Back To Article

STANDARD/AUTOMATIC TRANSMISSION

In today's modern vehicles, the automatic transmission has become a vital part of the powertrain. Automatic transmissions provide overall better fuel economy and efficiency while adapting to changing road conditions and driving habits. Standard transmissions offer more driver interaction with the vehicle, however automatic transmissions reduce driver fatigue and increase safety by shifting automatically. Automatic transmissions also offer improved driveability in stop and go traffic. If there is a disadvantage to an automatic transmission, it would be complexity and cost of manufacturing. See Fig. 1.

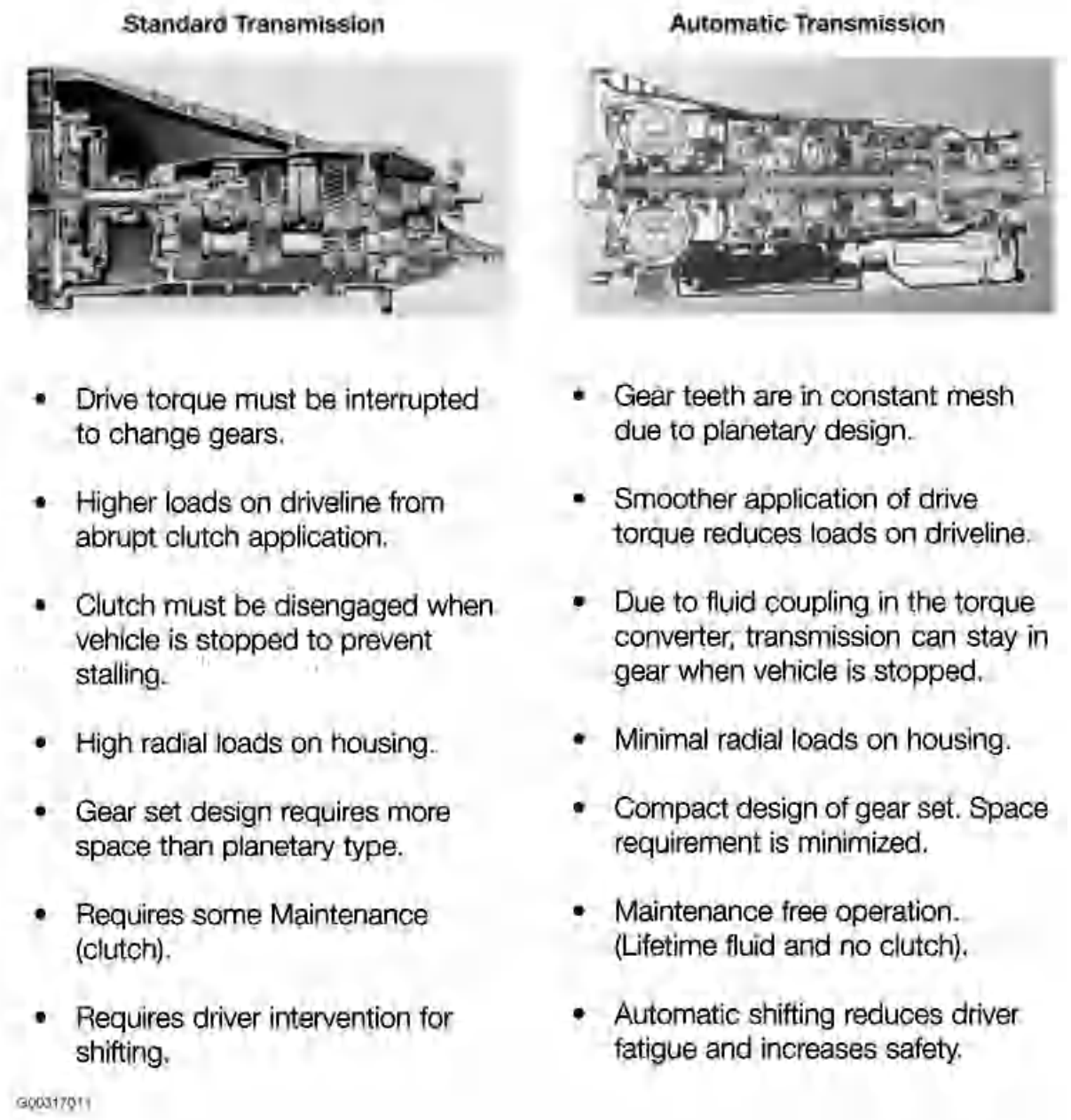

Fig. 1: Standard & Automatic Transmission Comparison
Courtesy of BMW OF NORTH AMERICA, INC.

HYDRAULIC TRANSMISSION VS. ELECTRO-HYDRAULIC TRANSMISSION

Since the introduction of the automatic transmission there have been numerous refinements to improve shift

comfort as well as fuel economy. Early automatic transmissions used only hydraulic control, there was no electronic intervention. In 1986 BMW introduced their first EH (Electro-Hydraulic) transmission into production vehicles. The acronym EGS is used by BMW for its electronic transmission control system. EGS stands for "Electronic Transmission Control" which comes from the German words "Elektronisch Getriebe Steurung". In order to comply with SAE terminology we will refer to the EGS control module as the TCM "Transmission Control Module". EH controlled transmissions allow for optimized shift points by closely monitoring changing conditions. Engine speed, road speed and throttle angle are some of the inputs that are monitored by the TCM to determine optimal shift points. The TCM will then process this information and control shift point via electronic solenoids mounted on the valve body. With the introduction of Adaptive Transmission Control, shift comfort and fuel economy was further improved. The TCM now monitors throttle angle deviations, wheel speeds and CAN Bus information to fine tune shift points. See Fig. 2.

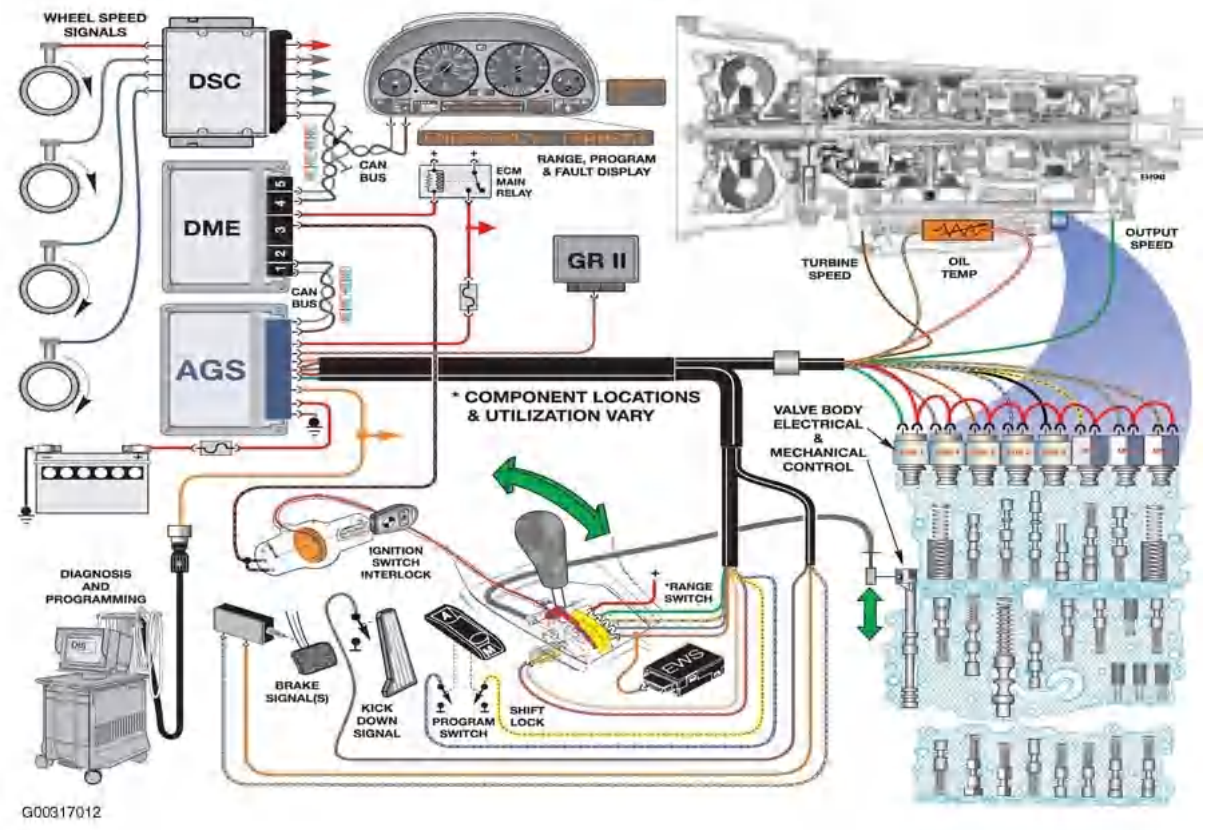

Fig. 2: Electronic Transmission Control System
Courtesy of BMW OF NORTH AMERICA, INC.

TRANSMISSION IDENTIFICATION

BMW automatic transmissions are manufactured by two suppliers for the US market:

- Zahnradfabrik Friedrichshafen: Commonly referred to as ZF. ZF manufactures both manual and automatic transmissions.
- GM Powertrain - Hydramatic: Hydramatic is a manufacturing division of General Motors located in Strasbourg France. Hydramatic supplies automatic transmissions to BMW for four and six-cylinder vehicles.

BMW has developed an internal numbering system for their transmissions for parts ordering, information research and identification. Also, each manufacturer uses their own internal identification system. Here is a breakdown of these identification codes. See Fig. 3.

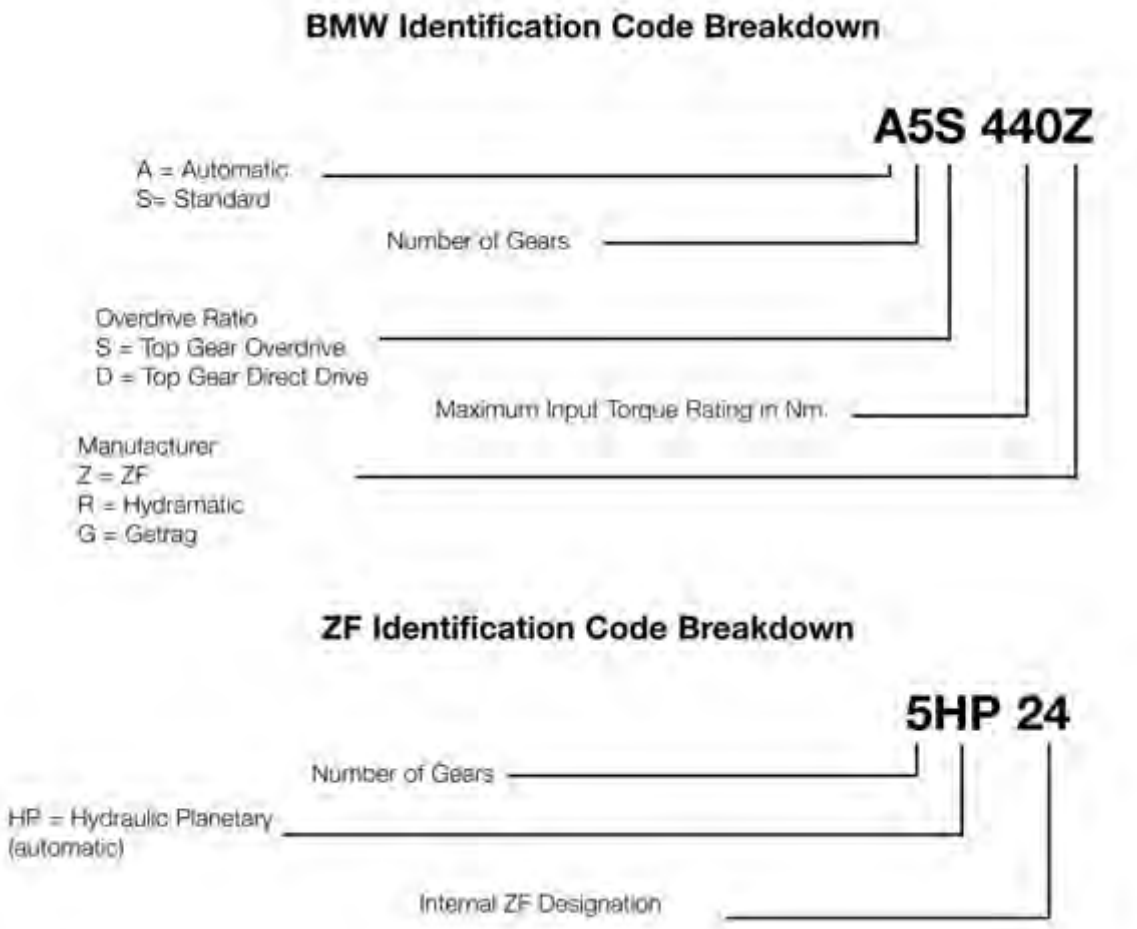

Fig. 3: Transmission Code Breakdown
Courtesy of BMW OF NORTH AMERICA, INC.

TRANSMISSION HYDRAULICS

TRANSMISSION FLUID (OIL)

The automatic transmission provides pressure regulated hydraulic fluid which is filtered for all of the transmissions functional requirements. See Fig. 4. All BMW automatic transmissions are designed to operate with specific fluids. Use of non-approved oil will cause malfunctions and irreparable transmission damage which is not covered by BMW warranty. The transmission fluid provides the following functions:

- Lubricates mechanical components (planetary gears, bearings etc.).
- Removes heat and transfers heat to transmission cooling system. (heat exchanger).
- Removes debris and contaminants to sump and filter when circulated.
- Provides a transfer of kinetic energy in the torque converter.
- Allows hydraulic operation of mechanical components (clutches, brakes) via control of the valve body.

Also, transmission fluid has various properties to prevent oxidation and breakdown from heat and friction. Each type of transmission fluid has properties specific for each transmission application. Fluid level is crucial in the proper operation of an automatic transmission. Improper fluid levels will cause improper operation and eventually irreparable transmission damage. Improper fluid level can cause:

- A low fluid level can cause an interruption in oil flow during fast acceleration or hard braking which can cause gear shift malfunctions.
- An excessively high fluid level can cause the rotating mechanical components to paddle in the oil. This produces foam which introduces air into the hydraulic system.

- A low fluid level can also cause transmission overheating causing premature transmission failure.

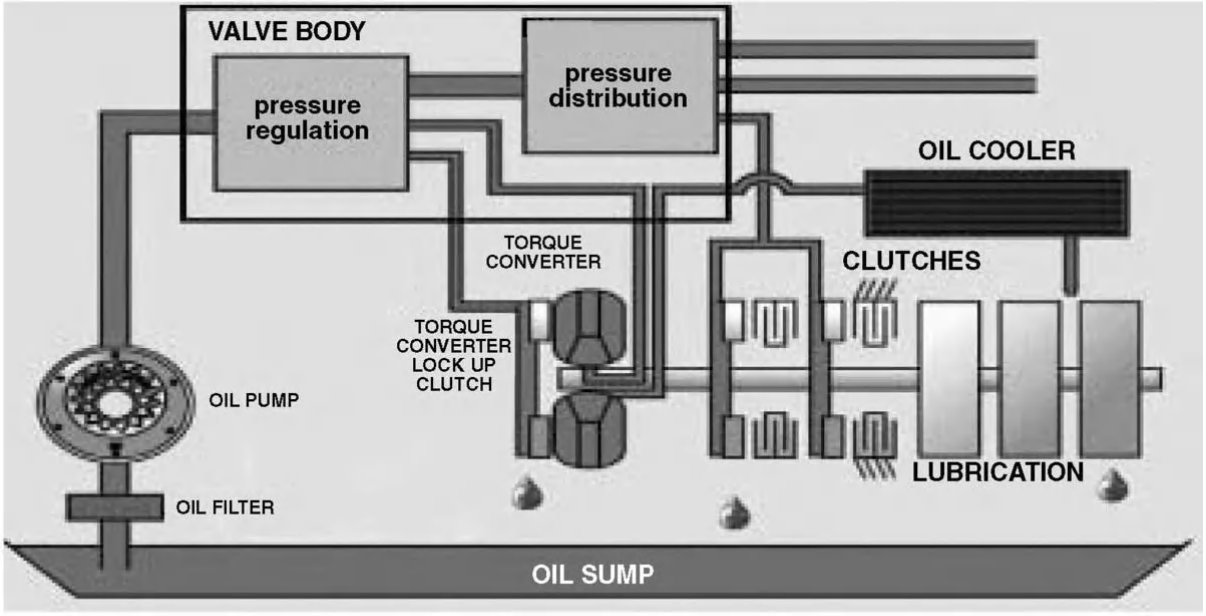

G00317014

Fig. 4: Identifying Transmission Hydraulics
Courtesy of BMW OF NORTH AMERICA, INC.

TRANSMISSION FLUID APPLICATION

There are numerous types of transmission fluid used in BMW transmissions. With the exception of the early transmissions (4HP22/24, A4S310/270R and the A5S310Z) all current BMW transmissions use "Lifetime Fill" transmission fluid. There is no maintenance required for these transmissions. It is important to use the correct fluid. Incorrect use of the transmission fluid can cause non-warrantable transmission damage.

When performing repairs on transmissions with lifetime fluid, it is important to drain the transmission fluid in to a clean container for re-use. New fluid should only be used for transmission replacement and for topping off after repairs.

Also, transmission fluid level is vital to the proper operation of the transmission. See Fig. 5.

Transmission	Fluid Type	BMW Part #	Container	SIB Ref.
4HP22 **4HP24**	Dexron III Mercon	Available Commercially (Castrol or Texaco)	N/A	
A5S310Z 530i/iT (E34)	Dexron III	Available Commercially (Castrol or Texaco)	N/A	
M3 (E36)	ESSO LT 71141	83 22 9 407 807	20 liter contalner	B 24 03 95
A5S325Z	ESSO LT 71141	83 22 9 407 807	20 liter contalner	
A5S440Z	ESSO LT 71141	83 22 9 407 807	20 liter container	
A5S560Z 740 (E32), 540 (E34) 840Ci (E31- 6/93-12/94) 740i/iL-750iL (E38)	Shell LA2634	83 22 9 407 765	5 liter container	B 24 11 92
540i (3/96-12/96) 850Ci (10/94-6/97)	ESSO LT 71141	83 22 9 407 807	20 liter container	B 24 02 94
A4S310R **A4S270R** **(THM-R1)**	Dexron III Mercon	Available Commercially (Castrol or Texaco)	N/A	
A5S360R **A5S390R**	Texaco ETL 7045E Texaco ETL 8072B	83 22 0 026 922 83 22 0 024 359	25 liter container 25 liter container	
GA6HP26Z	Shell M1375.4	83 22 0 142 516		

G00317015

Fig. 5: Transmission Fluid Application
Courtesy of BMW OF NORTH AMERICA, INC.

TORQUE CONVERTER

In standard transmissions the crankshaft is linked to the transmission input shaft via the clutch assembly. Power flows from the crankshaft through the flywheel. The pressure plate transfers power to the clutch disc which is splined to the transmission input shaft. The pressure plate is used to disconnect (or interrupt) power flow to the transmission input shaft. Because the engine is mechanically connected to the driveline, power flow must be interrupted when the vehicle is stationary. Otherwise the engine would stall. In automatic transmissions, there is a fluid coupling between the engine and transmission. This fluid coupling is more commonly referred to as the torque converter. In the torque converter there is no rigid connection between the engine and transmission (except for lock up clutch). In order to understand the operation of the torque converter, we must first start with the components. The breakdown of the components are as follows:

- The Impeller, which is rigidly connected to the torque converter housing.
- The Turbine, which is splined to the input shaft (turbine shaft) of the transmission.
- The Stator, which has a one-way clutch. The inner race of the one-way clutch is splined to a stationary shaft attached to the transmission. See Fig. 6.

The addition of the stator allows the fluid coupling to be referred to as a torque converter. The stator provides for a multiplication of torque at low speeds. Without the stator there would be no multiplication of torque.

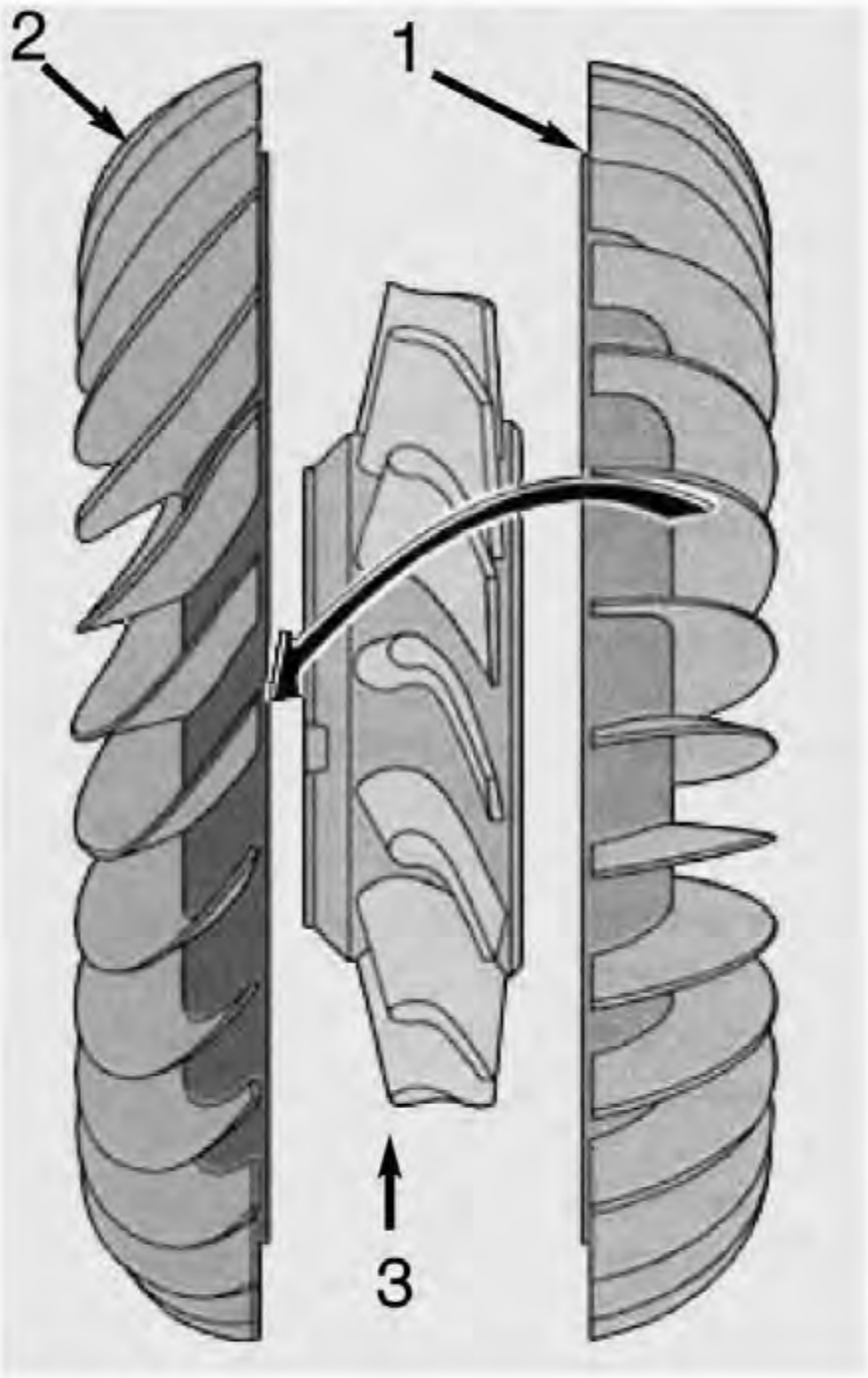

G00317016

Fig. 6: Identifying Impeller, Turbine & Stator
Courtesy of BMW OF NORTH AMERICA, INC.

When the engine is running, the impeller which is directly connected to the converter housing, rotates at engine speed. Fluid is directed from the impeller blades to the turbine blades. The fluid drives the turbine which is splined to the input (turbine) shaft of the transmission. This functions the same way as a waterfall acting on a paddle wheel. The ratio of the impeller speed to turbine speed is approximately 1.1 to 1. This ratio is improved to 1:1 with the addition of the torque converter clutch which is discussed later.

Torque Converter Operation At Low Speeds

1. At low engine speeds there is a large difference in rotational speed between the impeller and the turbine

2. Fluid flow is directed from the impeller to the turbine. Fluid strikes the vanes of the turbine. The turbine is driven forward in the direction of engine rotation.
3. Fluid flow is then directed back towards the impeller.
4. Before the fluid reaches the impeller, the fluid strikes the vanes of the stator.
5. When the fluid strikes the stator, the one way clutch prevents the stator from rotating.
6. The fluid is then re-directed by the curved vanes of the stator. The fluid is now flowing in the same direction as the impeller.
7. The fluid that is acting on the impeller increases the force on the impeller which multiplies torque. See Fig. 7.

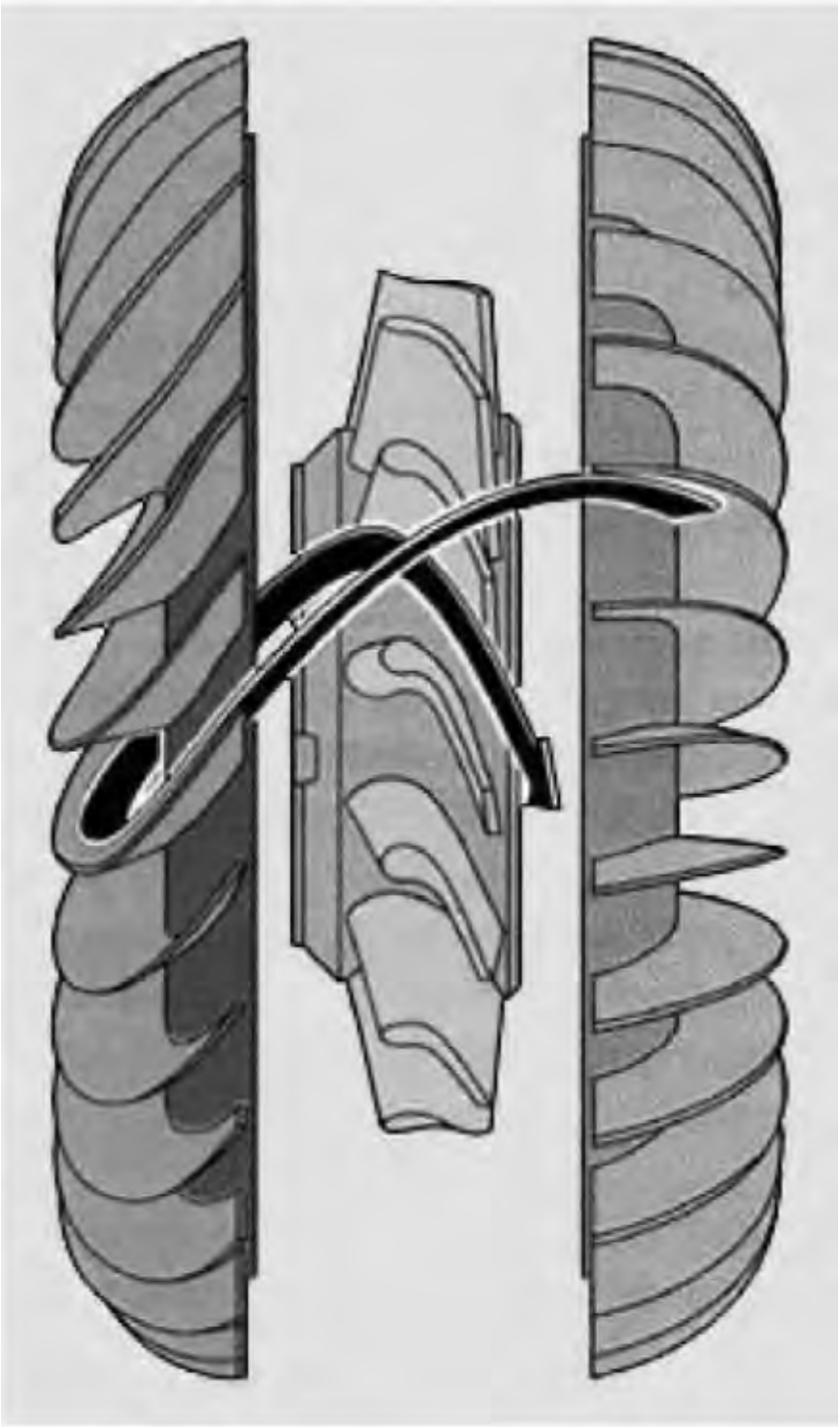

G00317017

Fig. 7: Torque Converter Operation At Low Speed

Courtesy of BMW OF NORTH AMERICA, INC.

Torque Converter Operation at High Speed

1. As engine speed increases, the turbine speed approaches the speed of the impeller.
2. The fluid flow is directed from the turbine to the back side of the impeller blades.
3. The one-way clutch in the stator unlocks and the stator blades turn in the direction of engine rotation.
4. Fluid is no longer re-directed and torque multiplication no longer takes place.
5. This is referred to as "Coupling Speed". The turbine never reaches the same speed as the impeller as fluid flow would come to a halt. Ratio is approximately 1.1 to 1. See Fig. 8.

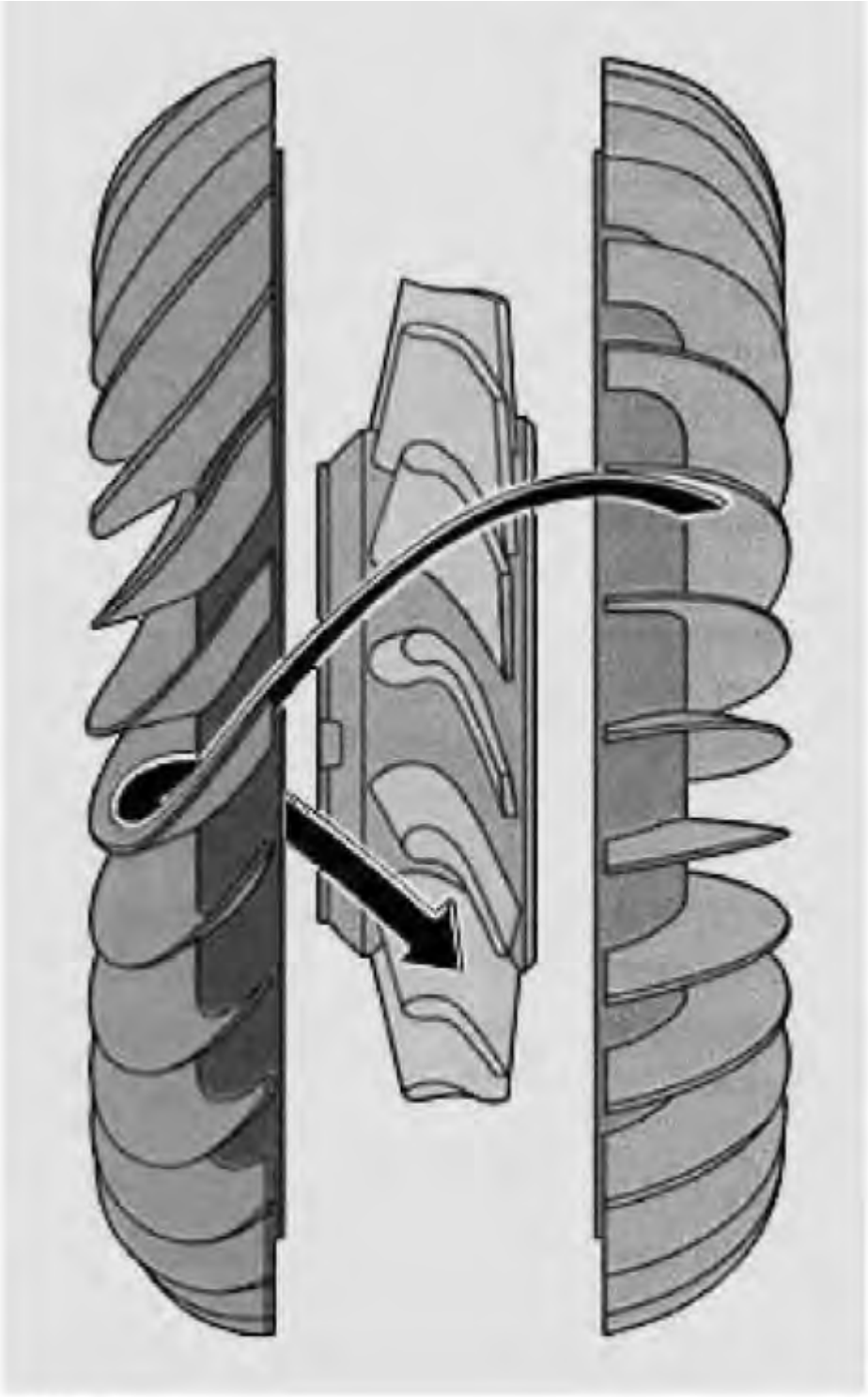

G00317021

Fig. 8: Torque Converter Operation At High Speed

Courtesy of BMW OF NORTH AMERICA, INC.

Torque Converter Clutch

Since the efficiency of the torque converter at coupling speed is approximately 1.1 to 1, fuel economy is compromised. To offset this a torque converter clutch was added on EH controlled transmissions. The torque converter clutch locks the turbine to the converter housing. This creates a mechanical coupling with a ratio of 1:1. This can only be achieved at higher engine speeds. The torque converter clutch must be disengaged at low engine speeds to prevent stalling. There are two methods for controlling the torque converter clutch on BMW transmissions:

- A4S310/270R, 4HP22/24 EH, A5S310Z - These transmission use an on/off control method to lock and unlock the torque converter. The TCC is either completely engaged or completely disengaged. This method of engagement provides an abrupt sensation when the TCC is locking and unlocking. This abrupt sensation can be unpleasant and undesirable to some drivers.
- A5S560Z, A5S440Z, A5S325Z, GA6HP26Z, A5S360/390R - These transmissions use a gradual approach to TCC control. The TCC is gradually applied and released, this method reduces the abrupt feel of the on/off type TCC. The TCC solenoid is controlled by pulse width modulation. This allows fluid to be gradually introduced and released to the TCC.

The TCC is spring loaded to the engaged position. Pressurized fluid releases the TCC, when the pressurized fluid is released, the TCC is engaged. Depending on transmission application, the TCC can be engaged in 3rd, 4th or 5th gear. The TCC must be disengaged at low speeds to prevent stalling. See Fig. 9 and Fig. 10 .

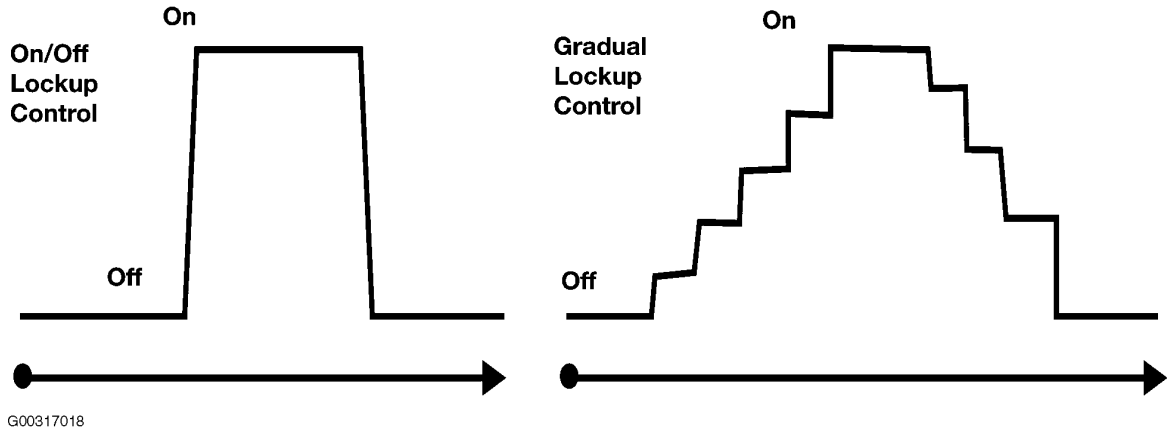

Fig. 9: Identifying TCC Operation
Courtesy of BMW OF NORTH AMERICA, INC.

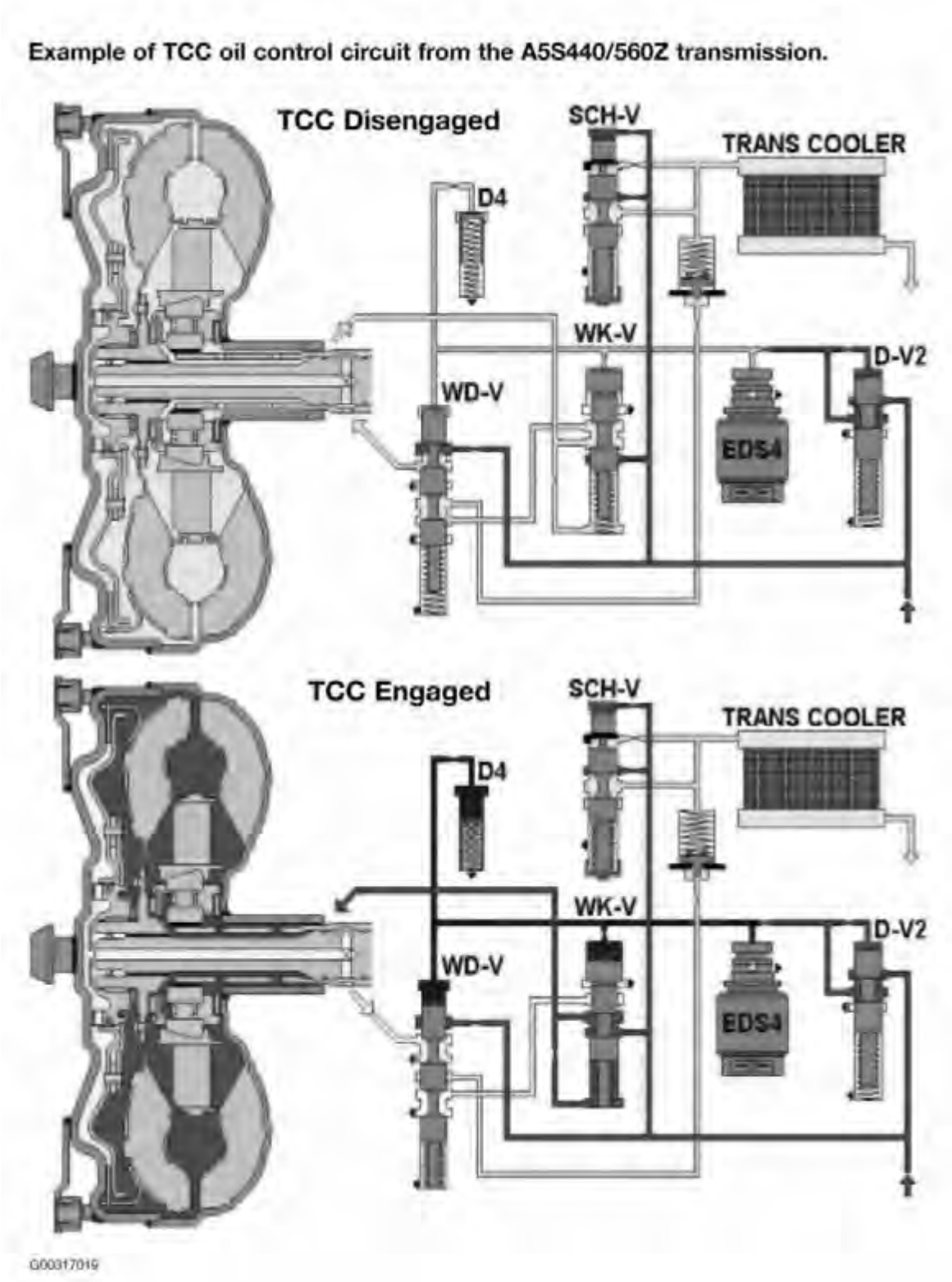

Fig. 10: TCC Oil Control Circuit
Courtesy of BMW OF NORTH AMERICA, INC.

OIL PUMP

The transmission oil pump is used to circulate oil and provide pressure for hydraulic operation. The pump is driven by the torque converter shell and rotates with engine. Fluid is drawn from the sump through the filter and distributed to the various transmission hydraulic systems. The output pressure is regulated to an operating pressure of approximately 25 bar. Currently there are two types of oil pumps used in BMW transmissions: Crescent type and Vane type. See Fig. 11.

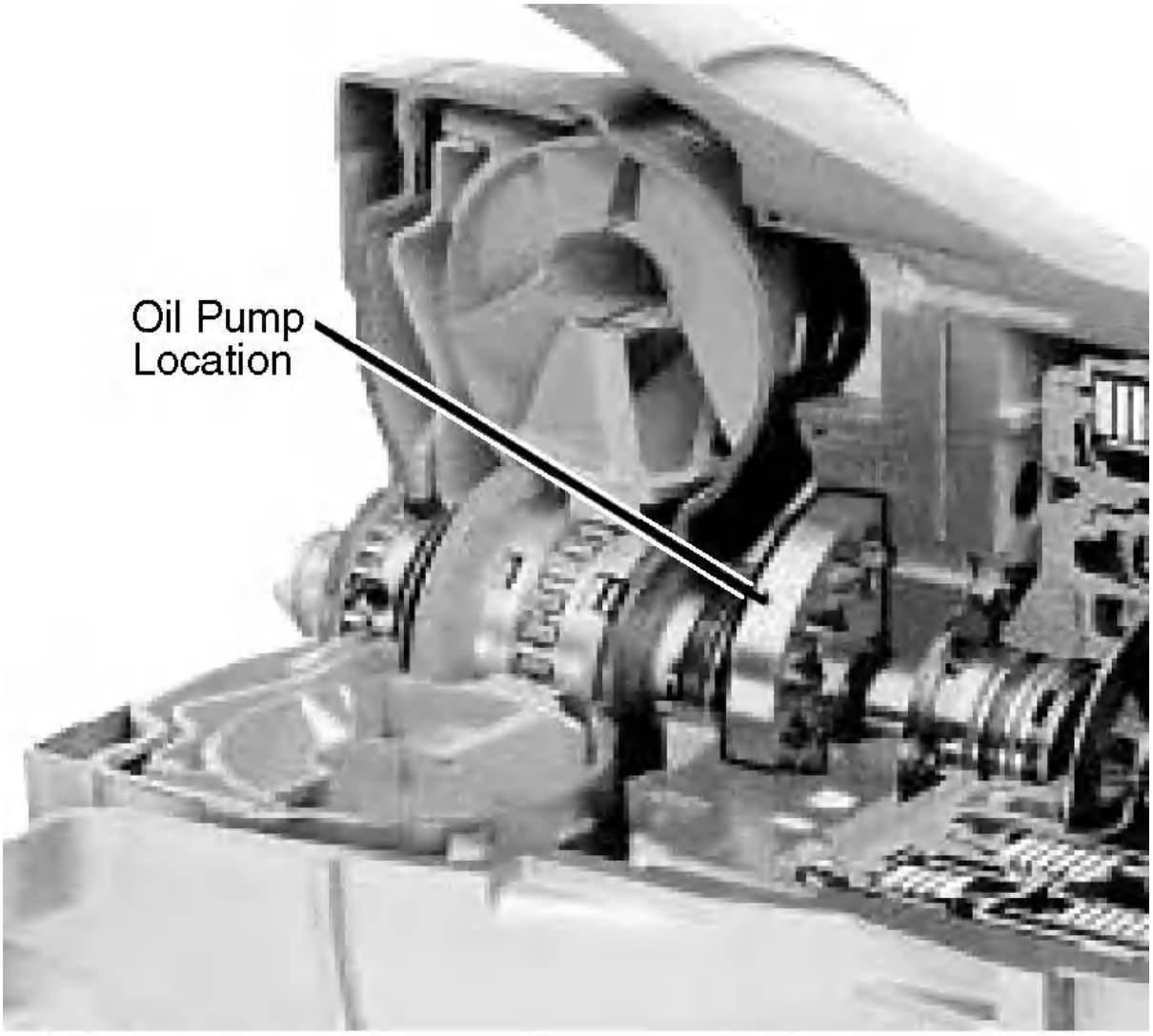

Fig. 11: Locating Oil Pump
Courtesy of BMW OF NORTH AMERICA, INC.

Crescent Type Oil Pump (All except A5S360/390R)

The crescent type is an internal gear pump containing a drive gear and a driven gear. The inner gear is driven by the torque converter and acts as the impeller. The outer gear is driven by the inner gear. The gap between the teeth varies from the input, through the crescent and to the output of the pump. A low pressure area is created on the input side of the pump by the widening gap between the gear teeth. The oil is drawn to the crescent and transferred to the output side of the pump, where the pressure is increased by the narrowing gap between the gear teeth. The output pressure of the pump is controlled by spring loaded pressure regulator. See Fig. 12.

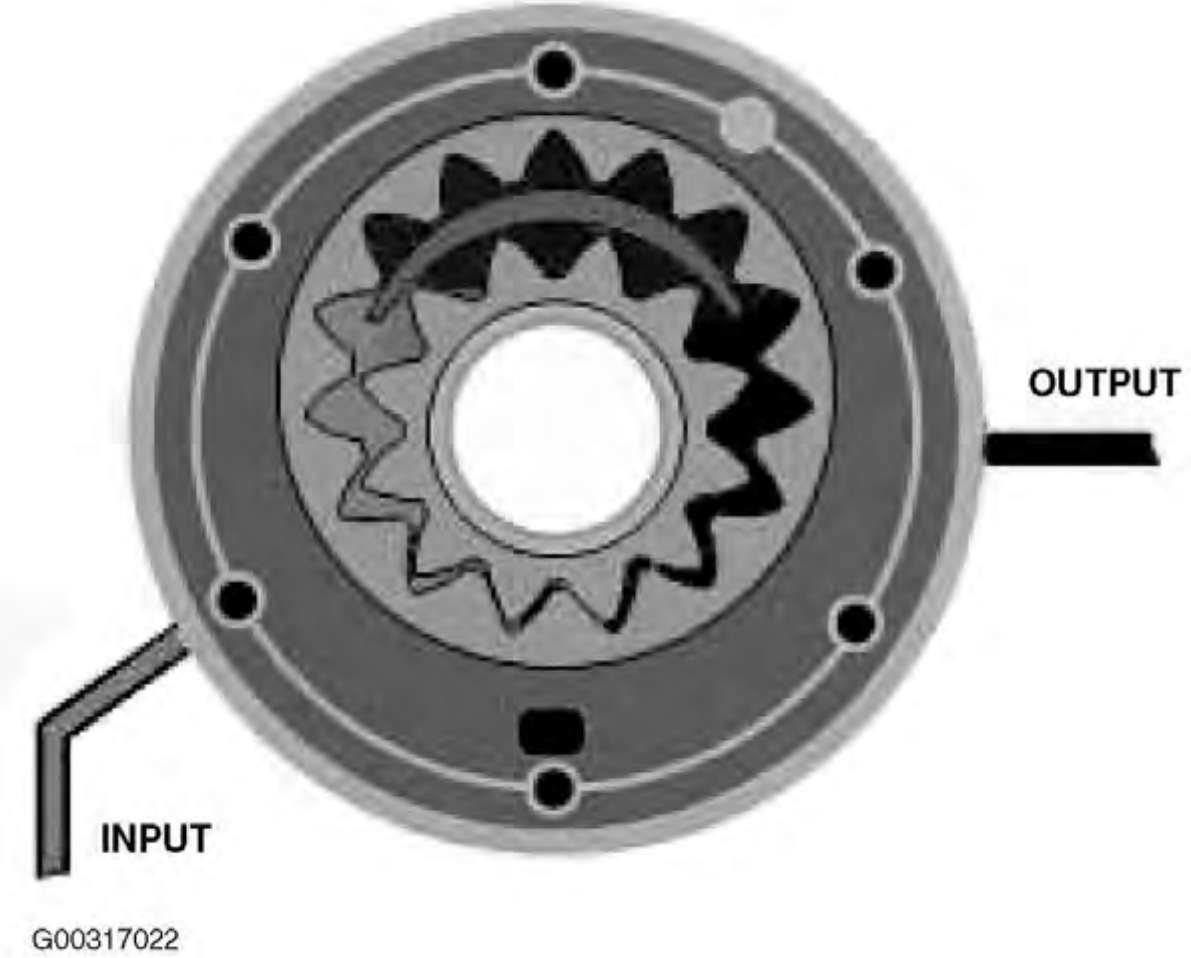

Fig. 12: Identifying Crescent Type Oil Pump
Courtesy of BMW OF NORTH AMERICA, INC.

Oil Volume Control

On the A5S440Z transmission, oil pump output volume is controlled based on engine RPM. High oil volume is initially required at start up to quickly fill the transmission requirements. As engine RPM increases, the volume is greater than is required. The Oil Volume Control Damper regulates the pump output volume based on engine RPM. This helps improve fuel economy by reducing the load on the engine at high RPM.

Vane Type Pump (A5S360/390R)

The new A5S360/390R (GM5) transmission uses a vane type pump. See Fig. 13. The torque converter drives the pump rotor and 13 vanes. The rotor and vanes are placed inside a slide mechanism. As the rotor spins, the vanes sweep oil from the pump intake to the output along the mating surface on the vane ends and the interior surface of the slide. The slide is mounted on a pivot pin. As it pivots, it changes the eccentricity of the rotor to slide mating surface. This in turn will alter the output oil volume. This provides the same function as the Oil Control Volume Damper on the A5S440Z. The slide's position is influenced by a calibrated spring and hydraulic control pressure from the main pressure regulator solenoid on the valve body. See Fig. 14. The benefit of changing the slide position is to optimize pump output volume to meet the following operating conditions:

- Provide maximum volume during engine start-up. This condition provides a fast priming action of the pump for immediate lubrication and for hydraulic pressure operation.
- Regulated output volume at higher engine speeds. Maximum pump volume is not required at all times.

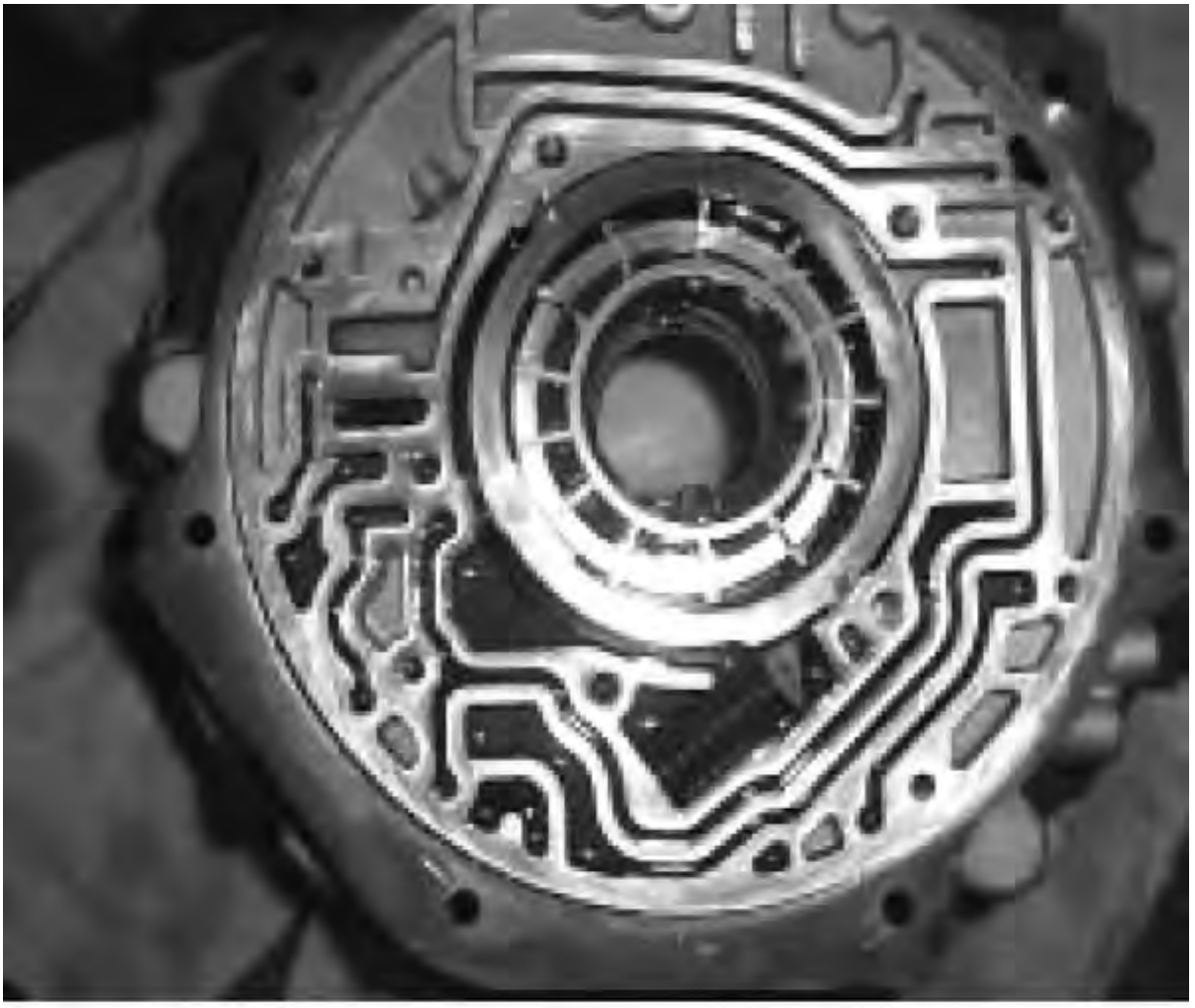

Fig. 13: Identifying Vane-Type Pump
Courtesy of BMW OF NORTH AMERICA, INC.

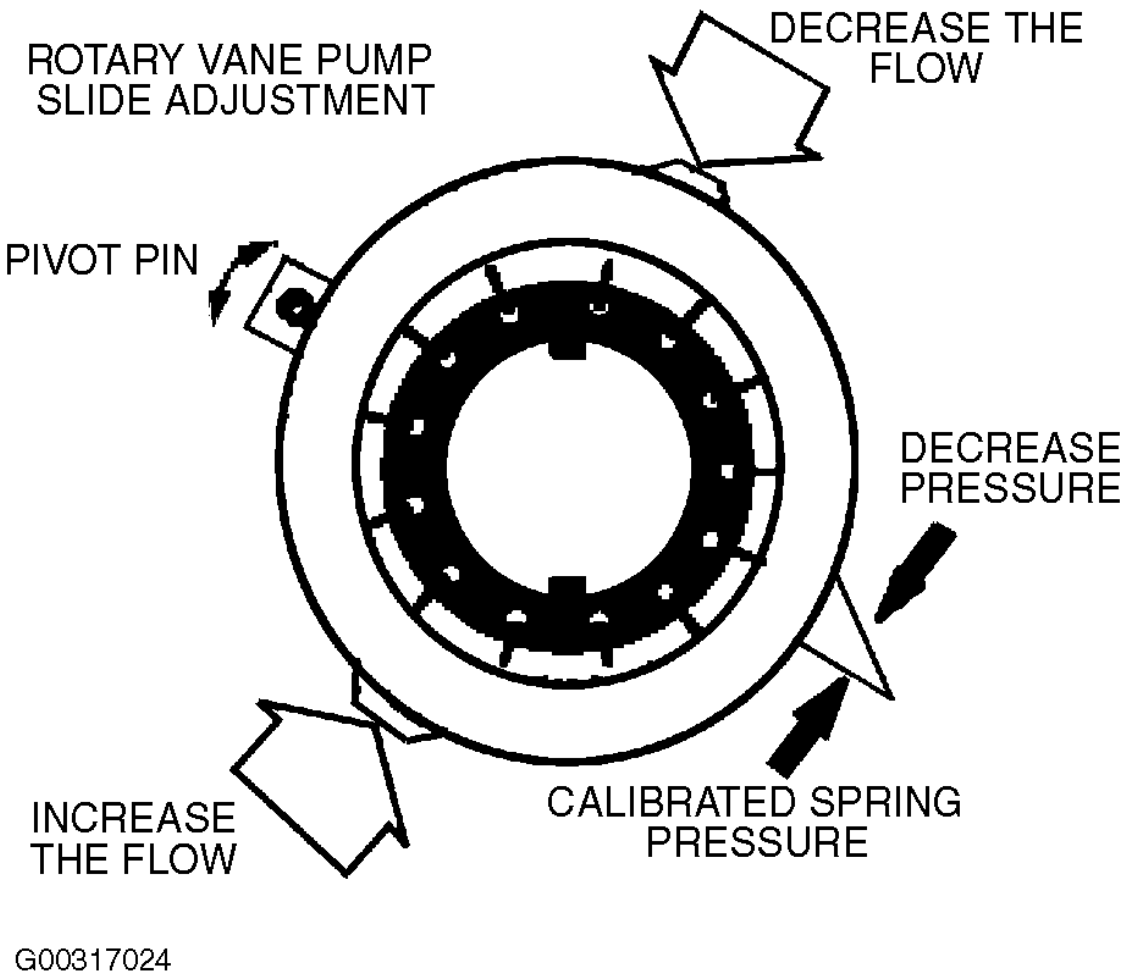

Fig. 14: Rotary Vane Pump Slide Adjustment
Courtesy of BMW OF NORTH AMERICA, INC.

HYDRAULIC CONTROL COMPONENTS

Electro/Hydraulic Valve Body

The valve body assembly is the main shift control element in the transmission. In non-EH transmissions the valve body was only hydraulically controlled. In the current EH (electrohydraulic) transmissions the valve body is similar in design, but now also housing a number of shift solenoids which are controlled by the TCM. The valve body consists of a number of sub-assemblies. Each sub-assembly contains a number of spool valves which are hydraulically controlled. Most spool valves are opposed by spring pressure. The spool valves are used to direct hydraulic fluid flow to the various shift elements in the transmission. There is also a manual valve which is connected to the shift assembly by a cable. The manual valve allows the drivers to select the basic operating mode (or ratio). See Fig. 15. The valve body is responsible for the following:

- Regulating main pressure.
- Controlling fluid flow to shift elements for Upshifts and Downshifts.
- Providing for manual operation by driver via manual valve.
- Reverse Lockout.
- Failsafe Operation.
- Shift Comfort through: Overlap Shift Control (ZF) Pressure Accumulators (GM).
- Torque Converter Control.
- Distribution of lubrication.

- Regulating Main Pressure
- Controlling fluid flow to shift elements for Upshifts and Downshifts.
- Providing for manual operation by driver via manual valve.
- Reverse Lockout
- Failsafe Operation
- Shift Comfort through: Overlap Shift Control (ZF) Pressure Accumulators (GM)
- Torque Converter Control
- Distribution of lubrication.

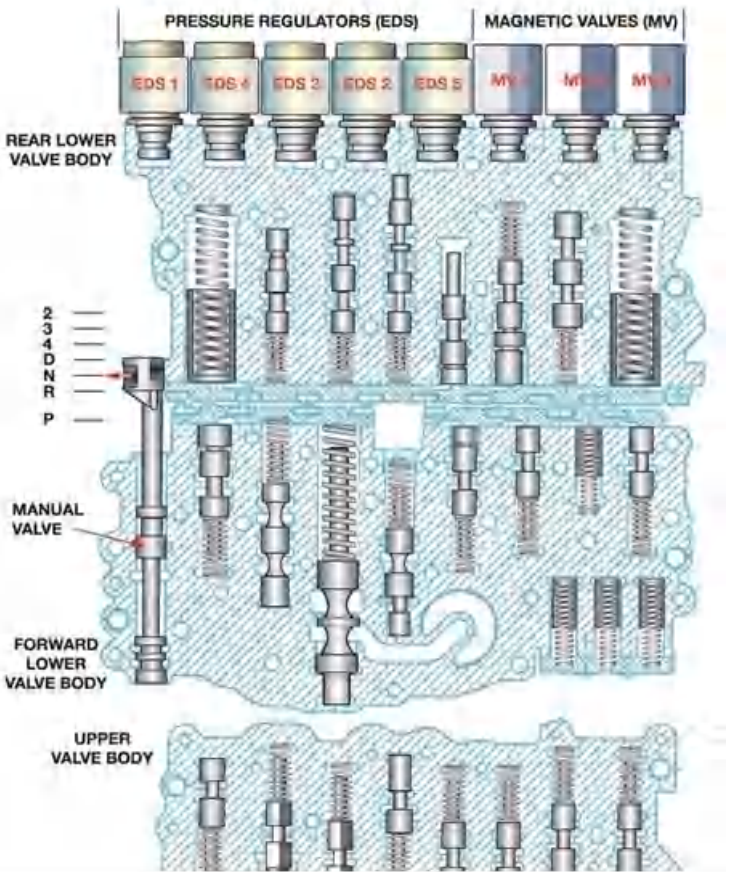

Fig. 15: Identifying Electro/Hydraulic Valve Body Components
Courtesy of BMW OF NORTH AMERICA, INC.

Shift Valves

Shift valves are used to direct application pressure to the various shift elements. Shift valves are regulated by spring pressure and control pressure for the shift solenoids. Shift valves come in various configurations depending upon application and transmission type. The most basic is the 3/2 shift valve. The 3/2 shift valve has 2 positions which are switched through one or two control pressures.

With no control pressure from shift solenoid present, the shift valve is moved to its end travel (left) by spring pressure. Operating pressure is blocked to the shift component. Also in this position any application pressure is drained from the shift component. See Fig. 16.

Once the control pressure is applied to the 3/2 shift valve, the shift valve moves to the right. This allows operating pressure to reach the shift component. When the control pressure is again reduced, spring pressure returns the 3/2 shift valve to the rest position. This drains and operating pressure from the shift component. See Fig. 17.

Operating Pressure to Shift Component. The example shown is a 4/2 shift valve. The operation is similar to the 3/2 valve. The primary difference is that the 4/2 shift valve affects 2 shift components. See Fig. 18.

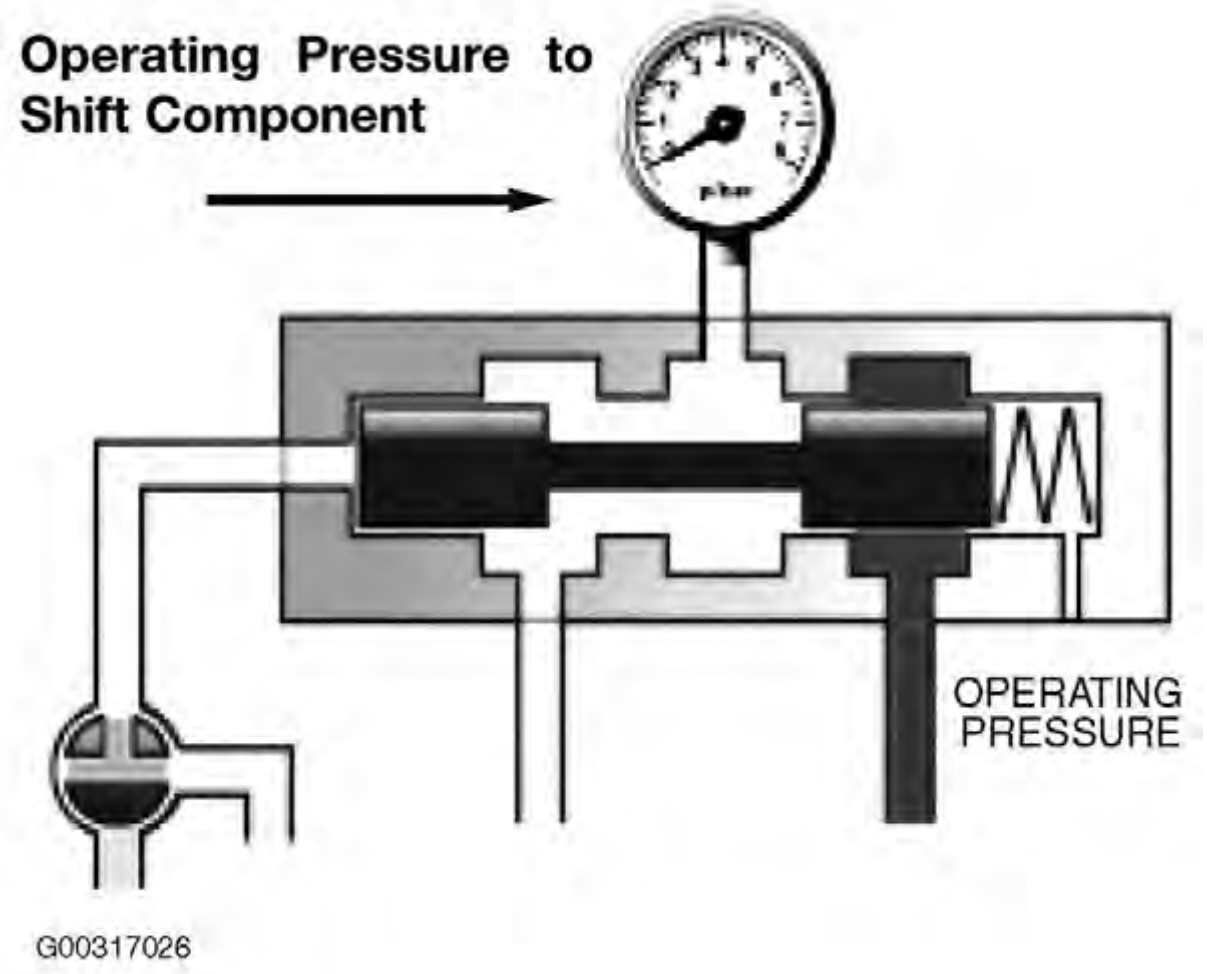

Fig. 16: Shift Valve Operation (1 Of 3)
Courtesy of BMW OF NORTH AMERICA, INC.

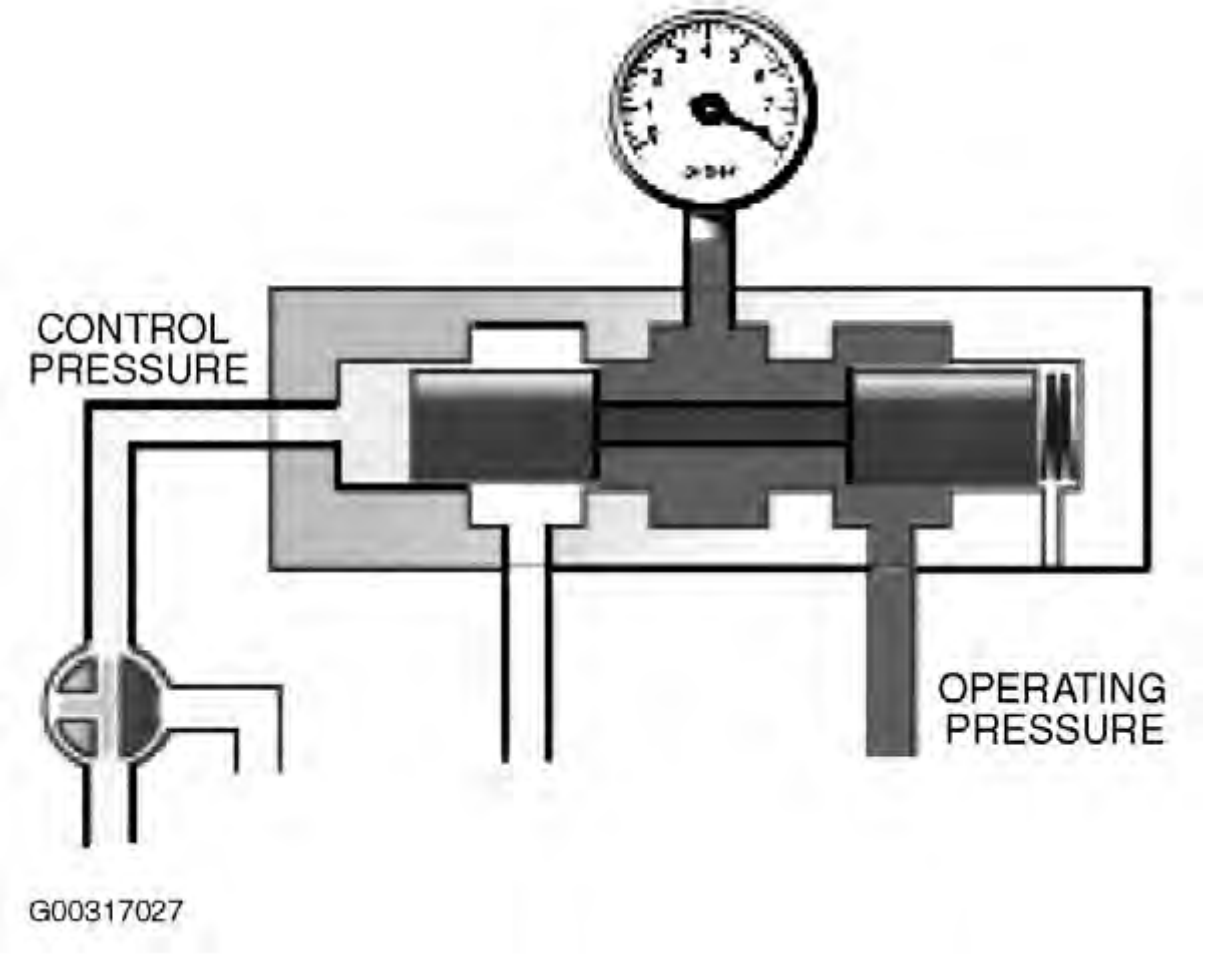

Fig. 17: Shift Valve Operation (2 Of 3)
Courtesy of BMW OF NORTH AMERICA, INC.

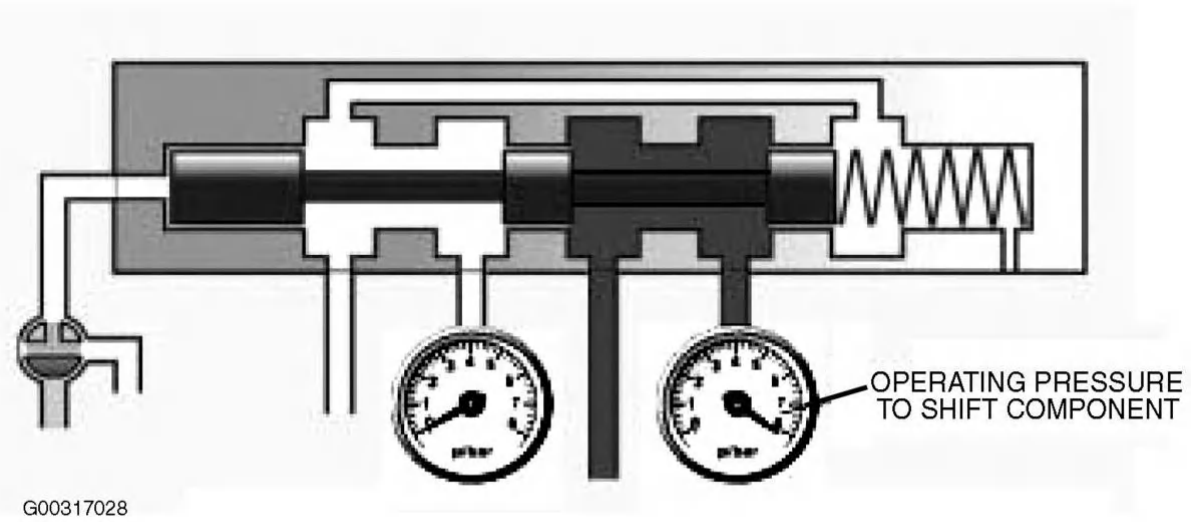

Fig. 18: Shift Valve Operation (3 Of 3)
Courtesy of BMW OF NORTH AMERICA, INC.

Pressure Regulation

Pressurized oil from the pump must be regulated for use within the transmission. Otherwise, the high pressure directly from the pump would influence shift quality. The shifts would be more abrupt and harsh. In order to

"fine tune" the pressures within the transmission, there is a pressure regulating valve and a pressure regulating solenoid. The pressure regulating valve is located in the oil pump housing or the valve body dependent upon transmission type. The pressure regulating solenoid is a pulse width modulated (PWM) solenoid. Current is controlled by the TCM. The pressure regulating solenoid is normally closed, there is maximum line pressure available when minimum (or no) current is applied to the pressure regulating solenoid. Depending upon application, pressure regulating solenoid can be PWM with B- or B+ control. GM transmissions use B+ control with a constant ground supply. ZF transmissions uses B- control with a constant B+ supply.

There are also pressure regulators used in ZF transmissions that are used to control shift pressures. The A5S440Z and A5S560Z both use EDS solenoids for "Overlap Shift Control" this will be explained later in this text. There are a few different names for pressure regulating solenoids depending upon the transmission type and manufacturer:

- ZF transmissions use the following terms - EDS solenoid (valve), or MV (magnetic valve).
- Hydramatic (GM) transmissions use the following terms: DR solenoid, Force Motor Solenoid or Variable Bleed Solenoid.

Transmission operating pressures are regulated based on engine speed, throttle angle and engine load. The regulated pressure from the pressure regulating solenoid is referred to as throttle pressure. This pressure is fed to the main pressure regulating valve. See Fig. 19.

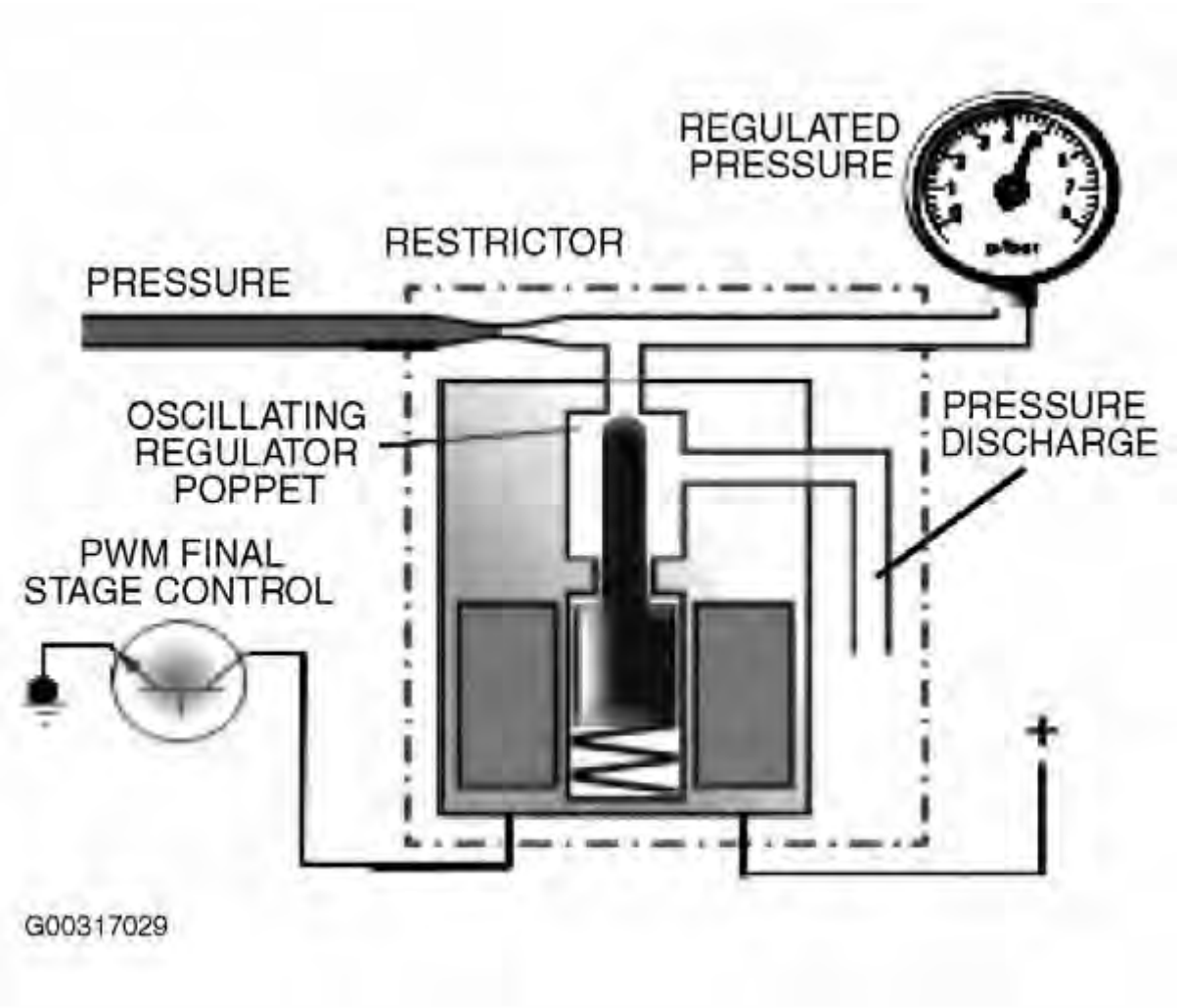

Fig. 19: Identifying Transmission Operating Pressure
Courtesy of BMW OF NORTH AMERICA, INC.

Pressure Regulation

As the diagram shows, regulating valve pressure is fed to the pressure regulating solenoid. See Fig. 20. This pressure is then regulated to create throttle pressure. Throttle pressure is modified based on throttle angle,

engine speed and engine load. Throttle pressure is then fed to the pressure regulating valve. As throttle pressure increases, the regulating valve piston is moved to the left (with respect to the diagram). As the regulating valve piston is moved to the left, operating pressure is increased to the 4/2 shift valve. The operating pressure to the 4/2 shift valve will be fed to Shift Component A or Shift Component B depending the position on the 4/2 shift valve. The operating pressure to the shift components will be increased or decreased depending upon the throttle valve pressure. As engine speed and load are increased, the operating pressure will be increased to provide higher clamping forces on the shift components. When there is no electrical power present to the pressure regulator solenoid, throttle pressure will be a maximum. Therefore maximum operating pressure will be available at the 4/2 shift valve. This condition would exist if the transmission was operating in failsafe mode.

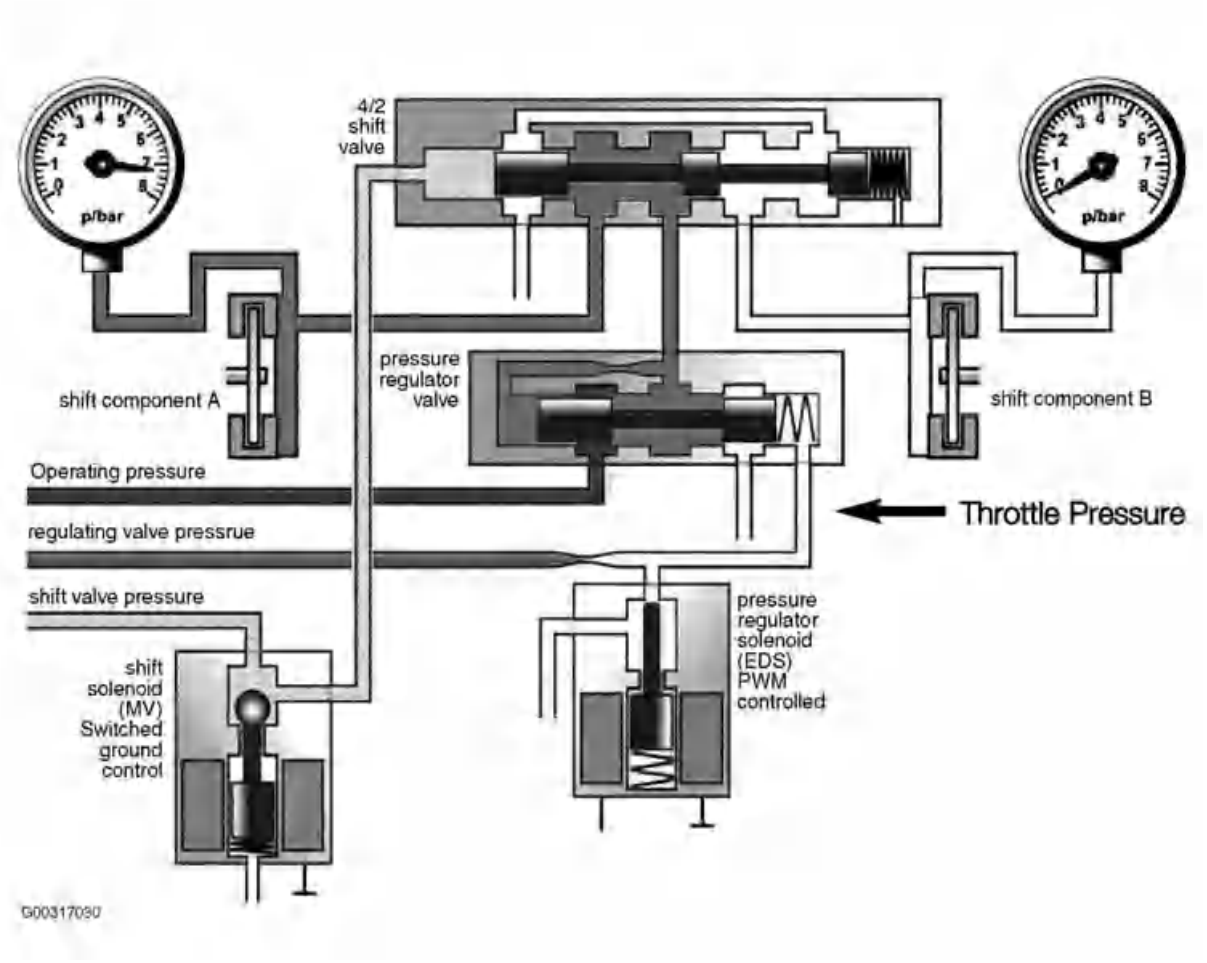

Fig. 20: Identifying Transmission Regulation Pressure
Courtesy of BMW OF NORTH AMERICA, INC.

APPLY COMPONENTS

Multi - Plate Clutches and Brakes

Multi Plate Clutches and Brakes are used to drive or hold members of the planetary gear set. See Fig. 21. As a general rule, Multi Plate Clutches connect one planetary member to another. Multi Plate Brakes connect a planetary member to the case to hold it stationary. The clutches and brakes consist of a number of friction discs and steel discs. The friction discs are coated with a friction material and have engaging lugs (splines) on the inner perimeter. The steel discs are steel on both sides and have engaging lugs located on the outer perimeter. The engaging lugs on the friction discs are usually engaged with a planetary member. The engaging lugs on the steel discs are usually engaged with the clutch piston housing. In addition to the friction and steel discs, there is also an apply piston, housing and return spring. Once hydraulic fluid is applied to the clutch assembly, the friction discs and steel discs will be locked together. Once hydraulic pressure is released, the return spring will cause the clutch piston to return to its rest position which will unlock the clutch assembly. See Fig. 22.

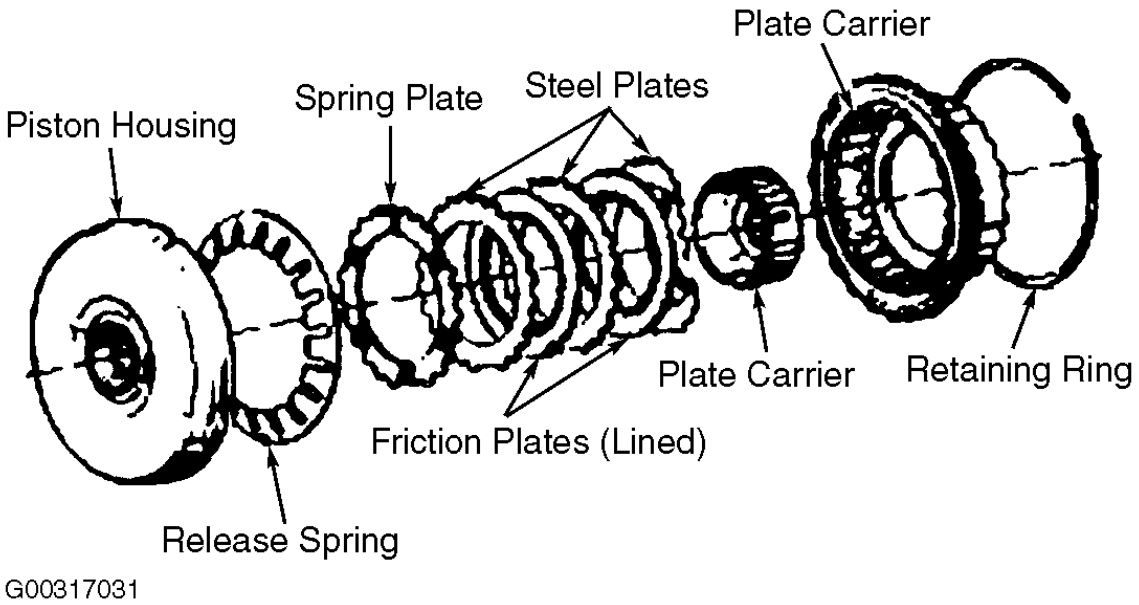

Fig. 21: Identifying Multi-Plate Clutches & Brakes
Courtesy of BMW OF NORTH AMERICA, INC.

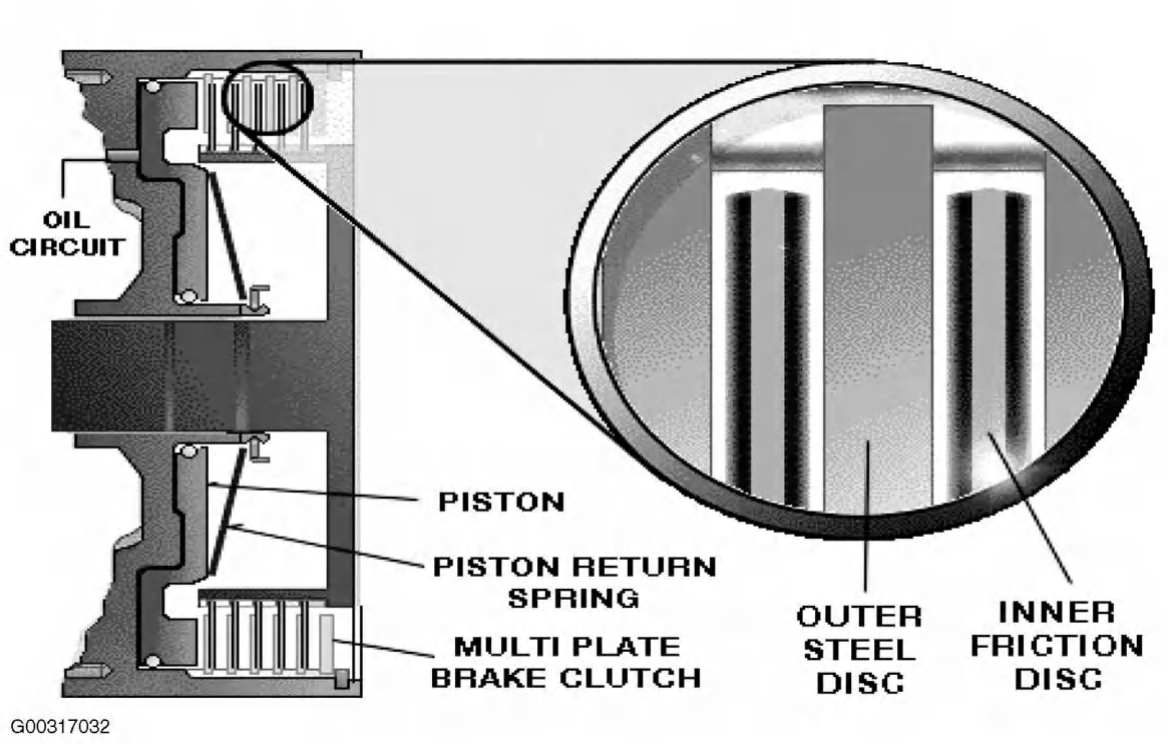

Fig. 22: Multi-Plate Clutch Identification
Courtesy of BMW OF NORTH AMERICA, INC.

Multi - Plate Clutch Operation

In order to carry out a shift in ratio, fluid needs to be applied or released from the Multi - Plate Clutch (or Brake). As shown in the example at the right, the following sequence occurs:

1. Fluid from a shift valve in the valve body is applied to the clutch assembly.
2. Fluid pressure builds behind the apply piston and overcomes the resistance from the diaphragm spring.

3. The friction and steel discs are compressed together and become locked, preventing any slippage between them.
4. Two planetary members are now locked together.
5. When fluid pressure is released, the steel and friction discs are allowed to unlock.
6. The diaphragm spring pushes against the apply piston and returns the piston back to the rest position.
7. The check ball in the apply piston is unseated by centrifugal force which allows the clutch to drain completely. See Fig. 23.

Fig. 23: Multi-Plate Clutch Operation
Courtesy of BMW OF NORTH AMERICA, INC.

BAND BRAKES

On some BMW transmissions there is a band type brake used for some applications. The A4S270/310R and the A5S310Z use a band type brake. The brake band is a circular band with friction material bonded to the inner surface. The band wraps around a particular planetary component (clutch drum) and locks that component to the transmission case. The brake band is applied and released by the clutch apply piston. The brake band is not adjustable on the A5S310Z, however there is some adjustment allowed when needed on the A4S270/310R. The brake band functions in the following manner on BMW transmissions:

- A4S270/310R - The brake band is active (applied) in first and second gear. The brake band holds the reaction sun drum stationary. The reaction sun drum is splined to the reaction sun gear.
- A5S310Z - The brake band is active (applied) in second, third and fifth gear. The brake band holds the forward sun gear to the case. See Fig. 24.

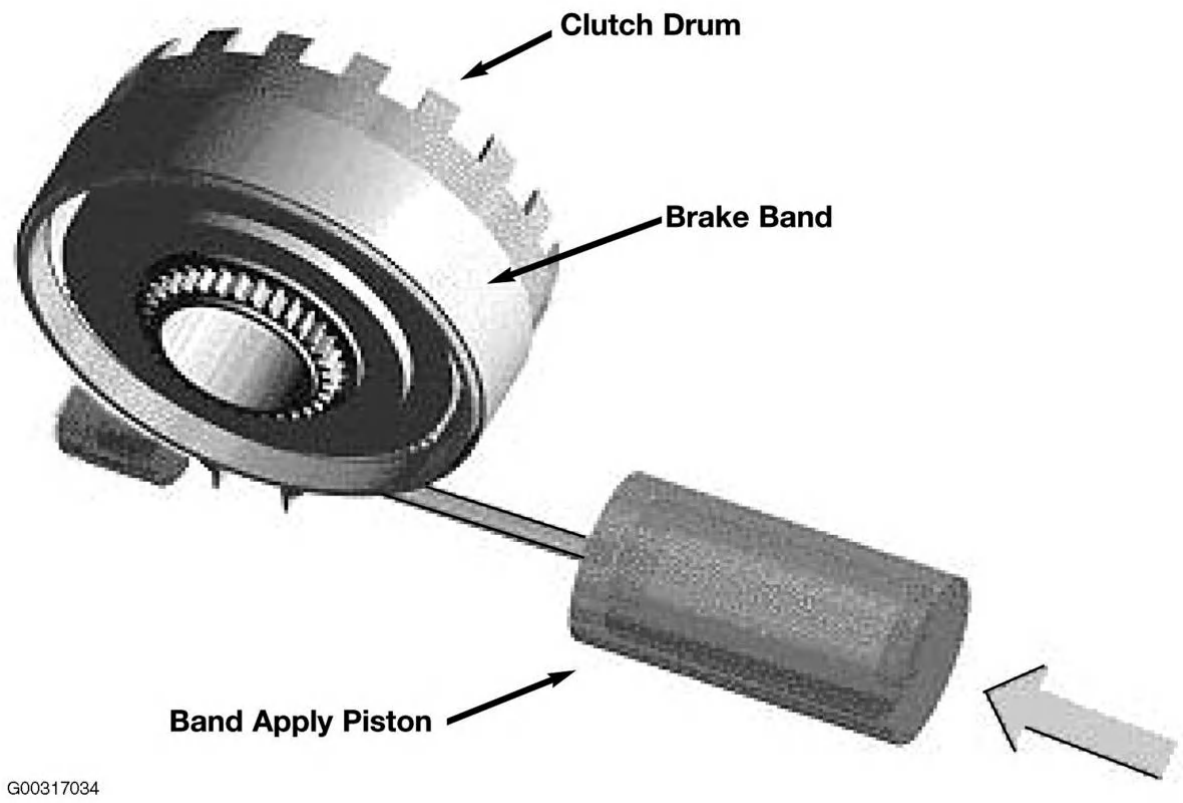

Fig. 24: Identifying Band Brake Operation
Courtesy of BMW OF NORTH AMERICA, INC.

ONE-WAY CLUTCHES (FREEWHEEL)

The one way clutch consists of an inner and outer ring with a locking device between the two. The one way

clutch is designed to lock in one direction and to allow free rotation in the other direction. See Fig. 25. Currently there are two types of one way clutches used in BMW transmissions:

- Roller type which consists of spring loaded rollers between the inner and outer race of the one way clutch. (Roller type is also used without springs on some applications).
- Sprag type which consists of asymmetrical shaped wedges located between the inner and outer race of the one way clutch.

In both versions of the one way clutch (freewheel), rotation is only allowed in one direction. Using the diagrams above, imagine that the inner races were locked stationary. The outer race would only be allowed to turn counter clock wise. In the clock wise direction, the outer race of both versions would be locked. In the roller type, the helper springs would push the rollers up the ramp on the outer race. This would force the rollers in to the smaller area which would cause the outer race to lock, In the sprag type, the asymmetrical wedges would lock between the inner and outer race. The one way clutches are used in the transmission to prevent an interruption of drive torque during certain gear shifts and to allow engine braking during coasting. Also there is a one way clutch in the stator of the torque converter.

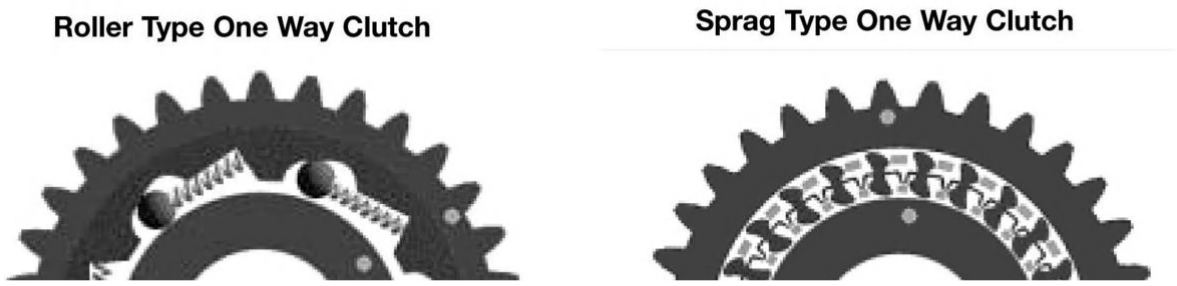

Fig. 25: Identifying One-Way Clutches
Courtesy of BMW OF NORTH AMERICA, INC.

PLANETARY GEAR SET

Planetary gear seats are compact gear units that receive input drive torque and provide the required output ratios for all forward gears and reverse gear. The planetary gear set consists of four main components:

1. Internal ring gear.
2. Planetary gears (pinions).
3. Sun gear.
4. Planetary gear carrier.

Various ratios are obtained by driving or holding different components in the planetary gear set. The example shown is a simple planetary gear set. See Fig. 26. Today's modern transmissions use a combination of multiple planetary gear sets referred to as a compound planetary gear set.

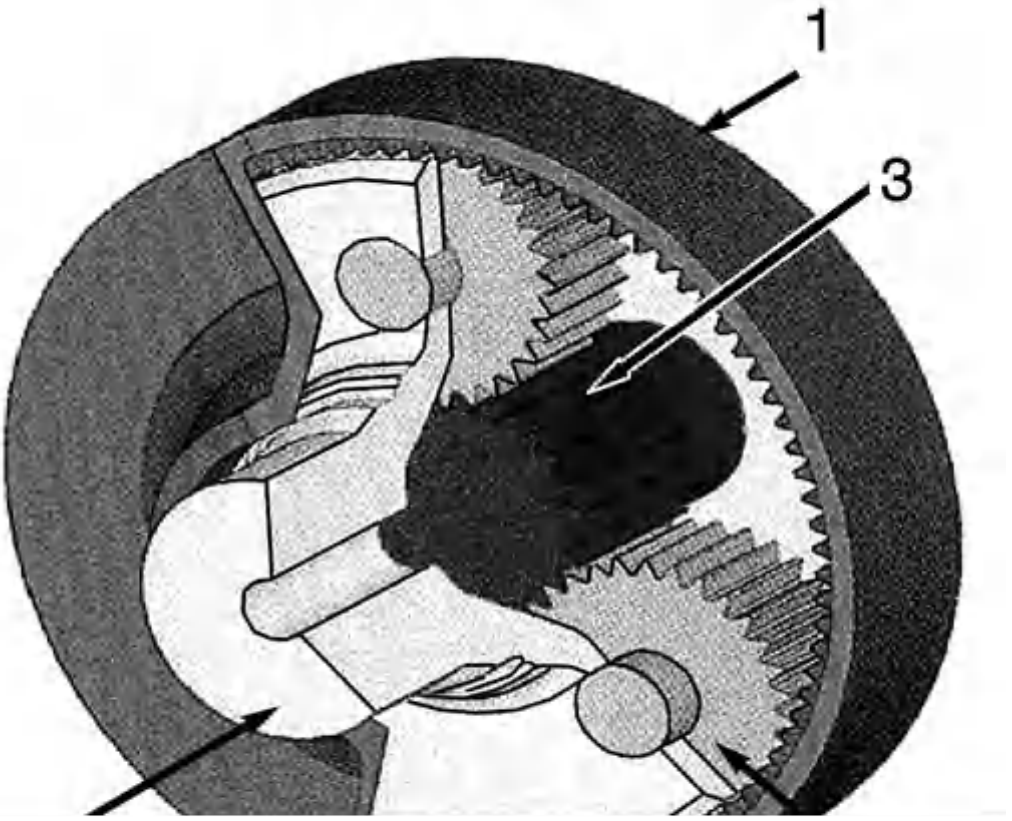

Fig. 26: Identifying Planetary Gear Set
Courtesy of BMW OF NORTH AMERICA, INC.

Advantages of Planetary Design

There are distinct advantages to the planetary gear set in comparison with a standard transmission gear set. Primarily, drive torque does not need to be interrupted to change gears. The planetary members are in constant mesh and there are more teeth engaged in any given ratio. This allows more torque to be transferred through the transmission.

Basic Power Flow Example

As an example of power flow in reverse gear, planetary gear carrier (4) is held stationary. The sun gear (3) is driven in a clockwise direction. The planetary pinions (2) are driven counterclockwise, which in turn drives the internal ring gear (1) counter clockwise as well. See Fig. 27.

Fig. 27: Identifying Basic Power Flow
Courtesy of BMW OF NORTH AMERICA, INC.

Compound Planetary Gear Sets

Compound planetary gear sets use multiple planetary components which are a variation on the simple planetary gear set. Since the inception of the simple planetary gear set, there have been numerous compound gear sets introduced. BMW transmissions use the following gear sets:

- Simpson Gear Set - used on 4HP22 and 4HP24.
- Ravigneax Gear Set - used on A4S270R, A4S310R, A5S310Z, A5S325Z, A5S360R and A5S390R.
- Wilson Gear Set - used on A5S440Z and A5S560Z.
- Lepelletier Gear Set - used on the GA6HP26Z.

Simpson Gear Set

The Simpson Gear Set is one of the early variations on the simple set. It is capable of 3 forward gears and one reverse. On BMW transmissions, the Simpson Gear set is used in the 4HP transmission which is a four speed automatic. See Fig. 28. Fourth gear (overdrive) is obtained by the addition of an auxiliary gear set (simple). Characteristics of the Simpson Gear set are as follows:

- Two Internal Ring Gears, one rear input ring and one attached to the rear planetary carrier.
- Two Planetary carriers, each containing three planetary pinions.
- One common Sun gear, which meshes with both sets of planetary pinions.

Fig. 28: Identifying Simpson Gear Set
Courtesy of BMW OF NORTH AMERICA, INC.

Ravigneaux Gear Set

A new version on the planetary design is the Ravigneaux gear set. See Fig. 29. This gear set is capable of 4 forward gears and one reverse. However, depending upon application it may be used with an auxiliary gear set. Here are some examples:

- The A4S310/270R uses the Ravigneax set for 3 forward gears and one reverse. Overdrive is obtained by the auxiliary gear set.
- The A5S310Z uses a combination of the Ravigneaux gear set and the auxiliary gear set to obtain 5 forward gear and one reverse. First, second and reverse gears are achieved by using a combination of both gear sets.
- The A5S360/390R uses a modified version of the Ravigneaux set that provides five forward gears and one reverse. There is no auxiliary gear set used.

Fig. 29: Identifying Ravigneaux Gear Set
Courtesy of BMW OF NORTH AMERICA, INC.

Characteristics of the Ravigneaux Gear Set are:

- One planetary carrier which is common to both sets of planetary pinions.
- Two sets of planetary pinions, one long set with small diameter and one short set with large diameter.
- Two sun gears, one input sun gear and one reaction sun gear.
- One common ring gear.

NOTE: The Ravigneaux Gear Set shown in the figure is a typical representation. There are a few variations of this arrangement used on BMW transmissions.

Wilson Gear Set

On BMW transmissions, the Wilson gear set is only used on the A5S440Z and A5S560Z. See Fig. 30. The Wilson Gear Set consists of three planetary gear sets. The ring gear of the first gear set, the planetary carrier of the second gear set and the ring gear of the third planetary gear set and directly connected to the "Pot". The "Pot" is a cylindrical device that slides over all of the components to unitize the individual gear sets into an assembly. The characteristics of the Wilson Gear Set are:

- Three planetary carriers.
- Three ring gears, with ring gear 1 and 3 meshed to "Pot" assembly.
- Three sun gears, sun gear 2 and 3 are common (attached). Sun gears 2 and 3 are also referred to as the "Double Sun Gear".

Fig. 30: Identifying Wilson Gear Set
Courtesy of BMW OF NORTH AMERICA, INC.

Lepelletier Gear Set

The Lepelletier Gear Set was introduced to BMW on the ZF GA6HP26Z. See Fig. 31. This gear set allows for 6 forward speeds and one reverse gear using a light weight design. The planetary gear train consists of a single carrier planetary gear train and a downstream double planetary gear train.

Fig. 31: Identifying Lepelletier Gear Set
Courtesy of BMW OF NORTH AMERICA, INC.

Planetary Gear Set Operation

In order to understand planetary gear set operation, it is important to understand some basic rules of operation:

- It is assumed that engine rotation is clockwise when referring to power flow charts and diagrams.
- Planetary pinions will always rotate in the same direction as the internal ring gear.
- When the sun gear is driven clockwise and the planetary carrier is held stationary the internal ring gear will rotate counter clockwise (reverse gear).
- When two or more planetary members are locked together, the assembly will rotate together. The ratio from input to output is 1:1.
- When the sun gear is held stationary and the planetary carrier is driven clockwise, the ring gear will be driven clockwise in an overdrive ratio (.75:1)

When trying to understand power flow schematics, it is important to be able to draw a comparison between the actual planetary components and the schematic symbols. The diagram below outlines the relationship between these components and the power flow schematic. The schematic is a representation of a cross section of the transmission, but you only see the top half of the cross section. The transmission is shown as though it has been quartered lengthwise. See Fig. 32.

Fig. 32: Identifying Gear Set Operation
Courtesy of BMW OF NORTH AMERICA, INC.

POWER FLOW SCHEMATIC

In order to understand power flow schematics, a relationship must be drawn between the actual components and the schematic representation. This example uses the 4HP22/24 power flow schematic. The 4HP22/24 transmission uses a Simpson Planetary Gearset and an auxiliary gearset. The auxiliary gear set is a simple planetary gearset. See Fig. 33.

Fig. 33: Identifying Power Flow Schematic
Courtesy of BMW OF NORTH AMERICA, INC.

Power Flow In First Gear

Drive torque is applied to the torque converter impeller and transferred to the turbine. The turbine shaft rotates clockwise (CW). The "A" clutch locks the turbine shaft to the rear input ring gear. The rear input ring gear rotates CW driving the rear planet pinions CW. The planetary pinions drive the common sun gear CCW, which

in turn drive the front planet pinions CW. The front planetary carrier is held from rotating CCW by one way clutch "J". The front planetary pinions which are rotating CW drive the front ring gear/rear carrier CW. The rear planetary carrier is rotating CW and is driving the planetary carrier from the auxiliary gear set. The "E" clutch in the auxiliary gear set is holding the Sun gear and the ring gear together. Therefore the auxiliary gear set is locked in a 1:1 ratio. See Fig. 34.

One Way Clutch "J" is locked to prevent the front planetary carrier from rotating CCW. One Way Clutch "H" is not used and One Way Clutch "K" is locked. One way clutch "K" is used to prevent an interruption in power flow before the "E" clutch is locked during the 4-3 shift. See Fig. 35.

Fig. 34: Power Flow Schematic In First Gear
Courtesy of BMW OF NORTH AMERICA, INC.

Fig. 35: Power Flow In First Gear
Courtesy of BMW OF NORTH AMERICA, INC.

Second Gear

Drive torque is applied to the torque converter impeller and transferred to the turbine. See Fig. 36. The turbine shaft rotates clockwise (CW). The "A" clutch locks the turbine shaft to the rear input ring gear. The rear input ring gear rotates CW driving the rear planet pinions CW. The sun gear is held stationary by the C' clutch. The rear planet pinions rotate around the fixed sun gear CW. The rear planetary carrier will rotate CW. The rear planetary carrier will drive the auxiliary gear set and will rotate as a complete unit. The auxiliary gear set is locked in a 1:1 ratio due to the "E" clutch locking the sun and ring gear together. The "C" clutch is locking the outer race of the "H" freewheel to the case. This is used for the 3/2 downshift. Freewheel "J" is not active and Freewheel "K" is locked.

Fig. 36: Power Flow Schematic In Second Gear
Courtesy of BMW OF NORTH AMERICA, INC.

Third Gear

Drive torque is applied to the torque converter impeller and transferred to the turbine. See Fig. 37. The turbine shaft rotates clockwise (CW). The "A" clutch and the "B" clutch are locked, this causes the rear input ring gear to be locked to the sun gear in the Simpson Gear set. The Simpson gear set is locked in a 1:1 ratio. The "E" clutch is locked which locks the ring gear to the sun gear in the Simpson gear set. The entire transmission planetary system is now locked in a 1:1 ratio. Freewheel "H" is overrun and freewheel "J" is not used. Freewheel "K" continues to be locked.

Fig. 37: Power Flow Schematic In Third Gear
Courtesy of BMW OF NORTH AMERICA, INC.

Fourth Gear

Drive torque is applied to the torque converter impeller and transferred to the turbine. See Fig. 38. The turbine shaft rotates clockwise (CW). (The turbine shaft can also be driven by the lock up clutch when engaged). The "A" clutch and the "B" clutch are locked, this causes the rear input ring gear to be locked to the sun gear in the Simpson Gear set. The Simpson gear set is locked in a 1:1 ratio. The "F" clutch is locked which locks the sun gear in the auxiliary gear set to the case. The Simpson gear set drives the planetary carrier CW. The planet pinions walk around the fixed sun gear in a CW direction. This causes the ring gear to rotate CW as well. The ring gear, which is the output of the transmission is driven in an overdrive ratio. Freewheel "H" and "K" are overrun. Freewheel "J" is not used.

Fig. 38: Power Flow Schematic In Fourth Gear
Courtesy of BMW OF NORTH AMERICA, INC.

Reverse Gear

Drive torque is applied to the torque converter impeller and transferred to the turbine. See Fig. 39. The turbine shaft rotates clockwise (CW). The "B" clutch is locked which drives the sun gear in the Simpson gear set CW. The sun gear drives the planet pinions CCW. The planetary carrier is held stationary by the "D" clutch. The planet pinions cause the front ring gear to rotate CCW. The front ring gear (and rear carrier) drive the auxiliary gear set CCW which rotates at a ratio of 1:1 due to the "E" clutch locking the sun and ring gear of the auxiliary gear set. Freewheel "H" and "J" are not used. Freewheel "K" is locked.

Fig. 39: Power Flow Schematic In Reverse Gear
Courtesy of BMW OF NORTH AMERICA, INC.

SHIFT CONTROL

Freewheel Shifting

In order to prevent an interruption in power flow, freewheel (One Way Clutches) are used to lock members of the planetary gear set. Certain transmissions such as the 4HP22/24, A4S270/310R and the A5S360R use freewheel shifting on all gear shifts. Transmissions such as A5S310Z, A5S440Z, A5S560Z and GA6HP26Z use freewheel shifting for only specific shifts. Other shifts in these transmissions use overlap shifting technology. To demonstrate how the freewheel is used, the freewheel "H" in the 4HP22/24 transmission will be examined.

In third gear, the sun gear is rotating clockwise. Freewheel "H" is overrun (unlocked) allowing the sun gear to rotate. Clutch "C" is active which locks the outer race of freewheel "H" to the case. During a 3/2 downshift, clutch "B" is released. The sun gear is held from rotating counter clockwise by freewheel "H" and the "C" clutch. Freewheel "H" is used to stop the counter clockwise rotation of the sun gear before the "C" clutch can engage. This prevents an interruption of power flow during the 3/2 downshift. If freewheel "H" fails to operate, there would be an increase in engine RPM from 3rd to 2nd gear. See Fig. 40 and Fig. 41 .

Fig. 40: Freewheel Shifting (Second Gear)
Courtesy of BMW OF NORTH AMERICA, INC.

Fig. 41: Freewheel Shifting (Third Gear)
Courtesy of BMW OF NORTH AMERICA, INC.

Overlap Shift Control

Overlap shift technology is currently used on ZF transmissions. The A5S310Z, A5S440Z, A5S560Z and the GA6HP26Z use overlap shift technology on most gear changes. The advantages of this design allows for the reduction of the use of One Way Clutches (freewheel) and a significant improvement in shift quality. During an overlap shift, the releasing clutch pressure is reduced at the same rate that the engaging clutch pressure is increased. The result is a smooth transfer or torque between gear ratios.

As shown in the diagram, clutch 1 is fully engaged with maximum pressure. Clutch 2 is fully released. During overlap shifting, the TCM closely monitors the rotational speeds of the turbine (input) shaft and output shaft. The TCM then uses the EDS solenoids to control pressures during shifting to provide the optimum shift timing and overlap control. See Fig. 42.

Fig. 42: Identifying Overlap Shift Control
Courtesy of BMW OF NORTH AMERICA, INC.

Overlap Shifting

During the transition of overlap, the clutches run through a slip zone. The torque is gradually transferred from the clutch that is releasing to the clutch that is engaging. The new gear engages the moment the torque level exceeds that of the first clutch. This is described as overlap. If the overlap is correct, (zero overlap) the

engaging clutch takes over as much torque as the disengaging clutch releases. The result is a seemingly unnoticed shift of the best quality. See Fig. 43 and Fig. 44 .

Fig. 43: Identifying Overlap Shifting (Clutch 1 Engaged)
Courtesy of BMW OF NORTH AMERICA, INC.

Fig. 44: Identifying Overlap Shifting (Clutch 1 Disengaged)
Courtesy of BMW OF NORTH AMERICA, INC.

Negative Overlap

Negative overlap occurs when the engaging clutch takes over too late or the releasing clutch drops pressure too early. The result is that the drive torque is briefly interrupted. When the engine is operating under load, the engine speed increases due to the interruption. When coasting the engine speed drops. See Fig. 45.

Fig. 45: Identifying Negative Overlap
Courtesy of BMW OF NORTH AMERICA, INC.

Positive Overlap

If positive overlap occurs, the engaging clutch takes over too early or the releasing clutch pressure drops too late. The gear set would become momentarily blocked if this condition occurs during an upshift. When this occurs the ratio of the gear set becomes 1:1 momentarily. The result is a loss in drive torque during a gear shift. See Fig. 46.

Fig. 46: Identifying Positive Overlap
Courtesy of BMW OF NORTH AMERICA, INC.

TRANSMISSION CONTROL MODULE

The TCM receives inputs, processes information and actuates the output elements to provide optimal shift points. The TCM is programmed for maximum shift comfort and fuel economy. The TCM on most BMW vehicles is located in the E-Box next to the ECM (DME). There are several types of TCM housings:

- 35 Pin TCM (TCU) - used on the 4HP transmissions.
- 55 Pin TCM used on the A4S310R (THM-R1).
- 88 Pin TCM used on all others up to 98.
- 134 Pin TCM used on all BMW transmission from the 99 model year. (Note- the 134 pin TCM was introduced on the 98 Models equipped with the A5S440Z).

The 134 Pin TCM is also referred to as SKE (Standard Shell Construction). The SKE housing uses 5 separate connectors. On transmission applications only three connectors (1, 3 and 4) are used. Connectors 2 and 5 are blank and are NOT used. The connectors are Blue in color to avoid confusion with the ECM (DME) connectors which are Black. See Fig. 47.

Fig. 47: Identifying Transmission Control Modules & Connectors
Courtesy of BMW OF NORTH AMERICA, INC.

Article GUID: A00169238

Back To Article

IDENTIFICATION

NOTE: For more information, see AUTOMATIC TRANSMISSION article.

VEHICLE IDENTIFICATION

Model (Chassis Code)	Engine Size (Code)
2001-2002	
Z3 (E36)	2.5 L (M54)
Z3 (E36)	3.0 (M54)

REMOVAL & INSTALLATION

CAUTION: Disconnecting vehicle battery will cancel fault codes of control units. On vehicles with radio codes, after disconnecting battery, radio codes must be re-entered. Obtain radio code card from customer. Note stored stations and restore then after connecting battery. Also, where applicable, initialize sunroof and set steering angle.

CAUTION: Use only the approved transmission fluid in this automatic transmission. Failure to comply with this requirement will result in serious damage to the automatic transmission. For more information, see SERVICING - A/T .

REMOVAL

1. Disconnect battery. See INSTRUCTIONS FOR DISCONNECTING AND CONNECTING BATTERY.
2. Remove intake hood (1). See Fig. 1 .
3. Release fan cowl (1) and pull a little upwards. See Fig. 2 .
4. Remove microfilter housing (1) and heater bulkhead behind it. See Fig. 3 .
5. If necessary, remove reinforcement plate. Remove engine underguard (1). See Fig. 4 .
6. Release screws. Remove front end reinforcement. See Fig. 5 .
7. Remove complete exhaust system. See REMOVING AND INSTALLING COMPLETE EXHAUST SYSTEM (Z3 M54).
8. Remove first heat shield (1). See Fig. 6 .
9. Remove second heat shield (1). See Fig. 7 .
10. Grip clamping sleeve (1). Release nut (2). See Fig. 8 .
11. Grip Bowden cable (1) at hexagon (2). Release nut (3). Pull cable (1) out of holder. See Fig. 9 .
12. Support transmission with Special Tools (00 2 030 / 24 5 301 / 24 5 305). See Fig. 10 .
13. Release screws. Remove cross-member (1). See Fig. 11 .
14. Release screws of flexible disk-to-propeller shaft and transmission output flange. See Fig. 12 .
15. Grip propeller shaft. Release nuts. Bend propeller shaft downwards at center bearing (1). See Fig. 13 . Detach propeller shaft from transmission output flange and tie back to side on vehicle underbody.
16. Lower transmission until cylinder head touches bulkhead. Suspend Special Tool (11 8 022) from left and right control arms. See Fig. 14 . Position special tool so that engine oil sump is securely resting on special tool. Tighten down knurled screws until special tool rests against engine oil sump.
17. Unlock and remove cable connector (1). Unclip cable from transmission housing. See Fig. 15 .
18. Release screw (1). Withdraw hydraulic lines (2) to oil cooler from transmission housing. See Fig. 16 .
19. Remove cover. See Fig. 17 .

20. Release retaining screws of torque converter (3 x) with Special Tool (24 1 110). See Fig. 18 .
21. Protect torque converter from slipping out. To do so, insert Special Tool (24 4 131 / 24 4 135) in opening in transmission housing. See Fig. 19 . Clamp torque converter.
22. Release screws. See Fig. 20 . Pull off transmission from engine towards rear and lower it.

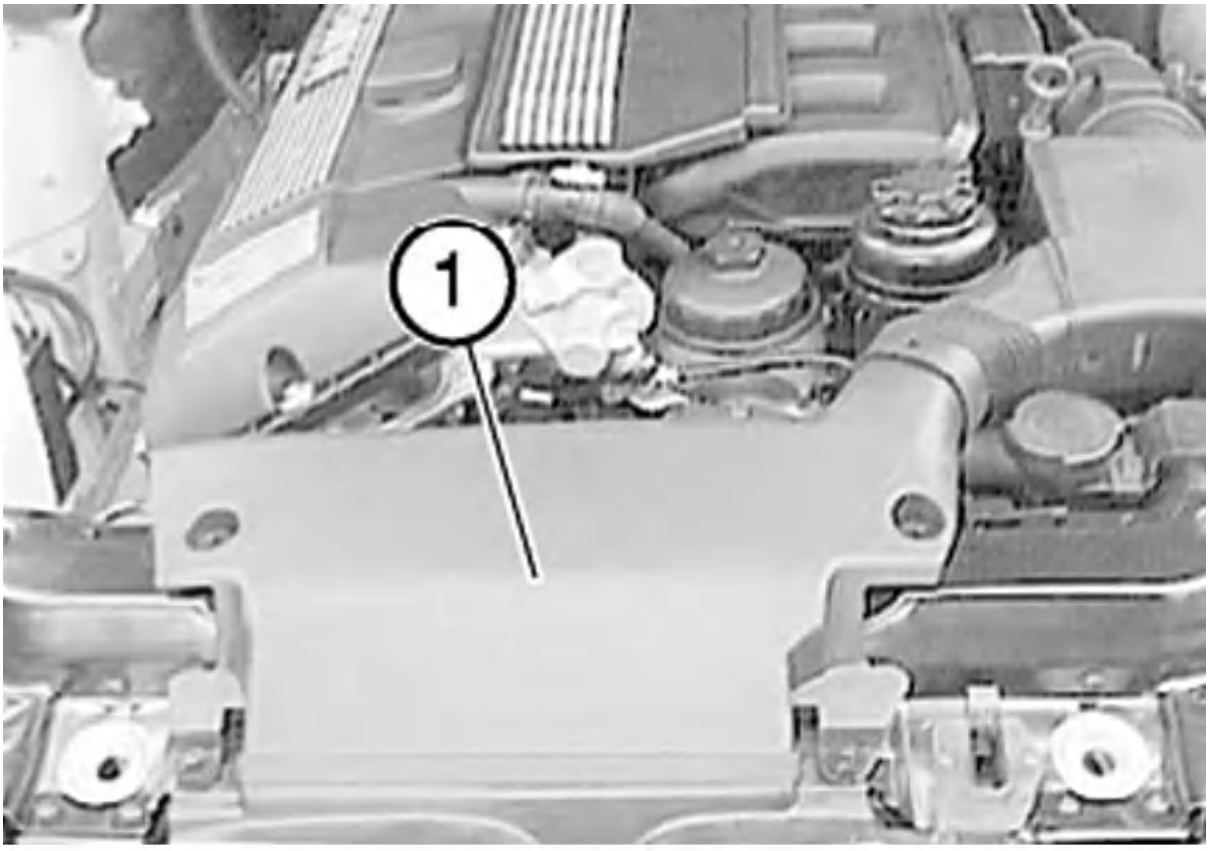

G00367846

Fig. 1: Removing Intake Hood
Courtesy of BMW OF NORTH AMERICA, INC.

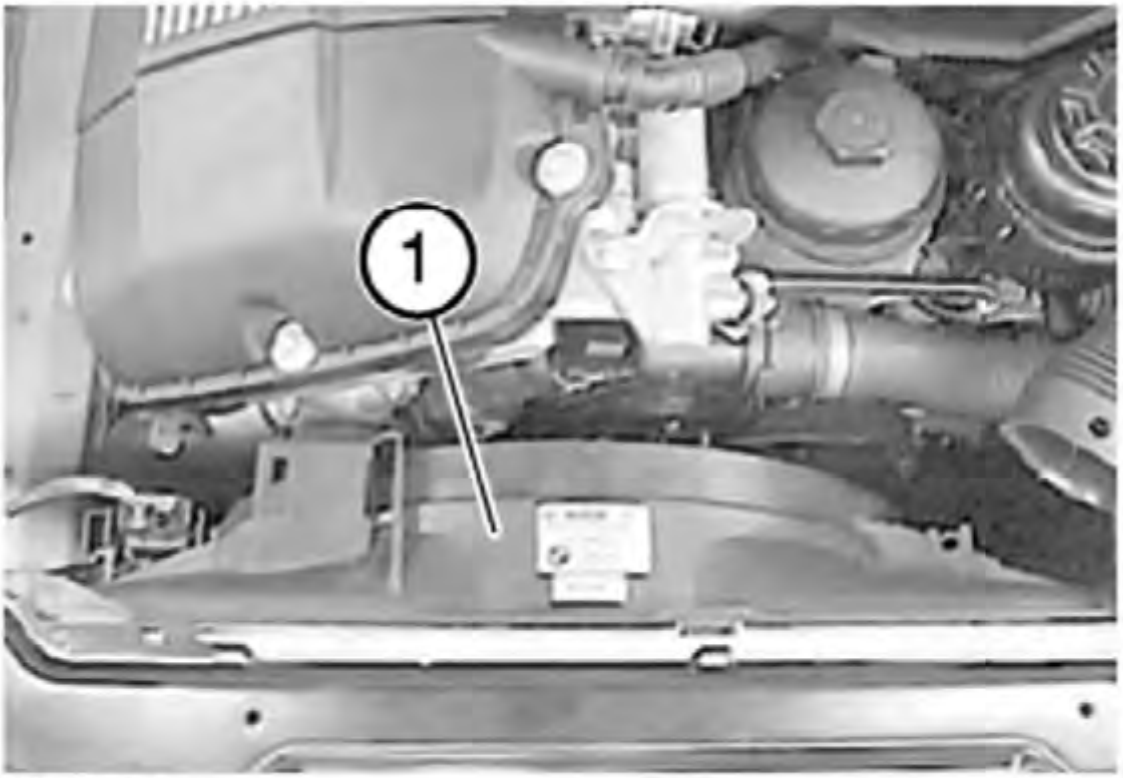

G00367847

Fig. 2: Releasing Fan Cowl
Courtesy of BMW OF NORTH AMERICA, INC.

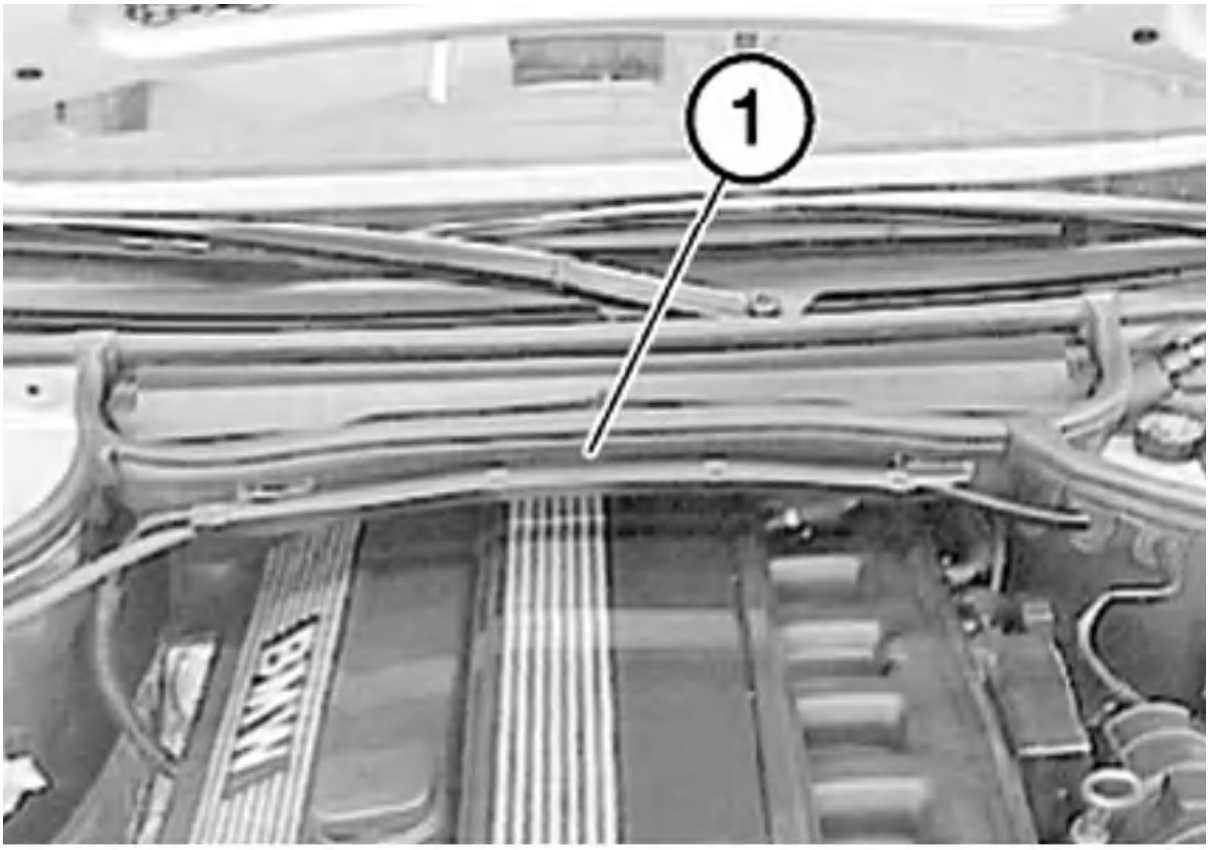

G00367848

Fig. 3: Removing Microfilter housing

Courtesy of BMW OF NORTH AMERICA, INC.

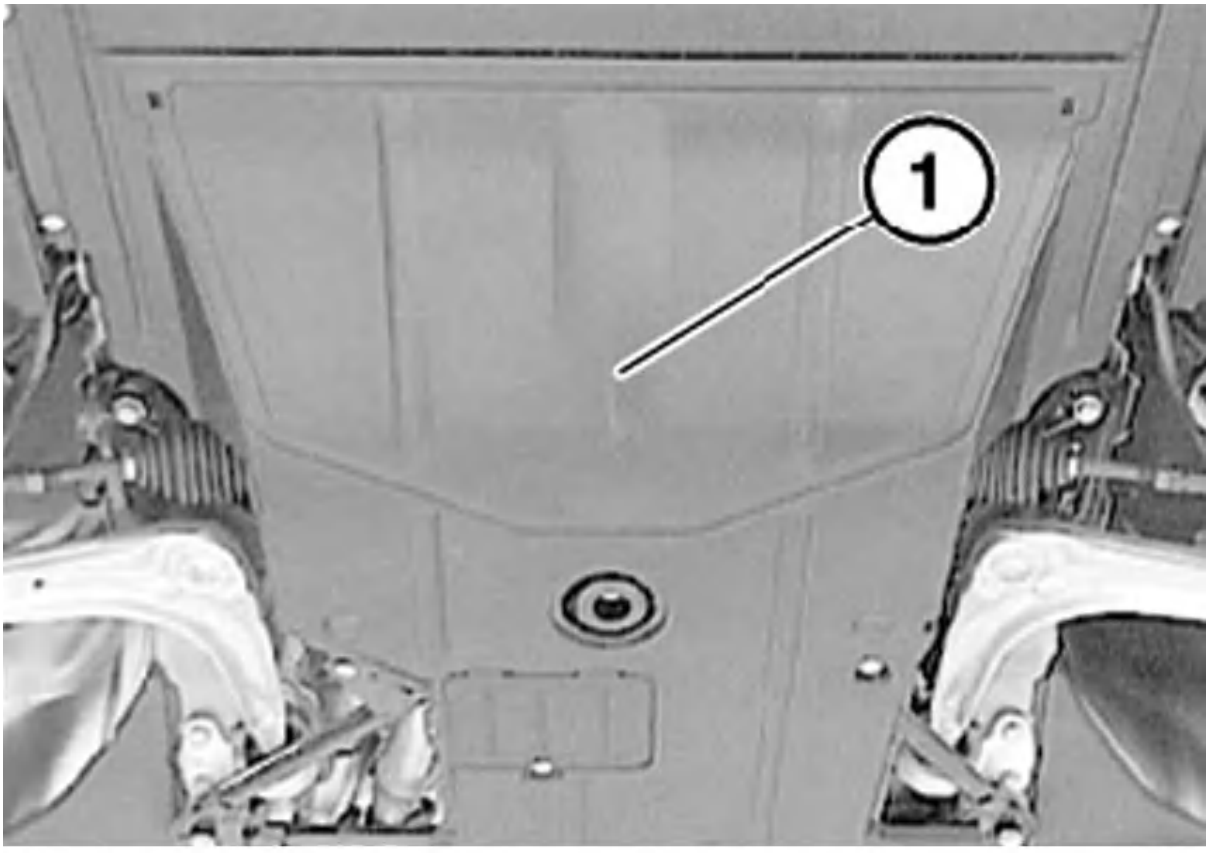

G00367849

Fig. 4: Removing Engine Underguard
Courtesy of BMW OF NORTH AMERICA, INC.

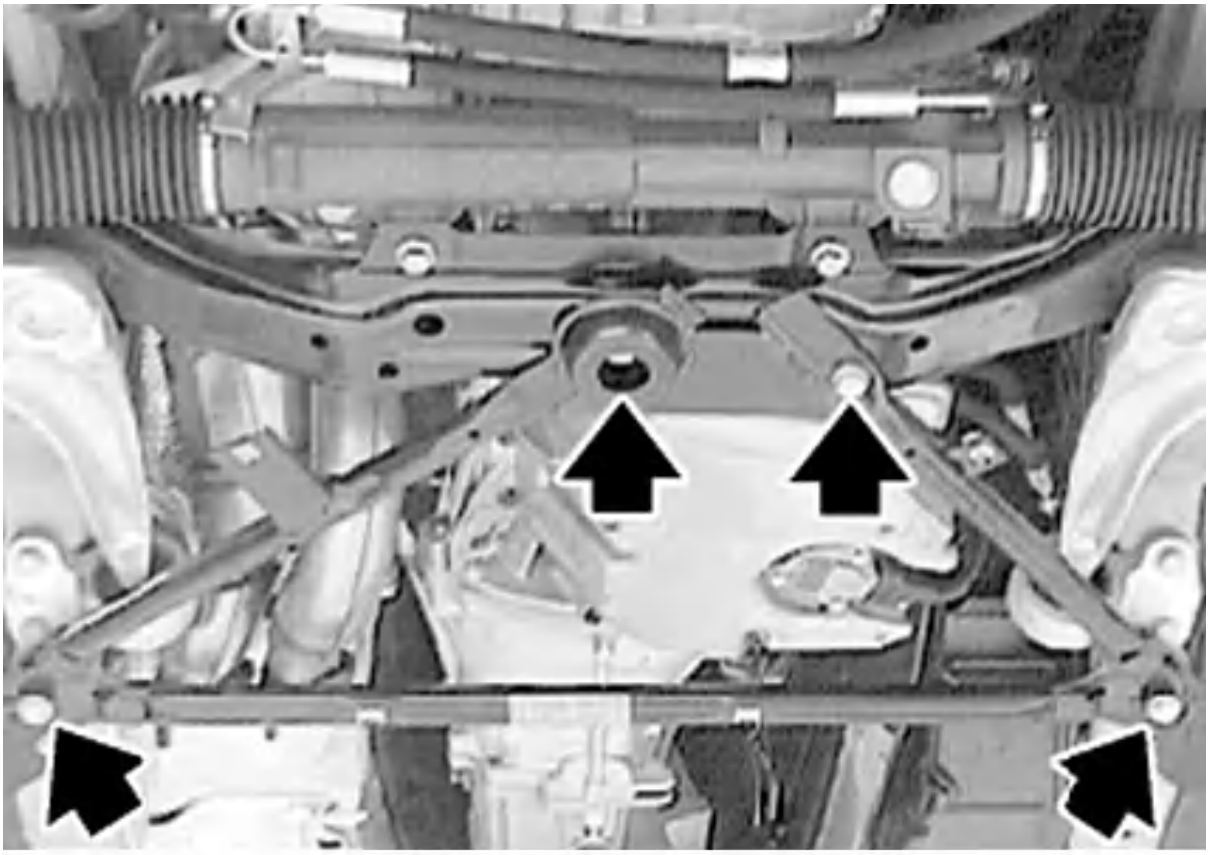

Fig. 5: Removing Front End Reinforcement
Courtesy of BMW OF NORTH AMERICA, INC.

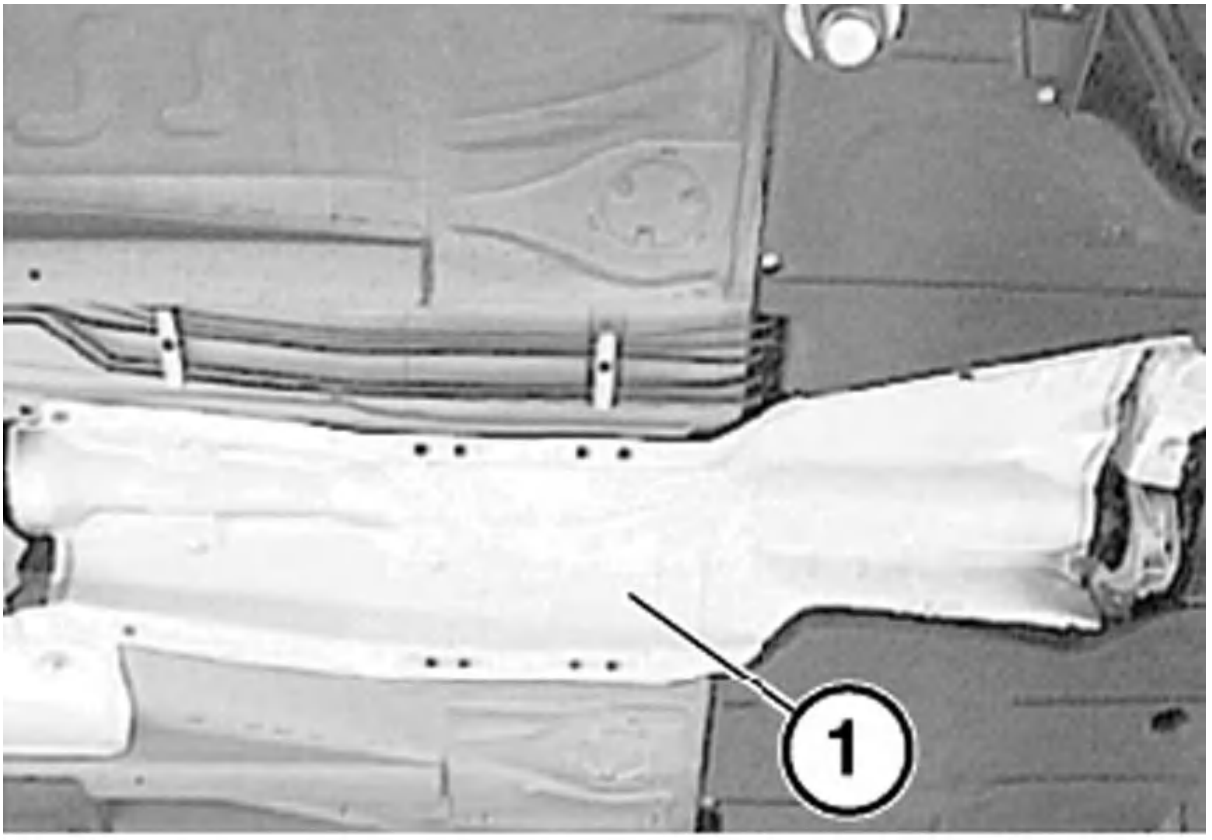

G00367851

Fig. 6: Removing First Heat Shield
Courtesy of BMW OF NORTH AMERICA, INC.

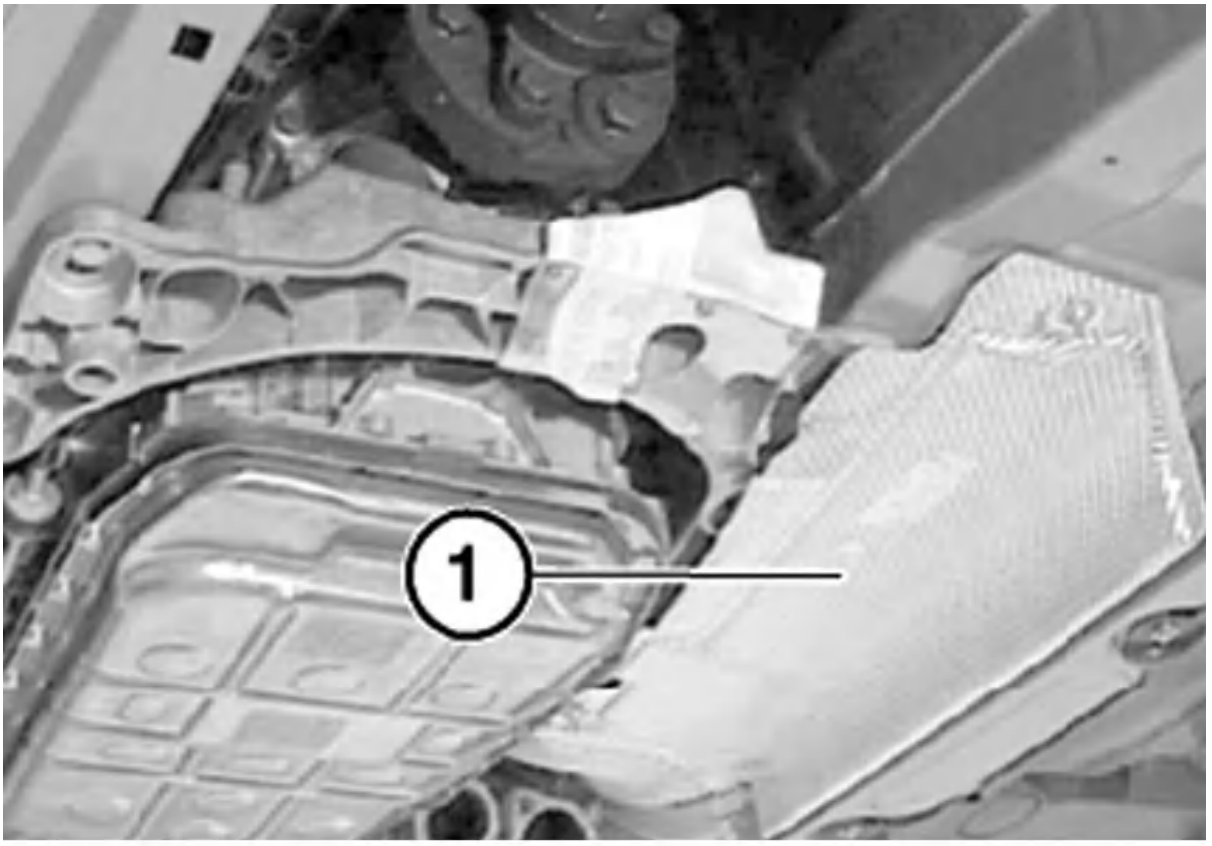

G00367852

Fig. 7: Removing Second Heat Shield
Courtesy of BMW OF NORTH AMERICA, INC.

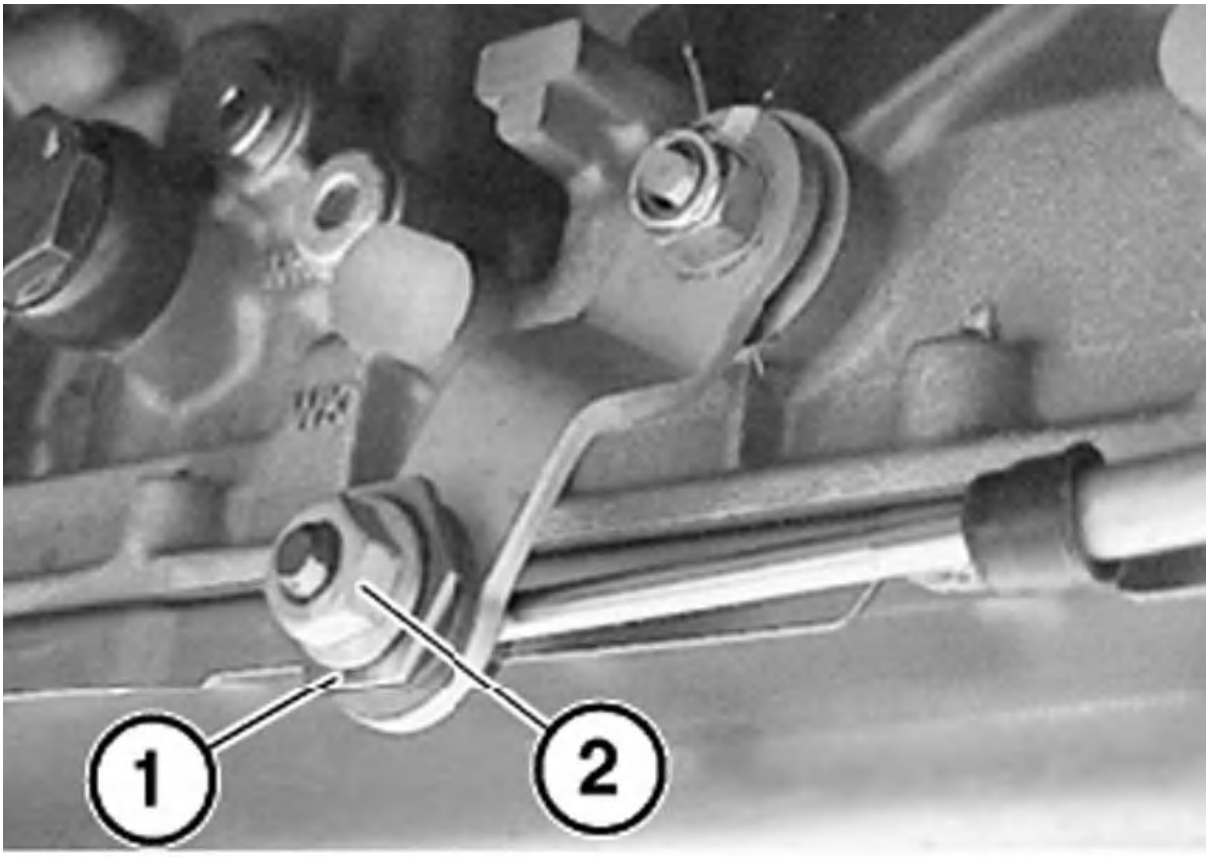

G00367853

Fig. 8: Releasing Selector Lever Nut
Courtesy of BMW OF NORTH AMERICA, INC.

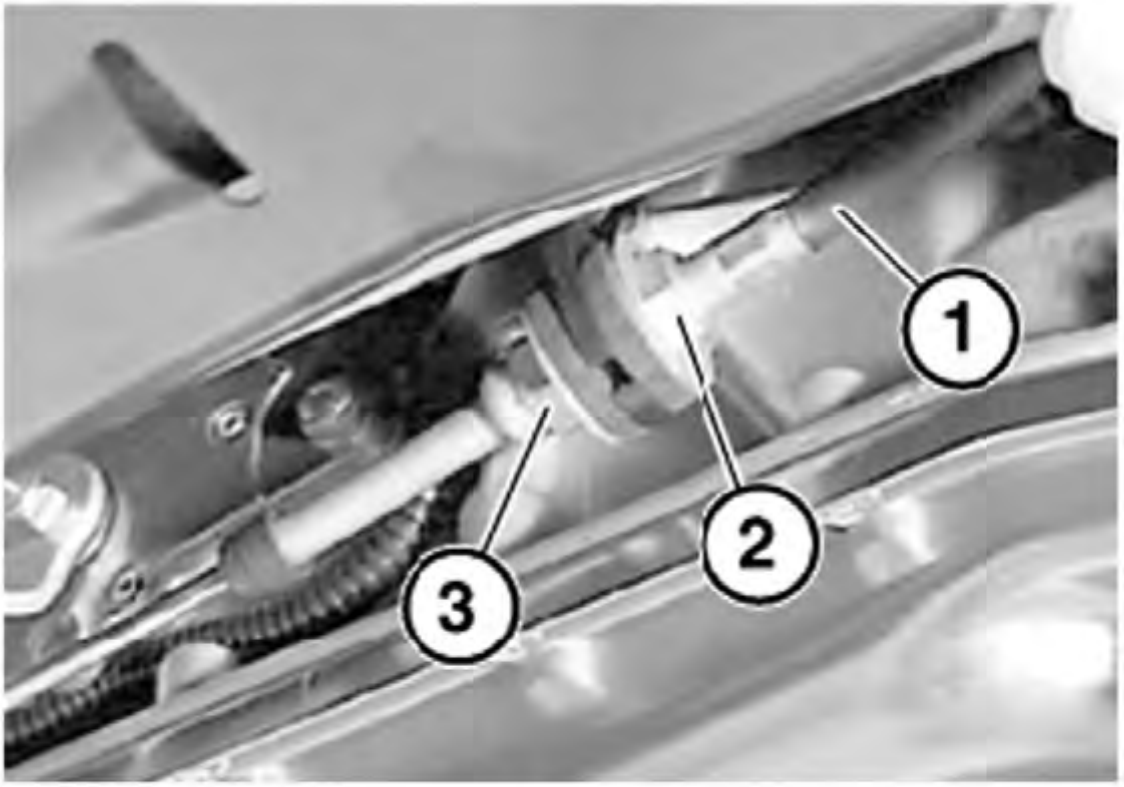

G00367854

Fig. 9: Pulling Bowden Cable Out
Courtesy of BMW OF NORTH AMERICA, INC.

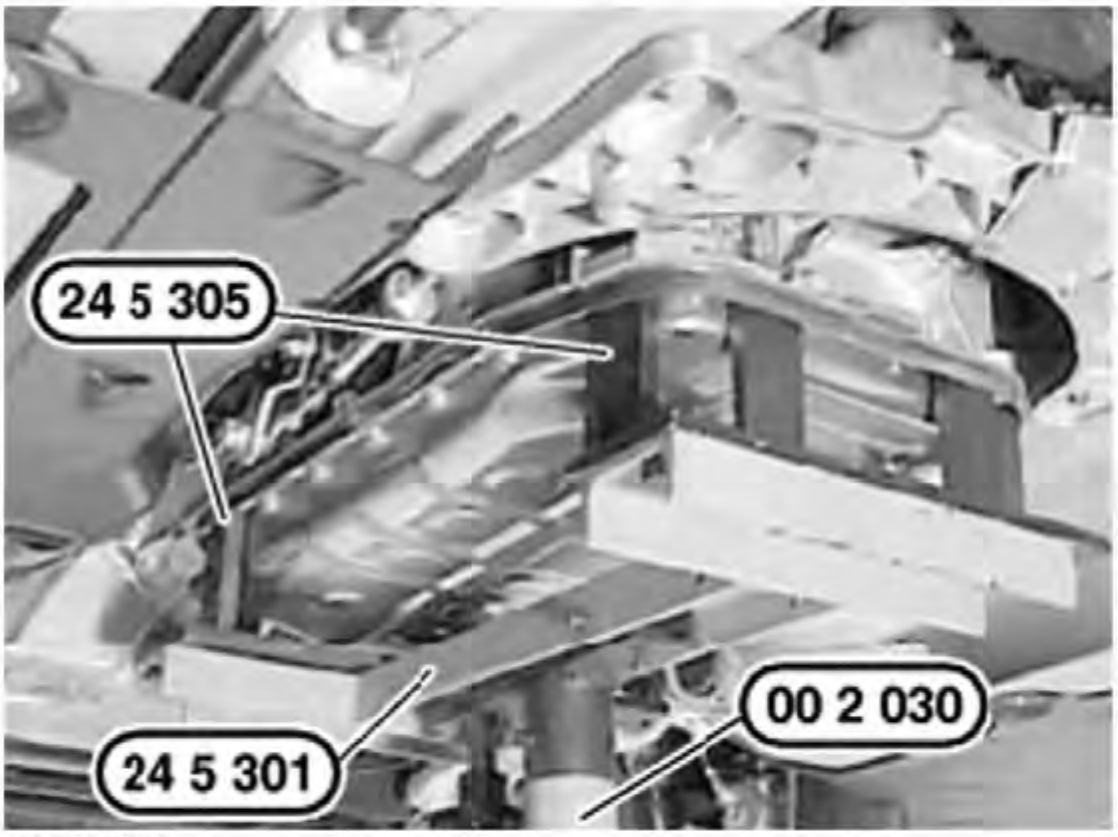

G00367855

Fig. 10: Supporting Transmission
Courtesy of BMW OF NORTH AMERICA, INC.

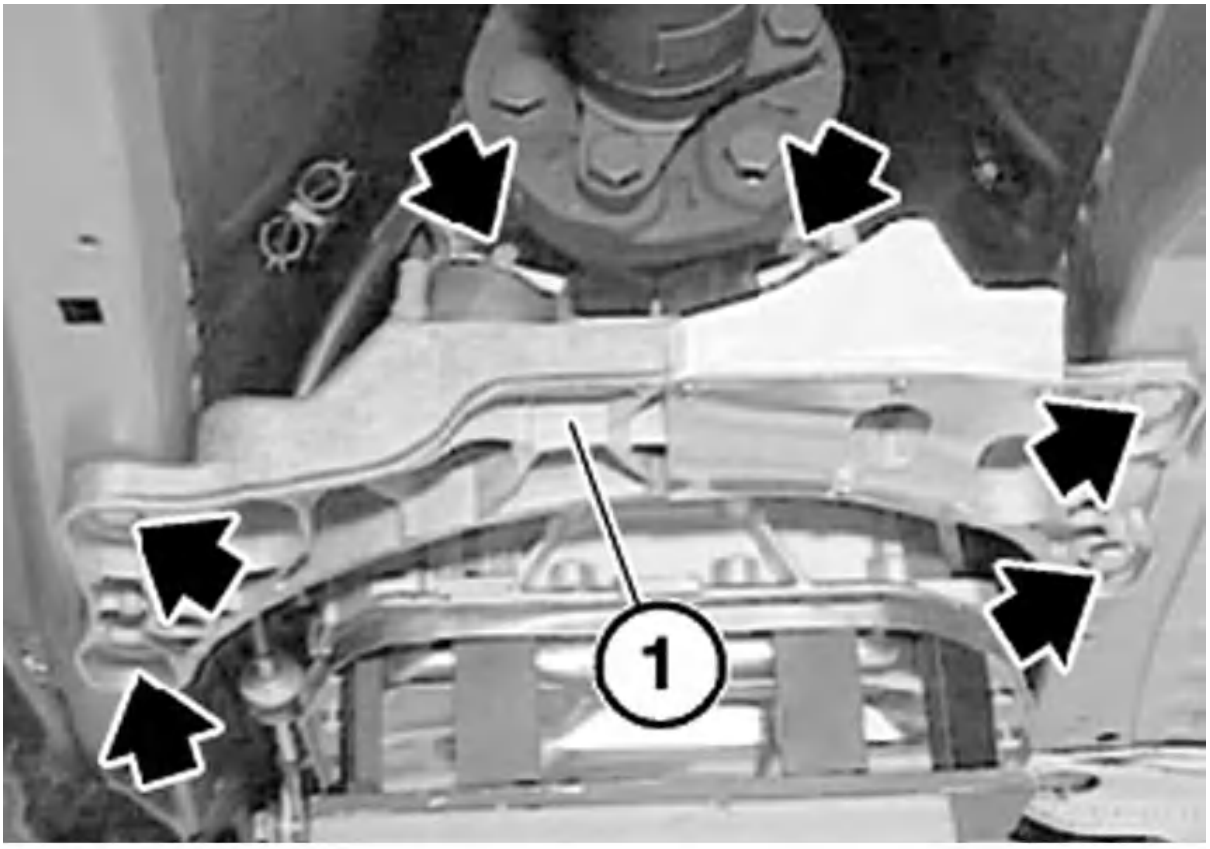

G00367856

Fig. 11: Removing Cross-Member
Courtesy of BMW OF NORTH AMERICA, INC.

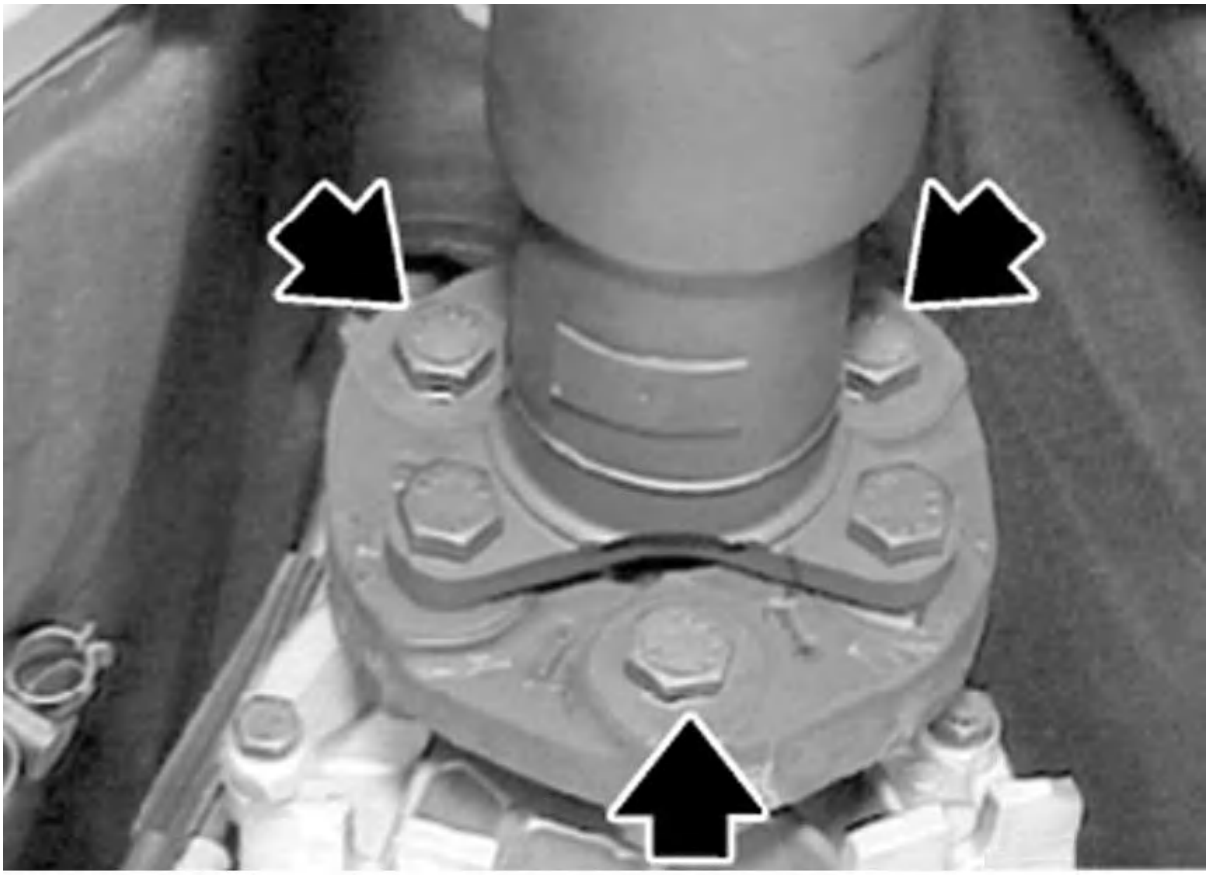

Fig. 12: Locating Flexible Disk To Propeller Shaft Screws
Courtesy of BMW OF NORTH AMERICA, INC.

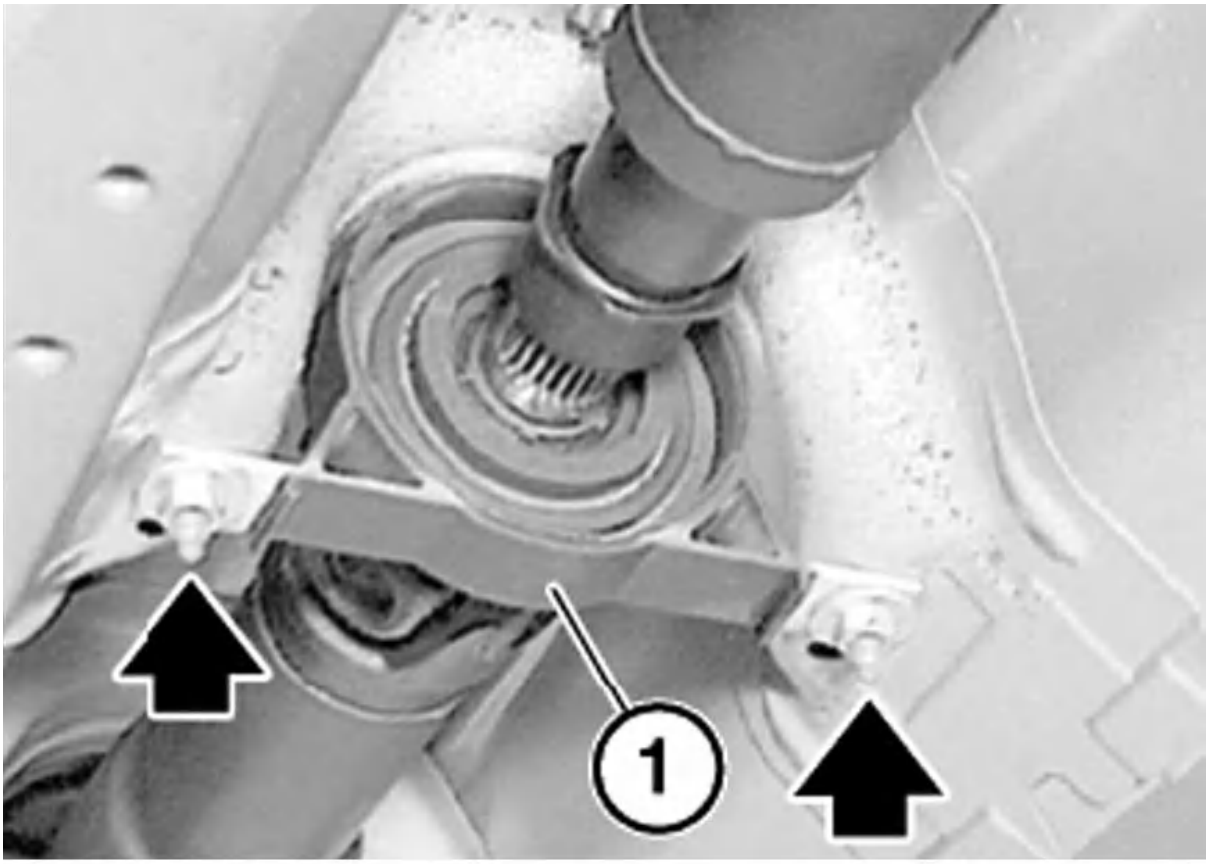

G00367858

Fig. 13: Detaching Propeller Shaft From Transmission Output Flange
Courtesy of BMW OF NORTH AMERICA, INC.

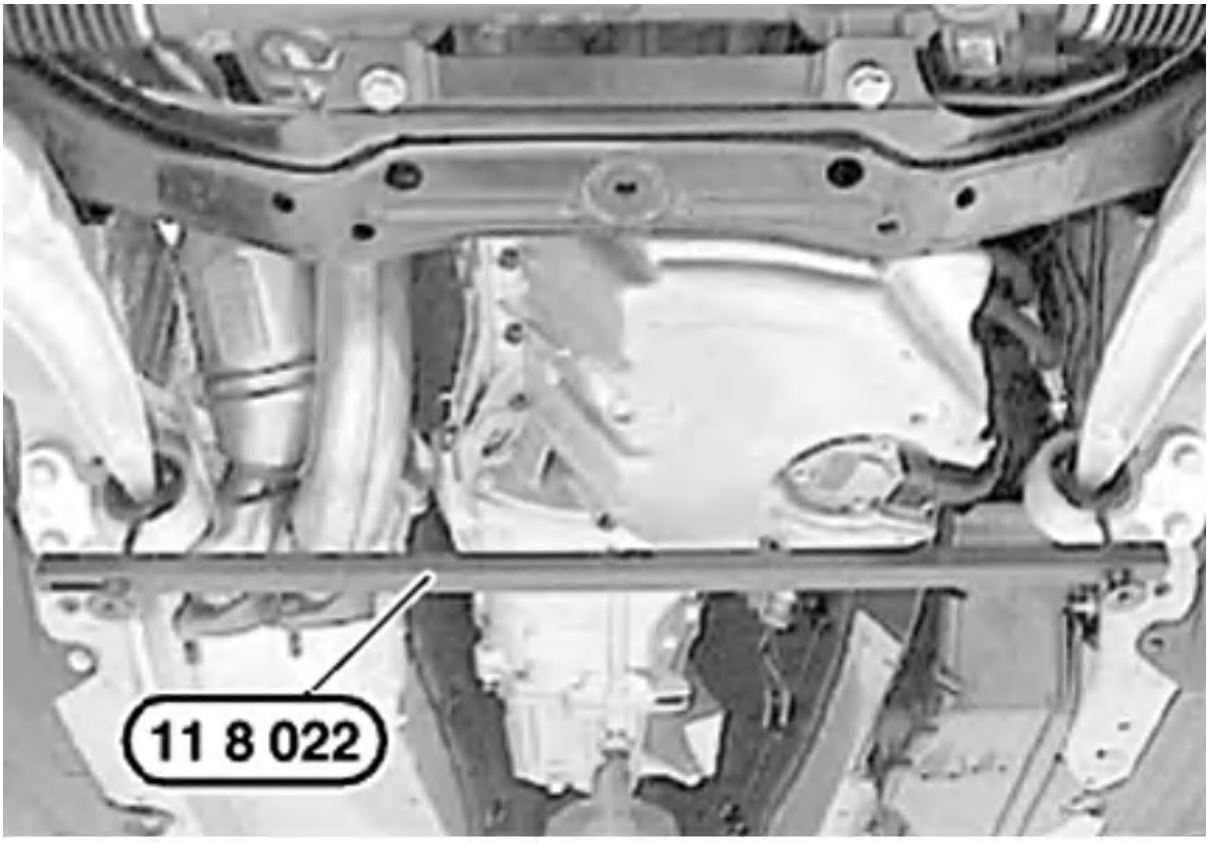

G00367859

Fig. 14: Lowering Transmission
Courtesy of BMW OF NORTH AMERICA, INC.

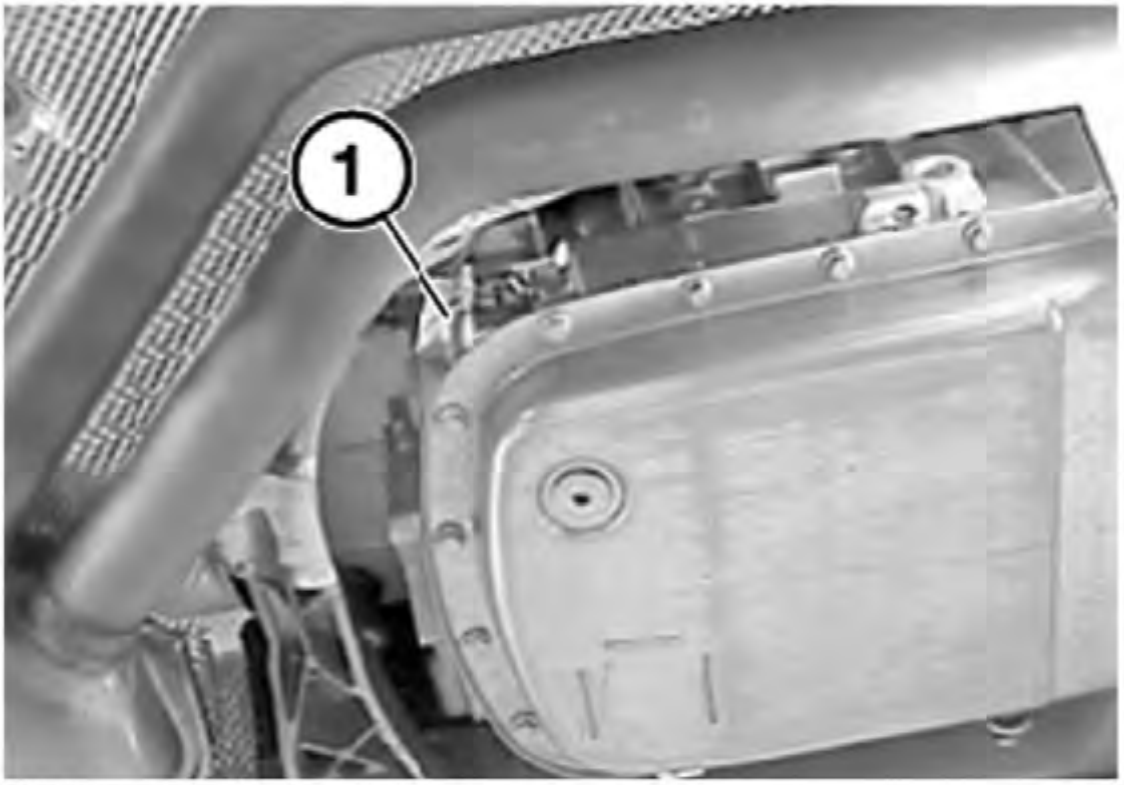

G00367860

Fig. 15: Removing Cable Connector
Courtesy of BMW OF NORTH AMERICA, INC.

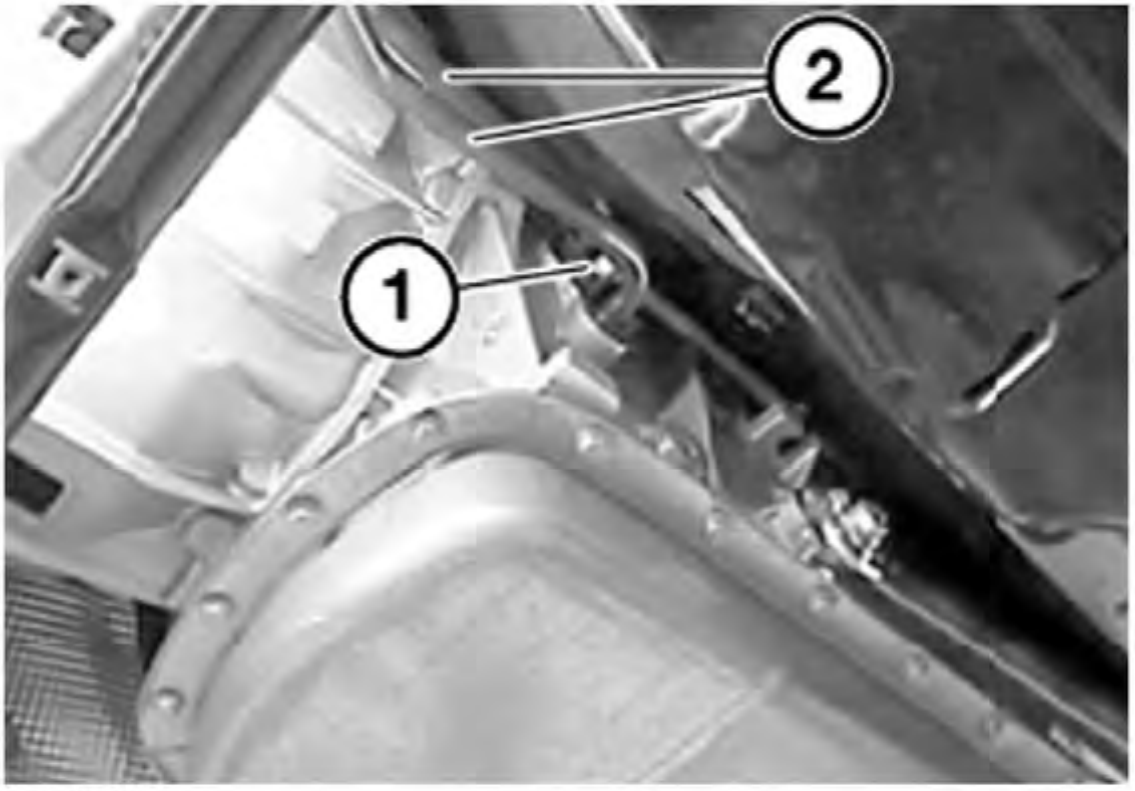

G00367861

Fig. 16: Locating Hydraulic Lines
Courtesy of BMW OF NORTH AMERICA, INC.

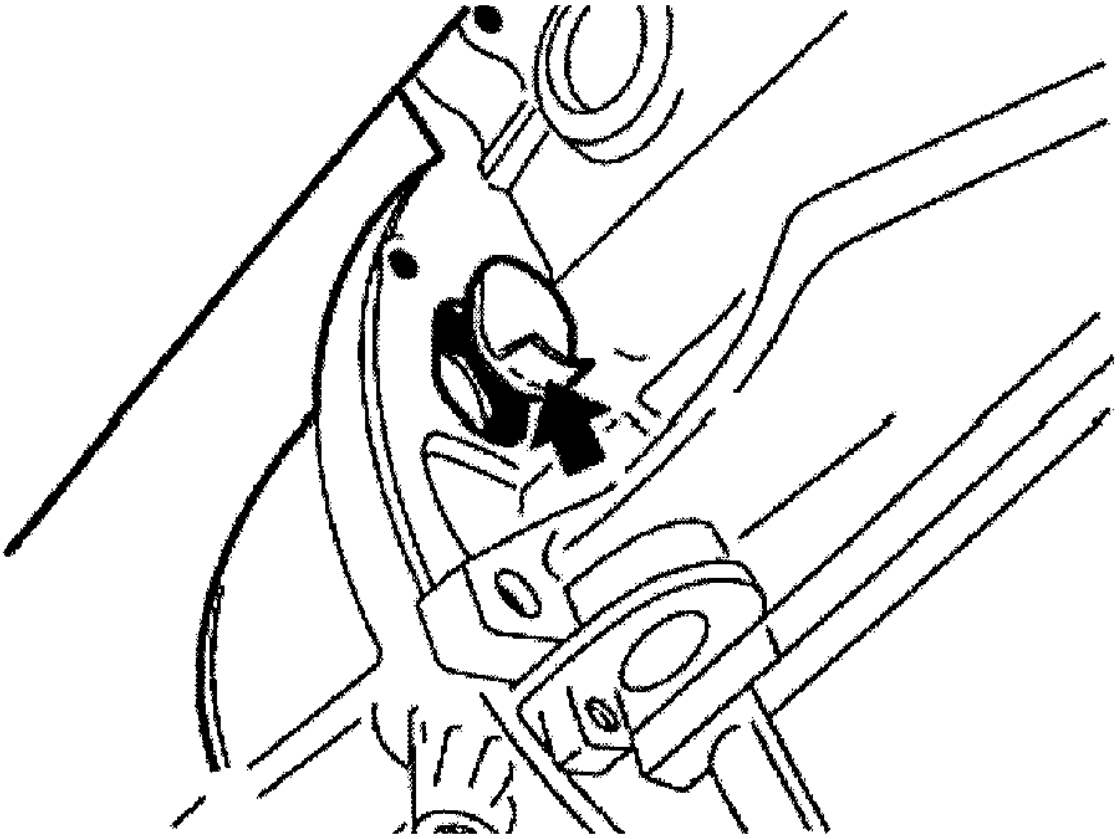

Fig. 17: Removing Cover
Courtesy of BMW OF NORTH AMERICA, INC.

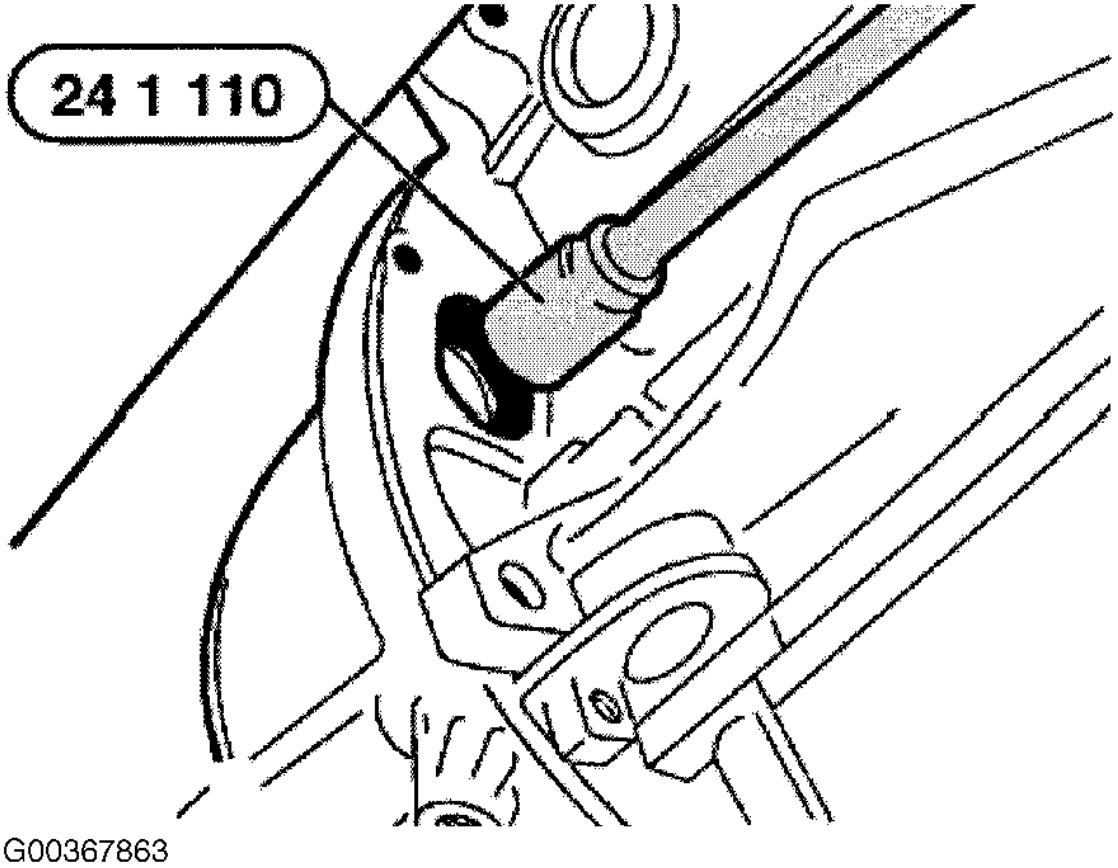

Fig. 18: Releasing Retaining Screws
Courtesy of BMW OF NORTH AMERICA, INC.

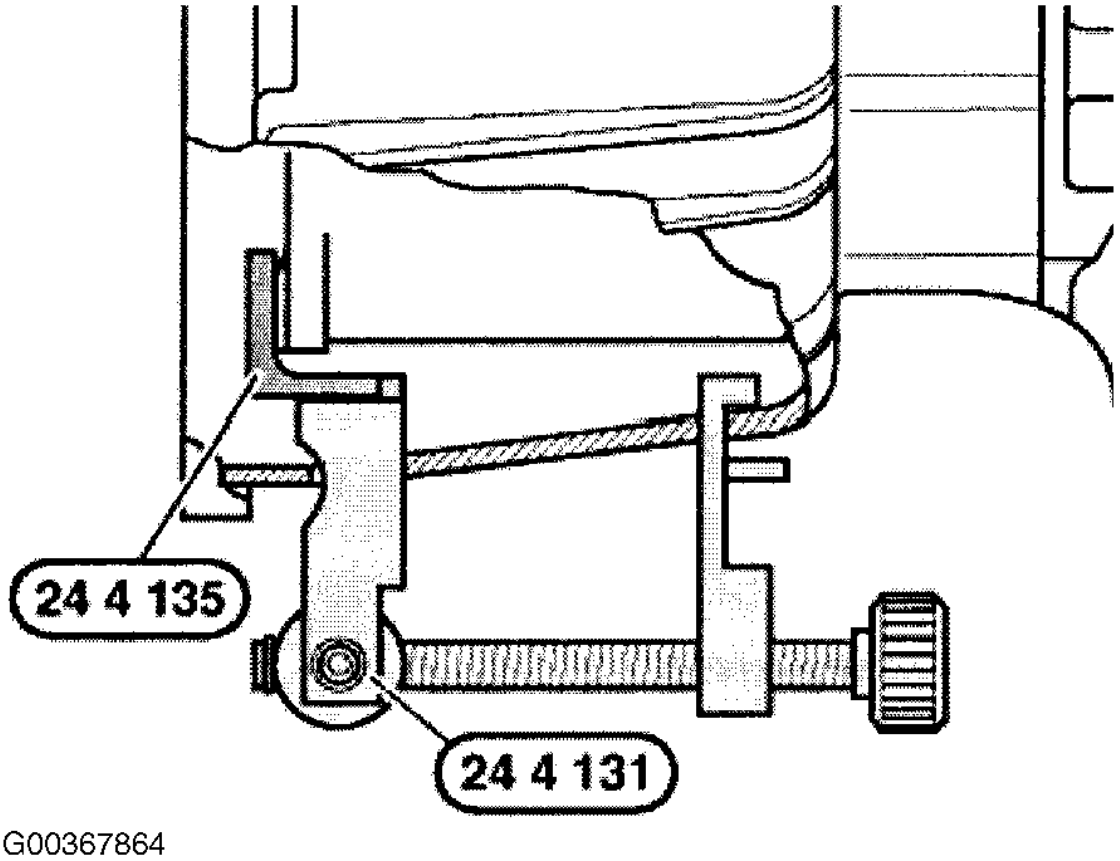

Fig. 19: Protecting Torque Converter From Slipping Out
Courtesy of BMW OF NORTH AMERICA, INC.

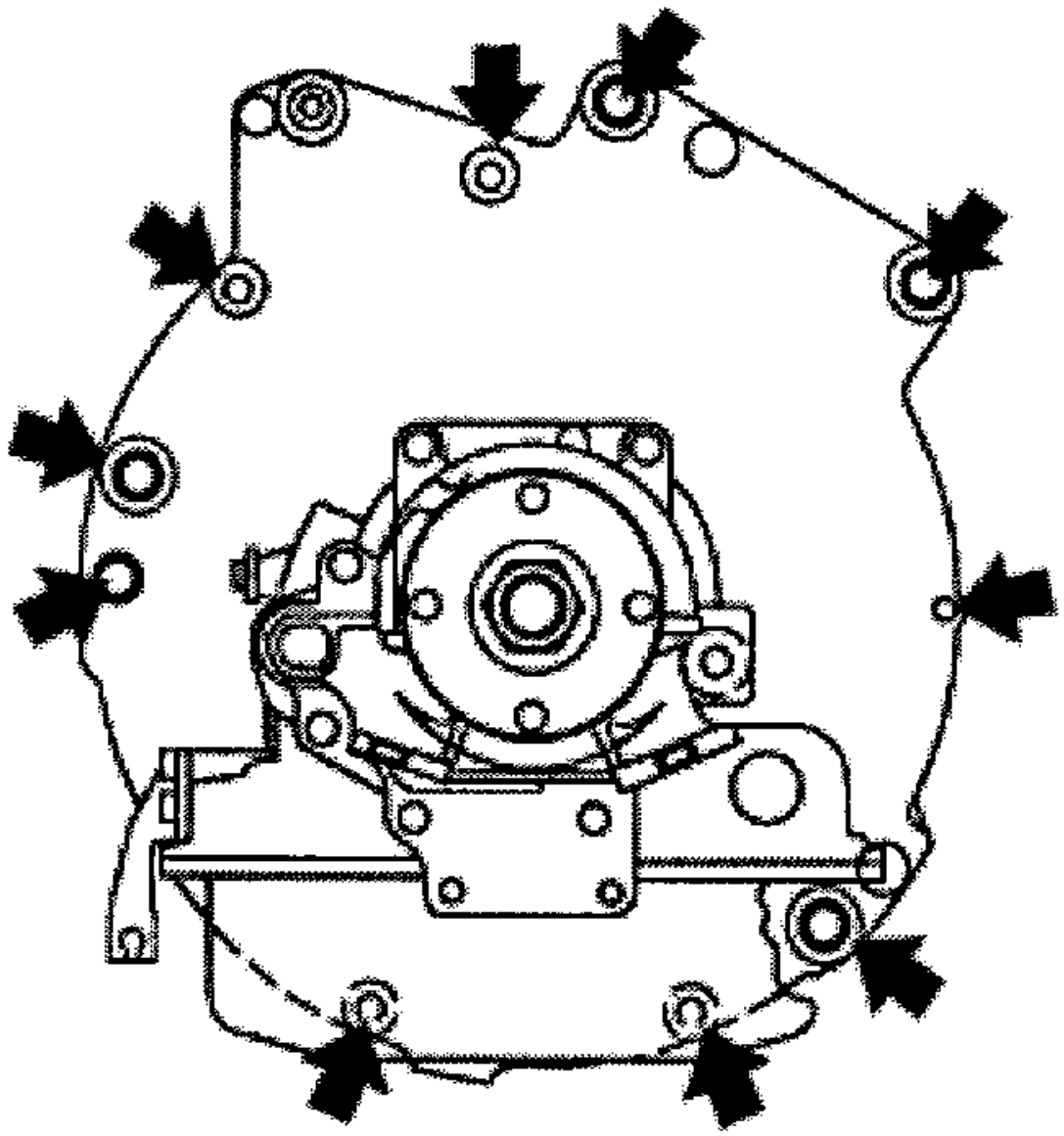

Fig. 20: Removing/Installing Transmission-To-Engine Screws
Courtesy of BMW OF NORTH AMERICA, INC.

INSTALLATION

CAUTION: When joining up engine and transmission, ensure ease of movement of torque converter.

1. Pay attention to adapter sleeves (1 and 2). See Fig. 21 . If necessary, withdraw adapter sleeves from transmission housing. Insert new adapter sleeves into engine block.
2. The sheet metal flywheel is equipped with three recesses for the torque converter retaining lugs. When joining together engine and transmission, the three retaining lugs on the torque converter must be aligned with the three recesses in the sheet metal flywheel. See Fig. 22 . Failure to comply with this requirement leads to secondary damage on the automatic transmission. The torque converter or engine is not able to spin and would cause damage.
3. Bore on driver must point to center of aperture in cover plate. See Fig. 23 .

4. Twist torque converter on transmission until bores on lugs point to center of bore on flywheel. Screw Special Tool (24 2 300) into lug. See Fig. 24 .
5. Raise automatic transmission until bore on driver is reached. Carefully insert transmission into bore on driver with Special Tool (24 2 300). See Fig. 25 . Flange transmission housing to engine. Remove special tool 24 2 300 from lug towards front.
6. Pay attention to adapter sleeves (1 and 2). See Fig. 21 .
7. Tighten transmission-to-engine screws to specification. See Fig. 20 . See TORQUE SPECIFICATIONS .
8. Use only original screws. Tighten torque converter-to-flywheel screws to specification. See Fig. 18 . See TORQUE SPECIFICATIONS .
9. To complete installation, reverse removal procedure. Replace sealing rings on hydraulic lines (2) to oil cooler. See Fig. 16 .
10. Pull off cover tape from butylene tape on both sides. Stick butylene tape (1) to outside of center bearing (2). See Fig. 26 . Remove butylene tape already attached to center bearing. Clean adhesive area on center bearing and on body. Then coat adhesive area on body with mineral oil. This coating with oil is necessary to facilitate insertion of the sticky butylene tape in the propeller shaft tunnel. This prevents the butylene tape from being deformed. Press center bearing (2) into transmission tunnel. See Fig. 27 .
11. Tighten nuts of center mount-to-body to specification. See Fig. 13 . See TORQUE SPECIFICATIONS .
12. Tighten nuts of flexible disk-to-propeller shaft and transmission output flange to specification. See Fig. 12 . See TORQUE SPECIFICATIONS .
13. Tighten screws of cross member-to-body and rubber mounts-to-cross member or transmission to specification. See Fig. 11 . See TORQUE SPECIFICATIONS .
14. Tighten Bowden cable on shift tower/transmission to specification. See Fig. 9 . See TORQUE SPECIFICATIONS .
15. Check cable for ease of movement. Move selector lever to Park. Grip clamping sleeve (1). See Fig. 28 . Slacken nut (2). Press selector lever (3) forwards into park position. Press cable (4) in direction of arrow and release again. Grip clamping sleeve (1). Tighten down nut (2) to specification. See TORQUE SPECIFICATIONS . Move selector lever to park position. Check whether parking gear is engaged by turning propeller shaft.
16. Tighten screws of front end reinforcement on front axle carrier/engine carrier to specification. See Fig. 5 . See TORQUE SPECIFICATIONS .
17. If necessary, install reinforcement plate and tighten to specification. See TORQUE SPECIFICATIONS .
18. After completion of work, check transmission fluid level. Connect battery.

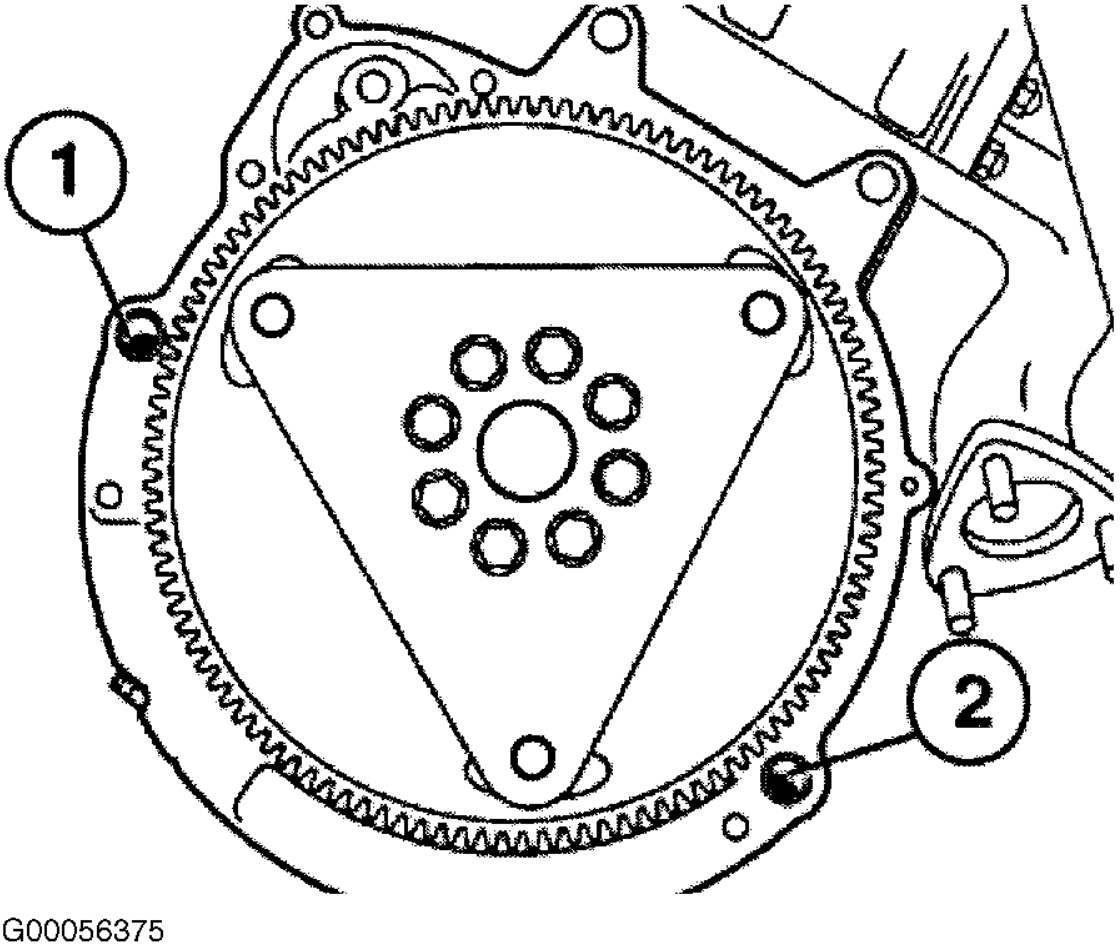

Fig. 21: Locating Adapter Sleeves
Courtesy of BMW OF NORTH AMERICA, INC.

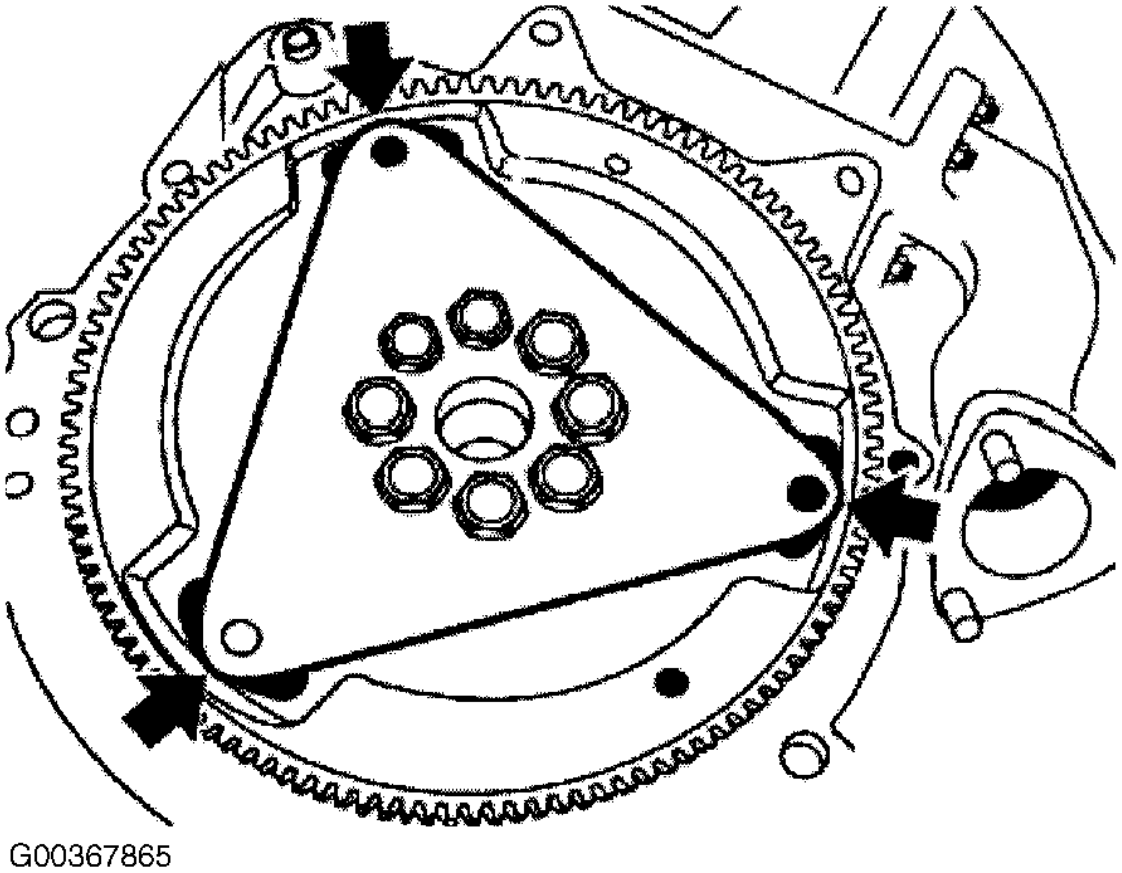

Fig. 22: Aligning Recesses In Sheet Metal Flywheel
Courtesy of BMW OF NORTH AMERICA, INC.

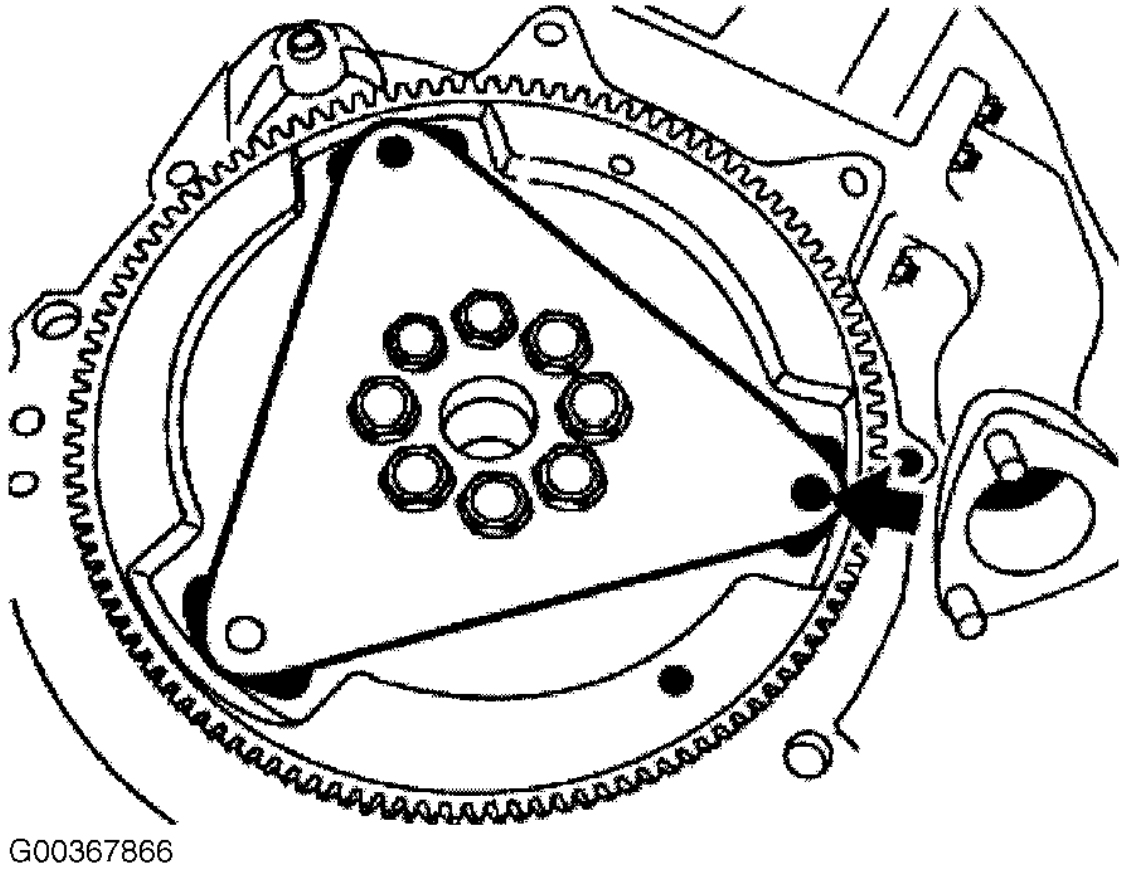

Fig. 23: Pointing Bore To Center Of Aperture In Cover Plate
Courtesy of BMW OF NORTH AMERICA, INC.

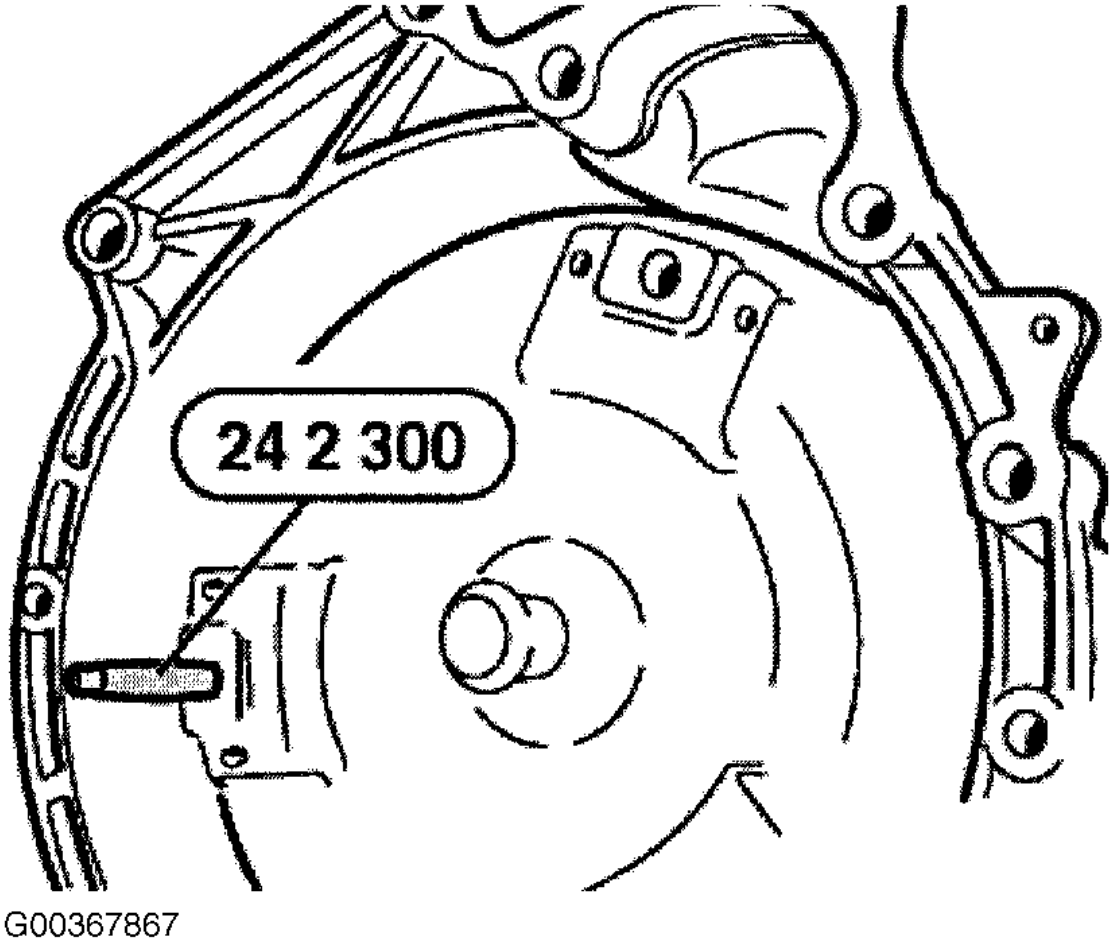

Fig. 24: Screwing Special Tool Into Lug
Courtesy of BMW OF NORTH AMERICA, INC.

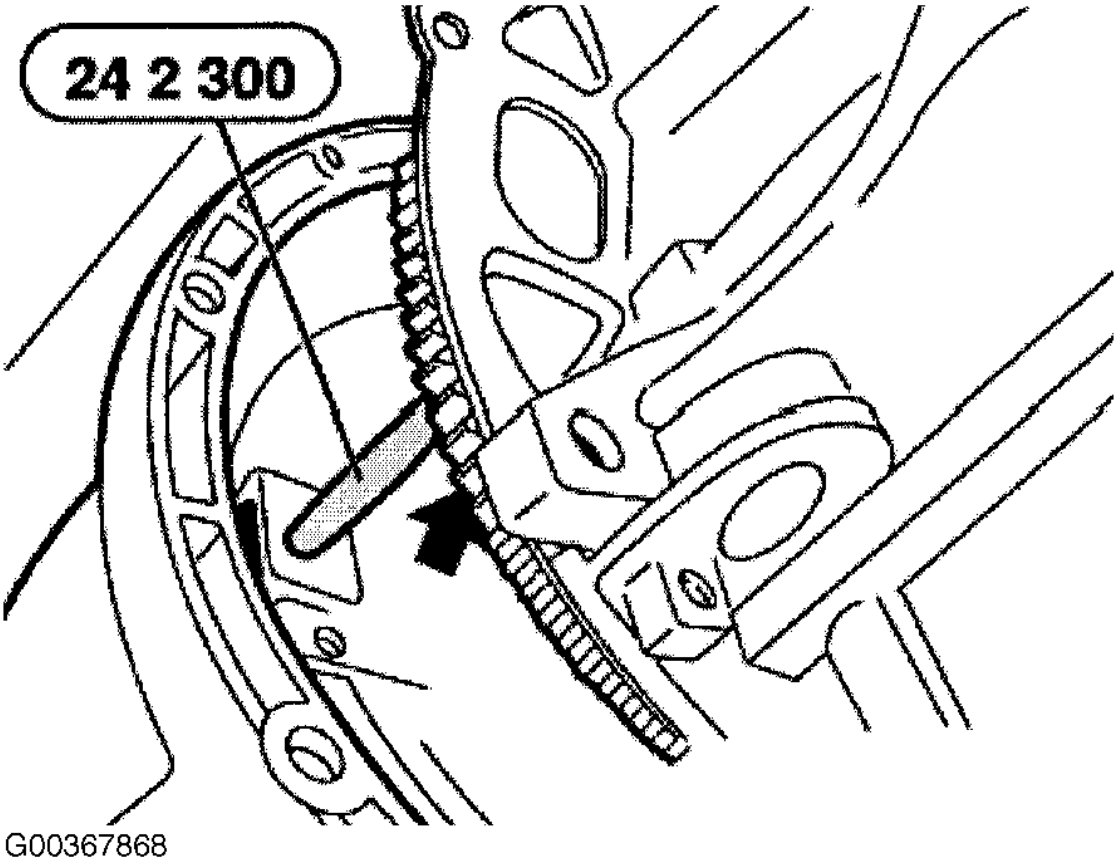

Fig. 25: Raising Automatic Transmission
Courtesy of BMW OF NORTH AMERICA, INC.

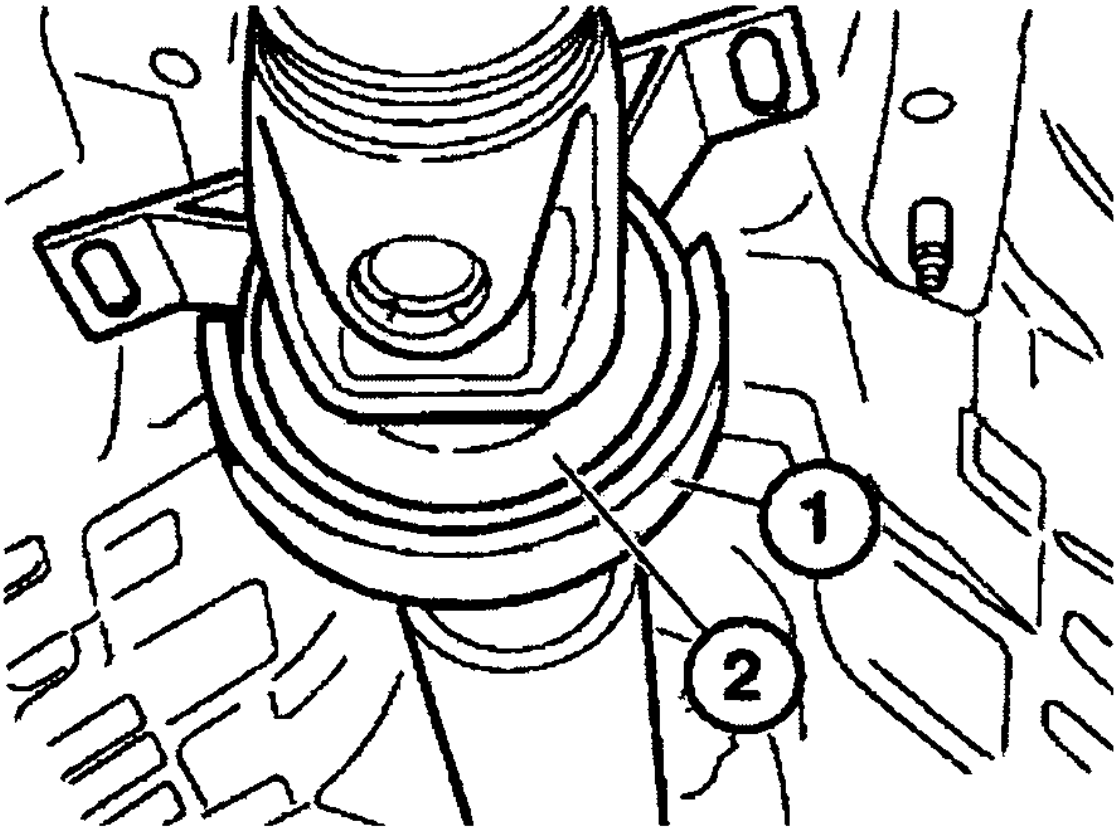

G00367869

Fig. 26: Sticking Butylene Tape To Center Bearing
Courtesy of BMW OF NORTH AMERICA, INC.

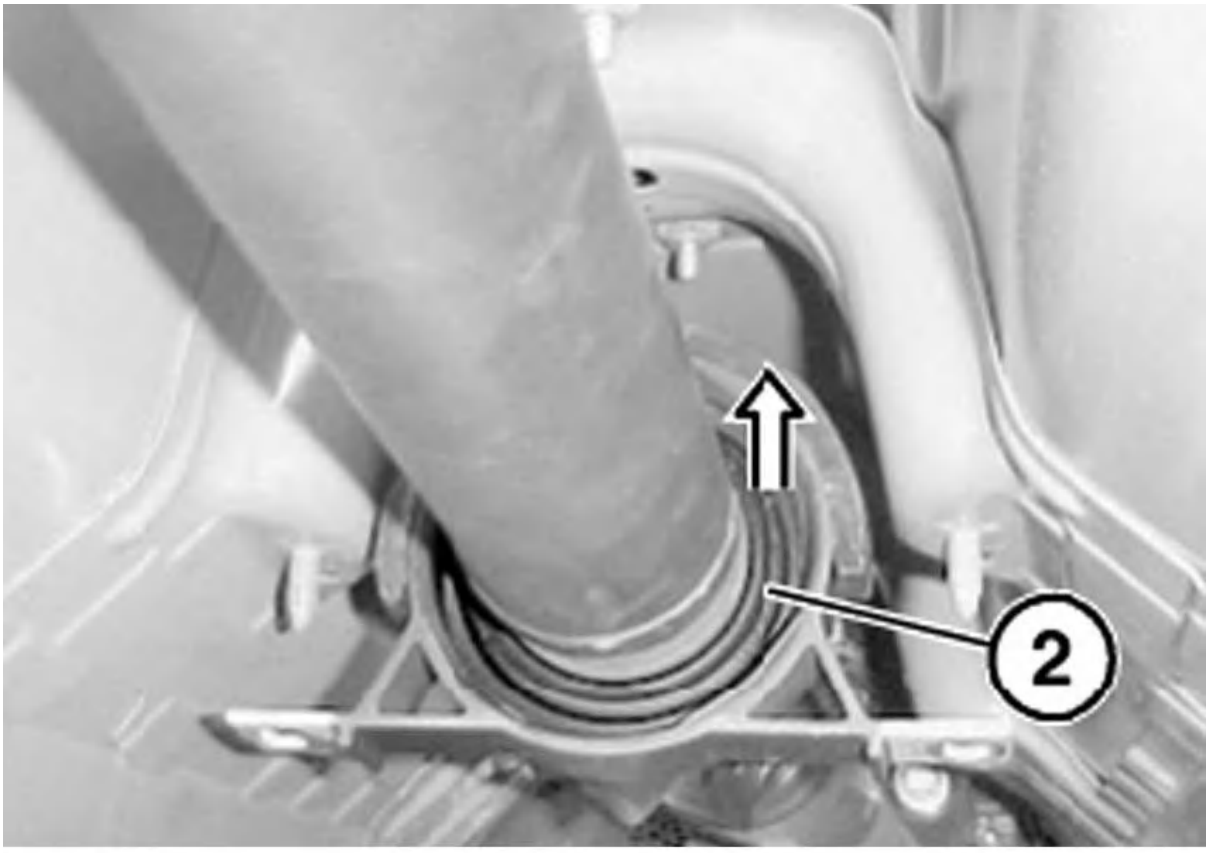

G00367870

Fig. 27: Pressing Center Bearing Into Transmission Tunnel
Courtesy of BMW OF NORTH AMERICA, INC.

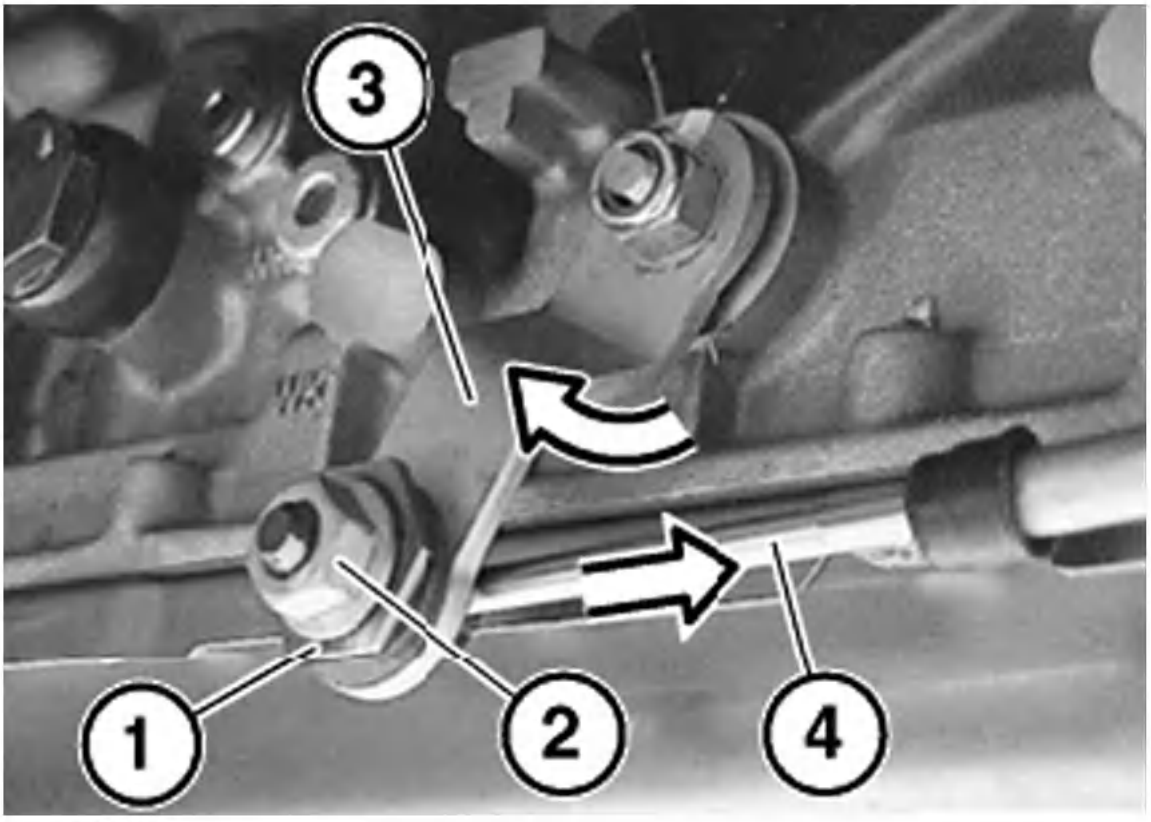

G00367871

Fig. 28: Adjusting Selector Lever
Courtesy of BMW OF NORTH AMERICA, INC.

TORQUE SPECIFICATIONS

TORQUE SPECIFICATIONS

Application	Ft. Lbs. (N.m)
Bowden Cable On Shift Tower/Transmission	11 (15)
Center Mount-To-Body	15 (21)
Cross Member-To-Body	15 (21)
Flexible Disk-To-Propeller Shaft & Transmission Output Flange	60 (81)
Front End Reinforcement On Front Axle Carrier/Engine Carrier	
Step 1	44 (59)
Step 2	Additional 90Â°
Step 3	Additional 30Â°
Reinforcement Plate-To-Front Axle Carrier/Engine Carrier	
Step 1	41 (56)
Step 2	Additional 90Â°
Step 3	Additional 15Â°
Rubber Mounts-To-Cross Member Or Transmission	15 (21)
Torque Converter-To-Flywheel	33 (45)
Transmission-To-Engine	
Hex Screws	
M8 Thread	18 (24)
M10 Thread	33 (45)
M12 Thread	60 (82)
Torx Bolts	
M8 Thread	15 (21)
M10 Thread	31 (42)
M12 Thread	53 (72)
	INCH Lbs. (N.m)
Clamping Screw On Shift Lever	89 (10)

Article GUID: A00169247

DESCRIPTION & OPERATION

BMW models since 1996 are capable of setting transmission "P" diagnostic codes in addition to BMW diagnostic codes. Codes can be accessed through BMW connector or OBD-II connector.

DIAGNOSIS & TESTING

NOTE: A BMW scan tool (MoDiC, Group Tester One (GT1) or Displus) is necessary to diagnose and test these systems.

RETRIEVING DIAGNOSTIC TROUBLE CODES

Use BMW tool (MoDiC, Group Tester One (GT1) or Displus) or generic scan tool to pull code. Connect scan tool to BMW connector or OBD-II diagnostic connector. Follow scan tool manufacturer's instructions. See Fig. 1-Fig. 3 .

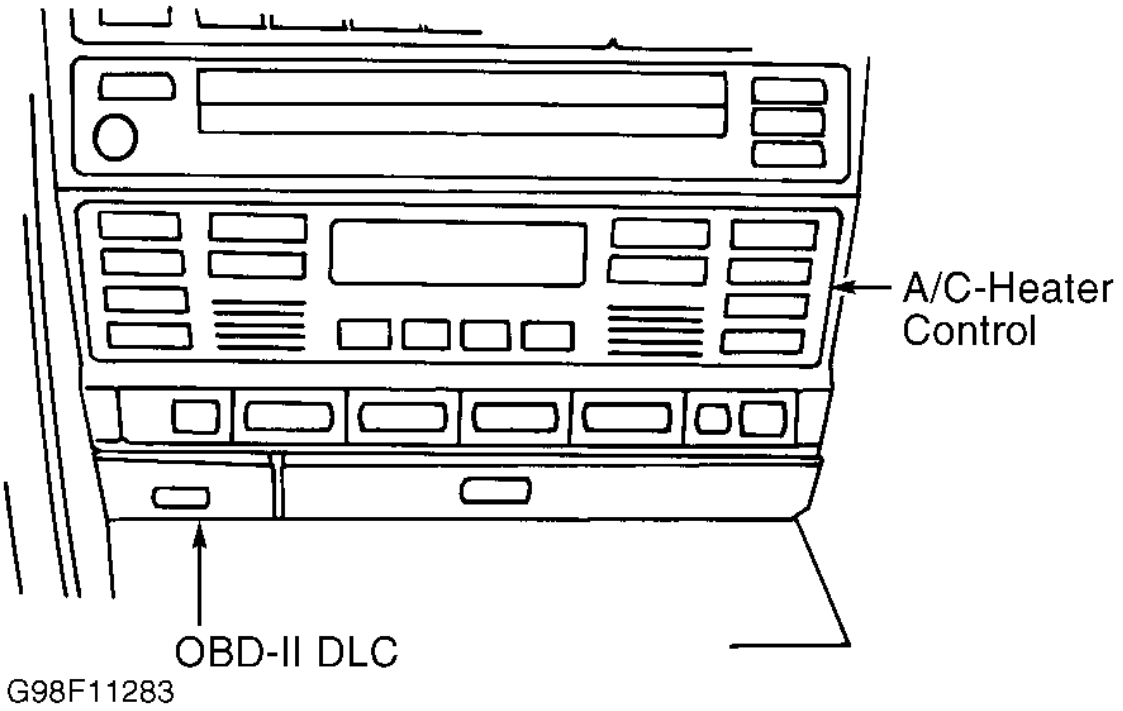

Fig. 1: Locating OBD-II Data Link Connector (1996-2001 7-Series)
Courtesy of BMW OF NORTH AMERICA, INC.

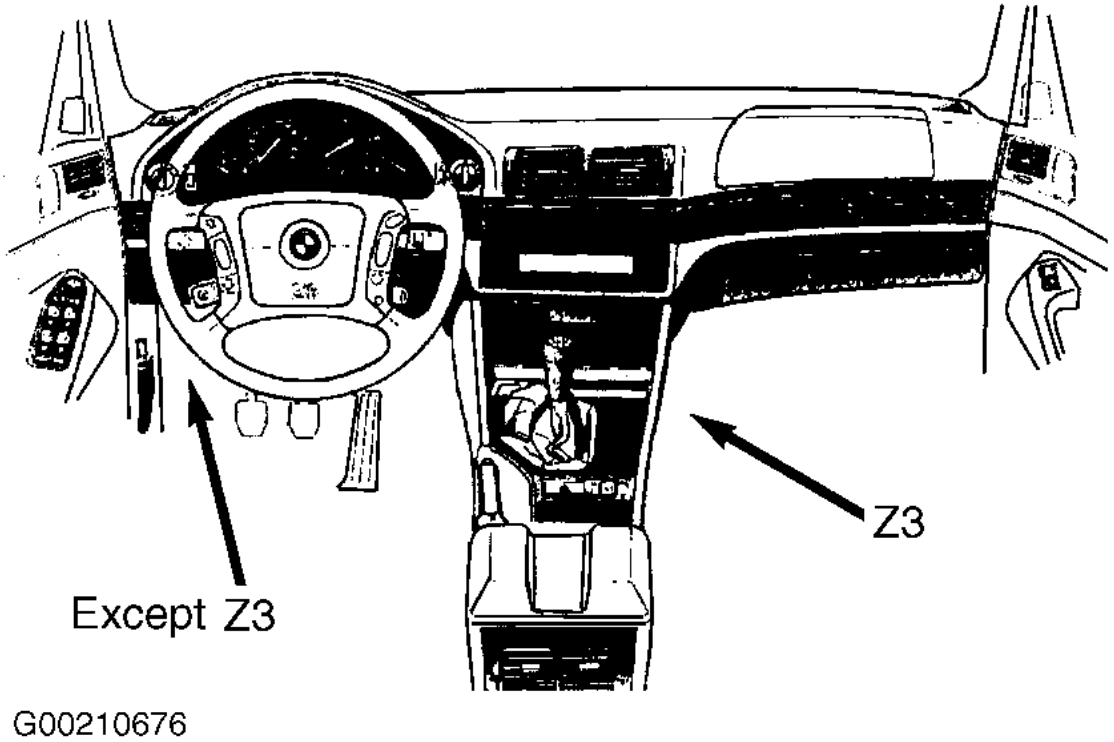

Fig. 2: Locating OBD-II Connector (All Models, Except 1996-2001 7-Series)
Courtesy of BMW OF NORTH AMERICA, INC.

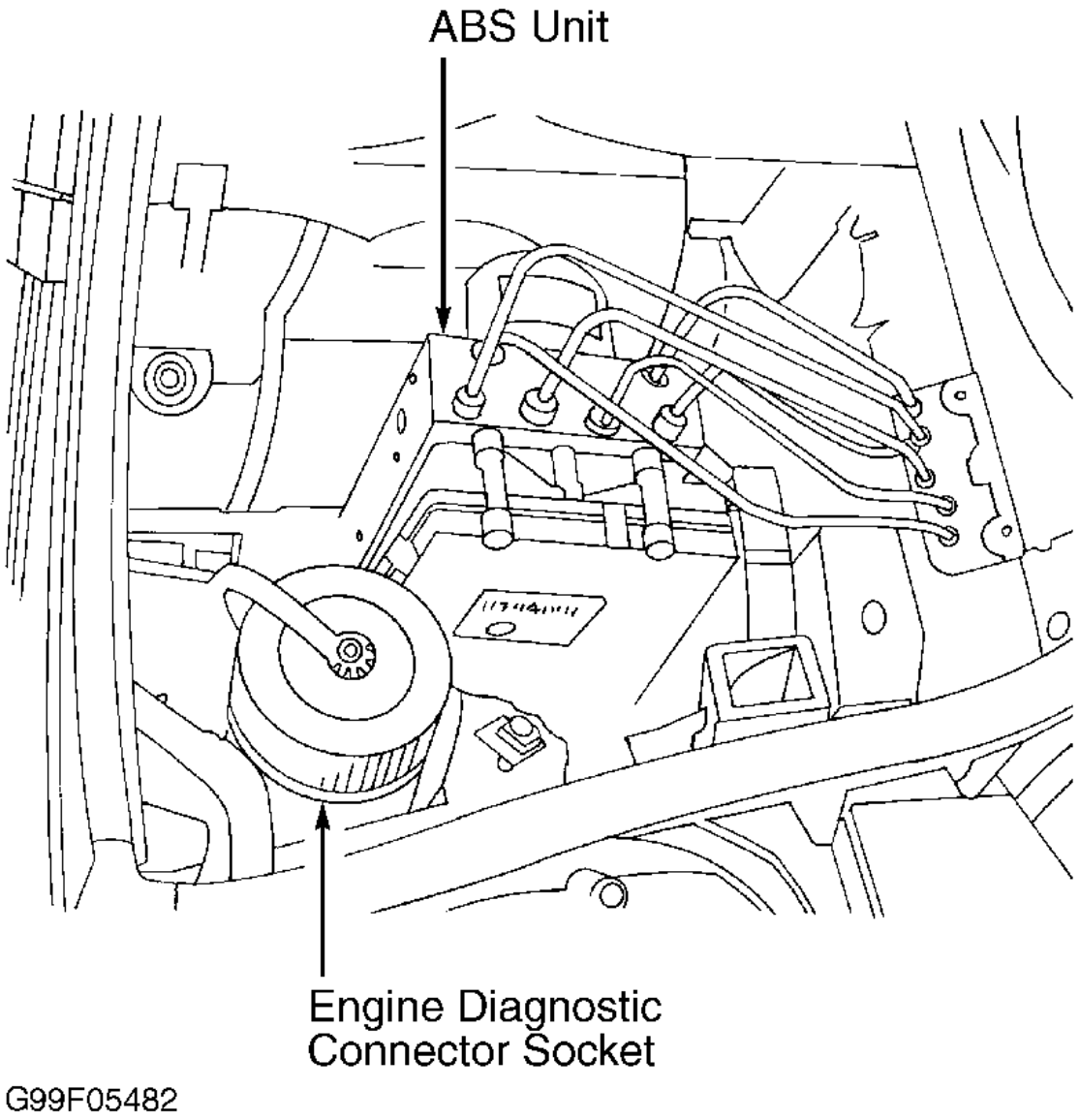

Fig. 3: Locating BMW Engine Diagnostic Connector (Typical)
Courtesy of BMW OF NORTH AMERICA, INC.

DIAGNOSTIC TROUBLE CODES

To identify DTCs, see TABLE 1: DIAGNOSTIC TROUBLE CODE INDEX table.

TABLE 1: DIAGNOSTIC TROUBLE CODE INDEX

Application	Table
4-Cylinder	
DIAGNOSTIC TROUBLE CODES Z3, 318i & 318ti (1/96-8/96).	
DIAGNOSTIC TROUBLE CODES Z3, 318i & 318ti (9/96-8/97).	
DIAGNOSTIC TROUBLE CODES Z3 (10/97-8/98), 318i (9/97-6/98) & 318ti (9/97-6/98).	
DIAGNOSTIC TROUBLE CODES 318ti (9/98-12/98).	
6-Cylinder	
DIAGNOSTIC TROUBLE CODES 6-CYLINDER : M52 - 2.8L (11/95-8/96).	
DIAGNOSTIC TROUBLE CODES 6-CYLINDER (3-SERIES - 9/96-8/97) & 5-SERIES (3/96-8/97).	

DIAGNOSTIC TROUBLE CODES 6-CYLINDER (M3 - 4/96-8/97).
~~DIAGNOSTIC TROUBLE CODES 6-CYLINDER (9/97-8/98).~~
DIAGNOSTIC TROUBLE CODES 6-CYLINDER (323i, 328i & 528i - 9/98-5/99).
DIAGNOSTIC TROUBLE CODES 6-CYLINDER (M COUPE, M ROADSTER, M3, Z3, 328IS, 528i - 9/98-5/99).
DIAGNOSTIC TROUBLE CODES 6-CYLINDER (Z3 - 6/99-5/00).
DIAGNOSTIC TROUBLE CODES 6-CYLINDER (323i, 328i & 528i - 6/99-8/00).
DIAGNOSTIC TROUBLE CODES 6-CYLINDER (4/00-9/01).
DIAGNOSTIC TROUBLE CODES 6-CYLINDER: ZF TRANSMISSION (9/01-8/02).
See DIAGNOSTIC TROUBLE CODES 6-CYLINDER: GM TRANSMISSION (9/01 TO 8/02).
DIAGNOSTIC TROUBLE CODES 6-CYLINDER: 5HP19 TRANSMISSION (9/02-2003).
DIAGNOSTIC TROUBLE CODES 6-CYLINDER: GM5 TRANSMISSION (9/02-2003).
DIAGNOSTIC TROUBLE CODES 6-CYLINDER: SMG TRANSMISSION (3/03-2003).
DIAGNOSTIC TROUBLE CODES 6-CYLINDER: 5HP19 NON-AWD TRANSMISSION (2004).
DIAGNOSTIC TROUBLE CODES 6-CYLINDER: 5HP19 (5-SPEED) - AWD TRANSMISSION (2004).
DIAGNOSTIC TROUBLE CODES 6-CYLINDER: 6HP19 (6-SPEED) - AWD TRANSMISSION (2004).
DIAGNOSTIC TROUBLE CODES 6-CYLINDER: NON-AWD TRANSMISSION (2004).
DIAGNOSTIC TROUBLE CODES 6-CYLINDER: GM5 - AWD (2004).
DIAGNOSTIC TROUBLE CODES 6-CYLINDER: SMG TRANSMISSION (2004).
V8
DIAGNOSTIC TROUBLE CODES V8: TRANSMISSION (1/96-8/97).
DIAGNOSTIC TROUBLE CODES V8 TRANSMISSION (9/97-8/00).
DIAGNOSTIC TROUBLE CODES V8 TRANSMISSION (9/00-8/01).
DIAGNOSTIC TROUBLE CODES V8 TRANSMISSION (9/01-8/02).
DIAGNOSTIC TROUBLE CODES V8 TRANSMISSION (5-SPEED - 9/02-2003).
DIAGNOSTIC TROUBLE CODES V8: TRANSMISSION (SMG - 2004).
V8 & V12
DIAGNOSTIC TROUBLE CODES V8 & V12 TRANSMISSION (6-SPEED - 2003).
DIAGNOSTIC TROUBLE CODES V8 & V12 TRANSMISSION (6-SPEED - 2004).
V12
DIAGNOSTIC TROUBLE CODES V12 TRANSMISSION (1996).
DIAGNOSTIC TROUBLE CODES V12 TRANSMISSION (1997).
DIAGNOSTIC TROUBLE CODES V12 TRANSMISSION (1998-2000).
DIAGNOSTIC TROUBLE CODES V12 TRANSMISSION (2001).
Â

DIAGNOSTIC TROUBLE CODES Z3, 318i & 318ti (1/96-8/96)

DIAGNOSTIC TROUBLE CODES Z3, 318i & 318ti (1/96-8/96)

PCode	BMW Code	Possible Problem	Diagnostic Parameters
P0705	8	Transmission Range Sensor "A" Circuit Malfunction (PRNDL Input)	See 1996 4-CYLINDER DIAGNOSIS: Z3, 318i & 318ti (1/96-8/96).
P0720	42	Output Speed Sensor Circuit	See 1996 4-CYLINDER DIAGNOSIS: Z3, 318i & 318ti (1/96-8/96).
P0730	100	Incorrect Gear Ratio	See 1996 4-CYLINDER DIAGNOSIS: Z3, 318i & 318ti (1/96-8/96).

P0740	111	Torque Converter Clutch Circuit/Open	See 1996 4-CYLINDER DIAGNOSIS: Z3, 318i & 318ti (1/96-8/96).
P0743	32	Torque Converter Clutch Circuit Electrical	See 1996 4-CYLINDER DIAGNOSIS: Z3, 318i & 318ti (1/96-8/96).
P0748	5	Pressure Control Solenoid "A" Electrical	See 1996 4-CYLINDER DIAGNOSIS: Z3, 318i & 318ti (1/96-8/96).
P0753	30	Shift Solenoid "A" Electrical	See 1996 4-CYLINDER DIAGNOSIS: Z3, 318i & 318ti (1/96-8/96).
P0758	33	Shift Solenoid "B" Electrical	See 1996 4-CYLINDER DIAGNOSIS: Z3, 318i & 318ti (1/96-8/96).
P1743	4	Pressure Control Solenoid "E" Electrical (M44/M52: Brake Band Electrical)	See 1996 4-CYLINDER DIAGNOSIS: Z3, 318i & 318ti (1/96-8/96).
P1746	104	Transmission Control Module Output Stage	See 1996 4-CYLINDER DIAGNOSIS: Z3, 318i & 318ti (1/96-8/96).
P1747	150	CAN-Bus Monitoring	See 1996 4-CYLINDER DIAGNOSIS: Z3, 318i & 318ti (1/96-8/96).
P1747	151	CAN-Bus Monitoring	See 1996 4-CYLINDER DIAGNOSIS: Z3, 318i & 318ti (1/96-8/96).
P1747	156	CAN-Bus Monitoring	See 1996 4-CYLINDER DIAGNOSIS: Z3, 318i & 318ti (1/96-8/96).
P1748	103	Transmission Control Module Self-Test	See 1996 4-CYLINDER DIAGNOSIS: Z3, 318i & 318ti (1/96-8/96).
P1748	105	Transmission Control Module Self-Test	See 1996 4-CYLINDER DIAGNOSIS: Z3, 318i & 318ti (1/96-8/96).
P1748	110	Transmission Control Module Self-Test	See 1996 4-CYLINDER DIAGNOSIS: Z3, 318i & 318ti (1/96-8/96).
P1749	108	Secondary Pressure Solenoid Communication Error (M52: Internal Transmission Control Module Memory Error)	No Diagnosis Available
P1750	54	Secondary Pressure Solenoid Circuit Range/Performance (M44/M52/S52/M62/M73: System Voltage Input Low)	No Diagnosis Available
P1761	2	Shiftlock Solenoid	No Diagnosis Available
P1765	154	CAN Throttle Valve	No Diagnosis Available
P1765	158	CAN Throttle Valve	No Diagnosis Available
P1780	152	CAN Torque Reduction	No Diagnosis Available
P1780	163	CAN Torque Reduction	No Diagnosis Available

Component/ System	Fault Code	Monitor Strategy Description	Malfunction Criteria	Threshold value	Secondary Parameter	Enable Conditions	Time Required	MIL illum.
A/T								
Range Switch	P0705	circuit continuity rationality	voltage unvalid code for P and N	no signal/multiple signal	engine speed	200 - 440 rpm	200 msec/ once per engine start up	two driving cycles
Input Speed	-	no input speed sensor involved, therefore input speed is calculated --> (output speed multiplied by gear ratios)					-	
Output Speed	P0720	rationality	output speed	no signal	selected gear engine speed	1, 2, 3 or 4 > 3000 rpm	500 msec/ continuous	two driving cycles
Gear Ratio	P0730	rationality	actual - calculated output * gear ratio	> 320 rpm (gear 1) > 480 rpm (gear 2) > 736 rpm (gear 3) > 992 rpm (gear 4)	engine speed	> 3000 rpm	2,5 sec/ continuous	two driving cycles
Torque Converter Clutch	P0743	circuit continuity	voltage				100 msec/ continuous	two driving cycles
	P0740	functional check	calculated slip	> 288 rpm	selected gear	3 or 4	2,5 sec/ continuous	
Pressure Control Solenoid	P0748	circuit continuity	voltage				200 msec/ continuous	two driving cycles
Shift Solenoid A	P0753	circuit continuity	voltage				100 msec/ continuous	two driving cycles
B	P0758							
Force Motor/Pressure Control Valve	P1743	circuit continuity	voltage				100 msec/ continuous	two driving cycles
Power Supply	P1746	rationality	battery voltage	< 9 V	engine speed	> 1500 rpm	300 msec/ continuous	two driving cycles
Transmission Control Modul (TCM)	P1747	bus check	CAN massages/time out	> 500 ms		at power up	immediately/cont.	two driving cycles
	P1748	self check	RAM and ROM check watchdog	invalid check-sum on			90 sec. 120 msec/cont. 100 msec/once	
Relay	P1746	functional check	timing (response)	delay time			after system start	

G00375666

Fig. 4: 1996 4-Cylinder Diagnosis: Z3, 318i & 318ti (1/96-8/96)
Courtesy of BMW OF NORTH AMERICA, INC.

DIAGNOSTIC TROUBLE CODES Z3, 318i & 318ti (9/96-8/97)

DIAGNOSTIC TROUBLE CODES Z3, 318i & 318ti (9/96-8/97)

PCode	BMW Code	Possible Cause	Diagnostic Parameters
P0705	8	Transmission Range Sensor "A" Circuit Malfunction (PRNDL Input)	See 1997 4-CYLINDER DIAGNOSIS: Z3, 318i & 318ti (9/96-8/97).
P0720	42	Output Speed Sensor Circuit	See 1997 4-CYLINDER DIAGNOSIS: Z3, 318i &

			318ti (9/96-8/97).
P0731	100	Gear 1 Incorrect Ratio	See 1997 4-CYLINDER DIAGNOSIS: Z3, 318i & 318ti (9/96-8/97).
P0732	.....	Gear 2 Incorrect Ratio	See 1997 4-CYLINDER DIAGNOSIS: Z3, 318i & 318ti (9/96-8/97).
P0733	.....	Gear 3 Incorrect Ratio	See 1997 4-CYLINDER DIAGNOSIS: Z3, 318i & 318ti (9/96-8/97).
P0734	.....	Gear 4 Incorrect Ratio	See 1997 4-CYLINDER DIAGNOSIS: Z3, 318i & 318ti (9/96-8/97).
P0740	111	Torque Converter Clutch Circuit/Open	See 1997 4-CYLINDER DIAGNOSIS: Z3, 318i & 318ti (9/96-8/97).
P0743	32	Torque Converter Clutch Circuit Electrical	See 1997 4-CYLINDER DIAGNOSIS: Z3, 318i & 318ti (9/96-8/97).
P0748	5	Pressure Control Solenoid "A" Electrical	See 1997 4-CYLINDER DIAGNOSIS: Z3, 318i & 318ti (9/96-8/97).
P0753	30	Shift Solenoid "A" Electrical	See 1997 4-CYLINDER DIAGNOSIS: Z3, 318i & 318ti (9/96-8/97).
P0758	33	Shift Solenoid "B" Electrical	See 1997 4-CYLINDER DIAGNOSIS: Z3, 318i & 318ti (9/96-8/97).
P1743	4	Pressure Control Solenoid "E" Electrical (M44/M52: Brake Band Electrical)	See 1997 4-CYLINDER DIAGNOSIS: Z3, 318i & 318ti (9/96-8/97).
P1746	104	Transmission Control Module Output Stage	See 1997 4-CYLINDER DIAGNOSIS: Z3, 318i & 318ti (9/96-8/97).
P1747	150	CAN-Bus Monitoring	See 1997 4-CYLINDER DIAGNOSIS: Z3, 318i & 318ti (9/96-8/97).
P1747	151	CAN-Bus Monitoring	See 1997 4-CYLINDER DIAGNOSIS: Z3, 318i & 318ti (9/96-8/97).
P1747	156	CAN-Bus Monitoring	See 1997 4-CYLINDER DIAGNOSIS: Z3, 318i & 318ti (9/96-8/97).
P1748	103	Transmission Control Module Self-Test	See 1997 4-CYLINDER DIAGNOSIS: Z3, 318i & 318ti (9/96-8/97).
P1748	105	Transmission Control Module Self-Test	See 1997 4-CYLINDER DIAGNOSIS: Z3, 318i & 318ti (9/96-8/97).
P1748	110	Transmission Control Module Self-Test	See 1997 4-CYLINDER DIAGNOSIS: Z3, 318i & 318ti (9/96-8/97).
P1749	108	Secondary Pressure Solenoid Communication Error (M52: Internal	No Diagnosis Available

		Transmission Control Module Memory Error)	
P1750	54	Secondary Pressure Solenoid Circuit Range/Performance (M44/M52/S52/M62/M73: System Voltage Input Low)	No Diagnosis Available
P1761	2	Shiftlock Solenoid	No Diagnosis Available
P1765	154	CAN Throttle Valve	No Diagnosis Available
P1765	158	CAN Throttle Valve	No Diagnosis Available
P1780	152	CAN Torque Reduction	No Diagnosis Available
P1780	163	CAN Torque Reduction	No Diagnosis Available

1997 4-Cylinder Diagnosis: Z3, 318i & 318ti (9/96-8/97)

Component/ System	Fault Code	Monitor Strategy Description	Malfunction Criteria	Threshold value	Secondary Parameter	Enable/Disable Conditions	Time Required	MIL illum.
A/T								
Range Switch	P0705	circuit continuity rationality	voltage unvalid code for P and N	no signal/multiple signal	engine speed	200 - 440 rpm	200 msec/ once per engine start up	two driving cycles
Input Speed		no input speed sensor involved, therefore input speed is calculated --> [output speed multiplied by gear ratios]						
Output Speed	P0720	rationality	output speed	no signal	selected gear engine speed	1, 2, 3 or 4 > 3000 rpm	500 msec/ continuous	two driving cycles
Gear Ratio	P0731 P0732 P0733 P0734	rationality	actual - calculated output * gear ratio	> 320 rpm (gear 1) > 480 rpm (gear 2) > 736 rpm (gear 3) > 992 rpm (gear 4)	engine speed	> 3000 rpm	2,5 sec/ continuous	two driving cycles
Torque Converter Clutch	P0743	circuit continuity	voltage				100 msec/ continuous	two driving cycles
	P0740	functional check	calculated slip	> 288 rpm	selected gear	3 or 4	2,5 sec/ continuous	
Pressure Control Solenoid	P0748	circuit continuity	voltage				200 msec/ continuous	two driving cycles
Shift Solenoid A B	P0753 P0758	circuit continuity	voltage				100 msec/ continuous	two driving cycles
Force Motor/Pressure Control Valve	P1743	circuit continuity	voltage				100 msec/ continuous	two driving cycles
Power Supply	P1746	rationality	battery voltage	< 9 V	engine speed	> 1500 rpm	300 msec/ continuous	two driving cycles
Transmission Control Modul (TCM)	P1747 P1748	bus check self check (watchdog)	CAN massages/time out RAM and ROM check	> 500 ms invalid check-sum		at power up	immediately/cont. 90 sec.	two driving cycles
Relay	P1746	functional check	timing (response)	delay time			100 msec/once after system start	

G00375667

Fig. 5: 1997 4-Cylinder Diagnosis: Z3, 318i & 318ti (9/96-8/97)
Courtesy of BMW OF NORTH AMERICA, INC.

TABLE 3: Z3 (10/97-8/98), 318i (9/97-6/98) & 318ti (9/97-6/98)

TABLE 3: Z3 (10/97-8/98), 318i (9/97-6/98) & 318ti (9/97-6/98)

PCode	BMW Code	Possible Cause	Diagnostic Parameters
P0705	8	Transmission Range Sensor "A" Circuit Malfunction (PRNDL Input)	See 1998 4-CYLINDER DIAGNOSIS: Z3 (10/97-8/98), 318i (9/97-6/98) & 318ti (9/97-6/98).
P0720	42	Output Speed Sensor Circuit	See 1998 4-CYLINDER

			DIAGNOSIS: Z3 (10/97-8/98), 318i (9/97-6/98) & 318ti (9/97-6/98).
P0731	100	Gear 1 Incorrect Ratio	See 1998 4-CYLINDER DIAGNOSIS: Z3 (10/97-8/98), 318i (9/97-6/98) & 318ti (9/97-6/98).
P0732	.....	Gear 2 Incorrect Ratio	See 1998 4-CYLINDER DIAGNOSIS: Z3 (10/97-8/98), 318i (9/97-6/98) & 318ti (9/97-6/98).
P0733	.....	Gear 3 Incorrect Ratio	See 1998 4-CYLINDER DIAGNOSIS: Z3 (10/97-8/98), 318i (9/97-6/98) & 318ti (9/97-6/98).
P0734	.....	Gear 4 Incorrect Ratio	See 1998 4-CYLINDER DIAGNOSIS: Z3 (10/97-8/98), 318i (9/97-6/98) & 318ti (9/97-6/98).
P0740	111	Torque Converter Clutch Circuit/Open	See 1998 4-CYLINDER DIAGNOSIS: Z3 (10/97-8/98), 318i (9/97-6/98) & 318ti (9/97-6/98).
P0743	32	Torque Converter Clutch Circuit Electrical	See 1998 4-CYLINDER DIAGNOSIS: Z3 (10/97-8/98), 318i (9/97-6/98) & 318ti (9/97-6/98).
P0748	5	Pressure Control Solenoid "A" Electrical	See 1998 4-CYLINDER DIAGNOSIS: Z3 (10/97-8/98), 318i (9/97-6/98) & 318ti (9/97-6/98).
P0753	30	Shift Solenoid "A" Electrical	See 1998 4-CYLINDER DIAGNOSIS: Z3 (10/97-8/98), 318i (9/97-6/98) & 318ti (9/97-6/98).
P0758	33	Shift Solenoid "B" Electrical	See 1998 4-CYLINDER DIAGNOSIS: Z3 (10/97-8/98), 318i (9/97-6/98) & 318ti (9/97-6/98).
P1743	4	Pressure Control Solenoid "E" Electrical (M44/M52: Brake Band Electrical)	See 1998 4-CYLINDER DIAGNOSIS: Z3 (10/97-8/98), 318i (9/97-6/98) & 318ti (9/97-6/98).
P1746	104	Transmission Control Module Output Stage	See 1998 4-CYLINDER DIAGNOSIS: Z3 (10/97-8/98), 318i (9/97-6/98) & 318ti (9/97-6/98).
P1747	150	CAN-Bus Monitoring	See 1998 4-CYLINDER DIAGNOSIS: Z3 (10/97-8/98), 318i (9/97-6/98) & 318ti (9/97-6/98).
P1747	151	CAN-Bus Monitoring	See 1998 4-CYLINDER DIAGNOSIS: Z3 (10/97-8/98), 318i (9/97-6/98) & 318ti (9/97-6/98).

P1747	156	CAN-Bus Monitoring	See 1998 4-CYLINDER DIAGNOSIS: Z3 (10/97-8/98), 318i (9/97-6/98) & 318ti (9/97-6/98).
P1748	103	Transmission Control Module Self-Test	See 1998 4-CYLINDER DIAGNOSIS: Z3 (10/97-8/98), 318i (9/97-6/98) & 318ti (9/97-6/98).
P1748	105	Transmission Control Module Self-Test	See 1998 4-CYLINDER DIAGNOSIS: Z3 (10/97-8/98), 318i (9/97-6/98) & 318ti (9/97-6/98).
P1748	110	Transmission Control Module Self-Test	No Diagnosis Available
P1749	108	Secondary Pressure Solenoid Communication Error (M52: Internal Transmission Control Module Memory Error)	No Diagnosis Available
P1750	54	Secondary Pressure Solenoid Circuit Range/Performance (M44/M52/S52/M62/M73: System Voltage Input Low)	No Diagnosis Available
P1761	2	Shiftlock Solenoid	No Diagnosis Available
P1765	154	CAN Throttle Valve	No Diagnosis Available
P1765	158	CAN Throttle Valve	No Diagnosis Available
P1780	152	CAN Torque Reduction	No Diagnosis Available
P1780	163	CAN Torque Reduction	No Diagnosis Available

1998 4-Cylinder Diagnosis: Z3 (10/97-8/98), 318i (9/97-6/98) & 318ti (9/97-6/98)

Component/ System	Fault Code	Monitor Strategy Description	Malfunction Criteria	Threshold value	Secondary Parameter	Enable Conditions	Time Required	MIL Illum.
A/T Range Switch	P0705	circuit continuity rationality	voltage unvalid code for P and N	no signal/multiple signal	engine speed	200 - 440 rpm	200 msec/ once per engine start up	two driving cycles
Input Speed		no input speed sensor involved, therefore input speed is calculated --> (output speed multiplied by gear ratios)						
Output Speed	P0720	rationality	output speed	no signal	selected gear engine speed	1, 2, 3 or 4 > 3000 rpm	500 msec/ continuous	two driving cycles
Gear Ratio	P0731 P0732 P0733 P0734	rationality	actual - calculated output * gear ratio	> 320 rpm (gear 1) > 480 rpm (gear 2) > 736 rpm (gear 3) > 892 rpm (gear 4)	engine speed	> 3000 rpm	2,5 sec/ continuous	two driving cycles
Torque Converter Clutch	P0743	circuit continuity	voltage				100 msec/ continuous	two driving cycles
	P0740	functional check	calculated slip	> 288 rpm	selected gear	3 or 4	2,5 sec/ continuous	
Pressure Control Solenoid	P0748	circuit continuity	voltage				200 msec/ continuous	two driving cycles
Shift Solenoid A B	P0753 P0758	circuit continuity	voltage				100 msec/ continuous	two driving cycles
Force Motor/Pressure Control Valve	P1743	circuit continuity	voltage				100 msec/ continuous	two driving cycles
Power Supply	P1746	rationality	battery voltage	< 9 V	engine speed	> 1500 rpm	300 msec/ continuous	two driving cycles
Transmission Control Modul (TCM)	P1747 P1748	bus check self check (watchdog)	CAN massages/time out RAM and ROM check	> 500 ms invalid check-sum		at power up	immediately/cont. 90 sec.	two driving cycles
Relay	P1746	funcitonal check	timing (response)	delay time			100 msec/once after system start	

G00375668

Fig. 6: 1998 4-Cylinder Diagnosis: Z3 (10/97-8/98), 318i (9/97-6/98) & 318ti (9/97-6/98)
Courtesy of BMW OF NORTH AMERICA, INC.

TABLE 4: DIAGNOSTIC TROUBLE CODES 318ti (9/98-12/98)

TABLE 4: DIAGNOSTIC TROUBLE CODES 318ti (9/98-12/98)

PCode	BMW Code	Possible Cause	Diagnostic Parameters
P0705	8	Transmission Range Sensor "A" Circuit Malfunction (PRNDL Input)	See 1999 4-CYLINDER DIAGNOSIS: 318ti (9/98-12/98).
P0720	42	Output Speed Sensor Circuit	See 1999 4-CYLINDER DIAGNOSIS: 318ti

			(9/98-12/98).
P0731	100	Gear 1 Incorrect Ratio	See 1999 4-CYLINDER DIAGNOSIS: 318ti (9/98-12/98).
P0732	.....	Gear 2 Incorrect Ratio	See 1999 4-CYLINDER DIAGNOSIS: 318ti (9/98-12/98).
P0733	.....	Gear 3 Incorrect Ratio	See 1999 4-CYLINDER DIAGNOSIS: 318ti (9/98-12/98).
P0734	.....	Gear 4 Incorrect Ratio	See 1999 4-CYLINDER DIAGNOSIS: 318ti (9/98-12/98).
P0740	111	Torque Converter Clutch Circuit/Open	See 1999 4-CYLINDER DIAGNOSIS: 318ti (9/98-12/98).
P0743	32	Torque Converter Clutch Circuit Electrical	See 1999 4-CYLINDER DIAGNOSIS: 318ti (9/98-12/98).
P0748	5	Pressure Control Solenoid "A" Electrical	See 1999 4-CYLINDER DIAGNOSIS: 318ti (9/98-12/98).
P0753	30	Shift Solenoid "A" Electrical	See 1999 4-CYLINDER DIAGNOSIS: 318ti (9/98-12/98).
P0758	33	Shift Solenoid "B" Electrical	See 1999 4-CYLINDER DIAGNOSIS: 318ti (9/98-12/98).
P1743	4	Pressure Control Solenoid "E" Electrical (M44/M52: Brake Band Electrical)	See 1999 4-CYLINDER DIAGNOSIS: 318ti (9/98-12/98).
P1746	104	Transmission Control Module Output Stage	See 1999 4-CYLINDER DIAGNOSIS: 318ti (9/98-12/98).
P1747	150	CAN-Bus Monitoring	See 1999 4-CYLINDER DIAGNOSIS: 318ti (9/98-12/98).
P1747	151	CAN-Bus Monitoring	See 1999 4-CYLINDER DIAGNOSIS: 318ti (9/98-12/98).
P1747	156	CAN-Bus Monitoring	See 1999 4-CYLINDER DIAGNOSIS: 318ti (9/98-12/98).
P1748	103	Transmission Control Module Self-Test	See 1999 4-CYLINDER DIAGNOSIS: 318ti (9/98-12/98).
P1748	105	Transmission Control Module Self-Test	See 1999 4-CYLINDER DIAGNOSIS: 318ti (9/98-12/98).
P1748	110	Transmission Control Module Self-Test	See 1999 4-CYLINDER DIAGNOSIS: 318ti (9/98-12/98).
P1749	108	Secondary Pressure Solenoid Communication Error (M52: Internal Transmission Control Module Memory	No Diagnosis Available

		Error)	
P1750	54	Secondary Pressure Solenoid Circuit Range/Performance (M44/M52/S52/M62/M73: System Voltage Input Low)	No Diagnosis Available
P1761	2	Shiftlock Solenoid	No Diagnosis Available
P1765	154	CAN Throttle Valve	No Diagnosis Available
P1765	158	CAN Throttle Valve	No Diagnosis Available
P1780	152	CAN Torque Reduction	No Diagnosis Available
P1780	163	CAN Torque Reduction	No Diagnosis Available

1999 4-Cylinder Diagnosis: 318ti (9/98-12/98)

Component/ System	Fault Code	Monitor Strategy Description	Malfunction Criteria	Threshold value	Secondary Parameter	Enable Conditions	Time Required	MIL Illum.
A/T Range Switch	P0705	circuit continuity rationality	voltage unvalid code for P and N	no signal/multiple signal	engine speed	200 - 440 rpm	200 msec/ once per engine start up	two driving cycles
Input Speed		no input speed sensor involved, therefore input speed is calculated --> (output speed multiplied by gear ratios)						
Output Speed	P0720	rationality	output speed	no signal	selected gear engine speed	1, 2, 3 or 4 > 3000 rpm	500 msec/ continuous	two driving cycles
Gear Ratio	P0731 P0732 P0733 P0734	rationality	actual - calculated output * gear ratio	> 320 rpm (gear 1) > 460 rpm (gear 2) > 736 rpm (gear 3) > 992 rpm (gear 4)	engine speed	> 3000 rpm	2,5 sec/ continuous	two driving cycles
Torque Converter Clutch	P0743	circuit continuity	voltage				100 msec/ continuous	two driving
	P0740	functional check	calculated slip	> 288 rpm	selected gear	3 or 4	2,5 sec/ continuous	cycles
Pressure Control Solenoid	P0748	circuit continuity	voltage				200 msec/ continuous	two driving cycles
Shift Solenoid A B	P0753 P0758	circuit continuity	voltage				100 msec/ continuous	two driving cycles
Force Motor/Pressure Control Valve	P1743	circuit continuity	voltage				100 msec/ continuous	two driving cycles
Power Supply	P1746	rationality	battery voltage	< 9 V	engine speed	> 1500 rpm	300 msec/ continuous	two driving cycles
Transmission Control Modul (TCM)	P1747 P1748	bus check self check (watchdog)	CAN messages/time out RAM and ROM check	> 500 ms invalid check-sum		at power up	immediately/cont. 90 sec.	two driving cycles
Relay	P1746	functional check	timing (response)	delay time			100 msec/once after system start	

G00375669

Fig. 7: 1999 4-Cylinder Diagnosis: 318ti (9/98-12/98)
Courtesy of BMW OF NORTH AMERICA, INC.

DIAGNOSTIC TROUBLE CODES 6-CYLINDER : M52 - 2.8L (11/95-8/96)

DIAGNOSTIC TROUBLE CODES 6-CYLINDER : M52 - 2.8L (11/95-8/96)

PCode	BMW Code	Possible Cause	Diagnosis Parameters
P0412	.....	Secondary Air System Solenoid Valve	No Diagnosis Available
P0705	8	Transmission Range Sensor "A" Circuit Malfunction (PRNDL Input)	See 6-CYLINDER DIAGNOSIS: M52 - 2.8L (11/95-8/96).
P0715	.....	Input Speed Sensor	No Diagnosis Available

P0720	42	Output Speed Sensor Circuit	See 6-CYLINDER DIAGNOSIS: M52 - 2.8L (11/95-8/96).
P0730	100	Incorrect Gear Ratio	See 6-CYLINDER DIAGNOSIS: M52 - 2.8L (11/95-8/96).
P0740	111	Torque Converter Clutch Circuit/Open	See 6-CYLINDER DIAGNOSIS: M52 - 2.8L (11/95-8/96).
P0743	32	Torque Converter Clutch Circuit Electrical	See 6-CYLINDER DIAGNOSIS: M52 - 2.8L (11/95-8/96).
P0748	5	Pressure Control Solenoid "A" Electrical	See 6-CYLINDER DIAGNOSIS: M52 - 2.8L (11/95-8/96).
P0753	30	Shift Solenoid "A" Electrical	See 6-CYLINDER DIAGNOSIS: M52 - 2.8L (11/95-8/96).
P0758	33	Shift Solenoid "B" Electrical	See 6-CYLINDER DIAGNOSIS: M52 - 2.8L (11/95-8/96).
P1453	.....	Secondary Air System Relay	No Diagnosis Available
P1743	4	Pressure Control Solenoid "E" Electrical (M44/M52: Brake Band Electrical)	See 6-CYLINDER DIAGNOSIS: M52 - 2.8L (11/95-8/96).
P1746	104	Transmission Control Module Output Stage	See 6-CYLINDER DIAGNOSIS: M52 - 2.8L (11/95-8/96).
P1747	150	CAN-Bus Monitoring	See 6-CYLINDER DIAGNOSIS: M52 - 2.8L (11/95-8/96).
P1747	151	CAN-Bus Monitoring	See 6-CYLINDER DIAGNOSIS: M52 - 2.8L (11/95-8/96).
P1747	156	CAN-Bus Monitoring	See 6-CYLINDER DIAGNOSIS: M52 - 2.8L (11/95-8/96).
P1748	103	Transmission Control Module Self-Test	See 6-CYLINDER DIAGNOSIS: M52 - 2.8L (11/95-8/96).
P1748	105	Transmission Control Module Self-Test	See 6-CYLINDER DIAGNOSIS: M52 - 2.8L (11/95-8/96).
P1748	110	Transmission Control Module Self-Test	See 6-CYLINDER DIAGNOSIS: M52 - 2.8L (11/95-8/96).
P1749	108	Secondary Pressure Solenoid Communication Error (M52: Internal Transmission Control Module Memory Error)	No Diagnosis Available
P1750	54	Secondary Pressure Solenoid Circuit Range/Performance (M44/M52/S52/M62/M73: System Voltage Input Low)	See 6-CYLINDER DIAGNOSIS: M52 - 2.8L (11/95-8/96).

P1761	2	Shiftlock Solenoid	No Diagnosis Available
P1765	154	CAN Throttle Valve	No Diagnosis Available
P1765	158	CAN Throttle Valve	No Diagnosis Available
P1780	152	CAN Torque Reduction	No Diagnosis Available
P1780	163	CAN Torque Reduction	No Diagnosis Available

6-Cylinder Diagnosis: M52 - 2.8L (11/95-8/96)

System/Component	Fault Code Management					Monitoring Method	Type of Signal
	Fault Code	pl	sg	mn	mx		
Transmission Control Modul (EGS)							
CAN	P 1747	x	x			CAN Bus-check	E
EGS	P 1748	x				EPROM check-sum	
EGS Relay	P 1746		x			final stage check	B
Power Supply Voltage	P 1750		x				
Transmission Range Sensor	P 0705	x	x				
Output Speed Sensor	P 0720	x	x			plausibility/	E
Input Speed Sensor	P 0715	x	x				
Incorrect Gear Ratio 1-4	P 0730	x	x			check circuit	
Torque Converter Clutch	P 0743		x	x	x		
	P 0740	x					
Pressure Control Solenoid	P 0748		x	x	x		
Shift Solenoid A	P 0753		x	x	x	voltage range check	C
B	P 0758		x	x	x		
Pressure Control Valve 4	P 1743		x	x	x		

Abbreviations:
pl = plausibility
sg = signal
mn = minimum threshold
mx = maximum threshold

Type of signals:
A = pulsating rectangular wave on/off-cycles with constant or varying on/off-times
B = non-pulsating signal
C = on/off switching signal
D = pulsating signal
E = ECM internal signal/value computation or comparison

G00375670

Fig. 8: 6-Cylinder Diagnosis: M52 - 2.8L (11/95-8/96)
Courtesy of BMW OF NORTH AMERICA, INC.

DIAGNOSTIC TROUBLE CODES 6-CYLINDER (3-SERIES - 9/96-8/97) & 5-SERIES (3/96-8/97)

DIAGNOSTIC TROUBLE CODES 6-CYLINDER (3-SERIES - 9/96-8/97) & 5-SERIES (3/96-8/97)

PCode	BMW Code	Possible Cause	Diagnostic Parameters
P0705	8	Transmission Range Sensor "A" Circuit Malfunction (PRNDL Input)	See 6-CYLINDER DIAGNOSIS: M52 - 2.8L 3-SERIES (9/96-8/97) & 5-SERIES (3/96-8/97).
P0720	42	Output Speed Sensor Circuit	See 6-CYLINDER DIAGNOSIS: M52 - 2.8L 3-SERIES (9/96-8/97) & 5-SERIES (3/96-8/97).
P0731	100	Gear 1 Incorrect Ratio	See 6-CYLINDER DIAGNOSIS: M52 - 2.8L 3-SERIES (9/96-8/97) & 5-

			SERIES (3/96-8/97).
P0732	.....	Gear 2 Incorrect Ratio	See 6-CYLINDER DIAGNOSIS: M52 - 2.8L 3-SERIES (9/96-8/97) & 5-SERIES (3/96-8/97).
P0733	.....	Gear 3 Incorrect Ratio	See 6-CYLINDER DIAGNOSIS: M52 - 2.8L 3-SERIES (9/96-8/97) & 5-SERIES (3/96-8/97).
P0734	.....	Gear 4 Incorrect Ratio	See 6-CYLINDER DIAGNOSIS: M52 - 2.8L 3-SERIES (9/96-8/97) & 5-SERIES (3/96-8/97).
P0740	111	Torque Converter Clutch Circuit/Open	See 6-CYLINDER DIAGNOSIS: M52 - 2.8L 3-SERIES (9/96-8/97) & 5-SERIES (3/96-8/97).
P0743	32	Torque Converter Clutch Circuit Electrical	See 6-CYLINDER DIAGNOSIS: M52 - 2.8L 3-SERIES (9/96-8/97) & 5-SERIES (3/96-8/97).
P0748	5	Pressure Control Solenoid "A" Electrical	See 6-CYLINDER DIAGNOSIS: M52 - 2.8L 3-SERIES (9/96-8/97) & 5-SERIES (3/96-8/97).
P0753	30	Shift Solenoid "A" Electrical	See 6-CYLINDER DIAGNOSIS: M52 - 2.8L 3-SERIES (9/96-8/97) & 5-SERIES (3/96-8/97).
P0758	33	Shift Solenoid "B" Electrical	See 6-CYLINDER DIAGNOSIS: M52 - 2.8L 3-SERIES (9/96-8/97) & 5-SERIES (3/96-8/97).
P1743	4	Pressure Control Solenoid "E" Electrical (M44/M52: Brake Band Electrical)	See 6-CYLINDER DIAGNOSIS: M52 - 2.8L 3-SERIES (9/96-8/97) & 5-SERIES (3/96-8/97).
P1746	104	Transmission Control Module Output Stage	See 6-CYLINDER DIAGNOSIS: M52 - 2.8L 3-SERIES (9/96-8/97) & 5-SERIES (3/96-8/97).
P1747	150	CAN-Bus Monitoring	See 6-CYLINDER DIAGNOSIS: M52 - 2.8L 3-SERIES (9/96-8/97) & 5-SERIES (3/96-8/97).
P1747	151	CAN-Bus Monitoring	See 6-CYLINDER DIAGNOSIS: M52 - 2.8L 3-SERIES (9/96-8/97) & 5-SERIES (3/96-8/97).
P1747	156	CAN-Bus Monitoring	See 6-CYLINDER DIAGNOSIS: M52 - 2.8L 3-SERIES (9/96-8/97) & 5-SERIES (3/96-8/97).
P1748	103	Transmission Control Module Self-Test	See 6-CYLINDER DIAGNOSIS: M52 - 2.8L

			3-SERIES (9/96-8/97) & 5-SERIES (3/96-8/97).
P1748	105	Transmission Control Module Self-Test	See 6-CYLINDER DIAGNOSIS: M52 - 2.8L 3-SERIES (9/96-8/97) & 5-SERIES (3/96-8/97).
P1748	110	Transmission Control Module Self-Test	See 6-CYLINDER DIAGNOSIS: M52 - 2.8L 3-SERIES (9/96-8/97) & 5-SERIES (3/96-8/97).
P1749	108	Secondary Pressure Solenoid Communication Error (M52: Internal Transmission Control Module Memory Error)	No Diagnosis Available
P1750	54	Secondary Pressure Solenoid Circuit Range/Performance (M44/M52/S52/M62/M73: System Voltage Input Low)	No Diagnosis Available
P1761	2	Shiftlock Solenoid	No Diagnosis Available
P1765	154	CAN Throttle Valve	No Diagnosis Available
P1765	158	CAN Throttle Valve	No Diagnosis Available
P1780	152	CAN Torque Reduction	No Diagnosis Available
P1780	163	CAN Torque Reduction	No Diagnosis Available

6-Cylinder Diagnosis: M52 - 2.8L 3-Series (9/96-8/97) & 5-Series (3/96-8/97)

Component/ System	Fault Code	Monitor Strategy Description	Malfunction Criteria	Threshold value	Secondary Parameter	Enable/Disable Conditions	Time Required	MIL Illum.
A/T Range Switch	P0705	circuit continuity rationality	voltage unvalid code for P and N	no signal/multiple signal	engine speed	200 - 440 rpm	200 msec/ once per engine start up	two driving cycles
Input Speed	—	no input speed sensor involved, therefore input speed is calculated --> [output speed multiplied by gear ratios]					-	
Output Speed	P0720	rationality	output speed	no signal	selected gear engine speed	1, 2, 3 or 4 > 3000 rpm	500 msec/ continuous	two driving cycles
Gear Ratio	P0731 P0732 P0733 P0734	rationality	actual - calculated output * gear ratio	> 320 rpm (gear 1) > 480 rpm (gear 2) > 736 rpm (gear 3) > 992 rpm (gear 4)	engine speed	> 3000 rpm	2,5 sec/ continuous	two driving cycles
Torque Convertor Clutch	P0743	circuit continuity	voltage				100 msec/ continuous	two driving cycles
	P0740	functional check	calculated slip	> 288 rpm	selected gear	3 or 4	2,5 sec/ continuous	
Pressure Control Solenoid	P0748	circuit continuity	voltage				200 msec/ continuous	two driving cycles
Shift Solenoid A B	P0753 P0758	circuit continuity	voltage				100 msec/ continuous	two driving cycles
Force Motor/Pressure Control Valve	P1743	circuit continuity	voltage				100 msec/ continuous	two driving cycles
Power Supply	P1746	rationality	battery voltage	< 9 V	engine speed	> 1500 rpm	300 msec/ continuous	two driving cycles
Transmission Control Modul (TCM)	P1747 P1748	bus check self check	CAN massages/time out RAM and ROM check watchdog	> 500 ms invalid check-sum on delay time		at power up	immediately/cont. 90 sec. 120 msec/cont. 100 msec/once after system start	two driving cycles
Relay	P1746	functional check	timing (response)					

G00375671

Fig. 9: 6-Cylinder Diagnosis: M52 - 2.8L 3-Series (9/96-8/97) & 5-Series (3/96-8/97)
Courtesy of BMW OF NORTH AMERICA, INC.

DIAGNOSTIC TROUBLE CODES 6-CYLINDER (M3 - 4/96-8/97)

DIAGNOSTIC TROUBLE CODES 6-CYLINDER (M3 - 4/96-8/97)

PCode	BMW Code	Possible Cause	Diagnostic Parameters
P0705	8	Transmission Range Sensor "A" Circuit Malfunction (PRNDL Input)	See 6-CYLINDER DIAGNOSIS - M3, 3.2L (4/96-8/97).
P0705	9	Transmission Range Sensor "A" Circuit Malfunction (PRNDL Input)	See 6-CYLINDER DIAGNOSIS - M3, 3.2L (4/96-

			8/97).
P0705	36	Transmission Range Sensor "A" Circuit Malfunction (PRNDL Input)	See 6-CYLINDER DIAGNOSIS - M3, 3.2L (4/96-8/97).
P0715	16	Input/Turbine Speed Sensor "A" Circuit	See 6-CYLINDER DIAGNOSIS - M3, 3.2L (4/96-8/97).
P0720	42	Output Speed Sensor Circuit	See 6-CYLINDER DIAGNOSIS - M3, 3.2L (4/96-8/97).
P0720	106	Output Speed Sensor Circuit	See 6-CYLINDER DIAGNOSIS - M3, 3.2L (4/96-8/97).
P0732	100	Gear 2 Incorrect Ratio	See 6-CYLINDER DIAGNOSIS - M3, 3.2L (4/96-8/97).
P0733	.....	Incorrect Gear Ratio	See 6-CYLINDER DIAGNOSIS - M3, 3.2L (4/96-8/97).
P0734	.....	Incorrect Gear Ratio	See 6-CYLINDER DIAGNOSIS - M3, 3.2L (4/96-8/97).
P0735	.....	Incorrect Gear Ratio	See 6-CYLINDER DIAGNOSIS - M3, 3.2L (4/96-8/97).
P0740	111	Torque Converter Clutch Circuit/Open	See 6-CYLINDER DIAGNOSIS - M3, 3.2L (4/96-8/97).
P0743	4	Torque Converter Clutch Circuit Electrical	See 6-CYLINDER DIAGNOSIS - M3, 3.2L (4/96-8/97).
P0748	5	Pressure Control Solenoid "A" Electrical	See 6-CYLINDER DIAGNOSIS - M3, 3.2L (4/96-8/97).
P0753	30	Shift Solenoid "A" Electrical	See 6-CYLINDER DIAGNOSIS - M3, 3.2L (4/96-8/97).
P0758	33	Shift Solenoid "B" Electrical	See 6-CYLINDER DIAGNOSIS - M3, 3.2L (4/96-8/97).
P0763	32	Shift Solenoid "C" Electrical	See 6-CYLINDER DIAGNOSIS - M3, 3.2L (4/96-8/97).
P0768	31	Shift Solenoid "D" Electrical	See 6-CYLINDER DIAGNOSIS - M3, 3.2L (4/96-8/97).
P0773	3	Shift Solenoid "E" Electrical	See 6-CYLINDER DIAGNOSIS - M3, 3.2L (4/96-8/97).
P1746	104	Transmission Control Module Output Stage	See 6-CYLINDER DIAGNOSIS - M3, 3.2L (4/96-8/97).
P1747	150	CAN-Bus Monitoring	See 6-CYLINDER DIAGNOSIS - M3, 3.2L (4/96-8/97).

P1747	151	CAN-Bus Monitoring	See 6-CYLINDER DIAGNOSIS - M3, 3.2L (4/96-8/97).
P1747	156	CAN-Bus Monitoring	See 6-CYLINDER DIAGNOSIS - M3, 3.2L (4/96-8/97).
P1748	103	Transmission Control Module Self-Test	See 6-CYLINDER DIAGNOSIS - M3, 3.2L (4/96-8/97).
P1748	105	Transmission Control Module Self-Test	See 6-CYLINDER DIAGNOSIS - M3, 3.2L (4/96-8/97).
P1748	110	Transmission Control Module Self-Test	See 6-CYLINDER DIAGNOSIS - M3, 3.2L (4/96-8/97).
P1750	54	Secondary Pressure Solenoid Circuit Range/Performance (M44/M52/S52/M62/M73: System Voltage Input Low)	See 6-CYLINDER DIAGNOSIS - M3, 3.2L (4/96-8/97).
P1761	2	Shiftlock Solenoid	No Diagnosis Available
P1765	154	CAN Throttle Valve	No Diagnosis Available
P1765	158	CAN Throttle Valve	No Diagnosis Available
P1780	152	CAN Torque Reduction	No Diagnosis Available

6-Cylinder Diagnosis - M3, 3.2L (4/96-8/97)

Component/ System	Fault Code	Monitor Strategy Description	Malfunction Criteria	Threshold value	Secondary Parameter	Enable/Disable Conditions	Time Required	MIL illum.
A/T Range Switch	P0705	circuit continuity rationality	voltage unvalid code for P and N	no signal/multiple signal	engine speed	200 - 440 rpm	100 msec/ once per engine start up	two driving cycles
Input Speed	P0715	rationality	input speed	no signal	selected gear engine speed output speed	1, 2, 3, 4 or 5 > 600 rpm > 250 rpm	200 msec/ continuous	two driving cycles
Output Speed	P0720	rationality	output speed	no signal	selected gear engine speed	1, 2, 3, 4 or 5 > 1700 rpm	200 msec/ continuous	two driving cycles
Gear Ratio	P0732 P0733 P0734 P0735		Input - output speed f (gear ratio)	> 350 rpm	selected gear input speed output speed	2, 3, 4 or 5 > 420 rpm > 250 rpm	200 msec/ continuous	two driving cycles
Torque Converter Clutch	P0743	circuit continuity	voltage				100 msec cont.	two driving cycles
	P0740	functional check	calculated slip	> 100 rpm	selected gear	3, 4 or 5	2,5 sec once per lock-up	
Pres. Contr. Solenoid	P0748	circuit continuity	voltage				100 msec cont.	two dr cyc
Shift Solenoid A	P0753	circuit continuity	voltage				30 msec/ continuous	two driving cycles
B	P0758							
C	P0763							
D	P0768	rationality	voltage		gear changing	2 - >3		
E	P0773	rationality	voltage		gear changing	4 - >5		
Force Motor/Pres. Control Valve	P1743	circuit continuity	voltage				100 msec/ continuous	two driving cycles
Power Supply	P1750	rationality	battery voltage	< 9 V	engine speed	> 1600 rpm	300 msec/ continuous	two driving cycles
Transmission Control Modul (TCM)	P1747 P1748	bus check self check	CAN massages/time out RAM and ROM check watchdog	> 500 ms invalid check-sum on		at power up	immediately/cont. 90 sec. 120 msec/cont. 100 msec/once after system start	two driving cycles
Relay	P1746	functional check	timing (response)	delay time				

G00375672

Fig. 10: 6-Cylinder Diagnosis - M3, 3.2L (4/96-8/97)
Courtesy of BMW OF NORTH AMERICA, INC.

DIAGNOSTIC TROUBLE CODES 6-CYLINDER (9/97-8/98)

DIAGNOSTIC TROUBLE CODES 6-CYLINDER (9/97-8/98)

PCode	BMW Code	Possible Cause	Diagnostic Parameters
P0705	8	Transmission Range Sensor "A" Circuit Malfunction (PRNDL Input)	See 6-CYLINDER DIAGNOSIS: 6-CYLINDER (9/97-8/98).
P0715	.....	Input Speed Signal	See 6-CYLINDER DIAGNOSIS: 6-

			CYLINDER (9/97-8/98).
P0720	42	Output Speed Sensor Circuit	See 6-CYLINDER DIAGNOSIS: 6-CYLINDER (9/97-8/98).
P0731	100	Gear 1 Incorrect Ratio	See 6-CYLINDER DIAGNOSIS: 6-CYLINDER (9/97-8/98).
P0732	.....	Gear 2 Incorrect Ratio	See 6-CYLINDER DIAGNOSIS: 6-CYLINDER (9/97-8/98).
P0733	.....	Gear 3 Incorrect Ratio	See 6-CYLINDER DIAGNOSIS: 6-CYLINDER (9/97-8/98).
P0734	.....	Gear 4 Incorrect Ratio	See 6-CYLINDER DIAGNOSIS: 6-CYLINDER (9/97-8/98).
P0735	.....	Gear 5 Incorrect Ratio	See 6-CYLINDER DIAGNOSIS: 6-CYLINDER (9/97-8/98).
P0740	111	Torque Converter Clutch Circuit/Open	See 6-CYLINDER DIAGNOSIS: 6-CYLINDER (9/97-8/98).
P0743	32	Torque Converter Clutch Circuit Electrical	See 6-CYLINDER DIAGNOSIS: 6-CYLINDER (9/97-8/98).
P0748	5	Pressure Control Solenoid "A" Electrical	See 6-CYLINDER DIAGNOSIS: 6-CYLINDER (9/97-8/98).
P0753	30	Shift Solenoid "A" Electrical	See 6-CYLINDER DIAGNOSIS: 6-CYLINDER (9/97-8/98).
P0758	33	Shift Solenoid "B" Electrical	See 6-CYLINDER DIAGNOSIS: 6-CYLINDER (9/97-8/98).
P1743	4	Pressure Control Solenoid "E" Electrical (M44/M52: Brake Band Electrical)	See 6-CYLINDER DIAGNOSIS: 6-CYLINDER (9/97-8/98).
P1746	104	Transmission Control Module Output Stage	See 6-CYLINDER DIAGNOSIS: 6-CYLINDER (9/97-8/98).
P1747	150	CAN-Bus Monitoring	See 6-CYLINDER DIAGNOSIS: 6-CYLINDER (9/97-8/98).
P1747	151	CAN-Bus Monitoring	See 6-CYLINDER DIAGNOSIS: 6-CYLINDER (9/97-8/98).
P1747	156	CAN-Bus Monitoring	See 6-CYLINDER DIAGNOSIS: 6-CYLINDER (9/97-8/98).
P1748	103	Transmission Control Module Self-Test	See 6-CYLINDER DIAGNOSIS: 6-CYLINDER (9/97-8/98).
P1748	105	Transmission Control Module Self-Test	See 6-CYLINDER DIAGNOSIS: 6-CYLINDER (9/97-8/98).

P1748	110	Transmission Control Module Self-Test	See 6-CYLINDER DIAGNOSIS: 6-CYLINDER (9/97-8/98).
P1749	108	Secondary Pressure Solenoid Communication Error (M52: Internal Transmission Control Module Memory Error)	No Diagnosis Available
P1750	54	Secondary Pressure Solenoid Circuit Range/Performance (M44/M52/S52/M62/M73: System Voltage Input Low)	See 6-CYLINDER DIAGNOSIS: 6-CYLINDER (9/97-8/98).
P1761	2	Shiftlock Solenoid	No Diagnosis Available
P1765	154	CAN Throttle Valve	No Diagnosis Available
P1765	158	CAN Throttle Valve	No Diagnosis Available
P1780	152	CAN Torque Reduction	No Diagnosis Available
P1780	163	CAN Torque Reduction	No Diagnosis Available

6-Cylinder Diagnosis: 6-Cylinder (9/97-8/98)

Component/ System	Fault Code	Monitor Strategy Description	Malfunction Criteria	Threshold value	Secondary Parameter	Enable/Disable Conditions	Time Required	MIL Illum.
A/T Range Switch	P0705	circuit continuity rationality	voltage unvalid code for P and N	no signal/multiple signal	engine speed	200 - 440 rpm	100 msec/ once per engine start up	two driving cycles
Input Speed	P0715	rationality	input speed	no signal	selected gear engine speed output speed	1, 2, 3, 4 or 5 > 600 rpm > 250 rpm	200 msec/ continuous	two driving cycles
Output Speed	P0720	rationality	output speed	no signal	selected gear engine speed	1, 2, 3, 4 or 5 > 1700 rpm	200 msec/ continuous	two driving cycles
Gear Ratio	P0732 P0733 P0734 P0735		input - output speed / (gear ratio)	> 350 rpm	selected gear input speed output speed	2, 3, 4 or 5 > 420 rpm > 250 rpm	200 msec/ continuous	two driving cycles
Torque Converter Clutch	P0743	circuit continuity	voltage				100 msec cont.	two driving
	P0740	functional check	calculated slip	> 100 rpm	selected gear	3, 4 or 5	2,5 sec once per lock-up	cycles
Pres. Contr. Solenoid	P0748	circuit continuity	voltage				100 msec cont.	two dr cyc
Shift Solenoid A	P0753	circuit continuity	voltage				30 msec/ continuous	two driving cycles
B	P0758							
C	P0763	rationality	voltage		gear changing	2 - >3		
D	P0768	rationality	voltage		gear changing	4 - >5		
E	P0773	rationality	voltage					
Force Motor/Pres. Control Valve	P1743	circuit continuity	voltage				100 msec/ continuous	two driving cycles
Power Supply	P1750	rationality	battery voltage	< 9 V	engine speed	> 1600 rpm	300 msec/ continuous	two driving cycles
Transmission Control Modul (TCM)	P1747 P1748	bus check self check	CAN massages/time out RAM and ROM check watchdog	> 500 ms invalid check-sum on delay time		at power up	immediately/cont. 90 sec. 120 msec/cont. 100 msec/once after system start	two driving cycles
Relay	P1746	functional check	timing (response)					

G00375673

Fig. 11: 6-Cylinder Diagnosis: 6-Cylinder (9/97-8/98)
Courtesy of BMW OF NORTH AMERICA, INC.

DIAGNOSTIC TROUBLE CODES 6-CYLINDER (323i, 328i & 528i - 9/98-5/99)

DIAGNOSTIC TROUBLE CODES 6-CYLINDER (323i, 328i & 528i - 9/98-5/99)

PCode	BMW Code	Possible Cause	Diagnostic Parameters
P0705	8	Transmission Range Sensor "A" Circuit Malfunction (PRNDL Input)	See 6-CYLINDER DIAGNOSIS (323i, 328i, 528i - 9/98-5/99).
P0715	.....	Input Speed Signal	See 6-CYLINDER DIAGNOSIS (323i, 328i, 528i

			- 9/98-5/99).
P0720	42	Output Speed Sensor Circuit	See 6-CYLINDER DIAGNOSIS (323i, 328i, 528i - 9/98-5/99).
P0731	100	Gear 1 Incorrect Ratio	See 6-CYLINDER DIAGNOSIS (323i, 328i, 528i - 9/98-5/99).
P0732	100	Gear 2 Incorrect Ratio	See 6-CYLINDER DIAGNOSIS (323i, 328i, 528i - 9/98-5/99).
P0733	100	Gear 3 Incorrect Ratio	See 6-CYLINDER DIAGNOSIS (323i, 328i, 528i - 9/98-5/99).
P0734	100	Gear 4 Incorrect Ratio	See 6-CYLINDER DIAGNOSIS (323i, 328i, 528i - 9/98-5/99).
P0735	100	Gear 5 Incorrect Ratio	See 6-CYLINDER DIAGNOSIS (323i, 328i, 528i - 9/98-5/99).
P0740	111	Torque Converter Clutch Circuit/Open	See 6-CYLINDER DIAGNOSIS (323i, 328i, 528i - 9/98-5/99).
P0743	32	Torque Converter Clutch Circuit Electrical	See 6-CYLINDER DIAGNOSIS (323i, 328i, 528i - 9/98-5/99).
P0748	5	Pressure Control Solenoid "A" Electrical	See 6-CYLINDER DIAGNOSIS (323i, 328i, 528i - 9/98-5/99).
P0753	30	Shift Solenoid "A" Electrical	See 6-CYLINDER DIAGNOSIS (323i, 328i, 528i - 9/98-5/99).
P0758	33	Shift Solenoid "B" Electrical	See 6-CYLINDER DIAGNOSIS (323i, 328i, 528i - 9/98-5/99).
P0763	.....	Shift Solenoid "C" Electrical	See 6-CYLINDER DIAGNOSIS (323i, 328i, 528i - 9/98-5/99).
P1743	4	Pressure Control Solenoid "E" Electrical (M44/M52: Brake Band Electrical)	See 6-CYLINDER DIAGNOSIS (323i, 328i, 528i - 9/98-5/99).
P1746	104	Transmission Control Module Output Stage	No Diagnosis Available
P1747	150	CAN-Bus Monitoring	See 6-CYLINDER DIAGNOSIS (323i, 328i, 528i - 9/98-5/99).
P1747	151	CAN-Bus Monitoring	See 6-CYLINDER DIAGNOSIS (323i, 328i, 528i - 9/98-5/99).
P1747	156	CAN-Bus Monitoring	See 6-CYLINDER DIAGNOSIS (323i, 328i, 528i - 9/98-5/99).
P1748	103	Transmission Control Module Self-Test	See 6-CYLINDER DIAGNOSIS (323i, 328i, 528i - 9/98-5/99).

P1748	105	Transmission Control Module Self-Test	See 6-CYLINDER DIAGNOSIS (323i, 328i, 528i - 9/98-5/99).
P1748	110	Transmission Control Module Self-Test	See 6-CYLINDER DIAGNOSIS (323i, 328i, 528i - 9/98-5/99).
P1749	108	Secondary Pressure Solenoid Communication Error (M52: Internal Transmission Control Module Memory Error)	See 6-CYLINDER DIAGNOSIS (323i, 328i, 528i - 9/98-5/99).
P1750	54	Secondary Pressure Solenoid Circuit Range/Performance (Voltage Input Low)	See 6-CYLINDER DIAGNOSIS (323i, 328i, 528i - 9/98-5/99).
P1751	54	Secondary Pressure Solenoid Circuit Range/Performance (Voltage Input High)	See 6-CYLINDER DIAGNOSIS (323i, 328i, 528i - 9/98-5/99).
P1765	154	CAN Throttle Valve	See 6-CYLINDER DIAGNOSIS (323i, 328i, 528i - 9/98-5/99).
P1765	158	CAN Throttle Valve	See 6-CYLINDER DIAGNOSIS (323i, 328i, 528i - 9/98-5/99).
P1780	152	CAN Torque Reduction	No Diagnosis Available
P1780	163	CAN Torque Reduction	No Diagnosis Available

6-Cylinder Diagnosis (323i, 328i, 528i - 9/98-5/99)

Component/ System	Fault Code	Monitor Strategy Description	Malfunction Criteria	Threshold value	Secondary Parameter	Enable/Disable Conditions	Time Required	MIL Illum.
A/T Range Switch	P0705	rationality	unvalid code	wrong signal	engine speed	> 600 rpm	3 sec / cont	
Input Speed	P0715	rationality	input speed	no signal or < 100 rpm	gear selected engine speed vehicle speed	1,2,3,4 or 5 > 600 rpm > 8 km/h	3 sec / cont	
Output Speed	P0720	rationality	output speed input speed	no signal > 1500 rpm	gear selected	1,2,3,4 or 5	5 sec / cont	
Gear Ratio	P0731 to P0735	rationality	input - output speed ƒ (gear ratio)	Δ > 5 %	gear selected pos lever vehicle speed	1,2,3,4,5 no P / no N / no R > 4 km/h	2 sec / cont	
Torque Converter Clutch	P0740	functional check	eng. speed - input speed (maximum slip)	> 200 prm	gear selected	2, 3, 4 or 5	20 sec / cont	two driving cycles
Press. Contr. Valve	P0743	circuit continuity	voltage				700 msec / cont	
Shift Solenoid (A)	P0753	circuit continuity	voltage				700 msec / cont	
(B)	P0758						700 msec / cont	
(C)	P0763						700 msec / cont	
Power Supply	P1750	rationality	battery voltage	< 9,5 V	engine speed	> 1500 rpm	5 sec / cont	two driving cycles
	P1751	rationality	battery voltage	> 18 V			10 sec / cont	
Transmission Control Modul	P0727	bus check	engine speed CAN messages/time out	> 1 s	battery voltage	> 10V	1 sec / cont	one driving cycle
	P1747							
	P1748	rationality	internal error				once at startup	
	P1749	self check	RAM and ROM check	invalid checksum			once at startup	two driving cycles
	P1765	rationality	CAN (throttle position)	signal range/performance			1 sec / cont	

G00375674

Fig. 12: 6-Cylinder Diagnosis (323i, 328i, 528i - 9/98-5/99)
Courtesy of BMW OF NORTH AMERICA, INC.

DIAGNOSTIC TROUBLE CODES 6-CYLINDER (M COUPE, M ROADSTER, M3, Z3, 328is, 528i - 9/98-5/99)

DIAGNOSTIC TROUBLE CODES 6-CYLINDER (M COUPE, M ROADSTER, M3, Z3, 328is, 528i - 9/98-5/99)

PCode	BMW Code	Possible Cause	Diagnostic Parameters
P0705	8	Transmission Range Sensor "A" Circuit Malfunction (PRNDL Input)	See 6-CYLINDER DIAGNOSIS (M COUPE, M ROADSTER, M3, Z3, 328IS, 528i - 9/98-5/99).

P0720	42	Output Speed Sensor Circuit	See 6-CYLINDER DIAGNOSIS (M COUPE, M ROADSTER, M3, Z3, 328IS, 528i - 9/98-5/99).
P0731	100	Gear 1 Incorrect Ratio	See 6-CYLINDER DIAGNOSIS (M COUPE, M ROADSTER, M3, Z3, 328IS, 528i - 9/98-5/99).
P0732	100	Gear 2 Incorrect Ratio	See 6-CYLINDER DIAGNOSIS (M COUPE, M ROADSTER, M3, Z3, 328IS, 528i - 9/98-5/99).
P0733	100	Gear 3 Incorrect Ratio	See 6-CYLINDER DIAGNOSIS (M COUPE, M ROADSTER, M3, Z3, 328IS, 528i - 9/98-5/99).
P0734	100	Gear 4 Incorrect Ratio	See 6-CYLINDER DIAGNOSIS (M COUPE, M ROADSTER, M3, Z3, 328IS, 528i - 9/98-5/99).
P0740	111	Torque Converter Clutch Circuit/Open	See 6-CYLINDER DIAGNOSIS (M COUPE, M ROADSTER, M3, Z3, 328IS, 528i - 9/98-5/99).
P0743	32	Torque Converter Clutch Circuit Electrical	See 6-CYLINDER DIAGNOSIS (M COUPE, M ROADSTER, M3, Z3, 328IS, 528i - 9/98-5/99).
P0748	5	Pressure Control Solenoid "A" Electrical	See 6-CYLINDER DIAGNOSIS (M COUPE, M ROADSTER, M3, Z3, 328IS, 528i - 9/98-5/99).
P0753	30	Shift Solenoid "A" Electrical	See 6-CYLINDER DIAGNOSIS (M COUPE, M ROADSTER, M3, Z3, 328IS, 528i - 9/98-5/99).
P0758	33	Shift Solenoid "B" Electrical	See 6-CYLINDER DIAGNOSIS (M COUPE, M ROADSTER, M3, Z3, 328IS, 528i - 9/98-5/99).
P1743	4	Pressure Control Solenoid "E" Electrical (M44/M52: Brake Band Electrical)	See 6-CYLINDER DIAGNOSIS (M COUPE, M ROADSTER, M3, Z3, 328IS, 528i - 9/98-5/99).
P1746	104	Transmission Control Module Output Stage	See 6-CYLINDER DIAGNOSIS (M COUPE, M ROADSTER, M3, Z3, 328IS, 528i - 9/98-5/99).
P1747	150	CAN-Bus Monitoring	See 6-CYLINDER DIAGNOSIS (M COUPE, M ROADSTER, M3, Z3, 328IS, 528i - 9/98-5/99).
P1747	151	CAN-Bus Monitoring	See 6-CYLINDER DIAGNOSIS (M COUPE, M ROADSTER, M3, Z3,

			328IS, 528i - 9/98-5/99).
P1747	156	CAN-Bus Monitoring	See 6-CYLINDER DIAGNOSIS (M COUPE, M ROADSTER, M3, Z3, 328IS, 528i - 9/98-5/99).
P1748	103	Transmission Control Module Self-Test	See 6-CYLINDER DIAGNOSIS (M COUPE, M ROADSTER, M3, Z3, 328IS, 528i - 9/98-5/99).
P1748	105	Transmission Control Module Self-Test	See 6-CYLINDER DIAGNOSIS (M COUPE, M ROADSTER, M3, Z3, 328IS, 528i - 9/98-5/99).
P1748	110	Transmission Control Module Self-Test	See 6-CYLINDER DIAGNOSIS (M COUPE, M ROADSTER, M3, Z3, 328IS, 528i - 9/98-5/99).
P1749	108	Secondary Pressure Solenoid Communication Error (M52: Internal Transmission Control Module Memory Error)	No Diagnosis Available
P1750	54	Secondary Pressure Solenoid Circuit Range/Performance (M44/M52/S52/M62/M73: System Voltage Input Low)	No Diagnosis Available
P1761	2	Shiftlock Solenoid	See 6-CYLINDER DIAGNOSIS (M COUPE, M ROADSTER, M3, Z3, 328IS, 528i - 9/98-5/99).
P1765	154	CAN Throttle Valve	See 6-CYLINDER DIAGNOSIS (M COUPE, M ROADSTER, M3, Z3, 328IS, 528i - 9/98-5/99).
P1765	158	CAN Throttle Valve	See 6-CYLINDER DIAGNOSIS (M COUPE, M ROADSTER, M3, Z3, 328IS, 528i - 9/98-5/99).
P1780	152	CAN Torque Reduction	No Diagnosis Available
P1780	163	CAN Torque Reduction	No Diagnosis Available

6-Cylinder Diagnosis (M Coupe, M Roadster, M3, Z3, 328is, 528i - 9/98-5/99)

Component/ System	Fault Code	Monitor Strategy Description	Malfunction Criteria	Threshold value	Secondary Parameter	Enable/Disable Conditions	Time Required	MIL Illum.
A/T Range Switch	P0705	circuit continuity rationality	voltage unvalid code for P and N	no signal/multiple signal	engine speed	200 - 440 rpm	200 msec/ once per engine start up	two driving cycles
Input Speed	-	no input speed sensor involved, therefore input speed is calculated --> [output speed multiplied by gear ratios]					-	
Output Speed	P0720	rationality	output speed	no signal	selected gear engine speed	1, 2, 3 or 4 > 3000 rpm	500 msec/ continuous	two driving cycles
Gear Ratio	P0731 P0732 P0733 P0734	rationality	actual - calculated output * gear ratio	> 320 rpm (gear 1) > 480 rpm (gear 2) > 736 rpm (gear 3) > 992 rpm (gear 4)	engine speed	> 3000 rpm	2,5 sec/ continuous	two driving cycles
Torque Converter Clutch	P0743	circuit continuity	voltage				100 msec/ continuous	two driving cycles
	P0740	functional check	calculated slip	> 288 rpm	selected gear	3 or 4	2,5 sec/ continuous	
Pressure Control Solenoid	P0748	circuit continuity	voltage				200 msec/ continuous	two driving cycles
Shift Solenoid A B	P0753 P0758	circuit continuity	voltage				100 msec/ continuous	two driving cycles
Force Motor/Pressure Control Valve	P1743	circuit continuity	voltage				100 msec/ continuous	two driving cycles
Power Supply	P1746	rationality	battery voltage	< 9 V	engine speed	> 1500 rpm	300 msec/ continuous	two driving cycles
Transmission Control Modul (TCM)	P1747	bus check	CAN messages/time out	> 500 ms			immediately/cont.	two driving cycles
	P1748	self check	RAM and ROM check	invalid check-sum		at power up	90 sec.	
			watchdog	on			120 msec/cont.	
Relay	P1746	functional check	timing (response)	delay time			100 msec/once after system start	
	P1761	circuit continuity	voltage				70 msec/cont.	
	P1765	rationality	CAN (throttle position)	signal range/performance			400 msec/cont	

G00375675

Fig. 13: 6-Cylinder Diagnosis (M Coupe, M Roadster, M3, Z3, 328is, 528i - 9/98-5/99)
Courtesy of BMW OF NORTH AMERICA, INC.

DIAGNOSTIC TROUBLE CODES 6-CYLINDER (Z3 - 6/99-5/00)

DIAGNOSTIC TROUBLE CODES 6-CYLINDER (Z3 - 6/99-5/00)

PCode	BMW Code	Possible Cause	Diagnostic Parameters
P0705	8	Transmission Range Sensor "A" Circuit Malfunction (PRNDL Input)	See 6-CYLINDER DIAGNOSIS (Z3 - 6/99-5/00).
P0720	42	Output Speed Sensor Circuit	See 6-CYLINDER DIAGNOSIS (Z3 - 6/99-5/00).
P0731	100	Gear 1 Incorrect Ratio	See 6-CYLINDER

			DIAGNOSIS (Z3 - 6/99-5/00).
P0732	100	Gear 2 Incorrect Ratio	See 6-CYLINDER DIAGNOSIS (Z3 - 6/99-5/00).
P0733	100	Gear 3 Incorrect Ratio	See 6-CYLINDER DIAGNOSIS (Z3 - 6/99-5/00).
P0734	100	Gear 4 Incorrect Ratio	See 6-CYLINDER DIAGNOSIS (Z3 - 6/99-5/00).
P0740	111	Torque Converter Clutch Circuit/Open	See 6-CYLINDER DIAGNOSIS (Z3 - 6/99-5/00).
P0743	32	Torque Converter Clutch Circuit Electrical	See 6-CYLINDER DIAGNOSIS (Z3 - 6/99-5/00).
P0748	5	Pressure Control Solenoid "A" Electrical	See 6-CYLINDER DIAGNOSIS (Z3 - 6/99-5/00).
P0753	30	Shift Solenoid "A" Electrical	See 6-CYLINDER DIAGNOSIS (Z3 - 6/99-5/00).
P0758	33	Shift Solenoid "B" Electrical	See 6-CYLINDER DIAGNOSIS (Z3 - 6/99-5/00).
P1743	4	Pressure Control Solenoid "E" Electrical (M44/M52: Brake Band Electrical)	See 6-CYLINDER DIAGNOSIS (Z3 - 6/99-5/00).
P1746	104	Transmission Control Module Output Stage	See 6-CYLINDER DIAGNOSIS (Z3 - 6/99-5/00).
P1747	150	CAN-Bus Monitoring	See 6-CYLINDER DIAGNOSIS (Z3 - 6/99-5/00).
P1747	151	CAN-Bus Monitoring	See 6-CYLINDER DIAGNOSIS (Z3 - 6/99-5/00).
P1747	156	CAN-Bus Monitoring	See 6-CYLINDER DIAGNOSIS (Z3 - 6/99-5/00).
P1748	103	Transmission Control Module Self-Test	See 6-CYLINDER DIAGNOSIS (Z3 - 6/99-5/00).
P1748	105	Transmission Control Module Self-Test	See 6-CYLINDER DIAGNOSIS (Z3 - 6/99-5/00).
P1748	110	Transmission Control Module Self-Test	See 6-CYLINDER DIAGNOSIS (Z3 - 6/99-5/00).
P1749	108	Secondary Pressure Solenoid Communication Error (M52: Internal Transmission Control Module Memory Error)	No Diagnosis Available
P1750	54	Secondary Pressure Solenoid Circuit Range/Performance (M44/M52/S52/M62/M73: System Voltage Input Low)	No Diagnosis Available
P1761	2	Shiftlock Solenoid	See 6-CYLINDER DIAGNOSIS (Z3 - 6/99-5/00).
P1765	154	CAN Throttle Valve	See 6-CYLINDER DIAGNOSIS (Z3 - 6/99-5/00).
P1765	158	CAN Throttle Valve	See 6-CYLINDER DIAGNOSIS (Z3 - 6/99-5/00).
P1780	152	CAN Torque Reduction	No Diagnosis Available
P1780	163	CAN Torque Reduction	No Diagnosis Available

Component/ System	Fault Code	Monitor Strategy Description	Malfunction Criteria	Threshold value	Secondary Parameter	Enable/Disable Conditions	Time Required	MIL Illum.
A/T Range Switch	P0705	circuit continuity rationality	voltage unvalid code for P and N	no signal/multiple signal	engine speed	200 - 440 rpm	200 msec/ once per engine start up	two driving cycles
Input Speed	-	no input speed sensor involved, therefore input speed is calculated --> [output speed multiplied by gear ratios]					-	
Output Speed	P0720	rationality	output speed	no signal	selected gear engine speed	1, 2, 3 or 4 > 3000 rpm	500 msec/ continuous	
Gear Ratio	P0731 P0732 P0733 P0734	rationality	actual - calculated output * gear ratio	> 320 rpm (gear 1) > 480 rpm (gear 2) > 736 rpm (gear 3) > 992 rpm (gear 4)	engine speed	> 3000 rpm	2,5 sec/ continuous	
Torque Converter Clutch	P0743	circuit continuity	voltage				100 msec/ continuous	
	P0740	functional check	calculated slip	> 288 rpm	selected gear	3 or 4	2,5 sec/ continuous	
Pressure Control Solenoid	P0748	circuit continuity	voltage				200 msec/ continuous	
Shift Solenoid A B	P0753 P0758	circuit continuity	voltage				100 msec/ continuous	
Force Motor/Pressure Control Valve	P1743	circuit continuity	voltage				100 msec/ continuous	
Power Supply	P1746	rationality	battery voltage	< 9 V	engine speed	> 1500 rpm	300 msec/ continuous	two driving cycles
Transmission Control Module (TCM)	P1747	bus check	CAN messages/time out	> 500 ms			immediately/cont.	one driving cycle
	P1748	self check	RAM and ROM check	invalid check-sum		at power up	90 sec.	
			watchdog	on			120 msec/cont.	two driving cycles
Relay	P1746	functional check	timing (response)	delay time			100 msec/once after system start	
	P1761	circuit continuity	voltage				70 msec/cont.	
	P1765	rationality	CAN (throttle position)	signal range/performance			400 msec/cont.	

G00375676

Fig. 14: 6-Cylinder Diagnosis (Z3 - 6/99-5/00)
Courtesy of BMW OF NORTH AMERICA, INC.

DIAGNOSTIC TROUBLE CODES 6-CYLINDER (323i, 328i & 528i - 6/99-8/00)

DIAGNOSTIC TROUBLE CODES 6-CYLINDER (323i, 328i & 528i - 6/99-8/00)

PCode	BMW Code	Possible Cause	Diagnostic Parameters
P0705	60	Transmission Range Sensor "A" Circuit Malfunction (PRNDL Input)	See 6-CYLINDER DIAGNOSIS (323i, 328i & 528i - 6/99-8/00).
P0715	33	Input/Turbine Speed Sensor "A" Circuit	See 6-CYLINDER DIAGNOSIS (323i, 328i

			& 528i - 6/99-8/00).
P0720	32	Output Speed Sensor Circuit	See 6-CYLINDER DIAGNOSIS (323i, 328i & 528i - 6/99-8/00).
P0727	150	Engine Speed Input Circuit No Signal	See 6-CYLINDER DIAGNOSIS (323i, 328i & 528i - 6/99-8/00).
P0731	50	Gear 1 Incorrect Ratio	See 6-CYLINDER DIAGNOSIS (323i, 328i & 528i - 6/99-8/00).
P0732	52	Gear 2 Incorrect Ratio	See 6-CYLINDER DIAGNOSIS (323i, 328i & 528i - 6/99-8/00).
P0733	53	Gear 3 Incorrect Ratio	See 6-CYLINDER DIAGNOSIS (323i, 328i & 528i - 6/99-8/00).
P0734	54	Gear 4 Incorrect Ratio	See 6-CYLINDER DIAGNOSIS (323i, 328i & 528i - 6/99-8/00).
P0735	55	Gear 5 Incorrect Ratio	See 6-CYLINDER DIAGNOSIS (323i, 328i & 528i - 6/99-8/00).
P0740	48	Torque Converter Clutch Circuit/Open	See 6-CYLINDER DIAGNOSIS (323i, 328i & 528i - 6/99-8/00).
P0743	4	Torque Converter Clutch Circuit Electrical	See 6-CYLINDER DIAGNOSIS (323i, 328i & 528i - 6/99-8/00).
P0753	16	Shift Solenoid "A" Electrical	See 6-CYLINDER DIAGNOSIS (323i, 328i & 528i - 6/99-8/00).
P0758	17	Shift Solenoid "B" Electrical	See 6-CYLINDER DIAGNOSIS (323i, 328i & 528i - 6/99-8/00).
P0763	18	Shift Solenoid "C" Electrical	See 6-CYLINDER DIAGNOSIS (323i, 328i & 528i - 6/99-8/00).
P1747	129	CAN-Bus Monitoring	See 6-CYLINDER DIAGNOSIS (323i, 328i & 528i - 6/99-8/00).
P1747	144	CAN-Bus Monitoring	See 6-CYLINDER DIAGNOSIS (323i, 328i & 528i - 6/99-8/00).
P1748	81	Transmission Control Module Self-Test	See 6-CYLINDER DIAGNOSIS (323i, 328i & 528i - 6/99-8/00).
P1749	80	Secondary Pressure Solenoid Communication Error (M52: Internal Transmission Control Module Memory Error)	See 6-CYLINDER DIAGNOSIS (323i, 328i & 528i - 6/99-8/00).
P1750	96	Secondary Pressure Solenoid Circuit Range/Performance (System Voltage Input Low)	See 6-CYLINDER DIAGNOSIS (323i, 328i & 528i - 6/99-8/00).
P1751	.....	Secondary Pressure Solenoid Circuit Range/Performance (System Voltage	See 6-CYLINDER DIAGNOSIS (323i, 328i

		Input High)	& 528i - 6/99-8/00).
P1765	147	CAN Throttle Valve	See 6-CYLINDER DIAGNOSIS (323i, 328i & 528i - 6/99-8/00).

6-Cylinder Diagnosis (323i, 328i & 528i - 6/99-8/00)

Component/ System	Fault Code	Monitor Strategy Description	Malfunction Criteria	Threshold value	Secondary Parameter	Enable/Disable Conditions	Time Required	MIL Illum.
A/T Range Switch	P0705	rationality	unvalid code	wrong signal	engine speed	> 600 rpm	3 sec / cont	two driving cycles
Input Speed	P0715	rationality	input speed	no signal or < 100 rpm	gear selected engine speed vehicle speed	1,2,3,4 or 5 > 600 rpm > 8 km/h	3 sec / cont	
Output Speed	P0720	rationality	output speed input speed	no signal > 1500 rpm	gear selected	1,2,3,4 or 5	5 sec / cont	
Gear Ratio	P0731 to P0735	rationality	input - output speed ∫ (gear ratio)	Δ > 5 %	gear selected pos lever vehicle speed	1,2,3,4,5 no P / no N / no R > 4 km/h	2 sec / cont	
Torque Converter Clutch Press. Contr. Valve	P0740	functional check	eng. speed - input speed (maximum slip)	> 200 prm	gear selected	2, 3, 4 or 5	20 sec / cont	
Shift Solenoid (A)	P0743	circuit continuity	voltage				700 msec / cont	
(B)	P0753	circuit continuity	voltage				700 msec / cont	
(C)	P0758						700 msec / cont	
	P0763						700 msec / cont	
Power Supply	P1750	rationality	battery voltage	< 9,5 V	engine speed	> 1500 rpm	5 sec / cont	two driving cycles
	P1751	rationality	battery voltage	> 18 V			10 sec / cont	
Transmission Control Module	P0727	bus check	engine speed CAN messages/time out	> 1 s	battery voltage	> 10V	1 sec / cont	one driving cycle
	P1747	rationality	internal error				once at startup	
	P1748	rationality	RAM and ROM check	invalid checksum			once at startup	two driving cycles
	P1749	self check	CAN (throttle position)	signal range/performance			1 sec / cont	
	P1765	rationality						

G00375677

Fig. 15: 6-Cylinder Diagnosis (323i, 328i & 528i - 6/99-8/00)
Courtesy of BMW OF NORTH AMERICA, INC.

DIAGNOSTIC TROUBLE CODES 6-CYLINDER (4/00-9/01)

DIAGNOSTIC TROUBLE CODES 6-CYLINDER (4/00-9/01)

PCode	BMW Code	Possible Cause	Diagnostic Parameters
P0560	96	System Voltage	See 6-CYLINDER DIAGNOSIS (4/00-9/01).
P0600	129	Serial Communication Link	See 6-CYLINDER DIAGNOSIS (4/00-9/01).
P0600	144	Serial Communication Link	See 6-CYLINDER DIAGNOSIS (4/00-9/01).
P0601	80	Internal Control Module Memory Check Sum Error	See 6-CYLINDER DIAGNOSIS (4/00-9/01).
P0603	81	Internal Control Module Keep Alive Memory (KAM) Error	No Diagnosis Available
P0705	60	Transmission Range Sensor "A" Circuit Malfunction (PRNDL Input)	See 6-CYLINDER DIAGNOSIS (4/00-9/01).
P0715	33	Input/Turbine Speed Sensor "A" Circuit	See 6-CYLINDER DIAGNOSIS (4/00-9/01).
P0720	32	Output Speed Sensor Circuit	See 6-CYLINDER DIAGNOSIS (4/00-9/01).
P0727	150	Engine Speed Input Circuit No Signal	See 6-CYLINDER DIAGNOSIS (4/00-9/01).
P0731	50	Gear 1 Incorrect Ratio	See 6-CYLINDER DIAGNOSIS (4/00-9/01).
P0732	52	Gear 2 Incorrect Ratio	See 6-CYLINDER DIAGNOSIS (4/00-9/01).
P0733	53	Gear 3 Incorrect Ratio	See 6-CYLINDER DIAGNOSIS (4/00-9/01).
P0734	54	Gear 4 Incorrect Ratio	See 6-CYLINDER DIAGNOSIS (4/00-9/01).
P0735	55	Gear 5 Incorrect Ratio	See 6-CYLINDER DIAGNOSIS (4/00-9/01).
P0741	.....	Torque Converter Clutch Functional Check	See 6-CYLINDER DIAGNOSIS (4/00-9/01).
P0743	4	Torque Converter Clutch Circuit Electrical	See 6-CYLINDER DIAGNOSIS (4/00-9/01).
P0753	16	Shift Solenoid "A" Electrical	See 6-CYLINDER DIAGNOSIS (4/00-9/01).
P0758	17	Shift Solenoid "B" Electrical	See 6-CYLINDER DIAGNOSIS (4/00-9/01).
P0763	18	Shift Solenoid "C" Electrical	See 6-CYLINDER DIAGNOSIS (4/00-9/01).
P1748	.....	Transmission Control Module Internal Module	See 6-CYLINDER DIAGNOSIS (4/00-9/01).
P1765	147	CAN Throttle Valve	See 6-CYLINDER DIAGNOSIS (4/00-9/01).

6-Cylinder Diagnosis (4/00-9/01)

Component/ System	Fault Code	Monitor Strategy Description	Malfunction Criteria	Threshold value	Secondary Parameter	Enable/Disable Conditions	Time Required	MIL Illum.
A/T Range Switch	P0705	rationality	unvalid code	wrong signal	engine speed	> 600 rpm	3 sec / cont	
Input Speed	P0715	rationality	input speed	no signal or < 100 rpm	gear selected engine speed vehicle speed	1,2,3,4 or 5 > 600 rpm > 8 km/h	3 sec / cont	
Output Speed	P0720	rationality	output speed input speed	no signal > 1500 rpm	gear selected	1,2,3,4 or 5	5 sec / cont	
Gear Ratio	P0731/0732 P0733/0734 P0735	rationality	input - output speed f (gear ratio)	Δ > 5 %	gear selected pos lever vehicle speed	1,2,3,4,5 no P / no N / no R > 4 km/h	2 sec / cont	
Torque Converter Clutch	P0741	functional check	eng. speed - input speed (maximum slip)	> 200 prm	gear selected	2, 3, 4 or 5	20 sec / cont	two driving cycles
Press. Contr. Valve	P0743	circuit continuity	voltage				700 msec / cont	
Shift Solenoid (A)	P0753	circuit continuity	voltage				700 msec / cont	
(B)	P0758						700 msec / cont	
(C)	P0763						700 msec / cont	
Power Supply	P0560	rationality	battery voltage battery voltage	< 9,5 V > 18 V	engine speed	> 1500 rpm	5 sec / cont 10 sec / cont	two driving cycles
Transmission Control Modul	P0727	bus check	engine speed CAN messages/time out	> 1 s	battery voltage	> 10V	1 sec / cont	one driving cycle
	P0600	rationality	internal error				once at startup	
	P1748	self check	RAM and ROM check	invalid checksum			once at startup	two driving cycles
	P0601	rationality	CAN (throttle position)	signal range/performance			1 sec / cont	
	P1765							

G00375678

Fig. 16: 6-Cylinder Diagnosis (4/00-9/01)
Courtesy of BMW OF NORTH AMERICA, INC.

DIAGNOSTIC TROUBLE CODES 6-CYLINDER: ZF TRANSMISSION (9/01-8/02)

DIAGNOSTIC TROUBLE CODES 6-CYLINDER: ZF TRANSMISSION (9/01-8/02)

P Code	BMW Code	Possible Cause	Diagnostic Parameters
P0709	60	Transmission Range Sensor "A" Circuit Intermittent	See 6-CYLINDER: ZF TRANSMISSION DIAGNOSIS (9/01-8/02 - 1 OF 4).
P0715	33	Input/Turbine Speed Sensor "A"	See 6-CYLINDER: ZF

		Circuit	TRANSMISSION DIAGNOSIS (9/01-8/02 - 1 OF 4).
P0716	33	Input/Turbine Speed Sensor "A" Circuit Range/Performance	See 6-CYLINDER: ZF TRANSMISSION DIAGNOSIS (9/01-8/02 - 1 OF 4).
P0720	32	Output Speed Sensor Circuit	See 6-CYLINDER: ZF TRANSMISSION DIAGNOSIS (9/01-8/02 - 1 OF 4).
P0721	59	Output Speed Sensor Circuit Range/Performance	See 6-CYLINDER: ZF TRANSMISSION DIAGNOSIS (9/01-8/02 - 1 OF 4).
P0731	50	Gear 1 Incorrect Ratio	See 6-CYLINDER: ZF TRANSMISSION DIAGNOSIS (9/01-8/02 - 1 OF 4).
P0732	52	Gear 2 Incorrect Ratio	See 6-CYLINDER: ZF TRANSMISSION DIAGNOSIS (9/01-8/02 - 1 OF 4).
P0733	53	Gear 3 Incorrect Ratio	See 6-CYLINDER: ZF TRANSMISSION DIAGNOSIS (9/01-8/02 - 1 OF 4).
P0734	54	Gear 4 Incorrect Ratio	See 6-CYLINDER: ZF TRANSMISSION DIAGNOSIS (9/01-8/02 - 1 OF 4).
P0735	55	Gear 5 Incorrect Ratio	See 6-CYLINDER: ZF TRANSMISSION DIAGNOSIS (9/01-8/02 - 1 OF 4).
P0740	4	Torque Converter Clutch Circuit/Open	See 6-CYLINDER: ZF TRANSMISSION DIAGNOSIS (9/01-8/02 - 2 OF 4).
P0741	48	Torque Converter Clutch Circuit Performance or Stuck Off	See 6-CYLINDER: ZF TRANSMISSION DIAGNOSIS (9/01-8/02 - 1 OF 4).
P0745	1	Pressure Control Solenoid "A"	See 6-CYLINDER: ZF TRANSMISSION DIAGNOSIS (9/01-8/02 - 2 OF 4).
P0750	16	Shift Solenoid "A"	See 6-CYLINDER: ZF TRANSMISSION DIAGNOSIS (9/01-8/02 - 2 OF 4).
P0751	16	Shift Solenoid "A" Performance or Stuck Off	See 6-CYLINDER: ZF TRANSMISSION DIAGNOSIS (9/01-8/02 - 2 OF 4).

P0752	16	Shift Solenoid "A" Stuck On	See 6-CYLINDER: ZF TRANSMISSION DIAGNOSIS (9/01-8/02 - 2 OF 4).
P0753	16	Shift Solenoid "A" Electrical	See 6-CYLINDER: ZF TRANSMISSION DIAGNOSIS (9/01-8/02 - 2 OF 4).
P0755	17	Shift Solenoid "B"	See 6-CYLINDER: ZF TRANSMISSION DIAGNOSIS (9/01-8/02 - 2 OF 4).
P0756	17	Shift Solenoid "B" Performance or Stuck Off	See 6-CYLINDER: ZF TRANSMISSION DIAGNOSIS (9/01-8/02 - 2 OF 4).
P0757	17	Shift Solenoid "B" Stuck On	See 6-CYLINDER: ZF TRANSMISSION DIAGNOSIS (9/01-8/02 - 2 OF 4).
P0758	17	Shift Solenoid "B" Electrical	See 6-CYLINDER: ZF TRANSMISSION DIAGNOSIS (9/01-8/02 - 2 OF 4).
P0760	18	Shift Solenoid "C"	See 6-CYLINDER: ZF TRANSMISSION DIAGNOSIS (9/01-8/02 - 3 OF 4).
P0761	18	Shift Solenoid "C" Performance or Stuck Off	See 6-CYLINDER: ZF TRANSMISSION DIAGNOSIS (9/01-8/02 - 3 OF 4).
P0762	18	Shift Solenoid "C" Stuck On	See 6-CYLINDER: ZF TRANSMISSION DIAGNOSIS (9/01-8/02 - 3 OF 4).
P0763	18	Shift Solenoid "C" Electrical	See 6-CYLINDER: ZF TRANSMISSION DIAGNOSIS (9/01-8/02 - 3 OF 4).
P0775	2	Pressure Control Solenoid "B"	See 6-CYLINDER: ZF TRANSMISSION DIAGNOSIS (9/01-8/02 - 2 OF 4).
P0782	57	2-3 Shift	See 6-CYLINDER: ZF TRANSMISSION DIAGNOSIS (9/01-8/02 - 3 OF 4).
P0783	58	3-4 Shift	See 6-CYLINDER: ZF TRANSMISSION DIAGNOSIS (9/01-8/02 - 3 OF 4).
P0795	3	Pressure Control Solenoid "C"	See 6-CYLINDER: ZF TRANSMISSION DIAGNOSIS (9/01-8/02 - 2 OF

			4).
P1700	62	Double Error Output Speed and Input/Turbine Speed	See 6-CYLINDER: ZF TRANSMISSION DIAGNOSIS (9/01-8/02 - 1 OF 4).
P1719	144	CAN Version Error	See 6-CYLINDER: ZF TRANSMISSION DIAGNOSIS (9/01-8/02 - 3 OF 4).
P1720	129	CAN Timeout Control Module	See 6-CYLINDER: ZF TRANSMISSION DIAGNOSIS (9/01-8/02 - 3 OF 4).
P1731	51	Gear 1 manual Incorrect Ratio	See 6-CYLINDER: ZF TRANSMISSION DIAGNOSIS (9/01-8/02 - 1 OF 4).
P1747	128	CAN-Bus Monitoring	See 6-CYLINDER: ZF TRANSMISSION DIAGNOSIS (9/01-8/02 - 3 OF 4).
P1761	19	Shiftlock Solenoid	See 6-CYLINDER: ZF TRANSMISSION DIAGNOSIS (9/01-8/02 - 3 OF 4).
P1762	19	Shiftlock Solenoid High Input	See 6-CYLINDER: ZF TRANSMISSION DIAGNOSIS (9/01-8/02 - 3 OF 4).
P1763	19	Shiftlock Solenoid Low Input	See 6-CYLINDER: ZF TRANSMISSION DIAGNOSIS (9/01-8/02 - 3 OF 4).
P1764	19	Shiftlock Solenoid Open Circuit	See 6-CYLINDER: ZF TRANSMISSION DIAGNOSIS (9/01-8/02 - 3 OF 4).
P1765	147	CAN Throttle Valve	See 6-CYLINDER: ZF TRANSMISSION DIAGNOSIS (9/01-8/02 - 3 OF 4).
P1791	81	Internal Transmission Control Module Memory Checksum/EEPROM Error	See 6-CYLINDER: ZF TRANSMISSION DIAGNOSIS (9/01-8/02 - 3 OF 4).
P1792	82	Internal Transmission Control Module Watchdog Error	See 6-CYLINDER: ZF TRANSMISSION DIAGNOSIS (9/01-8/02 - 3 OF 4)
P1794	80	Internal Transmission Control Module Memory Checksum Error	See 6-CYLINDER: ZF TRANSMISSION DIAGNOSIS (9/01-8/02 - 3 OF 4).
P1831	1	Pressure Control Solenoid "A" Circuit High	See 6-CYLINDER: ZF TRANSMISSION

			DIAGNOSIS (9/01-8/02 - 2 OF 4).
P1832	2	Pressure Control Solenoid "B" Circuit High	See 6-CYLINDER: ZF TRANSMISSION DIAGNOSIS (9/01-8/02 - 2 OF 4).
P1833	3	Pressure Control Solenoid "C" Circuit High	See 6-CYLINDER: ZF TRANSMISSION DIAGNOSIS (9/01-8/02 - 2 OF 4).
P1834	4	Pressure Control Solenoid "D" Circuit High	See 6-CYLINDER: ZF TRANSMISSION DIAGNOSIS (9/01-8/02 - 2 OF 4).
P1841	1	Pressure Control Solenoid "A" Circuit Low	See 6-CYLINDER: ZF TRANSMISSION DIAGNOSIS (9/01-8/02 - 2 OF 4).
P1842	2	Pressure Control Solenoid "B" Circuit Low	See 6-CYLINDER: ZF TRANSMISSION DIAGNOSIS (9/01-8/02 - 2 OF 4).
P1843	3	Pressure Control Solenoid "C" Circuit Low	See 6-CYLINDER: ZF TRANSMISSION DIAGNOSIS (9/01-8/02 - 2 OF 4).
P1844	4	Pressure Control Solenoid "D" Circuit Low	See 6-CYLINDER: ZF TRANSMISSION DIAGNOSIS (9/01-8/02 - 2 OF 4).
P1882	57	2-3 Shift Circuit High	See 6-CYLINDER: ZF TRANSMISSION DIAGNOSIS (9/01-8/02 - 3 OF 4).
P1883	58	3-4 Shift Circuit High	See 6-CYLINDER: ZF TRANSMISSION DIAGNOSIS (9/01-8/02 - 3 OF 4).
P1889	96	System Voltage - Electrical	See 6-CYLINDER: ZF TRANSMISSION DIAGNOSIS (9/01-8/02 - 3 OF 4).
P1892	96	System Voltage Low Input	See 6-CYLINDER: ZF TRANSMISSION DIAGNOSIS (9/01-8/02 - 3 OF 4).
P1893	83	Supply Voltage Pressure Control Solenoid/Shift Solenoid Circuit High	See 6-CYLINDER: ZF TRANSMISSION DIAGNOSIS (9/01-8/02 - 4 OF 4).
P1894	83	Supply Voltage Pressure Control Solenoid/Shift Solenoid Circuit Low	See 6-CYLINDER: ZF TRANSMISSION DIAGNOSIS (9/01-8/02 - 4 OF 4).
P1895	83	Supply Voltage Pressure Control	See 6-CYLINDER: ZF

		Solenoid/Shift Solenoid No Signal	TRANSMISSION DIAGNOSIS (9/01-8/02 - 4 OF 4).

6-Cylinder: ZF Transmission Diagnosis (9/01-8/02 - 1 Of 4)

Component/ System	Fault Code	Monitor Strategy Description	Malfunction Criteria	Treshold Value	Secondary Parameter	Enable Conditions	Time Required	MIL Illum.
A/T SHP19								
Range Switch	P0709	rationality	unvalid code	wrong signal			0.2 sec / cont	
Input Speed	P0715	rationality	input speed	0	engine speed output speed battery voltage gear selected	> 992 rev/min > 224 rev/min > 9V 1,2,3,4,5	0.5 sec / cont	two driving cycles
	P0716	rationality	input speed	> 6720 rev/min			500 msec / cont	
Output Speed	P0720	rationality	output speed or outp. Spd – wheel spd * rear axle ratio	> 7744 rev/min or delta > 750 rev/min	wheel speed	> 255 rev/min	240 msec / cont	
	P0721	rationality rationality	output speed wheel speed * rear axle ratio	< 160 rpm < 160 rpm	pcs lever output speed gear shifts	D, 4, 3, 2 > 1600 rpm not allowed	400 msec / cont	
output / wheel speed double fault	P1700	rationality rationality	output speed wheel speed	P0720 active invalid signal			250 msec / cont	
Gear Ratio	P0731 P0732 P0733 P0734 P0735	rationality	input - output speed / (gear ratio)	delta > 5 %	pcs lever output speed battery voltage transmission fluid temperature	no P / no N / no R > 500 rpm > 9V > 20 °C	900 msec / cont	two driving cycles
	P1731	rationality	input - output speed / (gear ratio)	delta > 5 %	pcs lever manual mode output speed battery voltage transmission fluid temperature	no P / no N / no R 1st gear > 500 rpm > 9V > 20 °C	900 msec / cont	
Torque Converter Clutch	P0741	functional check	eng. speed - input speed (maximum slip)	> 80 rpm	gear selected engine speed input torque to TC (calculated) TCC activation pressure (calculated)	2, 3, 4 or 5 > input speed <= 160 Nm >= 5.24 bar	2.5 sec / cont	

G00375679

Fig. 17: 6-Cylinder: ZF Transmission Diagnosis (9/01-8/02 - 1 Of 4)
Courtesy of BMW OF NORTH AMERICA, INC.

6-Cylinder: ZF Transmission Diagnosis (9/01-8/02 - 2 Of 4)

Component/ System		Fault Code	Monitor Strategy Description	Malfunction Criteria	Treshold Value	Secondary Parameter	Enable Conditions	Time Required	MIL Illum.
Press. Contr. Valve 1		P0745	rationality	meass. curr. - calc. curr.	> 150mA (if meas curr < 200mA) > 1000mA (if meas curr > 200mA)	abs(battery voltage - pcv 1 voltage)	<=1.5 V	70 msec / cont	two driving cycles
	1	P1831	circuit continuity, power short	voltage	12 V	pcv 1 voltage	> 7V		
	1	P1841	circuit continuity, ground short	voltage	0 V				
	2	P0775	rationality	meass. curr. - calc. curr.	> 150mA (if meas curr < 200mA) > 1000mA (if meas curr > 200mA)	abs(battery voltage - pcv 2 voltage)	<=1.5 V	50 msec / cont	
	2	P1832	circuit continuity, power short	voltage	12 V	pcv 2 voltage	> 7V		
	2	P1842	circuit continuity, ground short	voltage	0 V				
	3	P0795	rationality	meass. curr. - calc. curr.	> 150mA (if meas curr < 200mA) > 1000mA (if meas curr > 200mA)	abs(battery voltage - pcv 3 voltage)	<=1.5 V	50 msec / cont	
	3	P1833	circuit continuity, power short	voltage	12 V	pcv 3 voltage	> 7V		
	3	P1843	circuit continuity, ground short	voltage	0 V				
	4	P0740	rationality	meass. curr. - calc. curr.	> 150mA (if meas curr < 200mA) > 1000mA (if meas curr > 200mA)	abs(battery voltage - pcv 1 voltage)	<=1.5 V	70 msec / cont	
	4	P1834	circuit continuity, power short	voltage	12 V	pcv 1 voltage	> 7V		
	4	P1844	circuit continuity, ground short	voltage	0 V				
Shift Solenoid (A)		P0750	rationality	voltage	1V < ss voltage < 1.44V, if ss is under current 0.85V < ss voltage < 1.44V, if ss is not under current	MV input voltage	7V < MV inp. Volt. < 16V	800 msec / cont	
	(A)	P0753	circuit continuity, power short	voltage	1.44V < ss voltage < 5V, if ss is under current			800 msec / cont	
	(A)	P0752	circuit continuity, ground short	voltage	0V < ss voltage < 0.35V, if ss is not under current			800 msec / cont	
	(A)	P0751	circuit continuity, disconnection	voltage	0.35V < ss voltage < 0.85V, if ss is not under current			800 msec / cont	
	(B)	P0755	rationality	voltage	1V < ss voltage < 1.44V, if ss is under current 0.85V < ss voltage < 1.44V, if ss is not under current	MV input voltage	7V < MV inp. Volt. < 16V	800 msec / cont	
	(B)	P0758	circuit continuity, power short	voltage	1.44V < ss voltage < 5V, if ss is under current			800 msec / cont	
	(B)	P0757	circuit continuity, ground short	voltage	0V < ss voltage < 0.35V, if ss is not under current			800 msec / cont	
	(B)	P0756	circuit continuity, disconnection	voltage	0.35V < ss voltage < 0.85V, if ss is not under current			800 msec / cont	

G00375680

Fig. 18: 6-Cylinder: ZF Transmission Diagnosis (9/01-8/02 - 2 Of 4)
Courtesy of BMW OF NORTH AMERICA, INC.

6-Cylinder: ZF Transmission Diagnosis (9/01-8/02 - 3 Of 4)

Component/ System	Fault Code	Monitor Strategy Description	Malfunction Criteria	Treshold Value	Secondary Parameter	Enable Conditions	Time Required	MIL Illum.
⊕	P0760	rationality	voltage	1V < ss voltage < 1.44V, if ss is under current	MV input voltage	7V < MV inp. Volt. < 16V	800 msec / cont	
⊖				0.85V < ss voltage < 1.44V, if ss is not under current				
⊕	P0753	circuit continuity, power short	voltage	1.44V < ss voltage < 5V, if ss is under current			800 msec / cont	
⊖	P0752	circuit continuity, ground short	voltage	0V < ss voltage < 0.35V, if ss is not under current			800 msec / cont	
⊕	P0761	circuit continuity, disconnection	voltage	0.35V < ss voltage < 0.85V, if ss is not under current			800 msec / cont	
(Shift Lock)	P1761	rationality	voltage	1V < ss voltage < 1.44V, if ss is under current	MV input voltage	7V < MV inp. Volt. < 16V	500 msec / cont	
				0.85V < ss voltage < 1.44V, if ss is not under current				
(Shift Lock)	P1762	circuit continuity, power short	voltage	1.44V < ss voltage < 5V, if ss is under current			500 msec / cont	
(Shift Lock)	P1763	circuit continuity, ground short	voltage	0V < ss voltage < 0.35V, if ss is not under current			500 msec / cont	
(Shift Lock)	P1764	circuit continuity, disconnection	voltage	0.35V < ss voltage < 0.85V, if ss is not under current			500 msec / cont	
2/3 Shift	P0762	rationality, no change	input output	inp spd old gear - 40 rpm > inp spd new gear	pos lever output speed	no P / no N / no R > 500 rpm	90 msec / cont	two driving cycles
	P1892	rationality, value too big	input speed	inp spd old gear + 600 rpm < inp spd new gear	pos lever output speed	no P / no N / no R > 500 rpm	90 msec / cont	
% Shift	P0763	rationality, no change	input output	inp spd old gear - 40 rpm > inp spd new gear	pos lever output speed	no P / no N / no R > 500 rpm	90 msec / cont	
	P1893	rationality, value too big	input speed	inp spd old gear + 600 rpm < inp spd new gear	pos lever output speed	no P / no N / no R > 500 rpm	90 msec / cont	
System Voltage, electrical	P1889	rationality	battery voltage	bat. Volt. < 9V	engine speed	> 1408 rpm	2.5 sec / cont.	
System Voltage, low input	P1892	rationality	battery voltage	7V < bat. Volt. < 16V	engine speed	>1408 rpm	0.3 sec / cont	
Transmission Control Modul	P1719	bus check	CAN level	wrong value	ignition	on	0.3 sec / cont.	
	P1720	bus check	Can message/ time out DME	> 100 ms	battery voltage	> 9V	0.6 sec / cont	
	P1747	bus check	CAN bus fault	invalid signals	ignition	on	0.15 sec / cont.	
	P1785	rationality	CAN throttle position	invalid signal			0.4 sec / cont.	
	P1794	self check	EPROM checksum	invalid checksum			cont	
	P1791	self check	EEPROM	invalid checksum			once at startup	
	P1792	rationality microcontroller	watchdog	invalid checksum			once at startup	

G00375681

Fig. 19: 6-Cylinder: ZF Transmission Diagnosis (9/01-8/02 - 3 Of 4)
Courtesy of BMW OF NORTH AMERICA, INC.

6-Cylinder: ZF Transmission Diagnosis (9/01-8/02 - 4 Of 4)

Component/ System	Fault Code	Monitor Strategy Description	Malfunction Criteria	Treshold Value	Secondary Parameter	Enable Conditions	Time Required	MIL Illum.
Supply Voltage Pressure	P1893	circuit continuity, power short	voltage	ss and pcv voltage > battery voltage - 1.0V	ss and pcv voltage	>= battery voltage -2V	once at startup	
Control Solenoid / Shift Solenoid	P1894	circuit continuity, ground short	voltage	ss and pcv voltage < 2.3V ss and pcv voltage < 30% * battery voltage	ss and pcv voltage ss and pcv voltage	>= battery voltage -2V on	once at startup 0.03 sec / cont.	
	P1895	circuit continuity, disconnection	voltage	ss and pcv voltage >= 2.5V	ss and pcv voltage	>= 0V	once at startup	

G00375682

Fig. 20: 6-Cylinder: ZF Transmission Diagnosis (9/01-8/02 - 4 Of 4)
Courtesy of BMW OF NORTH AMERICA, INC.

DIAGNOSTIC TROUBLE CODES 6-CYLINDER: GM TRANSMISSION (9/01-8/02)

DIAGNOSTIC TROUBLE CODES 6-CYLINDER: GM TRANSMISSION (9/01-8/02)

PCode	BMW Code	Possible Cause	Diagnostic Parameters
P0705	8	Transmission Range Sensor "A" Circuit Malfunction (PRNDL Input)	See 6-CYLINDER: GM5 TRANSMISSION DIAGNOSIS (9/01-8/02 - 1 OF 3).
P0705	9	Transmission Range Sensor "A"	See 6-CYLINDER: GM5

		Circuit Malfunction (PRNDL Input)	TRANSMISSION DIAGNOSIS (9/01-8/02 - 1 OF 3).
P0705	36	Transmission Range Sensor "A" Circuit Malfunction (PRNDL Input)	See 6-CYLINDER: GM5 TRANSMISSION DIAGNOSIS (9/01-8/02 - 1 OF 3).
P0709	.....	Range Switch Transitional Signal	See 6-CYLINDER: GM5 TRANSMISSION DIAGNOSIS (9/01-8/02 - 1 OF 3).
P0715	16	Input/Turbine Speed Sensor "A" Circuit	See 6-CYLINDER: GM5 TRANSMISSION DIAGNOSIS (9/01-8/02 - 1 OF 3).
P0717	.....	Input Speed Less Than 100 RPM	See 6-CYLINDER: GM5 TRANSMISSION DIAGNOSIS (9/01-8/02 - 1 OF 3).
P0720	42	Output Speed Sensor Circuit	See 6-CYLINDER: GM5 TRANSMISSION DIAGNOSIS (9/01-8/02 - 1 OF 3).
P0720	106	Output Speed Sensor Circuit	See 6-CYLINDER: GM5 TRANSMISSION DIAGNOSIS (9/01-8/02 - 1 OF 3).
P0722	.....	Output Speed Less Than 100 RPM	See 6-CYLINDER: GM5 TRANSMISSION DIAGNOSIS (9/01-8/02 - 1 OF 3).
P0727	.....	CAN Engine Speed Invalid Signal	See 6-CYLINDER: GM5 TRANSMISSION DIAGNOSIS (9/01-8/02 - 3 OF 3).
P0731	.....	Gear 1 Incorrect Ratio	See 6-CYLINDER: GM5 TRANSMISSION DIAGNOSIS (9/01-8/02 - 1 OF 3).
P0732	100	Gear 2 Incorrect Ratio	See 6-CYLINDER: GM5 TRANSMISSION DIAGNOSIS (9/01-8/02 - 1 OF 3).
P0733	.....	Gear 3 Incorrect Ratio	See 6-CYLINDER: GM5 TRANSMISSION DIAGNOSIS (9/01-8/02 - 1 OF 3).
P0734	.....	Gear 4 Incorrect Ratio	See 6-CYLINDER: GM5 TRANSMISSION DIAGNOSIS (9/01-8/02 - 1 OF 3).
P0735	.....	Gear 5 Incorrect Ratio	See 6-CYLINDER: GM5 TRANSMISSION DIAGNOSIS (9/01-8/02 - 1 OF 3).

P0741	.....	TCC Stuck Off	See 6-CYLINDER: GM5 TRANSMISSION DIAGNOSIS (9/01-8/02 - 2 OF 3).
P0742	.....	TCC Stuck On	See 6-CYLINDER: GM5 TRANSMISSION DIAGNOSIS (9/01-8/02 - 2 OF 3).
P0743	4	Torque Converter Clutch Circuit Electrical	See 6-CYLINDER: GM5 TRANSMISSION DIAGNOSIS (9/01-8/02 - 2 OF 3).
P0753	30	Shift Solenoid "A" Electrical	See 6-CYLINDER: GM5 TRANSMISSION DIAGNOSIS (9/01-8/02 - 2 OF 3).
P0758	33	Shift Solenoid "B" Electrical	See 6-CYLINDER: GM5 TRANSMISSION DIAGNOSIS (9/01-8/02 - 2 OF 3).
P0763	32	Shift Solenoid "C" Electrical	See 6-CYLINDER: GM5 TRANSMISSION DIAGNOSIS (9/01-8/02 - 2 OF 3).
P1719	.....	CAN Level Bus Check	See 6-CYLINDER: GM5 TRANSMISSION DIAGNOSIS (9/01-8/02 - 3 OF 3).
P1720	.....	CAN Messages/Time Out	See 6-CYLINDER: GM5 TRANSMISSION DIAGNOSIS (9/01-8/02 - 3 OF 3).
P1765	154	CAN Throttle Valve	See 6-CYLINDER: GM5 TRANSMISSION DIAGNOSIS (9/01-8/02 - 3 OF 3).
P1765	158	CAN Throttle Valve	See 6-CYLINDER: GM5 TRANSMISSION DIAGNOSIS (9/01-8/02 - 3 OF 3).
P1780	152	CAN Torque Reduction	See 6-CYLINDER: GM5 TRANSMISSION DIAGNOSIS (9/01-8/02 - 3 OF 3).
P1790	.....	RAM & ROM Check	See 6-CYLINDER: GM5 TRANSMISSION DIAGNOSIS (9/01-8/02 - 3 OF 3).
P1791	.....	Internal Error (NVM/RAM)	See 6-CYLINDER: GM5 TRANSMISSION DIAGNOSIS (9/01-8/02 - 3 OF 3).
P1794	.....	ROM Check	See 6-CYLINDER: GM5 TRANSMISSION DIAGNOSIS (9/01-8/02 - 3 OF

			3).
P1801	.....	Shift Solenoid "A" Short To Ground	See 6-CYLINDER: GM5 TRANSMISSION DIAGNOSIS (9/01-8/02 - 2 OF 3).
P1802	.....	Shift Solenoid "B" Short To Ground	See 6-CYLINDER: GM5 TRANSMISSION DIAGNOSIS (9/01-8/02 - 2 OF 3).
P1803	.....	Shift Solenoid "C" Short To Ground	See 6-CYLINDER: GM5 TRANSMISSION DIAGNOSIS (9/01-8/02 - 2 OF 3).
P1891	.....	Power Supply Fault	See 6-CYLINDER: GM5 TRANSMISSION DIAGNOSIS (9/01-8/02 - 3 OF 3).
P1892	.....	Power Supply Fault	See 6-CYLINDER: GM5 TRANSMISSION DIAGNOSIS (9/01-8/02 - 3 OF 3).

6-Cylinder: GM5 Transmission Diagnosis (9/01-8/02 - 1 Of 3)

Component/ System	Fault Code	Monitor Strategy Description	Malfunction Criteria	Treshold Value	Secondary Parameter	Enable Conditions	Time Required	MIL Illum.
A/T GM5 (manufacturer: GM)								
Range Switch	P0705	rationality	invalid code	wrong signal	battery voltage engine speed	9V < battery voltage < 18V 450 rpm < eng. spd. < 6500 rpm	10 sec / cont	
	P0709	rationality	transitional code	transitional signal	battery voltage engine speed	9V < battery voltage < 18V 450 rpm < eng. spd. < 6500 rpm	0.5 sec/ cont	
Input Speed	P0715	performance	inp spd - last valid inp spd	> 1000 rpm	vehicle speed throttle position battery voltage	> 8 km/h > 12% 9V < battery voltage < 18V	3 sec / cont	two driving cycles
	P0717	rationality	input speed	< 100 rpm	gear selected vehicle speed battery voltage engine speed	1,2,3,4 or 5 > 8 km/h 9V < battery voltage < 18V 450 rpm < eng. spd. < 6500 rpm	5 sec / cont	
Output Speed	P0720	performance	delta output speed	> 1300 rpm	gear selected battery voltage engine speed outp. spd or last valid outp spd	1,2,3,4 or 5 9V < battery voltage < 18V 450 rpm < eng. spd. < 6500 rpm > 1300 rpm	5 sec / cont	
	P0722	rationality	output speed	< 100 rpm	engine torque throttle position input speed battery voltage engine speed	70 Nm < eng trq < 400 Nm > 12 % 1500 rpm < inp spd < 6000 rpm 9V < battery voltage < 18V 450 rpm < eng. spd. < 6500 rpm	3 sec / cont	
Gear Ratio	P0731 P0732 P0733 P0734 P0735	rationality	input / output speed / (gear ratio)	delta > 5 %	gear selected throttle position vehicle speed transmission temperature engine torque transmission ratio battery voltage engine speed	1, 2, 3, 4, 5 > 10% > 5 km/h no P / no N / no R 20°C < trans temp < 130 °C 50Nm < eng trq < 400 Nm 0.6 < trans ratio < 4.2 9V < battery voltage < 18V 450 rpm < eng. spd. < 6500 rpm	2 sec / cont	

G00375683

Fig. 21: 6-Cylinder: GM5 Transmission Diagnosis (9/01-8/02 - 1 Of 3)
Courtesy of BMW OF NORTH AMERICA, INC.

6-Cylinder: GM5 Transmission Diagnosis (9/01-8/02 - 2 Of 3)

Component/ System	Fault Code	Monitor Strategy Description	Malfunction Criteria	Treshold Value	Secondary Parameter	Enable Conditions	Time Required	MIL Illum.
Torque Converter Clutch	P0741	functional check TCC stuck off	eng. speed - input speed (maximum slip)	> 200 prm	TCC mode gear selected throttle position transmission temperature engine torque battery voltage engine speed	lock on 2, 3, 4 or 5 12% < throt pos < 90 % 20°C < trans temp < 130 °C 55 Nm < eng trq < 400 Nm 9V < battery voltage < 18V 450 rpm < eng. spd. < 6500 rpm	15 sec / cont	two driving cycles
	P0742	functional check TCC stuck on	eng. speed - input speed (minimum slip)	-20 rpm < delta < 20 rpm	TCC mode gear selected throttle position engine speed engine torque vehicle speed battery voltage engine speed	lock off 5 12% < throt pos < 90 % 600 rpm < eng spd < 4500 90 Nm < eng trq < 400 Nm 15 kph < eng spd < 255 kph 9V < battery voltage < 18V 450 rpm < eng. spd. < 6500 rpm	7.5 sec/ cont	
Press. Contr. Valve	P0743	circuit continuity	voltage	duty cycle (pwm signal) <= 10% or duty cycle (pwm signal) >= 80%	battery voltage engine speed	9V < battery voltage < 18V 450 rpm < eng. spd. < 6500 rpm	700 msec / cont	
Shift Solenoid (A)	P0753	circuit continuity, power short	voltage	power short	Shift Solenoid A battery voltage engine speed	on 9V < battery voltage < 18V 450 rpm < eng. spd. < 6500 rpm	700 msec / cont	
(A)	P1801	circuit continuity, ground short	voltage	ground short	battery voltage engine speed	9V < battery voltage < 18V 450 rpm < eng. spd. < 6500 rpm	700 msec / cont	
Shift Solenoid (B)	P0758	circuit continuity, power short	voltage	power short	Shift Solenoid B battery voltage engine speed	on 9V < battery voltage < 18V 450 rpm < eng. spd. < 6500 rpm	700 msec / cont	
(B)	P1802	circuit continuity, ground short	voltage	ground short	battery voltage engine speed	9V < battery voltage < 18V 450 rpm < eng. spd. < 6500 rpm	700 msec / cont	
Shift Solenoid (C)	P0763	circuit continuity, power short	voltage	power short	Shift Solenoid C battery voltage engine speed	on 9V < battery voltage < 18V 450 rpm < eng. spd. < 6500 rpm	700 msec / cont	
(C)	P1803	circuit continuity, ground short	voltage	ground short	battery voltage engine speed	9V < battery voltage < 18V 450 rpm < eng. spd. < 6500 rpm	700 msec / cont	

G00375684

Fig. 22: 6-Cylinder: GM5 Transmission Diagnosis (9/01-8/02 - 2 Of 3)
Courtesy of BMW OF NORTH AMERICA, INC.

6-Cylinder: GM5 Transmission Diagnosis (9/01-8/02 - 3 Of 3)

Component/ System	Fault Code	Monitor Strategy Description	Malfunction Criteria	Treshold Value	Secondary Parameter	Enable Conditions	Time Required	MIL Illum.
Power Supply	P1892	rationality	battery voltage	< 9.5 V	engine speed	> 1500 rpm	5 sec / cont	two driving cycles
	P1891	rationality	battery voltage	> 18 V			10 sec / cont	
Transmission Control Modul	P0727	rationality	CAN engine speed	invalid signal	battery voltage	9V < battery voltage < 16V	1 sec / cont	
	P1780	rationality	CAN torque reduction	invalid signal	battery voltage engine speed	9V < battery voltage < 18V 450 rpm < eng. spd. < 6500 rpm	1 sec / cont	
	P1765	rationality	CAN throttle position	invalid signal	battery voltage engine speed	9V < battery voltage < 16V 450 rpm < eng. spd. < 6500 rpm	1 sec / cont	
	P1720	bus check	CAN messages/time out	> 1 s	battery voltage	9V < battery voltage < 16V	1 sec / cont	
	P1719	bus check	CAN level	wrong value	battery voltage	9V < battery voltage < 16V	5 sec / cont	
	P1791	rationality	internal error (NVM / RAM)				once at startup	
	P1790	self check	RAM and ROM check	invalid checksum			once at startup	
	P1794	self check	ROM check	not programmed			once at startup	

G00375685

Fig. 23: 6-Cylinder: GM5 Transmission Diagnosis (9/01-8/02 - 3 Of 3)
Courtesy of BMW OF NORTH AMERICA, INC.

DIAGNOSTIC TROUBLE CODES 6-CYLINDER: 5HP19 TRANSMISSION (9/02-2003)

DIAGNOSTIC TROUBLE CODES 6-CYLINDER: 5HP19 TRANSMISSION (9/02-2003)

PCode	BMW Code	Possible Cause	Diagnostic Parameters
P0709	60	Transmission Range Sensor "A" Circuit Intermittent	See 6-CYLINDER: 5HP19 TRANSMISSION DIAGNOSIS (9/02-2003 - 1 OF 3).
P0715	33	Input/Turbine Speed Sensor "A"	See 6-CYLINDER: 5HP19

		Circuit	TRANSMISSION DIAGNOSIS (9/02-2003 - 1 OF 3).
P0716	33	Input/Turbine Speed Sensor "A" Circuit Range/Performance	See 6-CYLINDER: 5HP19 TRANSMISSION DIAGNOSIS (9/02-2003 - 1 OF 3).
P0720	32	Output Speed Sensor Circuit	See 6-CYLINDER: 5HP19 TRANSMISSION DIAGNOSIS (9/02-2003 - 1 OF 3).
P0721	59	Output Speed Sensor Circuit Range/Performance	See 6-CYLINDER: 5HP19 TRANSMISSION DIAGNOSIS (9/02-2003 - 1 OF 3).
P0731	50	Gear 1 Incorrect Ratio	See 6-CYLINDER: 5HP19 TRANSMISSION DIAGNOSIS (9/02-2003 - 1 OF 3).
P0732	52	Gear 2 Incorrect Ratio	See 6-CYLINDER: 5HP19 TRANSMISSION DIAGNOSIS (9/02-2003 - 1 OF 3).
P0733	53	Gear 3 Incorrect Ratio	See 6-CYLINDER: 5HP19 TRANSMISSION DIAGNOSIS (9/02-2003 - 1 OF 3).
P0734	54	Gear 4 Incorrect Ratio	See 6-CYLINDER: 5HP19 TRANSMISSION DIAGNOSIS (9/02-2003 - 1 OF 3).
P0735	55	Gear 5 Incorrect Ratio	See 6-CYLINDER: 5HP19 TRANSMISSION DIAGNOSIS (9/02-2003 - 1 OF 3).
P0741	48	Torque Converter Clutch Circuit Performance or Stuck Off	See 6-CYLINDER: 5HP19 TRANSMISSION DIAGNOSIS (9/02-2003 - 1 OF 3).
P0745	1	Pressure Control Solenoid "A"	See 6-CYLINDER: 5HP19 TRANSMISSION DIAGNOSIS (9/02-2003 - 2 OF 3).
P0750	16	Shift Solenoid "A"	See 6-CYLINDER: 5HP19 TRANSMISSION DIAGNOSIS (9/02-2003 - 2 OF 3).
P0751	16	Shift Solenoid "A" Performance or Stuck Off	See 6-CYLINDER: 5HP19 TRANSMISSION DIAGNOSIS (9/02-2003 - 2 OF 3).
P0752	16	Shift Solenoid "A" Stuck On	See 6-CYLINDER: 5HP19 TRANSMISSION DIAGNOSIS (9/02-2003 - 2 OF 3).

P0753	16	Shift Solenoid "A" Electrical	See 6-CYLINDER: 5HP19 TRANSMISSION DIAGNOSIS (9/02-2003 - 2 OF 3).
P0755	17	Shift Solenoid "B"	See 6-CYLINDER: 5HP19 TRANSMISSION DIAGNOSIS (9/02-2003 - 2 OF 3).
P0756	17	Shift Solenoid "B" Performance or Stuck Off	See 6-CYLINDER: 5HP19 TRANSMISSION DIAGNOSIS (9/02-2003 - 2 OF 3).
P0757	17	Shift Solenoid "B" Stuck On	See 6-CYLINDER: 5HP19 TRANSMISSION DIAGNOSIS (9/02-2003 - 2 OF 3).
P0758	17	Shift Solenoid "B" Electrical	See 6-CYLINDER: 5HP19 TRANSMISSION DIAGNOSIS (9/02-2003 - 2 OF 3).
P0760	18	Shift Solenoid "C"	See 6-CYLINDER: 5HP19 TRANSMISSION DIAGNOSIS (9/02-2003 - 3 OF 3).
P0761	18	Shift Solenoid "C" Performance or Stuck Off	See 6-CYLINDER: 5HP19 TRANSMISSION DIAGNOSIS (9/02-2003 - 3 OF 3).
P0762	18	Shift Solenoid "C" Stuck On	See 6-CYLINDER: 5HP19 TRANSMISSION DIAGNOSIS (9/02-2003 - 3 OF 3).
P0763	18	Shift Solenoid "C" Electrical	See 6-CYLINDER: 5HP19 TRANSMISSION DIAGNOSIS (9/02-2003 - 3 OF 3).
P0775	2	Pressure Control Solenoid "B"	See 6-CYLINDER: 5HP19 TRANSMISSION DIAGNOSIS (9/02-2003 - 2 OF 3).
P0782	57	2-3 Shift	See 6-CYLINDER: 5HP19 TRANSMISSION DIAGNOSIS (9/02-2003 - 3 OF 3).
P0783	58	3-4 Shift	See 6-CYLINDER: 5HP19 TRANSMISSION DIAGNOSIS (9/02-2003 - 3 OF 3).
P0795	3	Pressure Control Solenoid "C"	See 6-CYLINDER: 5HP19 TRANSMISSION DIAGNOSIS (9/02-2003 - 2 OF 3).
P0962	1	Pressure Control Solenoid "A" Control Circuit Low	See 6-CYLINDER: 5HP19 TRANSMISSION DIAGNOSIS (9/02-2003 - 2

			OF 3).
P0963	1	Pressure Control Solenoid "A" Control Circuit High	See 6-CYLINDER: 5HP19 TRANSMISSION DIAGNOSIS (9/02-2003 - 2 OF 3).
P0966	2	Pressure Control Solenoid "B" Control Circuit Low	See 6-CYLINDER: 5HP19 TRANSMISSION DIAGNOSIS (9/02-2003 - 2 OF 3).
P0967	2	Pressure Control Solenoid "B" Control Circuit High	See 6-CYLINDER: 5HP19 TRANSMISSION DIAGNOSIS (9/02-2003 - 2 OF 3).
P0970	3	Pressure Control Solenoid "C" Control Circuit Low	See 6-CYLINDER: 5HP19 TRANSMISSION DIAGNOSIS (9/02-2003 - 2 OF 3).
P0971	3	Pressure Control Solenoid "C" Control Circuit High	See 6-CYLINDER: 5HP19 TRANSMISSION DIAGNOSIS (9/02-2003 - 2 OF 3).
P1700	62	Double Error Output Speed and Input/Turbine Speed	See 6-CYLINDER: 5HP19 TRANSMISSION DIAGNOSIS (9/02-2003 - 1 OF 3).
P1719	144	CAN Version Error	See 6-CYLINDER: 5HP19 TRANSMISSION DIAGNOSIS (9/02-2003 - 3 OF 3).
P1720	129	CAN Timeout Control Module	See 6-CYLINDER: 5HP19 TRANSMISSION DIAGNOSIS (9/02-2003 - 3 OF 3).
P1731	51	Gear 1 manual Incorrect Ratio	See 6-CYLINDER: 5HP19 TRANSMISSION DIAGNOSIS (9/02-2003 - 1 OF 3).
P1732	65	Gear Monitoring 4 at Electrical Substitute Program	See 6-CYLINDER: 5HP19 TRANSMISSION DIAGNOSIS (9/02-2003 - 1 OF 3).
P1747	128	CAN-Bus Monitoring	See 6-CYLINDER: 5HP19 TRANSMISSION DIAGNOSIS (9/02-2003 - 3 OF 3).
P1761	19	Shiftlock Solenoid	See 6-CYLINDER: 5HP19 TRANSMISSION DIAGNOSIS (9/02-2003 - 3 OF 3).
P1762	19	Shiftlock Solenoid High Input	See 6-CYLINDER: 5HP19 TRANSMISSION DIAGNOSIS (9/02-2003 - 3 OF 3).
P1763	19	Shiftlock Solenoid Low Input	See 6-CYLINDER: 5HP19 TRANSMISSION

			DIAGNOSIS (9/02-2003 - 3 OF 3).
P1764	19	Shiftlock Solenoid Open Circuit	See 6-CYLINDER: 5HP19 TRANSMISSION DIAGNOSIS (9/02-2003 - 3 OF 3).
P1765	147	CAN Throttle Valve	See 6-CYLINDER: 5HP19 TRANSMISSION DIAGNOSIS (9/02-2003 - 3 OF 3).
P1791	81	Internal Transmission Control Module Memory Checksum/EEPROM Error	See 6-CYLINDER: 5HP19 TRANSMISSION DIAGNOSIS (9/02-2003 - 3 OF 3).
P1792	82	Internal Transmission Control Module Watchdog Error	See 6-CYLINDER: 5HP19 TRANSMISSION DIAGNOSIS (9/02-2003 - 3 OF 3).
P1794	80	Internal Transmission Control Module Memory Checksum Error	See 6-CYLINDER: 5HP19 TRANSMISSION DIAGNOSIS (9/02-2003 - 3 OF 3).
P1882	57	2-3 Shift Circuit High	See 6-CYLINDER: 5HP19 TRANSMISSION DIAGNOSIS (9/02-2003 - 3 OF 3).
P1883	58	3-4 Shift Circuit High	See 6-CYLINDER: 5HP19 TRANSMISSION DIAGNOSIS (9/02-2003 - 3 OF 3).
P1889	96	System Voltage - Electrical	See 6-CYLINDER: 5HP19 TRANSMISSION DIAGNOSIS (9/02-2003 - 3 OF 3).
P1892	96	System Voltage Low Input	See 6-CYLINDER: 5HP19 TRANSMISSION DIAGNOSIS (9/02-2003 - 3 OF 3).
P1893	83	Supply Voltage Pressure Control Solenoid/Shift Solenoid Circuit High	Diagnosis Not Available
P1894	83	Supply Voltage Pressure Control Solenoid/Shift Solenoid Circuit Low	Diagnosis Not Available
P1895	83	Supply Voltage Pressure Control Solenoid/Shift Solenoid No Signal	Diagnosis Not Available
P2761	4	Torque Converter Clutch Pressure Control Solenoid Control Circuit/Open	See 6-CYLINDER: 5HP19 TRANSMISSION DIAGNOSIS (9/02-2003 - 2 OF 3).
P2763	4	Torque Converter Clutch Pressure Control Solenoid Control Circuit High	See 6-CYLINDER: 5HP19 TRANSMISSION DIAGNOSIS (9/02-2003 - 2 OF 3).
P2764	4	Torque Converter Clutch Pressure	See 6-CYLINDER: 5HP19

		Control Solenoid Control Circuit Low	TRANSMISSION DIAGNOSIS (9/02-2003 - 2 OF 3).

6-Cylinder: 5HP19 Transmission Diagnosis (9/02-2003 - 1 Of 3)

Component/ System	Fault Code	Monitor Strategy Description	Malfunction Criteria	Treshold Value	Secondary Parameter	Enable Conditions	Time Required	MIL Illum.
A/T 5HP19								
Range Switch	P0709	rationality	unvalid code	wrong signal			0.2 sec / cont	two driving cycles
Input Speed	P0715	rationality	input speed	0	engine speed output speed battery voltage gear selected	> 992 rev/min > 224 rev/min > 9V 1,2,3,4,5	0.5 sec / cont	
	P0716	rationality	input speed	> 6720 rev/min			500 msec / cont	
Output Speed	P0720	rationality	output speed or outp. Spd – wheel spd * rear axle ratio	> 7744 rev/min or delta > 750 rev/min	wheel speed (Front wheel speed - back wheel speed)	> 255 rev/min < 8000 rev/min	240 msec / cont	
	P0721	rationality rationality	output speed wheel speed * rear axle ratio	< 160 rpm < 160 rpm	pos lever output speed gear shifts	D, 4, 3, 2 > 1600 rpm not allowed	400 msec / cont	
output / wheel speed double fault	P1700	rationality rationality	output speed wheel speed	P0720 active invalid signal			250 msec / cont	
Gear Ratio	P0731 P0732 P0733 P0734 P0735	rationality	input - output speed / (gear ratio)	delta > 5 %	pos lever output speed battery voltage transmission fluid temperature	no P / no N / no R > 500 rpm > 9V > 20 °C	900 msec / cont	two driving cycles
	P1731	rationality	input - output speed / (gear ratio)	delta > 5 %	pos lever manual mode output speed battery voltage transmission fluid temperature	no P / no N / no R 1st gear > 500 rpm > 9V > 20 °C	900 msec / cont	
Gear Ratio for substitude function 4.the gear	P1732	rationality	input - output speed / (gear ratio)	delta > 5 %	pos lever output speed battery voltage transmission fluid temperature Substitude function	no P / no N / no R > 500 rpm > 9V > 20 °C 4 st gear	40 msec / cont	two driving cycles
Torque Converter Clutch	P0741	functional check	eng. speed - input speed (maximum slip)	> 80 rpm	gear selected engine speed input torque to TC (calculated) TCC activation pressure (calculated)	2, 3, 4 or 5 > input speed <= 160 Nm >= 5.24 bar	2.5 sec / cont	two driving cycles

G00375694

Fig. 24: 6-Cylinder: 5HP19 Transmission Diagnosis (9/02-2003 - 1 Of 3)
Courtesy of BMW OF NORTH AMERICA, INC.

6-Cylinder: 5HP19 Transmission Diagnosis (9/02-2003 - 2 Of 3)

Component/ System	Fault Code	Monitor Strategy Description	Malfunction Criteria	Treshold Value	Secondary Parameter	Enable Conditions	Time Required	MIL Illum.
Press. Contr. Valve 1	P0745	rationality	meass. curr. - calc. curr.	> 150mA (if meas curr < 200mA) > 1000mA (if meas curr > 200mA)	abs(battery voltage - pcv 1 voltage)	<=1.5 V > 7V	70 msec / cont	two driving cycles
1	P0963	circuit continuity, power short	voltage	12 V	pcv 1 voltage			
1	P0962	circuit continuity, ground short	voltage	0 V				
2	P0775	rationality	meass. curr. - calc. curr.	> 150mA (if meas curr < 200mA) > 1000mA (if meas curr > 200mA)	abs(battery voltage - pcv 2 voltage)	<=1.5 V > 7V	50 msec / cont	
2	P0967	circuit continuity, power short	voltage	12 V	pcv 2 voltage			
2	P0966	circuit continuity, ground short	voltage	0 V				
3	P0195	rationality	meass. curr. - calc. curr.	> 150mA (if meas curr < 200mA) > 1000mA (if meas curr > 200mA)	abs(battery voltage - pcv 3 voltage)	<=1.5 V > 7V	50 msec / cont	
3	P0971	circuit continuity, power short	voltage	12 V	pcv 3 voltage			
3	P0970	circuit continuity, ground short	voltage	0 V				
4	P2761	rationality	meass. curr. - calc. curr.	> 150mA (if meas curr < 200mA) > 1000mA (if meas curr > 200mA)	abs(battery voltage - pcv 1 voltage)	<=1.5 V > 7V	70 msec / cont	
4	P2763	circuit continuity, power short	voltage	12 V	pcv 1 voltage			
4	P2764	circuit continuity, ground short	voltage	0 V				
Shift Solenoid (A)	P0750	rationality	voltage	1V < ss voltage < 1.44V, if ss is under current 0.85V < ss voltage < 1.44V, if ss is not under current	MV input voltage	7V < MV inp. Volt. < 16V	800 msec / cont	
(A)	P0753	circuit continuity, power short	voltage	1.44V < ss voltage < 5V, if ss is under current			800 msec / cont	
(A)	P0752	circuit continuity, ground short	voltage	0V < ss voltage < 0.35V, if ss is not under current			800 msec / cont	
(A)	P0751	circuit continuity, disconnection	voltage	0.35V < ss voltage < 0.85V, if ss is not under current			800 msec / cont	
(B)	P0755	rationality	voltage	1V < ss voltage < 1.44V, if ss is under current 0.85V < ss voltage < 1.44V, if ss is not under current	MV input voltage	7V < MV inp. Volt. < 16V	800 msec / cont	
(B)	P0758	circuit continuity, power short	voltage	1.44V < ss voltage < 5V, if ss is under current			800 msec / cont	
(B)	P0757	circuit continuity, ground short	voltage	0V < ss voltage < 0.35V, if ss is not under current			800 msec / cont	
(B)	P0756	circuit continuity, disconnection	voltage	0.35V < ss voltage < 0.85V, if ss is not under current			800 msec / cont	

G00375695

Fig. 25: 6-Cylinder: 5HP19 Transmission Diagnosis (9/02-2003 - 2 Of 3)
Courtesy of BMW OF NORTH AMERICA, INC.

6-Cylinder: 5HP19 Transmission Diagnosis (9/02-2003 - 3 Of 3)

Component/ System	Fault Code	Monitor Strategy Description	Malfunction Criteria	Treshold Value	Secondary Parameter	Enable Conditions	Time Required	MIL Illum.
Shift Solenoid (C)	P0760	rationality	voltage	1V < ss voltage < 1.44V, if ss is under current	MV input voltage	7V < MV inp. Volt. < 16V	800 msec / cont	two driving cycles
(C)	P0763	circuit continuity, power short	voltage	0.85V < ss voltage < 1.44V, if ss is not under current 1.44V < ss voltage < 5V, if ss is under current			800 msec / cont	
(C)	P0762	circuit continuity, ground short	voltage	0V < ss voltage < 0.35V, if ss is not under current			800 msec / cont	
(C)	P0761	circuit continuity, disconnection	voltage	0.35V < ss voltage < 0.85V, if ss is not under current			800 msec / cont	
(Shift Lock)	P1761	rationality	voltage	1V < ss voltage < 1.44V, if ss is under current	MV input voltage	7V < MV inp. Volt. < 16V	500 msec / cont	
(Shift Lock)	P1762	circuit continuity, power short	voltage	0.85V < ss voltage < 1.44V, if ss is not under current 1.44V < ss voltage < 5V, if ss is under current			500 msec / cont	
(Shift Lock)	P1763	circuit continuity, ground short	voltage	0V < ss voltage < 0.35V, if ss is not under current			500 msec / cont	
(Shift Lock)	P1764	circuit continuity, disconnection	voltage	0.35V < ss voltage < 0.85V, if ss is not under current			500 msec / cont	
2/3 Shift	P0782	rationality, no change	input output	inp spd old gear - 40 rpm > inp spd new gear	pos lever output speed	no P / no N / no R ≥ 500 rpm	90 msec / cont	
	P1882	rationality, value too big	input speed	inp spd old gear + 800 rpm < inp spd new gear	pos lever output speed	no P / no N / no R ≥ 500 rpm	90 msec / cont	
¾ Shift	P0783	rationality, no change	input output	inp spd old gear - 40 rpm > inp spd new gear	pos lever output speed	no P / no N / no R ≥ 500 rpm	90 msec / cont	
	P1883	rationality, value too big	input speed	inp spd old gear + 800 rpm < inp spd new gear	pos lever output speed	no P / no N / no R ≥ 500 rpm	90 msec / cont	
System Voltage, electrical	P1689	rationality	battery voltage	bat. Volt. < 9V	engine speed	> 1408 rpm	2.5 sec / cont	
System Voltage, low input	P1602	rationality	battery voltage	bat. Volt. < 7V or 16V < bat. Volt.	engine speed	>1408 rpm	0.3 sec / cont	
Transmission Control Modul	P1719	bus check	CAN level	wrong value	ignition		0.3 sec / cont	
	P1720	bus check	Can message/ time out DME	> 100 ms	battery voltage	or > 9V	0.6 sec / cont	
	P1747	bus check	CAN bus fault	invalid signals	ignition	on	0.15 sec / cont	
	P1765	rationality	CAN throttle position	invalid signal			0.4 sec / cont	
	P1784	self check	EPROM checksum	invalid checksum			cont	
	P1791	self check	EEPROM	invalid checksum			once at startup	
	P1792	rationality microcontroller	watchdog	invalid checksum			once at startup	

G00375696

Fig. 26: 6-Cylinder: 5HP19 Transmission Diagnosis (9/02-2003 - 3 Of 3)
Courtesy of BMW OF NORTH AMERICA, INC.

DIAGNOSTIC TROUBLE CODES 6-CYLINDER: GM5 TRANSMISSION (9/02-2003)

DIAGNOSTIC TROUBLE CODES 6-CYLINDER: GM5 TRANSMISSION (9/02-2003)

PCode	BMW Code	Possible Cause	Diagnostic Parameters
P0705	60	Transmission Range Sensor "A" Circuit Malfunction (PRNDL Input)	See 6-CYLINDER: GM5 TRANSMISSION DIAGNOSIS (9/02-2003 - 1 OF 3).
P0709	60	Transmission Range Sensor "A"	See 6-CYLINDER: GM5

		Circuit Intermittent	TRANSMISSION DIAGNOSIS (9/02-2003 - 1 OF 3).
P0715	33	Input/Turbine Speed Sensor "A" Circuit	See 6-CYLINDER: GM5 TRANSMISSION DIAGNOSIS (9/02-2003 - 1 OF 3).
P0717	33	Input/Turbine Speed Sensor "A" Circuit No Signal	See 6-CYLINDER: GM5 TRANSMISSION DIAGNOSIS (9/02-2003 - 1 OF 3).
P0720	32	Output Speed Sensor Circuit	See 6-CYLINDER: GM5 TRANSMISSION DIAGNOSIS (9/02-2003 - 1 OF 3).
P0722	32	Output Speed Sensor Circuit No Signal	See 6-CYLINDER: GM5 TRANSMISSION DIAGNOSIS (9/02-2003 - 1 OF 3).
P0727	150	Engine Speed Input Circuit No Signal	See 6-CYLINDER: GM5 TRANSMISSION DIAGNOSIS (9/02-2003 - 3 OF 3).
P0731	50	Gear 1 Incorrect Ratio	See 6-CYLINDER: GM5 TRANSMISSION DIAGNOSIS (9/02-2003 - 1 OF 3).
P0732	52	Gear 2 Incorrect Ratio	See 6-CYLINDER: GM5 TRANSMISSION DIAGNOSIS (9/02-2003 - 1 OF 3).
P0733	53	Gear 3 Incorrect Ratio	See 6-CYLINDER: GM5 TRANSMISSION DIAGNOSIS (9/02-2003 - 1 OF 3).
P0734	54	Gear 4 Incorrect Ratio	See 6-CYLINDER: GM5 TRANSMISSION DIAGNOSIS (9/02-2003 - 1 OF 3).
P0735	55	Gear 5 Incorrect Ratio	See 6-CYLINDER: GM5 TRANSMISSION DIAGNOSIS (9/02-2003 - 1 OF 3).
P0741	48	Torque Converter Clutch Circuit Performance or Stuck Off	See 6-CYLINDER: GM5 TRANSMISSION DIAGNOSIS (9/02-2003 - 2 OF 3).
P0742	48	Torque Converter Clutch Circuit Stuck On	See 6-CYLINDER: GM5 TRANSMISSION DIAGNOSIS (9/02-2003 - 2 OF 3).
P0753	16	Shift Solenoid "A" Electrical	See 6-CYLINDER: GM5 TRANSMISSION DIAGNOSIS (9/02-2003 - 2 OF 3).

P0758	17	Shift Solenoid "B" Electrical	See 6-CYLINDER: GM5 TRANSMISSION DIAGNOSIS (9/02-2003 - 2 OF 3).
P0763	18	Shift Solenoid "C" Electrical	See 6-CYLINDER: GM5 TRANSMISSION DIAGNOSIS (9/02-2003 - 3 OF 3).
P0973	16	Shift Solenoid "A" Control Circuit Low	See 6-CYLINDER: GM5 TRANSMISSION DIAGNOSIS (9/02-2003 - 2 OF 3).
P0976	17	Shift Solenoid "B" Control Circuit Low	See 6-CYLINDER: GM5 TRANSMISSION DIAGNOSIS (9/02-2003 - 2 OF 3).
P0979	18	Shift Solenoid "C" Control Circuit Low	See 6-CYLINDER: GM5 TRANSMISSION DIAGNOSIS (9/02-2003 - 3 OF 3).
P1719	144	CAN Version Error	See 6-CYLINDER: GM5 TRANSMISSION DIAGNOSIS (9/02-2003 - 3 OF 3).
P1720	129	CAN Timeout Control Module	See 6-CYLINDER: GM5 TRANSMISSION DIAGNOSIS (9/02-2003 - 3 OF 3).
P1765	147	CAN Throttle Valve	See 6-CYLINDER: GM5 TRANSMISSION DIAGNOSIS (9/02-2003 - 3 OF 3).
P1780	.....	CAN Throttle Valve	See 6-CYLINDER: GM5 TRANSMISSION DIAGNOSIS (9/02-2003 - 3 OF 3).
P1790	80	Internal Transmission Control Module Memory Checksum/EPROM Error	See 6-CYLINDER: GM5 TRANSMISSION DIAGNOSIS (9/02-2003 - 3 OF 3).
P1791	81	Internal Transmission Control Module Memory Checksum/EEPROM Error	See 6-CYLINDER: GM5 TRANSMISSION DIAGNOSIS (9/02-2003 - 3 OF 3).
P1794	80	Internal Transmission Control Module Memory Checksum Error	See 6-CYLINDER: GM5 TRANSMISSION DIAGNOSIS (9/02-2003 - 3 OF 3).
P1891	96	System Voltage High Input	See 6-CYLINDER: GM5 TRANSMISSION DIAGNOSIS (9/02-2003 - 3 OF 3).
P1892	96	System Voltage Low Input	See 6-CYLINDER: GM5 TRANSMISSION DIAGNOSIS (9/02-2003 - 3

			OF 3).
P2759	4	Torque Converter Clutch Pressure Control Solenoid Control Circuit Electrical	See 6-CYLINDER: GM5 TRANSMISSION DIAGNOSIS (9/02-2003 - 2 OF 3).

6-Cylinder: GM5 Transmission Diagnosis (9/02-2003 - 1 Of 3)

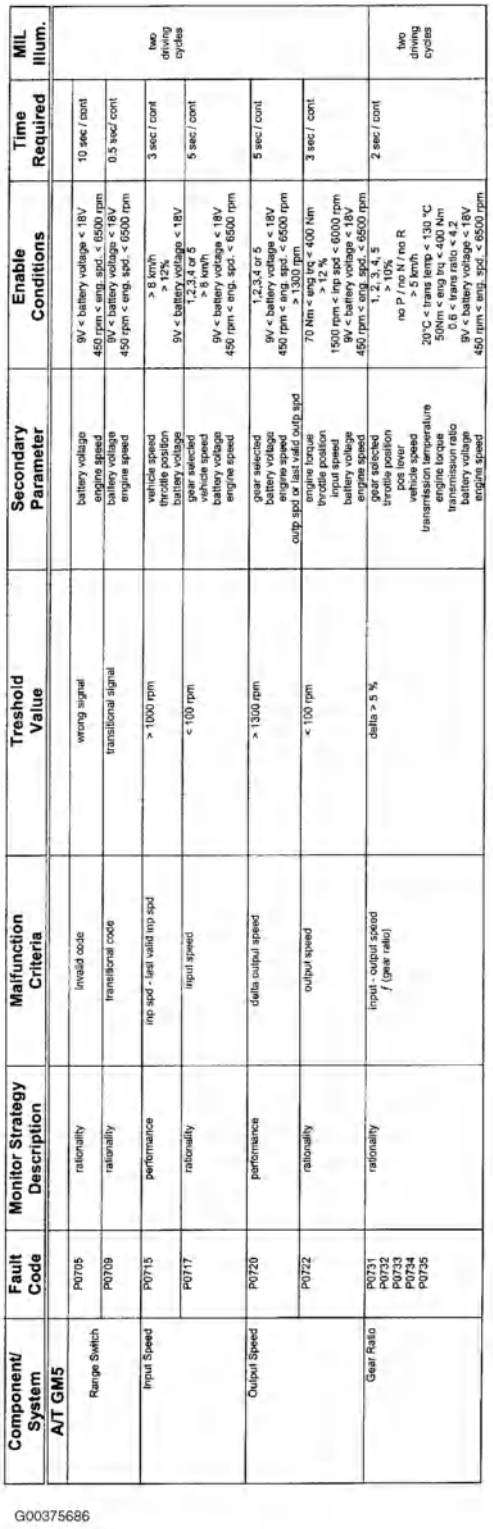

Component/ System	Fault Code	Monitor Strategy Description	Malfunction Criteria	Treshold Value	Secondary Parameter	Enable Conditions	Time Required	MIL Illum.
A/T GM5								
Range Switch	P0705	rationality	invalid code	wrong signal	battery voltage engine speed	9V < battery voltage < 18V 450 rpm < eng. spd. < 6500 rpm	10 sec / cont	two driving cycles
	P0709	rationality	transitional code	transitional signal	battery voltage engine speed	9V < battery voltage < 18V 450 rpm < eng. spd. < 6500 rpm	0.5 sec/ cont	
Input Speed	P0715	performance	inp spd - last valid inp spd	> 1000 rpm	vehicle speed throttle position battery voltage	> 8 km/h > 12% 9V < battery voltage < 18V	3 sec / cont	
	P0717	rationality	input speed	< 100 rpm	gear selected vehicle speed battery voltage engine speed	1,2,3,4 or 5 > 8 km/h 9V < battery voltage < 18V 450 rpm < eng. spd. < 6500 rpm	5 sec / cont	
Output Speed	P0720	performance	delta output speed	> 1300 rpm	gear selected battery voltage engine speed outp. spd or last valid outp.spd	1,2,3,4 or 5 9V < battery voltage < 18V 450 rpm < eng. spd. < 6500 rpm > 1300 rpm	5 sec / cont	
	P0722	rationality	output speed	< 100 rpm	engine torque throttle position input speed battery voltage engine speed	70 Nm < eng trq < 400 Nm > 12 % 1500 rpm < inp spd < 6000 rpm 9V < battery voltage < 18V 450 rpm < eng. spd. < 6500 rpm	3 sec / cont	
Gear Ratio	P0731 P0732 P0733 P0734 P0735	rationality	input - output speed / (gear ratio)	delta > 5 %	gear selected throttle position pos lever vehicle speed transmission temperature engine torque transmission ratio battery voltage engine speed	1, 2, 3, 4, 5 > 10% no P / no N / no R > 5 km/h 20°C < trans temp < 130 °C 50Nm < eng trq < 400 Nm 0.6 < trans ratio < 4.2 9V < battery voltage < 18V 450 rpm < eng. spd. < 6500 rpm	2 sec / cont	two driving cycles

G00375686

Fig. 27: 6-Cylinder: GM5 Transmission Diagnosis (9/02-2003 - 1 Of 3)
Courtesy of BMW OF NORTH AMERICA, INC.

6-Cylinder: GM5 Transmission Diagnosis (9/02-2003 - 2 Of 3)

Component/ System	Fault Code	Monitor Strategy Description	Malfunction Criteria	Treshold Value	Secondary Parameter	Enable Conditions	Time Required	MIL Illum.
Torque Converter Clutch	P0741	functional check TCC stuck off	TCC_Slip_Target - TCC_Slip (maximum slip)	> 200 pim	TCC mode gear selected throttle position transmission temperature engine torque battery voltage engine speed	lock on 2, 3, 4 or 5 12% < throt pos < 90 % 20°C < trans temp < 130 °C 55 Nm < eng trq < 400 Nm 9V < battery voltage < 18V 450 rpm < eng. spd. < 6500 rpm	15 sec / cont	
	P0742	functional check TCC stuck on	eng. speed - input speed (minimum slip)	-20 rpm < delta < 20 rpm	TCC mode gear selected throttle position engine speed engine torque vehicle speed battery voltage engine speed	lock off 5 12% < throt pos < 90 % 600 rpm < eng spd < 4500 80 Nm < eng trq < 400 Nm 15 kph < eng spd < 255 kph 9V < battery voltage < 18V 450 rpm < eng. spd. < 6500 rpm	7.5 sec/ cont	two driving cycles
Press. Contr. Valve	P2759	circuit continuity	voltage	duty cycle (pwm signal) <= 10% or duty cycle (pwm signal) >= 90%	battery voltage engine speed	9V < battery voltage < 18V 450 rpm < eng. spd. < 6500 rpm	700 msec / cont	
Shift Solenoid (A)	P0753	circuit continuity, power short	voltage	power short	Shift Solenoid A battery voltage engine speed	on 9V < battery voltage < 18V 450 rpm < eng. spd. < 6500 rpm	700 msec / cont	
(A)	P0973	circuit continuity, ground short	voltage	ground short	battery voltage engine speed	9V < battery voltage < 18V 450 rpm < eng. spd. < 6500 rpm	700 msec / cont	
Shift Solenoid (B)	P0758	circuit continuity, power short	voltage	power short	Shift Solenoid B battery voltage engine speed	on 9V < battery voltage < 18V 450 rpm < eng. spd. < 6500 rpm	700 msec / cont	
(B)	P0976	circuit continuity, ground short	voltage	ground short	battery voltage engine speed	9V < battery voltage < 18V 450 rpm < eng. spd. < 6500 rpm	700 msec / cont	

G00375687

Fig. 28: 6-Cylinder: GM5 Transmission Diagnosis (9/02-2003 - 2 Of 3)
Courtesy of BMW OF NORTH AMERICA, INC.

6-Cylinder: GM5 Transmission Diagnosis (9/02-2003 - 3 Of 3)

OBD II Requirements, Summary Table

Test Group 3BMXV03.0UL2		Certification Standard ULEV II		Enhanced Evap yes					
Component/ System	Fault Code	Monitor Strategy Description	Malfunction Criteria	Treshold Value	Secondary Parameter	Enable Conditions	Time Required	MIL Illum.
Shift Solenoid (C)	P0753	circuit continuity, power short	voltage	power short	Shift Solenoid C battery voltage engine speed	on 9V < battery voltage < 18V 450 rpm < eng. spd. < 6500 rpm	700 msec / cont	two driving cycles
(C)	P0879	cirkit continuity, ground short	voltage	ground short	battery voltage engine speed	9V < battery voltage < 18V 450 rpm < eng. spd. < 6500 rpm	700 msec / cont	
Power Supply	P1892	rationality	battery voltage	< 9,5 V	engine speed	> 1500 rpm	5 sec / cont	two driving cycles
	P1891	rationality	battery voltage	> 18 V			10 sec / cont	
Transmission Control Modul	P0727	rationality	CAN engine speed	invalid signal	battery voltage	9V < battery voltage < 18V	1 sec / cont	two driving cycles
	P1780	rationality	CAN torque reduction	invalid signal	battery voltage engine speed	9V < battery voltage < 18V 450 rpm < eng. spd. < 6500 rpm	1 sec / cont	
	P1765	rationality	CAN throttle position	invalid signal	battery voltage engine speed	9V < battery voltage < 18V 450 rpm < eng. spd. < 6500 rpm	1 sec / cont	
	P1720	bus check	CAN message/time out	> 1 s	battery voltage	9V < battery voltage < 18V	1 sec / cont	
	P1719	bus check	CAN level	wrong value	battery voltage	9V < battery voltage < 18V	5 sec / cont	
	P1791	rationality	internal error (NVM / RAM)	invalid checksum			once at startup	
	P1790	self check	RAM and ROM check	not programmed			once at startup	
	P1794	self check	ROM check				once at startup	

G00375688

Fig. 29: 6-Cylinder: GM5 Transmission Diagnosis (9/02-2003 - 3 Of 3)
Courtesy of BMW OF NORTH AMERICA, INC.

DIAGNOSTIC TROUBLE CODES 6-CYLINDER: SMG TRANSMISSION (3/03-2003)

DIAGNOSTIC TROUBLE CODES 6-CYLINDER: SMG TRANSMISSION (3/03-2003)

PCode	BMW Code	Possible Cause	Diagnostic Parameters
P0932	20215	Hydraulic Pressure Sensor Circuit	See 6-CYLINDER: SMG TRANSMISSION DIAGNOSIS (3/03-2003 - 1 OF 5).
P0934	20215	Hydraulic Pressure Sensor Circuit	See 6-CYLINDER: SMG

		Low	TRANSMISSION DIAGNOSIS (3/03-2003 - 1 OF 5).
P0935	20215	Hydraulic Pressure Sensor Circuit High	See 6-CYLINDER: SMG TRANSMISSION DIAGNOSIS (3/03-2003 - 1 OF 5).
P1720	20800	CAN Timeout Control Module	See 6-CYLINDER: SMG TRANSMISSION DIAGNOSIS (3/03-2003 - 1 OF 5).
P1721	20801	CAN Timeout ASC/DSC	See 6-CYLINDER: SMG TRANSMISSION DIAGNOSIS (3/03-2003 - 1 OF 5).
P1747	52999	CAN-Bus Monitoring	See 6-CYLINDER: SMG TRANSMISSION DIAGNOSIS (3/03-2003 - 1 OF 5).
P1765	20904	CAN Throttle Valve	See 6-CYLINDER: SMG TRANSMISSION DIAGNOSIS (3/03-2003 - 1 OF 5).
P1766	20702	Double Error Engine Speed CAN/Direct Wiring	See 6-CYLINDER: SMG TRANSMISSION DIAGNOSIS (3/03-2003 - 1 OF 5).
P1767	20913	CAN Wheel Speeds Rear Axle	See 6-CYLINDER: SMG TRANSMISSION DIAGNOSIS (3/03-2003 - 3 OF 5).
P1771	20901	CAN Torque Interface Plausibility	See 6-CYLINDER: SMG TRANSMISSION DIAGNOSIS (3/03-2003 - 4 OF 5).
P1782	20910	CAN Brake Signal	See 6-CYLINDER: SMG TRANSMISSION DIAGNOSIS (3/03-2003 - 2 OF 5).
P1791	20401	Internal Transmission Control Module Memory Checksum/EEPROM Error	See 6-CYLINDER: SMG TRANSMISSION DIAGNOSIS (3/03-2003 - 4 OF 5).
P1796	20406	Internal Transmission Control Module Error 7 (High Side Driver)	See 6-CYLINDER: SMG TRANSMISSION DIAGNOSIS (3/03-2003 - 4 OF 5).
P1817	20606	Gear Selector Lever GSL0 Cable High Input	See 6-CYLINDER: SMG TRANSMISSION DIAGNOSIS (3/03-2003 - 4 OF 5).
P1818	20606	Gear Selector Lever GSL0 Cable Low Input	See 6-CYLINDER: SMG TRANSMISSION DIAGNOSIS (3/03-2003 - 4 OF 5).

P1819	20606	Gear Selector Lever GSL0 Cable Plausibility	See 6-CYLINDER: SMG TRANSMISSION DIAGNOSIS (3/03-2003 - 4 OF 5).
P1820	20607	Gear Selector Lever GSL1 Cable High Input	See 6-CYLINDER: SMG TRANSMISSION DIAGNOSIS (3/03-2003 - 4 OF 5).
P1821	20607	Gear Selector Lever GSL1 Cable Low Input	See 6-CYLINDER: SMG TRANSMISSION DIAGNOSIS (3/03-2003 - 4 OF 5).
P1822	20607	Gear Selector Lever GSL1 Cable Plausibility	See 6-CYLINDER: SMG TRANSMISSION DIAGNOSIS (3/03-2003 - 4 OF 5).
P1823	20611	Gear Selector Lever Digital Cable Plausibility	See 6-CYLINDER: SMG TRANSMISSION DIAGNOSIS (3/03-2003 - 3 OF 5).
P1850	20213	Shift Angle Sensor High Input	See 6-CYLINDER: SMG TRANSMISSION DIAGNOSIS (3/03-2003 - 2 OF 5).
P1851	20213	Shift Angle Sensor Low Input	See 6-CYLINDER: SMG TRANSMISSION DIAGNOSIS (3/03-2003 - 2 OF 5).
P1852	20213	Shift Angle Sensor Plausibility	See 6-CYLINDER: SMG TRANSMISSION DIAGNOSIS (3/03-2003 - 2 OF 5).
P1859	20217	Clutch Speed Sensor Plausibility	See 6-CYLINDER: SMG TRANSMISSION DIAGNOSIS (3/03-2003 - 5 OF 5).
P1860	20612	Gear Selector Lever Hall Sensor Error 1	See 6-CYLINDER: SMG TRANSMISSION DIAGNOSIS (3/03-2003 - 5 OF 5).
P1866	20608	Gear Selector Lever GSL2 Cable High Input	See 6-CYLINDER: SMG TRANSMISSION DIAGNOSIS (3/03-2003 - 4 OF 5).
P1867	20608	Gear Selector Lever GSL2 Cable Low Input	See 6-CYLINDER: SMG TRANSMISSION DIAGNOSIS (3/03-2003 - 4 OF 5).
P1868	20608	Gear Selector Lever GSL2 Cable Plausibility	See 6-CYLINDER: SMG TRANSMISSION DIAGNOSIS (3/03-2003 - 4 OF 5).
P1869	20609	Gear Selector Lever GSL3 Cable High Input	See 6-CYLINDER: SMG TRANSMISSION DIAGNOSIS (3/03-2003 - 4

			OF 5).
P1870	20609	Gear Selector Lever GSL3 Cable Low Input	See 6-CYLINDER: SMG TRANSMISSION DIAGNOSIS (3/03-2003 - 4 OF 5).
P1876	20609	Gear Selector Lever GSL3 Cable Plausibility	See 6-CYLINDER: SMG TRANSMISSION DIAGNOSIS (3/03-2003 - 4 OF 5).
P1887	20335	Hydraulic Pump	See 6-CYLINDER: SMG TRANSMISSION DIAGNOSIS (3/03-2003 - 2 OF 5).

6-Cylinder: SMG Transmission Diagnosis (3/03-2003 - 1 Of 5)

Component/ System	Fault Code	Monitor Strategy Description	Malfunction Criteria	Threshold Value	Secondary Parameter	Enable Conditions	Time Required	MIL Illum
Transmission SMG								
Hydraulic Pressure Sensor	P0932	plausibility	interruption on sensor GND	delta pressure < +1.5 bar	pump activation = & GEARSHIFT & KEY = & NOT CRANKING = & Vsupply =	FINISHED NOT IN PROGRESS ON ON [6.5-10V, 17.01-17.5]	< 3s	2nd driving cycle
				delta pressure > -3 bar	& KEY = & NOT CRANKING = & Vsupply = & GEARSHIFT & ESTIMATED USED OIL	ON ON [6.5-10V, 17.01-17.5] IN PROGRESS >20 cm³	< 3s	
			sensor malfunction, out of dynamic range	|signal gradient| > 5V	KEY = & NOT CRANKING = & Vsupply =	ON ON [6.5-10V, 17.01-17.5]	< 500ms, continuous	
	P0934	lower threshold	interruption or s.c.to GND	signal < 0.4 V	KEY = & NOT CRANKING =	ON ON		
	P0935	upper threshold	s.c. to supply	signal > 4.7 V	& Vsupply =	[6.5-10V, 17.01-17.5]		
CAN Timeout DME	P1720	plausibility	signal is not available on CAN	timeout	KEY = & NOT CRANKING = & Vsupply =	ON ON [6.5-10V, 17.01-17.5]	< 105 ms, continuous	2nd driving cycle
CAN Timeout ASC/DSC	P1721	plausibility	signal is not available on CAN	timeout	KEY = & NOT CRANKING = & Vsupply =	ON ON [6.5-10V, 17.01-17.5]	< 210 ms, cont.	2nd driving cycle
CAN-Bus Monitoring	P1747	plausibility	CAN bus Off	timeout	KEY = & NOT CRANKING = & Vsupply = & Engine =	ON ON [6.5-10V, 17.01-17.5] ON acknowledging since timeout	< 1 s, cont.	2nd driving cycle
CAN Throttle Valve	P1765	plausibility	malfunction on throttle valve potentiometer	signal = FFhex	KEY = & ECU = & Vsupply =	ON ON [6.5-10V, 17.01-17.5] ON since timeout	< 20 ms, cont.	2nd driving cycle
Engine Speed	P1766	plausibility	sensor disconnected or multiple fault	speed signal = 0	failure on CAN engine speed = & KEY = & NOT CRANKING = & Vsupply =	Validated ON ON [6.5-10V, 17.01-17.5]	< 1 s, cont.	2nd driving cycle

G00375689

Fig. 30: 6-Cylinder: SMG Transmission Diagnosis (3/03-2003 - 1 Of 5)
Courtesy of BMW OF NORTH AMERICA, INC.

6-Cylinder: SMG Transmission Diagnosis (3/03-2003 - 2 Of 5)

Component/ System	Fault Code	Monitor Strategy Description	Malfunction Criteria	Threshold Value	Secondary Parameter	Enable Conditions	Time Required	MIL Illum
Hydraulic Pump Failure	P1867	plausibility	damage on hydraulic pump	pump switched on for more than 30 s	Pump = & error counter >=	Commanded &	< 50 s, cont.	2nd driving cycle
Shift Position Sensor	P1850	upper threshold	open circuit or s.c. to Vsupply	signal > 4,5V	KEY = & CRANKING = & Vsupply =	ON NOT ON [6,5-10V, 17,01-17,5]	< 500 ms, cont.	2nd driving cycle
	P1851	lower threshold	short to GND	signal < 0,5 V				
	P1852	plausibility	out of dynamic range	signal gradient > 4,4 V	selection thresholds = & KEY = & CRANKING = & Vsupply = & GEARSHIFT =	f(gear position, ECU, tuned values) ON NOT ON [6,5-10V, 17,01-17,5] NOT IN PROGRESS		
			Out of position range	signal outside selection thresholds				
CAN Brake Signal	P1782	plausibility	failure on brake switch system detected by engine control unit	CAN label F_BS = 1	KEY = & ECU = & Vsupply =	ON ignition timeout [6,5-10V, 17,01-17,5]	< 2/3 ms, cont.	2nd driving cycle

G00375690

Fig. 31: 6-Cylinder: SMG Transmission Diagnosis (3/03-2003 - 2 Of 5)
Courtesy of BMW OF NORTH AMERICA, INC.

6-Cylinder: SMG Transmission Diagnosis (3/03-2003 - 3 Of 5)

Test Group 3BMXV03.0UL2		Certification Standard ULEV II		Enhanced Evap yes	OBD II Requirements, Summary Table				
Component/ System	Fault Code	Monitor Strategy Description	Malfunction Criteria	Threshold Value	Secondary Parameter	Enable Conditions	Time Required	MIL Illum
Gear Lever Digital Line	P1823	no signal	hall cell is not switching or wiring problem	signal = 1	CODE <>& & KEY = & CRANKING =< & Vsupply =	JR ON NOT ON [6.5-10V, 17.01-17.5]	< 20 ms, cont.	2nd driving cycle
				signal = 0	CODE = & KEY = & CRANKING =< & Vsupply =	JR ON NOT ON [6.5-10V, 17.01-17.5]		
CAN Speed Rear Wheels	P1767	plausibility	out of dynamic range	| signal gradient | > 1000 /rpm	ENGINE = & KEY = & NOT CRANKING = & Vsupply = & GEAR = & CLUTCH =	ON ON ON [6.5-10V, 17.01-17.5] ENGAGED CLOSED	< 1 s, cont.	2nd driving cycle
			signal not available for timeout	speed signal = 0	ENGINE = & KEY = & NOT CRANKING = & Vsupply = & GEAR = & CLUTCH =	ON ON ON [6.5-10V, 17.01-17.5] ENGAGED CLOSED		
					ENGINE = & KEY = & NOT CRANKING = & Vsupply = & GEAR = & CLUTCH SPEED >	ON ON ON [6.5-10V, 17.01-17.5] ENGAGED 500 min^{-1}		

G00375691

Fig. 32: 6-Cylinder: SMG Transmission Diagnosis (3/03-2003 - 3 Of 5)
Courtesy of BMW OF NORTH AMERICA, INC.

6-Cylinder: SMG Transmission Diagnosis (3/03-2003 - 4 Of 5)

Component/ System	Fault Code	Monitor Strategy Description	Malfunction Criteria	Threshold Value	Secondary Parameter	Enable Conditions	Time Required	MIL Illum.
CAN Speed Rear Wheels			speed signal<>engine speed/gear ratio +e AND speed signal<>clutch speed/gear ratio +e	tolerance e = 500 min^{-1}, gear ratio = f(engaged gear), clutch speed	ENGINE = & KEY = & NOT CRANKING = & Vsupply = & GEAR = & CLUTCH =	ON ON ON [6.5-10V, 17.01-17.5] ENGAGED CLOSED	< 1 s, cont.	2nd driving cycle
			failure on speed signal detected by DSC control unit	one of the speed signals from CAN = 1FFh	ENGINE = & KEY = & NOT CRANKING = & Vsupply = & GEAR = & CLUTCH =	ON ON ON [6.5-10V, 17.01-17.5] ENGAGED CLOSED		
CAN Generated Engine Torque	P1771	plausibility	engine ECU not working properly	signal = FFhex	KEY = & ECU = & Vsupply =	ON since timeout [6.5-10V, 17.01-17.5]	< 20 ms, cont.	2nd driving cycle
EEPROM failure	P1791	plausibility	checksum failure	-	-	once at ECU power on	< 20 ms, 1per driving cycle	1st driving cycle
Power Latch Relays	P1796	plausibility	unintended drivers relay opening (open circuit on pin (1,7), burned fuse	Logic relay commanding AND power latch voltage > 5V AND drivers relay commanded on	NOT CRANKING = & TCU internal RELAY	ON ON	<150ms, cont.	1st driving cycle
			drivers relay permanently closed	power latch voltage > 5V AND drivers relay commanded off				
			logic relay permanently closed	ECU not switched off AND logic relay commanded off		ECU switch off request	< 20 ms, 1per driving cycle	2nd driving cycle
Gear lever analog lines					KEY = & CRANKING = & V_supply =	ON NOT ON [6.5-10V, 17.01-17.5]		
(0)	P1817	upper threshold	open circuit or s.c.to Vsupply or s.c.to +5V	signal > 4.2 V			< 1 s, cont.	2nd driving cycle
	P1818	lower threshold	short to GND	signal < 0.8 V				
	P1819	plausibility	signal gradient to high	signal gradient I > 4.40 V				
(1)	P1820	upper threshold	open circuit or s.c.to Vsupply or s.c.to +5V	signal > 4.2 V			< 1 s, cont.	
	P1821	lower threshold	short to GND	signal < 0.8 V				
	P1822	plausibility	signal gradient to high	signal gradient I > 4.40 V				
(2)	P1866	upper threshold	open circuit or s.c.to Vsupply or s.c.to +5V	signal > 4.2 V			< 1 s, cont.	
	P1867	lower threshold	short to GND	signal < 0.8 V				
	P1868	plausibility	signal gradient to high	signal gradient > 4.4 V				
(3)	P1869	upper threshold	open circuit or s.c.to Vsupply or s.c.to +5V	signal > 4.2 V			< 1 s, cont.	
	P1870	lower threshold	short to GND	signal < 0.8 V				
	P1876	plausibility	signal gradient to high	signal gradient > 4.4 V				

G00375892

Fig. 33: 6-Cylinder: SMG Transmission Diagnosis (3/03-2003 - 4 Of 5)
Courtesy of BMW OF NORTH AMERICA, INC.

6-Cylinder: SMG Transmission Diagnosis (3/03-2003 - 5 Of 5)

Component/ System	Fault Code	Monitor Strategy Description	Malfunction Criteria	Threshold Value	Secondary Parameter	Enable Conditions	Time Required	MIL Illum.
Gear Lever Hallsensors	P1860	no signal	hall cell is not switching	code not valid for a timeout (Code is compared to valid gear position codes)	KEY = & CRANKING = & V_supply =	ON NOT ON [6.5-10V, 17.01-17.5]	< 20 ms, cont.	2nd driving cycle
Clutch Speed	P1859	plausibility	out of dynamic range	| signal gradient | > 9000 rpm	ENGINE = & KEY = & CRANKING = & Vsupply = & CLUTCH = & GEAR =	ON ON NOT ON [6.5-10V, 17.01-17.5] CLOSED ENGAGED	< 1s, cont.	2nd driving cycle
			signal not available for timeout	speed signal = 0	ENGINE = & KEY = & CRANKING = & Vsupply = & CLUTCH = & GEAR =	ON ON NOT ON [6.5-10V, 17.01-17.5] CLOSED ENGAGED		
			speed signal <> engine speed+e AND speed signal <> driveline speed gear ratio +e	tolerance e = 2000 min^{-1}	ENGINE = & KEY = & CRANKING = & Vsupply = & CLUTCH = & GEAR = & gear ratio = & driveline speed > & driveline speed =	ON ON NOT ON [6.5-10V, 17.01-17.5] CLOSED ENGAGED 200 min^{-1} !(engaged gear) AVAILABLE		

G00375693

Fig. 34: 6-Cylinder: SMG Transmission Diagnosis (3/03-2003 - 5 Of 5)
Courtesy of BMW OF NORTH AMERICA, INC.

DIAGNOSTIC TROUBLE CODES 6-CYLINDER: 5HP19 NON-AWD TRANSMISSION (2004)

DIAGNOSTIC TROUBLE CODES 6-CYLINDER: 5HP19 NON-AWD TRANSMISSION (2004)

PCode	BMW Code	Possible Cause	Diagnostic Parameters
P0709	60	Transmission Range Sensor "A" Circuit Intermittent	See 6-CYLINDER: 5HP19 NON-AWD TRANSMISSION DIAGNOSIS (2004 - 1 OF 4).
P0715	33	Input/Turbine Speed Sensor "A" Circuit	See 6-CYLINDER: 5HP19 NON-AWD TRANSMISSION

			DIAGNOSIS (2004 - 1 OF 4).
P0716	33	Input/Turbine Speed Sensor "A" Circuit Range/Performance	See 6-CYLINDER: 5HP19 NON-AWD TRANSMISSION DIAGNOSIS (2004 - 1 OF 4).
P0720	32	Output Speed Sensor Circuit	See 6-CYLINDER: 5HP19 NON-AWD TRANSMISSION DIAGNOSIS (2004 - 1 OF 4).
P0721	59	Output Speed Sensor Circuit Range/Performance	See 6-CYLINDER: 5HP19 NON-AWD TRANSMISSION DIAGNOSIS (2004 - 1 OF 4).
P0731	50	Gear 1 Incorrect Ratio	See 6-CYLINDER: 5HP19 NON-AWD TRANSMISSION DIAGNOSIS (2004 - 1 OF 4).
P0732	52	Gear 2 Incorrect Ratio	See 6-CYLINDER: 5HP19 NON-AWD TRANSMISSION DIAGNOSIS (2004 - 1 OF 4).
P0733	53	Gear 3 Incorrect Ratio	See 6-CYLINDER: 5HP19 NON-AWD TRANSMISSION DIAGNOSIS (2004 - 1 OF 4).
P0734	54	Gear 4 Incorrect Ratio	See 6-CYLINDER: 5HP19 NON-AWD TRANSMISSION DIAGNOSIS (2004 - 1 OF 4).
P0735	55	Gear 5 Incorrect Ratio	See 6-CYLINDER: 5HP19 NON-AWD TRANSMISSION DIAGNOSIS (2004 - 1 OF 4).
P0741	48	Torque Converter Clutch Circuit Performance or Stuck Off	See 6-CYLINDER: 5HP19 NON-AWD TRANSMISSION DIAGNOSIS (2004 - 2 OF 4).
P0745	1	Pressure Control Solenoid "A"	See 6-CYLINDER: 5HP19 NON-AWD TRANSMISSION DIAGNOSIS (2004 - 2 OF 4).
P0750	16	Shift Solenoid "A"	See 6-CYLINDER: 5HP19 NON-AWD TRANSMISSION DIAGNOSIS (2004 - 2 OF 4).
P0751	16	Shift Solenoid "A" Performance or Stuck Off	See 6-CYLINDER: 5HP19 NON-AWD TRANSMISSION DIAGNOSIS (2004 - 2 OF 4).
P0752	16	Shift Solenoid "A" Stuck On	See 6-CYLINDER: 5HP19 NON-AWD TRANSMISSION DIAGNOSIS (2004 - 2 OF 4).
P0753	16	Shift Solenoid "A" Electrical	See 6-CYLINDER: 5HP19 NON-AWD TRANSMISSION DIAGNOSIS (2004 - 2 OF 4).
P0755	17	Shift Solenoid "B"	See 6-CYLINDER: 5HP19 NON-AWD TRANSMISSION DIAGNOSIS (2004 - 3 OF 4).
P0756	17	Shift Solenoid "B" Performance or Stuck Off	See 6-CYLINDER: 5HP19 NON-AWD TRANSMISSION DIAGNOSIS (2004 - 3 OF 4).
P0757	17	Shift Solenoid "B" Stuck On	See 6-CYLINDER: 5HP19 NON-AWD TRANSMISSION DIAGNOSIS (2004 - 3 OF 4).
P0758	17	Shift Solenoid "B" Electrical	See 6-CYLINDER: 5HP19 NON-AWD TRANSMISSION DIAGNOSIS (2004 - 3 OF 4).

P0760	18	Shift Solenoid "C"	See 6-CYLINDER: 5HP19 NON-AWD TRANSMISSION DIAGNOSIS (2004 - 3 OF 4).
P0761	18	Shift Solenoid "C" Performance or Stuck Off	See 6-CYLINDER: 5HP19 NON-AWD TRANSMISSION DIAGNOSIS (2004 - 3 OF 4).
P0762	18	Shift Solenoid "C" Stuck On	See 6-CYLINDER: 5HP19 NON-AWD TRANSMISSION DIAGNOSIS (2004 - 3 OF 4).
P0763	18	Shift Solenoid "C" Electrical	See 6-CYLINDER: 5HP19 NON-AWD TRANSMISSION DIAGNOSIS (2004 - 3 OF 4).
P0775	2	Pressure Control Solenoid "B"	See 6-CYLINDER: 5HP19 NON-AWD TRANSMISSION DIAGNOSIS (2004 - 2 OF 4).
P0782	57	2-3 Shift	See 6-CYLINDER: 5HP19 NON-AWD TRANSMISSION DIAGNOSIS (2004 - 3 OF 4).
P0783	58	3-4 Shift	See 6-CYLINDER: 5HP19 NON-AWD TRANSMISSION DIAGNOSIS (2004 - 3 OF 4).
P0795	3	Pressure Control Solenoid "C"	See 6-CYLINDER: 5HP19 NON-AWD TRANSMISSION DIAGNOSIS (2004 - 2 OF 4).
P0962	1	Pressure Control Solenoid "A" Control Circuit Low	See 6-CYLINDER: 5HP19 NON-AWD TRANSMISSION DIAGNOSIS (2004 - 2 OF 4).
P0963	1	Pressure Control Solenoid "A" Control Circuit High	See 6-CYLINDER: 5HP19 NON-AWD TRANSMISSION DIAGNOSIS (2004 - 2 OF 4).
P0966	2	Pressure Control Solenoid "B" Control Circuit Low	See 6-CYLINDER: 5HP19 NON-AWD TRANSMISSION DIAGNOSIS (2004 - 2 OF 4).
P0967	2	Pressure Control Solenoid "B" Control Circuit High	See 6-CYLINDER: 5HP19 NON-AWD TRANSMISSION DIAGNOSIS (2004 - 2 OF 4).
P0970	3	Pressure Control Solenoid "C" Control Circuit Low	See 6-CYLINDER: 5HP19 NON-AWD TRANSMISSION DIAGNOSIS (2004 - 2 OF 4).
P0971	3	Pressure Control Solenoid "C" Control Circuit High	See 6-CYLINDER: 5HP19 NON-AWD TRANSMISSION DIAGNOSIS (2004 - 2 OF 4).
P1700	62	Double Error Output Speed and Input/Turbine Speed	See 6-CYLINDER: 5HP19 NON-AWD TRANSMISSION DIAGNOSIS (2004 - 1 OF 4).
P1719	144	CAN Version Error	See 6-CYLINDER: 5HP19 NON-AWD TRANSMISSION DIAGNOSIS (2004 - 4 OF 4).
P1720	129	CAN Timeout Control Module	See 6-CYLINDER: 5HP19 NON-AWD TRANSMISSION DIAGNOSIS (2004 - 4 OF 4).
P1731	51	Gear 1 manual Incorrect Ratio	See 6-CYLINDER: 5HP19 NON-AWD TRANSMISSION DIAGNOSIS (2004 - 1 OF 4).

P1732	65	Gear Monitoring 4 at Electrical Substitute Program	See 6-CYLINDER: 5HP19 NON-AWD TRANSMISSION DIAGNOSIS (2004 - 1 OF 4).
P1747	128	CAN-Bus Monitoring	See 6-CYLINDER: 5HP19 NON-AWD TRANSMISSION DIAGNOSIS (2004 - 4 OF 4).
P1761	19	Shiftlock Solenoid	See 6-CYLINDER: 5HP19 NON-AWD TRANSMISSION DIAGNOSIS (2004 - 3 OF 4).
P1762	19	Shiftlock Solenoid High Input	See 6-CYLINDER: 5HP19 NON-AWD TRANSMISSION DIAGNOSIS (2004 - 3 OF 4).
P1763	19	Shiftlock Solenoid Low Input	See 6-CYLINDER: 5HP19 NON-AWD TRANSMISSION DIAGNOSIS (2004 - 3 OF 4).
P1764	19	Shiftlock Solenoid Open Circuit	See 6-CYLINDER: 5HP19 NON-AWD TRANSMISSION DIAGNOSIS (2004 - 3 OF 4).
P1765	147	CAN Throttle Valve	See 6-CYLINDER: 5HP19 NON-AWD TRANSMISSION DIAGNOSIS (2004 - 4 OF 4).
P1791	81	Internal Transmission Control Module Memory Checksum/EEPROM Error	See 6-CYLINDER: 5HP19 NON-AWD TRANSMISSION DIAGNOSIS (2004 - 4 OF 4).
P1792	82	Internal Transmission Control Module Watchdog Error	See 6-CYLINDER: 5HP19 NON-AWD TRANSMISSION DIAGNOSIS (2004 - 4 OF 4).
P1794	80	Internal Transmission Control Module Memory Checksum Error	See 6-CYLINDER: 5HP19 NON-AWD TRANSMISSION DIAGNOSIS (2004 - 4 OF 4).
P1882	57	2-3 Shift Circuit High	See 6-CYLINDER: 5HP19 NON-AWD TRANSMISSION DIAGNOSIS (2004 - 3 OF 4).
P1883	58	3-4 Shift Circuit High	See 6-CYLINDER: 5HP19 NON-AWD TRANSMISSION DIAGNOSIS (2004 - 3 OF 4).
P1889	96	System Voltage - Electrical	See 6-CYLINDER: 5HP19 NON-AWD TRANSMISSION DIAGNOSIS (2004 - 3 OF 4).
P1892	96	System Voltage Low Input	See 6-CYLINDER: 5HP19 NON-AWD TRANSMISSION DIAGNOSIS (2004 - 3 OF 4).
P1893	83	Supply Voltage Pressure Control Solenoid/Shift Solenoid Circuit High	See 6-CYLINDER: 5HP19 NON-AWD TRANSMISSION DIAGNOSIS (2004 - 4 OF 4).
P1894	83	Supply Voltage Pressure Control Solenoid/Shift Solenoid Circuit Low	See 6-CYLINDER: 5HP19 NON-AWD TRANSMISSION DIAGNOSIS (2004 - 4 OF 4).
P1895	83	Supply Voltage Pressure Control Solenoid/Shift Solenoid No Signal	See 6-CYLINDER: 5HP19 NON-AWD TRANSMISSION DIAGNOSIS (2004 - 4 OF 4).
P2761	4	Torque Converter Clutch Pressure Control Solenoid Control Circuit/Open	See 6-CYLINDER: 5HP19 NON-AWD TRANSMISSION DIAGNOSIS (2004 - 2 OF 4).

P2763	4	Torque Converter Clutch Pressure Control Solenoid Control Circuit High	See 6-CYLINDER: 5HP19 NON-AWD TRANSMISSION DIAGNOSIS (2004 - 2 OF 4).
P2764	4	Torque Converter Clutch Pressure Control Solenoid Control Circuit Low	See 6-CYLINDER: 5HP19 NON-AWD TRANSMISSION DIAGNOSIS (2004 - 2 OF 4).

6-Cylinder: 5HP19 Non-AWD Transmission Diagnosis (2004 - 1 Of 4)

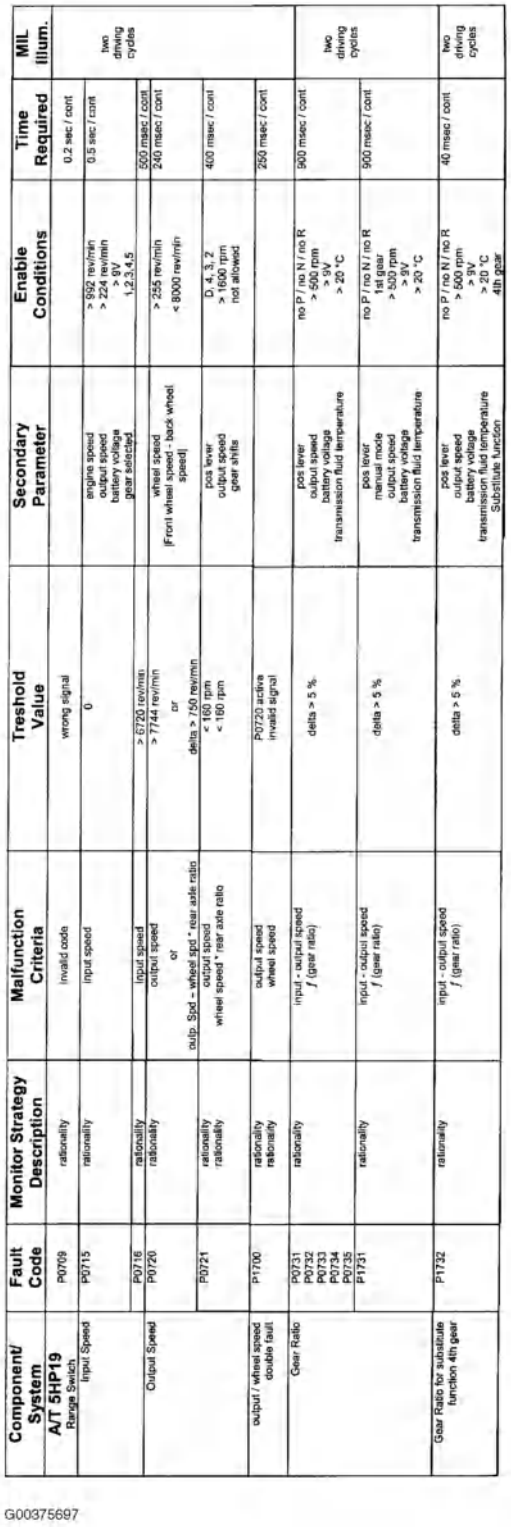

Component/ System	Fault Code	Monitor Strategy Description	Malfunction Criteria	Treshold Value	Secondary Parameter	Enable Conditions	Time Required	MIL illum.
A/T 5HP19	P0709	rationality	invalid code	wrong signal			0.2 sec / cont	two driving cycles
Range Switch Input Speed	P0715	rationality	input speed	0	engine speed output speed battery voltage gear selected	> 992 rev/min > 224 rev/min > 9V 1,2,3,4,5	0.5 sec / cont	
	P0716	rationality	input speed	> 6720 rev/min			500 msec / cont	
Output Speed	P0720	rationality	output speed or outp. Spd – wheel spd * rear axle ratio	> 7744 rev/min or delta > 750 rev/min	wheel speed [Front wheel speed - back wheel speed]	> 255 rev/min < 9000 rev/min	240 msec / cont	
	P0721	rationality rationality	output speed wheel speed * rear axle ratio	< 160 rpm < 160 rpm	pos lever output speed gear shifts	D, 4, 3, 2 > 1600 rpm not allowed	400 msec / cont	
output / wheel speed double fault	P1700	rationality rationality	output speed wheel speed	P0720 active invalid signal			250 msec / cont	
Gear Ratio	P0731 P0732 P0733 P0734 P0735	rationality	input - output speed / (gear ratio)	delta > 5 %	pos lever output speed battery voltage transmission fluid temperature	no P / no N / no R > 500 rpm > 9V > 20 °C	900 msec / cont	two driving cycles
	P1731	rationality	input - output speed / (gear ratio)	delta > 5 %	pos lever manual mode output speed battery voltage transmission fluid temperature	no P / no N / no R 1st gear > 500 rpm > 9V > 20 °C	900 msec / cont	
Gear Ratio for substitute function 4th gear	P1732	rationality	input - output speed / (gear ratio)	delta > 5 %	pos lever output speed battery voltage transmission fluid temperature Substitute function	no P / no N / no R > 500 rpm > 9V > 20 °C 4th gear	40 msec / cont	two driving cycles

G00375697

Fig. 35: 6-Cylinder: 5HP19 Non-AWD Transmission Diagnosis (2004 - 1 Of 4)
Courtesy of BMW OF NORTH AMERICA, INC.

6-Cylinder: 5HP19 Non-AWD Transmission Diagnosis (2004 - 2 Of 4)

Component/ System	Fault Code	Monitor Strategy Description	Malfunction Criteria	Treshold Value	Secondary Parameter	Enable Conditions	Time Required	MIL Illum.
Torque Converter Clutch	P0741	functional check	eng. speed - input speed (maximum slip)	> 80 rpm	gear selected engine speed input torque to TC (calculated) TCC activation pressure (calculated)	2, 3, 4 or 5 > input speed <= 160 Nm >= 5.24 bar	2.5 sec / cont	two driving cycles
Press. Contr. Valve 1	P0745	rationality	meas. curr. - calc. curr.	> 150mA (if meas curr < 200mA) > 1000mA (if meas curr > 200mA)	abs(battery voltage - pcv 1 voltage)	<=1.5 V	70 msec / cont	
1	P0963	circuit continuity, power short	voltage	12 V	pcv 1 voltage	> 7V		
1	P0962	circuit continuity, ground short	voltage	0 V				
2	P0775	rationality	meas. curr. - calc. curr.	> 150mA (if meas curr < 200mA) > 1000mA (if meas curr > 200mA)	abs(battery voltage - pcv 2 voltage)	<=1.5 V	50 msec / cont	
2	P0967	circuit continuity, power short	voltage	12 V	pcv 2 voltage	> 7V		
2	P0966	circuit continuity, ground short	voltage	0 V				
3	P0795	rationality	meas. curr. - calc. curr.	> 150mA (if meas curr < 200mA) > 1000mA (if meas curr > 200mA)	abs(battery voltage - pcv 3 voltage)	<=1.5 V	50 msec / cont	two driving cycles
3	P0971	circuit continuity, power short	voltage	12 V	pcv 3 voltage	> 7V		
3	P0970	circuit continuity, ground short	voltage	0 V				
4	P2761	rationality	meas. curr. - calc. curr.	> 150mA (if meas curr < 200mA) > 1000mA (if meas curr > 200mA)	abs(battery voltage - pcv 1 voltage)	<=1.5 V	70 msec / cont	
4	P2763	circuit continuity, power short	voltage	12 V	pcv 1 voltage	> 7V		
4	P2764	circuit continuity, ground short	voltage	0 V				
Shift Solenoid (A)	P0750	rationality	voltage	1V < ss voltage < 1.44V, if ss is under current 0.85V < ss voltage < 1.44V, if ss is not under current	MV input voltage	7V < MV inp. Volt. < 16V	800 msec / cont	
(A)	P0753	circuit continuity, power short	voltage	1.44V < ss voltage < 5V, if ss is under current			800 msec / cont	
(A)	P0752	circuit continuity, ground short	voltage	0V < ss voltage < 0.35V, if ss is not under current			800 msec / cont	
(A)	P0751	circuit continuity, disconnection	voltage	0.35V < ss voltage < 0.85V, if ss is not under current			800 msec / cont	

G00375698

Fig. 36: 6-Cylinder: 5HP19 Non-AWD Transmission Diagnosis (2004 - 2 Of 4)
Courtesy of BMW OF NORTH AMERICA, INC.

6-Cylinder: 5HP19 Non-AWD Transmission Diagnosis (2004 - 3 Of 4)

Component/ System	Fault Code	Monitor Strategy Description	Malfunction Criteria	Treshold Value	Secondary Parameter	Enable Conditions	Time Required	MIL Illum.
(B)	P0755	rationality	voltage	1V < ss voltage < 1.44V, if ss is under current 0.85V < ss voltage < 1.44V, if ss is not under current	MV input voltage	7V < MV inp. Volt. < 16V	800 msec / cont	two driving cycles
(B)	P0756	circuit continuity, power short	voltage	1.44V < ss voltage < 5V, if ss is under current			800 msec / cont	
(B)	P0757	circuit continuity, ground short	voltage	0V < ss voltage < 0.35V, if ss is not under current			800 msec / cont	
(B)	P0758	circuit continuity, disconnection	voltage	0.35V < ss voltage < 0.85V, if ss is not under current			800 msec / cont	
Shift Solenoid (C)	P0760	rationality	voltage	1V < ss voltage < 1.44V, if ss is under current 0.85V < ss voltage < 1.44V, if ss is not under current	MV input voltage	7V < MV inp. Volt. < 16V	800 msec / cont	
(C)	P0761	circuit continuity, power short	voltage	1.44V < ss voltage < 5V, if ss is under current			800 msec / cont	
(C)	P0762	circuit continuity, ground short	voltage	0V < ss voltage < 0.35V, if ss is not under current			800 msec / cont	
(C)	P0763	circuit continuity, disconnection	voltage	0.35V < ss voltage < 0.85V, if ss is not under current			800 msec / cont	
(Shift Locks)	P1761	rationality	voltage	1V < ss voltage < 1.44V, if ss is under current 0.85V < ss voltage < 1.44V, if ss is not under current	MV input voltage	7V < MV inp. Volt. < 16V	500 msec / cont	
(Shift Locks)	P1762	circuit continuity, power short	voltage	1.44V < ss voltage < 5V, if ss is under current			500 msec / cont	
(Shift Locks)	P1763	circuit continuity, ground short	voltage	0V < ss voltage < 0.35V, if ss is not under current			500 msec / cont	
(Shift Locks)	P1764	circuit continuity, disconnection	voltage	0.35V < ss voltage < 0.85V, if ss is not under current			500 msec / cont	
2/3 Shift	P0782	rationality, no change	input output	inp spd old gear - 10 rpm > inp spd new gear	pos lever output speed	no P / no N / no R > 500 rpm	90 msec / cont	two driving cycles
	P1892	rationality, value too big	input speed	inp spd old gear + 600 rpm < inp spd new gear	pos lever output speed	no P / no N / no R > 500 rpm	90 msec / cont	
3/4 Shift	P0789	rationality, no change	input output	inp spd old gear - 10 rpm > inp spd new gear	pos lever output speed	no P / no N / no R > 500 rpm	90 msec / cont	
	P1893	rationality, value too big	input speed	inp spd old gear + 600 rpm < inp spd new gear	pos lever output speed	no P / no N / no R > 500 rpm	90 msec / cont	
System Voltage, electrical	P1880	rationality	battery voltage	bat. Volt. < 8V	engine speed	> 1400 rpm	2.5 sec / cont	
System Voltage, low input	P1892	rationality	battery voltage	bat. Volt. < 7V or 16V < bat. Volt.	engine speed	> 1400 rpm	0.3 sec / cont	

G00375699

Fig. 37: 6-Cylinder: 5HP19 Non-AWD Transmission Diagnosis (2004 - 3 Of 4)
Courtesy of BMW OF NORTH AMERICA, INC.

6-Cylinder: 5HP19 Non-AWD Transmission Diagnosis (2004 - 4 Of 4)

Component/ System	Fault Code	Monitor Strategy Description	Malfunction Criteria	Treshold Value	Secondary Parameter	Enable Conditions	Time Required	MIL Illum.
Transmission Control Module	P1718	bus check	CAN level	wrong value			0.3 sec / cont	
	P1720	bus check	CAN messages/ time out DME	> 100 ms	ignition	on	0.5 sec / cont	
					battery voltage	> 9V		
	P1747	bus check	CAN bus fault	invalid signals	ignition	on	0.15 sec / cont	two driving cycles
	P1765	rationality	CAN throttle position	invalid signal			0.4 sec / cont	
	P1784	self check	EPROM checksum	invalid checksum			cont	
	P1791	self check	EEPROM	invalid checksum			once at startup	
	P1792	rationality microcontroller	watchdog	invalid checksum			once at startup	
Supply Voltage Pressure	P1893	circuit continuity, power short	voltage	ss and pcv voltage > battery voltage - 1.0V	ss and pcv voltage	>= battery voltage -2V	once at startup	
Control Solenoid / Shift Solenoid	P1894	circuit continuity, ground short	voltage	ss and pcv voltage < 2.5V	ss and pcv voltage	>= battery voltage -2V	once at startup	two driving cycles
			voltage	ss and pcv voltage < 30% * battery voltage	ss and pcv voltage	on	0.03 sec / cont.	
	P1895	circuit continuity, disconnection	voltage	ss and pcv voltage >= 2.5V	ss and pcv voltage	>= 0V	once at startup	

G00375700

Fig. 38: 6-Cylinder: 5HP19 Non-AWD Transmission Diagnosis (2004 - 4 Of 4)
Courtesy of BMW OF NORTH AMERICA, INC.

DIAGNOSTIC TROUBLE CODES 6-CYLINDER: 5HP19 (5-SPEED) - AWD TRANSMISSION (2004)

DIAGNOSTIC TROUBLE CODES 6-CYLINDER: 5HP19 (5-SPEED) - AWD TRANSMISSION (2004)

PCode	BMW Code	Possible Cause	Diagnostic Parameters
P0709	60	Transmission Range Sensor "A" Circuit Intermittent	See 6-CYLINDER: 5HP19 AWD TRANSMISSION DIAGNOSIS (2004 - 1 OF 3).
P0710	.....	Transmission Fluid Check	See 6-CYLINDER: 5HP19 AWD TRANSMISSION

			DIAGNOSIS (2004 - 1 OF 3).
P0711	.....	Transmission Temperature Sensor	See 6-CYLINDER: 5HP19 AWD TRANSMISSION DIAGNOSIS (2004 - 1 OF 3).
P0712	.....	Transmission Fluid Check	See 6-CYLINDER: 5HP19 AWD TRANSMISSION DIAGNOSIS (2004 - 1 OF 3).
P0713	.....	Transmission Fluid Check	See 6-CYLINDER: 5HP19 AWD TRANSMISSION DIAGNOSIS (2004 - 1 OF 3).
P0714	.....	Transmission Fluid Check	See 6-CYLINDER: 5HP19 AWD TRANSMISSION DIAGNOSIS (2004 - 1 OF 3).
P0715	33	Input/Turbine Speed Sensor "A" Circuit	See 6-CYLINDER: 5HP19 AWD TRANSMISSION DIAGNOSIS (2004 - 1 OF 3).
P0716	33	Input/Turbine Speed Sensor "A" Circuit Range/Performance	See 6-CYLINDER: 5HP19 AWD TRANSMISSION DIAGNOSIS (2004 - 1 OF 3).
P0720	32	Output Speed Sensor Circuit	See 6-CYLINDER: 5HP19 AWD TRANSMISSION DIAGNOSIS (2004 - 1 OF 3).
P0721	59	Output Speed Sensor Circuit Range/Performance	See 6-CYLINDER: 5HP19 AWD TRANSMISSION DIAGNOSIS (2004 - 1 OF 3).
P0731	50	Gear 1 Incorrect Ratio	See 6-CYLINDER: 5HP19 AWD TRANSMISSION DIAGNOSIS (2004 - 1 OF 3).
P0732	52	Gear 2 Incorrect Ratio	See 6-CYLINDER: 5HP19 AWD TRANSMISSION DIAGNOSIS (2004 - 1 OF 3).
P0733	53	Gear 3 Incorrect Ratio	See 6-CYLINDER: 5HP19 AWD TRANSMISSION DIAGNOSIS (2004 - 1 OF 3).
P0734	54	Gear 4 Incorrect Ratio	See 6-CYLINDER: 5HP19 AWD TRANSMISSION DIAGNOSIS (2004 - 1 OF 3).
P0735	55	Gear 5 Incorrect Ratio	See 6-CYLINDER: 5HP19 AWD TRANSMISSION DIAGNOSIS (2004 - 1 OF 3).
P0741	48	Torque Converter Clutch Circuit Performance or Stuck Off	See 6-CYLINDER: 5HP19 AWD TRANSMISSION DIAGNOSIS (2004 - 1 OF 3).
P0745	1	Pressure Control Solenoid "A"	See 6-CYLINDER: 5HP19 AWD TRANSMISSION DIAGNOSIS (2004 - 2 OF 3).
P0750	16	Shift Solenoid "A"	See 6-CYLINDER: 5HP19 AWD TRANSMISSION DIAGNOSIS (2004 - 2 OF 3).
P0751	16	Shift Solenoid "A" Performance or Stuck Off	See 6-CYLINDER: 5HP19 AWD TRANSMISSION DIAGNOSIS (2004 - 2 OF 3).
P0752	16	Shift Solenoid "A" Stuck On	See 6-CYLINDER: 5HP19 AWD TRANSMISSION DIAGNOSIS (2004 - 2 OF 3).

P0753	16	Shift Solenoid "A" Electrical	See 6-CYLINDER: 5HP19 AWD TRANSMISSION DIAGNOSIS (2004 - 2 OF 3).
P0755	17	Shift Solenoid "B"	See 6-CYLINDER: 5HP19 AWD TRANSMISSION DIAGNOSIS (2004 - 2 OF 3).
P0756	17	Shift Solenoid "B" Performance or Stuck Off	See 6-CYLINDER: 5HP19 AWD TRANSMISSION DIAGNOSIS (2004 - 2 OF 3).
P0757	17	Shift Solenoid "B" Stuck On	See 6-CYLINDER: 5HP19 AWD TRANSMISSION DIAGNOSIS (2004 - 2 OF 3).
P0758	17	Shift Solenoid "B" Electrical	See 6-CYLINDER: 5HP19 AWD TRANSMISSION DIAGNOSIS (2004 - 2 OF 3).
P0760	18	Shift Solenoid "C"	See 6-CYLINDER: 5HP19 AWD TRANSMISSION DIAGNOSIS (2004 - 3 OF 3).
P0761	18	Shift Solenoid "C" Performance or Stuck Off	See 6-CYLINDER: 5HP19 AWD TRANSMISSION DIAGNOSIS (2004 - 3 OF 3).
P0762	18	Shift Solenoid "C" Stuck On	See 6-CYLINDER: 5HP19 AWD TRANSMISSION DIAGNOSIS (2004 - 3 OF 3).
P0763	18	Shift Solenoid "C" Electrical	See 6-CYLINDER: 5HP19 AWD TRANSMISSION DIAGNOSIS (2004 - 3 OF 3).
P0775	2	Pressure Control Solenoid "B"	See 6-CYLINDER: 5HP19 AWD TRANSMISSION DIAGNOSIS (2004 - 2 OF 3).
P0782	57	2-3 Shift	See 6-CYLINDER: 5HP19 AWD TRANSMISSION DIAGNOSIS (2004 - 3 OF 3).
P0783	58	3-4 Shift	See 6-CYLINDER: 5HP19 AWD TRANSMISSION DIAGNOSIS (2004 - 3 OF 3).
P0795	3	Pressure Control Solenoid "C"	See 6-CYLINDER: 5HP19 AWD TRANSMISSION DIAGNOSIS (2004 - 2 OF 3).
P0962	1	Pressure Control Solenoid "A" Control Circuit Low	See 6-CYLINDER: 5HP19 AWD TRANSMISSION DIAGNOSIS (2004 - 2 OF 3).
P0963	1	Pressure Control Solenoid "A" Control Circuit High	See 6-CYLINDER: 5HP19 AWD TRANSMISSION DIAGNOSIS (2004 - 2 OF 3).
P0966	2	Pressure Control Solenoid "B" Control Circuit Low	See 6-CYLINDER: 5HP19 AWD TRANSMISSION DIAGNOSIS (2004 - 2 OF 3).
P0967	2	Pressure Control Solenoid "B" Control Circuit High	See 6-CYLINDER: 5HP19 AWD TRANSMISSION DIAGNOSIS (2004 - 2 OF 3).
P0970	3	Pressure Control Solenoid "C" Control Circuit Low	See 6-CYLINDER: 5HP19 AWD TRANSMISSION DIAGNOSIS (2004 - 2 OF 3).

P0971	3	Pressure Control Solenoid "C" Control Circuit High	See 6-CYLINDER: 5HP19 AWD TRANSMISSION DIAGNOSIS (2004 - 2 OF 3).
P1700	62	Double Error Output Speed and Input/Turbine Speed	See 6-CYLINDER: 5HP19 AWD TRANSMISSION DIAGNOSIS (2004 - 1 OF 3).
P1719	144	CAN Version Error	See 6-CYLINDER: 5HP19 AWD TRANSMISSION DIAGNOSIS (2004 - 3 OF 3).
P1720	129	CAN Timeout Control Module	See 6-CYLINDER: 5HP19 AWD TRANSMISSION DIAGNOSIS (2004 - 3 OF 3).
P1731	51	Gear 1 manual Incorrect Ratio	See 6-CYLINDER: 5HP19 AWD TRANSMISSION DIAGNOSIS (2004 - 1 OF 3).
P1732	65	Gear Monitoring 4 at Electrical Substitute Program	See 6-CYLINDER: 5HP19 AWD TRANSMISSION DIAGNOSIS (2004 - 1 OF 3).
P1747	128	CAN-Bus Monitoring	See 6-CYLINDER: 5HP19 AWD TRANSMISSION DIAGNOSIS (2004 - 3 OF 3).
P1761	19	Shiftlock Solenoid	See 6-CYLINDER: 5HP19 AWD TRANSMISSION DIAGNOSIS (2004 - 3 OF 3).
P1762	19	Shiftlock Solenoid High Input	See 6-CYLINDER: 5HP19 AWD TRANSMISSION DIAGNOSIS (2004 - 3 OF 3).
P1763	19	Shiftlock Solenoid Low Input	See 6-CYLINDER: 5HP19 AWD TRANSMISSION DIAGNOSIS (2004 - 3 OF 3).
P1764	19	Shiftlock Solenoid Open Circuit	See 6-CYLINDER: 5HP19 AWD TRANSMISSION DIAGNOSIS (2004 - 3 OF 3).
P1765	147	CAN Throttle Valve	See 6-CYLINDER: 5HP19 AWD TRANSMISSION DIAGNOSIS (2004 - 3 OF 3).
P1791	81	Internal Transmission Control Module Memory Checksum/EEPROM Error	See 6-CYLINDER: 5HP19 AWD TRANSMISSION DIAGNOSIS (2004 - 3 OF 3).
P1792	82	Internal Transmission Control Module Watchdog Error	See 6-CYLINDER: 5HP19 AWD TRANSMISSION DIAGNOSIS (2004 - 3 OF 3).
P1794	80	Internal Transmission Control Module Memory Checksum Error	See 6-CYLINDER: 5HP19 AWD TRANSMISSION DIAGNOSIS (2004 - 3 OF 3).
P1882	57	2-3 Shift Circuit High	See 6-CYLINDER: 5HP19 AWD TRANSMISSION DIAGNOSIS (2004 - 3 OF 3).
P1883	58	3-4 Shift Circuit High	See 6-CYLINDER: 5HP19 AWD TRANSMISSION DIAGNOSIS (2004 - 3 OF 3).
P1889	96	System Voltage - Electrical	See 6-CYLINDER: 5HP19 AWD TRANSMISSION DIAGNOSIS (2004 - 3 OF 3).
P1892	96	System Voltage Low Input	See 6-CYLINDER: 5HP19

			AWD TRANSMISSION DIAGNOSIS (2004 - 3 OF 3).
P1893	83	Supply Voltage Pressure Control Solenoid/Shift Solenoid Circuit High	See 6-CYLINDER: 5HP19 AWD TRANSMISSION DIAGNOSIS (2004 - 3 OF 3).
P1894	83	Supply Voltage Pressure Control Solenoid/Shift Solenoid Circuit Low	See 6-CYLINDER: 5HP19 AWD TRANSMISSION DIAGNOSIS (2004 - 3 OF 3).
P1895	83	Supply Voltage Pressure Control Solenoid/Shift Solenoid No Signal	See 6-CYLINDER: 5HP19 AWD TRANSMISSION DIAGNOSIS (2004 - 3 OF 3).
P2761	4	Torque Converter Clutch Pressure Control Solenoid Control Circuit/Open	See 6-CYLINDER: 5HP19 AWD TRANSMISSION DIAGNOSIS (2004 - 2 OF 3).
P2763	4	Torque Converter Clutch Pressure Control Solenoid Control Circuit High	See 6-CYLINDER: 5HP19 AWD TRANSMISSION DIAGNOSIS (2004 - 2 OF 3).
P2764	4	Torque Converter Clutch Pressure Control Solenoid Control Circuit Low	See 6-CYLINDER: 5HP19 AWD TRANSMISSION DIAGNOSIS (2004 - 2 OF 3).

6-Cylinder: 5HP19 AWD Transmission Diagnosis (2004 - 1 Of 3)

Component/ System	Fault Code	Monitor Strategy Description	Malfunction Criteria	Treshold Value	Secondary Parameter	Enable Conditions	Time Required	MIL Illum.
A/T 5HP19								
Range Switch	P0705	rationality	unvalid code	wrong signal			0.2 sec / cont	
Input Speed	P0715	rationality	input speed	0	engine speed output speed battery voltage gear selected	> 992 rev/min > 224 rev/min > 9V 1,2,3,4,5	0.5 sec / cont	two driving cycles
	P0716	rationality	input speed	> 6720 rev/min			500 msec / cont	
Temperature Sensor	P0711	sensor internal shorted	voltage	2.7V < sensor connectors < 2.7V			100 msec/cont	
Transmission Fluid	P0712	shorted to ground		sensor plus < 4.5V and sensor minus < 0.5V				
	P0713	shorted to battery		sensor plus > 4.5V and sensor minus > 0.5V				
	P0714	disconnection		sensor plus > 4.5V and sensor minus < 0.5V				
	P0710	rationality	stuck temperature	Δ temp. < 6°C within 200 sec	TFT at engine start output speed	< 20° C > 800 rev/min	240sec/cont.	
			temperature variation	Δ temp. > 10°C within 100 msec			100msec/cont.	
Output Speed	P0720	rationality	output speed or outp. Spd – wheel spd * rear axle ratio	> 7744 rev/min or delta > 750 rev/min	wheel speed [Front wheel speed - back wheel speed]	> 255 rev/min < 8000 rev/min	240 msec / cont	
	P0721	rationality	output speed wheel speed * rear axle ratio	< 160 rpm < 160 rpm	selector lever position output speed gear shifts	D, 4, 3, 2 > 1600 rpm not allowed	400 msec / cont	
output / wheel speed obvious fault	P1700	rationality	output speed wheel speed	P0720 active invalid signal			250 msec / cont	
Gear Ratio	P0731 P0732 P0733 P0734 P0735	rationality	input - output speed / (gear ratio)	delta > 5 %	selector lever position output speed battery voltage transmission fluid temperature	no P / no N / no R > 500 rpm > 9V > 20 °C	900 msec / cont	two driving cycles
	P1731	rationality	input - output speed / (gear ratio)	delta > 5 %	selector lever position manual mode output speed battery voltage transmission fluid temperature	no P / no N / no R 1 st gear > 500 rpm > 9V > 20 °C	900 msec / cont	
Gear Ratio for substitude function 4.the gear	P1732	rationality	input - output speed / (gear ratio)	delta > 5 %	selector lever position output speed battery voltage transmission fluid temperature Substitute function	no P / no N / no R > 500 rpm > 9V > 20 °C 4 st gear	40 msec / cont	two driving cycles
Torque Converter Clutch	P0741	functional check	eng. speed - input speed (maximum slip)	> 80 rpm	gear selected engine speed input torque to TC (calculated) TCC activation pressure (calculated)	2, 3, 4 or 5 > input speed <= 160 Nm >= 5.24 bar	2.5 sec / cont	two driving cycles

G00375701

Fig. 39: 6-Cylinder: 5HP19 AWD Transmission Diagnosis (2004 - 1 Of 3)
Courtesy of BMW OF NORTH AMERICA, INC.

6-Cylinder: 5HP19 AWD Transmission Diagnosis (2004 - 2 Of 3)

Component/ System	Fault Code	Monitor Strategy Description	Malfunction Criteria	Treshold Value	Secondary Parameter	Enable Conditions	Time Required	MIL Illum.
Press. Contr. Valve 1	P0745	rationality	meas. curr. - calc. curr.	> 150mA (if meas curr < 200mA) > 1000mA (if meas curr > 200mA)	abs(battery voltage - pcv 1 voltage)	<=1.5 V > 7V	70 msec / cont	
1	P0963	circuit continuity, power short	voltage	12 V	pcv 1 voltage			
1	P0962	circuit continuity, ground short	voltage	0 V				
2	P0775	rationality	meas. curr. - calc. curr.	> 150mA (if meas curr < 200mA) > 1000mA (if meas curr > 200mA)	abs(battery voltage - pcv 2 voltage)	<=1.5 V > 7V	50 msec / cont	
2	P0967	circuit continuity, power short	voltage	12 V	pcv 2 voltage			
2	P0966	circuit continuity, ground short	voltage	0 V				
3	P0795	rationality	meas. curr. - calc. curr.	> 150mA (if meas curr < 200mA) > 1000mA (if meas curr > 200mA)	abs(battery voltage - pcv 3 voltage)	<=1.5 V > 7V	50 msec / cont	two driving cycles
3	P0971	circuit continuity, power short	voltage	12 V	pcv 3 voltage			
3	P0970	circuit continuity, ground short	voltage	0 V				
4	P2761	rationality	meas. curr. - calc. curr.	> 150mA (if meas curr < 200mA) > 1000mA (if meas curr > 200mA)	abs(battery voltage - pcv 1 voltage)	<=1.5 V > 7V	70 msec / cont	
4	P2763	circuit continuity, power short	voltage	12 V	pcv 1 voltage			
4	P2764	circuit continuity, ground short	voltage	0 V				
Shift Solenoid (A)	P0750	rationality	voltage	1V < ss voltage < 1.44V, if ss is under current 0.85V < ss voltage < 1.44V, if ss is not under current	MV input voltage	7V < MV inp. Volt. < 16V	800 msec / cont	
(A)	P0753	circuit continuity, power short	voltage	1.44V < ss voltage < 5V, if ss is under current			800 msec / cont	
(A)	P0752	circuit continuity, ground short	voltage	0V < ss voltage < 0.35V, if ss is not under current			800 msec / cont	
(A)	P0751	circuit continuity, disconnection	voltage	0.35V < ss voltage < 0.85V, if ss is not under current			800 msec / cont	
(B)	P0755	rationality	voltage	1V < ss voltage < 1.44V, if ss is under current 0.85V < ss voltage < 1.44V, if ss is not under current	MV input voltage	7V < MV inp. Volt. < 16V	800 msec / cont	
(B)	P0758	circuit continuity, power short	voltage	1.44V < ss voltage < 5V, if ss is under current			800 msec / cont	
(B)	P0757	circuit continuity, ground short	voltage	0V < ss voltage < 0.35V, if ss is not under current			800 msec / cont	
(B)	P0756	circuit continuity, disconnection	voltage	0.35V < ss voltage < 0.85V, if ss is not under current			800 msec / cont	

G00375702

Fig. 40: 6-Cylinder: 5HP19 AWD Transmission Diagnosis (2004 - 2 Of 3)
Courtesy of BMW OF NORTH AMERICA, INC.

6-Cylinder: 5HP19 AWD Transmission Diagnosis (2004 - 3 Of 3)

Component/ System	Fault Code	Monitor Strategy Description	Malfunction Criteria	Treshold Value	Secondary Parameter	Enable Conditions	Time Required	MIL Illum.
Shift Solenoid (C)	P0760	rationality	voltage	1V < ss voltage < 1.44V, if ss is under current 0.85V < ss voltage < 1.44V, if ss is not under current	MV input voltage	7V < MV inp. Volt. < 16V	800 msec / cont	two driving cycles
(C)	P0763	circuit continuity power short	voltage	1.44V < ss voltage < 5V, if ss is under current			800 msec / cont	
(C)	P0762	circuit continuity, ground short	voltage	0V < ss voltage < 0.35V, if ss is not under current			800 msec / cont	
(C)	P0761	circuit continuity, disconnection	voltage	0.35V < ss voltage < 0.85V, if ss is not under current			800 msec / cont	
(Shift Lock)	P1761	rationality	voltage	1V < ss voltage < 1.44V, if ss is under current 0.85V < ss voltage < 1.44V, if ss is not under current	MV input voltage	7V < MV inp. Volt. < 16V	500 msec / cont	
(Shift Lock)	P1762	circuit continuity, power short	voltage	1.44V < ss voltage < 5V, if ss is under current			500 msec / cont	
(Shift Lock)	P1763	circuit continuity, ground short	voltage	0V < ss voltage < 0.35V, if ss is not under current			500 msec / cont	
(Shift Lock)	P1764	circuit continuity, disconnection	voltage	0.35V < ss voltage < 0.85V, if ss is not under current			500 msec / cont	
2/3 Shift	P0752	rationality, no change	input output	inp spd old gear - 40 rpm > inp spd new gear	selector lever position output speed	no P / no N / no R > 500 rpm	90 msec / cont	
	P1852	rationality, value too big	input speed	inp spd old gear + 600 rpm < inp spd new gear	selector lever position output speed	no P / no N / no R > 500 rpm	90 msec / cont	
¾ Shift	P0753	rationality, no change	input output	inp spd old gear - 40 rpm > inp spd new gear	selector lever position output speed	no P / no N / no R > 500 rpm	90 msec / cont	
	P1853	rationality, value too big	input speed	inp spd old gear + 600 rpm < inp spd new gear	selector lever position output speed	no P / no N / no R > 500 rpm	90 msec / cont	
System Voltage, electrical	P1889	rationality	battery voltage	battery voltage < 9V	engine speed	> 1408 rpm	2.5 sec / cont	
System Voltage, low input	P1892	rationality	battery voltage	battery voltage < 7V or 16V < battery voltage	engine speed	>1408 rpm	0.3 sec / cont	
Transmission Control Modul	P1719	bus check	CAN level	wrong value			0.3 sec / cont	
	P1720	bus check	CAN message/ time out DME	> 160 ms	ignition battery voltage	on > 9V	0.6 sec / cont	
	P1747	bus check	CAN bus fault	invalid signal	ignition	on	0.15 sec / cont	
	P1765	rationality	CAN throttle position	invalid signal			0.4 sec / cont	
	P1794	self check	EPROM checksum	invalid checksum			cont	
	P1791	self check	EEPROM	invalid checksum			once at startup	
	P1792	rationality microcontroller	watchdog	invalid checksum			once at startup	
Supply Voltage Pressure Control Solenoid / Shift Solenoid	P1893	circuit continuity, power short	voltage	ss and pcv voltage > battery voltage - 1.0V	ss and pcv voltage	>= battery voltage -2V	once at startup	two driving cycles
	P1894	circuit continuity, ground short	voltage	ss and pcv voltage < 2.5V ss and pcv voltage < 30% * battery voltage	ss and pcv voltage ss and pcv voltage	>= battery voltage -2V on	once at startup 0.03 sec / cont.	
	P1895	circuit continuity, disconnection	voltage	ss and pcv voltage >= 2.5V	ss and pcv voltage	>= 0V	once at startup	

G00375703

Fig. 41: 6-Cylinder: 5HP19 AWD Transmission Diagnosis (2004 - 3 Of 3)
Courtesy of BMW OF NORTH AMERICA, INC.

DIAGNOSTIC TROUBLE CODES 6-CYLINDER: 6HP19 (6-SPEED) - AWD TRANSMISSION (2004)

DIAGNOSTIC TROUBLE CODES 6-CYLINDER: 6HP19 (6-SPEED) - AWD TRANSMISSION (2004)

PCode	Possible Cause	Diagnostic Parameters
P0705	Range Position Switch	See 6-CYLINDER: 6HP19 TRANSMISSION DIAGNOSIS (2004 - 4 OF 5).
P0710	Oil Temperature Sensor Plausibility	See 6-CYLINDER: 6HP19 TRANSMISSION DIAGNOSIS

		(2004 - 1 OF 5).
P0711	Oil Temperature Sensor General	See 6-CYLINDER: 6HP19 TRANSMISSION DIAGNOSIS (2004 - 1 OF 5).
P0712	Oil Temperature Sensor Lower Threshold	See 6-CYLINDER: 6HP19 TRANSMISSION DIAGNOSIS (2004 - 1 OF 5).
P0713	Oil Temperature Sensor Upper Threshold	See 6-CYLINDER: 6HP19 TRANSMISSION DIAGNOSIS (2004 - 1 OF 5).
P0714	Oil Temperature Sensor No Signal	See 6-CYLINDER: 6HP19 TRANSMISSION DIAGNOSIS (2004 - 1 OF 5).
P0715	Input/Turbine Speed Sensor "A" Circuit	See 6-CYLINDER: 6HP19 TRANSMISSION DIAGNOSIS (2004 - 4 OF 5).
P0720	Output Speed Sensor Circuit	See 6-CYLINDER: 6HP19 TRANSMISSION DIAGNOSIS (2004 - 4 OF 5).
P0721	Output Speed Sensor Circuit Range/Performance	See 6-CYLINDER: 6HP19 TRANSMISSION DIAGNOSIS (2004 - 4 OF 5).
P0731	Gear 1 Incorrect Ratio	See 6-CYLINDER: 6HP19 TRANSMISSION DIAGNOSIS (2004 - 2 OF 5).
P0732	Gear 2 Incorrect Ratio	See 6-CYLINDER: 6HP19 TRANSMISSION DIAGNOSIS (2004 - 2 OF 5).
P0733	Gear 3 Incorrect Ratio	See 6-CYLINDER: 6HP19 TRANSMISSION DIAGNOSIS (2004 - 2 OF 5).
P0734	Gear 4 Incorrect Ratio	See6-CYLINDER: 6HP19 TRANSMISSION DIAGNOSIS (2004 - 2 OF 5).
P0735	Gear 5 Incorrect Ratio	See 6-CYLINDER: 6HP19 TRANSMISSION DIAGNOSIS (2004 - 2 OF 5).
P0741	Torque Converter Clutch Circuit Performance or Stuck Off	See 6-CYLINDER: 6HP19 TRANSMISSION DIAGNOSIS (2004 - 2 OF 5).
P0745	Pressure Control Solenoid "A"	See 6-CYLINDER: 6HP19 TRANSMISSION DIAGNOSIS (2004 - 1 OF 5).
P0748	Pressure Control Solenoid "A" No Signal	See 6-CYLINDER: 6HP19 TRANSMISSION DIAGNOSIS (2004 - 1 OF 5).
P0751	Shift Solenoid "A" Performance or Stuck Off	See 6-CYLINDER: 6HP19 TRANSMISSION DIAGNOSIS (2004 - 1 OF 5).
P0753	Solenoid Valve Upper Threshold	See 6-CYLINDER: 6HP19 TRANSMISSION DIAGNOSIS (2004 - 1 OF 5).
P0775	Pressure Control Solenoid "B"	See 6-CYLINDER: 6HP19 TRANSMISSION DIAGNOSIS (2004 - 1 OF 5).

P0778	Pressure Control Solenoid "B" No Signal	See 6-CYLINDER: 6HP19 TRANSMISSION DIAGNOSIS (2004 - 1 OF 5).
P0781	Range Shift Monitoring General	See 6-CYLINDER: 6HP19 TRANSMISSION DIAGNOSIS (2004 - 2 OF 5).
P0782	Range Shift Monitoring General	See 6-CYLINDER: 6HP19 TRANSMISSION DIAGNOSIS (2004 - 2 OF 5).
P0783	3-4 Shift	See 6-CYLINDER: 6HP19 TRANSMISSION DIAGNOSIS (2004 - 3 OF 5).
P0784	4-5 Shift	See 6-CYLINDER: 6HP19 TRANSMISSION DIAGNOSIS (2004 - 3 OF 5).
P0795	Pressure Control Solenoid "C"	See 6-CYLINDER: 6HP19 TRANSMISSION DIAGNOSIS (2004 - 1 OF 5).
P0798	Pressure Control Solenoid "C" No Signal	See 6-CYLINDER: 6HP19 TRANSMISSION DIAGNOSIS (2004 - 1 OF 5).
P0829	5-6 Shift	See 6-CYLINDER: 6HP19 TRANSMISSION DIAGNOSIS (2004 - 3 OF 5).
P0962	Pressure Control Solenoid "A" Control Circuit Low	See 6-CYLINDER: 6HP19 TRANSMISSION DIAGNOSIS (2004 - 1 OF 5).
P0963	Pressure Control Solenoid "A" Control Circuit High	See 6-CYLINDER: 6HP19 TRANSMISSION DIAGNOSIS (2004 - 1 OF 5).
P0966	Pressure Control Solenoid "B" Control Circuit Low	See 6-CYLINDER: 6HP19 TRANSMISSION DIAGNOSIS (2004 - 1 OF 5).
P0967	Pressure Control Solenoid "B" Control Circuit High	See 6-CYLINDER: 6HP19 TRANSMISSION DIAGNOSIS (2004 - 1 OF 5).
P0970	Pressure Control Solenoid "C" Control Circuit Low	See 6-CYLINDER: 6HP19 TRANSMISSION DIAGNOSIS (2004 - 1 OF 5).
P0971	Pressure Control Solenoid "C" Control Circuit High	See 6-CYLINDER: 6HP19 TRANSMISSION DIAGNOSIS (2004 - 1 OF 5).
P0973	Solenoid Valve Lower Threshold	See 6-CYLINDER: 6HP19 TRANSMISSION DIAGNOSIS (2004 - 1 OF 5).
P0979	Solenoid Valve Lower Threshold	See 6-CYLINDER: 6HP19 TRANSMISSION DIAGNOSIS (2004 - 1 OF 5).
P1702	Double Error Output Or Not Allowed Actuation Of Valves	See 6-CYLINDER: 6HP19 TRANSMISSION DIAGNOSIS (2004 - 5 OF 5).
P1720	CAN Timeout Control Module	See 6-CYLINDER: 6HP19 TRANSMISSION DIAGNOSIS (2004 - 5 OF 5).

P1721	CAN Timeout Control Module	See 6-CYLINDER: 6HP19 TRANSMISSION DIAGNOSIS (2004 - 5 OF 5).
P1727	Engine Speed Signal	See 6-CYLINDER: 6HP19 TRANSMISSION DIAGNOSIS (2004 - 4 OF 5).
P1728	Engine Speed	See 6-CYLINDER: 6HP19 TRANSMISSION DIAGNOSIS (2004 - 4 OF 5).
P1736	Gear Ratio Monitoring	See 6-CYLINDER: 6HP19 TRANSMISSION DIAGNOSIS (2004 - 2 OF 5).
P1747	CAN-Bus Monitoring	See 6-CYLINDER: 6HP19 TRANSMISSION DIAGNOSIS (2004 - 4 OF 5).
P1771	Engine Torque Plausibility	See 6-CYLINDER: 6HP19 TRANSMISSION DIAGNOSIS (2004 - 3 OF 5).
P1790	Internal Transmission Control Module Memory Checksum/EEPROM Error	See 6-CYLINDER: 6HP19 TRANSMISSION DIAGNOSIS (2004 - 5 OF 5).
P1791	Internal Transmission Control Module Memory Checksum/EEPROM Error	See 6-CYLINDER: 6HP19 TRANSMISSION DIAGNOSIS (2004 - 5 OF 5).
P1792	Internal Transmission Control Module Watchdog Error	See 6-CYLINDER: 6HP19 TRANSMISSION DIAGNOSIS (2004 - 5 OF 5).
P1793	TCM Hot Disabling	See 6-CYLINDER: 6HP19 TRANSMISSION DIAGNOSIS (2004 - 5 OF 5).
P1798	Internal Transmission Control Module Memory Checksum/EEPROM Error	See 6-CYLINDER: 6HP19 TRANSMISSION DIAGNOSIS (2004 - 5 OF 5).
P1804	Solenoid Valve Shiftlock	See 6-CYLINDER: 6HP19 TRANSMISSION DIAGNOSIS (2004 - 1 OF 5).
P1810	Turbine Speed Sensor Upper Threshold	See 6-CYLINDER: 6HP19 TRANSMISSION DIAGNOSIS (2004 - 4 OF 5).
P1811	Turbine Speed Sensor Lower Threshold	See 6-CYLINDER: 6HP19 TRANSMISSION DIAGNOSIS (2004 - 4 OF 5).
P1812	Output Speed Sensor Upper Threshold	See 6-CYLINDER: 6HP19 TRANSMISSION DIAGNOSIS (2004 - 4 OF 5).
P1813	Output Speed Sensor Lower Threshold	See 6-CYLINDER: 6HP19 TRANSMISSION DIAGNOSIS (2004 - 4 OF 5).
P1814	Output Speed Sensor Plausibility	See 6-CYLINDER: 6HP19 TRANSMISSION DIAGNOSIS (2004 - 4 OF 5).
P1861	2-1 Shift Circuit General	See 6-CYLINDER: 6HP19 TRANSMISSION DIAGNOSIS (2004 - 3 OF 5).
P1862	3-2 Shift Circuit General	See 6-CYLINDER: 6HP19

		TRANSMISSION DIAGNOSIS (2004 - 3 OF 5).
P1863	4-3 Shift Circuit General	See 6-CYLINDER: 6HP19 TRANSMISSION DIAGNOSIS (2004 - 3 OF 5).
P1864	5-4 Shift Circuit General	See 6-CYLINDER: 6HP19 TRANSMISSION DIAGNOSIS (2004 - 3 OF 5).
P1865	6-5 Shift Circuit General	See 6-CYLINDER: 6HP19 TRANSMISSION DIAGNOSIS (2004 - 3 OF 5).
P1881	Range Shift (1-2) Monitoring Upper Threshold	See 6-CYLINDER: 6HP19 TRANSMISSION DIAGNOSIS (2004 - 2 OF 5).
P1882	Range Shift (2-3) Monitoring Upper Threshold	See6-CYLINDER: 6HP19 TRANSMISSION DIAGNOSIS (2004 - 2 OF 5).
P1883	3-4 Shift Circuit High	See 6-CYLINDER: 6HP19 TRANSMISSION DIAGNOSIS (2004 - 3 OF 5).
P1884	4-5 Shift Circuit High	See 6-CYLINDER: 6HP19 TRANSMISSION DIAGNOSIS (2004 - 3 OF 5).
P1885	5-6 Shift Circuit High	See 6-CYLINDER: 6HP19 TRANSMISSION DIAGNOSIS (2004 - 3 OF 5).
P1890	Power Supply General	See 6-CYLINDER: 6HP19 TRANSMISSION DIAGNOSIS (2004 - 2 OF 5).
P1891	Power Supply Upper Threshold	See 6-CYLINDER: 6HP19 TRANSMISSION DIAGNOSIS (2004 - 2 OF 5).
P1892	System Voltage Low Input	See 6-CYLINDER: 6HP19 TRANSMISSION DIAGNOSIS (2004 - 2 OF 5).
P1893	Supply Voltage Pressure Control Solenoid/Shift Solenoid Circuit High	See 6-CYLINDER: 6HP19 TRANSMISSION DIAGNOSIS (2004 - 5 OF 5).
P1894	Supply Voltage Pressure Control Solenoid/Shift Solenoid Circuit Low	See 6-CYLINDER: 6HP19 TRANSMISSION DIAGNOSIS (2004 - 5 OF 5).
P1895	Supply Voltage Pressure Control Solenoid/Shift Solenoid No Signal	See 6-CYLINDER: 6HP19 TRANSMISSION DIAGNOSIS (2004 - 5 OF 5).
P1896	Valve Voltage Supply	See 6-CYLINDER: 6HP19 TRANSMISSION DIAGNOSIS (2004 - 5 OF 5).
P1897	Valve Voltage Supply Upper Threshold	See 6-CYLINDER: 6HP19 TRANSMISSION DIAGNOSIS (2004 - 5 OF 5).
P1898	Sensor Voltage Supply Lower Threshold	See 6-CYLINDER: 6HP19 TRANSMISSION DIAGNOSIS (2004 - 5 OF 5).
P2713	Pressure Regulator Valve Plausibility	See 6-CYLINDER: 6HP19 TRANSMISSION DIAGNOSIS

		(2004 - 1 OF 5).
P2716	Pressure Regulator No Signal	See 6-CYLINDER: 6HP19 TRANSMISSION DIAGNOSIS (2004 - 1 OF 5).
P2720	Pressure Regulator Valve Lower Threshold	See 6-CYLINDER: 6HP19 TRANSMISSION DIAGNOSIS (2004 - 1 OF 5).
P2721	Pressure Regulator Valve Upper Threshold	See 6-CYLINDER: 6HP19 TRANSMISSION DIAGNOSIS (2004 - 1 OF 5).
P2722	Pressure Regulator Valve Plausibility	See 6-CYLINDER: 6HP19 TRANSMISSION DIAGNOSIS (2004 - 1 OF 5).
P2725	Pressure Regulator Valve No Signal	See 6-CYLINDER: 6HP19 TRANSMISSION DIAGNOSIS (2004 - 1 OF 5).
P2729	Pressure Regulator Valve Lower Threshold	See 6-CYLINDER: 6HP19 TRANSMISSION DIAGNOSIS (2004 - 1 OF 5).
P2730	Pressure Regulator Valve Upper Threshold	See 6-CYLINDER: 6HP19 TRANSMISSION DIAGNOSIS (2004 - 1 OF 5).
P2759	Torque Converter Clutch No Signal	See 6-CYLINDER: 6HP19 TRANSMISSION DIAGNOSIS (2004 - 2 OF 5).
P2761	Torque Converter Clutch Pressure Control Solenoid Control Circuit/Open	See 6-CYLINDER: 6HP19 TRANSMISSION DIAGNOSIS (2004 - 2 OF 5).
P2763	Torque Converter Clutch Pressure Control Solenoid Control Circuit High	See 6-CYLINDER: 6HP19 TRANSMISSION DIAGNOSIS (2004 - 2 OF 5).
P2764	Torque Converter Clutch Pressure Control Solenoid Control Circuit Low	See 6-CYLINDER: 6HP19 TRANSMISSION DIAGNOSIS (2004 - 2 OF 5).

6-Cylinder: 6HP19 Transmission Diagnosis (2004 - 1 Of 5)

Component/ System	Fault Code	Monitor Strategy Description	Malfunction Criteria	Threshold value	Secondary Parameter	Enable Conditions	Time Required	MIL Illum.
A/T 6HP19								
Pressure Regulator Valves	(1)P0962	lower threshold	interruption or short circuit to gnd	>220mA (p-i)	Low-side and high-side FET Power supply Voltage-drop at FET Solenoid supply Desired PWM-Signal	activated >9V <=1V >9V Not 0% and not 100%	20msec/ continous	two driving cycles
	P0745	plausibility	current higher or lower than threshold					
	P0963	upper threshold	short circuit to supply					
	P0748	no signal	interruption					
	(2)P0966	lower threshold	interruption or short circuit to gnd	>730mA (p-i)				
	P0775	plausibility	current higher or lower than threshold					
	P0967	upper threshold	short circuit to supply					
	P0778	no signal	interruption					
	(3)P0970	lower threshold	interruption or short circuit to gnd	>220mA (p-i)				
	P0795	plausibility	current higher or lower than threshold					
	P0971	upper threshold	short circuit to supply					
	P0798	no signal	interruption					
	(4)P2720	lower threshold	interruption or short circuit to gnd	>730mA (p-i)				
	P2713	plausibility	current higher or lower than threshold					
	P2721	upper threshold	short circuit to supply					
	P2716	no signal	interruption					
	(5)P2729	lower threshold	interruption or short circuit to gnd	no monitoring				
	P2722	plausibility	current higher or lower than threshold					
	P2730	upper threshold	short circuit to supply					
	P2725	no signal	interruption					
Solenoid Valves	(1)P0973	lower threshold	interruption or short circuit to gnd.	Diagnosis by ASIC if PWM-signal const. at 0%, 100% voltage return lead (low/high) <0,15V 0,15V< voltage return lead (low) <0,8V	high-side FET high-side FET low-side FET	voltage drop <=1V enabled enabled	20msec/ continous	two driving cycles
	P0753	upper threshold	short circuit to supply	Diagnosis by ASIC if PWM-signal const. at 0%, 100% voltage return lead (high) >0,3V				
	P0751	no signal	interruption	Diagnosis by ASIC if PWM-signal const. at 0%, 100% 0,15V<voltage return lead (low) <0,8V				
	(2)	Not used	Not used	Not used				
interlock (only PL2)	(3)P0979	lower threshold	interruption or short circuit to gnd.	Diagnosis only by ASIC due to on/off-controlling				
Selfcase	(4)P1604	lower threshold	interruption or short circuit to gnd.	Diagnosis only by ASIC due to on/off-controlling				
Oil Temp Sensor	P0711	general	Short circuit (within sensor)	Voltage at connectors between 2,3 and 2,7V			150msec/ continous	two driving cycles
	P0713	upper threshold	short circuit to supply	Sensor-plus >4,5V and Sensor-minus >0,5V				
	P0712	lower threshold	short circuit to gnd	Sensor-plus <4,5V and Sensor-minus <0,5V				
	P0714	no signal	interruption	Sensor-plus >4,5V and Sensor-minus <0,5V				
	P0710	plausibility	Gradient lower than threshold	Increase of 20°C / 100 msec or Increase of 4°C / 4 min	Output speed Engine speed Start temperature	>800rpm and status OK >400rpm and status OK < 20°C		

G00375704

Fig. 42: 6-Cylinder: 6HP19 Transmission Diagnosis (2004 - 1 Of 5)
Courtesy of BMW OF NORTH AMERICA, INC.

6-Cylinder: 6HP19 Transmission Diagnosis (2004 - 2 Of 5)

Component/ System	Fault Code	Monitor Strategy Description	Malfunction Criteria	Threshold value	Secondary Parameter	Enable Conditions	Time Required	MIL Illum.
Torque Converter Clutch (TCC)	P0741	general	diff(engine speed, input speed) > threshold over defined time	>diff.-speed=f(engine torque) engine torque[-50; 300]Nm; diff.-speed[25; 25]rpm >30sec	torque converter clutch	clutch not opened	2500msec/ continous	two driving cycles
valve	P2764	lower threshold	interruption or short circuit to gnd.	-				
	P2761	plausibility	current higher or lower than threshold	-				
	P2763	upper threshold	short circuit to supply	no monitoring				
	P2759	no signal	interruption	-				
Power Supply	P1891	upper threshold	battery voltage > threshold	>=16V	engine speed FET Jump-Start	>=400rpm enabled no	10 msec/ continous	two driving cycles
	P1892	lower threshold		<=7V	engine speed FET	>=400rpm enabled		
	P1890	general		<9V	engine speed FET	>=400rpm and status OK enabled		
Gear Ratio Monitoring (1) (2) (3) (4) (5) (6)	P0731 P0732 P0733 P0734 P0735 P1736	plausibility	|output speed x ratio - input speed| > threshold	> characteristic speed-difference=f(engine speed) engine speed [0; 200; 6000] rpm speed-difference [400; 200; 400] rpm	transmission oil temp. actual Range output speed engine speed input speed Stand by Control SBC	>0°C 1, 2, 3, 4, 5, 6 >0rpm >400rpm >0rpm status OK inactive	30msec/ continous	two driving cycles
Range Shift monitoring (1) →(2)	A P1881	upper threshold	|input speed - output speed x ratio| > threshold	>300rpm	output speed	>300rpm	30msec/ continous	two driving cycles
	B P0761	general	|input speed - output speed x ratio|(i) - |input speed - output speed x ratio|(i=0) < threshold	-30rpm < calc. value < 40rpm	transmission oil temp. engine speed range position	>0°C >=600rpm not P, R, N		
(2) →(3)	A P1882	upper threshold	|input speed - output speed x ratio| > threshold	>300rpm	output speed	>300rpm		
	B P0762	general	|input speed - output speed x ratio|(i) - |input speed - output speed x ratio|(i=0) > threshold	-30rpm < calc. value < 40rpm	transmission oil temp. engine speed range position	>=0°C >=600rpm not P, R, N		

G00375705

Fig. 43: 6-Cylinder: 6HP19 Transmission Diagnosis (2004 - 2 Of 5)
Courtesy of BMW OF NORTH AMERICA, INC.

6-Cylinder: 6HP19 Transmission Diagnosis (2004 - 3 Of 5)

Component/ System	Fault Code	Monitor Strategy Description	Malfunction Criteria	Threshold value	Secondary Parameter	Enable Conditions	Time Required	MIL Illum.
Range Shift monitoring							30msec/ continous	two driving cycles
(3) →(4)	AP1683	upper threshold	(input speed - output speed x ratio) > threshold	>300rpm	output speed transmission oil temp. engine speed range position	>300rpm >=0°C >=600rpm not P, R, N		
	BP0783	general	(input speed - output speed x ratio)(t) - (input speed - output speed x ratio)(t=0) > threshold	-30rpm < calc. value < 40rpm				
(4) →(5)	AP1684	upper threshold	(input speed - output speed x ratio) > threshold	>300rpm	output speed transmission oil temp. engine speed range position	>300rpm >=0°C >=600rpm not P, R, N		
	BP0784	general	(input speed - output speed x ratio)(t) - (input speed - output speed x ratio)(t=0) > threshold	-30rpm < calc. value < 40rpm				
(5) →(6)	AP1685	upper threshold	(input speed - output speed x ratio) > threshold	>300rpm	output speed transmission oil temp. engine speed range position	>300rpm >=0°C >=600rpm not P, R, N		
	BP0825	general	(input speed - output speed x ratio)(t) - (input speed - output speed x ratio)(t=0) > threshold	-30rpm < calc. value < 40rpm				
(2) →(1)	A—	upper threshold	no monitoring		output speed transmission oil temp. engine speed range position	>250rpm >=0°C >=600rpm not P, R, N		
	BP1861	general	(input speed - output speed x ratio)(t) - (input speed - output speed x ratio)(t=0) > threshold	-30rpm < calc. value < 40rpm				
(3) →(2)	A—	upper threshold	no monitoring		output speed transmission oil temp. engine speed range position	>500rpm >=0°C >=600rpm not P, R, N		
	BP1862	general	(input speed - output speed x ratio)(t) - (input speed - output speed x ratio)(t=0) > threshold	-30rpm < calc. value < 40rpm				
(4) →(3)	A—	upper threshold	no monitoring		output speed transmission oil temp. engine speed range position	>700rpm >=0°C >=600rpm not P, R, N		
	BP1863	general	(input speed - output speed x ratio)(t) - (input speed - output speed x ratio)(t=0) > threshold	-30rpm < calc. value < 40rpm				
(5) →(4)	A—	upper threshold	no monitoring		output speed transmission oil temp. engine speed range position	>800rpm >=0°C >=600rpm not P, R, N		
	BP1864	general	(input speed - output speed x ratio)(t) - (input speed - output speed x ratio)(t=0) > threshold	-30rpm < calc. value < 40rpm				
(6) →(5)	A—	upper threshold	no monitoring		output speed transmission oil temp. engine speed range position	>1100rpm >=0°C >=600rpm not P, R, N		
	BP1865	general	(input speed - output speed x ratio)(t) - (input speed - output speed x ratio)(t=0) > threshold	-30rpm < calc. value < 40rpm				
Engine Torque	P1771	plausibility	CAN-Message signal error-flag alive-counter or checksum	=1 no alteration of alive-counter or wrong Checksum	DME-CAN Connection CAN-Bus ignition	Status OK Status OK status on	600msec/ continous	two driving cycles

G00375706

Fig. 44: 6-Cylinder: 6HP19 Transmission Diagnosis (2004 - 3 Of 5)
Courtesy of BMW OF NORTH AMERICA, INC.

6-Cylinder: 6HP19 Transmission Diagnosis (2004 - 4 Of 5)

Component/ System	Fault Code	Monitor Strategy Description	Malfunction Criteria	Threshold value	Secondary Parameter	Enable Conditions	Time Required	MIL Illum.
Engine Overspeed	P1728	plausibility	engine speed	>6800rpm	Range Position engine speed Park-Lock Sensor	not P, R, N, Z and status OK status OK or substitute value status OK	2,666/ continous	two driving cycles
Engine Speed Signal	P1727	plausibility	CAN-Message signal error-flag alive-counter or checksum	=1 no alteration of alive-counter or wrong Checksum	DME CAN-Connection ignition signal CAN Bus	status OK on status OK	600msec/ continous	two driving cycles
Range Position Switch (Driver's request)	P0705	plausibility	Transmission Position Sensor	invalid code	-	–	100msec/ continous	two driving cycles
CAN-Bus	P1747	plausibility	CAN-Bus disabled	-	ignition	status on	100msec/ continous	one driving cycle
Turbine Speed Sensor (Input Speed NTU)	P1810	Upper threshold	Short circuit to supply		Sensor supply	Status OK	100msec/ continous	two driving cycles
	P1811	Lower threshold	Interruption or short circuit to gnd.				600msec/ continous	
	P0715	plausibility	Signal greater or lower than threshold	>7700rpm, <20rpm	Sensor supply (NTU>7700rpm) Sensor (NTU>7700rpm) Sensor supply sensor Engine speed Output speed Range position Transmission condition	Status OK No electr. error Status OK No electr. error Status OK, >600rpm Status OK or substitute value Status OK or substitute value friction-locked (forward or backward)		
Output Speed Sensor	P0720	plausibility	Speed difference to wheel speed And turbine speed	>250rpm (output speed <>wheel speed) >200rpm (output speed <>turbine speed)	Transmission condition Shift flag Turbine speed Sensor supply Wheel speed	friction-locked (forward or backward) =0 (no shift) Status OK Status OK Status OK		
	P1812	Upper threshold	Short circuit to supply		Sensor supply	Status OK		
	P1813	Lower threshold	Interruption or short circuit to gnd.	>=8400rpm (default but variant specific) or Difference to converted wheel speed >250rpm				
	P0721	general	Signal greater than threshold		Sensor supply sensor Wheel speed	Status OK No electr. error Status OK No electr. error Mean speed of driven wheels OK Mean speed of non-driven wheels OK Converted wheel speed >500rpm Diff. Of driven and non-driven wheels <10rpm		
	P1814	plausibility	Negative gradient of signal > threshold	1000rpm / 10msec.	Transmission condition Turbine speed sensor Diff. (output speed turbine speed) Or shift flag	Function-locked (forward) Status OK >200rpm =1	600msec/ continous	

G00375707

Fig. 45: 6-Cylinder: 6HP19 Transmission Diagnosis (2004 - 4 Of 5)
Courtesy of BMW OF NORTH AMERICA, INC.

6-Cylinder: 6HP19 Transmission Diagnosis (2004 - 5 Of 5)

Component/ System	Fault Code	Monitor Strategy Description	Malfunction Criteria	Threshold value	Secondary Parameter	Enable Conditions	Time Required	MIL Illum.
Colliding Functions or not allowed actuating of valves (at detected interruption or short-circuit to supply)	P1702	general	SW-Functions actuating solenoid valves	colliding of 2 Substitute-Functions same priority driven solenoid valves have short-circuit to supply or interruption	none	-	20msec/ continous	two driving cycles
Watch-Dog	P1792	general	error-counter	exceeding diff. thresholds	Status-Counter	initialization: 0 or 1	10msec/ continous and in initialization	two driving cycles
					filtered battery voltage	>7V		
						in operation: debug-mode deactivated		
Timeout DME CAN-Connection	P1720	plausibility	CAN-Connection DME	Timeout	CAN-Bus	no Error and ready-to-transmit	750msec/ continous	one driving cycle
					TCM-CAN	no transmission of wake-up signal		
					battery voltage	>9V		
Timeout DSC CAN-Connection	P1721	plausibility	CAN-Connection DSC	Timeout	CAN-Bus	no Error and ready-to-transmit	2800msec/ continous	two driving cycles
					TCM-CAN	no transmission of wake-up signal		
					battery voltage	>9V		
TCM Hot Disabling	P1793	general	max(Chip-Temp. - 0°C, Trans-Oil-Temp. - 10°C) > threshold=f(battery-voltage)	> characteristic voltage[16.4, 18.5, 19.5, 25, 25]V Temp[141, 121, 111, 61, 61]°C	none		100msec/ continous and in initialization	two driving cycles
Valve Voltage Supply	P1696	plausibility	FET drive	not possible	Status-Counter	initialization: 0 or 1	30msec/ continous and in initialization	two driving cycles
	P1893	upper threshold	short-circuit to supply	-	filtered battery voltage	>7V		
	P1894	lower threshold	short-circuit to gnd. or sensor supply voltage < threshold or FET-drop-voltage > threshold	sensor supply <0.5V, drop-voltage>1V	high-side and low-side-FET battery voltage	in operation: enabled >7V		
	P1895	no signal	interruption	-				
Sensor Voltage Supply	P1897	upper threshold	sensor supply Voltage >threshold	>8V	battery-voltage	>6.05V	600msec/ continous	two driving cycles
	P1898	lower threshold	sensor supply Voltage <threshold	<6,42				
EEPROM	P1791	plausibility	Checksum-Error	=1	none	-	20msec/ continous	One driving cycle
EPROM	P1790	plausibility	Checksum-Error	=1	none	-	10msec/ continous	two driving cycles
	P1798		SW-Verify-Error due to Update of EEPROM-Emulation					

G00375708

Fig. 46: 6-Cylinder: 6HP19 Transmission Diagnosis (2004 - 5 Of 5)
Courtesy of BMW OF NORTH AMERICA, INC.

DIAGNOSTIC TROUBLE CODES 6-CYLINDER: NON-AWD TRANSMISSION (2004)

DIAGNOSTIC TROUBLE CODES 6-CYLINDER: NON-AWD TRANSMISSION (2004)

PCode	BMW Code	Possible Cause	Diagnostic Parameters
P0705	60	Transmission Range Sensor "A" Circuit Malfunction (PRNDL Input)	See 6-CYLINDER: GM5 NON-AWD TRANSMISSION DIAGNOSIS (2004 - 1 OF 3).
P0709	60	Transmission Range Sensor "A" Circuit Intermittent	See 6-CYLINDER: GM5 NON-AWD TRANSMISSION

			DIAGNOSIS (2004 - 1 OF 3).
P0715	33	Input/Turbine Speed Sensor "A" Circuit	See 6-CYLINDER: GM5 NON-AWD TRANSMISSION DIAGNOSIS (2004 - 1 OF 3).
P0717	33	Input/Turbine Speed Sensor "A" Circuit No Signal	See 6-CYLINDER: GM5 NON-AWD TRANSMISSION DIAGNOSIS (2004 - 1 OF 3).
P0720	32	Output Speed Sensor Circuit	See 6-CYLINDER: GM5 NON-AWD TRANSMISSION DIAGNOSIS (2004 - 1 OF 3).
P0722	32	Output Speed Sensor Circuit No Signal	See 6-CYLINDER: GM5 NON-AWD TRANSMISSION DIAGNOSIS (2004 - 1 OF 3).
P0727	150	Engine Speed Input Circuit No Signal	See 6-CYLINDER: GM5 NON-AWD TRANSMISSION DIAGNOSIS (2004 - 3 OF 3).
P0731	50	Gear 1 Incorrect Ratio	See 6-CYLINDER: GM5 NON-AWD TRANSMISSION DIAGNOSIS (2004 - 1 OF 3).
P0732	52	Gear 2 Incorrect Ratio	See 6-CYLINDER: GM5 NON-AWD TRANSMISSION DIAGNOSIS (2004 - 1 OF 3).
P0733	53	Gear 3 Incorrect Ratio	See 6-CYLINDER: GM5 NON-AWD TRANSMISSION DIAGNOSIS (2004 - 1 OF 3).
P0734	54	Gear 4 Incorrect Ratio	See 6-CYLINDER: GM5 NON-AWD TRANSMISSION DIAGNOSIS (2004 - 1 OF 3).
P0735	55	Gear 5 Incorrect Ratio	See 6-CYLINDER: GM5 NON-AWD TRANSMISSION DIAGNOSIS (2004 - 1 OF 3).
P0741	48	Torque Converter Clutch Circuit Performance or Stuck Off	See 6-CYLINDER: GM5 NON-AWD TRANSMISSION DIAGNOSIS (2004 - 2 OF 3).
P0742	48	Torque Converter Clutch Circuit Stuck On	See 6-CYLINDER: GM5 NON-AWD TRANSMISSION DIAGNOSIS (2004 - 2 OF 3).
P0753	16	Shift Solenoid "A" Electrical	See 6-CYLINDER: GM5 NON-AWD TRANSMISSION DIAGNOSIS (2004 - 2 OF 3).
P0758	17	Shift Solenoid "B" Electrical	See 6-CYLINDER: GM5 NON-AWD TRANSMISSION DIAGNOSIS (2004 - 2 OF 3).
P0763	18	Shift Solenoid "C" Electrical	See 6-CYLINDER: GM5 NON-AWD TRANSMISSION DIAGNOSIS (2004 - 3 OF 3).
P0973	16	Shift Solenoid "A" Control Circuit Low	See 6-CYLINDER: GM5 NON-AWD TRANSMISSION DIAGNOSIS (2004 - 2 OF 3).
P0976	17	Shift Solenoid "B" Control Circuit Low	See 6-CYLINDER: GM5 NON-AWD TRANSMISSION DIAGNOSIS (2004 - 2 OF 3).
P0979	18	Shift Solenoid "C" Control Circuit Low	See 6-CYLINDER: GM5 NON-AWD TRANSMISSION DIAGNOSIS (2004 - 3 OF 3).

P1719	144	CAN Version Error	See 6-CYLINDER: GM5 NON-AWD TRANSMISSION DIAGNOSIS (2004 - 3 OF 3).
P1720	129	CAN Timeout Control Module	See 6-CYLINDER: GM5 NON-AWD TRANSMISSION DIAGNOSIS (2004 - 3 OF 3).
P1765	147	CAN Throttle Valve	See 6-CYLINDER: GM5 NON-AWD TRANSMISSION DIAGNOSIS (2004 - 3 OF 3).
P1780	.....	CAN Throttle Valve	See 6-CYLINDER: GM5 NON-AWD TRANSMISSION DIAGNOSIS (2004 - 3 OF 3).
P1790	80	Internal Transmission Control Module Memory Checksum/EPROM Error	See 6-CYLINDER: GM5 NON-AWD TRANSMISSION DIAGNOSIS (2004 - 3 OF 3).
P1791	81	Internal Transmission Control Module Memory Checksum/EEPROM Error	See 6-CYLINDER: GM5 NON-AWD TRANSMISSION DIAGNOSIS (2004 - 3 OF 3).
P1794	80	Internal Transmission Control Module Memory Checksum Error	See 6-CYLINDER: GM5 NON-AWD TRANSMISSION DIAGNOSIS (2004 - 3 OF 3).
P1891	96	System Voltage High Input	See 6-CYLINDER: GM5 NON-AWD TRANSMISSION DIAGNOSIS (2004 - 3 OF 3).
P1892	96	System Voltage Low Input	See 6-CYLINDER: GM5 NON-AWD TRANSMISSION DIAGNOSIS (2004 - 3 OF 3).
P2759	4	Torque Converter Clutch Pressure Control Solenoid Control Circuit Electrical	See 6-CYLINDER: GM5 NON-AWD TRANSMISSION DIAGNOSIS (2004 - 2 OF 3).

6-Cylinder: GM5 Non-AWD Transmission Diagnosis (2004 - 1 Of 3)

Component/ System	Fault Code	Monitor Strategy Description	Malfunction Criteria	Treshold Value	Secondary Parameter	Enable Conditions	Time Required	MIL Illum.
A/T GM5								
Range Switch	P0705	rationality	invalid code	wrong signal	battery voltage engine speed	9V < battery voltage < 18V 450 rpm < eng. spd. < 6500 rpm	10 sec / cont	two driving cycles
	P0709	rationality	transitional code	transitional signal	battery voltage engine speed	9V < battery voltage < 18V 450 rpm < eng. spd. < 6500 rpm	0,5 sec/ cont	
Input Speed	P0715	performance	inp spd - last valid inp spd	> 1000 rpm	vehicle speed throttle position battery voltage	> 8 km/h > 12% 9V < battery voltage < 18V	3 sec / cont	
	P0717	rationality	input speed	< 100 rpm	gear selected vehicle speed battery voltage engine speed	1,2,3,4 or 5 > 8 km/h 9V < battery voltage < 18V 450 rpm < eng. spd. < 6500 rpm	5 sec / cont	
Output Speed	P0720	performance	delta output speed	> 1300 rpm	gear selected battery voltage engine speed outp spd or last valid outp spd	1,2,3,4 or 5 9V < battery voltage < 18V 450 rpm < eng. spd. < 6500 rpm > 1300 rpm	5 sec / cont	
	P0722	rationality	output speed	< 100 rpm	engine torque throttle position input speed battery voltage engine speed	70 Nm < eng trq < 400 Nm > 12 % 1500 rpm < inp spd < 6000 rpm 9V < battery voltage < 18V 450 rpm < eng. spd. < 6500 rpm	3 sec / cont	
Gear Ratio	P0731 P0732 P0733 P0734 P0735	rationality	input - output speed / (gear ratio)	delta > 5 %	gear selected throttle position pos lever vehicle speed transmission temperature engine torque transmission ratio battery voltage engine speed	1, 2, 3, 4, 5 > 10% no P / no N / no R > 5 km/h 20°C < trans temp < 130 °C 50Nm < eng trq < 400 Nm 0,5 < trans ratio < 4,2 9V < battery voltage < 18V 450 rpm < eng. spd. < 6500 rpm	2 sec / cont	two driving cycles

G00375709

Fig. 47: 6-Cylinder: GM5 Non-AWD Transmission Diagnosis (2004 - 1 Of 3)
Courtesy of BMW OF NORTH AMERICA, INC.

6-Cylinder: GM5 Non-AWD Transmission Diagnosis (2004 - 2 Of 3)

Component/ System	Fault Code	Monitor Strategy Description	Malfunction Criteria	Treshold Value	Secondary Parameter	Enable Conditions	Time Required	MIL Illum.
Torque Converter Clutch	P0741	functional check TCC stuck off	TCC_Slip_Target - TCC_Slip (maximum slip)	> 200 prm	TCC mode gear selected throttle position transmission temperature engine torque battery voltage engine speed	lock on 2, 3, 4 or 5 12% < throt pos < 90 % 20°C < trans temp < 130 °C 55 Nm < eng trq < 400 Nm 9V < battery voltage < 18V 450 rpm < eng. spd. < 6500 rpm	15 sec / cont	two driving cycles
	P0742	functional check TCC stuck on	eng. speed - input speed (minimum slip)	-20 rpm < delta < 20 rpm	TCC mode gear selected throttle position engine speed engine torque vehicle speed battery voltage engine speed	lock off 2, 3 12% < throt pos < 90 % 600 rpm < eng spd < 4500 80 Nm < eng trq < 400 Nm 15 kph < eng spd < 255 kph 9V < battery voltage < 18V 450 rpm < eng. spd. < 6500 rpm	7.5 sec/ cont	
Press. Contr. Valve	P2769	circuit continuity	voltage	duty cycle (pwm signal) <= 10% or duty cycle (pwm signal) >= 80%	battery voltage engine speed	9V < battery voltage < 18V 450 rpm < eng. spd. < 6500 rpm	700 msec / cont	
Shift Solenoid (A)	P0753	circuit continuity, power short	voltage	power short	Shift Solenoid A battery voltage engine speed	on 9V < battery voltage < 18V 450 rpm < eng. spd. < 6500 rpm	700 msec / cont	
(A)	P0973	circuit continuity, ground short	voltage	ground short	battery voltage engine speed	9V < battery voltage < 18V 450 rpm < eng. spd. < 6500 rpm	700 msec / cont	
Shift Solenoid (B)	P0758	circuit continuity, power short	voltage	power short	Shift Solenoid B battery voltage engine speed	on 9V < battery voltage < 18V 450 rpm < eng. spd. < 6500 rpm	700 msec / cont	
(B)	P0976	circuit continuity, ground short	voltage	ground short	battery voltage engine speed	9V < battery voltage < 18V 450 rpm < eng. spd. < 6500 rpm	700 msec / cont	

G00383747

Fig. 48: 6-Cylinder: GM5 Non-AWD Transmission Diagnosis (2004 - 2 Of 3)
Courtesy of BMW OF NORTH AMERICA, INC.

6-Cylinder: GM5 Non-AWD Transmission Diagnosis (2004 - 3 Of 3)

Component/ System	Fault Code	Monitor Strategy Description	Malfunction Criteria	Treshold Value	Secondary Parameter	Enable Conditions	Time Required	MIL Illum.
Shift Solenoid (C)	P0763	circuit continuity, power short	voltage	power short	Shift Solenoid C battery voltage engine speed	on 9V < battery voltage < 18V 450 rpm < eng. spd. < 6500 rpm	700 msec / cont	two driving cycles
(C)	P0879	circuit continuity, ground short	voltage	ground short	battery voltage engine speed	9V < battery voltage < 18V 450 rpm < eng. spd. < 6500 rpm	700 msec / cont	
Power Supply	P1692	rationality	battery voltage	< 9,5 V	engine speed	> 1500 rpm	5 sec / cont	two driving cycles
	P1851	rationality	battery voltage	> 18 V			10 sec / cont	
Transmission Control Modul	P0727	rationality	CAN engine speed	invalid signal	battery voltage	9V < battery voltage < 18V	1 sec / cont	two driving cycles
	P1780	rationality	CAN torque reduction	invalid signal	battery voltage engine speed	9V < battery voltage < 18V 450 rpm < eng. spd. < 6500 rpm	1 sec / cont	
	P1785	rationality	CAN throttle position	invalid signal	battery voltage engine speed	9V < battery voltage < 18V 450 rpm < eng. spd. < 6500 rpm	1 sec / cont	
	P1720	bus check	CAN messages time out	> 1 s	battery voltage	9V < battery voltage < 18V	1 sec / cont	
	P1719	bus check	CAN level	wrong value	battery voltage	9V < battery voltage < 18V	5 sec / cont	
	P1791	rationality	internal error (NVM / RAM)				once at startup	
	P1790	self check	RAM and ROM check	invalid checksum			once at startup	
	P1794	self check	ROM check	not programmed			once at startup	

G00383748

Fig. 49: 6-Cylinder: GM5 Non-AWD Transmission Diagnosis (2004 - 3 Of 3)
Courtesy of BMW OF NORTH AMERICA, INC.

DIAGNOSTIC TROUBLE CODES 6-CYLINDER: GM5 - AWD (2004)

DIAGNOSTIC TROUBLE CODES 6-CYLINDER: GM5 - AWD (2004)

PCode	BMW Code	Possible Cause	Diagnostic Parameters
P0705	60	Transmission Range Sensor "A" Circuit Malfunction (PRNDL Input)	See 6-CYLINDER: GM5 AWD TRANSMISSION DIAGNOSIS (2004 - 1 OF 3).
P0709	60	Transmission Range Sensor "A" Circuit Intermittent	See 6-CYLINDER: GM5 AWD TRANSMISSION DIAGNOSIS

			(2004 - 1 OF 3).
P0710	.....	Transmission Fluid Temperature Sensor	See 6-CYLINDER: GM5 AWD TRANSMISSION DIAGNOSIS (2004 - 1 OF 3).
P0712	.....	Transmission Fluid Temperature Sensor	See 6-CYLINDER: GM5 AWD TRANSMISSION DIAGNOSIS (2004 - 1 OF 3).
P0713	.....	Transmission Fluid Temperature Sensor	See 6-CYLINDER: GM5 AWD TRANSMISSION DIAGNOSIS (2004 - 1 OF 3).
P0715	33	Input/Turbine Speed Sensor "A" Circuit	See 6-CYLINDER: GM5 AWD TRANSMISSION DIAGNOSIS (2004 - 1 OF 3).
P0717	33	Input/Turbine Speed Sensor "A" Circuit No Signal	See 6-CYLINDER: GM5 AWD TRANSMISSION DIAGNOSIS (2004 - 1 OF 3).
P0720	32	Output Speed Sensor Circuit	See 6-CYLINDER: GM5 AWD TRANSMISSION DIAGNOSIS (2004 - 1 OF 3).
P0722	32	Output Speed Sensor Circuit No Signal	See 6-CYLINDER: GM5 AWD TRANSMISSION DIAGNOSIS (2004 - 1 OF 3).
P0727	150	Engine Speed Input Circuit No Signal	See 6-CYLINDER: GM5 AWD TRANSMISSION DIAGNOSIS (2004 - 3 OF 3).
P0731	50	Gear 1 Incorrect Ratio	See 6-CYLINDER: GM5 AWD TRANSMISSION DIAGNOSIS (2004 - 2 OF 3).
P0732	52	Gear 2 Incorrect Ratio	See 6-CYLINDER: GM5 AWD TRANSMISSION DIAGNOSIS (2004 - 2 OF 3).
P0733	53	Gear 3 Incorrect Ratio	See 6-CYLINDER: GM5 AWD TRANSMISSION DIAGNOSIS (2004 - 2 OF 3).
P0734	54	Gear 4 Incorrect Ratio	See 6-CYLINDER: GM5 AWD TRANSMISSION DIAGNOSIS (2004 - 2 OF 3).
P0735	55	Gear 5 Incorrect Ratio	See 6-CYLINDER: GM5 AWD TRANSMISSION DIAGNOSIS (2004 - 2 OF 3).
P0741	48	Torque Converter Clutch Circuit Performance or Stuck Off	See 6-CYLINDER: GM5 AWD TRANSMISSION DIAGNOSIS (2004 - 2 OF 3).
P0742	48	Torque Converter Clutch Circuit Stuck On	See 6-CYLINDER: GM5 AWD TRANSMISSION DIAGNOSIS (2004 - 2 OF 3).
P0753	16	Shift Solenoid "A" Electrical	See 6-CYLINDER: GM5 AWD TRANSMISSION DIAGNOSIS (2004 - 2 OF 3).
P0758	17	Shift Solenoid "B" Electrical	See 6-CYLINDER: GM5 AWD TRANSMISSION DIAGNOSIS (2004 - 2 OF 3).
P0763	18	Shift Solenoid "C" Electrical	See 6-CYLINDER: GM5 AWD TRANSMISSION DIAGNOSIS (2004 - 3 OF 3).

P0973	16	Shift Solenoid "A" Control Circuit Low	See 6-CYLINDER: GM5 AWD TRANSMISSION DIAGNOSIS (2004 - 2 OF 3).
P0976	17	Shift Solenoid "B" Control Circuit Low	See 6-CYLINDER: GM5 AWD TRANSMISSION DIAGNOSIS (2004 - 2 OF 3).
P0979	18	Shift Solenoid "C" Control Circuit Low	See 6-CYLINDER: GM5 AWD TRANSMISSION DIAGNOSIS (2004 - 3 OF 3).
P1719	144	CAN Version Error	See 6-CYLINDER: GM5 AWD TRANSMISSION DIAGNOSIS (2004 - 3 OF 3).
P1720	129	CAN Timeout Control Module	See 6-CYLINDER: GM5 AWD TRANSMISSION DIAGNOSIS (2004 - 3 OF 3).
P1765	147	CAN Throttle Valve	See 6-CYLINDER: GM5 AWD TRANSMISSION DIAGNOSIS (2004 - 3 OF 3).
P1790	80	Internal Transmission Control Module Memory Checksum/EPROM Error	See 6-CYLINDER: GM5 AWD TRANSMISSION DIAGNOSIS (2004 - 3 OF 3).
P1791	81	Internal Transmission Control Module Memory Checksum/EEPROM Error	See 6-CYLINDER: GM5 AWD TRANSMISSION DIAGNOSIS (2004 - 3 OF 3).
P1794	80	Internal Transmission Control Module Memory Checksum Error	See 6-CYLINDER: GM5 AWD TRANSMISSION DIAGNOSIS (2004 - 3 OF 3).
P1891	96	System Voltage High Input	See 6-CYLINDER: GM5 AWD TRANSMISSION DIAGNOSIS (2004 - 3 OF 3).
P1892	96	System Voltage Low Input	See 6-CYLINDER: GM5 AWD TRANSMISSION DIAGNOSIS (2004 - 3 OF 3).

6-Cylinder: GM5 AWD Transmission Diagnosis (2004 - 1 Of 3)

Component/ System	Fault Code	Monitor Strategy Description	Malfunction Criteria	Treshold Value	Secondary Parameter	Enable Conditions	Time Required	MIL Illum.
A/T GM5								
Range Switch	P0705	rationality	invalid code	wrong signal	battery voltage engine speed	9V < battery voltage < 18V 450 rpm < eng. spd. < 6500 rpm	10 sec / cont	two driving cycles
	P0709	rationality	transitional code	transitional signal	battery voltage engine speed	9V < battery voltage < 18V 450 rpm < eng. spd. < 6500 rpm	0.5 sec/ cont	
Temperature Sensor	P0712	short to ground or sensor internal short	voltage	< 0.12 V			10 sec/cont.	
Transmission Fluid	P0713	short to battery or open		> 4.9 V	input speed – output speed vehicle speed transmission warm-up	> 120 rpm > 8 km/h > 200 sec	5 sec/cont.	
	P0710	rationality	stuck temperature	Δ temp. < 2°C within 100 sec.	input speed – output speed vehicle speed engine coolant temperature and engine coolant temperature	> 120 rpm > 8 km/h > 70° C Δ > 50° C	100sec/once per DC	
			temperature gradient	Δ temp. > 20°C within 250 msec			7msec/cont.	
Input Speed	P0715	performance	in_speed - last valid in_speed	> 1000 rpm	vehicle speed throttle position battery voltage	> 8 km/h > 12% 9V < battery voltage < 18V	3 sec / cont	
	P0717	rationality	input speed	< 100 rpm	gear selected vehicle speed battery voltage engine speed	1,2,3,4 or 5 > 8 km/h 9V < battery voltage < 18V 450 rpm < eng. spd. < 6500 rpm	5 sec / cont	
Output Speed	P0720	performance	delta output speed	> 1300 rpm	gear selected battery voltage engine speed outp spd or last valid outp spd	1,2,3,4 or 5 9V < battery voltage < 18V 450 rpm < eng. spd. < 6500 rpm > 1300 rpm	5 sec / cont	
	P0722	rationality	output speed	< 100 rpm	engine torque throttle position input speed battery voltage engine speed	70 Nm < eng trq < 400 Nm > 12 % 1500 rpm < inp spd < 6000 rpm 9V < battery voltage < 18V 450 rpm < eng. spd. < 6500 rpm	3 sec / cont	

G00383749

Fig. 50: 6-Cylinder: GM5 AWD Transmission Diagnosis (2004 - 1 Of 3)
Courtesy of BMW OF NORTH AMERICA, INC.

6-Cylinder: GM5 AWD Transmission Diagnosis (2004 - 2 Of 3)

Component/ System	Fault Code	Monitor Strategy Description	Malfunction Criteria	Treshold Value	Secondary Parameter	Enable Conditions	Time Required	MIL Illum.
		rationality						
Gear Ratio	P0731 P0732 P0733 P0734 P0735		input - output speed / (gear ratio)	delta > 5 %	gear selected throttle position selector lever position vehicle speed transmission temperature engine torque transmission ratio battery voltage engine speed	1, 2, 3, 4, 5 > 10% no P / no N / no R > 5 km/h 20°C < trans temp < 130 °C 50Nm < eng trq < 400 Nm 0 < trans ratio < 4.2 9V < battery voltage < 18V 450 rpm < eng. spd. < 6500 rpm	2 sec / cont	two driving cycles
Torque Converter Clutch	P0741	functional check TCC stuck off	TCC_Slip_Target - TCC_Slip (maximum slip)	> 200 rpm	TCC mode gear selected throttle position transmission temperature engine torque battery voltage engine speed	lock on 2, 3, 4 or 5 12% < throt pos < 99 % 20°C < trans temp < 130 °C 55 Nm < eng trq < 400 Nm 9V < battery voltage < 18V 450 rpm < eng. spd. < 6500 rpm	15 sec / cont	two driving cycles
	P0742	functional check TCC stuck on	eng. speed - input speed (minimum slip)	-20 rpm < delta < 20 rpm	TCC mode gear selected throttle position engine speed engine torque vehicle speed battery voltage engine speed	lock off 5 12% < throt pos < 99 % 600 rpm < eng spd < 4500 80 Nm < eng trq < 400 Nm 15 km/h < vehicle speed < 255 km/h 9V < battery voltage < 18V 450 rpm < eng. spd. < 6500 rpm	7.5 sec/ cont	
Press. Contr. Valve	P2759	circuit continuity	voltage	duty cycle (pwm signal) <= 10% or duty cycle (pwm signal) >= 80%	battery voltage engine speed	9V < battery voltage < 18V 450 rpm < eng. spd. < 6500 rpm	700 msec / cont	
Shift Solenoid (A)	P0753	circuit continuity, power short	voltage	power short	Shift Solenoid A battery voltage engine speed	on 9V < battery voltage < 18V 450 rpm < eng. spd. < 6500 rpm	700 msec / cont	
(A)	P0973	circuit continuity, ground short	voltage	ground short	battery voltage engine speed	9V < battery voltage < 18V 450 rpm < eng. spd. < 6500 rpm	700 msec / cont	
Shift Solenoid (B)	P0758	circuit continuity, power short	voltage	power short	Shift Solenoid B battery voltage engine speed	on 9V < battery voltage < 18V 450 rpm < eng. spd. < 6500 rpm	700 msec / cont	
(B)	P0976	circuit continuity, ground short	voltage	ground short	battery voltage engine speed	9V < battery voltage < 18V 450 rpm < eng. spd. < 6500 rpm	700 msec / cont	

G00383750

Fig. 51: 6-Cylinder: GM5 AWD Transmission Diagnosis (2004 - 2 Of 3)
Courtesy of BMW OF NORTH AMERICA, INC.

6-Cylinder: GM5 AWD Transmission Diagnosis (2004 - 3 Of 3)

Component/ System	Fault Code	Monitor Strategy Description	Malfunction Criteria	Treshold Value	Secondary Parameter	Enable Conditions	Time Required	MIL Illum.
Shift Solenoid (C)	P0763	circuit continuity, power short	voltage	power short	Shift Solenoid C battery voltage engine speed	on 9V < battery voltage < 18V 450 rpm < eng. spd. < 6500 rpm	700 msec / cont	two driving cycles
(C)	P0979	circuit continuity, ground short	voltage	ground short	battery voltage engine speed	9V < battery voltage < 18V 450 rpm < eng. spd. < 6500 rpm	700 msec / cont	
Power Supply	P1692	rationality	battery voltage	< 9.5 V	engine speed	> 1500 rpm	5 sec / cont	two driving cycles
	P1691	rationality	battery voltage	> 18 V			10 sec / cont	
Transmission Control Module	P0727	rationality	CAN engine speed	invalid signal	battery voltage	9V < battery voltage < 18V	1 sec / cont	
	P1765	rationality	CAN throttle position	invalid signal	battery voltage engine speed	9V < battery voltage < 18V 450 rpm < eng. spd. < 6500 rpm	1 sec / cont	
	P1720	bus check	CAN message/time out	> 1 s	battery voltage	9V < battery voltage < 18V	1 sec / cont	
	P1719	bus check	CAN level	wrong value	battery voltage	9V < battery voltage < 18V	5 sec / cont	
	P1791	rationality	internal error (NVM / RAM)				once at startup	
	P1790	self check	RAM and ROM check	invalid checksum			once at startup	
	P1794	self check	ROM check	not programmed			once at startup	

G00383751

Fig. 52: 6-Cylinder: GM5 AWD Transmission Diagnosis (2004 - 3 Of 3)
Courtesy of BMW OF NORTH AMERICA, INC.

DIAGNOSTIC TROUBLE CODES 6-CYLINDER: SMG TRANSMISSION (2004)

DIAGNOSTIC TROUBLE CODES 6-CYLINDER: SMG TRANSMISSION (2004)

PCode	BMW Code	Possible Cause	Diagnostic Parameters
P0932	20215	Hydraulic Pressure Sensor Circuit	See 6-CYLINDER: SMG TRANSMISSION DIAGNOSIS (2004 - 1 OF 5).
P0934	20215	Hydraulic Pressure Sensor Circuit Low	See 6-CYLINDER: SMG TRANSMISSION

			DIAGNOSIS (2004 - 1 OF 5).
P0935	20215	Hydraulic Pressure Sensor Circuit High	See 6-CYLINDER: SMG TRANSMISSION DIAGNOSIS (2004 - 1 OF 5).
P1720	20800	CAN Timeout Control Module	See 6-CYLINDER: SMG TRANSMISSION DIAGNOSIS (2004 - 1 OF 5).
P1721	20801	CAN Timeout ASC/DSC	See 6-CYLINDER: SMG TRANSMISSION DIAGNOSIS (2004 - 1 OF 5).
P1747	52999	CAN-Bus Monitoring	See 6-CYLINDER: SMG TRANSMISSION DIAGNOSIS (2004 - 1 OF 5).
P1765	20904	CAN Throttle Valve	See 6-CYLINDER: SMG TRANSMISSION DIAGNOSIS (2004 - 1 OF 5).
P1766	20702	Double Error Engine Speed CAN/Direct Wiring	See 6-CYLINDER: SMG TRANSMISSION DIAGNOSIS (2004 - 1 OF 5).
P1767	20913	CAN Wheel Speeds Rear Axle	See 6-CYLINDER: SMG TRANSMISSION DIAGNOSIS (2004 - 3 OF 5).
P1771	20901	CAN Torque Interface Plausibility	See 6-CYLINDER: SMG TRANSMISSION DIAGNOSIS (2004 - 4 OF 5).
P1782	20910	CAN Brake Signal	See 6-CYLINDER: SMG TRANSMISSION DIAGNOSIS (2004 - 2 OF 5).
P1791	20401	Internal Transmission Control Module Memory Checksum/EEPROM Error	See 6-CYLINDER: SMG TRANSMISSION DIAGNOSIS (2004 - 4 OF 5).
P1796	20406	Internal Transmission Control Module Error 7 (High Side Driver)	See 6-CYLINDER: SMG TRANSMISSION DIAGNOSIS (2004 - 4 OF 5).
P1817	20606	Gear Selector Lever GSL0 Cable High Input	See 6-CYLINDER: SMG TRANSMISSION DIAGNOSIS (2004 - 4 OF 5).
P1818	20606	Gear Selector Lever GSL0 Cable Low Input	See 6-CYLINDER: SMG TRANSMISSION DIAGNOSIS (2004 - 4 OF 5).
P1819	20606	Gear Selector Lever GSL0 Cable Plausibility	See 6-CYLINDER: SMG TRANSMISSION DIAGNOSIS (2004 - 4 OF 5).
P1820	20607	Gear Selector Lever GSL1 Cable High Input	See 6-CYLINDER: SMG TRANSMISSION DIAGNOSIS (2004 - 4 OF 5).
P1821	20607	Gear Selector Lever GSL1 Cable Low Input	See 6-CYLINDER: SMG TRANSMISSION DIAGNOSIS (2004 - 4 OF 5).
P1822	20607	Gear Selector Lever GSL1 Cable Plausibility	See 6-CYLINDER: SMG TRANSMISSION DIAGNOSIS (2004 - 4 OF 5).
P1823	20611	Gear Selector Lever Digital Cable Plausibility	See 6-CYLINDER: SMG TRANSMISSION DIAGNOSIS (2004 - 3 OF 5).

P1850	20213	Shift Angle Sensor High Input	See 6-CYLINDER: SMG TRANSMISSION DIAGNOSIS (2004 - 2 OF 5).
P1851	20213	Shift Angle Sensor Low Input	See 6-CYLINDER: SMG TRANSMISSION DIAGNOSIS (2004 - 2 OF 5).
P1852	20213	Shift Angle Sensor Plausibility	See 6-CYLINDER: SMG TRANSMISSION DIAGNOSIS (2004 - 2 OF 5).
P1859	20217	Clutch Speed Sensor Plausibility	See 6-CYLINDER: SMG TRANSMISSION DIAGNOSIS (2004 - 5 OF 5).
P1860	20612	Gear Selector Lever Hall Sensor Error 1	See 6-CYLINDER: SMG TRANSMISSION DIAGNOSIS (2004 - 5 OF 5).
P1866	20608	Gear Selector Lever GSL2 Cable High Input	See 6-CYLINDER: SMG TRANSMISSION DIAGNOSIS (2004 - 4 OF 5).
P1867	20608	Gear Selector Lever GSL2 Cable Low Input	See 6-CYLINDER: SMG TRANSMISSION DIAGNOSIS (2004 - 4 OF 5).
P1868	20608	Gear Selector Lever GSL2 Cable Plausibility	See 6-CYLINDER: SMG TRANSMISSION DIAGNOSIS (2004 - 4 OF 5).
P1869	20609	Gear Selector Lever GSL3 Cable High Input	See 6-CYLINDER: SMG TRANSMISSION DIAGNOSIS (2004 - 4 OF 5).
P1870	20609	Gear Selector Lever GSL3 Cable Low Input	See 6-CYLINDER: SMG TRANSMISSION DIAGNOSIS (2004 - 4 OF 5).
P1876	20609	Gear Selector Lever GSL3 Cable Plausibility	See 6-CYLINDER: SMG TRANSMISSION DIAGNOSIS (2004 - 4 OF 5).
P1887	20335	Hydraulic Pump	See 6-CYLINDER: SMG TRANSMISSION DIAGNOSIS (2004 - 2 OF 5).

6-Cylinder: SMG Transmission Diagnosis (2004 - 1 Of 5)

Component/ System	Fault Code	Monitor Strategy Description	Malfunction Criteria	Threshold Value	Secondary Parameter	Enable Conditions	Time Required	MIL Illum
Transmission SMG								
Hydraulic Pressure Sensor	P0932	plausibility	interruption on sensor GND	delta pressure < +1,5 bar	pump activation = & GEARSHIFT & KEY = & NOT CRANKING = & Vsupply =	FINISHED NOT IN PROGRESS ON ON [6,5-10V, 17.01-17.5]	< 3s	2nd driving cycle
				delta pressure > -3 bar	& KEY = & NOT CRANKING = & Vsupply = & GEARSHIFT & ESTIMATED USED OIL	ON ON [6,5-10V, 17.01-17.5] IN PROGRESS >20 cm³	< 3s	
			sensor malfunction, out of dynamic range	| signal gradient | > 5V	KEY = & NOT CRANKING = & Vsupply =	ON ON [6,5-10V, 17.01-17.5]	< 500ms, continuous	
	P0934	lower threshold	interruption or s.c. to GND	signal < 0,4 V	KEY = & NOT CRANKING =	ON ON		
	P0935	upper threshold	s.c. to supply	signal > 4,7 V	& Vsupply =	[6,5-10V, 17.01-17.5]		
CAN Timeout DME	P1720	plausibility	signal is not available on CAN	timeout	KEY = & NOT CRANKING = & Vsupply =	ON ON [6,5-10V, 17.01-17.5]	< 105 ms, continuous	2nd driving cycle
CAN Timeout ASC/DSC	P1721	plausibility	signal is not available on CAN	timeout	KEY = & NOT CRANKING = & Vsupply =	ON ON [6,5-10V, 17.01-17.5]	< 210 ms, cont.	2nd driving cycle
CAN-Bus Monitoring	P1747	plausibility	CAN bus Off	timeout	KEY = & NOT CRANKING = & Vsupply = & Engine =	ON ON [6,5-10V, 17.01-17.5] ON acknowledged since timeout	< 1 s, cont.	2nd driving cycle
CAN Throttle Valve	P1765	plausibility	malfunction on throttle valve potentiometer	signal = FFfjex	KEY = & ECU = & Vsupply =	ON since timeout [6,5-10V, 17.01-17.5]	< 20 ms, cont.	2nd driving cycle
Engine Speed	P1766	plausibility	sensor disconnected or multiple fault	speed signal = 0	failure on CAN engine speed = & KEY = & NOT CRANKING = & Vsupply =	Validated ON ON [6,5-10V, 17.01-17.5]	< 1 s, cont.	2nd driving cycle

G00383752

Fig. 53: 6-Cylinder: SMG Transmission Diagnosis (2004 - 1 Of 5)
Courtesy of BMW OF NORTH AMERICA, INC.

6-Cylinder: SMG Transmission Diagnosis (2004 - 2 Of 5)

Component/ System	Fault Code	Monitor Strategy Description	Malfunction Criteria	Threshold Value	Secondary Parameter	Enable Conditions	Time Required	MIL Illum
Hydraulic Pump Failure	P1887	plausibility	damage on hydraulic pump	pump switched on for more than 30s	Pump = & error counter >=	Commended S	< 50 s, cont.	2nd driving cycle
Shift Position Sensor	P1850	upper threshold	open circuit or s.c. to Vsupply	signal > 4.5V	KEY = & CRANKING = & Vsupply =	ON NOT ON [6.5-10V, 17.01-17.5] Or, NOT ON [6.5-10V, 17.01-17.5] NOT IN PROGRESS	< 500 ms, cont.	2nd driving cycle
	P1851	lower threshold	short to GND	signal < 0.5 V				
	P1852	plausibility	out of dynamic range	signal gradient > 4.4 V	selection thresholds = & KEY = & CRANKING = & Vsupply = & GEARSHIFT =			
			Out of position range	signal outside selection thresholds				
CAN Brake Signal	P1782	plausibility	failure on brake switch system detected by engine control unit	CAN label F_BS = 1	KEY = & ECU = & Vsupply =	ON since a timeout [6.5-10V, 17.01-17.5]	< 20 ms, cont.	2nd driving cycle

G00383753

Fig. 54: 6-Cylinder: SMG Transmission Diagnosis (2004 - 2 Of 5)
Courtesy of BMW OF NORTH AMERICA, INC.

6-Cylinder: SMG Transmission Diagnosis (2004 - 3 Of 5)

Component/ System	Fault Code	Monitor Strategy Description	Malfunction Criteria	Threshold Value	Secondary Parameter	Enable Conditions	Time Required	MIL Illum
Gear Lever Digital Line	P1823	no signal	hall cell is not switching or wiring problem	signal = 1	CODE <> & KEY = & CRANKING = & Vsupply =	„R" ON NOT ON [6.5-10V, 17.01-17.5]	< 20 ms, cont.	2nd driving cycle
				signal ≠ 0	CODE = & KEY = & CRANKING = & Vsupply =	„R" ON NOT ON [6.5-10V, 17.01-17.5]		
CAN Speed Rear Wheels	P1767	plausibility	out of dynamic range	| signal gradient | > 1000 rpm	ENGINE = & KEY = & NOT CRANKING = & Vsupply = & GEAR = & CLUTCH =	ON ON ON [6.5-10V, 17.01-17.5] ENGAGED CLOSED	< 1 s, cont.	2nd driving cycle
			signal not available for timeout	speed signal = 0	ENGINE = & KEY = & NOT CRANKING = & Vsupply = & GEAR = & CLUTCH =	ON ON ON [6.5-10V, 17.01-17.5] ENGAGED CLOSED		
					ENGINE = & KEY = & NOT CRANKING = & Vsupply = & GEAR = & CLUTCH SPEED >	ON ON ON [6.5-10V, 17.01-17.5] ENGAGED 500 min^{-1}		

G00383754

Fig. 55: 6-Cylinder: SMG Transmission Diagnosis (2004 - 3 Of 5)
Courtesy of BMW OF NORTH AMERICA, INC.

6-Cylinder: SMG Transmission Diagnosis (2004 - 4 Of 5)

Component/ System	Fault Code	Monitor Strategy Description	Malfunction Criteria	Threshold Value	Secondary Parameter	Enable Conditions	Time Required	MIL Illum.
CAN Speed Rear Wheels			speed signal<>engine speed/gear ratio +e AND speed signal<>clutch speed/gear ratio +e	tolerance e = 500 min^{-1}, gear ratio = f(engaged gear), clutch speed	ENGINE = & KEY = & NOT CRANKING = & Vsupply = & GEAR = & CLUTCH =	ON ON ON [6.5-10V, 17.01-17.5] ENGAGED CLOSED	< 1 s, cont.	2nd driving cycle
			failure on speed signal detected by DSC control unit	one of the speed signals from CAN = 1FFFh	ENGINE = & KEY = & NOT CRANKING = & Vsupply = & GEAR = & CLUTCH =	ON ON ON [6.5-10V, 17.01-17.5] ENGAGED CLOSED		
CAN Generated Engine Torque	P1771	plausibility	engine ECU not working properly	signal = FFFlex	KEY = & ECU = & Vsupply =	ON ON since timeout [6.5-10V, 17.01-17.5]	< 20 ms, cont.	2nd driving cycle
EEPROM failure	P1791	plausibility	checksum failure		-	once at ECU power on	< 20 ms, 1per driving cycle	1st driving cycle
Power Latch Relays	P1796	plausibility	uninterrupted drivers relay opening (open circuit on pin (1/7), burned fuse	Logic relay commanded AND power latch voltage > 5V AND drivers relay commanded on	NOT CRANKING = & TCU internal RELAY	ON ON	<150ms, cont.	1st driving cycle
			drivers relay permanently closed	power latch voltage > 5V AND drivers relay commanded off				
			logic relay permanently closed	ECU not switched off AND logic relay commanded off		ECU switch off request	< 20 ms, 1per driving cycle	2nd driving cycle
Gear lever analog lines								
(0)	P1817	upper threshold	open circuit or s.c.to Vsupply or s.c.to +5V	signal > 4,2 V	KEY = & CRANKING = & V_supply =	ON NOT ON [6.5-10V, 17.01-17.5]	< 1 s, cont.	2nd driving cycle
	P1818	lower threshold	short to GND	signal < 0,8 V				
	P1819	plausibility	signal gradient to high	| signal gradient | > 4,40 V				
(1)	P1820	upper threshold	open circuit or s.c.to Vsupply or s.c.to +5V	signal > 4,2 V			< 1 s, cont.	
	P1821	lower threshold	short to GND	signal < 0,8 V				
	P1822	plausibility	signal gradient to high	| signal gradient | > 4,40 V				
(2)	P1866	upper threshold	open circuit or s.c.to Vsupply or s.c.to +5V	signal > 4,2 V			< 1 s, cont.	
	P1867	lower threshold	short to GND	signal < 0,8 V				
	P1868	plausibility	signal gradient to high	signal gradient > 4,4 V				
(3)	P1869	upper threshold	open circuit or s.c.to Vsupply or s.c.to +5V	signal > 4,2 V			< 1 s, cont.	
	P1870	lower threshold	short to GND	signal < 0,8 V				
	P1876	plausibility	signal gradient to high	signal gradient > 4,4 V				

G00383755

Fig. 56: 6-Cylinder: SMG Transmission Diagnosis (2004 - 4 Of 5)
Courtesy of BMW OF NORTH AMERICA, INC.

6-Cylinder: SMG Transmission Diagnosis (2004 - 5 Of 5)

Component/ System	Fault Code	Monitor Strategy Description	Malfunction Criteria	Threshold Value	Secondary Parameter	Enable Conditions	Time Required	MIL Illum.
Gear Lever Hallsensors	P1860	no signal	hall coil is not switching	code not valid for a timeout (Code is compared to valid gear position codes)	KEY = & CRANKING = & V_supply =	ON NOT ON [6.5-10V, 17.01-17.5]	< 20 ms, cont.	2nd driving cycle
Clutch Speed	P1869	plausibility	out of dynamic range	| signal gradient | > 9000 rpm	ENGINE = & KEY = & CRANKING = & Vsupply = & CLUTCH = & GEAR =	ON ON NOT ON [6.5-10V, 17.01-17.5] CLOSED ENGAGED	< 1s, cont.	2nd driving cycle
			signal not available for timeout	speed signal = 0	ENGINE = & KEY = & CRANKING = & Vsupply = & CLUTCH = & GEAR =	ON ON NOT ON [6.5-10V, 17.01-17.5] CLOSED ENGAGED		
					ENGINE = & KEY = & CRANKING = & Vsupply = & CLUTCH = & GEAR = & drive/ine speed >	ON ON NOT ON [6.5-10V, 17.01-17.5] NOT CLOSED ENGAGED 200 min^{-1}		
			speed signal <> engine speed+e AND speed signal<> drive/ine speed*gear ratio +e	tolerance e = 2000 min^{-1}	ENGINE = & KEY = & CRANKING = & Vsupply = & CLUTCH = & GEAR = & gear ratio = & drive/ine speed =	ON ON NOT ON [6.5-10V, 17.01-17.5] CLOSED ENGAGED f(engaged gear) /VAILABLE		

G00383756

Fig. 57: 6-Cylinder: SMG Transmission Diagnosis (2004 - 5 Of 5)
Courtesy of BMW OF NORTH AMERICA, INC.

DIAGNOSTIC TROUBLE CODES V8: TRANSMISSION (1/96-8/97)

DIAGNOSTIC TROUBLE CODES V8: TRANSMISSION (1/96-8/97)

PCode	BMW Code	Possible Cause	Diagnostic Parameters
P0705	8	Transmission Range Sensor "A" Circuit Malfunction (PRNDL Input)	See V8 TRANSMISSION DIAGNOSIS (1996-8/97).
P0715	16	Input/Turbine Speed Sensor "A" Circuit	See V8 TRANSMISSION DIAGNOSIS (1996-8/97).

P0720	42	Output Speed Sensor Circuit	SeeV8 TRANSMISSION DIAGNOSIS (1996-8/97).
P0730	102	Incorrect Gear Ratio	See V8 TRANSMISSION DIAGNOSIS (1996-8/97).
P0731	.....	Incorrect Gear Ratio	See V8 TRANSMISSION DIAGNOSIS (1996-8/97).
P0732	100	Gear 2 Incorrect Ratio	See V8 TRANSMISSION DIAGNOSIS (1996-8/97).
P0733	.....	Gear 2 Incorrect Ratio	See V8 TRANSMISSION DIAGNOSIS (1996-8/97).
P0734	.....	Gear 2 Incorrect Ratio	See V8 TRANSMISSION DIAGNOSIS (1996-8/97).
P0735	101	Gear 5 Incorrect Ratio	See V8 TRANSMISSION DIAGNOSIS (1996-8/97).
P0740	111	Torque Converter Clutch Circuit/Open	See V8 TRANSMISSION DIAGNOSIS (1996-8/97).
P0743	4	Torque Converter Clutch Circuit Electrical	See V8 TRANSMISSION DIAGNOSIS (1996-8/97).
P0748	5	Pressure Control Solenoid "A" Electrical	See V8 TRANSMISSION DIAGNOSIS (1996-8/97).
P0753	30	Shift Solenoid "A" Electrical	See V8 TRANSMISSION DIAGNOSIS (1996-8/97).
P0758	33	Shift Solenoid "B" Electrical	See V8 TRANSMISSION DIAGNOSIS (1996-8/97).
P0763	32	Shift Solenoid "C" Electrical	See V8 TRANSMISSION DIAGNOSIS (1996-8/97).
P1734	1	Pressure Control Solenoid "B" Electrical	See V8 TRANSMISSION DIAGNOSIS (1996-8/97).
P1738	29	Pressure Control Solenoid "C" Electrical	See V8 TRANSMISSION DIAGNOSIS (1996-8/97).
P1743	51	Pressure Control Solenoid "E" Electrical	See V8 TRANSMISSION DIAGNOSIS (1996-8/97).
P1746	104	Transmission Control Module Output Stage	See V8 TRANSMISSION DIAGNOSIS (1996-8/97).
P1747	150	CAN-Bus Monitoring	See V8 TRANSMISSION DIAGNOSIS (1996-8/97).
P1747	151	CAN-Bus Monitoring	See V8 TRANSMISSION DIAGNOSIS (1996-8/97).
P1747	156	CAN-Bus Monitoring	See V8 TRANSMISSION DIAGNOSIS (1996-8/97).
P1748	103	Transmission Control Module Self-Test	See V8 TRANSMISSION DIAGNOSIS (1996-8/97).
P1748	105	Transmission Control Module Self-Test	See V8 TRANSMISSION DIAGNOSIS (1996-8/97).
P1748	110	Transmission Control Module Self-Test	See V8 TRANSMISSION DIAGNOSIS (1996-8/97).
P1750	54	Secondary Pressure Solenoid Circuit Range/Performance System Voltage Input Low)	See V8 TRANSMISSION DIAGNOSIS (1996-8/97).

V8 Transmission Diagnosis (1996-8/97)

Component/ System	Fault Code	Monitor Strategy Description	Malfunction Criteria	Threshold value	Secondary Parameter	Enable Conditions	Time Required	MIL illum.
A/T Range Switch	P0705	circuit continuity rationality	voltage unvalid code for P and N	no signal/multiple signal	engine speed	200 < rpm < 440	200 msec/ once per engine start up	two driving cycles
Input Speed	P0715	rationality	input speed	no signal	gear selected engine speed output speed	1,2,3,4 or 5 > 600 rpm > 250 rpm	200 msec/ continuous	two driving cycles
Output Speed	P0720	rationality	output speed	no signal	gear selected engine speed	1,2,3,4 or 5 > 1700 rpm	200 msec/ continuous	two driving cycles
Gear Ratio	P0730/ P0735	rationality	input - output speed f (gear ratio)	> 350 rpm	gear selected input speed output speed	1,2,3,4 / 5 > 420 rpm > 250 rpm	200 msec/ continuous	two driving cycles
Torque Converter Clutch	P0743	circuit continuity	voltage				100 msec/ continuous	two driving cycles
	P0740	functional check	eng. speed - input speed (maximum slip)	> 100 rpm	gear selected	3, 4 or 5	2,5 sec/ once per lock	
Pressure Control Solenoid	P0748	circuit continuity	voltage				100 msec/ continuous	two driving cycles
Shift Solenoid A B C	P0753 P0758 P0763	circuit continuity	voltage				30 msec/ continuous	two driving cycles
Pres. Control Valve 2 3 4	P1734 P1738 P1743	circuit continuity	voltage				100 msec/ continuous	two driving cycles
Power Supply	P1750	rationality	battery voltage	< 9 V	engine speed	> 1600 rpm	300 msec/ continuous	two driving cycles
Transmission Control Modul (TCM)	P1747 P1748	bus check self check	CAN massages/time out RAM and ROM check watchdog	> 500 msec invalid check-sum on delay time	at power up		immediately/cont. 90 sec 120 msec/cont. 100 msec/once after system start	two driving cycles
Relay	P1746	functional check	timing (response)					

G00383757

Fig. 58: V8 Transmission Diagnosis (1996-8/97)
Courtesy of BMW OF NORTH AMERICA, INC.

DIAGNOSTIC TROUBLE CODES V8 TRANSMISSION (9/97-8/00)

DIAGNOSTIC TROUBLE CODES V8 TRANSMISSION (9/97-8/00)

PCode	BMW Code	Possible Cause	Diagnostic Parameters
P0705	8	Transmission Range Sensor "A" Circuit Malfunction (PRNDL Input)	See V8 TRANSMISSION DIAGNOSIS (9/97-8/00).
P0715	16	Input/Turbine Speed Sensor "A" Circuit	See V8 TRANSMISSION DIAGNOSIS (9/97-8/00).

P0720	42	Output Speed Sensor Circuit	See V8 TRANSMISSION DIAGNOSIS (9/97-8/00).
P0732	100	Gear 2 Incorrect Ratio	See V8 TRANSMISSION DIAGNOSIS (9/97-8/00).
P0735	101	Gear 5 Incorrect Ratio	See V8 TRANSMISSION DIAGNOSIS (9/97-8/00).
P0740	111	Torque Converter Clutch Circuit/Open	See V8 TRANSMISSION DIAGNOSIS (9/97-8/00).
P0743	4	Torque Converter Clutch Circuit Electrical	See V8 TRANSMISSION DIAGNOSIS (9/97-8/00).
P0748	5	Pressure Control Solenoid "A" Electrical	See V8 TRANSMISSION DIAGNOSIS (9/97-8/00).
P0753	30	Shift Solenoid "A" Electrical	See V8 TRANSMISSION DIAGNOSIS (9/97-8/00).
P0758	33	Shift Solenoid "B" Electrical	See V8 TRANSMISSION DIAGNOSIS (9/97-8/00).
P0763	32	Shift Solenoid "C" Electrical	See V8 TRANSMISSION DIAGNOSIS (9/97-8/00).
P1734	1	Pressure Control Solenoid "B" Electrical	See V8 TRANSMISSION DIAGNOSIS (9/97-8/00).
P1738	29	Pressure Control Solenoid "C" Electrical	See V8 TRANSMISSION DIAGNOSIS (9/97-8/00).
P1743	51	Pressure Control Solenoid "E" Electrical	See V8 TRANSMISSION DIAGNOSIS (9/97-8/00).
P1746	104	Transmission Control Module Output Stage	See V8 TRANSMISSION DIAGNOSIS (9/97-8/00).
P1747	150	CAN-Bus Monitoring	See V8 TRANSMISSION DIAGNOSIS (9/97-8/00).
P1747	151	CAN-Bus Monitoring	See V8 TRANSMISSION DIAGNOSIS (9/97-8/00).
P1747	156	CAN-Bus Monitoring	See V8 TRANSMISSION DIAGNOSIS (9/97-8/00).
P1748	103	Transmission Control Module Self-Test	See V8 TRANSMISSION DIAGNOSIS (9/97-8/00).
P1748	105	Transmission Control Module Self-Test	See V8 TRANSMISSION DIAGNOSIS (9/97-8/00).
P1748	110	Transmission Control Module Self-Test	See V8 TRANSMISSION DIAGNOSIS (9/97-8/00).
P1750	54	Secondary Pressure Solenoid Circuit Range/Performance	See V8 TRANSMISSION DIAGNOSIS (9/97-8/00).
P1761	2	Shiftlock Solenoid	See V8 TRANSMISSION DIAGNOSIS (9/97-8/00).
P1765	.....	TCM Rationality	See V8 TRANSMISSION DIAGNOSIS (9/97-8/00).

V8 Transmission Diagnosis (9/97-8/00)

Component/ System	Fault Code	Monitor Strategy Description	Malfunction Criteria	Threshold value	Secondary Parameter	Enable Conditions	Time Required	MIL Illum.
A/T Range Switch	P0705	circuit continuity rationality	voltage unvalid code for P and N	no signal/multiple signal	engine speed	200 < rpm < 440	200 msec/ once per engine start up	
Input Speed	P0715	rationality	input speed	no signal	gear selected engine speed output speed	1,2,3,4 or 5 > 600 rpm > 200 rpm	200 msec/ continuous	
Output Speed	P0720	rationality	output Speed	no signal	wheel speed	> 400 rpm	250 msec/cont.	
			input speed	> 1700 rpm	gear selected output speed	1,2,3,4 or 5 < 160 rpm	200 msec/cont.	
Gear Ratio	P0732 to P0735	rationality	input - output speed f (gear ratio)	> 400 rpm	gear selected input speed output speed	2,3,4,5 > 400 rpm > 250 rpm	10 msec/ continuous	
Torque Converter Clutch	P0740	functional check	eng. speed - input speed (maximum slip)	> 80 rpm	gear selected	3, 4 or 5	70 msec/ once per lock	two driving cycles
Press. Contr. Valve	P0743	circuit continuity	voltage				2,5 sec/	
Press. Cont. Solenoid	P0748	circuit continuity	voltage				70 msec/cont.	
Pressure Control Valves (2) (3) (4)	P1734 P1738 P1743	circuit continuity	voltage				50 msec/cont. 50 msec/cont. 70 msec/cont.	
Shift Solenoid (A) (B) (C)	P0753 P0758 P0763	circuit continuity	voltage				50 msec/cont. 50 msec/cont. 70 msec/cont.	
Power Supply	P1750	rationality	battery voltage	< 9 V	engine speed	> 1400 rpm	300 msec/cont.	two driving cycles
Transmission Control Module	P1746	functional check	voltage				30 msec/once after system start	
	P1747	bus check	CAN messages/time out	> 700 msec	battery voltage	> 10V	immediately/cont.	
	P1748	self check	RAM and ROM check	invalid check-sum on	at power up		90 sec	
		rationality	engine speed	> 6300 rpm	gear selected	1, 2, 3, 4, 5	200 msec/cont.	
			check sum				100 msec/cont.	
	P1761	circuit continuity	voltage				70 msec/cont.	
	P1765	rationality	CAN (throttle position)	signal range/performance			400 msec/cont.	

G00383759

Fig. 59: V8 Transmission Diagnosis (9/97-8/00)
Courtesy of BMW OF NORTH AMERICA, INC.

DIAGNOSTIC TROUBLE CODES V8 TRANSMISSION (9/00-8/01)

DIAGNOSTIC TROUBLE CODES V8 TRANSMISSION (9/00-8/01)

PCode	BMW Code	Possible Cause	Diagnostic Parameters
P0560	96	System Voltage	See V8 TRANSMISSION DIAGNOSIS (9/00-8/01).
P0600	129	Serial Communication Link	See V8 TRANSMISSION DIAGNOSIS (9/00-8/01).
P0600	144	Serial Communication Link	See V8 TRANSMISSION

			DIAGNOSIS (9/00-8/01).
P0603	81	Internal Control Module Keep Alive Memory (KAM) Error	See V8 TRANSMISSION DIAGNOSIS (9/00-8/01).
P0606	82	ECM/PCM Processor	See V8 TRANSMISSION DIAGNOSIS (9/00-8/01).
P0705	60	Transmission Range Sensor "A" Circuit Malfunction (PRNDL Input)	See V8 TRANSMISSION DIAGNOSIS (9/00-8/01).
P0715	33	Input/Turbine Speed Sensor "A" Circuit	See V8 TRANSMISSION DIAGNOSIS (9/00-8/01).
P0720	32	Output Speed Sensor Circuit	See V8 TRANSMISSION DIAGNOSIS (9/00-8/01).
P0720	59	Output Speed Sensor Circuit	See V8 TRANSMISSION DIAGNOSIS (9/00-8/01).
P0731	50	Gear 1 Incorrect Ratio	See V8 TRANSMISSION DIAGNOSIS (9/00-8/01).
P0731	51	Gear 1 Incorrect Ratio	See V8 TRANSMISSION DIAGNOSIS (9/00-8/01).
P0732	52	Gear 2 Incorrect Ratio	See V8 TRANSMISSION DIAGNOSIS (9/00-8/01).
P0733	53	Gear 3 Incorrect Ratio	See V8 TRANSMISSION DIAGNOSIS (9/00-8/01).
P0733	57	Gear 3 Incorrect Ratio	See V8 TRANSMISSION DIAGNOSIS (9/00-8/01).
P0734	54	Gear 4 Incorrect Ratio	See V8 TRANSMISSION DIAGNOSIS (9/00-8/01).
P0734	58	Gear 4 Incorrect Ratio	See V8 TRANSMISSION DIAGNOSIS (9/00-8/01).
P0735	55	Gear 5 Incorrect Ratio	See V8 TRANSMISSION DIAGNOSIS (9/00-8/01).
P0741	48	Torque Converter Clutch Circuit Performance or Stuck Off	See V8 TRANSMISSION DIAGNOSIS (9/00-8/01).
P0743	4	Torque Converter Clutch Circuit Electrical	See V8 TRANSMISSION DIAGNOSIS (9/00-8/01).
P0748	1	Pressure Control Solenoid "A" Electrical	See V8 TRANSMISSION DIAGNOSIS (9/00-8/01).
P0753	16	Shift Solenoid "A" Electrical	See V8 TRANSMISSION DIAGNOSIS (9/00-8/01).
P0758	17	Shift Solenoid "B" Electrical	See V8 TRANSMISSION DIAGNOSIS (9/00-8/01).
P0763	18	Shift Solenoid "C" Electrical	See V8 TRANSMISSION DIAGNOSIS (9/00-8/01).
P0778	2	Pressure Control Solenoid "B" Electrical	See V8 TRANSMISSION DIAGNOSIS (9/00-8/01).
P0798	3	Pressure Control Solenoid "C" Electrical	See V8 TRANSMISSION DIAGNOSIS (9/00-8/01).
P1743	5	Pressure Control Solenoid "E" Electrical (M44/M52: Brake Band Electrical)	See V8 TRANSMISSION DIAGNOSIS (9/00-8/01).
P1746	83	Transmission Control Module Output Stage	See V8 TRANSMISSION DIAGNOSIS (9/00-8/01).
P1747	128	CAN-Bus Monitoring	See V8 TRANSMISSION DIAGNOSIS (9/00-8/01).

P1748	15	Transmission Control Module Self-Test	See V8 TRANSMISSION DIAGNOSIS (9/00-8/01).
P1765	147	CAN Throttle Valve	See V8 TRANSMISSION DIAGNOSIS (9/00-8/01).

V8 Transmission Diagnosis (9/00-8/01)

Component/ System	Fault Code	Monitor Strategy Description	Malfunction Criteria	Threshold value	Secondary Parameter	Enable Conditions	Time Required	MIL Illum.
A/T Range Switch	P0705	circuit continuity rationality	voltage unvalid code for P and N	no signal/multiple signal	engine speed	200 < rpm < 440	200 msec/ once per engine start up	two driving cycles
Input Speed	P0715	rationality	input speed	no signal	gear selected engine speed output speed	1,2,3,4 or 5 > 600 rpm > 200 rpm	200 msec/ continuous	
Output Speed	P0720	rationality	output speed	no signal	wheel speed	> 400 rpm	250 msec/cont.	
			input speed	> 1700 rpm	gear selected output speed	1,2,3,4 or 5 < 160 rpm	200 msec/cont.	
Gear Ratio 1 / 2 Gear Ratio 3 / 4 Gear Ratio 5	P0731/0732 P0733/0734 P0735	rationality	input - output speed f (gear ratio)	> 400 rpm	gear selected input speed output speed	2,3,4,5 > 400 rpm > 250 rpm	10 msec/ continuous	
Torque Converter Clutch	P0741	functional check	eng. speed - input speed (maximum slip)	> 80 rpm	gear selected	3, 4 or 5	70 msec/ once per lock	
Press. Contr. Valve	P0743	circuit continuity	voltage				2,5 sec/	
Press. Cont. Solenoid	P0748	circuit continuity	voltage				70 msec/cont.	
Pressure Control (2) Valves (3) (4)	P0778 P0798 P1743	circuit continuity	voltage				50 msec/cont. 50 msec/cont. 70 msec/cont.	
Shift Solenoid (A) (B) (C)	P0753 P0758 P0763	circuit continuity	voltage				50 msec/cont. 50 msec/cont. 70 msec/cont.	
Power Supply	P0560	rationality	battery voltage	< 9 V	engine speed	> 1400 rpm	300 msec/cont.	
Transmission Control Modul	P1746	functional check	voltage				30 msec/once after system start	two driving cycles
			CAN-bus check					
	P1747	rationality	CAN messages/time out	> 700 msec	battery voltage	> 10V	immediately/cont.	
	P0600							
	P0603/0606	self check	RAM and ROM check	invalid check-sum on	at power up		90 sec	
	P1748	rationality	engine speed	> 6300 rpm	gear selected	1, 2, 3, 4, 5	200 msec/cont.	
			watchdog				100 msec/cont.	
	P1765	rationality	(CAN messages)	signal range/ performance			400 msec/cont.	

G00383760

Fig. 60: V8 Transmission Diagnosis (9/00-8/01)
Courtesy of BMW OF NORTH AMERICA, INC.

DIAGNOSTIC TROUBLE CODES V8 TRANSMISSION (9/01-8/02)

PCode	BMW Code	Possible Cause	Diagnostic Parameters
P0709	60	Transmission Range Sensor "A" Circuit Intermittent	See V8 TRANSMISSION DIAGNOSIS (9/01-8/02 - 1 OF 5).
P0715	33	Input/Turbine Speed Sensor "A" Circuit	See V8 TRANSMISSION DIAGNOSIS (9/01-8/02 - 1 OF 5).
P0716	33	Input/Turbine Speed Sensor "A" Circuit Range/Performance	See V8 TRANSMISSION DIAGNOSIS (9/01-8/02 - 1 OF 5).
P0720	32	Output Speed Sensor Circuit	See V8 TRANSMISSION DIAGNOSIS (9/01-8/02 - 1 OF 5).
P0721	59	Output Speed Sensor Circuit Range/Performance	See V8 TRANSMISSION DIAGNOSIS (9/01-8/02 - 1 OF 5).
P0731	50	Gear 1 Incorrect Ratio	See V8 TRANSMISSION DIAGNOSIS (9/01-8/02 - 1 OF 5).
P0732	52	Gear 2 Incorrect Ratio	See V8 TRANSMISSION DIAGNOSIS (9/01-8/02 - 1 OF 5).
P0733	53	Gear 3 Incorrect Ratio	See V8 TRANSMISSION DIAGNOSIS (9/01-8/02 - 1 OF 5).
P0734	54	Gear 4 Incorrect Ratio	See V8 TRANSMISSION DIAGNOSIS (9/01-8/02 - 1 OF 5).
P0735	55	Gear 5 Incorrect Ratio	See V8 TRANSMISSION DIAGNOSIS (9/01-8/02 - 1 OF 5).
P0740	4	Torque Converter Clutch Circuit/Open	See V8 TRANSMISSION DIAGNOSIS (9/01-8/02 - 2 OF 5).
P0741	48	Torque Converter Clutch Circuit Performance or Stuck Off	See V8 TRANSMISSION DIAGNOSIS (9/01-8/02 - 2 OF 5).
P0745	1	Pressure Control Solenoid "A"	See V8 TRANSMISSION DIAGNOSIS (9/01-8/02 - 2 OF 5).
P0750	16	Shift Solenoid "A"	See V8 TRANSMISSION DIAGNOSIS (9/01-8/02 - 3 OF 5).
P0751	16	Shift Solenoid "A" Performance or Stuck Off	See V8 TRANSMISSION DIAGNOSIS (9/01-8/02 - 3 OF 5).
P0752	16	Shift Solenoid "A" Stuck On	See V8 TRANSMISSION DIAGNOSIS (9/01-8/02 - 3 OF 5).
P0753	16	Shift Solenoid "A" Electrical	See V8 TRANSMISSION DIAGNOSIS (9/01-8/02 - 3 OF 5).
P0755	17	Shift Solenoid "B"	See V8 TRANSMISSION DIAGNOSIS (9/01-8/02 - 3 OF

			5).
P0756	17	Shift Solenoid "B" Performance or Stuck Off	See V8 TRANSMISSION DIAGNOSIS (9/01-8/02 - 3 OF 5).
P0757	17	Shift Solenoid "B" Stuck On	See V8 TRANSMISSION DIAGNOSIS (9/01-8/02 - 3 OF 5).
P0758	17	Shift Solenoid "B" Electrical	See V8 TRANSMISSION DIAGNOSIS (9/01-8/02 - 3 OF 5).
P0760	18	Shift Solenoid "C"	See V8 TRANSMISSION DIAGNOSIS (9/01-8/02 - 3 OF 5).
P0761	18	Shift Solenoid "C" Performance or Stuck Off	See V8 TRANSMISSION DIAGNOSIS (9/01-8/02 - 3 OF 5).
P0762	18	Shift Solenoid "C" Stuck On	See V8 TRANSMISSION DIAGNOSIS (9/01-8/02 - 3 OF 5).
P0763	18	Shift Solenoid "C" Electrical	See V8 TRANSMISSION DIAGNOSIS (9/01-8/02 - 3 OF 5).
P0775	2	Pressure Control Solenoid "B"	See V8 TRANSMISSION DIAGNOSIS (9/01-8/02 - 2 OF 5).
P0782	57	2-3 Shift	See V8 TRANSMISSION DIAGNOSIS (9/01-8/02 - 4 OF 5).
P0783	58	3-4 Shift	See V8 TRANSMISSION DIAGNOSIS (9/01-8/02 - 4 OF 5).
P0795	3	Pressure Control Solenoid "C"	See V8 TRANSMISSION DIAGNOSIS (9/01-8/02 - 2 OF 5).
P1719	144	CAN Version Error	See V8 TRANSMISSION DIAGNOSIS (9/01-8/02 - 5 OF 5).
P1720	129	CAN Timeout Control Module	See V8 TRANSMISSION DIAGNOSIS (9/01-8/02 - 5 OF 5).
P1731	51	Gear 1 manual Incorrect Ratio	See V8 TRANSMISSION DIAGNOSIS (9/01-8/02 - 1 OF 5).
P1745	5	Pressure Control Solenoid "E"	See V8 TRANSMISSION DIAGNOSIS (9/01-8/02 - 3 OF 5).
P1747	128	CAN-Bus Monitoring	See V8 TRANSMISSION DIAGNOSIS (9/01-8/02 - 5 OF 5).
P1748	15	Transmission Control Module Self-Test	See V8 TRANSMISSION DIAGNOSIS (9/01-8/02 - 3 OF 5).
P1761	19	Shiftlock Solenoid	See V8 TRANSMISSION DIAGNOSIS (9/01-8/02 - 4 OF 5).

P1762	19	Shiftlock Solenoid High Input	See V8 TRANSMISSION DIAGNOSIS (9/01-8/02 - 4 OF 5).
P1763	19	Shiftlock Solenoid Low Input	See V8 TRANSMISSION DIAGNOSIS (9/01-8/02 - 4 OF 5).
P1764	19	Shiftlock Solenoid Open Circuit	See V8 TRANSMISSION DIAGNOSIS (9/01-8/02 - 4 OF 5).
P1765	147	CAN Throttle Valve	See V8 TRANSMISSION DIAGNOSIS (9/01-8/02 - 5 OF 5).
P1791	81	Internal Transmission Control Module Memory Checksum/EEPROM Error	See V8 TRANSMISSION DIAGNOSIS (9/01-8/02 - 5 OF 5).
P1792	82	Internal Transmission Control Module Watchdog Error	See V8 TRANSMISSION DIAGNOSIS (9/01-8/02 - 5 OF 5).
P1794	80	Internal Transmission Control Module Memory Checksum Error	See V8 TRANSMISSION DIAGNOSIS (9/01-8/02 - 5 OF 5).
P1831	1	Pressure Control Solenoid "A" Circuit High	See V8 TRANSMISSION DIAGNOSIS (9/01-8/02 - 2 OF 5).
P1832	2	Pressure Control Solenoid "B" Circuit High	See V8 TRANSMISSION DIAGNOSIS (9/01-8/02 - 2 OF 5).
P1833	3	Pressure Control Solenoid "C" Circuit High	See V8 TRANSMISSION DIAGNOSIS (9/01-8/02 - 2 OF 5).
P1834	4	Pressure Control Solenoid "D" Circuit High	See V8 TRANSMISSION DIAGNOSIS (9/01-8/02 - 2 OF 5).
P1835	5	Pressure Control Solenoid "E" Circuit High	See V8 TRANSMISSION DIAGNOSIS (9/01-8/02 - 3 OF 5).
P1841	1	Pressure Control Solenoid "A" Circuit Low	See V8 TRANSMISSION DIAGNOSIS (9/01-8/02 - 2 OF 5).
P1842	2	Pressure Control Solenoid "B" Circuit Low	See V8 TRANSMISSION DIAGNOSIS (9/01-8/02 - 2 OF 5).
P1843	3	Pressure Control Solenoid "C" Circuit Low	See V8 TRANSMISSION DIAGNOSIS (9/01-8/02 - 2 OF 5).
P1844	4	Pressure Control Solenoid "D" Circuit Low	See V8 TRANSMISSION DIAGNOSIS (9/01-8/02 - 2 OF 5).
P1845	5	Pressure Control Solenoid "E" Circuit Low	See V8 TRANSMISSION DIAGNOSIS (9/01-8/02 - 3 OF 5).
P1882	57	2-3 Shift Circuit High	See V8 TRANSMISSION DIAGNOSIS (9/01-8/02 - 4 OF 5).

P1883	58	3-4 Shift Circuit High	See V8 TRANSMISSION DIAGNOSIS (9/01-8/02 - 4 OF 5).
P1889	96	System Voltage - Electrical	See V8 TRANSMISSION DIAGNOSIS (9/01-8/02 - 4 OF 5).
P1892	96	System Voltage Low Input	See V8 TRANSMISSION DIAGNOSIS (9/01-8/02 - 4 OF 5).
P1893	83	Supply Voltage Pressure Control Solenoid/Shift Solenoid Circuit High	See V8 TRANSMISSION DIAGNOSIS (9/01-8/02 - 5 OF 5).
P1894	83	Supply Voltage Pressure Control Solenoid/Shift Solenoid Circuit Low	See V8 TRANSMISSION DIAGNOSIS (9/01-8/02 - 5 OF 5).
P1895	83	Supply Voltage Pressure Control Solenoid/Shift Solenoid No Signal	See V8 TRANSMISSION DIAGNOSIS (9/01-8/02 - 5 OF 5).

V8 Transmission Diagnosis (9/01-8/02 - 1 Of 5)

Component/ System	Fault Code	Monitor Strategy Description	Malfunction Criteria	Threshold value	Secondary Parameter	Enable Conditions	Time Required	MIL Illum.
A/T GS8602								
Range Switch	P0709	rationality	unvalid code	wrong signal			0.2 sec / cont	
Input Speed	P0715	rationality	input speed	0	engine speed output speed battery voltage gear selected	> 608 rev/min > 224 rev/min > 5V 1,2,3,4,5	0.5 sec / cont	
	P0716	rationality	input speed	> 6800 rev/min			500 msec / cont	
Output Speed	P0720	rationality	output speed or outp. spd - wheel spd * rear axle ratio	> 8160 rev/min or delta > 1500 rev/min	wheel speed	> 400 rev/min	240 msec / cont	
	P0721	rationality rationality	output speed wheel speed * rear axle ratio	< 160 rpm < 160 rpm	pos lever output speed gear shifts	D, 4, 3, 2 > 1696 rpm not allowed	400 msec / cont	two driving cycles
Gear Ratio	P0731 P0732 P0733 P0734 P0735	rationality	input - output speed f (gear ratio)	delta > 5 %	pos lever output speed battery voltage transmission fluid temperature	no P / no N / no R > 256 rpm > 9V > 2 °C	200 msec / cont	
	P1731	rationality	input - output speed f (gear ratio)	delta > 5 %	pos lever manual mode output speed battery voltage transmission fluid temperature	no P / no N / no R 1st gear > 256 rpm > 9V > 2 °C	200 msec / cont	

G00383761

Fig. 61: V8 Transmission Diagnosis (9/01-8/02 - 1 Of 5)
Courtesy of BMW OF NORTH AMERICA, INC.

V8 Transmission Diagnosis (9/01-8/02 - 2 Of 5)

Component/ System	Fault Code	Monitor Strategy Description	Malfunction Criteria	Threshold value	Secondary Parameter	Enable Conditions	Time Required	MIL Illum.
Torque Converter Clutch	P0741	functional check	eng. speed - input speed (maximum slip)	> 80 rpm	gear selected engine speed input torque to TC (calculated) TCC activation pressure (calculated)	2, 3, 4 or 5 > input speed <= 140 Nm >= 5.24 bar	2.5 sec / cont	
Press. Contr. Valve 1	P0745	rationality	meass. curr. - calc. curr.	> 150mA (if meas curr < 200mA) > 1000mA (if meas curr > 200mA)	abs(battery voltage - pcv 1 voltage)	<= 1.5 V	70 msec / cont	
1	P1831	circuit continuity, power short	voltage	12 V	pcv 1 voltage	> 7V		
1	P1841	circuit continuity, ground short	voltage	0 V				
2	P0775	rationality	meass. curr. - calc. curr.	> 150mA (if meas curr < 200mA) > 1000mA (if meas curr > 200mA)	abs(battery voltage - pcv 2 voltage)	<= 1.5 V	50 msec / cont	
2	P1832	circuit continuity, power short	voltage	12 V	pcv 2 voltage	> 7V		
2	P1842	circuit continuity, ground short	voltage	0 V				
3	P0795	rationality	meass. curr. - calc. curr.	> 150mA (if meas curr < 200mA) > 1000mA (if meas curr > 200mA)	abs(battery voltage - pcv 3 voltage)	<= 1.5 V	50 msec / cont	two driving cycles
3	P1833	circuit continuity, power short	voltage	12 V	pcv 3 voltage	> 7V		
3	P1843	circuit continuity, ground short	voltage	0 V				
4	P0740	rationality	meass. curr. - calc. curr.	> 150mA (if meas curr < 200mA) > 1000mA (if meas curr > 200mA)	abs(battery voltage - pcv 1 voltage)	<= 1.5 V	70 msec / cont	
4	P1834	circuit continuity, power short	voltage	12 V	pcv 1 voltage	> 7V		
4	P1844	circuit continuity, ground short	voltage	0 V				

G00383762

Fig. 62: V8 Transmission Diagnosis (9/01-8/02 - 2 Of 5)
Courtesy of BMW OF NORTH AMERICA, INC.

V8 Transmission Diagnosis (9/01-8/02 - 3 Of 5)

Component/ System	Fault Code	Monitor Strategy Description	Malfunction Criteria	Threshold value	Secondary Parameter	Enable Conditions	Time Required	MIL Illum.
Press. Contr. Valve 5	P1745	rationality	meass. curr. - calc. curr.	> 150mA (if meas curr < 200mA) > 1000mA (if meas curr > 200mA)	abs(battery voltage - press contr valve 1 voltage)	<= 1.5 V > 7V	70 msec / cont	
5	P1835	circuit continuity, power short	voltage	12 V	press contr valve 1 voltage			
5	P1845	circuit continuity, ground short	voltage	0 V				
Press. Contr. Valve sum current	P1748	abs(sum current of PCV - sum of each PCVI)	current	> 0.15 A	gearshift	not allowed	200 msec / cont	
Shift Solenoid (A)	P0750	rationality	voltage	1V < ss voltage < 1.44V, if ss is under current 0.85V < ss voltage < 1.44V, if ss is not under current	MV input voltage	7V < MV inp. volt. < 16V	800 msec / cont	two driving cycles
(A)	P0753	circuit continuity, power short	voltage	1.44V < ss voltage < 5V, if ss is under current			800 msec / cont	
(A)	P0752	circuit continuity, ground short	voltage	0V < ss voltage < 0.35V, if ss is not under current			800 msec / cont	
(A)	P0751	circuit continuity, disconnection	voltage	0.35V < ss voltage < 0.85V, if ss is not under current			800 msec / cont	
(B)	P0755	rationality	voltage	1V < ss voltage < 1.44V, if ss is under current 0.85V < ss voltage < 1.44V, if ss is not under current	MV input voltage	7V < MV inp. volt. < 16V	800 msec / cont	
(B)	P0758	circuit continuity, power short	voltage	1.44V < ss voltage < 5V, if ss is under current			800 msec / cont	
(B)	P0757	circuit continuity, ground short	voltage	0V < ss voltage < 0.35V, if ss is not under current			800 msec / cont	
(B)	P0756	circuit continuity, disconnection	voltage	0.35V < ss voltage < 0.85V, if ss is not under current			800 msec / cont	
(C)	P0760	rationality	voltage	1V < ss voltage < 1.44V, if ss is under current 0.85V < ss voltage < 1.44V, if ss is not under current	MV input voltage	7V < MV inp. volt. < 16V	800 msec / cont	
(C)	P0763	circuit continuity, power short	voltage	1.44V < ss voltage < 5V, if ss is under current			800 msec / cont	
(C)	P0762	circuit continuity, ground short	voltage	0V < ss voltage < 0.35V, if ss is not under current			800 msec / cont	
(C)	P0761	circuit continuity, disconnection	voltage	0.35V < ss voltage < 0.85V, if ss is not under current			800 msec / cont	

G00383763

Fig. 63: V8 Transmission Diagnosis (9/01-8/02 - 3 Of 5)
Courtesy of BMW OF NORTH AMERICA, INC.

V8 Transmission Diagnosis (9/01-8/02 - 4 Of 5)

Component/ System	Fault Code	Monitor Strategy Description	Malfunction Criteria	Threshold value	Secondary Parameter	Enable Conditions	Time Required	MIL Illum.
(Shift Lock)	P1761	rationality	voltage	1V < ss voltage < 1.44V, if ss is under current 0.85V < ss voltage < 1.44V, if ss is not under current	MV input voltage	7V < MV inp. volt. < 16V	500 msec / cont	
(Shift Lock)	P1762	circuit continuity, power short	voltage	1.44V < ss voltage < 5V, if ss is under current			500 msec / cont	
(Shift Lock)	P1763	circuit continuity, ground short	voltage	0V < ss voltage < 0.35V, if ss is not under current			500 msec / cont	
(Shift Lock)	P1764	circuit continuity, disconnection	voltage	0.35V < ss voltage < 0.85V, if ss is not under current			500 msec / cont	
2/3 Shift	P0732	rationality, no change	input output	inp spd old gear - 40 rpm > inp spd new gear	pos lever output speed transmission oil temperature	no P / no N / no R > 500 rpm > 30°C	90 msec / cont	
	P1682	rationality, value too big	input speed	inp spd old gear + 600 rpm < inp spd new gear	pos lever output speed transmission oil temperature	no P / no N / no R > 500 rpm > 30 °C	90 msec / cont	
3/4 Shift	P0733	rationality, no change	input output	inp spd old gear - 40 rpm > inp spd new gear	pos lever output speed transmission oil temperature	no P / no N / no R > 500 rpm > 30 °C	90 msec / cont	two driving cycles
	P1683	rationality, value too big	input speed	inp spd old gear + 600 rpm < inp spd new gear	pos lever output speed transmission oil temperature	no P / no N / no R > 500 rpm > 30 °C	90 msec / cont	
System Voltage, electrical	P1689	rationality	battery voltage	bat.Volt. < 5V	engine speed	> 1408 rpm	2.5 sec / cont	
System Voltage, low input	P1692	rationality	battery voltage	9V < bat. Volt. < 16V	engine speed	>1408 rpm	0.3 sec / cont	

G00383764

Fig. 64: V8 Transmission Diagnosis (9/01-8/02 - 4 Of 5)
Courtesy of BMW OF NORTH AMERICA, INC.

V8 Transmission Diagnosis (9/01-8/02 - 5 Of 5)

Component/ System	Fault Code	Monitor Strategy Description	Malfunction Criteria	Threshold value	Secondary Parameter	Enable Conditions	Time Required	MIL Illum.
Transmission Control Modul	P1719	bus check	CAN level	wrong value			0.3 sec / cont	
	P1720	bus check	Can message/ time out DME	> 100 ms	ignition battery voltage	on > 9V	0.6 sec / cont	
	P1747	bus check	CAN bus fault	Invalid signals	ignition	on	0.15 sec / cont	
	P1765	rationality	CAN throttle position	invalid signal			0.4 sec / cont	two driving cycles
	P1794	self check	EPROM checksum	invalid checksum			cont	
	P1791	self check	EEPROM	invalid checksum			once at startup	
	P1792	rationality microcontroller	watchdog	invalid checksum			once at startup	
Supply Voltage Pressure Control Solenoid / Shift Solenoid	P1893	circuit continuity, power short	voltage	ss and pcv voltage > battery voltage - 1.0V	ss and pcv voltage	>= battery voltage -2V	once at startup	
	P1894	circuit continuity, ground short	voltage	ss and pcv voltage < 2.5V ss and pcv voltage < 30% * battery voltage	ss and pcv voltage ss and pcv voltage	>= battery voltage -2V on	once at startup 0.03 sec / cont.	
	P1895	circuit continuity, disconnection	voltage	ss and pcv voltage >= 2.5V	ss and pcv voltage	>= 0V	once at startup	

G00383765

Fig. 65: V8 Transmission Diagnosis (9/01-8/02 - 5 Of 5)
Courtesy of BMW OF NORTH AMERICA, INC.

DIAGNOSTIC TROUBLE CODES V8 TRANSMISSION (5-SPEED - 9/02-2003)

DIAGNOSTIC TROUBLE CODES V8 TRANSMISSION (5-SPEED - 9/02-2003)

PCode	BMW Code	Possible Cause	Diagnostic Parameters
P0709	60	Transmission Range Sensor "A" Circuit Intermittent	See V8 TRANSMISSION 5-SPEED DIAGNOSIS (9/02-2003 - 1 OF 5).
P0715	33	Input/Turbine Speed Sensor "A" Circuit	See V8 TRANSMISSION 5-SPEED DIAGNOSIS (9/02-2003

			- 1 OF 5).
P0716	33	Input/Turbine Speed Sensor "A" Circuit Range/Performance	See V8 TRANSMISSION 5-SPEED DIAGNOSIS (9/02-2003 - 1 OF 5).
P0720	32	Output Speed Sensor Circuit	See V8 TRANSMISSION 5-SPEED DIAGNOSIS (9/02-2003 - 1 OF 5).
P0721	59	Output Speed Sensor Circuit Range/Performance	See V8 TRANSMISSION 5-SPEED DIAGNOSIS (9/02-2003 - 1 OF 5).
P0731	50	Gear 1 Incorrect Ratio	See V8 TRANSMISSION 5-SPEED DIAGNOSIS (9/02-2003 - 1 OF 5).
P0732	52	Gear 2 Incorrect Ratio	See V8 TRANSMISSION 5-SPEED DIAGNOSIS (9/02-2003 - 1 OF 5).
P0733	53	Gear 3 Incorrect Ratio	See V8 TRANSMISSION 5-SPEED DIAGNOSIS (9/02-2003 - 1 OF 5).
P0734	54	Gear 4 Incorrect Ratio	See V8 TRANSMISSION 5-SPEED DIAGNOSIS (9/02-2003 - 1 OF 5).
P0735	55	Gear 5 Incorrect Ratio	See V8 TRANSMISSION 5-SPEED DIAGNOSIS (9/02-2003 - 1 OF 5).
P0741	48	Torque Converter Clutch Circuit Performance or Stuck Off	See V8 TRANSMISSION 5-SPEED DIAGNOSIS (9/02-2003 - 2 OF 5).
P0745	1	Pressure Control Solenoid "A"	See V8 TRANSMISSION 5-SPEED DIAGNOSIS (9/02-2003 - 2 OF 5).
P0750	16	Shift Solenoid "A"	See V8 TRANSMISSION 5-SPEED DIAGNOSIS (9/02-2003 - 3 OF 5).
P0751	16	Shift Solenoid "A" Performance or Stuck Off	See V8 TRANSMISSION 5-SPEED DIAGNOSIS (9/02-2003 - 3 OF 5).
P0752	16	Shift Solenoid "A" Stuck On	See V8 TRANSMISSION 5-SPEED DIAGNOSIS (9/02-2003 - 3 OF 5).
P0753	16	Shift Solenoid "A" Electrical	See V8 TRANSMISSION 5-SPEED DIAGNOSIS (9/02-2003 - 3 OF 5).
P0755	17	Shift Solenoid "B"	See V8 TRANSMISSION 5-SPEED DIAGNOSIS (9/02-2003 - 3 OF 5).
P0756	17	Shift Solenoid "B" Performance or Stuck Off	See V8 TRANSMISSION 5-SPEED DIAGNOSIS (9/02-2003 - 3 OF 5).
P0757	17	Shift Solenoid "B" Stuck On	See V8 TRANSMISSION 5-SPEED DIAGNOSIS (9/02-2003 - 3 OF 5).
P0758	17	Shift Solenoid "B" Electrical	See V8 TRANSMISSION 5-SPEED DIAGNOSIS (9/02-2003 - 3 OF 5).

P0760	18	Shift Solenoid "C"	See V8 TRANSMISSION 5-SPEED DIAGNOSIS (9/02-2003 - 3 OF 5).
P0761	18	Shift Solenoid "C" Performance or Stuck Off	See V8 TRANSMISSION 5-SPEED DIAGNOSIS (9/02-2003 - 3 OF 5).
P0762	18	Shift Solenoid "C" Stuck On	See V8 TRANSMISSION 5-SPEED DIAGNOSIS (9/02-2003 - 3 OF 5).
P0763	18	Shift Solenoid "C" Electrical	See V8 TRANSMISSION 5-SPEED DIAGNOSIS (9/02-2003 - 3 OF 5).
P0775	2	Pressure Control Solenoid "B"	See V8 TRANSMISSION 5-SPEED DIAGNOSIS (9/02-2003 - 2 OF 5).
P0782	57	2-3 Shift	See V8 TRANSMISSION 5-SPEED DIAGNOSIS (9/02-2003 - 4 OF 5).
P0783	58	3-4 Shift	See V8 TRANSMISSION 5-SPEED DIAGNOSIS (9/02-2003 - 4 OF 5).
P0795	3	Pressure Control Solenoid "C"	See V8 TRANSMISSION 5-SPEED DIAGNOSIS (9/02-2003 - 2 OF 5).
P0962	1	Pressure Control Solenoid "A" Control Circuit Low	See V8 TRANSMISSION 5-SPEED DIAGNOSIS (9/02-2003 - 2 OF 5).
P0963	1	Pressure Control Solenoid "A" Control Circuit High	See V8 TRANSMISSION 5-SPEED DIAGNOSIS (9/02-2003 - 2 OF 5).
P0966	2	Pressure Control Solenoid "B" Control Circuit Low	See V8 TRANSMISSION 5-SPEED DIAGNOSIS (9/02-2003 - 2 OF 5).
P0967	2	Pressure Control Solenoid "B" Control Circuit High	See V8 TRANSMISSION 5-SPEED DIAGNOSIS (9/02-2003 - 2 OF 5).
P0970	3	Pressure Control Solenoid "C" Control Circuit Low	See V8 TRANSMISSION 5-SPEED DIAGNOSIS (9/02-2003 - 2 OF 5).
P0971	3	Pressure Control Solenoid "C" Control Circuit High	See V8 TRANSMISSION 5-SPEED DIAGNOSIS (9/02-2003 - 2 OF 5).
P1719	144	CAN Version Error	See V8 TRANSMISSION 5-SPEED DIAGNOSIS (9/02-2003 - 5 OF 5).
P1720	129	CAN Timeout Control Module	See V8 TRANSMISSION 5-SPEED DIAGNOSIS (9/02-2003 - 5 OF 5).
P1731	51	Gear 1 manual Incorrect Ratio	See V8 TRANSMISSION 5-SPEED DIAGNOSIS (9/02-2003 - 1 OF 5).
P1747	128	CAN-Bus Monitoring	See V8 TRANSMISSION 5-SPEED DIAGNOSIS (9/02-2003 - 5 OF 5).

P1748	15	Transmission Control Module Self-Test	See V8 TRANSMISSION 5-SPEED DIAGNOSIS (9/02-2003 - 3 OF 5).
P1761	19	Shiftlock Solenoid	See V8 TRANSMISSION 5-SPEED DIAGNOSIS (9/02-2003 - 4 OF 5).
P1762	19	Shiftlock Solenoid High Input	See V8 TRANSMISSION 5-SPEED DIAGNOSIS (9/02-2003 - 4 OF 5).
P1763	19	Shiftlock Solenoid Low Input	See V8 TRANSMISSION 5-SPEED DIAGNOSIS (9/02-2003 - 4 OF 5).
P1764	19	Shiftlock Solenoid Open Circuit	See V8 TRANSMISSION 5-SPEED DIAGNOSIS (9/02-2003 - 4 OF 5).
P1765	147	CAN Throttle Valve	See V8 TRANSMISSION 5-SPEED DIAGNOSIS (9/02-2003 - 5 OF 5).
P1791	81	Internal Transmission Control Module Memory Checksum/EEPROM Error	See V8 TRANSMISSION 5-SPEED DIAGNOSIS (9/02-2003 - 5 OF 5).
P1792	82	Internal Transmission Control Module Watchdog Error	See V8 TRANSMISSION 5-SPEED DIAGNOSIS (9/02-2003 - 5 OF 5).
P1794	80	Internal Transmission Control Module Memory Checksum Error	See V8 TRANSMISSION 5-SPEED DIAGNOSIS (9/02-2003 - 5 OF 5).
P1882	57	2-3 Shift Circuit High	See V8 TRANSMISSION 5-SPEED DIAGNOSIS (9/02-2003 - 4 OF 5).
P1883	58	3-4 Shift Circuit High	See V8 TRANSMISSION 5-SPEED DIAGNOSIS (9/02-2003 - 4 OF 5).
P1889	96	System Voltage - Electrical	See V8 TRANSMISSION 5-SPEED DIAGNOSIS (9/02-2003 - 4 OF 5).
P1892	96	System Voltage Low Input	See V8 TRANSMISSION 5-SPEED DIAGNOSIS (9/02-2003 - 4 OF 5).
P1893	83	Supply Voltage Pressure Control Solenoid/Shift Solenoid Circuit High	See V8 TRANSMISSION 5-SPEED DIAGNOSIS (9/02-2003 - 5 OF 5).
P1894	83	Supply Voltage Pressure Control Solenoid/Shift Solenoid Circuit Low	See V8 TRANSMISSION 5-SPEED DIAGNOSIS (9/02-2003 - 5 OF 5).
P1895	83	Supply Voltage Pressure Control Solenoid/Shift Solenoid No Signal	See V8 TRANSMISSION 5-SPEED DIAGNOSIS (9/02-2003 - 5 OF 5).
P2722	5	Pressure Control Solenoid "E"	See V8 TRANSMISSION 5-SPEED DIAGNOSIS (9/02-2003 - 3 OF 5).
P2729	5	Pressure Control Solenoid "E" Control Circuit Low	See V8 TRANSMISSION 5-SPEED DIAGNOSIS (9/02-2003 - 3 OF 5).
P2730	5	Pressure Control Solenoid "E"	See V8 TRANSMISSION 5-

		Control Circuit High	SPEED DIAGNOSIS (9/02-2003 - 3 OF 5).
P2761	4	Torque Converter Clutch Pressure Control Solenoid Control Circuit/Open	See V8 TRANSMISSION 5-SPEED DIAGNOSIS (9/02-2003 - 2 OF 5).
P2763	4	Torque Converter Clutch Pressure Control Solenoid Control Circuit High	See V8 TRANSMISSION 5-SPEED DIAGNOSIS (9/02-2003 - 2 OF 5).
P2764	4	Torque Converter Clutch Pressure Control Solenoid Control Circuit Low	See V8 TRANSMISSION 5-SPEED DIAGNOSIS (9/02-2003 - 2 OF 5).

V8 Transmission 5-Speed Diagnosis (9/02-2003 - 1 Of 5)

Component/ System	Fault Code	Monitor Strategy Description	Malfunction Criteria	Threshold value	Secondary Parameter	Enable Conditions	Time Required	MIL Illum.
A/T 5HP24								
Range Switch	P0709	rationality	unvalid code	wrong signal			200 msec / cont	
Input Speed	P0715	rationality	input speed	0	engine speed output speed battery voltage gear selected	> 608 rev/min > 224 rev/min > 5V 1,2,3,4,5	500 msec / cont	
	P0716	rationality	input speed	> 6800 rev/min			500 msec / cont	
Output Speed	P0720	rationality	output speed or outp. spd - wheel spd * rear axle ratio	> 8160 rev/min or delta > 1500 rev/min	wheel speed [Front wheel speed - back wheel speed]	> 400 rev/min < 8000 rev/min	240 msec / cont	
	P0721	rationality rationality	output speed wheel speed * rear axle ratio	< 160 rpm < 160 rpm	pcs lever output speed gear shifts	D, 4, 3, 2 > 1696 rpm not allowed	400 msec / cont	two driving cycles
Gear Ratio	P0731 P0732 P0733 P0734 P0735	rationality	input - output speed ∫ (gear ratio)	delta > 5 %	pcs lever output speed battery voltage transmission fluid temperature	no P / no N / no R > 256 rpm > 9V > 2 °C	200 msec / cont	
	P1731	rationality	input - output speed ∫ (gear ratio)	delta > 5 %	pcs lever manual mode output speed battery voltage transmission fluid temperature	no P / no N / no R 1st gear > 256 rpm > 9V > 2 °C	200 msec / cont	

G00383766

Fig. 66: V8 Transmission 5-Speed Diagnosis (9/02-2003 - 1 Of 5)
Courtesy of BMW OF NORTH AMERICA, INC.

V8 Transmission 5-Speed Diagnosis (9/02-2003 - 2 Of 5)

Component/ System	Fault Code	Monitor Strategy Description	Malfunction Criteria	Threshold value	Secondary Parameter	Enable Conditions	Time Required	MIL Illum.
Torque Converter Clutch	P0741	functional check	eng. speed - input speed (maximum slip)	> 80 rpm	gear selected engine speed input torque to TC (calculated) TCC activation pressure (calculated)	2, 3, 4 or 5 > input speed <= 140 Nm >= 5.24 bar	2.5 sec / cont	
Press. Contr. Valve 1	P0745	rationality	meas. curr. - calc. curr.	> 150mA (if meas curr < 200mA) > 1000mA (if meas curr > 200mA)	abs(battery voltage - pcv 1 voltage)	<= 1.5 V	70 msec / cont	
1	P0963	circuit continuity, power short	voltage	12 V	pcv 1 voltage	> 7V		
1	P0962	circuit continuity, ground short	voltage	0 V				
2	P0775	rationality	meas. curr. - calc. curr.	> 150mA (if meas curr < 200mA) > 1000mA (if meas curr > 200mA)	abs(battery voltage - pcv 2 voltage)	<= 1.5 V	50 msec / cont	two driving cycles
2	P0967	circuit continuity, power short	voltage	12 V	pcv 2 voltage	> 7V		
2	P0966	circuit continuity, ground short	voltage	0 V				
3	P0795	rationality	meas. curr. - calc. curr.	> 150mA (if meas curr < 200mA) > 1000mA (if meas curr > 200mA)	abs(battery voltage - pcv 3 voltage)	<= 1.5 V	50 msec / cont	
3	P0971	circuit continuity, power short	voltage	12 V	pcv 3 voltage	> 7V		
3	P0970	circuit continuity, ground short	voltage	0 V				
4	P2761	rationality	meas. curr. - calc. curr.	> 150mA (if meas curr < 200mA) > 1000mA (if meas curr > 200mA)	abs(battery voltage - pcv 1 voltage)	<= 1.5 V	70 msec / cont	
4	P2763	circuit continuity, power short	voltage	12 V	pcv 1 voltage	> 7V		
4	P2764	circuit continuity, ground short	voltage	0 V				

G00383767

Fig. 67: V8 Transmission 5-Speed Diagnosis (9/02-2003 - 2 Of 5)
Courtesy of BMW OF NORTH AMERICA, INC.

V8 Transmission 5-Speed Diagnosis (9/02-2003 - 3 Of 5)

Component/ System	Fault Code	Monitor Strategy Description	Malfunction Criteria	Threshold value	Secondary Parameter	Enable Conditions	Time Required	MIL Illum.
Press. Contr. Valve 5	P2722	rationality	meass. curr. - calc. curr.	> 150mA (if meas curr < 200mA) > 1000mA (if meas curr > 200mA)	abs(battery voltage - press contr valve 1 voltage)	<= 1.5 V	70 msec / cont	
5	P2730	circuit continuity, power short	voltage	12 V	press contr valve 1 voltage	> 7V		
5	P2729	circuit continuity, ground short	voltage	0 V				
Press. Contr. Valve sum current	P1748	abs(sum current of PCV - sum of each PCV))	current	> 0.15 A	gearshift	not allowed	200 msec / cont	
Shift Solenoid (A)	P0750	rationality	voltage	1V < ss voltage < 1.44V, if ss is under current 0.85V < ss voltage < 1.44V, if ss is not under current	MV input voltage	7V < MV inp. volt. < 16V	800 msec / cont	
(A)	P0753	circuit continuity, power short	voltage	1.44V < ss voltage < 5V, if ss is under current			800 msec / cont	
(A)	P0752	circuit continuity, ground short	voltage	0V < ss voltage < 0.35V, if ss is not under current			800 msec / cont	two driving cycles
(A)	P0751	circuit continuity, disconnection	voltage	0.35V < ss voltage < 0.85V, if ss is not under current			800 msec / cont	
(B)	P0755	rationality	voltage	1V < ss voltage < 1.44V, if ss is under current 0.85V < ss voltage < 1.44V, if ss is not under current	MV input voltage	7V < MV inp. volt. < 16V	800 msec / cont	
(B)	P0758	circuit continuity, power short	voltage	1.44V < ss voltage < 5V, if ss is under current			800 msec / cont	
(B)	P0757	circuit continuity, ground short	voltage	0V < ss voltage < 0.35V, if ss is not under current			800 msec / cont	
(B)	P0756	circuit continuity, disconnection	voltage	0.35V < ss voltage < 0.85V, if ss is not under current			800 msec / cont	
(C)	P0760	rationality	voltage	1V < ss voltage < 1.44V, if ss is under current 0.85V < ss voltage < 1.44V, if ss is not under current	MV input voltage	7V < MV inp. volt. < 16V	800 msec / cont	
(C)	P0763	circuit continuity, power short	voltage	1.44V < ss voltage < 5V, if ss is under current			800 msec / cont	
(C)	P0762	circuit continuity, ground short	voltage	0V < ss voltage < 0.35V, if ss is not under current			800 msec / cont	
(C)	P0761	circuit continuity, disconnection	voltage	0.35V < ss voltage < 0.85V, if ss is not under current			800 msec / cont	

G00383768

Fig. 68: V8 Transmission 5-Speed Diagnosis (9/02-2003 - 3 Of 5)
Courtesy of BMW OF NORTH AMERICA, INC.

V8 Transmission 5-Speed Diagnosis (9/02-2003 - 4 Of 5)

Component/ System	Fault Code	Monitor Strategy Description	Malfunction Criteria	Threshold value	Secondary Parameter	Enable Conditions	Time Required	MIL Illum.
(Shift Lock)	P1761	rationality	voltage	1V < ss voltage < 1.44V, if ss is under current 0.85V < ss voltage < 1.44V, if ss is not under current	MV input voltage	7V < MV inp. volt. < 16V	500 msec / cont	
(Shift Lock)	P1762	circuit continuity, power short	voltage	1.44V < ss voltage < 5V, if ss is under current			500 msec / cont	
(Shift Lock)	P1763	circuit continuity, ground short	voltage	0V < ss voltage < 0.35V, if ss is not under current			500 msec / cont	
(Shift Lock)	P1764	circuit continuity, disconnection	voltage	0.35V < ss voltage < 0.85V, if ss is not under current			500 msec / cont	
2/3 Shift	P0762	rationality, no change	input output	inp spd old gear - 40 rpm > inp spd new gear	pos lever output speed transmission oil temperature	no P / no N / no R > 500 rpm > 30°C	90 msec / cont	
	P1882	rationality, value too big	input speed	inp spd old gear + 600 rpm < inp spd new gear	pos lever output speed transmission oil temperature	no P / no N / no R > 500 rpm > 30 °C	90 msec / cont	
3/4 Shift	P0763	rationality, no change	input output	inp spd old gear - 40 rpm > inp spd new gear	pos lever output speed transmission oil temperature	no P / no N / no R > 500 rpm > 30 °C	90 msec / cont	two driving cycles
	P1883	rationality, value too big	input speed	inp spd old gear + 600 rpm < inp spd new gear	pos lever output speed transmission oil temperature	no P / no N / no R > 500 rpm > 30 °C	90 msec / cont	
System Voltage, electrical	P1889	rationality	battery voltage	bat. Volt. < 9V	engine speed	> 1408 rpm	2.5 sec / cont	
System Voltage, low input	P1892	rationality	battery voltage	bat. Volt. < 9V or 16V < bat. Volt.	engine speed	>1408 rpm	0.3 sec / cont	

G00383769

Fig. 69: V8 Transmission 5-Speed Diagnosis (9/02-2003 - 4 Of 5)
Courtesy of BMW OF NORTH AMERICA, INC.

V8 Transmission 5-Speed Diagnosis (9/02-2003 - 5 Of 5)

Component/ System	Fault Code	Monitor Strategy Description	Malfunction Criteria	Threshold value	Secondary Parameter	Enable Conditions	Time Required	MIL Illum.
Transmission Control Modul	P1719	bus check	CAN level	wrong value			0,3 sec / cont	
	P1720	bus check	Can message/ time out DME	> 100 ms	ignition battery voltage	on > 9V	0,6 sec / cont	
	P1747	bus check	CAN bus fault	invalid signals	ignition	on	0,15 sec / cont	
	P1765	rationality	CAN throttle position	invalid signal			0,4 sec / cont	two driving cycles
	P1784	self check	EPROM checksum	invalid checksum			cont	
	P1791	self check	EEPROM	invalid checksum			once at startup	
	P1792	rationality microcontroller	watchdog	invalid checksum			once at startup	
Supply Voltage Pressure Control Solenoid / Shift Solenoid	P1893	circuit continuity, power short	voltage	ss and pcv voltage > battery voltage - 1,0V	ss and pcv voltage	>= battery voltage -2V	once at startup	
	P1894	circuit continuity, ground short	voltage	ss and pcv voltage < 2,5V ss and pcv voltage < 30% * battery voltage	ss and pcv voltage ss and pcv voltage	>= battery voltage -2V on	once at startup 0,03 sec / cont.	
	P1895	circuit continuity, disconnection	voltage	ss and pcv voltage >= 2,5V	ss and pcv voltage	>= 0V	once at startup	

G00383770

Fig. 70: V8 Transmission 5-Speed Diagnosis (9/02-2003 - 5 Of 5)
Courtesy of BMW OF NORTH AMERICA, INC.

DIAGNOSTIC TROUBLE CODES V8: TRANSMISSION (SMG - 2004)

DIAGNOSTIC TROUBLE CODES V8: TRANSMISSION (SMG - 2004)

PCode	BMW Code	Possible Cause	Diagnostic Parameters
P1765	20904	CAN Throttle Valve	See V8 SMG TRANSMISSION DIAGNOSIS (2004 - 1 OF 4).
P1766	20702	Double Error Engine Speed CAN/Direct Wiring	See V8 SMG TRANSMISSION

			DIAGNOSIS (2004 - 1 OF 4).
P1767	20913	CAN Wheel Speeds Rear Axle	See V8 SMG TRANSMISSION DIAGNOSIS (2004 - 1 OF 4).
P1771	20901	CAN Torque Interface Plausibility	See V8 SMG TRANSMISSION DIAGNOSIS (2004 - 2 OF 4).
P1782	20910	CAN Brake Signal	See V8 SMG TRANSMISSION DIAGNOSIS (2004 - 4 OF 4).
P1791	20401	Internal Transmission Control Module Memory Checksum/EEPROM Error	See V8 SMG TRANSMISSION DIAGNOSIS (2004 - 2 OF 4).
P1796	20406	Internal Transmission Control Module Error 7 (High Side Driver)	See V8 SMG TRANSMISSION DIAGNOSIS (2004 - 2 OF 4).
P1817	20606	Gear Selector Lever GSL0 Cable High Input	See V8 SMG TRANSMISSION DIAGNOSIS (2004 - 3 OF 4).
P1818	20606	Gear Selector Lever GSL0 Cable Low Input	See V8 SMG TRANSMISSION DIAGNOSIS (2004 - 3 OF 4).
P1819	20606	Gear Selector Lever GSL0 Cable Plausibility	See V8 SMG TRANSMISSION DIAGNOSIS (2004 - 3 OF 4).
P1820	20607	Gear Selector Lever GSL1 Cable High Input	See V8 SMG TRANSMISSION DIAGNOSIS (2004 - 3 OF 4).
P1821	20607	Gear Selector Lever GSL1 Cable Low Input	See V8 SMG TRANSMISSION DIAGNOSIS (2004 - 3 OF 4).
P1822	20607	Gear Selector Lever GSL1 Cable Plausibility	See V8 SMG TRANSMISSION DIAGNOSIS (2004 - 3 OF 4).
P1823	20611	Gear Selector Lever Digital Cable Plausibility	See V8 SMG TRANSMISSION DIAGNOSIS (2004 - 1 OF 4).
P1850	20213	Shift Angle Sensor High Input	See V8 SMG TRANSMISSION DIAGNOSIS (2004 - 4 OF 4).
P1851	20213	Shift Angle Sensor Low Input	See V8 SMG TRANSMISSION DIAGNOSIS (2004 - 4 OF 4).
P1852	20213	Shift Angle Sensor Plausibility	See V8 SMG TRANSMISSION DIAGNOSIS (2004 - 4 OF 4).
P1859	20217	Clutch Speed Sensor Plausibility	See V8 SMG TRANSMISSION DIAGNOSIS (2004 - 3 OF 4).
P1860	20612	Gear Selector Lever Hall Sensor Error 1	See V8 SMG TRANSMISSION DIAGNOSIS (2004 - 3 OF 4).
P1866	20608	Gear Selector Lever GSL2 Cable High Input	See V8 SMG TRANSMISSION DIAGNOSIS (2004 - 3 OF 4).

P1867	20608	Gear Selector Lever GSL2 Cable Low Input	See V8 SMG TRANSMISSION DIAGNOSIS (2004 - 3 OF 4).
P1868	20608	Gear Selector Lever GSL2 Cable Plausibility	See V8 SMG TRANSMISSION DIAGNOSIS (2004 - 3 OF 4).
P1869	20609	Gear Selector Lever GSL3 Cable High Input	See V8 SMG TRANSMISSION DIAGNOSIS (2004 - 3 OF 4).
P1870	20609	Gear Selector Lever GSL3 Cable Low Input	See V8 SMG TRANSMISSION DIAGNOSIS (2004 - 3 OF 4).
P1876	20609	Gear Selector Lever GSL3 Cable Plausibility	See V8 SMG TRANSMISSION DIAGNOSIS (2004 - 3 OF 4).
P1887	20335	Hydraulic Pump	See V8 SMG TRANSMISSION DIAGNOSIS (2004 - 4 OF 4).

V8 SMG Transmission Diagnosis (2004 - 1 Of 4)

Component/ System	Fault Code	Monitor Strategy Description	Malfunction Criteria	Threshold value	Secondary Parameter	Enable Conditions	Time Required	MIL Illum.
SMG								
CAN Throttle Valve	P1765	plausibility	malfunction on throttle valve potentiometer	signal = FFhex	KEY = & ECU = & Vsupply =	ON CN since timeout [6.5-10V, 17.01-17.5]	< 20 ms, cont.	2nd driving cycle
Engine Speed	P1766	plausibility	sensor disconnected or multiple fault	speed signal = 0	failure on CAN engine speed = & KEY = & NOT CRANKING = & Vsupply =	Validated ON ON [6.5-10V, 17.01-17.5]	< 1 s, cont.	2nd driving cycle
Gear Lever Digital Line	P1823	no signal	hall cell is not switching or wiring problem	signal = 1	CODE <> & KEY = & CRANKING = & Vsupply =	R* ON NOT ON [6.5-10V, 17.01-17.5]	< 20 ms, cont.	2nd driving cycle
				signal = 0	CODE = & KEY = & CRANKING = & Vsupply =	R* ON NOT ON [6.5-10V, 17.01-17.5]		
CAN Speed Rear Wheels	P1767	plausibility	out of dynamic range	| signal gradient | > 1000 rpm	ENGINE = & KEY = & NOT CRANKING = & Vsupply = & GEAR = & CLUTCH =	ON ON ON [6.5-10V, 17.01-17.5] ENGAGED CLOSED	< 1 s, cont.	2nd driving cycle
			signal not available for timeout	speed signal = 0	ENGINE = & KEY = & NOT CRANKING = & Vsupply = & GEAR = & CLUTCH =	ON ON ON [6.5-10V, 17.01-17.5] ENGAGED CLOSED		
					ENGINE = & KEY = & NOT CRANKING = & Vsupply = & GEAR = & CLUTCH SPEED >	ON ON ON [6.5-10V, 17.01-17.5] ENGAGED 500 min^{-1}		

G00383777

Fig. 71: V8 SMG Transmission Diagnosis (2004 - 1 Of 4)
Courtesy of BMW OF NORTH AMERICA, INC.

V8 SMG Transmission Diagnosis (2004 - 2 Of 4)

Component/ System	Fault Code	Monitor Strategy Description	Malfunction Criteria	Threshold Value	Secondary Parameter	Enable Conditions	Time Required	MIL Illum.
SMG			speed signal<>engine speed/gear ratio +e AND speed signal<>clutch speed/gear ratio +e	tolerance e = 500 min^{-1}, gear ratio = f(engaged gear), clutch speed	ENGINE = & KEY = & NOT CRANKING = & Vsupply = & GEAR = & CLUTCH =	ON ON ON [[6.5-10V, 17.01-17.5] ENGAGED CLOSED	< 1 s, cont.	2nd driving cycle
			failure on speed signal detected by DSC control unit	one of the speed signals from CAN = 1FFFh	ENGINE = & KEY = & NOT CRANKING = & Vsupply = & GEAR = & CLUTCH =	ON ON ON [6.5-10V, 17.01-17.5] ENGAGED CLOSED		
CAN Generated Engine Torque	P1771	plausibility	engine ECU not working properly	signal = FFhex	KEY = & ECU = & Vsupply =	ON ON since timeout [6.5-10V, 17.01-17.5]	< 20 ms, cont.	2nd driving cycle
EEPROM failure	P1791	plausibility	checksum failure	-	-	once at ECU power on	< 20 ms, 1per driving cycle	1st driving cycle
Power Latch Relays	P1796	plausibility	unintended drivers relay opening (open circuit on pin (1,7), burned fuse	Logic relay commanded AND power latch voltage > 5V AND drivers relay commanded on	NOT CRANKING = & TCU internal RELAY =	ON ON	<150ms, cont.	1st driving cycle
			drivers relay permanently closed	power latch voltage > 5V AND drivers relay commanded off	-	ECU switch off request	< 20 ms, 1 per driving cycle	2nd driving cycle
			logic relay permanently closed	ECU not switched off AND logic relay commanded off	-			

G00383778

Fig. 72: V8 SMG Transmission Diagnosis (2004 - 2 Of 4)
Courtesy of BMW OF NORTH AMERICA, INC.

V8 SMG Transmission Diagnosis (2004 - 3 Of 4)

Component/ System	Fault Code	Monitor Strategy Description	Malfunction Criteria	Threshold value	Secondary Parameter	Enable Conditions	Time Required	MIL Illum.
SMG								
Gear lever analog lines								
(0)	P1817	upper threshold	open circuit or s.c.to Vsupply or s.c.to +5V	signal > 4.2 V	KEY = & CRANKING = & V_supply =	ON NOT ON [6.5-10V, 17.01-17.5]	< 1 s, cont.	2nd driving cycle
	P1818	lower threshold	short to GND	signal < 0.8 V				
	P1819	plausibility	signal gradient to high	| signal gradient | > 4.40 V				
(1)	P1820	upper threshold	open circuit or s.c.to Vsupply or s.c.to +5V	signal > 4.2 V			< 1 s, cont.	
	P1821	lower threshold	short to GND	signal < 0.8 V				
	P1822	plausibility	signal gradient to high	| signal gradient | > 4.40 V				
(2)	P1866	upper threshold	open circuit or s.c.to Vsupply or s.c.to +5V	signal > 4.2 V			< 1 s, cont.	
	P1867	lower threshold	short to GND	signal < 0.8 V				
	P1868	plausibility	signal gradient to high	signal gradient > 4.4 V				
(3)	P1869	upper threshold	open circuit or s.c.to Vsupply or s.c.to +5V	signal > 4.2 V			< 1 s, cont.	
	P1870	lower threshold	short to GND	signal < 0.8 V				
	P1876	plausibility	signal gradient to high	signal gradient > 4.4 V				
Gear Lever Hallsensors	P1860	no signal	hall cell is not switching	code not valid for a timeout (Code is compared to valid gear position codes)	KEY = & CRANKING = & V_supply =	ON NOT ON [6.5-10V, 17.01-17.5]	< 20 ms, cont.	2nd driving cycle
Clutch Speed	P1859	plausibility	out of dynamic range	| signal gradient | > 9000 rpm	ENGINE = & KEY = & CRANKING = & Vsupply = & CLUTCH = & GEAR =	ON ON NOT ON [6.5-10V, 17.01-17.5] CLOSED ENGAGED	< 1s, cont.	2nd driving cycle
			signal not available for timeout	speed signal = 0	ENGINE = & KEY = & CRANKING = & Vsupply = & CLUTCH = & GEAR =	ON ON NOT ON [6.5-10V, 17.01-17.5] CLOSED ENGAGED		
					ENGINE = & KEY = & CRANKING = & Vsupply = & CLUTCH = & GEAR = & drivetrains speed >	ON ON NOT ON [6.5-10V, 17.01-17.5] NOT CLOSED ENGAGED 200 min^{-1}		

G00383779

Fig. 73: V8 SMG Transmission Diagnosis (2004 - 3 Of 4)
Courtesy of BMW OF NORTH AMERICA, INC.

V8 SMG Transmission Diagnosis (2004 - 4 Of 4)

Component/ System	Fault Code	Monitor Strategy Description	Malfunction Criteria	Threshold value	Secondary Parameter	Enable Conditions	Time Required	MIL Illum.
SMG			speed signal <> engine speed*e AND speed signal <> driveline speed*gear ratio *e		ENGINE = & KEY = & CRANKING = & Vsupply = & CLUTCH = & GEAR = & gear ratio = & driveline speed =	ON ON NOT ON [6.5-10V, 17.01-17.5] CLOSED ENGAGED f(engaged gear) AVAILABLE	< 1s, cont.	2nd driving cycle
Hydraulic Pump Failure	P1887	plausibility	damage on hydraulic pump	tolerance e = 2000 min^{-1} pump switched on for more than 30s	Pump = & error counter >=	Commanded 5	< 50 s, cont.	2nd driving cycle
Shift Position Sensor	P1850	upper threshold	open circuit or s.c. to Vsupply	signal > 4,5V	KEY = & CRANKING = & Vsupply =	ON NOT ON [6.5-10V, 17.01-17.5]	< 500 ms, cont.	2nd driving cycle
	P1851	lower threshold	short to GND	signal < 0,5 V				
	P1852	plausibility	out of dynamic range	signal gradient > 4,4 V				
			Out of position range	signal outside selection thresholds	selection thresholds = & KEY = & CRANKING = & Vsupply = & GEARSHIFT =	f(gear position, EOL tuned values) ON NOT ON [6.5-10V, 17.01-17.5] NOT IN PROGRESS		
CAN Brake Signal	P1782	plausibility	failure on brake switch system detected by engine control unit	CAN label F_BS = 1	KEY = & ECU = & Vsupply =	ON ON since timeout [6.5-10V, 17.01-17.5]	< 20 ms, cont.	2nd driving cycle

G00383780

Fig. 74: V8 SMG Transmission Diagnosis (2004 - 4 Of 4)
Courtesy of BMW OF NORTH AMERICA, INC.

DIAGNOSTIC TROUBLE CODES V8 & V12 TRANSMISSION (6-SPEED - 2003)

DIAGNOSTIC TROUBLE CODES V8 & V12 TRANSMISSION (6-SPEED - 2003)

PCode	BMW Code	Possible Cause	Diagnostic Parameters
P0715	20200	Input/Turbine Speed Sensor "A" Circuit	See V8 & V12 6-SPEED TRANSMISSION DIAGNOSIS (2003 - 1 OF 6).
P0720	20201	Output Speed Sensor Circuit	See V8 & V12 6-SPEED TRANSMISSION

			DIAGNOSIS (2003 - 1 OF 6).
P0729	20306	Gear 6 Incorrect Ratio	See V8 & V12 6-SPEED TRANSMISSION DIAGNOSIS (2003 - 3 OF 6).
P0731	20301	Gear 1 Incorrect Ratio	See V8 & V12 6-SPEED TRANSMISSION DIAGNOSIS (2003 - 3 OF 6).
P0732	20302	Gear 2 Incorrect Ratio	See V8 & V12 6-SPEED TRANSMISSION DIAGNOSIS (2003 - 3 OF 6).
P0733	20303	Gear 3 Incorrect Ratio	See V8 & V12 6-SPEED TRANSMISSION DIAGNOSIS (2003 - 3 OF 6).
P0734	20304	Gear 4 Incorrect Ratio	See V8 & V12 6-SPEED TRANSMISSION DIAGNOSIS (2003 - 3 OF 6).
P0735	20305	Gear 5 Incorrect Ratio	See V8 & V12 6-SPEED TRANSMISSION DIAGNOSIS (2003 - 3 OF 6).
P0741	20307	Torque Converter Clutch Circuit Performance or Stuck Off	See V8 & V12 6-SPEED TRANSMISSION DIAGNOSIS (2003 - 3 OF 6).
P0745	20000	Pressure Control Solenoid "A"	See V8 & V12 6-SPEED TRANSMISSION DIAGNOSIS (2003 - 1 OF 6).
P0748	20000	Pressure Control Solenoid "A" Electrical	See V8 & V12 6-SPEED TRANSMISSION DIAGNOSIS (2003 - 1 OF 6).
P0751	20100	Shift Solenoid "A" Performance or Stuck Off	See V8 & V12 6-SPEED TRANSMISSION DIAGNOSIS (2003 - 2 OF 6).
P0753	20100	Shift Solenoid "A" Electrical	See V8 & V12 6-SPEED TRANSMISSION DIAGNOSIS (2003 - 2 OF 6).
P0756	20101	Shift Solenoid "B" Performance or Stuck Off	See V8 & V12 6-SPEED TRANSMISSION DIAGNOSIS (2003 - 2 OF 6).
P0758	20101	Shift Solenoid "B" Electrical	See V8 & V12 6-SPEED TRANSMISSION DIAGNOSIS (2003 - 2 OF 6).
P0761	20102	Shift Solenoid "C" Performance or Stuck Off	See V8 & V12 6-SPEED TRANSMISSION DIAGNOSIS (2003 - 2 OF 6).
P0763	20102	Shift Solenoid "C" Electrical	See V8 & V12 6-SPEED TRANSMISSION DIAGNOSIS (2003 - 2 OF 6).
P0766	.....	Reserved For Later Versions	See V8 & V12 6-SPEED TRANSMISSION DIAGNOSIS (2003 - 2 OF 6).
P0768	.....	Reserved For Later Versions	See V8 & V12 6-SPEED TRANSMISSION DIAGNOSIS (2003 - 2 OF 6).
P0775	20001	Pressure Control Solenoid "B"	See V8 & V12 6-SPEED TRANSMISSION DIAGNOSIS (2003 - 1 OF 6).

P0778	20001	Pressure Control Solenoid "B" Electrical	See V8 & V12 6-SPEED TRANSMISSION DIAGNOSIS (2003 - 1 OF 6).
P0781	20311	1-2 Shift	See V8 & V12 6-SPEED TRANSMISSION DIAGNOSIS (2003 - 3 OF 6).
P0782	20312	2-3 Shift	See V8 & V12 6-SPEED TRANSMISSION DIAGNOSIS (2003 - 3 OF 6).
P0783	20313	3-4 Shift	See V8 & V12 6-SPEED TRANSMISSION DIAGNOSIS (2003 - 4 OF 6).
P0784	20314	4-5 Shift	See V8 & V12 6-SPEED TRANSMISSION DIAGNOSIS (2003 - 4 OF 6).
P0795	20002	Pressure Control Solenoid "C"	See V8 & V12 6-SPEED TRANSMISSION DIAGNOSIS (2003 - 1 OF 6).
P0798	20002	Pressure Control Solenoid "C" Electrical	See V8 & V12 6-SPEED TRANSMISSION DIAGNOSIS (2003 - 1 OF 6).
P0829	20315	5-6 Shift	See V8 & V12 6-SPEED TRANSMISSION DIAGNOSIS (2003 - 4 OF 6).
P0962	20000	Pressure Control Solenoid "A" Control Circuit Low	See V8 & V12 6-SPEED TRANSMISSION DIAGNOSIS (2003 - 1 OF 6).
P0963	20000	Pressure Control Solenoid "A" Control Circuit High	See V8 & V12 6-SPEED TRANSMISSION DIAGNOSIS (2003 - 1 OF 6).
P0966	20001	Pressure Control Solenoid "B" Control Circuit Low	See V8 & V12 6-SPEED TRANSMISSION DIAGNOSIS (2003 - 1 OF 6).
P0967	20001	Pressure Control Solenoid "B" Control Circuit High	See V8 & V12 6-SPEED TRANSMISSION DIAGNOSIS (2003 - 1 OF 6).
P0970	20002	Pressure Control Solenoid "C" Control Circuit Low	See V8 & V12 6-SPEED TRANSMISSION DIAGNOSIS (2003 - 1 OF 6).
P0971	20002	Pressure Control Solenoid "C" Control Circuit High	See V8 & V12 6-SPEED TRANSMISSION DIAGNOSIS (2003 - 1 OF 6).
P0973	20100	Shift Solenoid "A" Control Circuit Low	See V8 & V12 6-SPEED TRANSMISSION DIAGNOSIS (2003 - 2 OF 6).
P0976	20101	Shift Solenoid "B" Control Circuit Low	See V8 & V12 6-SPEED TRANSMISSION DIAGNOSIS (2003 - 2 OF 6).
P0979	20102	Shift Solenoid "C" Control Circuit Low	See V8 & V12 6-SPEED TRANSMISSION DIAGNOSIS (2003 - 2 OF 6).
P1701	20700	Double Error Position Information CAN/Serial Line	See V8 & V12 6-SPEED TRANSMISSION DIAGNOSIS (2003 - 5 OF 6).

P1702	20701	Combination Substitute Function	See V8 & V12 6-SPEED TRANSMISSION DIAGNOSIS (2003 - 5 OF 6).
P1720	20800	CAN Timeout Control Module	See V8 & V12 6-SPEED TRANSMISSION DIAGNOSIS (2003 - 5 OF 6).
P1721	20801	CAN Timeout ASC/DSC	See V8 & V12 6-SPEED TRANSMISSION DIAGNOSIS (2003 - 5 OF 6).
P1727	20903	CAN Engine Speed	See V8 & V12 6-SPEED TRANSMISSION DIAGNOSIS (2003 - 5 OF 6).
P1728	20336	Engine Overspeed Condition	See V8 & V12 6-SPEED TRANSMISSION DIAGNOSIS (2003 - 5 OF 6).
P1747	52999	CAN-Bus Monitoring	See V8 & V12 6-SPEED TRANSMISSION DIAGNOSIS (2003 - 5 OF 6).
P1765	.....	Throttle Valve Signal	See V8 & V12 6-SPEED TRANSMISSION DIAGNOSIS (2003 - 5 OF 6).
P1771	20901	CAN Torque Interface Plausibility	See V8 & V12 6-SPEED TRANSMISSION DIAGNOSIS (2003 - 4 OF 6).
P1782	.....	Brake Pedal Signal	See V8 & V12 6-SPEED TRANSMISSION DIAGNOSIS (2003 - 5 OF 6).
P1790	20400	Internal Transmission Control Module Memory Checksum/EPROM Error	See V8 & V12 6-SPEED TRANSMISSION DIAGNOSIS (2003 - 6 OF 6).
P1791	20401	Internal Transmission Control Module Memory Checksum/EEPROM Error	See V8 & V12 6-SPEED TRANSMISSION DIAGNOSIS (2003 - 6 OF 6).
P1792	20402	Internal Transmission Control Module Watchdog Error	See V8 & V12 6-SPEED TRANSMISSION DIAGNOSIS (2003 - 5 OF 6).
P1793	20330	ETC Cut-Off Due To Overtemperature Condition	See V8 & V12 6-SPEED TRANSMISSION DIAGNOSIS (2003 - 6 OF 6).
P1804	.....	Reserved For Later Versions	See V8 & V12 6-SPEED TRANSMISSION DIAGNOSIS (2003 - 2 OF 6).
P1806	20105	Shift Solenoid "A" or "B" Mechanically Stuck	See V8 & V12 6-SPEED TRANSMISSION DIAGNOSIS (2003 - 2 OF 6).
P1810	20200	Input/Turbine Speed Sensor Circuit High	See V8 & V12 6-SPEED TRANSMISSION DIAGNOSIS (2003 - 1 OF 6).
P1811	20200	Input/Turbine Speed Sensor Circuit Low	See V8 & V12 6-SPEED TRANSMISSION DIAGNOSIS (2003 - 1 OF 6).
P1812	20201	Output Speed Sensor Circuit High Input	See V8 & V12 6-SPEED TRANSMISSION DIAGNOSIS (2003 - 1 OF 6).

P1813	20201	Output Speed Sensor Circuit Low Input	See V8 & V12 6-SPEED TRANSMISSION DIAGNOSIS (2003 - 1 OF 6).
P1814	20203	Output Speed Sensor Gradient Too High	See V8 & V12 6-SPEED TRANSMISSION DIAGNOSIS (2003 - 1 OF 6).
P1830	20006	Pressure Control Solenoid Current Error in P/R/N	See V8 & V12 6-SPEED TRANSMISSION DIAGNOSIS (2003 - 2 OF 6).
P1836	20005	Torque Converter Clutch Circuit High	See V8 & V12 6-SPEED TRANSMISSION DIAGNOSIS (2003 - 3 OF 6).
P1846	20005	Torque Converter Clutch Circuit Low	See V8 & V12 6-SPEED TRANSMISSION DIAGNOSIS (2003 - 3 OF 6).
P1861	20316	2-1 Shift	See V8 & V12 6-SPEED TRANSMISSION DIAGNOSIS (2003 - 4 OF 6).
P1862	20317	3-2 Shift	See V8 & V12 6-SPEED TRANSMISSION DIAGNOSIS (2003 - 4 OF 6).
P1863	20318	4-3 Shift	See V8 & V12 6-SPEED TRANSMISSION DIAGNOSIS (2003 - 4 OF 6).
P1864	20319	5-4 Shift	See V8 & V12 6-SPEED TRANSMISSION DIAGNOSIS (2003 - 4 OF 6).
P1865	20320	6-5 Shift	See V8 & V12 6-SPEED TRANSMISSION DIAGNOSIS (2003 - 4 OF 6).
P1871	20316	2-1 Shift Circuit High	See V8 & V12 6-SPEED TRANSMISSION DIAGNOSIS (2003 - 4 OF 6).
P1872	20317	3-2 Shift Circuit High	See V8 & V12 6-SPEED TRANSMISSION DIAGNOSIS (2003 - 4 OF 6).
P1873	20318	4-3 Shift Circuit High	See V8 & V12 6-SPEED TRANSMISSION DIAGNOSIS (2003 - 4 OF 6).
P1874	20319	5-4 Shift Circuit High	See V8 & V12 6-SPEED TRANSMISSION DIAGNOSIS (2003 - 4 OF 6).
P1875	20320	6-5 Shift Circuit High	See V8 & V12 6-SPEED TRANSMISSION DIAGNOSIS (2003 - 4 OF 6).
P1881	20311	1-2 Shift Circuit High	See V8 & V12 6-SPEED TRANSMISSION DIAGNOSIS (2003 - 3 OF 6).
P1882	20312	2-3 Shift Circuit High	See V8 & V12 6-SPEED TRANSMISSION DIAGNOSIS (2003 - 3 OF 6).
P1883	20313	3-4 Shift Circuit High	See V8 & V12 6-SPEED TRANSMISSION DIAGNOSIS (2003 - 4 OF 6).

P1884	20314	4-5 Shift Circuit High	See V8 & V12 6-SPEED TRANSMISSION DIAGNOSIS (2003 - 4 OF 6).
P1885	20315	5-6 Shift Circuit High	See V8 & V12 6-SPEED TRANSMISSION DIAGNOSIS (2003 - 4 OF 6).
P1888	20337	CAN Timeout Instrument Pack during Operation Parking Interlock Emergency Release	See V8 & V12 6-SPEED TRANSMISSION DIAGNOSIS (2003 - 5 OF 6).
P1890	20500	System Voltage	See V8 & V12 6-SPEED TRANSMISSION DIAGNOSIS (2003 - 3 OF 6).
P1891	20500	System Voltage High Input	See V8 & V12 6-SPEED TRANSMISSION DIAGNOSIS (2003 - 3 OF 6).
P1892	20500	System Voltage Low Input	See V8 & V12 6-SPEED TRANSMISSION DIAGNOSIS (2003 - 3 OF 6).
P1893	20501	Supply Voltage Pressure Control Solenoid/Shift Solenoid Circuit High	See V8 & V12 6-SPEED TRANSMISSION DIAGNOSIS (2003 - 6 OF 6).
P1894	20501	Supply Voltage Pressure Control Solenoid/Shift Solenoid Circuit Low	See V8 & V12 6-SPEED TRANSMISSION DIAGNOSIS (2003 - 6 OF 6).
P1895	20501	Supply Voltage Pressure Control Solenoid/Shift Solenoid No Signal	See V8 & V12 6-SPEED TRANSMISSION DIAGNOSIS (2003 - 6 OF 6).
P1896	20501	Supply Voltage Pressure Control Solenoid/Shift Solenoid	See V8 & V12 6-SPEED TRANSMISSION DIAGNOSIS (2003 - 6 OF 6).
P1897	20502	Supply Voltage Sensors High Input	See V8 & V12 6-SPEED TRANSMISSION DIAGNOSIS (2003 - 6 OF 6).
P1898	20502	Supply Voltage Sensors Low Input	See V8 & V12 6-SPEED TRANSMISSION DIAGNOSIS (2003 - 6 OF 6).
P2713	20003	Pressure Control Solenoid "D"	See V8 & V12 6-SPEED TRANSMISSION DIAGNOSIS (2003 - 1 OF 6).
P2716	20003	Pressure Control Solenoid "D" Electrical	See V8 & V12 6-SPEED TRANSMISSION DIAGNOSIS (2003 - 1 OF 6).
P2720	20003	Pressure Control Solenoid "D" Circuit Low	See V8 & V12 6-SPEED TRANSMISSION DIAGNOSIS (2003 - 1 OF 6).
P2721	20003	Pressure Control Solenoid "D" Control Circuit High	See V8 & V12 6-SPEED TRANSMISSION DIAGNOSIS (2003 - 1 OF 6).
P2722	20004	Pressure Control Solenoid "E"	See V8 & V12 6-SPEED TRANSMISSION DIAGNOSIS (2003 - 2 OF 6).
P2725	20004	Pressure Control Solenoid "E" Electrical	See V8 & V12 6-SPEED TRANSMISSION DIAGNOSIS (2003 - 2 OF 6).
P2729	20004	Pressure Control Solenoid "E"	See V8 & V12 6-SPEED

		Control Circuit Low	TRANSMISSION DIAGNOSIS (2003 - 2 OF 6).
P2730	20004	Pressure Control Solenoid "E" Control Circuit High	See V8 & V12 6-SPEED TRANSMISSION DIAGNOSIS (2003 - 2 OF 6).
P2759	20005	Torque Converter Clutch Pressure Control Solenoid Control Circuit Electrical	See V8 & V12 6-SPEED TRANSMISSION DIAGNOSIS (2003 - 3 OF 6).
P2761	20005	Torque Converter Clutch Pressure Control Solenoid Control Circuit/Open	See V8 & V12 6-SPEED TRANSMISSION DIAGNOSIS (2003 - 3 OF 6).

V8 & V12 6-Speed Transmission Diagnosis (2003 - 1 Of 6)

Component/ System	Fault Code	Monitor Strategy Description	Malfunction Criteria	Threshold value	Secondary Parameter	Enable Conditions	Time Required	MIL illum.
A/T 6HP26								
Turbine Speed Sensor	P1810	upper threshold	short circuit to supply	-	sensor supply	status OK	20msec. continous	two driving cycles
(Input Speed NTU)	P1811	lower threshold	interruption or short circuit to gnd.	-				
	P0715	plausibility	signal greater or lower than threshold	>7700rpm, <20rpm	sensor supply (NTU>7700rpm) sensor (NTU>7700rpm)	status OK no electr. error		
					sensor supply sensor engine speed output speed range position transmission condition	status OK no electr. error status OK status OK or substitute value >250rpm status OK or substitute value friction-locked (forward or backward)		
Output Speed Sensor	P0720	plausibility	signal greater than threshold	N62 4,4b >=7300rpm or difference to converted wheel speed >250rpm	sensor supply sensor	status OK no electr. error	20msec. continous	two driving cycles
					sensor supply sensor wheel speed	status OK no electr. error mean speed of driven wheels OK mean speed of non-driven wheels OK converted wheel speed >500rpm diff. of driven and non-driven wheels <10rpm		
	P1812	upper threshold	short circuit to supply	-	sensor supply	status OK		
	P1813	lower threshold	interruption or short circuit to gnd.	-				
	P1814	plausibility	negative gradient of signal > threshold	1000rpm / 10msec	transmission condition turbine speed sensor difference (converted output-speed, turbine-speed) or shift flag	friction-locked (forward) status OK >200rpm =1	20msec. continous	two driving cycles
Pressure Regulator Valves								
(1)	P0962	lower threshold	interruption or short circuit to gnd.	-	low-side and high-side FET power supply voltage-drop at FET solenoid supply	*monitoring short-circuit to gnd., supply or interruption* activated >9V <=1V >6V	10msec. continous	two driving cycles
	P0745	plausibility	current higher or lower than threshold	>220mA (p=I)				
	P0963	upper threshold	short circuit to supply	-				
	P0748	no signal	interruption	-				
(2)	P0966	lower threshold	interruption or short circuit to gnd.	-				
	P0775	plausibility	current higher or lower than threshold	<730mA (p=I)				
	P0967	upper threshold	short circuit to supply	-	see above and desired PWM-Signal	*monitoring current* see above and not 0% or not 100%		
	P0778	no signal	interruption	-				
(3)	P0970	lower threshold	interruption or short circuit to gnd.	-				
	P0795	plausibility	current higher or lower than threshold	>220mA (p=I)				
	P0971	upper threshold	short circuit to supply	-				
	P0798	no signal	interruption	-				
(4)	P2720	lower threshold	interruption or short circuit to gnd.	-				
	P2713	plausibility	current higher or lower than threshold	<730mA (p=I)				
	P2721	upper threshold	short circuit to supply	-				
	P2716	no signal	interruption	-				

G00383771

Fig. 75: V8 & V12 6-Speed Transmission Diagnosis (2003 - 1 Of 6)
Courtesy of BMW OF NORTH AMERICA, INC.

V8 & V12 6-Speed Transmission Diagnosis (2003 - 2 Of 6)

Component/ System	Fault Code	Monitor Strategy Description	Malfunction Criteria	Threshold value	Secondary Parameter	Enable Conditions	Time Required	MIL Illum.
Pressure Regulator Valves	(5)P2729	lower threshold	interruption or short circuit to gnd.	-				two driving cycles
	P2722	plausibility	current higher or lower than threshold	no monitoring				
	P2730	upper threshold	short circuit to supply	-				
	P2725	no signal	interruption	-				
	(1)P1830	plausibility	current higher or lower than threshold	>220mA (p-i)	shift-direction dist. time after shift-end	from D to P, R, N 2sec after shift-end for 1sec	10msec, continuous	two driving cycles
Solenoid Valves	(1)P0973	lower threshold	interruption or short circuit to gnd.	Diagnosis by ASIC if PWM-signal const. at 0%, 100% voltage return lead (low) <0,15V voltage return lead (high) <0,15V 0,15V< voltage return lead (low) <0,8V	high-side FET high-side FET low-side FET	voltage drop <=1V enabled enabled	10msec, continuous	two driving cycles
	P0753	upper threshold	short circuit to supply	Diagnosis by ASIC if PWM-signal const. at 0%, 100% voltage return lead (high) >0,3V				
	P0751	no signal	interruption	Diagnosis by ASIC if PWM-signal const. at 0%, 100% 0,15V<voltage return lead (low) <0,8V				
	(2)P0976	lower threshold	interruption or short circuit to gnd.	Diagnosis by ASIC if PWM-signal const. at 0%, 100% voltage return lead (low) <0,15V voltage return lead (high) <0,15V 0,15V< voltage return lead (low) <0,8V				
	P0758	upper threshold	short circuit to supply	Diagnosis by ASIC if PWM-signal const. at 0%, 100% voltage return lead (high) >0,3V				
	P0756	no signal	interruption	Diagnosis by ASIC if PWM-signal const. at 0%, 100% 0,15V<voltage return lead (low) <0,8V				
	(3)P0979	lower threshold	interruption or short circuit to gnd.	Diagnosis by ASIC if PWM-signal const. at 0%, 100% voltage return lead (low) <0,15V voltage return lead (high) <0,15V 0,15V< voltage return lead (low) <0,8V				
	P0763	upper threshold	short circuit to supply	Diagnosis by ASIC if PWM-signal const. at 0%, 100% voltage return lead (high) >0,3V				
	P0761	no signal	interruption	Diagnosis by ASIC if PWM-signal const. at 0%, 100% 0,15V<voltage return lead (low) <0,8V				
	(1) or (2)P1806	plausibility	Range Position	≠P □	engine speed range position	0rpm to >1000rpm (engine start) =P	10msec once at engine start	
Reserved for later versions (4)	P1804	lower threshold	interruption or short circuit to gnd.	□				two driving cycles
	P0768	upper threshold	short circuit to supply	□				
	P0766	no signal	interruption	□				

G00383772

Fig. 76: V8 & V12 6-Speed Transmission Diagnosis (2003 - 2 Of 6)
Courtesy of BMW OF NORTH AMERICA, INC.

V8 & V12 6-Speed Transmission Diagnosis (2003 - 3 Of 6)

Component/ System	Fault Code	Monitor Strategy Description	Malfunction Criteria	Threshold value	Secondary Parameter	Enable Conditions	Time Required	MIL illum.
Torque Converter Clutch (TCC)	P0741	general	diff(engine speed, incut speed) > threshold over def. time	>diff.-speed=f(engine torque) engine torque(-50; 300)Nm; diff.-speed(25; 25)rpm >30sec	torque converter clutch	clutch not opened	10msec, continous	two driving cycles
valve	P1846	lower threshold	interruption or short circuit to gnd.	-				
	P2761	plausibility	current higher or lower ttlvin threshold	no monitoring				
	P1836	upper threshold	short circuit to supply	-				
	P2759	no signal	interruption	-				
Power Supply	P1891	upper threshold	battery voltage > threshold	>=16V	engine speed FET Jump-Start	>=400rpm enabled no	10 msec, continous	two driving cycles
	P1892	lower threshold	battery voltage < threshold	<=7V	engine speed FET	>=400rpm enabled		
	P1890	general	battery voltage < threshold	<9V	engine speed FET	>=400rpm and status OK enabled		
Gear Ratio Monitoring								
(1)	P0731	plausibility	|output speed x ratio - input speed| > threshold	> characteristic speed-difference=f(engine speed)	transmission oil temp.	>0°C	30msec, continous	two driving cycles
(2)	P0732	plausibility	|output speed x ratio - input speed| > threshold	engine speed [0; 1000; 6000] rpm	actual Range	1, 2, 3, 4, 5, 6		
(3)	P0733	plausibility	|output speed x ratio - input speed| > threshold	speed-difference [200; 200; 400] rpm	output speed	>256rpm		
(4)	P0734	plausability	|output speed x ratio - input speed| > threshold		engine speed	>100rpm		
(5)	P0735	plausability	|output speed x ratio - input speed| > threshold		input speed	>416rpm		
(6)	P0729	plausability	|output speed x ratio - input speed| > threshold		input speed Stand by Control SBC	status OK inactiv		
Range Shift monitoring								
(1) →(2)	A P1881	upper threshold	|input speed – output speed x ratio| > threshold	>500rpm	output speed	>300rpm	30msec, continous	two driving cycles
	B P0781	general	|input speed – output speed x ratio|(t) - |input speed – output speed x ratio|(t+t0) < threshold	-30rpm < calc. value < 30rpm	transmission oil temp. engine speed range position	>=0°C >=600rpm not P, R, N		
(2) →(3)	A P1882	upper threshold	|input speed – output speed x ratio| > threshold	>500rpm	output speed	>300rpm		
	B P0782	general	|input speed – output speed x ratio|(t) - |input speed – output speed x ratio|(t+t0) > threshold	-30rpm < calc. value < 30rpm	transmission oil temp. engine speed range position	>=0°C >=600rpm not P, R, N		

G00383773

Fig. 77: V8 & V12 6-Speed Transmission Diagnosis (2003 - 3 Of 6)
Courtesy of BMW OF NORTH AMERICA, INC.

V8 & V12 6-Speed Transmission Diagnosis (2003 - 4 Of 6)

Component/ System	Fault Code	Monitor Strategy Description	Malfunction Criteria	Threshold value	Secondary Parameter	Enable Conditions	Time Required	MIL Illum.
Range Shift monitoring								two driving cycles
(3) →(4)	A P1863	upper threshold	(input speed - output speed x ratio) > threshold	>400rpm	output speed transmission oil temp. engine speed range position	>300rpm >=0°C >=600rpm not P, R, N		
	B P0783	general	(input speed - output speed x ratio)(t) - (input speed - output speed x ratio)(t=0) > threshold	-30rpm < calc. value < 30rpm				
(4) →(5)	A P1864	upper threshold	(input speed - output speed x ratio) > threshold	>400rpm	output speed transmission oil temp. engine speed range position	>300rpm >=0°C >=600rpm not P, R, N		
	B P0784	general	(input speed - output speed x ratio)(t) - (input speed - output speed x ratio)(t=0) > threshold	-30rpm < calc. value < 30rpm				
(5) →(6)	A P1865	upper threshold	(input speed - output speed x ratio) > threshold	>400rpm	output speed transmission oil temp. engine speed range position	>300rpm >=0°C >=600rpm not P, R, N		
	B P0829	general	(input speed - output speed x ratio)(t) - (input speed - output speed x ratio)(t=0) > threshold	-30rpm < calc. value < 25rpm				
(2) →(1)	A P1871	upper threshold	no monitoring		output speed transmission oil temp. engine speed range position	>250rpm >=0°C >=600rpm not P, R, N		
	B P1861	general	(input speed - output speed x ratio)(t) - (input speed - output speed x ratio)(t=0) > threshold	-30rpm < calc. value < 30rpm				
(3) →(2)	A P1872	upper threshold	no monitoring		output speed transmission oil temp. engine speed range position	>500rpm >=0°C >=600rpm not P, R, N		
	B P1862	general	(input speed - output speed x ratio)(t) - (input speed - output speed x ratio)(t=0) > threshold	-30rpm < calc. value < 30rpm				
(4) →(3)	A P1873	upper threshold	no monitoring		output speed transmission oil temp. engine speed range position	>700rpm >=0°C >=600rpm not P, R, N		
	B P1863	general	(input speed - output speed x ratio)(t) - (input speed - output speed x ratio)(t=0) > threshold	-30rpm < calc. value < 30rpm				
(5) →(4)	A P1874	upper threshold	no monitoring		output speed transmission oil temp. engine speed range position	>800rpm >=0°C >=600rpm not P, R, N		
	B P1864	general	(input speed - output speed x ratio)(t) - (input speed - output speed x ratio)(t=0) > threshold	-30rpm < calc. value < 30rpm				
(6) →(5)	A P1875	upper threshold	no monitoring		output speed transmission oil temp. engine speed range position	>1100rpm >=0°C >=600rpm not P, R, N		
	B P1865	general	(input speed - output speed x ratio)(t) - (input speed - output speed x ratio)(t=0) > threshold	-30rpm < calc. value < 30rpm				
Engine Torque	P1771	plausibility	CAN-Messages signal error flag alive-counter or checksum	"1" no alteration of alive-counter or wrong Checksum	DME-CAN Connection CAN-Bus ignition	Status OK Status OK status on	50msec. continuous	two driving cycles

G00383774

Fig. 78: V8 & V12 6-Speed Transmission Diagnosis (2003 - 4 Of 6)
Courtesy of BMW OF NORTH AMERICA, INC.

V8 & V12 6-Speed Transmission Diagnosis (2003 - 5 Of 6)

Component/ System	Fault Code	Monitor Strategy Description	Malfunction Criteria	Threshold value	Secondary Parameter	Enable Conditions	Time Required	MIL Illum.
Engine Overspeed	P1728	plausibility	engine speed	>7000rpm	Range Position engine speed Park-Lock Sensor	not P, R, N, Z and status OK status OK or substitute value status OK	30msec, continous	two driving cycles
Timeout DME CAN-Connection	P1720	plausibility	CAN-Connection DME	Timeout	CAN-Bus TCM-CAN battery voltage	no Error and ready-to-transmit no transmission of wake-up signal >9V	20msec, continous	one driving cycle
Timeout DSC CAN-Connection	P1721	plausibility	CAN-Connection DSC	Timeout	CAN-Bus TCM-CAN battery voltage	no Error and ready-to-transmit no transmission of wake-up signal >9V	20msec, continous	two driving cycles
Throttle Valve Signal	P1765	plausibility	Message Signal Error-Flag	=1	DME-CAN Connection CAN-Bus ignition	Status OK Status OK status on	20msec, continous	two driving cycles
Brake Pedal Signal	P1782	plausibility	brake line-pressure brake switch	Status not OK Status not OK	DME-CAN Connection DSC-CAN Connection CAN-Bus ignition	Status OK Status OK Status OK status on	20msec, continous	two driving cycles
Engine Speed Signal	P1727	plausibility	CAN-Message signal error-flag alive-counter or checksum	=1 no alteration of alive-counter or wrong Checksum	DME CAN-Connection ignition signal CAN-Bus	status OK on status OK	50msec, continous	two driving cycles
Range Position Switch (Driver's request)	P1701	plausibility	Message Signal-Error	-	-	-	20msec, continous	two driving cycles
Manual Park-Lock disabling and Instrument-Pack Timeout	P1888	plausibility	Manual Park-Lock Disabling Instrument-Pack	Park-Lock disabled Timeout	none		20msec, continous	two driving cycles
CAN-Bus	P1747	plausibility	CAN-Bus disabled	-	ignition	Status on	20msec, continous	one driving cycles
Colliding Functions or not allowed actuating of valves (at detected interruption or short-circuit to supply)	P1702	general	SW-Functions actuating solenoid valves	colliding of 2 Emergency-Functions same priority driven solenoid valves have short-circuit to suppy or interruption	none	-	20msec, continous	two driving cycles
Watch-Dog	P1792	general	error-counter	exceeding diff. thresholds	Status-Counter filtered battery voltage	Initialization: 0 or 1 >7V in operation; debug-mode deactivated	f0msec, continous and in Initialization	two driving cycles

G00383775

Fig. 79: V8 & V12 6-Speed Transmission Diagnosis (2003 - 5 Of 6)
Courtesy of BMW OF NORTH AMERICA, INC.

V8 & V12 6-Speed Transmission Diagnosis (2003 - 6 Of 6)

Component/ System	Fault Code	Monitor Strategy Description	Malfunction Criteria	Threshold value	Secondary Parameter	Enable Conditions	Time Required	MIL Illum.
TCM Hot Disabling	P1793	general	max(Chip-Temp. + 0°C, Trans.-Oil-Temp. - 10°C) > thresh-old=f(battery-voltage)	> characteristic voltage(16.4, 18.5, 19.5, 25, 29)V Temp(141, 121, 111, 61, 81)°C	none		10msec. continous and in initialization	two driving cycles
Valve Voltage Supply	P1896	plausibility	FET drive	not possible	Status-Counter filtered battery voltage high-side and low-side-FET battery voltage	initialization: 0 or 1 >7V in operation: enabled >7V	10msec. continous and in initialization	two driving cycles
	P1893	upper threshold	short-circuit to supply	-				
	P1894	lower threshold	short-circuit to gnd, or sensor supply voltage < threshold or FET-drop-voltage > threshold	sensor supply <0.5V, drop-voltage>1V				
	P1895	no signal	interruption	-				
Sensor Voltage Supply	P1897	upper threshold	sensor supply Voltage >threshold	>6V	battery-voltage	>6.05V	20msec. continous	two driving cycles
	P1898	lower threshold	sensor supply Voltage <threshold	<5.5V				
EEPROM	P1791	plausibility	Checksum-Error	=1	none	-	20msec. continous	one driving cycle
EPROM	P1790	plausibility	Checksum-Error	=1	none	-	10msec. continous	two driving cycles

G00383776

Fig. 80: V8 & V12 6-Speed Transmission Diagnosis (2003 - 6 Of 6)
Courtesy of BMW OF NORTH AMERICA, INC.

DIAGNOSTIC TROUBLE CODES V8 & V12 TRANSMISSION (6-SPEED - 2004)

DIAGNOSTIC TROUBLE CODES V8 & V12 TRANSMISSION (6-SPEED - 2004)

PCode	BMW Code	Possible Cause	Diagnostic Parameter
P0668	.....	Chip Temp	See V8 & V12 6-SPEED TRANSMISSION DIAGNOSIS (2004 - 10 OF 10)
P0669	.....	Chip Temp	See V8 & V12 6-SPEED

			TRANSMISSION DIAGNOSIS (2004 - 10 OF 10)
P0701	.....	Range Position Switch	See V8 & V12 6-SPEED TRANSMISSION DIAGNOSIS (2004 - 9 OF 10).
P0702	.....	Watchdog	See V8 & V12 6-SPEED TRANSMISSION DIAGNOSIS (2004 - 9 OF 10).
P0705	.....	Range Position Switch	See V8 & V12 6-SPEED TRANSMISSION DIAGNOSIS (2004 - 9 OF 10).
P0710	.....	Oil Temperature Sensor	See V8 & V12 6-SPEED TRANSMISSION DIAGNOSIS (2004 - 2 OF 10).
P0711	.....	Oil Temperature Sensor	See V8 & V12 6-SPEED TRANSMISSION DIAGNOSIS (2004 - 2 OF 10).
P0712	.....	Oil Temperature Sensor	See V8 & V12 6-SPEED TRANSMISSION DIAGNOSIS (2004 - 2 OF 10).
P0713	.....	Oil Temperature Sensor	See V8 & V12 6-SPEED TRANSMISSION DIAGNOSIS (2004 - 2 OF 10).
P0714	.....	Oil Temperature Sensor	See V8 & V12 6-SPEED TRANSMISSION DIAGNOSIS (2004 - 2 OF 10).
P0715	20200	Input/Turbine Speed Sensor "A" Circuit	See V8 & V12 6-SPEED TRANSMISSION DIAGNOSIS (2004 - 1 OF 10).
P0720	20201	Output Speed Sensor Circuit	See V8 & V12 6-SPEED TRANSMISSION DIAGNOSIS (2004 - 2 OF 10).
P0721	.....	Output Speed Sensor Circuit	SeeV8 & V12 6-SPEED TRANSMISSION DIAGNOSIS (2004 - 1 OF 10) .
P0729	.....	Gear Ratio Monitoring	See V8 & V12 6-SPEED TRANSMISSION DIAGNOSIS (2004 - 6 OF 10).
P0731	20301	Gear 1 Incorrect Ratio	See V8 & V12 6-SPEED TRANSMISSION DIAGNOSIS (2004 - 6 OF 10).

P0732	20302	Gear 2 Incorrect Ratio	See V8 & V12 6-SPEED TRANSMISSION DIAGNOSIS (2004 - 6 OF 10).
P0733	20303	Gear 3 Incorrect Ratio	See V8 & V12 6-SPEED TRANSMISSION DIAGNOSIS (2004 - 6 OF 10).
P0734	20304	Gear 4 Incorrect Ratio	See V8 & V12 6-SPEED TRANSMISSION DIAGNOSIS (2004 - 6 OF 10).
P0735	20305	Gear 5 Incorrect Ratio	See V8 & V12 6-SPEED TRANSMISSION DIAGNOSIS (2004 - 6 OF 10).
P0736	.....	Gear Ratio Monitoring	See V8 & V12 6-SPEED TRANSMISSION DIAGNOSIS (2004 - 6 OF 10).
P0741	20307	Torque Converter Clutch Circuit Performance or Stuck Off	See V8 & V12 6-SPEED TRANSMISSION DIAGNOSIS (2004 - 5 OF 10).
P0745	20000	Pressure Control Solenoid "A"	See V8 & V12 6-SPEED TRANSMISSION DIAGNOSIS (2004 - 3 OF 10).
P0748	20000	Pressure Control Solenoid "A" Electrical	See V8 & V12 6-SPEED TRANSMISSION DIAGNOSIS (2004 - 3 OF 10).
P0751	20100	Shift Solenoid "A" Performance or Stuck Off	See V8 & V12 6-SPEED TRANSMISSION DIAGNOSIS (2004 - 4 OF 10).
P0753	20100	Shift Solenoid "A" Electrical	See V8 & V12 6-SPEED TRANSMISSION DIAGNOSIS (2004 - 4 OF 10).
P0756	20101	Shift Solenoid "B" Performance or Stuck Off	See V8 & V12 6-SPEED TRANSMISSION DIAGNOSIS (2004 - 5 OF 10).
P0758	20101	Shift Solenoid "B" Electrical	See V8 & V12 6-SPEED TRANSMISSION DIAGNOSIS (2004 - 4 OF 10).
P0775	20001	Pressure Control Solenoid "B"	See V8 & V12 6-SPEED TRANSMISSION DIAGNOSIS (2004 - 3 OF 10).
P0778	20001	Pressure Control Solenoid "B" Electrical	See V8 & V12 6-SPEED TRANSMISSION DIAGNOSIS (2004 - 3 OF

			10).
P0781	20311	1-2 Shift	See V8 & V12 6-SPEED TRANSMISSION DIAGNOSIS (2004 - 6 OF 10).
P0782	20312	2-3 Shift	See V8 & V12 6-SPEED TRANSMISSION DIAGNOSIS (2004 - 6 OF 10).
P0783	20313	3-4 Shift	See V8 & V12 6-SPEED TRANSMISSION DIAGNOSIS (2004 - 6 OF 10).
P0784	20314	4-5 Shift	See V8 & V12 6-SPEED TRANSMISSION DIAGNOSIS (2004 - 7 OF 10).
P0795	20002	Pressure Control Solenoid "C"	See V8 & V12 6-SPEED TRANSMISSION DIAGNOSIS (2004 - 3 OF 10).
P0798	20002	Pressure Control Solenoid "C" Electrical	See V8 & V12 6-SPEED TRANSMISSION DIAGNOSIS (2004 - 3 OF 10).
P0829	.....	Range Shift Monitoring	See V8 & V12 6-SPEED TRANSMISSION DIAGNOSIS (2004 - 3 OF 10).
P0962	.....	Pressure Regulator Valve	See V8 & V12 6-SPEED TRANSMISSION DIAGNOSIS (2004 - 3 OF 10).
P0963	.....	Pressure Regulator Valve	See V8 & V12 6-SPEED TRANSMISSION DIAGNOSIS (2004 - 3 OF 10).
P0966	.....	Pressure Regulator Valve	See V8 & V12 6-SPEED TRANSMISSION DIAGNOSIS (2004 - 3 OF 10).
P0967	.....	Pressure Regulator Valve	See V8 & V12 6-SPEED TRANSMISSION DIAGNOSIS (2004 - 3 OF 10).
P0970	.....	Pressure Regulator Valve	See V8 & V12 6-SPEED TRANSMISSION DIAGNOSIS (2004 - 3 OF 10).
P0971	.....	Pressure Regulator Valve	See V8 & V12 6-SPEED TRANSMISSION DIAGNOSIS (2004 - 3 OF 10).
P0973	.....	Solenoid Valve	See V8 & V12 6-SPEED TRANSMISSION

			DIAGNOSIS (2004 - 3 OF 10).
P0979	.....	Interlock Lower Threshold	See V8 & V12 6-SPEED TRANSMISSION DIAGNOSIS (2004 - 5 OF 10).
P0982	.....	Shiftlock Interruption Or Short To Ground	See V8 & V12 6-SPEED TRANSMISSION DIAGNOSIS (2004 - 5 OF 10).
P1720	20800	CAN Timeout Control Module	See V8 & V12 6-SPEED TRANSMISSION DIAGNOSIS (2004 - 8 OF 10).
P1721	20801	CAN Timeout ASC/DSC	See V8 & V12 6-SPEED TRANSMISSION DIAGNOSIS (2004 - 8 OF 10).
P1727	20903	CAN Engine Speed	See V8 & V12 6-SPEED TRANSMISSION DIAGNOSIS (2004 - 8 OF 10).
P1728	20336	Engine Overspeed Condition	See V8 & V12 6-SPEED TRANSMISSION DIAGNOSIS (2004 - 8 OF 10).
P1747	52999	CAN-Bus Monitoring	See V8 & V12 6-SPEED TRANSMISSION DIAGNOSIS (2004 - 9 OF 10) .
P1771	20901	CAN Torque Interface Plausibility	See V8 & V12 6-SPEED TRANSMISSION DIAGNOSIS (2004 - 8 OF 10).
P1790	20400	Internal Transmission Control Module Memory Checksum/EPROM Error	See V8 & V12 6-SPEED TRANSMISSION DIAGNOSIS (2004 - 10 OF 10).
P1791	20401	Internal Transmission Control Module Memory Checksum/EEPROM Error	See V8 & V12 6-SPEED TRANSMISSION DIAGNOSIS (2004 - 10 OF 10).
P1792	20402	Internal Transmission Control Module Watchdog Error	See V8 & V12 6-SPEED TRANSMISSION DIAGNOSIS (2004 - 9 OF 10).
P1793	20330	ETC Cut-Off due to Overtemperature Condition	See V8 & V12 6-SPEED TRANSMISSION DIAGNOSIS (2004 - 9 OF 10).
P1798	.....	EPROM Plausibility	See V8 & V12 6-SPEED TRANSMISSION DIAGNOSIS (2004 - 10 OF 10).
P1810	20200	Input/Turbine Speed Sensor	See V8 & V12 6-SPEED

		Circuit High	TRANSMISSION DIAGNOSIS (2004 - 1 OF 10).
P1811	20200	Input/Turbine Speed Sensor Circuit Low	See V8 & V12 6-SPEED TRANSMISSION DIAGNOSIS (2004 - 1 OF 10).
P1812	20201	Output Speed Sensor Circuit High Input	See V8 & V12 6-SPEED TRANSMISSION DIAGNOSIS (2004 - 2 OF 10).
P1813	20201	Output Speed Sensor Circuit Low Input	See V8 & V12 6-SPEED TRANSMISSION DIAGNOSIS (2004 - 2 OF 10).
P1814	20203	Output Speed Sensor Gradient Too High	See V8 & V12 6-SPEED TRANSMISSION DIAGNOSIS (2004 - 2 OF 10).
P1861	20316	2-1 Shift	See .V8 & V12 6-SPEED TRANSMISSION DIAGNOSIS (2004 - 3 OF 10)
P1862	20317	3-2 Shift	See V8 & V12 6-SPEED TRANSMISSION DIAGNOSIS (2004 - 3 OF 10).
P1863	20318	4-3 Shift	See V8 & V12 6-SPEED TRANSMISSION DIAGNOSIS (2004 - 3 OF 10).
P1864	20319	5-4 Shift	See V8 & V12 6-SPEED TRANSMISSION DIAGNOSIS (2004 - 3 OF 10).
P1865	20320	6-5 Shift	See V8 & V12 6-SPEED TRANSMISSION DIAGNOSIS (2004 - 8 OF 10).
P1881	20311	1-2 Shift Circuit High	See V8 & V12 6-SPEED TRANSMISSION DIAGNOSIS (2004 - 6 OF 10).
P1882	20312	2-3 Shift Circuit High	See V8 & V12 6-SPEED TRANSMISSION DIAGNOSIS (2004 - 6 OF 10).
P1883	20313	3-4 Shift Circuit High	See V8 & V12 6-SPEED TRANSMISSION DIAGNOSIS (2004 - 6 OF 10).
P1884	20314	4-5 Shift Circuit High	See V8 & V12 6-SPEED TRANSMISSION DIAGNOSIS (2004 - 7 OF 10).
P1885	20315	5-6 Shift Circuit High	See V8 & V12 6-SPEED

			TRANSMISSION DIAGNOSIS (2004 - 7 OF 10)
P1888	20337	CAN Timeout Instrument Pack during Operation Parking Interlock Emergency Release	See V8 & V12 6-SPEED TRANSMISSION DIAGNOSIS (2004 - 9 OF 10).
P1890	20500	System Voltage	See V8 & V12 6-SPEED TRANSMISSION DIAGNOSIS (2004 - 5 OF 10).
P1891	20500	System Voltage High Input	See V8 & V12 6-SPEED TRANSMISSION DIAGNOSIS (2004 - 5 OF 10).
P1892	20500	System Voltage Low Input	See V8 & V12 6-SPEED TRANSMISSION DIAGNOSIS (2004 - 5 OF 10).
P1893	20501	Supply Voltage Pressure Control Solenoid/Shift Solenoid Circuit High	See V8 & V12 6-SPEED TRANSMISSION DIAGNOSIS (2004 - 10 OF 10).
P1894	20501	Supply Voltage Pressure Control Solenoid/Shift Solenoid Circuit Low	See V8 & V12 6-SPEED TRANSMISSION DIAGNOSIS (2004 - 10 OF 10).
P1895	20501	Supply Voltage Pressure Control Solenoid/Shift Solenoid No Signal	See V8 & V12 6-SPEED TRANSMISSION DIAGNOSIS (2004 - 10 OF 10).
P1896	20501	Supply Voltage Pressure Control Solenoid/Shift Solenoid	See V8 & V12 6-SPEED TRANSMISSION DIAGNOSIS (2004 - 10 OF 10).
P1897	20502	Supply Voltage Sensors High Input	See V8 & V12 6-SPEED TRANSMISSION DIAGNOSIS (2004 - 10 OF 10).
P1898	20502	Supply Voltage Sensors Low Input	See V8 & V12 6-SPEED TRANSMISSION DIAGNOSIS (2004 - 10 OF 10).
P2713	.....	Pressure Regulator Valve	See V8 & V12 6-SPEED TRANSMISSION DIAGNOSIS (2004 - 3 OF 10).
P2716	.....	Pressure Regulator Valve	See V8 & V12 6-SPEED TRANSMISSION DIAGNOSIS (2004 - 3 OF 10).
P2721	.....	Pressure Regulator Valve	See V8 & V12 6-SPEED TRANSMISSION DIAGNOSIS (2004 - 3 OF 10).
P2722	.....	Pressure Regulator Valve	See V8 & V12 6-SPEED

			TRANSMISSION DIAGNOSIS (2004 - 3 OF 10).
P2725	.....	Pressure Regulator Valve	See V8 & V12 6-SPEED TRANSMISSION DIAGNOSIS (2004 - 3 OF 10).
P2729	.....	Pressure Regulator Valve	See V8 & V12 6-SPEED TRANSMISSION DIAGNOSIS (2004 - 3 OF 10).
P2730	.....	Pressure Regulator Valve	See V8 & V12 6-SPEED TRANSMISSION DIAGNOSIS (2004 - 3 OF 10).
P2759	.....	TCC Valve	See V8 & V12 6-SPEED TRANSMISSION DIAGNOSIS (2004 - 5 OF 10).
P2761	.....	TCC Valve	See V8 & V12 6-SPEED TRANSMISSION DIAGNOSIS (2004 - 5 OF 10).
P2763	.....	TCC Valve	See V8 & V12 6-SPEED TRANSMISSION DIAGNOSIS (2004 - 5 OF 10).
P2764	.....	TCC Valve	See V8 & V12 6-SPEED TRANSMISSION DIAGNOSIS (2004 - 5 OF 10).

V8 & V12 6-Speed Transmission Diagnosis (2004 - 1 Of 10)

Component/ System	Fault Code	Monitor Strategy Description	Malfunction Criteria	Threshold value	Secondary Parameter	Enable Conditions	Time Required	MIL Illum.
A/T 6HP26								
Turbine Speed Sensor (Input Speed NTU)	P1810	upper threshold	short circuit to supply	-	sensor supply	status OK	20 msec, cont.	two driving cycles
	P1811	lower threshold	interruption or short circuit to ground	-				
	P0715	plausibility	signal greater or lower than threshold	> 7700 rpm, < 20 rpm	sensor supply (NTU > 7700 rpm) sensor (NTU > 7700 rpm) sensor supply sensor engine speed output speed range position transmission condition	status OK no electr. error status OK no electr. error status OK, > 600 rpm status OK or substitute value, > 250 rpm status OK or substitute value friction-locked (forward or backward)	20 msec, cont.	two driving cycles
Output Speed Sensor	P0721	general	signal greater than threshold	>= 8400 rpm (default but variant-specific) or difference to converted wheel speed > 250 rpm	sensor supply sensor sensor supply sensor wheel speed	status OK no electr. error status OK no electr. error mean speed of driven wheels OK mean speed of non-driven wheels OK converted wheel speed >500rpm diff. of driven and non-driven wheels < 10 rpm	20 msec, cont.	two driving cycles

G00383781

Fig. 81: V8 & V12 6-Speed Transmission Diagnosis (2004 - 1 Of 10)
Courtesy of BMW OF NORTH AMERICA, INC.

V8 & V12 6-Speed Transmission Diagnosis (2004 - 2 Of 10)

Component/ System	Fault Code	Monitor Strategy Description	Malfunction Criteria	Threshold value	Secondary Parameter	Enable Conditions	Time Required	MIL Illum.
A/T 6HP26	P1812	upper threshold	short circuit to supply	-	sensor supply	status OK		
	P1813	lower threshold	interruption or short circuit to ground	-				
	P0720	plausibility	speed difference to wheel speed and turbine speed	> 250rpm > 200rpm	transmission condition shift flag turbine speed sensor supply wheel speed	friction locked backward or forward =0 (no shift) status OK status OK status OK		
	P1814	plausibility	negative gradient of signal > threshold	1000rpm / 10msec	transmission condition turbine speed sensor difference (converted output-speed, turbine-speed) or shift-flag	friction-locked (forward) status OK >200rpm =1	20 msec, cont.	two driving cycles
Oil-Temperature Sensor	P0711	general	short circuit in sensor	voltage at sensor-connectors between 2.3V and 2.7V			100 msec, continous	two driving cycles
	P0713	upper threshold	short circuit to supply	sensor-plus > 4.5V and sensor-minus > 0.5V				
	P0712	lower threshold	short circuit to ground	sensor-plus < 4.5V and sensor-minus < 0.5V				
	P0714	no signal	interruption	sensor-plus > 4.5V and sensor-minus < 0.5V				
	P0710	plausibility	gradient > threshold or deviation of oil-temp to TCU-temp	increase of +20°C / 100 msec OR diff(oil-temp, TCU-temp) >threshold threshold = tolerance between 25°C and 40°C	Input speed engine speed	> 400 rpm and status OK > 400 rpm and status OK		

G00383782

Fig. 82: V8 & V12 6-Speed Transmission Diagnosis (2004 - 2 Of 10)
Courtesy of BMW OF NORTH AMERICA, INC.

V8 & V12 6-Speed Transmission Diagnosis (2004 - 3 Of 10)

Component/ System	Fault Code	Monitor Strategy Description	Malfunction Criteria	Threshold value	Secondary Parameter	Enable Conditions	Time Required	MIL Illum.
A/T 6HP26								
Pressure Regulator Valves						*monitoring short-circuit to ground, supply or interruption*	10 msec, cont.	two driving cycles
	(1) P0962	lower threshold plausibility	interruption or short circuit to ground	-		activated		
	P0745	upper threshold no signal	current higher or lower than threshold	> 220mA (p-I)	low-side and high-side FET	> 9V		
	P0963		short circuit to supply	-	power supply	<= 1V		
	P0748		interruption	-	voltage-drop at FET	> 9V		
	(2) P0966	lower threshold plausibility	interruption or short circuit to ground	-	solenoid supply			
	P0775	upper threshold no signal	current higher or lower than threshold	< 730mA (p-1/I)		*monitoring current*		
	P0967		short circuit to supply	-		see above and		
	P0778	lower threshold plausibility	interruption	-	see above and	not 0% or not 100%		
	(3) P0970		interruption or short circuit to ground	-	desired PWM-Signal			
	P0795	upper threshold no signal	current higher or lower than threshold	> 220mA (p-I)				
	P0971		short circuit to supply	-				
	P0798	lower threshold plausibility	interruption	-				
	(4) P2720		interruption or short circuit to ground	-				
	P2713	upper threshold no signal	current higher or lower than threshold	< 730mA (p-1/I)				
	P2721		short circuit to supply	-				
	P2716	lower threshold plausibility	interruption	-				
	(5) P2729		interruption or short circuit to ground	-				
	P2722	upper threshold no signal	current higher or lower than threshold	no monitoring				
	P2730		short circuit to supply	-				
	P2725		interruption	-				

G00383783

Fig. 83: V8 & V12 6-Speed Transmission Diagnosis (2004 - 3 Of 10)
Courtesy of BMW OF NORTH AMERICA, INC.

V8 & V12 6-Speed Transmission Diagnosis (2004 - 4 Of 10)

Component/ System	Fault Code	Monitor Strategy Description	Malfunction Criteria	Threshold value	Secondary Parameter	Enable Conditions	Time Required	MIL Illum.
A/T 6HP26								
Solenoid Valves								
	(1) P0973	lower threshold	interruption or short circuit to ground	Diagnosis by ASIC if PWM-signal const. at 0%, 100% voltage return lead (low) < 0.15V voltage return lead (high) < 0.15V 0.15V < voltage return lead (low) < 0.8V	high-side FET high-side FET low-side FET	voltage drop <=1V enabled enabled	10 msec, cont.	two driving cycles
	P0753	upper threshold	short circuit to supply	Diagnosis by ASIC if PWM-signal const. at 0%, 100% voltage return lead (high) > 0.3V				
	P0751	no signal	interruption	Diagnosis by ASIC if PWM-signal const. at 0%, 100% 0.15V < voltage return lead (low) < 0.8V				
(only for "Shift by Wire")	(2) P0976	lower threshold	interruption or short circuit to ground	Diagnosis by ASIC if PWM-signal const. at 0%, 100% voltage return lead (low) < 0.15V voltage return lead (high) < 0.15V 0.15V < voltage return lead (low) < 0.8V				
	P0758	upper threshold	short circuit to supply	Diagnosis by ASIC if PWM-signal const. at 0%, 100% voltage return lead (high) > 0.3V				

G00383784

Fig. 84: V8 & V12 6-Speed Transmission Diagnosis (2004 - 4 Of 10)
Courtesy of BMW OF NORTH AMERICA, INC.

V8 & V12 6-Speed Transmission Diagnosis (2004 - 5 Of 10)

Component/ System	Fault Code	Monitor Strategy Description	Malfunction Criteria	Threshold value	Secondary Parameter	Enable Conditions	Time Required	MIL Illum.
A/T 6HP26	P0756	no signal	interruption	Diagnosis by ASIC if PWM-signal const. at 0%, 100% 0.15V < voltage return lead (low) < 0.8V				
(3) Interlock (for Shift by Lever) OR Parking-Lock-Actuator (for Shift by Wire)	P0979	lower threshold	interruption or short circuit to ground	Diagnosis only by ASIC due to on/off-controlling				
(4) Shiftlock	P0992	lower threshold	interruption or short circuit to ground	Diagnosis only by ASIC due to on/off-controlling				
Torque Converter Clutch (TCC)	P0741	general	diff(engine speed, input speed) > threshold over def. time	>diff.-speed=f(engine torque) engine torque[-50; 300]Nm; diff.-speed[25; 25]rpm > 30 sec	torque converter clutch	clutch not opened	10 msec, cont.	two driving cycles
(6) valve	P2764	lower threshold plausibility	interruption or short circuit to ground	-	low-side and high-side FET	activated	10 msec, cont.	two driving cycles
	P2761	upper threshold	current higher or lower than threshold	no monitoring	power supply	> 9V		
	P2763	no signal	short circuit to supply	-	voltage drop at FET	<= 1V		
	P2759		interruption	-	solenoid supply	> 9V		
Power Supply	P1891	upper threshold	battery voltage > threshold	>= 16V	engine speed	>= 400 rpm	10 msec, cont.	two driving cycles
					FET	enabled		
					Jump-Start	no		
	P1892	lower threshold	battery voltage < threshold	<= 7V	engine speed	>= 400 rpm		
					FET	enabled		
	P1890	general	battery voltage < threshold	< 9V	engine speed	>= 400 rpm and status OK		
					FET	enabled		

G00383785

Fig. 85: V8 & V12 6-Speed Transmission Diagnosis (2004 - 5 Of 10)
Courtesy of BMW OF NORTH AMERICA, INC.

V8 & V12 6-Speed Transmission Diagnosis (2004 - 6 Of 10)

Component/ System	Fault Code	Monitor Strategy Description	Malfunction Criteria	Threshold value	Secondary Parameter	Enable Conditions	Time Required	MIL Illum.
A/T 6HP26								
Gear Ratio Monitoring								
(1)	P0731	plausibility	|output speed x ratio – input speed| > threshold	> characteristic speed-difference=f(output speed)	transmission oil temperature	> 0°C	30 msec, cont.	two driving cycles
(2)	P0732	plausibility	|output speed x ratio – input speed| > threshold	output speed [0; 200; 6000] rpm	actual Range	1, 2, 3, 4, 5, 6		
(3)	P0733	plausibility	|output speed x ratio – input speed| > threshold	speed-difference [400; 200; 400] rpm	output speed	> 0 rpm		
(4)	P0734	plausibility	|output speed x ratio – input speed| > threshold		engine speed	> 400 rpm		
(5)	P0735	plausibility	|output speed x ratio – input speed| > threshold		input speed	> 0 rpm		
(6)	P0729	plausibility	|output speed x ratio – input speed| > threshold		input speed	status OK		
©	P0736	plausibility	|output speed x ratio – input speed| > threshold		Stand by Control SBC	inactive	30 msec, cont.	two driving cycles
Range Shift monitoring								
(1) →(2) A	P1881	upper threshold	(input speed – output speed x ratio) > threshold	>300rpm	output speed	> 300 rpm		
B	P0781	general	(input speed – output speed x ratio)(t) – (input speed – output speed x ratio)(t=0) < threshold	-30rpm < calc. value < 40rpm	transmission oil temperature engine speed range position	>= 0°C >= 600 rpm not P, R, N		
(2) →(3) A	P1882	upper threshold	(input speed – output speed x ratio) > threshold	>300rpm	output speed	> 300 rpm		
B	P0782	general	(input speed – output speed x ratio)(t) – (input speed – output speed x ratio)(t=0) > threshold	-30rpm < calc. value < 40rpm	transmission oil temperature engine speed range position	>= 0°C >= 600 rpm not P, R, N		
(3) →(4) A	P1883	upper threshold	(input speed – output speed x ratio) > threshold	>300rpm	output speed	>300rpm		
B	P0783	general	(input speed – output speed x ratio)(t) – (input speed – output speed x ratio)(t=0) > threshold	-30rpm < calc. value < 40rpm	transmission oil temperature engine speed range position	>=0°C >=600rpm not P, R, N		

G00383786

Fig. 86: V8 & V12 6-Speed Transmission Diagnosis (2004 - 6 Of 10)
Courtesy of BMW OF NORTH AMERICA, INC.

V8 & V12 6-Speed Transmission Diagnosis (2004 - 7 Of 10)

Component/ System	Fault Code	Monitor Strategy Description	Malfunction Criteria	Threshold value	Secondary Parameter	Enable Conditions	Time Required	MIL Illum.
A/T 6HP26								
(4) →(5) A	P1864	upper threshold	(input speed - output speed x ratio) > threshold	> 300 rpm	output speed	> 300 rpm		
B	P0784	general	(input speed - output speed x ratio)(t) - (input speed - output speed x ratio)(t=0) > threshold	-30 rpm < calc. value < 40 rpm	transmission oil temperature engine speed range position	>= 0°C >= 600 rpm not P, R, N		
(5) →(6) A	P1885	upper threshold	(input speed - output speed x ratio) > threshold	> 300 rpm	output speed	> 300 rpm		
B	P0829	general	(input speed - output speed x ratio)(t) - (input speed - output speed x ratio)(t=0) > threshold	-30 rpm < calc. value < 40 rpm	transmission oil temperature engine speed range position	>= 0°C >= 600 rpm not P, R, N		
(2) →(1) A	—	upper threshold	no monitoring		output speed	> 250 rpm	30msec, cont.	two driving cycles
B	P1861	general	(input speed - output speed x ratio)(t) - (input speed - output speed x ratio)(t=0) > threshold	-30 rpm < calc. value < 40 rpm	transmission oil temperature engine speed range position	>= 0°C >= 600 rpm not P, R, N		
(3) →(2) A	—	upper threshold	no monitoring		output speed	> 500 rpm		
B	P1862	general	(input speed - output speed x ratio)(t) - (input speed - output speed x ratio)(t=0) > threshold	-30 rpm < calc. value < 40 rpm	transmission oil temperature engine speed range position	>=0°C >= 600 rpm not P, R, N		
(4) →(3) A	—	upper threshold	no monitoring		output speed	> 700 rpm		
B	P1863	general	(input speed - output speed x ratio)(t) - (input speed - output speed x ratio)(t=0) > threshold	-30rpm < calc. value < 40rpm	transmission oil temperature engine speed range position	>= 0°C >= 600 rpm not P, R, N		
(5) →(4) A	—	upper threshold	no monitoring		output speed	> 800 rpm		
B	P1864	general	(input speed - output speed x ratio)(t) - (input speed - output speed x ratio)(t=0) > threshold	-30 rpm < calc. value < 40 rpm	transmission oil temperature engine speed range position	>= 0°C >= 600 rpm not P, R, N		

G00383787

Fig. 87: V8 & V12 6-Speed Transmission Diagnosis (2004 - 7 Of 10)
Courtesy of BMW OF NORTH AMERICA, INC.

V8 & V12 6-Speed Transmission Diagnosis (2004 - 8 Of 10)

Component/ System	Fault Code	Monitor Strategy Description	Malfunction Criteria	Threshold value	Secondary Parameter	Enable Conditions	Time Required	MIL Illum.
A/T 6HP26 (6) →(5) A	—	upper threshold	no monitoring		output speed	> 1100 rpm		
B	P1865	general	(input speed - output speed x ratio)(t) - (input speed - output speed x ratio)(t=0) > threshold	-30 rpm < calc. value < 40 rpm	transmission oil temperature engine speed range position	>= 0°C >= 600 rpm not P, R, N		
Engine Torque	P1771	plausibility	CAN-Message signal error-flag alive-counter or checksum	=1 no alteration of alive-counter or wrong Checksum	DME-CAN Connection CAN-Bus ignition	Status OK Status OK status on	50 msec, cont.	two driving cycles
Engine Overspeed	P1728	plausibility	engine speed	> 6500 rpm (default but variant-specific)	Range Position engine speed Park-Lock Sensor	not P, R, N, Z and status OK status OK or substitute value status OK	30 msec, cont.	two driving cycles
Timeout DME CAN-Connection	P1720	plausibility	CAN-Connection DME	Timeout	CAN-Bus TCM-CAN battery voltage	no Error and ready-to-transmit no transmission of wake-up signal >9V	20 msec, cont.	one driving cycle
Timeout DSC CAN-Connection	P1721	plausibility	CAN-Connection DSC	Timeout	CAN-Bus TCM-CAN battery voltage	no Error and ready-to-transmit no transmission of wake-up signal > 9V	20 msec, cont.	two driving cycles
Engine Speed Signal	P1727	plausibility	CAN-Message signal error-flag alive-counter or checksum	=1 no alteration of alive-counter or wrong Checksum	DME CAN-Connection ignition signal CAN-Bus	status OK on status OK	50 msec, cont.	two driving cycles

G00383788

Fig. 88: V8 & V12 6-Speed Transmission Diagnosis (2004 - 8 Of 10)
Courtesy of BMW OF NORTH AMERICA, INC.

V8 & V12 6-Speed Transmission Diagnosis (2004 - 9 Of 10)

Component/ System	Fault Code	Monitor Strategy Description	Malfunction Criteria	Threshold value	Secondary Parameter	Enable Conditions	Time Required	MIL Illum.
A/T 6HP26								
Range Position Switch	P0705	plausibility	Transmission Position Sensor	-	-	-	20 msec, cont.	two driving cycles
Range Position Switch	P1701	plausibility	Message Signal Error	-	-	-	20 msec, cont.	two driving cycles
(Driver's request / only "Shift by Wire") Manual Park-Lock disabling and Instrument-Pack Timeout (only "Shift by Wire")	P1888	plausibility	Manual Park-Lock Disabling Instrument Pack	Park-Lock disabled Timeout	none		20 msec, cont.	two driving cycles
CAN-Bus	P1747	plausibility	CAN-Bus disabled	-	ignition	Status on	20 msec, cont.	one driving cycles
Colliding Functions or not allowed actuating of valves (at detected Interruption or short-circuit to supply)	P1702	general	SW Functions actuating solenoid valves	colliding of 2 Substitute Functions same priority driven solenoid valves have short circuit to supply or interruption	none	-	20 msec, cont.	two driving cycles
Watch-Dog	P1792	general	error-counter	exceeding diff. thresholds	Status Counter	Initialization: 0 or 1	10 msec, cont. and in initialization	two driving cycles
TCM Hot Disabling	P1793	general	max(Chip-Temp. + 0°C, Trans.-Oil-Temp. - 10°C) > threshold=f(battery-voltage)	> characteristic voltage(10.4, 18.5, 19.5, 25, 25)V Temp(141, 121, 111, 61, 61)°C	filtered battery voltage none	>7V In operation: debug-mode deactivated	100 msec, cont. and in initialization	two driving cycles

G00383789

Fig. 89: V8 & V12 6-Speed Transmission Diagnosis (2004 - 9 Of 10)
Courtesy of BMW OF NORTH AMERICA, INC.

V8 & V12 6-Speed Transmission Diagnosis (2004 - 10 Of 10)

Component/ System	Fault Code	Monitor Strategy Description	Malfunction Criteria	Threshold value	Secondary Parameter	Enable Conditions	Time Required	MIL Illum.
A/T 6HP26								
Valve Voltage Supply	P1686	plausibility	FET drive	not possible	Status Counter	initialization: 0 or 1	10 msec, cont.	two driving cycles
	P1693	upper threshold	short circuit to supply	-	filtered battery voltage	> 7V	and in initialization	
	P1694	lower threshold	short-circuit to ground or sensor supply voltage < threshold or FET-drop-voltage > threshold	sensor supply <0,5V, drop-voltage>1V	high-side and low-side-FET battery voltage	in operation: enabled > 7V		
	P1695	no signal	interruption	-				
Sensor Voltage Supply	P1697	upper threshold	sensor supply Voltage > threshold	>8V	battery-voltage	> 6,05V	20 msec, cont.	two driving cycles
	P1698	lower threshold	sensor supply Voltage < threshold	<5,42V				
EEPROM	P1791	plausibility	Checksum Error	=1	none	-	20 msec, cont.	one driving cycle
EPROM	P1790	plausibility	Checksum Error	=1	none	-	10 msec, cont.	two driving cycles
Chip-Temp	P1798	plausibility	SW-Verify-Error due to Update of EEPROM-Emulation	=1	none	-		
	P0668	upper threshold	sensor supply Voltage >threshold	> 4,95V	none	-	100 msec, cont.	two driving cycles
	P0669	lower threshold	sensor supply Voltage <threshold	< 0,1V	none	-		

G00383790

Fig. 90: V8 & V12 6-Speed Transmission Diagnosis (2004 - 10 Of 10)
Courtesy of BMW OF NORTH AMERICA, INC.

DIAGNOSTIC TROUBLE CODES V12 TRANSMISSION (1996)

DIAGNOSTIC TROUBLE CODES V12 TRANSMISSION (1996)

PCode	BMW Code	Possible Cause	Diagnostic Parameters
P0705	8	Transmission Range Sensor "A" Circuit Malfunction (PRNDL Input)	See V12 TRANSMISSION DIAGNOSIS (1996).
P0715	16	Input/Turbine Speed Sensor "A" Circuit	See V12 TRANSMISSION DIAGNOSIS (1996).

P0720	42	Output Speed Sensor Circuit	See V12 TRANSMISSION DIAGNOSIS (1996).
P0730	100	Incorrect Gear Ratio	See V12 TRANSMISSION DIAGNOSIS (1996).
P0730	102	Incorrect Gear Ratio	See V12 TRANSMISSION DIAGNOSIS (1996).
P0735	101	Gear 5 Incorrect Ratio	See V12 TRANSMISSION DIAGNOSIS (1996).
P0740	111	Torque Converter Clutch Circuit/Open	See V12 TRANSMISSION DIAGNOSIS (1996).
P0743	4	Torque Converter Clutch Circuit Electrical	See V12 TRANSMISSION DIAGNOSIS (1996).
P0748	5	Pressure Control Solenoid "A" Electrical	See V12 TRANSMISSION DIAGNOSIS (1996).
P0753	30	Shift Solenoid "A" Electrical	See V12 TRANSMISSION DIAGNOSIS (1996).
P0758	33	Shift Solenoid "B" Electrical	See V12 TRANSMISSION DIAGNOSIS (1996).
P0763	32	Shift Solenoid "C" Electrical	See V12 TRANSMISSION DIAGNOSIS (1996).
P1734	1	Pressure Control Solenoid "B" Electrical	SeeV12 TRANSMISSION DIAGNOSIS (1996).
P1738	29	Pressure Control Solenoid "C" Electrical	See V12 TRANSMISSION DIAGNOSIS (1996).
P1743	51	Pressure Control Solenoid "E" Electrical	See V12 TRANSMISSION DIAGNOSIS (1996).
P1746	104	Transmission Control Module Output Stage	See V12 TRANSMISSION DIAGNOSIS (1996).
P1747	150	CAN-Bus Monitoring	See V12 TRANSMISSION DIAGNOSIS (1996).
P1747	151	CAN-Bus Monitoring	See V12 TRANSMISSION DIAGNOSIS (1996).
P1747	156	CAN-Bus Monitoring	See V12 TRANSMISSION DIAGNOSIS (1996).
P1748	103	Transmission Control Module Self-Test	See V12 TRANSMISSION DIAGNOSIS (1996).
P1748	105	Transmission Control Module Self-Test	See V12 TRANSMISSION DIAGNOSIS (1996).
P1748	110	Transmission Control Module Self-Test	See V12 TRANSMISSION DIAGNOSIS (1996).
P1750	54	Secondary Pressure Solenoid Circuit Range/Performance	See V12 TRANSMISSION DIAGNOSIS (1996).
P1761	2	Shiftlock Solenoid	See V12 TRANSMISSION DIAGNOSIS (1996).

V12 Transmission Diagnosis (1996)

System/Component	Fault Code Management					Monitoring Method	Type of Signal
	Fault Code	pl	sg	mn	mx		
Transmission Control Modul (EGS)							
CAN	P 1747	x	x			CAN Bus-check	E
EGS	P 1748	x				EPROM check-sum	
EGS Relay	P 1746		x			final stage check	B
Power Supply Voltage	P 1750		x				
Transmission Range	P 0705	x	x				
Input Speed	P 0715	x	x			plausibility/	E
Output Speed	P 0720	x	x			check circuit continuity	C
Incorrect Gear Ratio 1/4	P 0730	x	x				
Gear 5 incorrect Ratio	P 0735	x	x				
Torque Converter Clutch	P 0743		x	x	x		
	P 0740	x					
Pressure Control Solenoid	P 0748		x	x	x		
Shift Solenoid A	P 0753		x	x	x		
B	P 0758		x	x	x	check circuit continuity	C
C	P 0763		x	x	x		
Pressure Control Valve 2	P 1734		x	x	x		
Pressure Control Valve 3	P 1738		x	x	x		
Pressure Control Valve 4	P 1743		x	x	x		

G00383791

Fig. 91: V12 Transmission Diagnosis (1996)
Courtesy of BMW OF NORTH AMERICA, INC.

DIAGNOSTIC TROUBLE CODES V12 TRANSMISSION (1997)

DIAGNOSTIC TROUBLE CODES V12 TRANSMISSION (1997)

PCode	BMW Code	Possible Cause	Diagnostic Parameters
P0705	8	Transmission Range Sensor "A" Circuit Malfunction (PRNDL Input)	See V12 TRANSMISSION DIAGNOSIS (1997).
P0715	16	Input/Turbine Speed Sensor "A" Circuit	See V12 TRANSMISSION DIAGNOSIS (1997).
P0720	42	Output Speed Sensor Circuit	See V12 TRANSMISSION DIAGNOSIS (1997).
P0732	100	Gear 2 Incorrect Ratio	See V12 TRANSMISSION DIAGNOSIS (1997).
P0733	100	Gear 3 Incorrect Ratio	See V12 TRANSMISSION DIAGNOSIS (1997).
P0734	100	Gear 4 Incorrect Ratio	See V12 TRANSMISSION DIAGNOSIS (1997).
P0735	101	Gear 5 Incorrect Ratio	See V12 TRANSMISSION DIAGNOSIS (1997).
P0740	111	Torque Converter Clutch Circuit/Open	See V12 TRANSMISSION DIAGNOSIS (1997).
P0743	4	Torque Converter Clutch Circuit Electrical	See V12 TRANSMISSION DIAGNOSIS (1997).
P0748	5	Pressure Control Solenoid "A" Electrical	See V12 TRANSMISSION DIAGNOSIS (1997).
P0753	30	Shift Solenoid "A" Electrical	See V12 TRANSMISSION DIAGNOSIS (1997).
P0758	33	Shift Solenoid "B" Electrical	See V12 TRANSMISSION

			DIAGNOSIS (1997).
P0763	32	Shift Solenoid "C" Electrical	See V12 TRANSMISSION DIAGNOSIS (1997).
P1734	1	Pressure Control Solenoid "B" Electrical	See V12 TRANSMISSION DIAGNOSIS (1997).
P1738	29	Pressure Control Solenoid "C" Electrical	See V12 TRANSMISSION DIAGNOSIS (1997).
P1743	51	Pressure Control Solenoid "E" Electrical	See V12 TRANSMISSION DIAGNOSIS (1997).
P1746	104	Transmission Control Module Output Stage	See V12 TRANSMISSION DIAGNOSIS (1997).
P1747	150	CAN-Bus Monitoring	See V12 TRANSMISSION DIAGNOSIS (1997).
P1747	151	CAN-Bus Monitoring	See V12 TRANSMISSION DIAGNOSIS (1997).
P1747	156	CAN-Bus Monitoring	See V12 TRANSMISSION DIAGNOSIS (1997).
P1748	103	Transmission Control Module Self-Test	See V12 TRANSMISSION DIAGNOSIS (1997).
P1748	105	Transmission Control Module Self-Test	See V12 TRANSMISSION DIAGNOSIS (1997).
P1748	110	Transmission Control Module Self-Test	See V12 TRANSMISSION DIAGNOSIS (1997).
P1750	54	Secondary Pressure Solenoid Circuit Range/Performance	See V12 TRANSMISSION DIAGNOSIS (1997).

V12 Transmission Diagnosis (1997)

Component/ System	Fault Code	Monitor Strategy Description	Malfunction Criteria	Threshold value	Secondary Parameter	Enable Conditions	Time Required	MIL Illum.
A/T Range Switch	P0705	circuit continuity rationality	voltage unvalid code for P and N	no signal/multiple signal	engine speed	200 < rpm < 440	200 msec/ once per engine start up	two driving cycles
Input Speed	P0715	rationality	input speed	no signal	gear selected engine speed output speed	1,2,3,4 or 5 > 600 rpm > 250 rpm	200 msec/ continuous	two driving cycles
Output Speed	P0720	rationality	output speed	no signal	gear selected engine speed	1,2,3,4 or 5 > 1700 rpm	200 msec/ continuous	two driving cycles
Gear Ratio (2) to (5)	P0732 to P0735	rationality	input - output speed / (gear ratio)	> 350 rpm	shift occurs input speed output speed	1>2/2>3/3>4/4>5 > 420 rpm > 250 rpm	200 msec/ continuous	two driving cycles
Torque Converter Clutch	P0743	circuit continuity	voltage				100 msec/ continuous	two driving cycles
	P0740	functional check	eng. speed - input speed (maximum slip)	> 100 rpm	gear selected	3, 4 or 5	2,5 sec/ once per lock	
Pressure Control Solenoid	P0748	circuit continuity	voltage				100 msec/ continuous	two driving cycles
Shift Solenoid A B C	P0753 P0758 P0763	circuit continuity	voltage				30 msec/ continuous	two driving cycles
Pres. Control Valve 2 3 4	P1734 P1738 P1743	circuit continuity	voltage				100 msec/ continuous	two driving cycles
Transmission Control Modul (TCM)	P1747	bus check	CAN massages/time out	> 500 msec			immediately/cont.	two driving cycles
	P1748	self check	RAM and ROM check watchdog	invalid check-sum on	at power up		90 sec 120 msec/cont.	
Relay	P1745	functional check	timing (response)	delay time			100 msec/once after system start	
Power Supply	P1750	rationality	battery voltage	< 9 V	engine speed	> 1600 rpm	300 msec/cont.	

G00383792

Fig. 92: V12 Transmission Diagnosis (1997)
Courtesy of BMW OF NORTH AMERICA, INC.

DIAGNOSTIC TROUBLE CODES V12 TRANSMISSION (1998-2000)

DIAGNOSTIC TROUBLE CODES V12 TRANSMISSION (1998-2000)

PCode	BMW Code	Possible Cause	Diagnostic Parameters
P0705	8	Transmission Range Sensor "A" Circuit Malfunction (PRNDL Input)	See V12 TRANSMISSION DIAGNOSIS (1998-2000).
P0715	16	Input/Turbine Speed Sensor "A" Circuit	See V12 TRANSMISSION DIAGNOSIS (1998-2000).

P0720	42	Output Speed Sensor Circuit	See V12 TRANSMISSION DIAGNOSIS (1998-2000).
P0732	100	Gear 2 Incorrect Ratio	See V12 TRANSMISSION DIAGNOSIS (1998-2000).
P0733	100	Gear 3 Incorrect Ratio	See V12 TRANSMISSION DIAGNOSIS (1998-2000).
P0734	100	Gear 4 Incorrect Ratio	See V12 TRANSMISSION DIAGNOSIS (1998-2000).
P0735	101	Gear 5 Incorrect Ratio	See V12 TRANSMISSION DIAGNOSIS (1998-2000).
P0740	111	Torque Converter Clutch Circuit/Open	See V12 TRANSMISSION DIAGNOSIS (1998-2000).
P0743	4	Torque Converter Clutch Circuit Electrical	See V12 TRANSMISSION DIAGNOSIS (1998-2000).
P0748	5	Pressure Control Solenoid "A" Electrical	See V12 TRANSMISSION DIAGNOSIS (1998-2000).
P0753	30	Shift Solenoid "A" Electrical	See V12 TRANSMISSION DIAGNOSIS (1998-2000).
P0758	33	Shift Solenoid "B" Electrical	See V12 TRANSMISSION DIAGNOSIS (1998-2000).
P0763	32	Shift Solenoid "C" Electrical	See V12 TRANSMISSION DIAGNOSIS (1998-2000).
P1734	1	Pressure Control Solenoid "B" Electrical	See V12 TRANSMISSION DIAGNOSIS (1998-2000).
P1738	29	Pressure Control Solenoid "C" Electrical	See V12 TRANSMISSION DIAGNOSIS (1998-2000).
P1743	51	Pressure Control Solenoid "E" Electrical	See V12 TRANSMISSION DIAGNOSIS (1998-2000).
P1746	104	Transmission Control Module Output Stage	See V12 TRANSMISSION DIAGNOSIS (1998-2000).
P1747	150	CAN-Bus Monitoring	See V12 TRANSMISSION DIAGNOSIS (1998-2000).
P1747	151	CAN-Bus Monitoring	See V12 TRANSMISSION DIAGNOSIS (1998-2000).
P1747	156	CAN-Bus Monitoring	See V12 TRANSMISSION DIAGNOSIS (1998-2000).
P1748	103	Transmission Control Module Self-Test	See V12 TRANSMISSION DIAGNOSIS (1998-2000).
P1748	105	Transmission Control Module Self-Test	See V12 TRANSMISSION DIAGNOSIS (1998-2000).
P1748	110	Transmission Control Module Self-Test	See V12 TRANSMISSION DIAGNOSIS (1998-2000).
P1750	54	Secondary Pressure Solenoid Circuit Range/Performance	See V12 TRANSMISSION DIAGNOSIS (1998-2000).
P1761	.....	Transmission Control Module	See V12 TRANSMISSION DIAGNOSIS (1998-2000).
P1765	.....	Transmission Control Module	See V12 TRANSMISSION DIAGNOSIS (1998-2000).

V12 Transmission Diagnosis (1998-2000)

Component/ System	Fault Code	Monitor Strategy Description	Malfunction Criteria	Threshold value	Secondary Parameter	Enable Conditions	Time Required	MIL Illum.
A/T								
Range Switch	P0705	circuit continuity rationality	voltage unvalid code for P and N	no signal/multiple signal	engine speed	200 < rpm < 440	200 msec/ once per engine start up	
Input Speed	P0715	rationality	input speed	no signal	gear selected output speed	1,2,3,4 or 5 > 600 rpm > 200 rpm	200 msec/ continuous	
Output Speed	P0720	rationality	output speed	no signal	wheel speed	> 400 rpm	250 msec/cont.	
			input speed	> 1700 rpm	gear selected output speed	1,2,3,4 or 5 < 160 rpm	200 msec/cont.	
Gear Ratio	P0732 to P0735	rationality	input - output speed f (gear ratio)	> 400 rpm	gear selected input speed output speed	2,3,4,5 > 400 rpm > 250 rpm	10 msec/ continuous	two driving cycles
Torque Converter Clutch	P0740	functional check	eng. speed - input speed (maximum slip)	> 80 rpm	gear selected	3, 4 or 5	70 msec/ once per lock	
Press. Contr. Valve	P0743	circuit continuity	voltage				2,5 sec/	
Press. Cont. Solenoid	P0748	circuit continuity	voltage				70 msec/cont.	
Pressure Control (2) Valves (3) (4)	P1734 P1738 P1743	circuit continuity	voltage				50 msec/cont. 50 msec/cont. 70 msec/cont.	
Shift Solenoid (A) (B) (C)	P0753 P0758 P0763	circuit continuity	voltage				50 msec/cont. 50 msec/cont. 70 msec/cont.	
Power Supply	P1750	rationality	battery voltage	< 9 V	engine speed	> 1400 rpm	300 msec/cont.	
Transmission Control Modul	P1746	functional check	voltage				30 msec/once after system start	two driving cycles
	P1747	bus check	CAN messages/time out	> 700 msec	battery voltage	> 10V	immediately/cont.	
	P1748	self check	RAM and ROM check	invalid check-sum on	at power up		90 sec	
		rationality	engine speed	> 6300 rpm	gear selected	1, 2, 3, 4, 5	200 msec/cont.	
			check sum				100 msec/cont.	
	P1761	circuit continuity	voltage				70 msec/cont.	
	P1765	rationality	CAN (throttle position)	signal range/performance			400 msec/cont.	

G00383793

Fig. 93: V12 Transmission Diagnosis (1998-2000)
Courtesy of BMW OF NORTH AMERICA, INC.

DIAGNOSTIC TROUBLE CODES V12 TRANSMISSION (2001)

DIAGNOSTIC TROUBLE CODES V12 TRANSMISSION (2001)

PCode	BMW Code	Possible Cause	Diagnostic Parameters
P0560	96	System Voltage	See V12 TRANSMISSION DIAGNOSIS (2001).
P0600	144	Serial Communication Link	See V12 TRANSMISSION DIAGNOSIS (2001).
P0603	81	Internal Control Module Keep	See V12 TRANSMISSION

		Alive Memory (KAM) Error	DIAGNOSIS (2001).
P0606	82	ECM/PCM Processor	See V12 TRANSMISSION DIAGNOSIS (2001).
P0705	60	Transmission Range Sensor "A" Circuit Malfunction (PRNDL Input)	See V12 TRANSMISSION DIAGNOSIS (2001)
P0715	33	Input/Turbine Speed Sensor "A" Circuit	See V12 TRANSMISSION DIAGNOSIS (2001).
P0720	59	Output Speed Sensor Circuit	See V12 TRANSMISSION DIAGNOSIS (2001).
P0731	50	Gear 1 Incorrect Ratio	See V12 TRANSMISSION DIAGNOSIS (2001).
P0731	51	Gear 1 Incorrect Ratio	See V12 TRANSMISSION DIAGNOSIS (2001).
P0732	52	Gear 2 Incorrect Ratio	See V12 TRANSMISSION DIAGNOSIS (2001).
P0733	53	Gear 3 Incorrect Ratio	See V12 TRANSMISSION DIAGNOSIS (2001).
P0734	54	Gear 4 Incorrect Ratio	See V12 TRANSMISSION DIAGNOSIS (2001).
P0735	55	Gear 5 Incorrect Ratio	See V12 TRANSMISSION DIAGNOSIS (2001).
P0735	64	Gear 5 Incorrect Ratio	See V12 TRANSMISSION DIAGNOSIS (2001).
P0741	48	Torque Converter Clutch Circuit Performance or Stuck Off	See V12 TRANSMISSION DIAGNOSIS (2001).
P0743	4	Torque Converter Clutch Circuit Electrical	See V12 TRANSMISSION DIAGNOSIS (2001).
P0748	1	Pressure Control Solenoid "A" Electrical	See V12 TRANSMISSION DIAGNOSIS (2001).
P0753	16	Shift Solenoid "A" Electrical	See V12 TRANSMISSION DIAGNOSIS (2001).
P0758	17	Shift Solenoid "B" Electrical	See V12 TRANSMISSION DIAGNOSIS (2001).
P0763	18	Shift Solenoid "C" Electrical	See V12 TRANSMISSION DIAGNOSIS (2001).
P0778	2	Pressure Control Solenoid "B" Electrical	See V12 TRANSMISSION DIAGNOSIS (2001).
P0798	3	Pressure Control Solenoid "C" Electrical	See V12 TRANSMISSION DIAGNOSIS (2001).
P1743	5	Pressure Control Solenoid "E" Electrical	See V12 TRANSMISSION DIAGNOSIS (2001).
P1746	83	Transmission Control Module Output Stage	See V12 TRANSMISSION DIAGNOSIS (2001).
P1747	128	CAN-Bus Monitoring	See V12 TRANSMISSION DIAGNOSIS (2001).
P1748	15	Transmission Control Module Self-Test	See V12 TRANSMISSION DIAGNOSIS (2001).
P1765	147	CAN Throttle Valve	See V12 TRANSMISSION DIAGNOSIS (2001).

V12 Transmission Diagnosis (2001)

G00383794

Component/ System	Fault Code	Monitor Strategy Description	Malfunction Criteria	Threshold value	Secondary Parameter	Enable Conditions	Time Required	MIL Illum.
A/T								
Range Switch	P0705	circuit continuity rationality	voltage unvalid code for P and N	no signal/multiple signal	engine speed	200 < rpm < 440	200 msec/ once per engine start up	
Input Speed	P0715	rationality	input speed	no signal	gear selected engine speed output speed	1,2,3,4 or 5 > 600 rpm > 200 rpm	200 msec/ continuous	
Output Speed	P0720	rationality	output speed	no signal	wheel speed	> 400 rpm	250 msec/cont.	
			input speed	> 1700 rpm	gear selected output speed	1,2,3,4 or 5 < 160 rpm	200 msec/cont.	
Gear Ratio	P0731/0732/ P0733/0734/ P0735	rationality	input - output speed f (gear ratio)	> 400 rpm	gear selected input speed output speed	1,2,3,4,5 > 400 rpm > 250 rpm	10 msec/ continuous	
Torque Converter Clutch	P0741	functional check	eng. speed - input speed (maximum slip)	> 80 rpm	gear selected	3, 4 or 5	70 msec/ once per lock	two driving cycles
Press. Contr. Valve	P0743	circuit continuity	voltage				2,5 sec/	
Press. Cont. Solenoid	P0748	circuit continuity	voltage				70 msec/cont.	
Pressure Control (2) Valves (3) (4)	P0778 P0798 P1743		voltage				50 msec/cont. 50 msec/cont. 70 msec/cont.	
Shift Solenoid (A) (B) (C)	P0753 P0758 P0763	circuit continuity	voltage				50 msec/cont. 50 msec/cont. 70 msec/cont.	
Power Supply	P0560	rationality	battery voltage	< 9 V	engine speed	> 1400 rpm	300 msec/cont.	
Transmission Control Modul	P1746	functional check	voltage				30 msec/once after system start	two driving cycles
	P1747		CAN-bus check					
	P0600	bus check	CAN messages/time out	> 700 msec	battery voltage	> 10V	immediately/cont.	
	P0603/0606	self check	RAM and ROM check	invalid check-sum on	at power up		90 sec	
	P1748	rationality	engine speed	> 6300 rpm	gear selected	1, 2, 3, 4, 5	200 msec/cont.	
			check sum				100 msec/cont.	
	P1765	rationality	(CAN messages) throttle position	signal range/ performance			400 msec/cont.	

Fig. 94: V12 Transmission Diagnosis (2001)
Courtesy of BMW OF NORTH AMERICA, INC.

PEDALS MOUNTING BLOCK

35 11 PEDAL ASSEMBLY CONSOLE

PEDAL ASSEMBLY CONSOLE - TIGHTENING TORQUE SPECIFICATIONS

Application	Type	Thread	Tightening Specification	Measure
1AZ Bearing pedestal to brake assembly and body	E38, E39, E52	Â	Â	31 Nm
Â	E36, E46	Â	Â	25 Nm
Â	E53, E65, E66, E67, E60, E61, E63, E64, E83	Â	Retighten 1x on brake booster after 30 min.	26 Nm
Â	E85	M8	Retighten 1x on brake booster after 30 min	22 Nm
2AZ Bracket to bearing block	E85	M6	Â	9 Nm

BRAKE PEDAL AND LINKAGE

35 21 BRAKE PEDAL AND LINKAGE

BRAKE PEDAL AND LINKAGE - TIGHTENING TORQUE SPECIFICATIONS

Application	Type	Measure
1AZ Piston rod lock nut	All	27 Nm
2AZ Nut on shaft	All	27 Nm
3AZ Pull rod Nut for pivot	All	27 Nm
4AZ Left and right reversing lever Nut on shaft bolt	All	27 Nm
5AZ Support to console Brake booster	All	22 Nm
6AZ Support to console Reversing lever	All	27 Nm

CLUTCH PEDAL AND LINKAGE

35 31 CLUTCH PEDAL AND LINKAGE

CLUTCH PEDAL AND LINKAGE - TIGHTENING TORQUE SPECIFICATIONS

Application	Type	Measure
1AZ Piston rod lock nut	All	6 Nm
2AZ Spring lock nut	All	6 Nm
3AZ Piston rod shaft bolt	All	22 Nm
5AZ Bearing pin, spring pedal	All	22 Nm
6AZ Clutch pedal Nut on eccentric bolt	All	22 Nm

ACCELERATOR PEDAL

34 41 PARKING BRAKE

PARKING BRAKE - TIGHTENING TORQUE SPECIFICATIONS

Application	Type	Thread	Measure

1AZ Handbrake lever to body	E52, E53, E60, E61, E63, E64	Â	21 Nm
2AZ Housing cover to parking brake	E65, E66, E67	Â	2 Nm
3AZ Actuating unit and control unit of parking brake	E65, E66, E67	Â	4 Nm
4AZ Mounting pan to tunnel	E85	M6	8 Nm
5AZ Spring clip to wheel carrier	E60, E61, E63, E64	M6	8 Nm
6AZ Support Duo-Servo to wheel carrier, rear	E60, E61, E63, E64	M10	60 Nm

35 11 PEDAL ASSEMBLY CONSOLE

PEDAL ASSEMBLY CONSOLE - TIGHTENING TORQUE SPECIFICATIONS

Application	Type	Thread	Tightening Specification	Measure
1AZ Bearing pedestal to brake assembly and body	E38, E39, E52	Â	Â	31 Nm
Â	E36, E46	Â	Â	25 Nm
Â	E53, E65, E66, E67, E60, E61, E63, E64, E83	Â	Retighten 1x on brake booster after 30 min.	26 Nm
Â	E85	M8	Retighten 1x on brake booster after 30 min	22 Nm
2AZ Bracket to bearing block	E85	M6	Â	9 Nm

35 40 PEDALS

PEDALS - TIGHTENING TORQUE SPECIFICATIONS

Application	Type	Thread	Measure
1AZ Accelerator pedal module to body	All	Â	19 Nm
Â	E65, E66, E83, E85	M6	9 Nm
Â	E60, E61, E63, E64, E67	M6	8 Nm

KICK - DOWN

35 41 ACCELERATOR PEDAL AND LINKAGE

ACCELERATOR PEDAL AND LINKAGE - TIGHTENING TORQUE SPECIFICATIONS

Application	Type	Measure
1AZ Accelerator travel stop	All	10 Nm

Article GUID: A00202657

GENERAL

35 00... PEDAL ASSEMBLY

Inspection dimensions for gaps beside pedal:

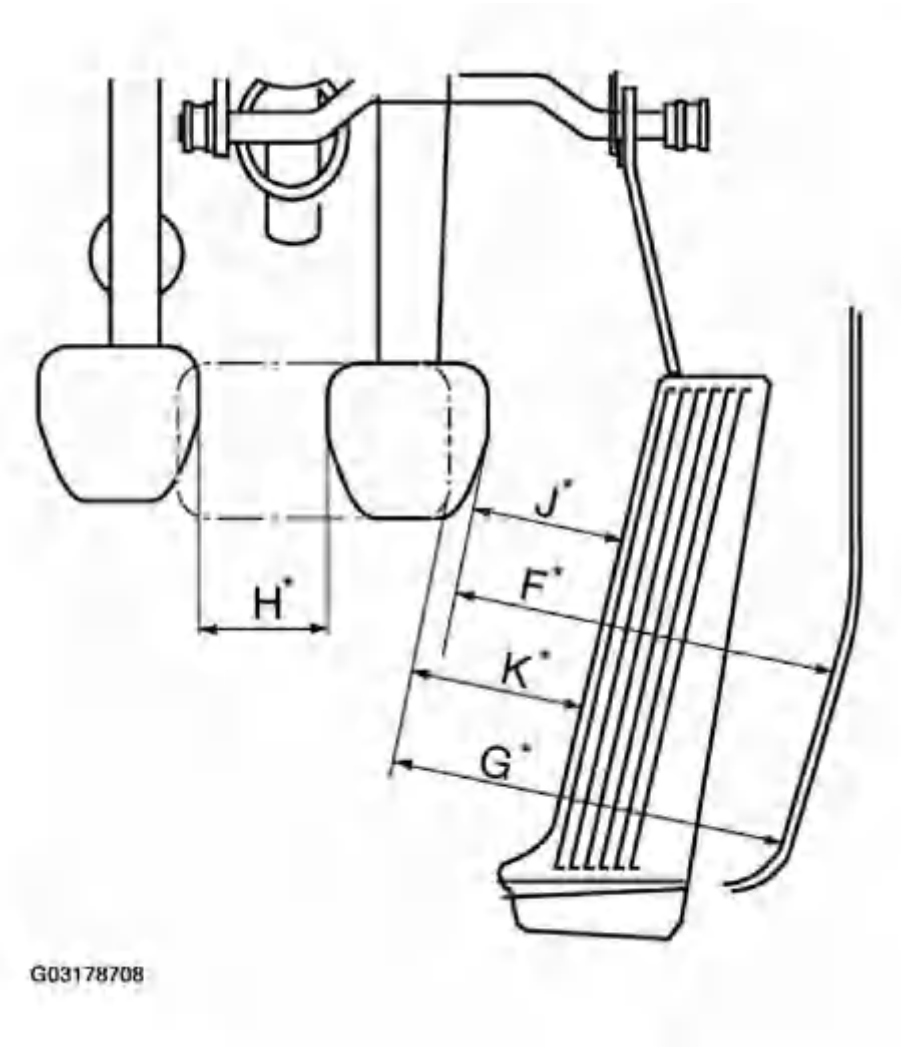

Fig. 1: Identifying Dimensions For Pedal Gaps
Courtesy of BMW OF NORTH AMERICA, INC.

Dimension H, J, K, F, G, refer to 35 00 REAR AXLE IN GENERAL E36 .

Inspection dimension (B) from underside of pedal to face wall for:

Clutch pedal (dimension B), refer to 35 31 CLUTCH PEDAL AND LINKAGES E36 .

Brake pedal (dimension A), refer to 35 21 BRAKE PEDAL AND LINKAGES E36 .

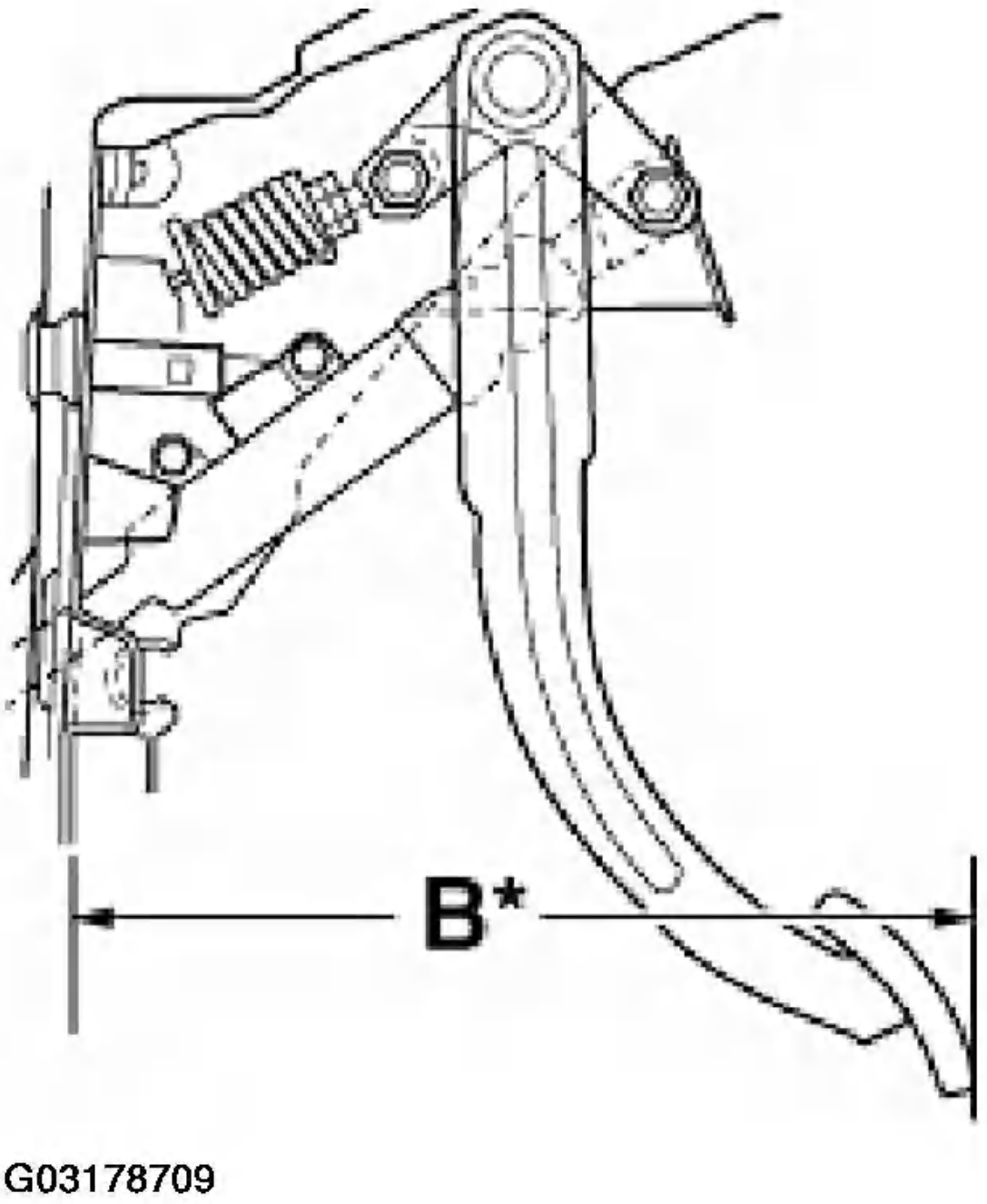

Fig. 2: Identifying Dimension B (Underside Of Pedal To Face Wall)
Courtesy of BMW OF NORTH AMERICA, INC.

Inspection dimension (C) for accelerator pedal, refer to 35 41 ACCELERATOR PEDAL AND LINKAGES E36 .

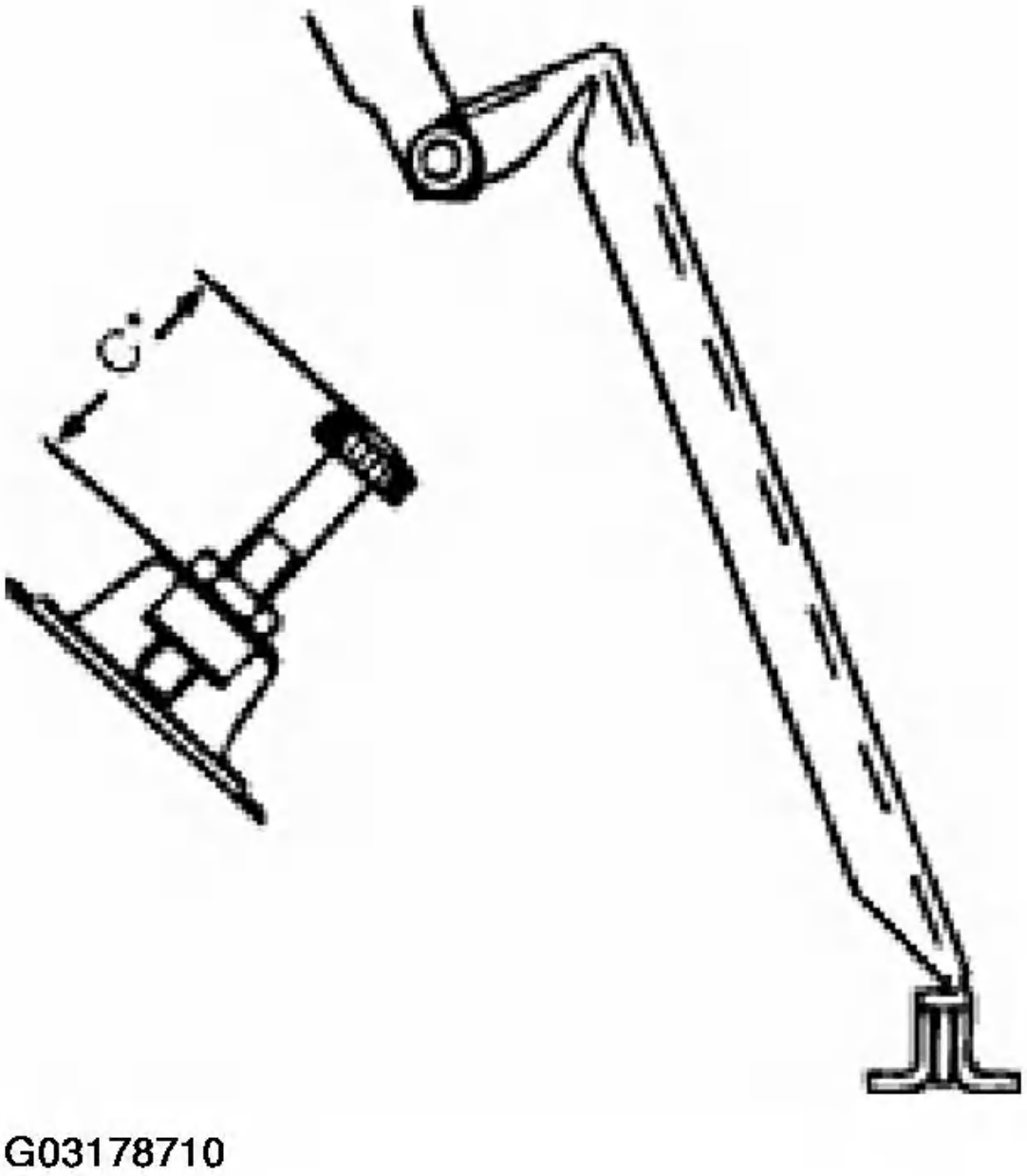

Fig. 3: Identifying Dimension C (Accelerator Pedal)
Courtesy of BMW OF NORTH AMERICA, INC.

PEDAL MOUNTING BLOCK

35 11 000 REMOVING AND INSTALLING MOUNTING BLOCK FOR PEDALS

NOTE: Remove and install panel for instrument panel, refer to 51 45 180 REMOVING AND INSTALLING/REPLACING TRIM FOR INSTRUMENT PANEL, BOTTOM LEFT (Z3 ROADSTER, M ROADSTER, Z3 COUPE, M COUPE) . Remove brake light switch, if necessary remove clutch switch, refer to 61 31 310 REPLACING BRAKE-LIGHT SWITCH .

Unscrew and pull out screws (1 and 3). Take off holder for brake-light and clutch switches.

Place clutch cylinder to one side.

Installation:

Replace self-locking nut of screw (1).

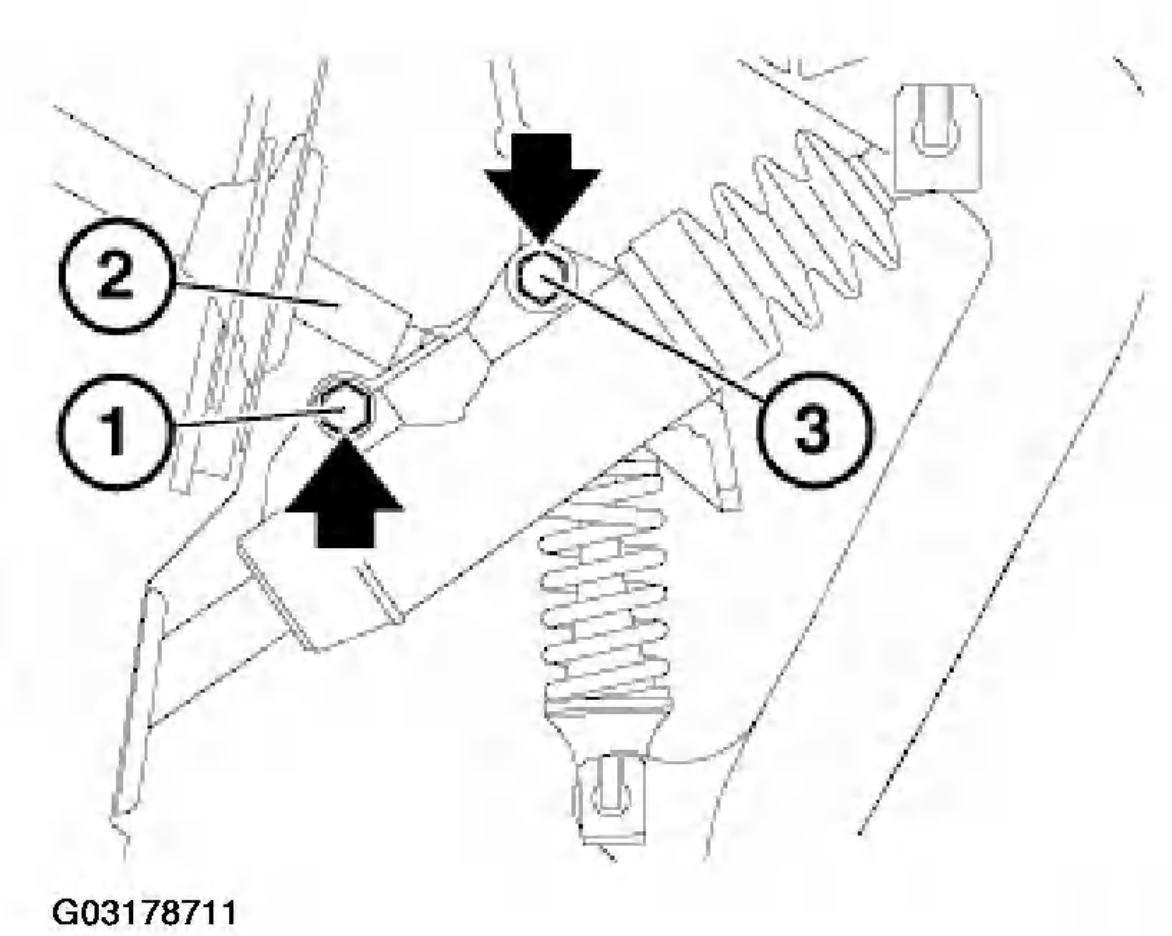

Fig. 4: Removing Switch Holder Screws
Courtesy of BMW OF NORTH AMERICA, INC.

Screw (3) holds retaining plate for clutch and brake-light switches.

Installation:

Make sure line (2) is laid without kinks.

(1) and (3) = clutch-cylinder screws.

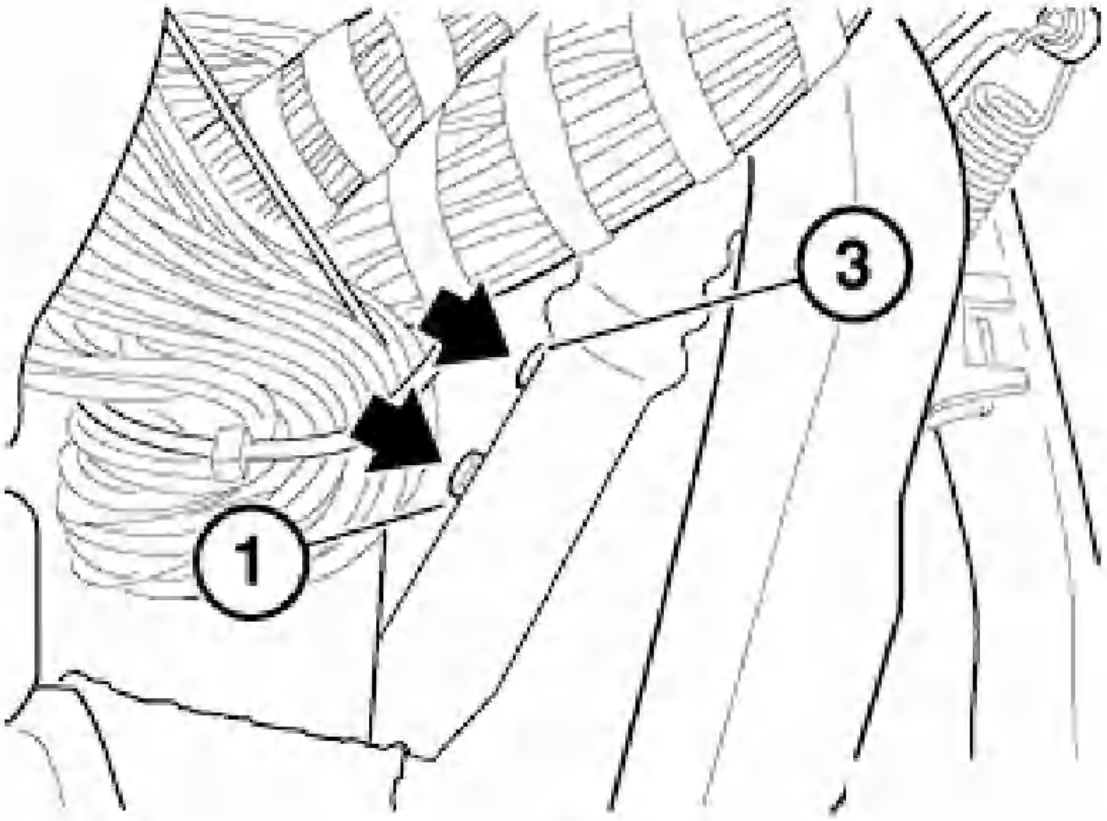

Fig. 5: Identifying Clutch-Cylinder Screws
Courtesy of BMW OF NORTH AMERICA, INC.

Remove locking clip for shaft pin of clutch cylinder.

Version with return spring for clutch pedal:

Disconnect return spring.

Push out shaft pin.

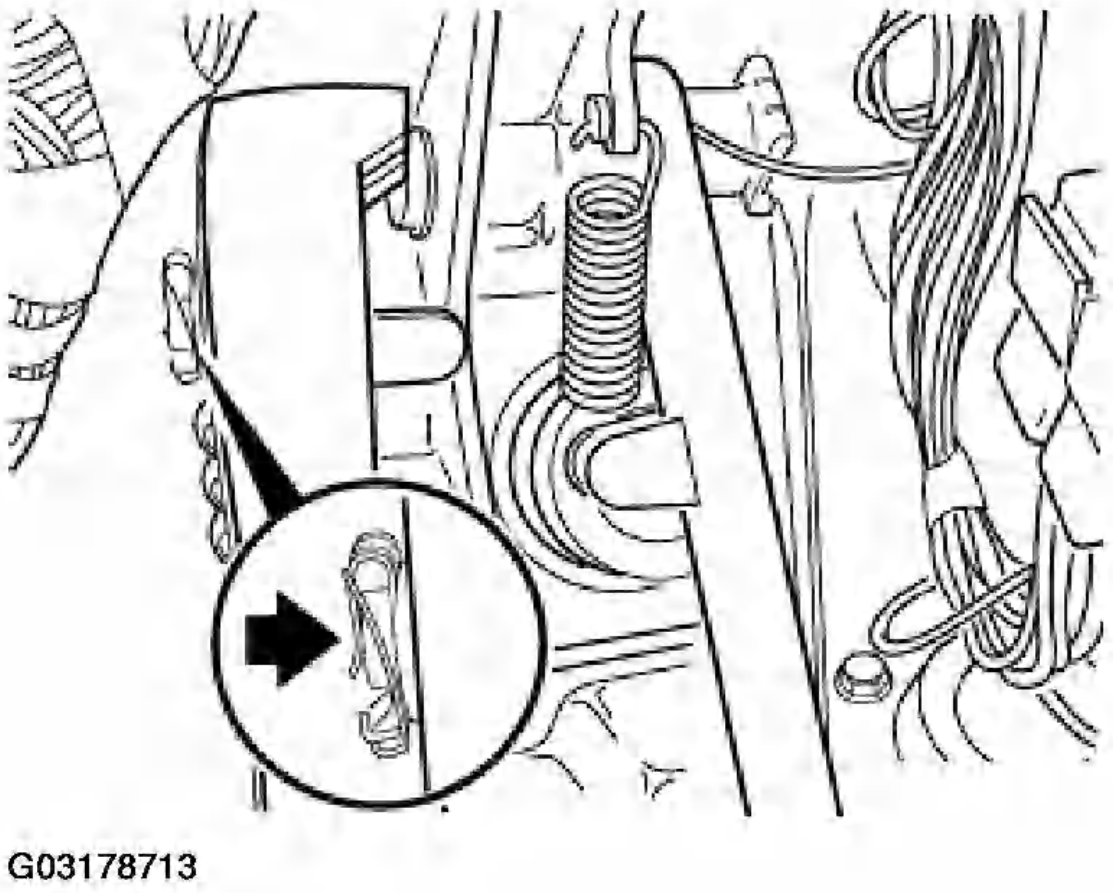

Fig. 6: Identifying Clutch Cylinder Locking Clip And Clutch Pedal Return Spring
Courtesy of BMW OF NORTH AMERICA, INC.

Installation:

Grease sliding surfaces, refer to 35 41 ACCELERATOR PEDAL AND LINKAGES E36 .

Version with over-center helper spring for clutch pedal:

Hold clutch pedal tightly.

Push out shaft pin.

Pull up clutch pedal slowly.

Take off over-center helper spring.

Installation:

Grease sliding surfaces, refer to 35 41 ACCELERATOR PEDAL AND LINKAGES E36 .

Make sure spring holder is seated correctly in mounting block.

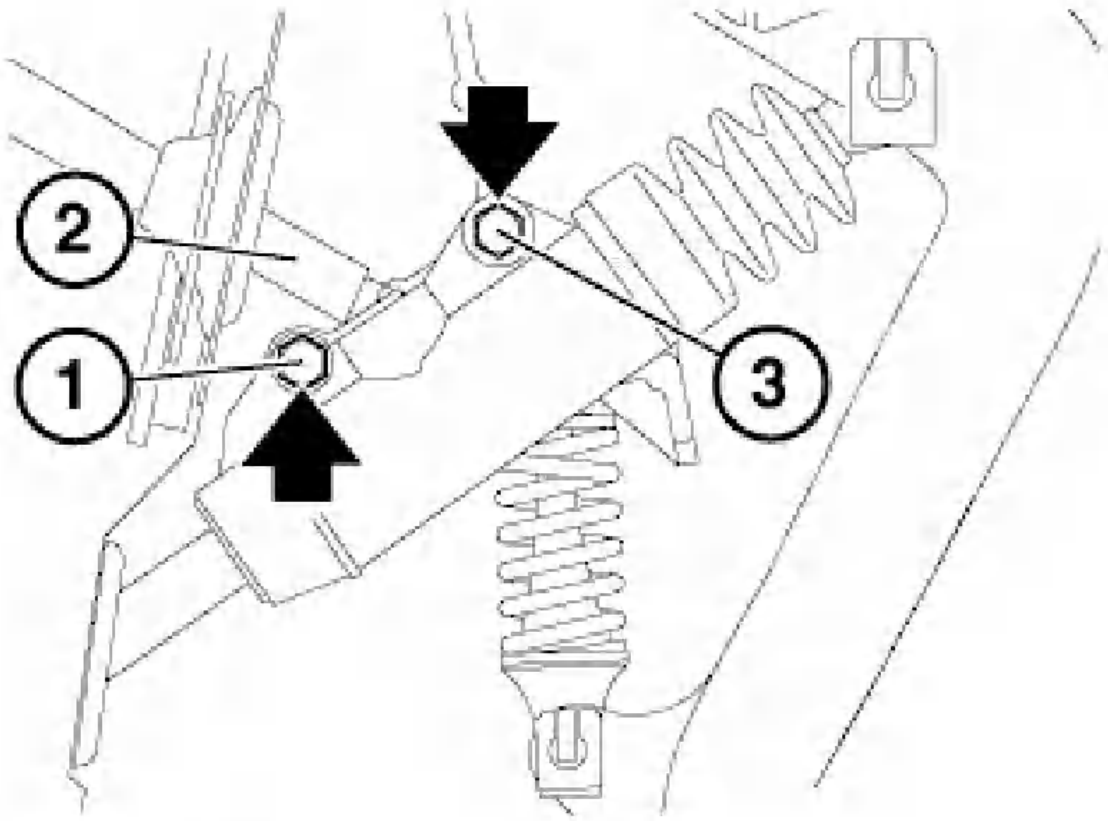

Fig. 7: Identifying Switch Holder Screws
Courtesy of BMW OF NORTH AMERICA, INC.

Assembly of over-center helper spring:

1. Spring retainer.
2. Over-center helper spring.
3. Guide pin.
4. Bearing shaft.
5. Locking clip.

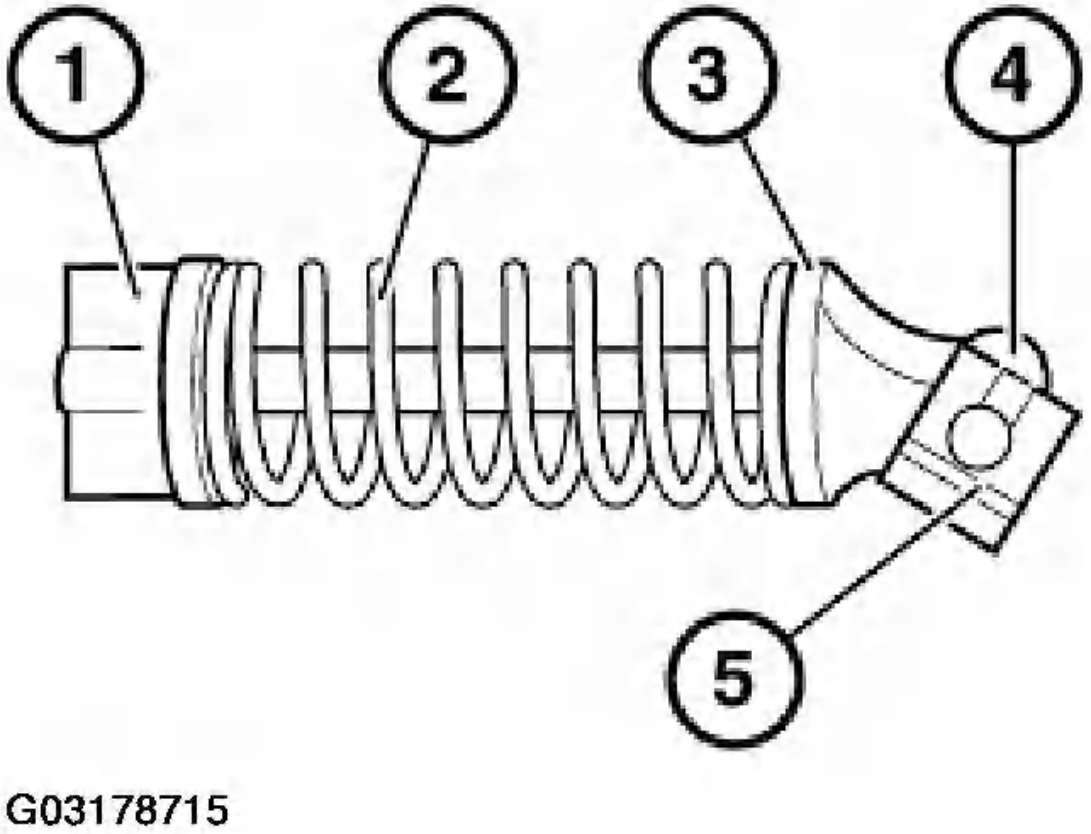

Fig. 8: Identifying Over-Centre Helper Spring Components
Courtesy of BMW OF NORTH AMERICA, INC.

Disconnect return spring for brake pedal.

Take off locking clip for shaft pin of brake pedal.

Push out shaft pin.

Installation:

Grease sliding surfaces, refer to 35 41 ACCELERATOR PEDAL AND LINKAGES E36 .

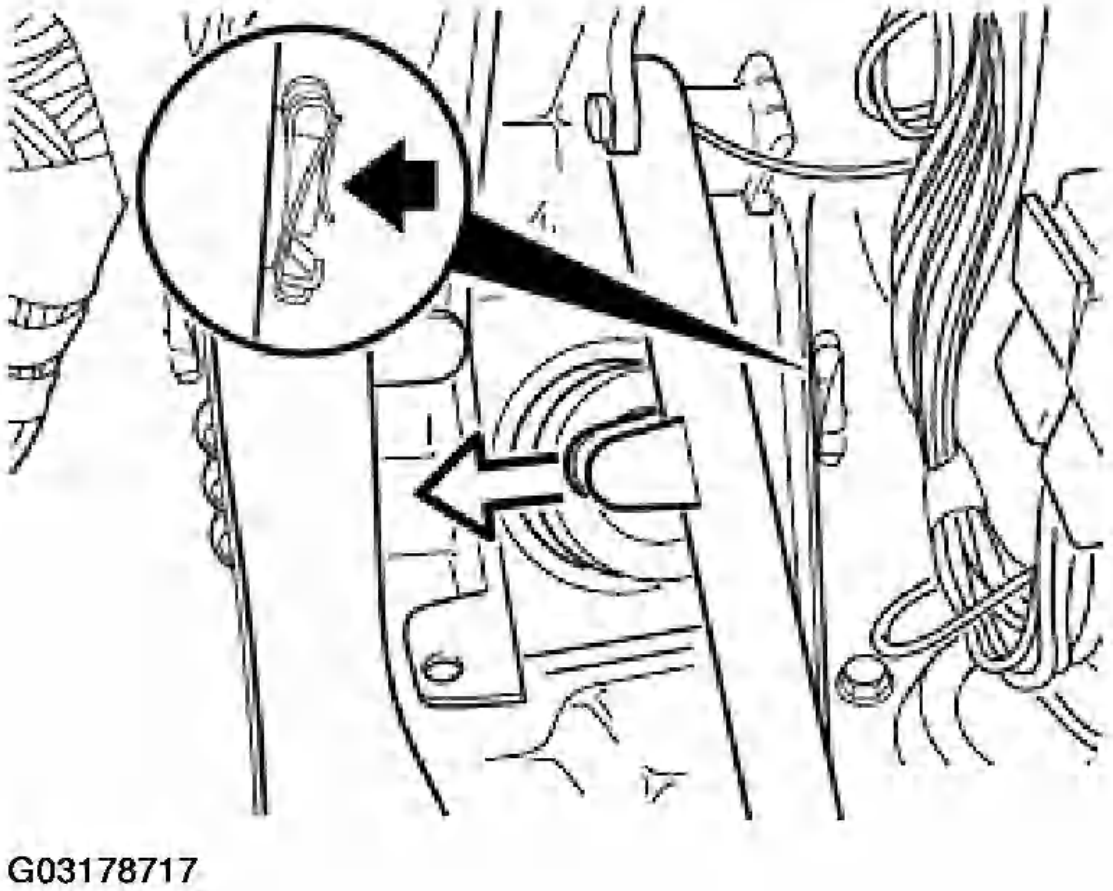

Fig. 9: Disconnecting Return Spring For Brake Pedal
Courtesy of BMW OF NORTH AMERICA, INC.

Unscrew screw.

Installation:

Tightening torque, 35 11 1AZD. Refer to 35 11 PEDAL ASSEMBLY CONSOLE .

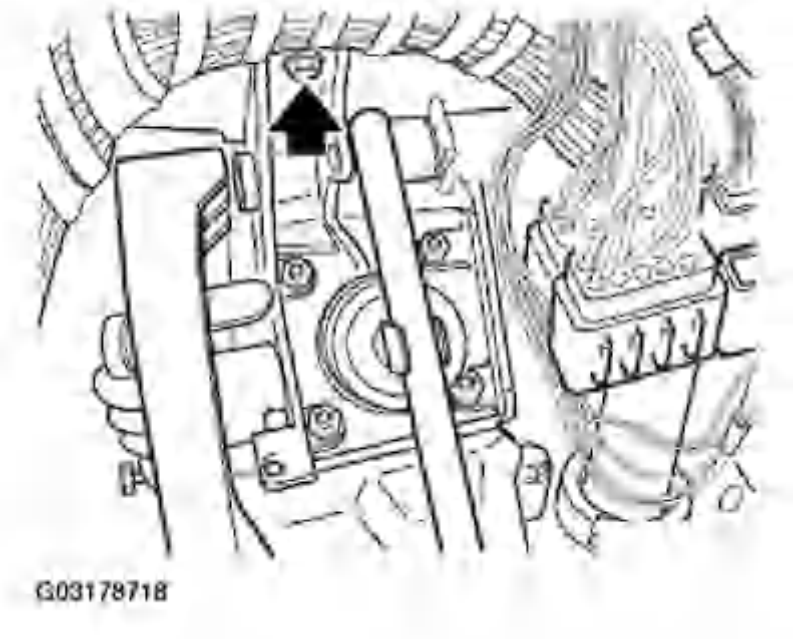

Fig. 10: Removing Screw
Courtesy of BMW OF NORTH AMERICA, INC.

Unscrew self-locking nuts.

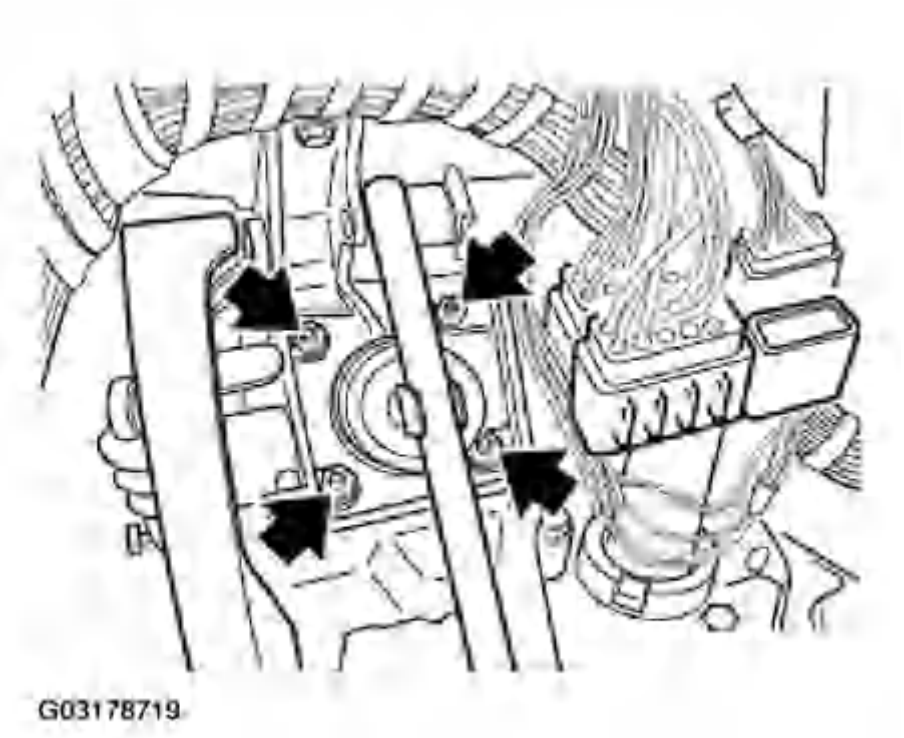

Fig. 11: Removing Self-Locking Nuts
Courtesy of BMW OF NORTH AMERICA, INC.

Remove mounting block.

Installation:

Replace self-locking nuts.

Tightening torque, 35 11 1AZD. Refer to 35 11 PEDAL ASSEMBLY CONSOLE .

35 11 001 REPLACING MOUNTING BLOCK FOR PEDAL ASSEMBLY

NOTE: Remove and install mounting block for pedal assembly, see 35 11 000 REMOVING AND INSTALLING MOUNTING BLOCK FOR PEDALS .

Take off locking clips.

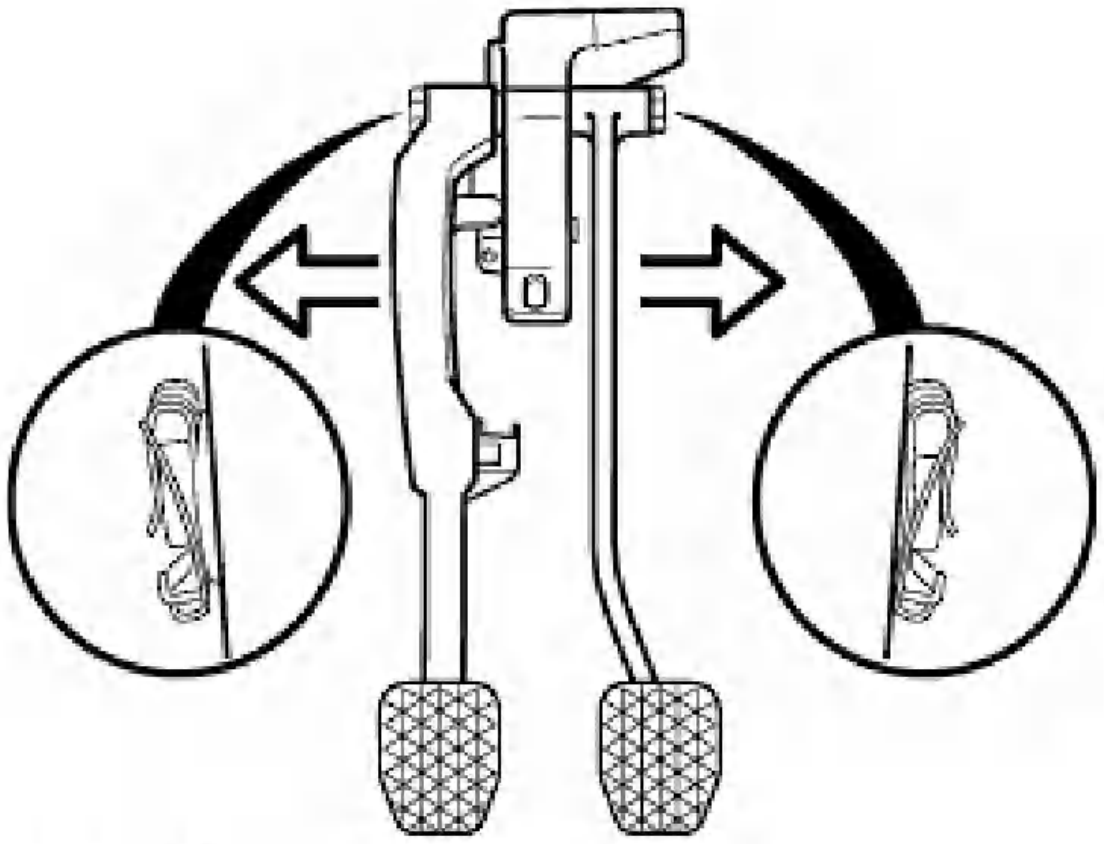

Fig. 12: Removing Locking Clips
Courtesy of BMW OF NORTH AMERICA, INC.

Pull brake and clutch pedals off shaft.

Installation:

Make sure locking clips are seated correctly.

Clutch-pedal assembly:

1. Bearing sleeves - check or replace.
2. Locking clip.
3. Clutch pedal.
4. Grommet for clutch-pedal return spring.
5. Mounting block.

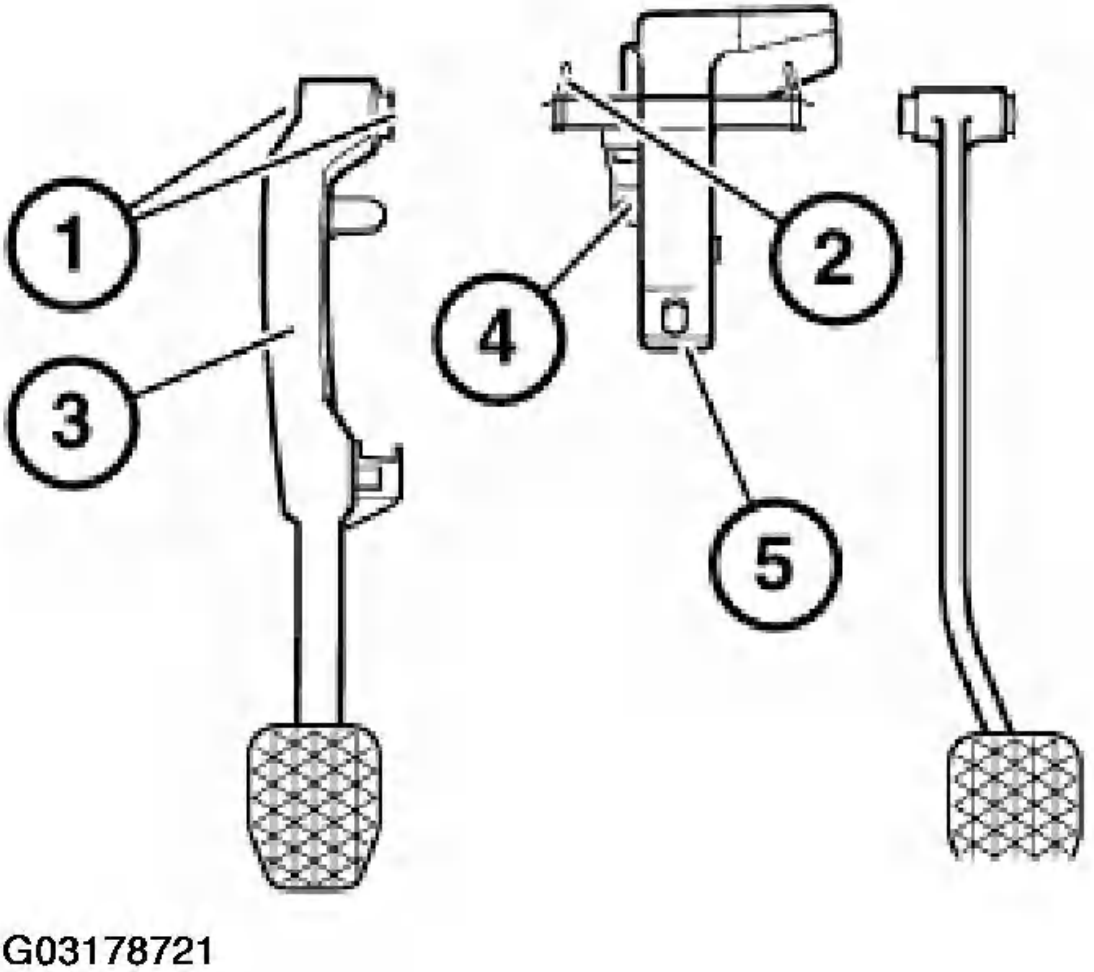

Fig. 13: Identifying Clutch-Pedal Assembly
Courtesy of BMW OF NORTH AMERICA, INC.

Brake-pedal assembly:

1. Bearing sleeves - check or replace.
2. Brake pedal.
3. Locking clip.
4. Grommet.
5. Mounting block.

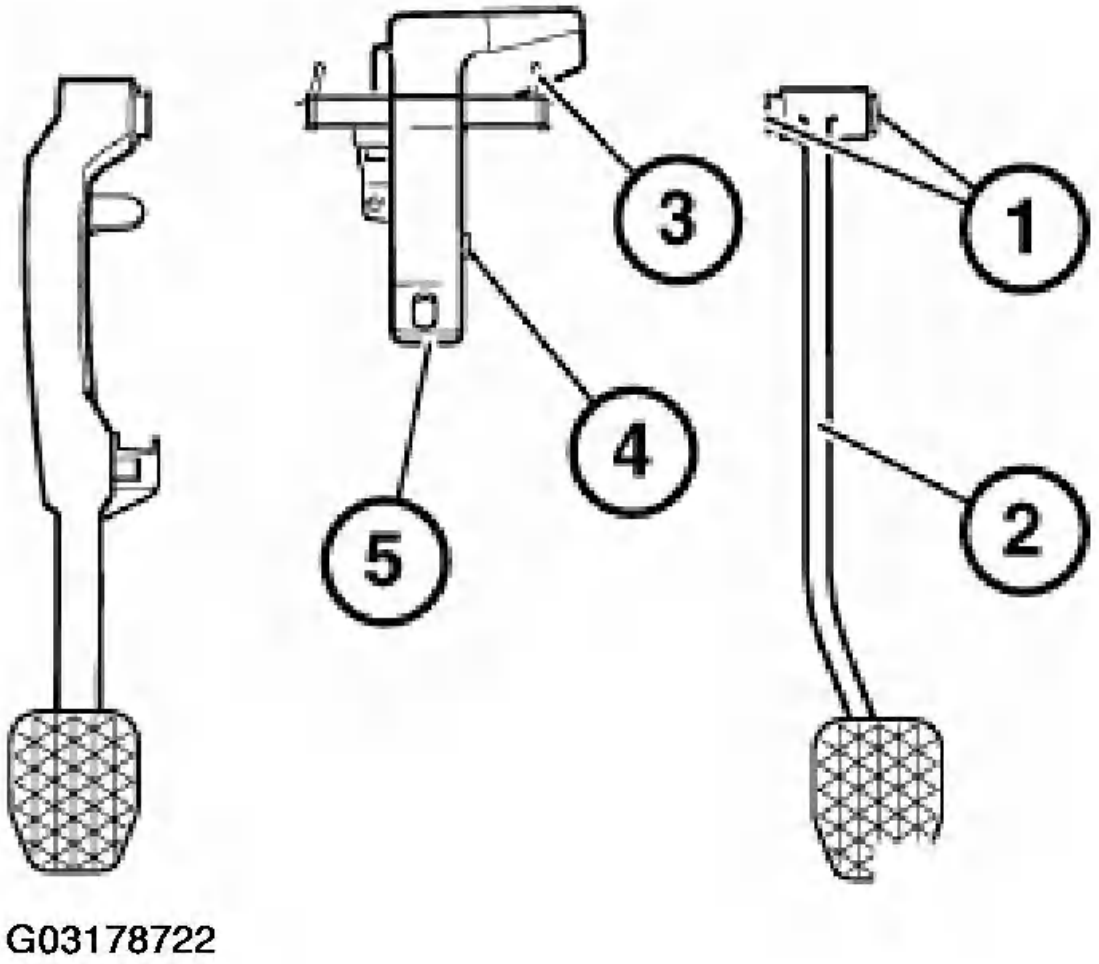

Fig. 14: Identifying Brake-Pedal Assembly
Courtesy of BMW OF NORTH AMERICA, INC.

Assembly of over-center helper spring.

1. Spring retainer.
2. Over-center helper spring.
3. Guide pin.
4. Bearing shaft.
5. Locking clip.

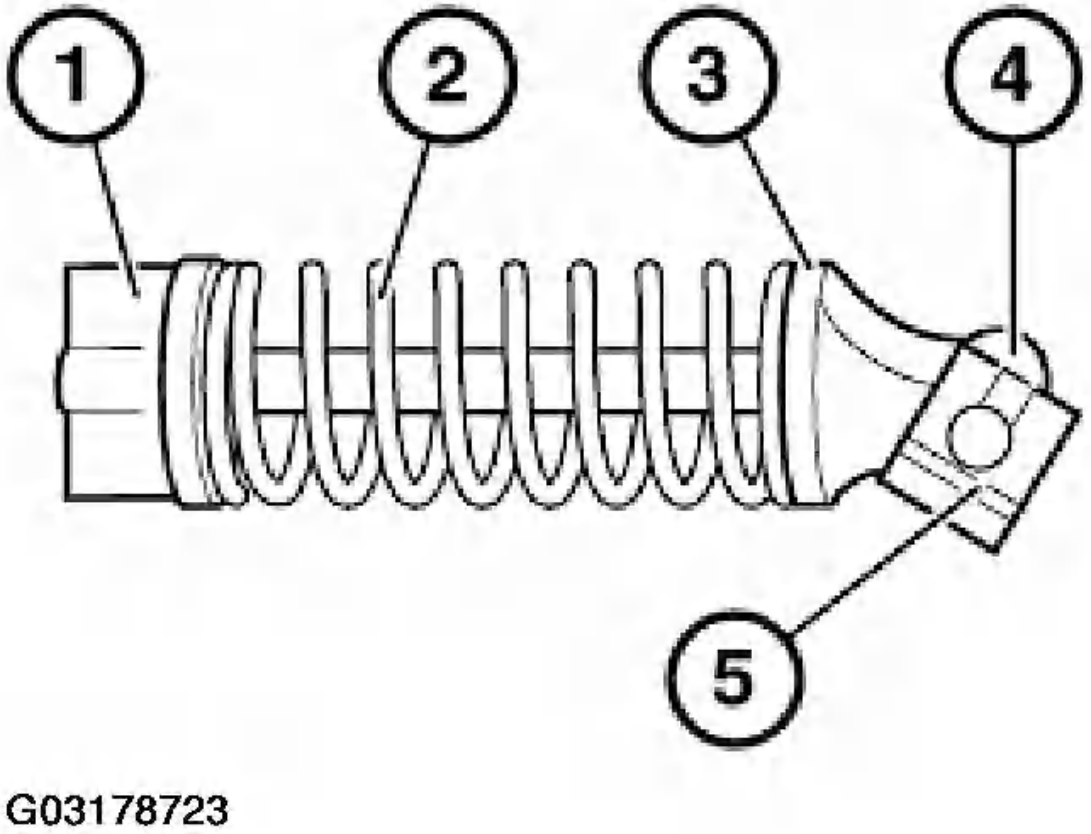

Fig. 15: Identifying Over-Center Helper Spring Assembly
Courtesy of BMW OF NORTH AMERICA, INC.

Check grommet on clutch pedal, replacing if necessary.

Check grommet on shaft for brake pedal, replacing if necessary.

Transfer brake and clutch pedals with bearing sleeves. Check grommets on pedals, replacing if necessary.

Transfer grommet for brake pedal return spring, replacing if necessary.

Transfer grommet for clutch pedal return spring, replacing if necessary.

Grease sliding faces, see 35 41 ACCELERATOR PEDAL AND LINKAGES E36 .

BRAKE PEDAL WITH LINKAGE

35 21 000 REMOVING AND INSTALLING BRAKE PEDAL

NOTE: Remove and install panelling for instrument panel, see 51 45 180 REMOVING AND INSTALLING/REPLACING TRIM FOR INSTRUMENT PANEL, BOTTOM LEFT (Z3 ROADSTER, M ROADSTER, Z3 COUPE, M COUPE) . Remove brake-light switch, see 61 31 310 REPLACING BRAKE-LIGHT SWITCH .

Disconnect return spring for brake pedal.

Take off locking clip for shaft pin of brake pedal.

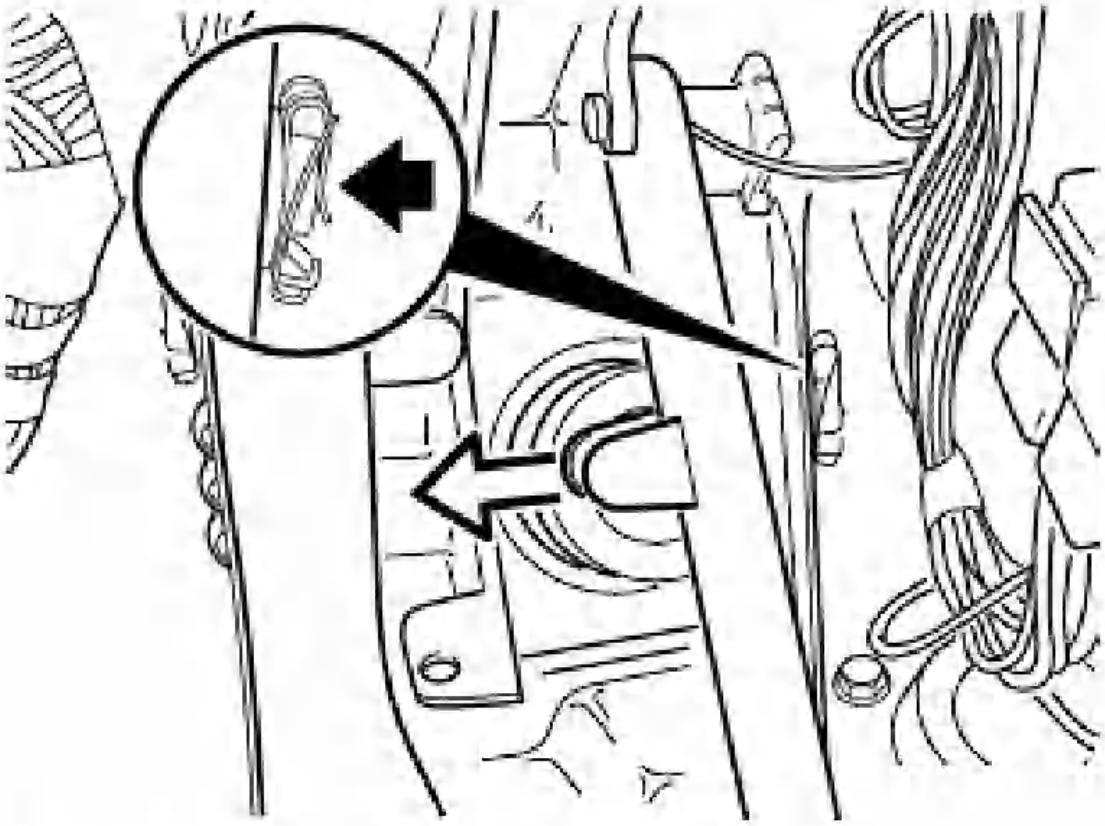

Fig. 16: Removing Locking Clip For Shaft Pin Of Brake Pedal
Courtesy of BMW OF NORTH AMERICA, INC.

Push out shaft pin.

Installation:

Lubricate sliding surfaces with grease, see 35 41 ACCELERATOR PEDAL AND LINKAGES E36 .

Take off locking clip (1) for brake pedal.

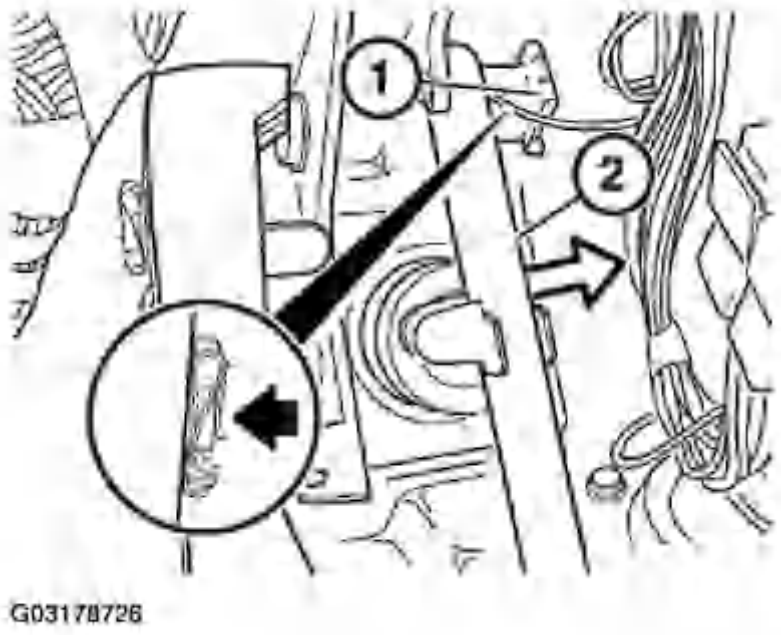

Fig. 17: Removing Locking Clip For Brake Pedal
Courtesy of BMW OF NORTH AMERICA, INC.

Pull off brake pedal (2).

Installation:

Check bearing sleeves (1), replacing if necessary.

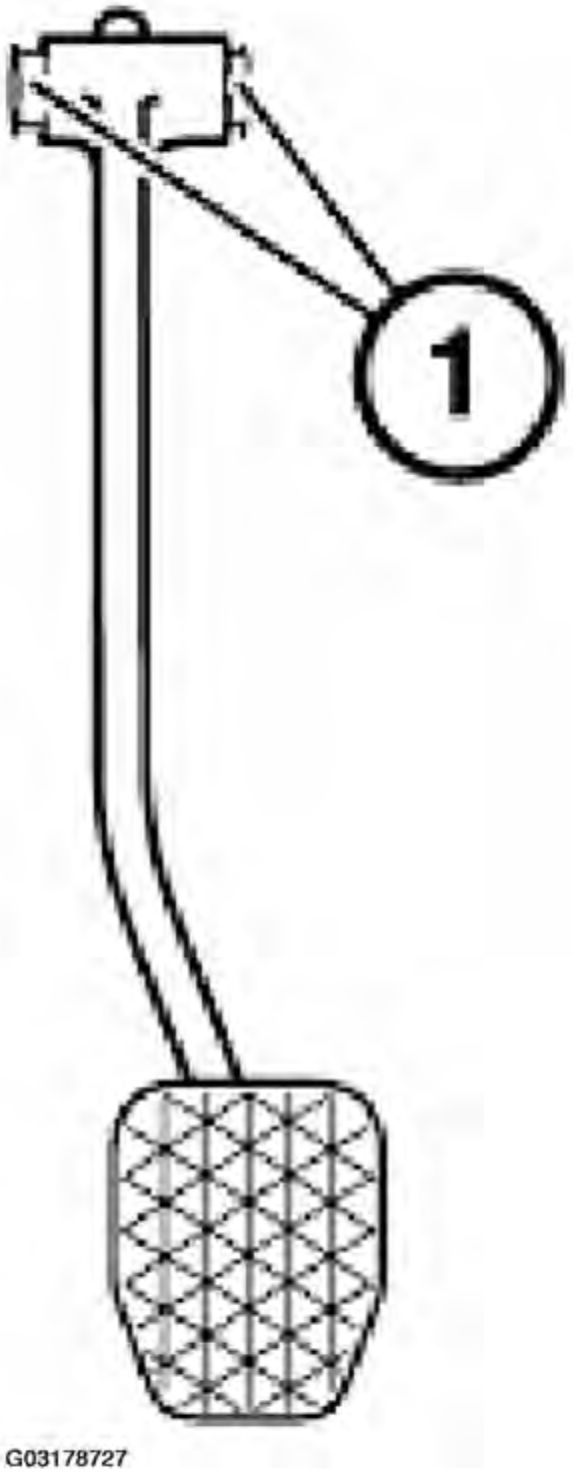

Fig. 18: Checking Bearing Sleeves
Courtesy of BMW OF NORTH AMERICA, INC.

Lubricate sliding surfaces with grease, see 35 41 ACCELERATOR PEDAL AND LINKAGES E36 .

CLUTCH PEDAL WITH LINKAGE

35 31 000 REMOVING AND INSTALLING CLUTCH PEDAL

NOTE: Remove brake light switch, refer to 61 31 310 REPLACING BRAKE-LIGHT SWITCH . If applicable, remove clutch switch. Remove retaining plate, refer to 35 11 000 REMOVING AND INSTALLING MOUNTING BLOCK FOR PEDALS .

Take off locking clip for shaft pin of clutch-sensor cylinder.

Version with return spring for clutch pedal:

Disconnect return spring. Push out shaft pin.

Installation:

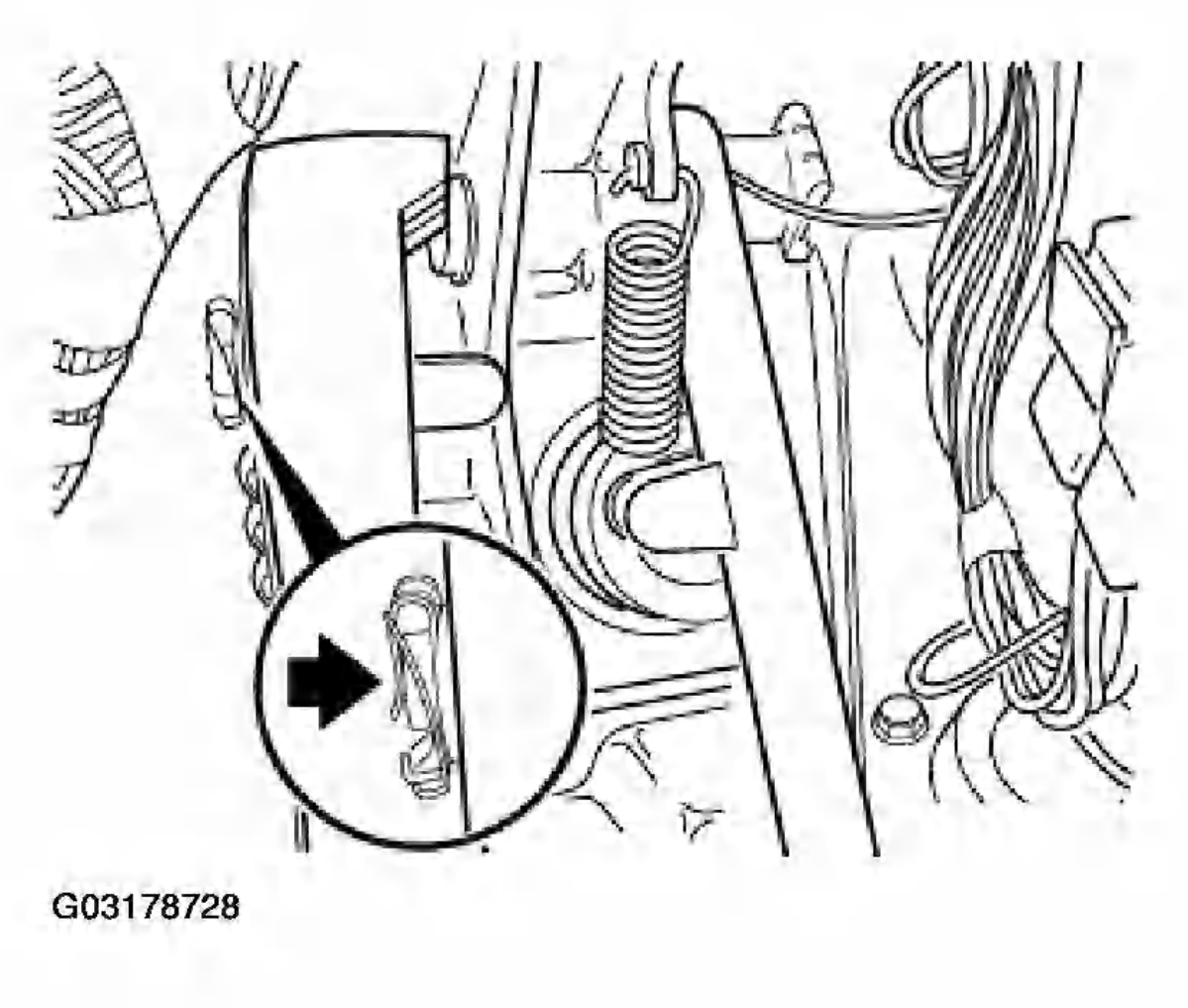

Fig. 19: Removing Locking Clip For Shaft Pin Of Clutch-Sensor Cylinder
Courtesy of BMW OF NORTH AMERICA, INC.

Version with over-center helper spring:

Hold clutch pedal tightly, push out shaft pin, pull up clutch pedal slowly and take off over-center helper spring.

Installation:

Check for correct seating of spring holder in mounting block!

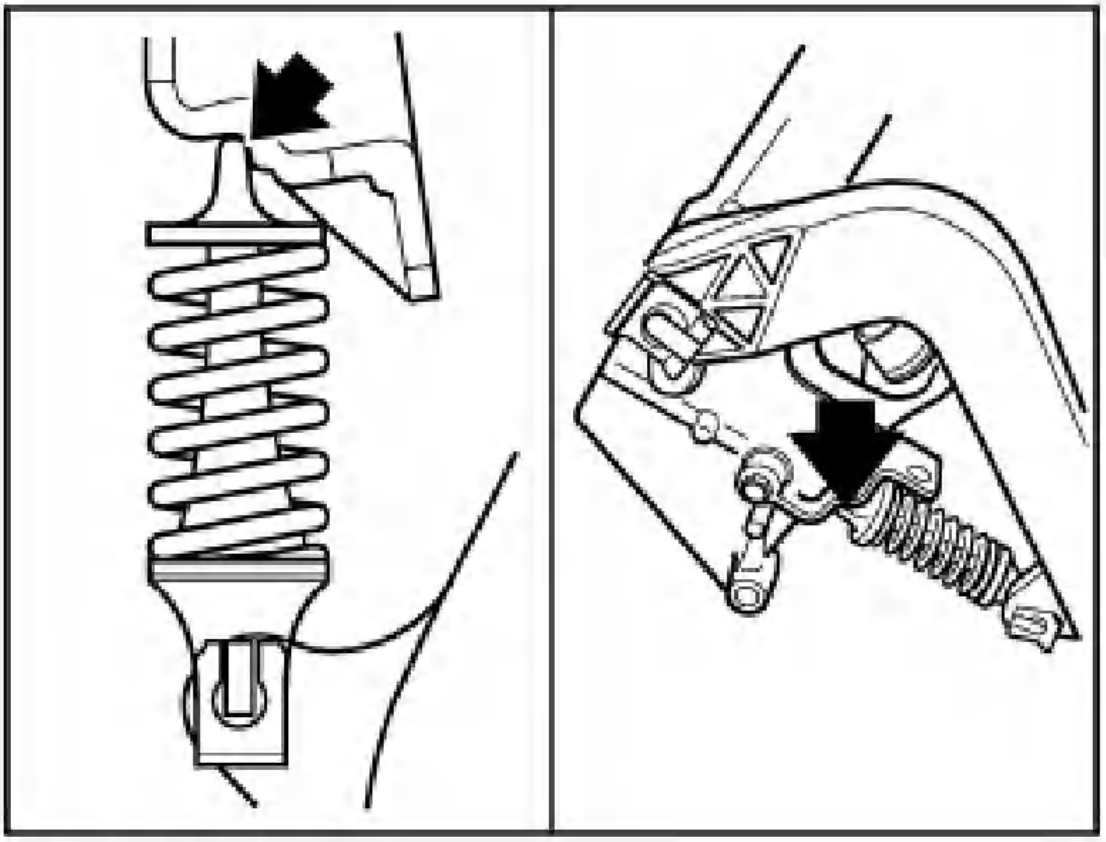

Fig. 20: Identifying Over-Centre Helper Spring
Courtesy of BMW OF NORTH AMERICA, INC.

Assembly of over-center helper spring:

1. Spring retainer.
2. Over-Center Helper Spring.
3. Guide Pin.
4. Bearing Pin.
5. Locking Clip.

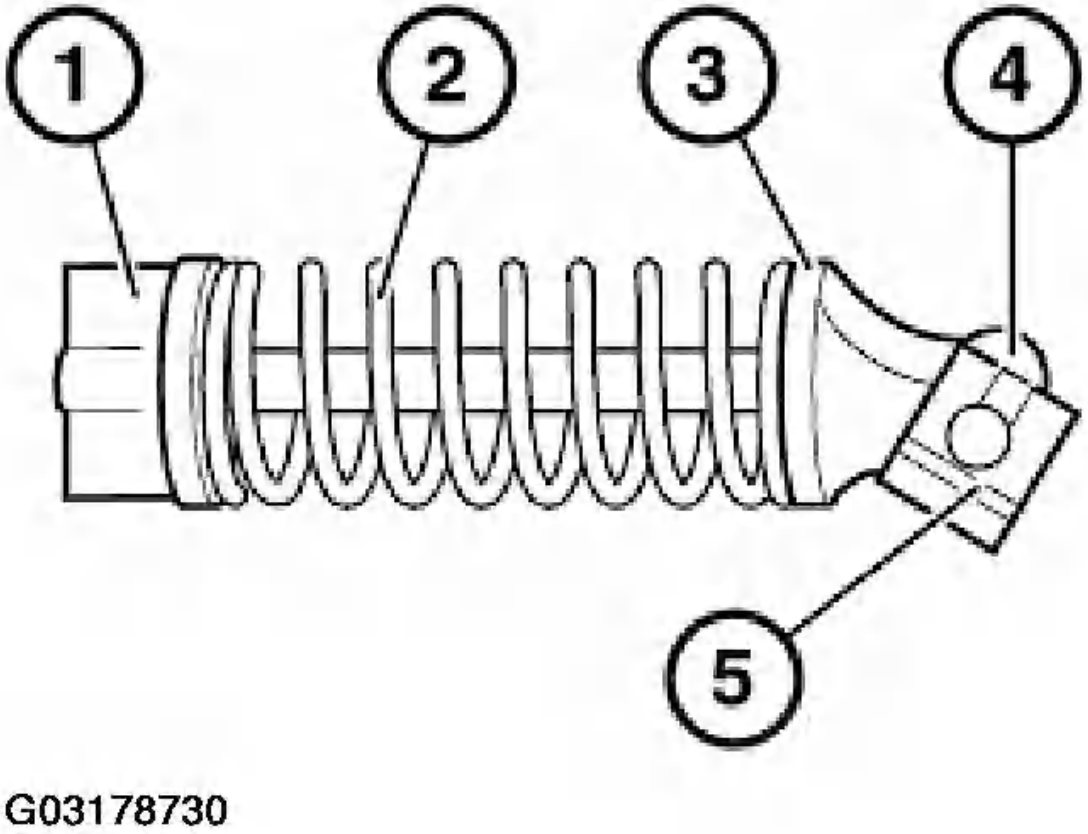

Fig. 21: Identifying Over-Centre Helper Spring Assembly
Courtesy of BMW OF NORTH AMERICA, INC.

Take off locking clip (1) for clutch pedal.

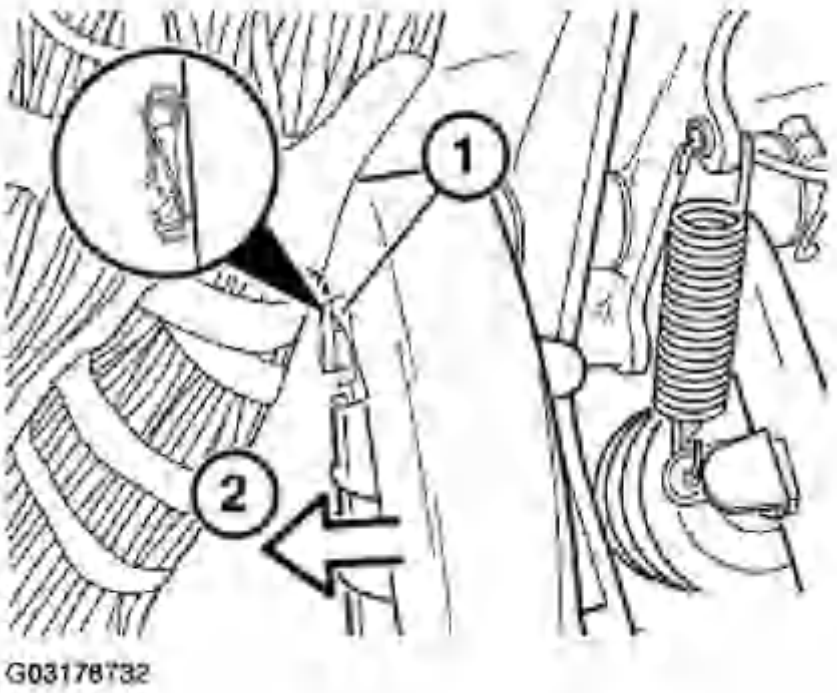

Fig. 22: Removing Locking Clip For Clutch Pedal
Courtesy of BMW OF NORTH AMERICA, INC.

Pull off clutch pedal (2).

Installation:

Check bearing sleeves, replacing if necessary.

KICK-DOWN

35 41 ... THROTTLE-CABLE ADJUSTING PROCEDURES

Adjusting Instruction For Throttle Cable:

For Vehicles With Manual Transmission:

1. Accelerator-pedal plate in idling position (accelerator pedal on idling stop).
2. Throttle in idling position.
3. Adjust throttle cable so that it is free from tension (adjusting screw on throttle cable).
4. Adjust adjustment screw on "full-throttle stop of pedal assembly" so that it rests against accelerator-pedal plate when engine is at full load and there is still play of 0.5 mm at throttle full-load stop.

   Unscrewing adjusting screw by 1.5 turns is equal to 0.5 mm play.

5. Lock with M8 nut.

For Vehicles With Automatic Transmission:

1. to 3., refer to manual transmission.

Without override element:

4. Adjust pressed full-throttle stop so that it rests against accelerator-pedal plate when transmission is at

full load and there is still play of 0.5 mm at throttle full-load stop.

Unscrewing adjusting screw by 1.5 turns is equal to 0.5 mm play.

5. Lock with M8 nut.

35 41 000 REPLACING ACCELERATOR PEDAL

CAUTION: A removed accelerator pedal must always be replaced as removing will damage the retaining clips. This would allow the pedal to slide out of its holder and could cause an accident!

Press off locking washer (1).

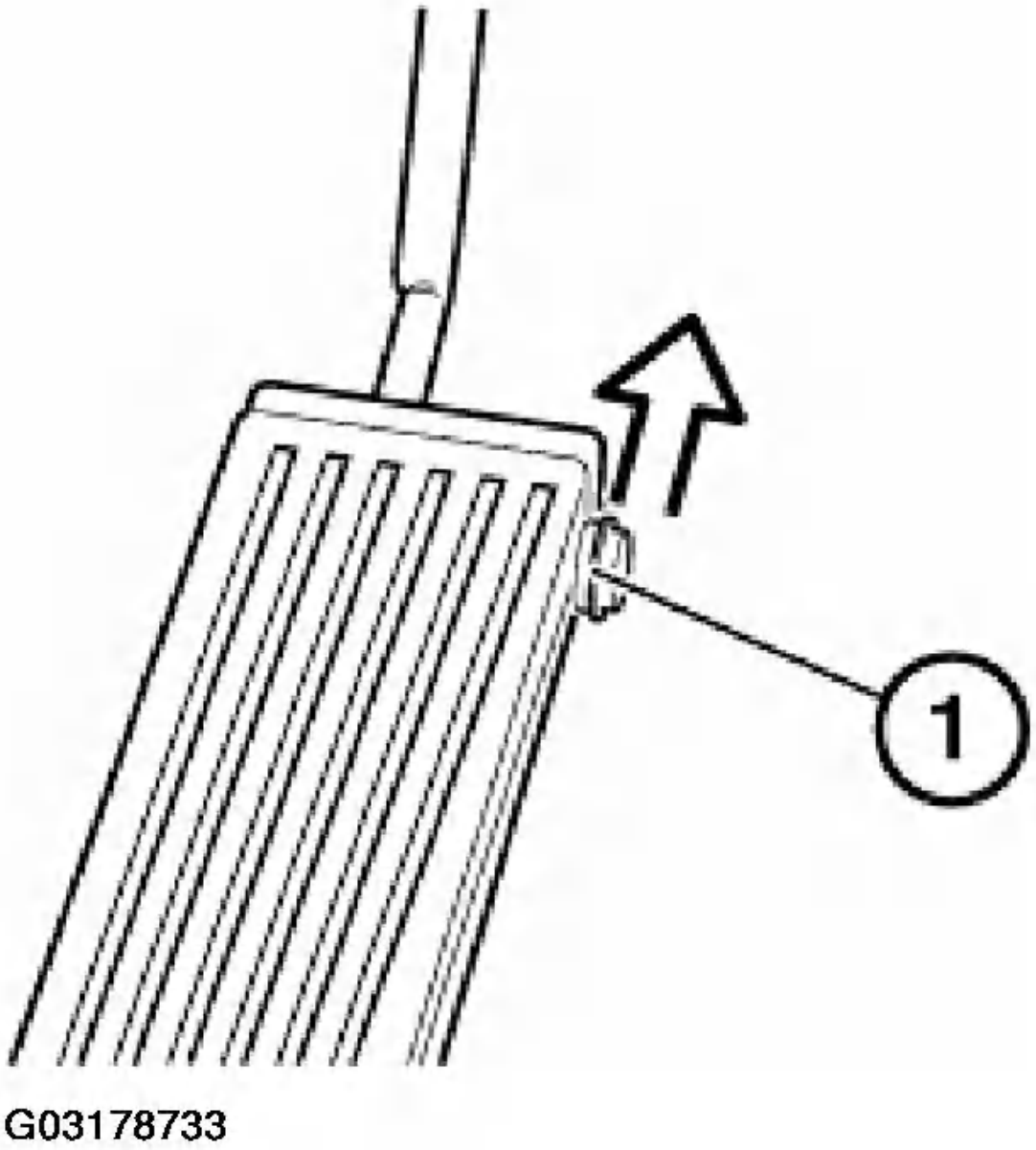

Fig. 23: Removing Locking Washer From Accelerator Pedal
Courtesy of BMW OF NORTH AMERICA, INC.

Disconnect pedal.

Installation:

Lubricate sliding surfaces with grease, refer to 35 41 ACCELERATOR PEDAL AND LINKAGES E36 .

Press down on carpet, unbend retaining clips and lever out accelerator pedal in upwards direction.

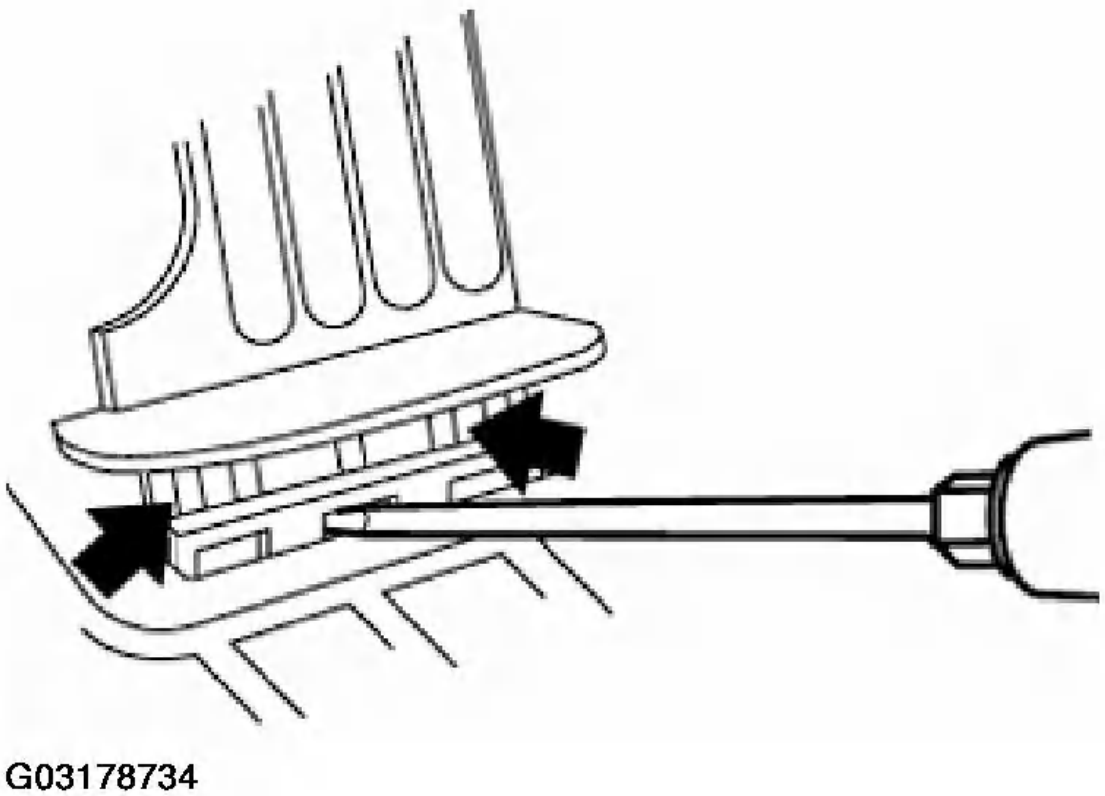

Fig. 24: Removing Accelerator Pedal Using Screwdriver
Courtesy of BMW OF NORTH AMERICA, INC.

Installation:

Install accelerator pedal with pocket on holder on floor plate and snap retaining clips into place.

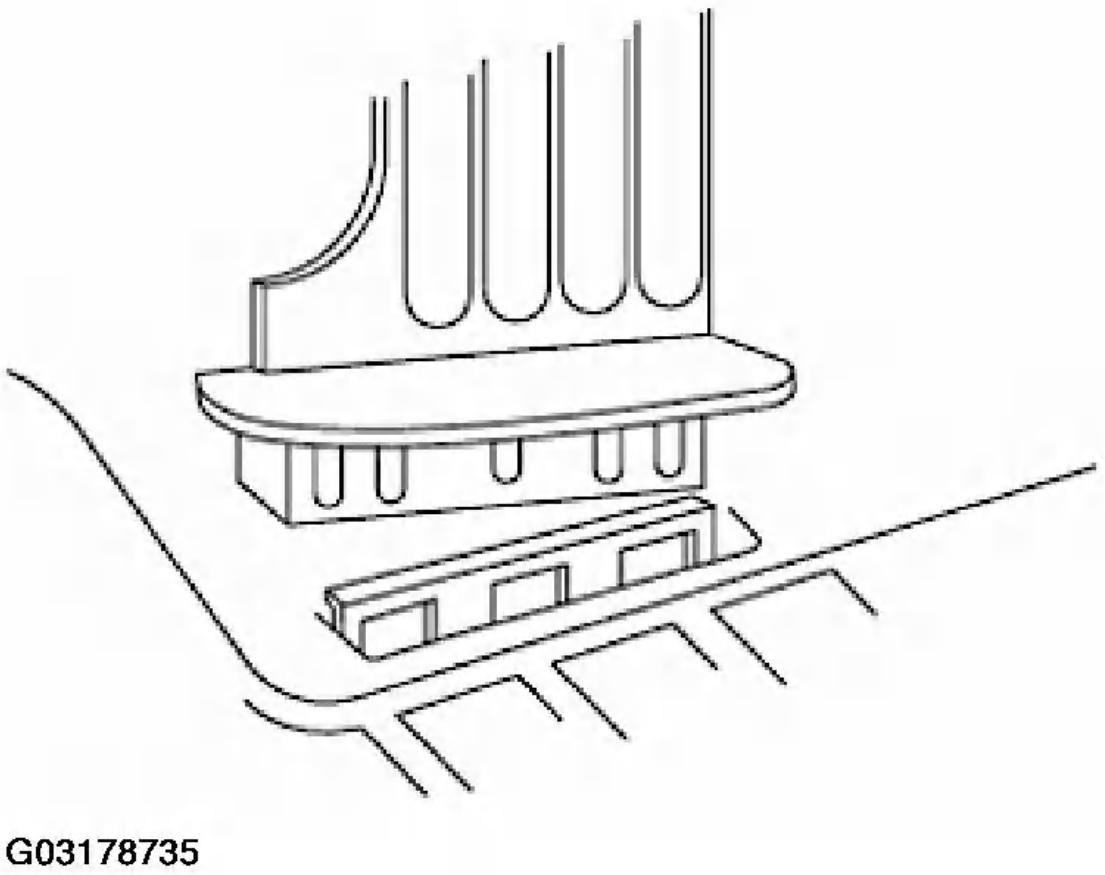

Fig. 25: Installing Accelerator Pedal
Courtesy of BMW OF NORTH AMERICA, INC.

CAUTION: To be absolutely sure, check that retaining clips have snapped into place.

35 41 010 REMOVING AND INSTALLING OR REPLACING ACCELERATOR LEVER

NOTE: Remove paneling for instrument panel, see 51 45 180 REMOVING AND INSTALLING/REPLACING TRIM FOR INSTRUMENT PANEL, BOTTOM LEFT (Z3 ROADSTER, M ROADSTER, Z3 COUPE, M COUPE) .

Disconnect Bowden cable on accelerator-lever shaft.

Fig. 26: Disconnecting Bowden Cable On Accelerator-Lever Shaft
Courtesy of BMW OF NORTH AMERICA, INC.

Installation:

Check rubber grommet, replacing if necessary.

Press off locking washer (1).

Fig. 27: Removing Locking Washer From Accelerator Pedal
Courtesy of BMW OF NORTH AMERICA, INC.

Disconnect pedal.

Installation:

Grease anti-friction faces, refer to 35 41 ACCELERATOR PEDAL AND LINKAGES E36 .

Take off locking clip.

Fig. 28: Removing Locking Clip
Courtesy of BMW OF NORTH AMERICA, INC.

Installation:

Check for correct seating of locking clip.

Disconnect return spring.

Fig. 29: Disconnecting Return Spring
Courtesy of BMW OF NORTH AMERICA, INC.

Slide accelerator-lever shaft to the left and remove.

Installation:

Check for correct installation position of return spring.

Fig. 30: Checking Return Spring Installation Position
Courtesy of BMW OF NORTH AMERICA, INC.

35 41 421 REPLACING BOWDEN CABLE FOR THROTTLE VALVE ACTUATION

CAUTION: Adjust throttle cable after installation, refer to 35 41 ... THROTTLE-CABLE ADJUSTING PROCEDURES .

Remove and install panelling for instrument panel, refer to 51 45 180 REMOVING AND INSTALLING/REPLACING TRIM FOR INSTRUMENT PANEL, BOTTOM LEFT (Z3 ROADSTER, M ROADSTER, Z3 COUPE, M COUPE) .

Disconnect Bowden cable on accelerator-lever shaft.

Fig. 31: Disconnecting Bowden Cable On Accelerator-Lever Shaft
Courtesy of BMW OF NORTH AMERICA, INC.

Installation:

Check rubber grommet (1), replace if necessary.

Compress retaining hook and pull Bowden cable out of engine-compartment wall.

Fig. 32: Removing Bowden Cable Out Of Engine-Compartment Wall
Courtesy of BMW OF NORTH AMERICA, INC.

6-Cylinder:

Compress nipple mounts on both lugs and press out of operating lever.

Fig. 33: Locating Nipple Mounts
Courtesy of BMW OF NORTH AMERICA, INC.

NOTE: Intake pipe was removed for demonstration purposes.

Press nipple out of nipple mounts.

Take Bowden cable out of nipple mounts.

Fig. 34: Removing Bowden Cable Out Of Nipple Mounts
Courtesy of BMW OF NORTH AMERICA, INC.

Remove protective cap using a screwdriver.

Pull out Bowden cable towards rear of vehicle.

Fig. 35: Removing Bowden Cable Towards The Rear
Courtesy of BMW OF NORTH AMERICA, INC.

Take rubber pad out of retainer.

Installation:

Guide in Bowden cable as far as stop.

Overview of throttle cable to throttle-valve assembly:

1. Nipple.
2. Accelerator Bowden cable.
3. Protective cap.
4. Rubber mount.
5. Sleeve.
6. Adjusting screw.

Fig. 36: Identifying Throttle Cable To Throttle-Valve Assembly Components
Courtesy of BMW OF NORTH AMERICA, INC.

4-Cylinder:

Unscrew screw.

Fold up cover.

Fig. 37: Removing Cover And Screw
Courtesy of BMW OF NORTH AMERICA, INC.

Press nipple mount apart at both lugs and press out of operating lever.

Fig. 38: Removing Nipple Mount
Courtesy of BMW OF NORTH AMERICA, INC.

Press nipple out of nipple mounts.

Installation:

Check installed position (rear take-up)

Fig. 39: Removing Nipple From Nipple Mounts
Courtesy of BMW OF NORTH AMERICA, INC.

Unbend nipple mounts using a screwdriver and remove Bowden cable.

Fig. 40: Removing Bowden Cable
Courtesy of BMW OF NORTH AMERICA, INC.

Installation:

Replace nipple mounts.

Remove protective cap using a screwdriver.

Pull out Bowden cable towards rear of vehicle.

Fig. 41: Removing Bowden Cable Towards The Rear
Courtesy of BMW OF NORTH AMERICA, INC.

Installation:

Guide in Bowden cable as far as stop.

35 41 480 REPLACING KICKDOWN SWITCH (EH TRANSMISSION)

Testing - see Status List Diagnosing Program 03 EGS and use BMW SERVICE TESTER or MODIC.

Pull off flat male connector (1).

Fig. 42: Removing Flat Male Connector
Courtesy of BMW OF NORTH AMERICA, INC.

Unscrew nut (2).

Unscrew switch.

Installation:

Adjust nut to control distance C, see 35 41 ACCELERATOR PEDAL AND LINKAGE .

Fig. 43: Adjusting Nut To Control Distance C
Courtesy of BMW OF NORTH AMERICA, INC.

Make final adjustment after installation.

Article GUID: A00202361

GENERAL

35 00 REAR AXLE IN GENERAL E36

REAR AXLE IN GENERAL E36 TECHNICAL SPECIFICATION

Spacing between accelerator pedal and Brake pedal Measuring points, refer to 35 00... PEDAL ASSEMBLY .	.....	.....
Manual transmission J	mm	50
Autom. transmission K	mm	60
Distance tunnel-brake pedal Measuring points, refer to 35 00... PEDAL ASSEMBLY .	.....	.....
Manual transmission F	mm	135 +/- 5
Automatic transmission G	mm	145 +/- 5
Spacing H between brake pedal and Clutch pedal Measuring points, refer to 35 00... PEDAL ASSEMBLY .	mm	50
Specified distances are reference values only and do not account for installation tolerances. Distances without consideration for carpets.	.....	.....

BRAKE PEDAL WITH LINKAGE

35 21 BRAKE PEDAL AND LINKAGES E36

BRAKE PEDAL AND LINKAGES E36 TECHNICAL SPECIFICATION

Distance A pedal underside - bulkhead Measuring points, refer to 35 00... PEDAL ASSEMBLY .	mm	225 + 10

35 31 CLUTCH PEDAL AND LINKAGES E36

CLUTCH PEDAL AND LINKAGES E36 TECHNICAL SPECIFICATION

Distance B pedal underside - bulkhead Measuring points, refer to 35 00... PEDAL ASSEMBLY .	mm	260 + 10
Specified distances are reference values only and do not account for installation tolerances. Distances without consideration for carpets.	.....	.....

CLUTCH PEDAL WITH LINKAGE

35 31 CLUTCH PEDAL AND LINKAGES E36

CLUTCH PEDAL AND LINKAGES E36 TECHNICAL SPECIFICATION

Distance B pedal underside - bulkhead Measuring points, refer to 35 00... PEDAL ASSEMBLY .	mm	260+10
Specified distances are reference values only and do not account for installation tolerances. Distances without consideration for carpets.	.....	.....

KICK-DOWN

35 41 ACCELERATOR PEDAL AND LINKAGES E36

ACCELERATOR PEDAL AND LINKAGES E36 TECHNICAL SPECIFICATION

Thread adjustment dimension C at full throttle stop Measuring points, refer to 35 00... PEDAL ASSEMBLY .	.....	.....
Manual transmission	mm	62
Automatic transmission	mm	54
EH transmission	mm	51
Lubricant for bearings: Renocal FN 745 Fa. Fuchs Mannheim	.....	.....
Specified distances are reference values only and do not account for installation tolerances. Distances without consideration for carpets.	.....	.....

Article GUID: A00202377

1995-04 ELECTRONIC TRANSMISSION

Overview - BMW

PURPOSE OF SYSTEM

Electronically controlled transmissions were introduced on BMW products in 1986 on 5 and 7 series vehicles. Currently EH (Electro-hydraulic) transmissions are offered on almost every production model (Except E46 M3 and E39 M5). EH transmissions offer the following benefits the to driver:

- Increased driving safety by reducing fatigue. All shifts are automatic as opposed to manual transmissions which require more driver interaction.
- Increased fuel economy through use of lock up torque converter.
- Increased fuel economy through optimized shift points.
- Improved shift comfort by use of "Overlap Shift" technology (ZF).
- More available features through the use of CAN bus technology. See Fig. 1 .

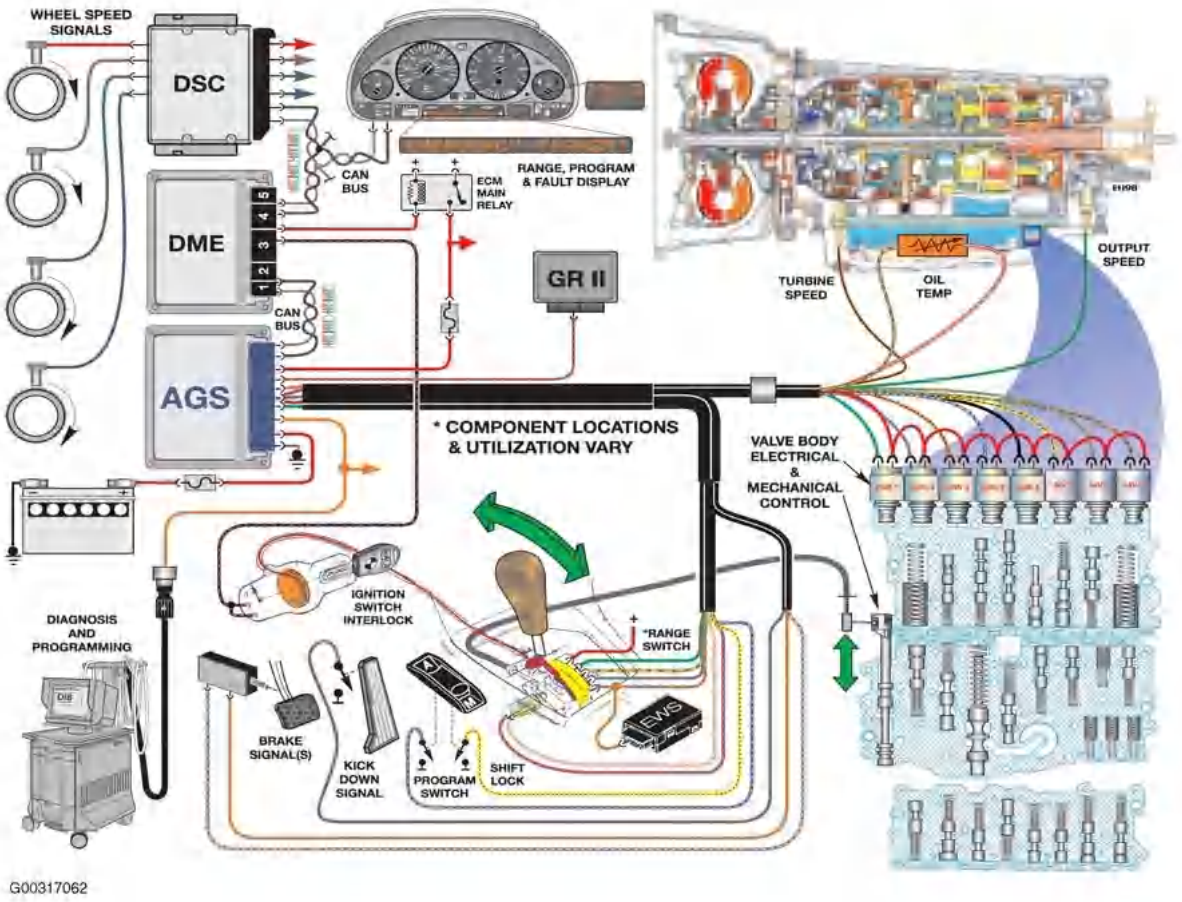

Fig. 1: Identifying Transmission Control System
Courtesy of BMW OF NORTH AMERICA, INC.

The EH Control System is designed to work in conjunction with the engine electronics for precise shift control. The TCM receives information on engine RPM, load and throttle position to provide optimum shift points to maximize fuel economy and driver comfort. See Fig. 2 . The function of an EGS System is to:

- Monitor all operating conditions through input signals
- Continually assess operating conditions by processing input data and select the appropriate operating program for current conditions.
- Activate transmission system components and to communicate with other drivetrain control systems.

- Respond to driver selected driving program (Economy, Sport or Manual).

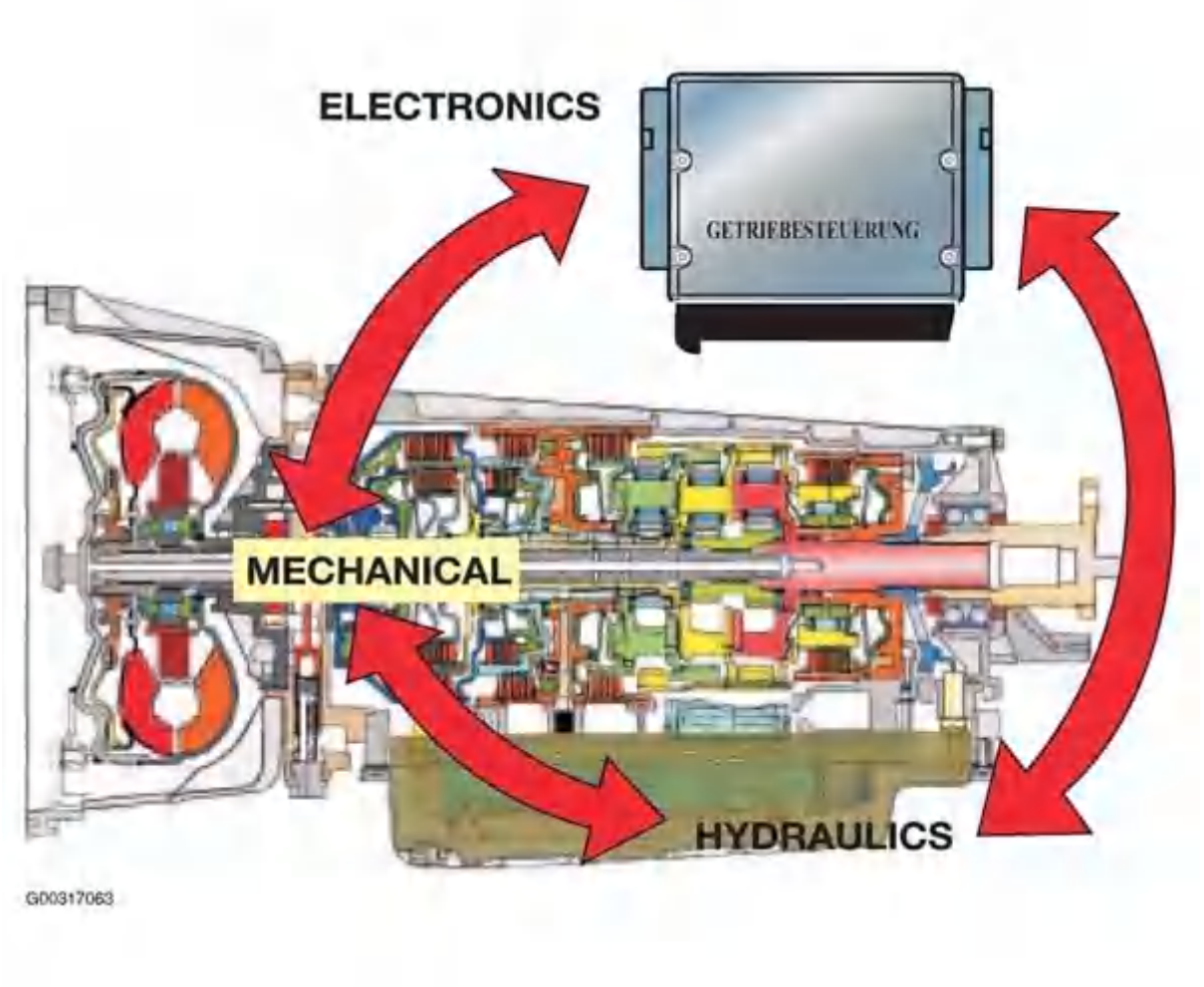

Fig. 2: Identifying Electrical, Mechanical & Hydraulic Systems
Courtesy of BMW OF NORTH AMERICA, INC.

In addition to providing shift control, the TCM also adapts to changing conditions within the transmission by monitoring slip ratios and modifying line pressure. This increases the life of the transmission and reduces maintenance and adjustments. The TCM controls the operation of the Lock-Up Torque Converter which further increases economy.

On current models, the TCM also has the capability of adapting to driver habits and responds to changing environmental conditions. Items such as rate of throttle input and kickdown requests are monitored to select the most appropriate shift program.

The EGS system is also required to maintain occupant safety, safeguard drivetrain damage, improve vehicle emissions and operate in failsafe mode when a malfunction occurs.

TRANSMISSION VERSIONS & CONTROL SYSTEMS

Each BMW Electro-hydraulic transmission has a corresponding control system. They are designated "GS" which stands for Transmission Control. This acronym is from the German words Getriebe Steurung. Each transmission can have more than one control system, this depends upon application (model year, series etc.). See Fig. 3 and Fig. 4 .

Transmission BMW ID #	Manufacturer ID	Model/Year	Control System	Engine
4HP22 (EH)	4HP22 (EH)	86 535i 86 635i 86 735i	GS 1.2X GS 1.2X GS 1.2X	M30 M30 M30
4HP24 (EH)	4HP24 (EH)	88-9/91 750iL (E32) 92-94 750iL (E32) 90-94 850i/Ci (E31)	GS 1.27 GS 1.29 GS 1.29	M70 M70 M70
A5S310Z	5HP18	93 530i/iT (E34) 94 530i/iT (E34) 95 M3 (E36) 96-99 M3 (E36)	GS 7.3 GS 7.32 GS 7.11 GS 8.32	M60 M60 S50 (US) S52
A5S325Z	5HP19	00 323i/Ci/CiC (3/00-8/00) 01 323iT (from 4/01) 01-02 325i/Ci/CiC from 9/00 00-01 330i/Ci/CiC from 6/00 01- 525 from 3/01 01- 530 from 3/01 03 Z4 (E85) 2.5i and 3.0i	GS 8.60 GS 8.60 GS 8.60.4 GS 8.60.4 GS 8.60.4 GS 8.60.4 GS 8.60.4	M52 TU M52 TU M54 M54 M54 M54 M54
A5S440Z	5HP24	97 840Ci (E31) from 9/96 97 540i (E39) 1/97-8/97 97 740i/iL (1/97 - 4/97) 97 740i/iL (5/97-8/97) 98-03 540i 98-01 740i/iL 00- X5 4.4i	GS 8.55 (CAN index 50) GS 8.55 (CAN index 50) GS 8.55 (CAN index 50) GS 8.55 (CAN index 60) GS 8.60.2 (CAN index 60) GS 8.60.2 (CAN index 60) GS 8.60.2	M62 M62 M62 M62 M62, M62 TU 99-02 M62, M62 TU 99-01 M62TU
A5S560Z	5HP30	93-94 740i/iL (E32) 93 540i (E34) 94-95 540i (E34) 94-95 840Ci (E31) 95 740i/iL (E38) 95-01 750iL (E38) 96-97 740i/iL (-1/97) 96 840Ci (E31) 95-97 850Ci	GS 9.2 GS 9.2 GS 9.22 GS 9.22 GS 9.22 GS 9.22.1 GS 9.22.1 GS 9.22.1 GS 9.22.1	M60 M60 M60 M60 M60 M73/M73TU M62 M62 M73
GA6HP26Z	GA6HP26Z GA6HP26Z	02- 745Li (E65/E66) 03- 760Li (E66)	GS 19 GS 19	N62 N73

G00317064

Fig. 3: Identifying ZF Control Systems
Courtesy of BMW OF NORTH AMERICA, INC.

Transmission BMW ID #	Manufacturer ID #	Model/Year	Control System	Engine
A4S310R (THM-R1)	4L30-E(A4S310R) >>>	90-92 525i (E34) 93-95 525i (E34) 92 325i,is,ic (E36) 93-95325i,is,ic (E36) 92-95 318ti (E36)	GS 4.14 GS 4.16 GS 4.14 GS 4.16 GS 4.14 & GS 4.16	M50 M50 TU M50 M50 TU M42
A4S270R	4L30-E(A4S270R) >>>	96-98 328i (is,ic -97) 96-98 318i (is,ic-97) 96-98 318ti (E36/5) 96-98 Z3 1.9 (E36/7) 96-98 Z3 2.8 97-98 528i (E39)	GS 8.34 GS 8.34 GS 8.34 GS 8.34 GS 8.34 GS 8.34	M52 M44 M44 M44 M52 M52
A5S360R (GM5)	5L40-E (A5S360R) >>	99-00 323i/Ci (7/98-3/00) 99-00 328i/Ci (6/98-5/00) 99-00 528i (E39) 9/99-8/00 99-00 Z3 (E36/7) 2.3/2.8	GS 20 GS 20 GS 20 GS 20	M52 TU M52 TU M52 TU M52 TU
A5S390R (GM5)	5L40-E (A5S390R) >>	00-03 X5 3.0i (4/00 -) 01 325iT (8/00-3/01) 01-03 325xi/xiT & 330Xi (-8/00) 01 525i/iT (9/00-3/01) 01 530i (9/00-3/01) 01-02 Z3 2.5/3.0 (6/00-)	GS 20 GS 20 GS 20 GS 20 GS 20 GS 20	M54 M54 M54 M54 M54 M54

GS 20 TCM (Siemens)

G00317065

Fig. 4: Identifying Hydramatic Control Systems
Courtesy of BMW OF NORTH AMERICA, INC.

TRANSMISSION IDENTIFICATION

BMW automatic transmission are manufactured by two suppliers for the US market:

- Zahnradfabrik Friedrichshafen: Commonly referred to as ZF. ZF manufactures both manual as well as automatic transmissions.
- GM Powertrain - Hydramatic: Hydramatic is a manufacturing division of General Motors located in Strasbourg, France. Hydramatic supplies automatic transmissions to BMW for four and six-cylinder vehicles.

BMW has developed an internal numbering system for their transmissions for ordering parts, information research and identification. Also, each transmission manufacturer uses an internal identification system. Here is a breakdown of these identification codes:

Hydramatic Transmissions have internal designations, however they are not used often. The internal code for the A4S310/270R is 4L30-E and the A5S360/390R is 5L40-E. See Fig. 5 and Fig. 6 .

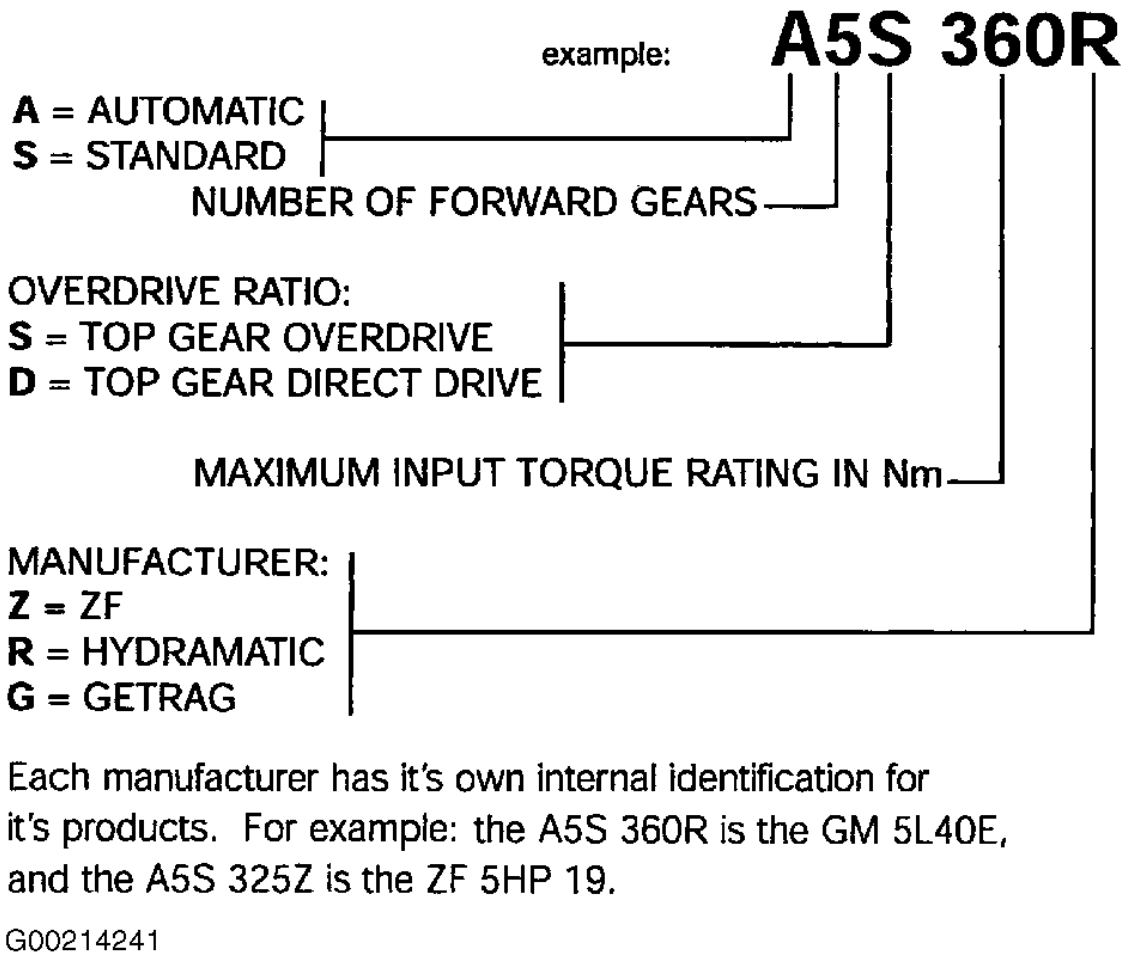

Fig. 5: BMW Transmission Identification Code (1 Of 2)
Courtesy of BMW OF NORTH AMERICA, INC.

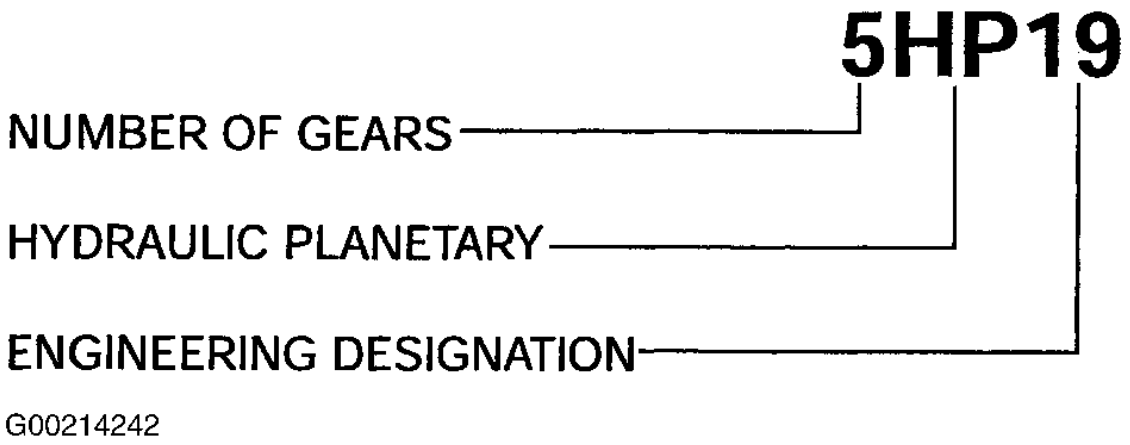

Fig. 6: BMW Transmission Identification Code (2 Of 2)
Courtesy of BMW OF NORTH AMERICA, INC.

TRANSMISSION ID TAG LOCATION

In order to identify BMW transmissions there are identification tags located externally on the transmission case. The tag contains information such as Manufacturer, Serial number, transmission type etc. This information is needed when ordering parts, referencing bulletins and calling for technical assistance. ZF tag is located on:

- Right hand side (passenger side) of transmission case. (5HP30 and 5HP18).
- Left hand side (drivers side) of transmission case. (6HP26Z, 5HP24 and all 4HP).
- Rear under output shaft. (5HP19). See Fig. 7 .

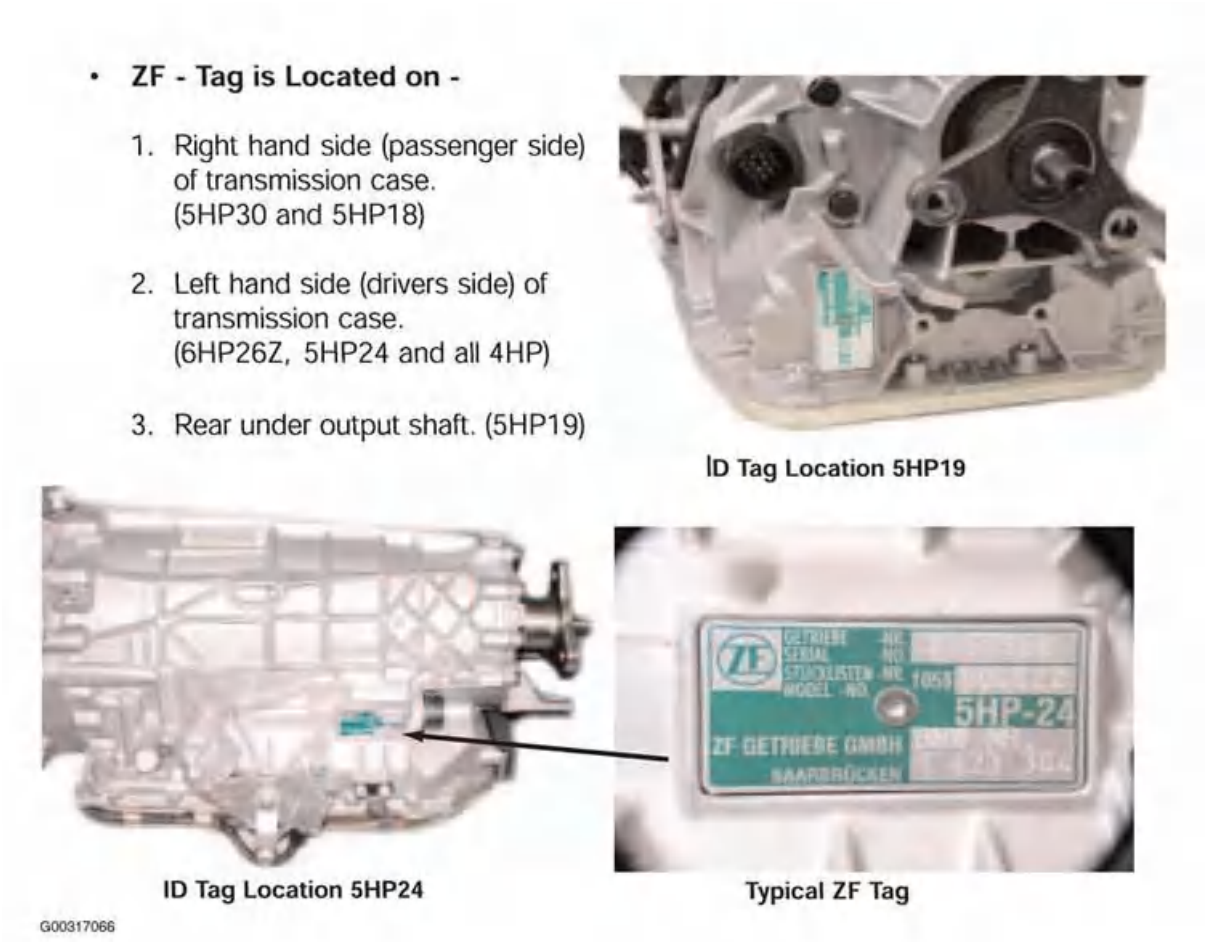

Fig. 7: Identifying ZF Identification Tag Location
Courtesy of BMW OF NORTH AMERICA, INC.

GM tag is located on:

- Left side (driver's side) of transmission case. See Fig. 8 .

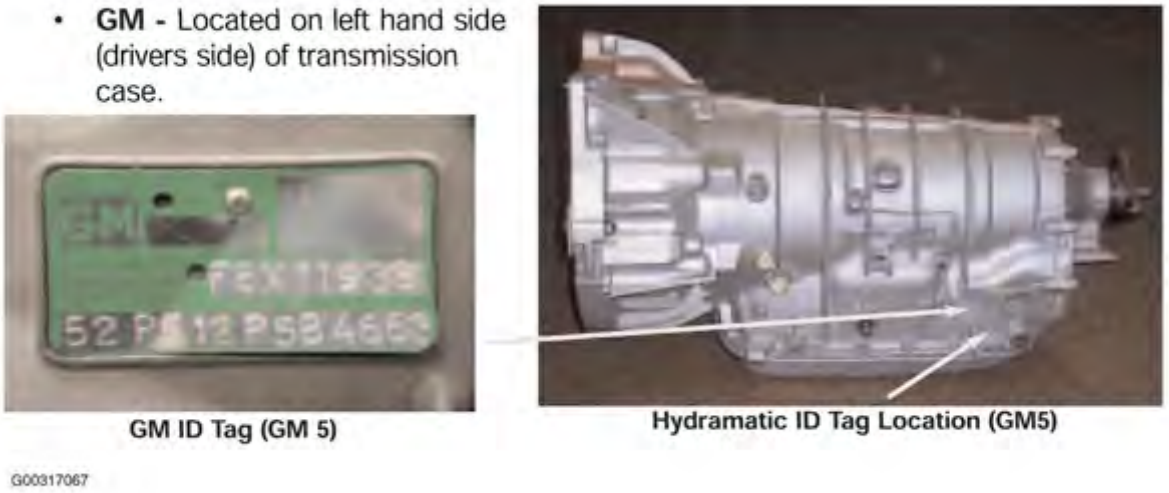

Fig. 8: Identifying GM Identification Tag Location
Courtesy of BMW OF NORTH AMERICA, INC.

SYSTEM COMPONENTS

TRANSMISSION CONTROL MODULE

The TCM receives inputs, processes information and actuates the output elements to provide optimal shift points. See Fig. 9 . The TCM is programmed for maximum shift comfort and fuel economy. The TCM on most BMW vehicles is located in the E-Box next to the ECM (DME). There are several types of TCM housings:

- 35 Pin TCM (TCU) - used on the 4HP transmissions.
- 55 Pin TCM - used on the A4S310R (THM-R1).
- 88 Pin TCM - used on all others up to 1998.
- 134 Pin TCM - used on all BMW transmission from the 1999 model year. (Note- the 134 pin TCM was introduced on the 1998 Models equipped with the A5S440Z).

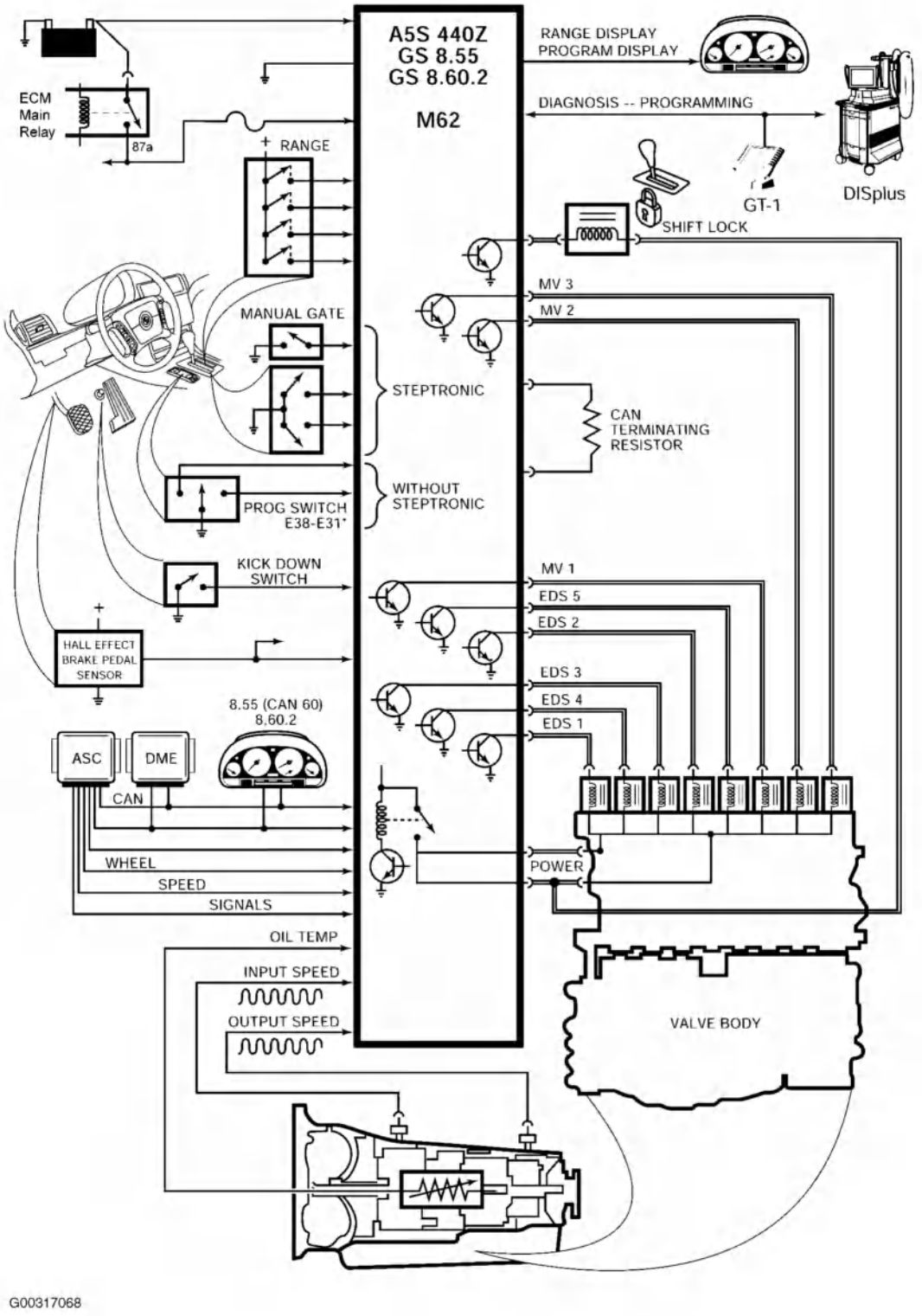

Fig. 9: Electrical System Components
Courtesy of BMW OF NORTH AMERICA, INC.

The 134 Pin TCM is also referred to as SKE (Standard Shell Construction). The SKE housing uses 5 separate connectors. On transmission applications only three connectors 1, 3 and 4) are used. Connectors 2 and 5 are blank and are NOT used. The connectors are blue in color to avoid confusion with the ECM (DME) connectors which are black. See Fig. 10 .

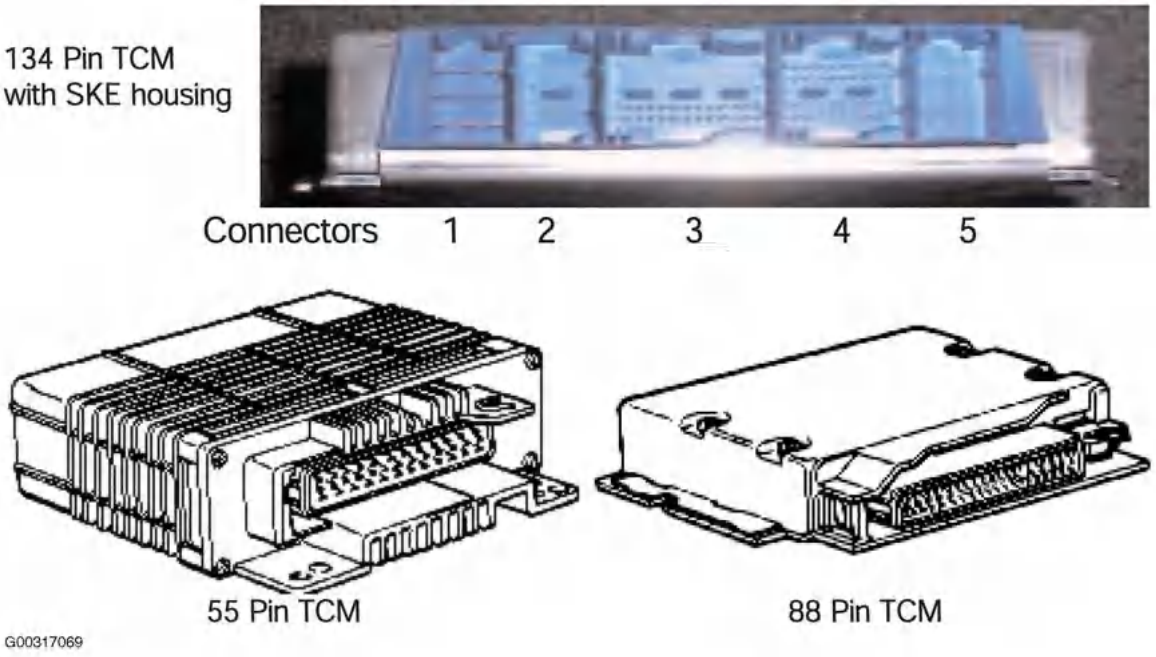

Fig. 10: Identifying Transmission Control Module & Connectors
Courtesy of BMW OF NORTH AMERICA, INC.

TURBINE SPEED SENSOR

The Turbine Speed Sensor is used to provide input (turbine) shaft speed information to the TCM (EGS). The input shaft speed signal is used in conjunction with the output shaft speed signal to determine gear range and slip time information for processing in the TCM. Not all BMW transmissions use a turbine speed sensor. Some TCM's use the TD (engine speed) signal to determine input shaft speed. All transmissions with the exception of the A5S325Z use an inductive type sensor which generates an A/C analog signal. The A5S325Z currently uses a Hall Effect Turbine Speed Sensor which will send a digital square wave signal to the TCM.

4HP22/24 (EH), A4S310/270R

These transmissions do not use a Turbine Speed Sensor. The TD signal is used to determine input shaft speed. The TD signal is an output signal of the DME control unit.

A5S310Z, A5S325Z, A5S440Z, A5S560Z, A5S360/390R

These transmission use a turbine speed sensor. The TD signal is also used with the turbine speed signal to allow the TCM to monitor Torque Converter Clutch operation. The TCM can control torque converter clutch slippage and also monitor for faults.

OUTPUT SHAFT SPEED SENSOR

The Output Shaft Speed Sensor is used to provide output shaft speed information to the TCM. The output shaft speed signal is used in conjunction with the turbine speed signal to provide the TCM with information on gear ranges and slip times. All BMW electronic transmissions have an output shaft speed sensor. The output shaft speed sensor is an inductive type which will generate an A/C analog signal to the TCM. The frequency and amplitude of the signal will increase as output shaft speed increases. See Fig. 11 . The exact location of the output shaft speed sensor varies by transmission model.

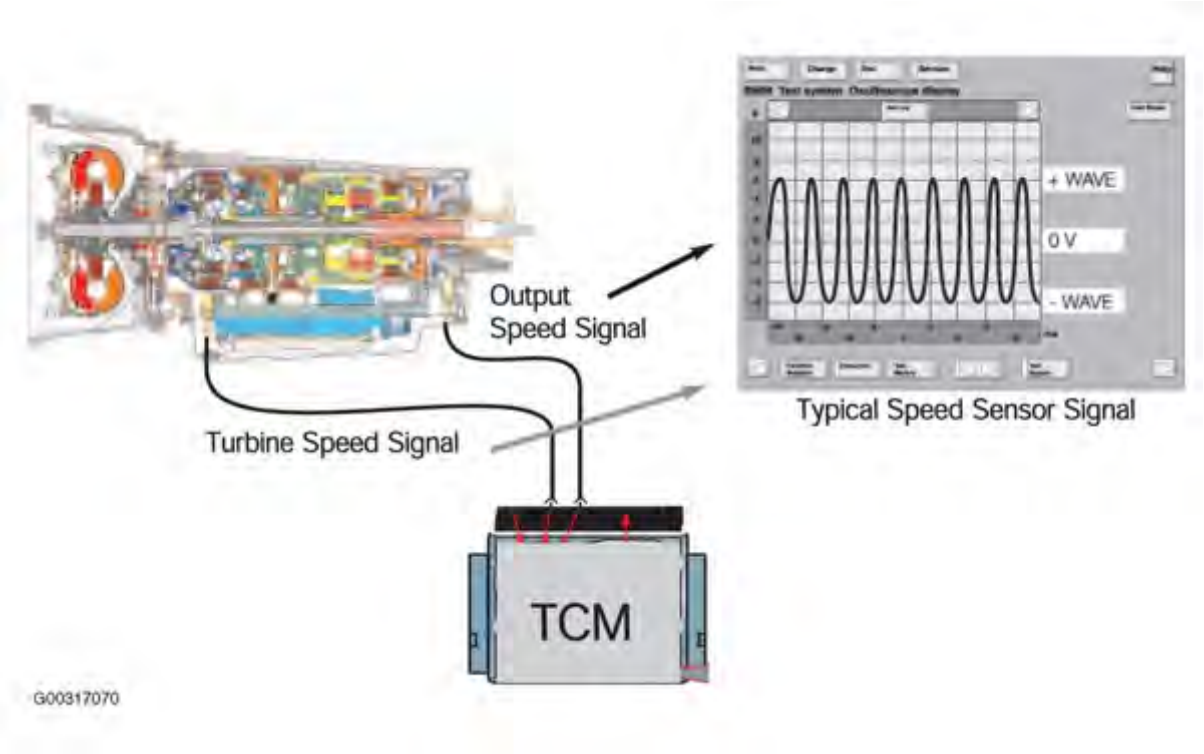

Fig. 11: Identifying Speed Sensor Output Signal
Courtesy of BMW OF NORTH AMERICA, INC.

TRANSMISSION OIL TEMPERATURE SENSOR

The TCM is provided with transmission oil temperature information via a temperature sensor. See Fig. 12 . On most BMW transmissions, the sensor is an NTC element which is part of the transmission internal wiring harness.

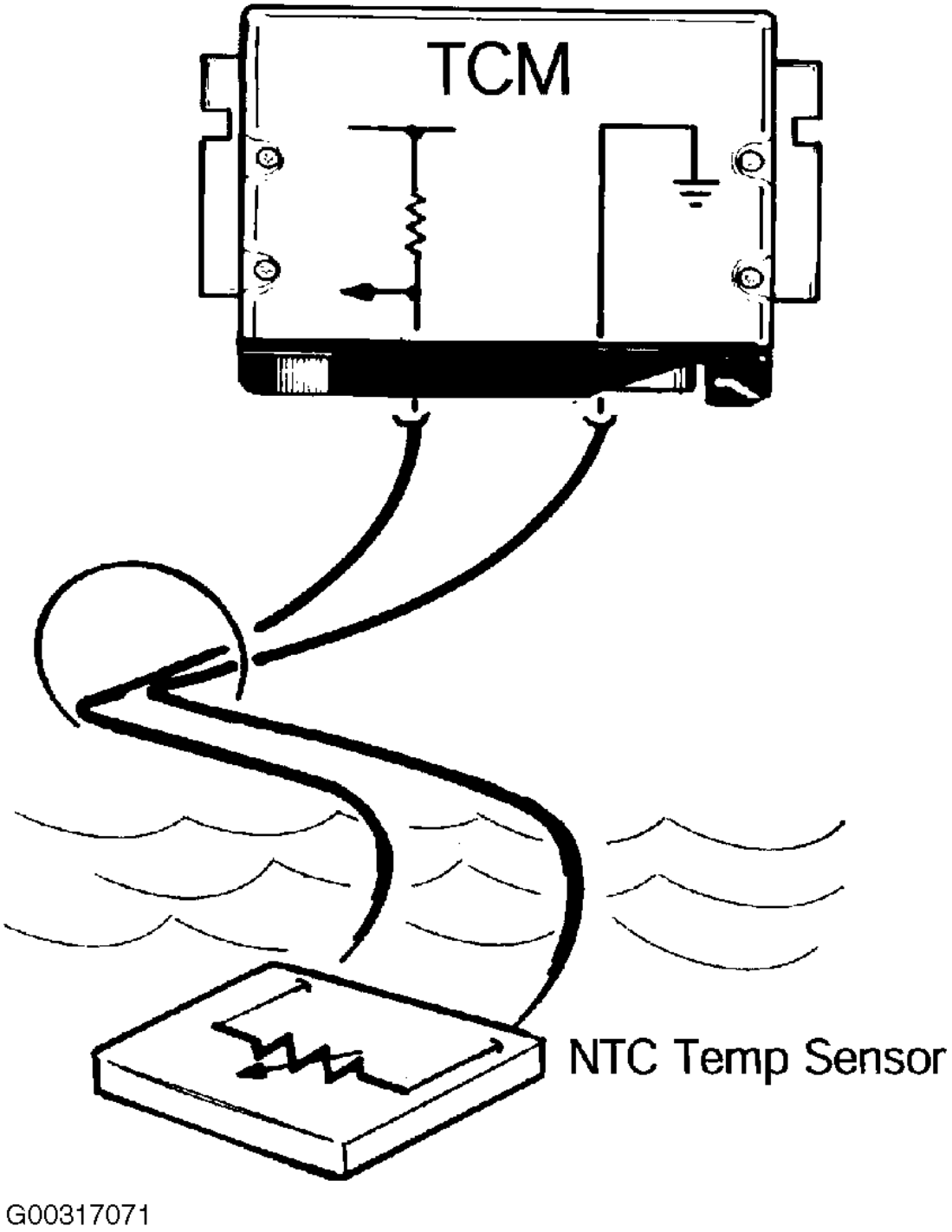

Fig. 12: Identifying Transmission Oil Temperature Sensor
Courtesy of BMW OF NORTH AMERICA, INC.

NOTE: Mechatronics Module is not currently serviceable at this time. Do not attempt any repair or replacement of the Mechatronics Module.

The transmission oil temperature information is used to:

- Initiate the Warm Up Program
- To inhibit TCC operation until a specified temperature has been reached.
- For determining fluid level when used with diagnostic equipment.

The transmission oil temperature sensor is connected to the TCM via a 5 Volt reference and a circuit ground. As transmission oil temperature increases, the circuit resistance and voltage decrease proportionately.

4HP22/24 (EH)

These transmissions do not use a transmission oil temperature sensor. There are no transmission oil temperature influenced features on the 4HP transmissions.

All Except A5S360/390R, GA6HP26Z

The transmission fluid temp sensor is part of the transmission internal wiring harness. On these transmissions, the sensor cannot be replaced separately. The harness must be replaced.

A5S360/390R Transmission

The sensor is a separate, replaceable sensor that can be unplugged from the harness.

GA6HP26Z

The sensor is located in the Mechatronics Module, which is located inside of the transmission.

KICKDOWN SWITCH

The TCM receives a kickdown request via one of two possible methods:

- The kickdown signal is a direct ground input to the TCM. The kickdown input is provided by a kickdown switch located under the accelerator pedal. See Fig. 13 . This method is used on most BMW vehicles without electronic throttle control systems (except M52TU with MDK).

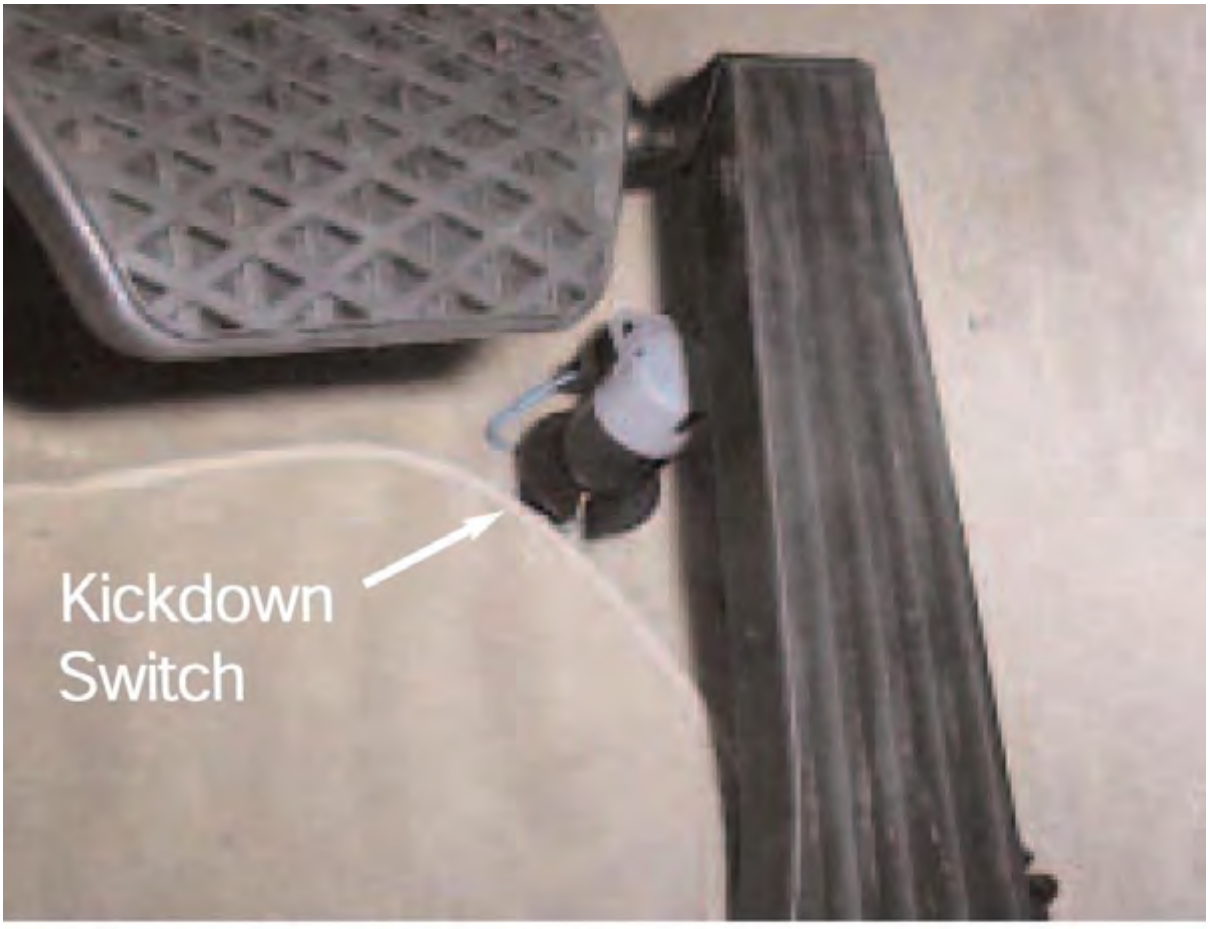

G00317072

Fig. 13: Identifying Kickdown Switch Location
Courtesy of BMW OF NORTH AMERICA, INC.

- The kickdown request is provided by the ECM (DME) via the CAN bus. The kick down request originates from the PWG. There is no separate switch in the PWG. When the PWG voltage reaches approximately 4.5 volts, the ECM will process a kickdown request to the TCM via CAN. The PWG contains a kickdown detent to simulate the feel of a kickdown switch. This method is used on the M62TU, M54, M73, M73TU, N73 and N62 engines. See Fig. 14 .

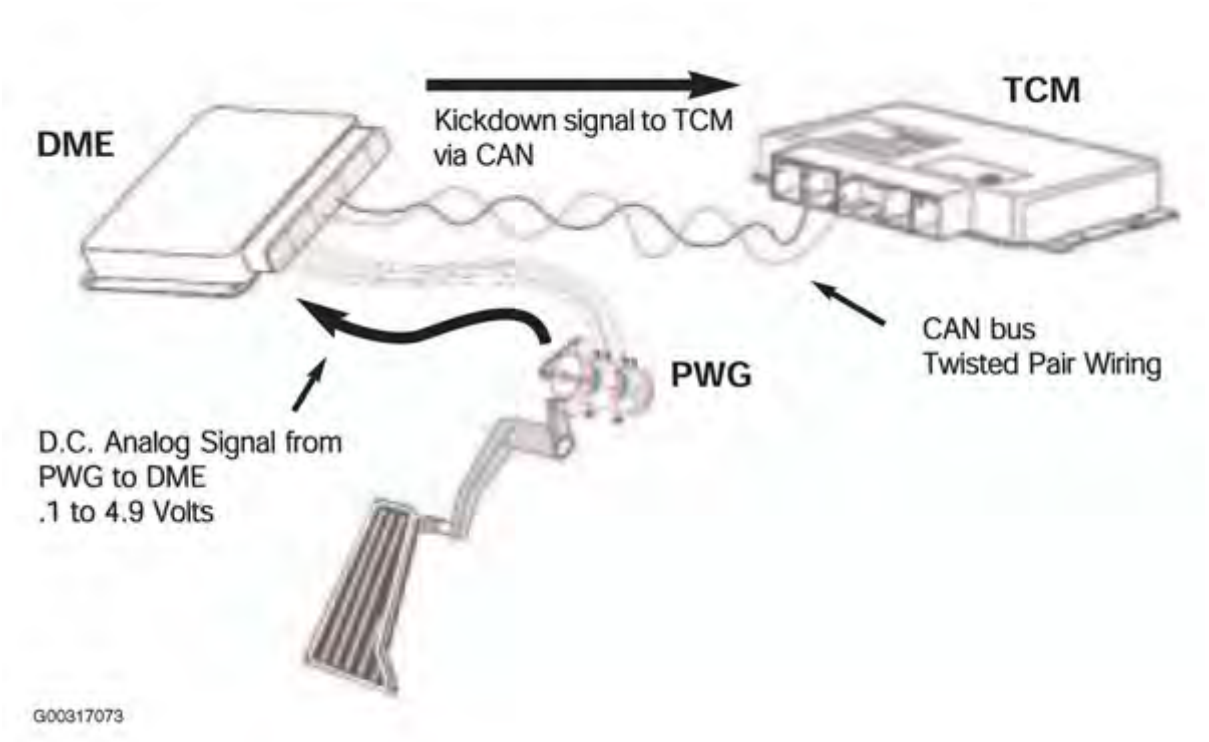

Fig. 14: Identifying Kickdown Switch Circuit
Courtesy of BMW OF NORTH AMERICA, INC.

BRAKE SWITCH

The brake switch is located on the brake pedal linkage. See Fig. 15 . The brake switch signal is an input to the TCM which is used for:

- De-activation of the shift lock solenoid. When the ignition key is turned to KL15 the shift lock is active. The shift lock solenoid is de-activated when the brakes are applied.
- De-activate the Torque Converter . The TCC is deactivated whenever the brake is applied. (only on Hydramatic Transmissions).

There are two types of brake switches used on BMW vehicles:

- On early vehicles such as E32, E34, E36, E24, E28 and E31 the brake switch is a double-contact mechanical switch. There is a brake light circuit and a brake test circuit. The brake test circuit is used for a plausibility check to indicate faults within the brake light circuit.
- On the E38, E39, E46, E65/66, E85 and E53 the brake switch is a hall effect type switch. The electronic switch is also monitored for faults and plausibility.

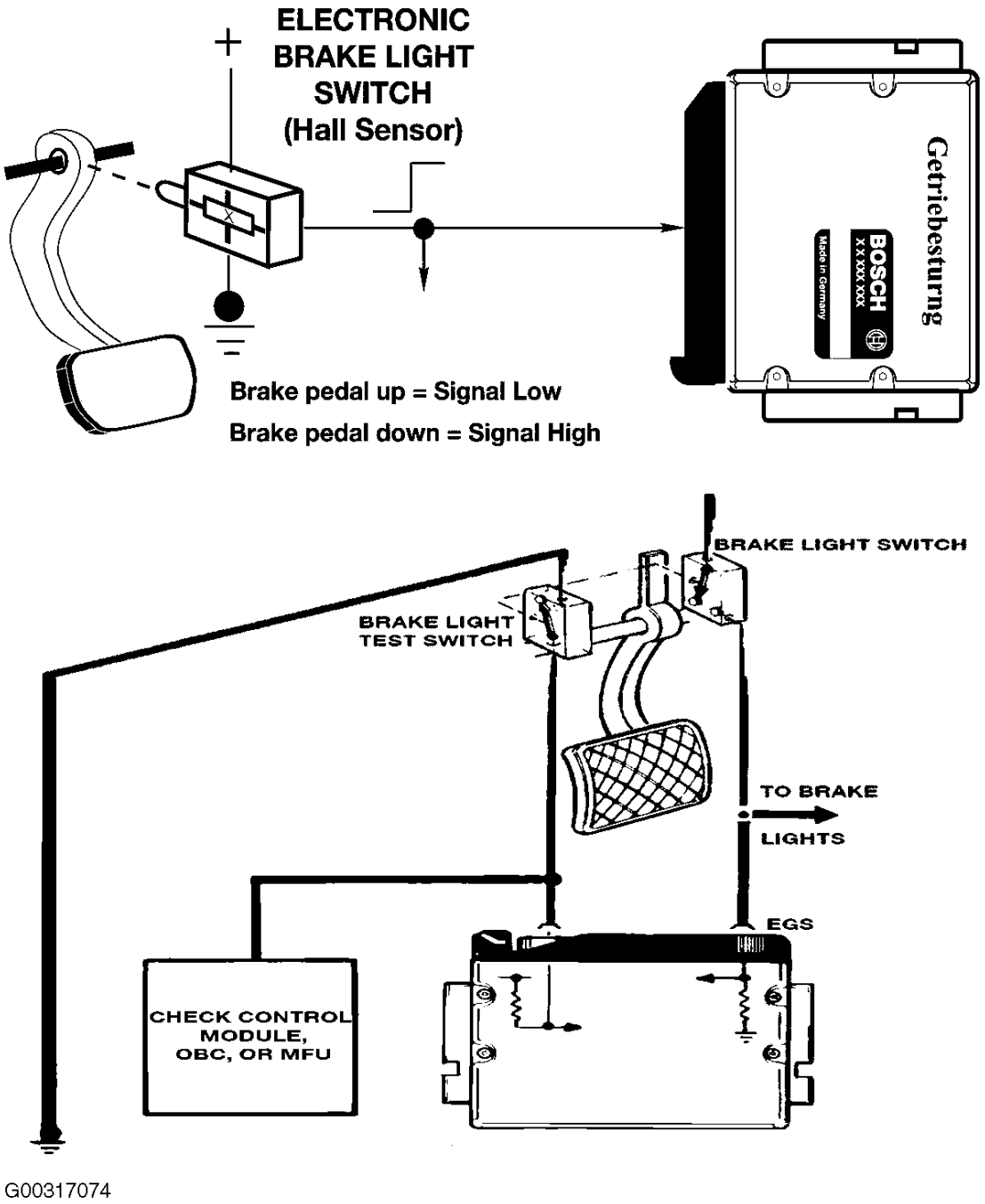

Fig. 15: Identifying Brake Light Switch Components
Courtesy of BMW OF NORTH AMERICA, INC.

TRANSMISSION RANGE SELECTOR SWITCH

The range selector switch is an input to the TCM. The input is used by the TCM to determine the position of the manual valve. The range switch uses the familiar "coded input" signal to determine selector lever position. See Fig. 16 . On all transmissions except the A5S360/390R, the range switch uses a 4 wire configuration to determine 7 range selector positions. The A5S360/390R uses a five wire arrangement.

Most range switches are located on the transmission case with some exceptions. The E36 with the A4S270/310R the range switch is located in the center console on the selector lever assembly. The E39 with A4S270R the range switch is located on the transmission case and is adjustable. The range selector switch on the A5S360/390R is located inside the transmission housing. GA6HP26Z is part of the Mechatronics Module.

The range switch can be checked by using "Status Requests" in the DISplus or GT-1. A multimeter or an oscilloscope can also be used to check the range switch. If the reading on "Status Requests" does not match the actual selector lever position, there will be various transmission malfunctions. Always refer to the proper ETM when diagnosing the range selector switch. Use the switch logic chart to diagnose faults in the switch.

In the example below, the range switch is in neutral. Using the logic chart, switches L1, L2 and L3 are closed providing B+ voltage to the corresponding pins of the TCM. Switch L4 is open and no voltage is sent to the TCM. Malfunctions in the range switch or wiring can cause various shifting complaints and possible no-start complaints. See Fig. 17 .

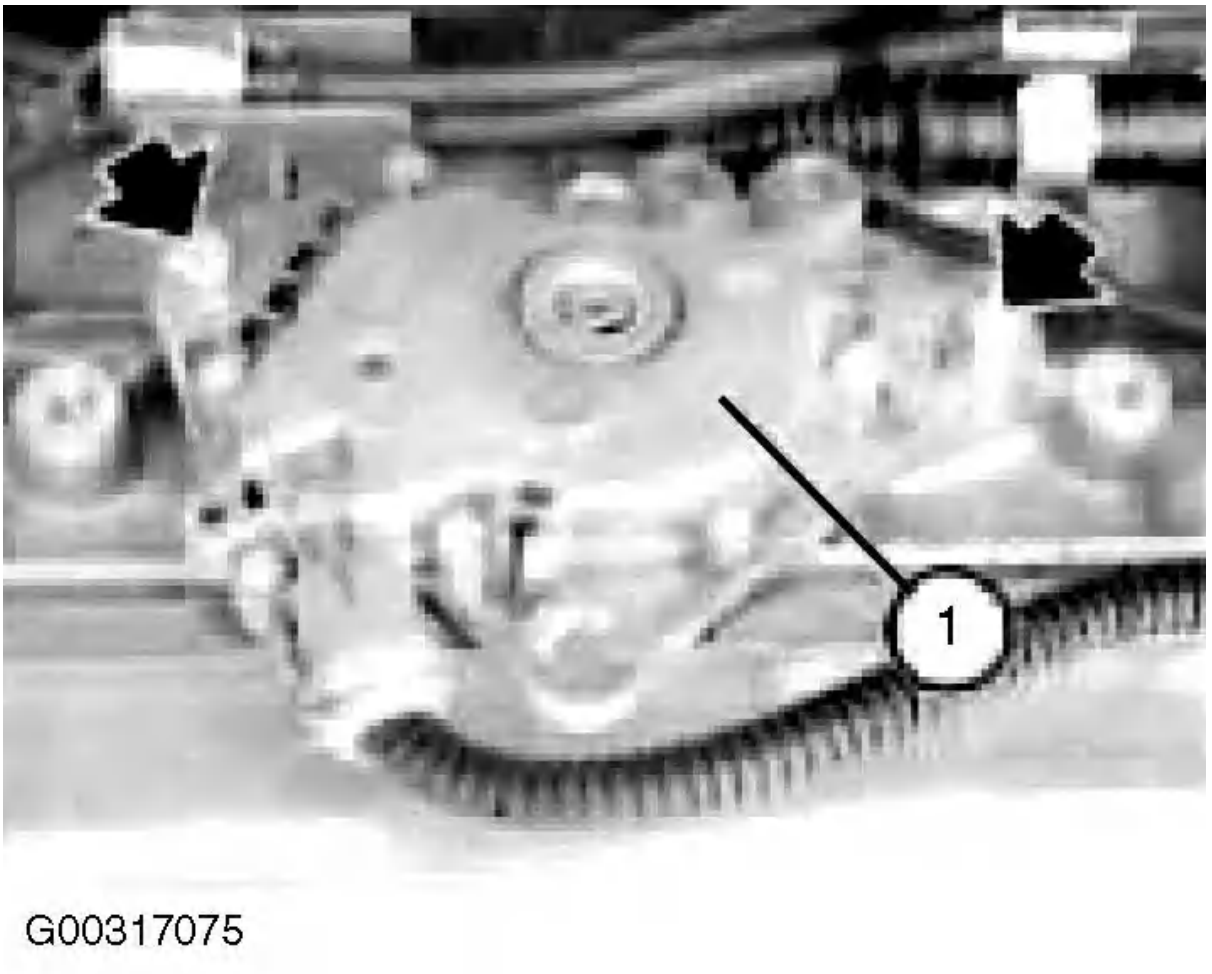

Fig. 16: Identifying Transmission Range Switch
Courtesy of BMW OF NORTH AMERICA, INC.

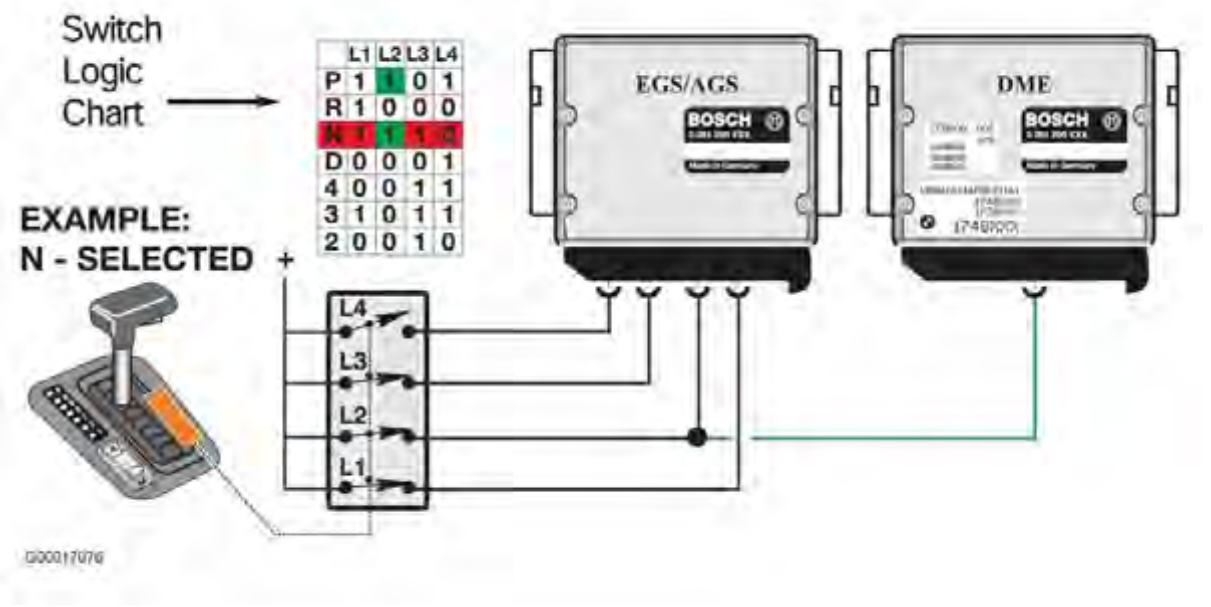

Fig. 17: Identifying Transmission Range Switch Circuit
Courtesy of BMW OF NORTH AMERICA, INC.

TRANSMISSION PROGRAM SWITCH

The transmission program switch is used to switch between various operating modes of the transmission. The normal default mode of the TCM is Economy which is indicated in the program display as "E". Economy mode allows the transmission to operate in the most efficient mode. Shift priorities are for maximum economy and shift comfort. On some vehicles the program switch is designated "A" for economy mode. Program switches come in 2 or 3 position configurations. Early vehicles with the 4HP (Early E7) used a rotary program switch.

The TCM can also be switched to "Manual Mode" which on some vehicles is designated "Winter Mode". Manual mode is used to start the vehicle off in a higher gear when encountering slippery conditions. The program display will indicate "M" (manual) or an asterisk symbol for "Winter Mode".

Sport Mode is the third operating mode that is available. Sport mode allows for a slightly delayed and more aggressive shift. Sport mode is obtained a number of ways. On vehicles with 2 position program switches, moving the selector lever out of drive to 4, 3, or 2 with the program switch in Economy will allow Sport mode. On vehicles with 3 position program switches, Sport mode can be obtained by switching to "S". See Fig. 18 .

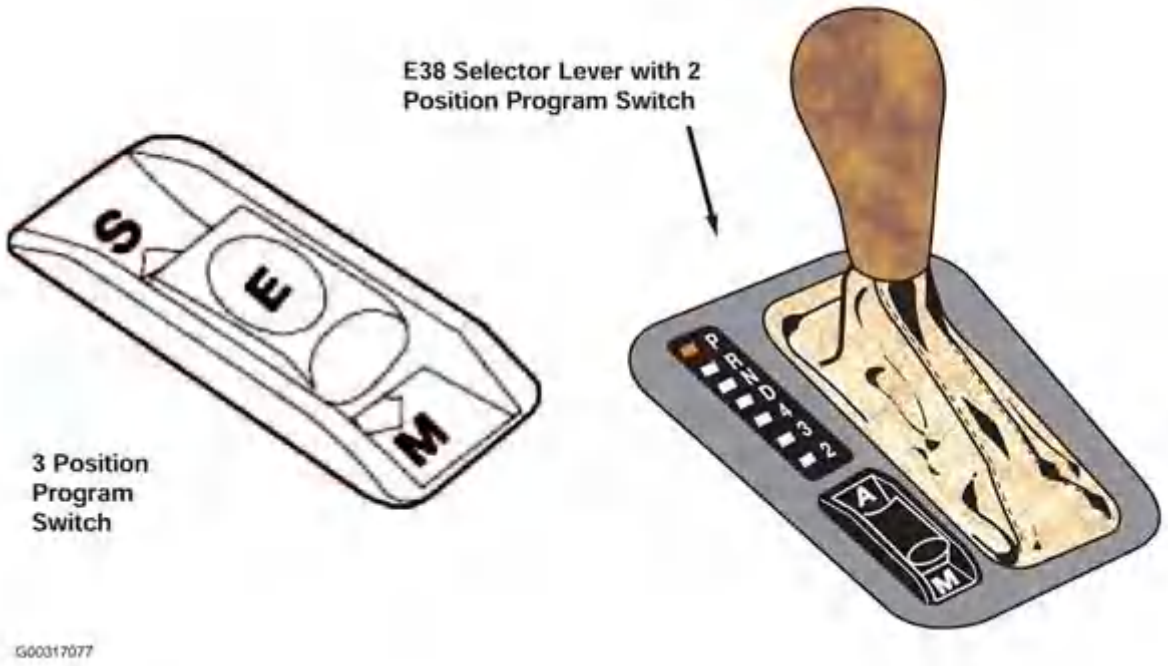

Fig. 18: Identifying Transmission Program Switch
Courtesy of BMW OF NORTH AMERICA, INC.

STEPTRONIC COMPONENTS

The Steptronic system uses additional components not found on a conventional system. These components consist of a manual switch and an Up/Down microswitch. Otherwise, the Steptronic system uses the same transmission and TCM. The TCM monitors the Steptronic shifter position from P through D via the conventional range selector switch located on the transmission. The Range Selector Switch provides positions P through D to the TCM because the automatic gate of the shifter only travels through these positions. See Fig. 19 .

When the Steptronic Shifter is moved to the left 15 degrees into the manual gate, the TCM receives a ground input from the manual gate switch. The ground signal is provided to the TCM through the Transmission Position Indicator. The transmission position indicator also provides range position signaling to the range position indicator in the shift console.

Steptronic was introduced on the E31 850Ci (10/94) and the 840Ci (1/96). Steptronic was subsequently introduced into the E38, E39, E46, E36/7 and the E53. The Steptronic system can be diagnosed through "Status Requests" with the DISplus or GT-1. From 2002 model year the Steptronic shifter has changed slightly. Downshifts are now achieved by moving the selector lever forward and upshifts are now rearward.

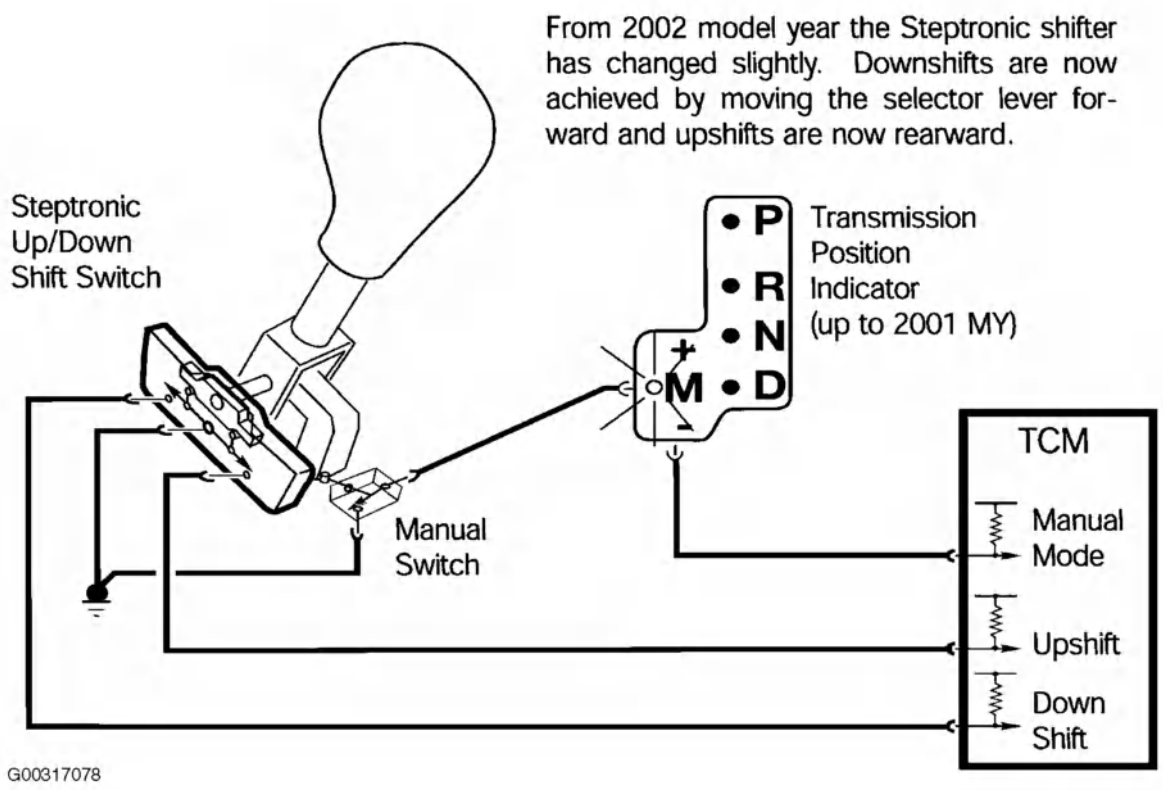

Fig. 19: Identifying Steptronic Components
Courtesy of BMW OF NORTH AMERICA, INC.

MAGNETIC VALVES

Magnetic Valves (MV) are used to electronically control hydraulic fluid flow to the various shift elements within the transmission. See Fig. 20 . Magnetic valves are located on the valve body and replaceable as separate components. In ZF transmissions, MV valves are designated MV1, MV2, MV3 etc. In Hydramatic transmissions, they are designated Shift Valve A, Shift Valve B, Shift Valve C etc.

The magnetic valves are controlled by the TCM. They are supplied power by an internal TCM relay and are ground controlled. The TCM switches one or more of the MV's on or off in various combinations to achieve various shifts. Most transmission have 2 or 3 MV's to control shifting.

In addition to controlling shifts within the transmission, magnetic valves are also used for overlap shifting and pressure regulation on some transmission applications. For example MV4 and MV5 are used for overlap shifting in the A5S310Z. MV5 is used for pressure regulation on the 4HP22/24EH transmissions. When used for pressure regulation, the magnetic valves are pulse width modulated by the TCM.

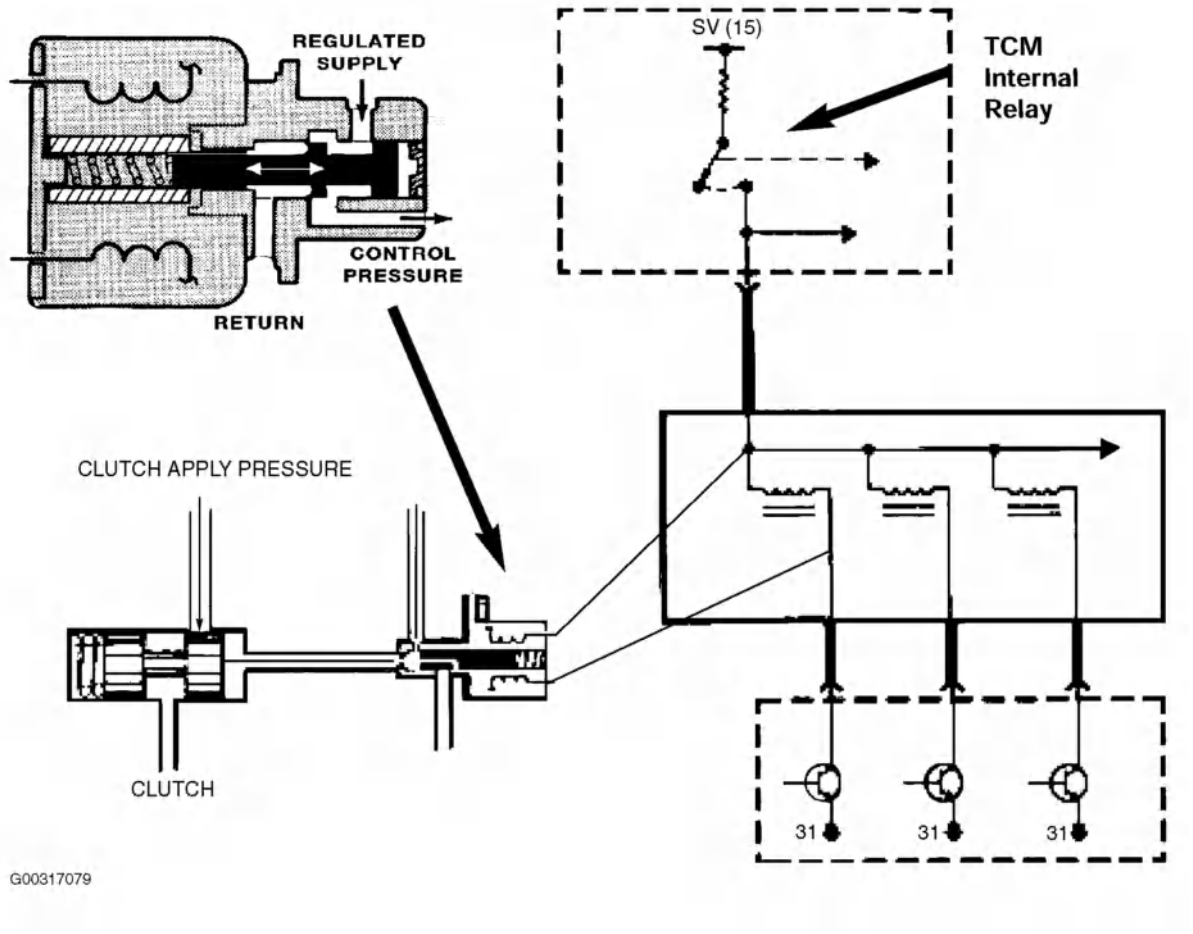

Fig. 20: Identifying Magnetic Valve Operation
Courtesy of BMW OF NORTH AMERICA, INC.

PRESSURE REGULATING SOLENOIDS

Pressure Regulating Solenoids are used to modify line pressure for use in the transmission. See Fig. 21 . There are numerous terms for these solenoids depending upon transmission type and manufacturer. ZF transmissions use the term EDS, while Hydramatic Transmissions use the term DR solenoid, Force Motor Solenoid and Variable Bleed Solenoid (VBS). EDS valves are used for main line pressure regulation, TCC application and Overlap Shift Pressure Control on the A5S440Z and A5S560Z.

All pressure regulating solenoids are controlled by Pulse Width Modulation. Using the example in the picture below, this is a section of the A5S440Z/560Z valve body. The EDS valves are used for the following:

- EDS 1 is used for main line pressure regulation.
- EDS 2, 3 and 5 are used Overlap Shift Pressure Control.
- EDS 4 is used for TCC application. (GWK) Gradually applied TCC.

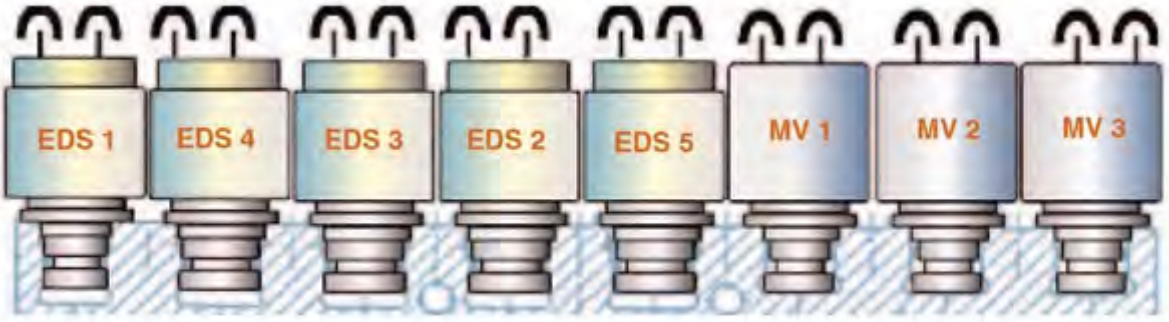

Fig. 21: Identifying Pressure Regulating Solenoids
Courtesy of BMW OF NORTH AMERICA, INC.

HYDRAMATIC PRESSURE REGULATOR

The valve body shown in illustration is from the A5S360/390R. Note location of main pressure regulator. Depending upon the reference text, the pressure regulator is also known as the Force Motor Solenoid, Variable Bleed Solenoid or PC Solenoid. See Fig. 22 and Fig. 23 .

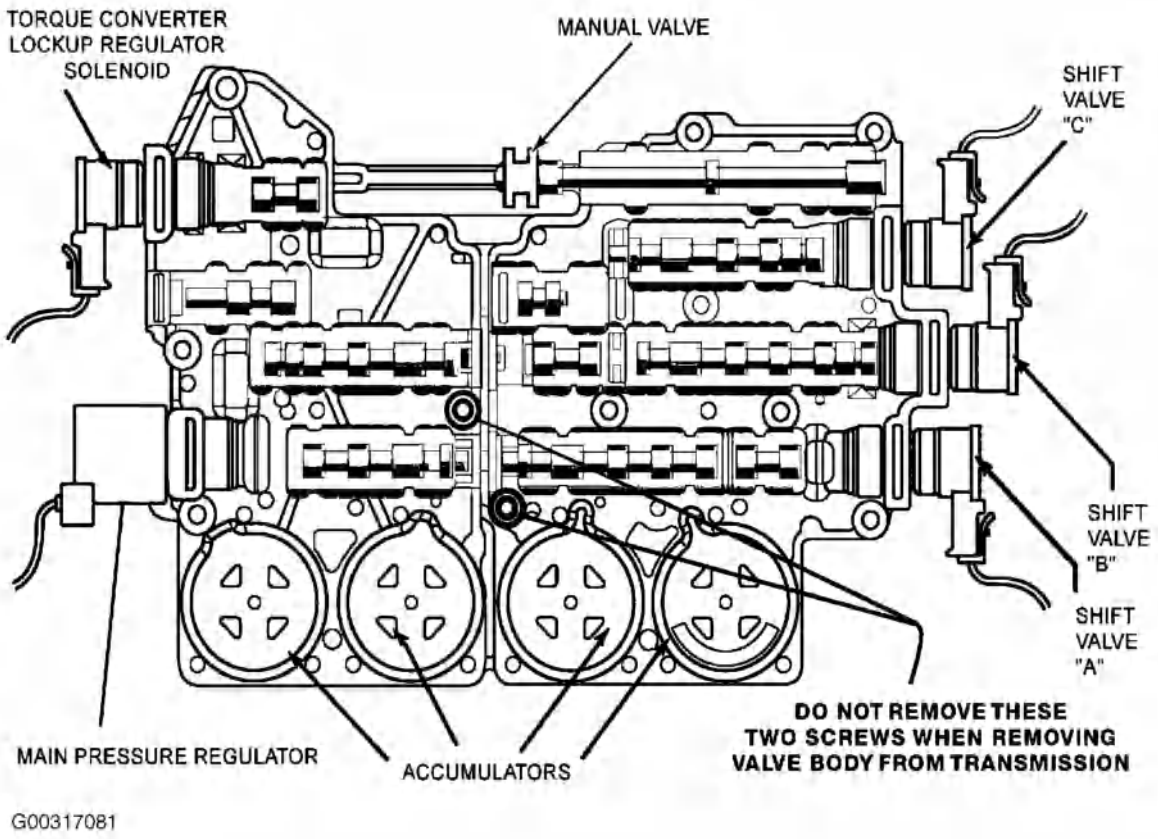

Fig. 22: Identifying Valve Body Components (1 Of 2)
Courtesy of BMW OF NORTH AMERICA, INC.

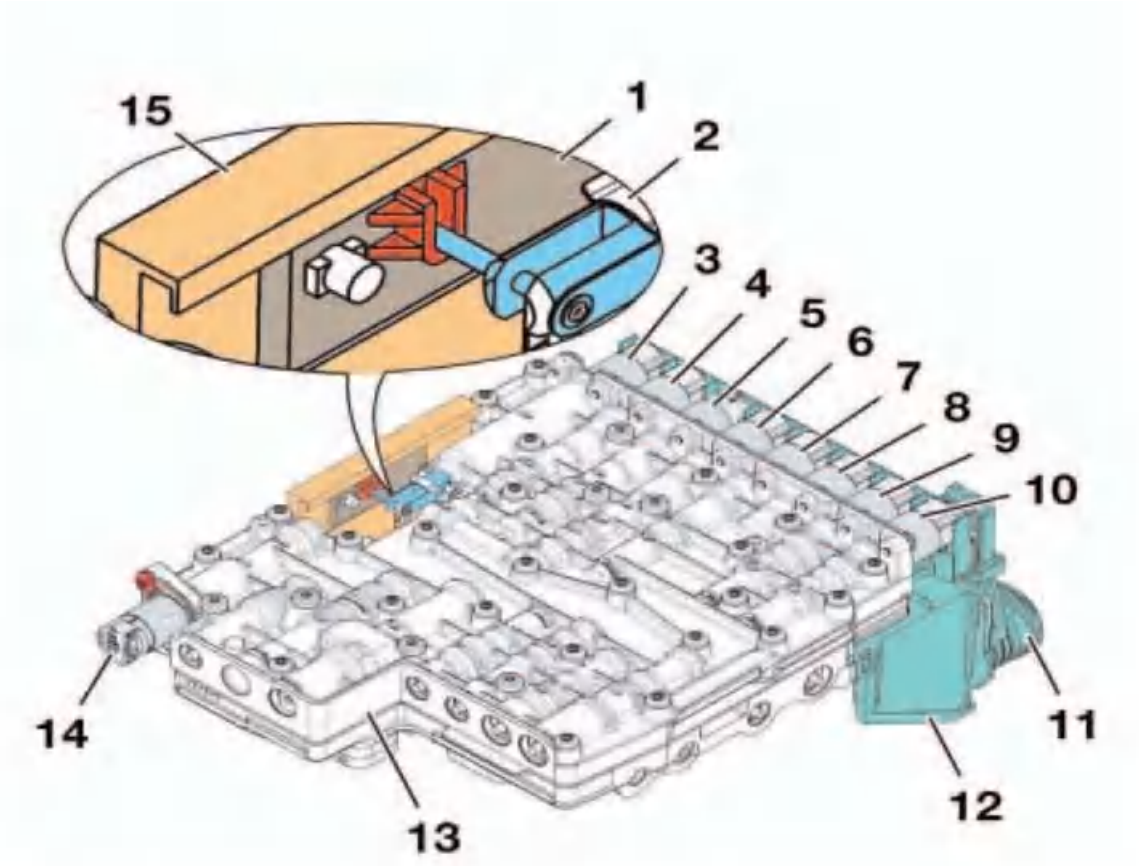

1	Position Slide Switch	9	EDS 2
2	Parking Lock Cylinder Piston	10	EDS 1
3	Solenoid Valve 3, parking lock Cylinder	11	Electronic Plug Connector
4	EDS	12	Electronic Module
5	Solenoid Valve 1	13	Hydraulic Module (Valve body)
6	EDS 4	14	Solenoid Valve 2
7	EDS 5	15	Position Switch
8	EDS 3		

G00317082

Fig. 23: Identifying Valve Body Components (6HP26Z)
Courtesy of BMW OF NORTH AMERICA, INC.

INSTRUMENT CLUSTER

The cluster is used to report information to the driver regarding transmission status. There are three items of information needed by the driver:

Transmission Range

This indicates the position of the range selector lever. The driver needs to know whether the transmission is in P, R, N, D, 4, 3, or 2.

Transmission Program

This indicates the mode of operation. There are 3 modes, Economy, Manual and Sport.

Transmission Fault Information

The driver needs to know of there is a malfunction in the transmission. Depending upon application,

transmission faults can be indicated by an icon or by a "Transmission Program" message in the instrument cluster display matrix. See Fig. 24 .

Depending upon vehicle model and transmission, these pieces of information arrive at the cluster through different methods:

- The most current method for this information to arrive at the cluster is through the CAN bus. The cluster processes this information from the TCM via CAN.
- On early E38 and E39 vehicles these is a "One Way Data Signal" from the TCM to the cluster. There is a one way serial data line that transfers this information to the cluster. On later vehicles, the cluster was introduced to the CAN bus and this method was no longer used. This was used on the E38 vehicles to 5/97 and E39 vehicles to 8/97 production. See Fig. 25 .
- Early vehicles such as E32, E34, E36 etc. used a various combination of methods to transfer this data. Some clusters use the "Coded Input" method for the program indicator. Fault indication is done by a ground circuit through the TCM. Transmission range indication is achieved by a direct connection between the range switch and cluster or by a coded input to cluster.

Fig. 24: Identifying Instrument Cluster Transmission Information
Courtesy of BMW OF NORTH AMERICA, INC.

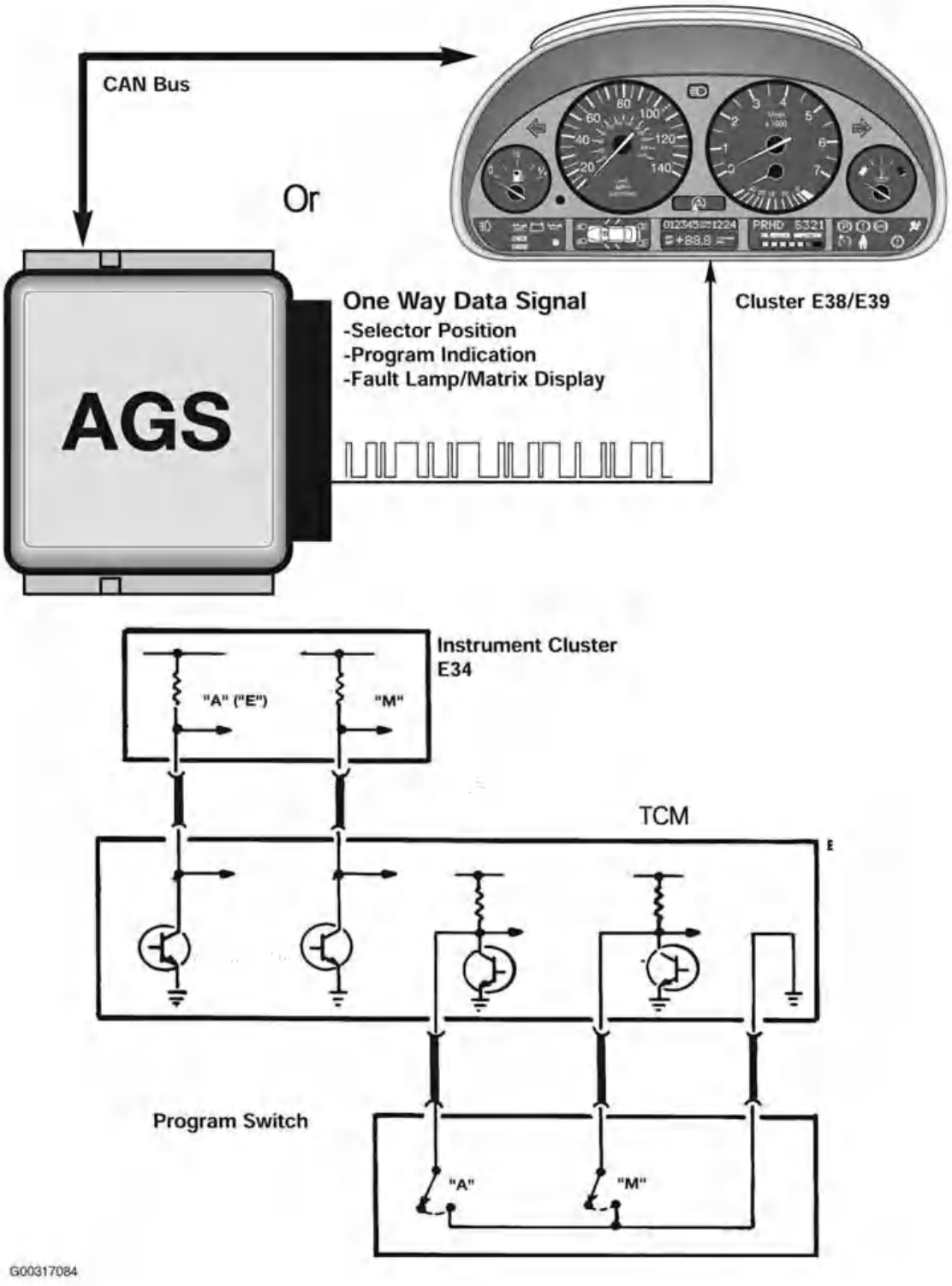

Fig. 25: Identifying E38/E39 CAN Bus Cluster & E34 Circuit
Courtesy of BMW OF NORTH AMERICA, INC.

TRANSMISSION FEATURES & PRINCIPLES OF OPERATION

ADAPTIVE HYDRAULIC PRESSURE CONTROL

Pressure adaptation has been a feature of ZF automatic transmissions since the 4HP22EH. The TCM will maximize shift quality by adapting to transmission wear over time. The TCM will adjust transmission shift pressures to compensate for wear in the multi-plate clutches. This is accomplished by monitoring the input and output speeds of the transmission. When the transmission shifts, the TCM monitors the time that it takes to accomplish the shift. The time change in gear ratio is monitored and compared to an internal time value in the

TCM. If the ratio change takes more time than the stored value, the TCM will compensate by adjusting the transmission shift pressures via the EDS valve solenoids. The adaptation value is stored in the TCM. This adaptation values can only be cleared by the diagnostic tester (DIS plus or GT-1). See Fig. 26 .

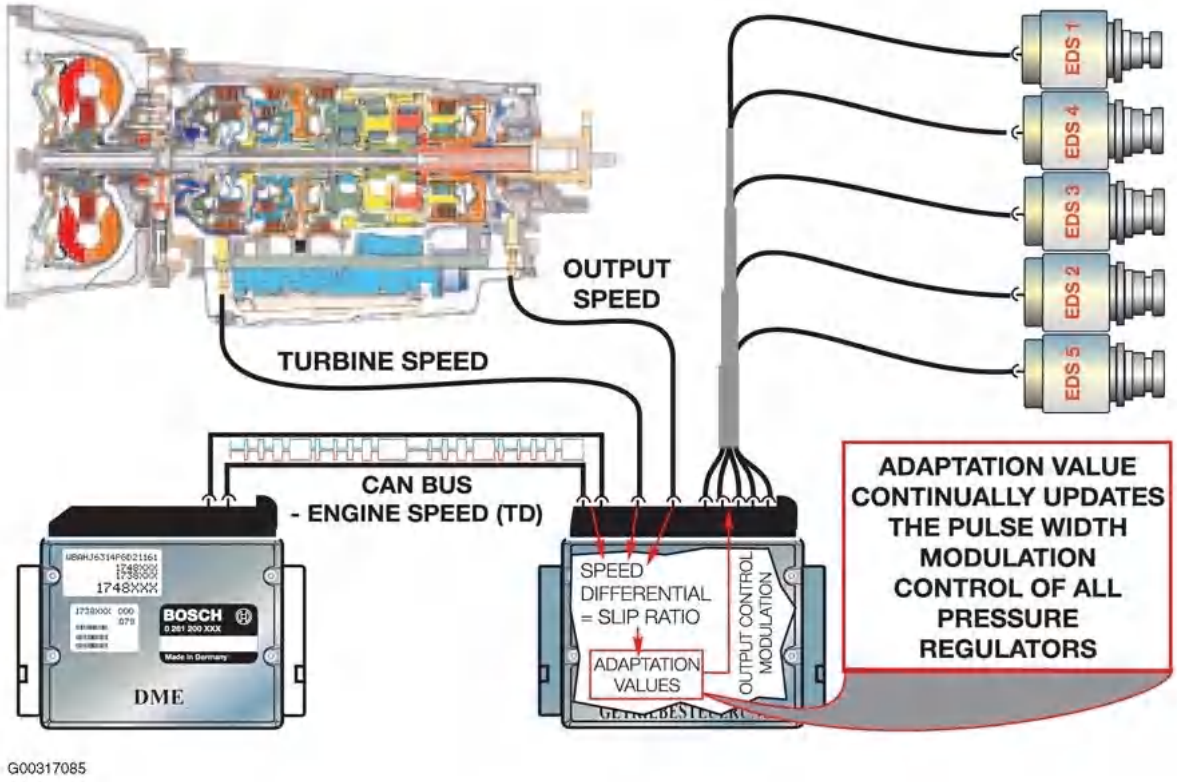

Fig. 26: Identifying Adaptive Hydraulic Pressure Control
Courtesy of BMW OF NORTH AMERICA, INC.

NOTE: DO NOT clear adaptation values unless directed to do so by technical assistance. Clearing pressure adaptations should not be done to resolve a customer complaint. The only time that you would need to do so is after a transmission or valve body replacement or software change. Also it is important not to confuse pressure adaptation with AGS features. AGS features will be discussed later in this chapter. AGS features are not stored on a long term basis and will not be cleared when the pressure adaptations are cleared. Driving style is NOT stored.

DOWNSHIFT PROTECTION

Downshift protection is a feature that prevents unwanted or improper downshifting. If the range selector were moved to a lower gear at a high road speed, engine damage could occur from an unintended over-rev. This feature will prevent engine over-rev by delaying or preventing the unwanted downshift until the proper road speed is achieved. The result is increased safety by preventing unwanted deceleration slip.

REVERSE LOCKOUT

The TCM will lockout reverse above 3 MPH to prevent drivetrain damage. The range selector lever will go into the reverse detent, but reverse will not engage. This is achieved by the TCM through hydraulic intervention. The transmission will appear to be in neutral.

NOTE: Reverse Lockout is not operative when in failsafe.

ENGINE WARM UP CYCLE

The transmission shift points are modified after cold start to raise engine RPM during shifting. This allows for a faster engine warm up and reduction of catalyst warm up time. The TCM uses the transmission oil temperature information to determine the implementation of this function. The warm up phase program will be terminated if any of the following conditions exist:

- The vehicle exceeds 25 MPH.
- Transmission oil temperature exceeds 60Â°C.
- A Maximum of three minutes is exceeded.

ASC/DSC SHIFT INTERVENTION

During ASC/DSC regulation upshifts are inhibited to enhance the effectiveness of tractional control. Depending upon vehicle model, this action can take place via the CAN bus or a dedicated shift intervention signal wire. On later model vehicles where the ASC/DSC module is connected to the CAN bus, the shift intervention signal is sent to the TCM via CAN.

TORQUE REDUCTION

In order to allow a smoother shift and reduce load on the transmission, engine torque is reduced during shifting. This is accomplished by a signal that is sent from the TCM (EGS) to the ECM (DME) during shifting. The ECM will retard timing momentarily during the shift for a few milliseconds. This timing change is transparent to the driver. Depending upon application, the torque reduction signal is sent over a dedicated wire or a signal over the CAN bus.

EMERGENCY PROGRAM

When a malfunction occurs within the transmission, the emergency program (failsafe mode) will be initiated. The emergency program will prevent unintended gear engagement and ensure driver safety. The following will occur during failsafe operation:

- All shift solenoids are de-energized via TCM internal relay.
- The pressure regulation solenoid is de-energized resulting in maximum line pressure.
- The Torque Converter Clutch is de-activated.
- The Reverse Lockout function is canceled.
- Shift lock solenoid is de-energized.
- Fault indicators are active.

The fault indicator varies depending upon model, year and cluster type etc. See Fig. 27 . High version instrument cluster will display a message in the matrix display. Vehicles with low version clusters will display a fault symbol in the cluster. During failsafe mode the transmission will be shifted into a higher gear to allow the vehicle to be driven to a service location. Depending upon application, the transmission will shift into 3rd or 4th gear (on a 4 spd) and 4th or 5th gear (on a 5 spd). For example the A5S360R transmission will go into 5th gear when there is a malfunction and 4th when there is a power failure to the TCM. Since pressure regulation ceases, the shift to failsafe mode will be abrupt or harsh, unless the transmission is already in the failsafe gear. On newer OBD II complaint vehicles, the MIL light will also be illuminated by the ECM (DME).

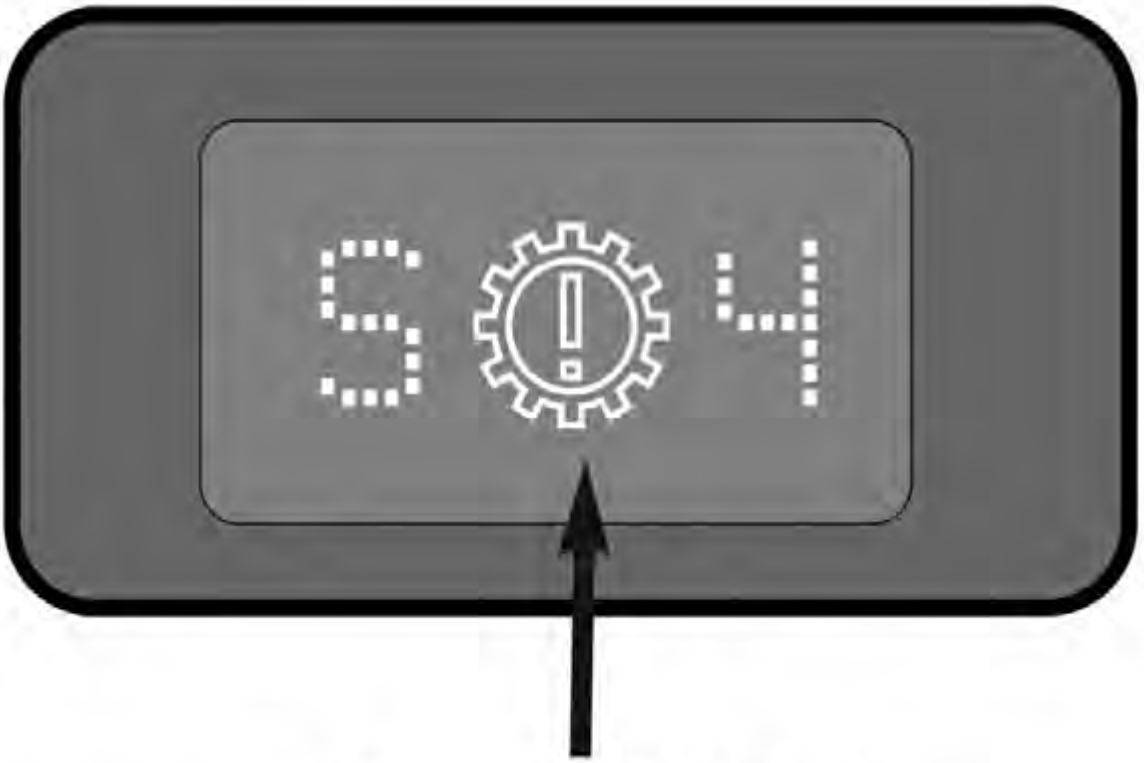

Fig. 27: E46 Transmission Fault Indicator
Courtesy of BMW OF NORTH AMERICA, INC.

NOTE: Note: When diagnosing transmission related complaints, it is possible to have an erroneous fault indicator warning. Faults in the cluster can cause a false indication or "Trans Program" message. One indication of this scenario would be a transmission fault message in the cluster with no transmission faults stored in the TCM.

A/C COMPRESSOR LOAD SENSING (HYDRAMATIC TRANSMISSIONS)

When the A/C Compressor is switched on, additional load is placed on the engine. To compensate for the additional load, the TCM modifies line pressure and shift points. On the THMR-1, the TCM receives these signals via a direct connection to the A/C compressor control circuit. On vehicles equipped with CAN bus technology, the "AC on" signal is sent to the TCM from the DME as a CAN bus message. See Fig. 28 .

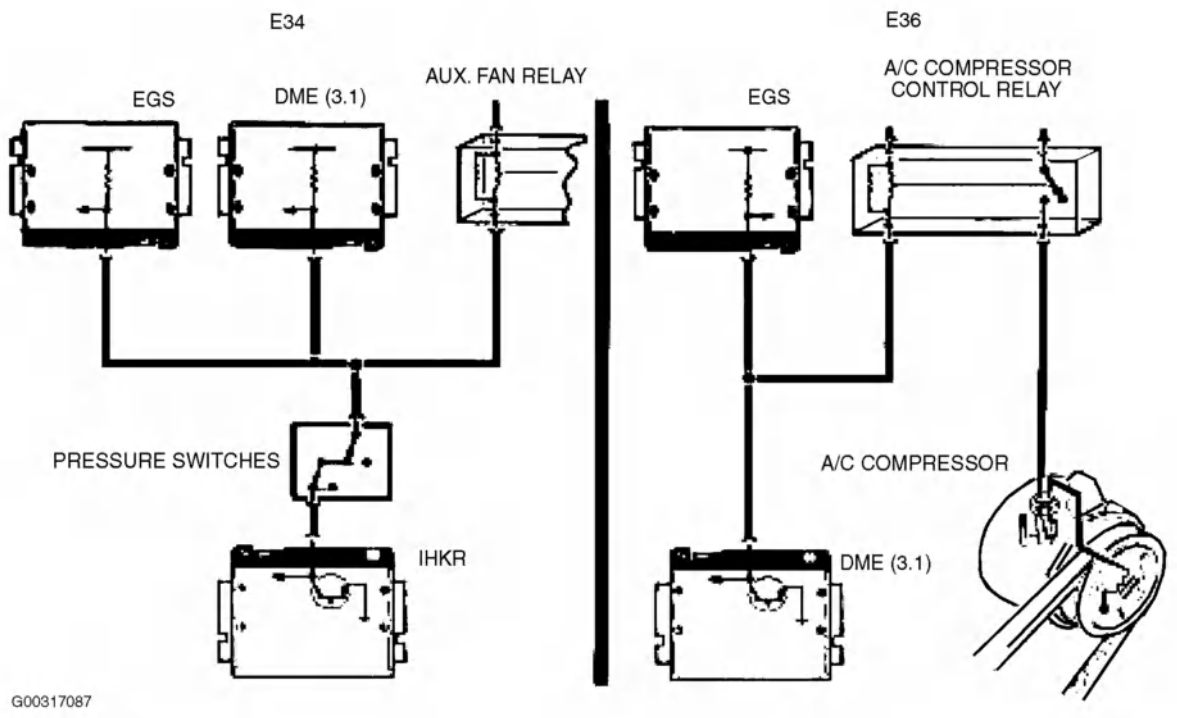

Fig. 28: A/C Compressor Load Sensing
Courtesy of BMW OF NORTH AMERICA, INC.

SHIFT LOCK

The shift lock solenoid is mounted on the selector lever assembly and locks the selector lever in Park or Neutral when the ignition is ON. See Fig. 29 . This prevents the selection of a gear unless the brake pedal is depressed. The solenoid is activated by a switched ground from the TCM. Power is supplied by the TCM internal relay. During failsafe operation, the shift lock is disabled. On later models, the shift lock will also be active when the TD signal is present and the shifter will remain locked above an engine speed of 2500 RPM regardless of brake application.

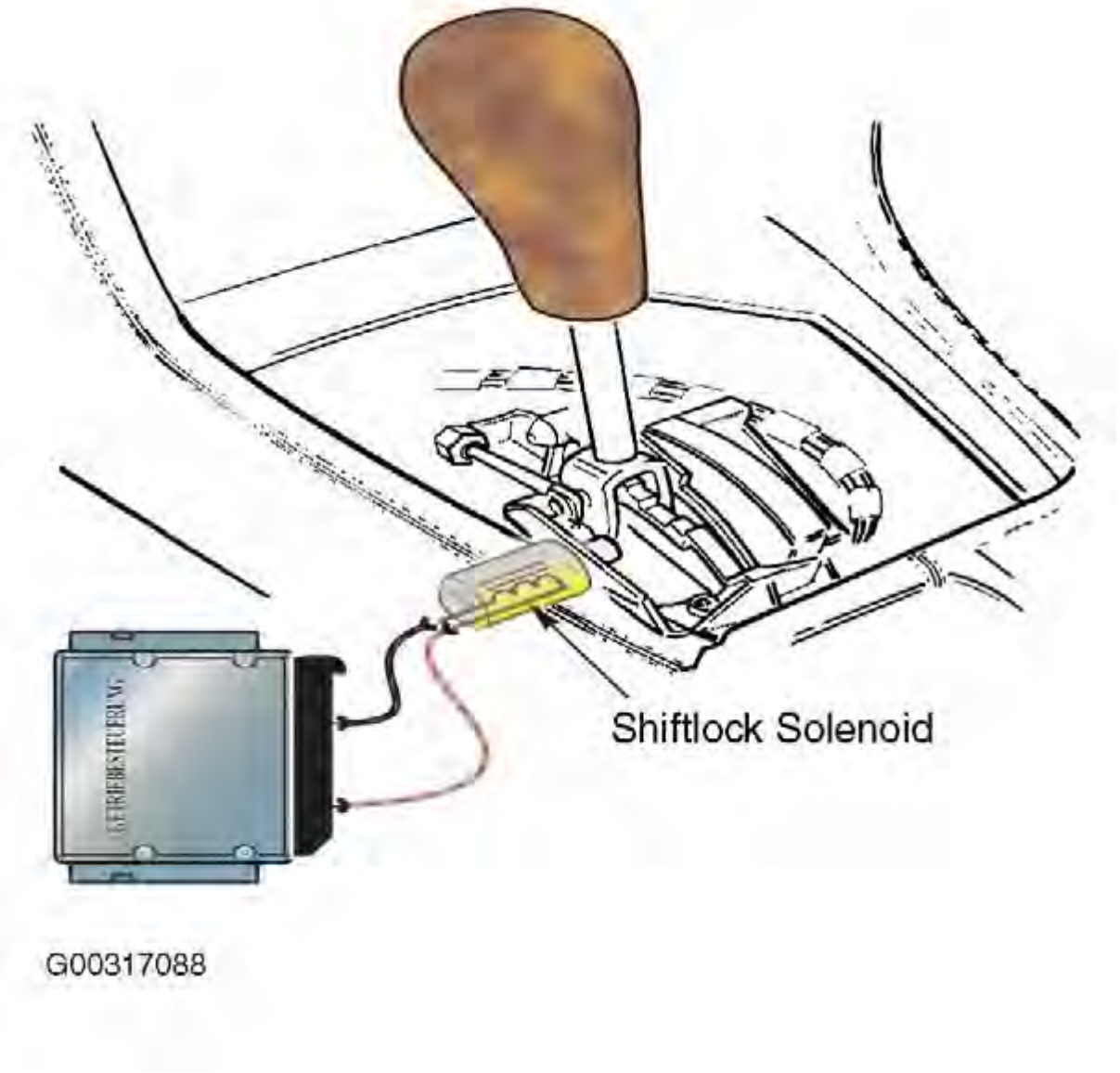

Fig. 29: Identifying Shift Lock Solenoid
Courtesy of BMW OF NORTH AMERICA, INC.

TORQUE CONVERTER CLUTCH

A torque converter clutch was added on EH controlled transmissions. The torque converter clutch locks the turbine to the converter housing. This creates a mechanical coupling with a ratio of 1:1. This can only be achieved at higher engine speeds, the torque converter clutch must be disengaged at low engine speeds to prevent stalling. There are two methods for controlling the torque converter clutch on BMW transmissions:

- A4S310/270R, 4HP22/24 EH, A5S310Z - These transmissions use an on/off control method to lock and unlock the torque converter. The Torque Converter Clutch is either completely engaged or disengaged. This method of engagement provides an abrupt sensation when the TCC is locking and unlocking. This abrupt sensation can be undesirable to some drivers.
- A5S560Z, A5S440Z, A5S325Z, GA6HP26Z,A5S360/390R - These transmissions use a gradual approach to TCC control. The TCC is gradually applied and released, this method reduces the abrupt feel of the on/off type TCC. The TCC solenoid is controlled by pulse width modulation. This allows fluid to be gradually introduced and released to the TCC.

The TCC is spring loaded to the engaged position. Pressurized fluid releases the TCC, when the pressurized fluid is released, the TCC is engaged. Depending on transmission application, the TCC can be engaged in 3rd, 4th or 5th gear. The TCC must be disengaged at low speeds to prevent stalling. See Fig. 30 and Fig. 31 .

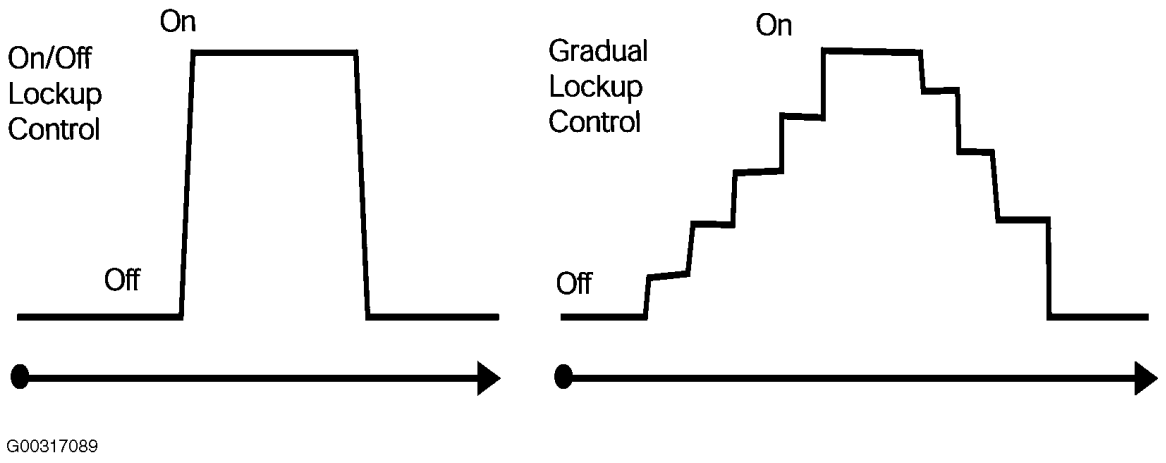

Fig. 30: Torque Converter Clutch Operation
Courtesy of BMW OF NORTH AMERICA, INC.

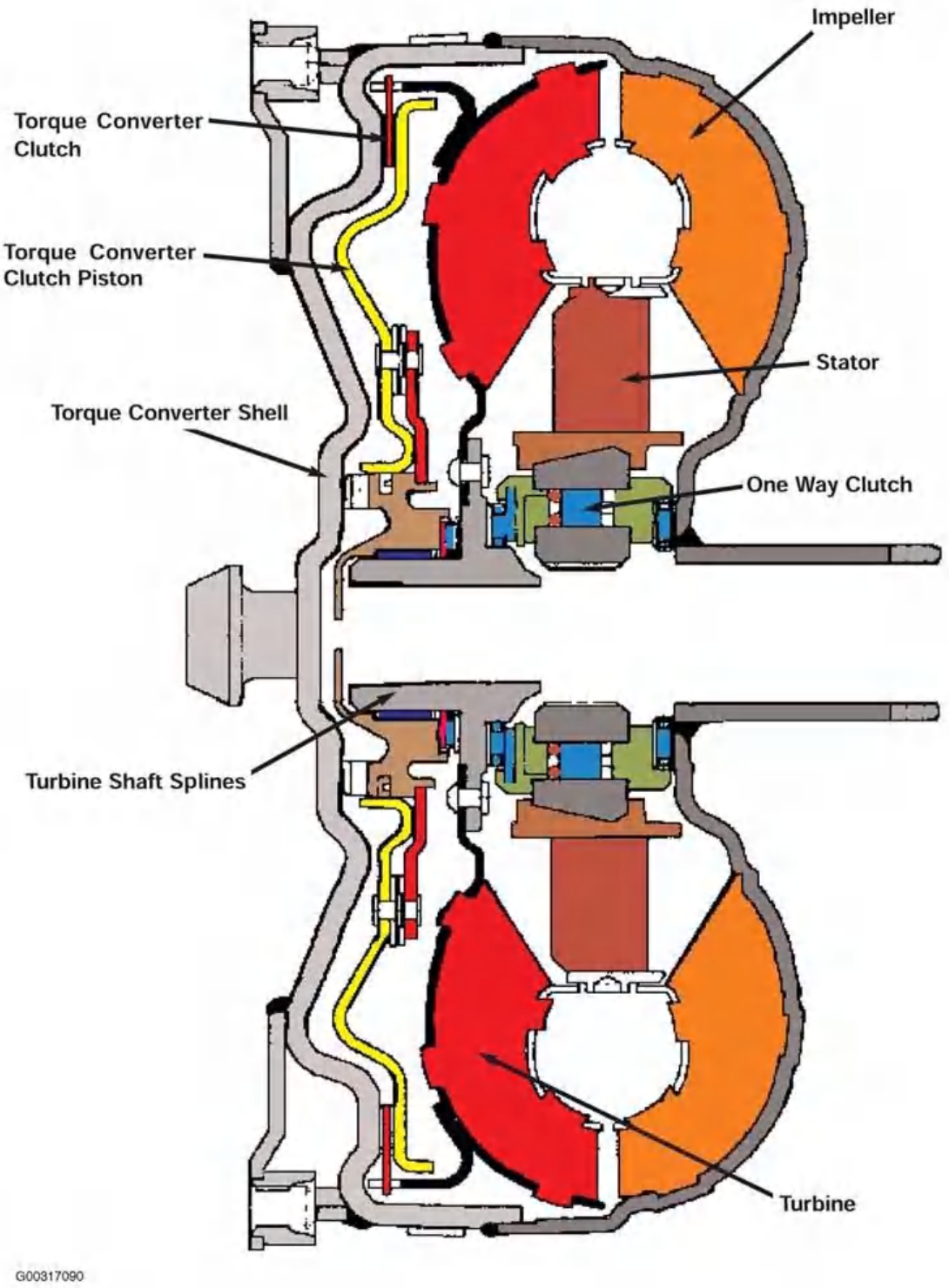

Fig. 31: Identifying Lock-Up Torque Converter Components
Courtesy of BMW OF NORTH AMERICA, INC.

SHIFT SOLENOID CONTROL

Magnetic valves are used to direct the flow of transmission fluid to control shift elements in the transmission. Another Term for "Magnetic Valve" is "Shift Valve". Magnetic valves (MV) are solenoids controlled by the TCM. They can be switched by B+ or B-. On ZF transmissions, magnetic valves are designated MV1, MV2, MV3 etc. On GM transmissions they are designated Shift Valve A, Shift Valve B, Shift Valve C etc. Either valve can be checked for proper resistance using a multi-meter, DISplus or GT-1. Also, the "Activate Components" function can be used to check the Magnetic valves. Most all magnetic valves are switched on/off instead of Pulse Width Modulation (PWM). All magnetic valves (except THM R-1 to 12/95) are supplied

power from an internal relay located in the TCM. The magnetic valves are switched on and off by final stage transistors in the TCM. During failsafe operation, power to all MV's is switched off by the internal relay. Magnetic valves are located on the valve body. They can be replaced individually. Refer to proper repair instructions for installation and removal procedures. See Fig. 32 .

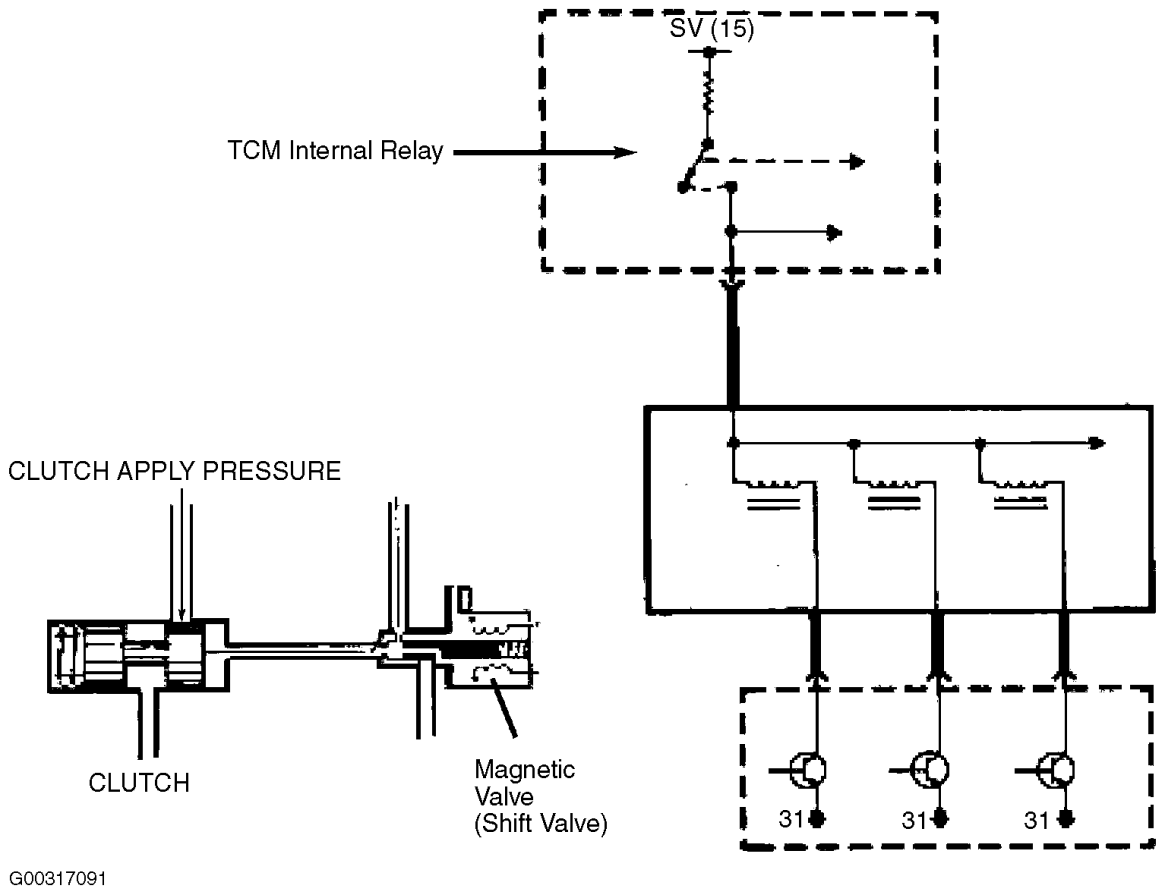

Fig. 32: Identifying Shift Solenoid Control Components
Courtesy of BMW OF NORTH AMERICA, INC.

PRESSURE REGULATION

Pressure regulating solenoids modify line pressure for hydraulic operation. Solenoids for pressure regulation are referred to as EDS valves in ZF transmissions. GM transmissions have a few terms such as Force Motor Solenoid, Variable Bleed Solenoid, and DR solenoid. Regardless of the name used, they are all used to control main line pressure based on throttle position and engine load. On ZF transmissions, EDS valves are also used to control "Overlap Shifting". This allows for improved shift comfort by controlling pressures during shifting. Depending upon transmission application, pressure regulating solenoids can be controlled using Pulse Width Modulation on B+ or B-. The TCM will increase line pressure by regulating current flow to the pressure regulator. Current flow is controlled by pulse width modulation. When the duty cycle is low, the current flow to the solenoid is low. This allows spring pressure to close the valve. Therefore maximum line pressure is achieved. As the duty cycle increases, the current flow also increases. The valve opening increases, which allows pressure to be released through the pressure discharge which in turn decreases line pressure. Main line pressure is also increased during failsafe operation and when needed during "Adaptive Hydraulic Pressure Control" functions. Mainline pressure will also default to maximum pressure when power to the TCM is switched off. See Fig. 33 .

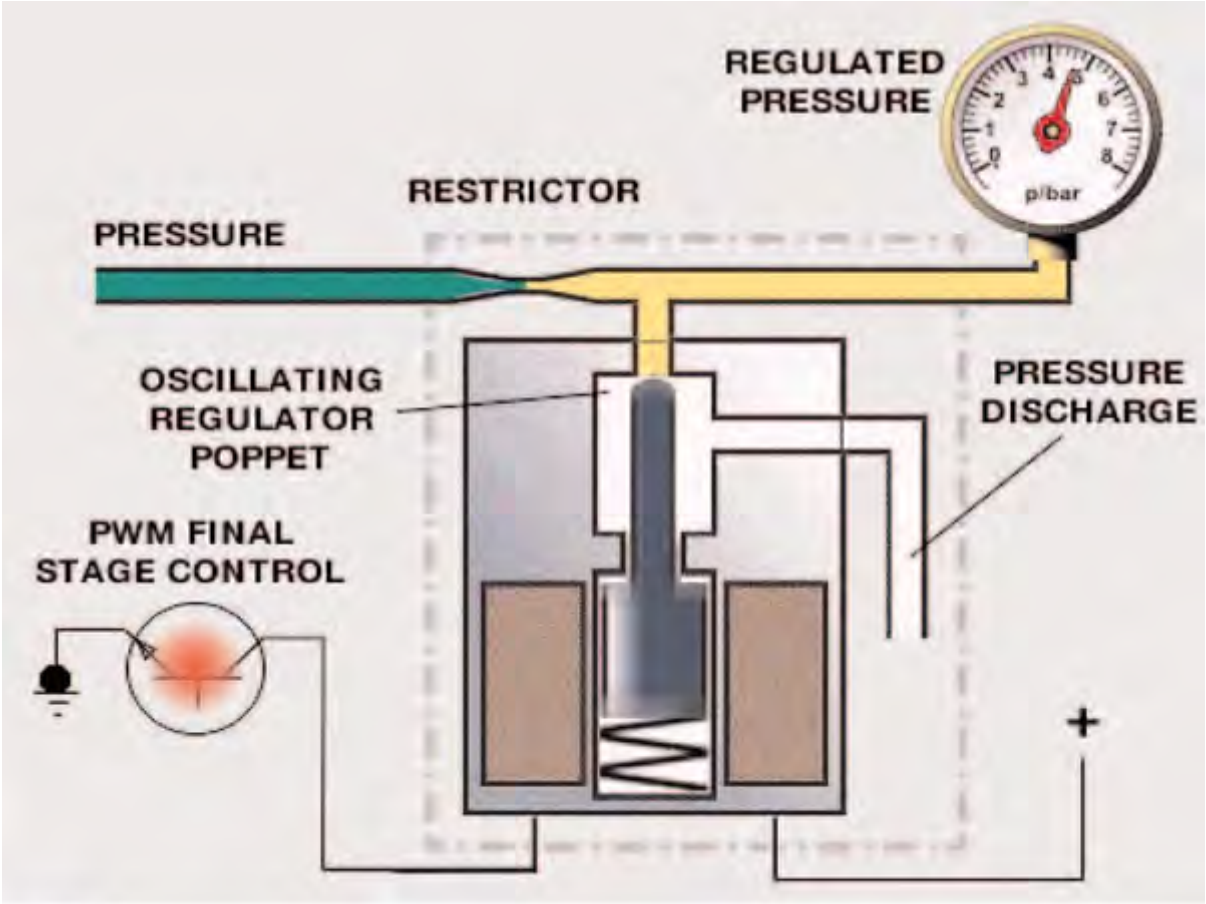

Fig. 33: Identifying Pressure Regulation
Courtesy of BMW OF NORTH AMERICA, INC.

SHIFT PROGRAMS

BMW EH transmissions have selectable shift programs (or modes) to suit driver needs and operating conditions. See Fig. 34 . There are 3 basic shift programs available:

- Economy Program - The economy program is the default program which is adopted every time the vehicle is started. When in economy mode, the operating priority is for maximum economy and shift comfort. Shifts will take place at low engine RPM and road speed. The economy mode is indicated by an "A" on the program switch. The cluster will display an "E" to indicate economy mode.
- Manual Mode (Winter Mode) - Manual mode is used to start out the vehicle in a higher gear on slippery surfaces when more traction is needed. A higher gear will reduce torque to the rear wheels. Manual mode can also be used to select a lower gear when needed such as when climbing a hill. Depending upon vehicle application an "M" will appear in the cluster when in Manual Mode or an asterisk (*) symbol will appear in the instrument cluster to indicate Winter Mode.
- Sport Mode - Sport Mode provides raised shift points and a more aggressive shift program for the "Enthusiastic" BMW driver. The cluster will display an "S" when in sport mode.

Regardless of vehicle application, the program switch provides a momentary ground to the TCM to switch between modes. There have been numerous designs of the program switch since it's introduction. The program switch configurations are as follows:

- 2 Position Slide Switch - This switch has the "A" and the "M" selection. Sport mode is achieved by moving the selector lever from "D" to 4, 3 or 2 when in the Economy Mode. The 2 Position slide switch is used on most models. These vehicles usually have a range and program display located in the instrument cluster.
- 2 Position Rocker Switch - This switch operates the same as the slide switch, but it is used exclusively on

the E36. The E36 does not have a program indicator in the cluster. The rocker switch will illuminate, indicating the current program.

- 3 Position Slide Switch - This switch has the added position for sport mode. The shifter does not have to be moved out of drive (D) to be in sport mode. This switch is used on the E36 M3 and the 4HP22/24 EH (Version Late E-7).
- 3 Position Rotary Switch - This switch is used only on the Early 4HP22 EH trans missions (Version Early E-7).
- No Program Switch - On some vehicles with AGS features, there is no program switch. Shift modes are obtained by moving the shift lever out of "D" range or automatically by adaptive shift functions. (Example E39).

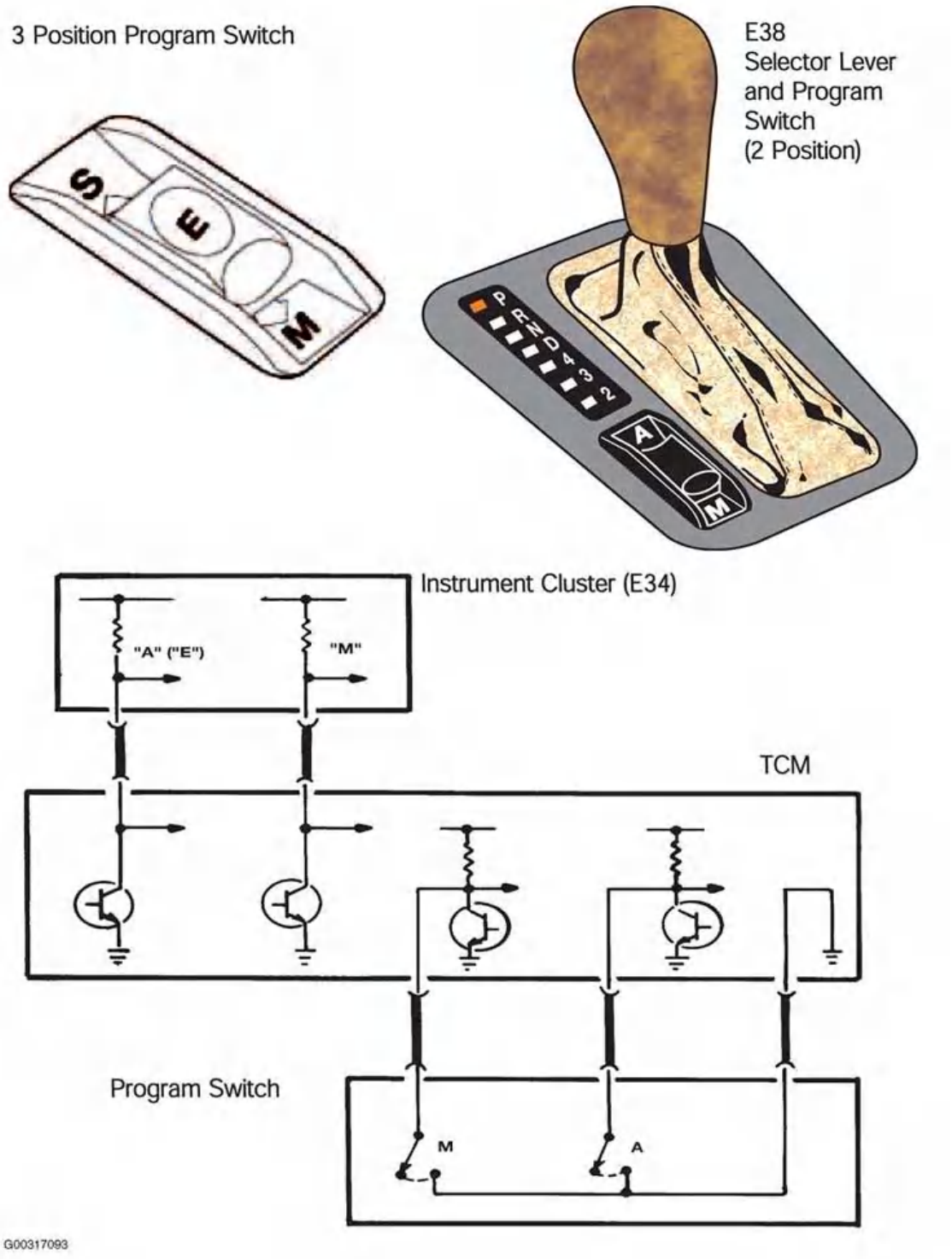

Fig. 34: Identifying Shift Program
Courtesy of BMW OF NORTH AMERICA, INC.

STEPTRONIC SHIFT MODES

The Steptronic shifting system was introduced to the BMW model line on the 95 E31 850Ci (from 10/94). Steptronic was subsequently added to other BMW models and is available on all BMW models with automatic transmissions. Other than a few additional components in the shifter mechanism, Steptronic equipped vehicles use the same transmission and TCM as non-Steptronic equipped vehicles. Since the introduction of Steptronic, there have been several variations in Steptronic function. Regardless of version, the Steptronic system provides the driver with two modes of operation:

- To operate the transmission in fully automatic mode as with a non-Steptronic transmission.
- To operate the transmission in the manual shift mode by tilting the shift lever forward or backward when in the manual gate.

The Steptronic shift lever console contains and automatic and a manual shift gate. The automatic gate contains the gear lever positions P/R/N/D. When the lever is placed in "D" all of the shifting takes place based on the shift map programming in the TCM. To enter the manual gate the shift lever is moved 15 degrees to the left. Depending upon application, there are three possible configurations of the manual gate:

- On the E31 850Ci, the gate is marked as "M" only. There is a plus and minus sign for manual shifting. Upshifts are achieved by momentarily moving the shifter forward. Downshifts are achieved by moving the shifter rearward. When placing the shifter into the "M" gate, the transmission will adopt the current gear that is engaged. The transmission will stay in that gear until an upshift or down shift request is made.
- On all other vehicles until the 2002 model year, the gate is marked M/S. There is also a plus and minus sign for manual shifting. When placing the shifter into the M/S gate, the transmission will adopt Sport mode. All shifts will still be automatic. Full manual mode is achieved when an upshift or downshift request is made. Upshifts are achieved by moving the shifter forward momentarily and downshifts are achieved by moving the shifter rearward.
- On all models with Steptronic from 2002, the only change is to the manual shifting modes. In order to be consistent with SMG operation, the positions were reversed. Upshifts are now achieved by moving the shifter rearward and downshifts are now forward. Otherwise, Steptronic operation is identical to the previous models.

AUTOMATIC FUNCTIONS IN MANUAL MODE

When in manual mode there are certain functions which occur automatically to prevent drivetrain damage and improve driveability:

- Engine Overspeed Prevention: To prevent engine over-rev, the TCM will upshift automatically just prior to maximum engine cutoff.
- Kickdown: If plausible, the TCM will automatically shift down to the next lower when a kickdown request is received.
- Decelerating: If in 5th gear and coasting to a stop, the TCM will automatically down shift to 4th gear at approximately 31 mph and then 3rd gear at approximately 19 mph. The automatic downshift allows for an acceptable gear when re-accelerating. (6 cylinder models will shift to 2nd gear when stopping vehicle).
- Implausible Gear Requests: Certain shift requests are ignored by the TCM. For example, requesting a downshift at a high rate of speed would be ignored. Any shift request that would cause the engine to exceed the maximum RPM limit would not be allowed. Also starting out in a high gear is also not allowed. Only 1st, 2nd or third gear is allowed when accelerating from a stop. See Fig. 35 .

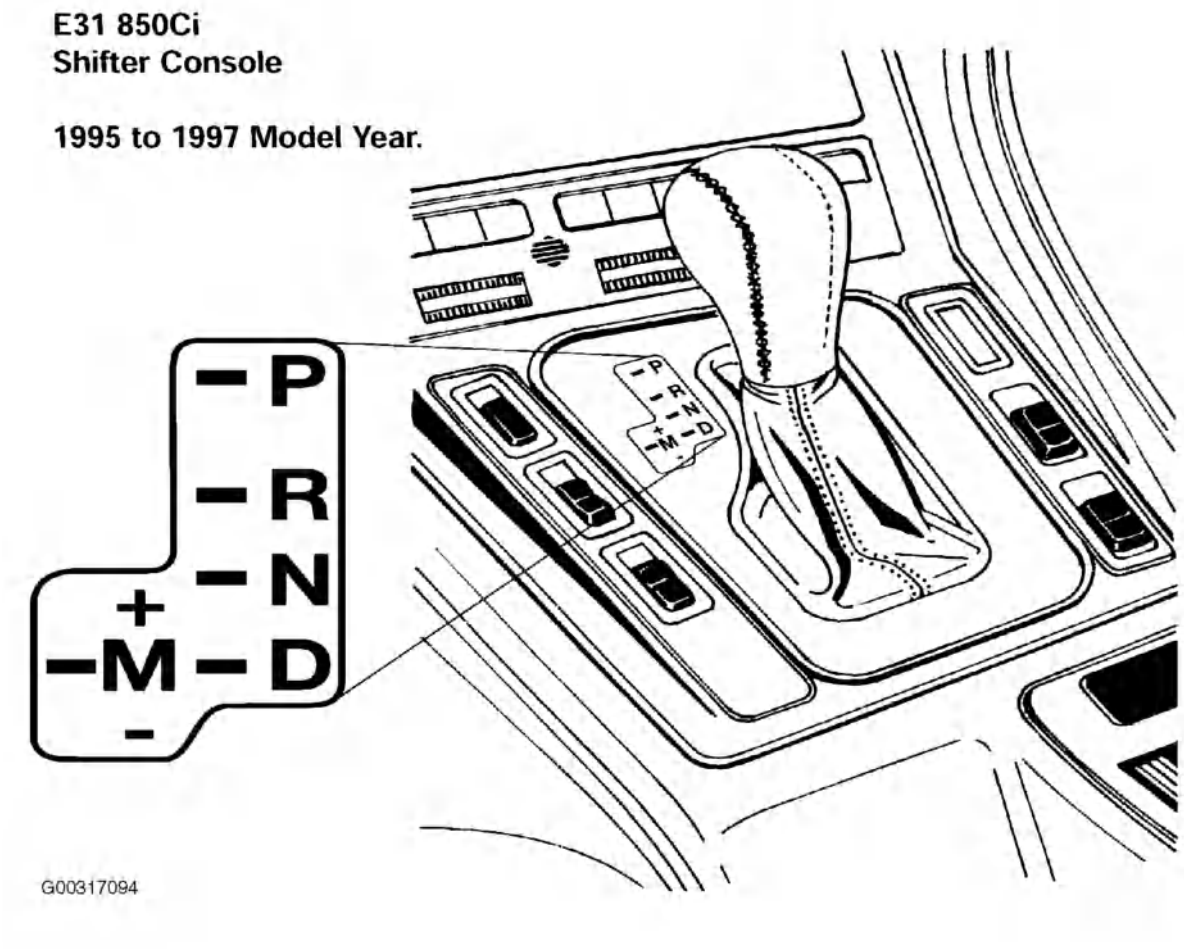

Fig. 35: Identifying 850Ci (E31) Shifter Console
Courtesy of BMW OF NORTH AMERICA, INC.

STEPTRONIC SHIFTER CIRCUIT

In order to achieve manual shifts with Steptronic, the selector lever is moved 15 degrees to the left. A pin on the selector lever engages the "up/down" microswitches which are a ground input to the TCM. The selector lever also triggers the "M" gate microswitch which is also a ground input to the TCM. The example in illustration shows a typical shift console for an E31. See Fig. 36 . Note the shift pattern, upshifts are forward and downshifts are rearward. This shift pattern was used on vehicles up to the end of 2001 production. On vehicles from 2002 production, the shift pattern is reversed. See Fig. 37 .

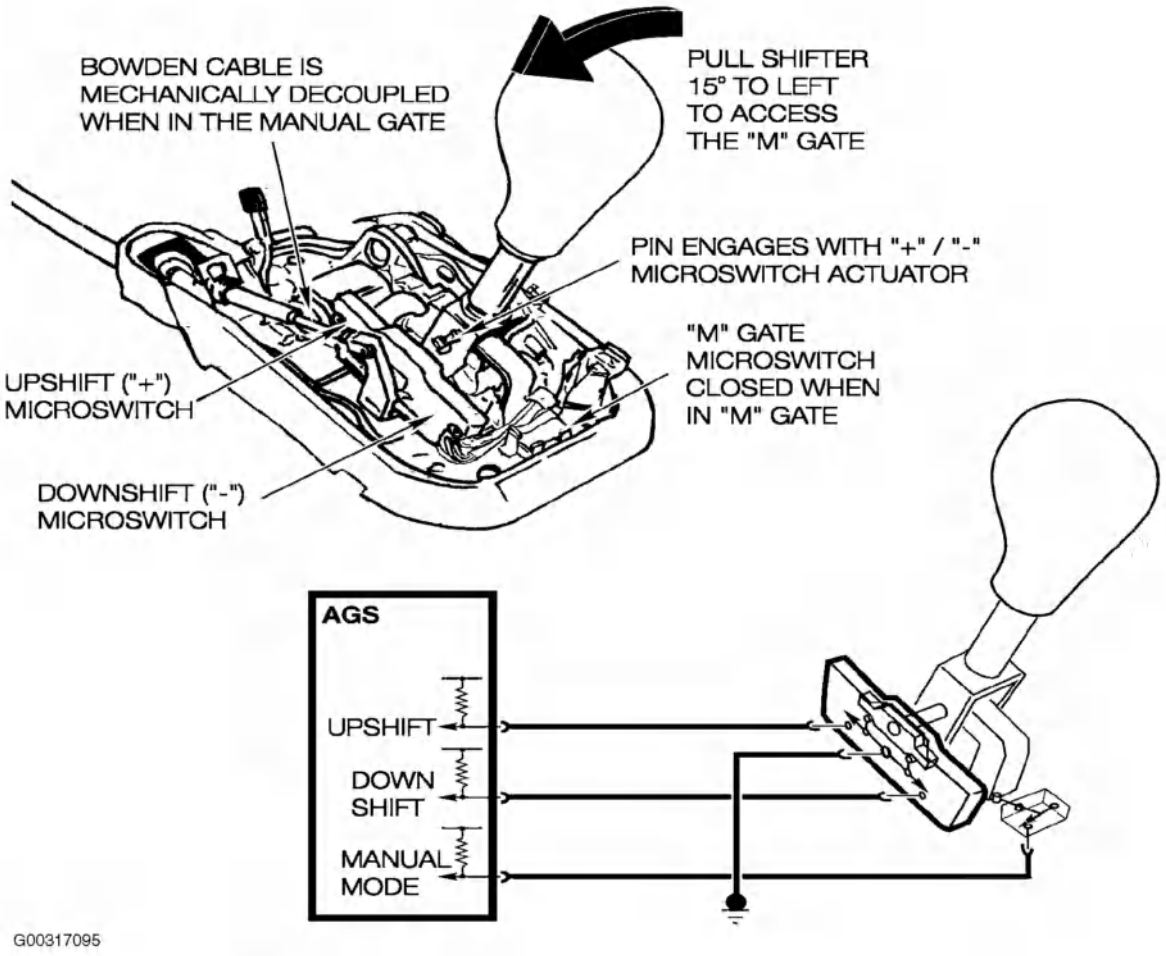

Fig. 36: Identifying Steptronic Shifter
Courtesy of BMW OF NORTH AMERICA, INC.

Steptronic System Comparison

Detail	E31 850Ci 1995 to 1997	All model except E31 850Ci up to 2001 Model year with Steptronic.	All Models from 2002 model year with Steptronic
Shift Console Layout	"M" Gate	M/S Gate	M/S Gate
Selection of Manual Mode	Shift to "M" gate	Shift to "M/S" gate and move lever momentarily to "+" or to "-".	Shift to "M/S" gate and move lever momentarily to "+" or to "-".
Gear Range in Manual Mode.	2nd to 5th gear (1st gear only accepted for 2 minutes after cold start. If the throttle is pressed 100% a 2-1 shift will occur	1st to 5th gears	1st to 5th gears
Un-allowable gear requests.	4th and 5th gear after vehicle standstill. Downshifts that can cause engine over-rev. 1st gear after engine warm up.	4th and 5th gear after vehicle standstill. Downshifts that can cause engine over-rev.	4th and 5th gear after vehicle standstill. Downshifts that can cause engine over-rev.
Upshifts/Downshifts	Upshifts - Forward Downshifts - Rear	Upshifts - Forward Downshifts - Rear	Upshifts - Rear Downshifts - Forward

Shift Pattern up to 2001

Shift Pattern from 2002

G00917096

Fig. 37: Steptronic System Comparison
Courtesy of BMW OF NORTH AMERICA, INC.

ADAPTIVE FEATURES (AGS)

AGS features were introduced in 1994 with the A5S560Z transmission. AGS control consists of adaptive features that will modify transmission operation according to various factors. See Fig. 38 . AGS operation can be influenced by two major functional groups:

- Driver influenced features (influenced by throttle and kickdown input).
- Environmental influences (such as road conditions - icy, traffic etc.).

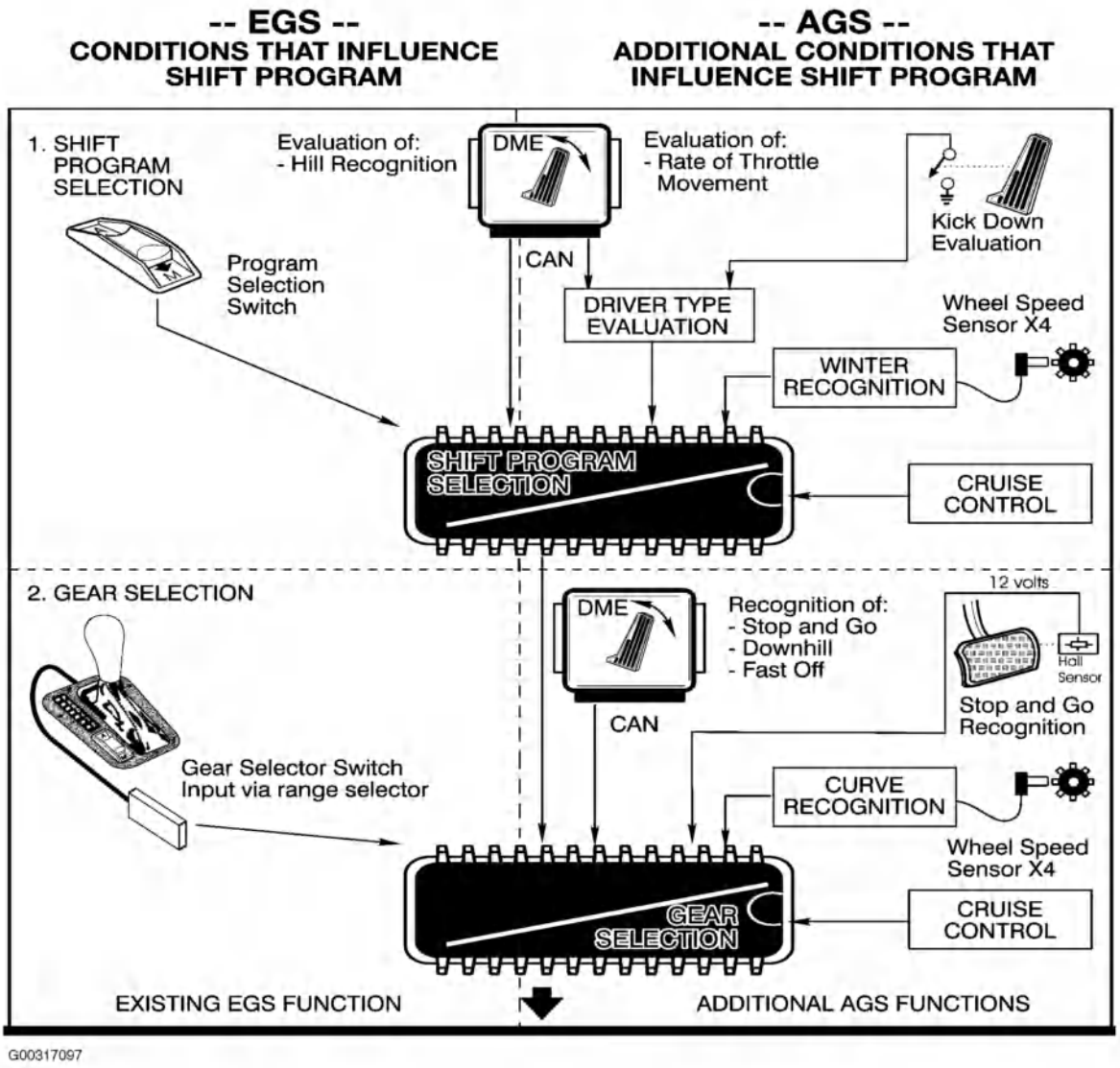

Fig. 38: Identifying AGS Features
Courtesy of BMW OF NORTH AMERICA, INC.

The driving program selection is not adapted on a long term basis - nor is it stored in the control module memory when the ignition is switched off. It continually changes as the driver of the vehicle changes driving habits.

DRIVER INFLUENCED FEATURES OF AGS

The adaptive drive program is based primarily on throttle input. The throttle information comes from the ECM (DME) via the CAN bus. The TCM continuously monitors the throttle input for:

- The current throttle position.
- The rate of change in pedal movement.
- The number of acceleration requests.
- The number of kickdown requests. See Fig. 39 .

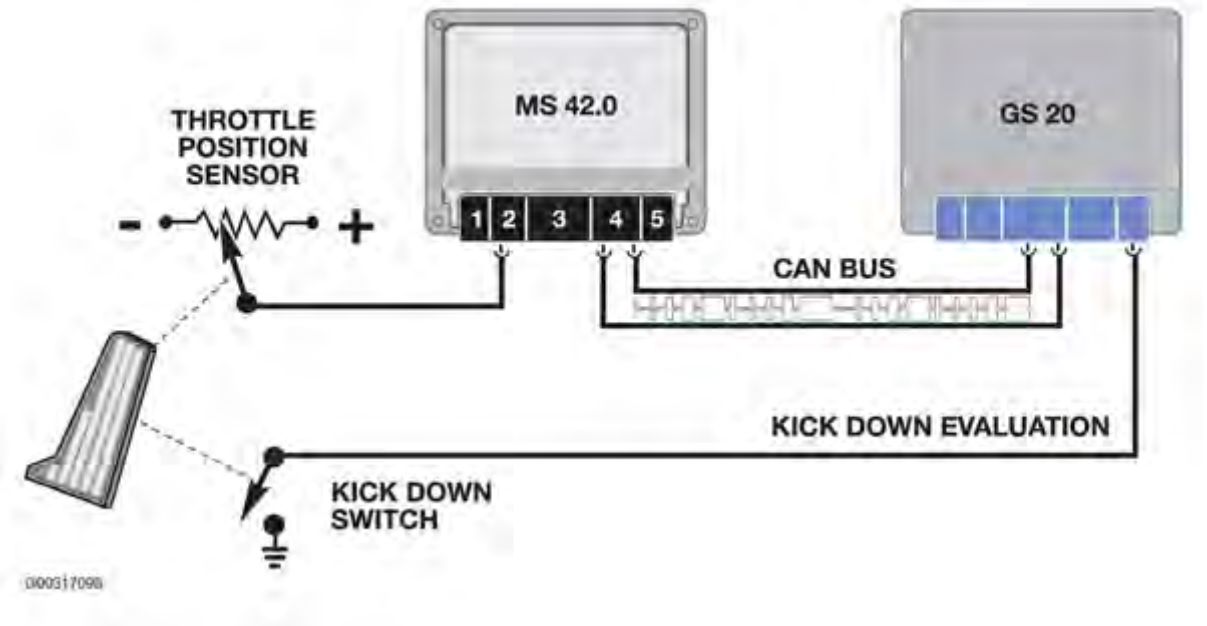

Fig. 39: Identifying Driver Influenced Features Of AGS
Courtesy of BMW OF NORTH AMERICA, INC.

DRIVE AWAY EVALUATION

The AGS system selects the appropriate shift program based on the amount of acceleration that occurs during takeoff. When driving away under full throttle the transmission will shift from XE to E.

KICK FAST FEATURE

Based on these inputs, the AGS will select one of three different driving programs as follows:

- Extreme Economy - Shift points are at low speeds for maximum comfort and economy.
- Economy - The shift points are raised for more performance with economy as priority.
- Sport - The shift points are higher to take advantage of full engine performance.

Under full throttle acceleration at high speed, single gear downshifts are possible. A two gear downshift is possible if the accelerator pedal is moved quickly to kick-down. The Extreme Sport program was eliminated as part of the kick-fast feature. See Fig. 40 .

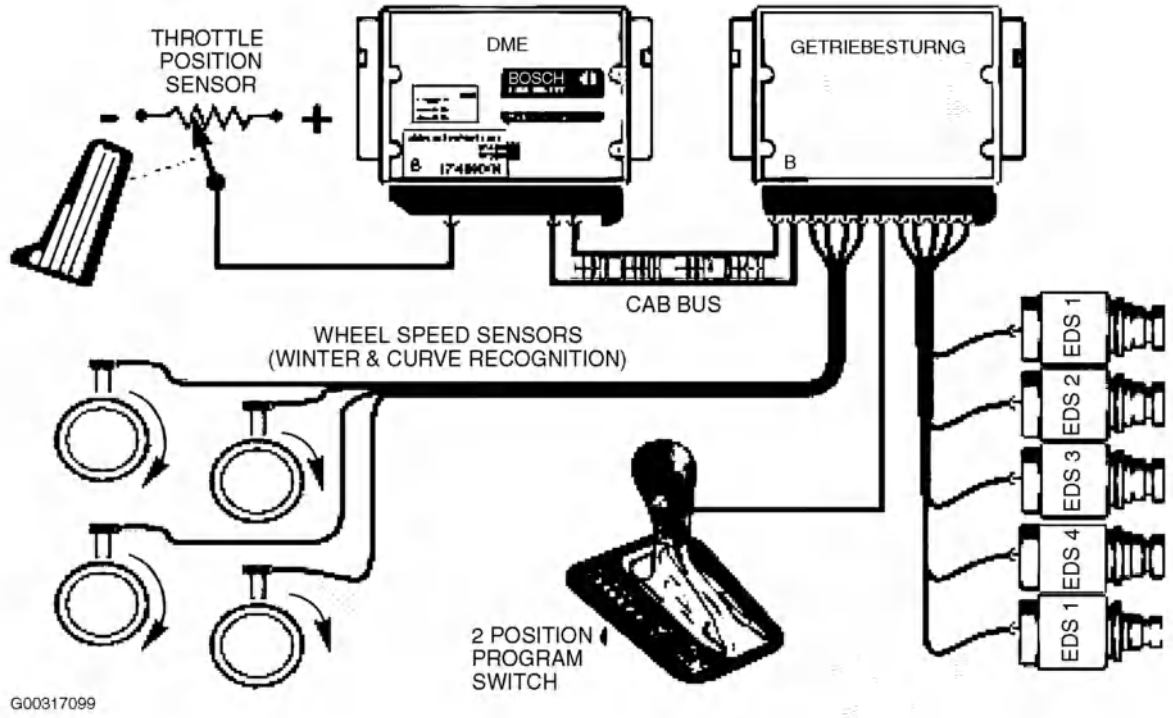

Fig. 40: Identifying Environmentally Influenced AGS Features
Courtesy of BMW OF NORTH AMERICA, INC.

STOP & GO

The feature is activated by defined sequence of shifts which are as follows:

- Upshift from first to second - followed by a downshift from second to first - followed by another upshift from first to second. This is then followed by the vehicle coming to a complete stop.

After this sequence occurs, the transmission will stay in second gear. The AGS control has recognized stop and go driving and this function will prevent excessive shifting during heavy conditions. The second gear start will be cancelled when:

- The vehicle speed exceeds 40 MPH.
- The throttle pedal is pressed more than 90%.
- The range selector is moved to Park, Neutral, Reverse or Sport (4, 3 or 2).
- The vehicle is in Sport Mode.

WINTER DRIVE PROGRAM

This feature is activated when the TCM detects slippage at the rear wheels by comparing front and rear wheel speed signals. When slippage is detected by the TCM, the transmission will start in second gear and the shift points will be lowered. This will reduce torque to the rear wheels allowing improved driveability and traction on slippery roads.

HILL RECOGNITION PROGRAM

There are two hill recognition programs, one for Uphill and one for Downhill. The TCM will activate this feature when it receives a high engine load signal at slower road speeds. The TCM will perceive this information as being consistent with climbing a hill. The shift points will be raised to prevent constant up and down shifting. This is referred to as the pendulum shift effect. When driving downhill, road speed will increase with minimal throttle input. The TCM will detect a downhill situation and hold the current gear to prevent an upshift when going downhill.

CURVE RECOGNITION

This feature will inhibit upshifts when the vehicle is in a curve. This is to improve stability when the vehicle is cornering at high speeds. The TCM will initiate this feature when it detects a difference between left and right (front) wheel speed signals. The difference in these signals will indicate that the vehicle is in a curve. Be aware that improper tire sizes, brands and inflation pressures can influence this feature. Always address these issues first when diagnosing delayed upshift complaints.

CRUISE CONTROL DRIVE PROGRAM

A special cruise control shift map is selected by the TCM when cruise control is active. The TCM will prevent unwanted locking and unlocking of the torque converter clutch. Also, upshifting and downshifting will be minimized. Depending upon application, the cruise control interfaces with TCM via a single wire data link or as on vehicles with electronic throttle control, the TCM will interface with the ECM (DME).

MANUALLY SELECTED "EXTREME SPORT" PROGRAM

This feature is activated by moving the shift lever to position 4, 3 or 2. This activates the "Extreme Sport Program" where the shift points are raised for maximum RPM and performance. On Steptronic equipped vehicles, the sport program is obtained by moving the shifter to the manual gate to initiate the "Sport Program".

MODIFICATIONS TO AGS FEATURES

Since the introduction of AGS features in 1994, there have been some software changes to address customer concerns. Some AGS features have been perceived by the customer as malfunctions. To correct this, some of the AGS features were modified with updated software. The AGS features previously discussed in this text reflect the updated modifications.

CAN BUS COMMUNICATION

The CAN bus is a serial communications bus in which all connected control units can send as well as receive information. Data over the CAN bus operates at a rate of up to 1Mb/s (megabits per second). The CAN protocol was developed by Intel and Bosch in 1988 for use in the automotive industry to provide a standardized, reliable and cost-effective communications bus to combat the increasing size of wiring harnesses. The CAN bus was originally introduced on BMW automobiles in the 1993 E32 740i/IL as a data link between the TCM (EGS) and the ECM (DME).

On earlier EGS systems, various signals were transmitted on individual signal wires. This reduced reliability and increased the amount of wiring needed. The CAN bus allows faster signal transmission and increased versatility. For example, the signals listed in the chart below were previously transmitted on individual wires, now these signals are all on the CAN bus. This chart represents only some of the signals on the CAN bus, there are many more signals transmitted between the TCM and ECM. See Fig. 41 and Fig. 42 .

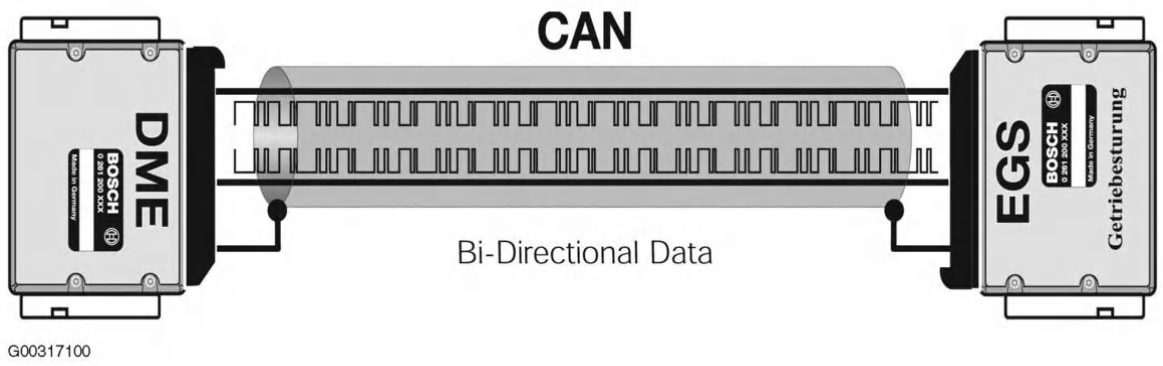

Fig. 41: Identifying CAN Bus Communication (1 Of 2)
Courtesy of BMW OF NORTH AMERICA, INC.

Sender	Information Item	Receiver	Signal Use
ECM	Engine Temperature	TCM	Shift Point Calculation
ECM	Engine Load (tL)	TCM	Shift Point Calculation
ECM	Engine RPM (TD)	TCM	TCC Slippage
ECM	Throttle Position (DKV)	TCM	Shift Point Calculation
ECM	A/C Compressor ON	TCM	Fine tune shift points to compensate for increased engine load.
TCM	Transmission Range	ECM	Engine Idle Speed Control
TCM	Torque Reduction Signal (ME)	ECM	Timing Retard during shifts.
TCM	TCC Lockup Status	ECM	Engine Timing Map adjustment.

G00317101

Fig. 42: Identifying CAN Bus Communication (2 Of 2)
Courtesy of BMW OF NORTH AMERICA, INC.

CAN BUS TOPOLOGY

The CAN bus consists of two twisted copper wires. Each wire contains an opposing signal with the exact same information (CAN-High, CAN-Low). The opposing signals transmitted through the twisted wire serve to suppress any electrical interference. Early CAN bus wiring included a grounded shield around the two wires, later vehicles discarded the shield in favor of the unshielded twisted pair wiring. Due to the linear structure of the network, the CAN bus is available for other modules in the event of a disconnected or failed control unit. This is referred to as a "Tree" structure with each control unit occupying a branch. See Fig. 43 and Fig. 44 .

As previously mentioned, the CAN bus initially was used as a high speed communication link between the DME and AGS control units. With the introduction of the E38 750iL (95 M.Y.), the CAN bus was expanded to include the EML and DSC control modules. The 750iL made exclusive use of the "star coupler" to link the individual CAN bus ends to a common connector. The 1998 model year introduced new users of the CAN bus. The instrument cluster and the steering angle sensor were linked to expand the signal sharing capabilities of the vehicle. The 1999 750iL was the last vehicle to use the shielded cable, after which the entire CAN bus went to twisted pair wiring.

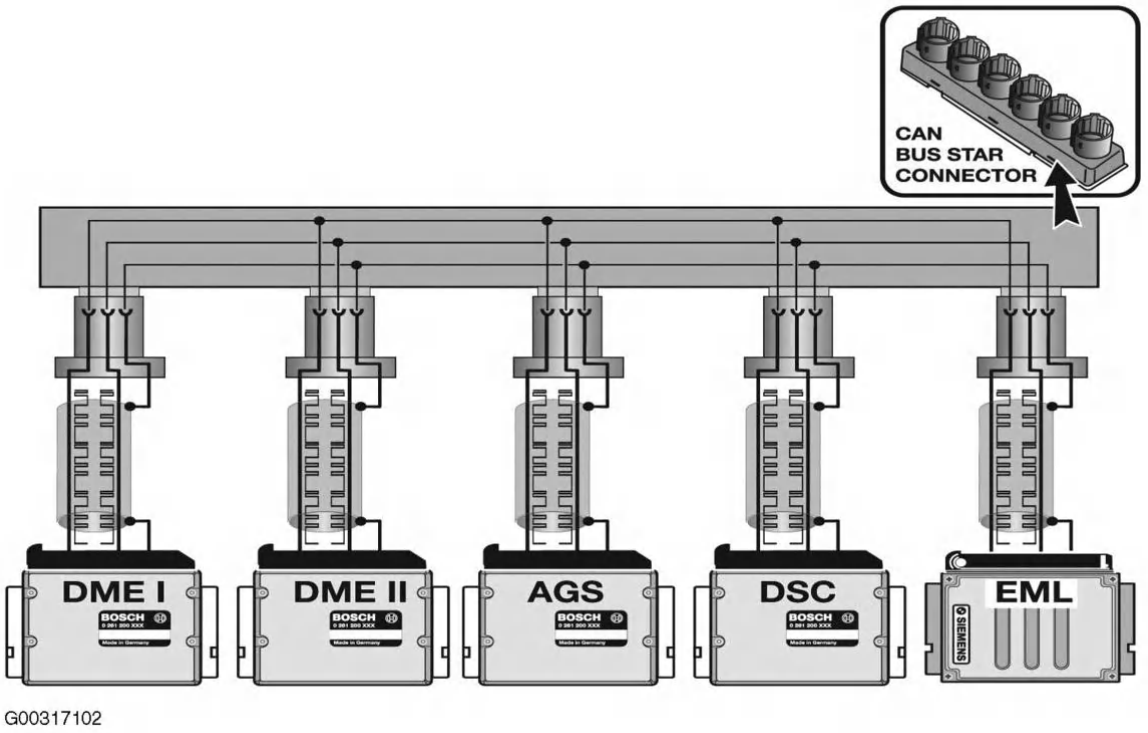

Fig. 43: Identifying CAN Bus Wiring (1 Of 2)
Courtesy of BMW OF NORTH AMERICA, INC.

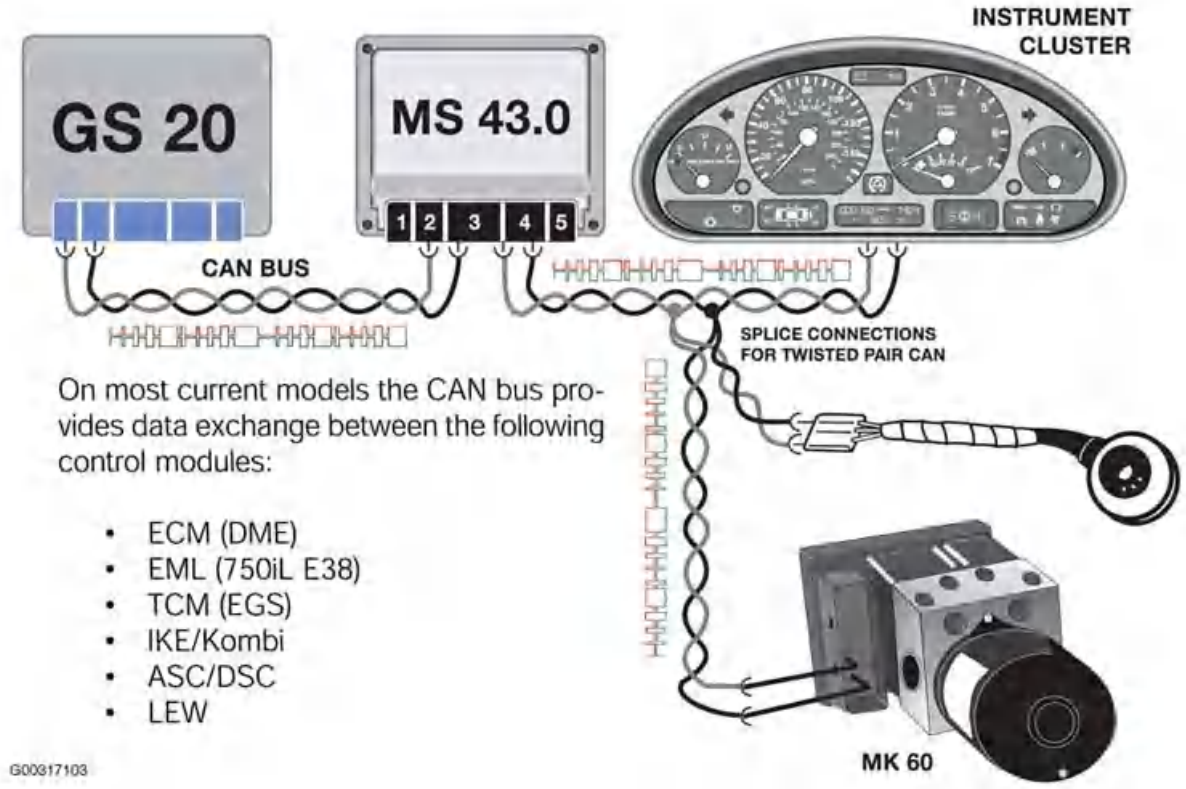

Fig. 44: Identifying CAN Bus Wiring (2 Of 2)
Courtesy of BMW OF NORTH AMERICA, INC.

On most current models the CAN bus provides data exchange between the following control modules:

- ECM (DME).

- EML (750iL E38).
- TCM (EGS).
- IKE/Kombi.
- ASC/DSC.
- LEW.

On models that use twisted pair, the wire color of the CAN bus is uniform throughout the vehicle with CAN-Low GE/BR and CAN-High GE/SW or GE/RT. Shielded wiring is easily identified by the black sheath surrounding the CAN bus.

TROUBLESHOOTING THE CAN BUS

The failure of communication on the CAN bus can be caused by several sources:

- Failure of the CAN bus cables.
- Failure of one of the control units attached to the CAN.
- Failure of the voltage supply or ground to individual modules.
- Interference in the CAN bus cables.

FAILURE OF THE CAN BUS CABLES

The following faults can occur to the CAN bus wiring:

- CAN-H/L interrupted.
- CAN-H/L shorted to battery voltage.
- CAN-H/L shorted to ground.
- CAN-H shorted to CAN-L.
- Defective plug connections (damaged, corroded, or improperly crimped).

In each instance, the connected control units will store a fault due to the lack of information received over the CAN bus.

The voltage of the CAN bus is divided between the two data lines: CAN-High and CAN-Low for an average of 2.5V per line. The voltage measurement is taken from each data line to ground. Each module on the CAN contributes to this voltage. The fact that 2.5V are present does not mean that the CAN bus is fault free, it just means that the voltage level is sufficient to support communication.

TERMINAL RESISTORS

Terminal resistors are used in the CAN bus circuit to establish the correct impedance to ensure fault free communication. A 120 Ohm resistor is installed in two control units of the CAN between CAN-H and CAN-L. Because the CAN is a parallel circuit, the effective resistance of the complete circuit is 60 Ohms. On some vehicles there is a jumper wire that connects the two parallel branches together, others have an internal connection at the instrument cluster.

The resistance is measured by connecting the appropriate adapter to any of the modules on the CAN and measuring the resistance between CAN-L and CAN-H. The resistance should be 60 Ohms. The CAN bus is very stable and can continue to communicate if the resistance on the CAN bus is not completely correct; however, sporadic communication faults will occur. The terminal resistors are located in the ASC/DSC control unit and either the instrument cluster or in the DME. Early 750iL vehicles that used the star connector have a separate external resistor which connect CAN-H and CAN-L together. Modules which do not have the terminal resistor can be checked by disconnecting the module and checking the resistance directly between the pins for CANH and CAN-L. The value at these control units should be between 10k Ohms and 50k Ohms.

DIAGNOSIS & TROUBLESHOOTING

Due to the cost and complexity of today's electronic transmissions, BMW recommends that the following procedures followed before any repairs are performed. It is important that the technician perform some basic diagnostic procedures:

- Always verify customer complaint, make sure the complaint is not related to normal operation. (i.e. Warm Up Phase, AGS operation etc.).
- Survey Fault Memory - Perform complete quick test. There may be other systems that interface with EGS that could cause faults. (i.e DME, ASC/DSC, IKE/Kombi etc.).
- Print out all fault codes with fault conditions. Also print out copy of Identification page and diagnostic report.
- Check to see if there are any service bulletins that apply to your specific complaint.
- Ensure that battery voltage is sufficient. Battery voltage must be greater than 12.5 with ignition switched off. Check battery connections for tightness and condition.
- Check ground connections. (chassis to engine, grounds to bulkhead and shock tower).
- Check over vehicle to look for transmission leaks, physical damage, loose connections etc.
- If necessary, check fluid level and condition using DISplus or GT-1.
- Check to see if any aftermarket or performance components have been installed that could effect transmission operation. (DME or EGS software as well as any engine modifications).
- Check repair history to see if there were any recent repairs that could effect the proper operation of the transmission (i.e. engine replacement with damaged dowel pin etc.).

ESTABLISHING A DIAGNOSTIC PLAN

Once all of the pre-diagnostic criteria has been satisfied, a logical diagnostic plan should be followed. A logical, well organized diagnostic plan will help avoid improper diagnosis, unnecessary parts replacement and lost diagnostic time. The productivity of the technician can also be improved by following a logical, common-sense approach to problem solving. The following steps are recommended to form a diagnostic plan:

- Verify the Customer Complaint - This step is the most important, but also the most overlooked. The focus should always be on the exact customer concern. Make sure that the customer complaint is not a misunderstanding of proper vehicle operation. This step can avoid unnecessary diagnosis and lost time. Also make sure that the conditions under which the concern has occurred are duplicated. For example: If the customer is complaining about a shifting concern after a cold start, then the vehicle should be road tested under those conditions.
- Analyze the Problem - Once the complaint has been verified, then all available resources should be used to find the "root cause" of the complaint. Start out by checking technical service bulletins. Use the DISplus or GT-1 to access the diagnostic program and perform Diagnostic Test Modules where applicable. Wiring diagrams should also be used when needed.
- Isolate the Problem - Now, the problem can be narrowed down into the final steps of diagnosis. Using proper tools and procedures, the technician can "Isolate" by using the process of elimination and common sense. Perform all necessary electrical checks such as Voltage Drop, resistance measurements etc.
- Repair the Problem - Once the concern has been correctly identified, perform all necessary repairs.
- Verify the Repair - Make sure the customer concern has been rectified. Road test the vehicle under the same conditions whenever possible.

FAULT CODES

When diagnosing transmission fault codes, always print out the fault code(s) and the fault conditions. When referring to the fault code itself, be aware that there are actually 3 formats for the fault code. See Fig. 45 .

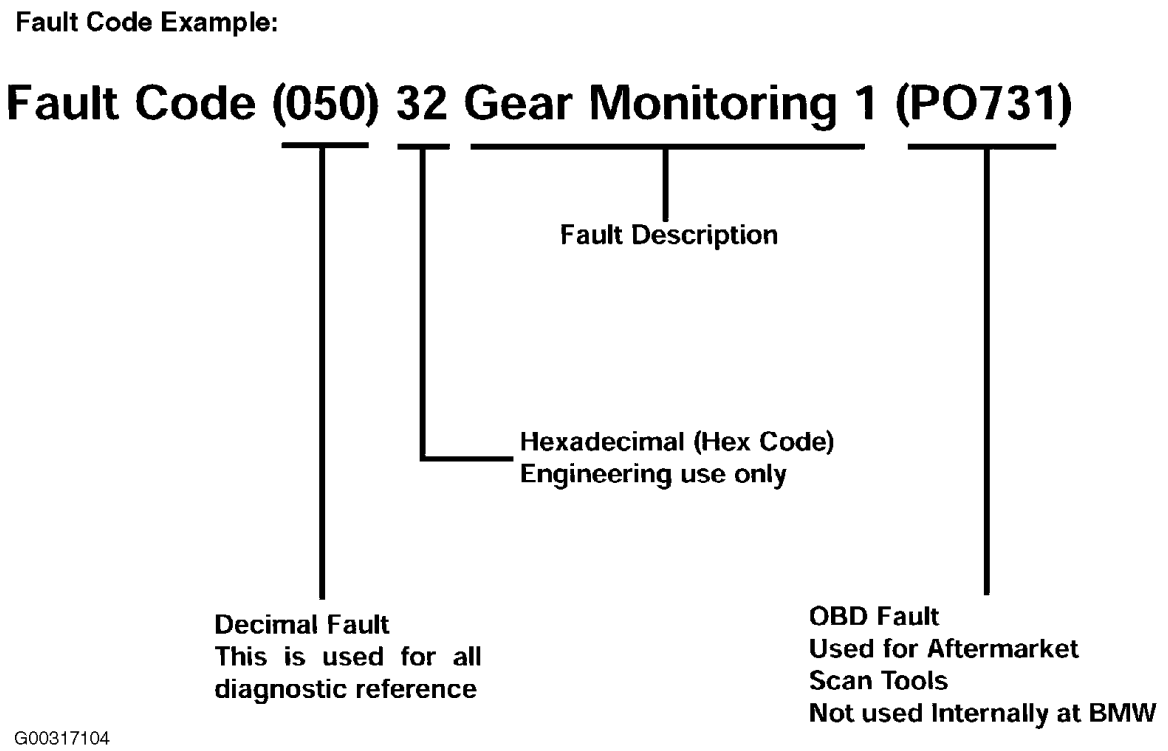

Fig. 45: Identifying Fault Code Components
Courtesy of BMW OF NORTH AMERICA, INC.

FAULT CONDITIONS

When a fault code is set, it is stored with a set of environmental conditions. The environmental conditions are used to aid in pinpointing the root cause of the fault. Some of the information found in the fault conditions contain information on transmission temperature, engine speed and road speed etc. This information is also helpful when trying to duplicate the customer complaint. For example, if a customer complains about a shifting complaint when cold, check the fault conditions to verify this complaint. Remember to always print out the fault codes with the fault conditions. This information is helpful to the technician as well as technical assistance.

IDENTIFICATION PAGE

The ID page is helpful to determine the transmission and control system used as well as the chassis number and current software version. Always print out a copy of the ID page when performing any diagnosis or programming procedures.

DIAGNOSIS PROGRAM

There are two diagnostic formats (programs) used on current model BMW vehicles. The earlier diagnostic program was used on the E38 and E39. The latter diagnostic program was introduced as the "E46 Diagnostic Concept". This is used on the E46, E65 and the E52 (Z8). The E53 X5 uses a mixture of both diagnostic programs depending upon engine/transmission options. Below is an example of the earlier diagnostic program.

The diagnostic program contains the following features:

- Fault Symptoms - This is a symptom driven program that will lead the technician into guided diagnostics. It contains several possible fault scenarios that are common to electronic transmissions. This path is helpful when the technician is not sure where to start in his diagnostic plan.
- Function Test - There are no function tests for electronic transmissions.
- Service Functions - This is where you will find the ATF level check function. Also Test Codes can be obtained and printed out for warranty purposes. The Adaptation values can be cleared as well as printed

out.

- Expert Mode - Expert Mode should be used when the technician has a thorough working knowledge of the system. You will find several items in expert mode: Read/Clear fault memory, Diagnosis (Status) requests, Component Activation and Test Modules.

TEST MODULES

Test modules are found in the diagnosis program of the DISplus and GT-1. These allow the technician to take advantage of a guided diagnostic plan. The program will direct the technician through the various steps using a "trouble tree" format. When using test modules it is important to follow the instructions exactly. Due to the complex nature of some faults, the test modules are not always conclusive. The test module is only as effective as the information provided by the technician. The technician also needs to rely on his experience and some common sense. The test modules should be used to assist the technician, not as a replacement for good diagnostic skills.

DIAGNOSTIC TIPS

The following consists of some helpful hints to assist the BMW diagnostic technician. It is designed to assist the technician to form a logical path of diagnosis. These suggestions should be used in conjunction with other approved diagnostic routines. Transmission concerns can be broken down into several categories:

- Shift Quality Complaints - Shift Quality complaints consist of harsh up or down shifts, improper shift points and erratic shifting. These complaints could be related to electronic/software issues or hydraulic/mechanical problems. Perform quick test and check TSB's before proceeding. As with most concerns, check the transmission fluid level and condition as well.
- Delayed/No Upshifts - Before proceeding on delayed upshift complaints, make sure you are aware of the conditions that this occurs. This could be normal operation, such as the "Warm-up Phase" program. Always check front tires for proper inflation pressures, correct size and type. Also check for uneven tire wear. Variations in front tire size from left to right can activate the AGS "Curve Recognition" feature. The TCM will interpret the difference in wheel speed signals as being a turn and suppress (or delay) upshifts.
- Slipping - This type of issue is usually associated with a fault code. Be sure to check the transmission fluid level and condition.
- Noise, Vibration - Noises and vibrations should be checked over by a good visual inspection. Look for loose transmission or engine mounts. Check the driveshaft, center bearing and flexible coupling (or constant velocity joints). Also check the lateral alignment of the driveshaft.
- No Forward or Reverse Gear - Start by checking transmission fluid level and note the fluid condition. Inspect for leaks and external transmission damage.
- Leaks - When investigating transmission leaks, be sure to verify that the suspected leak is actually transmission fluid. Engine oil, hydraulic and brake fluid can be mistaken for a transmission leak. Check the transmission cooler lines, transmission cooler and transmission pan gasket. Try to locate the source of the leak.
- Fault Codes - Perform COMPLETE short test (Quick test) on all vehicle systems. It is important to survey all systems in the event that a related system is causing the transmission fault. Always print out the ID Page, Fault codes and fault conditions.

TCM CODING & PROGRAMMING

As with other control modules used on BMW systems, the TCM must be programmed and/or coded for the vehicle. Over the years, these methods have varied from system to system.

CODING

Coding will assign the control unit to a particular application. Information such as differential ratio, tire size, vehicle series, engine, engine control system, with or without A/C etc., are some of the possible variants that have to be considered. Transmission control units are coded using various methods:

- Grounding pins in wiring harness connector - On early models equipped with the 4HP22/24 EH transmissions, the TCM was coded to the vehicle by means of grounding pins in the wiring harness connector for the TCM. By selectively grounding specific pins in the harness, the TCM was assigned to that vehicle. For example, TCM could be installed in a 535, 635, or a 735. This only applies to the early 7-series (E23, E24, E28).
- TCM ordered for specific application - On some later models, the TCM was ordered for a specific vehicle application, coding was not necessary.
- Coding performed during programming - On systems that use a flash programmable TCM, the coding process is done during flash programming. See Fig. 46 .

PROGRAMMING

Programming refers to the instructions that the TCM is to follow. The TCM is programmed to apply certain shift maps according to operating conditions such as vehicle speed, engine speed, engine temperature, engine load and throttle position. This information can be entered into the TCM via an updated EPROM or through flash programming. Flash programmable control units use a EEPROM which is Electronically Erasable. The EEPROM is also soldered into the TCM and cannot be removed or replaced. Flash programmable TCM's can be programmed up to 14 times (with a new TCM). See Fig. 46 .

NOTE: Always clear adaptations after programming.

NOTE: Do not program a TCM to correct a complaint unless there is a specific TSB that covers the issue.

Control System	Transmission	Coding	Programming	TCM Type
GS 1.26 GS 1.27 GS 1.29	4HP22 EH (Early E-7) 4HP22/24 EH (Late E-7 and E-9)	Grounding pins in Harness. (Early E-7 Only) TCM ordered for specific application. Coding not needed.	Replaceable EPROM Replaceable EPROM	35 Pin 35 Pin
GS 7.3 GS 7.32 GS 7.11 GS 8.32	A5S310Z (5HP18)	TCM ordered for specific application. Coding not needed.	Replaceable EPROM	88 Pin
GS 8.60 GS 8.60.4	A5S325Z (5HP19)	Coding done when Programmed	Flash Programming (EEPROM)	134 Pin SKE
GS 8.55 GS 8.60.2	A5S440Z (5HP24)	Coding done when programmed	Flash Programming (EEPROM)	88 Pin up to 98 (E38 M62) 134 Pin SKE from 98 to present.
GS 9.2 GS 9.22 GS 9.22.1 GS 8.60.3	A5S560Z (5HP30) A5S560Z (5HP30) (E38 M73TU)	TCM ordered for specific application. Coding not needed. Coding done when programmed.	Replaceable EPROM Flash Programming (EEPROM)	88 Pin 134 Pin
GS 4.14 GS 4.16	A4S310R (THMR-1)	TCM ordered for specific application. Coding not needed.	Replaceable EPROM	55 Pin
GS 8.34	A4S270R (THMR-1)	TCM ordered for specific application. Coding not needed.	Replaceable EPROM	88 Pin
GS 20	A5S360R A5S390R	Coding done when programmed	Flash Programming (EEPROM)	134 Pin SKE

G00317105

Fig. 46: Identifying TCM Coding & Programming
Courtesy of BMW OF NORTH AMERICA, INC.

TRANSMISSION FLUID INFORMATION

TRANSMISSION FLUID (OIL)

The automatic transmission provides filtered, pressure regulated hydraulic fluid for all of the transmissions functional requirements. All BMW automatic transmissions are designed to operate with specific fluids. Use of non-approved oil will cause malfunctions and irreparable transmission damage which is not covered by BMW warranty. The transmission fluid provides the following functions:

- Lubricates mechanical components (planetary gears, bearings etc.).
- Removes heat and transfers heat to transmission cooling system. (Heat Exchanger).
- Removes debris and contaminants to sump and filter when circulated.
- Provides a transfer of kinetic energy in the torque converter.
- Allows hydraulic operation of mechanical components (clutches, brakes) via control of the valve body.

Also, transmission fluid has various properties to prevent oxidation and breakdown from heat and friction. Each type of transmission fluid has properties specific for each transmission application. Fluid level is crucial in the proper operation of an automatic transmission. Improper fluid levels will cause improper operation and eventually irreparable transmission damage. Improper fluid level can cause:

- A low fluid level can cause an interruption in oil flow during fast acceleration or hard braking which can cause gear shift malfunctions and noises.
- An excessively high fluid level can cause the rotating mechanical components to paddle in the oil. This produces foam which introduces air into the hydraulic system.
- A low fluid level can also cause transmission overheating causing premature transmission failure.

TRANSMISSION FLUID CHECKING PROCEDURES

Transmission fluid checking is accomplished using the DISplus or GT-1. The DISplus or GT- 1 is used to monitor transmission fluid temperature to insure the transmission is not over or under-filled. As with most other current ZF transmissions there is no dipstick, the fluid level is checked and filled at the fill plug. The location of the fill plug varies between transmissions. See Fig. 47 . Transmission fluid should be checked between 30 and 50 degrees Celsius (unless otherwise specified). Use the DISplus and/or GT-1 to determine transmission temperature. When checking transmission fluid, observe the following items:

- Transmission in Park.
- Parking brake applied.
- Engine Running.
- Vehicle level.
- No engine load.
- Trans Temp 30-50C.
- Observe correct drain plug torque.
- Use correct fluid.

When replacing parts on transmissions that use lifetime fluid, drain fluid into a clean container and reuse.

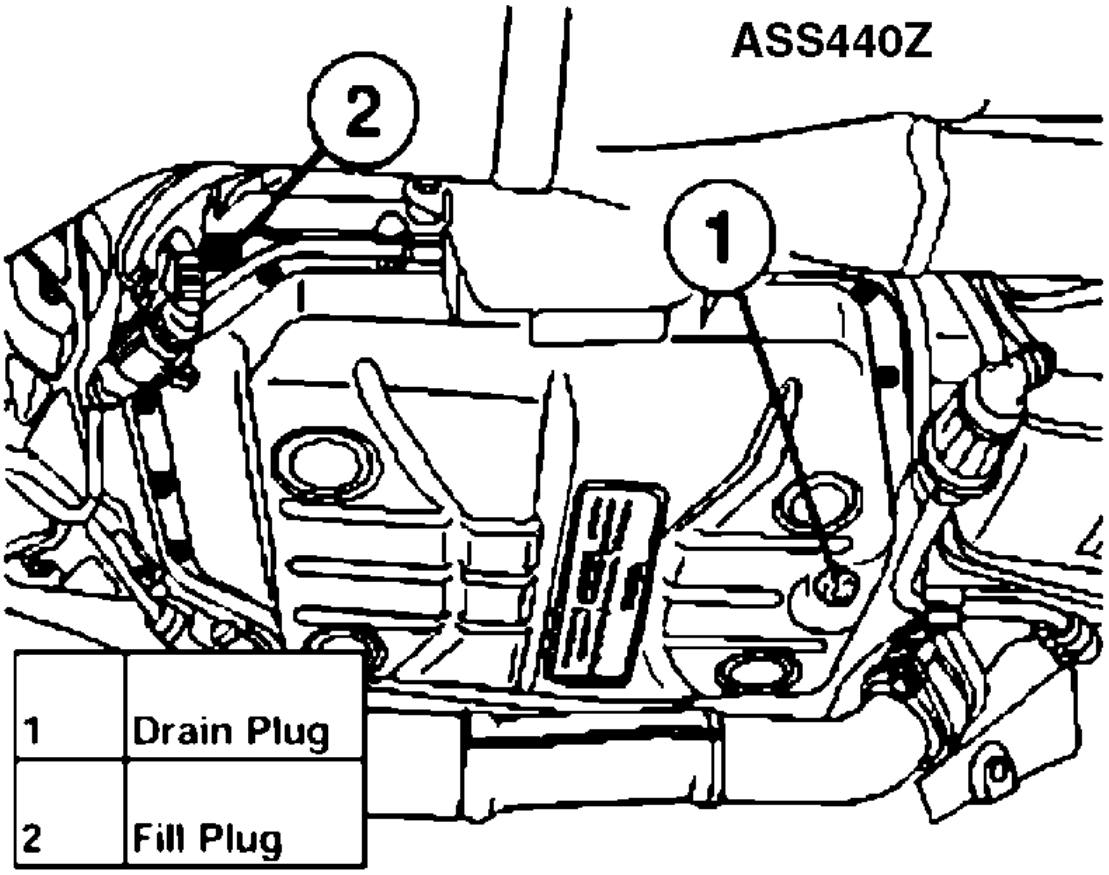

G00317106

Fig. 47: Identifying Drain & Fill Plug (Typical)
Courtesy of BMW OF NORTH AMERICA, INC.

TRANSMISSION FLUID APPLICATION

There are numerous types of transmission fluid used in BMW transmissions. With the exception of the early transmissions (4HP22/24, A4S310/270R and the A5S310Z in the E34) all current BMW transmissions use "Lifetime Fill" transmission fluid. See Fig. 48 . There is no maintenance required for these transmissions. It is important to use the correct fluid. Incorrect use of the transmission fluid can cause non-warrantable transmission damage. When performing repairs on transmissions with lifetime fluid, it is important to drain the transmission fluid in to a clean container for re-use. New fluid should only be used for transmission replacement and for topping off after repairs. Also, transmission fluid level is vital to the proper operation of the transmission.

Transmission	Fluid Type	BMW Part #	Container	SIB Ref.
4HP22 **4HP24**	Dexron III Mercon	Available Commercially (Castrol or Texaco)	N/A	
A5S310Z 530i/iT (E34)	Dexron III	Available Commercially (Castrol or Texaco)	N/A	
M3 (E36)	ESSO LT 71141	83 22 9 407 807	20 liter contalner	B 24 03 95
A5S325Z	ESSO LT 71141	83 22 9 407 807	20 liter contalner	
A5S440Z	ESSO LT 71141	83 22 9 407 807	20 liter container	
A5S560Z 740 (E32), 540 (E34) 840Ci (E31- 6/93-12/94) 740i/iL-750iL (E38)	Shell LA2634	83 22 9 407 765	5 liter container	B 24 11 92
540i (3/96-12/96) 850Ci (10/94-6/97)	ESSO LT 71141	83 22 9 407 807	20 liter container	B 24 02 94
A4S310R **A4S270R** **(THM-R1)**	Dexron III Mercon	Available Commercially (Castrol or Texaco)	N/A	
A5S360R **A5S390R**	Texaco ETL 7045E Texaco ETL 8072B	83 22 0 026 922 83 22 0 024 359	25 liter container 25 liter container	
GA6HP26Z **GA6HP32Z**	Shell M-1375.4	83 22 0 142 516	20 liter container	

G00317107

Fig. 48: Transmission Fluid Application
Courtesy of BMW OF NORTH AMERICA, INC.

TRANSMISSION SERVICE

OVERVIEW OF ALLOWABLE REPAIRS

Currently, service of transmissions is limited to electrical, minor mechanical and hydraulic repairs as well as service adjustments. See Fig. 49 . Part availability is limited to include the repair of the following:

- Oil Leaks - Radial seals and gaskets.
- Mechanical/Hydraulic Faults - Torque converter, valve body, parking pawl, oil pan, output shaft bearing.
- Electrical Faults - Solenoid valves, pressure regulator valves, wiring harness.
- Signal Sensing - Turbine and output speed sensors, CAN bus, temp sensor.

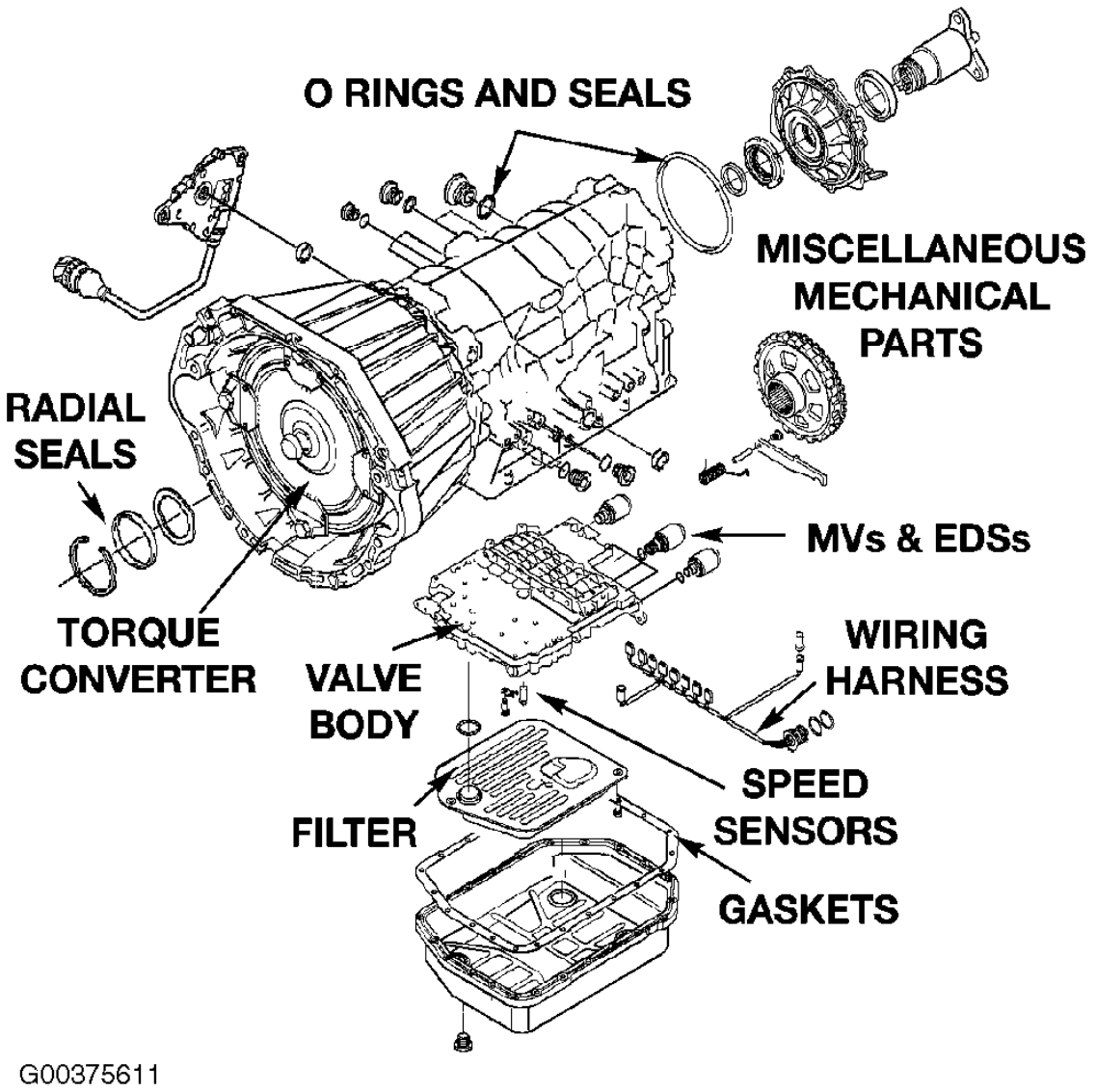

Fig. 49: Identifying Allowable Repairs
Courtesy of BMW OF NORTH AMERICA, INC.

Article GUID: A00169288

ENGINE SUSPENSION

22 11 ENGINE SUSPENSION

ENGINE SUSPENSION - TIGHTENING TORQUE SPECIFICATIONS

Application	Type	Thread	Tightening Specification	Measure
1AZ Engine mount to front axle support	E52 / E85	Â	Â	42 Nm
Â	E60 / E61 / E63 / E64 / E65 / E66 / E67	M8-8	Â	19 Nm
Â	E53	M8-10.9	Â	30 Nm
Â	E83	M8	Â	21 Nm
Â	E87 / E90	M8 10.9	Â	28 Nm
2AZ Engine mount to engine support arm	E60 / E61 / E63 / E64 / E65 / E66 / E67 / E53 / E83 / E87 / E90	M10 10.9	Â	56 Nm
Â	E65 / E66 / E67	M12 10.9	Â	100 Nm
Â	E85 / E52	Â	Â	42 Nm
3AZ Engine support arm to engine	E60 / E61 / E63 / E64 / E65 / E66 / E67 / E87 / E90	M10 8.8	Â	38 Nm
Â	E60/61 N52 / E63/64 N52 / E83/85 N52 / E87/ 90 N52 / E65 N52	M12	Aluminium screws marked blue must be replaced	Â
Â	Â	Â	Jointing torque	34 Nm
Â	Â	Â	Torque angle	90-110Â°
Â	E60 / E61 / E65 / E66 / E67	M8 8.8	Â	19 Nm
Â	E85 / E83	M8 8.8	Â	21 Nm
Â	E53 (N62/ M54)	Â	Â	38 Nm
Â	E53 (M57)	Â	Â	65 Nm
4AZ Engine mount to mounting bracket	E65 / E60 / E61 / E63/E64	M8 8.8	Â	19 Nm
5AZ Mounting bracket to front axle carrier	E65 / E60 / E61 / E63 / E64	M8-8	Â	19 Nm

22 32 TRANSMISSION MOUNTS

TRANSMISSION MOUNTS - TIGHTENING TORQUE SPECIFICATIONS

Application	Type	Thread	Measure
1AZ Bolt to transmission cross-member	E60 / E65 / E66 / E67	Â	30 Nm
2AZ Transmission support block to transmission	E60 / E61 / E65 / E66 / E67 / E85 / E63 / E64 / E87 / E90	Â	38 Nm

3AZ Transmission mount to transmission / transmission crossmember	E60 / E61 / E63 / E64 / E67 / E85 / E87 / E90	M8	19 Nm
4AZ Transmission cross-member to body	E85 / E46 / E83	M8 8.8	21 Nm
Â	E60 / E61 / E63 / E64 / E67 / E87 / E90	Â	19 Nm
Â	E53	M10	41 Nm
5AZ Transmission cross member to rubber mounts	E46 / E53 / E83	M12	74 Nm

TRANSMISSION SUSPENSION

22 32 TRANSMISSION MOUNTS

TRANSMISSION MOUNTS - TIGHTENING TORQUE SPECIFICATIONS

Application	Type	Thread	Measure
1AZ Bolt to transmission cross-member	E60 / E65 / E66 / E67	Â	30 Nm
2AZ Transmission support block to transmission	E60 / E61 / E65 / E66 / E67 / E85 / E63 / E64 / E87 / E90	Â	38 Nm
3AZ Transmission mount to transmission / transmission crossmember	E60 / E61 / E63 / E64 / E67 / E85 / E87 / E90	M8	19 Nm
4AZ Transmission cross-member to body	E85 / E46 / E83	M8 8.8	21 Nm
Â	E60 / E61 / E63 / E64 / E67 / E87 / E90	Â	19 Nm
Â	E53	M10	41 Nm
5AZ Transmission cross member to rubber mounts	E46 / E53 / E83	M12	74 Nm

Article GUID: A00202655

ELECTRONIC TRANSMISSION CONTROL

PURPOSE OF THE SYSTEM

Electronically controlled transmissions were introduced on BMW products in 1986 on 5 and 7 series vehicles. Currently EH (Electro-hydraulic) transmissions are offered on almost every production model (Except E46 M3 and E39 M5). EH transmissions offer the following benefits the to driver:

- Increased driving safety by reducing fatigue. All shifts are automatic as opposed to manual transmissions which require more driver interaction.
- Increased fuel economy through use of lock up torque converter.
- Increased fuel economy through optimized shift points.
- Improved shift comfort by use of "Overlap Shift" technology (ZF).
- More available features through the use of CAN bus technology.

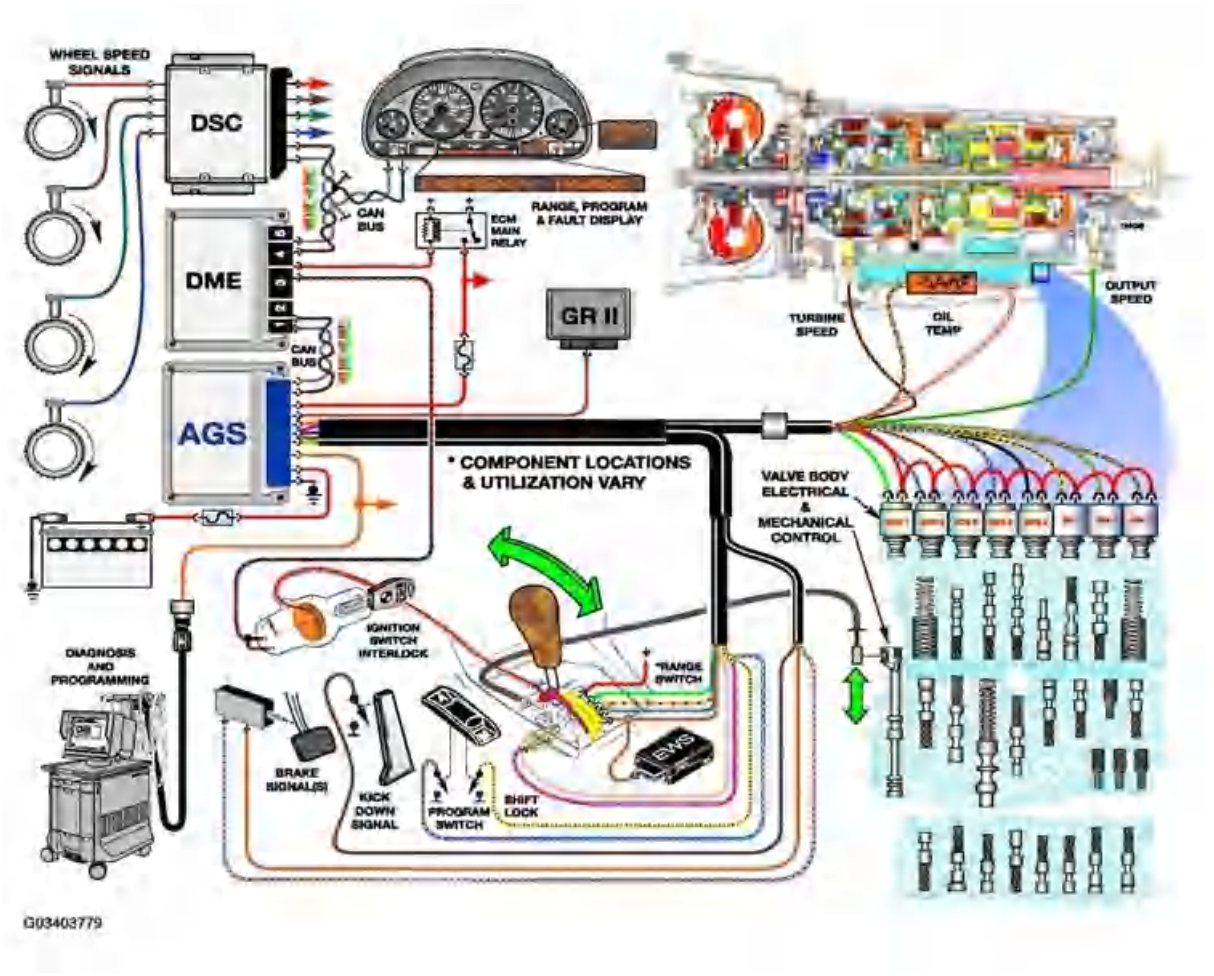

Fig. 1: Identifying Electro-Hydraulic Transmission Inputs/Outputs
Courtesy of BMW OF NORTH AMERICA, INC.

The EH Control System is designed to work in conjunction with the engine electronics for precise shift control. The TCM receives information on engine RPM, load and throttle position to provide optimum shift points to maximize fuel economy and driver comfort.

The function of an EGS System is to:

- Monitor all operating conditions through input signals

- Continually assess operating conditions by processing input data and select the appropriate operating program for current conditions.
- Activate transmission system components and to communicate with other drivetrain control systems.
- Respond to driver selected driving program (Economy, Sport or Manual).

In addition to providing shift control, the TCM also adapts to changing conditions within the transmission by monitoring slip ratios and modifying line pressure. This increases the life of the transmission and reduces maintenance and adjustments. The TCM controls the operation of the Lock-Up Torque Converter which further increases economy.

On current models, the TCM also has the capability of adapting to driver habits and responds to changing environmental conditions. Items such as rate of throttle input and kickdown requests are monitored to select the most appropriate shift program.

The EGS system is also required to maintain occupant safety, safeguard drivetrain damage, improve vehicle emissions and operate in fail-safe mode when a malfunction occurs.

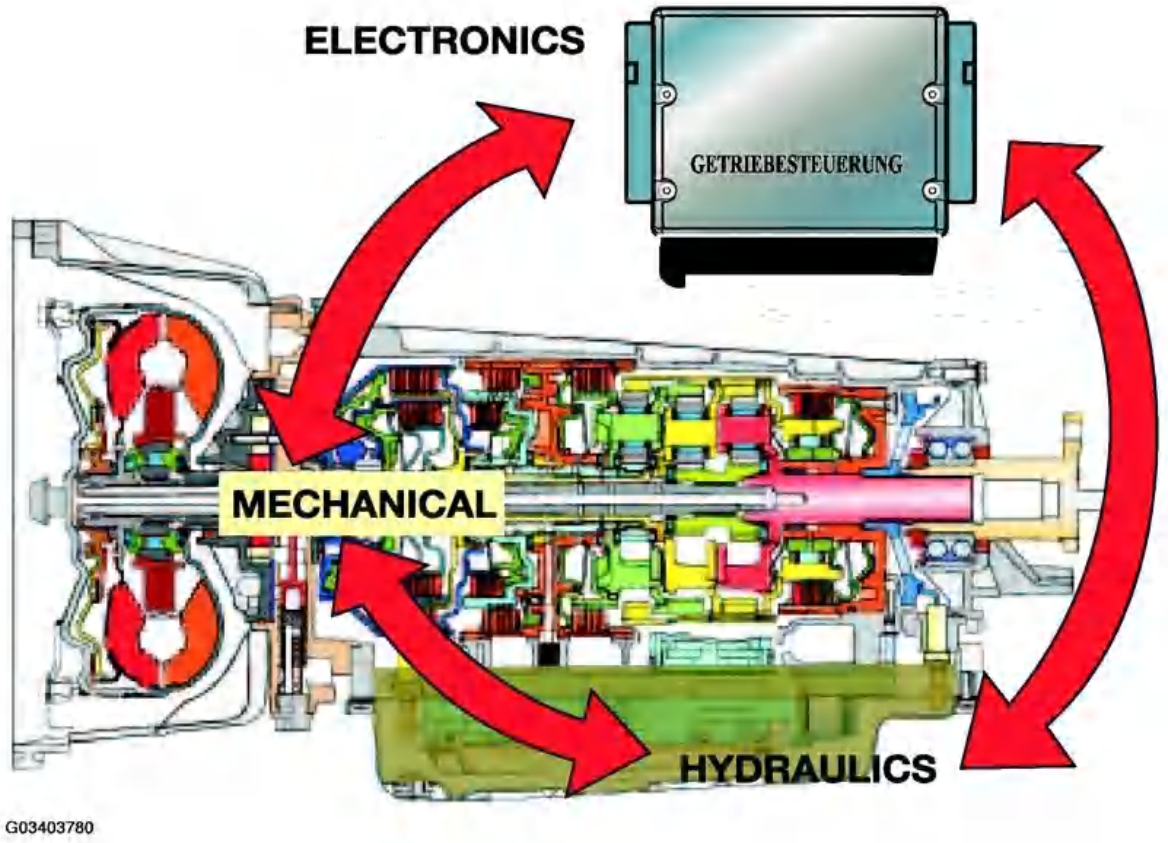

Fig. 2: Identifying EGS System
Courtesy of BMW OF NORTH AMERICA, INC.

TRANSMISSION VERSION AND CONTROL SYSTEMS

Each BMW Electro-hydraulic transmission has a corresponding control system. They are designated "GS" which stands for Transmission Control. This acronym is from the German words G etriebe S teurung. Each transmission can have more than one control system, this depends upon application (model year, series etc.). Below is a listing of ZF control systems used on BMW vehicles, Hydramatic control systems are shown on the opposing page.

ZF Control Systems

ZF CONTROL SYSTEMS SPECIFICATIONS

Transmission BMW ID #	Manufacturer ID	Model/Year	Control System	Engine
4HP22 (EH)	4HP22 (EH)	86 535i 86 635i 86 735i	GS 1.2X GS 1.2X GS 1.2X	M30 M30 M30
4HP24 (EH)	4HP24 (EH)	88-9/91 750iL (E32) 92-94 750iL (E32) 90-94 850i/Ci (E31)	GS 1.27 GS 1.29 GS 1.29	M70 M70 M70
A5S310Z	5HP18	93 530i/iT (E34) 94 530i/iT (E34) 95 M3 (E36) 96-99 M3 (E36)	GS 7.3 GS 7.32 GS 7.11 GS 8.32	M60 M60 S50 (US) S52
A5S325Z	5HP19	00 323i/Ci/CiC (3/00-8/00) 01 323iT (from 4/01) 01-02 325i/Ci/CiC from 9/00 00-01 330i/Ci/CiC from 6/00 01- 525 from 3/01 01- 530 from 3/01 03 Z4 (E85) 2.5i and 3.0i	GS 8.60 GS 8.60 GS 8.60.4 GS 8.60.4 GS 8.60.4 GS 8.60.4 GS 8.60.4	M52 TU M52 TU M54 M54 M54 M54 M54
A5S440Z	5HP24	97 840Ci (E31) from 9/96 97 540i (E39) 1/97-8/97 97 740i/iL (1/97 - 4/97) 97 740i/iL (5/97-8/97) 98-03 540i 98-01 740i/iL 00- X5 4.4i	GS 8.55 (CAN index 50) GS 8.55 (CAN index 50) GS 8.55 (CAN index 50) GS 8.55 (CAN index 60) GS 8.60.2 (CAN index 60) GS 8.60.2 (CAN index 60) GS 8.60.2	M62 M62 M62 M62 M62, M62 TU 99-02 M62, M62 TU 99-01 M62TU
A5S560Z	5HP30	93-94 740i/iL (E32) 93 540i (E34) 94-95 540i (E34) 94-95 840Ci (E31) 95 740i/iL (E38) 95-01 750iL (E38) 96-97 740i/iL (-1/97) 96 840Ci (E31) 95-97 850Ci	GS 9.2 GS 9.2 GS 9.22 GS 9.22 GS 9.22 GS 9.22.1 GS 9.22.1 GS 9.22.1 GS 9.22.1	M60 M60 M60 M60 M60 M73/M73TU M62 M62 M73
GA6HP26Z	GA6HP26Z GA6HP26Z	02- 745Li (E65/E66) 03- 760Li (E66)	GS 19 GS 19	N62 N73

Hydramatic Control Systems

HYDRAMATIC CONTROL SYSTEMS SPECIFICATIONS

Transmission				

BMW ID #	Manufacturer ID #	Model/Year	Control System	Engine
A4S310R (THM-R1)	4L30-E(A4S310R) >>>	90-92 525i (E34) 93-95 525i (E34) 92 325i, is, ic (E36) 93-95325i, is, ic (E36) 92-95 318ti (E36)	GS 4.14 GS 4.16 GS 4.14 GS 4.16 GS 4.14 & GS 4.16	M50 M50 TU M50 M50 TU M42
A4S270R	4L30-E(A4S270R) >>>	96-98 328i (is, ic -97) 96-98 318i (is, ic-97) 96-98 318ti (E36/5) 96-98 Z3 1.9 (E36/7) 96-98 Z3 2.8 97-98 528i (E39)	GS 8.34 GS 8.34 GS 8.34 GS 8.34 GS 8.34 GS 8.34	M52 M44 M44 M44 M52 M52
A5S360R (GMS)	5L40-E (A5S360R) >>	99-00 323i/Ci (7/98-3/00) 99-00 328i/Ci (6/98-5/00) 99-00 528i (E39) 9/99-8/00 99-00 Z3 (E36/7) 2.3/2.8	GS 20 GS 20 GS 20 GS 20	M52 TU M52 TU M52 TU M52 TU
A5S390R (GM5)	5L40-E (A5S390R) >>	00-03 X5 3.0i (4/00 -) 01 325iT (8/00-3/01) 01-03 325xi/xiT & 330Xi (-8/00) 01 525i/iT (9/00-3/01) 01 530i (9/00-3/01) 01-02 Z3 2.5/3.0 (6/00-)	GS 20 GS 20 GS 20 GS 20 GS 20 GS 20	M54 M54 M54 M54 M54 M54

G03403781

Fig. 3: Hydramatic Control Systems - GS 20 TCM (Siemens)
Courtesy of BMW OF NORTH AMERICA, INC.

TRANSMISSION IDENTIFICATION

BMW automatic transmission are manufactured by two suppliers for the US market:

- Zahnradfabrik Friedrichshafen: Commonly referred to as ZF. ZF manufactures both manual as well as automatic transmissions.
- GM Powertrain - Hydramatic: Hydramatic is a manufacturing division of General Motors located in Strasbourg, France. Hydramatic supplies automatic transmissions to BMW for four and six-cylinder vehicles.

BMW has developed an internal numbering system for their transmissions for ordering parts, information research and identification. Also, each transmission manufacturer uses an internal identification system. Here is a breakdown of these identification codes:

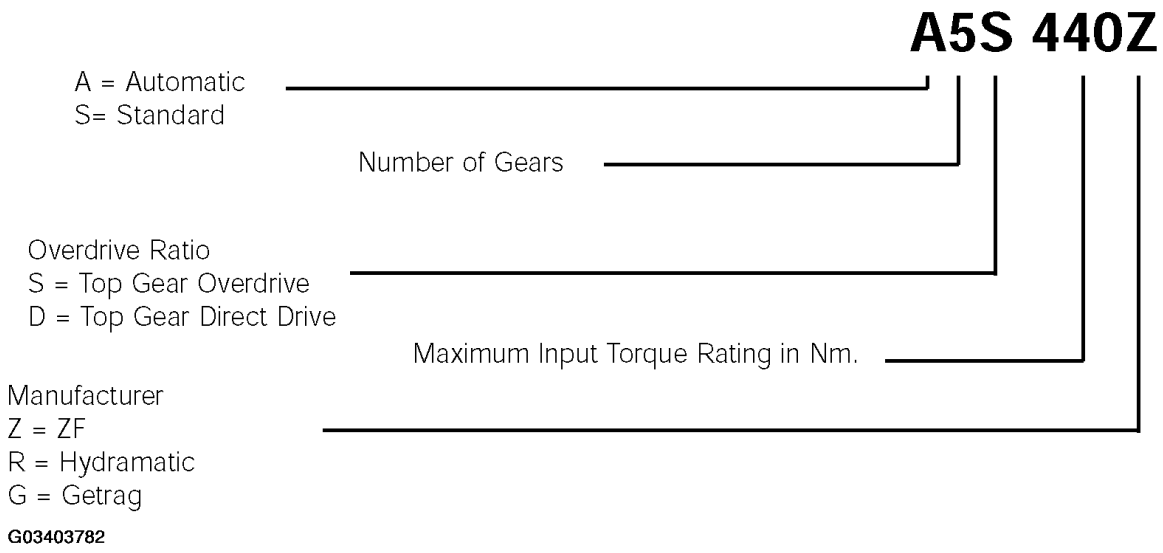

Fig. 4: Identifying BMW Identification Code Breakdown
Courtesy of BMW OF NORTH AMERICA, INC.

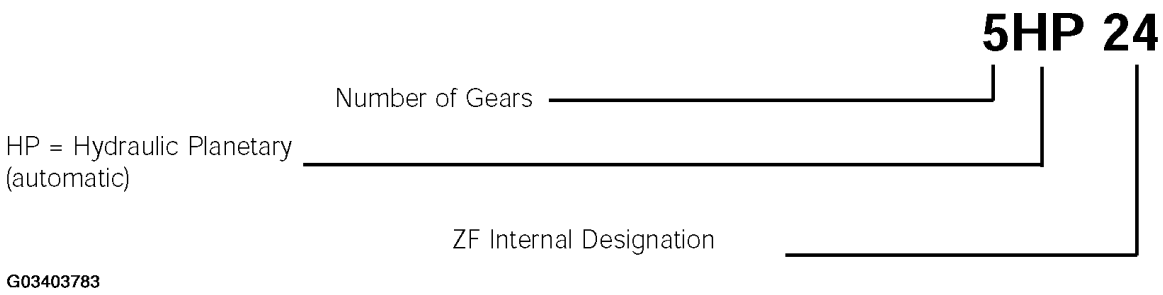

Fig. 5: Identifying ZF Identification Code Breakdown
Courtesy of BMW OF NORTH AMERICA, INC.

Hydramatic Transmissions have internal designations, however they are not used often. The internal code for the A4S310/270R is 4L30-E and the A5S360/390R is 5L40-E.

Transmission ID Tag Location

In order to identify BMW transmissions there are identification tags located externally on the transmission case. The tag contains information such as Manufacturer, Serial number, transmission type etc. This information is needed when ordering parts, referencing bulletins and calling for technical assistance.

- ZF - Tag is Located on -
    1. Right hand side (passenger side) of transmission case. (5HP30 and 5HP18)
    2. Left hand side (drivers side) of transmission case. (6HP26Z, 5HP24 and all 4HP)
    3. Rear under output shaft. (5HP19)

G03403784

Fig. 6: Identifying ID Tag Location 5HP19
Courtesy of BMW OF NORTH AMERICA, INC.

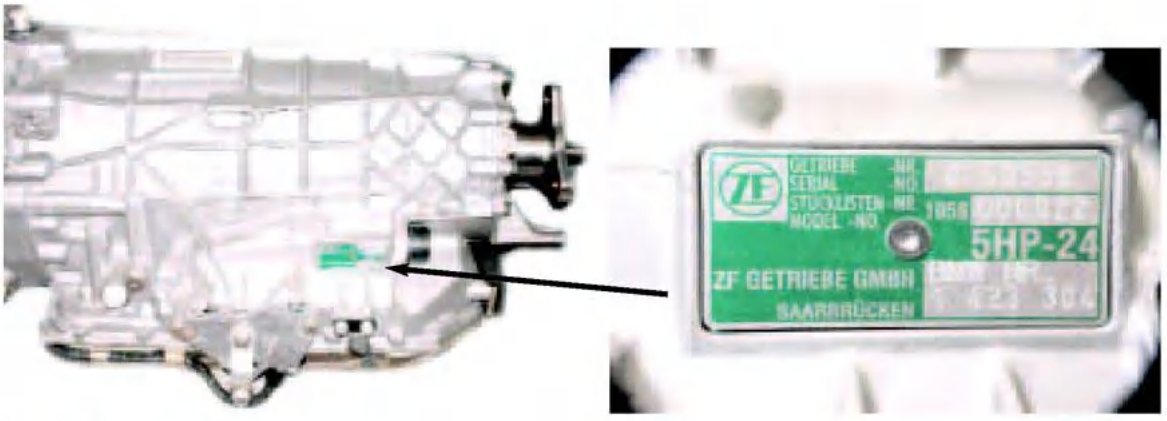

G03403785

Fig. 7: Identifying Typical ZF Tag
Courtesy of BMW OF NORTH AMERICA, INC.

- GM - Located on left hand side (drivers side) of transmission case.

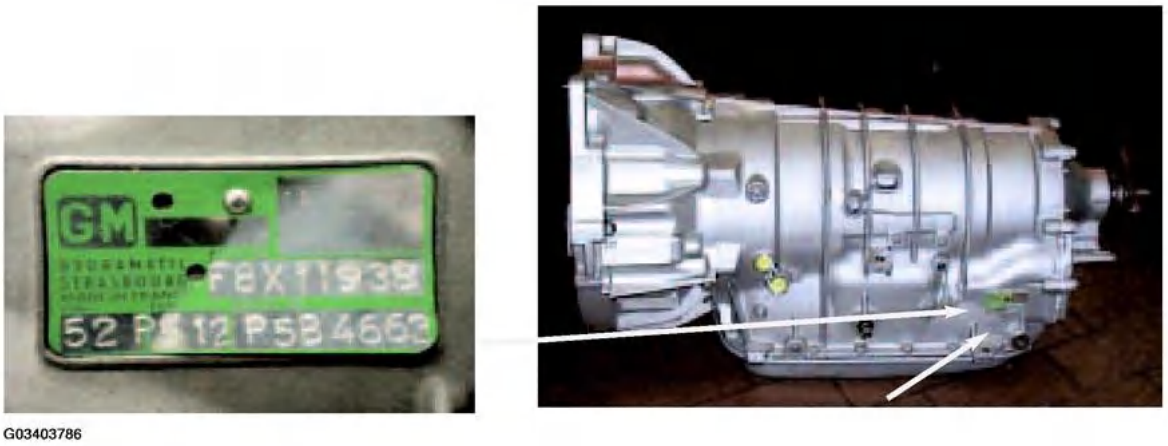

Fig. 8: Identifying GM ID Tag (GM 5)
Courtesy of BMW OF NORTH AMERICA, INC.

SYSTEM COMPONENTS (ELECTRICAL)

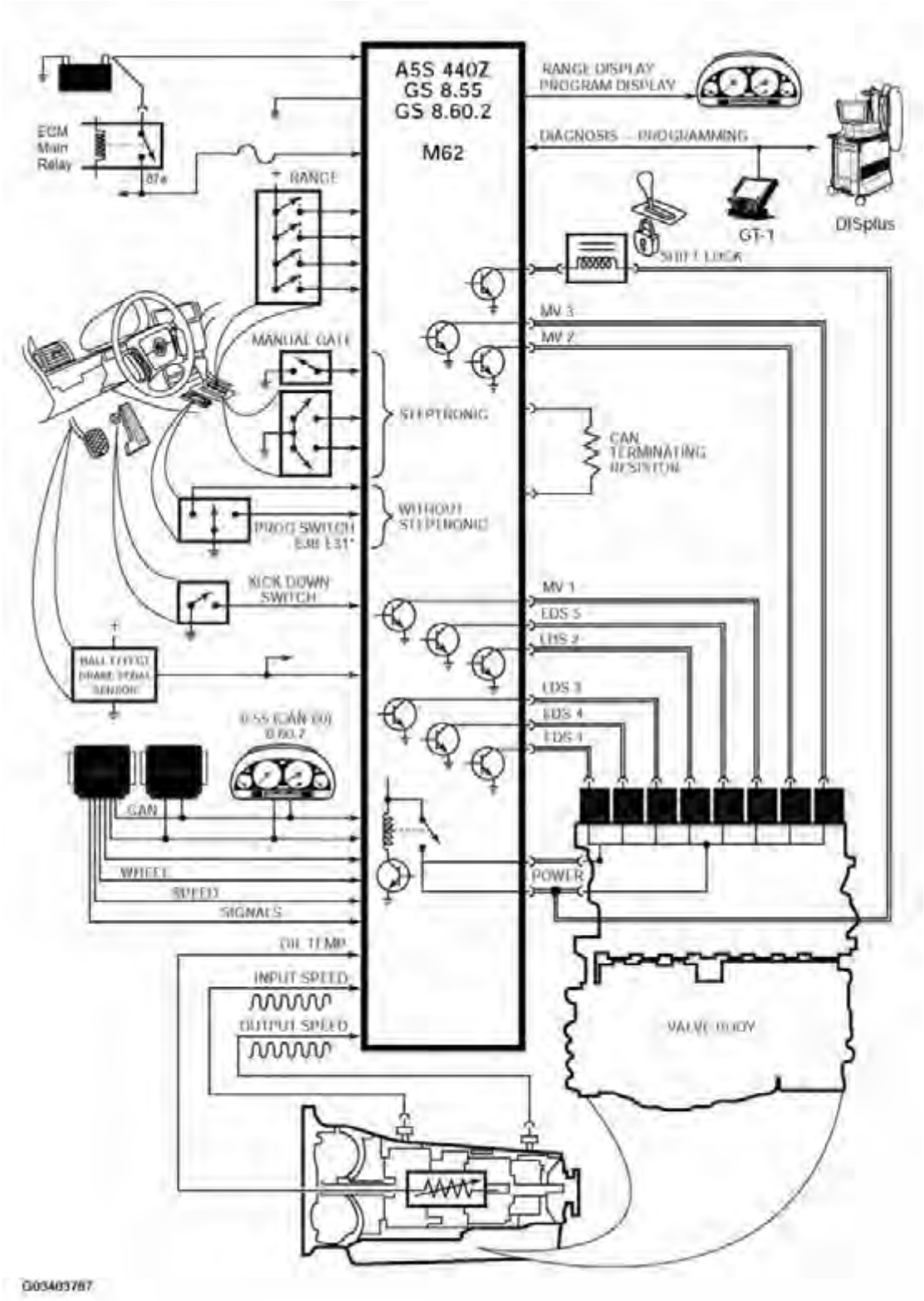

Fig. 9: Identifying System Components (Electrical)
Courtesy of BMW OF NORTH AMERICA, INC.

Transmission Control Module

The TCM receives inputs, processes information and actuates the output elements to provide optimal shift points. The TCM is programmed for maximum shift comfort and fuel economy. The TCM on most BMW vehicles is located in the E-Box next to the ECM (DME).

There are several types of TCM housings:

- 35 Pin TCM (TCU) - used on the 4HP transmissions
- 55 Pin TCM - used on the A4S310R (THM-R1)

- 88 Pin TCM - used on all others up to 98
- 134 Pin TCM - used on all BMW transmission from the 99 model year. (Note- the 134 pin TCM was introduced on the 98 Models equipped with the A5S440Z).

The 134 Pin TCM is also referred to as SKE (Standard Shell Construction). The SKE housing uses 5 separate connectors. On transmission applications only three connectors 1, 3 and 4) are used. Connectors 2 and 5 are blank and are NOT used. The connectors are blue in color to avoid confusion with the ECM (DME) connectors which are black.

!34 Pin control modules are supplied by Bosch for ZF transmissions and Siemens for Hydramatic transmissions. Bosch and Siemens control modules are NOT interchangeable.

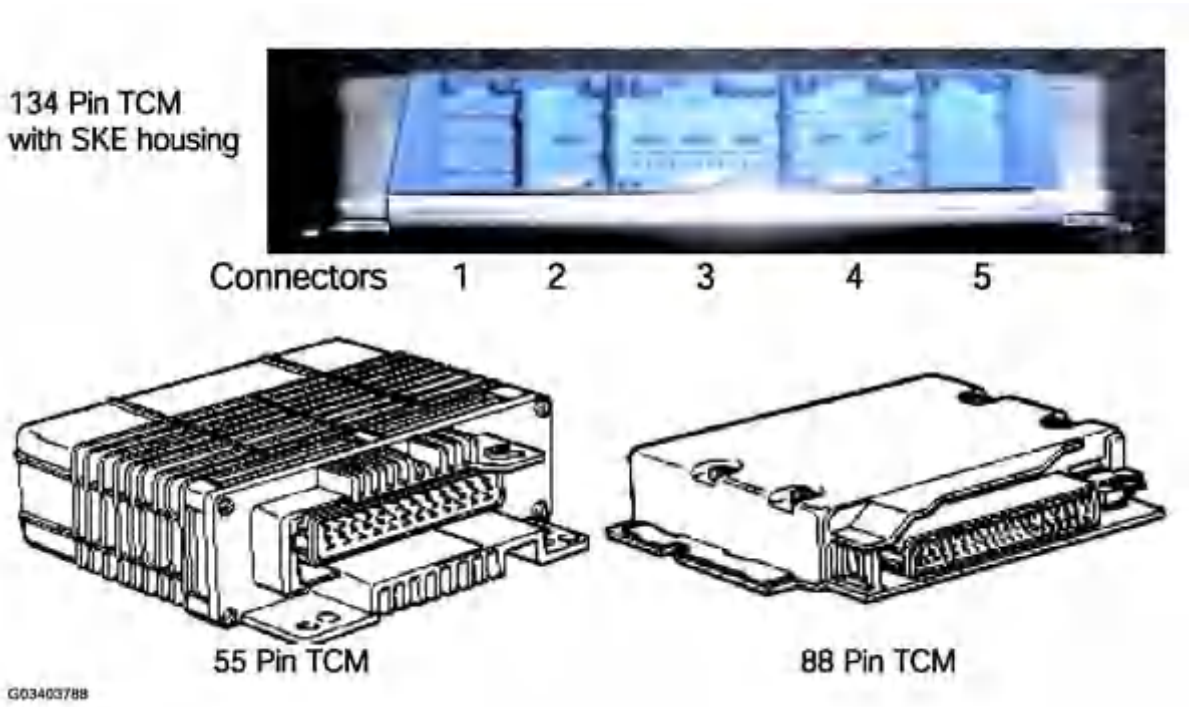

Fig. 10: Identifying Transmission Control Module
Courtesy of BMW OF NORTH AMERICA, INC.

Turbine Speed Sensor

The Turbine Speed Sensor is used to provide input (turbine) shaft speed information to the TCM (EGS). The input shaft speed signal is used in conjunction with the output shaft speed signal to determine gear range and slip time information for processing in the TCM. Not all BMW transmissions use a turbine speed sensor. Some TCM's use the TD (engine speed) signal to determine input shaft speed. All transmissions with the exception of the A5S325Z use an inductive type sensor which generates an AC analog signal. The A5S325Z currently uses a Hall Effect Turbine Speed Sensor which will send a digital square wave signal to the TCM.

4HP22/24 (EH), A4S310/270R: These transmissions do not use a Turbine Speed Sensor. The TD signal is used to determine input shaft speed. The TD signal is an output signal of the DME control unit.

A5S310Z, A5S325Z, A5S440Z, A5S560Z, A5S360/390R: These transmission use a turbine speed sensor. The TD signal is also used with the turbine speed signal to allow the TCM to monitor Torque Converter Clutch operation. The TCM can control torque converter clutch slippage and also monitor for faults.

Output Shaft Speed Sensor

The Output Shaft Speed Sensor is used to provide output shaft speed information to the TCM. The output shaft speed signal is used in conjunction with the turbine speed signal to provide the TCM with information on gear ranges and slip times.

All BMW electronic transmissions have an output shaft speed sensor. The output shaft speed sensor is an inductive type which will generate an AC analog signal to the TCM. The frequency and amplitude of the signal will increase as output shaft speed increases. The exact location of the output shaft speed sensor varies by transmission model.

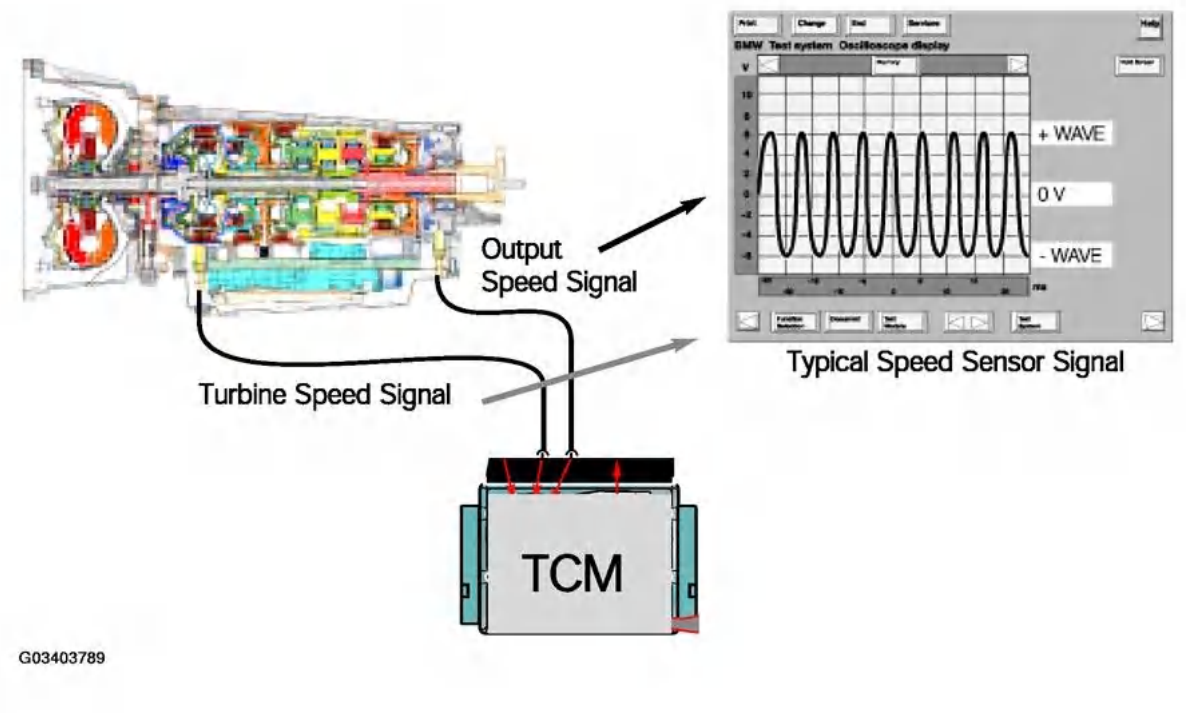

Fig. 11: Identifying Output Shaft Speed Sensor Graph
Courtesy of BMW OF NORTH AMERICA, INC.

Transmission Oil Temp Sensor

The TCM is provided with transmission oil temperature information via a temperature sensor. On most BMW transmissions, the sensor is an NTC element which is part of the transmission internal wiring harness.

4HP22/24 (EH): These transmissions do not use a transmission oil temperature sensor. There are no transmission oil temperature influenced features on the 4HP transmissions.

All Except A5S360/390R, GA6HP26Z: The transmission fluid temp sensor is part of the transmission internal wiring harness. On these transmissions, the sensor cannot be replaced separately. The harness must be replaced.

A5S360/390R transmission: the sensor is a separate, replaceable sensor that can be unplugged from the harness.

GA6HP26Z: the sensor is located in the Mechatronics Module, which is located inside of the transmission.

NOTE: The Mechatronics Module is not currently serviceable at this time. Contact the BMW Technical Hotline in the event of a failure. Do not attempt any repair or replacement of the Mechatronics Module.

The transmission oil temperature information is used to:

- Initiate the Warm Up Program
- To inhibit TCC operation until a specified temperature has been reached.
- For determining fluid level when used with diagnostic equipment.

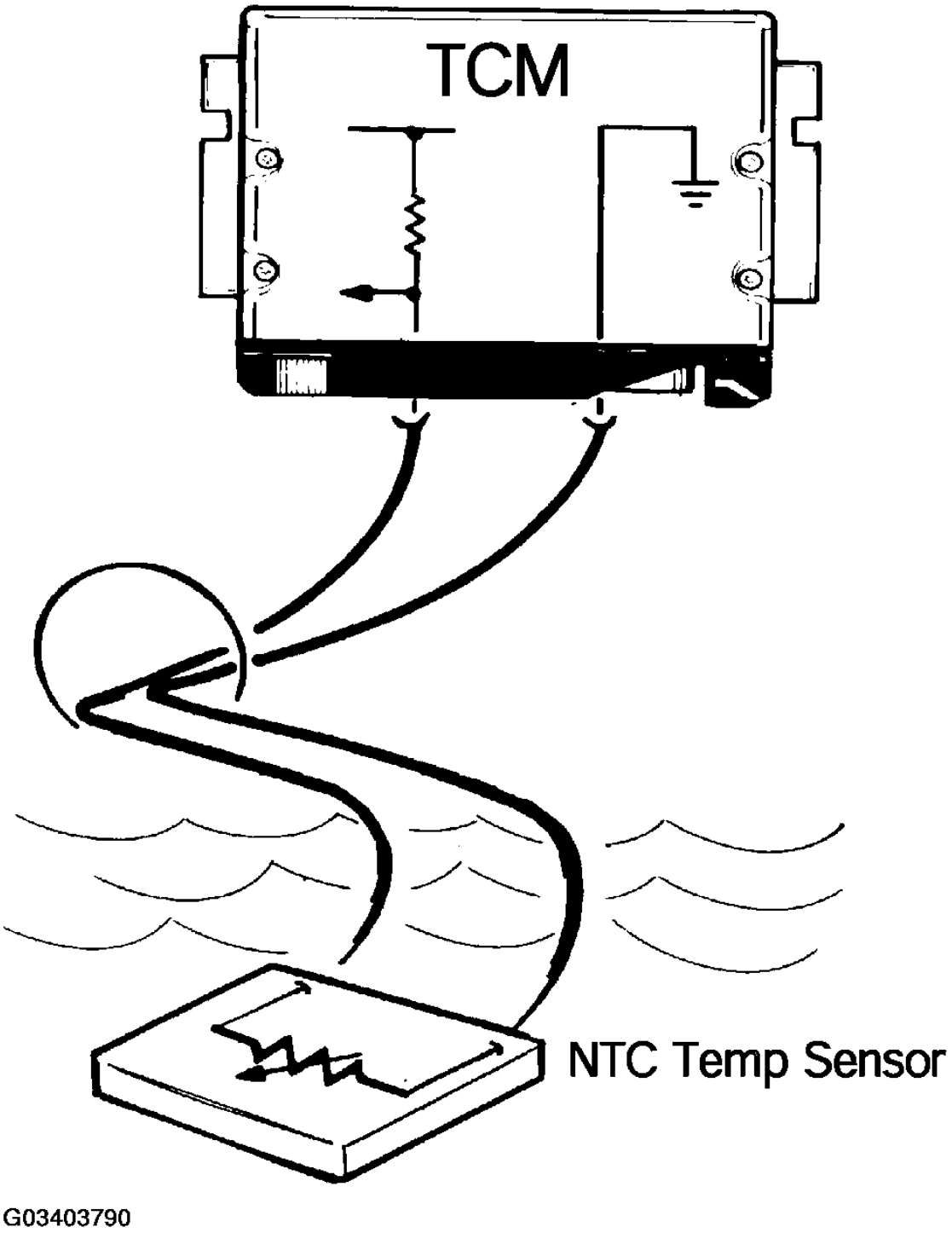

Fig. 12: Transmission Oil Temperature Sensor Is Connected To TCM
Courtesy of BMW OF NORTH AMERICA, INC.

The transmission oil temperature sensor is connected to the TCM via a 5 Volt reference and a circuit ground. As transmission oil temperature increases, the circuit resistance and voltage decrease proportionately.

Kickdown Switch

The TCM receives a kickdown request via one of two possible methods:

- The kickdown signal is a direct ground input to the TCM. The kickdown input is provided by a kickdown switch located under the accelerator pedal. This method is used on most BMW vehicles without electronic throttle control systems (except M52TU with MDK).

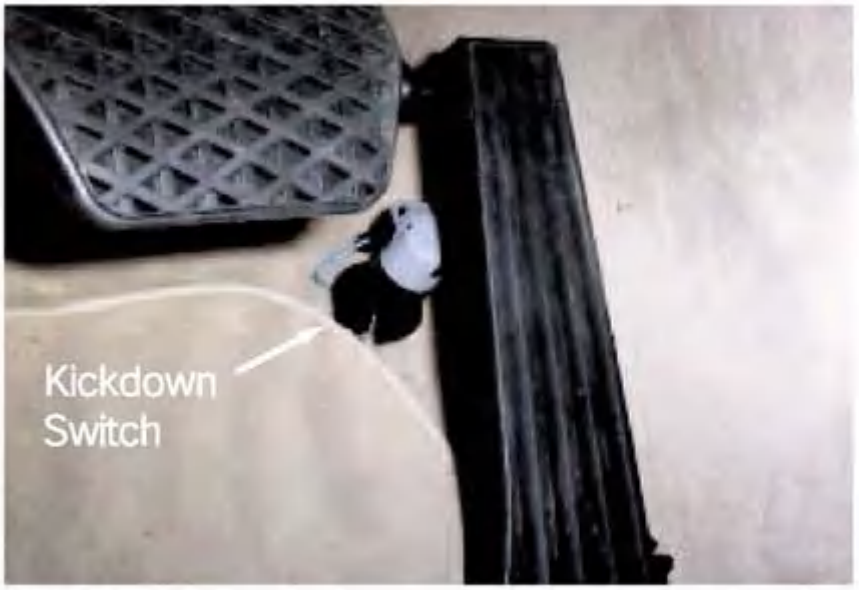

Fig. 13: Identifying Kickdown Switch
Courtesy of BMW OF NORTH AMERICA, INC.

- The kickdown request is provided by the ECM (DME) via the CAN bus. The kick down request originates from the PWG. There is no separate switch in the PWG. When the PWG voltage reaches approximately 4.5 volts, the ECM will process a kickdown request to the TCM via CAN. The PWG contains a kickdown detent to simulate the feel of a kickdown switch.

  This method is used on the M62TU, M54, M73, M73TU, N73 and N62 engines.

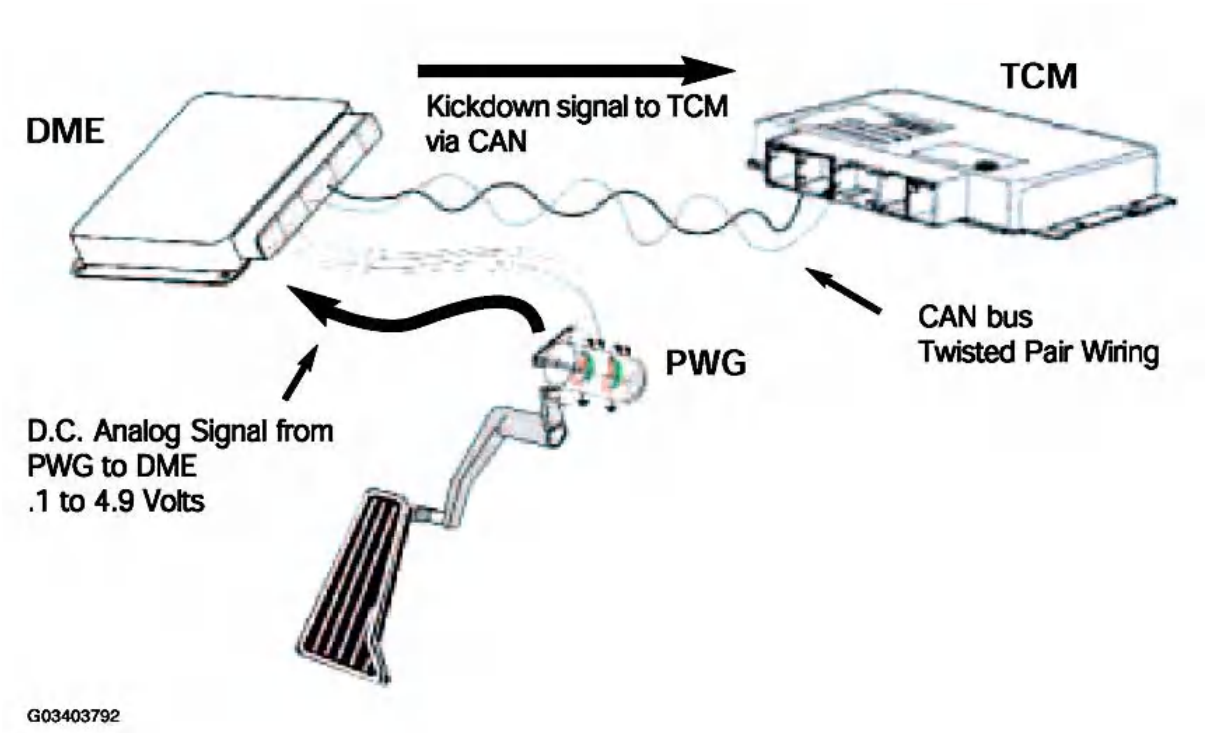

Fig. 14: Identifying Kickdown Signal Is A Direct Ground Input To
Courtesy of BMW OF NORTH AMERICA, INC.

Brake Switch

The brake switch is located on the brake pedal linkage. The brake switch signal is an input to the TCM which is used for:

- De-activation of the shift lock solenoid. When the ignition key is turned to KL15 the shift lock is active. The shift lock solenoid is de-activated when the brakes are applied.
- De-activate the Torque Converter. The TCC is deactivated whenever the brake is applied. (only on Hydramatic Transmissions).

There are two types of brake switches used on BMW vehicles:

- On early vehicles such as E32, E34, E36, E24, E28 and E31 the brake switch is a double-contact mechanical switch. There is a brake light circuit and a brake test circuit. The brake test circuit is used for a plausibility check to indicate faults within the brake light circuit.
- On the E38, E39, E46, E65/66, E85 and E53 the brake switch is a hall effect type switch. The electronic switch is also monitored for faults and plausibility.

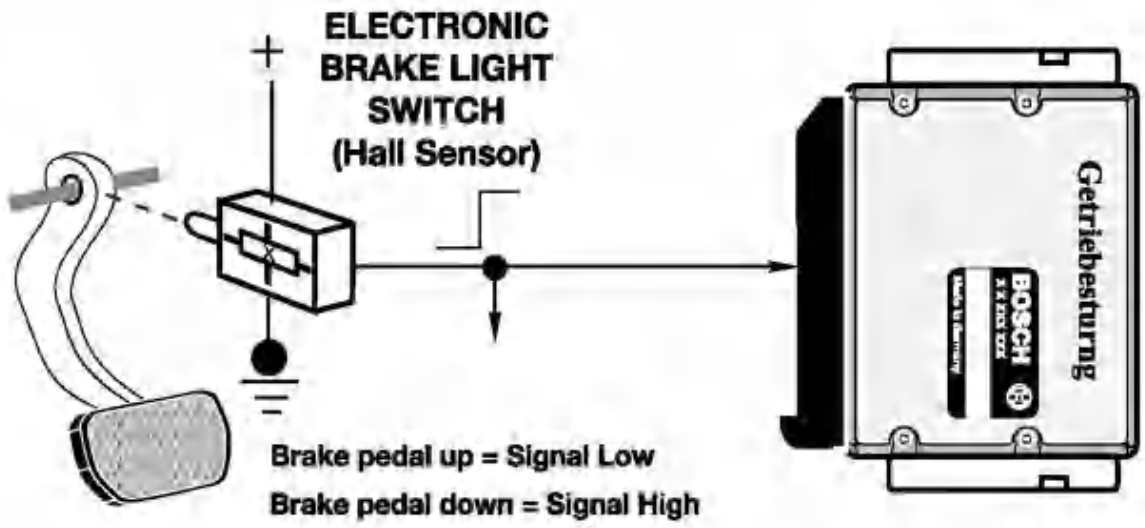

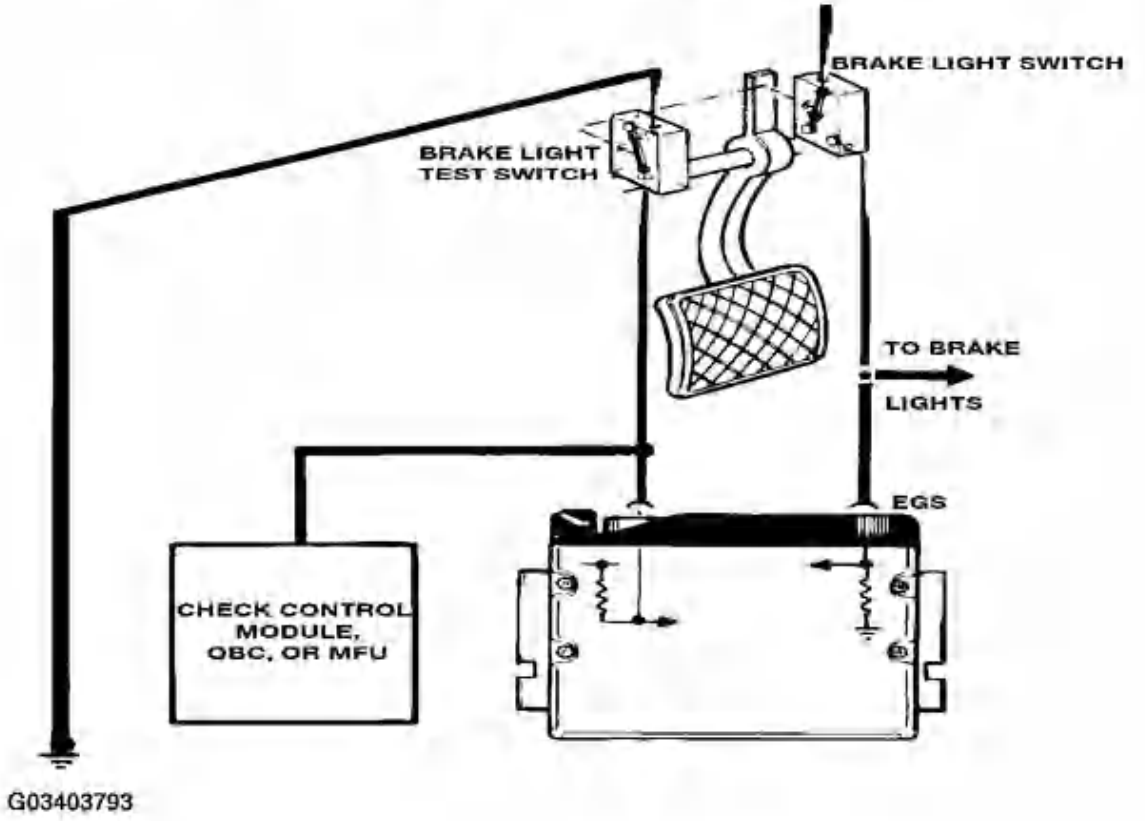

Fig. 15: Identifying Brake Switch Signal Is An Input To TCM
Courtesy of BMW OF NORTH AMERICA, INC.

Transmission Range Selector Switch

The range selector switch is an input to the TCM. The input is used by the TCM to determine the position of the manual valve. The range switch uses the familiar "coded input" signal to determine selector lever position. On all transmissions except the A5S360/390R, the range switch uses a 4 wire configuration to determine 7 range selector positions. The A5S360/390R uses a five wire arrangement.

Most range switches are located on the transmission case with some exceptions. The E36 with the A4S270/310R the range switch is located is the center console on the selector lever assembly. The E39 with A4S270R the range switch is located on the transmission case and is adjustable. The range selector switch on the A5S360/390R is located inside the transmission housing. GA6HP26Z is part of the Mechatronics Module.

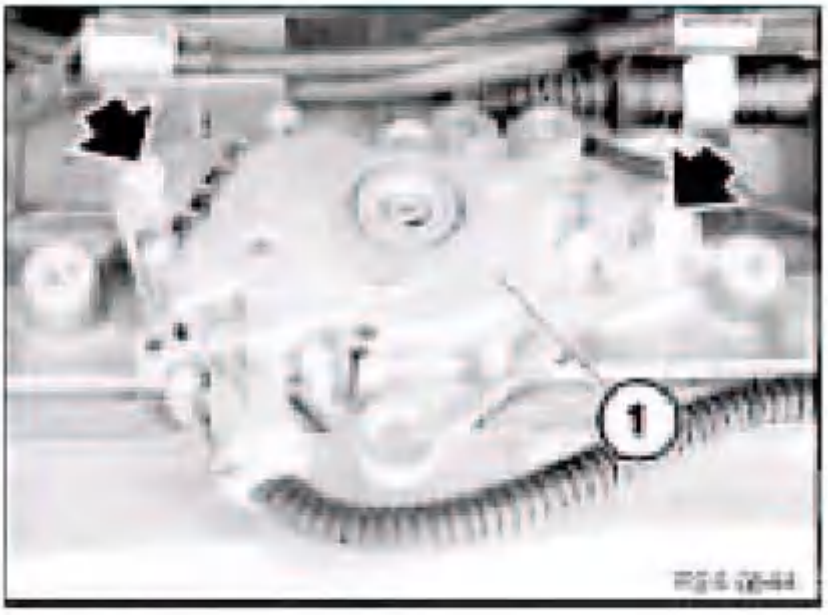

G03403794

Fig. 16: Identifying Transmission Range Selector Switch
Courtesy of BMW OF NORTH AMERICA, INC.

The range switch can be checked by using "Status Requests" in the DISplus or GT-1.

A multimeter or an oscilloscope can also be used to check the range switch. If the reading on "Status Requests" does not match the actual selector lever position, there will be various transmission malfunctions.

Use the switch logic chart to diagnose faults in the switch.

In the example below, the range switch is in neutral. Using the logic chart, switches L1, L2 and L3 are closed providing B+ voltage to the corresponding pins of the TCM. Switch L4 is open and no voltage is sent to the TCM. Malfunctions in the range switch or wiring can cause various shifting complaints and possible No-Start complaints.

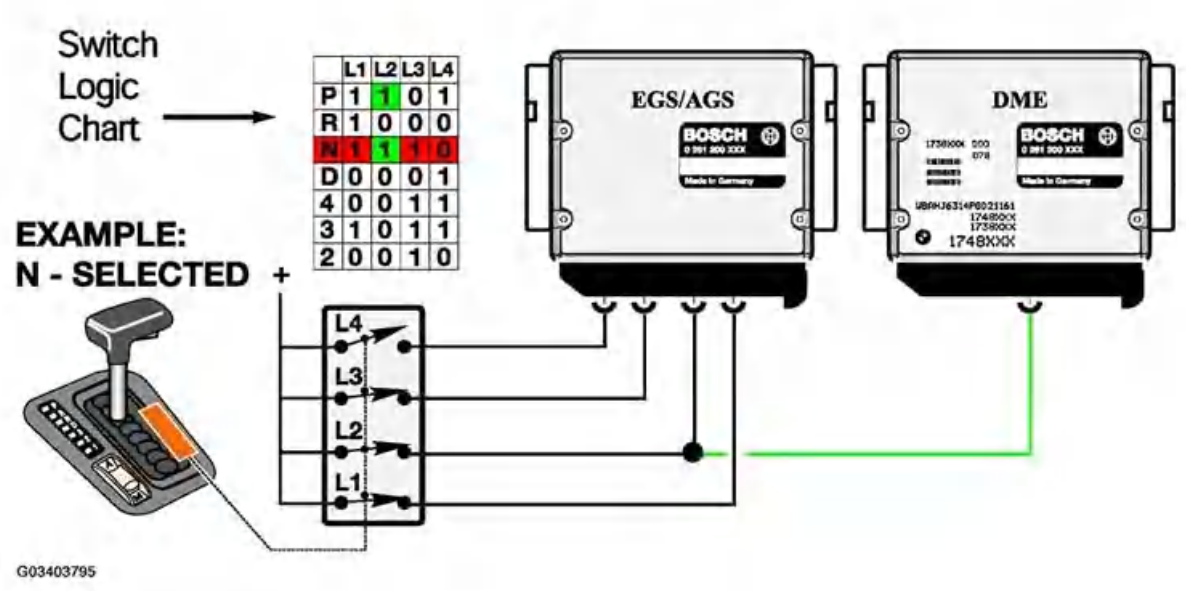

Fig. 17: Identifying Transmission Range Selector Switch Logic Chart
Courtesy of BMW OF NORTH AMERICA, INC.

Transmission Program Switch

The transmission program switch is used to switch between various operating modes of the transmission. The normal default mode of the TCM is Economy which is indicated in the program display as "E". Economy mode allows the transmission to operate in the most efficient mode. Shift priorities are for maximum economy and shift comfort. On some vehicles the program switch is designated "A" for economy mode. Program switches come in 2 or 3 position configurations. Early vehicles with the 4HP (Early E7) used a rotary program switch.

The TCM can also be switched to "Manual Mode" which on some vehicles is designated "Winter Mode". Manual mode is used to start the vehicle off in a higher gear when encountering slippery conditions. The program display will indicate "M" (manual) or an asterisk symbol for "Winter Mode".

Sport Mode is the third operating mode that is available. Sport mode allows for a slightly delayed and more aggressive shift. Sport mode is obtained a number of ways. On vehicles with 2 position program switches, moving the selector lever out of drive to 4, 3, or 2 with the program switch in Economy will allow Sport mode. On vehicles with 3 position program switches, Sport mode can be obtained by switching to "S".

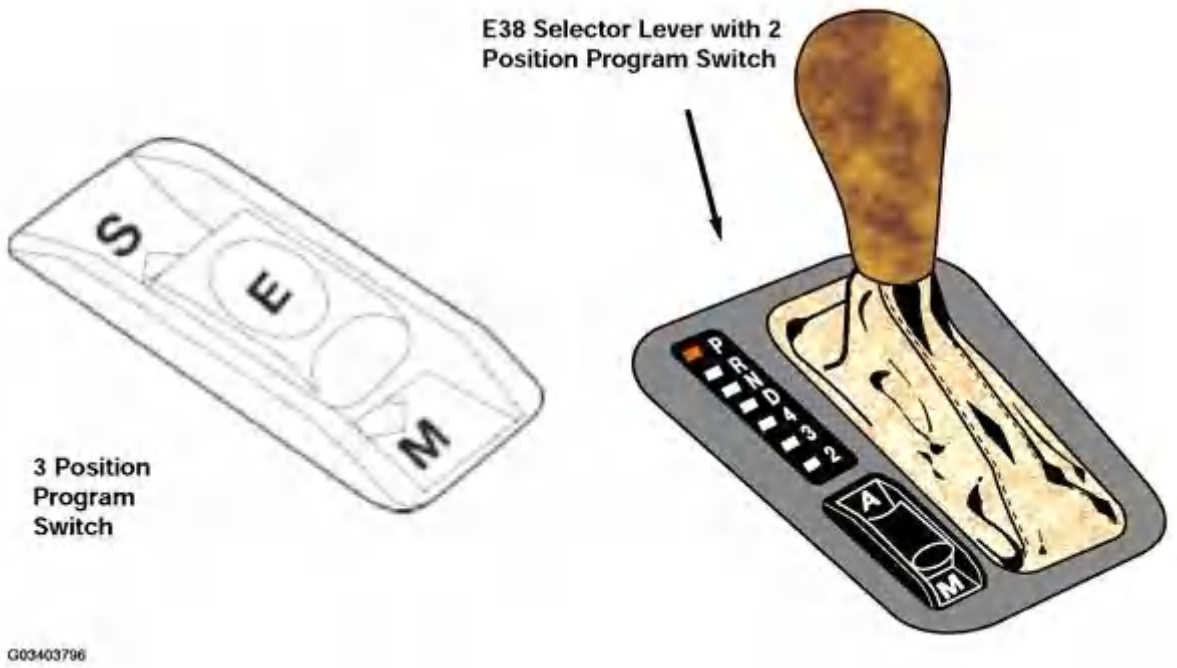

Fig. 18: Identifying Transmission Program Switch
Courtesy of BMW OF NORTH AMERICA, INC.

Steptronic Components

The Steptronic system uses additional components not found on a conventional system. These components consist of a manual switch and an Up/Down microswitch. Otherwise, the Steptronic system uses the same transmission and TCM.

The TCM monitors the Steptronic shifter position from P through D via the conventional range selector switch located on the transmission. The Range Selector Switch provides positions P through D to the TCM because the automatic gate of the shifter only travels through these positions.

When the Steptronic Shifter is moved to the left 15 degrees into the manual gate, the TCM receives a ground input from the manual gate switch. The ground signal is provided to the TCM through the Transmission Position Indicator. The transmission position indicator also provides range position signaling to the range position indicator in the shift console.

Steptronic was introduced on the E31 850Ci (10/94) and the 840Ci (1/96). Steptronic was subsequently introduced into the E38, E39, E46, E36/7 and the E53.

The Steptronic system can be diagnosed through "Status Requests" with the DISplus or GT-1.

From 2002 model year the Steptronic shifter has changed slightly. Downshifts are now achieved by moving the selector lever forward and upshifts are now rearward.

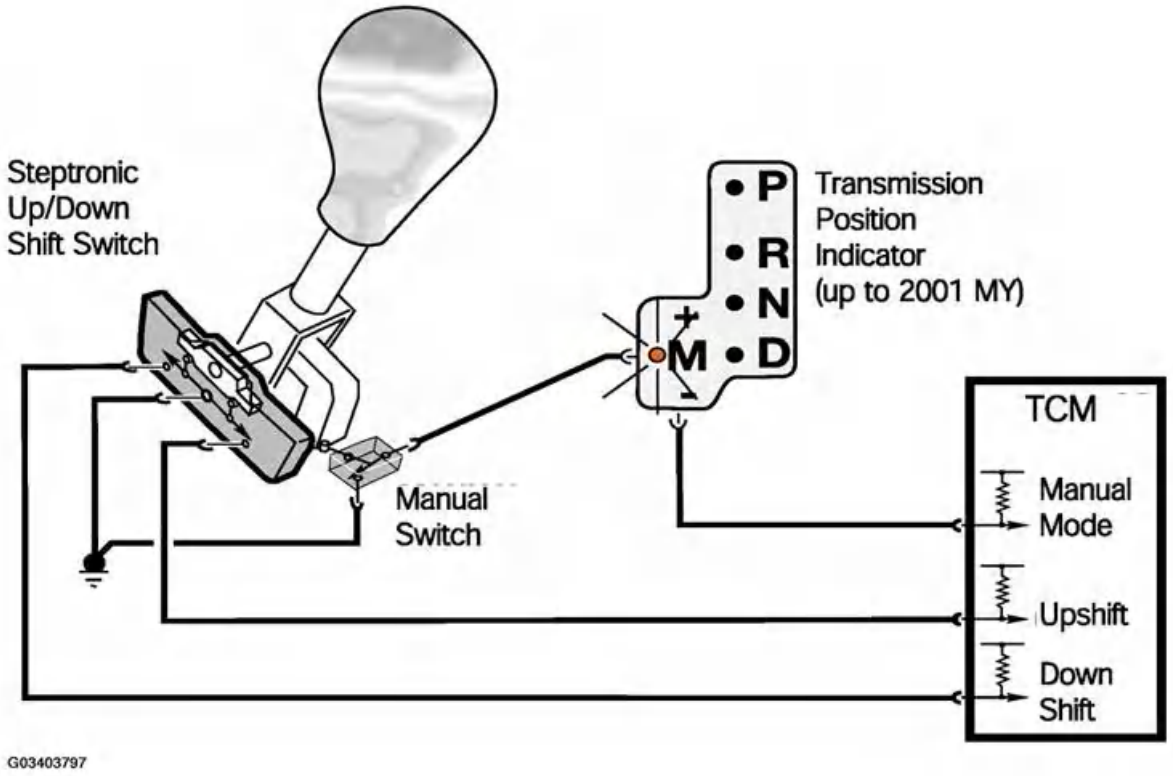

Fig. 19: Identifying Steptronic Components
Courtesy of BMW OF NORTH AMERICA, INC.

Magnetic Valves

Magnetic Valves (MV) are used to electronically control hydraulic fluid flow to the various shift elements within the transmission. Magnetic valves are located on the valvebody and replaceable as separate components. In ZF transmissions, MV valves are designated MV1, MV2, MV3 etc. In Hydramatic transmissions, they are designated Shift Valve A, Shift Valve B, Shift Valve C etc.

The magnetic valves are controlled by the TCM. They are supplied power by an internal TCM relay and are ground controlled. The TCM switches one or more of the MV's on or off in various combinations to achieve various shifts. Most transmission have 2 or 3 MV's to control shifting.

In addition to controlling shifts within the transmission, magnetic valves are also used for overlap shifting and pressure regulation on some transmission applications. For example MV4 and MV5 are used for overlap shifting in the A5S310Z. MV5 is used for pressure regulation on the 4HP22/24EH transmissions. When used for pressure regulation, the magnetic valves are pulse width modulated by the TCM.

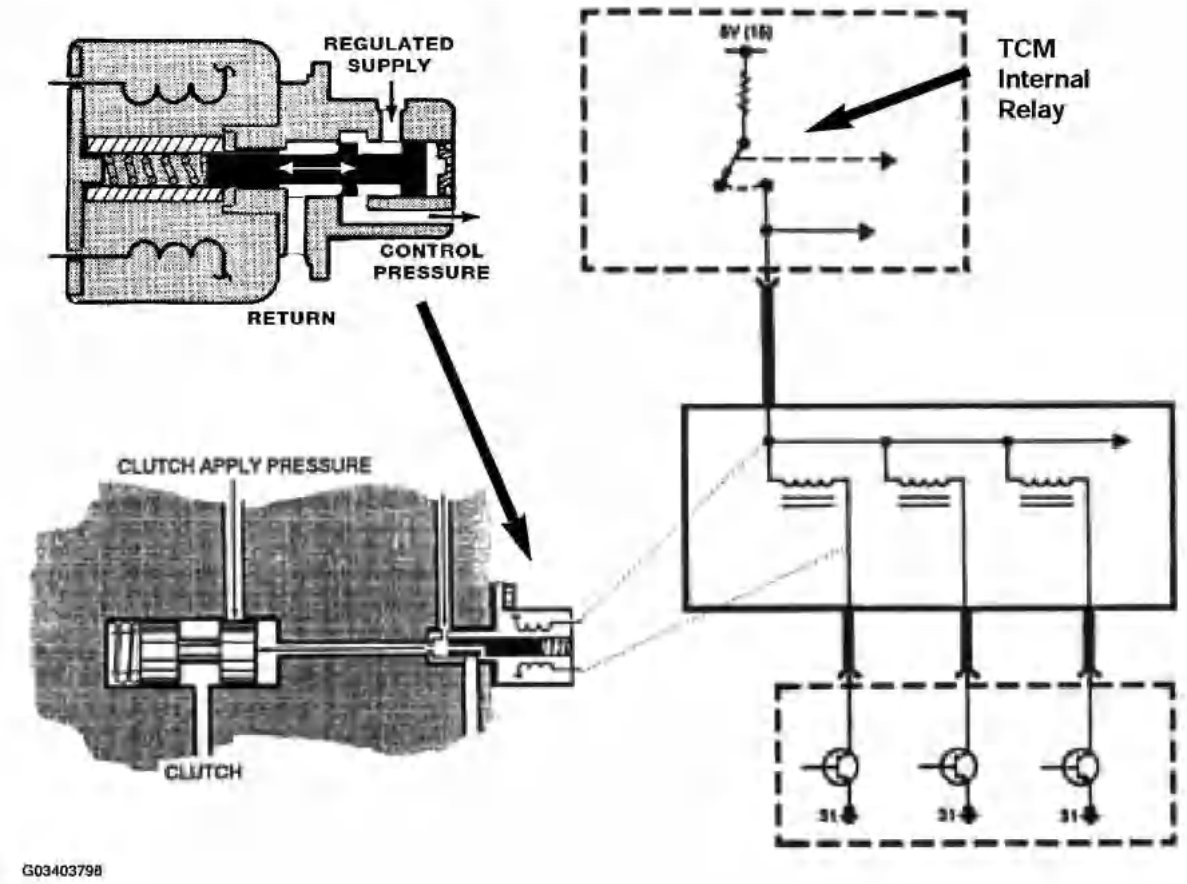

Fig. 20: Identifying Magnetic Valves Are Pulse Width Modulated By TCM
Courtesy of BMW OF NORTH AMERICA, INC.

Pressure Regulating Solenoids

Pressure Regulating Solenoids are used to modify line pressure for use in the transmission. There are numerous terms for these solenoids depending upon transmission type and manufacturer. ZF transmissions use the term EDS, while Hydramatic Transmissions use the term DR solenoid, Force Motor Solenoid and Variable Bleed Solenoid (VBS).

EDS valves are used for main line pressure regulation, TCC application and Overlap Shift Pressure Control on the A5S440Z and A5S560Z. All pressure regulating solenoid are controlled by Pulse Width Modulation.

Using the example in the picture below, this is a section of the A5S440Z/560Z valve body. The EDS valves are used for the following:

- EDS 1 is used for main line pressure regulation
- EDS 2, 3 and 5 are used Overlap Shift Pressure Control
- EDS 4 is used for TCC application. (GWK) Gradually applied TCC.

Fig. 21: Identifying Pressure Regulating Solenoids
Courtesy of BMW OF NORTH AMERICA, INC.

Hydramatic Pressure Regulator

The valve body shown at the right is from the A5S360/390R. Note the location of the main pressure regulator. Depending upon the reference text, the pressure regulator is also known as the Force Motor Solenoid, Variable Bleed Solenoid or PC Solenoid.

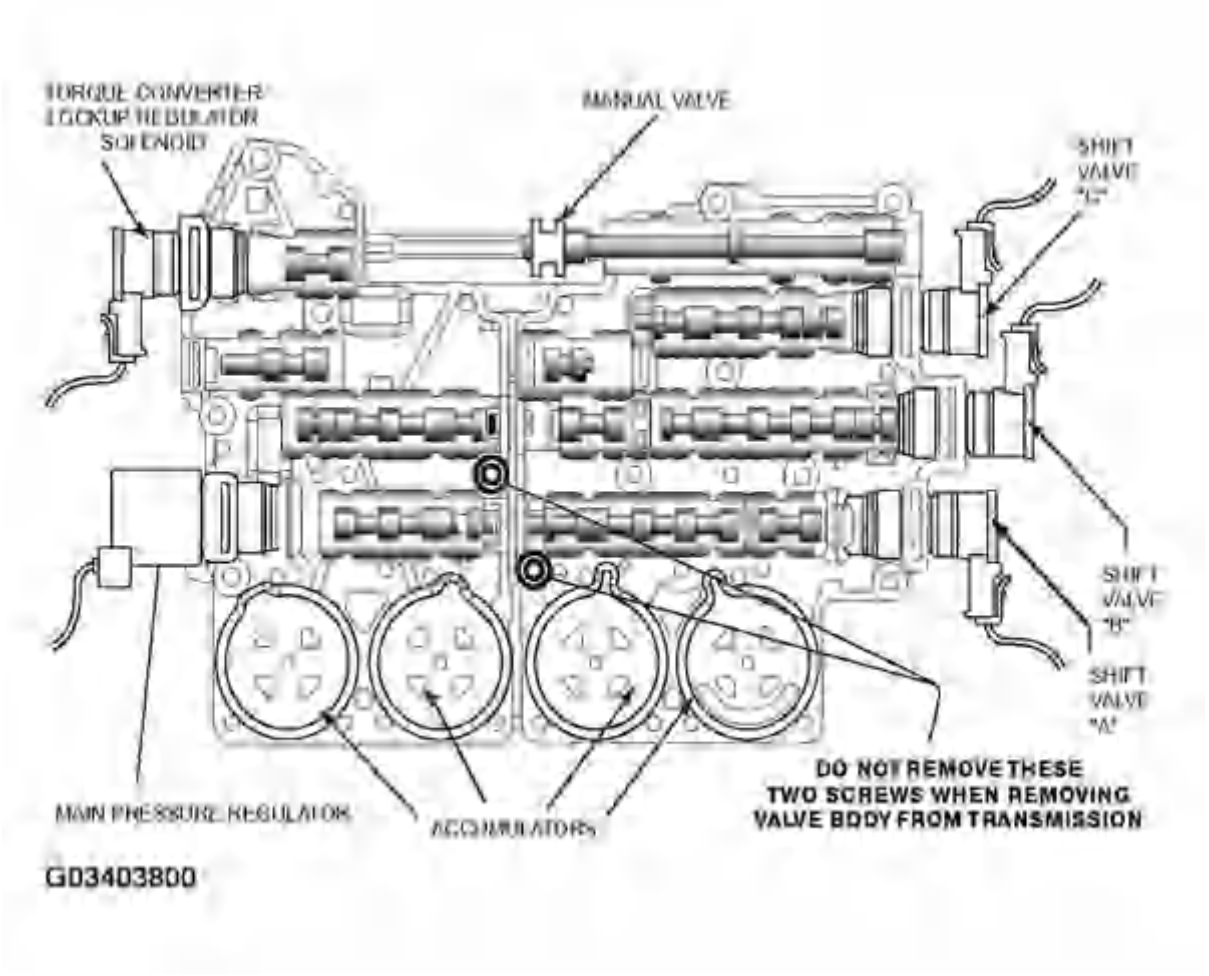

Fig. 22: Identifying Hydramatic Pressure Regulator
Courtesy of BMW OF NORTH AMERICA, INC.

Mechatronics Module GA 6HP26Z

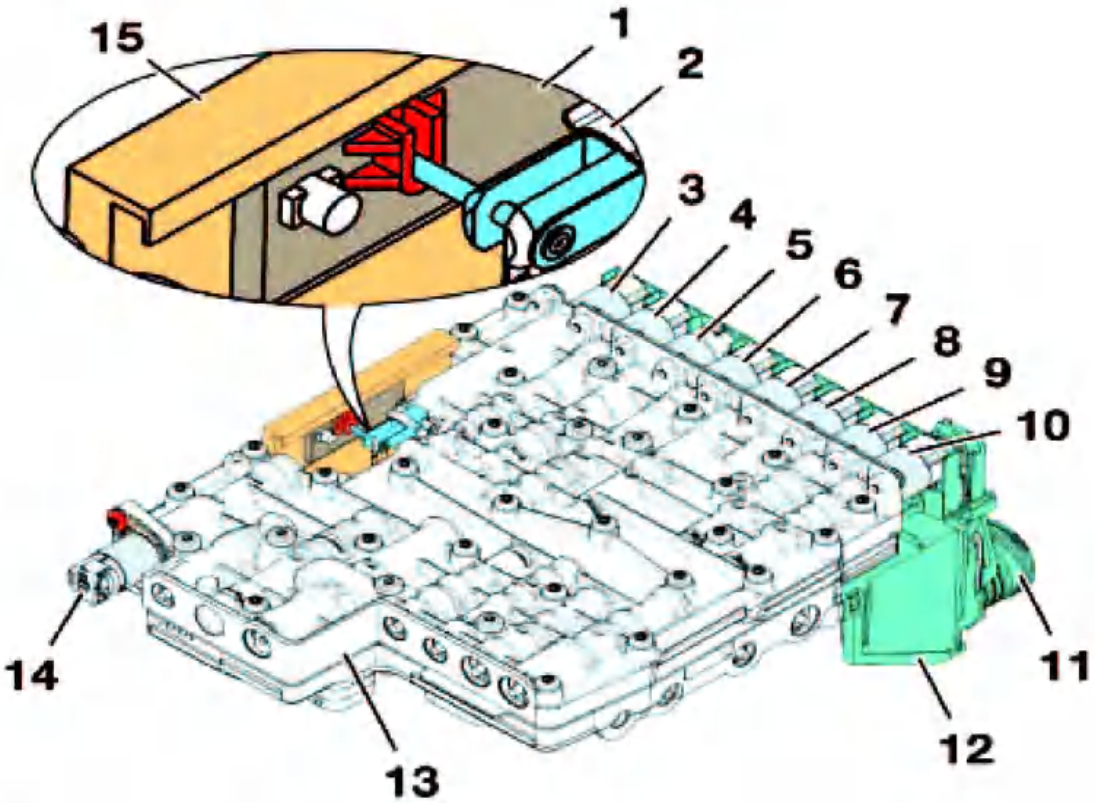

1	Position Slide Switch	9	EDS 2
2	Parking Lock Cylinder Piston	10	EDS 1
3	Solenoid Valve 3, parking lock Cylinder	11	Electronic Plug Connector
4	EDS	12	Electronic Module
5	Solenoid Valve 1	13	Hydraulic Module (Valve body)
6	EDS 4	14	Solenoid Valve 2
7	EDS 5	15	Position Switch
8	EDS 3		

G03403801

Fig. 23: Identifying Mechatronics Module GA 6HP26Z
Courtesy of BMW OF NORTH AMERICA, INC.

Instrument Cluster

The cluster is used to report information to the driver regarding transmission status. There are three items of information needed by the driver:

- Transmission Range - this indicates the position of the range selector lever. The driver needs to know whether the transmission is in P, R, N, D, 4, 3, or 2.
- Transmission Program - this indicates the mode of operation. There are 3 modes, Economy, Manual and Sport.
- Transmission Fault Information - the driver needs to know of there is a malfunction in the transmission. Depending upon application, transmission faults can be indicated by an icon or by a "Transmission Program" message in the instrument cluster display matrix.

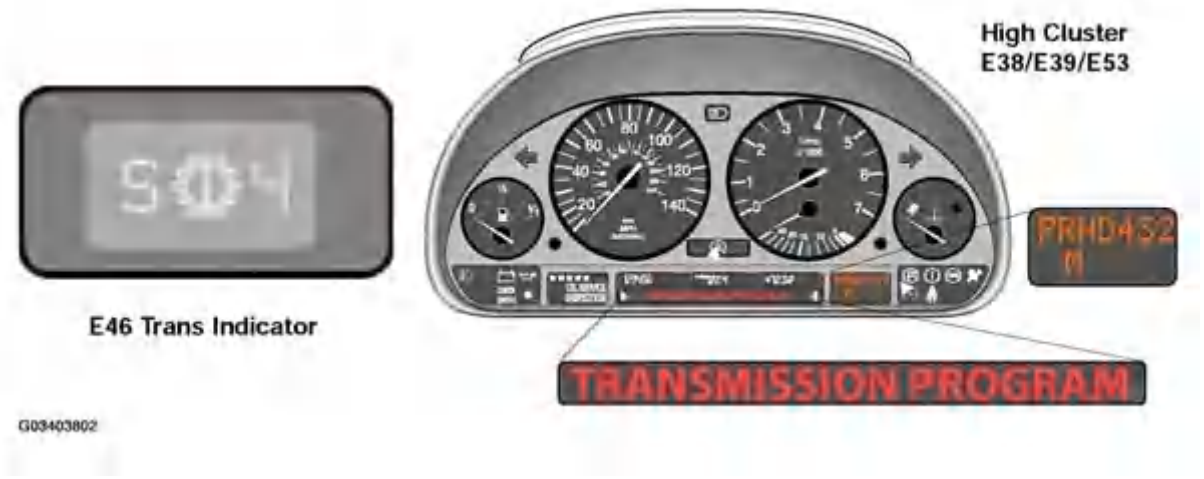

Fig. 24: Identifying Instrument Cluster
Courtesy of BMW OF NORTH AMERICA, INC.

Depending upon vehicle model and transmission, these pieces of information arrive at the cluster through different methods.

- The most current method for this information to arrive at the cluster is through the CAN bus. The cluster processes this information from the TCM via CAN.
- On early E38 and E39 vehicles these is a "One Way Data Signal" from the TCM to the cluster. There is a one way serial data line that transfers this information to the cluster. On later vehicles, the cluster was introduced to the CAN bus and this method was no longer used. This was used on the E38 vehicles to 5/97 and E39 vehicles to 8/97 production.
- Early vehicles such as E32, E34, E36 etc. used a various combination of methods to transfer this data. Some clusters use the "Coded Input" method for the program indicator. Fault indication is done by a ground circuit through the TCM. Transmission range indication is achieved by a direct connection between the range switch and cluster or by a coded input to cluster.

There will be a FC6 in the Kombi when the TCM goes into fail-safe mode.

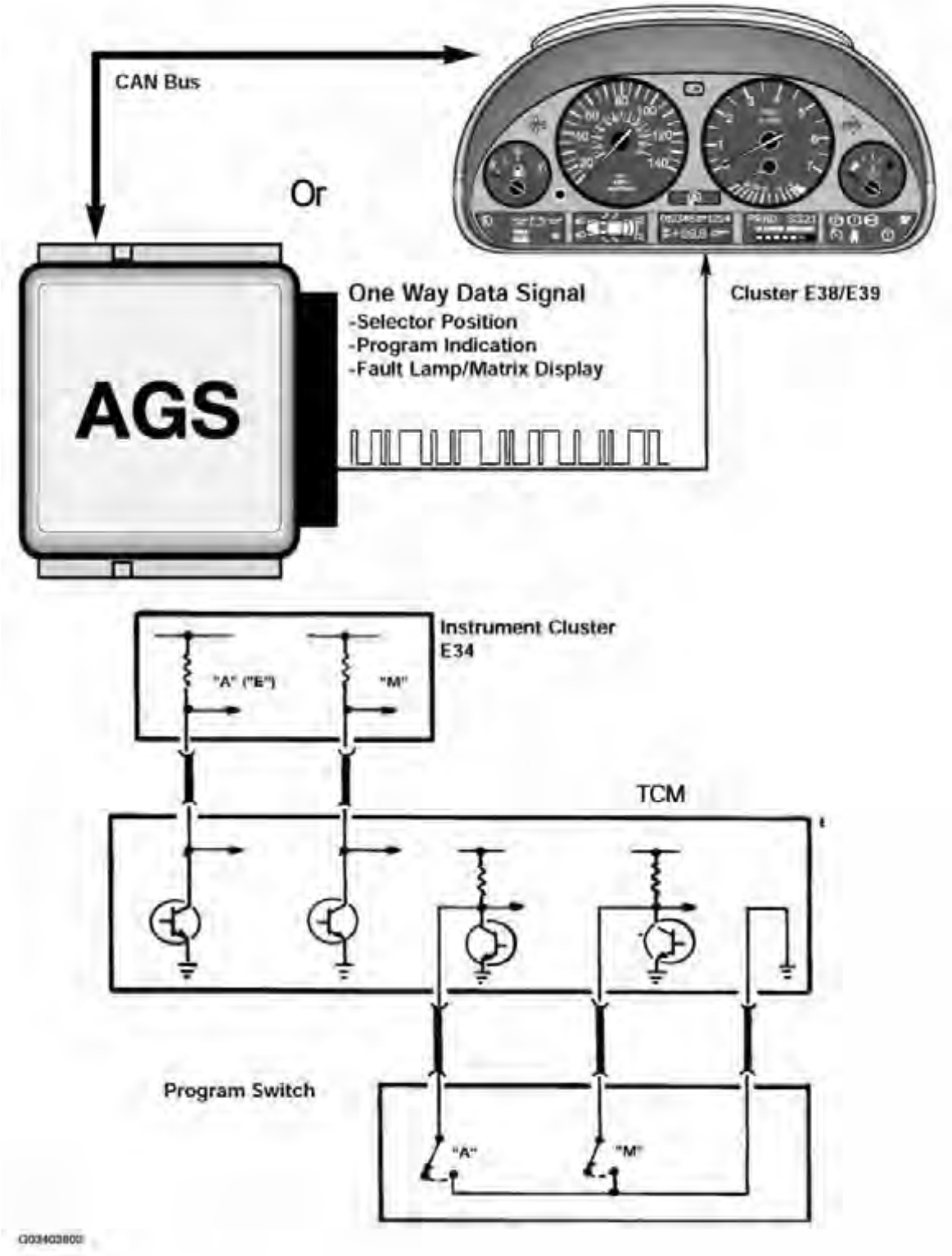

Fig. 25: Identifying Instrument Cluster Circuit
Courtesy of BMW OF NORTH AMERICA, INC.

TRANSMISSION FEATURES AND PRINCIPLES OF OPERATION

Adaptive Hydraulic Pressure Control

Pressure adaptation has been a feature of ZF automatic transmissions since the 4HP22EH. The TCM will maximize shift quality by adapting to transmission wear over time. The TCM will adjust transmission shift pressures to compensate for wear in the multi-plate clutches. This is accomplished by monitoring the input and output speeds of the transmission. When the transmission shifts, the TCM monitors the time that it takes to accomplish the shift. The time change in gear ratio is monitored and compared to an internal time value in the TCM. If the ratio change takes more time than the stored value, the TCM will compensate by adjusting the

transmission shift pressures via the EDS valve solenoids. The adaptation value is stored in the TCM. This adaptation values can only be cleared by the diagnostic tester (DIS plus or GT-1).

NOTE: DO NOT clear adaptation values unless directed to do so by technical assistance. Clearing pressure adaptations should not be done to resolve a customer complaint. The only time that you would need to do so is after a transmission or valve body replacement or software change.
Also it is important not to confuse pressure adaptation with AGS features. AGS features will be discussed later in this chapter. AGS features are not stored on a long term basis and will not be cleared when the pressure adaptations are cleared. Driving style is NOT stored.

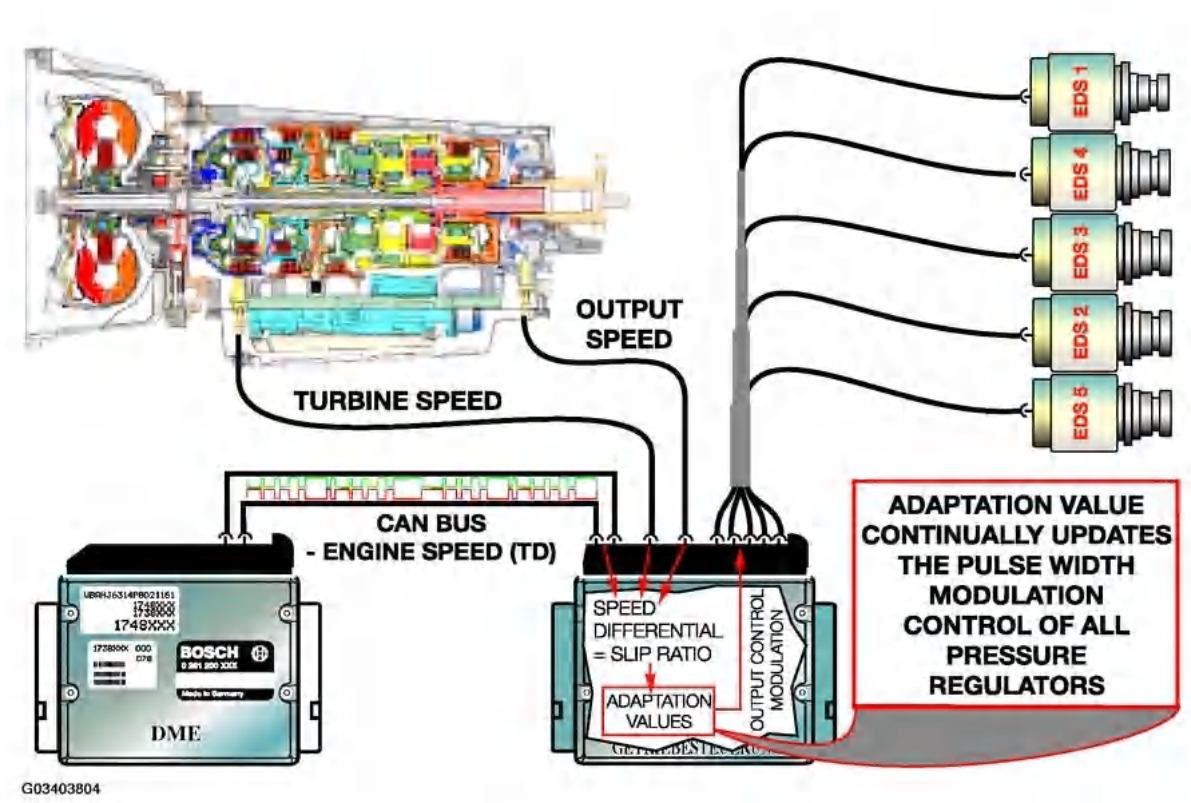

Fig. 26: Identifying Adaptive Hydraulic Pressure Control
Courtesy of BMW OF NORTH AMERICA, INC.

Downshift Protection

Downshift protection is a feature that prevents unwanted or improper downshifting. If the range selector were moved to a lower gear at a high road speed, engine damage could occur from an unintended over-rev. This feature will prevent engine over-rev by delaying or preventing the unwanted downshift until the proper road speed is achieved. The result is increased safety by preventing unwanted deceleration slip.

Reverse Lockout

The TCM will lockout reverse above 3 MPH to prevent drivetrain damage. The range selector lever will go into the reverse detent, but reverse will not engage. This is achieved by the TCM through hydraulic intervention. The transmission will appear to be in neutral.

NOTE: Reverse Lockout is not operative when in fail-safe.

Engine Warm Up Cycle

The transmission shift points are modified after cold start to raise engine RPM during shifting. This allows for a faster engine warm up and reduction of catalyst warm up time. The TCM uses the transmission oil temperature

information to determine the implementation of this function.

The warm up phase program will be terminated if any of the following conditions exist:

- The vehicle exceeds 25 MPH or
- Transmission oil temperature exceeds 60 Degrees Celsius or
- A Maximum of three minutes is exceeded.

ASC/DSC Shift Intervention

During ASC/DSC regulation upshifts are inhibited to enhance the effectiveness of tractional control. Depending upon vehicle model, this action can take place via the CAN bus or a dedicated shift intervention signal wire. On later model vehicles where the ASC/DSC module is connected to the CAN bus, the shift intervention signal is sent to the TCM via CAN.

Torque Reduction

In order to allow a smoother shift and reduce load on the transmission, engine torque is reduced during shifting. This is accomplished by a signal that is sent from the TCM (EGS) to the ECM (DME) during shifting. The ECM will retard timing momentarily during the shift for a few milliseconds. This timing change is transparent to the driver. Depending upon application, the torque reduction signal is sent over a dedicated wire or a signal over the CAN bus.

Emergency Program

When a malfunction occurs within the transmission, the Emergency program (fail-safe mode) will be initiated. The Emergency Program will prevent unintended gear engagement and ensure driver safety. The following will occur during Fail-safe Operation:

- All shift solenoids are de-energized via TCM internal relay.
- The pressure regulation solenoid is de-energized resulting in maximum line pressure.
- The Torque Converter Clutch is de-activated.
- The Reverse Lockout function is cancelled.
- Shift lock solenoid is de-energized.
- Fault indicators are active.

The fault indicator varies depending upon model, year and cluster type etc. High version instrument cluster will display a message in the matrix display. Vehicles with low version clusters will display a fault symbol in the cluster.

During fail-safe mode the transmission will be shifted into a higher gear to allow the vehicle to be driven to a service location. Depending upon application, the transmission will shift into 3rd or 4th gear (on a 4spd) and 4th or 5th gear (on a 5 spd). For example the A5S360R transmission will go into 5th gear when there is a malfunction and 4th when there is a power failure to the TCM. Since pressure regulation ceases, the shift to fail-safe mode will be abrupt or harsh, unless the transmission is already in the fail-safe gear.

On newer OBD II compliant vehicles, the MIL light will also be illuminated by the ECM (DME).

NOTE: When diagnosing transmission related complaints, it is possible to have an erroneous fault indicator warning. Faults in the cluster can cause a false indication or "Trans Program" message. One indication of this scenario would be a transmission fault message in the cluster with no transmission faults stored in the TCM.

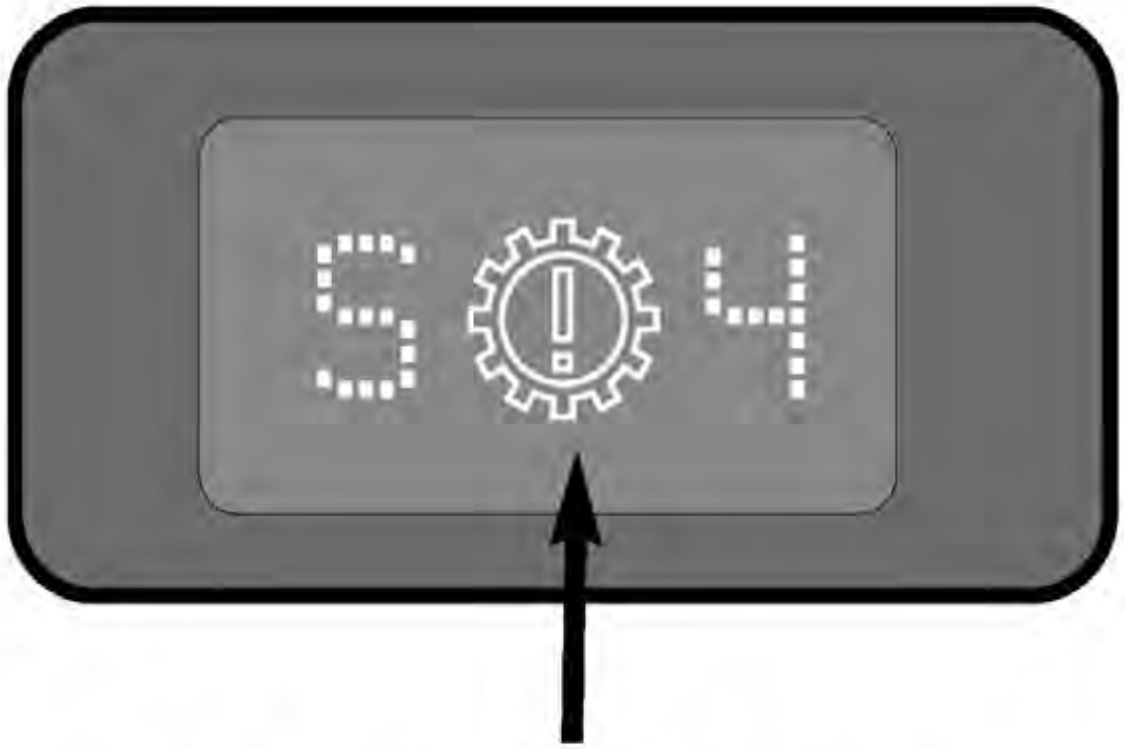

Fig. 27: Identifying E46 Transmission Fault Indicator
Courtesy of BMW OF NORTH AMERICA, INC.

AC Compressor Load Sensing (Hydramatic Transmissions)

When the AC Compressor is switched on, additional load is placed on the engine. To compensate for the additional load, the TCM modifies line pressure and shift points. On the THMR-1, the TCM receives these signals via a direct connection to the AC compressor control circuit.

On vehicles equipped with CAN bus technology, the "AC on" signal is sent to the TCM from the DME as a CAN bus message.

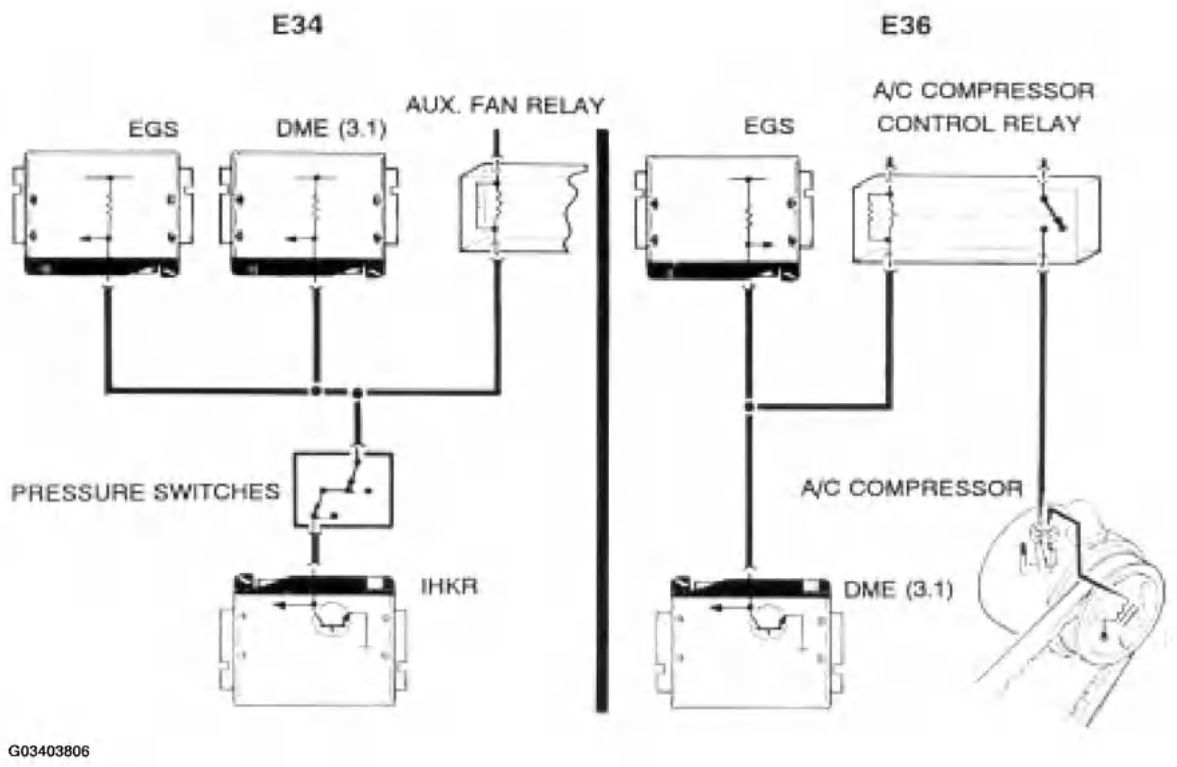

Fig. 28: Identifying AC Compressor Load Sensing (Hydramatic Transmissions)
Courtesy of BMW OF NORTH AMERICA, INC.

Shift Lock

The shift lock solenoid is mounted on the selector lever assembly and locks the selector lever in Park or Neutral when the ignition is ON. This prevent the selection of a gear unless the brake pedal is depressed. The solenoid is activated by a switched ground from the TCM. Power is supplied by the TCM internal relay. During fail-safe operation, the shift lock is disabled. On later models, the shift lock will also be active when the TD signal is present and the shifter will remain locked above an engine speed of 2500 RPM regardless of brake application.

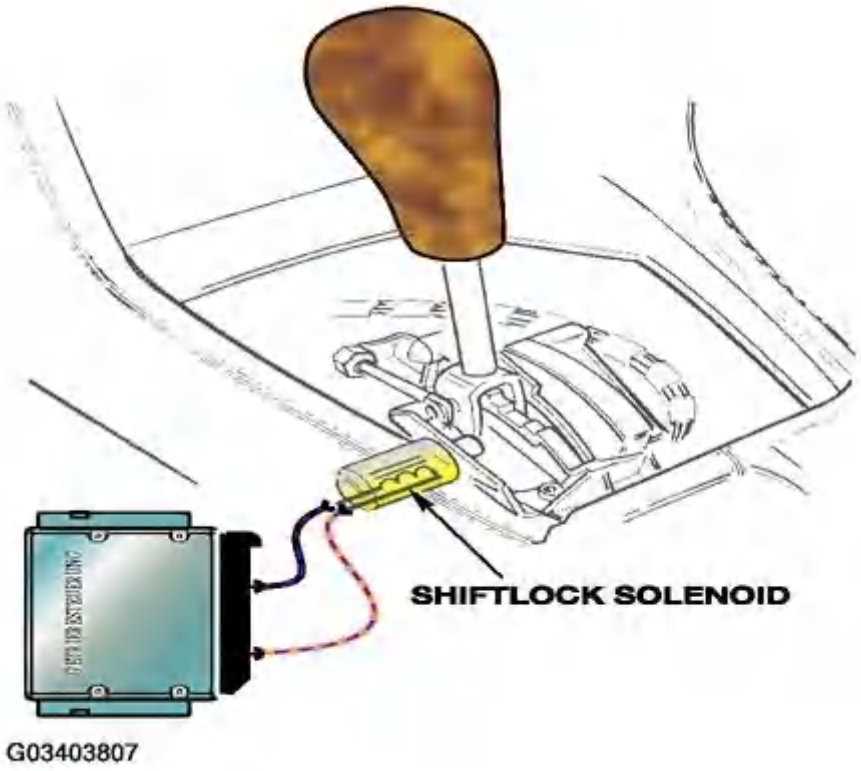

Fig. 29: Identifying Shift Lock Solenoid
Courtesy of BMW OF NORTH AMERICA, INC.

Torque Converter Clutch

Since the efficiency of the torque converter at coupling speed is approximately 1.1 to 1, fuel economy is compromised. To offset this a torque converter clutch was added on EH controlled transmissions. The torque converter clutch locks the turbine to the converter housing. This creates a mechanical coupling with a ratio of 1:1. This can only be achieved at higher engine speeds, the torque converter clutch must be disengaged at low engine speeds to prevent stalling.

There are two methods for controlling the torque converter clutch on BMW transmissions:

- A4S310/270R, 4HP22/24 EH, A5S310Z - These transmissions use an on/off control method to lock and unlock the torque converter. The Torque Converter Clutch is either completely engaged or disengaged. This method of engagement provides an abrupt sensation when the TCC is locking and unlocking. This abrupt sensation can be undesirable to some drivers.
- A5S560Z, A5S440Z, A5S325Z, GA6HP26Z, A5S360/390R - These transmissions use a gradual approach to TCC control. The TCC is gradually applied and released, this method reduces the abrupt feel of the on/off type TCC. The TCC solenoid is controlled by pulse width modulation. This allows fluid to be gradually introduced and released to the TCC.

The TCC is spring loaded to the engaged position. Pressurized fluid releases the TCC, when the pressurized fluid is released, the TCC is engaged. Depending on transmission application, the TCC can be engaged in 3rd, 4th or 5th gear. The TCC must be disengaged at low speeds to prevent stalling.

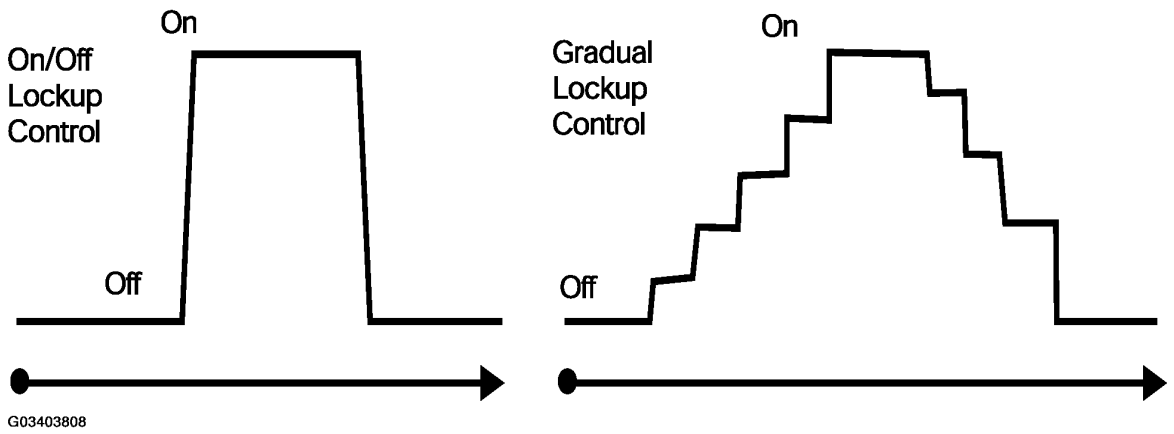

Fig. 30: Identifying Two Methods For Controlling Torque Converter Clutch On BMW Transmissions
Courtesy of BMW OF NORTH AMERICA, INC.

Lock-Up Torque Converter

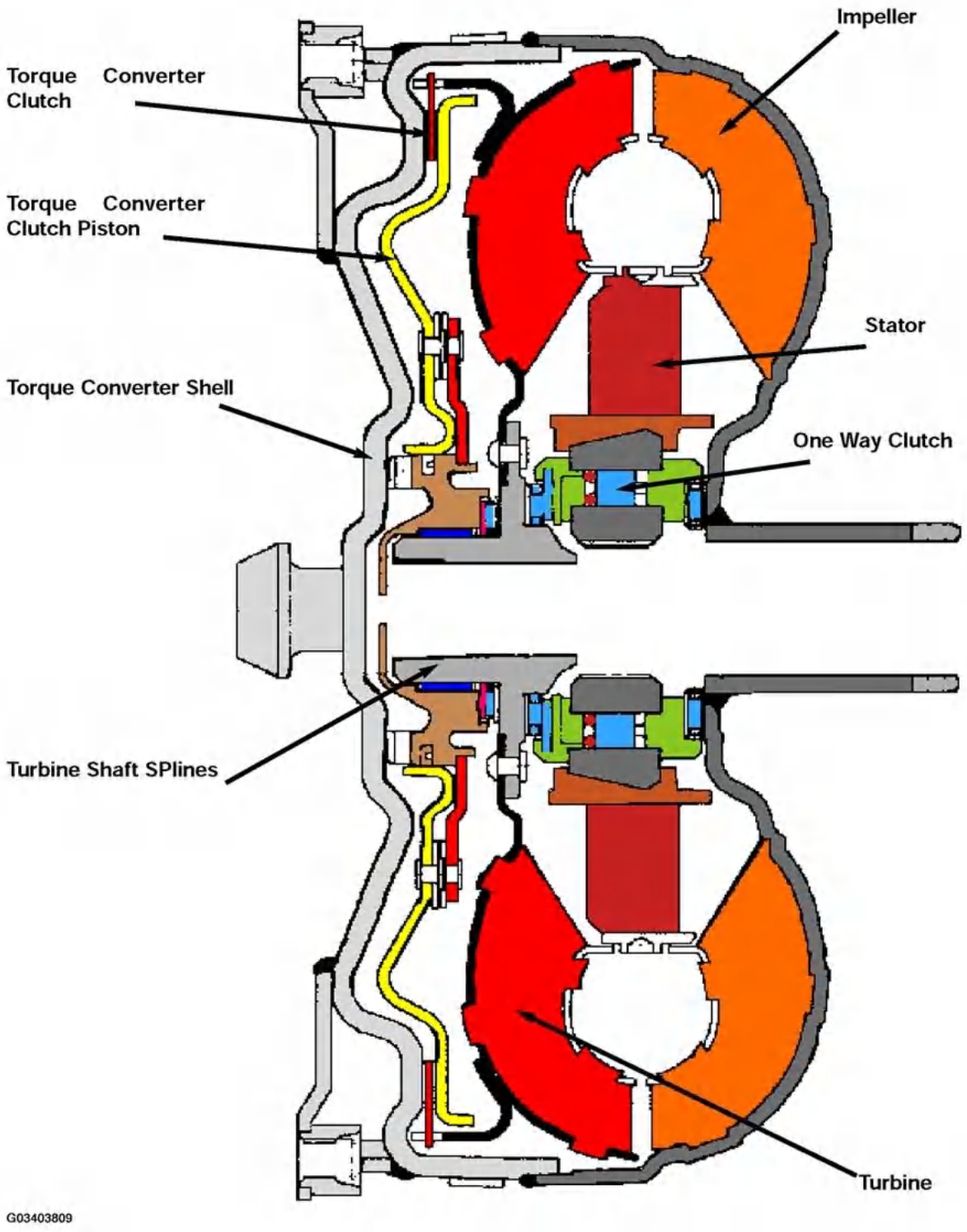

Fig. 31: Identifying Cross Section View Of Lock-Up Torque Converter
Courtesy of BMW OF NORTH AMERICA, INC.

Shift Solenoid Control

Magnetic valves are used to direct the flow of transmission fluid to control shift elements in the transmission. Another Term for "Magnetic Valve" is "Shift Valve". Magnetic valves (MV) are solenoids controlled by the TCM. They can be switched by B+ or B-.

On ZF transmissions, magnetic valves are designated MV1, MV2, MV3 etc. On GM transmissions they are designated Shift Valve A, Shift Valve B, Shift Valve C etc.

Either valve can be checked for proper resistance using a multi-meter, DISplus or GT-1. Also, the "Activate Components" function can be used to check the Magnetic valves. Most all magnetic valves are switched on/off

instead of Pulse Width Modulation (PWM).

All magnetic valves (except THM R-1 to 12/95) are supplied power from an internal relay located in the TCM. The magnetic valves are switched on and off by final stage transistors in the TCM. During fail-safe operation, power to all MV's is switched off by the internal relay.

Magnetic valves are located on the valve body. They can be replaced individually.

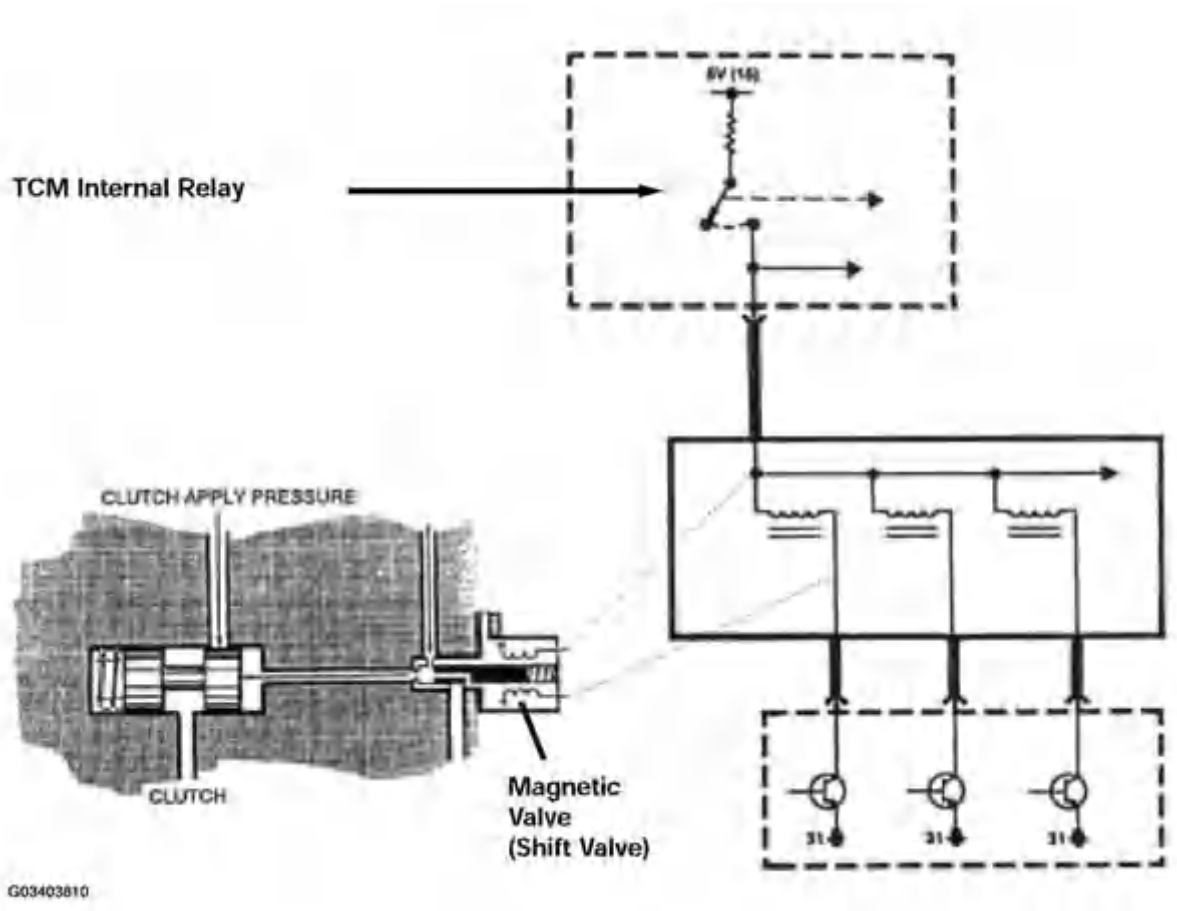

Fig. 32: Identifying Shift Solenoid Control Circuit Diagram
Courtesy of BMW OF NORTH AMERICA, INC.

Pressure Regulation

Pressure regulating solenoids modify line pressure for hydraulic operation. Solenoids for pressure regulation are referred to as EDS valves in ZF transmissions. GM transmissions have a few terms such as Force Motor Solenoid, Variable Bleed Solenoid, and DR solenoid. Regardless of the name used, they are all used to control main line pressure based on throttle position and engine load.

On ZF transmissions, EDS valves are also used to control "Overlap Shifting". This allows for improved shift comfort by controlling pressures during shifting.

Depending upon transmission application, pressure regulating solenoids can be controlled using Pulse Width Modulation on B+ or B-.

The TCM will increase line pressure by regulating current flow to the pressure regulator. Current flow is controlled by pulse width modulation. When the duty cycle is low, the current flow to the solenoid is low. This allows spring pressure to close the valve. Therefore maximum line pressure is achieved. As the duty cycle increases, the current flow also increases. The valve opening increases, which allows pressure to be released through the pressure discharge which in turn decreases line pressure.

Main line pressure is also increased during fail-safe operation and when needed during "Adaptive Hydraulic Pressure Control" functions. Mainline pressure will also default to maximum pressure when power to the TCM

is switched off.

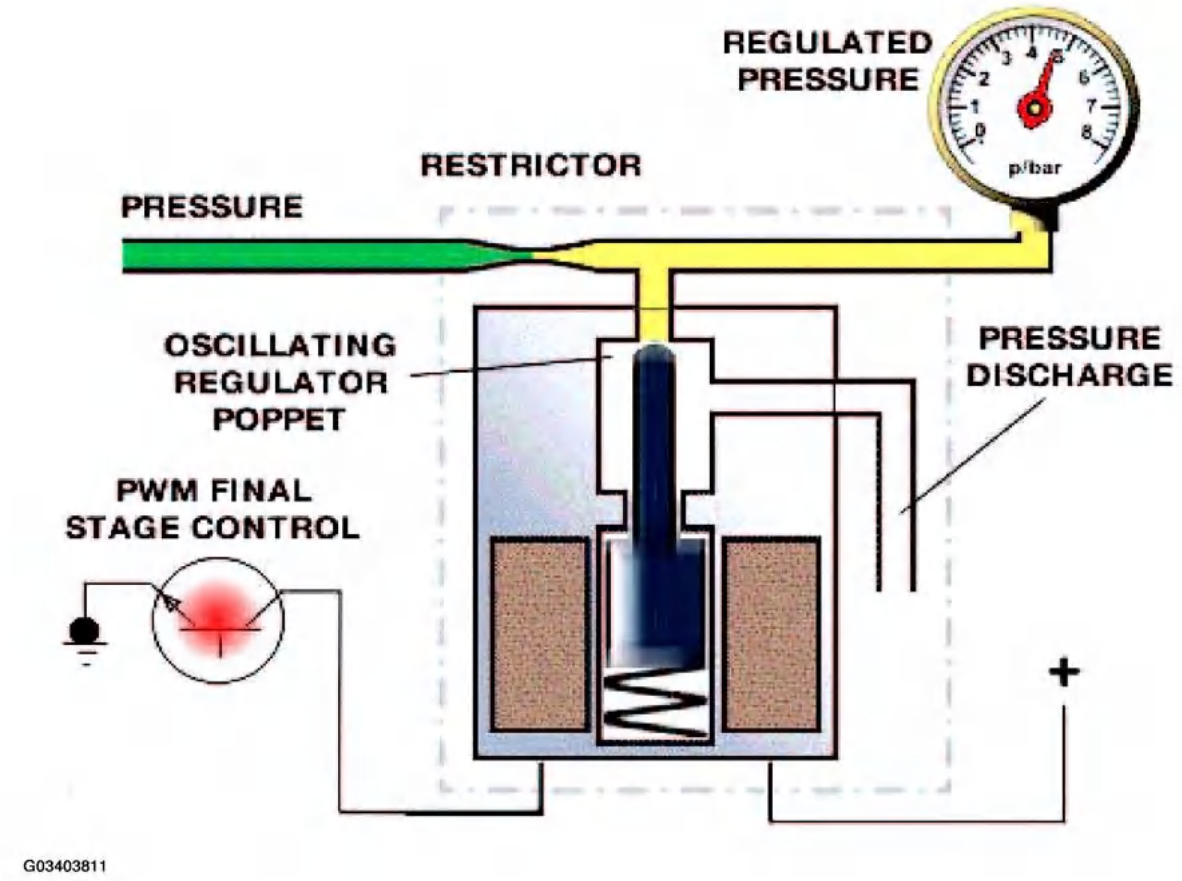

Fig. 33: Identifying Pressure Regulation
Courtesy of BMW OF NORTH AMERICA, INC.

Shift Programs

BMW EH transmissions have selectable shift programs (or modes) to suit driver needs and operating conditions. There are 3 basic shift programs available:

- Economy Program - The economy program is the default program which is adopted every time the vehicle is started. When in economy mode, the operating priority is for maximum economy and shift comfort. Shifts will take place at low engine RPM and road speed. The economy mode is indicated by an "A" on the program switch. The cluster will display an "E" to indicate economy mode.
- Manual Mode (Winter Mode) - Manual mode is used to start out the vehicle in a higher gear on slippery surfaces when more traction is needed. A higher gear will reduce torque to the rear wheels. Manual mode can also be used to select a lower gear when needed such as when climbing a hill. Depending upon vehicle application an "M" will appear in the cluster when in Manual Mode or an asterisk (*) symbol will appear in the instrument cluster to indicate Winter Mode.
- Sport Mode - Sport Mode provides raised shift points and a more aggressive shift program for the "Enthusiastic" BMW driver. The cluster will display an "S" when in sport mode.

Regardless of vehicle application, the program switch provides a momentary ground to the TCM to switch between modes. There have been numerous designs of the program switch since it's introduction. The program switch configurations are as follows:

- 2 Position Slide Switch - This switch has the "A" and the "M" selection. Sport mode is achieved by moving the selector lever from "D" to 4, 3 or 2 when in the Economy Mode. The 2 Position slide switch is used on most models. These vehicles usually have a range and program display located in the instrument cluster.

- 2 Position Rocker Switch - This switch operates the same as the slide switch, but it is used exclusively on the E36. The E36 does not have a program indicator in the cluster. The rocker switch will illuminate, indicating the current program.
- 3 Position Slide Switch - This switch has the added position for sport mode. The shifter does not have to be moved out of drive (D) to be in sport mode. This switch is used on the E36 M3 and the 4HP22/24 EH (Version Late E-7).
- 3 Position Rotary Switch - This switch is used only on the Early 4HP22 EH trans missions (Version Early E-7).
- No Program Switch - On some vehicles with AGS features, there is no program switch. Shift modes are obtained by moving the shift lever out of "D" range or automatically by adaptive shift functions. (Example E39)

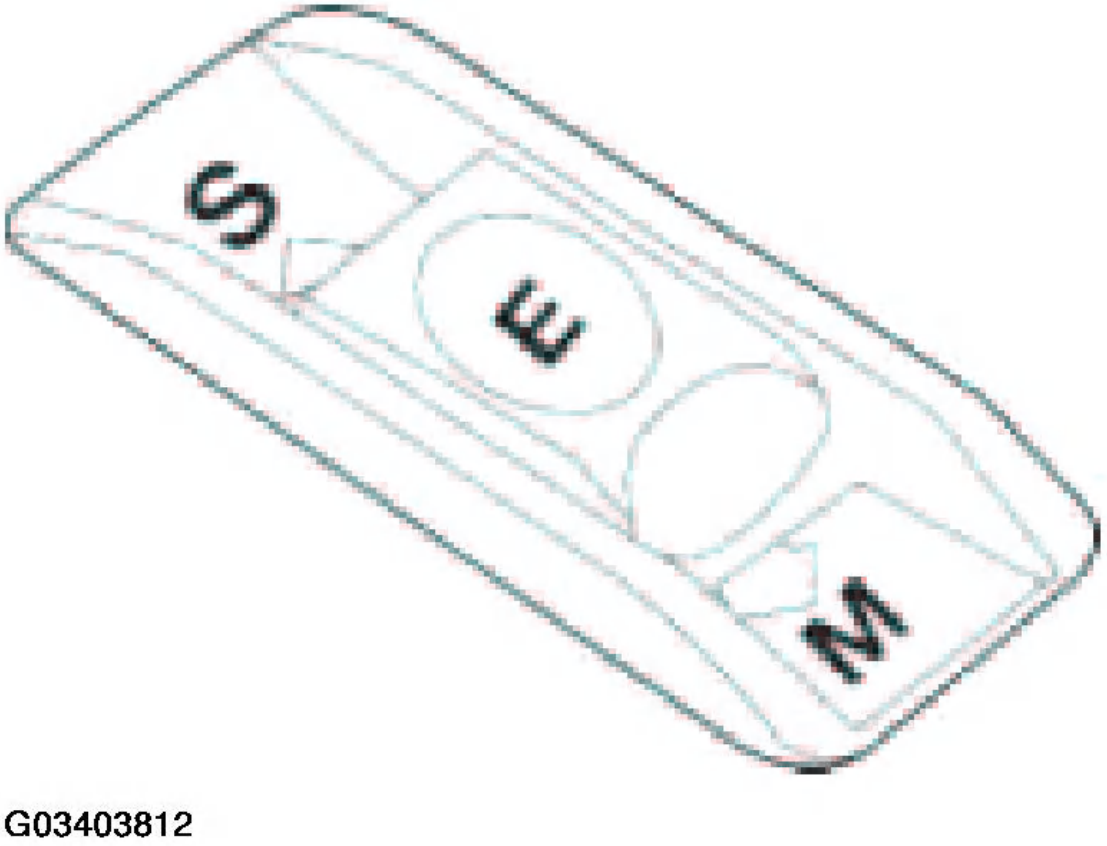

Fig. 34: Identifying 3 Position Program Switch
Courtesy of BMW OF NORTH AMERICA, INC.

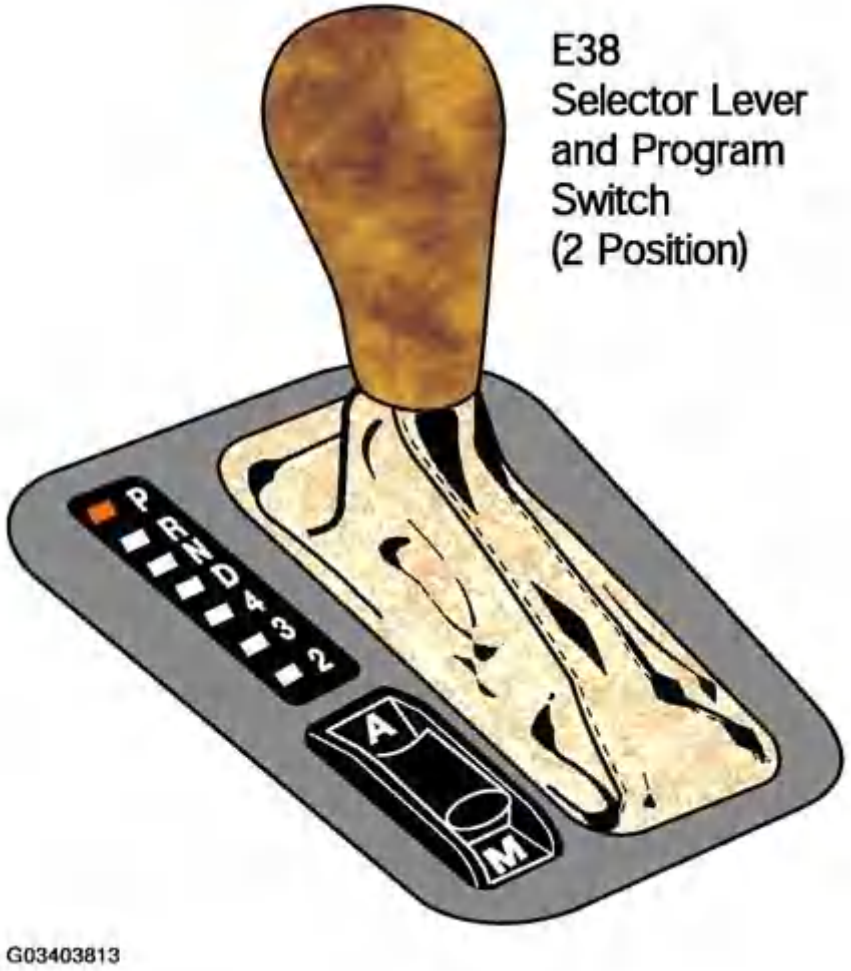

Fig. 35: Identifying E38 Selector Lever And Program Switch (2 Position)
Courtesy of BMW OF NORTH AMERICA, INC.

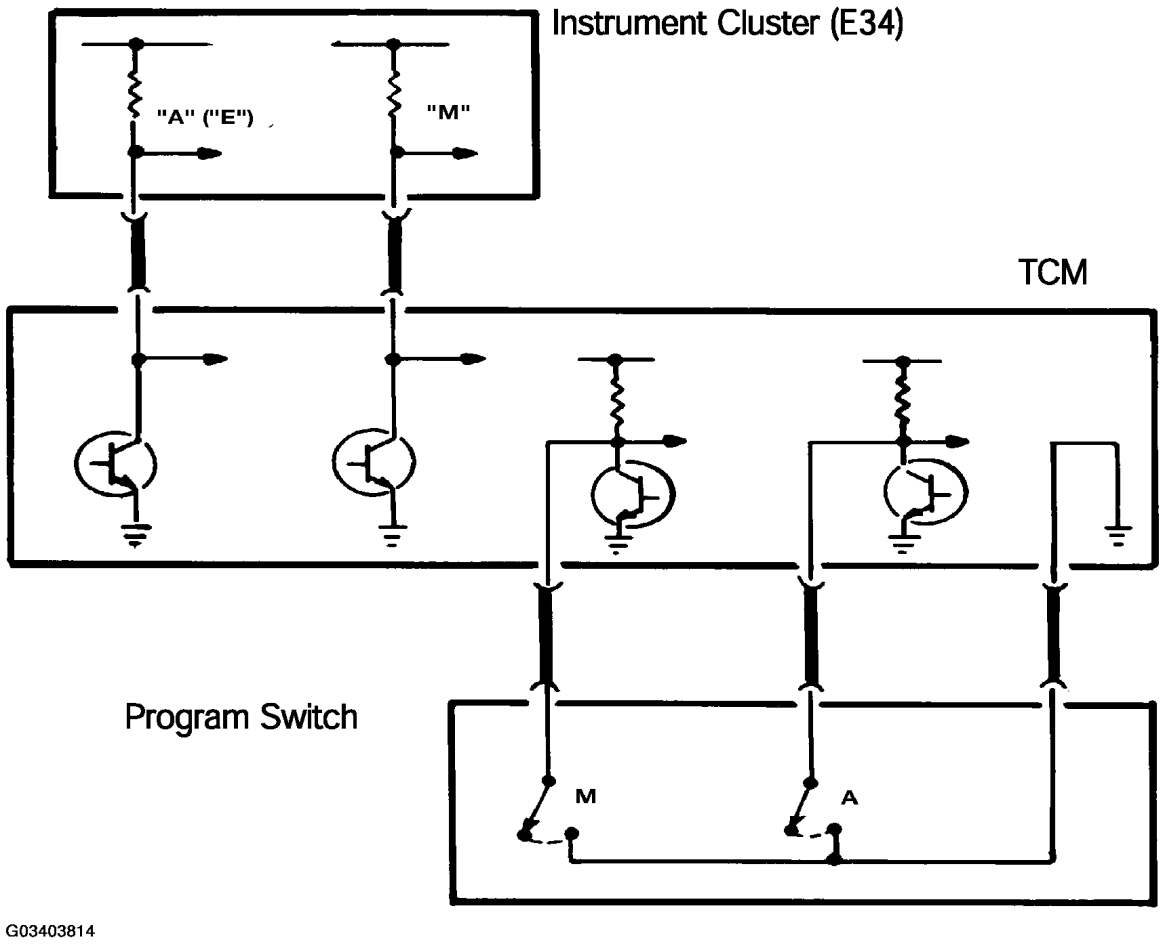

Fig. 36: Shift Programs Circuit
Courtesy of BMW OF NORTH AMERICA, INC.

Steptronic Shift Modes

The Steptronic shifting system was introduced to the BMW model line on the 95 E31 850Ci (from 10/94). Steptronic was subsequently added to other BMW models and is available on all BMW models with automatic transmissions. Other than a few additional components in the shifter mechanism, Steptronic equipped vehicles use the same transmission and TCM as non-Steptronic equipped vehicles.

Since the introduction of Steptronic, there have been several variations in Steptronic function. Regardless of version, the Steptronic system provides the driver with two modes of operation:

- To operate the transmission in fully automatic mode as with a non-Steptronic transmission.
- To operate the transmission in the manual shift mode by tilting the shift lever forward or backward when in the manual gate.

The Steptronic shift lever console contains and automatic and a manual shift gate. The automatic gate contains the gear lever positions P/R/N/D. When the lever is placed in "D" all of the shifting takes place based on the shift map programming in the TCM. To enter the manual gate the shift lever is moved 15 degrees to the left. Depending upon application, there are three possible configurations of the manual gate:

- On the E31 850Ci, the gate is marked as "M" only. There is a plus and minus sign for manual shifting. Upshifts are achieved by momentarily moving the shifter forward. Downshifts are achieved by moving the shifter rearward. When placing the shifter into the "M" gate, the transmission will adopt the current gear that is engaged. The transmission will stay in that gear until an upshift or down shift request is made.
- On all other vehicles until the 2002 model year, the gate is marked M/S. There is also a plus and minus sign for manual shifting. When placing the shifter into the M/S gate, the transmission will adopt Sport

mode. All shifts will still be automatic. Full manual mode is achieved when an upshift or downshift request is made. Upshifts are achieved by moving the shifter forward momentarily and downshifts are achieved by moving the shifter rearward.

- On all models with Steptronic from 2002, the only change is to the manual shifting modes. In order to be consistent with SMG operation, the positions were reversed. Upshifts are now achieved by moving the shifter rearward and downshifts are now forward. Otherwise, Steptronic operation is identical to the previous models.

Automatic Functions In Manual Mode

When in manual mode there are certain functions which occur automatically to prevent drivetrain damage and improve driveability:

- Engine Overspeed Prevention: To prevent engine over-rev, the TCM will upshift automatically just prior to max engine cutoff.
- Kickdown: If plausible, the TCM will automatically shift down to the next lower when a kickdown request is received.
- Decelerating: If in 5th gear and coasting to a stop, the TCM will automatically down shift to 4th gear at approximately 31 mph and then 3rd gear at approximately 19 mph. The automatic downshift allows for an acceptable gear when re-accelerating. (6 cylinder models will shift to 2nd gear when stopping vehicle)
- Implausible Gear Requests: Certain shift requests are ignored by the TCM. For example, requesting a downshift at a high rate of speed would be ignored. Any shift request that would cause the engine to exceed the maximum RPM limit would not be allowed. Also starting out in a high gear is also not allowed. Only 1st, 2nd or third gear is allowed when accelerating from a stop.

E31 850Ci Shifter Console

1995 to 1997 Model Year.

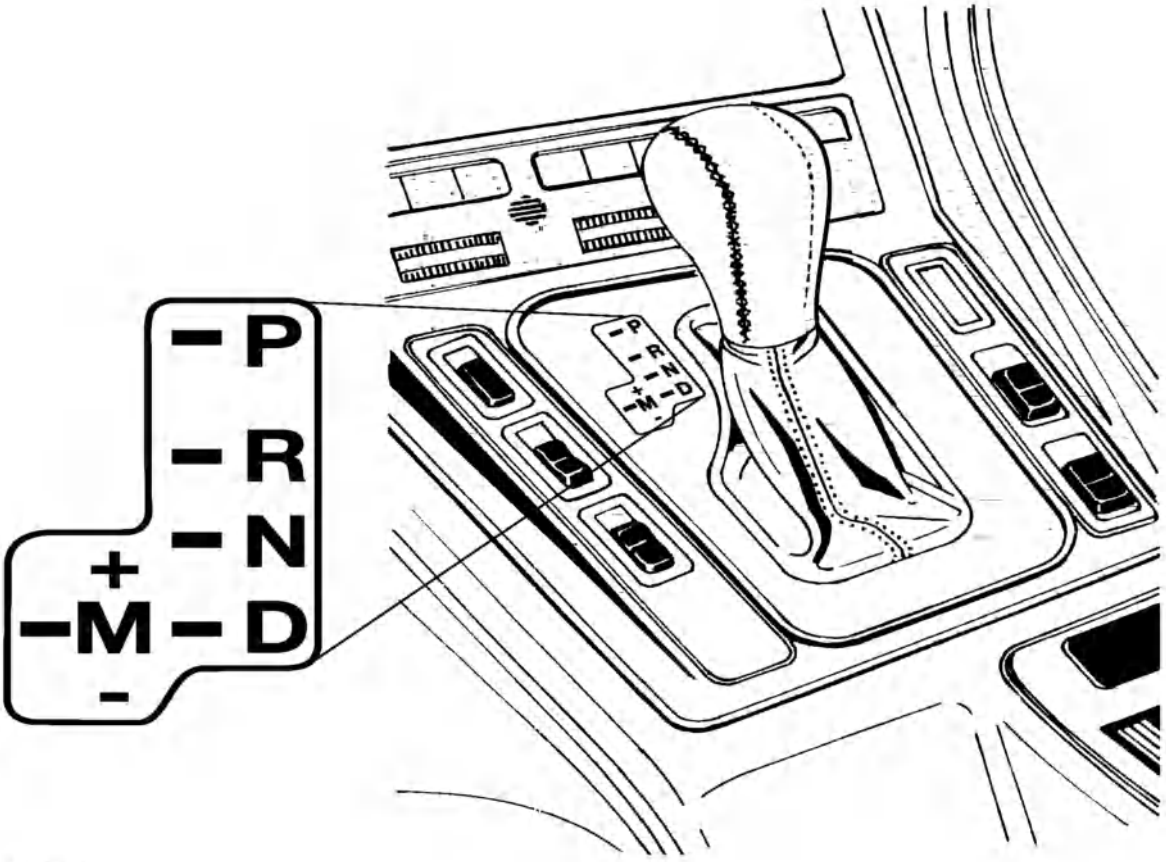

Fig. 37: Identifying E31 850Ci Shifter Console
Courtesy of BMW OF NORTH AMERICA, INC.

Steptronic Shifter Circuit

In order to achieve manual shifts with Steptronic, the selector lever is moved 15 degrees to the left. A pin on the selector lever engages the "up/down" microswitches which are a ground input to the TCM. The selector lever also triggers the "M" gate microswitch which is also a ground input to the TCM.

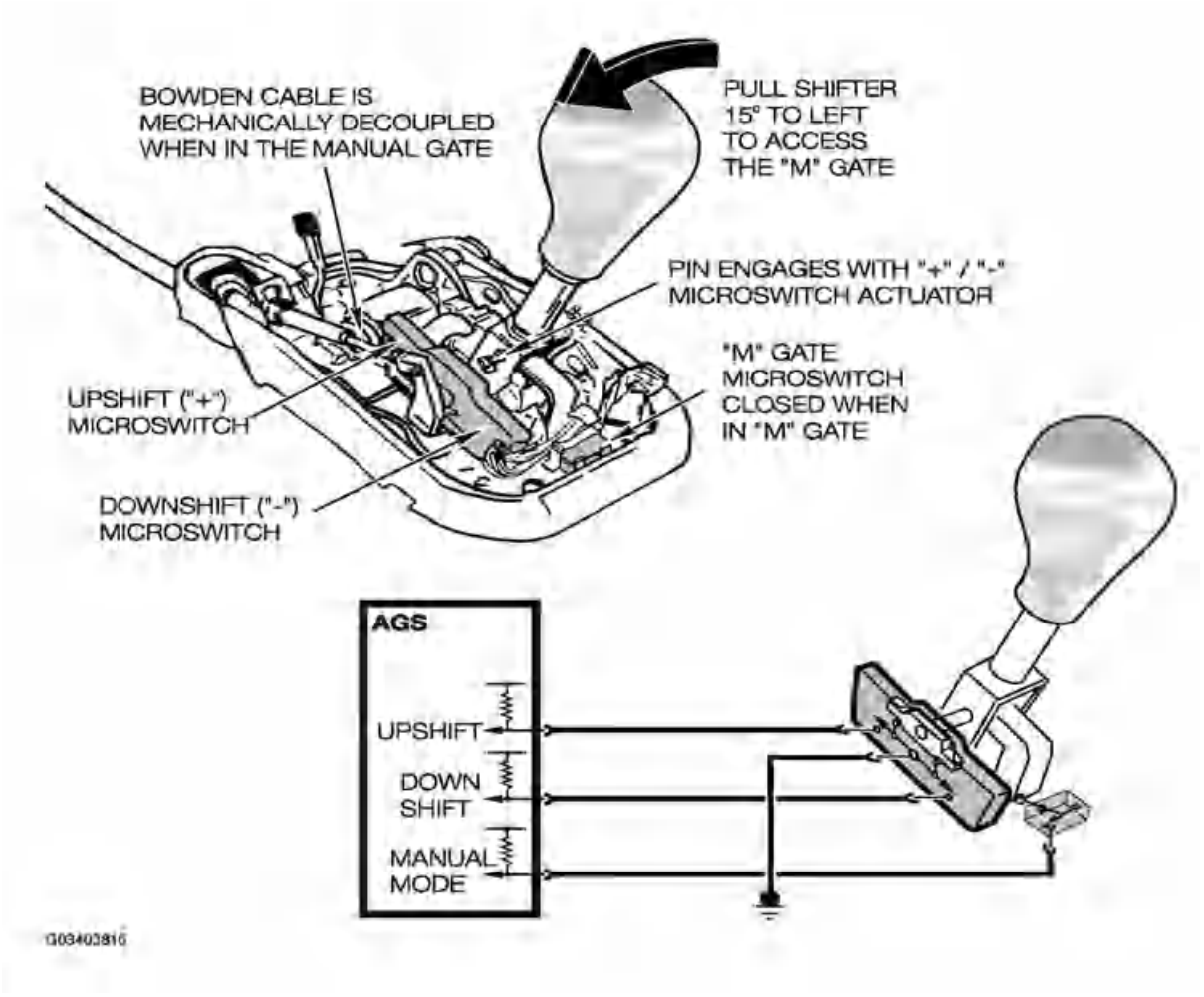

Fig. 38: Identifying Steptronic Shifter Circuit
Courtesy of BMW OF NORTH AMERICA, INC.

The example on the right shows a typical shift console for an E31. Note the shift pattern, upshifts are forward and downshifts are rearward. This shift pattern was used on vehicles up to the end of 2001 production. On vehicles from 2002 production, the shift pattern is reversed.

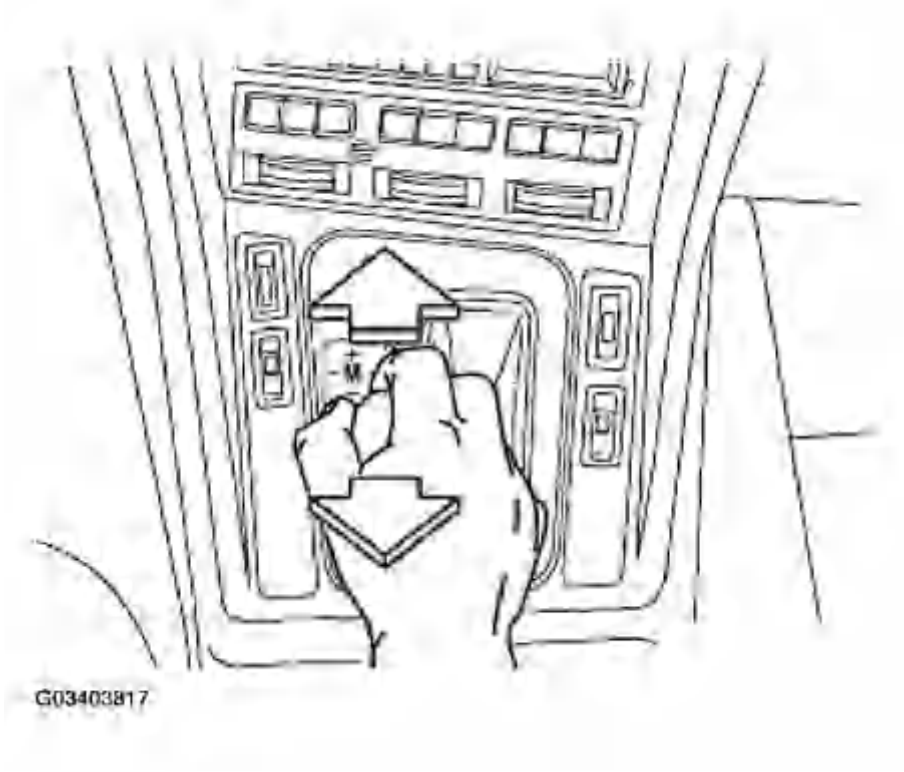

Fig. 39: Identifying Shift Pattern
Courtesy of BMW OF NORTH AMERICA, INC.

Steptronic System Comparison

STEPTRONIC SYSTEM COMPARISON

Detail	E31 850Ci 1995 to 1997	All model except E31 850Ci up to 2001 Model year with Steptronic.	All Models from 2002 model year with Steptronic
Shift Console Layout	"M" Gate	M/S Gate	M/S Gate
Selection of Manual Mode	Shift to "M" gate	Shift to "M/S" gate and move lever momentarily to "+" or to "-".	Shift to "M/S" gate and move lever momentarily to "+" or to "-".
Gear Range in Manual Mode.	2nd to 5th gear (1st gear only accepted for 2 minutes after cold start. If the throttle is pressed 100% a 2-1 shift will occur	1st to 5th gears	1st to 5th gears
Un-allowable gear requests.	4th and 5th gear after vehicle standstill. Downshifts that can cause engine over-rev. 1st gear after engine warm up.	4th and 5th gear after vehicle standstill. Downshifts that can cause engine over-rev.	4th and 5th gear after vehicle standstill. Downshifts that can cause engine over-rev.
Upshifts/Downshifts	Upshifts - Forward Downshifts - Rear	Upshifts - Forward Downshifts - Rear	Upshifts - Rear Downshifts - Forward

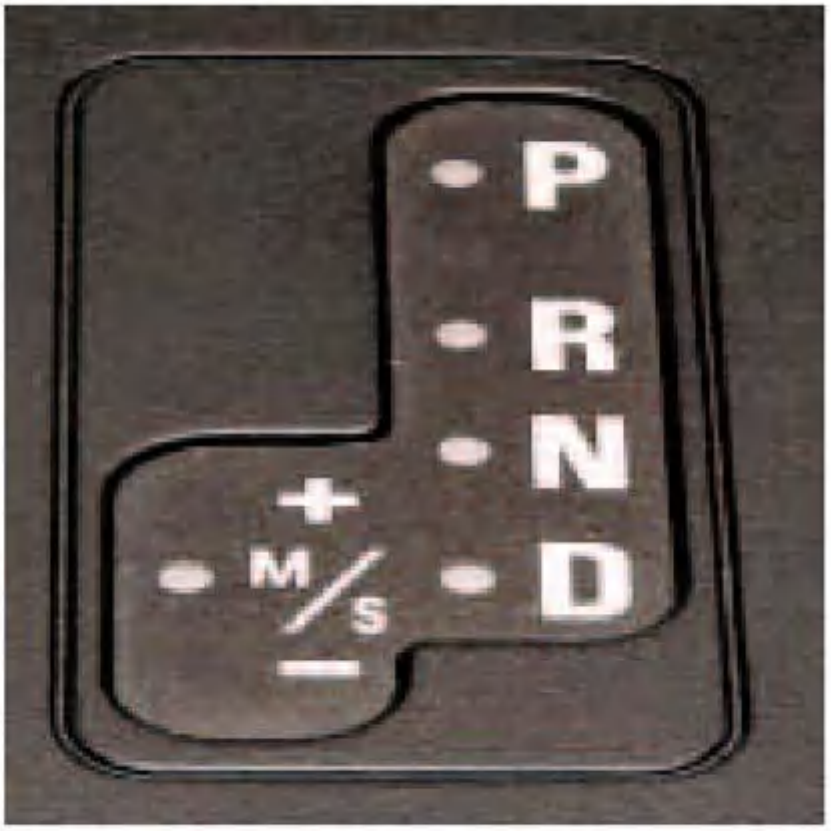

G03403818

Fig. 40: Identifying Shift Pattern Up To 2001
Courtesy of BMW OF NORTH AMERICA, INC.

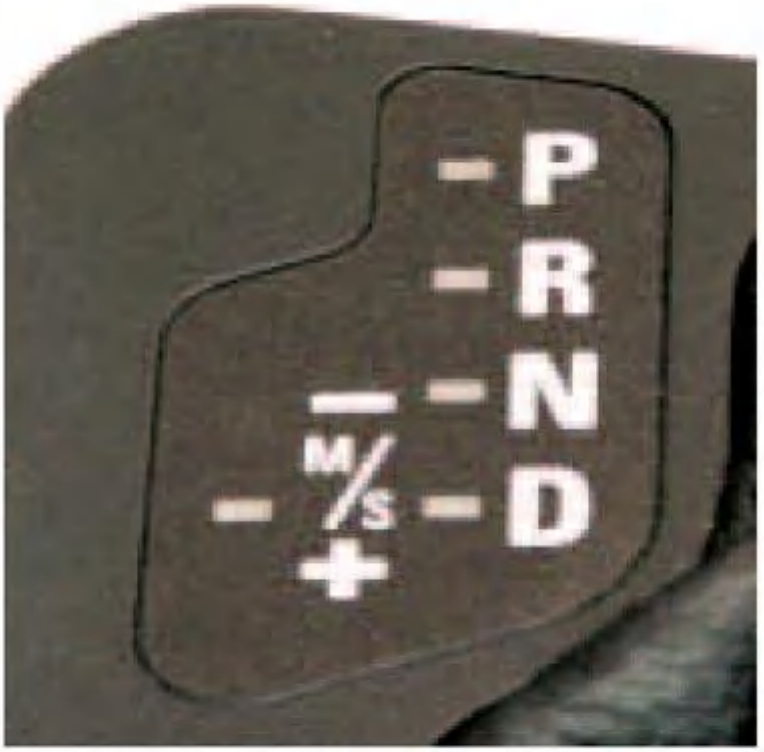

Fig. 41: Identifying Shift Pattern From 2002
Courtesy of BMW OF NORTH AMERICA, INC.

ADAPTIVE FEATURES (AGS)

AGS features were introduced in 1994 with the A5S560Z transmission. AGS control consists of adaptive features that will modify transmission operation according to various factors. AGS operation can be influenced by two major functional groups:

- Driver influenced features (influenced by throttle and kickdown input)
- Environmental influences (such as road conditions - icy, traffic etc.)

--EGS-- CONDITIONS THAT INFLUENCE SHIFT PROGRAM

--AGS-- ADDITIONAL CONDITIONS THAT INFLUENCE SHIFT PROGRAM

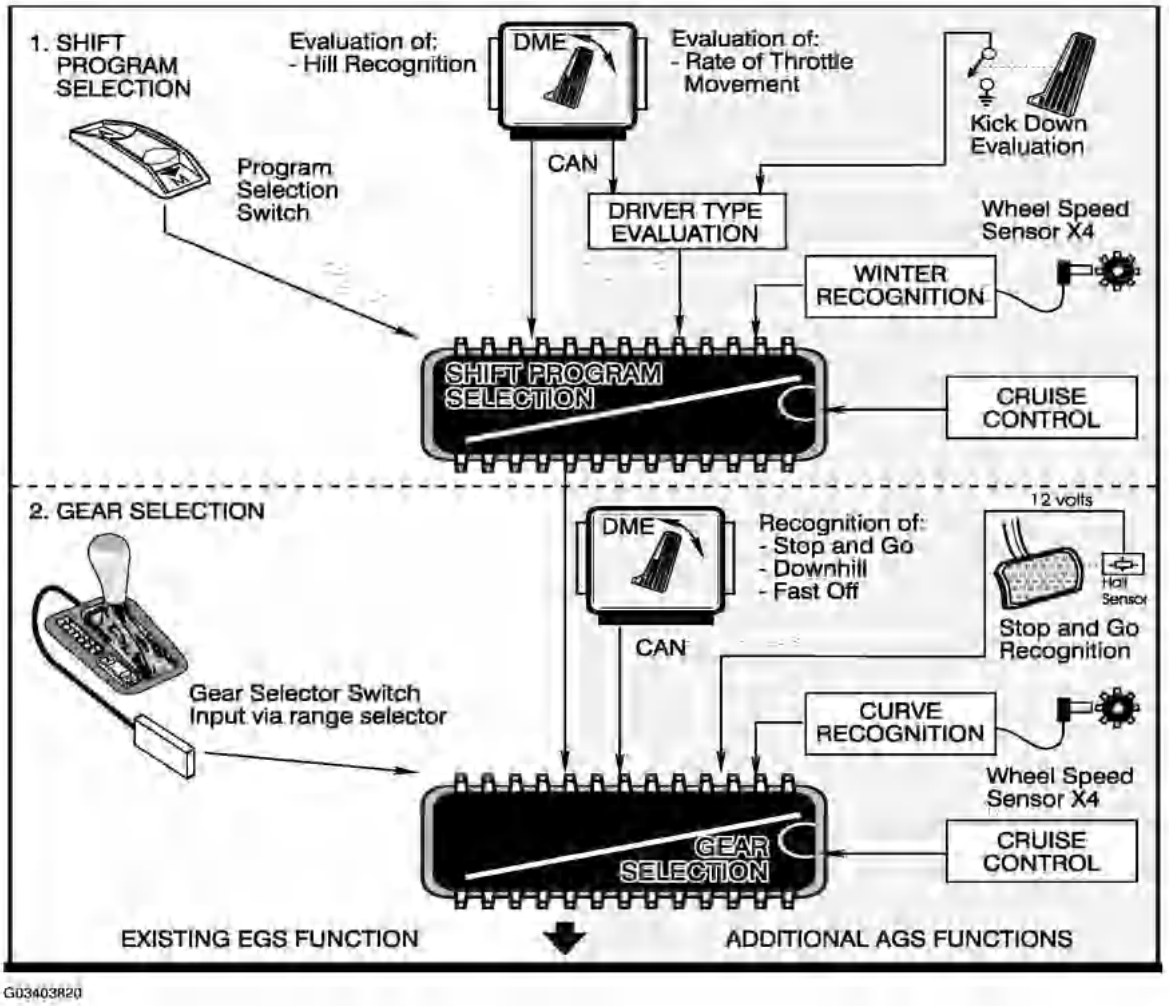

Fig. 42: Identifying Adaptive Features (AGS)
Courtesy of BMW OF NORTH AMERICA, INC.

The driving program selection is not adapted on a long term basis - nor is it stored in the control module memory when the ignition is switched off. It continually changes as the driver of the vehicle changes driving habits.

Driver Influenced Features Of AGS

The adaptive drive program is based primarily on throttle input. The throttle information comes from the ECM (DME) via the CAN bus. The TCM continuously monitors the throttle input for:

- The current throttle position
- The rate of change in pedal movement
- The number of acceleration requests
- The number of kickdown requests

Drive Away Evaluation

The AGS system selects the appropriate shift program based on the amount of acceleration that occurs during takeoff. When driving away under full throttle the transmission will shift from XE to E.

Kick Fast Feature

Based on these inputs, the AGS will select one three different driving programs as follows:

- Extreme Economy - Shift points are a low speeds for maximum comfort and economy

- Economy - The shift points are raised for more performance with economy as priority
- Sport - The shift points are higher to take advantage of full engine performance.

  Under full throttle acceleration at high speed, single gear downshifts are possible. A two gear downshift is possible if the accelerator pedal is moved quickly to kick-down. The Extreme Sport program was eliminated as part of the kick-fast feature.

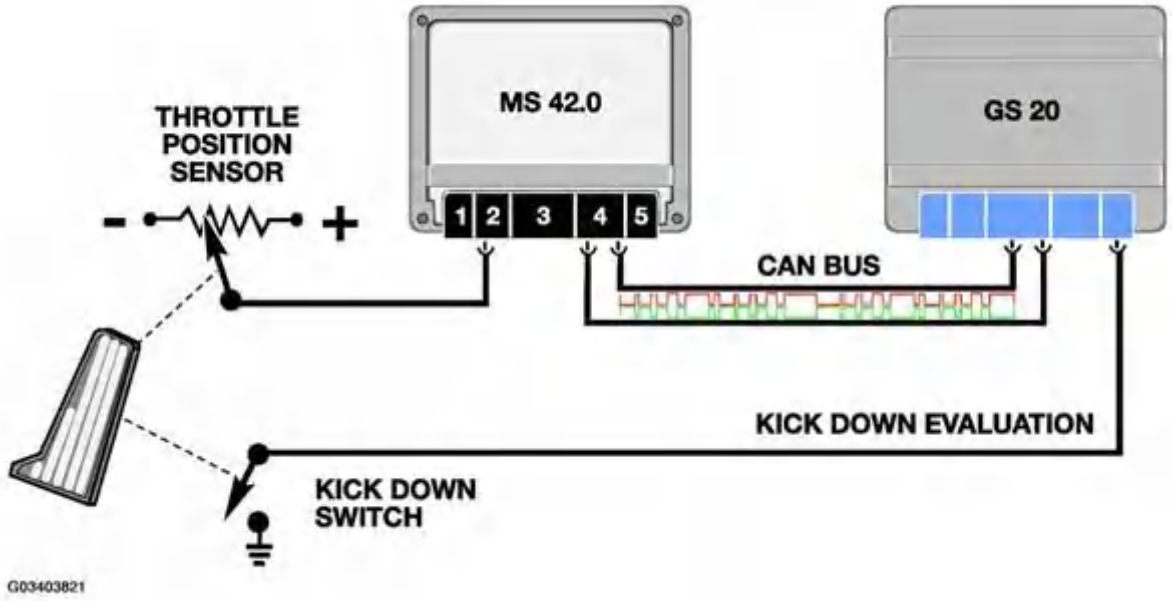

Fig. 43: Identifying Kick Fast Feature
Courtesy of BMW OF NORTH AMERICA, INC.

Environmentally Influenced AGS Features

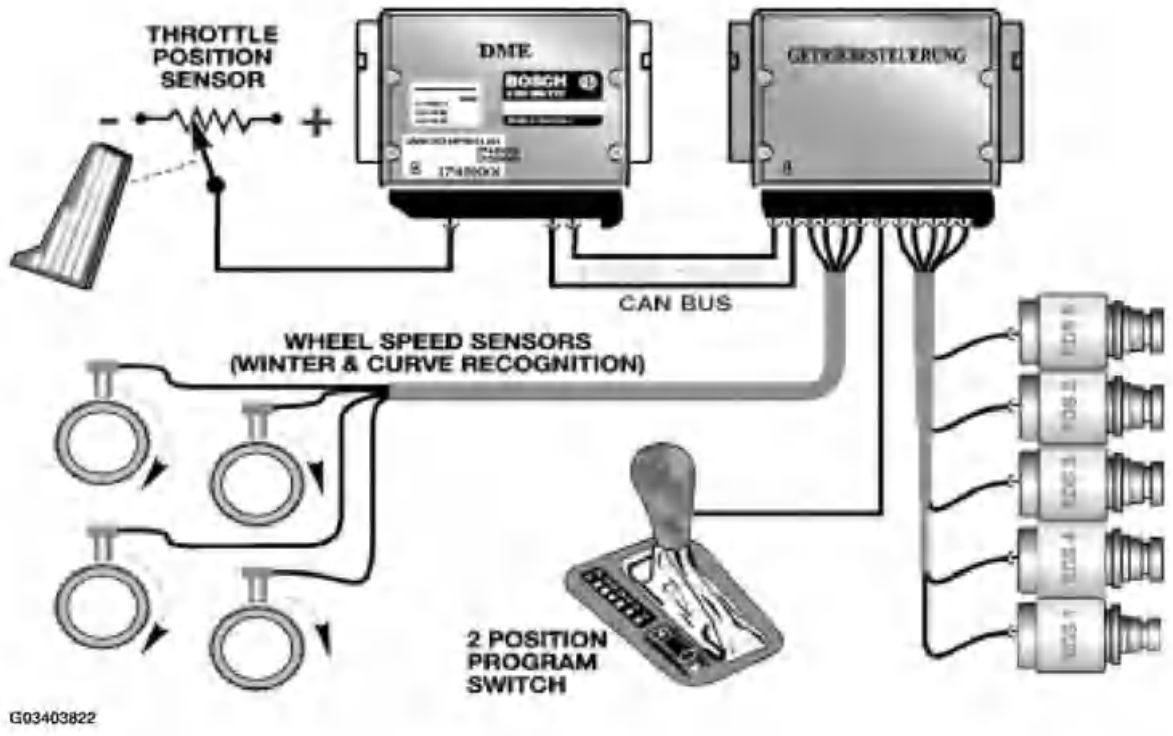

Fig. 44: Identifying Environmentally Influenced AGS Features
Courtesy of BMW OF NORTH AMERICA, INC.

STOP And GO

The feature is activated by defined sequence of shifts which are as follows:

- Upshift from first to second - followed by a downshift from second to first - followed by another upshift from first to second. This is then followed by the vehicle coming to a complete stop.

After this sequence occurs, the transmission will stay in second gear. The AGS control has recognized stop and go driving and this function will prevent excessive shifting during heavy conditions. The second gear start will be cancelled when:

- The vehicle speed exceeds 40 MPH
- The throttle pedal is pressed more than 90%
- The range selector is moved to Park, Neutral, Reverse or Sport (4, 3 or 2)
- The vehicle is in Sport Mode

Winter Drive Program

This feature is activated when the TCM detects slippage at the rear wheels by comparing front and rear wheel speed signals. When slippage is detected by the TCM, the transmission will start in second gear and the shift points will be lowered. This will reduce torque to the rear wheels allowing improved driveability and traction on slippery roads.

Hill Recognition Program

There are two hill recognition programs, one for Uphill and one for Downhill. The TCM will activate this feature when it receives a high engine load signal at slower road speeds. The TCM will perceive this information as being consistent with climbing a hill. The shift points will be raised to prevent constant up and down shifting. This is referred to as the pendulum shift effect. When driving downhill, road speed will increase with minimal throttle input. The TCM will detect a downhill situation and hold the current gear to prevent an upshift when going downhill.

Curve Recognition

This feature will inhibit upshifts when the vehicle is in a curve. This is to improve stability when the vehicle is cornering at high speeds. The TCM will initiate this feature when it detects a difference between left and right (front) wheel speed signals. The difference in these signals will indicate that the vehicle is in a curve. Be aware that improper tire sizes, brands and inflation pressures can influence this feature. Always address these issues first when diagnosing delayed upshift complaints.

Cruise Control Drive program

A special cruise control shift map is selected by the TCM when cruise control is active. The TCM will prevent unwanted locking and unlocking of the torque converter clutch. Also, upshifting and downshifting will be minimized. Depending upon application, the cruise control interfaces with TCM via a single wire data link or as on vehicles with electronic throttle control, the TCM will interface with the ECM (DME).

Manually Selected "Extreme Sport" Program

This feature is activated by moving the shift lever to position 4, 3 or 2. This activates the "Extreme Sport Program" where the shift points are raised for maximum RPM and performance. On Steptronic equipped vehicles, the sport program is obtained by moving the shifter to the manual gate to initiate the "Sport Program".

Modifications To AGS Features

Since the introduction of AGS features in 1994, there have been some software changes to address customer concerns. Some AGS features have been perceived by the customer as malfunctions. To correct this, some of the AGS features were modified with updated software. The AGS features previously discussed in this text reflect the updated modifications.

CAN BUS COMMUNICATION

The CAN bus is a serial communications bus in which all connected control units can send as well as receive information. Data over the CAN bus operates at a rate of up to 1Mb/s (megabits per second).

The CAN protocol was developed by Intel and Bosch in 1988 for use in the automotive industry to provide a standardized, reliable and cost-effective communications bus to combat the increasing size of wiring harnesses.

The CAN bus was originally introduced on BMW automobiles in the 1993 E32 740i/IL as a data link between the TCM (EGS) and the ECM (DME).

Fig. 45: Identifying CAN Bus
Courtesy of BMW OF NORTH AMERICA, INC.

On earlier EGS systems, various signals were transmitted on individual signal wires. This reduced reliability and increased the amount of wiring needed. The CAN bus allows faster signal transmission and increased versatility. For example, the signals listed in the chart below were previously transmitted on individual wires, now these signals are all on the CAN bus. This chart represents only some of the signals on the CAN bus, there are many more signals transmitted between the TCM and ECM.

EGS SYSTEMS SIGNALS

Sender	Information Item	Receiver	Signal Use
ECM	Engine Temperature	TCM	Shift Point Calculation
ECM	Engine Load (tL)	TCM	Shift Point Calculation
ECM	Engine RPM (TD)	TCM	TCC Slippage
ECM	Throttle Position (DKV)	TCM	Shift Point Calculation
ECM	A/C Compressor ON	TCM	Fine tune shift points to compensate for increased engine load.
TCM	Transmission Range	ECM	Engine Idle Speed Control
TCM	Torque Reduction Signal (ME)	ECM	Timing Retard during shifts.
TCM	TCC Lockup Status	ECM	Engine Timing Map adjustment.

CAN Bus Topology

The CAN bus consists of two twisted copper wires. Each wire contains an opposing signal with the exact same information (CAN-High, CAN-Low). The opposing signals transmitted through the twisted wire serve to suppress any electrical interference. Early CAN bus wiring included a grounded shield around the two wires, later vehicles discarded the shield in favor of the unshielded twisted pair wiring.

Due to the linear structure of the network, the CAN bus is available for other modules in the event of a

disconnected or failed control unit. This is referred to as a "Tree" structure with each control unit occupying a branch.

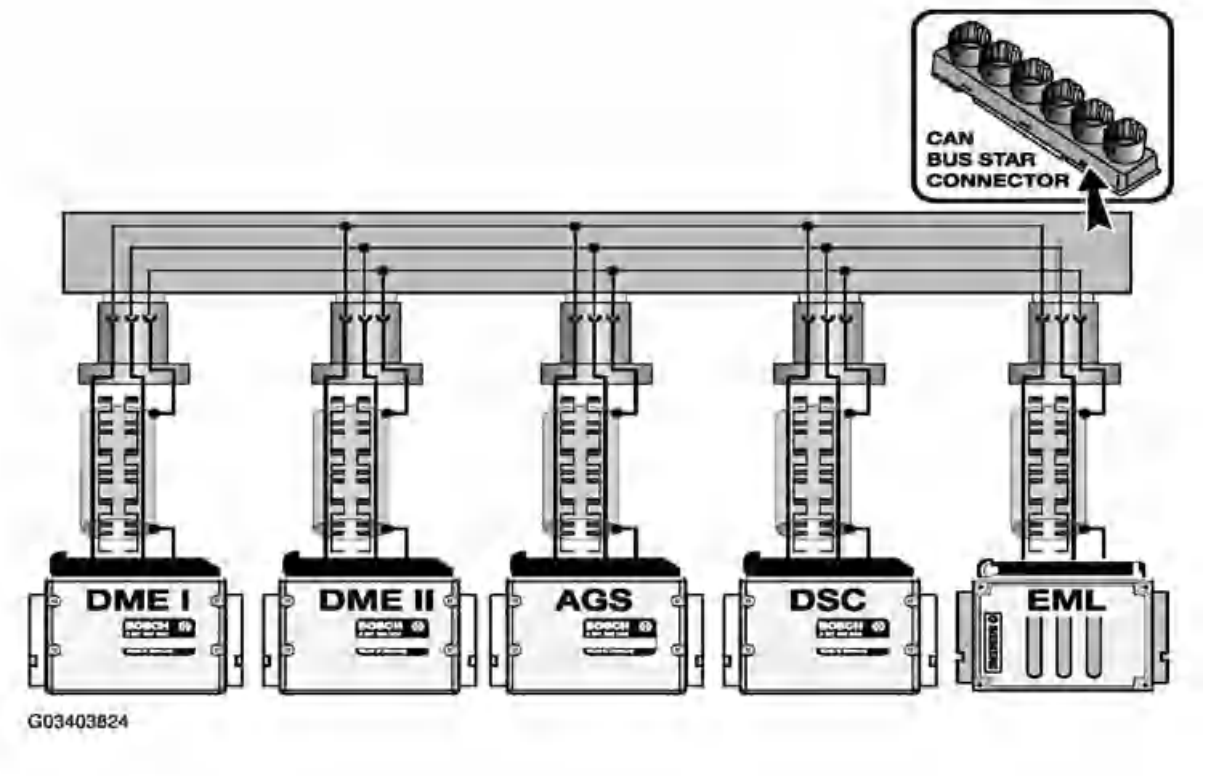

Fig. 46: Identifying CAN Bus Topology
Courtesy of BMW OF NORTH AMERICA, INC.

As previously mentioned, the CAN bus initially was used as a high speed communication link between the DME and AGS control units.

With the introduction of the E38 750iL (95 M.Y.), the CAN bus was expanded to include the EML and DSC control modules. The 750iL made exclusive use of the "star coupler" to link the individual CAN bus ends to a common connector.

The 1998 model year introduced new users of the CAN bus. The instrument cluster and the steering angle sensor were linked to expand the signal sharing capabilities of the vehicle.

The 1999 750iL was the last vehicle to use the shielded cable, after which the entire CAN bus went to twisted pair wiring.

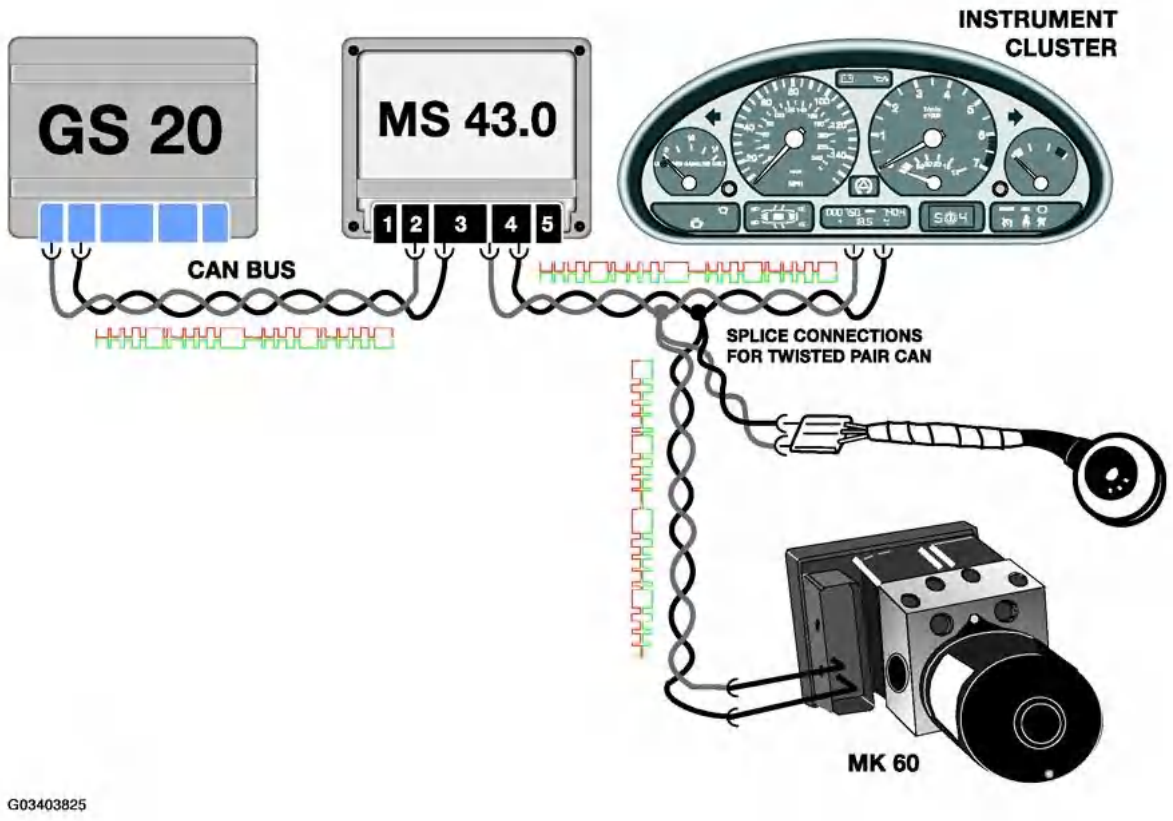

Fig. 47: Identifying CAN Bus Signal Sharing Capabilities
Courtesy of BMW OF NORTH AMERICA, INC.

On most current models the CAN bus provides data exchange between the following control modules:

- ECM (DME)
- EML (750iL E38)
- TCM (EGS)
- IKE/Kombi
- ASC/DSC
- LEW

On models that use twisted pair, the wire color of the CAN bus is uniform throughout the vehicle with: CAN-Low GE/BR and CAN-High GE/SW or GE/RT. Shielded wiring is easily identified by the black sheath surrounding the CAN bus.

Troubleshooting The CAN Bus

The failure of communication on the CAN bus can be caused by several sources:

- Failure of the CAN bus cables.
- Failure of one of the control units attached to the CAN.
- Failure of the voltage supply or ground to individual modules.
- Interference in the CAN bus cables.

Failure of the CAN bus cables

The following faults can occur to the CAN bus wiring:

- CAN-H/L interrupted
- CAN-H/L shorted to battery voltage

- CAN-H/L shorted to ground
- CAN-H shorted to CAN-L
- Defective plug connections (damaged, corroded, or improperly crimped)

In each instance, the connected control units will store a fault due to the lack of information received over the CAN bus.

The voltage of the CAN bus is divided between the two data lines: CAN-High and CAN-Low for an average of 2.5V per line. The voltage measurement is taken from each data line to ground. Each module on the CAN contributes to this voltage.

The fact that 2.5V are present does not mean that the CAN bus is fault free, it just means that the voltage level is sufficient to support communication.

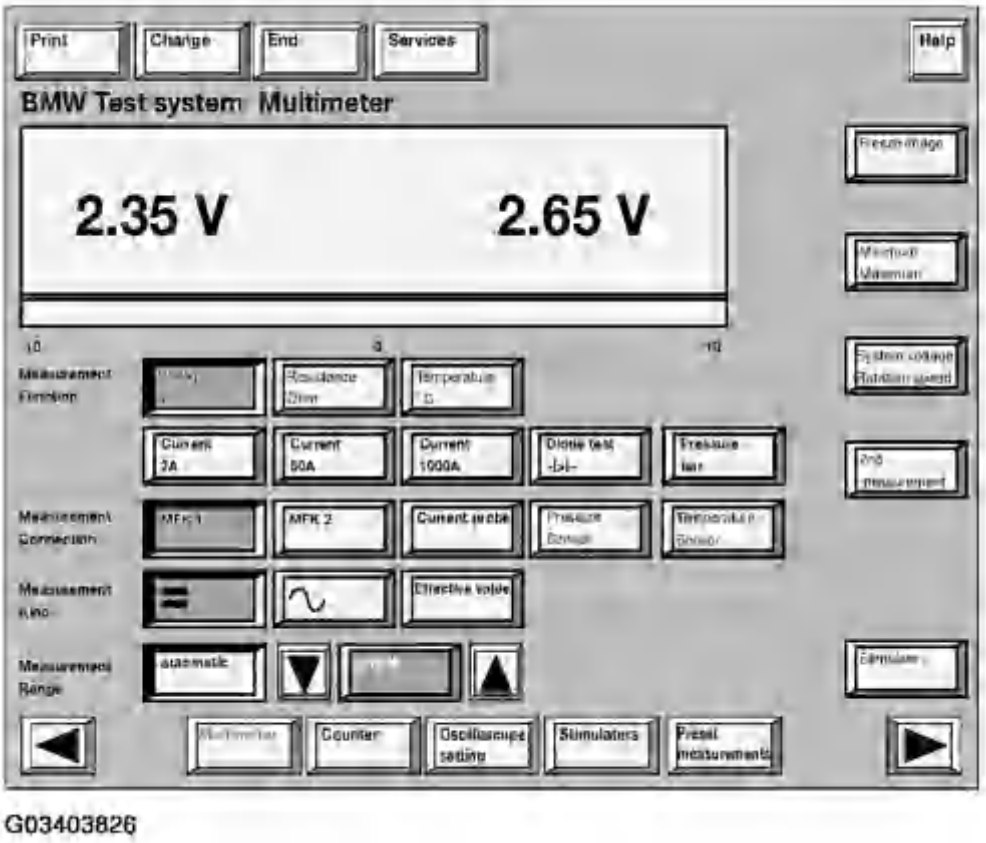

Fig. 48: Identifying BMW Test System Multimeter Display
Courtesy of BMW OF NORTH AMERICA, INC.

Terminal Resistors: are used in the CAN bus circuit to establish the correct impedance to ensure fault free communication. A 120 Ohm resistor is installed in two control units of the CAN between CAN-H and CAN-L. Because the CAN is a parallel circuit, the effective resistance of the complete circuit is 60 Ohms. On some vehicles there is a jumper wire that connects the two parallel branches together, others have an internal connection at the instrument cluster.

The resistance is measured by connecting the appropriate adapter to any of the modules on the CAN and measuring the resistance between CAN-L and CAN-H. The resistance should be 60 Ohms. The CAN bus is very stable and can continue to communicate if the resistance on the CAN bus is not completely correct; however, sporadic communication faults will occur.

The terminal resistors are located in the ASC/DSC control unit and either the instrument cluster or in the DME.

Early 750iL vehicles that used the star connector have a separate external resistor which connect CAN-H and CAN-L together.

Modules which do not have the terminal resistor can be checked by disconnecting the module and checking the resistance directly between the pins for CANH and CAN-L. The value at these control units should be between 10 kOhms and 50 kOhms.

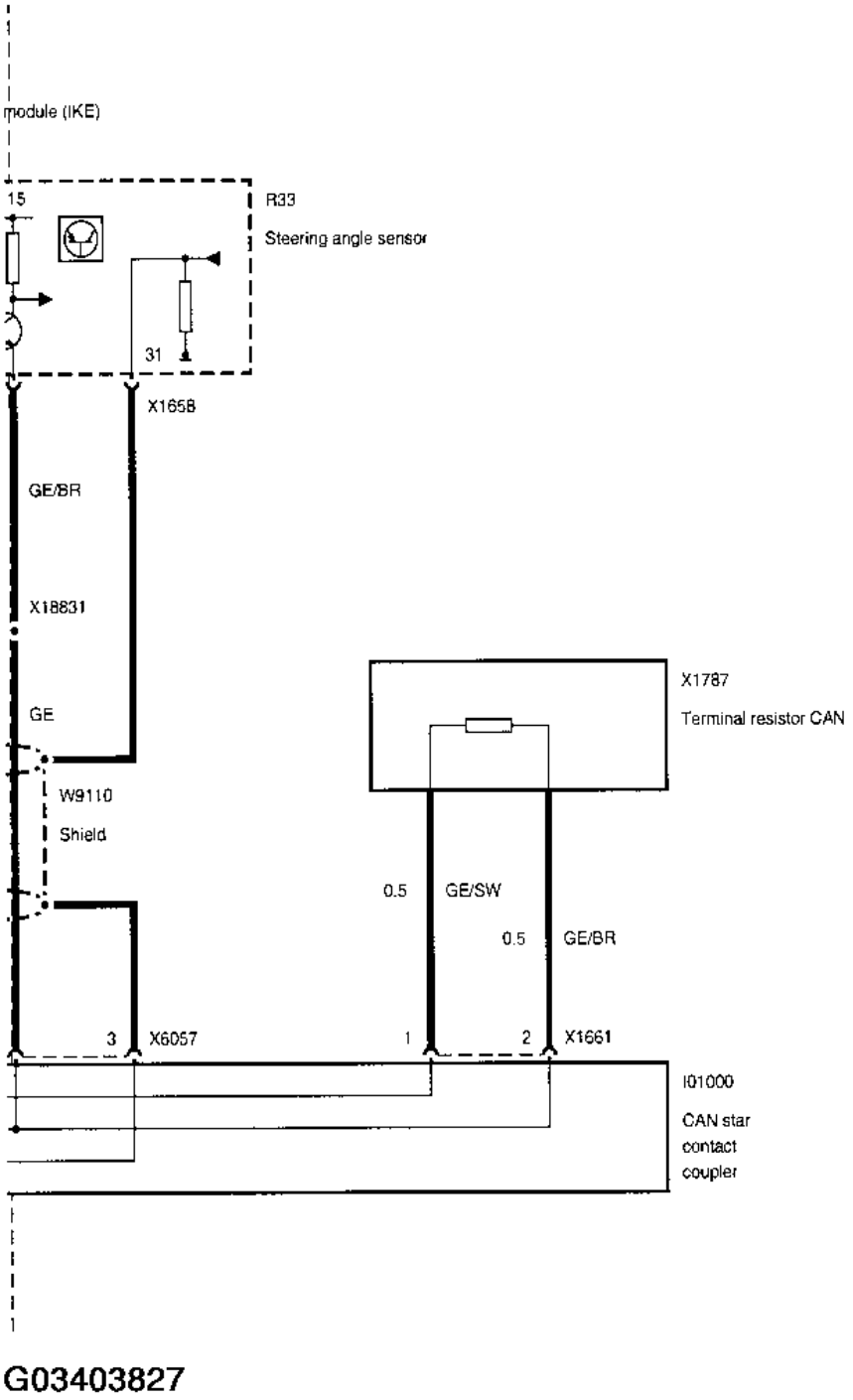

Fig. 49: Identifying Terminal Resistor Circuit
Courtesy of BMW OF NORTH AMERICA, INC.

DIAGNOSIS AND TROUBLESHOOTING

Due to the cost and complexity of today's electronic transmissions, BMW recommends that the technical

hotline be contacted before any repairs are performed. It is important that the technician perform some basic diagnostic procedures before contacting technical assistance. The following procedures should be followed:

- Always Verify customer complaint, make sure the complaint is not related to normal operation. (i.e. Warm Up Phase, AGS operation etc.)
- Survey Fault Memory - Perform complete quick test. There may be other systems that interface with EGS that could cause faults. (i.e DME, ASC/DSC, IKE/Kombi etc.)
- Print out all fault code with fault conditions. Also print out copy of Identification page and diagnostic report.
- CHECK TO SEE IF THERE ARE ANY SERVICE BULLETINS THAT APPLY TO YOUR SPECIFIC COMPLAINT. THIS INCLUDES THE SERVICE ROUND TABLE.
- Ensure that battery voltage is sufficient. Battery voltage must be greater than 12.5 with ignition switched off. Check battery connections for tightness and condition.
- Check ground connections. (chassis to engine, grounds to bulkhead and shock tower.)
- Check over vehicle to look for transmission leaks, physical damage, loose connections etc.
- If necessary, check fluid level and condition using DISplus or GT-1.
- Check to see if any aftermarket or performance components have been installed that could effect transmission operation. (DME or EGS software as well as any engine modifications).
- Check repair history to see if there were any recent repairs that could effect the proper operation of the transmission (i.e. Engine replacement with damaged dowel pin etc.).
- Check DCS for any open campaigns or recalls pertaining to drivetrain.
- Check and record chassis number, production date and transmission serial # before contacting technical assistance.

Establishing A Diagnostic Plan

Once all of the pre-diagnostic criteria has been satisfied, a logical diagnostic plan should be followed. A logical, well organized diagnostic plan will help avoid improper diagnosis, unnecessary parts replacement and lost diagnostic time. A technician's goal should be to satisfy the customer by "Fixing it the first time, on time, every time". The productivity of the technician can also be improved by following a logical, common-sense approach to problem solving. The following steps are recommended to form a diagnostic plan:

- Verify the Customer Complaint - This step is the most important, but also the most overlooked. The focus should always be on the exact customer concern. Make sure that the customer complaint is not a misunderstanding of proper vehicle operation. This step can avoid unnecessary diagnosis and lost time. If the customer concern is not exactly identified, any subsequent repairs can not be verified as being effective. This is the most common cause of "comeback" repairs. Communication between the customer to advisor and the advisor to technician must be clear. Vague or misunderstood customer complaints are often improperly diagnosed. Also make sure that the conditions under which the concern has occurred are duplicated. For example: If the customer is customer is complaining about a shifting concern after a cold start, then the vehicle should be road tested under those conditions.
- Analyze the Problem - Once the complaint has been verified, then all available resources should be used to find the "root cause" of the complaint. Start out by checking Service Information Bulletins, DCS messages, and Service Round table information. Use the DISplus or GT-1 to access the diagnostic program and per form Diagnostic Test Modules where applicable. Electrical Troubleshooting Manuals (ETM's) should also be used when needed.
- Isolate the Problem - Now, the problem can be narrowed down into the final steps of diagnosis. Using proper tools and procedures, the technician can "Isolate" by using the process of elimination and common sense. Having a working knowledge of BMW systems is helpful in this area. When applicable, use all available BMW special tools and equipment. Perform all necessary electrical checks such as Voltage Drop, resistance measurements etc.
- Repair the Problem - Once the concern has been correctly identified, perform all necessary repairs as per BMW guidelines. Make sure all repairs are properly documented to comply with warranty policies and procedures.

- Verify the Repair - Make sure the customer concern has been rectified. Road test the vehicle under the same conditions whenever possible. Failure to complete this step properly is almost a guaranteed comeback. Repeat repair attempts are costly to the BMW Center and the BMW Service Technician.

REMEMBER - Fix it the first time, On Time, Every time.

Fault Codes

When diagnosing transmission fault codes, always print out the fault code(s) and the fault conditions. When referring to the fault code itself, be aware that there are actually 3 formats for the fault code. The fault code breakdown is as follows:

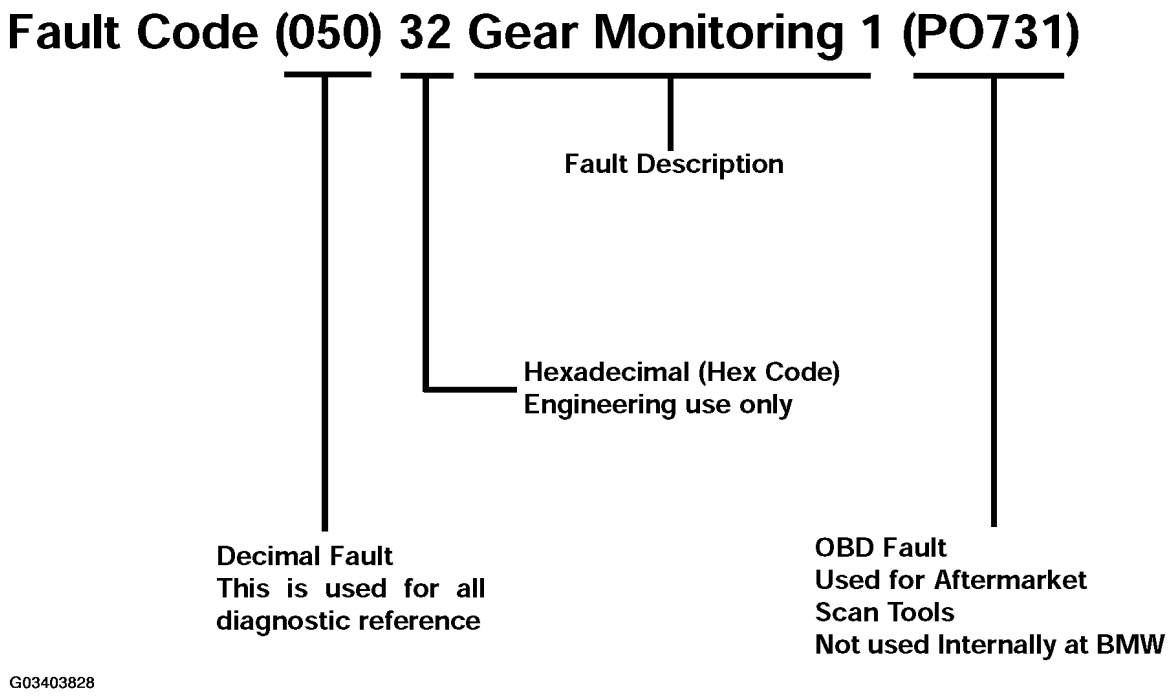

Fig. 50: Identifying Fault Codes
Courtesy of BMW OF NORTH AMERICA, INC.

When referring to the "Fault Code" during diagnosis always use the fault that is in Decimal Format. The Decimal fault is referred to in all reference material such as Service Information Bulletins, Test Modules and DCS messages etc. In the example above, FC 050 would be the correct choice.

Fault Conditions

When a fault code is set, it is stored with a set of environmental conditions. The environmental conditions are used to aid in pinpointing the root cause of the fault. Some of the information found in the fault conditions contain information on transmission temperature, engine speed and road speed etc. This information is also helpful when trying to duplicate the customer complaint. For example, if a customer complains about a shifting complaint when cold, check the fault conditions to verify this complaint. Remember to always print out the fault codes with the fault conditions. This information is helpful to the technician as well as technical assistance.

Identification Page

The ID page is helpful to determine the Transmission and control system used as well as the chassis number and current software version. Always print out a copy of the ID page when performing any diagnosis or programming procedures.

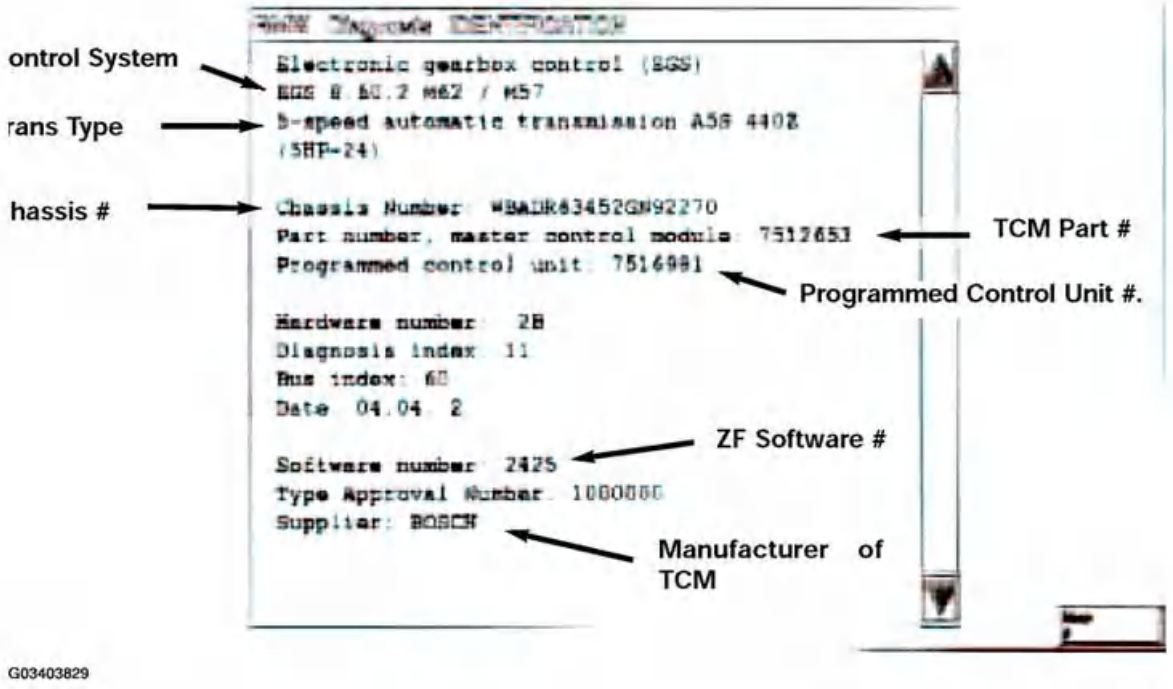

Fig. 51: Identifying Identification Page
Courtesy of BMW OF NORTH AMERICA, INC.

Diagnosis Program

There are two diagnostic formats (programs) used on current model BMW vehicles. The earlier diagnostic program was used on the E38 and E39. The latter diagnostic program was introduced as the "E46 Diagnostic Concept". This is used on the E46, E65 and the E52 (Z8). The E53 X5 uses a mixture of both diagnostic programs depending upon engine/transmission options. Below is an example of the earlier diagnostic program.

Fig. 52: Identifying Diagnosis Program
Courtesy of BMW OF NORTH AMERICA, INC.

The diagnostic program contains the following features:

- Fault Symptoms - This is a symptom driven program that will lead the technician into guided diagnostics. It contains several possible fault scenarios that are common to electronic transmissions. This path is helpful when the technician is not sure where to start in his diagnostic plan.
- Function Test - There are no function tests for electronic transmissions.
- Service Functions - This is where you will find the ATF level check function. Also Test Codes can be obtained and printed out for warranty purposes. The Adaptation values can be cleared as well as printed out.
- Expert Mode - Expert Mode should be used when the technician has a thorough working knowledge of the system. You will find several items in expert mode: Read/Clear fault memory, Diagnosis (Status) requests, Component Activation and Test Modules.

Test Modules

Test modules are found in the diagnosis program of the DISplus and GT-1. These allow the technician to take advantage of a guided diagnostic plan. The program will direct the technician through the various steps using a "trouble tree" format. When using test modules it is important to follow the instructions exactly. Due to the complex nature of some faults, the test modules are not always conclusive. The test module is only as effective as the information provided by the technician. The technician also needs to rely on his experience and some common sense. The test modules should be used to assist the technician, not as a replacement for good diagnostic skills.

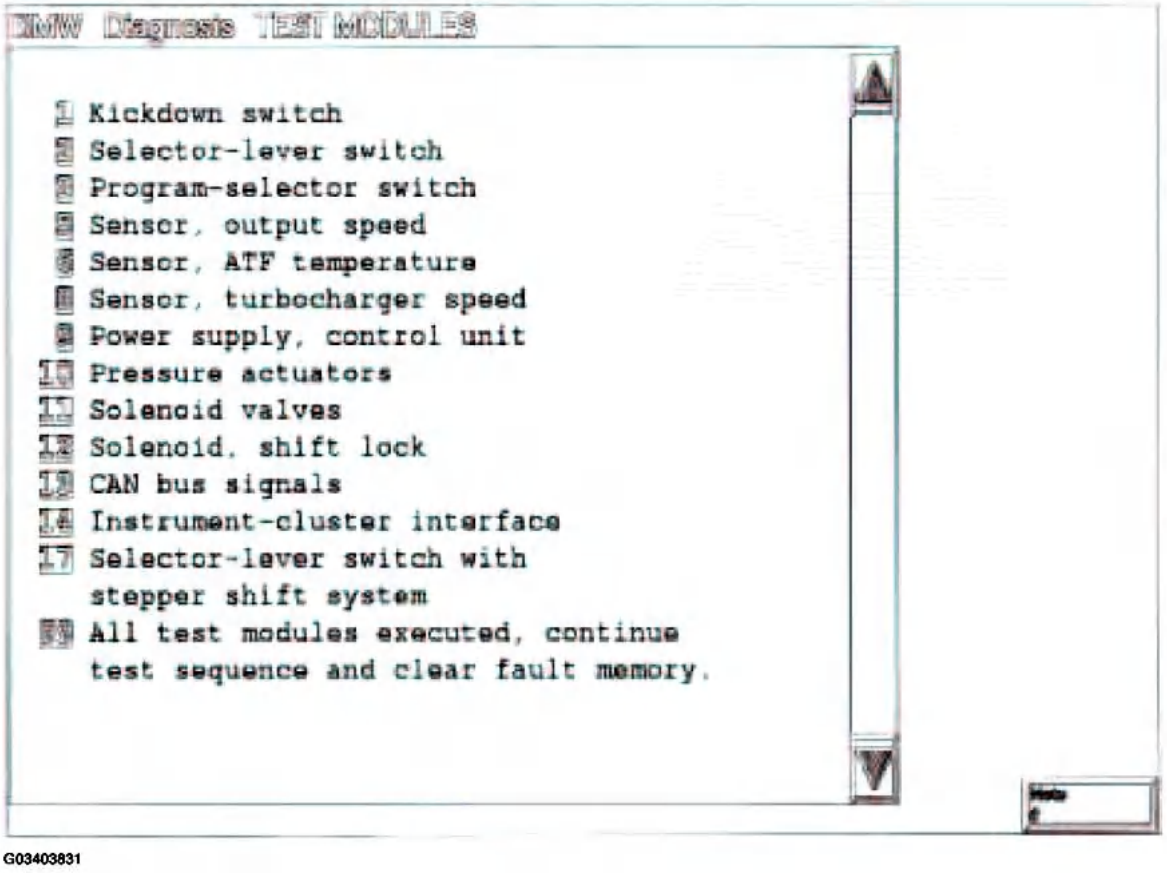

Fig. 53: Identifying Test Modules
Courtesy of BMW OF NORTH AMERICA, INC.

Test modules come in two formats. The one shown above is used on E38/E39 vehicles and the E53 with 4.4 and

4.6 engines. The E46, E65 and E53 (with 3.0 M54) uses the new "E46 Diagnostic Concept" which was introduced with the E46 in the 1999 model year. Regardless of the format used, the technician is still guided through a step by step procedure.

Diagnostic Tips

The following consists of some helpful hints to assist the BMW diagnostic technician. It is designed to assist the technician to form a logical path of diagnosis. These suggestions should be used in conjunction with other approved diagnostic routines. This does not exclude the technician from the responsibility to contact technical assistance. All major repairs and transmission replacement must be pre-approved by the BMW Technical Hotline. Transmission concerns can be broken down into several categories:

- Shift Quality Complaints - Shift Quality complaints consist of harsh up or down shifts, improper shift points and erratic shifting. These complaints could be related to electronic/software issues or hydraulic/mechanical problems. Perform quick test and check SIB's before proceeding. As with most concerns, check the transmission fluid level and condition as well.

  Do not clear adaptation values unless instructed to do so by BMW Technical Hotline.

- Delayed/No Upshifts - Before proceeding on delayed upshift complaints, make sure you are aware of the conditions that this occurs. This could be normal operation, such as the "Warm-up Phase" program. Always check front tires for proper inflation pressures, correct size and type. Also check for uneven tire wear. Variations in front tire size from left to right can activate the AGS "Curve Recognition" feature. The TCM will interpret the difference in wheel speed signals as being a turn and suppress (or delay) upshifts.
- Slipping - This type of issue is usually associated with a fault code. Be sure to check the transmission fluid level and condition.
- Noise, Vibration - Noises and vibrations should be checked over by a good visual inspection. Look for loose transmission or engine mounts. Check the driveshaft, center bearing and flexible coupling (or constant velocity joints). Also check the lateral alignment of the driveshaft. There are several SIB's pertaining to noise and vibration.
- No Forward or Reverse Gear - Start by checking transmission fluid level and note the fluid condition. Inspect for leaks and external transmission damage.
- Leaks - When investigation transmission leaks, be sure to verify that the suspected leak is actually transmission fluid. Engine oil, hydraulic and brake fluid can be mistaken for a transmission leak. Check the transmission cooler lines, transmission cooler and transmission pan gasket. Try to locate the source of the leak. Do not make any major repairs until the technical hotline is contacted.
- Fault Codes - Perform COMPLETE short test (Quick test) on all vehicle systems. It is important to survey all systems in the event that a related system is causing the transmission fault. Always print out the ID Page, Fault codes and fault conditions.

Information Resources

When diagnosing transmission related concerns it is important to use all information resources available. The following information sources should be utilized at all times:

- Service Information Bulletins
- Technical Data
- ETM Electrical Troubleshooting Manual
- DCS (Dealer Communication System)
- Repair Instructions
- Tightening Torques
- Technical Training Manuals
- Special Tool Information

Technical Information System (TIS)

Most of the above information can be accessed by using the BMW TIS CD or by logging on the BMW TIS website through www.bmwcenternet.com. The BMW TIS website contains a wealth of helpful information for the technician. The information is updated on a regular basis.

Service Round Table

In addition to the above sources of information, the technician should be up to date on the latest edition of the BMW Service Round table. The round table will cover the most recent topics and offer some hints that will assist the technician. The Service Round table is broadcast live on a monthly basis via the BMW Visionwerke Network. In addition to live broadcasts, the round table is rebroadcast on a regular schedule during the month.

TCM CODING AND PROGRAMMING

As with other control modules used on BMW systems, the TCM must be programmed and/or coded for the vehicle. Over the years, these methods have varied from system to system.

Coding

Coding will assign the control unit to a particular application. Information such as differential ratio, tire size, vehicle series, engine, engine control system, w/wo AC etc.are some of the possible variants that have to be considered. Transmission control units are coded using various methods.

- Grounding pins in wiring harness connector - On early models equipped with the 4HP22/24 EH transmissions, the TCM was coded to the vehicle by means of grounding pins in the wiring harness connector for the TCM. By selectively grounding specific pins in the harness, the TCM was assigned to that vehicle. For Example: The TCM could be installed in a 535, 635, or a 735. This only applies to the Early E- 7 Versions. (E23, E24, E28)
- TCM ordered for Specific Application - On some later models, the TCM was ordered for a specific vehicle application, coding was not necessary.
- Coding performed during programming - On systems that use a flash programmable TCM, the coding process is done during flash programming.

Programming

Programming refers to the instructions that the TCM is to follow. The TCM is programmed to apply certain shift maps according to operating conditions such as vehicle speed, engine speed, engine temperature, engine load and throttle position. This information can be entered into the TCM via an updated EPROM or through flash programming.

Flash programmable control units use a EEPROM which is Electronically Erasable. The EEPROM is also soldered into the TCM and cannot be removed or replaced. Flash programmable TCM's can be programmed up to 14 times (with a new TCM).

NOTE: Always clear adaptations after programming.

NOTE: Do not program a TCM to correct a complaint unless there is a specific SIB that covers the issue. Only program when installing a new TCM or when instructed to do so by BMW Technical Assistance. Always have the ID page available when calling for technical assistance.

TCM PROGRAMMING

Control System	Transmission	Coding	Programming	TCM Type
GS 1.26 GS 1.27 GS 1.29	4HP22 EH (Early E-7) 4HP22/24 EH (Late E-7 and E-9)	Grounding pins in Harness. (Early E-7 Only) TCM ordered for specific application. Coding not needed.	Replaceable EPROM Replaceable EPROM	35 Pin 35 Pin

GS 7.3 GS 7.32 GS 7.11 GS 8.32	A5S310Z (5HP18)	TCM ordered for specific application. Coding not needed.	Replaceable EPROM	88 Pin
GS 8.60 GS 8.60.4	A5S325Z (5HP19)	Coding done when Programmed	Flash Programming (EEPROM)	134 Pin SKE
GS 8.55 GS 8.60.2	A5S440Z (5HP24)	Coding done when programmed	Flash Programming (EEPROM)	88 Pin up to 98 (E38 M62) 134 Pin SKE from 98 to present.
GS 9.2 GS 9.22 GS 9.22.1 GS 8.60.3	A5S560Z (5HP30) A5S560Z (5HP30) (E38 M73TU)	TCM ordered for specific application. Coding not needed. Coding done when programmed.	Replaceable EPROM Flash Programming (EEPROM)	88 Pin 134 Pin
GS 4.14 GS 4.16	A4S310R (THMR-1)	TCM ordered for specific application. Coding not needed.	Replaceable EPROM	55 Pin
GS 8.34	A4S270R (THMR-1)	TCM ordered for specific application. Coding not needed.	Replaceable EPROM	88 Pin
GS 20	A5S360R A5S390R	Coding done when programmed	Flash Programming (EEPROM)	134 Pin SKE

TRANSMISSION FLUID INFORMATION

Transmission Fluid (Oil)

The automatic transmission provides filtered, pressure regulated hydraulic fluid for all of the transmissions functional requirements. All BMW automatic transmissions are designed to operate with specific fluids. Use of non-approved oil will cause malfunctions and irreparable transmission damage which is not covered by BMW warranty.

The transmission fluid provides the following functions:

- Lubricates mechanical components (planetary gears, bearings etc.).
- Removes heat and transfers heat to transmission cooling system. (Heat Exchanger).
- Removes debris and contaminants to sump and filter when circulated.
- Provides a transfer of kinetic energy in the torque converter.
- Allows hydraulic operation of mechanical components (clutches, brakes) via control of the valve body.

Also, transmission fluid has various properties to prevent oxidation and breakdown from heat and friction. Each type of transmission fluid has properties specific for each transmission application.

Fluid level is crucial in the proper operation of an automatic transmission. Improper fluid levels will cause improper operation and eventually irreparable transmission damage. Improper fluid level can cause:

- A low fluid level can cause an interruption in oil flow during fast acceleration or hard braking which can cause gear shift malfunctions and noises.
- An excessively high fluid level can cause the rotating mechanical components to paddle in the oil. This produces foam which introduces air into the hydraulic system.
- A low fluid level can also cause transmission overheating causing premature transmission failure.

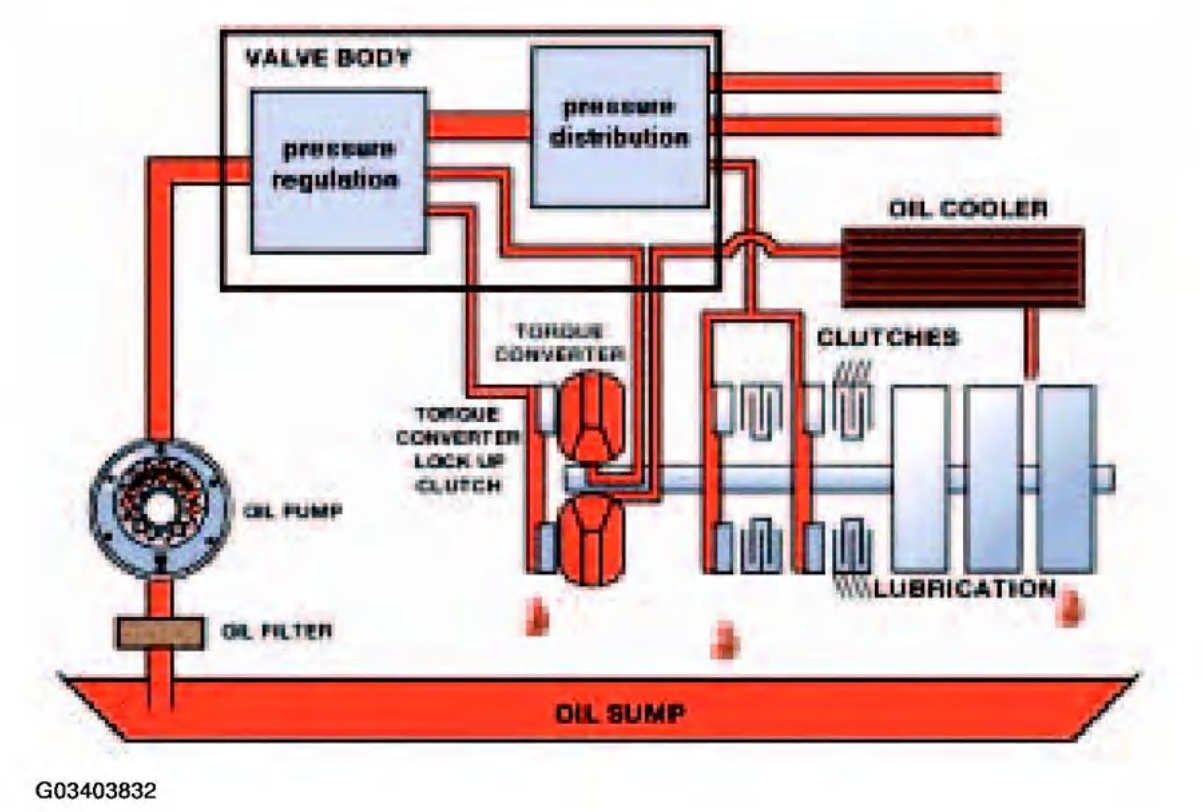

Fig. 54: Identifying Transmission Fluid Flow
Courtesy of BMW OF NORTH AMERICA, INC.

Transmission Fluid Checking Procedures

Transmission fluid checking is accomplished using the DISplus or GT-1. The DISplus or GT-1 is used to monitor transmission fluid temperature to insure the transmission is not over or under-filled. As with most other current ZF transmissions there is no dipstick, the fluid level is checked and filled at the fill plug. The location of the fill plug varies between transmissions.

Transmission fluid should be checked between 30 and 50 degrees Celsius (unless otherwise specified). Use the DISplus and/or GT-1 to determine transmission temperature. The transmission temperature information can be found in the diagnosis section under Service Functions.

Proper procedures for checking and filling transmission fluid can be found in BMW Service Information Bulletin B 24 01 98.

When checking transmission fluid, observe the following items:

G03403833

Fig. 55: Identifying Transmission Fluid Checking Procedures
Courtesy of BMW OF NORTH AMERICA, INC.

- Transmission in Park
- Parking brake applied
- Engine Running
- Vehicle level
- No engine load
- Trans Temp 30-50C
- Observe correct drain plug torque
- Use correct fluid

When replacing parts on transmissions that use lifetime fluid, drain fluid into a clean container and reuse.

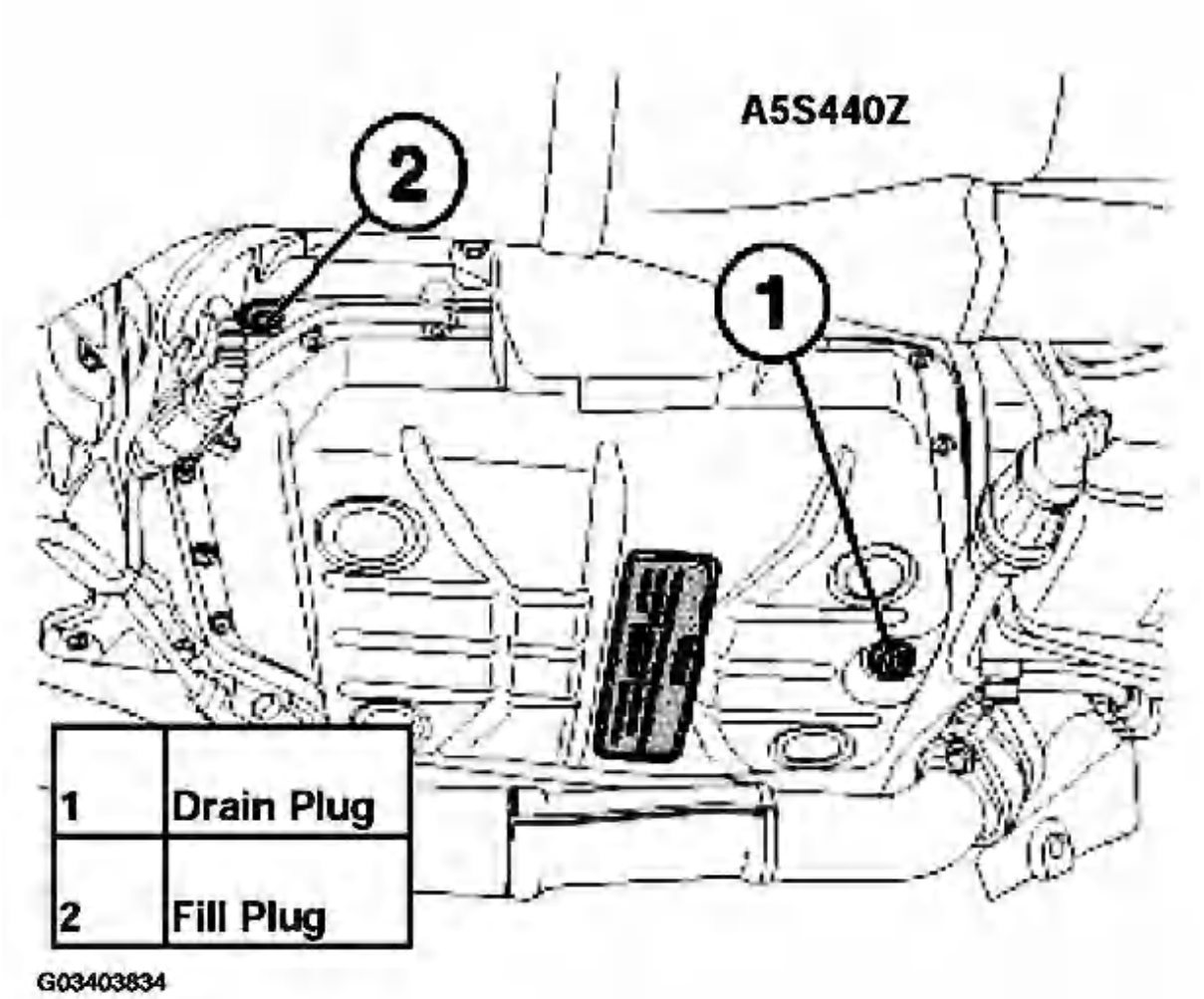

Fig. 56: Identifying Transmissions Drain Plug And Fill Plug
Courtesy of BMW OF NORTH AMERICA, INC.

Transmission Fluid Application

There are numerous types of transmission fluid used in BMW transmissions. With the exception of the early transmissions (4HP22/24, A4S310/270R and the A5S310Z in the E34) all current BMW transmissions use "Lifetime Fill" transmission fluid. There is no maintenance required for these transmissions. It is important to use the correct fluid. Incorrect use of the transmission fluid can cause non-warrantable transmission damage.

When performing repairs on transmissions with lifetime fluid, it is important to drain the transmission fluid in to a clean container for re-use. New fluid should only be used for transmission replacement and for topping off after repairs.

Also, transmission fluid level is vital to the proper operation of the transmission.

When servicing or repairing BMW automatic transmissions, refer to TIS for fluid capacities.

TRANSMISSION FLUID

Transmission	Fluid Type	BMW Part #	Container	SIB Ref.
4HP22 4HP24	Dexron III Mercon	Available Commercially (Castrol or Texaco)	N/A	Â
A5S310Z 530i/iT (E34)	Dexron III	Available Commercially (Castrol or Texaco)	N/A	Â
M3 (E36)	ESSO LT 71141	83 22 9 407 807	20 liter container	B 24 03 95

A5S325Z	ESSO LT 71141	83 22 9 407 807	20 liter container	Â
A5S440Z	ESSO LT 71141	83 22 9 407 807	20 liter container	Â
A5S560Z 740 (E32), 540 (E34) 840Ci (E31- 6/93-12/94) 740i/iL-750iL (E38)	Shell LA2634	83 22 9 407 765	5 liter container	B 24 11 92
540i (3/96-12/96) 850Ci (10/94-6/97)	ESSO LT 71141	83 22 9 407 807	20 liter container	B 24 02 94
A4S310R A4S270R (THM-R1)	Dexron III Mercon	Available Commercially (Castrol or Texaco)	N/A	Â
A5S360R A5S390R	Texaco ETL 7045E Texaco ETL 8072B	83 22 0 026 922 83 22 0 024 359	25 liter container 25 liter container	Â
GA6HP26Z GA6HP32Z	Shell M-1375.4	83 22 0 142 516	20 liter container	Â

TRANSMISSION SERVICE

Overview Of Allowable Repairs

Currently, service of transmissions covered under warranty is limited to level I. Level I service includes electrical, minor mechanical and hydraulic repairs as well as repair manual provided service adjustments.

Part availability is limited to include the repair of the following:

- Oil Leaks - Radial Seals and gaskets.
- Mechanical/Hydraulic Faults - Torque Converter, Valve Body, parking pawl, oil pan, output shaft bearing.
- Electrical Faults - Solenoid Valves, pressure regulator valves, wiring harness.
- Signal Sensing - Turbine and Output Speed Sensors, CAN bus, Temp Sensor.

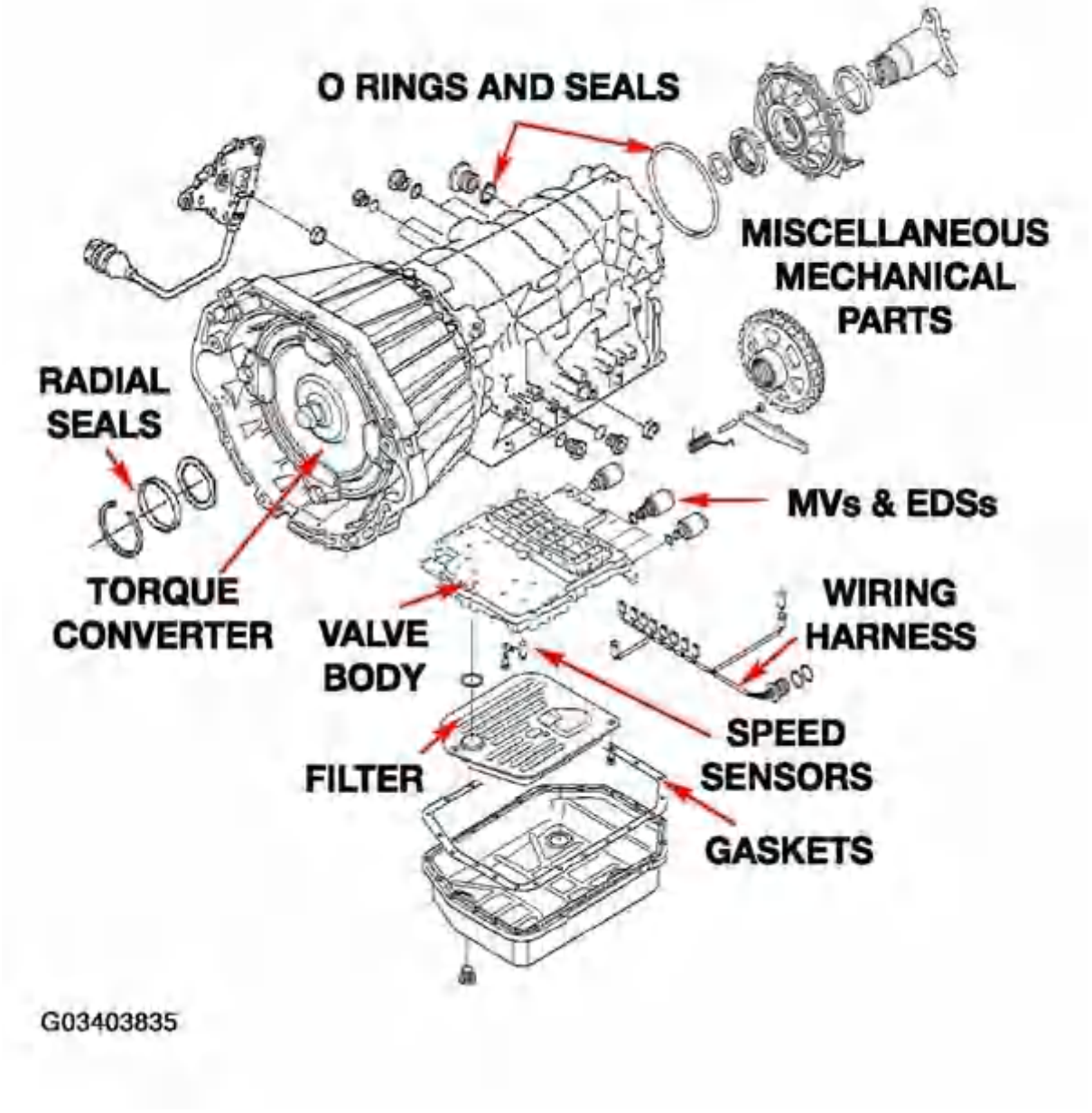

Fig. 57: Exploded View Of Transmission Parts
Courtesy of BMW OF NORTH AMERICA, INC.

BMW Technical Hotline

Before performing any majors repairs or transmission replacement, always contact the BMW Technical Hotline at 1-800-472-7222. When prompted to do so, select option 1 for the Drivetrain Group. Be prepared will all necessary information such as transmission serial number, ID page, fault codes etc. Failure to contact the technical hotline could result in the non payment of warranty claims.

BMW Value Line Program

The Value-Line replacement transmission program provides the availability of factory certified rebuilt units at a very competitive cost.

BMW SPECIAL TOOLS (TRANSMISSION)

The following pages contain information about BMW special tools, this is not an all inclusive list. This is a list of tools that would be helpful in the diagnosis and service of BMW transmissions.

Transmission Removal And Installation

Tool # 24 1 110

This tool is used to remove the torque converter to flexplate bolts. It is a 17 mm socket with 3/8" drive. There is a magnet to help retain the bolt during installation and removal.

Fig. 58: Identifying BMW Special Tools - Tool # 24 1 110
Courtesy of BMW OF NORTH AMERICA, INC.

Tool # 24 4 130

During transmission installation and removal the oil pump must be protected from damage. This tool helps keep the torque converter in place, to prevent oil pump damage due to misalignment.

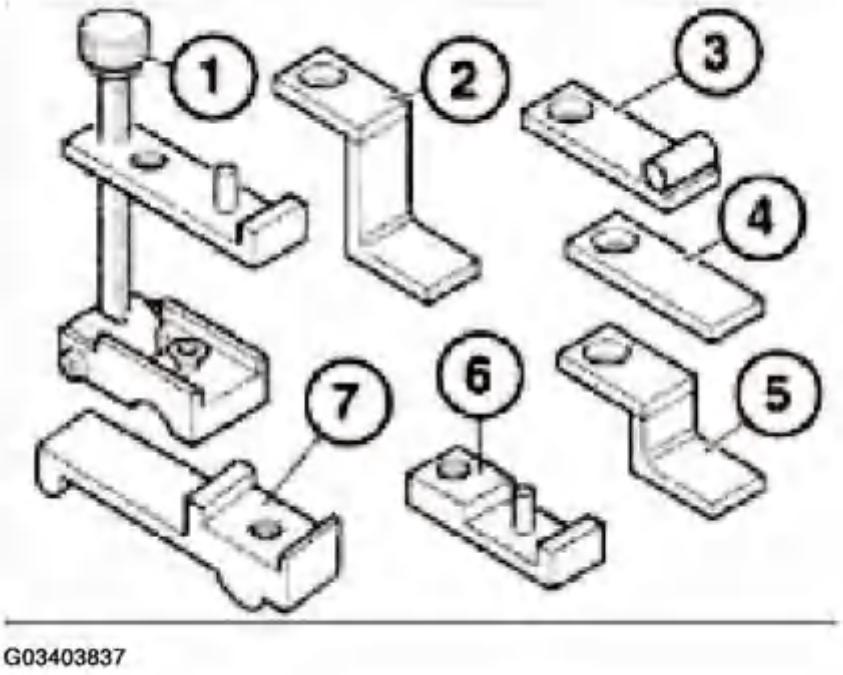

Fig. 59: Identifying BMW Special Tools - Tool # 24 4 130
Courtesy of BMW OF NORTH AMERICA, INC.

Tool # 24 2 300

Used to align torque converter with flexplate during installation. Use on all BMW automatic transmissions.

Fig. 60: Identifying BMW Special Tools - Tool # 24 2 300
Courtesy of BMW OF NORTH AMERICA, INC.

Transmission Adjustments

Tool # 24 2 320

3/16" socket head cap screw (hex) with 1/4" drive. Used to adjust brake band on the THMR-1.

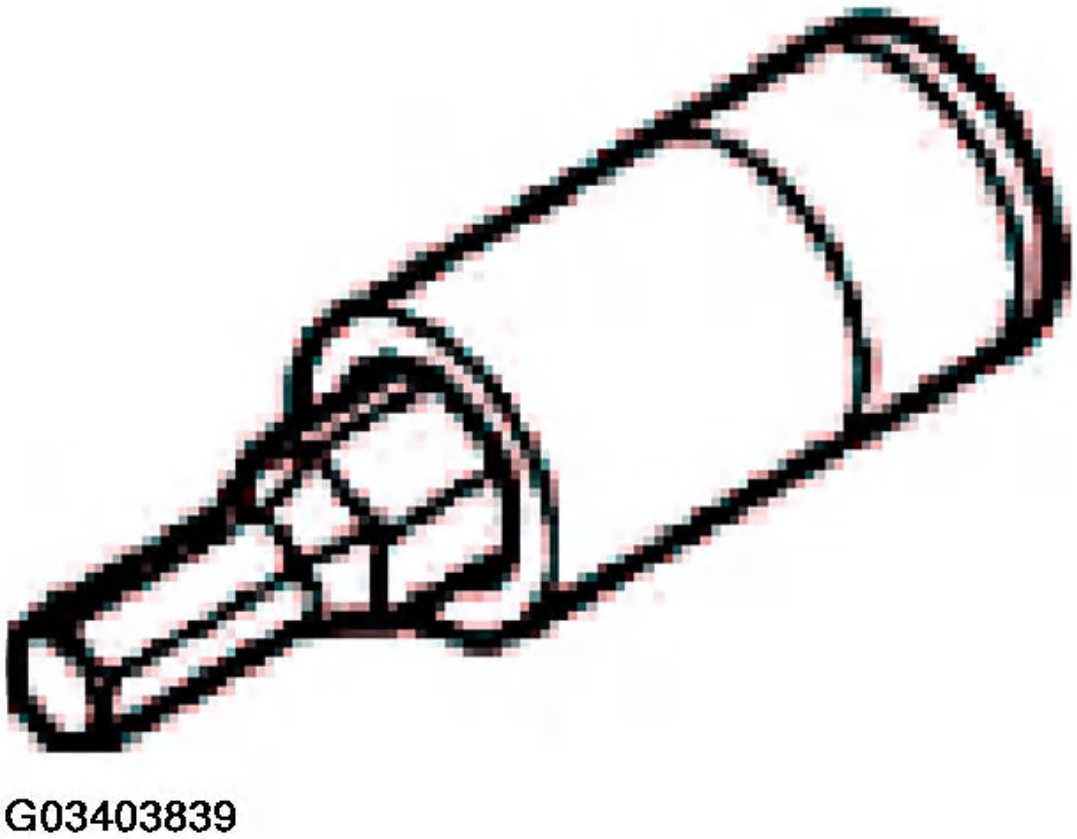

Fig. 61: Identifying BMW Special Tools - Tool # 24 2 320
Courtesy of BMW OF NORTH AMERICA, INC.

Tool # 24 2 330

1/2 open end wrench used to turn lock-nut on the brake band servo when adjusting the brake band. Used only on the THMR-1 transmissions.

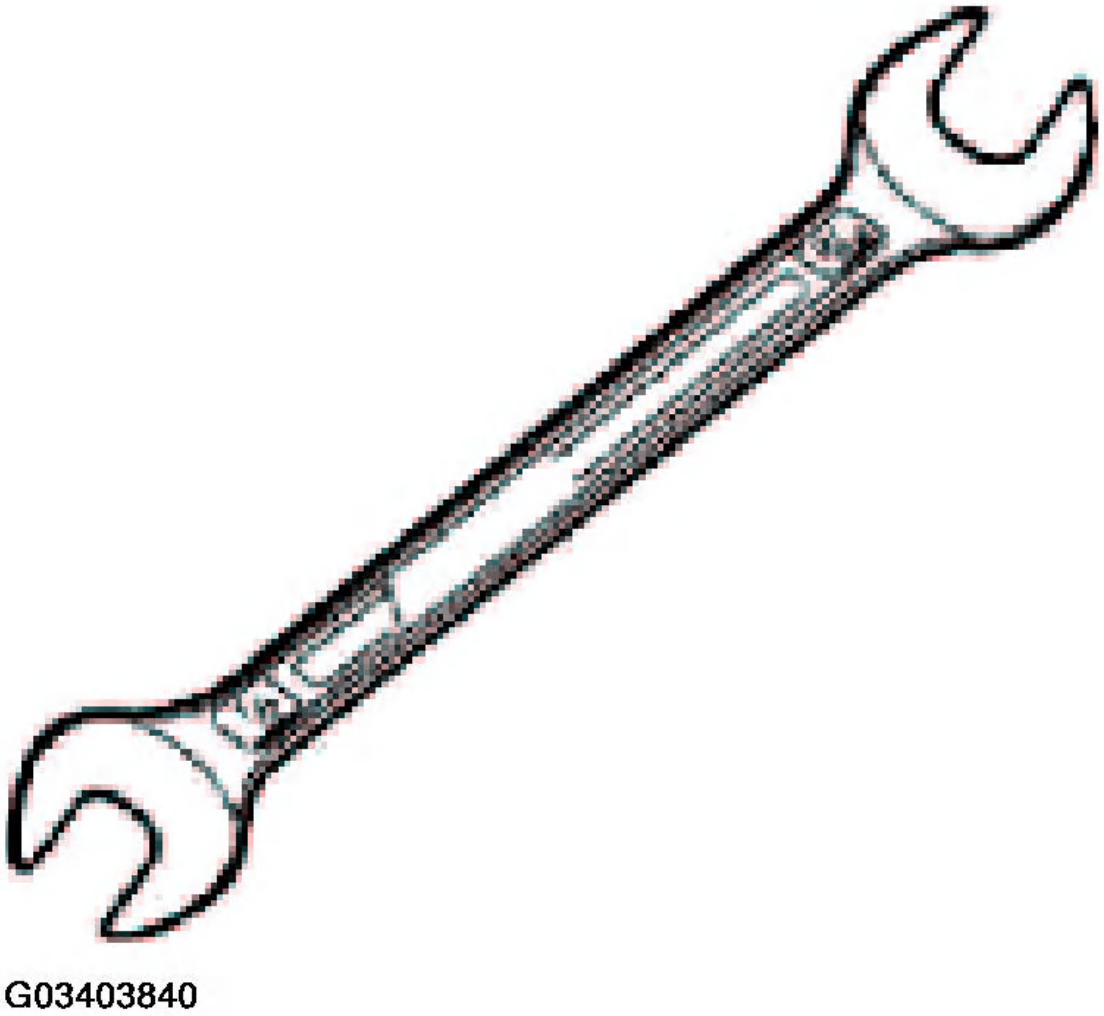

Fig. 62: Identifying BMW Special Tools - Tool # 24 2 330
Courtesy of BMW OF NORTH AMERICA, INC.

Tool # 24 1 120

Used as guide to lock the range selector switch in "P" when installing. It is used on the A4S270R transmission. Used only for applications which have the selector switch mounted on the transmission case.

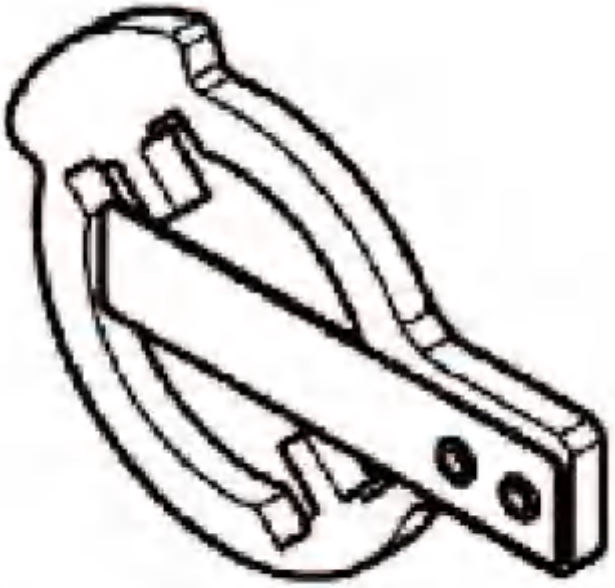

Fig. 63: Identifying BMW Special Tools - Tool # 24 1 120
Courtesy of BMW OF NORTH AMERICA, INC.

Transmission Diagnostic Tools

Tool # 24 6 000

8-pin test cable used to test the transmission at the "Cannon Plug" located on transmission case. This cable is used for the 4HP22/24 EH. Used in conjunction with 61 1 459.

Fig. 64: Identifying Transmission Diagnostic Tools - Tool # 24 6 000

Courtesy of BMW OF NORTH AMERICA, INC.

Tool # 24 6 060

16 pin test cable used to test the transmission at the "Cannon Plug" located on the transmission case. This cable is used for the A5S310Z and A5S560Z. Used in conjunction with 61 1 459.

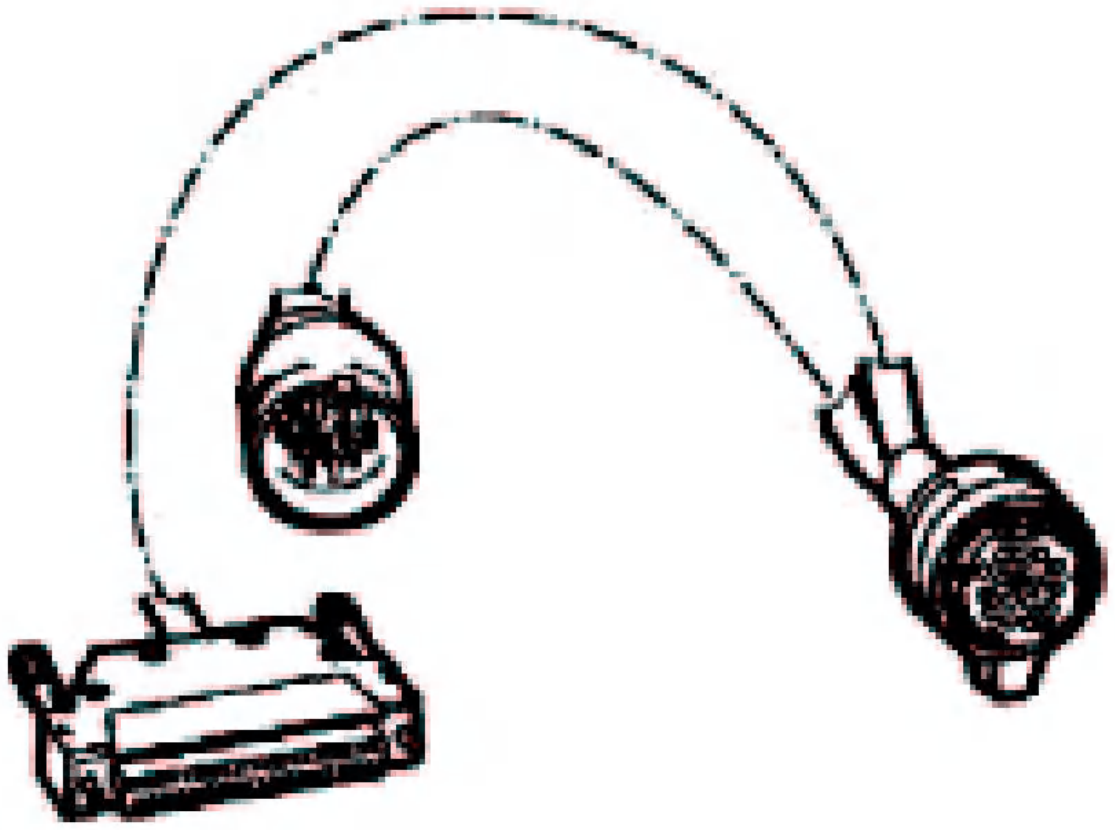

Fig. 65: Identifying Transmission Diagnostic Tools - Tool # 24 6 060
Courtesy of BMW OF NORTH AMERICA, INC.

Tool # 24 6 020

14 pin test cable used to test the transmission at the "Cannon Plug" located on the transmission case. This cable is used on the A5S310Z.

Used in conjunction with 61 1 459.

Fig. 66: Identifying Transmission Diagnostic Tools - Tool # 24 6 020
Courtesy of BMW OF NORTH AMERICA, INC.

Tool # 24 6 010

8-pin test cable used to test the transmission at the "Cannon Plug" located on transmission case. This cable is used for the A4S270/310R.

Used in conjunction with 61 1 459.

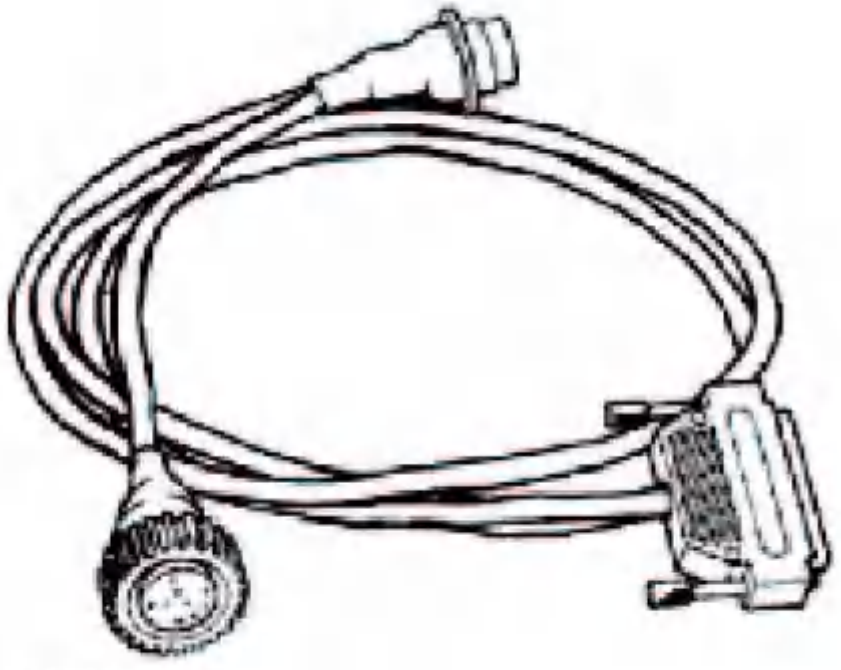

Fig. 67: Identifying Transmission Diagnostic Tools - Tool # 24 6 010
Courtesy of BMW OF NORTH AMERICA, INC.

Tool # 24 6 080

16-pin test cable used to test the transmission at the "Cannon Plug" located on transmission case. This cable is used for the 6HP26Z.

Used in conjunction with 61 1 459.

Fig. 68: Identifying Transmission Diagnostic Tools - Tool # 24 6 080
Courtesy of BMW OF NORTH AMERICA, INC.

Tool # 24 6 070

20-pin test cable used to test the transmission at the "Cannon Plug" located on transmission case. This cable is used for the A5S360/390R.

Used in conjunction with 61 1 459.

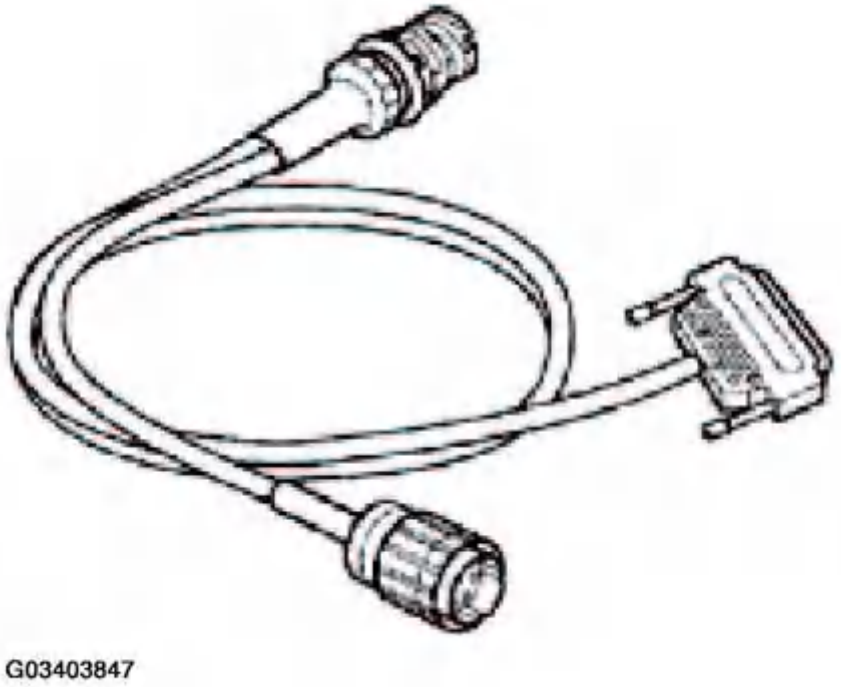

Fig. 69: Identifying Transmission Diagnostic Tools - Tool # 24 6 070
Courtesy of BMW OF NORTH AMERICA, INC.

Service and Repair Tools

Tool # 24 1 170

For loosening and tightening slotted nut on output drive flange. Used on 5HP18 (A5S310Z). Use in conjunction with tool #24 1 220.

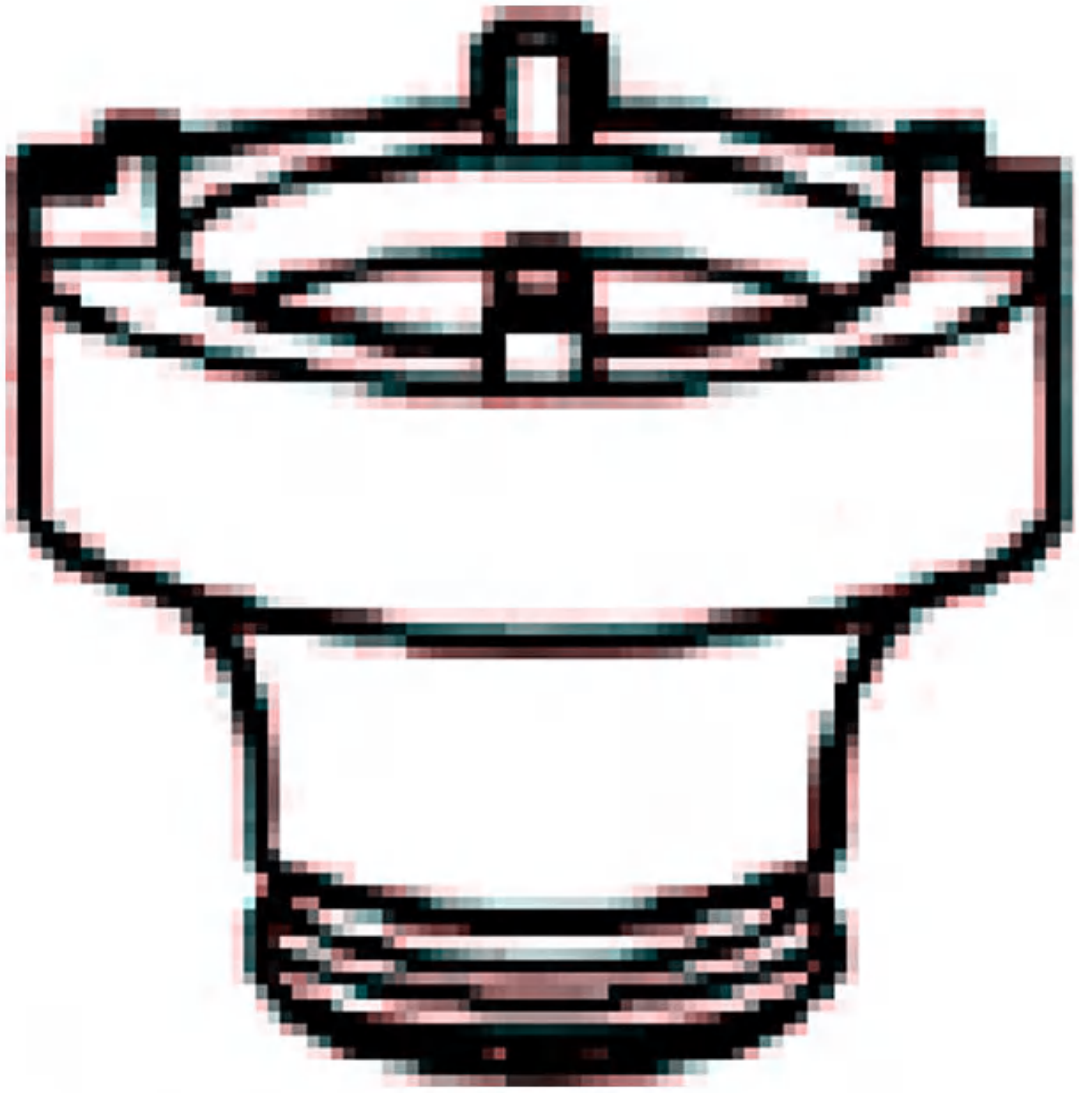

Fig. 70: Identifying Service And Repair Tools - Tool # 24 1 170
Courtesy of BMW OF NORTH AMERICA, INC.

Tool # 24 4 110

For loosening and tightening slotted nut on output drive flange. Used on 5HP24 and 5HP30. Use in conjunction with tool #24 1 220.

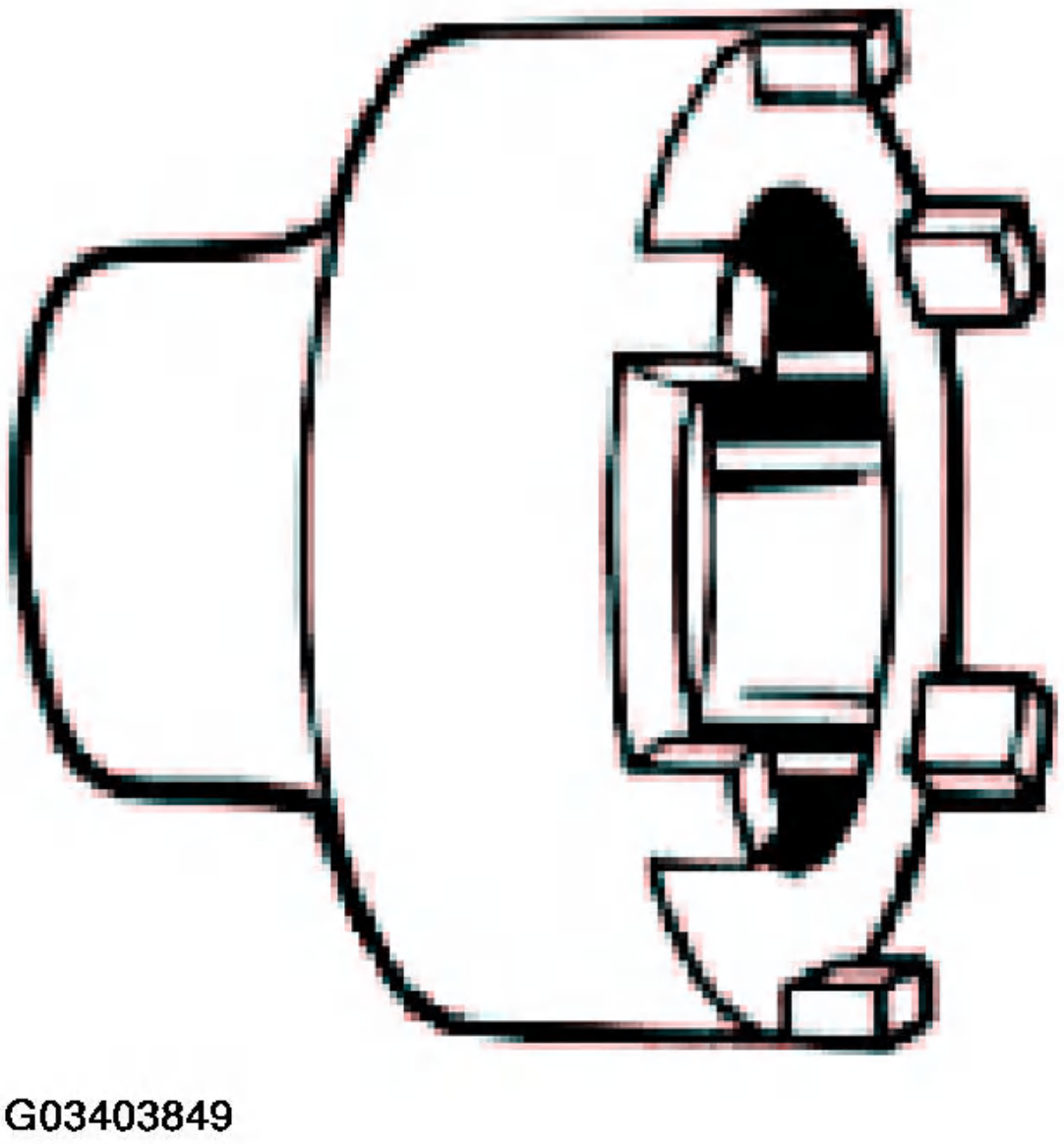

Fig. 71: Identifying Service And Repair Tools - Tool # 24 4 110
Courtesy of BMW OF NORTH AMERICA, INC.

Tool # 24 1 220

Take up support for drive flange. Used when tightening of loosening slotted nut on output drive flange. Used with tool numbers 24 4 170 and 24 4 110.

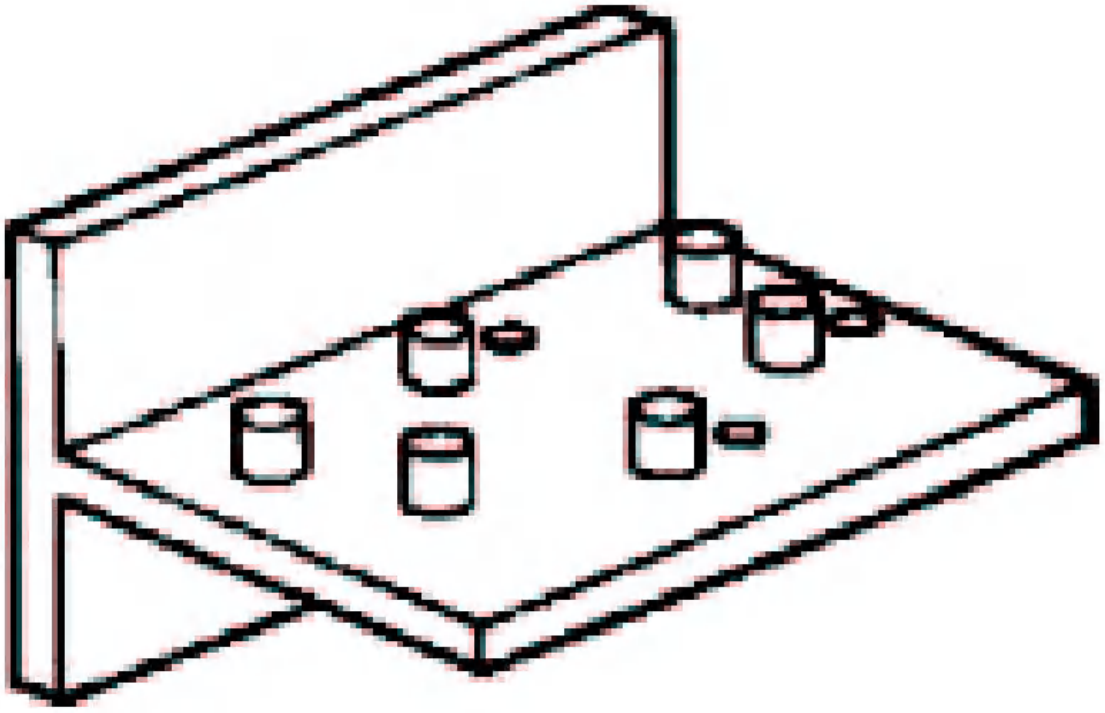

Fig. 72: Identifying Service And Repair Tools - Tool # 24 1 220
Courtesy of BMW OF NORTH AMERICA, INC.

Tool # 24 2 380

34 mm Socket used to tighten and loosen nut on output drive flange. Used with special tool 23 0 020. For GA6HP26Z transmission.

G03403851

Fig. 73: Identifying Service And Repair Tools - Tool # 24 2 380
Courtesy of BMW OF NORTH AMERICA, INC.

Tool # 24 2 310

Set of tools used to re-seal intermediate plate. Used on A4S310R and A4S270R. Tool Set Consists of:

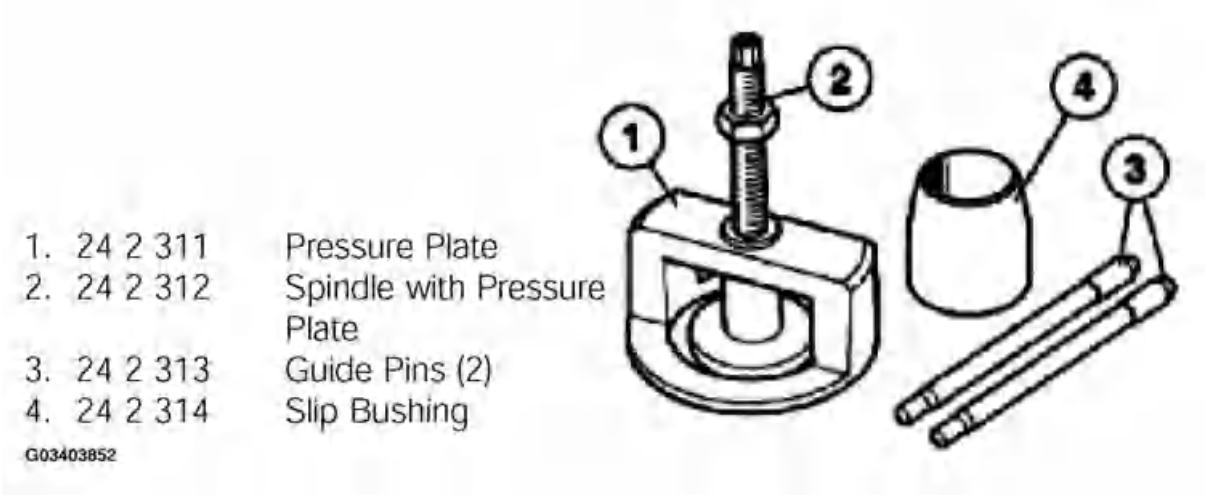

Fig. 74: Identifying Service And Repair Tools - Tool # 24 2 310
Courtesy of BMW OF NORTH AMERICA, INC.

Tool # 24 1 200

Used to prevent damage to rotary shift shaft seal when fitting new seal on shift shaft. Used on A5S310Z (5HP18).

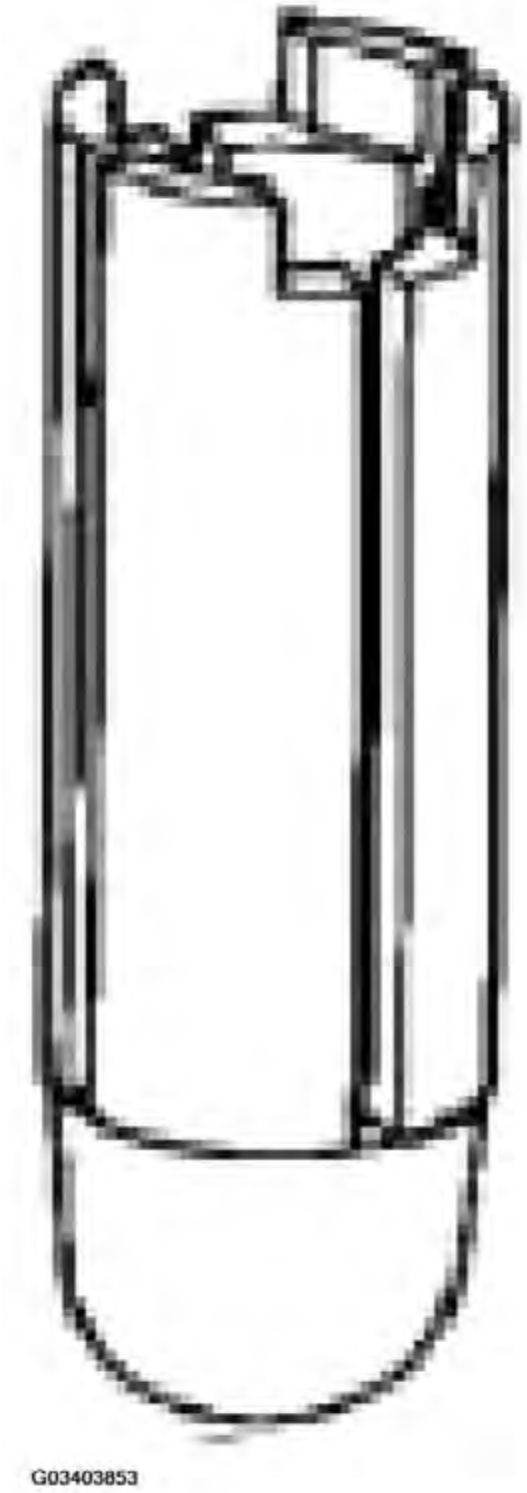

Fig. 75: Identifying Service And Repair Tools - Tool # 24 1 200
Courtesy of BMW OF NORTH AMERICA, INC.

Article GUID: A00232781

REMOVAL & INSTALLATION

NOTE: After completion of work, check transmission oil level. See SERVICING - M/T article.

NOTE: On vehicles with ASC+T, the throttle assembly and/or the expansion tank on the master brake cylinder can become damaged when the transmission is lowered.

Remove throttle assembly (ASC+T). See THROTTLE BODY.

Disconnect battery. See DISCONNECTING AND CONNECTING BATTERY.

Remove exhaust system. See REMOVING AND INSTALLING COMPLETE EXHAUST SYSTEM (Z3 M54).

Unflange propeller shaft from transmission and tie up to one side. See DRIVE SHAFT .

Remove retainer (1). See Fig. 1 . Withdraw selector rod (3) from selector linkage joint and remove shims (2). Upon installation, apply thin coat of grease to selector rod.

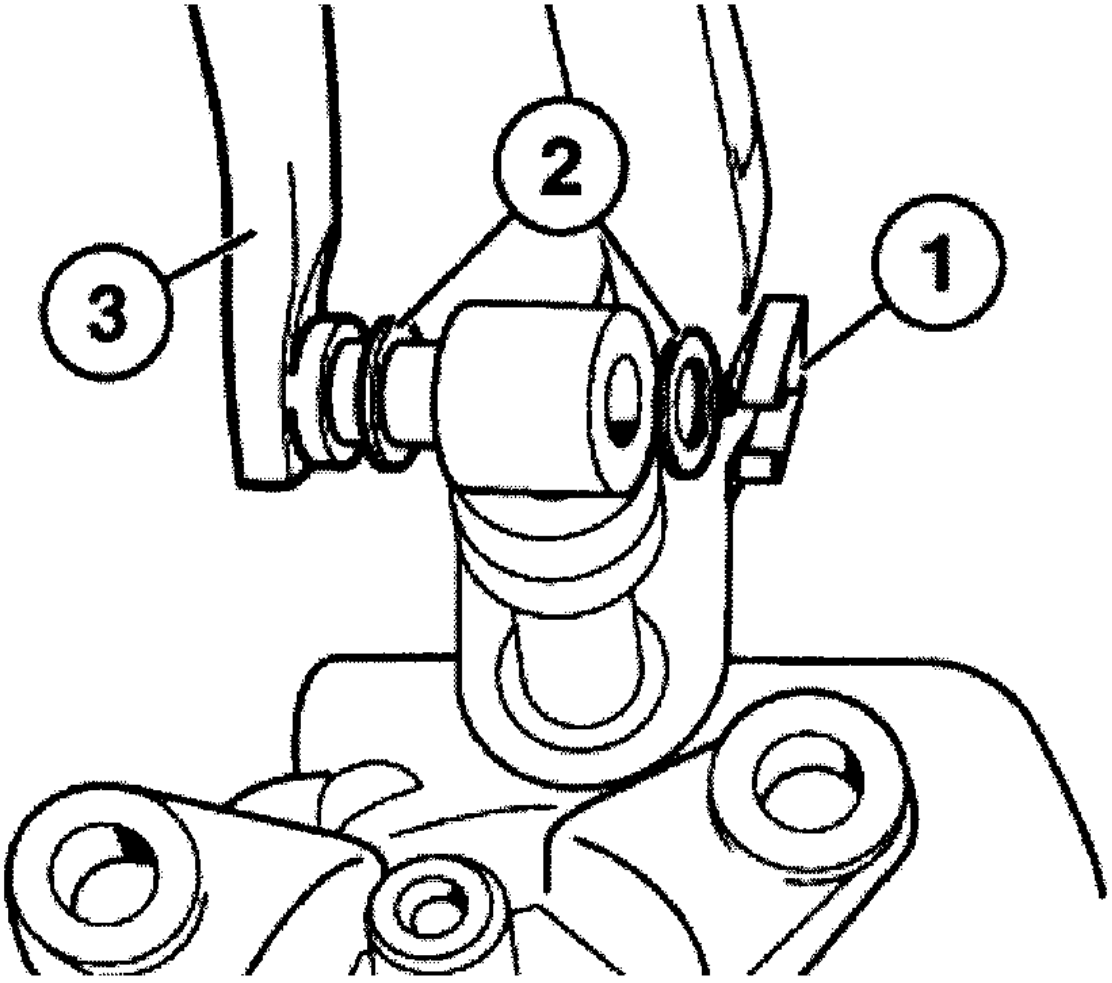

G00382293

Fig. 1: Withdrawing Selector Rod From Selector Linkage
Courtesy of BMW OF NORTH AMERICA, INC.

CAUTION: Relieve clutch slave cylinder slowly, as otherwise air will be sucked in via the sealing sleeve.

Release nuts, remove clutch slave cylinder. See Fig. 2 . Pressure line remains connected. Upon installation, tighten nuts to specification. See TORQUE SPECIFICATIONS .

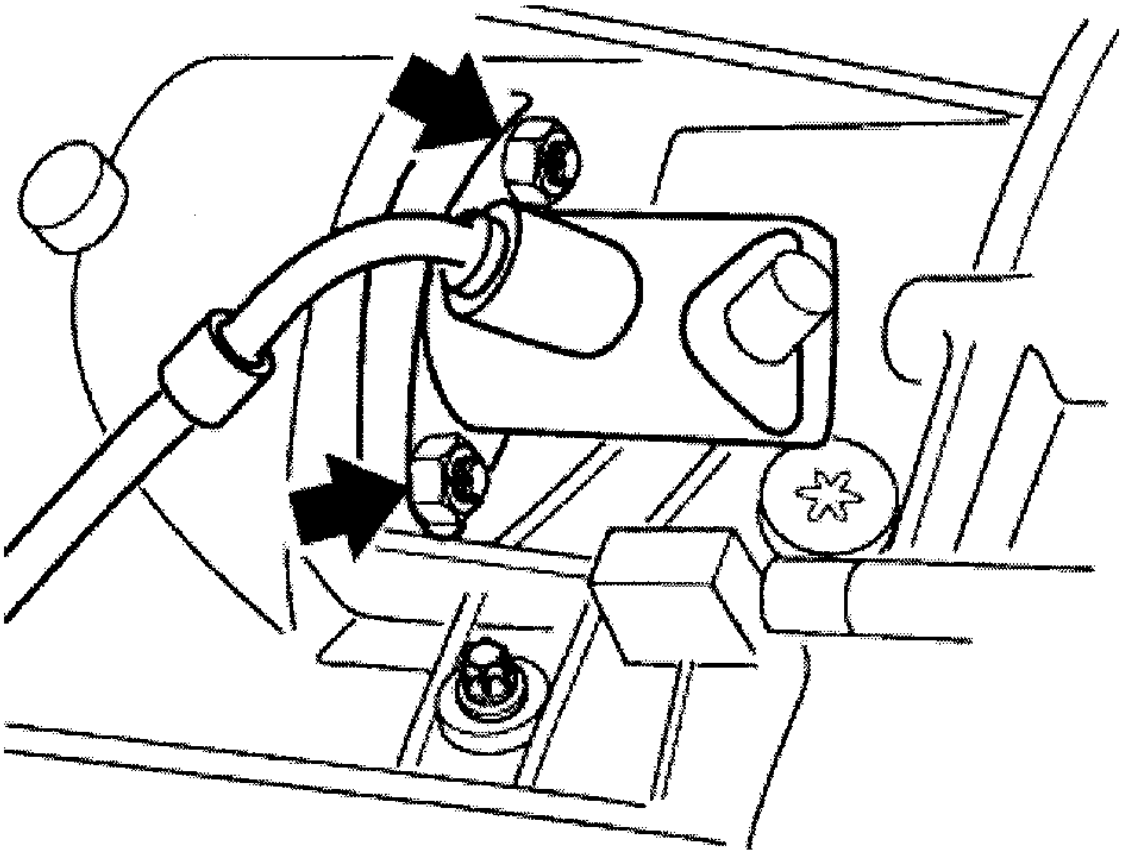

G00382294

Fig. 2: Removing Clutch Slave Cylinder
Courtesy of BMW OF NORTH AMERICA, INC.

Pull wires off reverse-gear switch. Detach oxygen-sensor plug from bracket. See Fig. 3 .

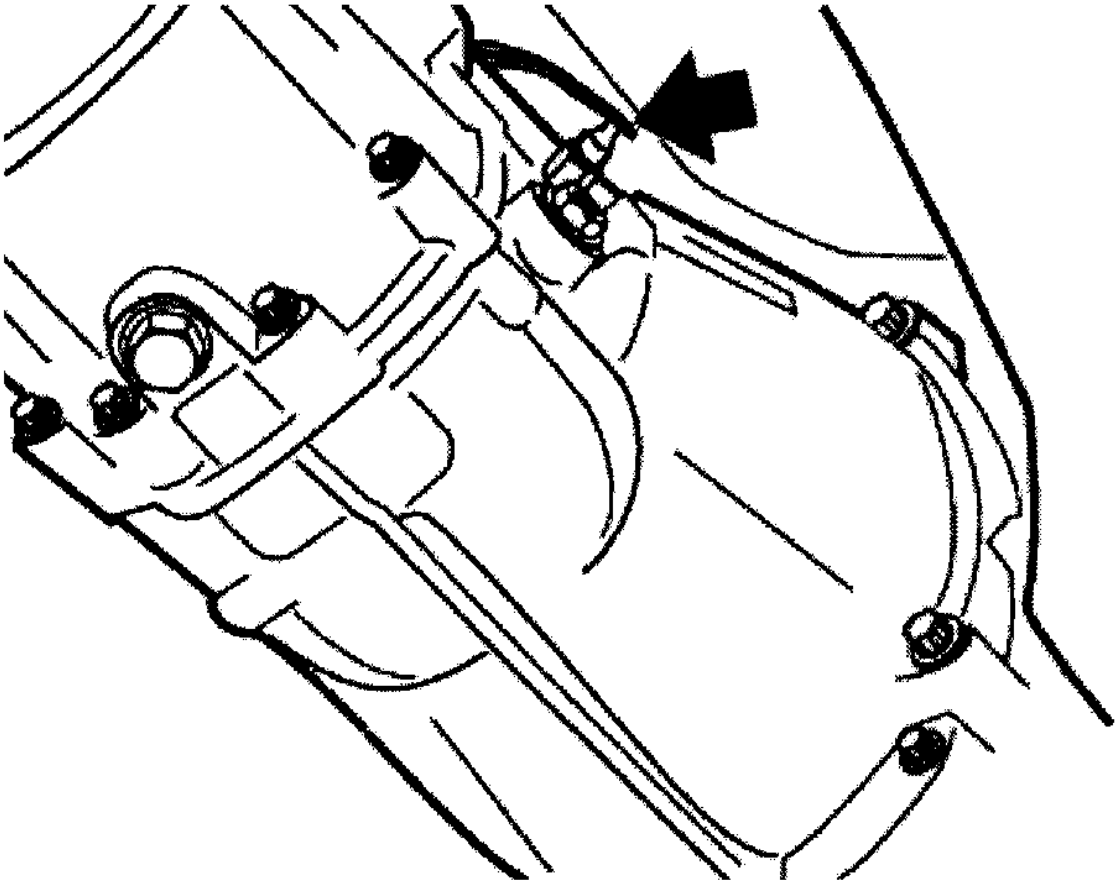

G00382290

Fig. 3: Locating Reverse-Gear Switch Plug
Courtesy of BMW OF NORTH AMERICA, INC.

Remove cross tube. See Fig. 4 .

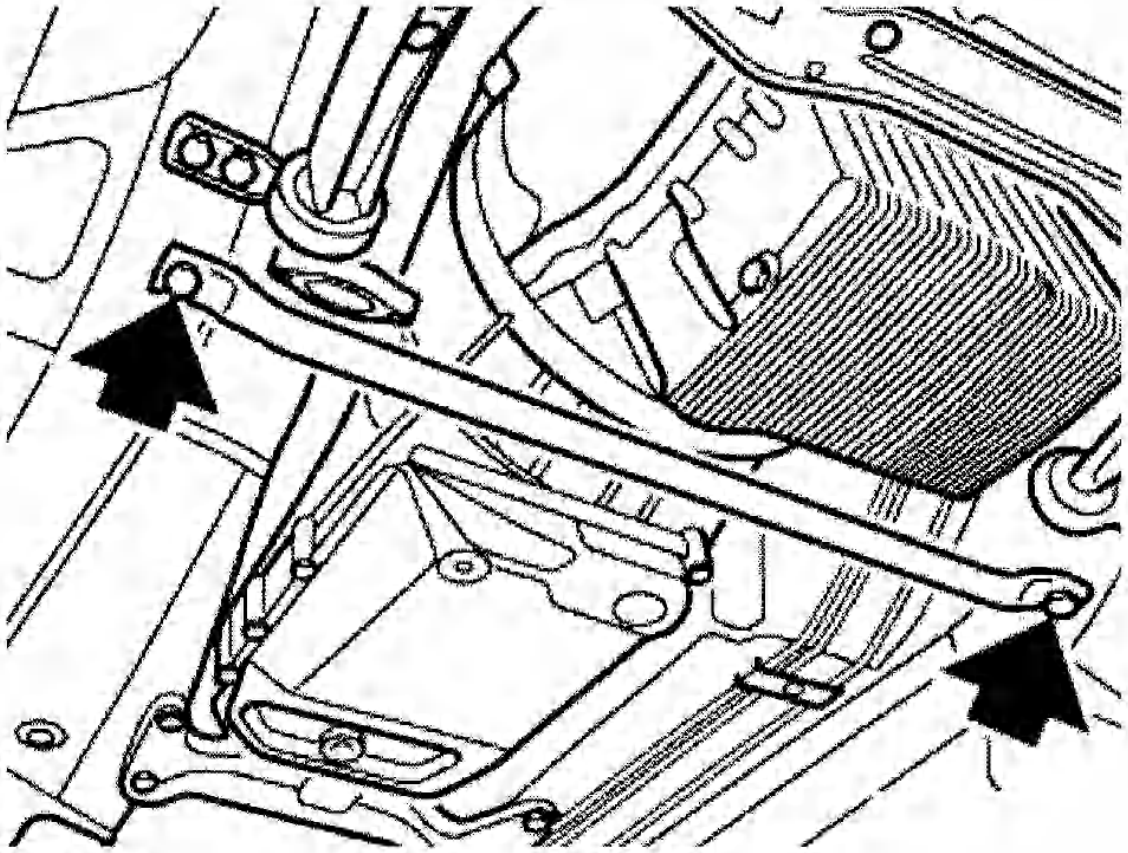

Fig. 4: Removing Cross Tube
Courtesy of BMW OF NORTH AMERICA, INC.

Support transmission with a workshop hoist. See Fig. 5 . Unfasten screws and remove cross member with rubber mount. Lower workshop hoist. Upon installation, tighten screws to specification. See TORQUE SPECIFICATIONS .

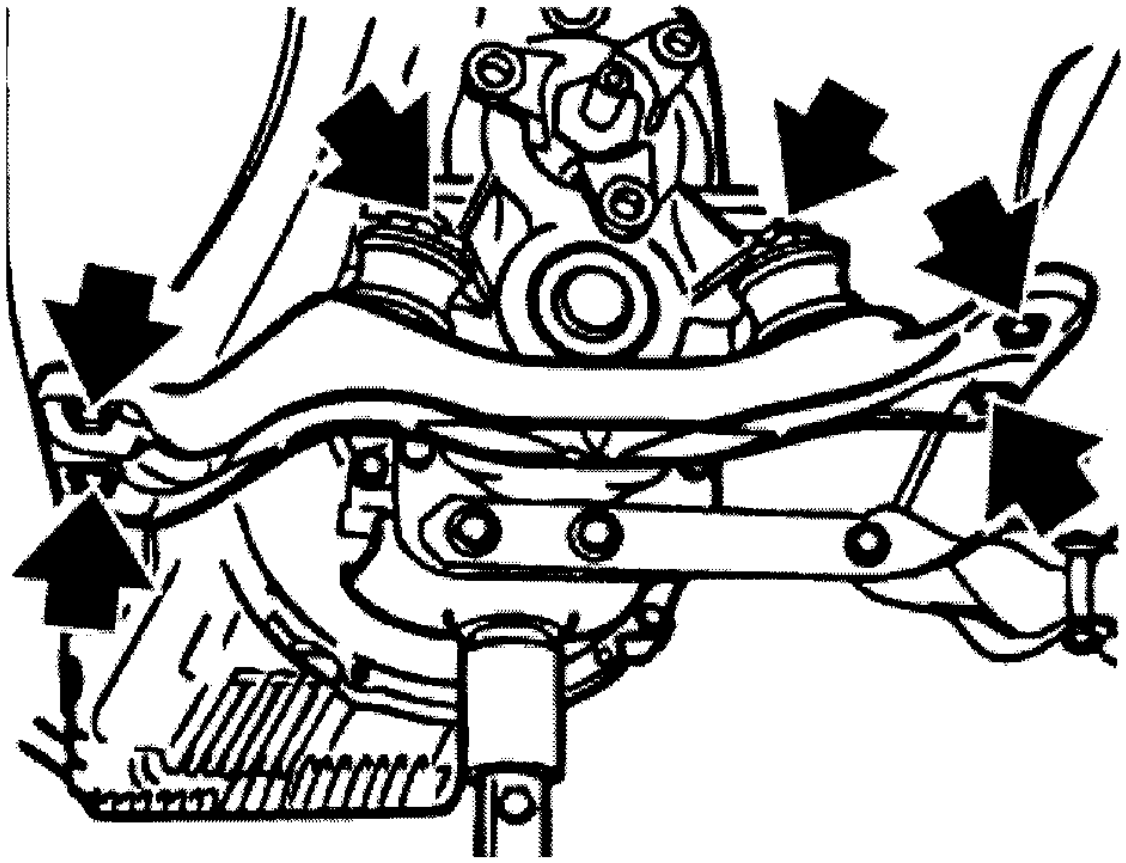

G00382296

Fig. 5: Removing Cross Member
Courtesy of BMW OF NORTH AMERICA, INC.

Use a screwdriver to lift out spring (1) from the lug (2) on the housing and swivel upwards. See Fig. 6 . Pull out shaft. Upon installation, apply thin coat of grease to bearing pin.

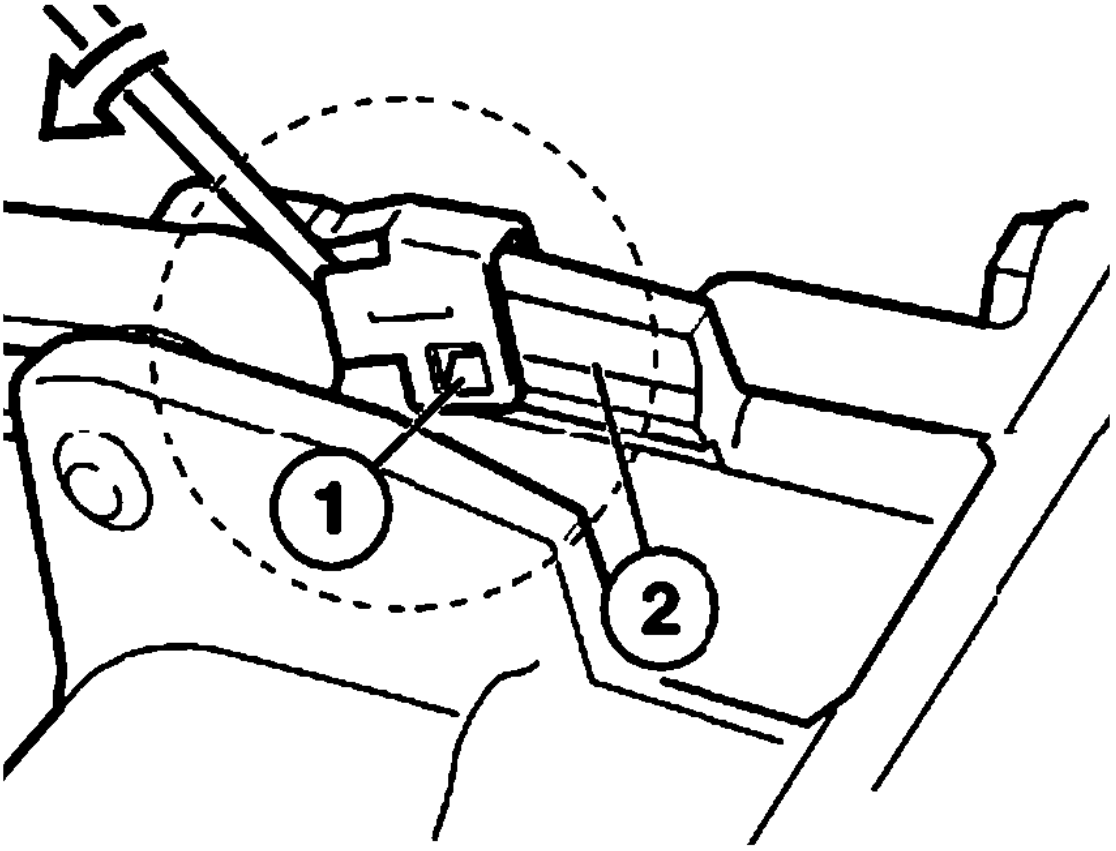

G00374668

Fig. 6: Levering Out Spring
Courtesy of BMW OF NORTH AMERICA, INC.

CAUTION: Do not allow transmission to hang on transmission input shaft when removing and installing, as the clutch disc will be deformed.

Support transmission with a workshop hoist. Unfasten screws. See Fig. 7 . Pull transmission downwards and remove. Upon installation, always fit screws with washers. Tighten screws to specification. See TORQUE SPECIFICATIONS .

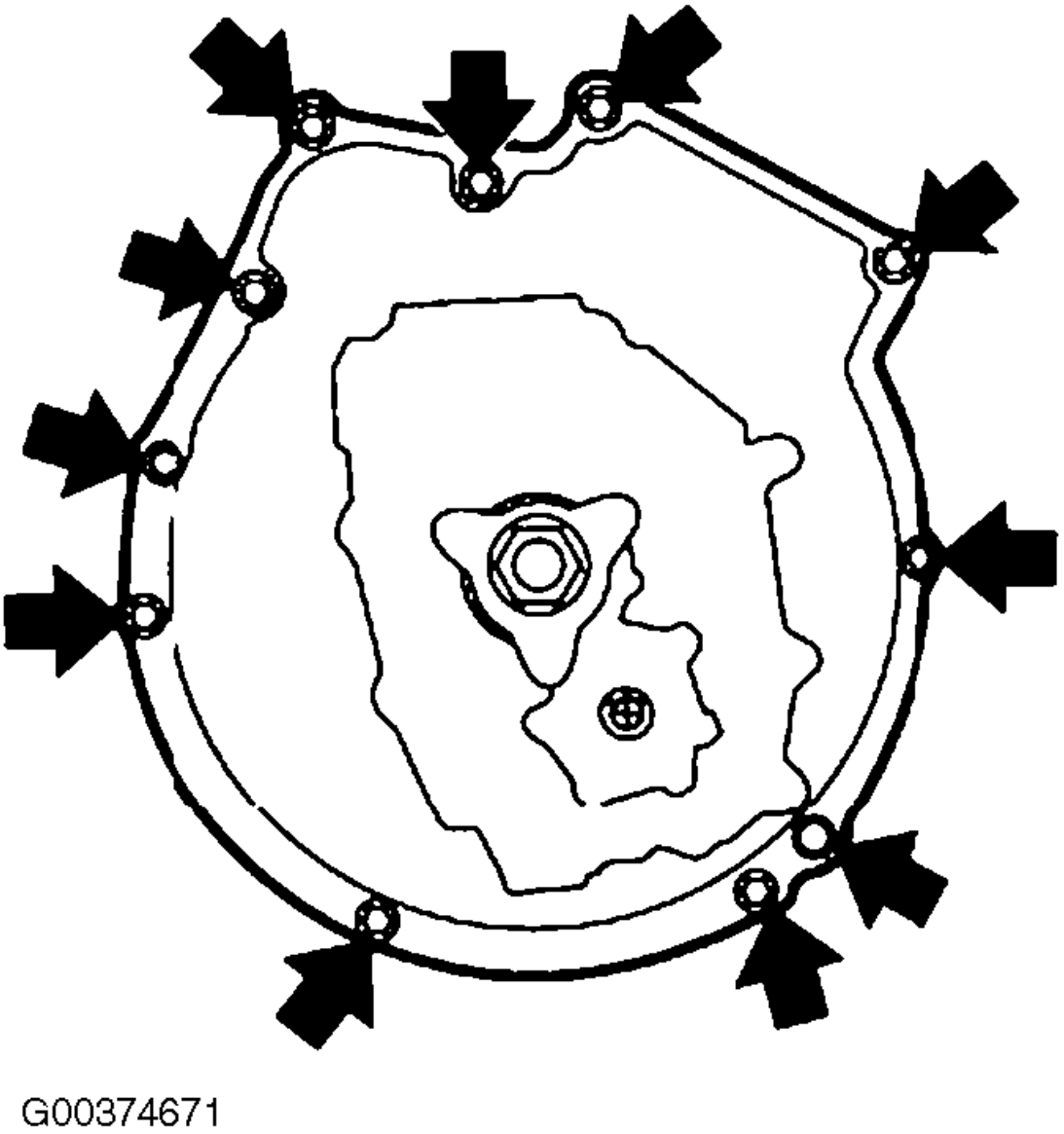

Fig. 7: Locating Transmission Mounting Screws
Courtesy of BMW OF NORTH AMERICA, INC.

Installation: pay attention to guide sleeves (1, 2), replace if necessary. See Fig. 8 . Ensure correct position of cover plate.

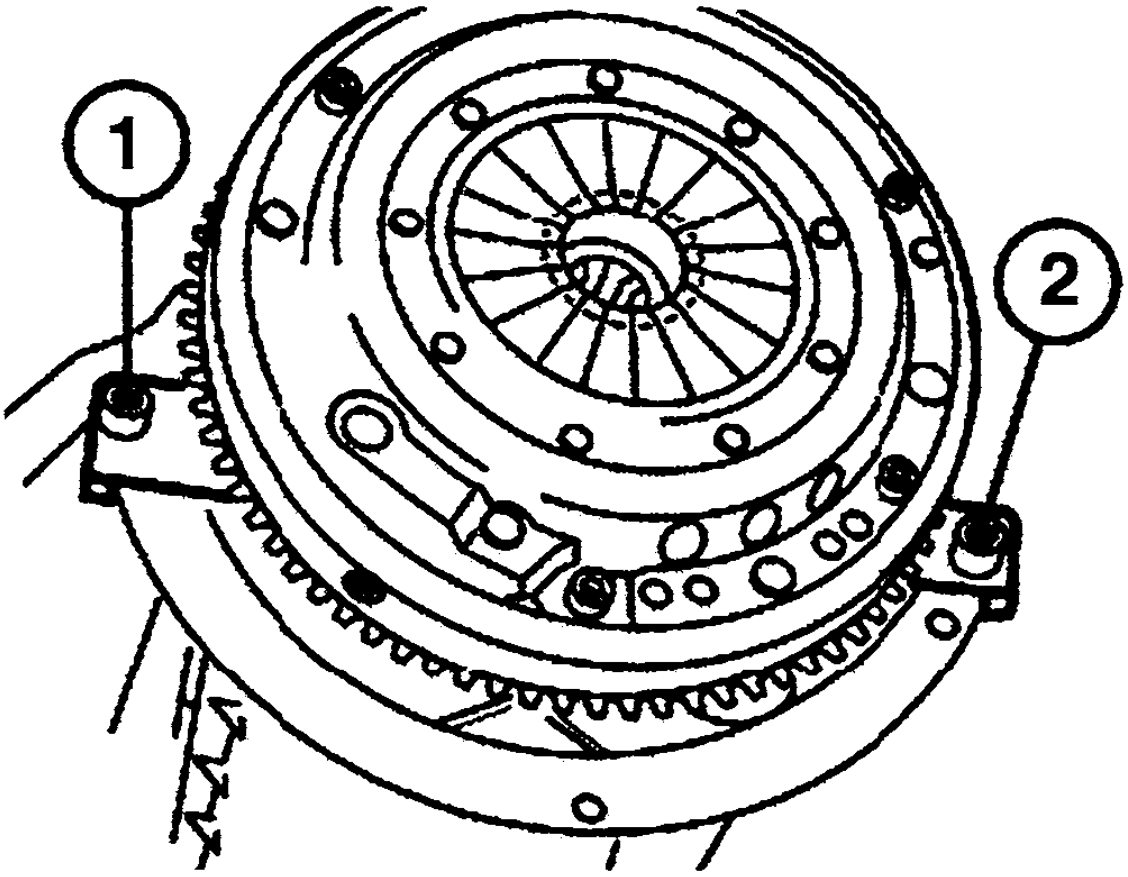

G00374647

Fig. 8: Checking Dowel Sleeves
Courtesy of BMW OF NORTH AMERICA, INC.

Installation: remove and clean release unit and release lever and grease appropriate points.

Installation: Check lubrication of transmission input shaft for sticky consistency. See Fig. 9 . Replace clutch disk if grease is sticky. Check clutch disk for friction rust in taper splines and replace if necessary. Mechanically remove old grease and lining abrasion from the taper splines of the clutch disk (with a cloth). Clean and grease taper grooves and guide pin of transmission input shaft.

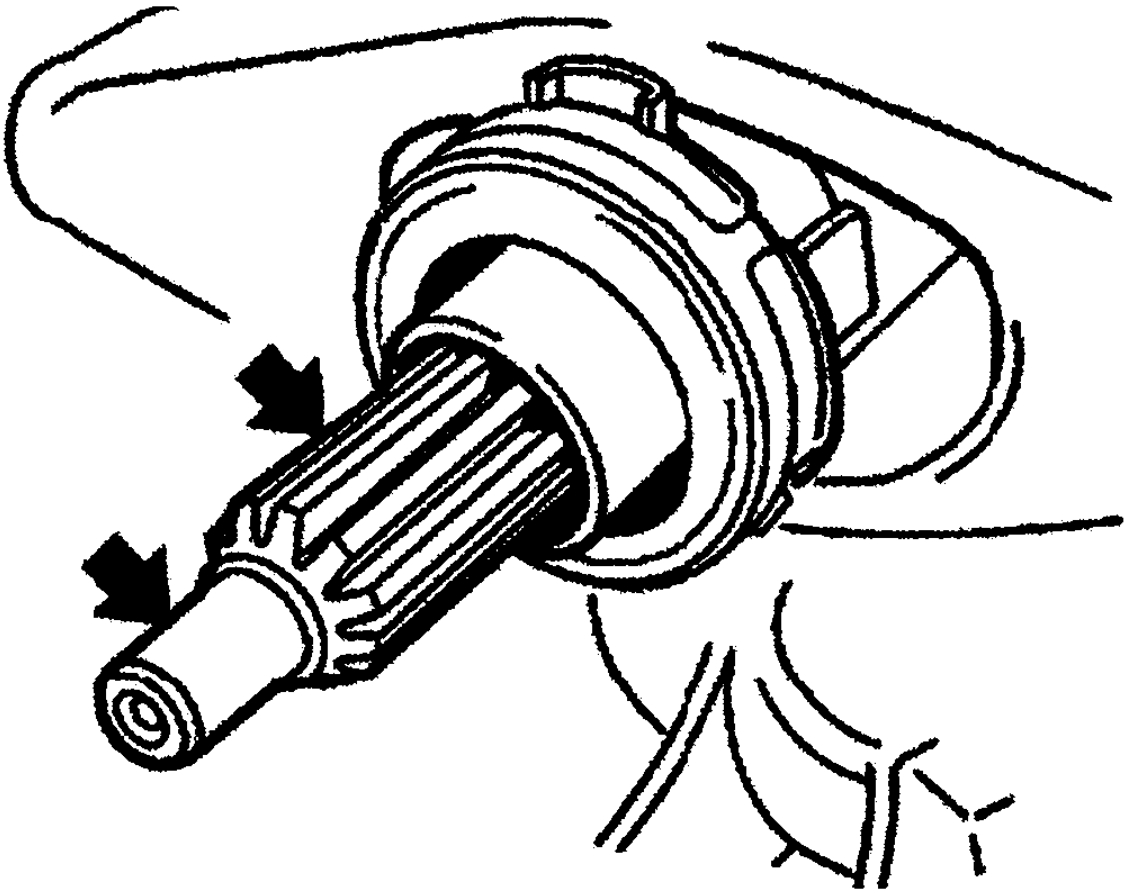

G00374648

Fig. 9: Checking Lubrication Of Transmission Input Shaft
Courtesy of BMW OF NORTH AMERICA, INC.

To complete installation, reverse removal procedure.

TORQUE SPECIFICATIONS

TORQUE SPECIFICATIONS

Application	Ft. Lbs. (N.m)
Clutch Slave Cylinder-To-Clutch Housing/Transmission Case	16 (22)
Transmission Cross Member-To-Body	
M10 Thread	31 (42)
M8 Thread	(21)
Transmission Mounts (Rubber)-To-Body	31 (42)
Transmission-To-Engine	
Hex Screws	
M8 Thread	18 (25)
M10 Thread	36 (49)
M12 Thread	55 (74)
Screw With Torx Head	
M8 Thread	16 (22)
M10 Thread	32 (43)
M12 Thread	53 (72)
	INCH Lbs. (N.m)

Transmission-To-Engine M6 Thread	80 (9)

Article GUID: A00171086

APPLICATION

MANUAL TRANSMISSION APPLICATION

Application	Transmission Model
M Coupe & M Roadster (E36/7)	
2001-02	ZF Type C
M3 (E46)	
2001-05	Getrag Type D Or Getrag Type D With SMG
M5 (E39)	
2001-03	S6S-420G
X3 (E83)	
2004-05	ZF G56X337BZ
X5 (E53)	
3.0L (2001-05)	ZF Type H
Z3 (E36/7)	
2001-02	ZF G56X37BZ
Z4 (E85)	
2003-05 (2.5)	Getrag Type B+
2003-05 (3.0L)	ZF Type H & ZF Type H With SMG
Z8 (E52)	
2001-03	Getrag
3-Series (E46)	
325i (4/01 To 2005), 330 & 330Ci (6/00 To 2005) & 325i & 325Ci (9/00 To 2005)	S5D-280Z Or ZF Type H
330xi (6/00 To 2005)	S5D-280Z Or ZF Type H
5-Series (E39)	
525i & 530i (3/01 To 2003)	S5D-280Z
540i (1/97 To 2003)	S6S-420G
5-Series (E60)	
525i, 530i & 545i (8/03 To 2005)	ZF Type H & ZF Type G
6-Series (E63)	
645Ci (2004-05)	ZF Type G

LUBRICATION

SERVICE INTERVALS

Inspect fluid level when vehicle is serviced. DO NOT drain fluid, transmission has lifetime fluid except for the following exceptions:

- M3 - Change oil at 1200 mile service and each Inspection II.
- M5 - Change oil at 1200 mile service, then fill with lifetime oil.

CHECKING FLUID LEVEL

Check lubricant at fill hole. Lubricant should be at bottom of filler plug hole.

RECOMMENDED FLUID

For model years 1998-2003, all manual transmissions are filled with Esso/Exxon MTF-LT-1 lifetime fluid. A Yellow label with the letters MTF-LT-1 is located next to the oil filler plug. Except for models specified under SERVICE INTERVALS, no oil change is required for the service life of the transmission.

From model year 2004, some manual transmissions are filled with Castrol MTF-LT-2 lifetime fluid. This fluid has the same properties as the MTF-LT-1 fluid. The MTF-LT-1 fluid may be mixed or substituted for the MTF-LT-2 manual transmission fluid.

NOTE: The following does not apply to transmissions filled with lifetime fluid.

Cold Shift Effort

Transmission cold shift effort is reduced by replacing the original oil (SAE 80 or Mobil SHC 630) with a reputable brand single-grade HD engine mineral oil of API-SE standards (SAE 20, SAE 30, or SAE 40). Thinner oils run the risk of increased gear noise. A further reduction in shift effort can be obtained by using ATF , but gear noise will be more noticeable compared to single-grade engine mineral oils. For summer operation it is recommended that ATF or engjne oil be drained and replaced by the original lubricant, either SAE 80 or Mobil SHC 630 transmission fluid.

FLUID CAPACITIES

Fluid capacity is approximately 1.4 qts. (1.3L). Transmission should be filled to bottom of filler plug hole.

ADJUSTMENTS

GEARSHIFT LINKAGE

No external adjustment is necessary.

TORQUE SPECIFICATIONS

TORQUE SPECIFICATIONS

Application	Ft. Lbs. (N.m)
Drain & Fill Plug (All Models)	37 (50)

Article GUID: A00169078

Back To Article

1.0 GENERAL INFORMATION ON AUTOMATIC TRANSMISSION FLUIDS

Automatic Transmission Fluid was developed especially for automatic transmissions. It requires additives which are carefully matched with each other, a high viscosity index and a solidification point below -40Â °F/-40Â°C.

Friction behavior of Automatic Transmission Fluid in plate-type clutches under very different operating conditions is extremely important. Other important factors are:

- Wear Protection
- Oil Film Shear Resistance
- Adhesive Property
- Oxidation Resistance
- Corrosion Inhibition
- Sludge Prevention
- Temperature-Dependent Viscosity Changes
- Compatibility With Sealing Materials

2.0 OIL ADDITIVES

Automatic transmissions are designed so that oil additives are not necessary. BMW disapproves the use of any oil additives and cannot accept the liability for any consequential damage which results from using oil additives.

3.0 APPROVED AUTOMATIC TRANSMISSION FLUIDS FOR INITIAL FILLINGS AND CORRECTING FLUID LEVELS

3.1 GM TRANSMISSIONS

USE OF ANY OTHER OIL WILL CAUSE A NON WARRANTABLE TRANSMISSION FAILURE

*Transmission identification plate can be utilized to determine proper transmission fitted in vehicle

A4S 270R (THM-R1W)

E36

318i/is/iC/ti from 1996 to 1999 production

323i/is/iC from 1998 to 1999 production

328i/is/iC from 1996 to 1998 production

Z3 1.9 from 1996 to 1999 production

Z3 2.3/2.8 from 1997 to 2000 production

All reputable brand name Automatic Transmission Fluids of the DexronÂ® III formulation.

E39

528i/iT from1997-1999 production

All reputable brand name Automatic Transmission Fluids of the DexronÂ® III formulation.

A4S 310R (THM-R1)

E34

525i from 1990 to 1995 production

All reputable brand name Automatic Transmission Fluids of the DexronÂ® III formulation.

E36

318i/is/iC/ti from 1992 to 1995 production

325i/is/iC from 1992 to 1995 production

All reputable brand name Automatic Transmission Fluids of the DexronÂ® III formulation.

A5S 360R (GM5)

E46

323i/Ci/Cic from 6/98 to 3/00 production

323iT from 1//00 to 3/01 to production

328i/Ci/Cic from 6/98 to 3/01 production

The transmission oil pan will be labeled with either Texaco ETL - 7045 or DexronÂ® III, please fill or top off with the proper fluid only. Do not mix Texaco ETL - 7045 and DexronÂ® III fluids.

See S.I. Bulletin B 24 01 98.

A5S 390R (GM 5)

E46

330xi from 6/00 production to present

325xiT from 9/00 production to present

E53

X5 3.0 from 8/03 production to present

E83

X3 2.5, 3.0 from 8/03 production to present

The transmission oil pan will be labeled with either Texaco ETL - 7045 or DexronÂ® III, please fill or top off with the proper fluid only. Do not mix Texaco ETL - 7045 and DexronÂ® III fluids.

See S.I. Bulletin B 24 01 98.

3.2 ZF TRANSMISSIONS

USE OF ANY OTHER OIL WILL CAUSE A NON WARRANTABLE TRANSMISSION FAILURE

*Transmission identification plate can be utilized to determine proper transmission fitted in vehicle

ZF 3HP22, 4HP22, 4HP24

Utilizes Castrol TQ or Texaco Havoline Automatic Transmission Fluids of the DexronÂ® III formulation.

Never mix any other oil with this transmission fluid when doing repairs or topping up.

A5S 310Z (5HP18)

E36

M3 from 1995 to 1999 production

Utilizes a lifetime filling of synthetic transmission fluid, ESSO LT 71141, no subsequent transmission fluid changes are necessary. Never mix any other oil with this transmission fluid when doing repairs or topping up.

ESSO LT 71141, BMW Part No. 83 22 9 407 807.

See S.I. Bulletin B 24 01 98.

E34

530i/iT from 1993 through 1995 production

Utilizes Castrol TQ or Texaco Havoline Automatic Transmission Fluids of the DexronÂ® III formulation. Never mix any other oil with this transmission fluid when doing repairs or topping up.

A5S325Z (5HP19)

E46

323i/Ci/Cic from 3/00 to 8/00 production

325iT from 4/01production to present

330i/Ci/Cic from 6/00 production to present

325i/Ci/Cic from 9/00 production to present

No subsequent transmission fluid changes are necessary. Never mix any other oil with this transmission fluid when doing repairs or topping up.

ESSO LT 71141, BMW Part No. 83 22 9 407 807.

See S.I. Bulletin B 24 01 98.

E39

525i/iT from 3/01 production to present

530i from 3/01 production to present

No subsequent transmission fluid changes are necessary. Never mix any other oil with this transmission fluid when doing repairs or topping up.

ESSO LT 71141, BMW Part No. 83 22 9 407 807.

See S.I. Bulletin B 24 01 98.

E83

X3 All Models

No subsequent transmission fluid changes are necessary. Never mix any other oil with this transmission fluid when doing repairs or topping up.

ESSO LT 71141, BMW Part No. 83 22 9 407 807.

See S.I. Bulletin B 24 01 98.

E85

Z4 3.0 from 9/02 production to present

Z4 2.5 from 9/02 production to present

No subsequent transmission fluid changes are necessary. Never mix any other oil with this transmission fluid when doing repairs or topping up.

ESSO LT 71141, BMW Part No. 83 22 9 407 807.

See S.I. Bulletin B 24 01 98.

A5S 440Z (5HP24)

E31

840Ci from 9/96 to the present

No subsequent transmission fluid changes are necessary. Never mix any other oil with this transmission fluid when doing repairs or topping up.

ESSO LT 71141, BMW Part No. 83 22 9 407 807.

See S.I. Bulletin B 24 01 98.

E38

740i/iL from 1/97 production to present

No subsequent transmission fluid changes are necessary. Never mix any other oil with this transmission fluid when doing repairs or topping up.

ESSO LT 71141, BMW Part No. 83 22 9 407 807.

See S.I. Bulletin B 24 01 98.

E39

540i/iT from 1/97 production to present

No subsequent transmission fluid changes are necessary. Never mix any other oil with this transmission fluid when doing repairs or topping up.

ESSO LT 711 41, BMW Part No. 83 22 9 407 807.

See S.I. Bulletin B 24 01 98.

E53

X5 4.4i from 9/99 production to present

X5 4.6i from 9/01 production to present

No subsequent transmission fluid changes are necessary. Never mix any other oil with this transmission fluid when doing repairs or topping up.

ESSO LT 711 41, BMW Part No. 83 22 9 407 807.

See S.I. Bulletin B 24 01 98.

A5S 560Z (5HP30)

E31

840Ci equipped with M60 engine

Utilizes a lifetime fill of transmission fluid, no subsequent oil changes are necessary on this transmission. If transmission fluid is required for repair purposes, use only the oil approved for this transmission. It is not permitted to mix this oil with other grades of transmission fluid.

Shell LA 2634, BMW Part No. 83 22 9 407 765.

See S.I. Bulletin B 24 01 98.

E31

840Ci equipped with M62 engine

850Ci equipped with M73 Engine

Utilizes lifetime fill of transmission fluid, no subsequent transmission fluid changes are necessary.

Never mix any other oil with this transmission fluid when doing repairs or topping up.

ESSO LT 711 41, BMW Part No. 83 22 9 407 807.

See S.I. Bulletin B 24 01 98.

E32

740i/iL from 1993 through 1994 production

Utilizes a lifetime fill of transmission fluid, no subsequent oil changes are necessary on this transmission. If transmission fluid is required for repair purposes, use only the oil approved for this transmission. It is not permitted to mix this oil with other grades of transmission fluid.

Shell LA 2634, BMW Part No. 83 22 9 407 765.

See S.I. Bulletin B 24 01 98.

E34

540i/iT from 1993 through 1995 production

Utilizes a lifetime fill of transmission fluid, no subsequent oil changes are necessary on this transmission. If transmission fluid is required for repair purposes, use only the oil approved for this transmission. It is not permitted to mix this oil with other grades of transmission fluid.

Shell LA 2634, BMW Part No. 83 22 9 407 765.

See S.I. Bulletin B 24 01 98.

Effective with model year 1995 and later:

E31

850Ci from 10/94 to 6/97 production

840Ci from 12/95 to 8/96 production

Utilizes lifetime fill of transmission fluid, no subsequent transmission fluid changes are necessary.

Never mix any other oil with this transmission fluid when doing repairs or topping up.

ESSO LT 711 41, BMW Part No. 83 22 9 407 807.

See S.I. Bulletin B 24 01 98.

E38

750iL from 1/95 production to present

740i/iL from 7/94 to 12/96 production

Utilizes lifetime fill of transmission fluid, no subsequent transmission fluid changes are necessary.

Never mix any other oil with this transmission fluid when doing repairs or topping up.

ESSO LT 711 41, BMW Part No. 83 22 9 407 807.

See S.I. Bulletin B 24 01 98.

E39

540i/iT from 3/96 to 12/96 production

Utilizes lifetime fill of transmission fluid, no subsequent transmission fluid changes are necessary.

Never mix any other oil with this transmission fluid when doing repairs or topping up.

ESSO LT 711 41, BMW Part No. 83 22 9 407 807.

See S.I. Bulletin B 24 01 98.

GA6HP19Z

E90

325i, 330i All

The transmission fluid has a Condition Based Service interval of approximately 100,000 miles; please refer to S.I. B00 07 02 for further information. Never mix any other oil with this transmission fluid when doing repairs or topping up.

Shell M-1375.4, BMW Part No. 83 22 0 142 516.

GA6HP26Z

E60/61

525i, 530i from 8/03 production to present

The transmission fluid has a Condition Based Service interval of approximately 100,000 miles; please refer to S.I. B00 07 02 for further information. Never mix any other oil with this transmission fluid when doing repairs or topping up.

Shell M-1375.4, BMW Part No. 83 22 0 142 516.

GA6HP26Z

E60

545i from 8/03 production to present

550i All

The transmission fluid has a Condition Based Service interval of approximately 100,000 miles; please refer to S.I. B00 07 02 for further information. Never mix any other oil with this transmission fluid when doing repairs or topping up.

Shell M-1375.4, BMW Part No. 83 22 0 142 516.

E63, E64

645Ci, 645CiC from start of production to present

650Ci, 650CiC All

The transmission fluid has a Condition Based Service interval of approximately 100,000 miles; please refer to S.I. B00 07 02 for further information. Never mix any other oil with this transmission fluid when doing repairs or topping up.

Shell M-1375.4, BMW Part No. 83 22 0 142 516.

E65

745i from 11/2001 production to present

750i All

The transmission fluid has a Condition Based Service interval of approximately 100,000 miles; please refer to S.I. B00 07 02 for further information. Never mix any other oil with this transmission fluid when doing repairs or topping up.

Shell M-1375.4, BMW Part No. 83 22 0 142 516.

E66

745Li from 3/2002 production to present

750Li All

760Li from 9/2002 production to present

The transmission fluid has a Condition Based Service interval of approximately 100,000 miles; please refer to S.I. Bulletin B 00 07 02 for further information. Never mix any other oil with this transmission fluid when doing repairs or topping up.

Shell M-1375.4, BMW Part No. 83 22 0 142 516.

4.0 CHECKING TRANSMISSION FLUID LEVEL

Due to the substantial expansion of transmission fluid when heated it is only possible to measure the oil level correctly at specified oil temperatures (after driving a distance of about 12 mi./20 km).

ZF 3HP AND 4HP

Due to the substantial expansion of transmission fluid when heated it is only possible to measure the oil level correctly at specified oil temperatures (after driving a distance of about 12 mi./20 km).

See S.I. Bulletins B 24 02 85 (1027) and B 24 01 98.

A5S 560Z, A5S440Z, GA6HP19Z, GA6HP26Z, GA6HP26Z, A5S325Z, A5S 310Z

All 5 and 6 speed transmissions require the fluid to be checked when fluid temperature is between 30-50Â° Celsius using DIS Plus or GT1. Do not check fluid level after temperature has exceeded 50Â° Celsius.

See S.I. Bulletin B 24 01 98.

A4S 270R, A4S 310R AND A5S 360R

For vehicles with or without a dipstick See S.I. Bulletin B 24 01 98.

5.0 TRANSMISSION FLUID CHANGE INTERVALS (IF APPLICABLE)

Please refer to applicable Service and Maintenance Checklist for each vehicle.

Article GUID: A00217930

Back To Article

Operating Fluids - Clutch - All Models

1.0 GENERAL INFORMATION

Brake fluid is used as an operating fluid for hydraulic clutch operation.

Refer to appropriate BRAKES article for complete details about brake fluid.

See S.I. Bulletin 21 01 93 (3789) of 5/93.

2.0 SMG: SEQUENTIAL MANUAL GEAR BOX

All models SMG Hydraulic Unit require the use of Pentosin CHF 11S fluid.

3.0 OTHER OPERATING FLUIDS

CLUTCH COMPONENT GREASE

Use UNIREX S2 (replaces Klueber Microlube GL 261) for the lubrication of splines on the transmission input shaft, lubricating groove of the clutch release bearing, piston rod sleeve, clutch master cylinder and front push rod of the clutch slave cylinder.

UNIREX S2 Grease BMW Part No. 83 23 9 416 138

See S.I. Bulletin 23 01 99 of 2/99.

As of 11/93 the clutch release bearings are available as a replacement part which have plastic sliding sleeves instead of aluminum. Such updated bearings should not be lubricated at all. This applies to all models with manual transmission except for 8 Series models.

See S.I. Bulletin 21 01 94 (3953) of 1/94.

Article GUID: A00217928

Back To Article

Operating Fluids - Gear Shift Mechanism - All Models

1.0 GENERAL INFORMATION

Components of the gear shift mechanism located outside of the transmission housings, such as ball cups, bearing bushings, gearshift joints, etc. may be lubricated with Polylub GLY 801 (BMW Part No. 81 22 9 407 647).

Article GUID: A00217931

Back To Article

Operating Fluids - Manual Transmission - All Models

1.0 GENERAL INFORMATION ON GEAR LUBRICANTS

Gear lubricants for manual transmissions must conform to the following requirements due to the different transmission designs with considerable variation in loads, temperature and speeds.

The qualities of a recommended gear lubricant are:

A. Load carrying capacity, i.e. high-pressure resistance.
B. Noise reduction.
C. Non-corrosive to various metals.
D. Non-foaming.
E. Non-separation of additives at operating temperatures.
F. Non-sludge forming.
G. Prevention of swelling, hardening and shrinking of seals.

These properties are already provided in manual transmission oil by:

- High-pressure additives.
- Corrosion inhibitors.
- Oxidation inhibitors (inhibitors which limit or prevent chemical reactions).
- Anti-foaming agents.

2.0 OIL ADDITIVES

BMW manual transmissions are designed so that they do not require aftermarket oil additives.

BMW disapproves the use of any oil additives and cannot accept the liability for any consequential damage that results from using oil additives.

3.0 MANUAL TRANSMISSION OIL REQUIREMENTS AND SPECIFICATIONS

A. All reputable brand mineral-based transmission oils of viscosity class SAE 80 according to specifications MIL-L-2105 or API GL-4 (no label on transmission bell housing).
B. Synthetic transmission fluid, Mobil SHC 630 (325e/528e without dual mass flywheel, produced before mid-1986). Manual transmissions which are filled with Mobil SHC 630 synthetic gear lube have a green label with the words "Special Oil" located next to the oil filter plug.

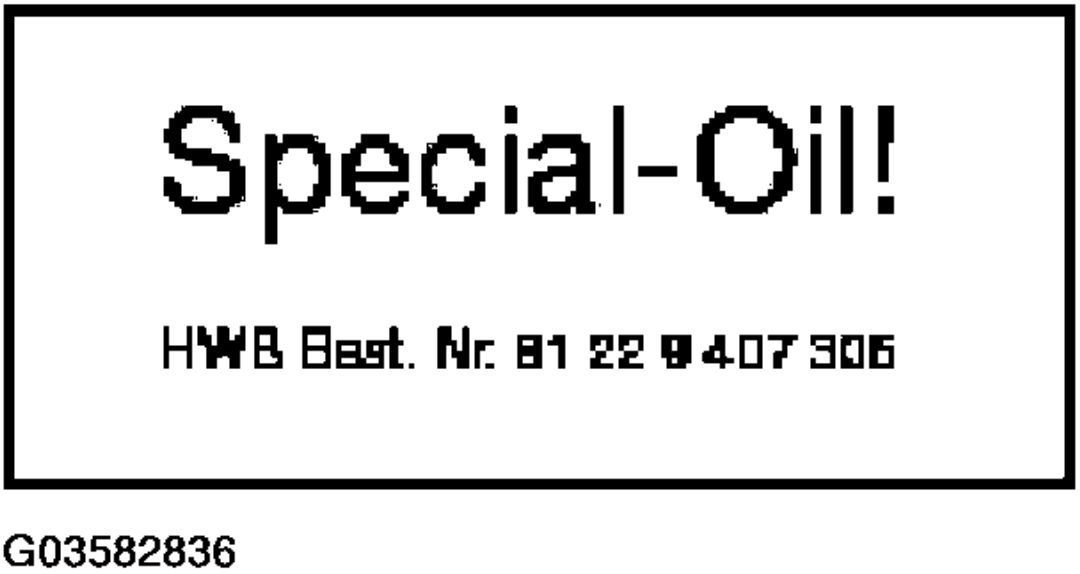

Fig. 1: Identifying Label For Oil Specification (Special Oil)
Courtesy of BMW OF NORTH AMERICA, INC.

NOTE: Mobil SHC 630 is available in 5-gallon pails or 55-gallon drums from:

Mobil Oil Corporation - Contact your local Mobil oil distributor.

Filling BMW transmissions with unapproved synthetic gear lubes could cause the following damage:

- Premature synchromesh ring wear
- Reduced service life of bearings
- Tooth profile damage
- Faster wear of selector forks
- Damage to radial shaft oil seals

Transmission gear clashing will eventually result.

NOTE: Do not use synthetic fluid Mobil SHC 630 in other vehicles. The transmission synchronizers of cars other than listed above are not compatible with synthetic fluid and premature wear will result.

NOTE: To reduce the physical effort required to change gear at low ambient temperatures, the following oils can be used in the transmission during the winter:

- Single-grade HD mineral engine oils SAE40, SAE30, SAE20
- In countries where the ambient temperatures are particularly low, ATF oils can also be used.

This has the disadvantage that the transmission tends to rattle or knock while in neutral at higher temperatures.

CAUTION: These transmissions must never be filled with synthetic engine oils or

multigrade engine oils, since these oils contain coefficient of friction-reducing agents that can adversely affect operation of the synchromesh mechanism.

C. Automatic Transmission Fluid (ATF) of Dexron(R) II or Dexron(R) III formulation on any of the following:
   - Dual mass flywheel
   - Direct drive fifth gear as of 9/90
   - Six-speeds

   Manual transmissions which are filled with ATF have 17mm external hex plugs in the filler and drain openings as well as an orange label on the transmission bell housing next to the filler plug.

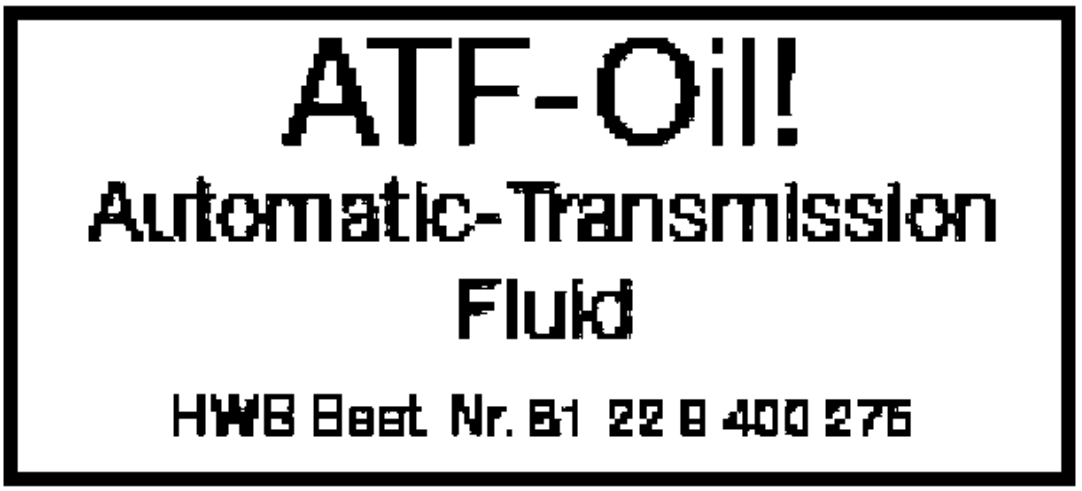

G03582837

Fig. 2: Identifying Orange Label For Oil Specification (Automatic Transmissions Fluid)
Courtesy of BMW OF NORTH AMERICA, INC.

D. From model year 1998 (9/97 production) all manual transmissions are filled with Esso/Exxon "MTF-LT-1" lifetime fluid. A yellow label with the letters "MTF-LT-1" is located next to the oil filler plug.

   No oil change is required for the entire service life of these transmissions.

   In the event of a repair, the transmission must only be filled with the lifetime oil.

   Esso/Exxon MTF-LT-1

   BMW P/N 83 22 9 408 942.

E. From model year 2004 some manual transmissions are filled with Castrol "MTF-LT-2" lifetime fluid. This fluid has the same properties as the "MTF-LT-1" fluid indicated above in section D. The "MTF-LT-1" fluid may be mixed and/or substituted for the "MTF-LT-2" manual transmission fluid.

   2006 MY E60 M5 equipped with SMG utilizes only MTF-LT-2 fluid.

   MTF-LT-2 Fluid

BMW P/N 83 22 0 309 031

F. From Model Year 2006 all vehicles equipped with a manual transmission and the N52 engine require the MTF-LT-3 lifetime fluid.

N52 equipped vehicles:

- E60 from 3/2005 production
- E85 from 9/2005 production
- E90 from 3/2005 production

MTF-LT-3

BMW P/N 83 22 0 409 878

No oil change is required for the entire service life of these transmissions.

MANUAL TRANSMISSION COLD SHIFT EFFORT

NOTE: The following information does not apply to transmissions filled with lifetime fluid.

Transmission cold shift effort is reduced by replacing the original oil (SAE 80 or Mobil SHC 630) with a reputable brand single-grade HD engine mineral oil of API-SE standards (SAE 20, SAE 30, or SAE 40). Thinner oils will run the risk of increased gear noise.

A further reduction in shift effort can be obtained by using ATF, but gear noise will be more noticeable compared to single-grade engine mineral oils.

For summer operation it is recommended that ATF or engine oil be drained and replaced by the original lubricant, either SAE 80 or Mobil SHC 630 (as specified) transmission fluid.

CAUTION: Never fill a manual transmission with synthetic engine oils or multigrade mineral-based engine oils, since they have friction-reducing components that could impair the function of the synchronizers.

4.0 TRANSMISSION OIL CHANGE INTERVAL

Refer to Service Maintenance checklists for the respective model year.

Starting with 1998 models all manual transmissions are filled with lifetime fluid and require no fluid changes for the life of the vehicle.

Article GUID: A00217929

21 2 070 GAUGE

NOTE: Note: For checking lining thickness on clutch drive plate. Replaced in 8/95 by 21 2 080.

Transmission: S5D 200G, S5D 250G, S5D 260Z, S5D 310Z, S6S 420G, S6S 560G

Order number: 21 2 070

Gauge

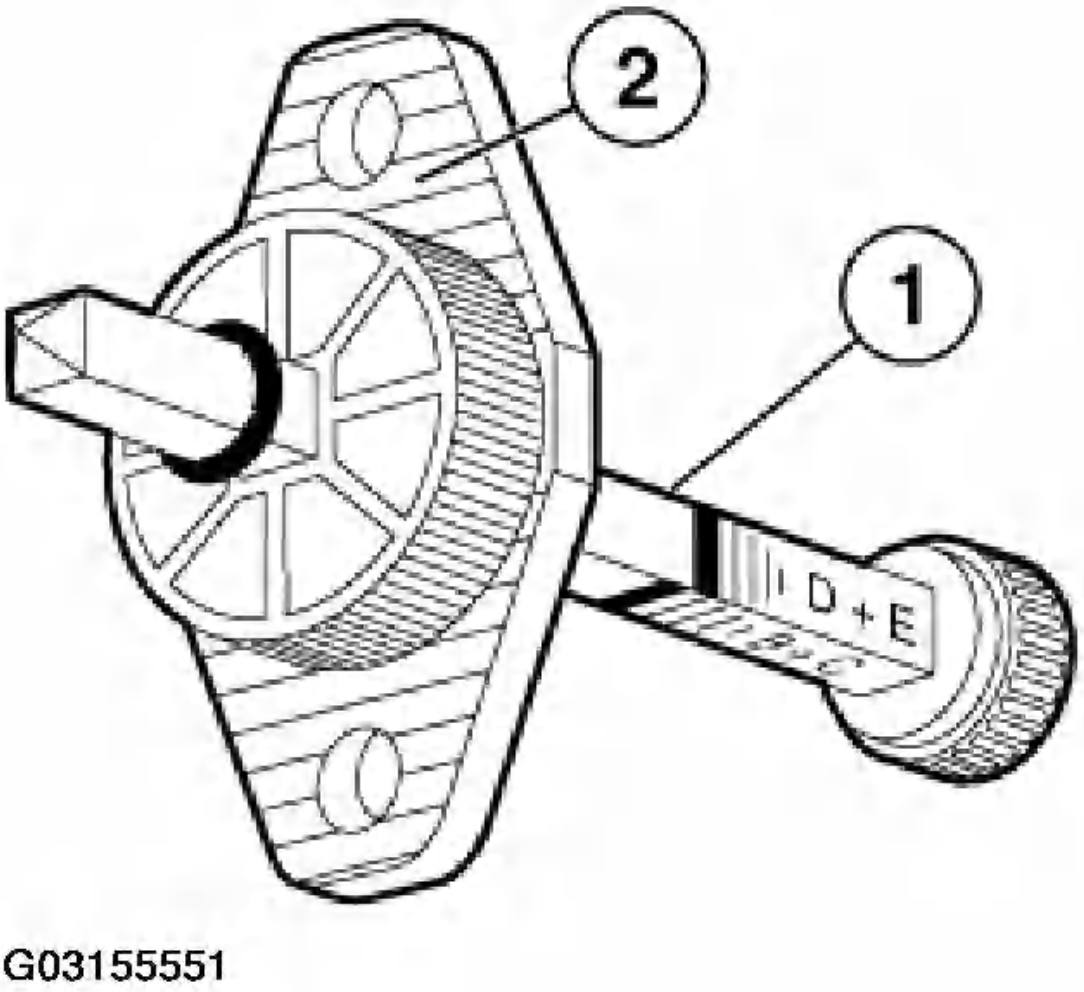

Fig. 1: Identifying Special Tool - Gauge
Courtesy of BMW OF NORTH AMERICA, INC.

21 2 100 DRIFT

Minimum set: Mechanical tools

NOTE: Note: For centering clutch disc while installing clutch

Transmission: 240/5, 260/5, 265/5, 265/5Sport, 280/5Sport

Storage location: C22

Order number: 21 2 100

Drift

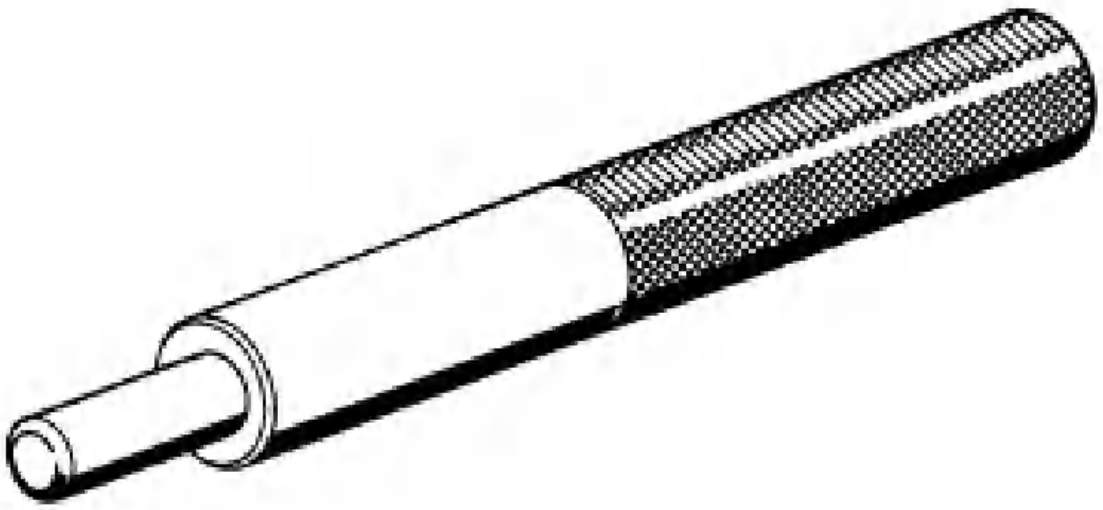

Fig. 2: Identifying Special Tool - 21 2 100 Drift
Courtesy of BMW OF NORTH AMERICA, INC.

21 2 120 DRIFT

Minimum set: Mechanical tools

NOTE: Note: For centering clutch disc while installing clutch

Transmission: S6S 420G, S6S 560G

Storage location: C22

SI number: 1 05 90(207)

Order number: 21 2 120

Drift

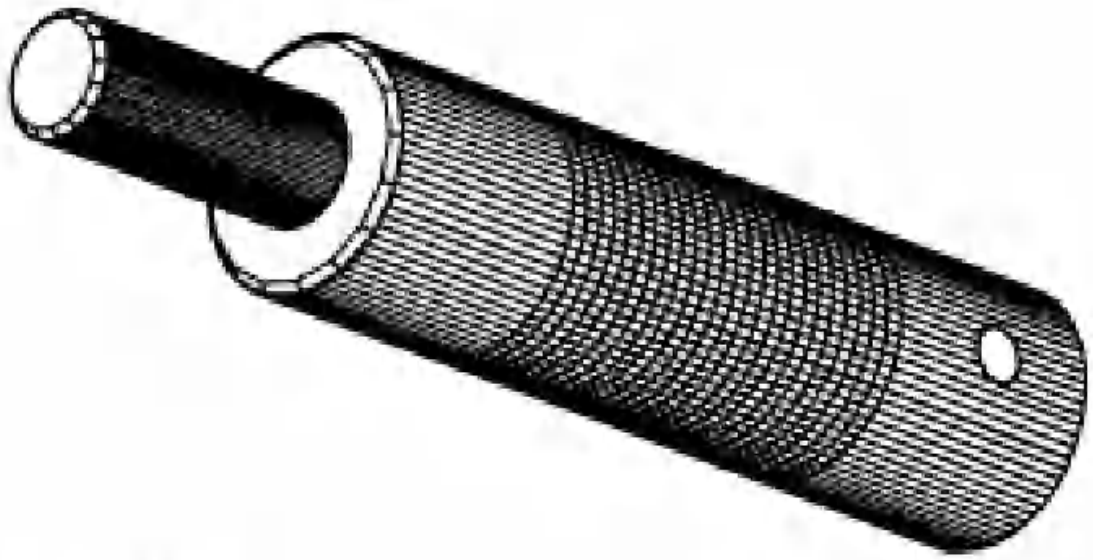

Fig. 3: Identifying Special Tool - 21 2 120 Drift
Courtesy of BMW OF NORTH AMERICA, INC.

21 2 130 DRIFT

Minimum set: Mechanical tools

NOTE: Note: For centering clutch disc while installing clutch

Transmission: S5D 200G, S5D 250G, S5D 260Z, S5D 310Z

Storage location: C22

SI number: 1 01 91(312)

Order number: 21 2 130

Drift

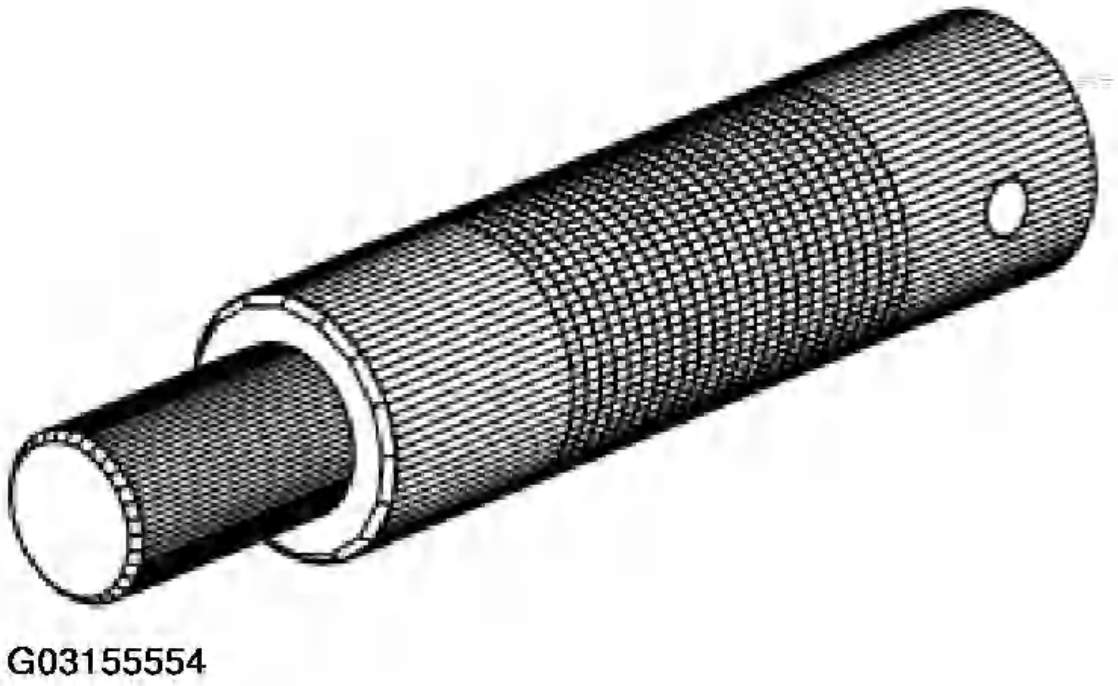

Fig. 4: Identifying Special Tool - 21 2 130 Drift
Courtesy of BMW OF NORTH AMERICA, INC.

21 2 140 CLUTCH CENTERING MANDREL (2 X)

Minimum set: Mechanical tools

NOTE: Note: For centering clutch disc on flywheel while installing self-adjusting clutch (SAC) - Phase-in of SAC in E46, 09/97

Transmission: S5D 200G, S5D 250G, S5D 260Z, S5D 310Z, S6S 420G, S6S 560G

Storage location: C5

SI number: 1 13 96 (104)

Order number: 21 2 140

Clutch centering mandrel (2 x)

Consisting of:

1 = 21 2 141 Clutch centering tool

NOTE: With M10 screw - Transmission: S6S 420G, S6S 560G

2 = 21 2 142 Clutch centering tool

NOTE: With M10 screw - Transmission: S5D 200G, S5D 250G, S5D 260Z, S5D 310Z

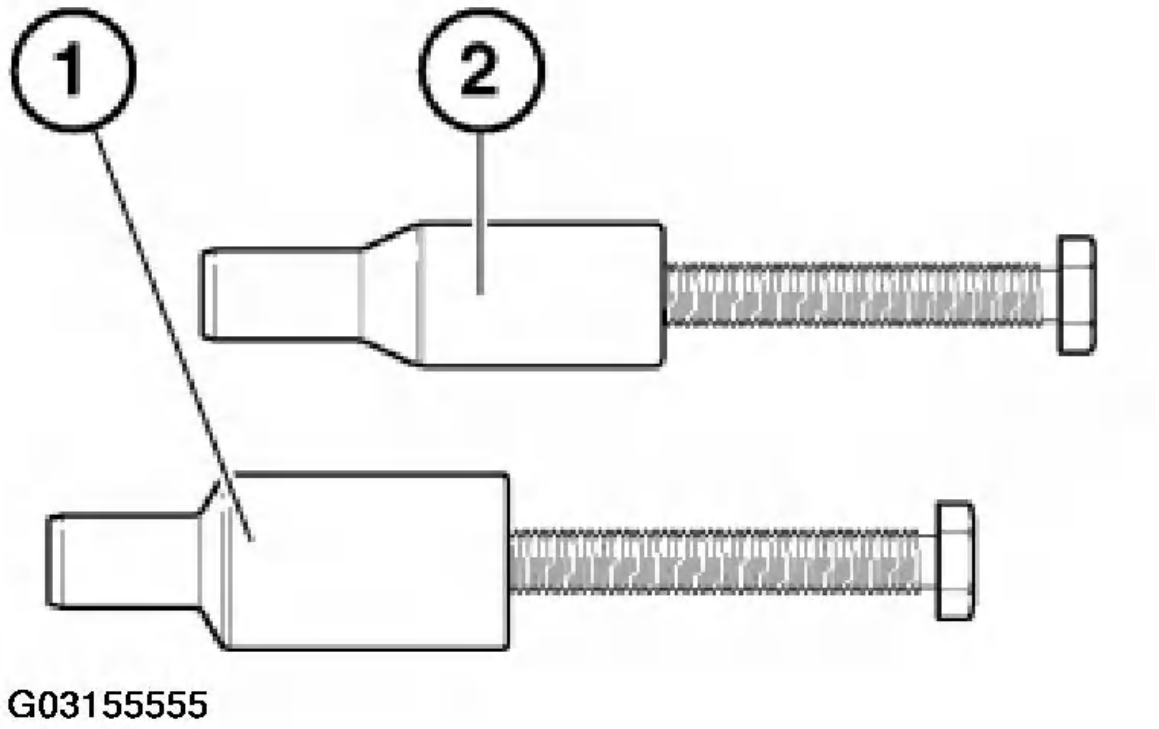

Fig. 5: Identifying Special Tool - Clutch Centering Mandrel (2 X)
Courtesy of BMW OF NORTH AMERICA, INC.

21 2 170 TENSIONING TOOL

Minimum set: Mechanical tools

In conjunction with: 21 2 180, 21 2 190, 21 2 141, 21 2 142

NOTE: Note: For resetting adjustment ring and installing self adjusting clutch (SAC) on flywheel without tension.

Series: E34, E36, E38, E39, E46, E52, E53, E60, E61, E85, E87

SI number: 1 16 00 (622)

Order number: 21 2 170

Tensioning tool

Consisting of:

1 = 21 2 171 Star with adjusting spindle

2 = 21 2 172 Clamping claw (1 x)

3 = 21 2 173 Pressure spindle with disk

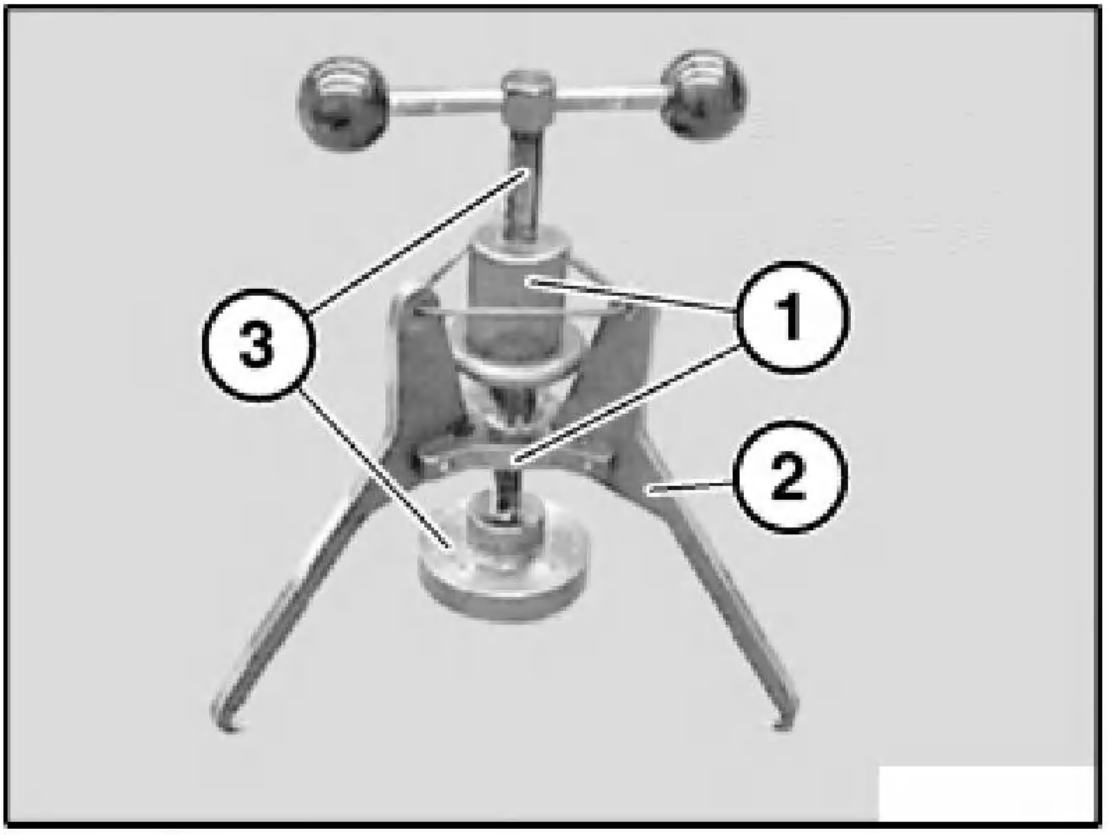

G03155556

Fig. 6: Identifying Special Tool - Tensioning Tool
Courtesy of BMW OF NORTH AMERICA, INC.

21 2 180 LOCATING RING

Minimum set: Mechanical tools

In conjunction with: 21 2 170

NOTE: Note: For locating and resetting adjustment ring of SAC clutch on all 6- and 8-cylinder engines.

Series: E34, E36, E38, E39, E46, E52, E53, E60, E85

Storage location: A44

SI number: 1 16 00 (622)

Order number: 21 2 180

Locating ring

Consisting of:

1 = 21 2 181 Outer ring

2 = 21 2 182 Inner ring

3 = 21 2 183 Pin set

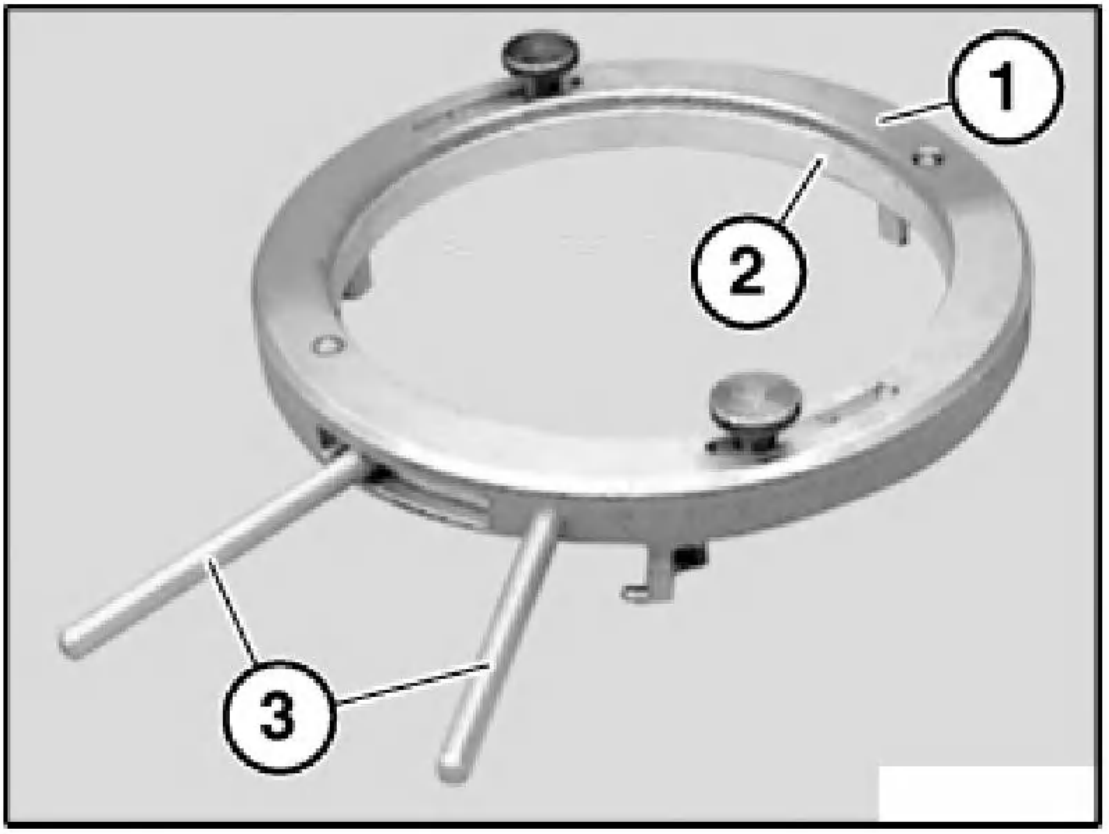

G03155557

Fig. 7: Identifying Special Tool - 21 2 180 Locating Ring
Courtesy of BMW OF NORTH AMERICA, INC.

21 2 190 LOCATING RING

Minimum set: Mechanical tools

In conjunction with: 21 2 170

NOTE: Note: For locating and resetting adjustment ring of SAC clutch on all 4-cylinder engines.

Series: E34, E36, E38, E39, E46, E52, E53, E87

Storage location: A44

SI number: 1 16 00 (622)

Order number: 21 2 190

Locating ring

Consisting of: 1 = 21 2 191

Outer ring

2 = 21 2 192 Inner ring

3 = 21 2 193 Driver (1 x)

4 = 21 2 194 Pin set

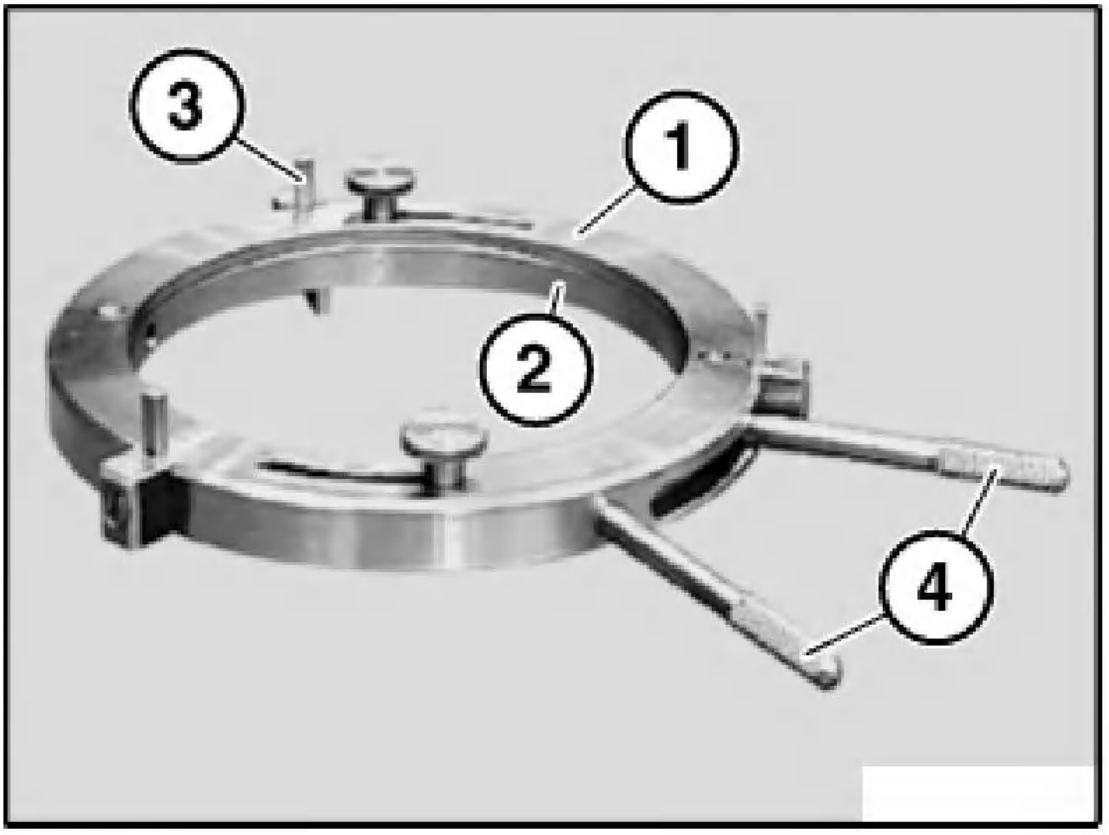

G03155558

Fig. 8: Identifying Special Tool - 21 2 190 Locating Ring
Courtesy of BMW OF NORTH AMERICA, INC.

21 2 200 CLUTCH CENTERING TOOL

Minimum set: Mechanical tools

NOTE: Note: For centering clutch plate during installation. H-transmission

Transmission: GS6-37BZ, GS6-37DZ

Storage location: B44, C44

SI number: 01 10 02 (907)

Order number: 21 2 200

Clutch centering tool

Consisting of:

1 = 21 2 201 Clutch centering tool

NOTE: With M10 screw Transmission: GS6-37BZ/DZ (H-transmission)

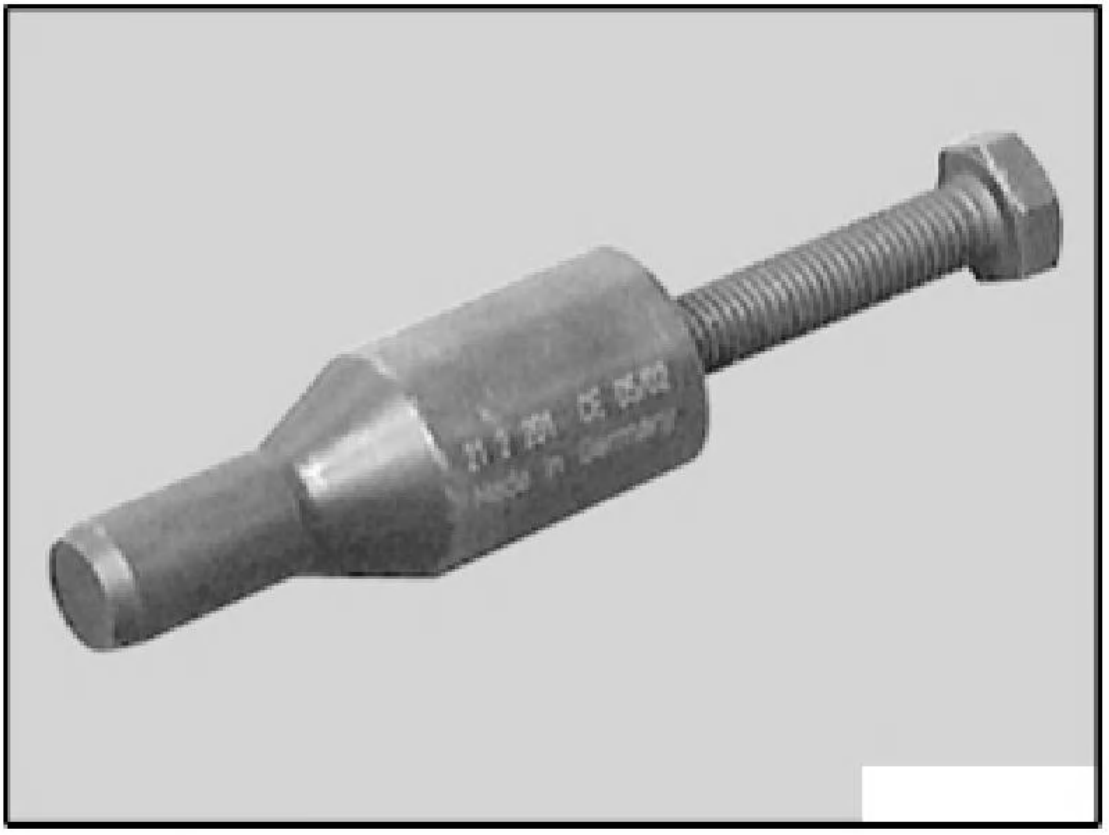

G03155559

Fig. 9: Identifying Special Tool - 21 2 200 Clutch Centering Tool
Courtesy of BMW OF NORTH AMERICA, INC.

21 2 230 CLUTCH CENTERING TOOL

Minimum set: Mechanical tools

NOTE: Note: With M10 screw (G-transmission)

Transmission: GS6-53BZ, GS6-53DZ

Storage location: A47

SI number: 1 03 03 (960)

Order number: 21 2 230

Clutch centering tool

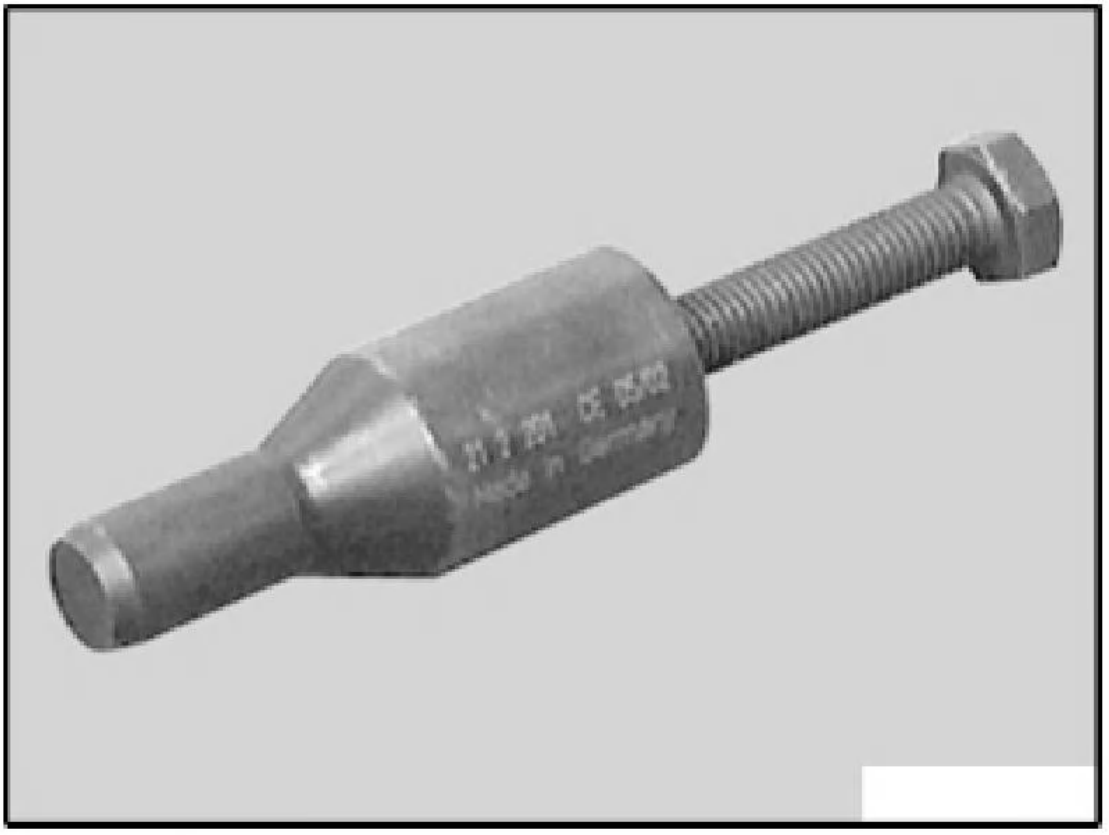

G03155560

Fig. 10: Identifying Special Tool - 21 2 230 Clutch Centering Tool
Courtesy of BMW OF NORTH AMERICA, INC.

21 2 240 GREASE SCRAPER RING

Minimum set: Mechanical tools

NOTE: Note: For scraping grease on spline shaft teeth of transmission input shaft (G-transmission)

Transmission: GS6-53BZ, GS6-53DZ

Storage location:A47

SI number: 1 03 03 (960)

Order number: 21 2 240

Grease scraper ring

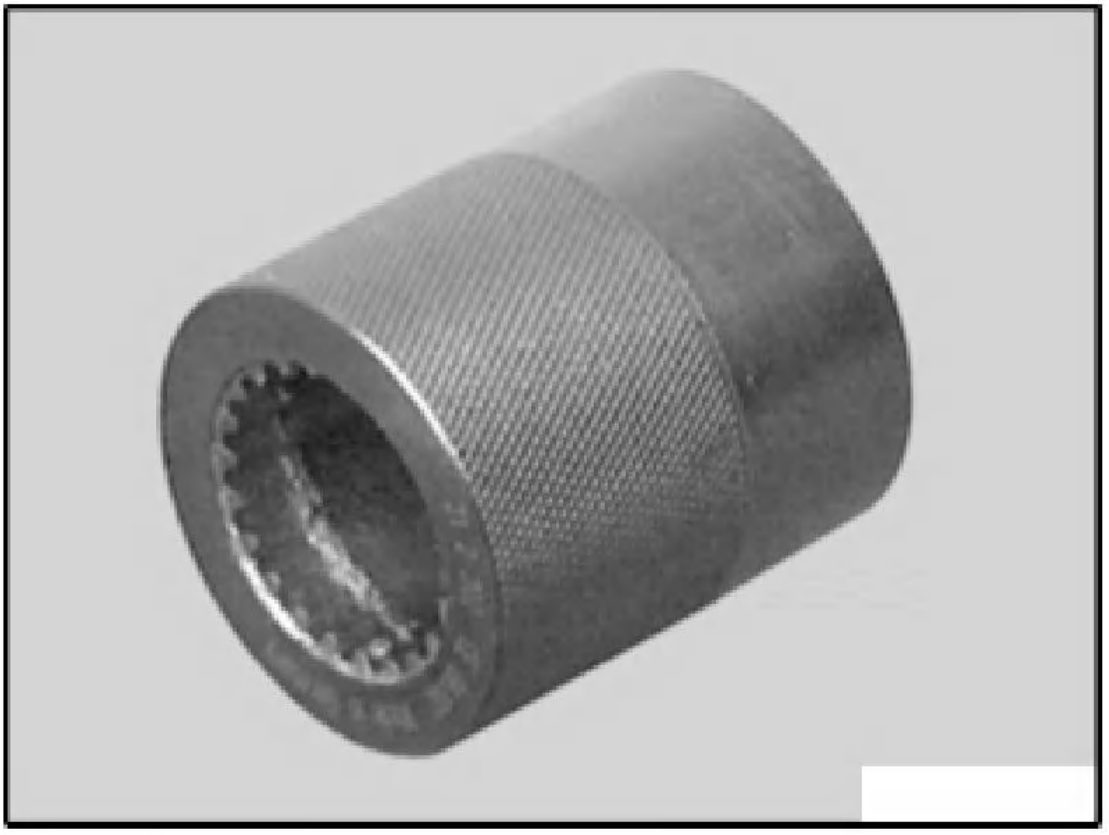

G03155561

Fig. 11: Identifying Special Tool - Grease Scraper Ring
Courtesy of BMW OF NORTH AMERICA, INC.

21 5 010 ADAPTER

In conjunction with: 17 0 002

NOTE: Note: For expansion tank when bleeding hydraulic clutch system on automatic transmission

Transmission: S6S 420G

Storage location: C17

SI number: 1 06 97 (186)

Order number: 21 5 010

Adapter

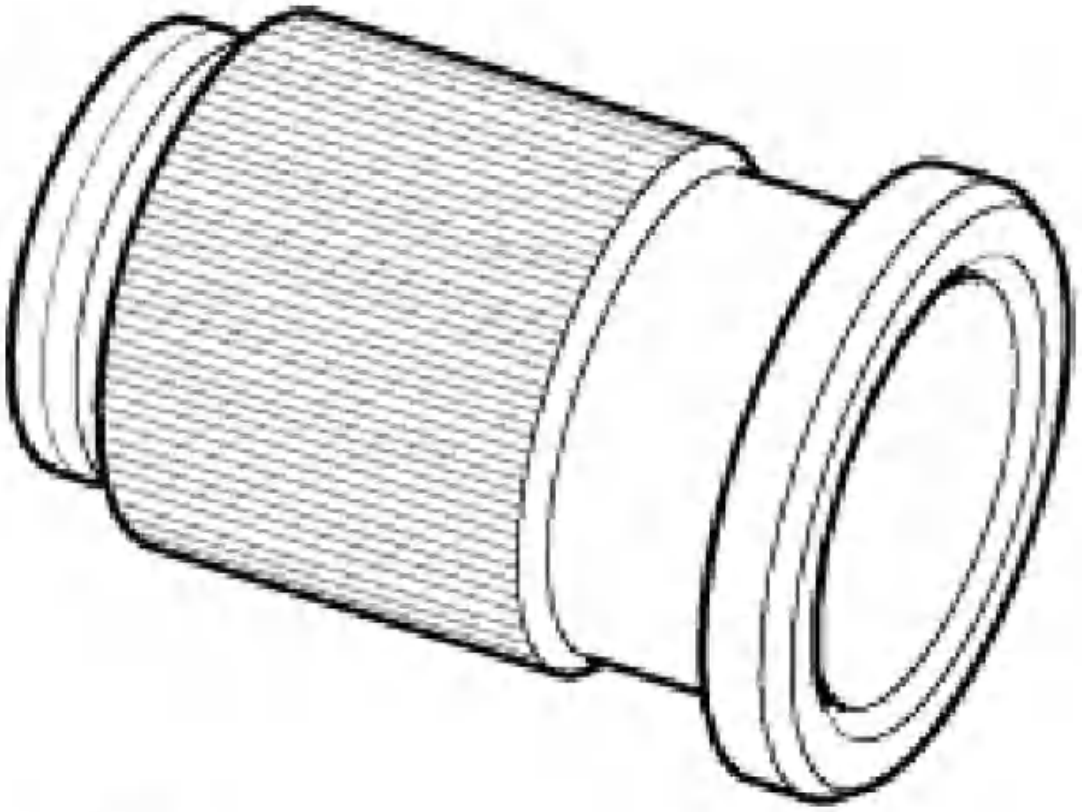

Fig. 12: Identifying Special Tool - Adapter
Courtesy of BMW OF NORTH AMERICA, INC.

21 5 020 BLEEDER FLASK

In conjunction with: 21 5 030

NOTE: Note: For hydraulic fluid (Pentosin) - for bleeding hydraulic clutch system on sequential M-transmission.

Transmission: S6S 420G

SI number: 1 15 97 (211)

Order number: 21 5 020

Bleeder flask

Fig. 13: Identifying Special Tool - Bleeder Flask
Courtesy of BMW OF NORTH AMERICA, INC.

21 5 030 FIXTURE

NOTE: Note: For bleeding clutch hydraulics.

Series: E30, E31, E32, E34, E36, E38, E39, E85, E87, R53

Storage location: A8

SI number: 1 14 97 (210)

Order number: 21 5 030

Fixture

Consisting of:

1 = 21 5 031 Spindle

2 = 21 5 032 Locating bracket

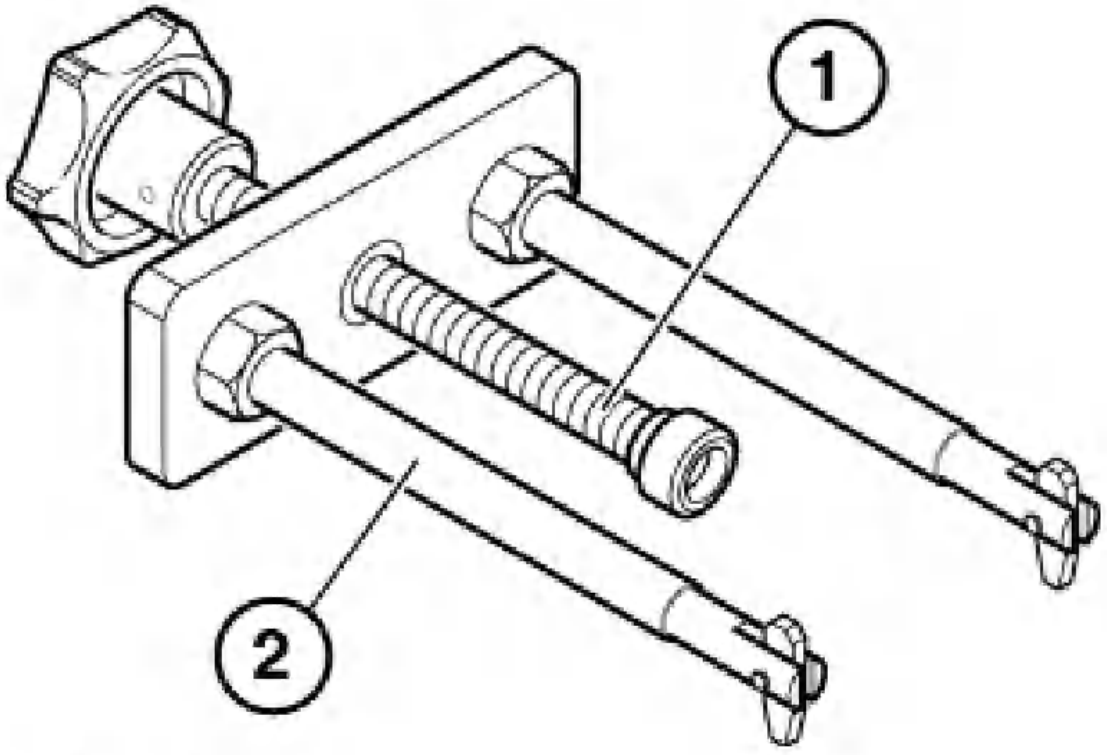

Fig. 14: Identifying Special Tool - 21 5 030 Fixture
Courtesy of BMW OF NORTH AMERICA, INC.

Article GUID: A00202804

11 CLUTCH HOUSING

21 11 BELL HOUSING

BELL HOUSING TIGHTENING TORQUE SPECIFICATIONS

Â		Type	Thread	Tightening specification	Measure
1AZ	Clutch housing to crankcase	E36 / E38 / E39 / E46 / E52 / E53 / E60 / E61 / E63 / E64 / E83 / E85 / E87 / E90 / E91	M8	Â	28 Nm
Â		E36 / E38 / E39 / E46 / E52 / E53 / E60 / E61 / E63 / E64 / E83 / E85 / E87 / E90 / E91	M10	Â	56 Nm
Â		E36 / E38 / E39 / E46 / E52 / E53 / E60 / E61 / E63 / E64 / E83 / E85 / E87 / E90 / E91	M12	Â	98 Nm

21 CLUTCH WITH DRIVING DISC

21 21 CLUTCH DISC AND DRIVE PLATE

CLUTCH DISC AND DRIVE PLATE TIGHTENING TORQUE SPECIFICATIONS

Â		Type	Thread	Work instruction	Measure
1AZ	Clutch to flywheel	E36 / E38 / E39 / E46 / E52 / E53 / E60 / E61 / E63 / E64 / E83 / E85 / E86 / E87 / E90 / E91	M8 8.8	Replace screws	25 Nm
Â		E36 / E38 / E39 / E46 / E52 / E53 / E60 / E61 / E63 / E64 / E83 / E85 / E86 / E87 / E90 / E91	M8 10.9	Replace screws	34 Nm
	Clutch to flywheel With ZNS bolts	Â	Â	Replace ZNS bolts Jointing torque and angle of rotation must be observed without fail	Â

Â	E60 S85, E61 S85	Â	Jointing torque	15 Nm
Â	Â	Â	Torque angle	25Â°
Â	N52, N53, M47T2, N46T, N54, E92 N54 N46T, N43, N45K, N47, M57T2	M8 10.9	Jointing torque	15 Nm
Â	Â	Â	Torque angle	90Â° +/- 5Â°

52 CLUTCH OPERATION (HYDRAULIC)

21 52 CLUTCH OPERATION (HYDRAULIC)

CLUTCH OPERATION TIGHTENING TORQUE SPECIFICATIONS

Â		Type	Thread	Tightening specification	Measure
1AZ	Hydraulic line to clutch slave cylinder or throttle.	E36 / E38 / E39 / E52 / E53 / E60 / E61 / E63 / E64 / E83 / E85 / E86 / E81 / E87 / E90 / E91 / E92	Â	Â	14.5 Nm
Â		E46	Â	Â	20 + 5 Nm
2AZ	Clutch master cylinder to bearing block	E36 / E38 / E39 / E46 / E52 / E53 / E60 / E61 / E63 / E64 / E85 / E86 / E81 / E87 / E90 / E91 / E92 / E93	Â	Â	22 Nm
Â		E83	Â	Â	8 Nm
3AZ	Fitting screw, clutch master cylinder	E36 / E38 / E39 / E46 / E52 / E53 / E60 / E61 / E63 / E64 / E83 / E85 / E86 / E81 / E87 / E90 / E91 / E92 / E93	Â	Â	22 Nm
4AZ	Clutch master cylinder to pedal assembly	E36 / E38 / E39 / E46 / E52 / E53 / E60 / E61 / E63 / E64 / E83 / E85 / E86 / E87 / E90 / E91 / E92 / E93 / E81	Â	Â	9 Nm
5AZ	Clutch slave cylinder to clutch housing/transmission case	E36 / E38 / E39 / E46 / E52 / E53 / E60 / E61 / E63 / E64 / E83 / E85 / E86 / E87 / E90 / E91 / E92 / E93 / E81	Â	Â	22 Nm
Â		E60 / E63	7-speed SMG	Â	25 Nm
6AZ	Pressure accumulator to hydraulic unit	E36 / M3	Â	Â	35 Nm

7AZ	Coupling bolts for hydraulic pipes	E46 / M3	Â	Â	14 Nm
8AZ	Pressure accumulator for hydraulic unit	E46 / M3	Â	Â	40 Nm
9AZ	Clutch position sensor to clutch slave cylinder	E46 / E60 / E61 / E63 / E64 / E85	6-speed SMG	Â	2.5 Nm
Â		E60 / E61 / E63	7-speed SMG	Â	3.5 Nm
10AZ	Banjo bolt, pipe, actuator/pump block	E60 / E61 / E63	7-speed SMG	Â	18 Nm
11AZ	Filler plug, expansion tank, pump block	E60 / E61 / E63	7-speed SMG	Â	2.1 Nm
12AZ	Throttle valve to clutch slave cylinder	E60, E61	Â	Â	17 Nm

Article GUID: A00267746

GEARSHIFT MECHANISM

25 1 110 PIN WRENCH

ORDER NUMBER: 25 1 110 SPECIAL TOOL SPECIFICATION

Note:	For removing shift lever. Replaced by 25 1 120.
Series:	E31, E36, E60, E85
Storage location:	B19
SI number:	1 05 90 (207)
Order number:	25 1 110
Â	Pin wrench

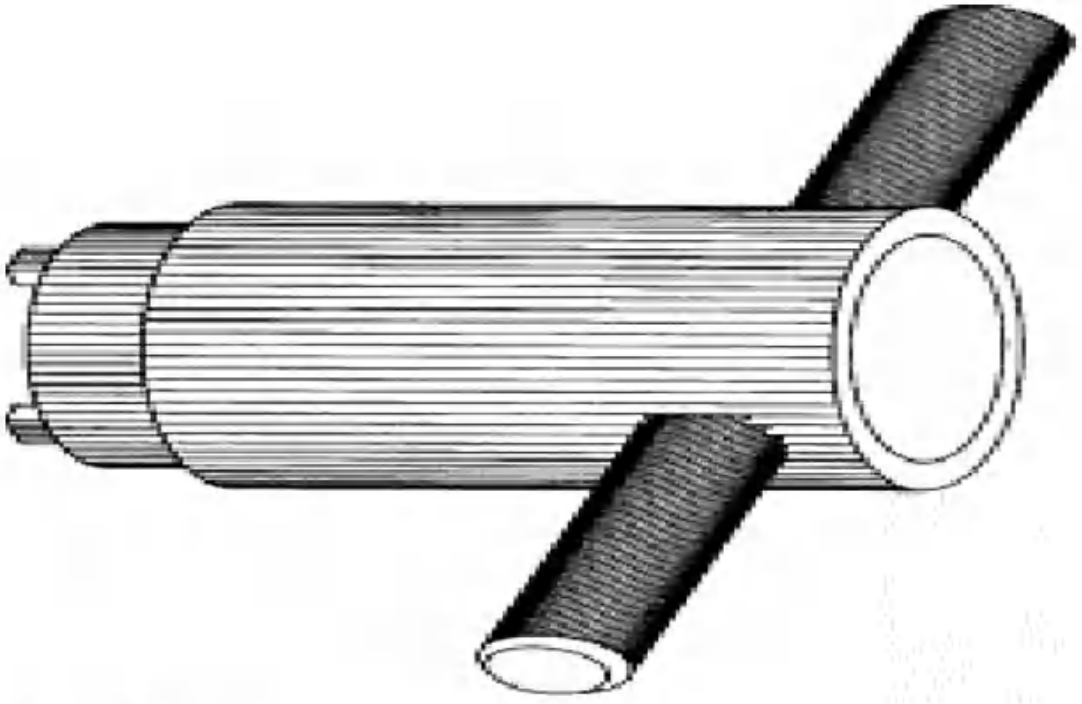

Fig. 1: Identifying Special Tool 25 1 110 Pin Wrench For Removing Shift Lever
Courtesy of BMW OF NORTH AMERICA, INC.

25 1 120 PIN WRENCH

Minimum set: Mechanical tools

ORDER NUMBER: 25 1 120 SPECIAL TOOL SPECIFICATION

Note:	For removing gear lever (releasing gear lever bearing).
Series:	E31, E36, E60, E61, E83, E85, E87, E90

Storage location:	B19
SI number:	1 24 03 (040)
Order number:	25 1 120
Â	Pin wrench

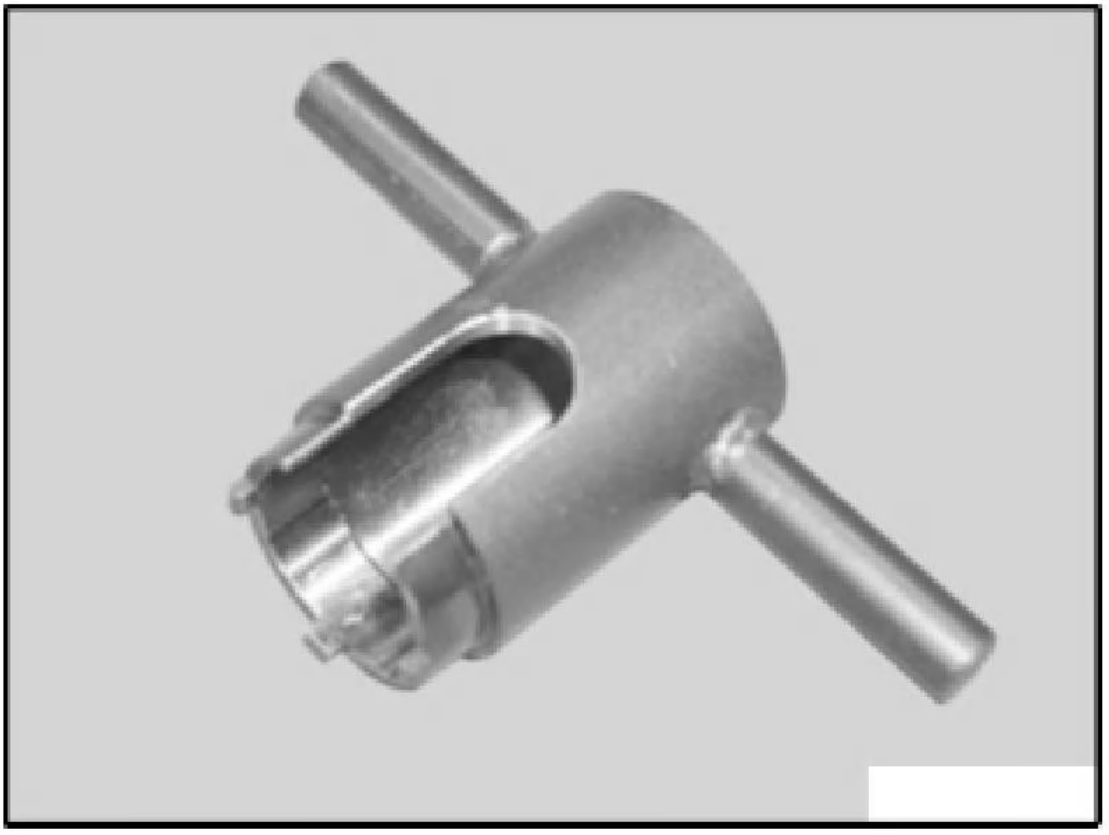

G03155667

Fig. 2: Identifying Special Tool 25 1 120 Pin Wrench For Removing Gear Lever
Courtesy of BMW OF NORTH AMERICA, INC.

Article GUID: A00202806

23 0 000 ATTACHMENT

ORDER NUMBER: 23 0 000 SPECIAL TOOL SPECIFICATION

Note:	For car jack, for removing and installing manual and automatic transmissions
Order number:	23 0 000
Â	Attachment

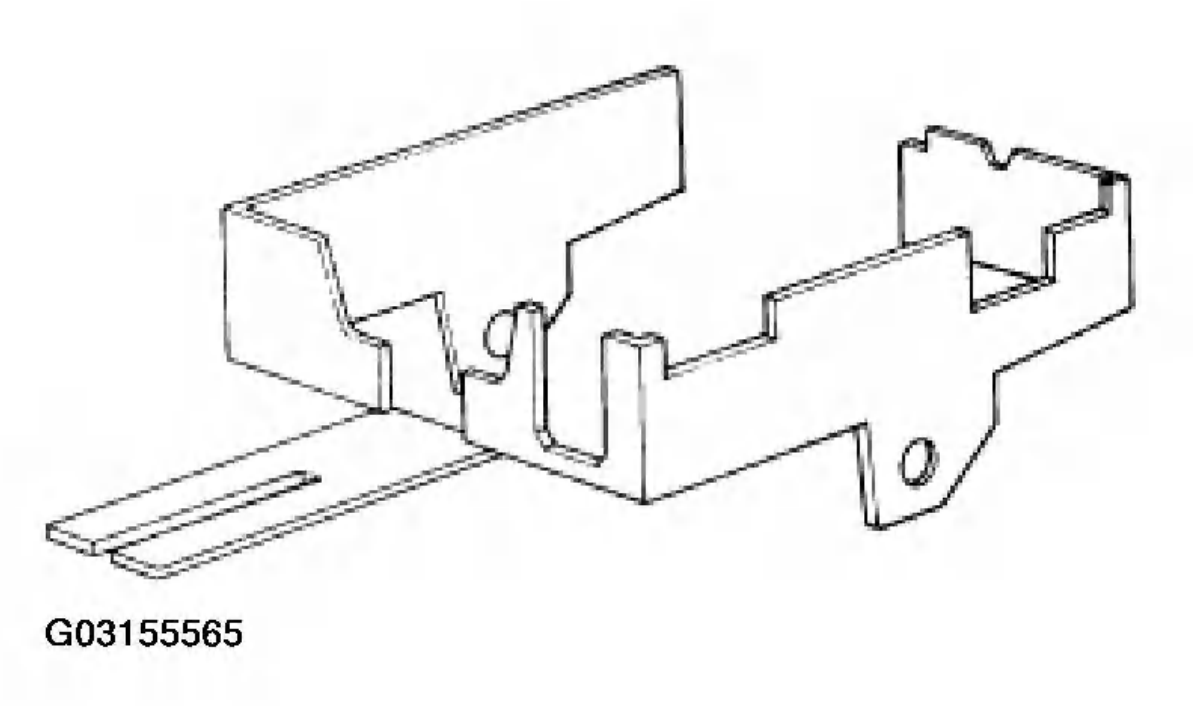

Fig. 1: Identifying Special Tools 23 0 000 For Attachment
Courtesy of BMW OF NORTH AMERICA, INC.

23 0 030 SUPPORT

ORDER NUMBER: 23 0 030 SPECIAL TOOL SPECIFICATION

Note:	For Getrag transmission
Transmission:	280/5 Sport
Order number:	23 0 030
Â	Support

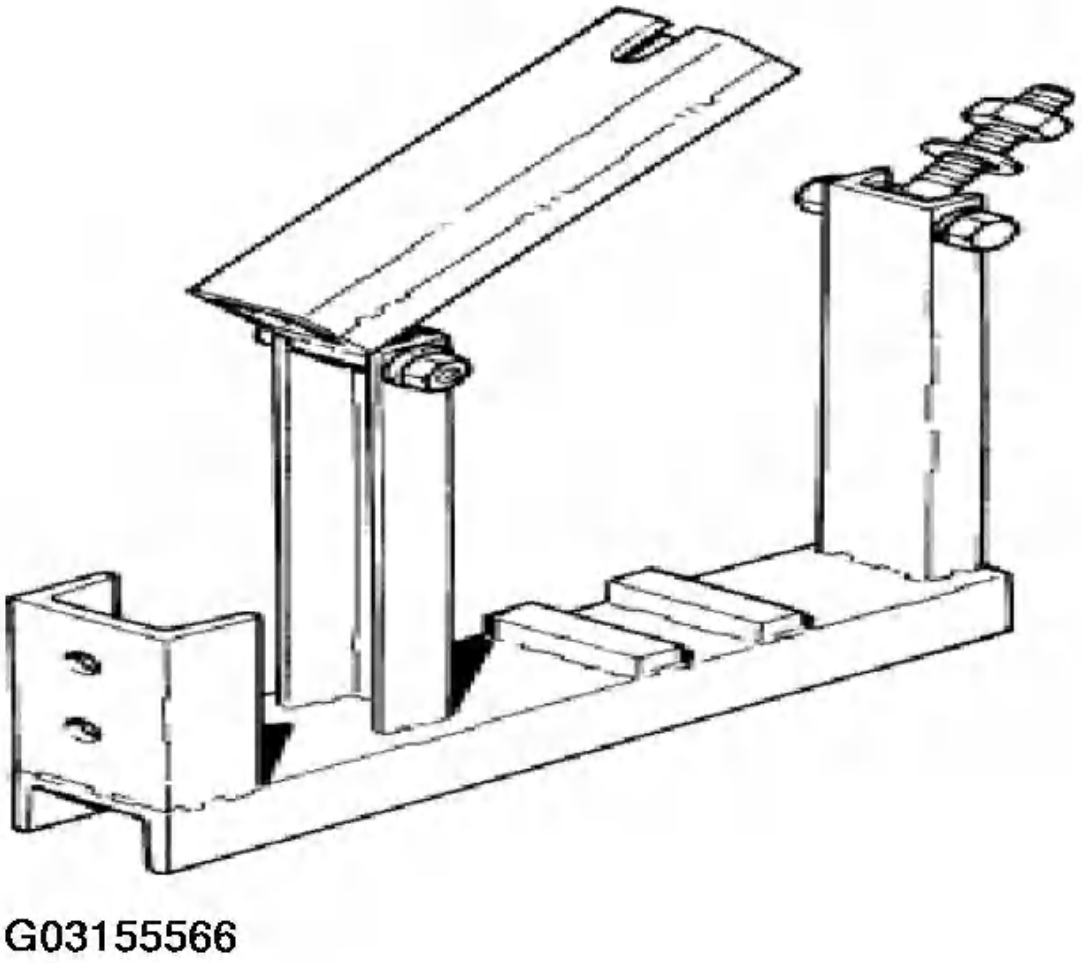

Fig. 2: Identifying Special Tools 23 0 030 For Support
Courtesy of BMW OF NORTH AMERICA, INC.

23 0 040 SUPPORT

ORDER NUMBER: 23 0 040 SPECIAL TOOL SPECIFICATION

In conjunction with:	00 2 030
Note:	For transmissions for removal and installation. Replaced by 23 0 110.
Transmission:	S6S 420G, S6S 560G
SI number:	1 05 90(207)
Order number:	23 0 040
Â	Support
Consisting of:	Â
1 = 23 0 041	Locating cage
Â	NOTE: Transmission: S6S 560G
2 = 23 0 042	Support bracket
Â	NOTE:

	Transmission: S6S 420G

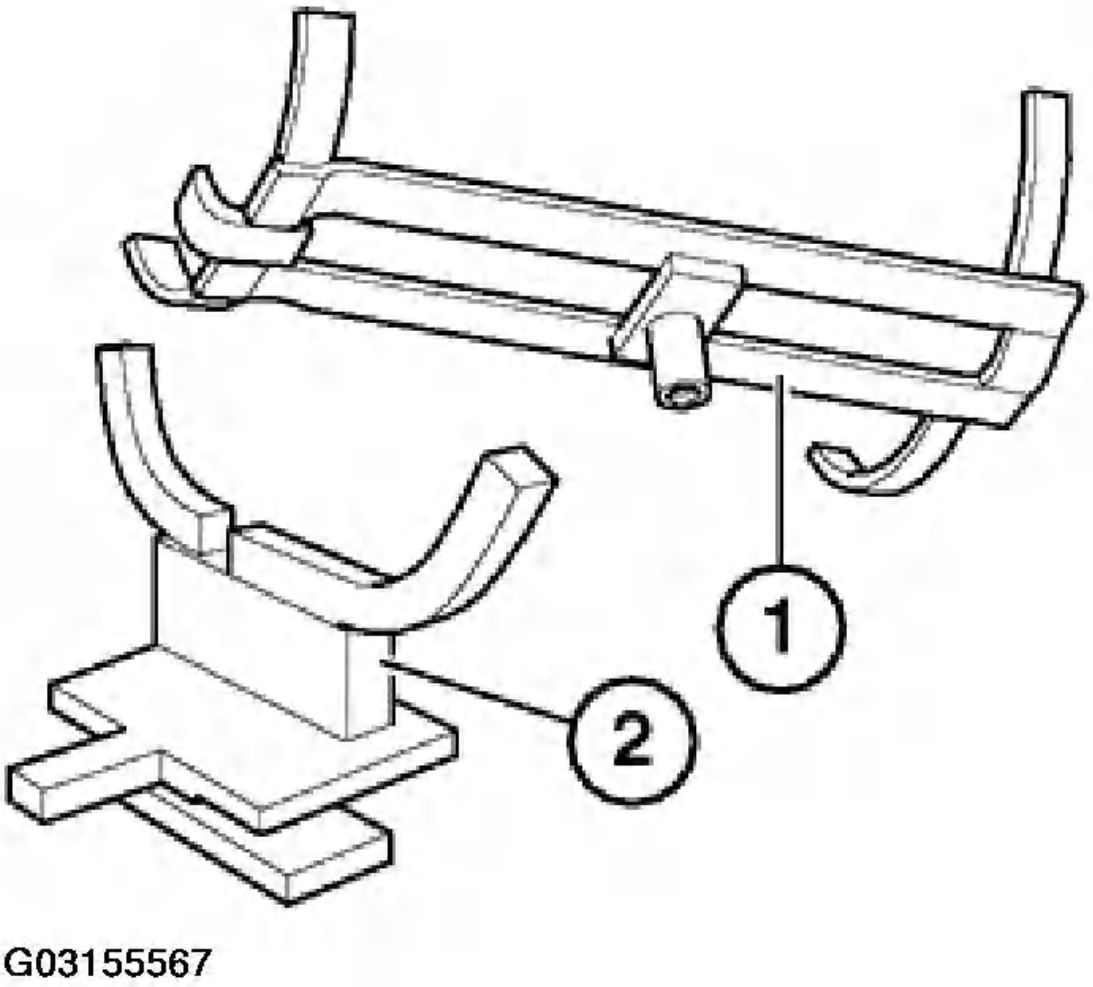

Fig. 3: Identifying Special Tools 23 0 040 For Support
Courtesy of BMW OF NORTH AMERICA, INC.

23 0 050 SUPPORT

ORDER NUMBER: 23 0 050 SPECIAL TOOL SPECIFICATION

In conjunction with:	00 1 450
Note:	For all 4-speed and 5-speed transmissions
Transmission:	242/4
Order number:	23 0 050
Â	Support

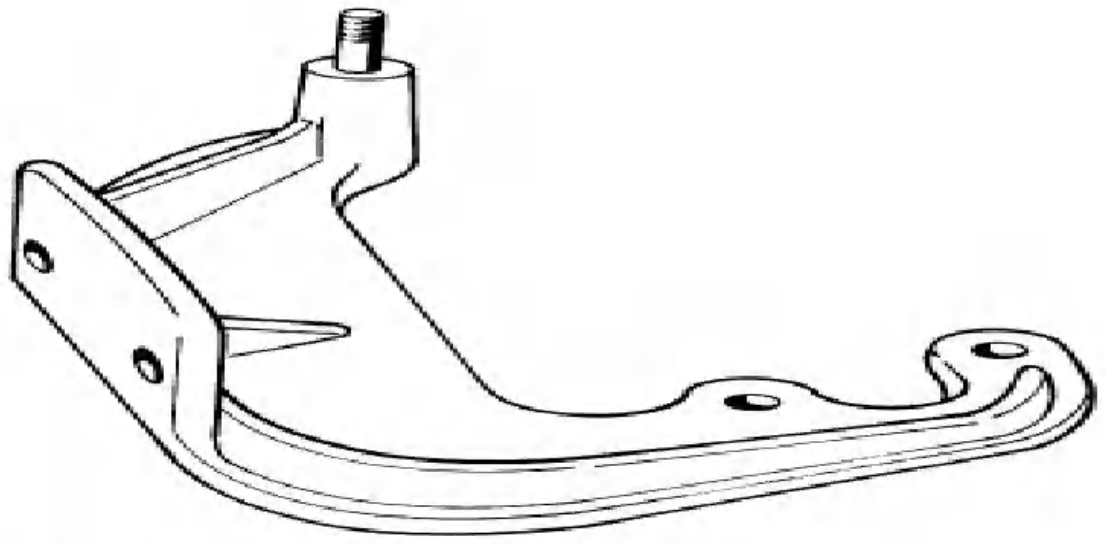

Fig. 4: Identifying Special Tools 23 0 050 For Support
Courtesy of BMW OF NORTH AMERICA, INC.

23 0 060 SUPPORT

ORDER NUMBER: 23 0 060 SPECIAL TOOL SPECIFICATION

In conjunction with:	00 1 450
Note:	For Getrag transmission
Transmission:	245/5, 245/5 Sport
Order number:	23 0 060
Â	Support

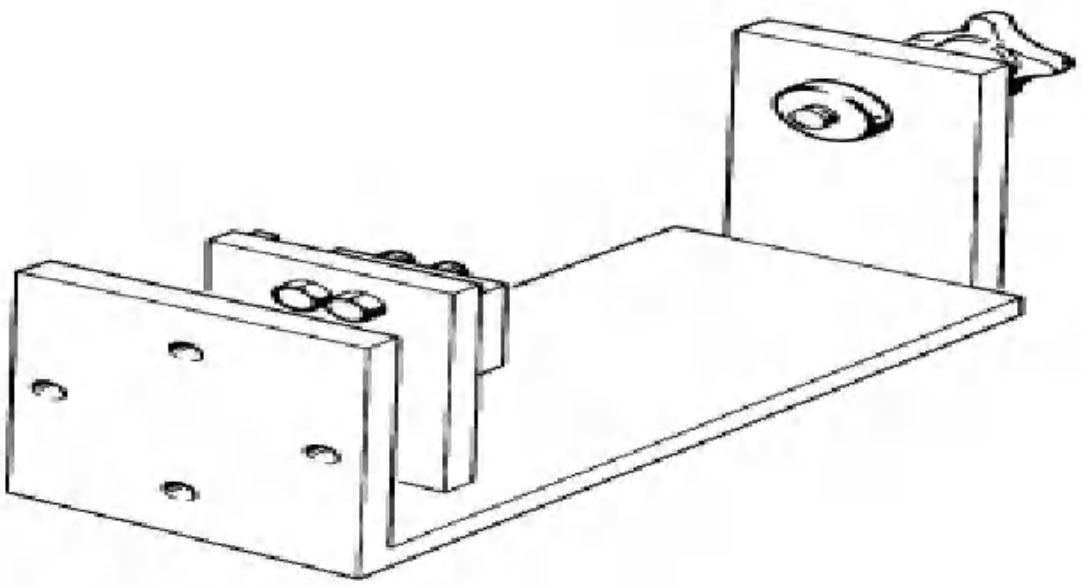

Fig. 5: Identifying Special Tools 23 0 060 For Support
Courtesy of BMW OF NORTH AMERICA, INC.

23 0 070 MOUNTING BRACKET

ORDER NUMBER: 23 0 070 SPECIAL TOOL SPECIFICATION

In conjunction with:	00 1 450
Note:	For Getrag transmission
Transmission:	265/5, 265/5 Sport
Order number:	23 0 070
Â	Mounting bracket

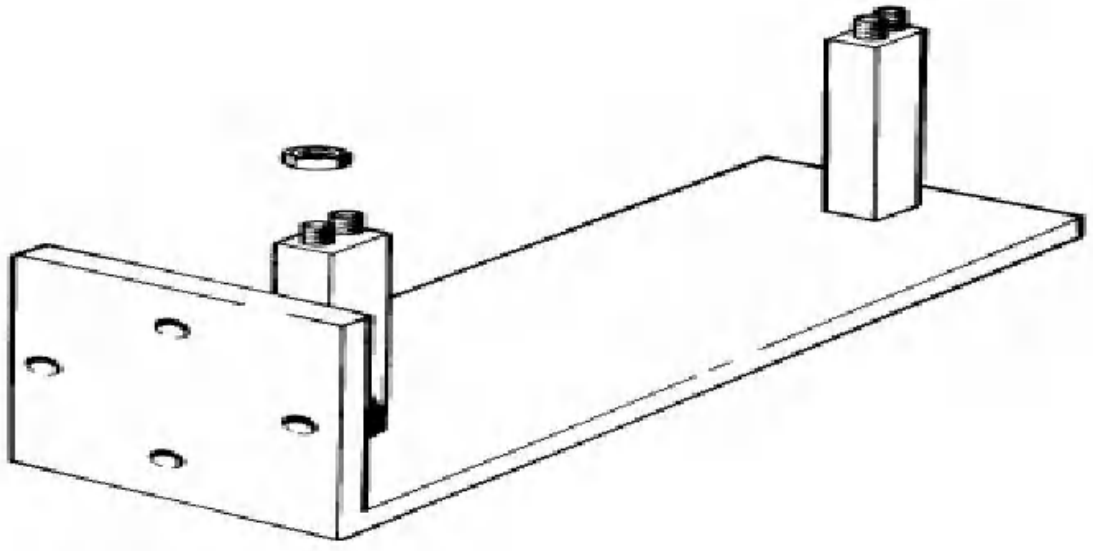

Fig. 6: Identifying Special Tools 23 0 070 For Mounting Bracket
Courtesy of BMW OF NORTH AMERICA, INC.

23 0 080 FIXTURE

ORDER NUMBER: 23 0 080 SPECIAL TOOL SPECIFICATION

Note:	For removing 5th gear wheel
Transmission:	265/5, 265/5 Sport, 280/5 Sport
Order number:	23 0 080
Â	Fixture
Consisting of:	Â
23 0 081	Puller jaws (2)

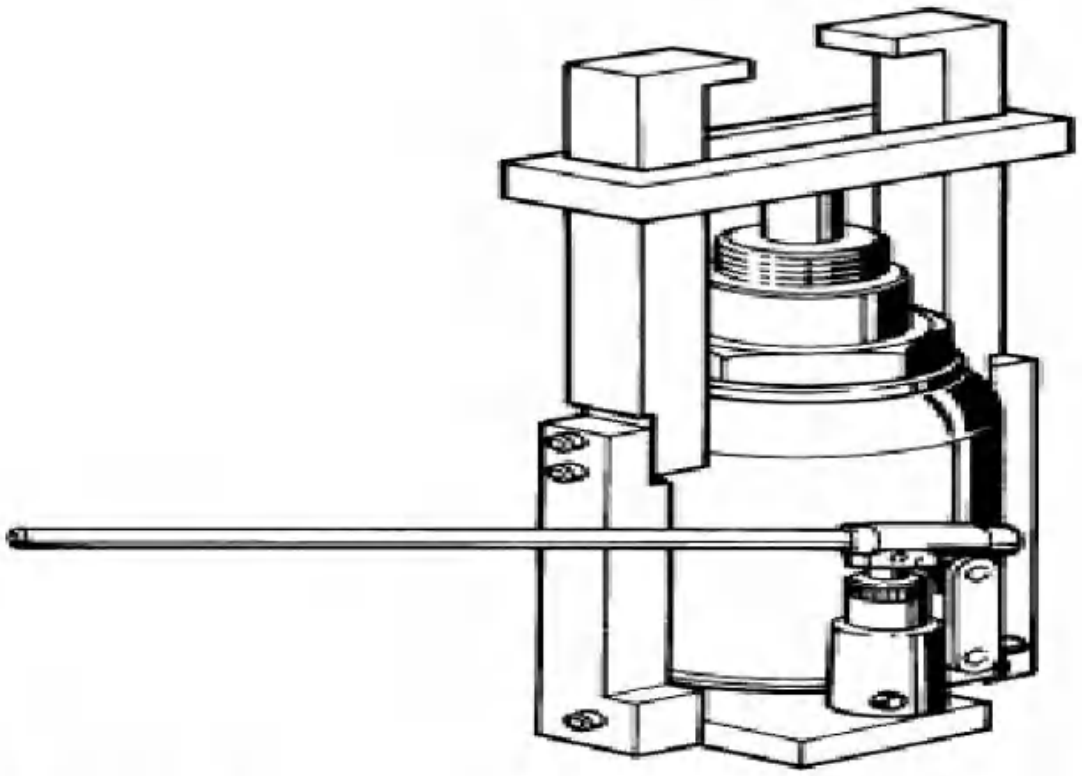

Fig. 7: Identifying Special Tools 23 0 070 For Fixture
Courtesy of BMW OF NORTH AMERICA, INC.

23 0 090 SUPPORT

ORDER NUMBER: 23 0 090 SPECIAL TOOL SPECIFICATION

In conjunction with:	00 1 450
Note:	For ZF and Getrag transmissions
Transmission:	240/5, 260/5, ZF S5-16
Order number:	23 0 090
Â	Support

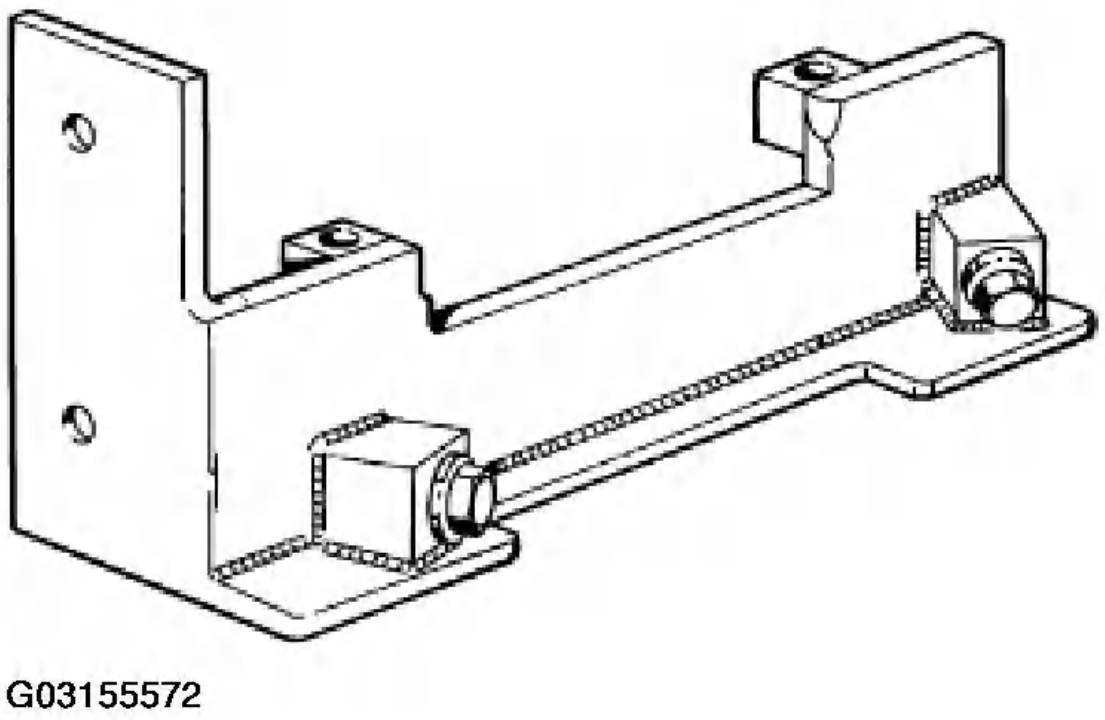

Fig. 8: Identifying Special Tools 23 0 090 For Support
Courtesy of BMW OF NORTH AMERICA, INC.

23 0 100 SUPPORT

ORDER NUMBER: 23 0 100 SPECIAL TOOL SPECIFICATION

In conjunction with:	00 1 450
Note:	For mounting transmission on assembly stand
Transmission:	S5D 200G, S5D 250G, S5D 260Z, S5D 310Z, S5D 320Z
SI number:	1 07 90 (244)
Order number:	23 0 100
Â	Support

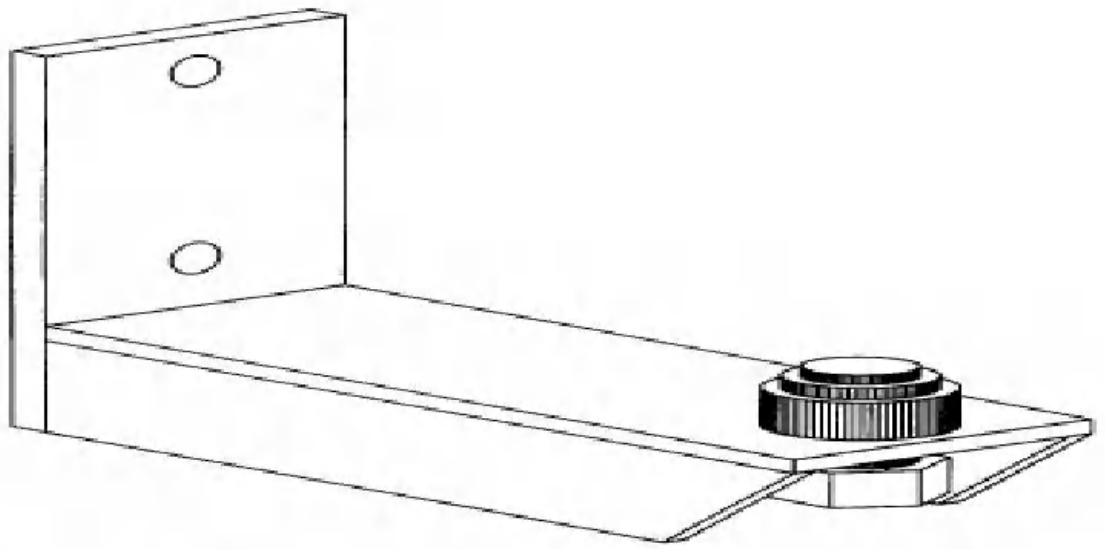

Fig. 9: Identifying Special Tools 23 0 100 For Support
Courtesy of BMW OF NORTH AMERICA, INC.

23 0 110 SUPPORT

ORDER NUMBER: 23 0 110 SPECIAL TOOL SPECIFICATION

In conjunction with:	00 2 030
Note:	For removing and installing transmission.
Transmission:	S6S 420G, S6S 560G
SI number:	1 02 00 (551)
Order number:	23 0 110
Â	Support
Consisting of:	Â
1 = 23 0 111	Take-up support
Â	NOTE: Transmission: S6S 560G
2 = 23 0 112	Locating bracket (not shown)
Â	NOTE: Transmission: S6S 420G
Â	In conjunction with: 21 0 111 Take-up support

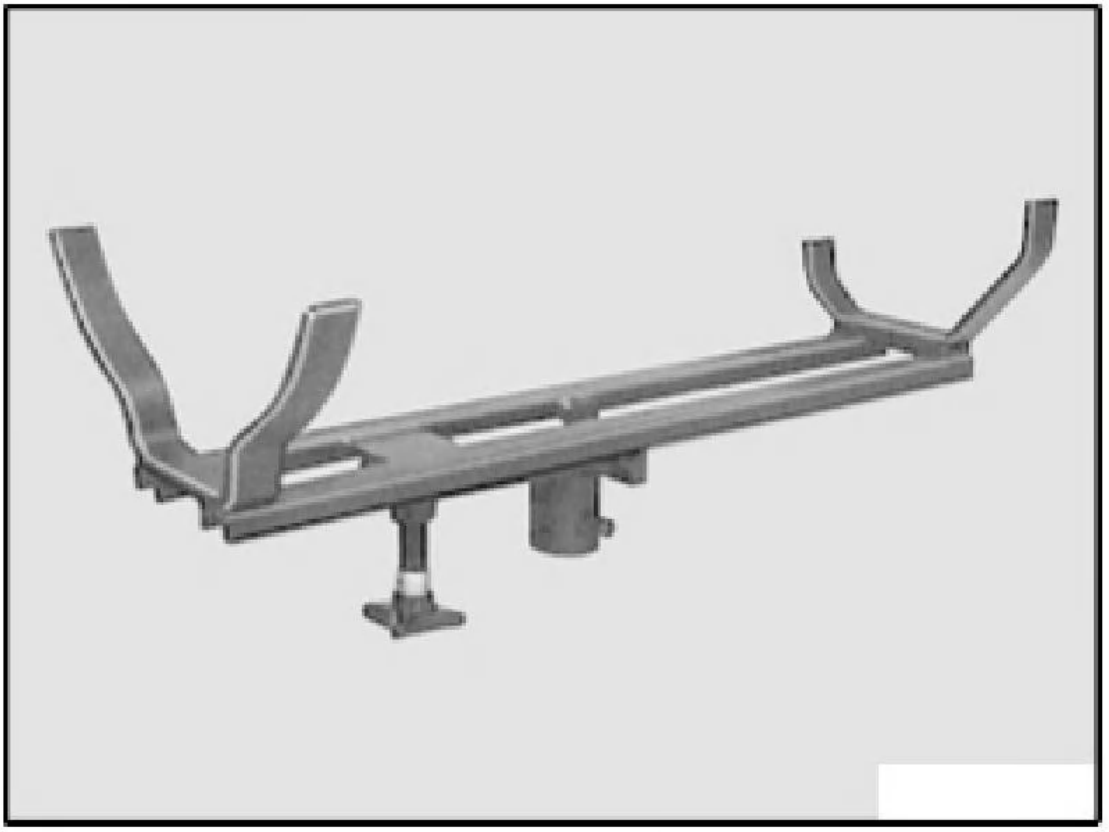

G03155574

Fig. 10: Identifying Special Tools 23 0 110 For Support
Courtesy of BMW OF NORTH AMERICA, INC.

23 0 140 SUPPORT

ORDER NUMBER: 23 0 140 SPECIAL TOOL SPECIFICATION

In conjunction with:	00 2 030
Note:	For accommodating transmission during removal and installation. Transmission: F-transmission
Transmission:	S5D 320Z, S5D 390Z
SI number:	1 20 98(378)
Order number:	23 0 140
Â	Support

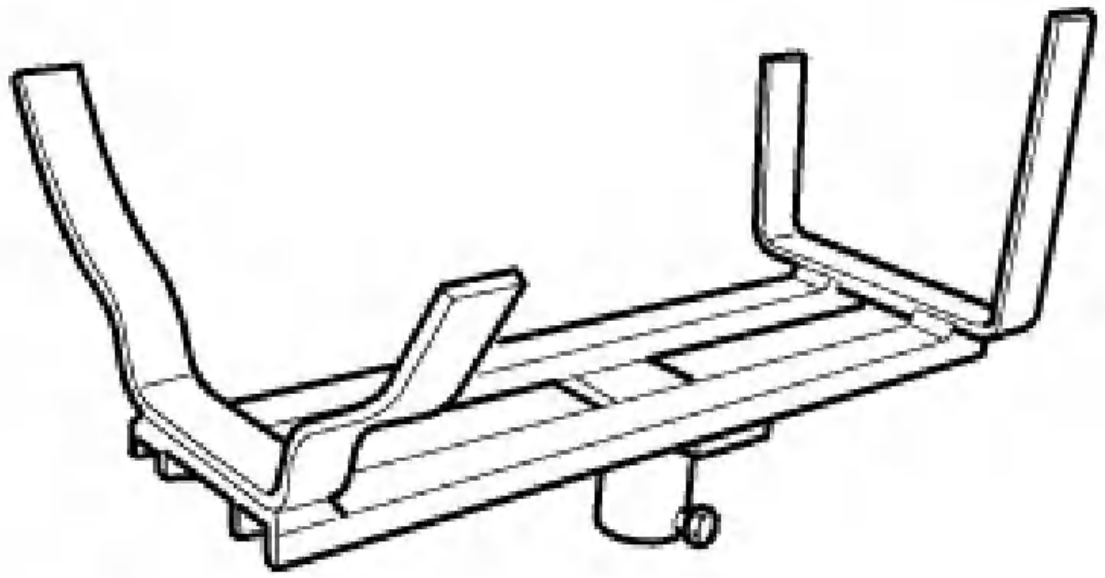

Fig. 11: Identifying Special Tools 23 0 140 For Support
Courtesy of BMW OF NORTH AMERICA, INC.

23 0 150 SUPPORT

ORDER NUMBER: 23 0 150 SPECIAL TOOL SPECIFICATION

In conjunction with:	00 1 450
Note:	For accommodating transmission on assembly stand. For ZF transmission.
Transmission:	ZF S5-16
Order number:	23 0 150
Â	Support

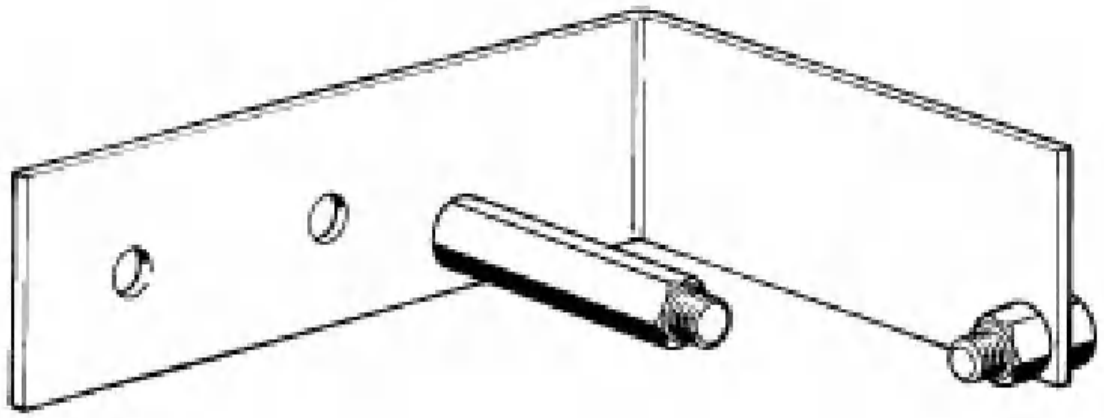

Fig. 12: Identifying Special Tools 23 0 150 For Support
Courtesy of BMW OF NORTH AMERICA, INC.

23 0 160 SUPPORT

ORDER NUMBER: 23 0 160 SPECIAL TOOL SPECIFICATION

In conjunction with:	00 1 450
Note:	For Getrag transmission
Transmission:	262/4
Order number:	23 0 160
Â	Support

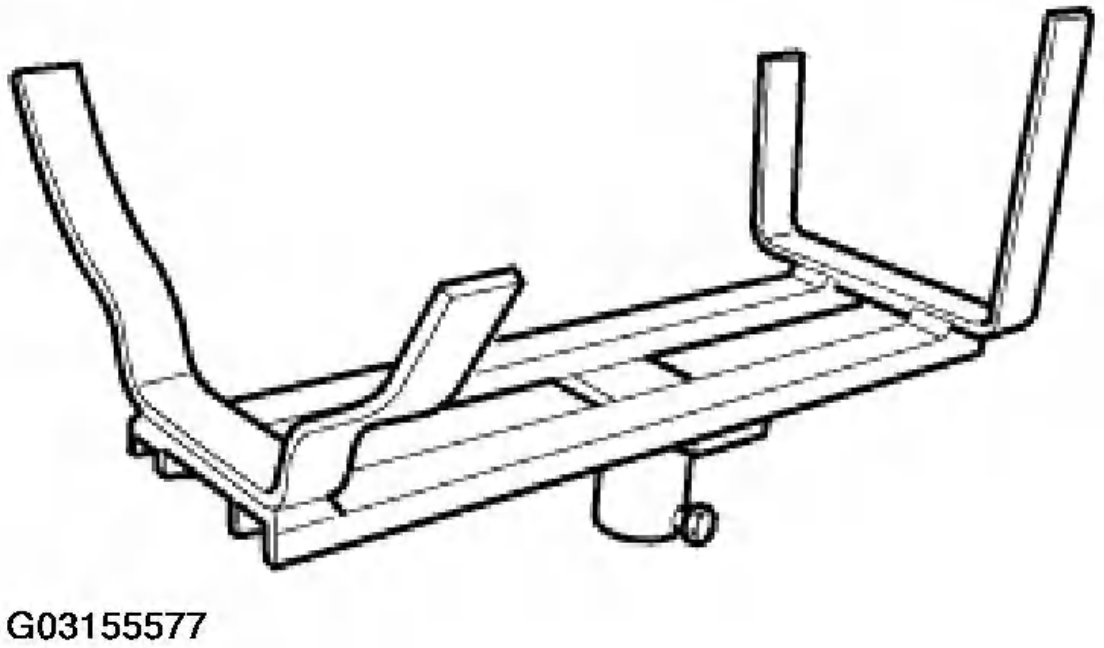

Fig. 13: Identifying Special Tools 23 0 160 For Support
Courtesy of BMW OF NORTH AMERICA, INC.

23 0 170 SUPPORT

ORDER NUMBER: 23 0 170 SPECIAL TOOL SPECIFICATION

In conjunction with:	00 1 450
Note:	For mounting F-transmission on assembly stand
Transmission:	S5D 390Z
SI number:	1 14 99(482)
Order number:	23 0 170
Â	Support
Consisting of:	Â
1 = 23 0 171	Basic body
2 = 23 0 172	Spindle (2)
Â	NOTE: With handle

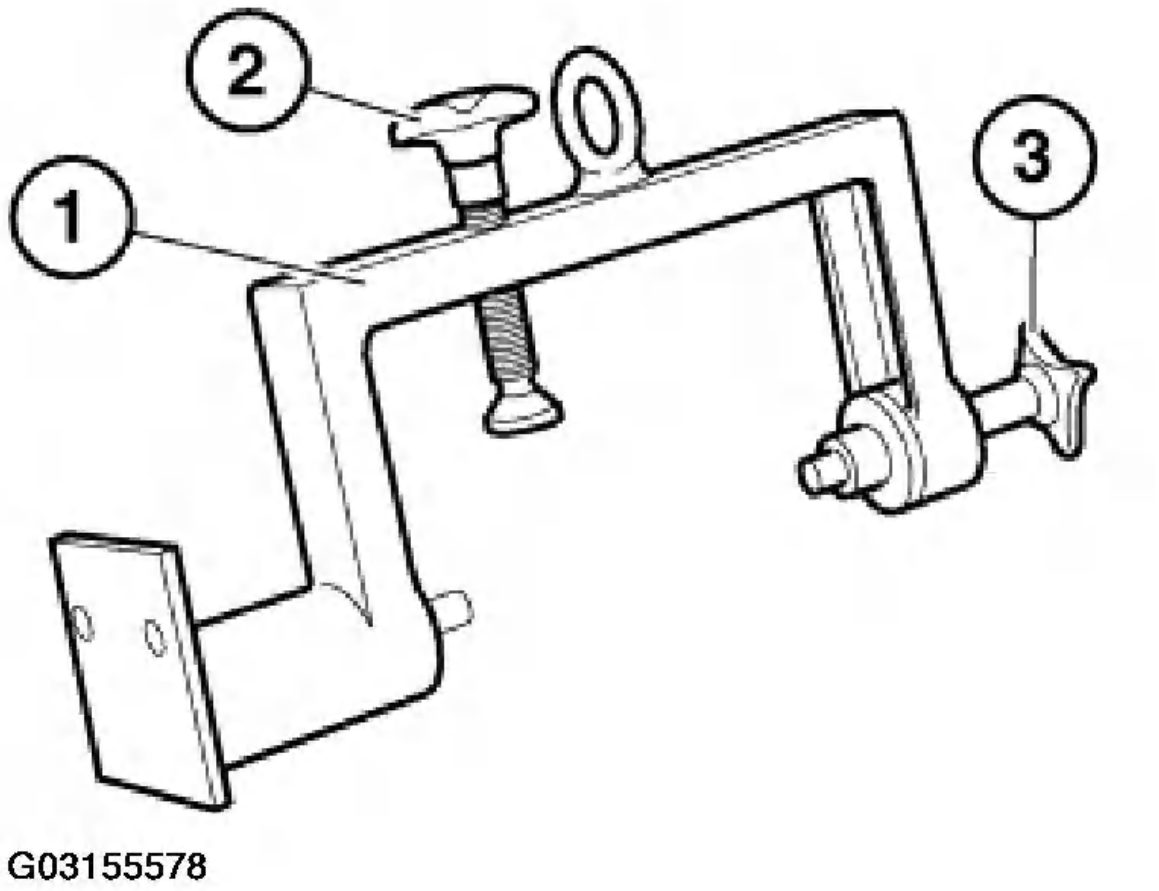

Fig. 14: Identifying Special Tools 23 0 170 For Support
Courtesy of BMW OF NORTH AMERICA, INC.

23 0 180 IMPACT RING WITH SLIP SLEEVE

Minimum set: Mechanical tools

ORDER NUMBER: 23 0 180 SPECIAL TOOL SPECIFICATION

In conjunction with:	23 2 491
Note:	For driving in radial shaft seal on drive side - F transmission
Transmission:	S5D 390Z
SI number:	1 14 99(482)
Order number:	23 0 180
Â	Impact ring with slip sleeve
Consisting of:	Â
1 = 23 0 181	Impact ring
2 = 23 0 182	Slip sleeve

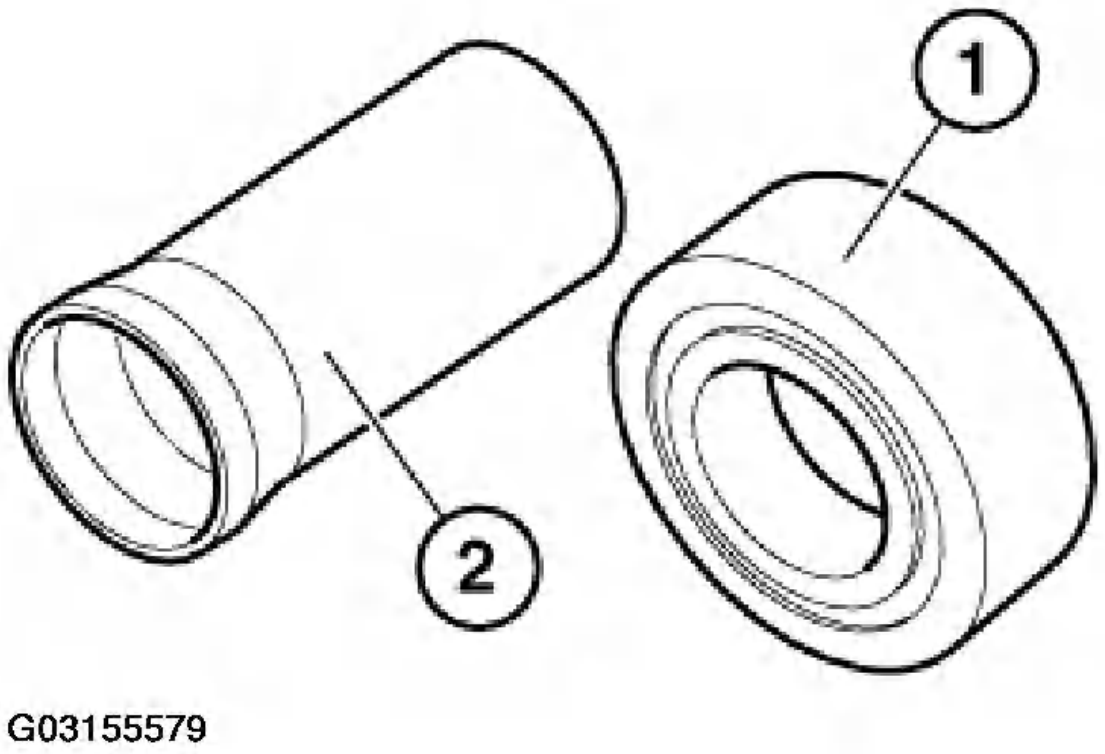

Fig. 15: Identifying Special Tools 23 0 180 Impact Ring With Slip Sleeve
Courtesy of BMW OF NORTH AMERICA, INC.

23 0 190 IMPACT BUSH

Minimum set: Mechanical tools

ORDER NUMBER: 23 0 190 SPECIAL TOOL SPECIFICATION

Note:	For driving in radial shaft seal on output side - F transmission
Transmission:	S5D 280Z, S5D 320Z, S5D 390Z
Storage location:	B39
SI number:	1 14 99(482)
Order number:	23 0 190

Â	Impact bush

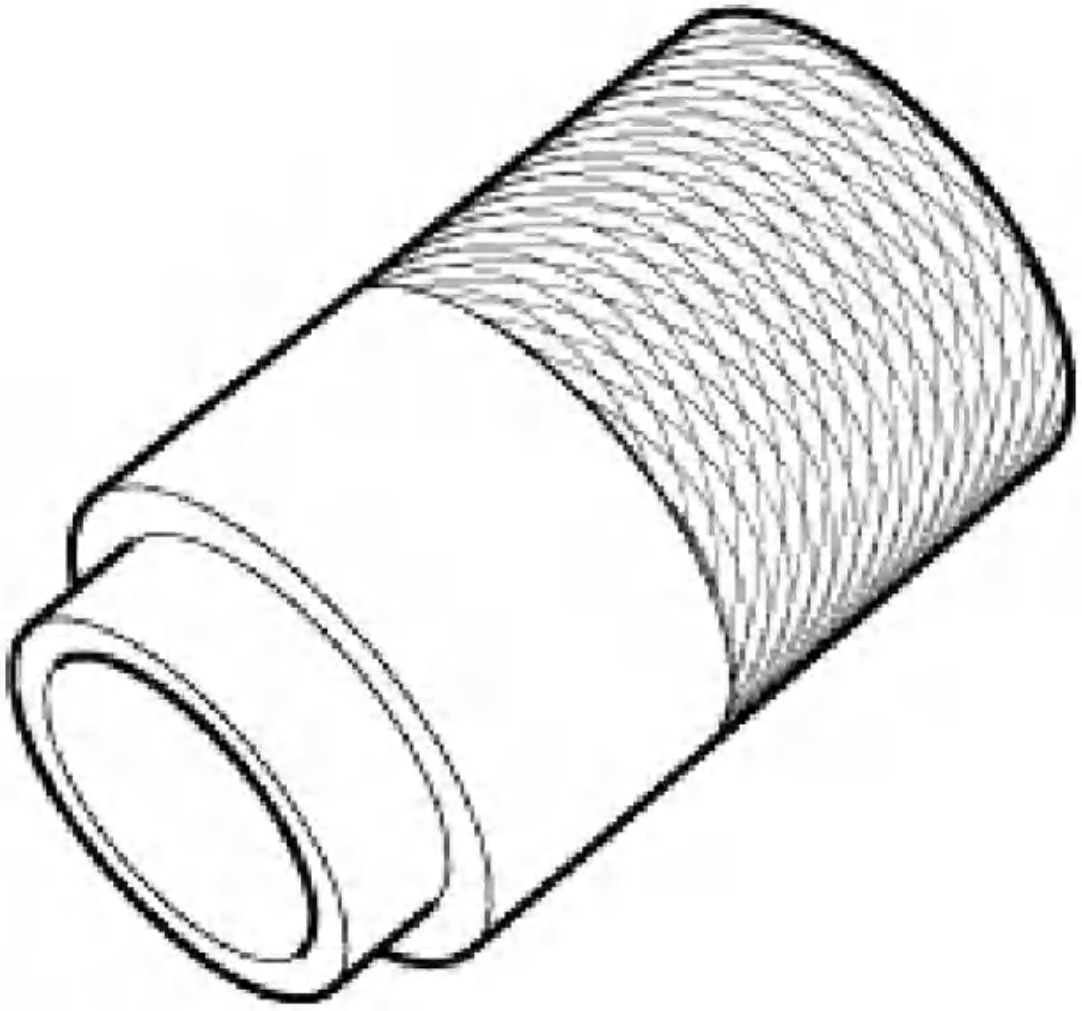

Fig. 16: Identifying Special Tools 23 0 190 Impact Bush
Courtesy of BMW OF NORTH AMERICA, INC.

23 0 200 SOCKET 41 A/F

Minimum set: Mechanical tools

ORDER NUMBER: 23 0 200 SPECIAL TOOL SPECIFICATION

Note:	Long version for releasing and tightening down output flange - F-transmission
Transmission:	S5D 390Z
SI number:	1 14 99(482)
Order number:	23 0 200
Â	Socket 41 A/F

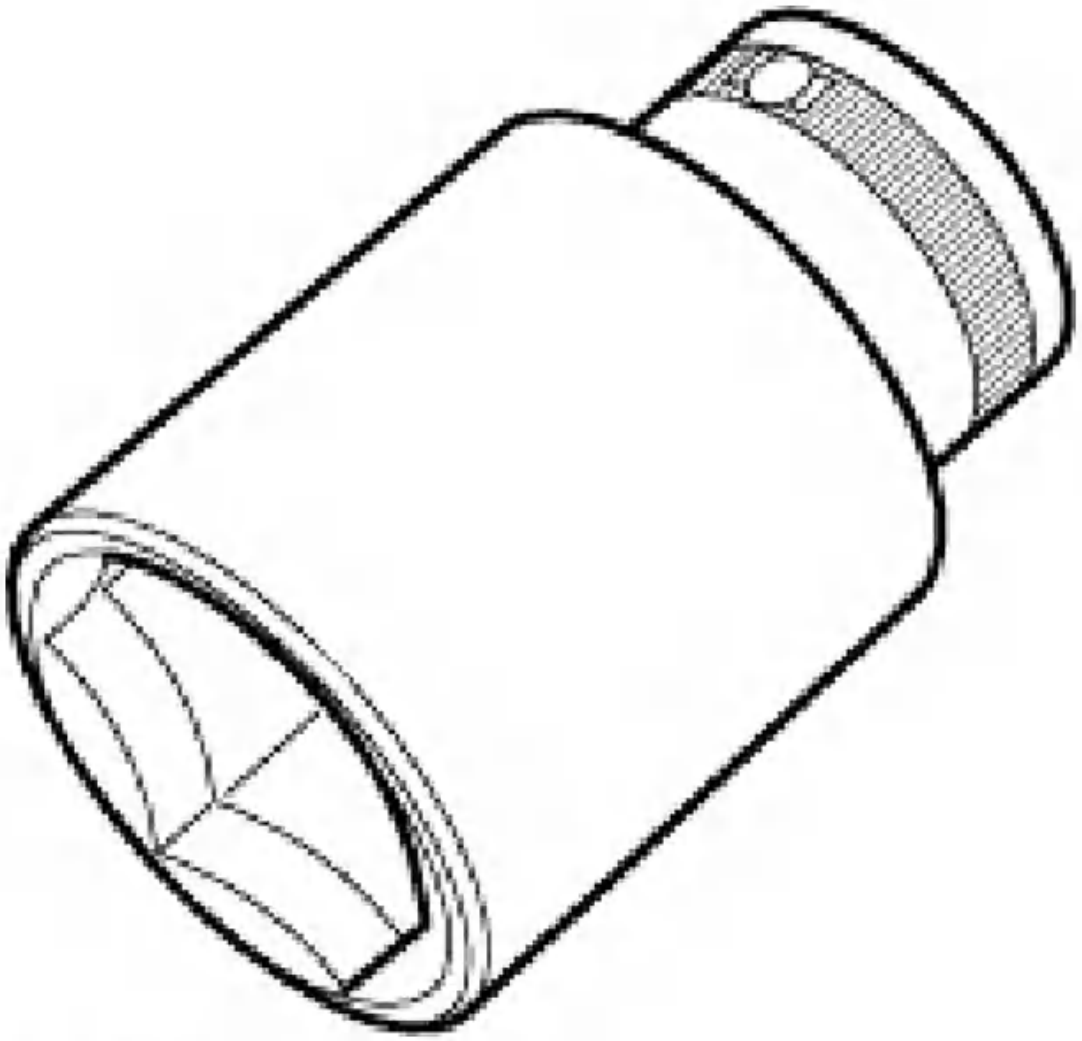

Fig. 17: Identifying Special Tools 23 0 200 Socket 41 A/F
Courtesy of BMW OF NORTH AMERICA, INC.

23 0 250 HOLDER

Minimum set: Mechanical tools

ORDER NUMBER: 23 0 250 SPECIAL TOOL SPECIFICATION

Note:	Assistance in releasing and tightening down output flange
Transmission:	GS5-39DZ, S5D 280Z, S5D 320Z
Storage location:	B41
SI number:	1 06 00(575)
Order number:	23 0 250
Â	Holder

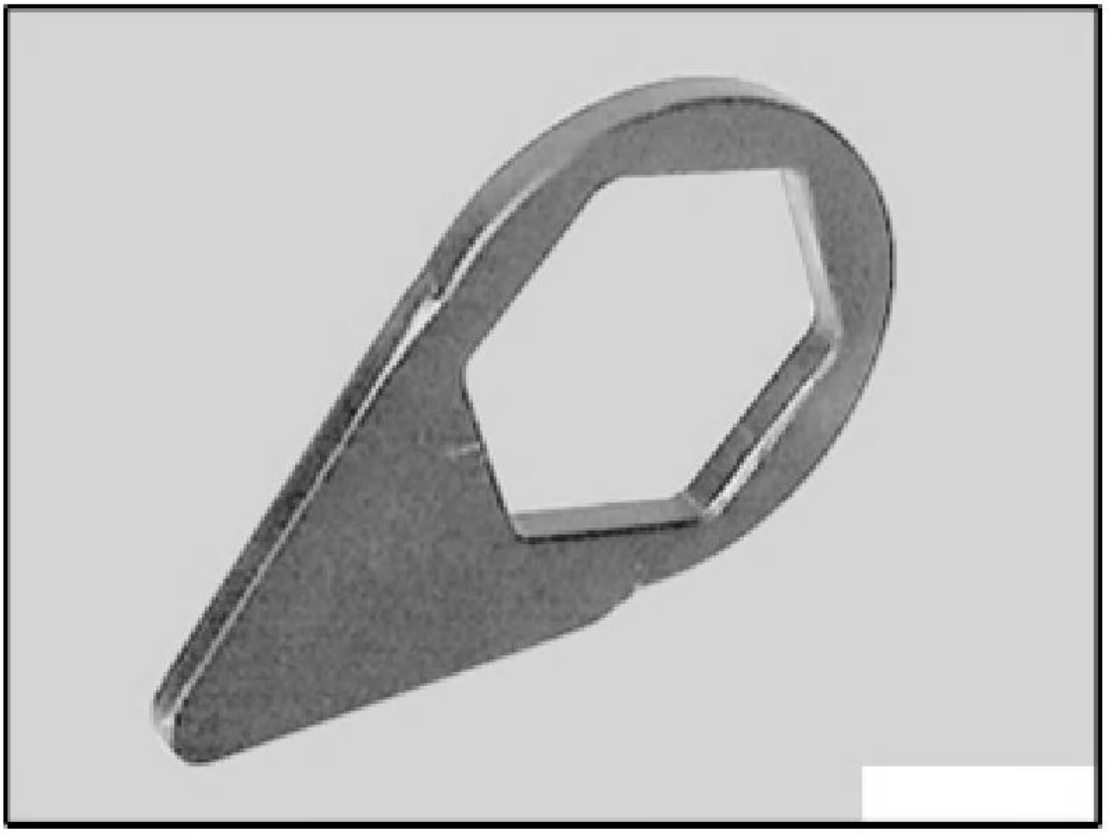

G03155582

Fig. 18: Identifying Special Tools 23 0 250 Holder
Courtesy of BMW OF NORTH AMERICA, INC.

23 0 490 EXTRACTOR

ORDER NUMBER: 23 0 490 SPECIAL TOOL SPECIFICATION

Note:	For removing shaft seal
Series:	E34, E34tou, E36, E36/2, E36/3, E36/5, E36/7, E36/C, E36tou, E39, E39PL, E39tou, E46, E46/16, E46/2, E46/3, E46/5, E46/C, E53, E60, E61, E63, E64, E83, E85, E87, E90, E91, R50, R52
Transmission:	GS5-39DZ, GS5-65BH, GS6-17BG, GS7S47BG, S5D 200G, S5D 250G, S5D 260Z, S5D 280Z, S5D 310Z, S5D 320Z, S5D 390Z, S6S 420G, S6S 560G
Storage location:	B6, C6
SI number:	1 15 96 (106)
Order number:	23 0 490
Extractor	
Consisting of:	
1 = 23 0 491	Rod
NOTE: With self-tapping screw	
2 = 23 0 492	Impact weight

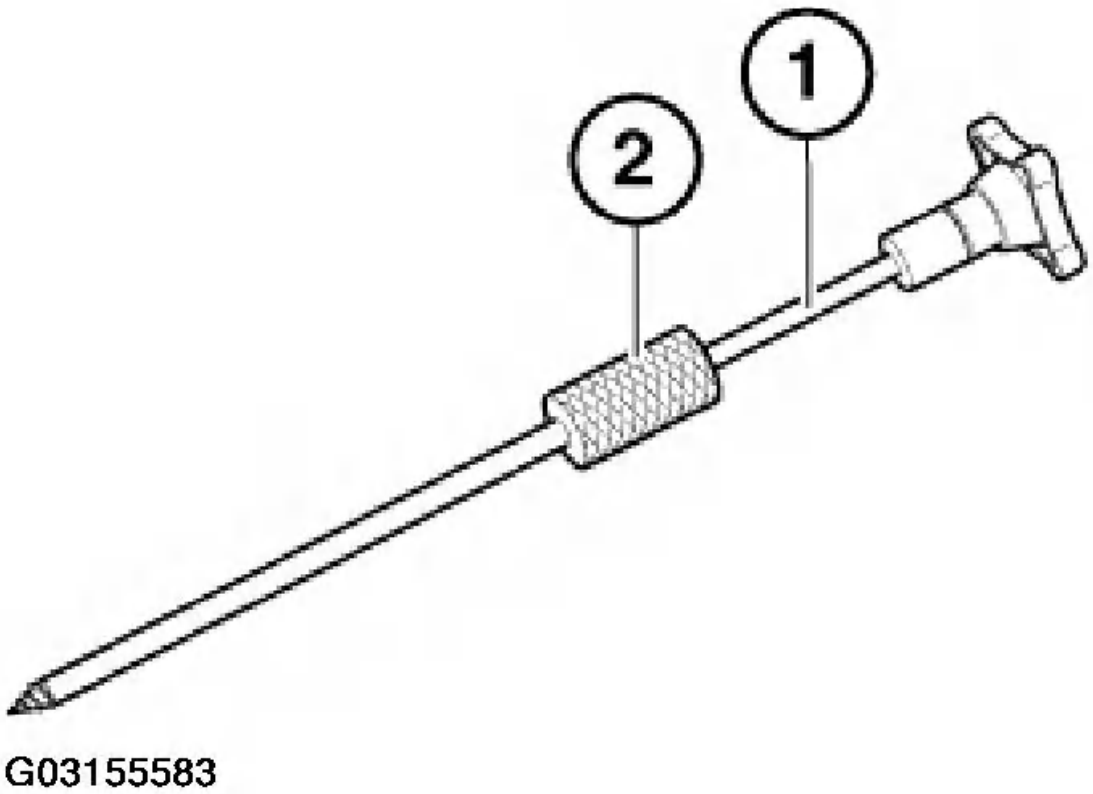

Fig. 19: Identifying Special Tools 23 0 490 Extractor
Courtesy of BMW OF NORTH AMERICA, INC.

23 1 000 FIXTURE

ORDER NUMBER: 23 1 000 SPECIAL TOOL SPECIFICATION

Note:	For pressing-on transmission casing and deep groove ball bearing on transmission input shaft and in transmission casing
Transmission:	240/5, 242/4, 245/5, 245/5Sport, 260/5, 262/4, 265/5, 265/5Sport, 280/5Sport, 3 HP 12, 3 HP 20, 3 HP 22, 4 HP 22, 4 HP 24, A4S 270R, A4S 310R, A5S 300J, A5S 310Z, A5S 440Z, A5S 560Z, BW 65, S5D 260Z
Storage location:	C15, C16
Order number:	23 1 000
Â	Fixture
Consisting of:	Â
1 = 23 1 001	Sleeve
2 = 23 1 002	Dowel pin (2 x)
3 = 23 1 003	Thrust piece, long
4 = 23 1 004	Thrust piece, short
5 = 23 1 005	Handle
7 = 23 1 007	Thrust piece for Getrag transmissions

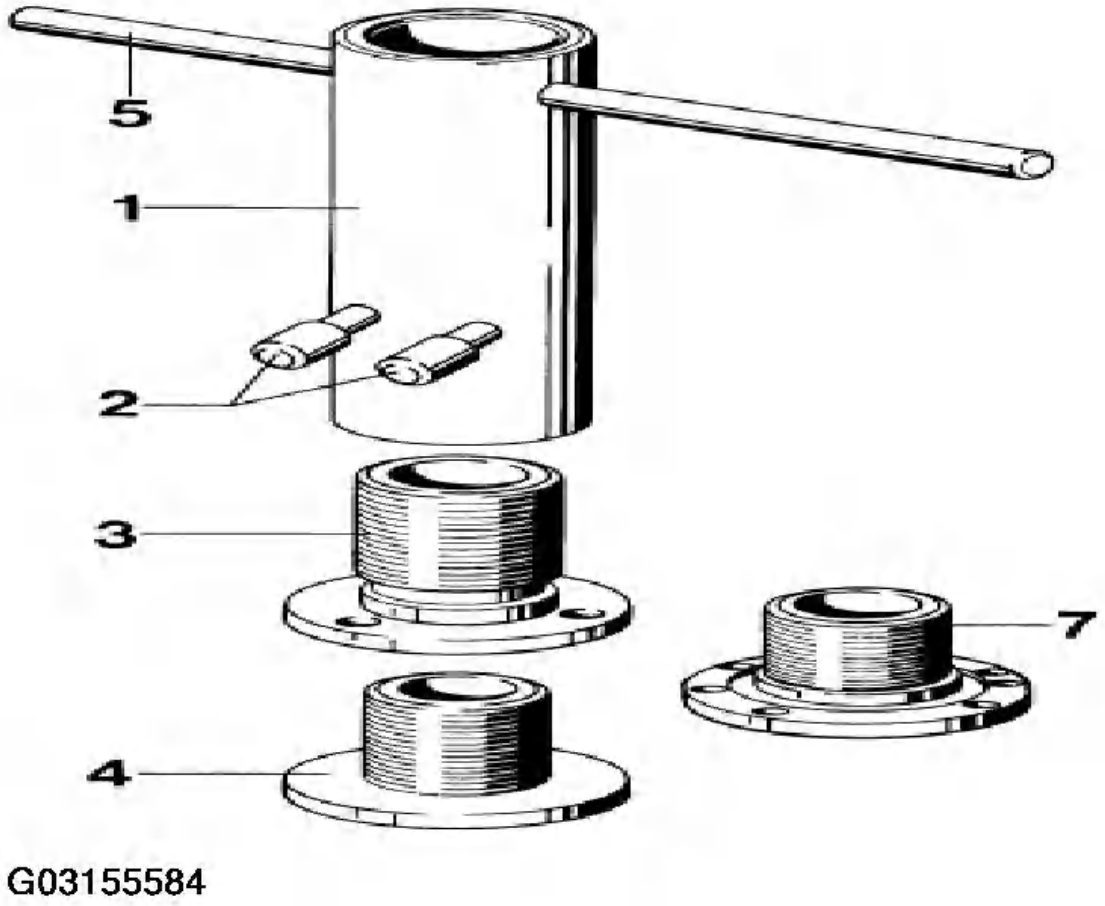

Fig. 20: Identifying Special Tools 23 1 000 Fixture
Courtesy of BMW OF NORTH AMERICA, INC.

23 1 010 FIXTURE FOR REMOVING REAR SECTION OF TRANSMISSION CASING

ORDER NUMBER: 23 1 010 SPECIAL TOOL SPECIFICATION

Transmission:	280/5 Sport
Order number:	23 1 010
Â	Fixture for removing rear section of transmission casing

Fig. 21: Identifying Special Tools 23 1 010 Fixture For Removing Rear Section Of Transmission Casing
Courtesy of BMW OF NORTH AMERICA, INC.

23 1 020 FIXTURE FOR REMOVING TRANSMISSION CASING (FRONT AND REAR SECTION)

ORDER NUMBER: 23 1 020 SPECIAL TOOL SPECIFICATION

In conjunction with:	33 1 301
Transmission:	245/5 Sport
Storage location:	C32
Order number:	23 1 020
Â	Fixture for removing transmission casing (front and rear section)

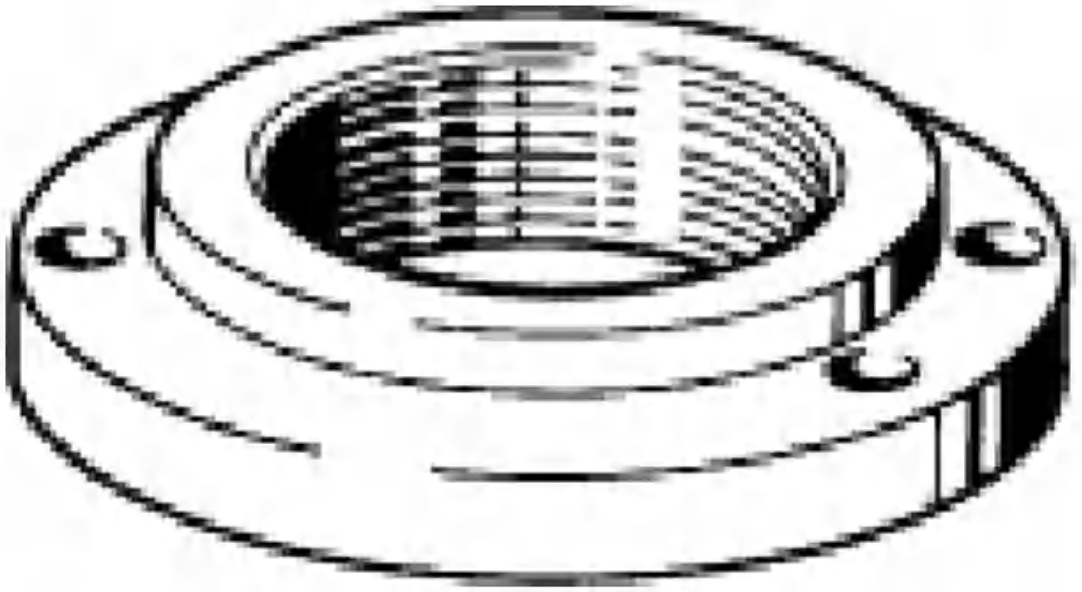

Fig. 22: Identifying Special Tools 23 1 020 Fixture For Removing Transmission Casing (Front And Rear Section)
Courtesy of BMW OF NORTH AMERICA, INC.

23 1 030 DRIFT FOR FITTING INNER BEARING RACE ON COUNTERSHAFT

ORDER NUMBER: 23 1 030 SPECIAL TOOL SPECIFICATION

Transmission:	245/5, 265/5
Storage location:	C22
Order number:	23 1 030
Â	Drift for fitting inner bearing race on countershaft

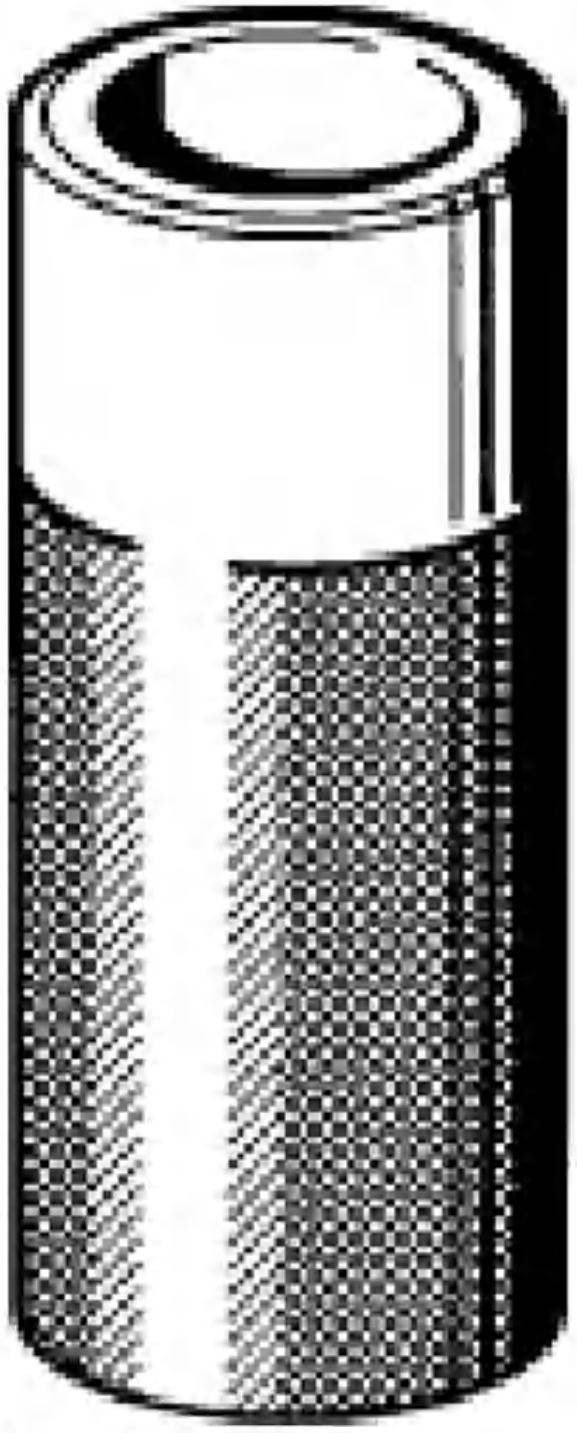

Fig. 23: Identifying Special Tools 23 1 030 Drift For Fitting Inner Bearing Race On Countershaft
Courtesy of BMW OF NORTH AMERICA, INC.

23 1 040 DRIFT

ORDER NUMBER: 23 1 040 SPECIAL TOOL SPECIFICATION

Note:	For mounting sliding section (5th gear) and driving water pipe out of crankcase Engine: N73
Transmission:	245/5Sport, S5D 200G, S5D 250G
Storage location:	C23
Order number:	23 1 040

Fig. 24: Identifying Special Tools 23 1 040 Drift
Courtesy of BMW OF NORTH AMERICA, INC.

23 1 050 PULLER (KUKKO)

ORDER NUMBER: 23 1 050 SPECIAL TOOL SPECIFICATION

Note:	For 5th gear as well as reverse gear wheel
Transmission:	240/5, 245/5, 260/5, 265/5Sport, 280/5Sport, ZF S5-16
Order number:	23 1 050

Â	Puller (Kukko)
Consisting of:	Â
1 = 23 1 051	Link (Kukko 20-20)

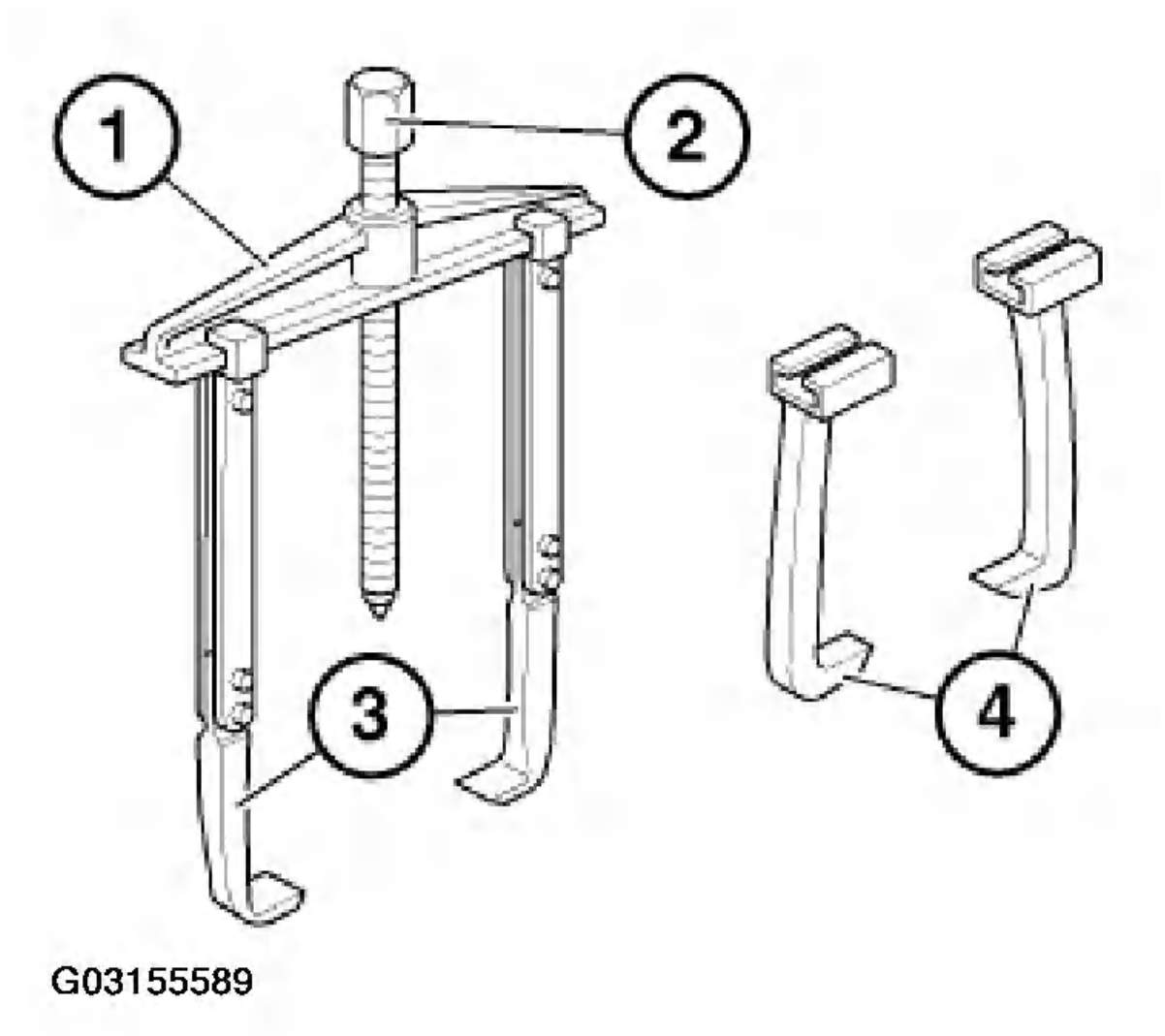

Fig. 25: Identifying Special Tools 23 1 050 Puller (Kukko)
Courtesy of BMW OF NORTH AMERICA, INC.

23 1 060 FIXTURE

ORDER NUMBER: 23 1 060 SPECIAL TOOL SPECIFICATION

In conjunction with:	33 1 301
Note:	For removing inner bearing race - reverse gear wheel
Transmission:	245/5, 265/5 Sport
Storage location:	B20
Order number:	23 1 060
Â	Fixture
Consisting of:	Â
1 = 23 1 061	Shells (2)
2 = 23 1 062	Threaded ring
3 = 23 1 063	Holding sleeve

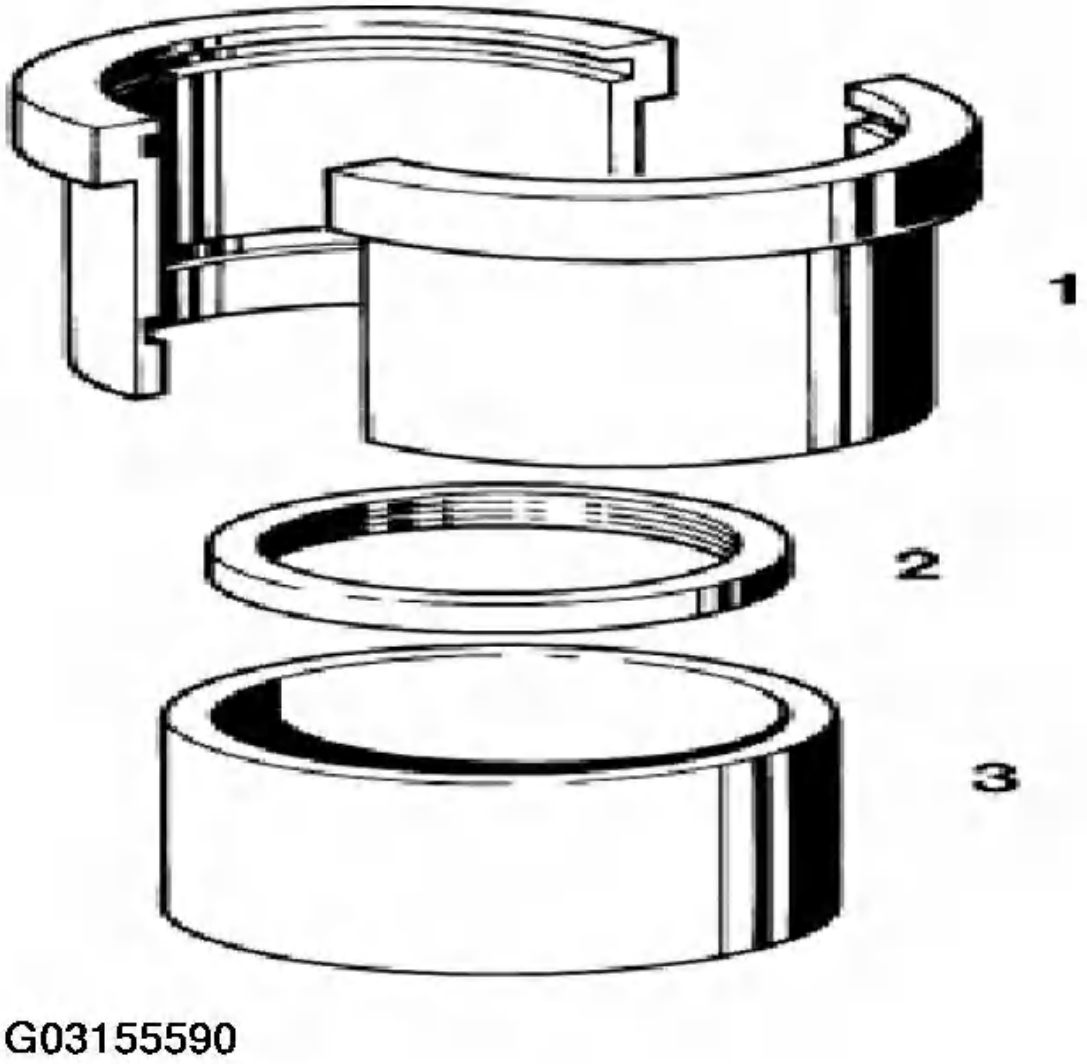

Fig. 26: Identifying Special Tools 23 1 060 Fixture
Courtesy of BMW OF NORTH AMERICA, INC.

23 1 070 MEASURING RING

ORDER NUMBER: 23 1 070 SPECIAL TOOL SPECIFICATION

Note:	For determining shim ring between outer bearing race and circlip of countershaft
Transmission:	245/5
Storage location:	B28
Order number:	23 1 070
Â	Measuring ring

Fig. 27: Identifying Special Tools 23 1 070 Measuring Ring
Courtesy of BMW OF NORTH AMERICA, INC.

23 1 080 DRIFT

ORDER NUMBER: 23 1 080 SPECIAL TOOL SPECIFICATION

In conjunction with:	00 5 500
Note:	For removing and installing outer bearing race in front section of transmission casing/center section of countershaft and of ball bearing in rear section of transmission casing, input shaft
Transmission:	245/5, 265/5
Storage location:	A28
Order number:	23 1 080
Â	Drift

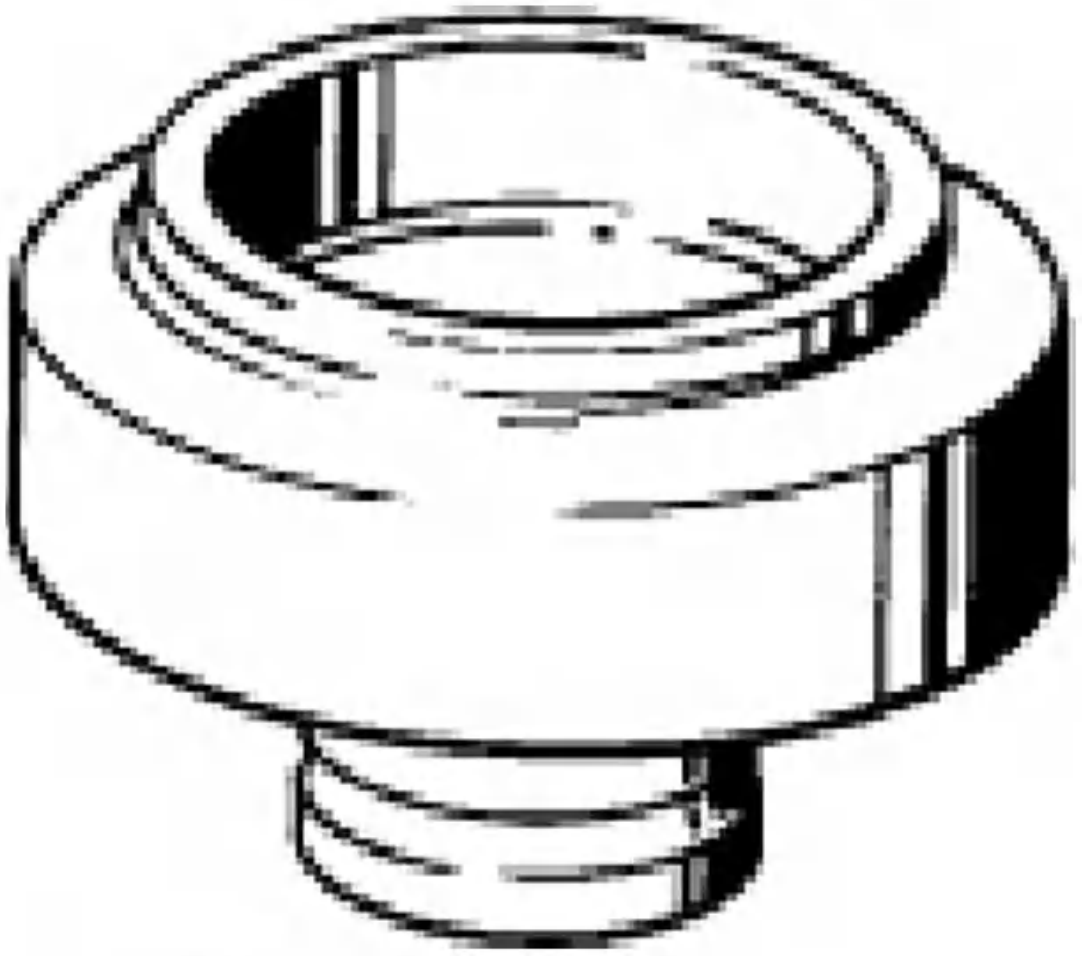

Fig. 28: Identifying Special Tools 23 1 080 Drift
Courtesy of BMW OF NORTH AMERICA, INC.

23 1 090 DRIFT

ORDER NUMBER: 23 1 090 SPECIAL TOOL SPECIFICATION

In conjunction with:	00 5 500
Note:	For removing and installing outer bearing race of input shaft in front section of transmission casing
Transmission:	245/5, 265/5, GS5-65BH
Storage location:	A28
Order number:	23 1 090
Â	Drift

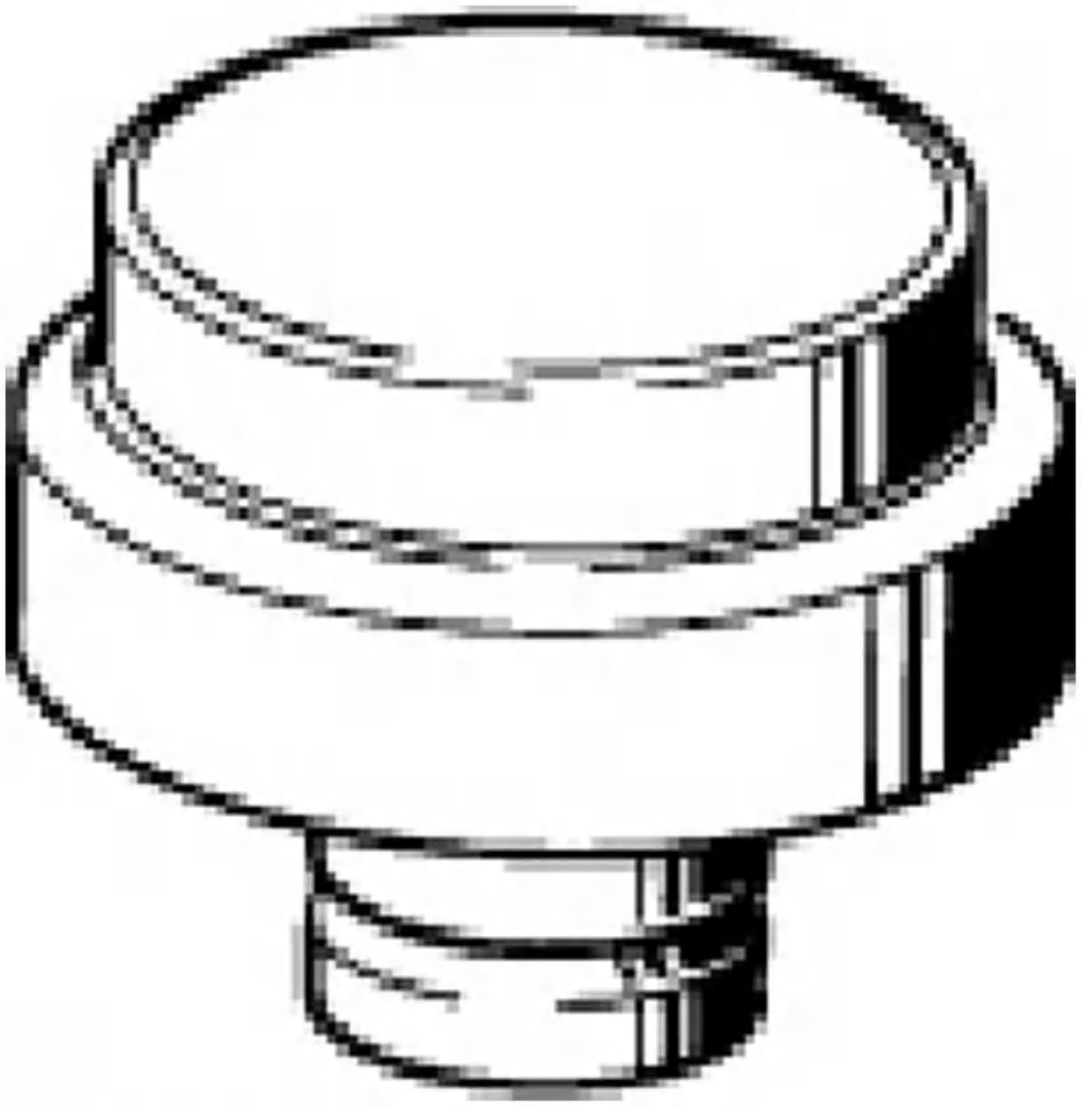

Fig. 29: Identifying Special Tools 23 1 090 Drift
Courtesy of BMW OF NORTH AMERICA, INC.

23 1 100 PULLER CLAWS

ORDER NUMBER: 23 1 100 SPECIAL TOOL SPECIFICATION

In conjunction with:	00 7 500
Note:	For speedometer gear
Transmission:	245/5, 265/5, 280/5Sport
Storage location:	B29
Order number:	23 1 100
Â	Puller claws

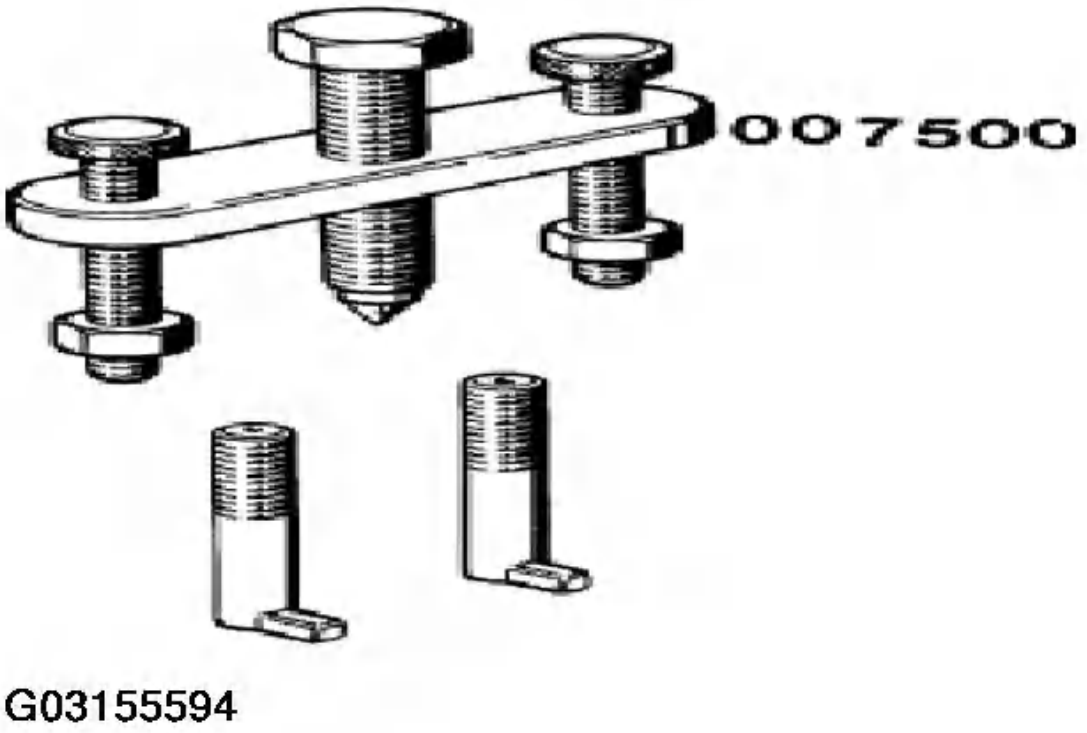

Fig. 30: Identifying Special Tools 23 1 100 Puller Claws
Courtesy of BMW OF NORTH AMERICA, INC.

23 1 110 DRIFT

ORDER NUMBER: 23 1 110 SPECIAL TOOL SPECIFICATION

In conjunction with:	00 5 500
Note:	For installing bearing of output shaft in rear section of transmission casing
Transmission:	245/5
Storage location:	A28
Order number:	23 1 110
Â	Drift

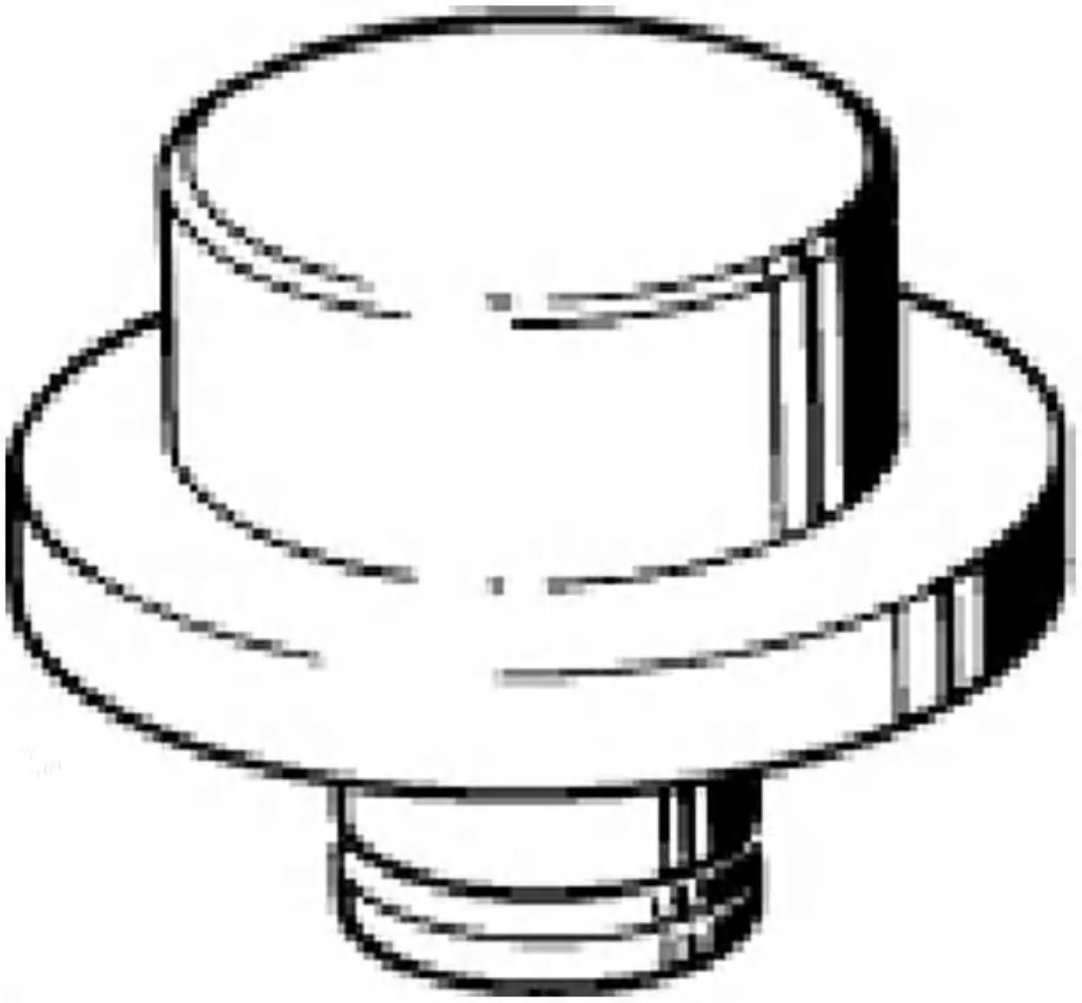

Fig. 31: Identifying Special Tools 23 1 110 Drift
Courtesy of BMW OF NORTH AMERICA, INC.

23 1 120 DRIFT

ORDER NUMBER: 23 1 120 SPECIAL TOOL SPECIFICATION

In conjunction with:	00 5 500
Note:	For removing outer bearing race of countershaft in center section of transmission casing
Transmission:	240/5, 245/5, 260/5, 280/5Sport, ZF S5-16
Storage location:	A29
Order number:	23 1 120
Â	Drift

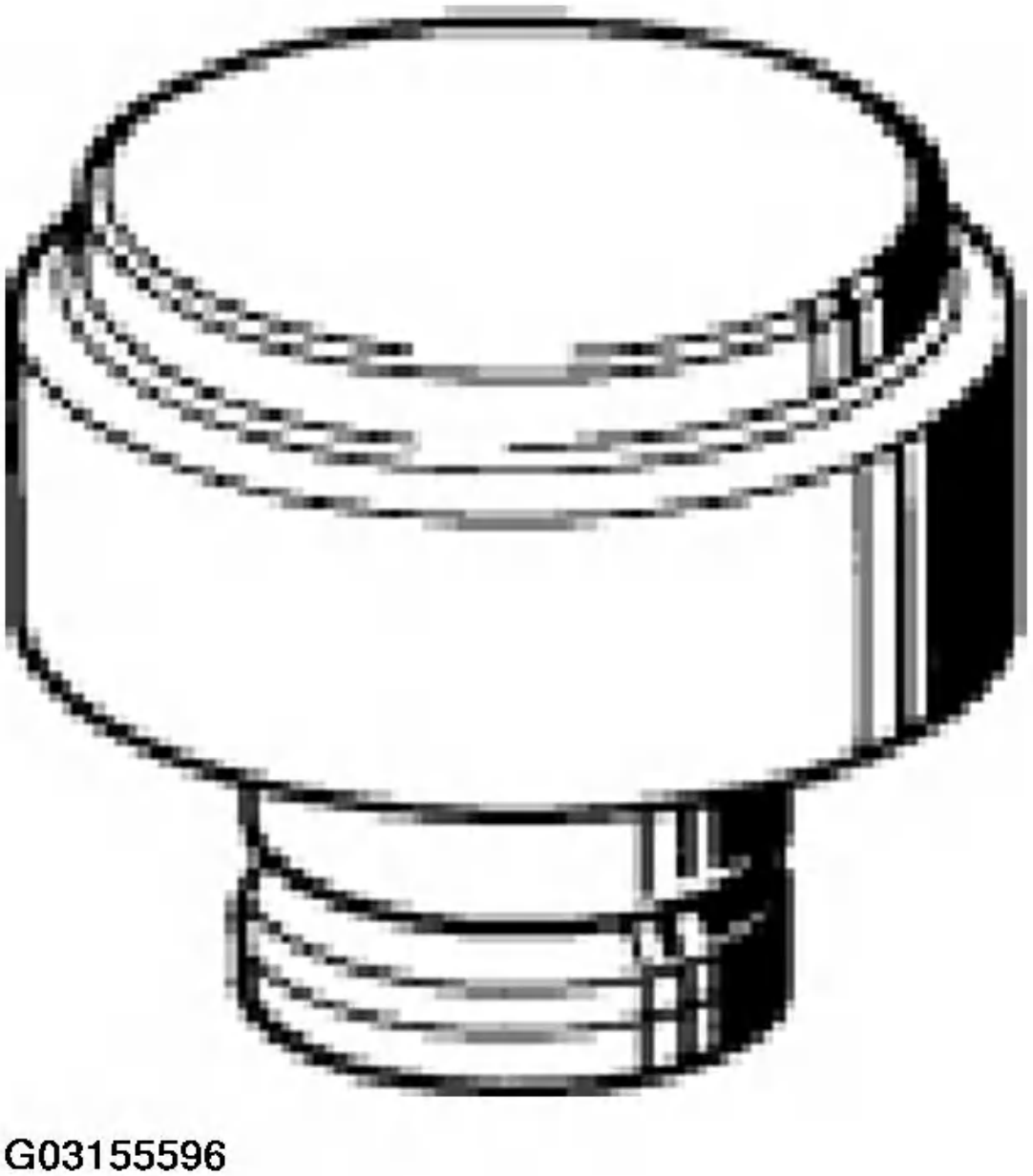

Fig. 32: Identifying Special Tools 23 1 120 Drift
Courtesy of BMW OF NORTH AMERICA, INC.

23 1 130 DRIFT

ORDER NUMBER: 23 1 130 SPECIAL TOOL SPECIFICATION

Note:	For removing bearing of input shaft and roller bearing in center section of transmission casing
Transmission:	245/5, 280/5Sport
Storage location:	A29
Order number:	23 1 130
Â	Drift

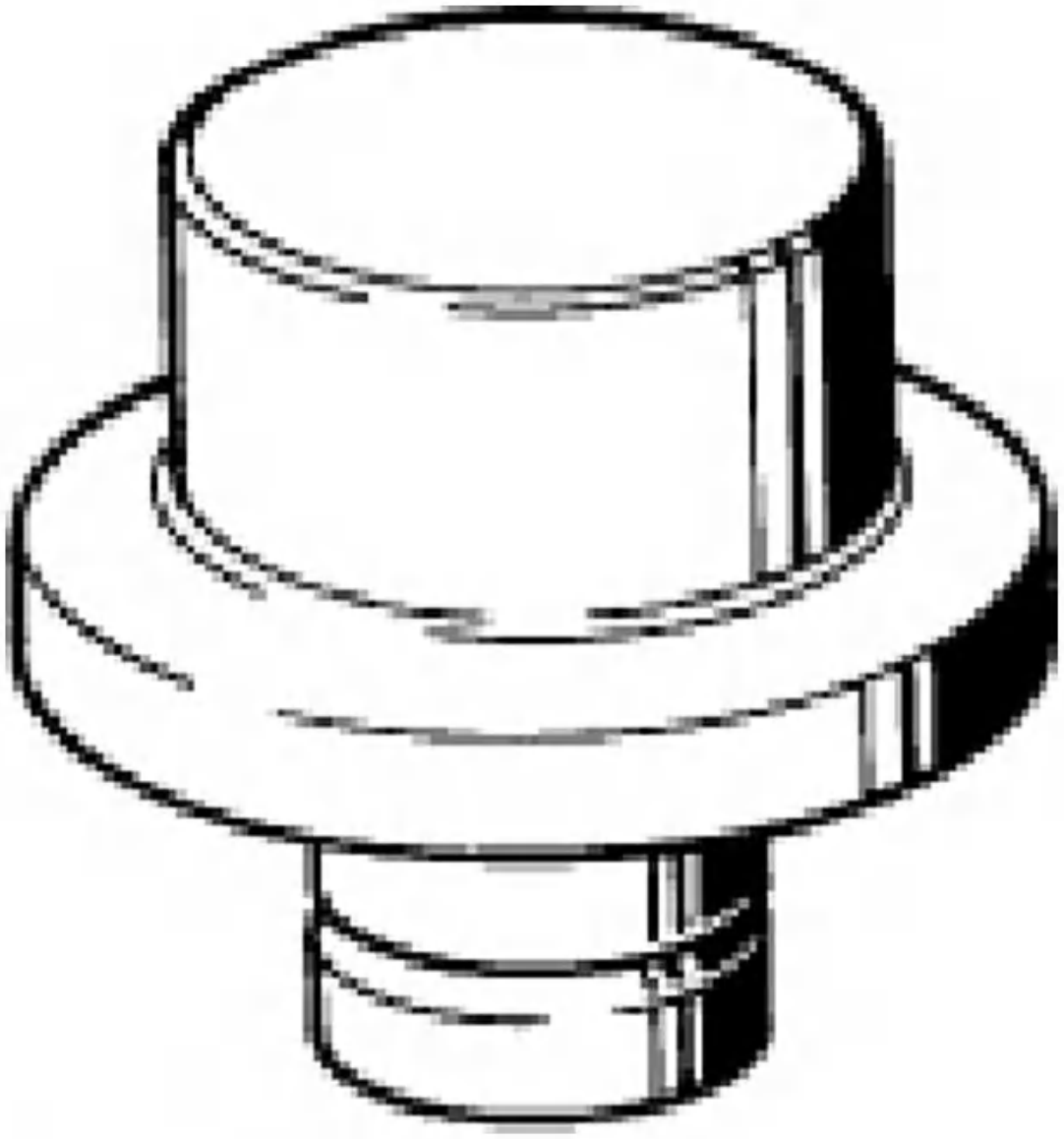

Fig. 33: Identifying Special Tools 23 1 130 Drift
Courtesy of BMW OF NORTH AMERICA, INC.

23 1 160 DRIFT

ORDER NUMBER: 23 1 160 SPECIAL TOOL SPECIFICATION

Note:	For fitting inner bearing race and bearing sleeve on output shaft (245) - fitting slide (5th gear - 265/5) - mounting output flange - mounting bearing on countershaft (S5D 310Z) - mounting center bearing on propeller shaft, E46
Series:	E36, E38, E46, E65, E85, E87, E90
Transmission:	242/4, 245/5, 265/5, 280/5Sport, A5S 310Z, S5D 260Z, S5D 310Z, S5D 320Z
Storage location:	C22, C23

Order number:	23 1 160
Â	Drift

Fig. 34: Identifying Special Tools 23 1 160 Drift
Courtesy of BMW OF NORTH AMERICA, INC.

23 1 170 FIXTURE

ORDER NUMBER: 23 1 170 SPECIAL TOOL SPECIFICATION

Note:	For removing front section of transmission casing
Transmission:	265/5

Order number:	23 1 170
Â	Fixture
Consisting of:	Â
1 = 23 1 171	Plate
2 = 23 1 172	Knurled screw (3)

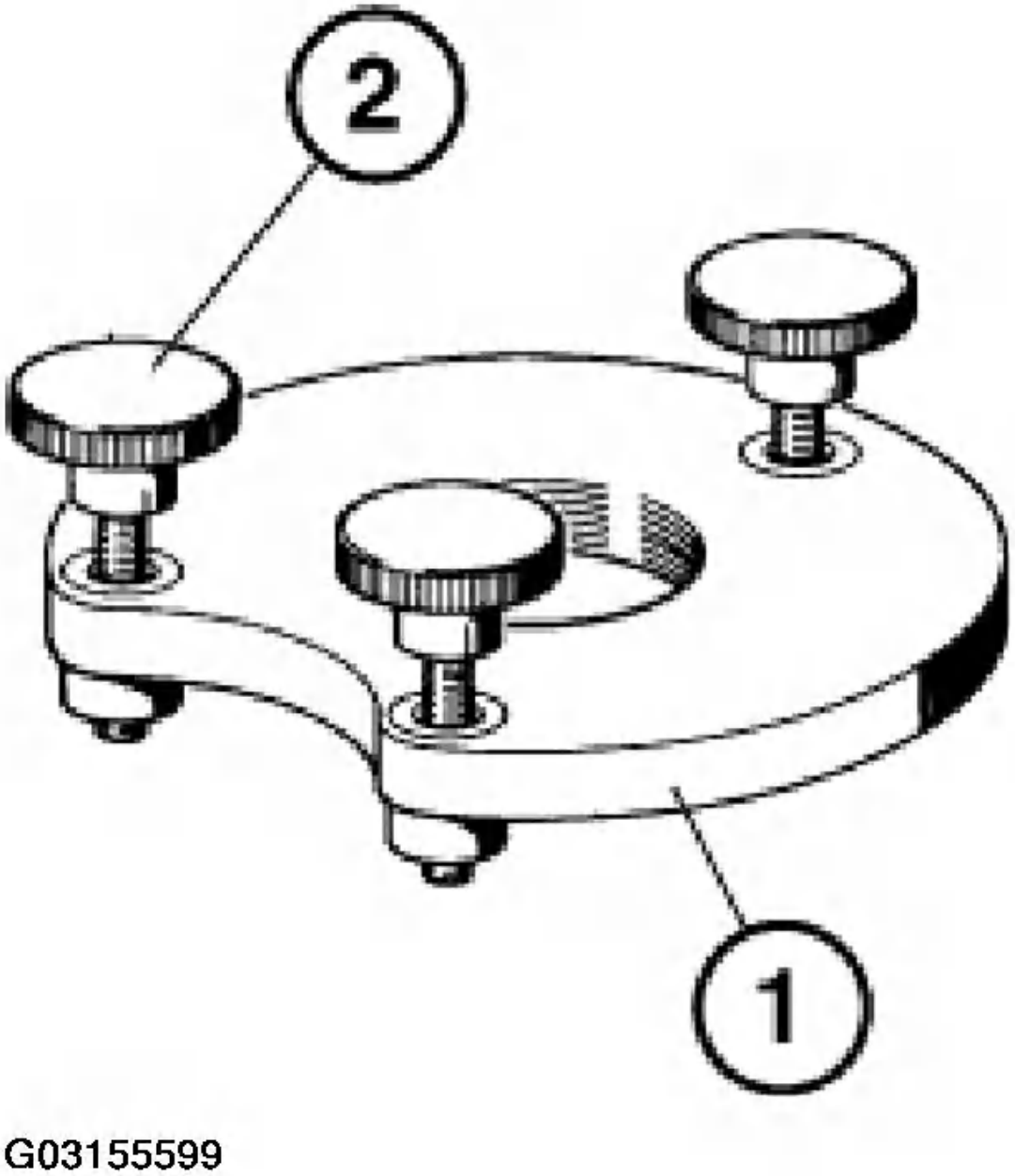

Fig. 35: Identifying Special Tools 23 1 170 Fixture
Courtesy of BMW OF NORTH AMERICA, INC.

23 1 180 DRIFT

ORDER NUMBER: 23 1 180 SPECIAL TOOL SPECIFICATION

In conjunction with:	00 0 500
Note:	For fitting rotary shaft seal in guide tube of clutch

	release mechanism
Transmission:	260/5, 265/5, 265/5Sport, 280/5Sport
Storage location:	A29
Order number:	23 1 180
Â	Drift

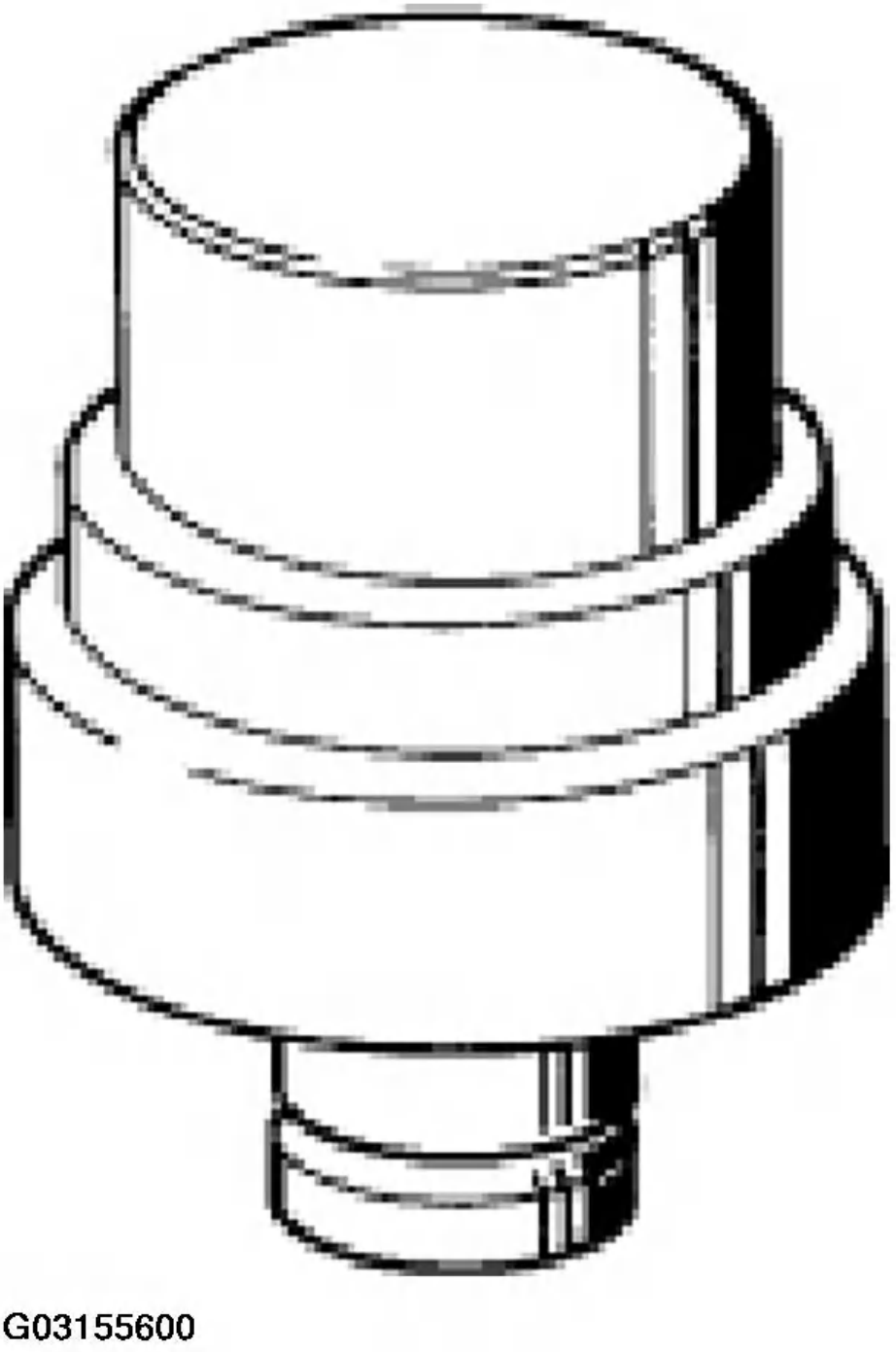

Fig. 36: Identifying Special Tools 23 1 180 Drift
Courtesy of BMW OF NORTH AMERICA, INC.

23 1 190 DRIFT

ORDER NUMBER: 23 1 190 SPECIAL TOOL SPECIFICATION

In conjunction with:	00 5 500
Note:	For removing and installing ball bearing of input shaft in front section of transmission casing
Transmission:	265/5, 280/5 Sport
Order number:	23 1 190
Â	Drift

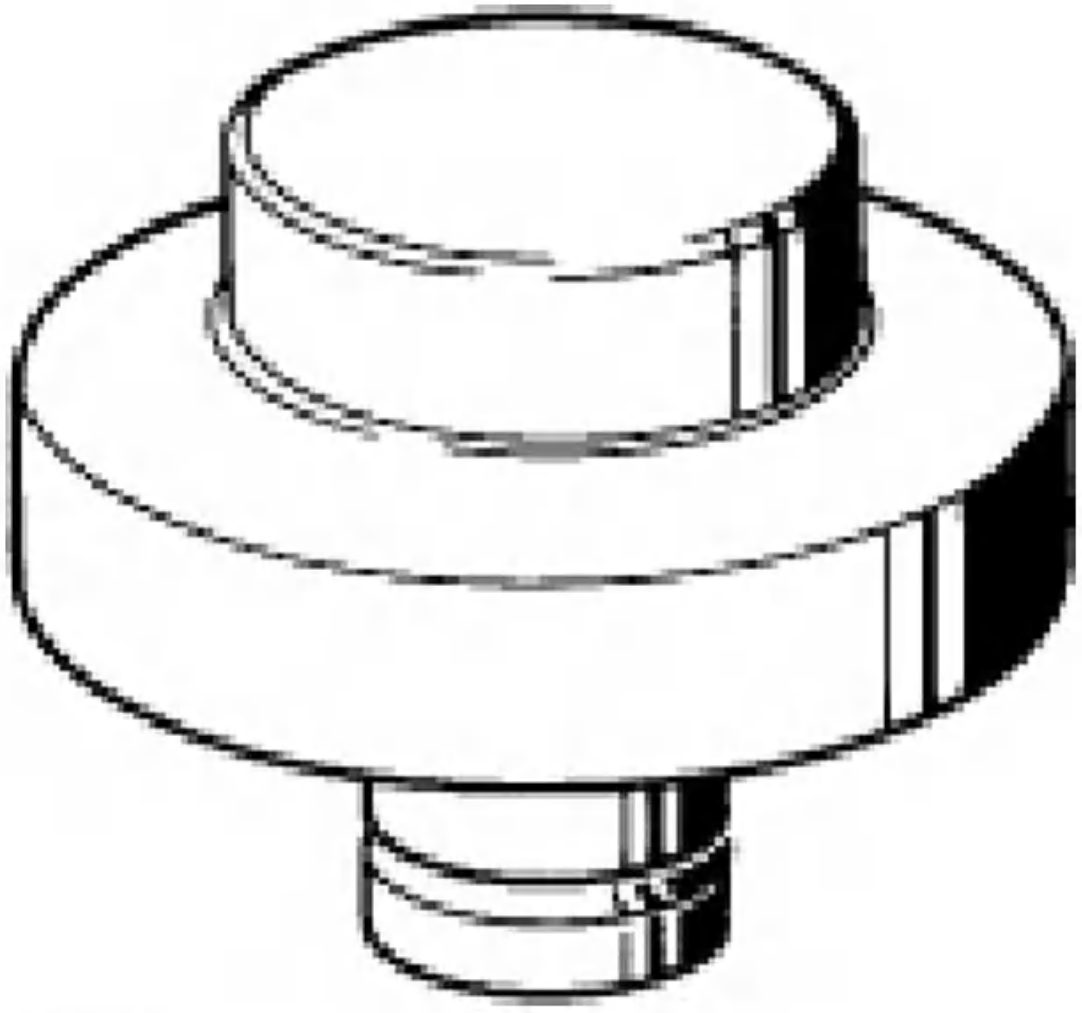

Fig. 37: Identifying Special Tools 23 1 190 Drift
Courtesy of BMW OF NORTH AMERICA, INC.

23 1 200 GUIDE BUSH

ORDER NUMBER: 23 1 200 SPECIAL TOOL SPECIFICATION

In conjunction with:	23 1 210
Note:	For centering wrench socket when releasing and tightening transmission output flange and input flange of rear axle differential

Transmission:	265/5
Storage location:	B30
Order number:	23 1 200
Â	Guide bush

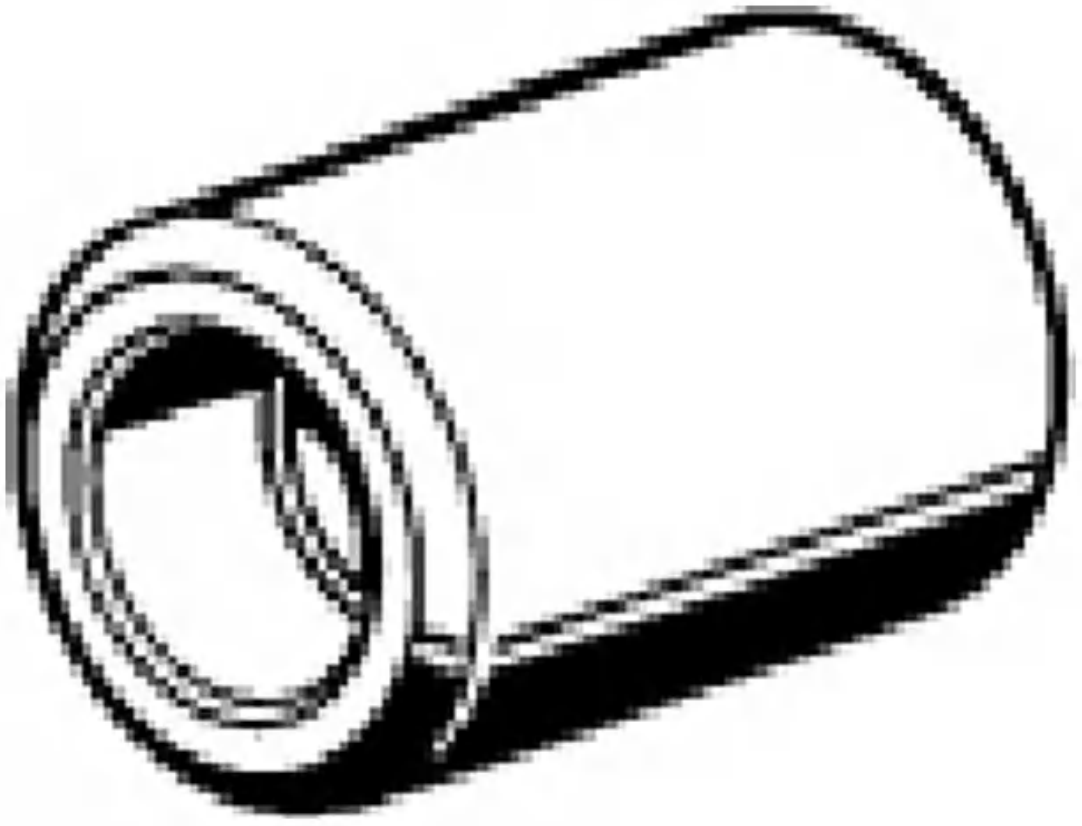

Fig. 38: Identifying Special Tools 23 1 200 Guide Bush
Courtesy of BMW OF NORTH AMERICA, INC.

23 1 220 DRIFT

ORDER NUMBER: 23 1 220 SPECIAL TOOL SPECIFICATION

In conjunction with:	00 5 500
Note:	For removing and installing roller bearing of countershaft shaft in front section of transmission casing
Transmission:	260/5, 265/5, A5S 310Z
Storage location:	A29
Order number:	23 1 220
Â	Drift

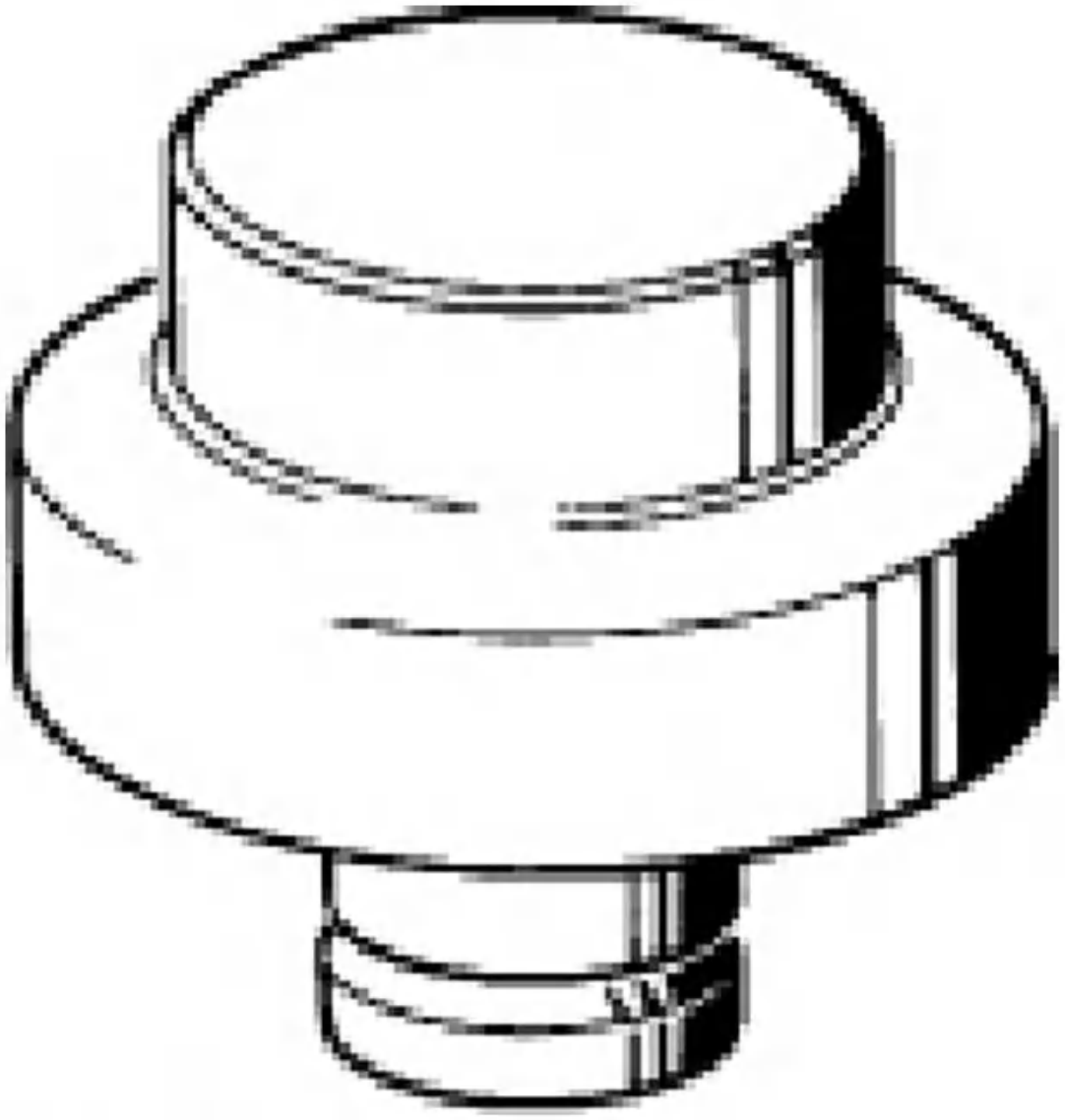

Fig. 39: Identifying Special Tools 23 1 220 Drift
Courtesy of BMW OF NORTH AMERICA, INC.

23 1 230 SPINDLE (2)

ORDER NUMBER: 23 1 230 SPECIAL TOOL SPECIFICATION

In conjunction with:	00 7 500
Note:	For removing inner bearing race from input shaft in front section of transmission casing
Transmission:	265/5
Order number:	23 1 230
Â	Spindle (2)

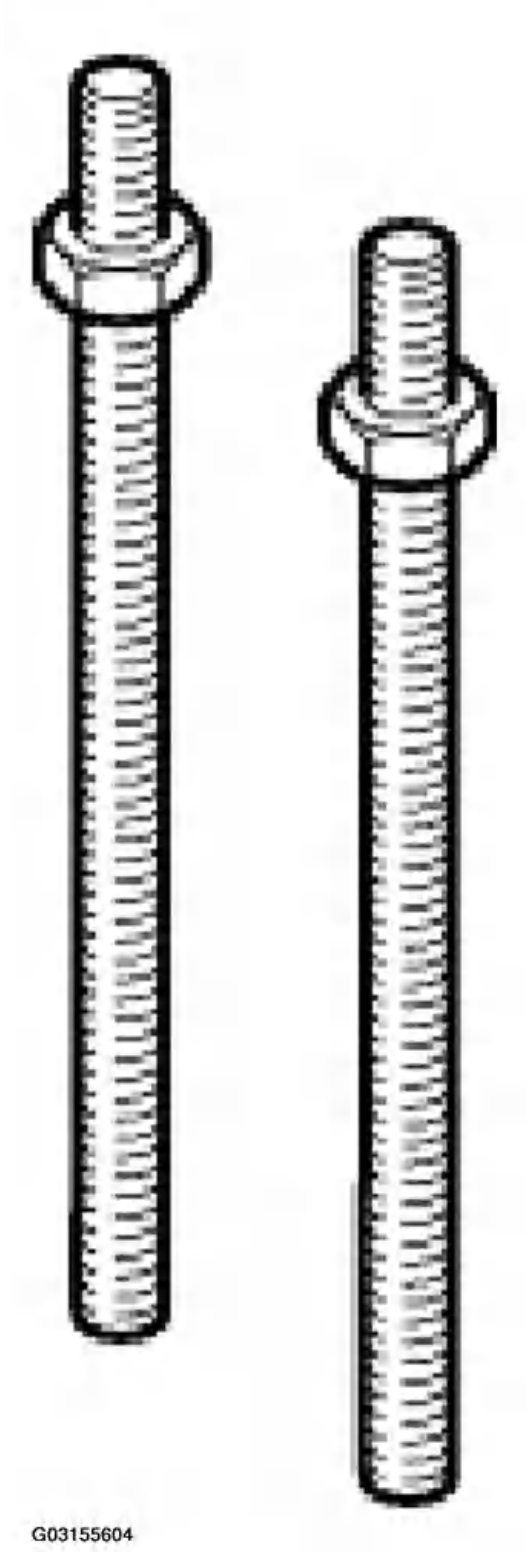

Fig. 40: Identifying Special Tools 23 1 230 Spindle (2)
Courtesy of BMW OF NORTH AMERICA, INC.

23 1 270 DRIFT

ORDER NUMBER: 23 1 270 SPECIAL TOOL SPECIFICATION

In conjunction with:	00 5 500
Note:	For removing outer bearing race on countershaft in front section of transmission casing as well as for removing seal and needle bearing from oil pump housing (A5S 560Z)
Transmission:	240/5, 260/5, A5S 560Z

Storage location:	A29
Order number:	23 1 270
Â	Drift

Fig. 41: Identifying Special Tools 23 1 270 Drift
Courtesy of BMW OF NORTH AMERICA, INC.

23 1 300 FIXTURE

Minimum set: Mechanical tools

ORDER NUMBER: 23 1 300 SPECIAL TOOL SPECIFICATION

In conjunction with:	23 2 150
Note:	For fitting output flange on all manual and automatic transmissions, for installing deep groove ball bearing on transmission output shafts and for

	fitting input flange on all rear axle differentials
Series:	E36, E36/2, E36/3, E36/5, E36/7, E36/C, E38, E39, E46, E52, E53, E61, E63, E64, E65, E66, E67, E83, E85, E87, E90, E91
Transmission:	HAG 188kom, HAG 220kom, HAG 225kom, HAG Type G, HAG Type K, HAG Type M, S5D 200G, S5D 250G
Storage location:	B15, B16
Order number:	23 1 300
Â	Fixture
Consisting of:	Â
1 = 23 1 301	Adapter
2 = 23 1 302	Support disk
Â	NOTE: For pressing drive flange onto rear differential
Â	In conjunction with: 33 1 341, 23 1 300
3 = 23 1 303	Mandrel

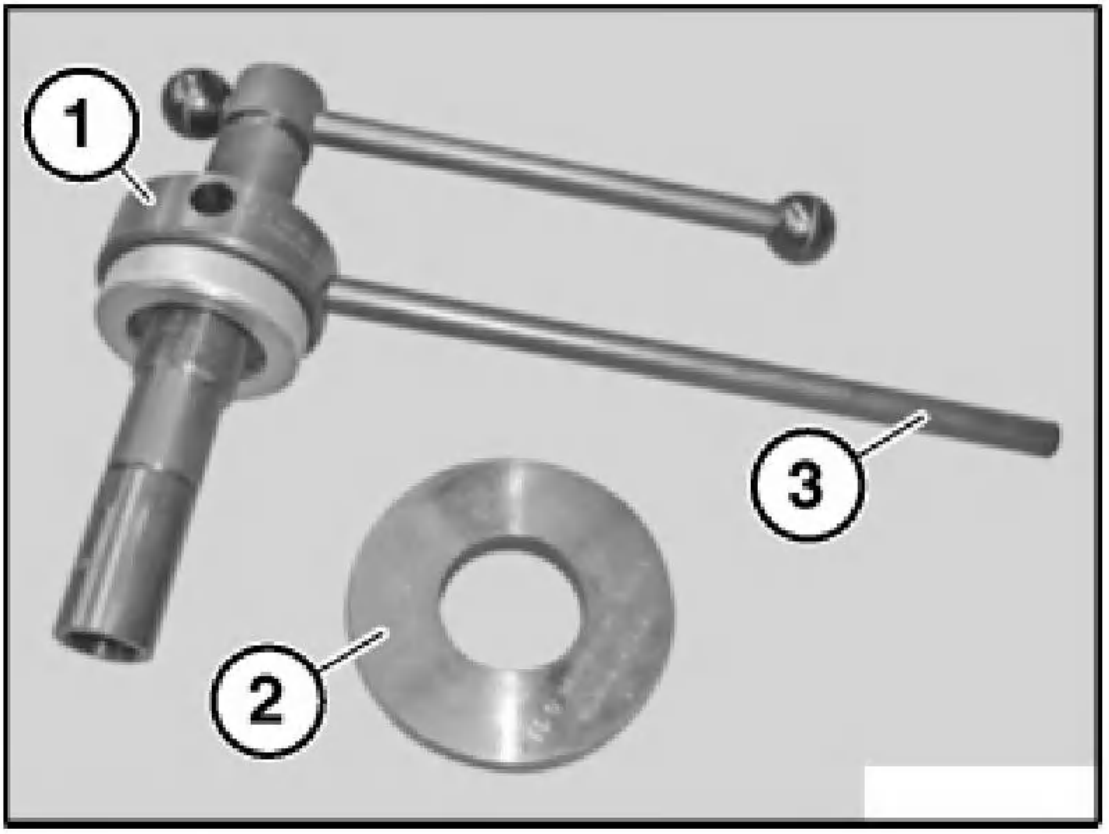

G03155606

Fig. 42: Identifying Special Tools 23 1 300 Fixture
Courtesy of BMW OF NORTH AMERICA, INC.

23 1 310 TOOL

ORDER NUMBER: 23 1 310 SPECIAL TOOL SPECIFICATION

Note:	For fitting locking device on deflection lever
Transmission:	280/5 Sport
Order number:	23 1 310
Â	Tool

Fig. 43: Identifying Special Tools 23 1 310 For Fitting Locking Device On Deflection Lever
Courtesy of BMW OF NORTH AMERICA, INC.

23 1 350 PULLER FIXTURE

ORDER NUMBER: 23 1 350 SPECIAL TOOL SPECIFICATION

In conjunction with:	33 1 301
Note:	For rear section of transmission casing
Transmission:	265/5
Order number:	23 1 350
Â	Puller fixture
Consisting of:	Â
1 = 23 1 351	Plate
2 = 23 1 352	Screw, short (2)
3 = 23 1 353	Screw, long (2)

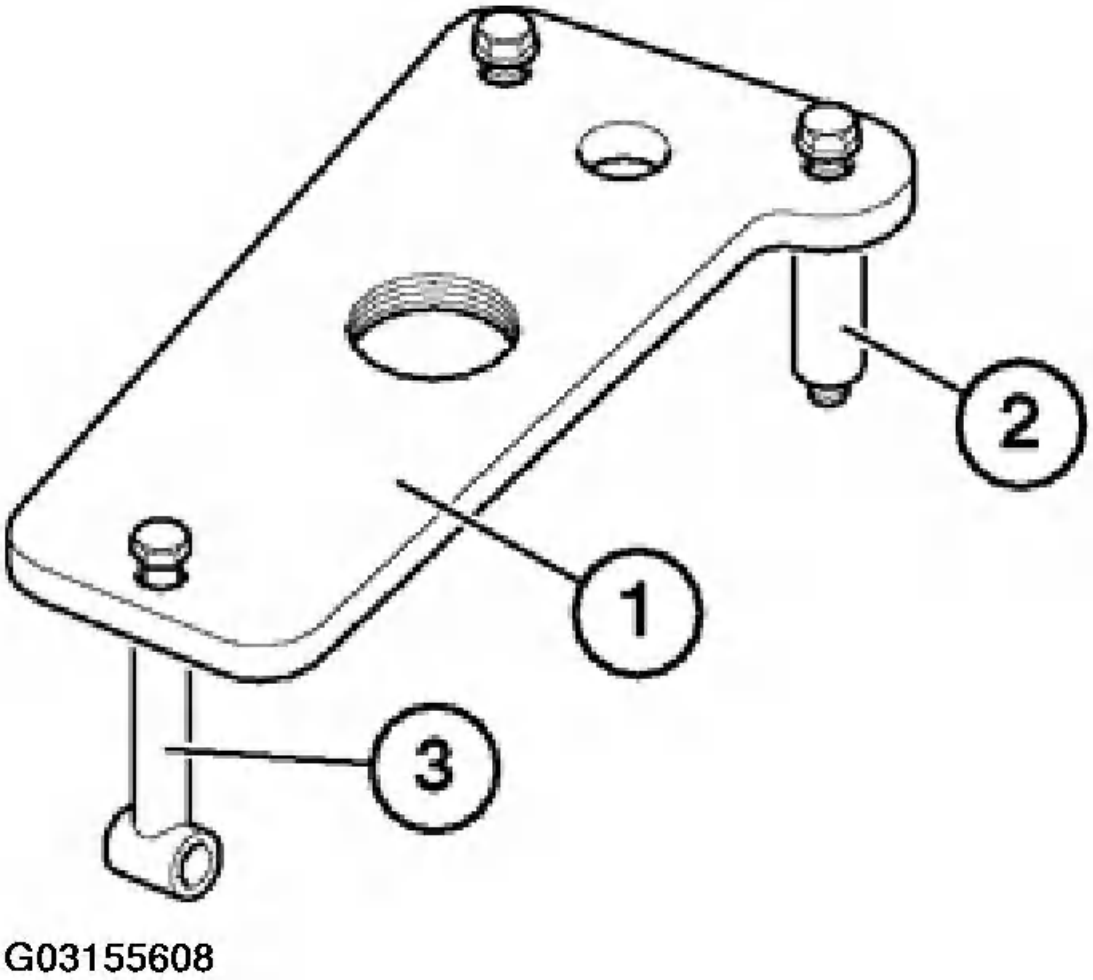

Fig. 44: Identifying Special Tools 23 1 350 Puller Fixture
Courtesy of BMW OF NORTH AMERICA, INC.

23 1 360 DRIFT

ORDER NUMBER: 23 1 360 SPECIAL TOOL SPECIFICATION

In conjunction with:	00 5 500
Note:	For fitting rotary shaft seal on transmission input shaft
Transmission:	240/5, 245/5, 262/4, ZF S5-16
Storage location:	A35
Order number:	23 1 360
Â	Drift

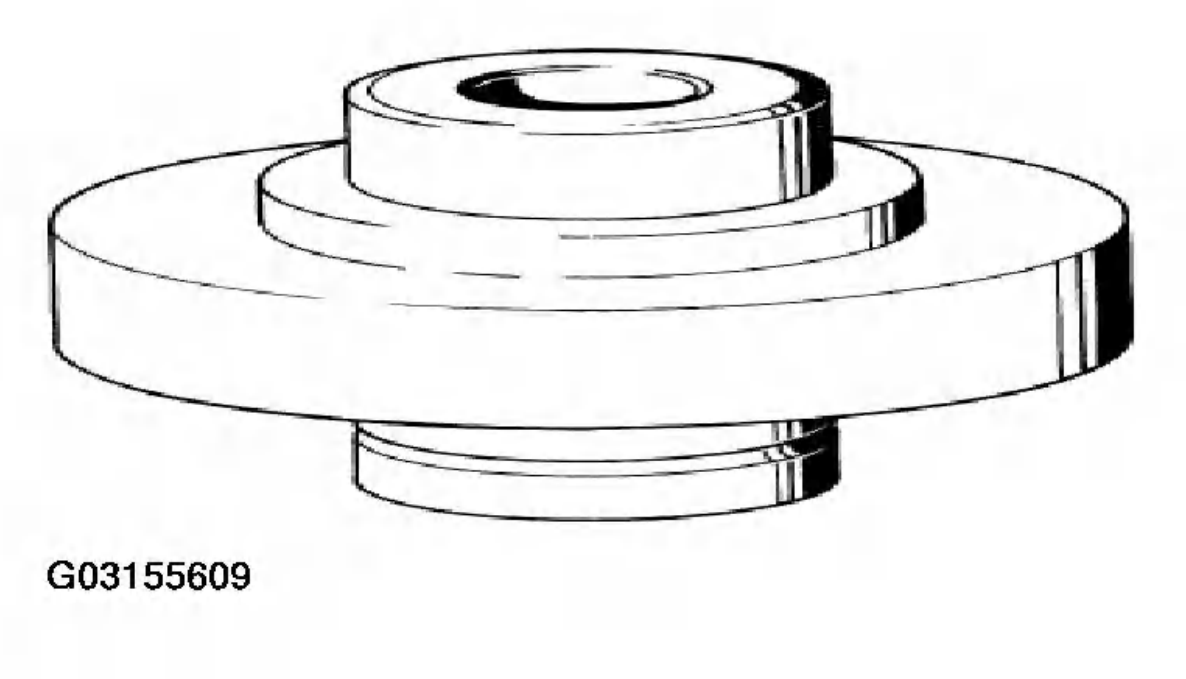

Fig. 45: Identifying Special Tools 23 1 360 Drift
Courtesy of BMW OF NORTH AMERICA, INC.

23 1 370 DRIFT

ORDER NUMBER: 23 1 370 SPECIAL TOOL SPECIFICATION

Note:	For fitting rotary shaft seals on transmission output flanges
Transmission:	242/4, 262/4, 265/5, 265/5Sport
Storage location:	B28
Order number:	23 1 370
Â	Drift

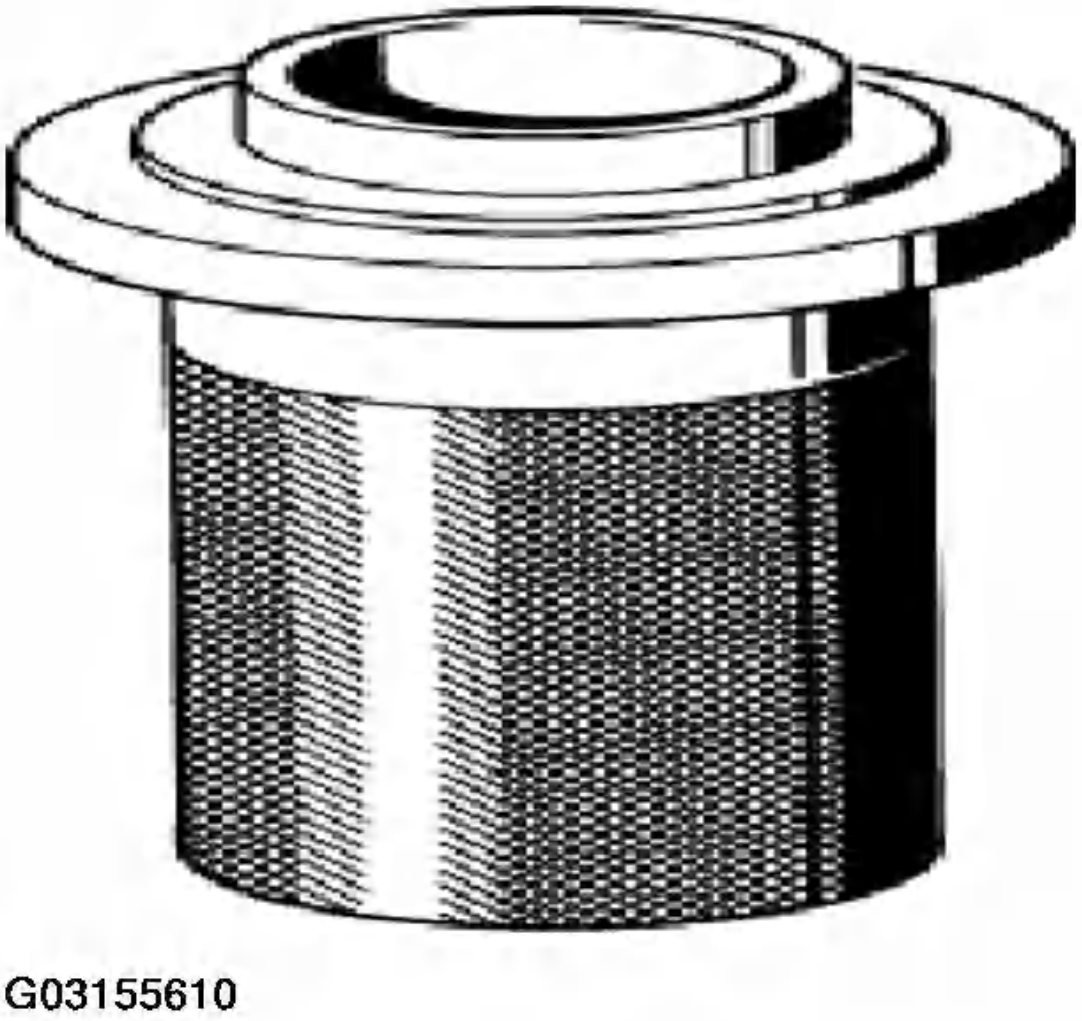

Fig. 46: Identifying Special Tools 23 1 370 Drift
Courtesy of BMW OF NORTH AMERICA, INC.

23 1 380 DRIFT

ORDER NUMBER: 23 1 380 SPECIAL TOOL SPECIFICATION

In conjunction with:	00 0 500
Note:	For installing roller bearing of countershaft shaft in rear section of transmission casing
Transmission:	240/5, 245/5, 260/5, 280/5Sport
Storage location:	B30
Order number:	23 1 380
Â	Drift

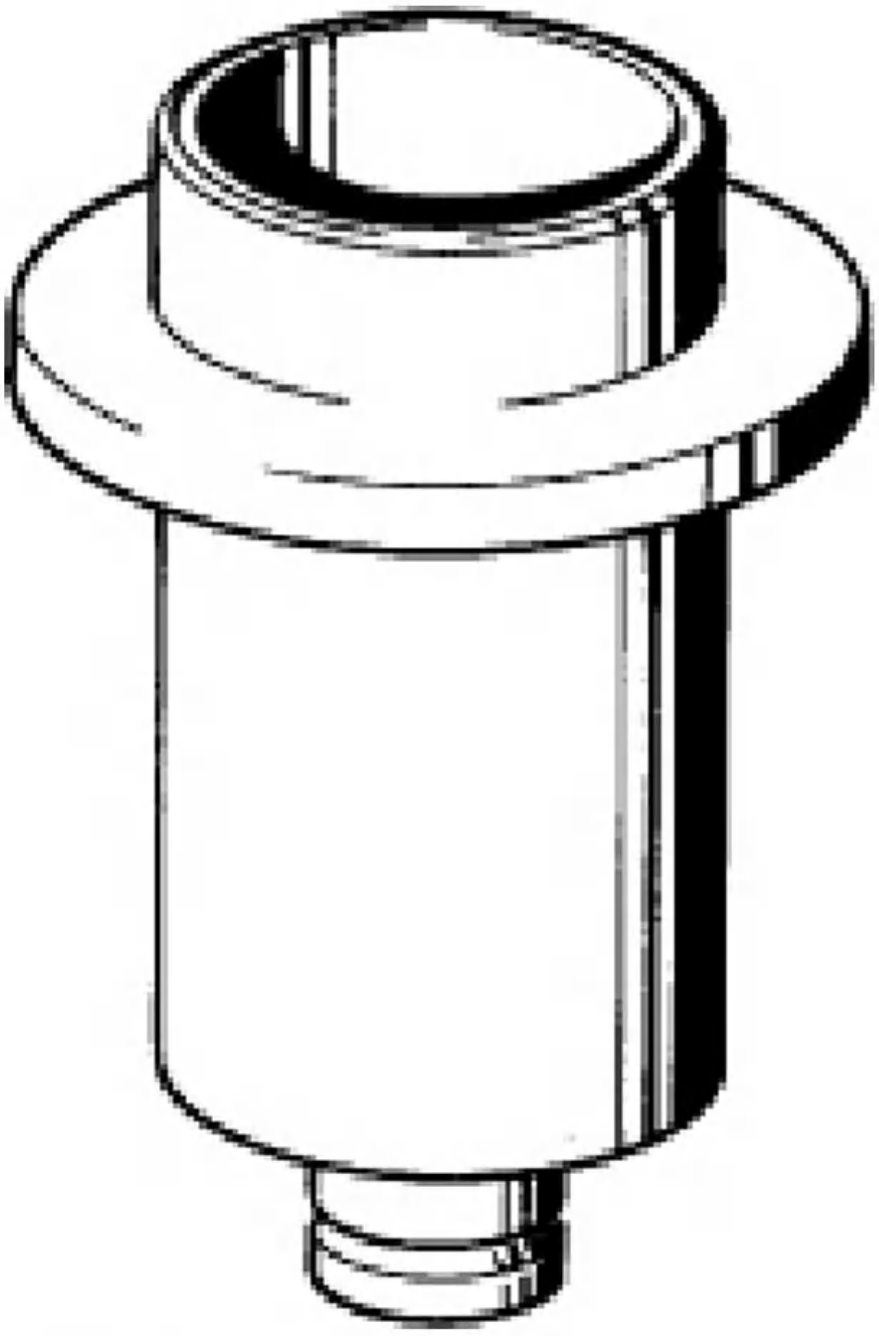

Fig. 47: Identifying Special Tools 23 1 380 Drift
Courtesy of BMW OF NORTH AMERICA, INC.

23 1 390 DRIFT

ORDER NUMBER: 23 1 390 SPECIAL TOOL SPECIFICATION

In conjunction with:	00 5 500
Note:	For installing roller bearing of countershaft shaft in rear section of transmission casing
Transmission:	265/5, 280/5 Sport
Storage location:	A29

Order number:	23 1 390
Â	Drift

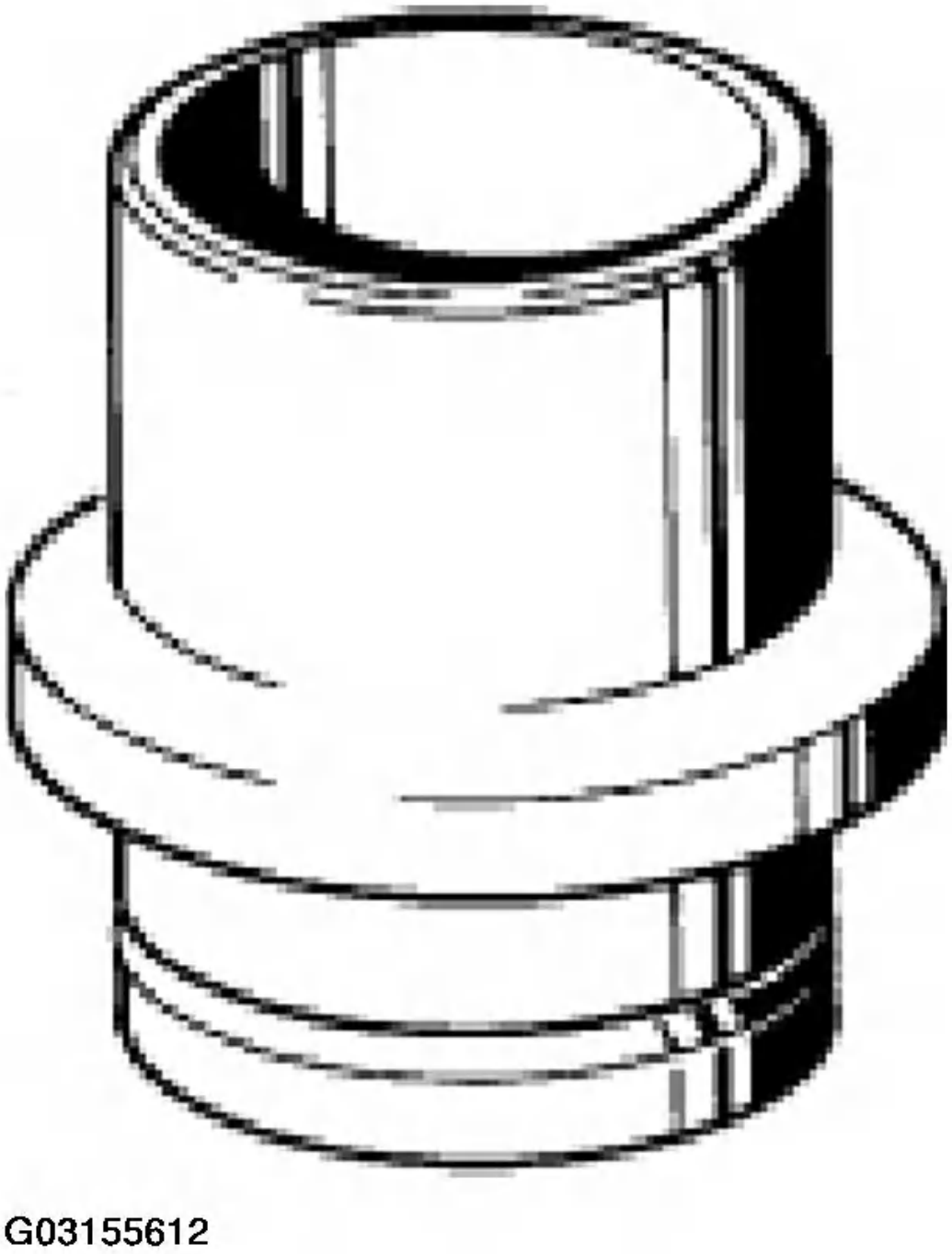

Fig. 48: Identifying Special Tools 23 1 390 Drift
Courtesy of BMW OF NORTH AMERICA, INC.

23 1 400 FIXTURE

ORDER NUMBER: 23 1 400 SPECIAL TOOL SPECIFICATION

Note:	For fitting rotary shaft seal in bush of speedometer pinion
Transmission:	242/4, 262/4

Order number:	23 1 400
Â	Fixture
Consisting of:	Â
1 = 23 1 401	Fitting shaft
2 = 23 1 402	Radial plug
3 = 23 1 403	Union sleeve

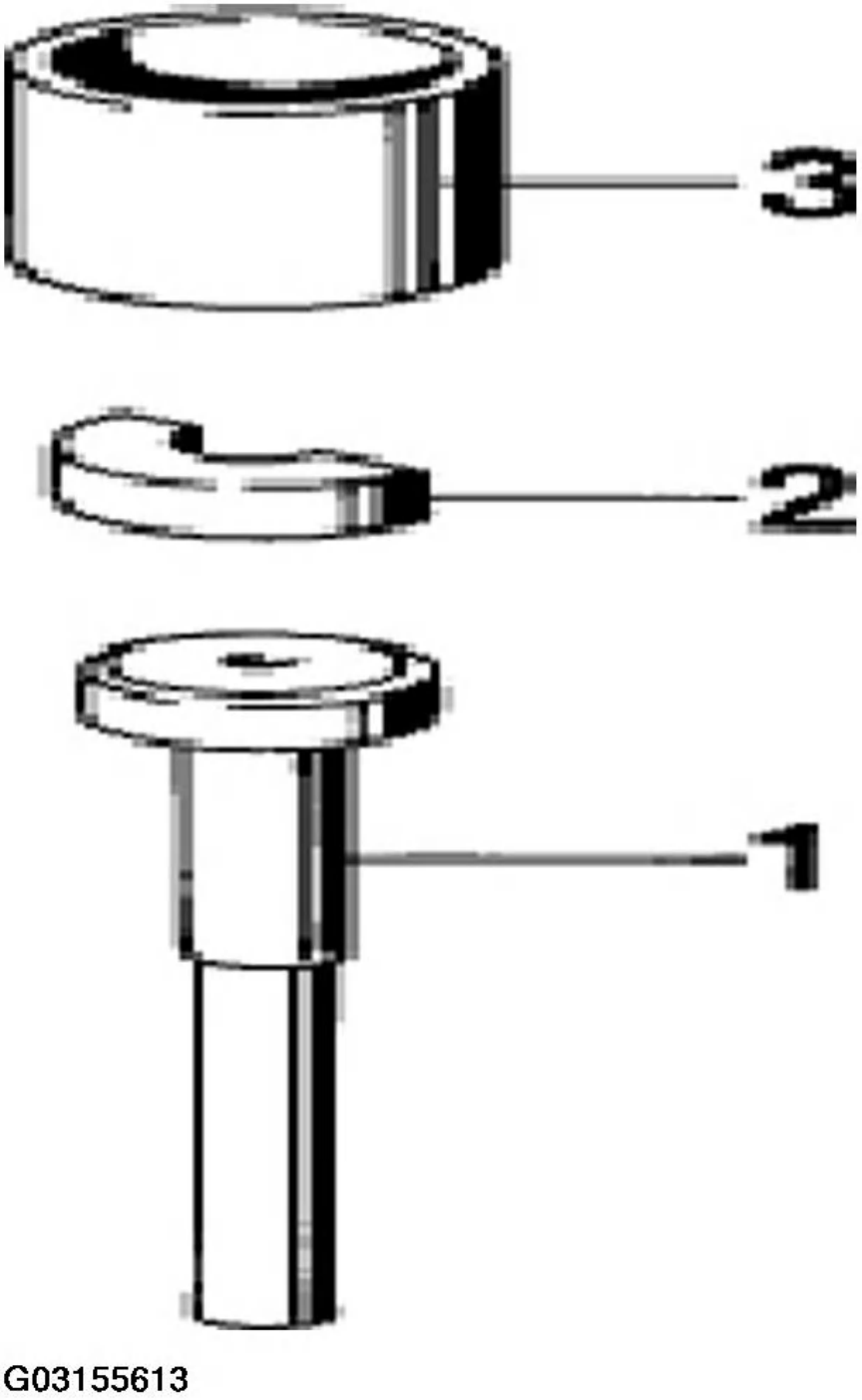

Fig. 49: Identifying Special Tools 23 1 400 Fixture
Courtesy of BMW OF NORTH AMERICA, INC.

23 1 410 DRIFT

ORDER NUMBER: 23 1 410 SPECIAL TOOL SPECIFICATION

In conjunction with:	00 5 500
Note:	For fitting ball bearing of output shaft in rear section of transmission casing and roller bearing of output shaft in center section of transmission casing
Transmission:	260/5, 265/5
Storage location:	A29
Order number:	23 1 410
Â	Drift

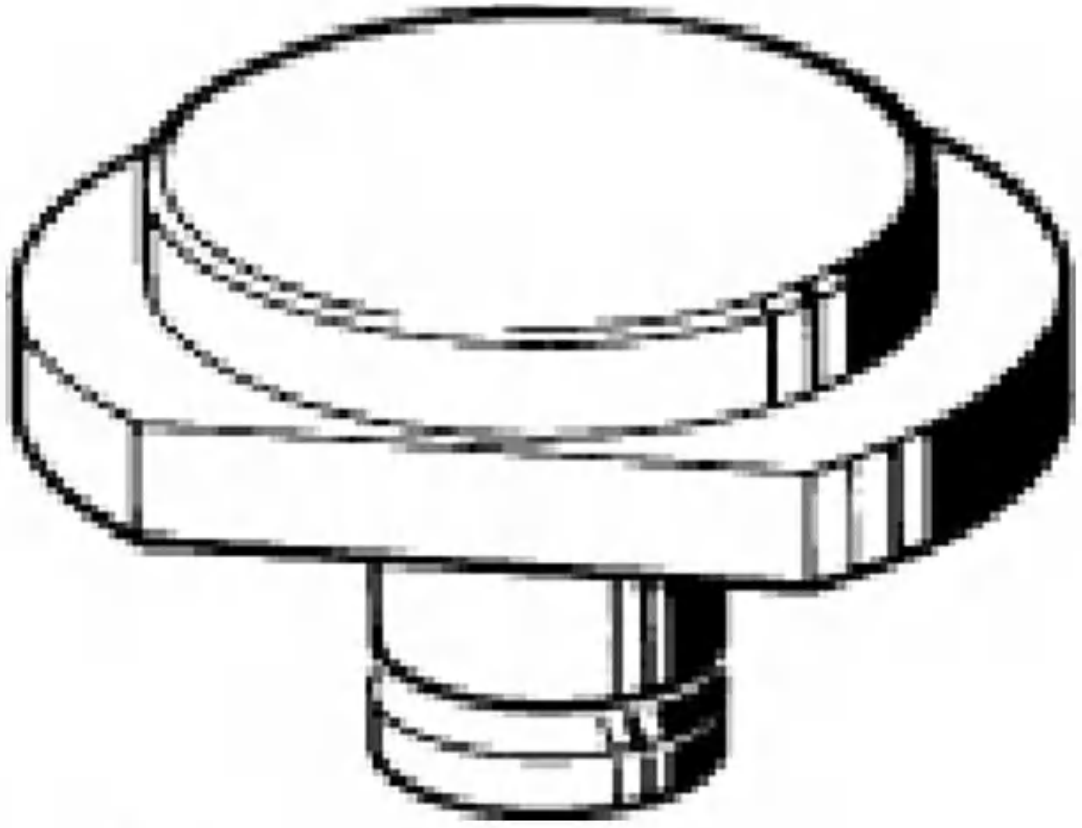

Fig. 50: Identifying Special Tools 23 1 410 Drift
Courtesy of BMW OF NORTH AMERICA, INC.

23 1 420 FIXTURE

ORDER NUMBER: 23 1 420 SPECIAL TOOL SPECIFICATION

In conjunction with:	33 1 301
Note:	For removing slide (5th gear)
Transmission:	265/5
Storage location:	C31
Order number:	23 1 420
Â	Fixture

Consisting of:	Â
23 1 421	Clamping screw

Fig. 51: Identifying Special Tools 23 1 420 Fixture
Courtesy of BMW OF NORTH AMERICA, INC.

23 1 430 THRUST PIECE

ORDER NUMBER: 23 1 430 SPECIAL TOOL SPECIFICATION

Note:	For fitting 5th gear wheel
Transmission:	265/5, 280/5 Sport
Storage location:	A35
Order number:	23 1 430
Â	Thrust piece

Fig. 52: Identifying Special Tools 23 1 430 Thrust Piece
Courtesy of BMW OF NORTH AMERICA, INC.

23 1 440 HOLDING SLEEVE

ORDER NUMBER: 23 1 440 SPECIAL TOOL SPECIFICATION

Note:	For fitting bearing bush and inner bearing race on output shaft as well as for removing bearing on output shaft (S5D 310Z)
Transmission:	265/5, 265/5Sport, 280/5Sport, S5D 310Z
Storage location:	C22, C23
Order number:	23 1 440
Â	Holding sleeve

Fig. 53: Identifying Special Tools 23 1 440 Holding Sleeve
Courtesy of BMW OF NORTH AMERICA, INC.

23 1 450 GUIDE PINS (2 X)

ORDER NUMBER: 23 1 450 SPECIAL TOOL SPECIFICATION

Note:	For fitting bearing bush in locking device of guide sleeve
Transmission:	245/5, 265/5
Storage location:	C3
Order number:	23 1 450
Â	Guide pins (2 x)

Fig. 54: Identifying Special Tools 23 1 450 Guide Pins (2 X)
Courtesy of BMW OF NORTH AMERICA, INC.

23 1 460 PULLER PLATE

ORDER NUMBER: 23 1 460 SPECIAL TOOL SPECIFICATION

In conjunction with:	33 1 301
Note:	For front section of transmission casing

Transmission:	260/5, 280/5Sport, ZF S5-16
Storage location:	A27
Order number:	23 1 460
Â	Puller plate

Fig. 55: Identifying Special Tools 23 1 460 Puller Plate
Courtesy of BMW OF NORTH AMERICA, INC.

23 1 480 DRIFT

ORDER NUMBER: 23 1 480 SPECIAL TOOL SPECIFICATION

In conjunction with:	00 5 500
Note:	For removing and installing deep groove ball bearing in front section of transmission casing
Transmission:	240/5, 242/4, 260/5, 280/5Sport
Storage location:	A29
Order number:	23 1 480
Â	Drift

Fig. 56: Identifying Special Tools 23 1 480 Drift
Courtesy of BMW OF NORTH AMERICA, INC.

23 1 490 FIXTURE

ORDER NUMBER: 23 1 490 SPECIAL TOOL SPECIFICATION

Note:	For removing gear wheels
Transmission:	240/5, 260/5, 280/5Sport, S5D 200G, ZF S5-16
Order number:	23 1 490
Â	Fixture
Consisting of:	Â
23 1 491	Spacer

Fig. 57: Identifying Special Tools 23 1 490 Fixture
Courtesy of BMW OF NORTH AMERICA, INC.

23 2 000 RILLEX BALL BEARING EXTRACTOR 6206

ORDER NUMBER: 23 2 000 SPECIAL TOOL SPECIFICATION

Note:	9 balls with steel cage - for removing deep groove ball bearing of transmission input shaft
Order number:	23 2 000
Â	Rillex ball bearing extractor 6206
Consisting of:	Â
1 = 23 2 001	Claw for Rillex 6206 (9 x)
2 = 23 2 002	Union sleeve
3 = 23 2 003	Pressure spindle

Fig. 58: Identifying Special Tools 23 2 000 Rillex Ball Bearing Extractor 6206
Courtesy of BMW OF NORTH AMERICA, INC.

23 2 010 RILLEX BALL BEARING EXTRACTOR 6206 E

ORDER NUMBER: 23 2 010 SPECIAL TOOL SPECIFICATION

Note:	8 balls with plastic cage - for removing deep groove ball bearing of transmission input shaft
Transmission:	242/4, 245/5Sport, 265/5
Order number:	23 2 010
Â	Rillex ball bearing extractor 6206 E
Consisting of:	Â
1 = 23 2 011	Claw for Rillex 6206 E (8)
2 = 23 2 012	Union sleeve
3 = 23 2 013	Pressure spindle

Fig. 59: Identifying Special Tools 23 2 010 Rillex Ball Bearing Extractor 6206 E
Courtesy of BMW OF NORTH AMERICA, INC.

23 2 020 RILLEX BALL BEARING EXTRACTOR

ORDER NUMBER: 23 2 020 SPECIAL TOOL SPECIFICATION

Note:	7 balls - for removing deep groove ball bearing of transmission input shaft
Transmission:	245/5 Sport, 265/5 Sport
Order number:	23 2 020
Â	Rillex ball bearing extractor
Consisting of:	Â
1 = 23 2 021	Claw for Rillex (7)
2 = 23 2 022	Union sleeve
3 = 23 2 023	Pressure spindle

Fig. 60: Identifying Special Tools 23 2 020 Rillex Ball Bearing Extractor
Courtesy of BMW OF NORTH AMERICA, INC.

23 2 050 RILLEX BALL BEARING EXTRACTOR 6205

ORDER NUMBER: 23 2 050 SPECIAL TOOL SPECIFICATION

Note:	For removing deep groove ball bearing of transmission countershaft and transmission output shaft
Transmission:	245/5 Sport, 262/4, 265/5 Sport
Order number:	23 2 050
Â	Rillex ball bearing extractor 6205
Consisting of:	Â
1 = 23 2 051	Claw for Rillex 6305 (8)
2 = 23 2 052	Union sleeve
3 = 23 2 053	Pressure spindle

Fig. 61: Identifying Special Tools 23 2 050 Rillex Ball Bearing Extractor 6205
Courtesy of BMW OF NORTH AMERICA, INC.

23 2 060 RILLEX BALL BEARING EXTRACTOR 6306

ORDER NUMBER: 23 2 060 SPECIAL TOOL SPECIFICATION

Note:	For removing deep groove ball bearing of input and output shaft
Transmission:	242/4, 262/4
Order number:	23 2 060
Â	Rillex ball bearing extractor 6306
Consisting of:	Â
1 = 23 2 061	Claw for Rillex 6306 (8)
2 = 23 2 062	Union sleeve
3 = 23 2 063	Pressure spindle

Fig. 62: Identifying Special Tools 23 2 060 Rillex Ball Bearing Extractor 6306
Courtesy of BMW OF NORTH AMERICA, INC.

23 2 080 ADAPTER

ORDER NUMBER: 23 2 080 SPECIAL TOOL SPECIFICATION

Note:	For removing guide sleeve - 2nd/3rd gear
Transmission:	260/5
Storage location:	C21
Order number:	23 2 080
Â	Adapter

Fig. 63: Identifying Special Tools 23 2 080 Adapter
Courtesy of BMW OF NORTH AMERICA, INC.

23 2 100 PLIERS

ORDER NUMBER: 23 2 100 SPECIAL TOOL SPECIFICATION

Note:	For removing and installing circlip on transmission output shaft
Transmission:	240/5, 242/4, 245/5, 245/5Sport, 260/5, 262/4, 265/5, 265/5Sport, 280/5Sport, 3 HP 12, 3 HP 20, 3 HP 22, 4 HP 22, 4 HP 24, A4S 270R, A4S 310R, A5S 300J, A5S 310Z, A5S 440Z, A5S 560Z, BW 65, S5D 200G, S5D 250G, S5D 260Z, S5D 310Z, S6S 420G, S6S 560G, ZF S5-16
Order number:	23 2 100
Â	Pliers

Fig. 64: Identifying Special Tools 23 2 100 Pliers
Courtesy of BMW OF NORTH AMERICA, INC.

23 2 150 PRESSURE SLEEVE

ORDER NUMBER: 23 2 150 SPECIAL TOOL SPECIFICATION

In conjunction with:	23 1 300
Note:	For fitting deep groove ball bearing of transmission output shaft (260/5, 245/5), for fitting front tapered roller bearing on drive pinion in all rear axle differentials as well as for mounting cover of

	countershaft (S5D 310Z)
Transmission:	245/5Sport, 260/5, S5D 260Z, S5D 310Z, S5D 320Z
Storage location:	B29
Order number:	23 2 150
Â	Pressure sleeve

Fig. 65: Identifying Special Tools 23 2 150 Pressure Sleeve
Courtesy of BMW OF NORTH AMERICA, INC.

23 2 160 IMPACT BUSH

ORDER NUMBER: 23 2 160 SPECIAL TOOL SPECIFICATION

Note:	For rotary shaft seal in rear section of transmission housing - output shaft
Transmission:	280/5Sport, ZF S5-16
Storage location:	B28
Order number:	23 2 160
Â	Impact bush

Fig. 66: Identifying Special Tools 23 2 160 Impact Bush
Courtesy of BMW OF NORTH AMERICA, INC.

23 2 170 FIXTURE

ORDER NUMBER: 23 2 170 SPECIAL TOOL SPECIFICATION

Note:	For tensioning transmission leaf spring
Transmission:	ZF S5-16
Order number:	23 2 170
Â	Fixture

Fig. 67: Identifying Special Tools 23 2 170 Fixture
Courtesy of BMW OF NORTH AMERICA, INC.

23 2 180 GUIDE BUSH

ORDER NUMBER: 23 2 180 SPECIAL TOOL SPECIFICATION

Note:	For mounting front section of transmission casing on selector shaft
Transmission:	ZF S5-16
Order number:	23 2 180
Â	Guide bush

Fig. 68: Identifying Special Tools 23 2 180 Guide Bush
Courtesy of BMW OF NORTH AMERICA, INC.

23 2 200 CIRCLIP PLIERS (STRAIGHT)

ORDER NUMBER: 23 2 200 SPECIAL TOOL SPECIFICATION

Note:	For removing and installing external circlips on

	transmission shafts
Transmission:	240/5, 242/4, 245/5, 245/5Sport, 260/5, 262/4, 265/5, 265/5Sport, 280/5Sport, 3 HP 12, 3 HP 20, 3 HP 22, 4 HP 22, 4 HP 24, A4S 270R, A4S 310R, A5S 300J, A5S 310Z, A5S 440Z, A5S 560Z, BW 65, S5D 200G, S5D 250G, S5D 260Z, S5D 310Z, S6S 420G, S6S 560G, ZF S5-16
Order number:	23 2 200
Â	Circlip pliers (straight)

Fig. 69: Identifying Special Tools 23 2 200 Circlip Pliers (Straight)
Courtesy of BMW OF NORTH AMERICA, INC.

23 2 210 CIRCLIP PLIERS (STRAIGHT)

ORDER NUMBER: 23 2 210 SPECIAL TOOL SPECIFICATION

Note:	For removing and installing internal circlips in transmission casings when replacing deep groove ball bearings
Transmission:	240/5, 242/4, 245/5, 245/5Sport, 260/5, 262/4, 265/5, 265/5Sport, 280/5Sport, 3 HP 12, 3 HP 20, 3 HP 22, 4 HP 22, 4 HP 24, A4S 270R, A4S 310R, A5S 300J, A5S 310Z, A5S 440Z, A5S 560Z, BW 65, S5D 200G, S5D 250G, S5D 260Z, S5D 310Z, S6S 420G, S6S 560G, ZF S5-16
Order number:	23 2 210
Â	Circlip pliers (straight)

Fig. 70: Identifying Special Tools 23 2 210 Circlip Pliers (Straight)
Courtesy of BMW OF NORTH AMERICA, INC.

23 2 220 DRIFT

ORDER NUMBER: 23 2 220 SPECIAL TOOL SPECIFICATION

Note:	For bearing of countershaft shaft in front and rear section of transmission casing
Transmission:	ZF S5-16
Order number:	23 2 220
Â	Drift

Fig. 71: Identifying Special Tools 23 2 220 Drift
Courtesy of BMW OF NORTH AMERICA, INC.

23 2 230 DISC

ORDER NUMBER: 23 2 230 SPECIAL TOOL SPECIFICATION

In conjunction with:	00 7 500
Note:	For removing guide sleeve from gear wheel or output shaft with toothed lock washer
Transmission:	280/5 Sport
Order number:	23 2 230
Â	Disc

Fig. 72: Identifying Special Tools 23 2 230 Disc
Courtesy of BMW OF NORTH AMERICA, INC.

23 2 250 BRACKET

ORDER NUMBER: 23 2 250 SPECIAL TOOL SPECIFICATION

Note:	For tensioning main shaft to countershaft
Transmission:	S5D 310Z
Storage location:	C20, C24
SI number:	1 07 90(244)
Order number:	23 2 250
Â	Bracket

Fig. 73: Identifying Special Tools 23 2 250 Bracket
Courtesy of BMW OF NORTH AMERICA, INC.

23 2 260 INSTALLATION DRIFT

Minimum set: Mechanical tools

ORDER NUMBER: 23 2 260 SPECIAL TOOL SPECIFICATION

Note:	For fitting rotary shaft seal on selector shaft of rear section of transmission casing
Transmission:	S5D 310Z
Storage location:	A20
SI number:	1 07 90(244)
Order number:	23 2 260
Â	Installation drift

Fig. 74: Identifying Special Tools 23 2 260 Installation Drift
Courtesy of BMW OF NORTH AMERICA, INC.

23 2 270 FIXTURE

ORDER NUMBER: 23 2 270 SPECIAL TOOL SPECIFICATION

Note:	For centering selector shaft while mounting front section of transmission casing
Transmission:	S5D 310Z
Storage location:	C30
SI number:	1 07 90(244)
Order number:	23 2 270
Â	Fixture

Fig. 75: Identifying Special Tools 23 2 270 Fixture
Courtesy of BMW OF NORTH AMERICA, INC.

23 2 280 PULLER PLATE

ORDER NUMBER: 23 2 280 SPECIAL TOOL SPECIFICATION

In conjunction with:	33 1 301

Note:	For front section of transmission casing
Transmission:	S5D 310Z
Storage location:	C31
SI number:	1 07 90(244)
Order number:	23 2 280
Â	Puller plate

Fig. 76: Identifying Special Tools 23 2 280 Puller Plate
Courtesy of BMW OF NORTH AMERICA, INC.

23 2 290 FIXTURE

ORDER NUMBER: 23 2 290 SPECIAL TOOL SPECIFICATION

Note:	For mounting front section of transmission casing
Transmission:	S5D 310Z
Storage location:	C18
SI number:	1 07 90(244)
Order number:	23 2 290
Â	Fixture
Consisting of:	Â
1 = 23 2 291	Base frame
2 = 23 2 292	Support
3 = 23 2 293	Ring
4 = 23 2 294	Set of shells

Fig. 77: Identifying Special Tools 23 2 290 Fixture
Courtesy of BMW OF NORTH AMERICA, INC.

23 2 300 DRIFT

Minimum set: Mechanical tools

ORDER NUMBER: 23 2 300 SPECIAL TOOL SPECIFICATION

Note:	For fitting rotary shaft seal of output shaft in rear section of transmission casing
Transmission:	S5D 310Z
Storage location:	B28
SI number:	1 07 90(244)
Order number:	23 2 300
Â	Drift

Fig. 78: Identifying Special Tools 23 2 300 Drift
Courtesy of BMW OF NORTH AMERICA, INC.

23 2 310 FIXTURE

ORDER NUMBER: 23 2 310 SPECIAL TOOL SPECIFICATION

Note:	For removing 3rd and 4th gear wheel from countershaft
Transmission:	S5D 310Z

Storage location:	C30
SI number:	1 07 90(244)
Order number:	23 2 310
Â	Fixture

Fig. 79: Identifying Special Tools 23 2 310 Fixture
Courtesy of BMW OF NORTH AMERICA, INC.

23 2 320 SOCKET FOR SOCKET WRENCH WAF 36

Minimum set: Mechanical tools

ORDER NUMBER: 23 2 320 SPECIAL TOOL SPECIFICATION

Note:	For loosening and tightening flanged nut
Transmission:	S5D 310Z, S6S 420G, S6S 560G
Storage location:	B30
SI number:	1 07 90(244)
Order number:	23 2 320
Â	Socket for socket wrench WAF 36

Fig. 80: Identifying Special Tools 23 2 320 Socket For Socket Wrench WAF 36
Courtesy of BMW OF NORTH AMERICA, INC.

23 2 330 FIXTURE

ORDER NUMBER: 23 2 330 SPECIAL TOOL SPECIFICATION

Note:	For installing complete gear train in rear section of transmission housing
Transmission:	S5D 310Z
Storage location:	C18
SI number:	1 07 90(244)
Order number:	23 2 330
Â	Fixture

Fig. 81: Identifying Special Tools 23 2 330 Fixture
Courtesy of BMW OF NORTH AMERICA, INC.

23 2 340 DRIFT

Minimum set: Mechanical tools

ORDER NUMBER: 23 2 340 SPECIAL TOOL SPECIFICATION

Note:	For fitting rotary shaft seal in front section of transmission casing
Transmission:	S5D 310Z
Storage location:	B29, C29
SI number:	1 07 90(244)
Order number:	23 2 340
Â	Drift

Fig. 82: Identifying Special Tools 23 2 340 Drift
Courtesy of BMW OF NORTH AMERICA, INC.

23 2 350 DRIFT

ORDER NUMBER: 23 2 350 SPECIAL TOOL SPECIFICATION

Note:	For fitting sealing cover for notch pin of selector shaft
Transmission:	S5D 310Z
Storage location:	B14, C14
SI number:	1 07 90(244)
Order number:	23 2 350
Â	Drift

Fig. 83: Identifying Special Tools 23 2 350 Drift
Courtesy of BMW OF NORTH AMERICA, INC.

23 2 360 DRIFT

ORDER NUMBER: 23 2 360 SPECIAL TOOL SPECIFICATION

Note:	For fitting end cover for notch pin
Transmission:	S5D 310Z
Storage location:	B14, C14
SI number:	1 07 90(244)
Order number:	23 2 360
Â	Drift

Fig. 84: Identifying Special Tools 23 2 360 Drift
Courtesy of BMW OF NORTH AMERICA, INC.

23 2 370 FIXTURE

ORDER NUMBER: 23 2 370 SPECIAL TOOL SPECIFICATION

In conjunction with:	23 1 050
Note:	For removing gear train
Transmission:	S5D 310Z
Storage location:	C30
SI number:	1 02 91(330)
Order number:	23 2 370
Â	Fixture

Fig. 85: Identifying Special Tools 23 2 370 Fixture
Courtesy of BMW OF NORTH AMERICA, INC.

23 2 380 INSTALLATION SLEEVE

ORDER NUMBER: 23 2 380 SPECIAL TOOL SPECIFICATION

Note:	For retaining ring on input shaft
Transmission:	S5D 310Z
Storage location:	A5

SI number:	1 02 91(330)
Order number:	23 2 380
Â	Installation sleeve

Fig. 86: Identifying Special Tools 23 2 380 Installation Sleeve
Courtesy of BMW OF NORTH AMERICA, INC.

23 2 470 IMPACT BUSH

ORDER NUMBER: 23 2 470 SPECIAL TOOL SPECIFICATION

Note:	For fitting tab washer of securing nut on output flange
Transmission:	S6S 420G, S6S 560G
Storage location:	A25
SI number:	1 10 93(689)
Order number:	23 2 470
Â	Impact bush

Fig. 87: Identifying Special Tools 23 2 470 Impact Bush
Courtesy of BMW OF NORTH AMERICA, INC.

23 2 480 IMPACT BUSH

ORDER NUMBER: 23 2 480 SPECIAL TOOL SPECIFICATION

Note:	For installing radial seal on output shaft
Transmission:	S6S 420G, S6S 560G
Storage location:	A19
SI number:	1 10 93(689)
Order number:	23 2 480
Â	Impact bush

Fig. 88: Identifying Special Tools 23 2 480 Impact Bush
Courtesy of BMW OF NORTH AMERICA, INC.

23 2 490 IMPACT BUSH AND SLIP SLEEVE

Minimum set: Mechanical tools

ORDER NUMBER: 23 2 490 SPECIAL TOOL SPECIFICATION

Note:	For fitting rotary shaft seal on input shaft
Transmission:	GS5-65BH, S6S 420G, S6S 560G
Storage location:	C29
SI number:	1 10 93(689)
Order number:	23 2 490
Â	Impact bush and slip sleeve
Consisting of:	Â
1 = 23 2 491	Impact bush
2 = 23 2 492	Slip sleeve (2-part)

Fig. 89: Identifying Special Tools 23 2 490 Impact Bush And Slip Sleeve

Courtesy of BMW OF NORTH AMERICA, INC.

23 3 010 FIXTURE

ORDER NUMBER: 23 3 010 SPECIAL TOOL SPECIFICATION (1 OF 2)

Note:	For fitting output flange on output shaft
Transmission:	S6S 420G, S6S 560G
Storage location:	A26
SI number:	1 10 93(689)
Order number:	23 3 010
Â	Fixture
Consisting of:	Â
1 = 23 3 011	Adapter spindle
2 = 23 3 012	Pressure sleeve
3 = 23 3 013	Pressure nut with bearing

Fig. 90: Identifying Special Tools 23 3 010 Fixture (1 Of 2)
Courtesy of BMW OF NORTH AMERICA, INC.

23 3 010 FIXTURE

ORDER NUMBER: 23 3 010 SPECIAL TOOL SPECIFICATION (2 OF 2)

Note:	For fitting output flange on output shaft
Transmission:	S65 420G, S6S 560G
Storage location:	A26
SI number:	1 10 93(689)
Order number:	23 3 010
Â	Fixture
Consisting of:	Â
1 = 23 3 011	Adapter
2 = 23 3 012	Pressure sleeve
3 = 23 3 013	Pressure nut with bearing

Fig. 91: Identifying Special Tools 23 3 010 Fixture (2 Of 2)
Courtesy of BMW OF NORTH AMERICA, INC.

23 3 020 MOUNTING SLEEVE

ORDER NUMBER: 23 3 020 SPECIAL TOOL SPECIFICATION

Note:	For installing gaiter of selector rod
Transmission:	S6S 560G
Storage location:	A14, B14
SI number:	1 10 93(689)
Order number:	23 3 020
Â	Mounting sleeve

Fig. 92: Identifying Special Tools 23 3 020 Mounting Sleeve
Courtesy of BMW OF NORTH AMERICA, INC.

23 3 110 DRIFT

ORDER NUMBER: 23 3 110 SPECIAL TOOL SPECIFICATION

Note:	For driving in guide bushings for catch pins on manual transmissions.
Transmission:	GS5-39DZ, S5D 280Z, S5D 320Z, S5D 390Z
SI number:	1 12 02 (918)
Order number:	23 3 110
Â	Drift

Fig. 93: Identifying Special Tools 23 3 110 Drift
Courtesy of BMW OF NORTH AMERICA, INC.

23 3 160 SET OF TOOLS

Minimum set: Mechanical tools

ORDER NUMBER: 23 3 160 SPECIAL TOOL SPECIFICATION

Note:	Removing and installing shaft seal on output shaft
Transmission:	GS6-37BZ, GS6-51BZ
SI number:	01 10 02 (907)
Order number:	23 3 160
Â	Set of tools
Consisting of:	Â
1 = 23 3 161	Extractor
2 = 23 3 162	Drift

Fig. 94: Identifying Special Tools 23 3 160 Extractor And Drift
Courtesy of BMW OF NORTH AMERICA, INC.

23 3 169 SET OF TOOLS

Minimum set: Mechanical tools

ORDER NUMBER: 23 3 169 SPECIAL TOOL SPECIFICATION

Note:	Removing and installing shaft seals on output side
Transmission:	GS6-37BZ
Order number:	23 3 169
Â	Set of tools

23 3 200 EXTRACTOR

Minimum set: Mechanical tools

ORDER NUMBER: 23 3 200 SPECIAL TOOL SPECIFICATION

Note:	For removing shaft seal on drive shaft
Transmission:	GS6-53BZ, GS6-53DZ
Storage location:	A49, A50
SI number:	1 11 04 (093)
Order number:	23 3 200
Â	Extractor

Fig. 95: Identifying Special Tools 23 3 200 Extractor

Courtesy of BMW OF NORTH AMERICA, INC.

23 3 210 EXTRACTOR

Minimum set: Mechanical tools

ORDER NUMBER: 23 3 210 SPECIAL TOOL SPECIFICATION

Note:	For removing shaft seal on output shaft
Transmission:	GS6-53BZ, GS6-53DZ
Storage location:	A50
SI number:	1 11 04 (093)
Order number:	23 3 210
Â	Extractor

Fig. 96: Identifying Special Tools 23 3 210 Extractor
Courtesy of BMW OF NORTH AMERICA, INC.

23 3 220 DRIFT

Minimum set: Mechanical tools

ORDER NUMBER: 23 3 220 SPECIAL TOOL SPECIFICATION

Note:	For driving in shaft seal on drive shaft (G-transmission)
Transmission:	GS6-53BZ, GS6-53DZ
Storage location:	A49
SI number:	1 11 04 (093)
Order number:	23 3 220
Â	Drift

Fig. 97: Identifying Special Tools 23 3 220 Drift
Courtesy of BMW OF NORTH AMERICA, INC.

23 3 230 DRIFT

Minimum set: Mechanical tools

ORDER NUMBER: 23 3 230 SPECIAL TOOL SPECIFICATION

Note:	For driving in shaft seal on output shaft (G-transmission)
Transmission:	GS6-53BZ, GS6-53DZ
Storage location:	A49
SI number:	1 11 04 (093)
Order number:	23 3 230
Â	Drift

Fig. 98: Identifying Special Tools 23 3 230 Drift
Courtesy of BMW OF NORTH AMERICA, INC.

23 4 000 DRIFT SET

Minimum set: Mechanical tools

ORDER NUMBER: 23 4 000 SPECIAL TOOL SPECIFICATION

In conjunction with:	00 5 500
Note:	For driving shaft seal into transmission
Transmission:	GS6-85BG
Storage location:	A49, B84
SI number:	1 02 02(823)
Order number:	23 4 000
Â	Drift set
Consisting of:	Â
1 = 23 4 001	Drift dia. 67 mm
2 = 23 4 002	Drift dia. 53 mm

Fig. 99: Identifying Special Tools 23 4 000 Drift Set
Courtesy of BMW OF NORTH AMERICA, INC.

23 4 010 REMOVAL TOOL

Minimum set: Mechanical tools

ORDER NUMBER: 23 4 010 SPECIAL TOOL SPECIFICATION

Note:	For pressing connector out of transmission
Transmission:	GS6-85BG
Storage location:	B83
SI number:	1 02 02 (823)
Order number:	23 4 010
Â	Removal tool

Fig. 100: Identifying Special Tools 23 4 010 For Pressing Connector Out Of Transmission
Courtesy of BMW OF NORTH AMERICA, INC.

23 4 020 DRIFTS

ORDER NUMBER: 23 4 020 SPECIAL TOOL SPECIFICATION

Note:	For driving in bearing bushings for locking pins, 5th and reverse gears.
Transmission:	GS5-39DZ, S5D 320Z
Storage location:	B49
SI number:	1 03 04 (070)
Order number:	23 4 020
Â	Drifts
Consisting of:	Â
1 = 23 4 021	Drift
Â	NOTE: For driving in cover caps on gear notch, 5th and reverse gears.
2 = 23 4 022	Drift
Â	NOTE: For driving in bearing bushing for locking pin, 5th gear.

3 = 23 4 023	Drift
Â	NOTE: For driving in bearing bushing for locking pin, reverse gear.

Fig. 101: Identifying Special Tools 23 4 020 Drifts
Courtesy of BMW OF NORTH AMERICA, INC.

Article GUID: A00202805