INSTALLATION

CAUTION:
Some of these service operations affect the SRS airbag system. Read the precautionary notices concerning the SRS airbag system before servicing (See page RS-1).

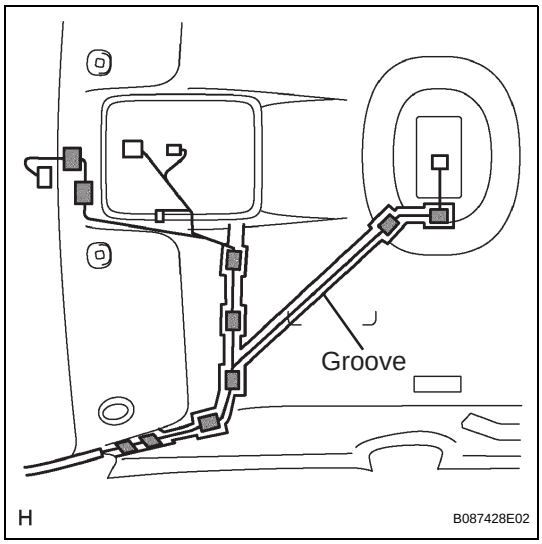

1. INSTALL ROOF WIRE
(a) w/ EC mirror:
(1) Install the roof wire with 8 new tapes, as shown in the illustration.
(b) w/o EC mirror:
(1) Install the roof wire with 8 new tapes, as shown in the illustration.

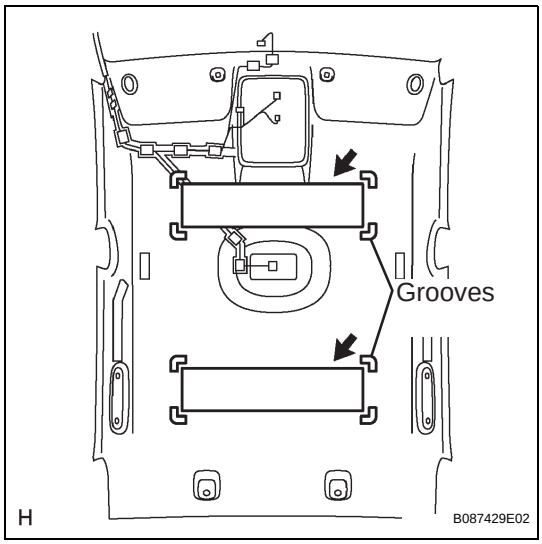

2. INSTALL ROOF HEADLINING PAD
(a) Install 2 new roof headlining pads onto the roof headlining.

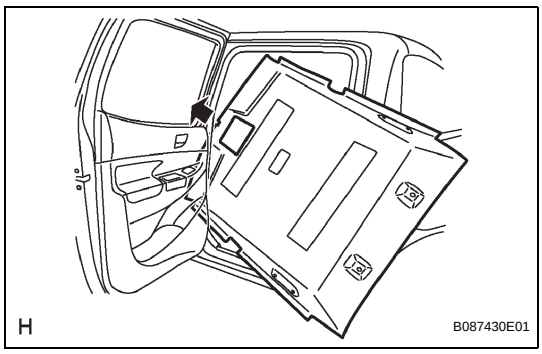

3. INSTALL ROOF HEADLINING ASSEMBLY
(a) Install the roof headlining into the vehicle.

cardiagn.com

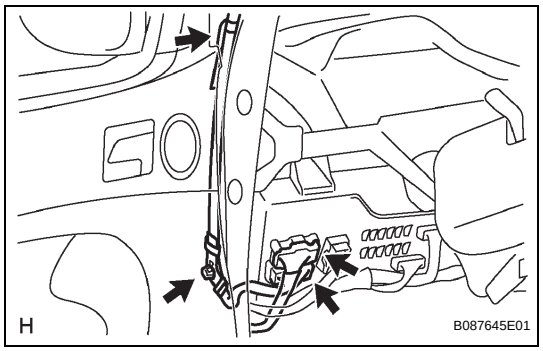

(b) Install the 2 wire harness clamps.
(c) Connect the roof wire connector.
(d) Connect the frame wire connector.

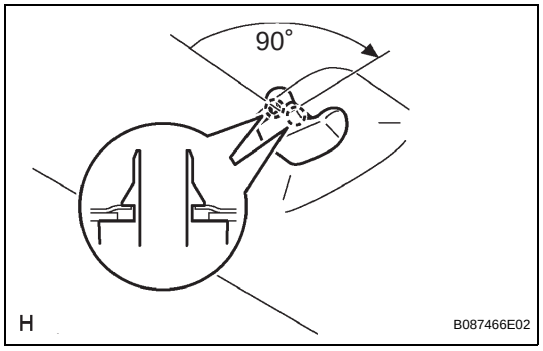

4. INSTALL COAT HOOK

HINT:
Follow the same procedures as for the opposite side.
(a) Turn the coat hook 90° clockwise and install it.

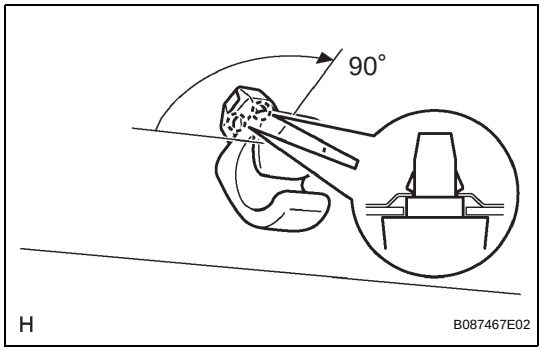

5. INSTALL VISOR HOLDER

HINT:
Follow the same procedures as for the opposite side.
(a) Turn the visor holder 90° clockwise and install it.

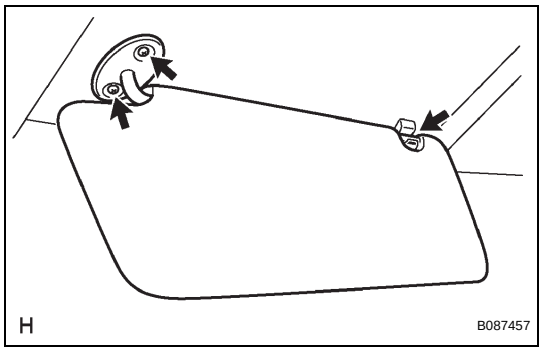

6. INSTALL VISOR ASSEMBLY LH

(a) Install the visor into the visor holder.
(b) Tighten the 2 screws.

7. INSTALL VISOR ASSEMBLY RH

HINT:
Follow the same procedures as for the visor assembly LH.

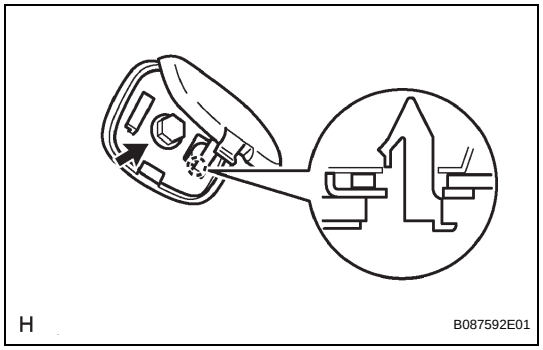

8. INSTALL ASSIST GRIP PLUG (w/ Curtain Shield Airbag)

HINT:
Follow the same procedures as for the opposite side.
(a) Engage the claw and install the assist grip plug.
(b) Tighten the screw.

cardiagn.com

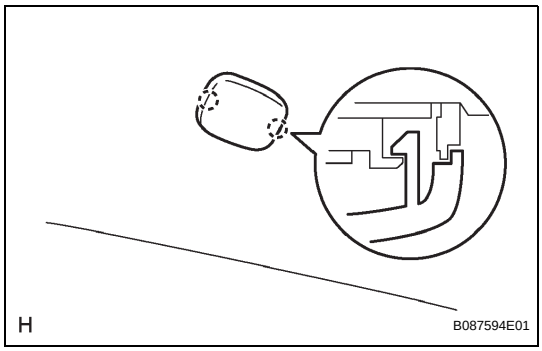

(c) Engage the 2 claws and close the cover.

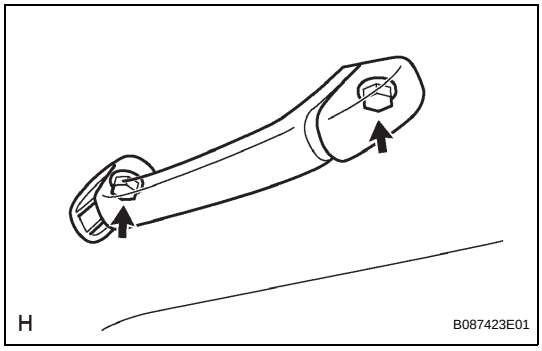

9. INSTALL ASSIST GRIP SUB-ASSEMBLY

HINT:
Follow the same procedures as for the opposite side.

(a) Install the assist grip with the 2 screws.

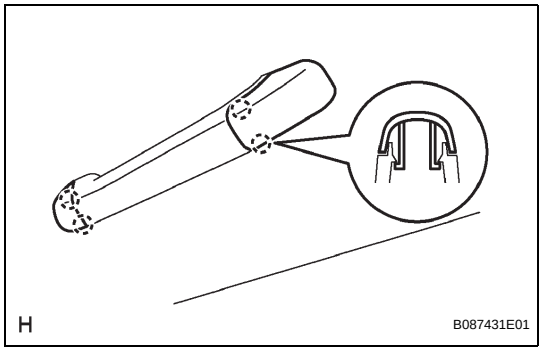

(b) Engage the 2 claws and close the cover.

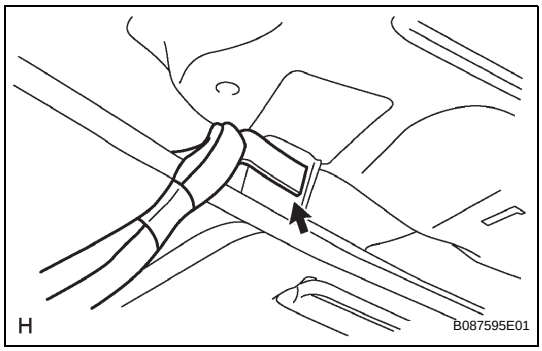

10. INSTALL ROOF CONSOLE BOX ASSEMBLY

(a) Install the wire harness clamp.

cardiagn.com

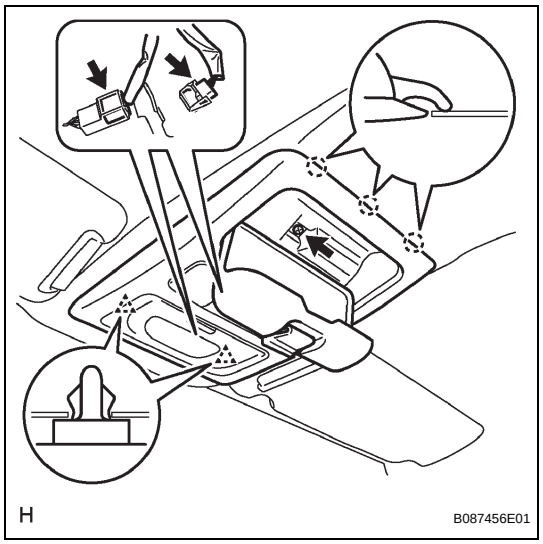

(b) Connect the accessory meter connector and map lamp connector.
(c) Engage the 2 clips and 3 claws and install the map lamp.
(d) Tighten the screw.

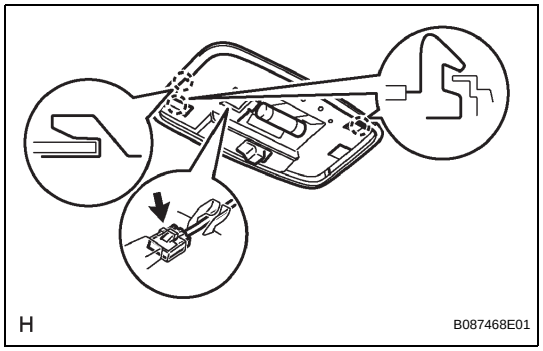

11. INSTALL ROOM LIGHT ASSEMBLY
(a) Connect the room light connector.
(b) Engage the 3 claws and install the room light.

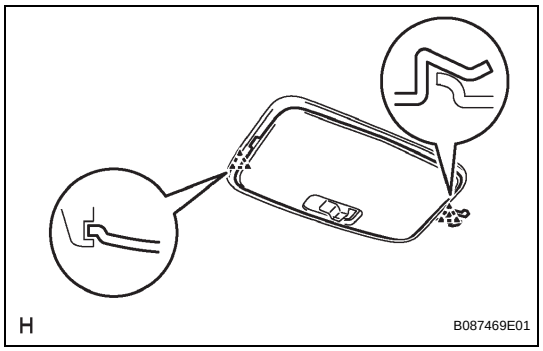

(c) Engage the 2 claws and install the room light lens.

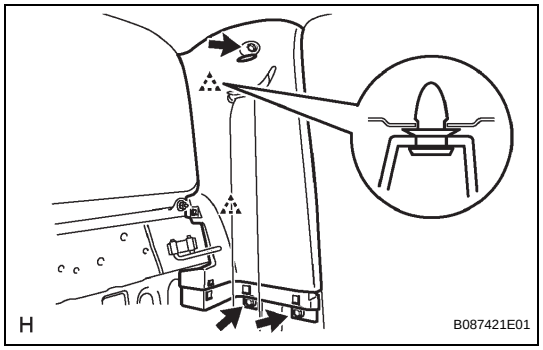

12. INSTALL QUARTER INSIDE TRIM BOARD LH
(a) Engage the 2 clips and install the quarter inside trim board.
(b) Tighten the 3 screws.

cardiagn.com

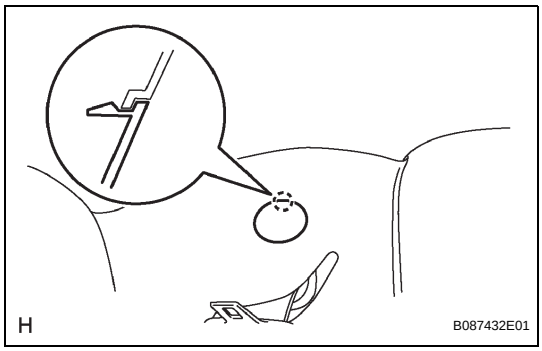

(c) Engage the claw and close the cover.

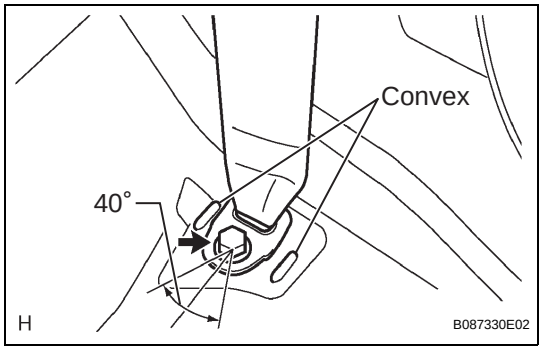

(d) Install the floor anchor of the rear seat belt outer with the bolt.
Torque: 42 N*m (430 kgf*cm, 31 ft.*lbf)
NOTICE:
- **Make sure that the rear seat outer belt is oriented in the correct direction when installing.**
- **Be careful not to place the rear seat outer belt over the convex areas of the floor panel.**

13. INSTALL QUARTER INSIDE TRIM BOARD RH
HINT:
Follow the same procedures as for the quarter inside trim board LH.

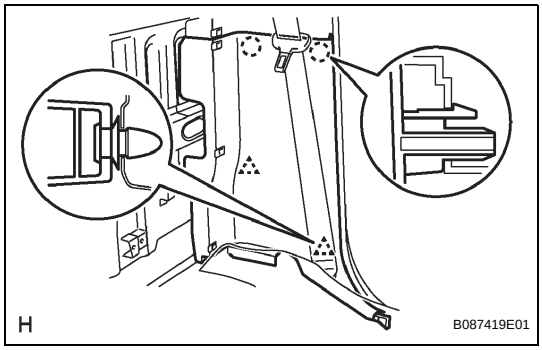

14. INSTALL QUARTER TRIM LOWER PANEL LH
(a) Engage the 2 claws and 2 clips, and install the quarter trim lower panel.

15. INSTALL QUARTER TRIM LOWER PANEL RH
HINT:
Follow the same procedures as for the quarter trim lower panel LH.

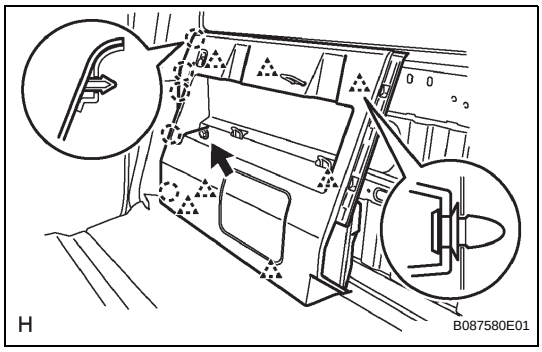

16. INSTALL LUGGAGE COMPARTMENT SIDE TRAY RH
(a) w/ Woofer:
(1) Engage the 5 claws and 7 clips, and install the luggage compartment side tray.
(2) Tighten the bolt.

cardiagn.com

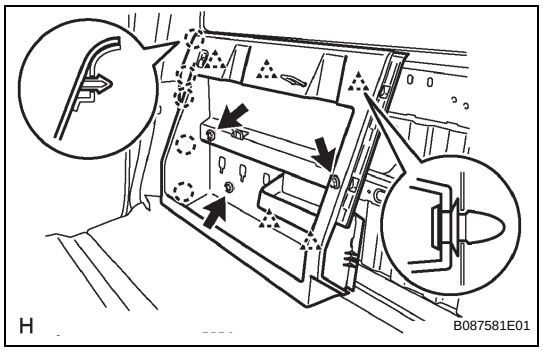

(b) w/o Woofer:
  (1) Engage the 5 claws and 5 clips, and install the luggage compartment side tray.
  (2) Tighten the 3 bolts.

17. INSTALL REAR SEAT BACK CENTER HINGE SUB-ASSEMBLY (See page SE-77)

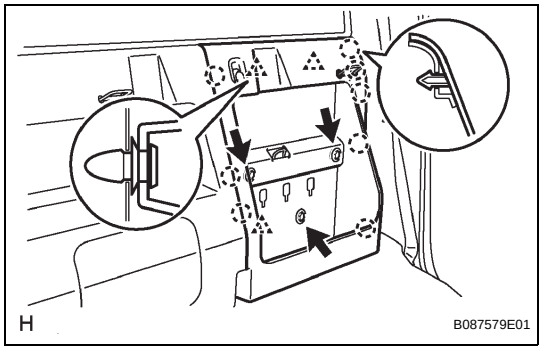

18. INSTALL LUGGAGE COMPARTMENT SIDE TRAY LH
(a) Engage the 8 claws and 3 clips, and install the luggage compartment side tray.
(b) Tighten the 3 bolts.

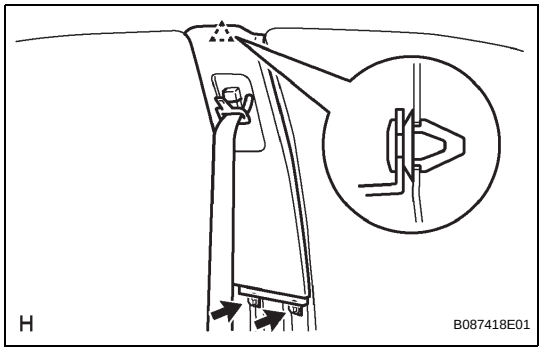

19. INSTALL CENTER PILLAR UPPER GARNISH LH
(a) Engage the clip and install the center pillar upper garnish.
(b) Tighten the 2 screws.

20. INSTALL CENTER PILLAR UPPER GARNISH RH
HINT:
Follow the same procedures as for the center pillar upper garnish LH.

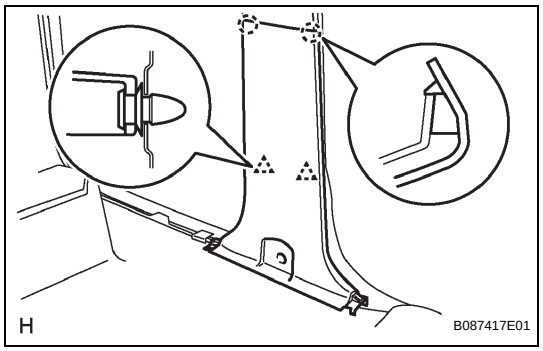

21. INSTALL CENTER PILLAR LOWER GARNISH LH
(a) Engage the 2 claws and 2 clips, and install the center pillar lower garnish.

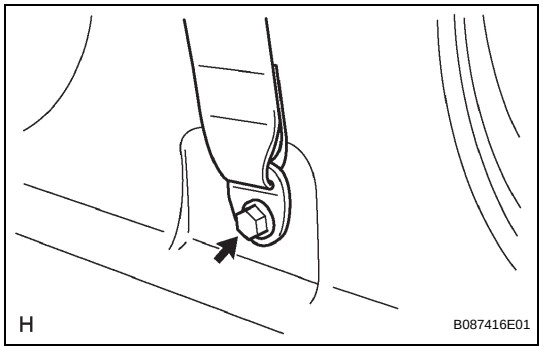

(b) Install the floor anchor of the front seat outer belt with the bolt.
Torque: 42 N*m (430 kgf*cm, 31 ft.*lbf)

22. INSTALL CENTER PILLAR LOWER GARNISH RH
HINT:
Follow the same procedures as for the center pillar lower garnish LH.

cardiagn.com

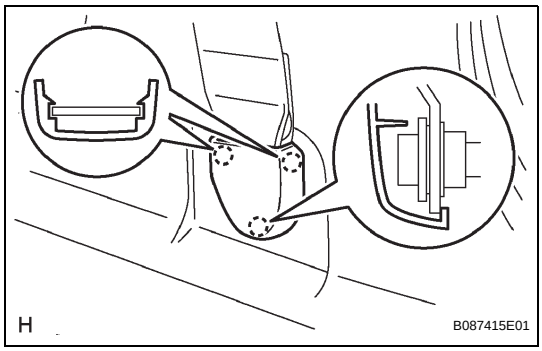

23. INSTALL LAP BELT OUTER ANCHOR COVER

HINT:
Follow the same procedures as for the opposite side.

(a) Engage the 3 claws and install the lap belt outer anchor cover.

24. INSTALL INSTRUMENT PANEL SUB-ASSEMBLY (See page IP-18)

25. CONNECT PASSENGER AIRBAG CONNECTOR

26. INSTALL INSTRUMENT SIDE PANEL (See page IP-20)

27. INSTALL INSTRUMENT LOWER COVER SUB-ASSEMBLY (See page IP-20)

28. INSTALL INSTRUMENT LOWER PANEL (See page IP-20)

29. INSTALL INSTRUMENT LOWER PANEL FINISH PANEL SUB-ASSEMBLY (See page IP-20)

30. INSTALL GLOVE COMPARTMENT DOOR ASSEMBLY (See page IP-20)

31. INSTALL INSTRUMENT CENTER CLUSTER FINISH PANEL SUB-ASSEMBLY (See page IP-21)

32. INSTALL COMBINATION METER ASSEMBLY (See page IP-21)

33. INSTALL INSTRUMENT CLUSTER FINISH PANEL SUB-ASSEMBLY (See page IP-21)

34. INSTALL INSTRUMENT LOWER PANEL FINISH PANEL (See page IP-22)

35. CONNECT HOOD LOCK CONTROL LEVER SUB-ASSEMBLY (See page ED-8)

36. INSTALL RADIO RECEIVER ASSEMBLY (See page AV-70)

37. INSTALL AIR CONDITIONING CONTROL ASSEMBLY (See page IP-22)

38. INSTALL FRONT CONSOLE BOX

(a) for Automatic Transmission:
  (1) Install the front console box (See page IP-24).

(b) for Manual Transmission:
  (1) Install the front console box (See page IP-23).

39. INSTALL INSTRUMENT PANEL CUP HOLDER TRAY (for Automatic Transmission) (See page IP-24)

40. INSTALL REAR CONSOLE BOX ASSEMBLY (See page IP-24)

41. INSTALL REAR CONSOLE UPPER PANEL SUB-ASSEMBLY

(a) for Automatic Transmission:
  (1) Install the rear console upper panel sub-assembly (See page IP-25).

cardiagn.com

(b) for Manual Transmission:
(1) Install the rear console upper panel sub-assembly (See page IP-25).

42. INSTALL INSTRUMENT PANEL UNDER TRAY (for Pedal Type Parking Brake) (See page IP-25)

43. INSTALL INSTRUMENT PANEL HOLE COVER (for Lever Type Parking Brake) (See page IP-25)

44. INSTALL FRONT PILLAR GARNISH LH

(a) Install the 3 wire harness clamps (LH side only).

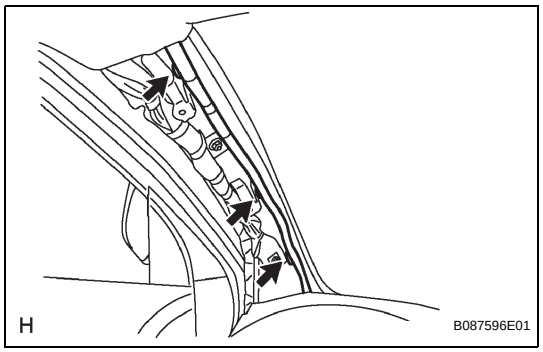

(b) Engage the claw and clip, and install the front pillar garnish.
(c) Tighten the 2 screws.

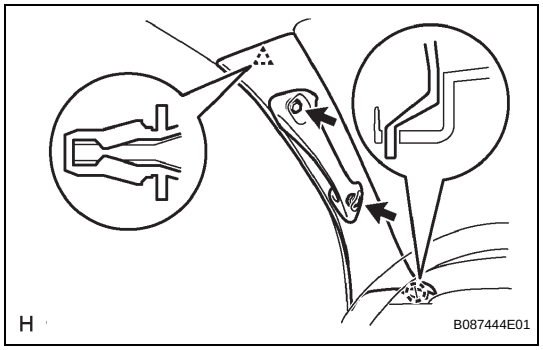

(d) Engage the 2 claws and install the assist grip plug.
HINT:
Follow the same procedures as for the opposite side.

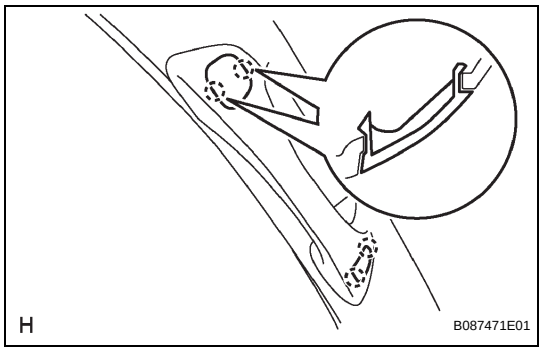

45. INSTALL FRONT PILLAR GARNISH RH

HINT:
Follow the same procedures as for the front pillar garnish LH.

46. INSTALL REAR DOOR OPENING TRIM WEATHERSTRIP LH

(a) Install the rear door opening trim weatherstrip.

47. INSTALL REAR DOOR OPENING TRIM WEATHERSTRIP RH

HINT:
Follow the same procedures as for the rear door opening trim weatherstrip.

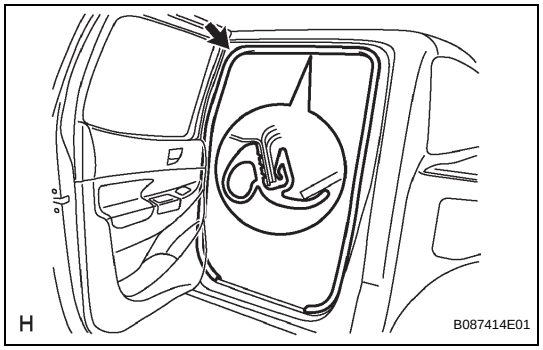

cardiagn.com

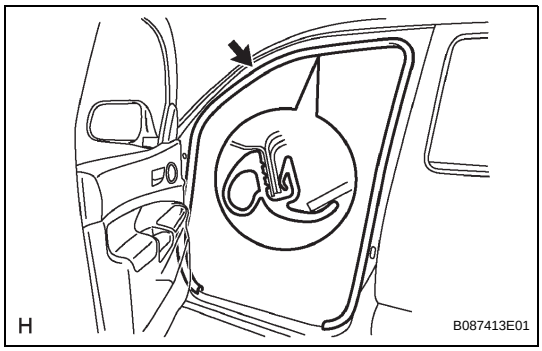

48. INSTALL FRONT DOOR OPENING TRIM WEATHERSTRIP LH

(a) Install the front door opening trim weatherstrip.

49. INSTALL FRONT DOOR OPENING TRIM WEATHERSTRIP RH

HINT:
Follow the same procedures as for the front door opening trim weatherstrip.

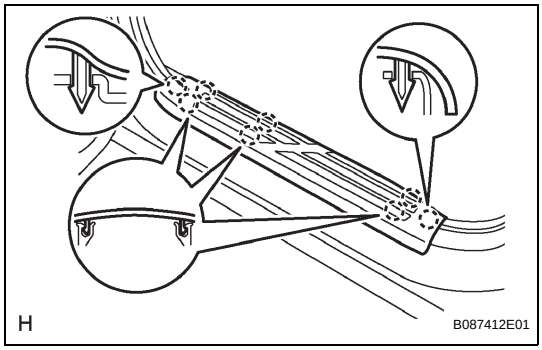

50. INSTALL REAR DOOR SCUFF PLATE LH

(a) Engage the 8 claws and install the rear door scuff plate.

51. INSTALL REAR DOOR SCUFF PLATE RH

HINT:
Follow the same procedures as for the rear door scuff plate LH.

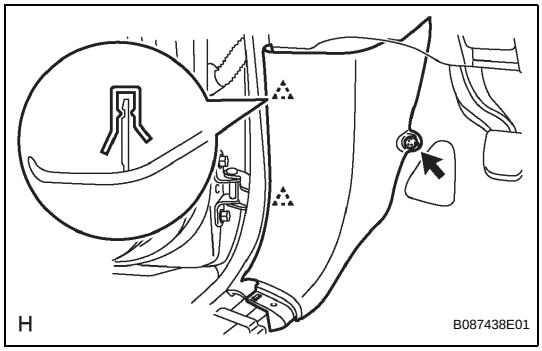

52. INSTALL COWL SIDE TRIM BOARD LH

(a) Engage the 2 clips and install the cowl side trim board.
(b) Install the clip.

53. INSTALL COWL SIDE TRIM BOARD RH

HINT:
Follow the same procedures as for the cowl side trim board LH.

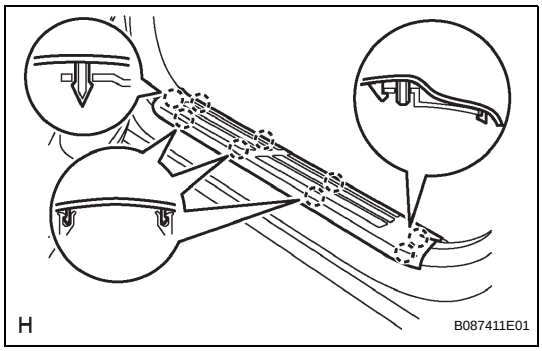

54. INSTALL FRONT DOOR SCUFF PLATE LH

(a) Engage the 9 claws and install the front door scuff plate.

55. INSTALL FRONT DOOR SCUFF PLATE RH

HINT:
Follow the same procedures as for the front door scuff plate LH.

56. INSTALL REAR SEAT BACK HINGE SUB-ASSEMBLY LH (See page SE-77)

57. INSTALL REAR SEAT BACK HINGE SUB-ASSEMBLY RH

HINT:
Follow the same procedures as for the rear seat back hinge sub-assembly LH.

58. INSTALL FRONT FLOOR FOOTREST (See page IR-1)

59. INSTALL REAR SEAT BACK ASSEMBLY LH (See page SE-77)

60. INSTALL REAR SEAT BACK ASSEMBLY RH (See page SE-90)

cardiagn.com

61. INSTALL REAR SEAT BACK HINGE COVER
(a) for LH Side:
(1) Install the rear seat back hinge cover (See page SE-78).
(b) for RH Side:
(1) Install the rear seat back hinge cover (See page SE-90).

62. INSTALL REAR SEAT CUSHION ASSEMBLY LH (See page SE-78)

63. INSTALL REAR SEAT CUSHION ASSEMBLY RH (See page SE-90)

64. INSTALL FRONT SEAT ASSEMBLY LH (See page SE-34)

65. INSTALL FRONT SEAT ASSEMBLY RH
(a) for Separate Folding Seat Type:
(1) Install the front seat assembly RH (See page SE-19).
(b) for Separate Seat Type Front Passenger Side:
(1) Install the front seat assembly RH (See page SE-48).

66. INSTALL SEAT TRACK COVER LH (See page SE-34)

67. INSTALL SEAT TRACK COVER RH
(a) for Separate Folding Seat Type:
(1) Install the seat track cover RH (See page SE-19).
(b) for Separate Seat Type Front Passenger Side:
(1) Install the seat track cover RH (See page SE-48).

68. INSTALL INNER REAR VIEW MIRROR ASSEMBLY (w/ EC Mirror)
(a) Engage the 2 claws and install the inner rear view mirror cover.

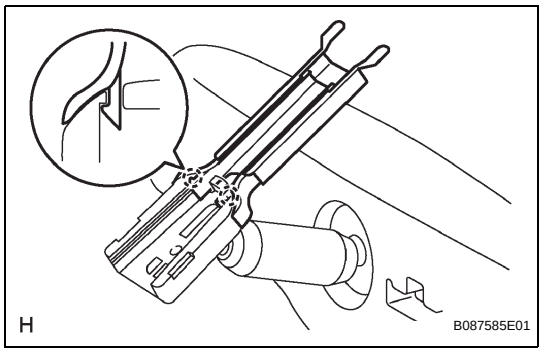

(b) Slide and install the inner rear view mirror.

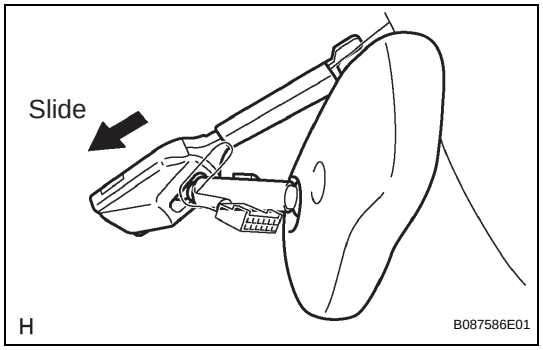

cardiagn.com

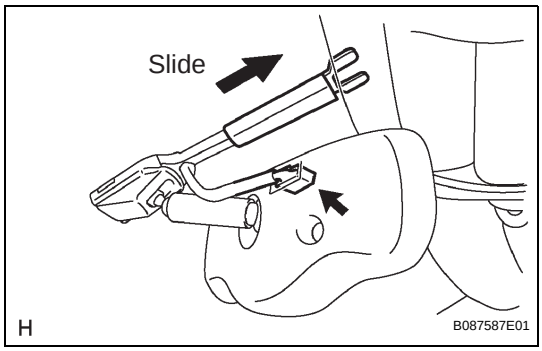

(c) Slide the inner rear view mirror cover.
(d) Connect the EC mirror connector.

69. CONNECT CABLE TO NEGATIVE BATTERY TERMINAL
Torque: 3.9 N*m (40 kgf*cm, 35 in.*lbf)

70. INSPECT SRS WARNING LIGHT
(See page RS-28)

cardiagn.com