REMOVAL

CAUTION:
Some of these service operations affect the SRS airbag system. Read the precautionary notices concerning the SRS airbag system before servicing (See page RS-1).

1. **DISCONNECT CABLE FROM NEGATIVE BATTERY TERMINAL**
   Wait for at least 90 seconds after disconnecting the cable to prevent the airbag from working.

2. **REMOVE INNER REAR VIEW MIRROR ASSEMBLY (w/ EC Mirror)**
   (a) Disconnect the EC mirror connector.
   (b) Slide the inner rear view mirror cover.

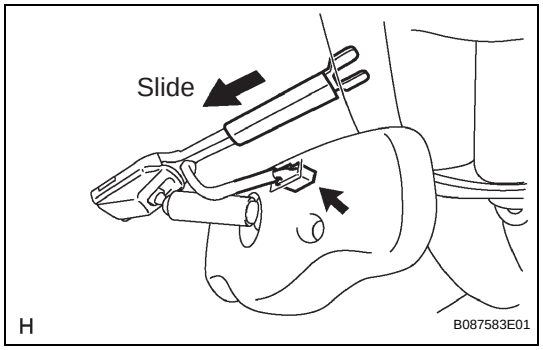

   (c) Slide the inner rear view mirror.

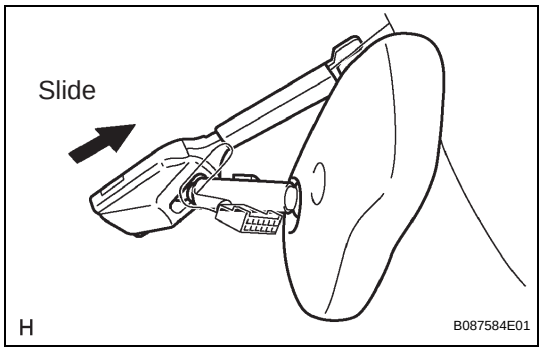

   (d) Disengage the 2 claws and remove the inner rear view mirror cover.

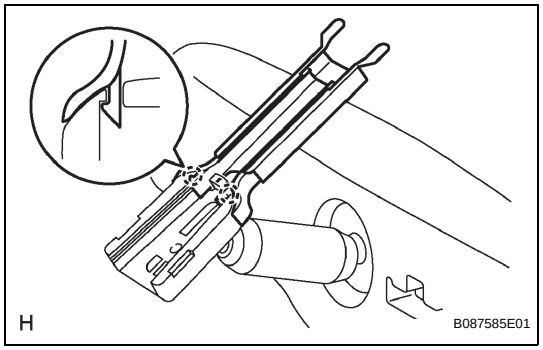

3. **REMOVE SEAT TRACK COVER LH (See page SE-23)**

4. **REMOVE SEAT TRACK COVER RH**
   (a) for Separate Folding Seat Type:
      (1) Remove the seat track cover RH (See page SE-5).
   (b) for Separate Seat Type Front Passenger Side:
      (1) Remove the seat track cover RH (See page SE-38).

5. **REMOVE FRONT SEAT ASSEMBLY LH (See page SE-23)**

6. **REMOVE FRONT SEAT ASSEMBLY RH**
   (a) for Separate Folding Seat Type:
      (1) Remove the front seat assembly RH (See page SE-5).
   (b) for Separate Seat Type Front Passenger Side:
      (1) Remove the front seat assembly RH (See page SE-38).

cardiagn.com

7. **REMOVE REAR SEAT CUSHION ASSEMBLY LH (See page SE-71)**

8. **REMOVE REAR SEAT CUSHION ASSEMBLY RH (See page SE-82)**

9. **REMOVE REAR SEAT BACK HINGE COVER**
   (a) for LH Side:
      (1) Remove the rear seat back hinge cover (See page SE-71).
   (b) for RH Side:
      (1) Remove the rear seat back hinge cover (See page SE-82).

10. **REMOVE REAR SEAT BACK ASSEMBLY LH (See page SE-71)**

11. **REMOVE REAR SEAT BACK ASSEMBLY RH (See page SE-82)**

12. **REMOVE REAR SEAT BACK HINGE SUB-ASSEMBLY LH (See page SE-71)**

13. **REMOVE REAR SEAT BACK HINGE SUB-ASSEMBLY RH**
    HINT:
    Follow the same procedures as for the rear seat back hinge sub-assembly LH.

14. **REMOVE FRONT FLOOR FOOTREST (See page IR-1)**

15. **REMOVE FRONT DOOR SCUFF PLATE LH**
    (a) Disengage the 9 claws and remove the front door scuff plate.

16. **REMOVE FRONT DOOR SCUFF PLATE RH**
    HINT:
    Follow the same procedures as for the front door scuff plate LH.

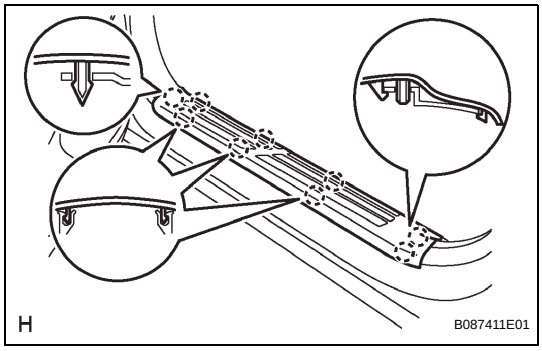

17. **REMOVE COWL SIDE TRIM BOARD LH**
    (a) Remove the clip.
    (b) Disengage the 2 clips and remove the cowl side trim board.

18. **REMOVE COWL SIDE TRIM BOARD RH**
    HINT:
    Follow the same procedures as for the cowl side trim board LH.

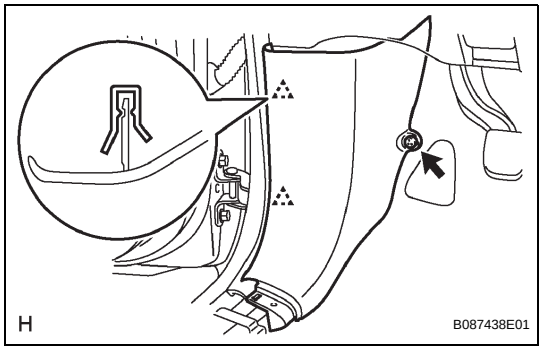

cardiagn.com

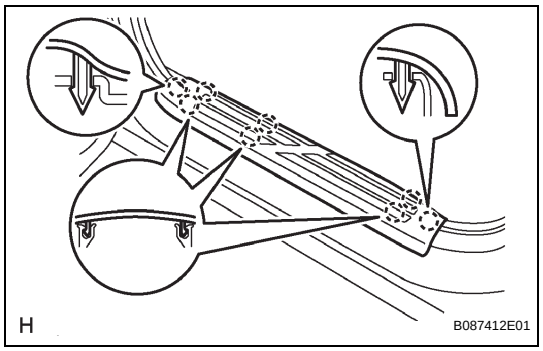

19. REMOVE REAR DOOR SCUFF PLATE LH

(a) Disengage the 8 claws and remove the rear door scuff plate.

20. REMOVE REAR DOOR SCUFF PLATE RH

HINT:
Follow the same procedures as for the rear door scuff plate LH.

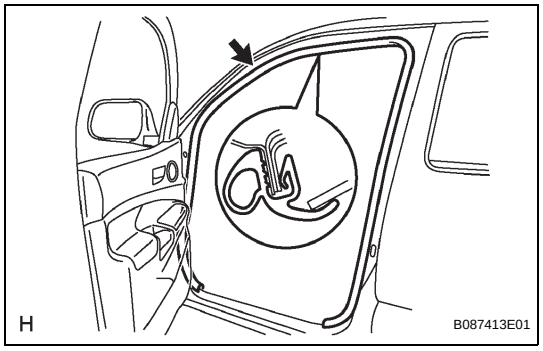

21. REMOVE FRONT DOOR OPENING TRIM WEATHERSTRIP LH

(a) Remove the front door opening trim weatherstrip.

22. REMOVE FRONT DOOR OPENING TRIM WEATHERSTRIP RH

HINT:
Follow the same procedures as for the front door opening trim weatherstrip LH.

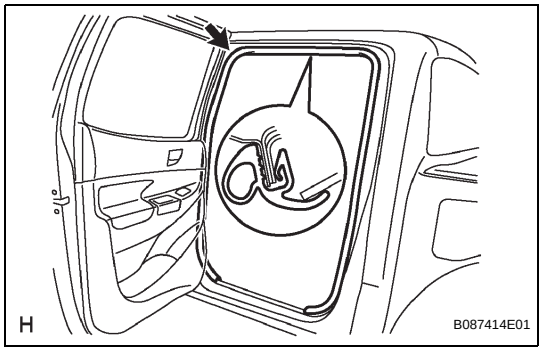

23. REMOVE REAR DOOR OPENING TRIM WEATHERSTRIP LH

(a) Remove the rear door opening trim weatherstrip.

24. REMOVE REAR DOOR OPENING TRIM WEATHERSTRIP RH

HINT:
Follow the same procedures as for the rear door opening trim weatherstrip LH.

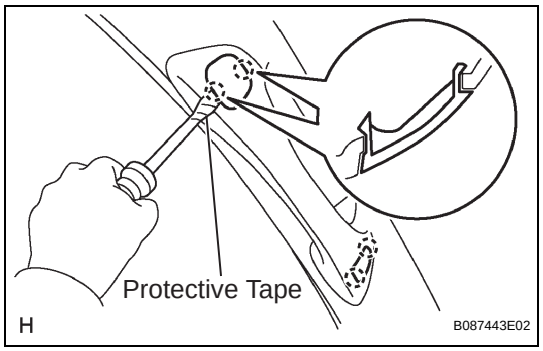

25. REMOVE FRONT PILLAR GARNISH LH

(a) Using a screwdriver with its tip taped in protective tape, disengage the 2 claws and remove the assist grip plug.
HINT:
Follow the same procedures as for the opposite side.

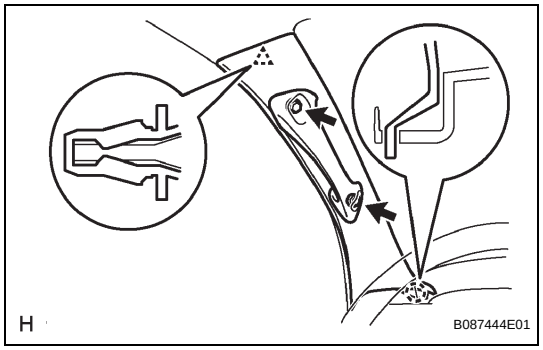

(b) Remove the 2 screws.
(c) Disengage the clip and claw and remove the front pillar garnish.

cardiagn.com

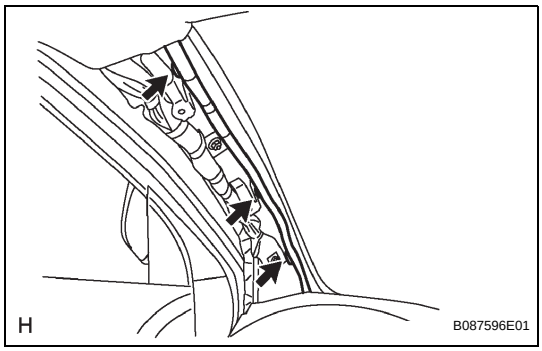

(d) for LH side:
(1) Using a clip remover, remove the 3 wire harness clamps.

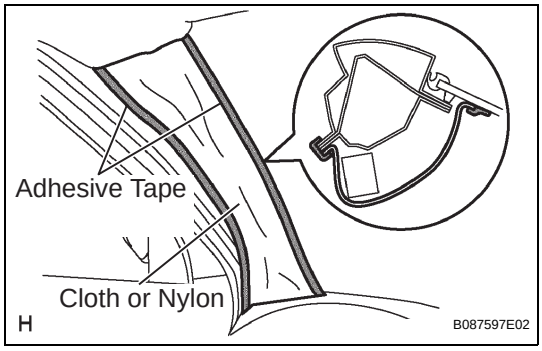

(e) w/ Curtain Shield Airbag:
NOTICE:
Cover the curtain shield airbag with the protective cover as soon as the front pillar garnish is removed.
(1) Thoroughly cover the air bag with cloth or nylon of 700 mm (27.56 in.) x 120 mm (4.72 in.) and fix the ends of the cover with adhesive tape, as shown in the illustration.

26. REMOVE FRONT PILLAR GARNISH RH
HINT:
Follow the same procedures as for the front pillar garnish LH.

27. REMOVE INSTRUMENT PANEL UNDER TRAY (for Pedal Type Parking Brake) (See page IP-9)

28. REMOVE INSTRUMENT PANEL HOLE COVER (for Lever Type Parking Brake) (See page IP-9)

29. REMOVE REAR CONSOLE UPPER PANEL SUB-ASSEMBLY
(a) for Automatic Transmission:
(1) Remove the rear console upper panel sub-assembly (See page IP-9).
(b) for Manual Transmission:
(1) Remove the rear console upper panel sub-assembly (See page IP-9).

30. REMOVE REAR CONSOLE BOX ASSEMBLY (See page IP-10)

31. REMOVE INSTRUMENT PANEL CUP HOLDER TRAY (for Automatic Transmission) (See page IP-10)

32. REMOVE FRONT CONSOLE BOX
(a) for Automatic Transmission:
(1) Remove the front console box (See page IP-10).
(b) for Manual Transmission:
(1) Remove the front console box (See page IP-11).

33. REMOVE AIR CONDITIONING CONTROL ASSEMBLY (See page IP-12)

cardiagn.com

34. REMOVE RADIO RECEIVER ASSEMBLY (See page AV-69)

35. DISCONNECT HOOD LOCK CONTROL LEVER SUB-ASSEMBLY (See page ED-3)

36. REMOVE INSTRUMENT LOWER PANEL FINISH PANEL (See page IP-12)

37. REMOVE INSTRUMENT CLUSTER FINISH PANEL SUB-ASSEMBLY (See page IP-12)

38. REMOVE COMBINATION METER ASSEMBLY (See page IP-13)

39. REMOVE INSTRUMENT CENTER CLUSTER FINISH PANEL SUB-ASSEMBLY (See page IP-13)

40. REMOVE GLOVE COMPARTMENT DOOR ASSEMBLY (See page IP-13)

41. REMOVE INSTRUMENT LOWER PANEL FINISH PANEL SUB-ASSEMBLY (See page IP-14)

42. REMOVE INSTRUMENT LOWER PANEL (See page IP-14)

43. REMOVE INSTRUMENT LOWER COVER SUB-ASSEMBLY (See page IP-14)

44. REMOVE INSTRUMENT SIDE PANEL (See page IP-14)

45. DISCONNECT PASSENGER AIRBAG CONNECTOR (See page RS-576)

46. REMOVE INSTRUMENT PANEL SUB-ASSEMBLY (See page IP-14)

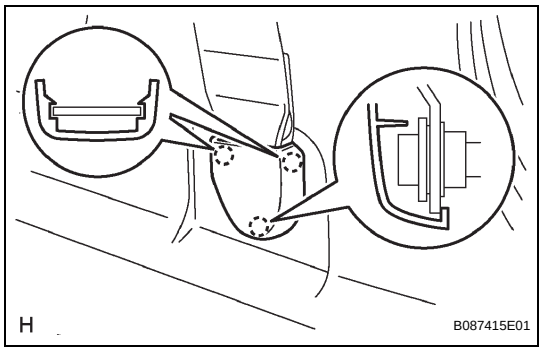

47. REMOVE LAP BELT OUTER ANCHOR COVER

HINT:

Follow the same procedures as for the opposite side.

(a) Disengage the 3 claws and remove the lap belt outer anchor cover.

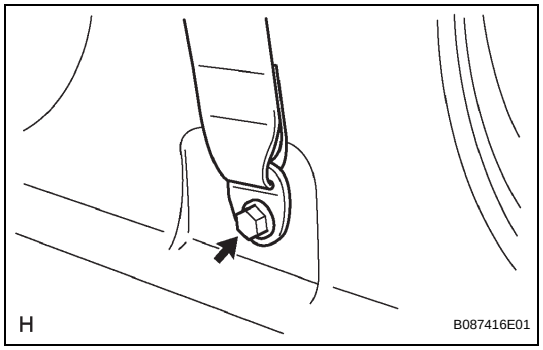

48. REMOVE CENTER PILLAR LOWER GARNISH LH

(a) Remove the bolt and floor anchor of the front seat outer belt.

cardiagn.com

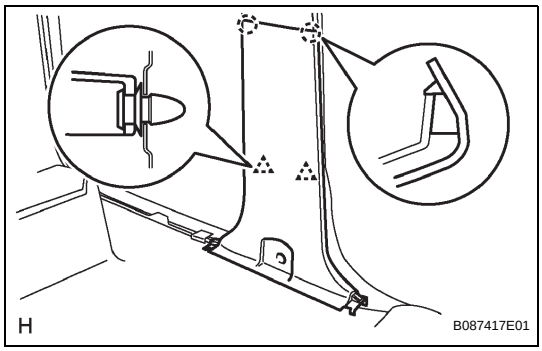

(b) Disengage the 2 claws and 2 clips, and remove the center pillar lower garnish.

49. REMOVE CENTER PILLAR LOWER GARNISH RH

HINT:
Follow the same procedures as for the center pillar lower garnish LH.

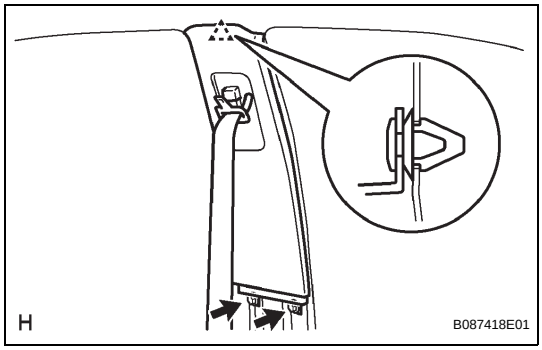

50. REMOVE CENTER PILLAR UPPER GARNISH LH

(a) Remove the 2 screws.
(b) Disengage the clip and remove the center pillar upper garnish.

51. REMOVE CENTER PILLAR UPPER GARNISH RH

HINT:
Follow the same procedures as for the center pillar upper garnish LH.

IR

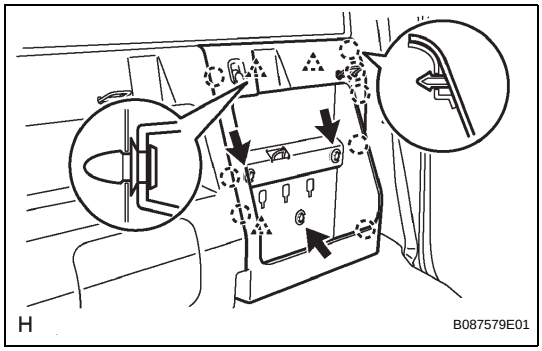

52. REMOVE LUGGAGE COMPARTMENT SIDE TRAY LH

(a) Remove the 3 bolts.
(b) Disengage the 8 claws and 3 clips, and remove the luggage compartment side tray.

53. REMOVE REAR SEAT BACK CENTER HINGE SUB-ASSEMBLY (See page SE-71)

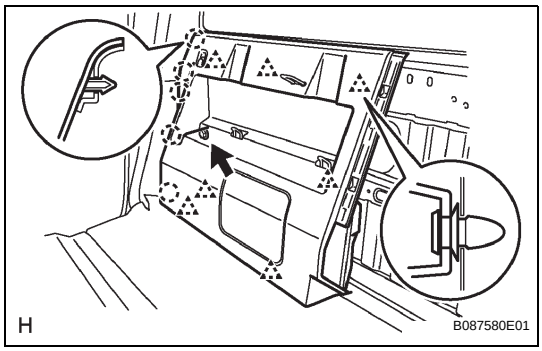

54. REMOVE LUGGAGE COMPARTMENT SIDE TRAY RH

(a) w/ Woofer:
  (1) Remove the bolt.
  (2) Disengage the 5 claws and 7 clips, and remove the luggage compartment side tray.

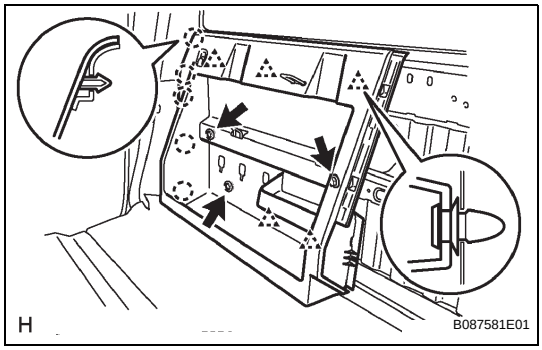

(b) w/o Woofer:
  (1) Remove the 3 bolts.
  (2) Disengage the 5 claws and 5 clips, and remove the luggage compartment side tray.

cardiagn.com

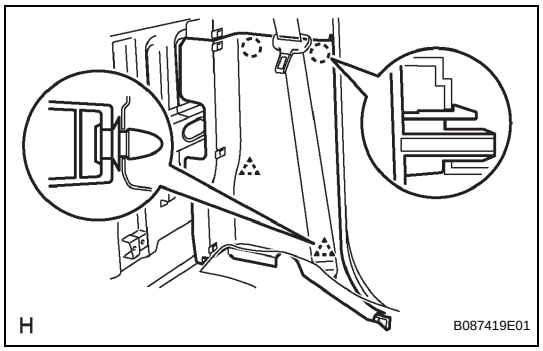

55. REMOVE QUARTER TRIM LOWER PANEL LH

(a) Disengage the 2 claws and 2 clips, and remove the quarter trim lower panel.

56. REMOVE QUARTER TRIM LOWER PANEL RH

HINT:
Follow the same procedures as for the quarter trim lower panel LH.

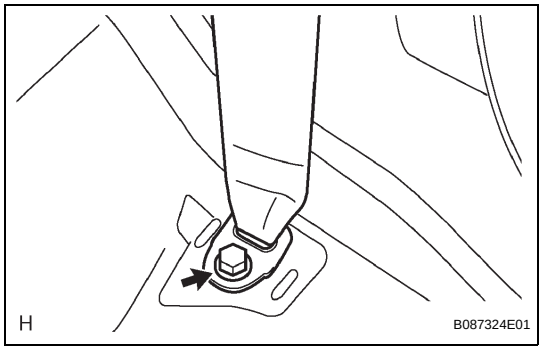

57. REMOVE QUARTER INSIDE TRIM BOARD LH

(a) Remove the bolt and remove the floor anchor of the rear seat belt outer.
HINT:
Follow the same procedures as for the opposite side.

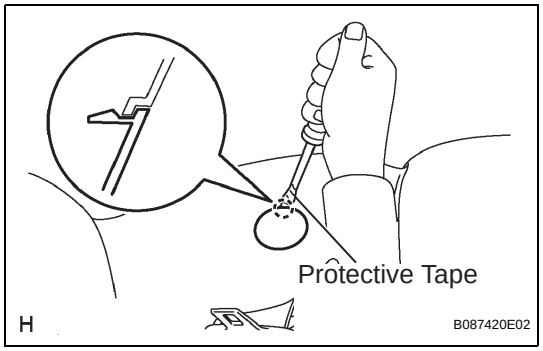

(b) Using a screwdriver with its tip taped in protective tape, disengage the claw and open the cover.

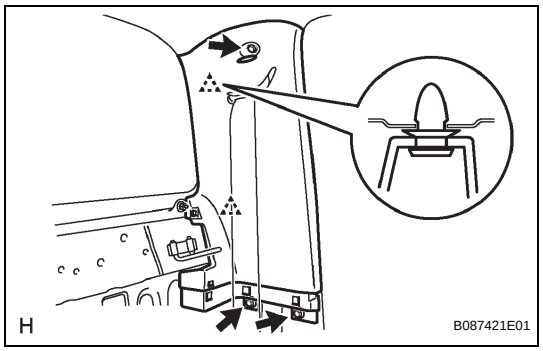

(c) Remove the 3 screws.
(d) Disengage the 2 clips and remove the quarter inside trim board.

58. REMOVE QUARTER INSIDE TRIM BOARD RH

HINT:
Follow the same procedures as for the quarter inside trim board LH.

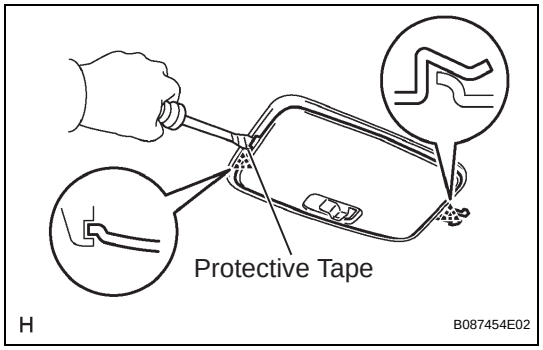

59. REMOVE ROOM LIGHT ASSEMBLY

(a) Using a screwdriver with its tip taped in protective tape, disengage the 2 claws and remove the room light lens.

cardiagn.com

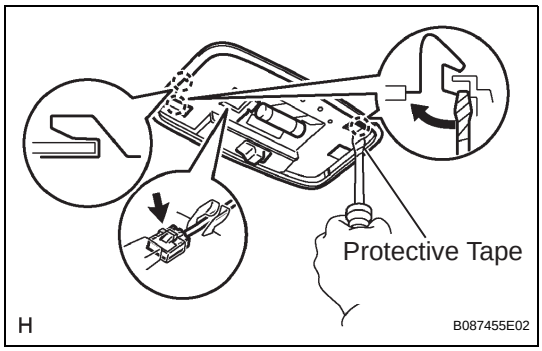

(b) Using a screwdriver with its tip taped in protective tape, disengage the 3 claws.
(c) Disconnect the room light connector and remove the room light.

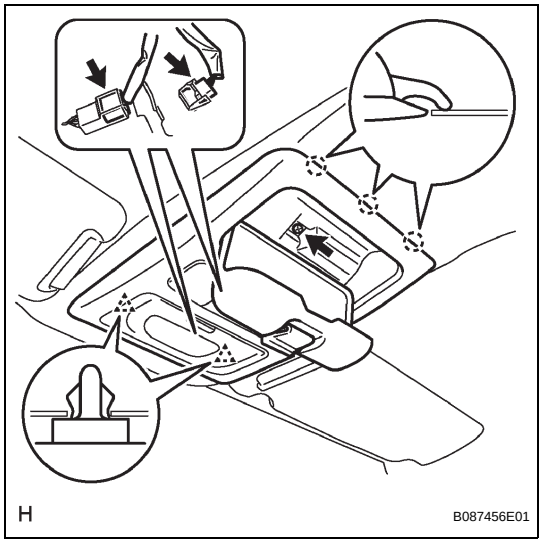

60. REMOVE ROOF CONSOLE BOX ASSEMBLY
(a) Remove the screw.
(b) Disengage the 2 clips and 3 claws.
(c) Disconnect the accessory meter connector and map lamp connector and remove the map lamp.

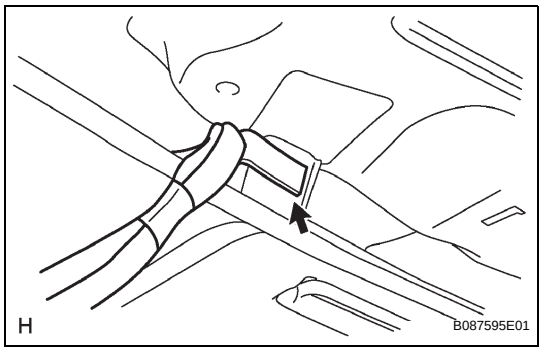

(d) Using a clip remover, remove the wire harness clamp.

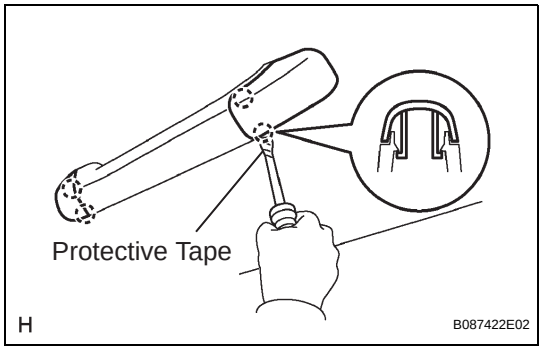

61. REMOVE ASSIST GRIP SUB-ASSEMBLY
HINT:
Follow the same procedures as for the opposite side.
(a) Using a screwdriver with its tip taped in protective tape, disengage the 2 claws and open the cover.

cardiagn.com

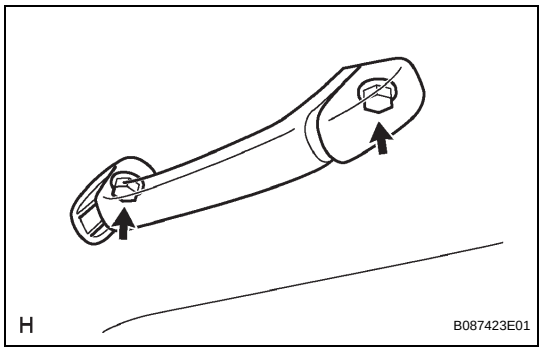

(b) Remove the 2 screws and assist grip.

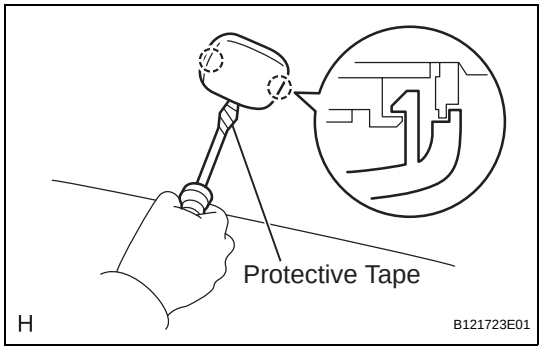

62. REMOVE ASSIST GRIP PLUG (w/ Curtain Shield Airbag)

HINT:
Follow the same procedures as for the opposite side.

(a) Using a screwdriver with its tip taped in protective tape, disengage the 2 claws and open the cover.

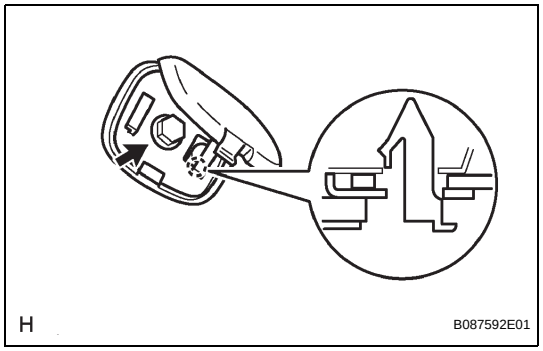

(b) Remove the screw.
(c) Disengage the claw and remove the assist grip plug.

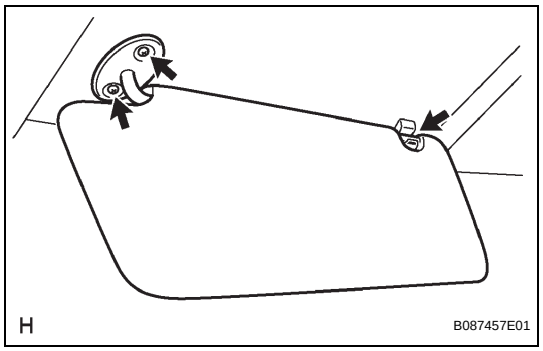

63. REMOVE VISOR ASSEMBLY LH

(a) Remove the 2 screws.
(b) Remove the visor from the visor hol

64. REMOVE VISOR ASSEMBLY RH

HINT:
Follow the same procedures as for the visor assembly LH.

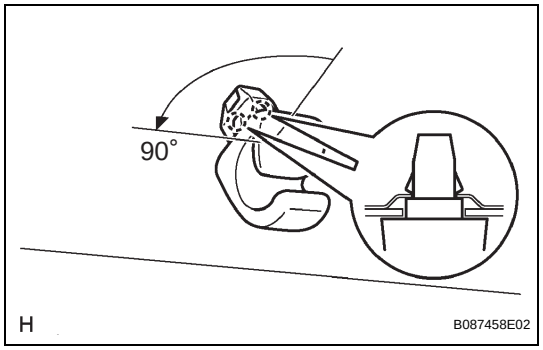

65. REMOVE VISOR HOLDER

(a) Turn the visor holder 90° counterclockwise and remove it.
HINT:
Follow the same procedures as for the opposite side.

cardiagn.com

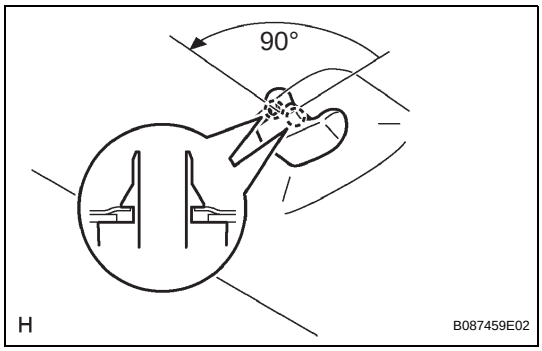

66. REMOVE COAT HOOK

HINT:

Follow the same procedures as for the opposite side.

(a) Turn the coat hook 90° counterclockwise and remove it.

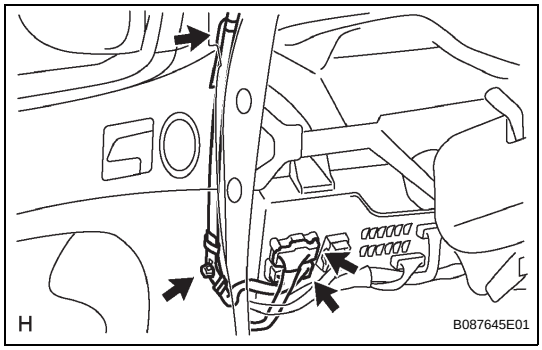

67. REMOVE ROOF HEADLINING ASSEMBLY

(a) Disconnect the frame wire connector.

(b) Disconnect the roof wire connector.

(c) Using a clip remover, remove the 2 wire harness clamps.

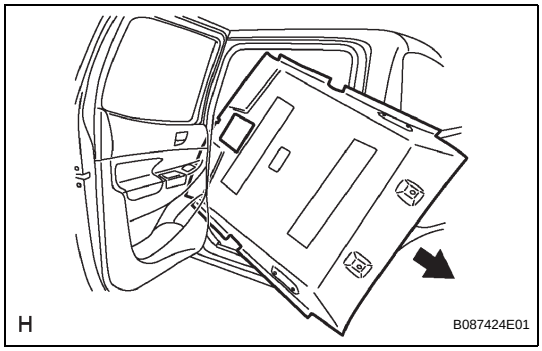

(d) Remove the roof headlining from the vehicle.

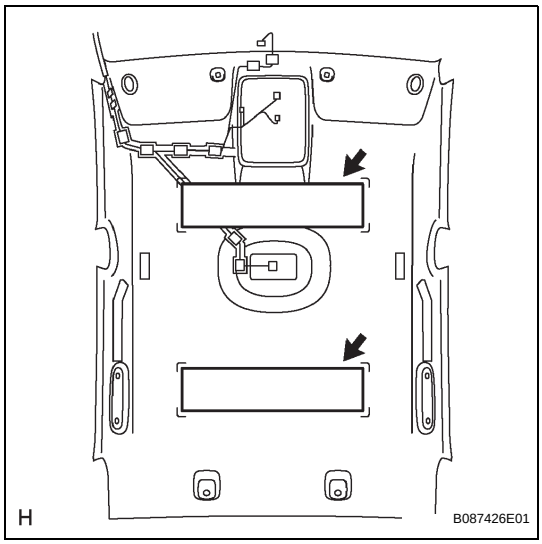

68. REMOVE ROOF HEADLINING PAD

(a) Remove the 2 roof headlining pads from the roof headlining.

cardiagn.com

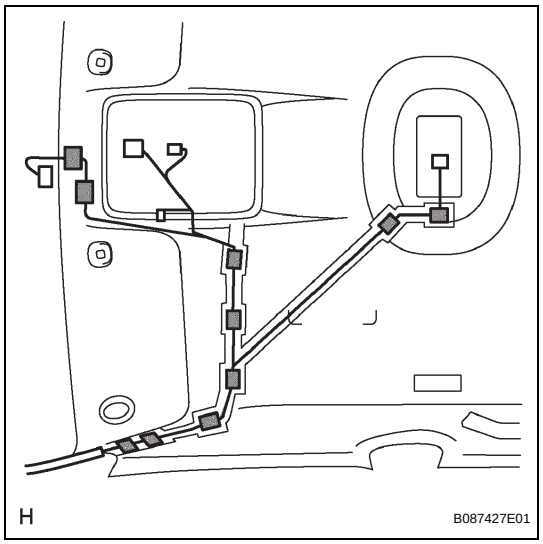

69. REMOVE ROOF WIRE

(a) w/ EC Mirror:

(1) Remove the 10 tapes and roof wire.

(b) w/o EC Mirror:

(1) Remove the 8 tapes and roof wire.

cardiagn.com