REMOVAL

1. DISCONNECT CABLE FROM NEGATIVE BATTERY TERMINAL

2. REMOVE REAR BUMPER BAR

(a) w/ Towing hitch:
- (1) Disconnect the 2 No. 3 wire frame connectors.
- (2) Loosen 2 bolts A.
- (3) Remove the 8 bolts.
- (4) Disengage the 2 pins and remove the rear bumper bar.

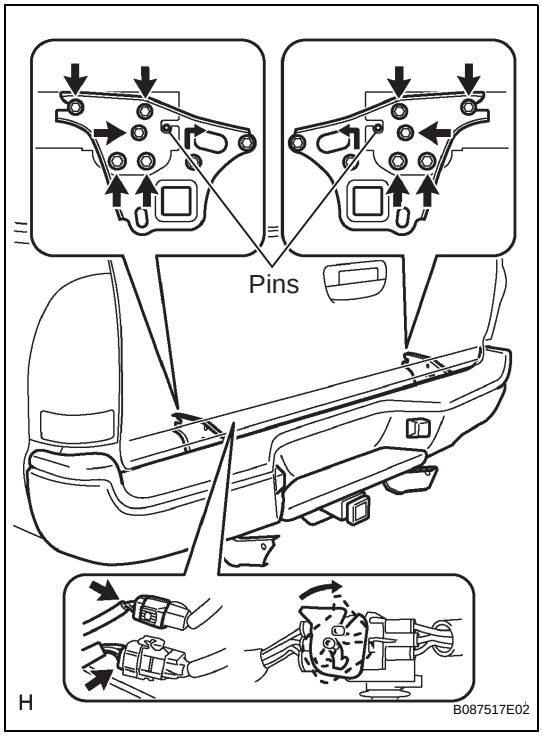

(b) w/o Towing hitch:
- (1) Disconnect the 2 license lamp connectors.
- (2) Loosen the 2 bolts.
- (3) Remove the 4 bolts.
- (4) Disengage the 2 pins and remove the rear bumper bar.

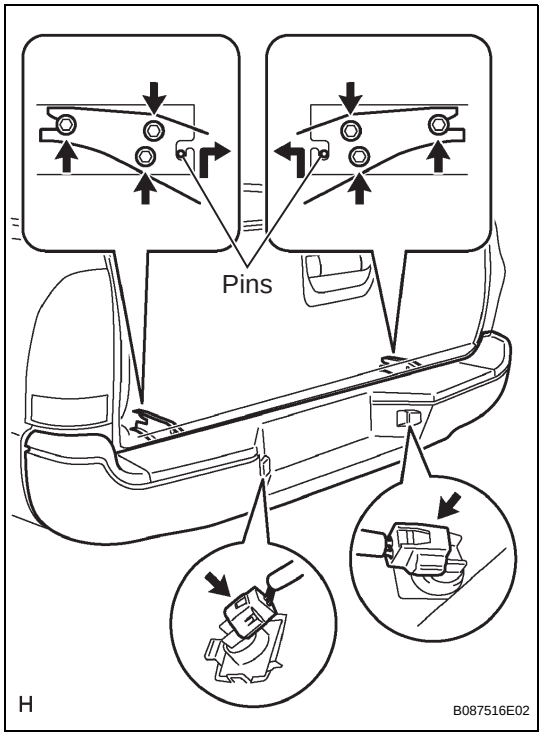

cardiagn.com

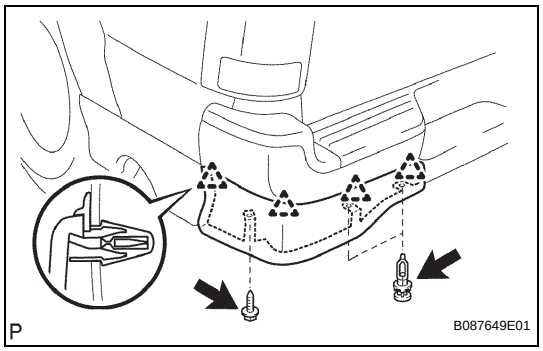

3. REMOVE REAR BUMPER SPOILER LH (for X-Runner)

(a) Using a clip remover, remove the 2 clips.
(b) Remove the screw.
(c) Disengage the 4 clips and remove the rear bumper spoiler.

4. REMOVE REAR BUMPER SPOILER RH (for X-Runner)

HINT:
Follow the same procedures as for the rear bumper spoiler LH.

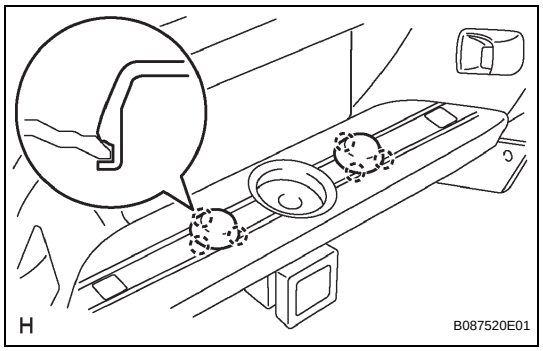

5. REMOVE REAR BUMPER COVER

(a) w/ Towing Hitch:
(1) Disengage the 3 claws and remove the receiver hitch cap.
HINT:
Follow the same procedures as for the opposite side.

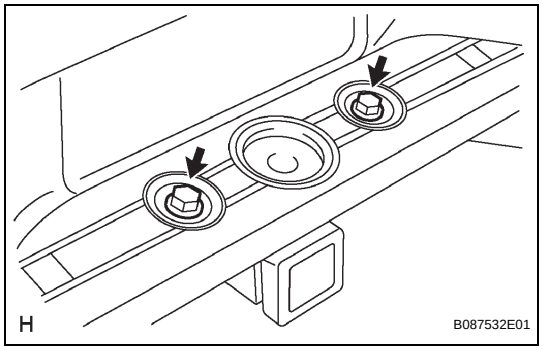

(2) Remove the 2 bolts.
(3) Remove the hitch ball.

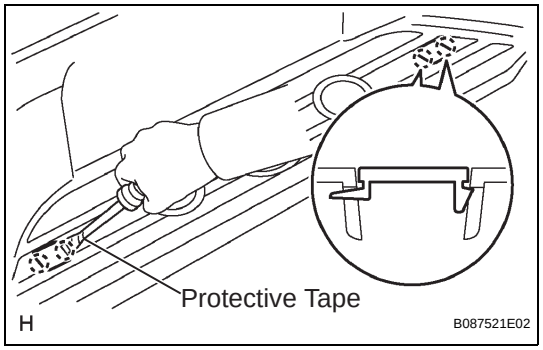

(b) Using a screwdriver with its tip in protective tape, disengage the 2 claws and remove the rear bumper cover lower.
HINT:
Follow the same procedures as for the opposite side.

cardiagn.com

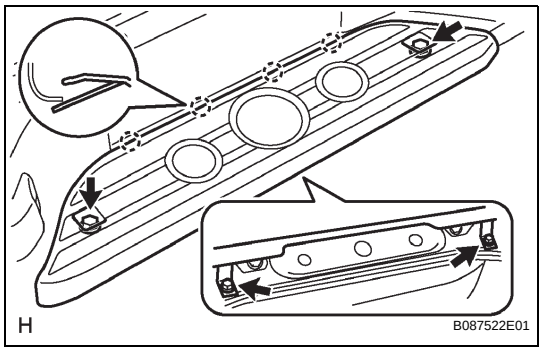

(c) Remove the 4 bolts.
(d) Disengage the 4 claws and remove the rear bumper cover.

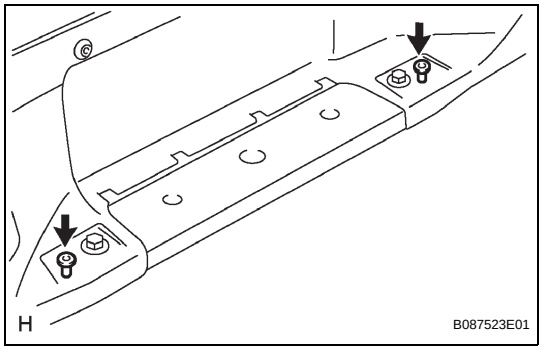

(e) Remove the 2 nuts from the rear bumper bar.

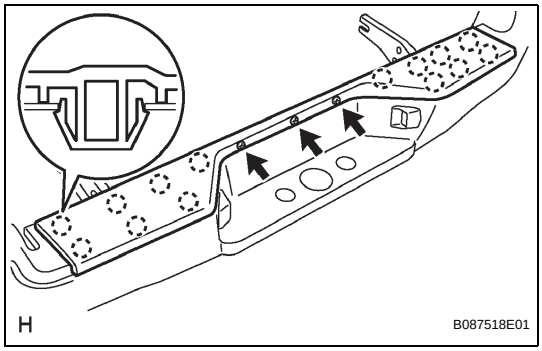

6. REMOVE REAR BUMPER PLATE
(a) Remove the 3 clips.
(b) Disengage the 14 claws and remove the rear bumper plate.

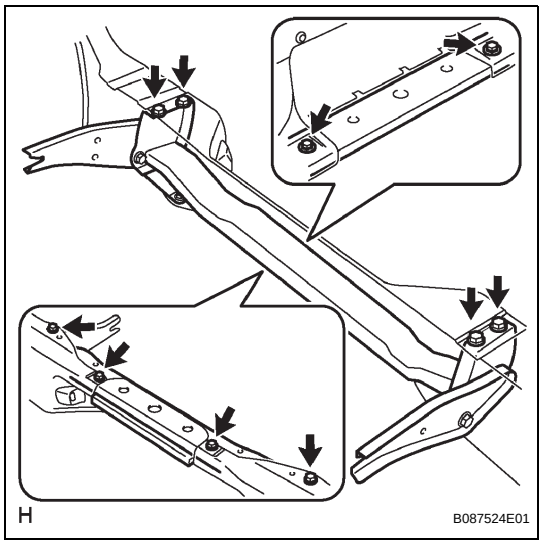

7. REMOVE REAR BUMPER BAR REINFORCEMENT SUB-ASSEMBLY (w/o Towing Hitch)
(a) Remove the 10 bolts and rear bumper bar reinforcement.

cardiagn.com

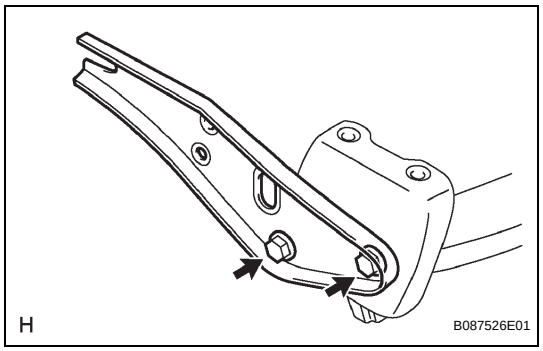

8. REMOVE REAR BUMPER ARM SUB-ASSEMBLY LH (w/o Towing Hitch)
(a) Remove the 2 bolts and rear bumper arm.

9. REMOVE REAR BUMPER ARM SUB-ASSEMBLY RH (w/o Towing Hitch)
HINT:
Follow the same procedures as for the rear bumper arm LH.

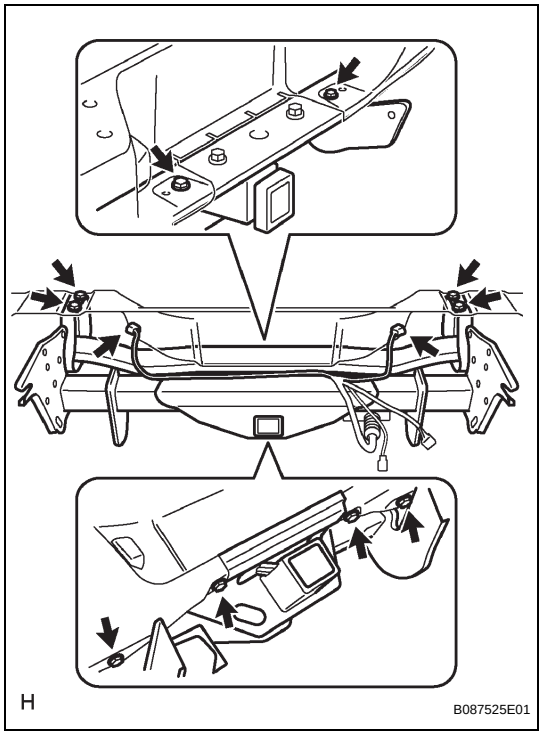

10. REMOVE RECEIVER HITCH BRACKET SUB-ASSEMBLY (w/ Towing Hitch)
(a) Disconnect the 2 license light connectors.
(b) Remove the 10 bolts and receiver hitch bracket.

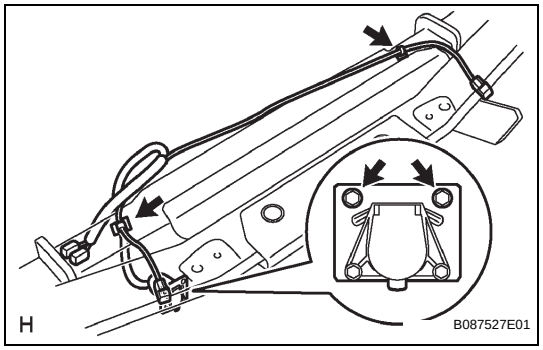

11. REMOVE NO. 3 FRAME WIRE (w/ Towing Hitch)
(a) Using a clip remover, remove the 2 wire harness clamps.
(b) Remove the 2 bolts and No. 3 frame wire.

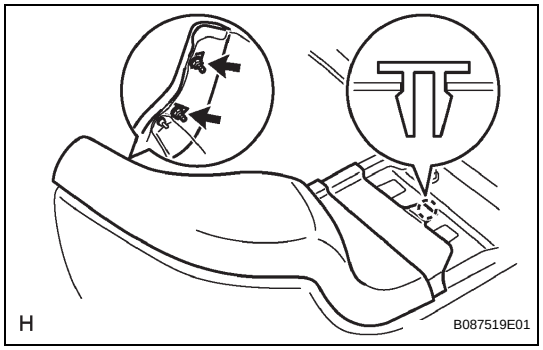

12. REMOVE REAR BUMPER PLATE LH
(a) Remove the 2 nuts.
(b) Disengage the claw and remove the rear bumper plate.

13. REMOVE REAR BUMPER PLATE RH
HINT:
Follow the same procedures as for the rear bumper plate LH.

cardiagn.com

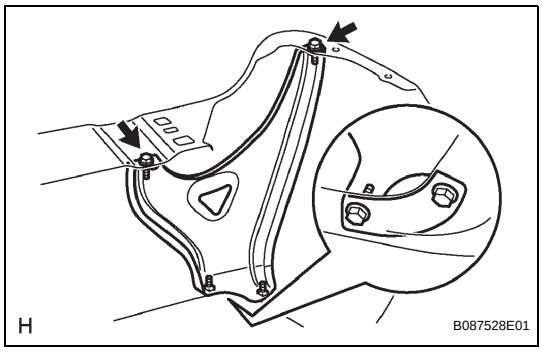

14. REMOVE REAR BUMPER BAR CORNER REINFORCEMENT LH

(a) Remove the 4 bolts and rear bumper bar corner reinforcement.

15. REMOVE REAR BUMPER BAR CORNER REINFORCEMENT RH

HINT:
Follow the same procedures as for the rear bumper bar corner reinforcement LH.

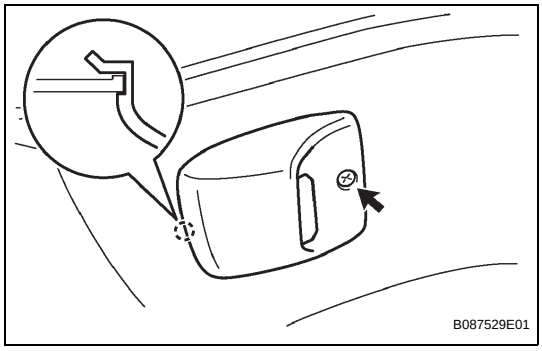

16. REMOVE LICENSE PLATE LIGHT ASSEMBLY

HINT:
Follow the same procedures as for the opposite side.

(a) Remove the screw.

(b) Disengage the claw and remove the license plate light.

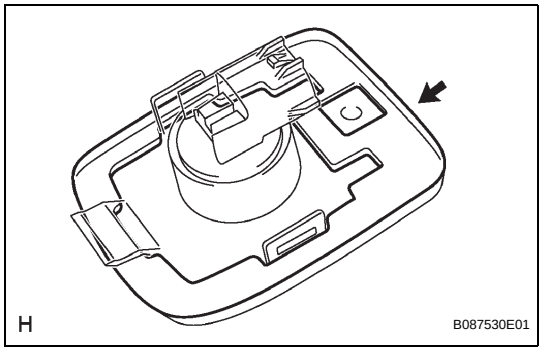

(c) Remove the bumper moulding mounting plate from the license plate light.

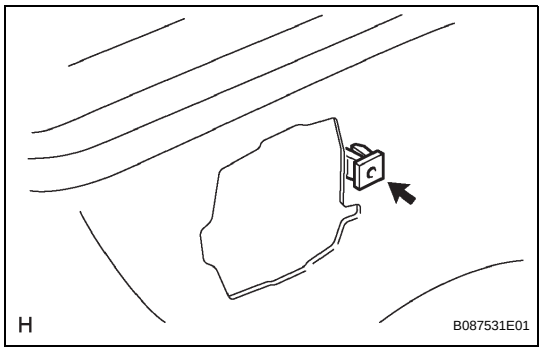

(d) Remove the nut from the rear bumper bar.

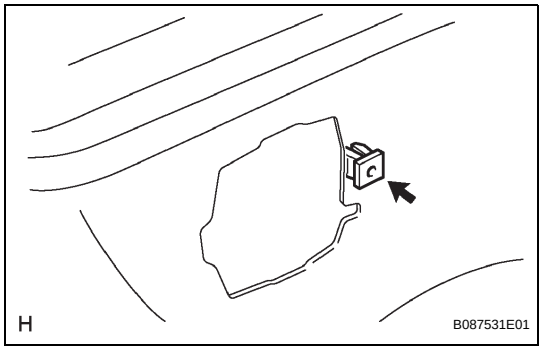

INSTALLATION

1. INSTALL LICENSE PLATE LIGHT ASSEMBLY

HINT:
Follow the same procedures as for the opposite side.

(a) Install the nut into the rear bumper bar.

cardiagn.com

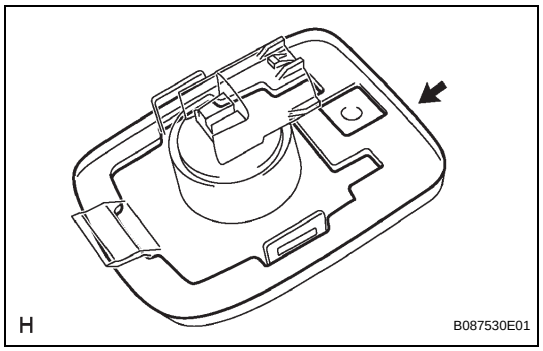

(b) Install the bumper moulding mounting plate onto the license plate light.

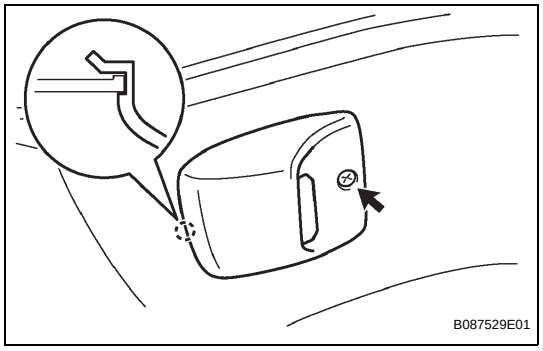

(c) Engage the claw and install the license plate light.
(d) Install the screw.

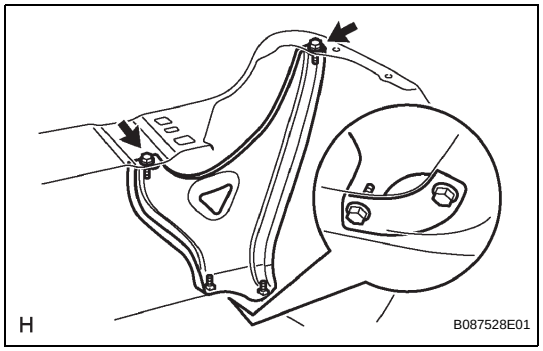

2. INSTALL REAR BUMPER BAR CORNER REINFORCEMENT LH

(a) Install the rear bumper bar corner reinforcement with 4 bolts.
Torque: 19 N*m (195 kgf*cm, 14 ft.*lbf)

3. INSTALL REAR BUMPER BAR CORNER REINFORCEMENT RH

HINT:
Follow the same procedures as for the rear bumper bar corner reinforcement LH.

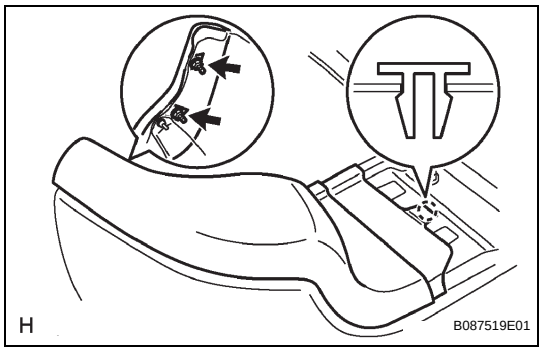

4. INSTALL REAR BUMPER PLATE LH

(a) Engage the claw and install the bumper plate.
(b) Install the 2 nuts.
Torque: 7.0 N*m (70 kgf*cm, 62 in.*lbf)

5. INSTALL REAR BUMPER PLATE RH

HINT:
Follow the same procedures as for the rear bumper plate LH.

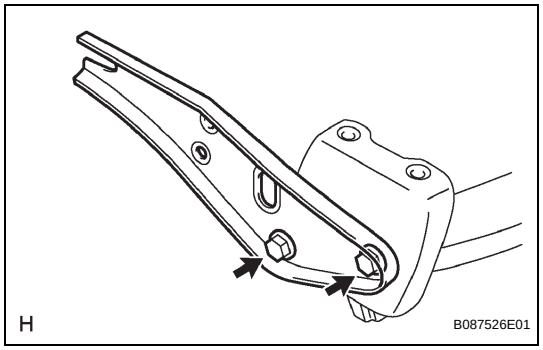

6. INSTALL REAR BUMPER ARM SUB-ASSEMBLY LH (w/o Towing Hitch)

(a) Install the rear bumper arm with the 2 bolts..
Torque: 19 N*m (195 kgf*cm, 14 ft.*lbf)

7. INSTALL REAR BUMPER ARM SUB-ASSEMBLY RH (w/o Towing Hitch)

HINT:
Follow the same procedures as for the rear bumper arm LH.

cardiagn.com

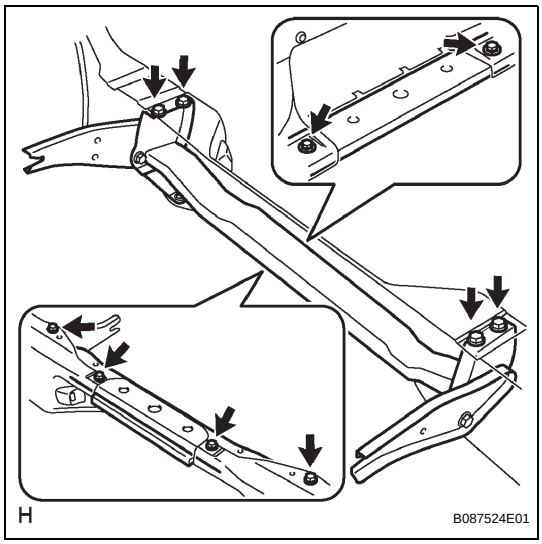

8. INSTALL REAR BUMPER REINFORCEMENT SUB-ASSEMBLY (w/o Towing Hitch)

(a) Install the rear bumper bar reinforcement with the 10 bolts.
Torque: 19 N*m (195 kgf*cm, 14 ft.*lbf)

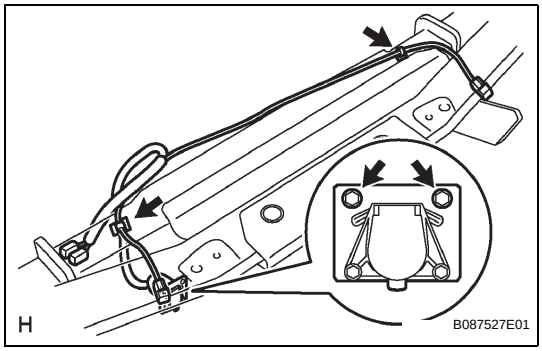

9. INSTALL NO. 3 FRAME WIRE (w/ Towing Hitch)

(a) Install the No. 3 frame wire with the 2 bolts.
Torque: 19 N*m (195 kgf*cm, 14 ft.*lbf)

(b) Install the 2 wire harness clamps.

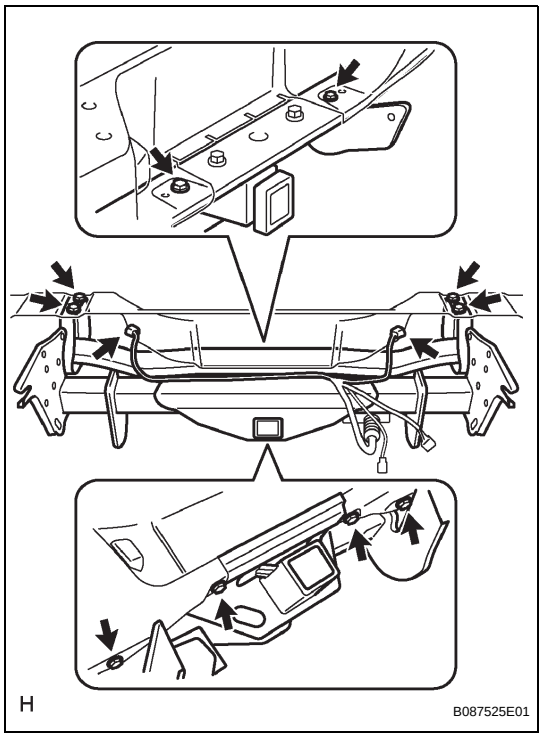

10. INSTALL RECEIVER HITCH BRACKET SUB-ASSEMBLY (w/ Towing Hitch)

(a) Install the receiver hitch bracket with the 10 bolts.
Torque: 19 N*m (195 kgf*cm, 14 ft.*lbf)

(b) Connect the 2 license light connectors.

cardiagn.com

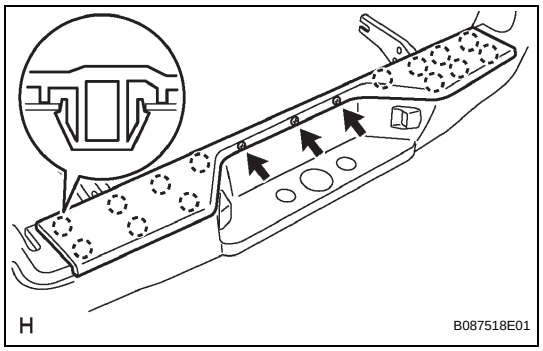

11. INSTALL REAR BUMPER PLATE

(a) Engage the 14 claws and install the rear bumper No. 1 plate.

(b) Install the 3 clips.

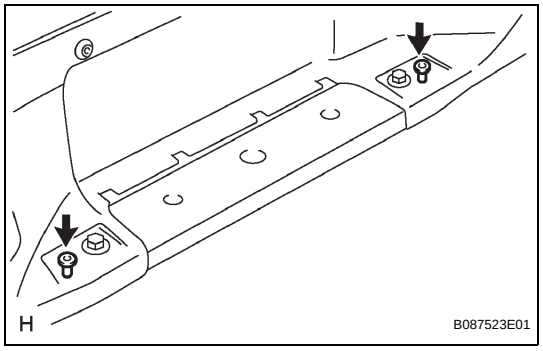

12. INSTALL REAR BUMPER COVER

(a) Install the 2 nuts into the rear bumper bar.

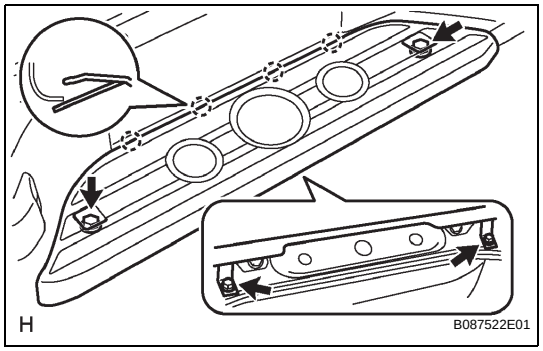

(b) Engage the 4 claws and install the rear bumper pad center.

(c) Tighten the 4 bolts.

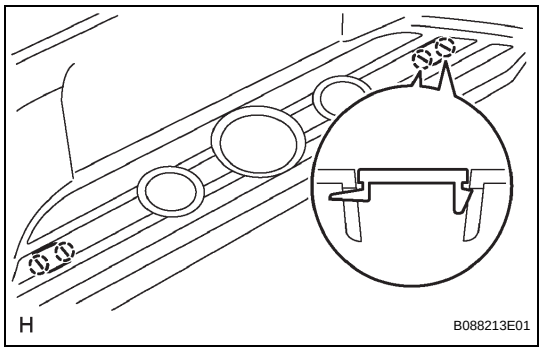

(d) Engage the 2 claws and install the rear bumper cover lower.
HINT:
Follow the same procedures as for the opposite side.

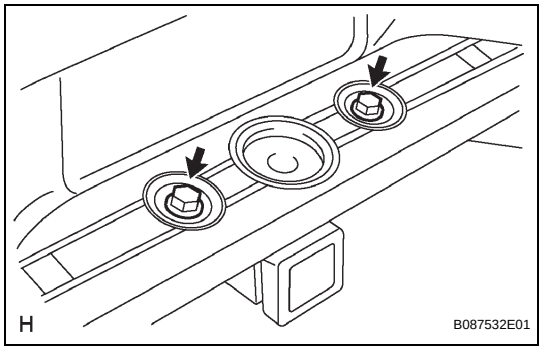

(e) w/ Towing Hitch:
(1) Install the hitch ball.
(2) Tighten the 2 bolts.

cardiagn.com

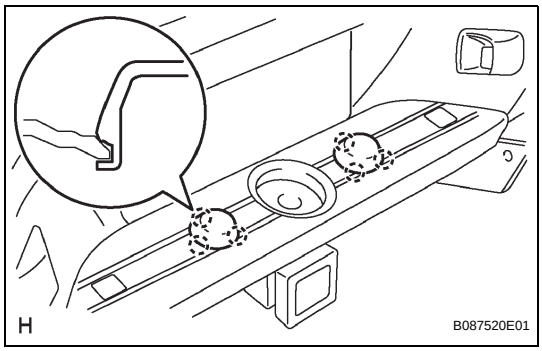

(3) Engage the 3 claws and remove the receiver hitch cap.
HINT:
Follow the same procedures as for the opposite side.

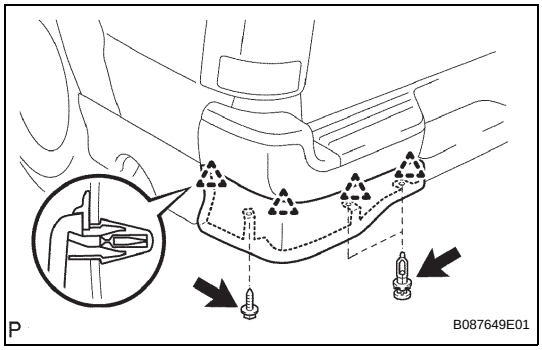

13. INSTALL REAR BUMPER SPOILER LH (for X-Runner)
(a) Engage the 4 clips and install the rear bumper spoiler.
(b) Tighten the screw.
(c) Install the 2 clips.

14. INSTALL REAR BUMPER SPOILER RH (for X-Runner)
HINT:
Follow the same procedures as for the rear bumper spoiler LH.

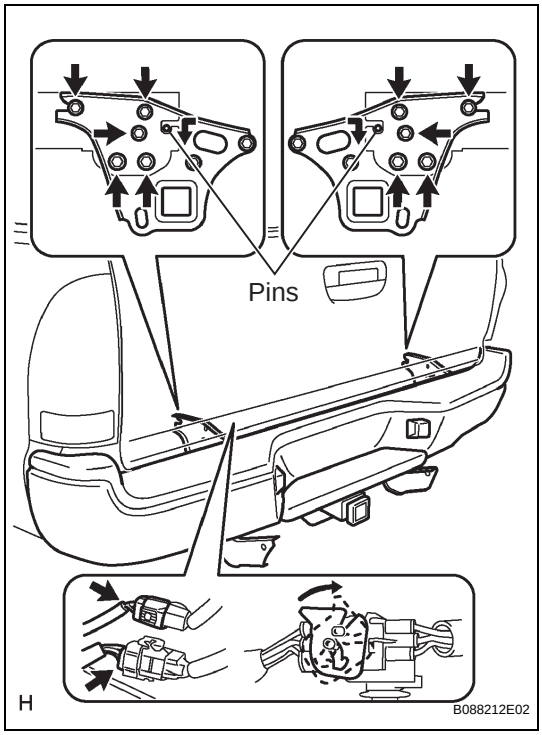

15. INSTALL REAR BUMPER BAR
(a) w/ Towing hitch:
(1) Engage the 2 pins and remove the rear bumper bar.
(2) Tighten the 8 bolts.
Torque: 90 N*m (920 kgf*cm, 67 ft.*lbf)
(3) Connect the 2 No. 3 wire frame connectors.

cardiagn.com

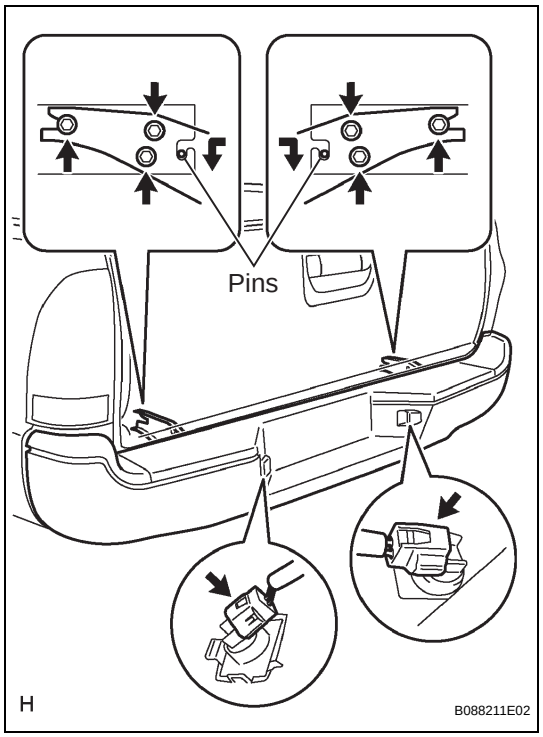

(b) w/o Towing hitch:
  (1) Engage the 2 pins and install the rear bumper bar.
  (2) Tighten the 6 bolts.
  Torque: 90 N*m (920 kgf*cm, 67 ft.*lbf)
  (3) Connect the 2 license lamp connectors.

16. CONNECT CABLE TO NEGATIVE BATTERY TERMINAL
Torque: 3.9 N*m (40 kgf*cm, 35 in.*lbf)

cardiagn.com