FRONT DOOR (w/o Power Window)

COMPONENTS

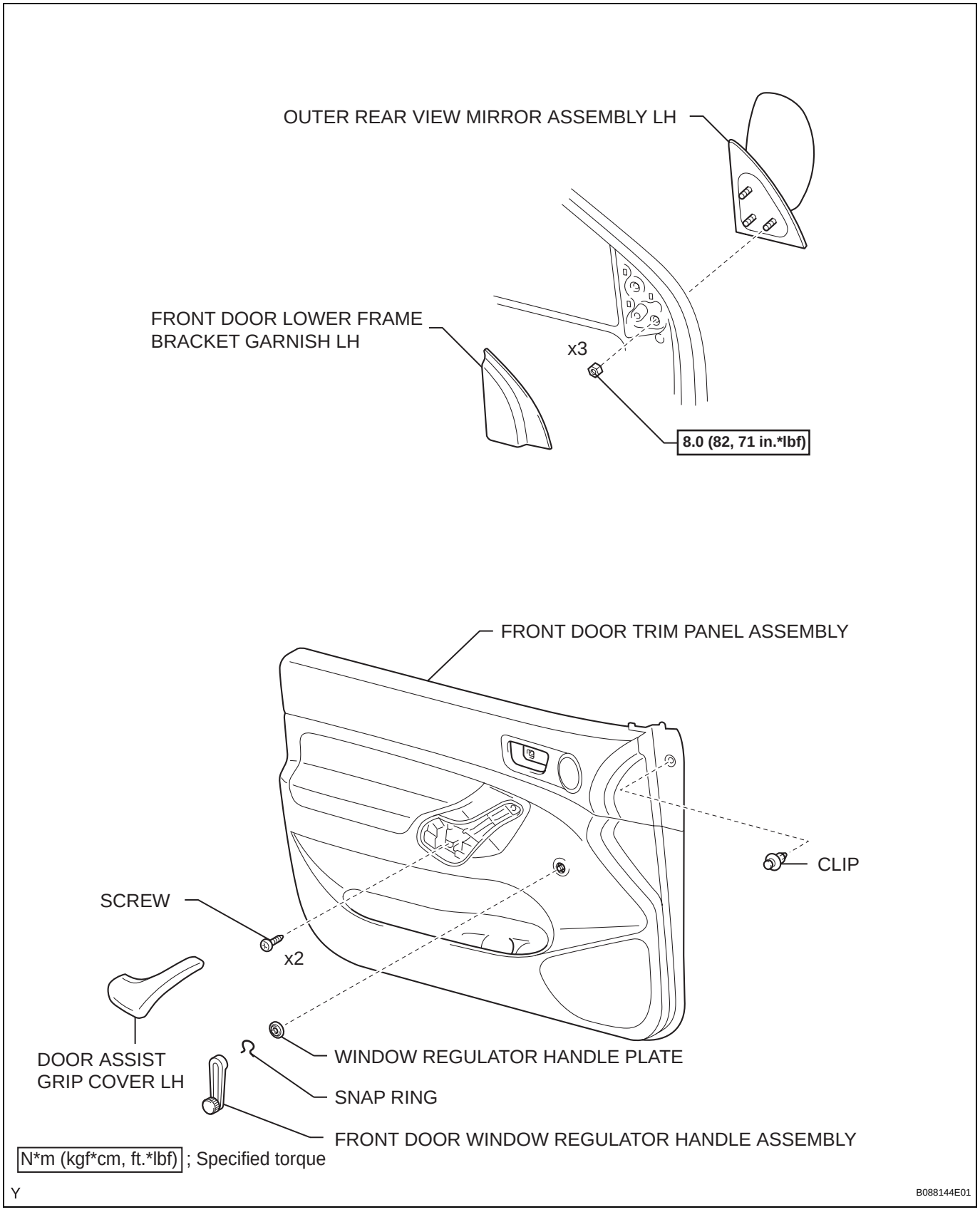

ED
cardiagn.com

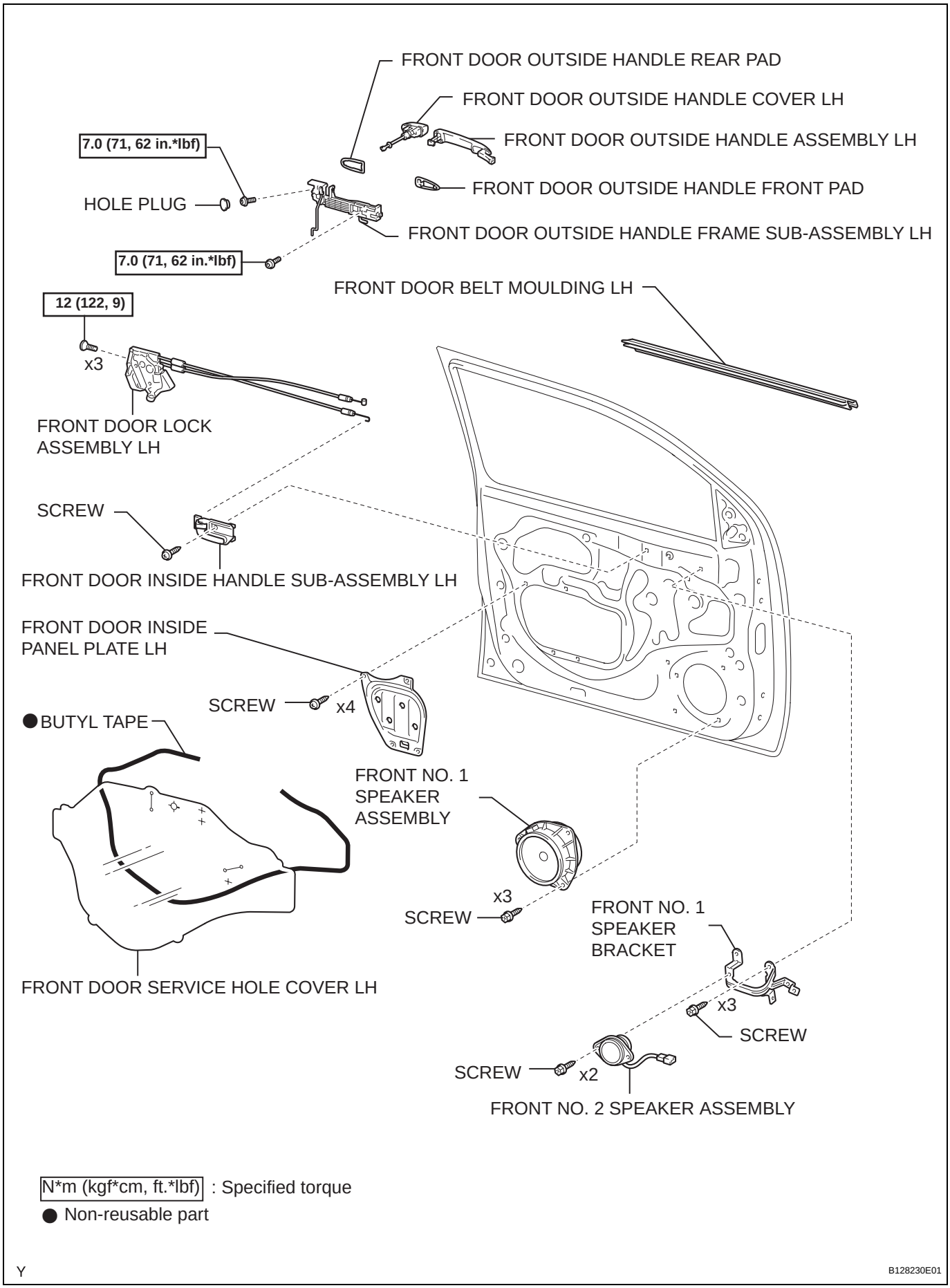

N*m (kgf*cm, ft.*lbf) : Specified torque

● Non-reusable part

Y

B128230E01

cardiagn.com

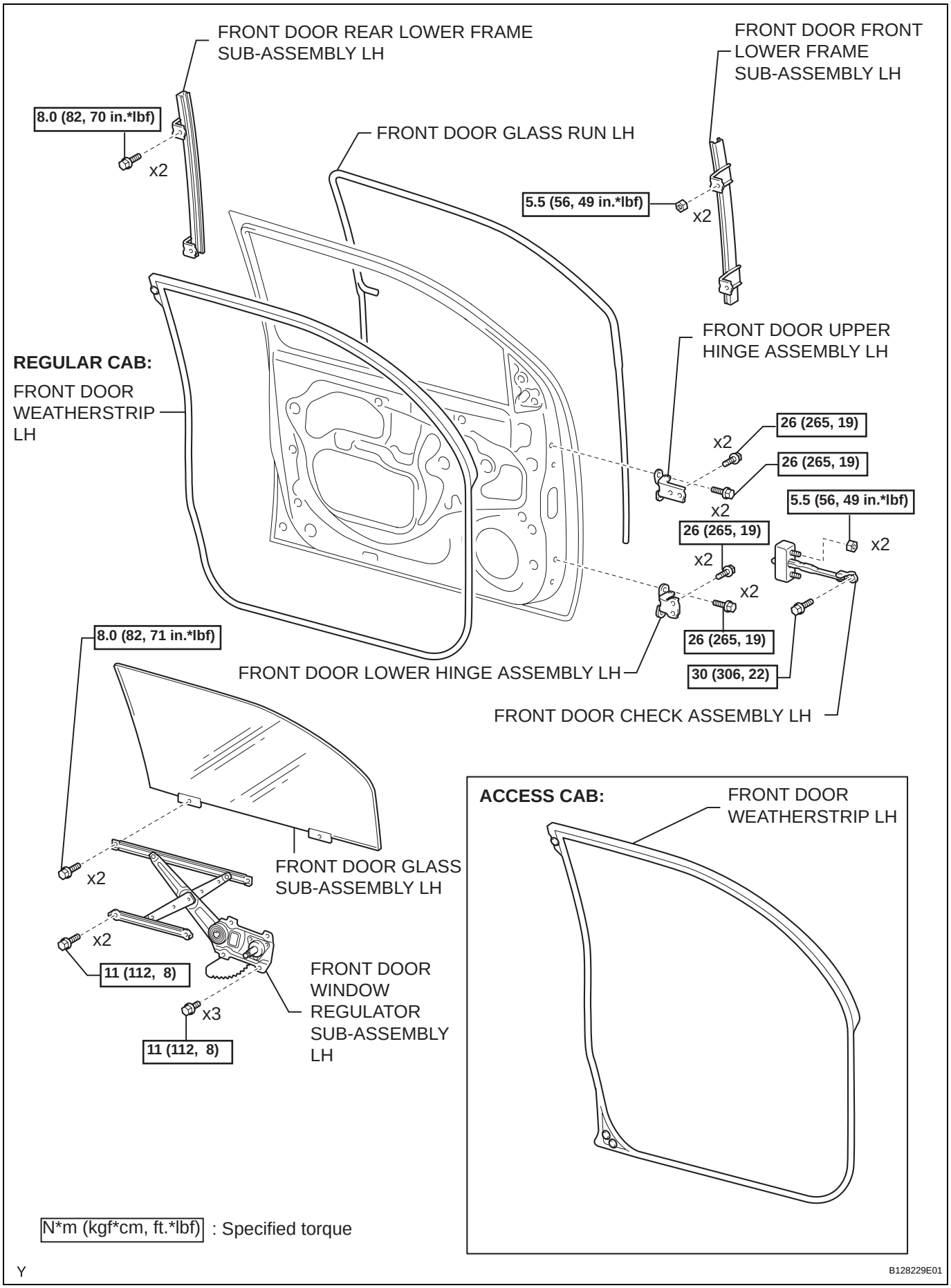

cardiagn.com