REAR SEAT ASSEMBLY (for LH Side)

COMPONENTS

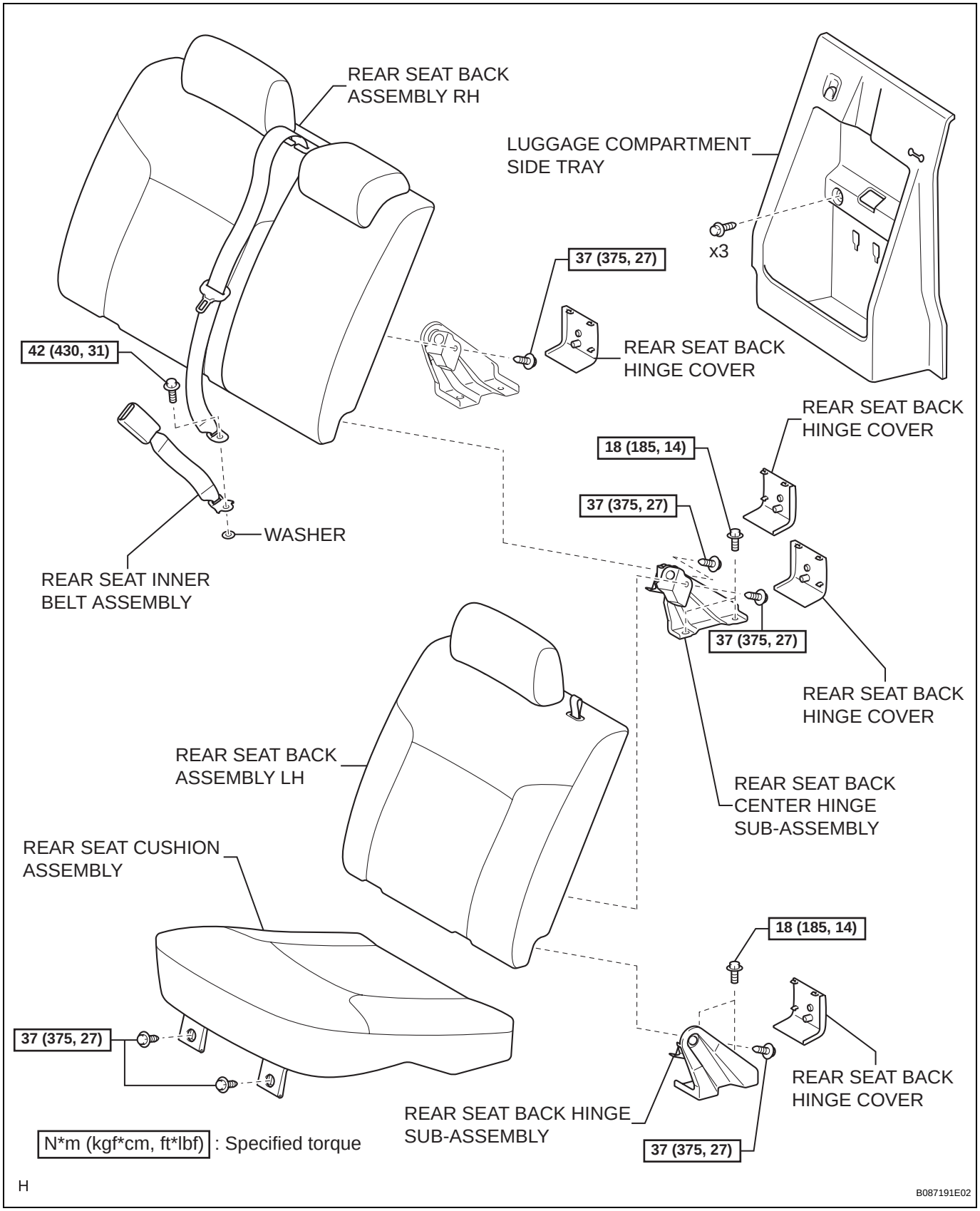

SE

cardiagn.com

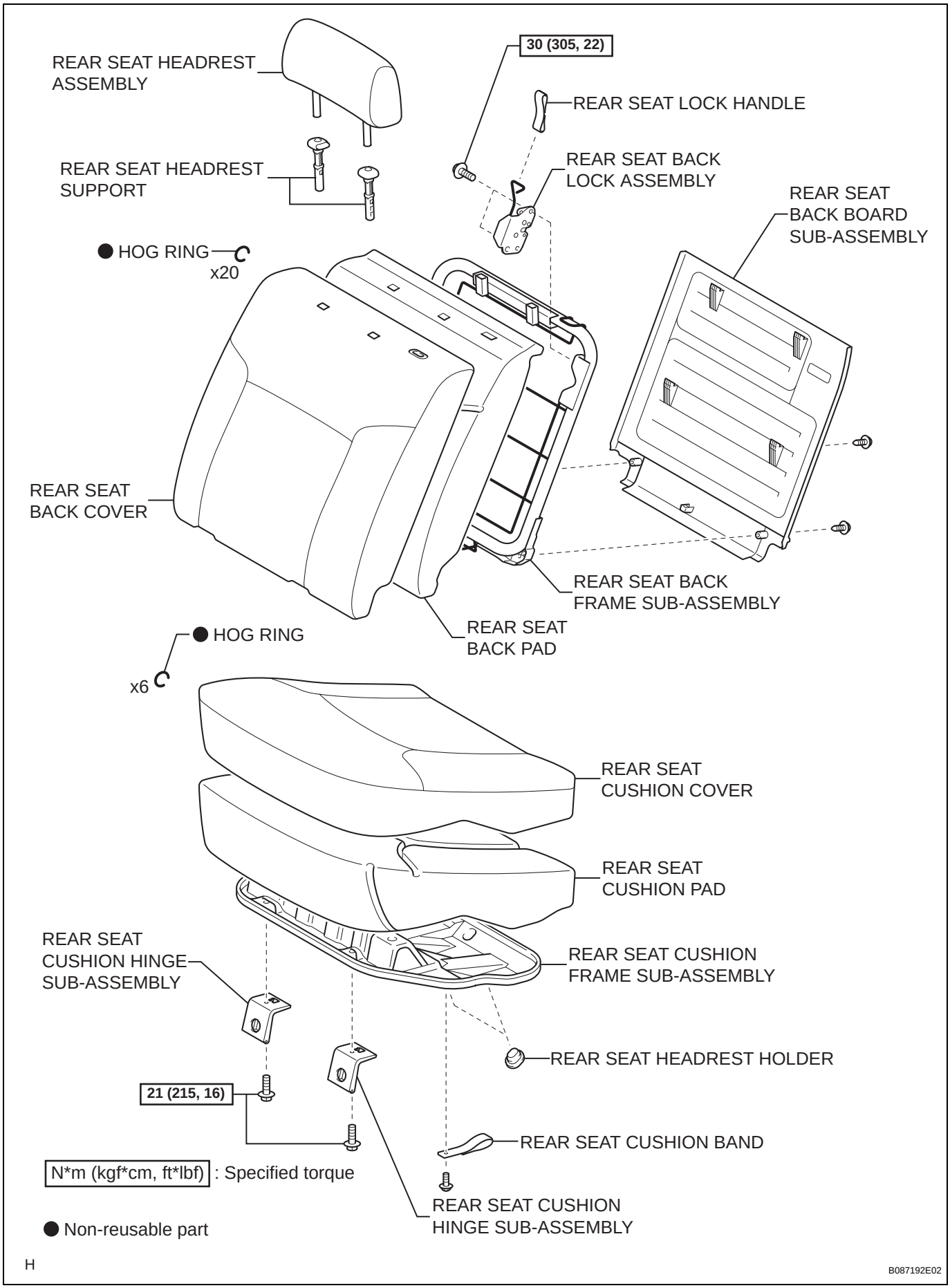

SE

cardiagn.com