REMOVAL

1. **PRECAUTION**
   RS-1

2. **DISCHARGE REFRIGERANT FROM REFRIGERATION SYSTEM (See page AC-18)**

3. **DISCONNECT CABLE FROM NEGATIVE BATTERY TERMINAL**
   Wait at least for 90 seconds after disconnecting the cable to prevent the airbag from working.

4. **DRAIN ENGINE COOLANT (for 2TR-FE) (See page CO-3)**

5. **DRAIN ENGINE COOLANT (for 1GR-FE) (See page CO-3)**

6. **DISCONNECT SUCTION HOSE SUB-ASSEMBLY**
   (a) Remove the 2 bolts and separate the suction hose sub-assembly.

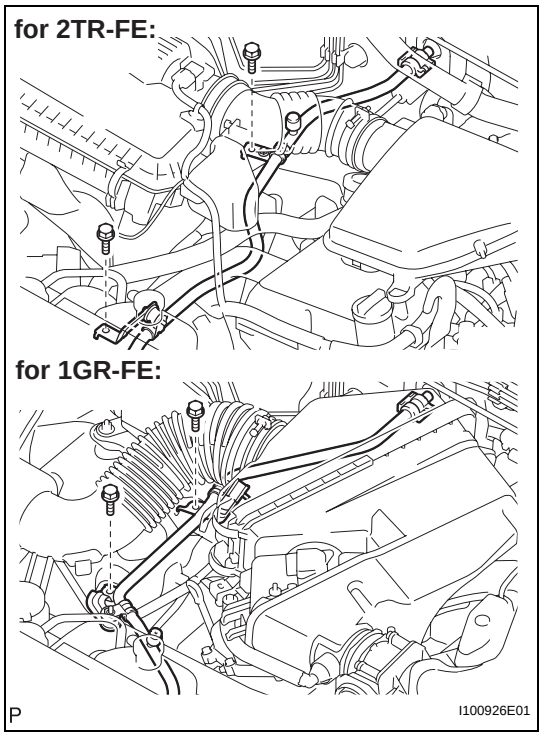

   (b) Insert 2 screwdrivers into the 2 piping clamp slots, and while holding them down, disengage the piping clamp claws and the piping clamp.

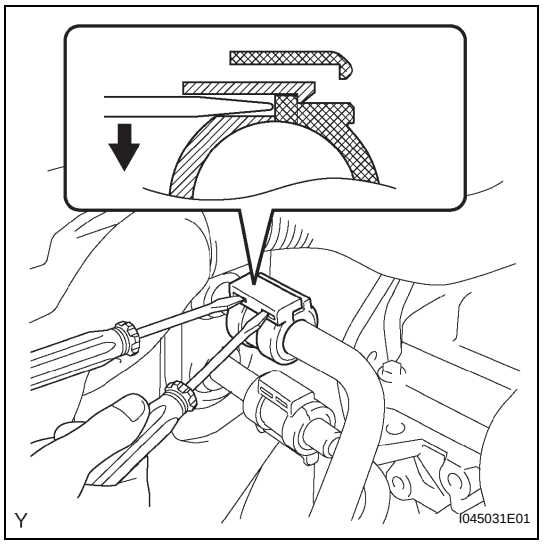

cardiagn.com

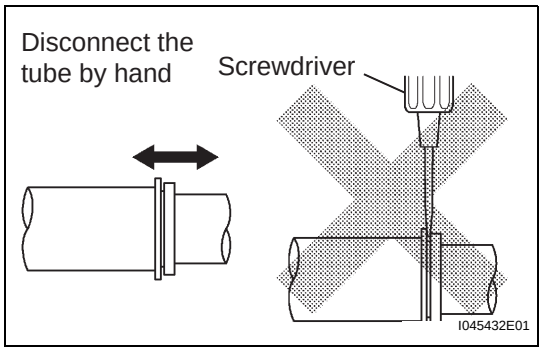

(c) Disconnect the suction hose sub-assembly.
NOTICE:
- **Do not use a screwdriver or any other tool to disconnect the hose.**
- **Seal the openings of the disconnected parts using vinyl tape to prevent moisture and foreign matter from entering.**

(d) Remove the 2 O-rings from the suction hose sub-assembly.

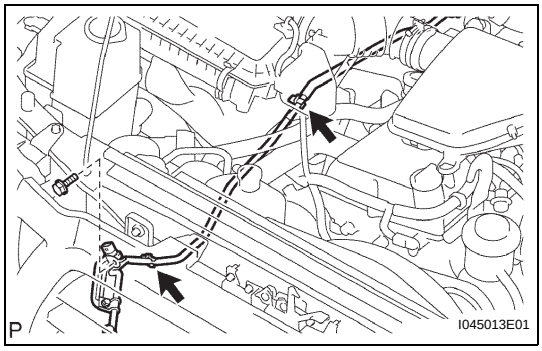

7. DISCONNECT AIR CONDITIONING TUBE ASSEMBLY

(a) Remove the bolt.

(b) Disengage the 2 clamps and separate the air conditioning tube assembly.

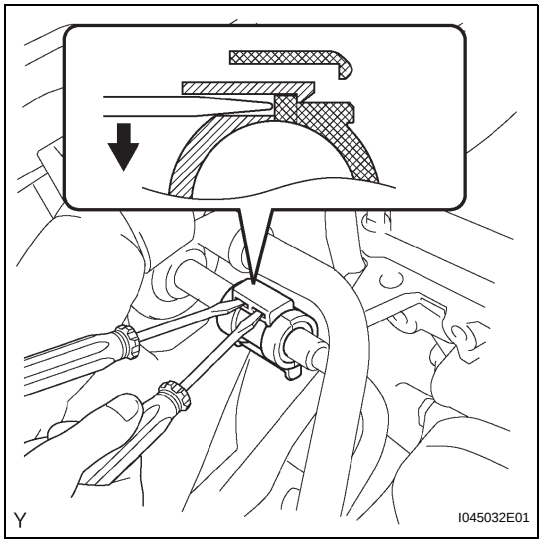

(c) Insert 2 screwdrivers into the 2 piping clamp slots, and while holding them down, disengage the piping clamp claws and the piping clamp.

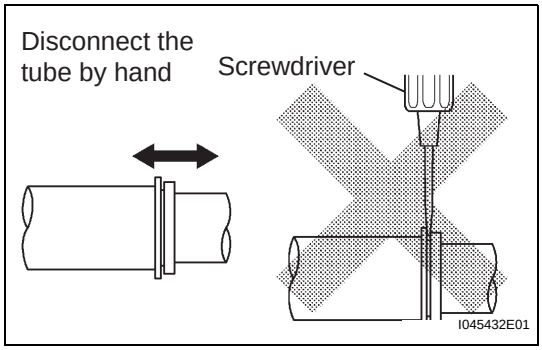

(d) Disconnect the air conditioner tube.
NOTICE:
- **Do not use a screwdriver or any other tool to disconnect the tube.**
- **Seal the openings of the disconnected parts using vinyl tape to prevent moisture and foreign matter from entering.**

(e) Remove the 2 O-rings from the air conditioner tube.

cardiagn.com

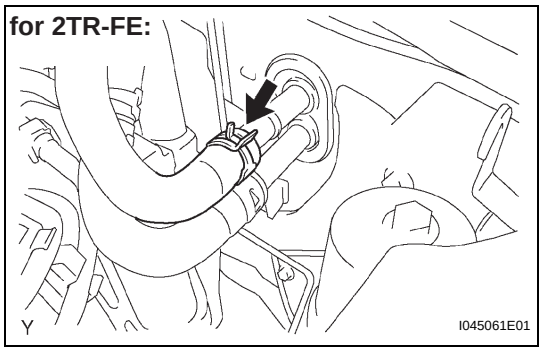

8. **DISCONNECT HEATER WATER INLET HOSE (for 2TR-FE)**
   (a) Using pliers, grip the claws of the clip, slide the clip and disconnect the heater water inlet hose from the heater unit.

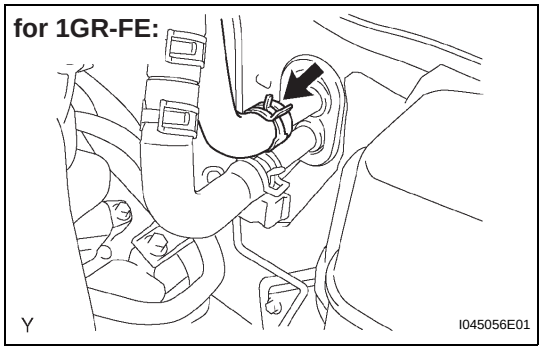

9. **DISCONNECT HEATER WATER INLET HOSE (for 1GR-FE)**
   (a) Using pliers, grip the claws of the clip, slide the clip and disconnect the heater water inlet hose from the heater unit.

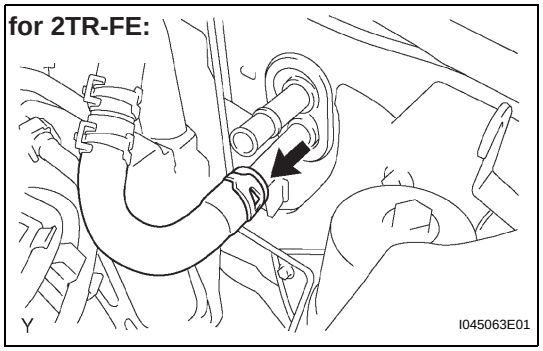

10. **DISCONNECT HEATER WATER OUTLET HOSE (for 2TR-FE)**
    (a) Using pliers, grip the claws of the clip, slide the clip and disconnect the heater water outlet hose from the heater unit.

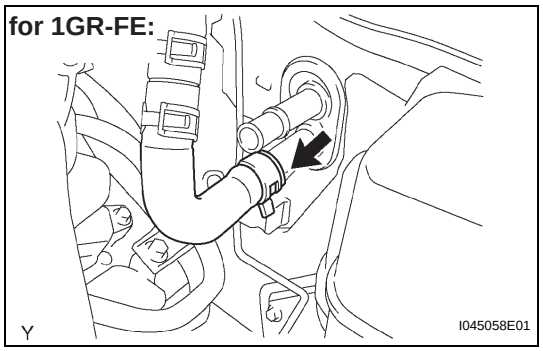

11. **DISCONNECT HEATER WATER OUTLET HOSE (for 1GR-FE)**
    (a) Using pliers, grip the claws of the clip, slide the clip and disconnect the heater water outlet hose from the heater unit.
12. **REMOVE FRONT WIPER ARM HEAD CAP (See page WW-7)**
13. **REMOVE FRONT WIPER ARM LH (See page WW-8)**
14. **REMOVE FRONT WIPER ARM RH (See page WW-8)**
15. **REMOVE FRONT FENDER TO COWL SIDE SEAL LH (See page WW-8)**
16. **REMOVE FRONT FENDER TO COWL SIDE SEAL RH (See page WW-8)**
17. **REMOVE COWL TOP VENTILATOR LOUVER SUB-ASSEMBLY (See page WW-8)**
18. **PLACE FRONT WHEELS FACING STRAIGHT AHEAD**
19. **REMOVE LOWER NO. 2 STEERING WHEEL COVER (See page RS-558)**

cardiagn.com

20. **REMOVE LOWER NO. 3 STEERING WHEEL COVER (See page RS-558)**
21. **REMOVE HORN BUTTON ASSEMBLY (See page RS-558)**
22. **REMOVE STEERING WHEEL ASSEMBLY (See page SR-9)**
23. **REMOVE STEERING COLUMN COVER LOWER (See page SR-9)**
24. **REMOVE STEERING COLUMN COVER UPPER (See page SR-10)**
25. **REMOVE SPIRAL CABLE SUB-ASSEMBLY (See page RS-566)**
26. **REMOVE WINDSHIELD WIPER SWITCH ASSEMBLY (See page WW-17)**
27. **REMOVE FRONT FLOOR FOOTREST (See page IR-1)**
28. **REMOVE FRONT DOOR SCUFF PLATE LH (for Regular Cab) (See page IR-40)**
29. **REMOVE FRONT DOOR SCUFF PLATE LH (for Access Cab) (See page IR-61)**
30. **REMOVE FRONT DOOR SCUFF PLATE LH (for Double Cab) (See page IR-12)**
31. **REMOVE FRONT DOOR SCUFF PLATE RH (for Regular Cab) (See page IR-41)**
32. **REMOVE FRONT DOOR SCUFF PLATE RH (for Access Cab) (See page IR-61)**
33. **REMOVE FRONT DOOR SCUFF PLATE RH (for Double Cab) (See page IR-12)**
34. **REMOVE COWL SIDE TRIM BOARD LH (for Regular Cab) (See page IR-40)**
35. **REMOVE COWL SIDE TRIM BOARD LH (for Access Cab) (See page IR-61)**
36. **REMOVE COWL SIDE TRIM BOARD LH (for Double Cab) (See page IR-12)**
37. **REMOVE COWL SIDE TRIM BOARD RH (for Regular Cab) (See page IR-40)**
38. **REMOVE COWL SIDE TRIM BOARD RH (for Access Cab) (See page IR-61)**
39. **REMOVE COWL SIDE TRIM BOARD RH (for Double Cab) (See page IR-12)**
40. **SEPARATE FRONT DOOR OPENING TRIM WEATHERSTRIP LH**
    (a) Separate the front door opening trim weatherstrip LH.

cardiagn.com

41. **SEPARATE FRONT DOOR OPENING TRIM WEATHERSTRIP RH**
    (a) Separate the front door opening trim weatherstrip RH.
42. **REMOVE FRONT PILLAR GARNISH LH (for Regular Cab) (See page IR-41)**
43. **REMOVE FRONT PILLAR GARNISH LH (for Access Cab) (See page IR-62)**
44. **REMOVE FRONT PILLAR GARNISH LH (for Double Cab) (See page IR-13)**
45. **REMOVE FRONT PILLAR GARNISH RH (for Regular Cab) (See page IR-41)**
46. **REMOVE FRONT PILLAR GARNISH RH (for Access Cab) (See page IR-63)**
47. **REMOVE FRONT PILLAR GARNISH RH (for Double Cab) (See page IR-14)**
48. **REMOVE INSTRUMENT PANEL UNDER TRAY (for Pedal Type Parking Brake) (See page IP-9)**
49. **REMOVE INSTRUMENT PANEL HOLE COVER (for Lever Type Parking Brake) (See page IP-9)**
50. **REMOVE CONSOLE UPPER REAR PANEL SUB-ASSEMBLY (for Automatic Transmission on Separate Seat Type) (See page IP-9)**
51. **REMOVE CONSOLE UPPER REAR PANEL SUB-ASSEMBLY (for Manual Transmission on Separate Seat Type) (See page IP-9)**
52. **REMOVE REAR CONSOLE BOX ASSEMBLY (for Separate Seat Type) (See page IP-10)**
53. **REMOVE INSTRUMENT PANEL CUP HOLDER TRAY (for Automatic Transmission on Separate Seat Type) (See page IP-10)**
54. **REMOVE FRONT CONSOLE BOX (for Automatic Transmission on Separate Seat Type) (See page IP-10)**
55. **REMOVE FRONT CONSOLE BOX (for Manual Transmission on Separate Seat Type) (See page IP-11)**
56. **REMOVE FRONT CONSOLE BOX (for Automatic Transmission on Bench Seat Type) (See page IP-11)**
57. **REMOVE FRONT CONSOLE BOX (for Manual Transmission on Bench Seat Type) (See page IP-11)**
58. **REMOVE AIR CONDITIONING CONTROL ASSEMBLY (See page IP-12)**
59. **REMOVE RADIO RECEIVER ASSEMBLY (See page AV-69)**

cardiagn.com

60. SEPARATE HOOD LOCK CONTROL LEVER SUB-ASSEMBLY (See page ED-3)

61. REMOVE LOWER NO. 1 INSTRUMENT PANEL FINISH PANEL (See page IP-12)

62. REMOVE INSTRUMENT CLUSTER FINISH PANEL SUB-ASSEMBLY (See page IP-12)

63. REMOVE COMBINATION METER ASSEMBLY (See page IP-13)

64. REMOVE INSTRUMENT CLUSTER CENTER FINISH PANEL SUB-ASSEMBLY (See page IP-13)

65. REMOVE GLOVE COMPARTMENT DOOR ASSEMBLY (See page IP-13)

66. REMOVE LOWER INSTRUMENT PANEL FINISH PANEL SUB-ASSEMBLY RH (See page IP-13)

67. REMOVE LOWER INSTRUMENT PANEL LH (See page IP-14)

68. REMOVE INSTRUMENT LOWER COVER SUB-ASSEMBLY (See page IP-14)

69. REMOVE INSTRUMENT SIDE PANEL RH (See page IP-14)

70. DISCONNECT PASSENGER AIRBAG CONNECTOR (See page RS-576)

71. REMOVE INSTRUMENT PANEL SUB-ASSEMBLY W/ PASSENGER AIRBAG ASSEMBLY (See page IP-14)

72. REMOVE NO. 1 HEATER TO REGISTER DUCT

(a) Remove the nut and heater to register duct.

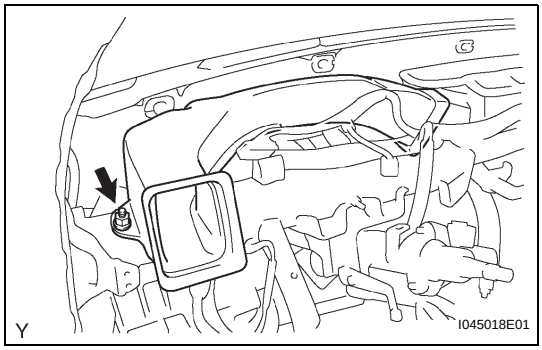

73. REMOVE NO. 3 HEATER TO REGISTER DUCT

(a) Remove the nut and heater to register duct.

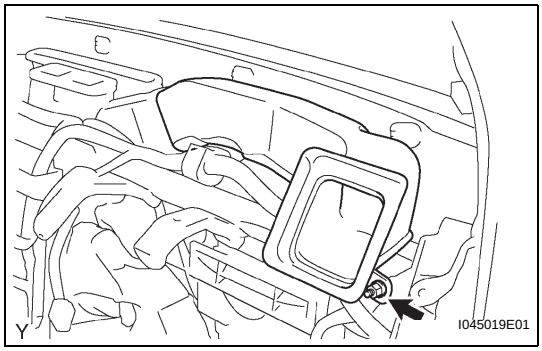

cardiagn.com

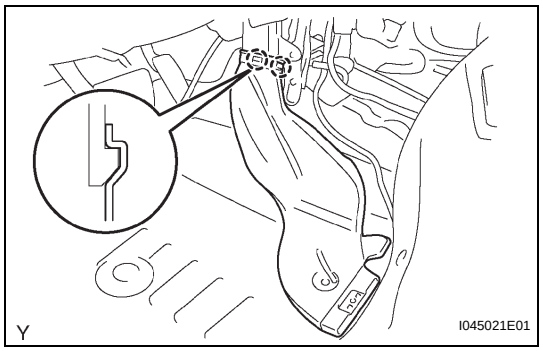

74. REMOVE NO. 2 REAR AIR DUCT (for Double Cab)
(a) Fold back the floor carpet.
(b) Disengage the 2 claws and remove the air duct rear.

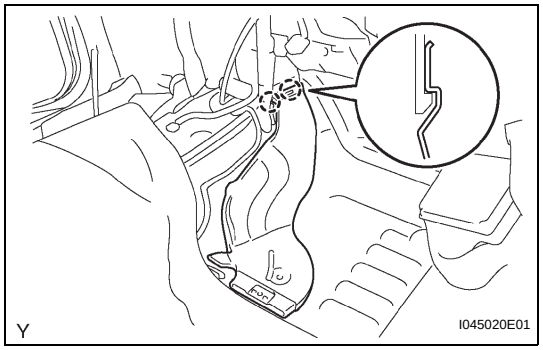

75. REMOVE NO. 1 REAR AIR DUCT (for Double Cab)
(a) Fold back the floor carpet.
(b) Disengage the 2 claws and remove the air duct rear.

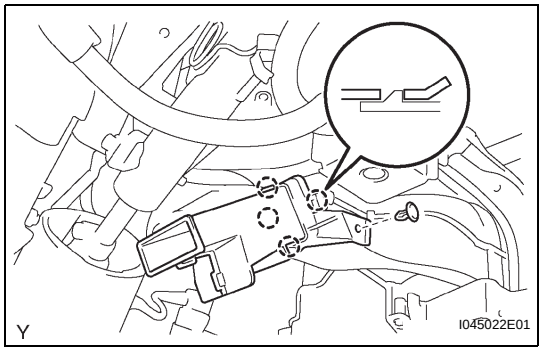

76. REMOVE AIR DUCT ASSEMBLY LH
(a) Remove the clip.
(b) Disengage the 4 claws and remove the air duct assembly heater.

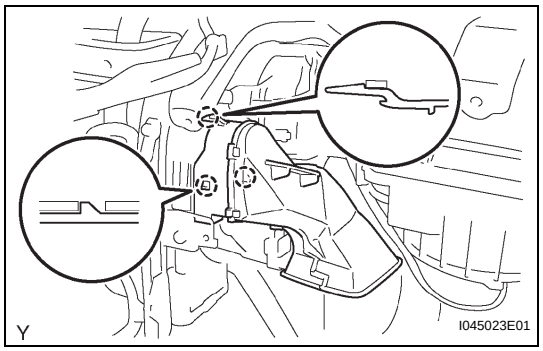

77. REMOVE AIR DUCT ASSEMBLY RH
(a) Disengage the 3 claws and remove the air duct assembly.

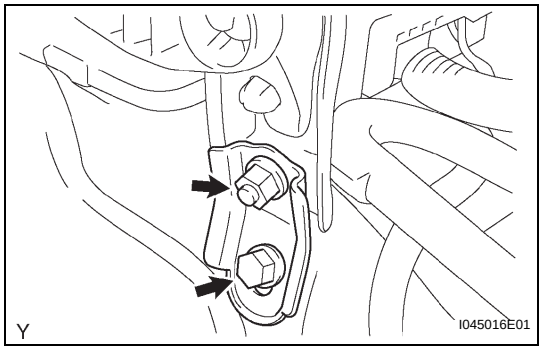

78. REMOVE NO. 1 INSTRUMENT PANEL BRACE MOUNTING BRACKET
(a) Remove the bolt, nut and instrument panel brace mounting bracket LH.

cardiagn.com

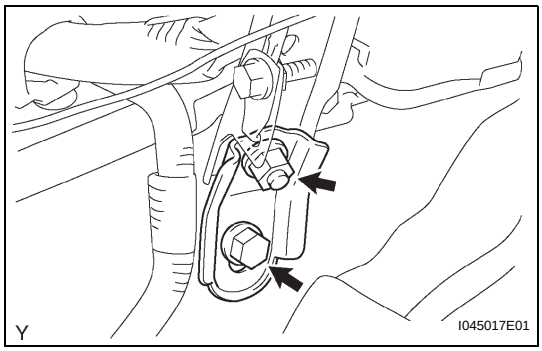

(b) Remove the bolt, nut and instrument panel brace mounting bracket RH.

79. REMOVE STEERING COLUMN HOLE COVER (See page SR-10)

80. SEPARATE STEERING SLIDING YOKE (See page SR-11)

81. REMOVE STEERING COLUMN ASSEMBLY (See page SR-11)

82. REMOVE PARKING BRAKE CONTROL LEVER ASSEMBLY (for Lever Type Parking Brake) (See page PB-6)

83. REMOVE ECM (for 2TR-FE) (See page ES-467)

84. REMOVE ECM (for 1GR-FE) (See page ES-428)

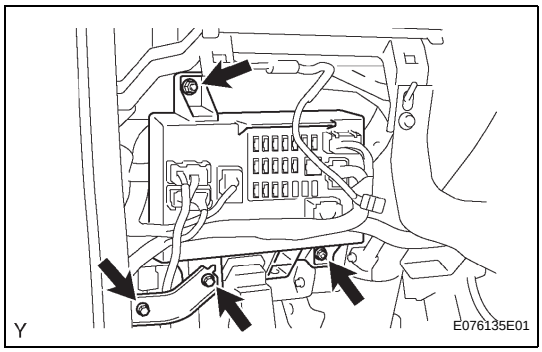

85. SEPARATE DRIVER SIDE JUNCTION BLOCK

(a) Remove the 2 bolts and bracket.

(b) Remove the 2 nuts and separate the driver side junction block assembly.

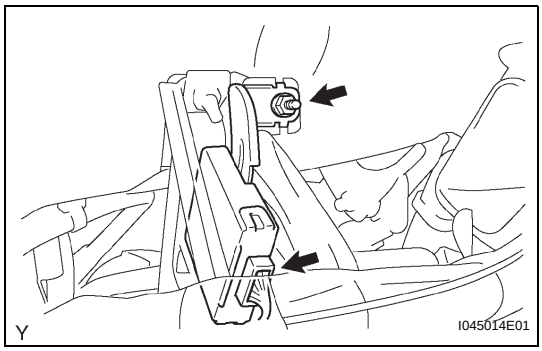

86. REMOVE TRANSPONDER KEY ECU ASSEMBLY

(a) Disconnect the connector.

(b) Remove the nut and the transponder key ECU assembly.

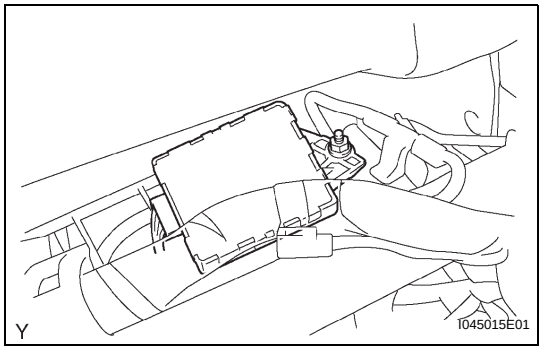

87. REMOVE AIR CONDITIONER AMPLIFIER ASSEMBLY

(a) Disconnect the connector.

(b) Remove the nut and the air conditioner amplifier assembly.

cardiagn.com

88. REMOVE AIR CONDITIONING UNIT ASSEMBLY

(a) Disengage the 4 clamps and disconnect the 6 connectors from the air conditioning unit assembly.

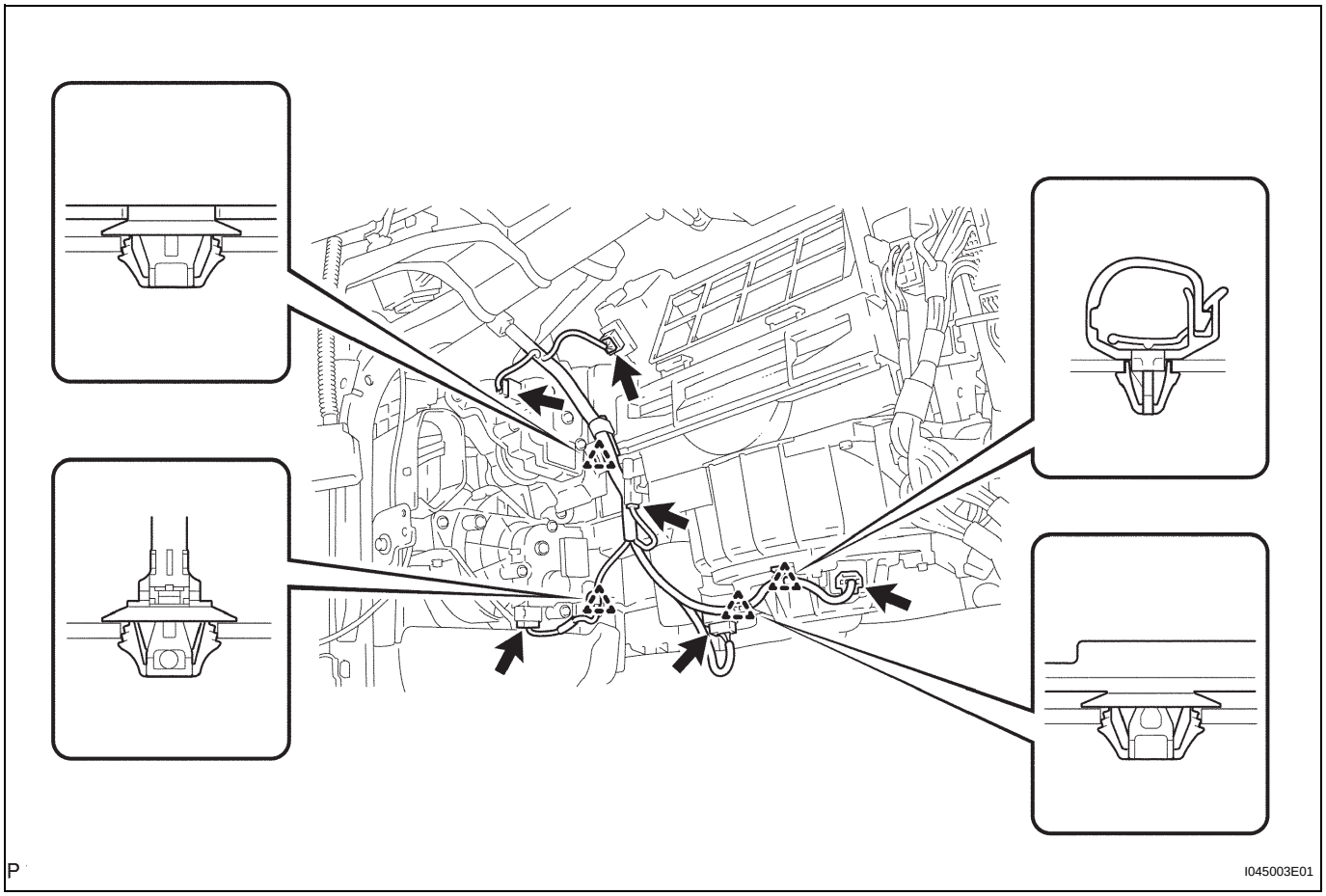

(b) Remove the 3 bolts.

(c) Disconnect the connector.

cardiagn.com

(d) Disconnect the 2 airbag connectors (see page 60-6).

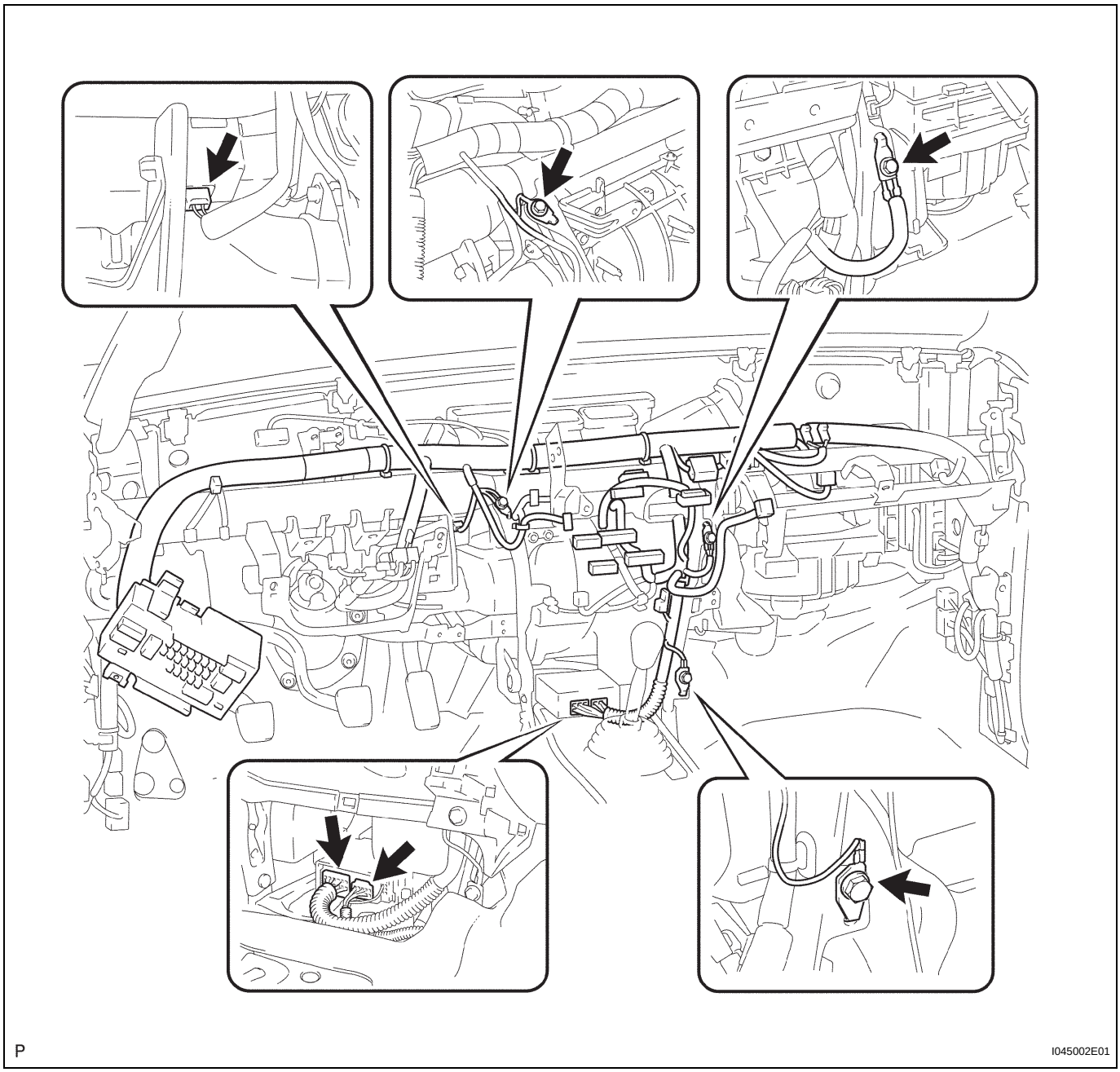

cardiagn.com

(e) Disengage the 20 clamps.

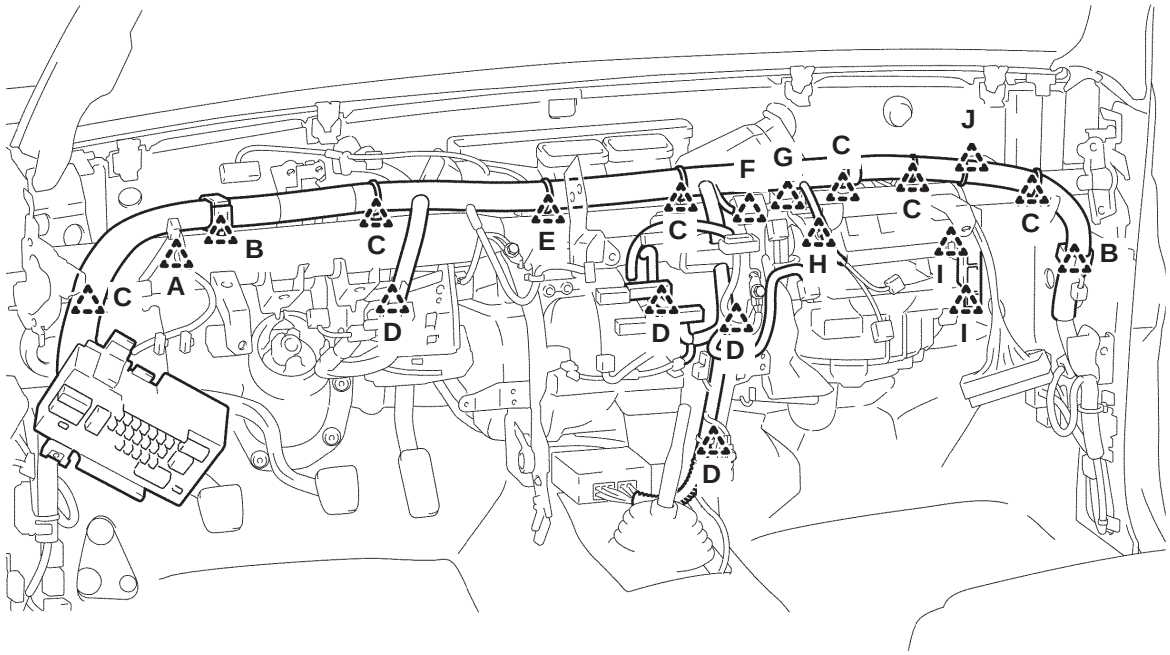

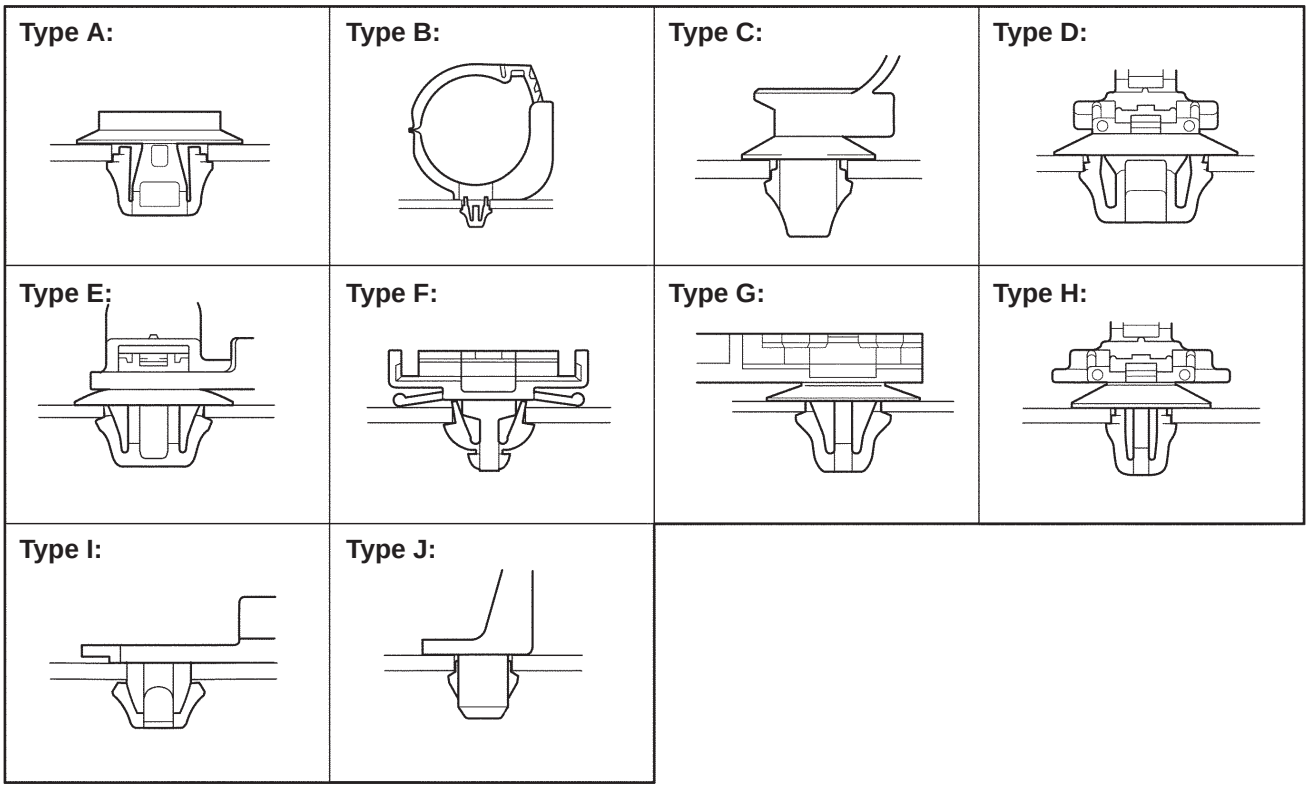

P

I045001E01

cardiagn.com

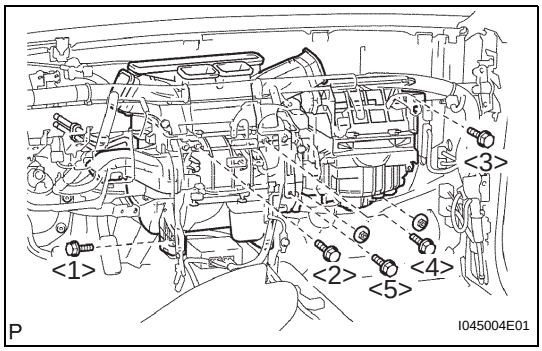

(f) Remove the 5 bolts and 2 nuts.
(g) Remove the 2 caps and 7 bolts.
(h) Disengage the reinforcement hook of the air conditioning unit, and remove the reinforcement.
(i) Remove the air conditioner unit assembly.

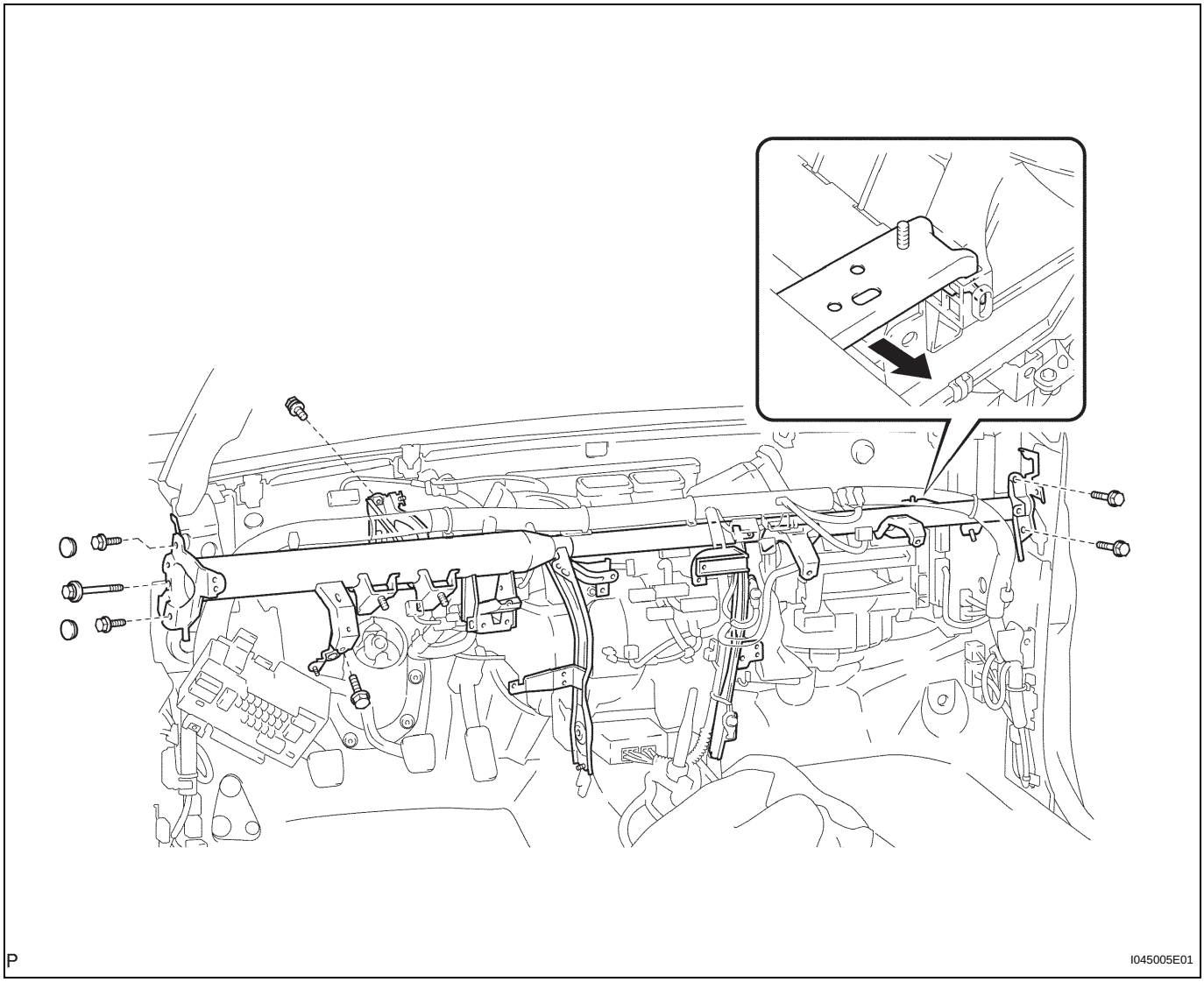

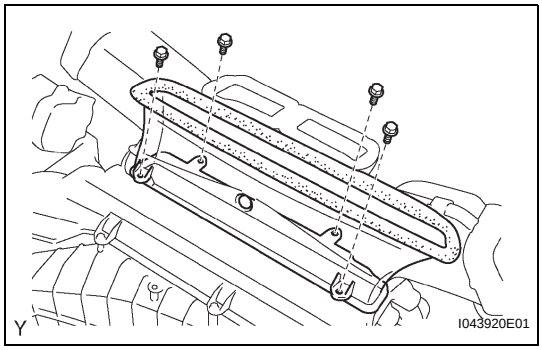

DISASSEMBLY

1. REMOVE DEFROSTER NOZZLE ASSEMBLY LOWER

(a) Remove the 4 bolts and the defroster nozzle assembly lower.

cardiagn.com

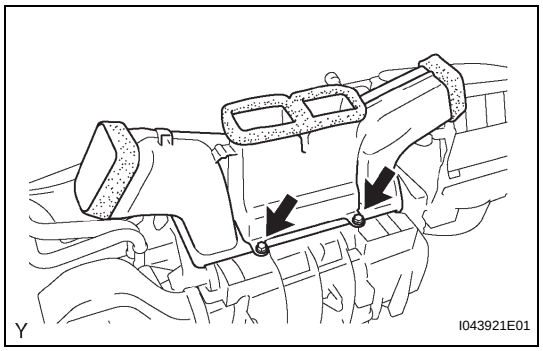

2. REMOVE HEATER TO REGISTER CENTER DUCT

(a) Remove the 2 bolts and heater to register duct center.

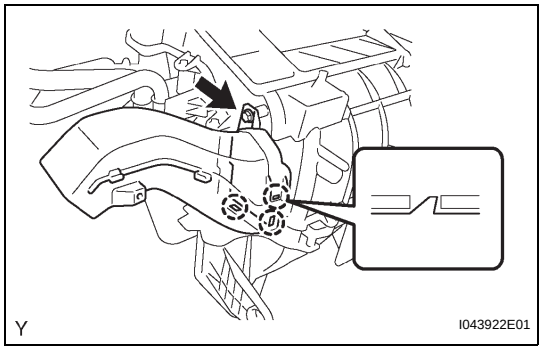

3. REMOVE NO. 1 AIR DUCT

(a) Remove the bolt.

(b) Disengage the 3 claws and remove the air duct.

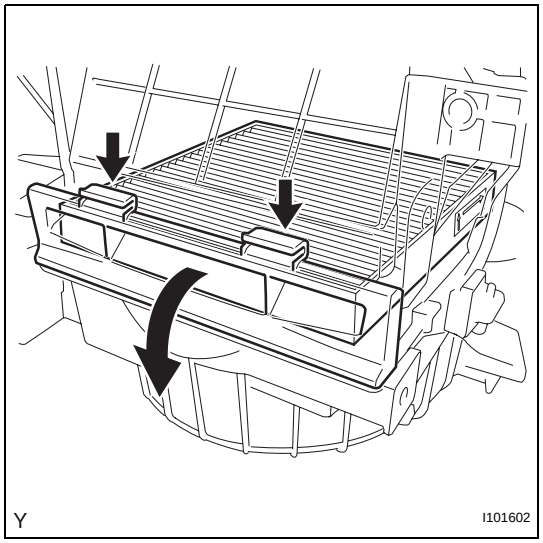

4. REMOVE AIR FILTER

(a) Push down on the 2 tabs and open the filter door.

(b) Remove the air filter.

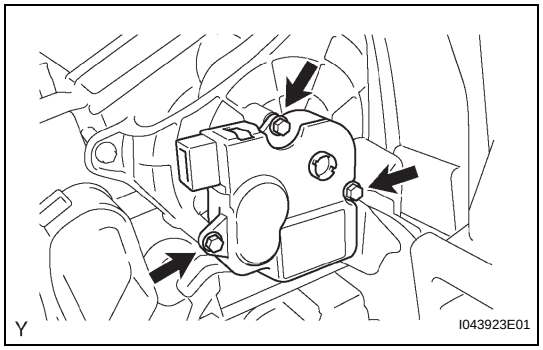

5. REMOVE MODE CONTROL SERVO MOTOR

(a) Remove the 3 bolts and mode control servo motor.

cardiagn.com

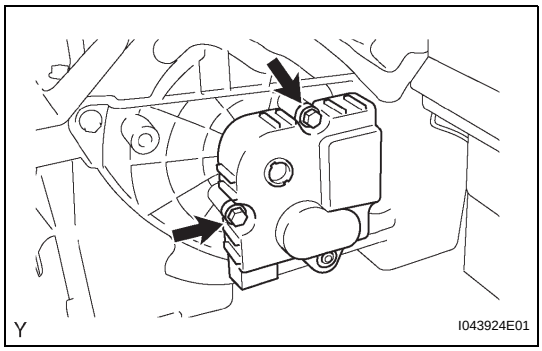

6. REMOVE AIR MIX CONTROL SERVO MOTOR

(a) Remove the 2 bolts and air mix control servo motor.

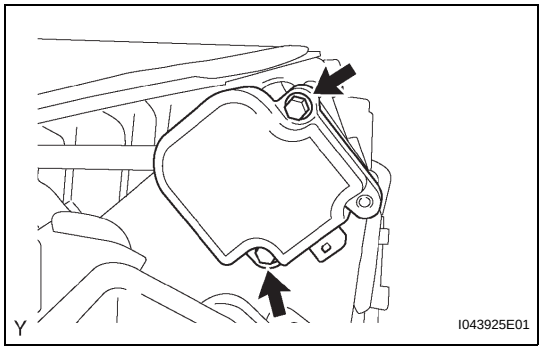

7. REMOVE AIR INLET CONTROL SERVO MOTOR

(a) Remove the 2 bolts and air inlet control servo motor.

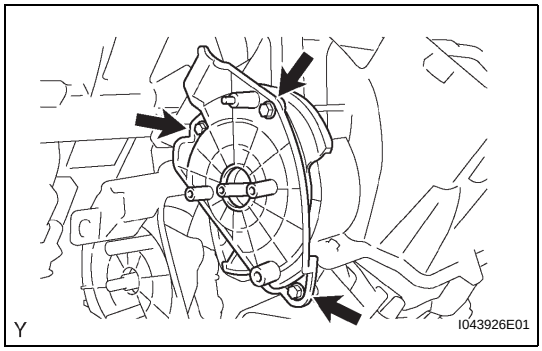

8. REMOVE HEATER RADIATOR ASSEMBLY

(a) Remove the 3 bolts and temperature mounting plate.

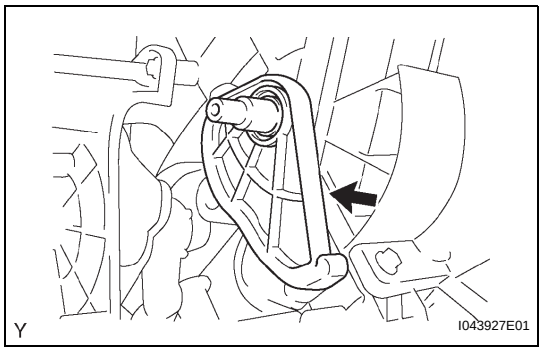

(b) Remove the temperature cam.

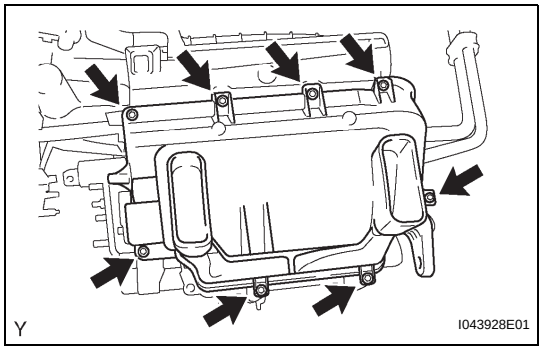

(c) Remove the 8 bolts and heater cover case.

cardiagn.com

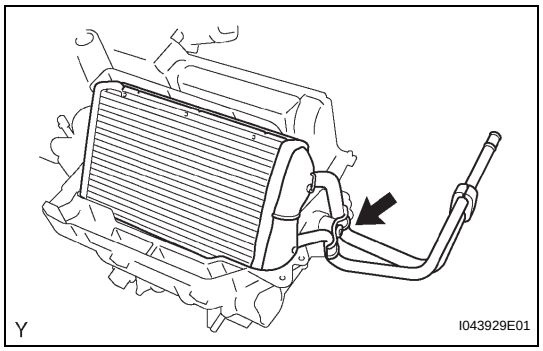

(d) Using "Torx" socket wrench T30, remove the bolt, clamp and heater radiator assembly.

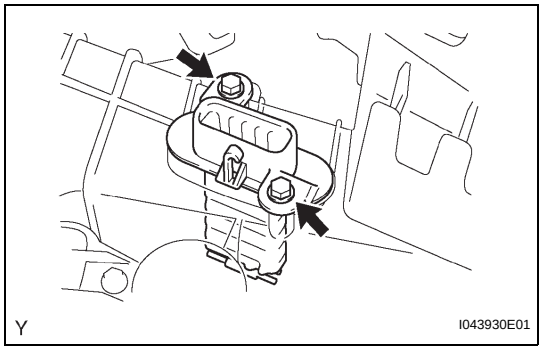

9. REMOVE BLOWER RESISTOR

(a) Remove the 2 bolts and blower resistor.

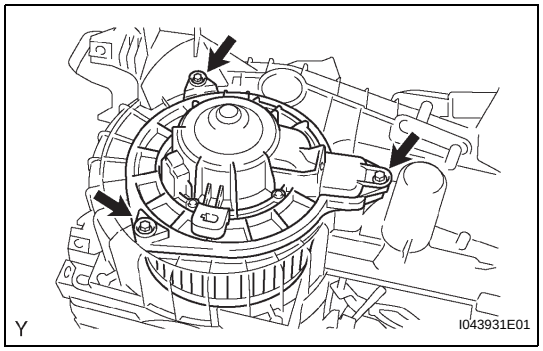

10. REMOVE BLOWER MOTOR

(a) Remove the 3 bolts and blower motor.

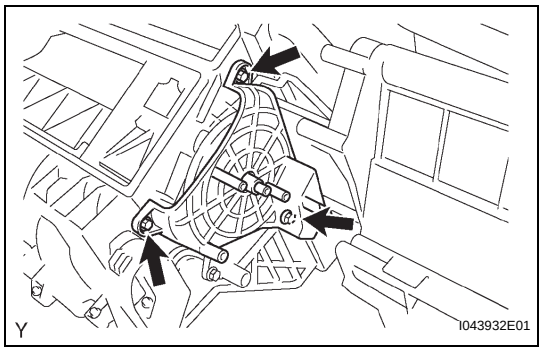

11. REMOVE EVAPORATOR CORE

(a) Remove the 3 bolts and mode mounting plate.

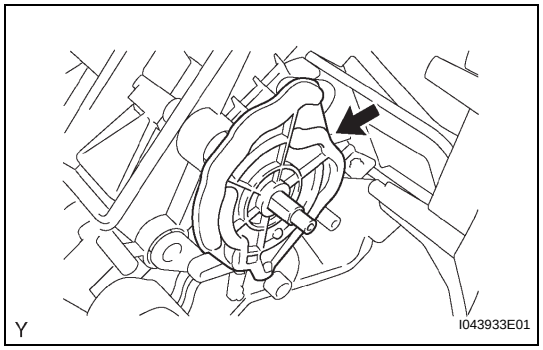

(b) Remove the mode cam.

cardiagn.com

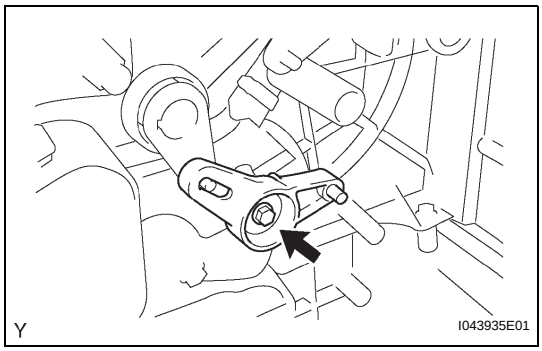

(c) Remove the bolt and heater pivot.

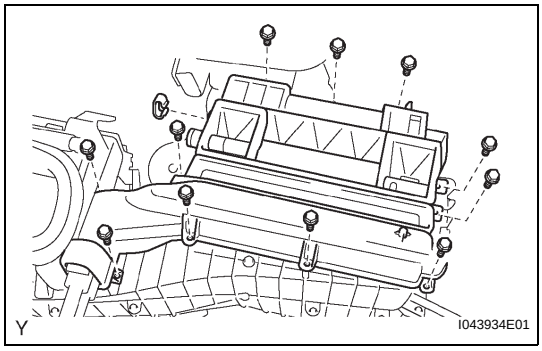

(d) Disengage the clip and remove the 11 bolts and mode case.

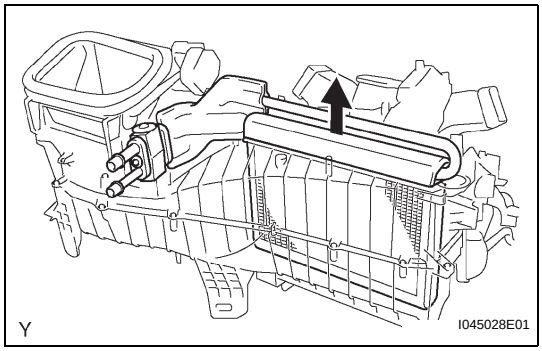

(e) Remove the evaporator core.
HINT:
If a new evaporator is installed, add compressor oil to the evaporator as follows.
Compressor oil:
RL-897 or equivalent
Add 40 cc (1.4 fl.oz.)

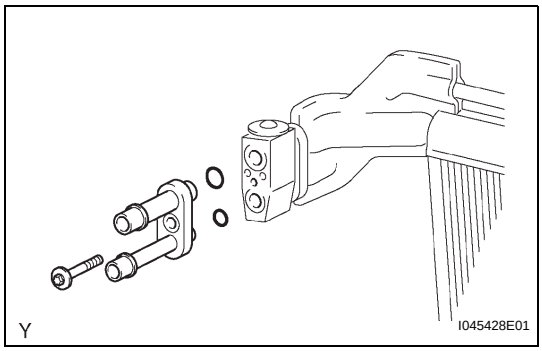

12. REMOVE VALVE TO CONNECTOR TUBE
(a) Using "Torx" socket wrench E10, remove the bolt and valve to connector tube.
(b) Remove the 2 seal washers from the air conditioning tube assembly.

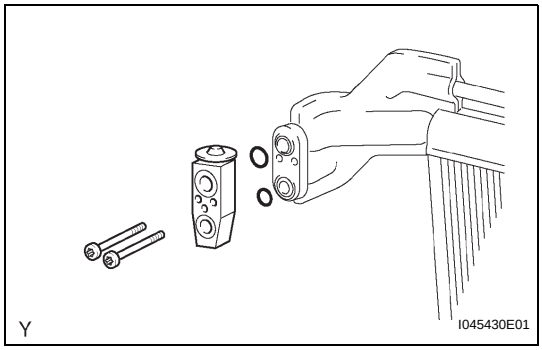

13. REMOVE EXPANSION VALVE
(a) Using "Torx" socket wrench T25, remove the 2 bolts and expansion valve.
(b) Remove the 2 seal washers from the expansion valve.

cardiagn.com

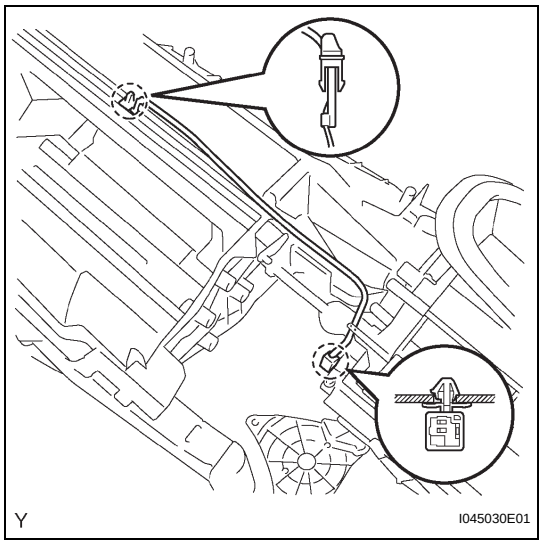

14. REMOVE COOLER THERMISTOR SENSOR

(a) Disengage the 2 clamps and remove the cooler thermistor sensor.

15. REMOVE NO. 1 COOLER UNIT DRAIN HOSE

cardiagn.com