ABS Warning Light Remains ON

DESCRIPTION

If any of the following is detected, the ABS warning light remains ON.

1. The skid control ECU connectors are disconnected from the skid control ECU.
2. There is a malfunction in the skid control ECU internal circuit.
3. There is an open in the harness between the combination meter and skid control ECU.

HINT:

Use of the intelligent tester may not be possible when there is a malfunction in the skid control ECU.

carcdesign.com

WIRING DIAGRAM

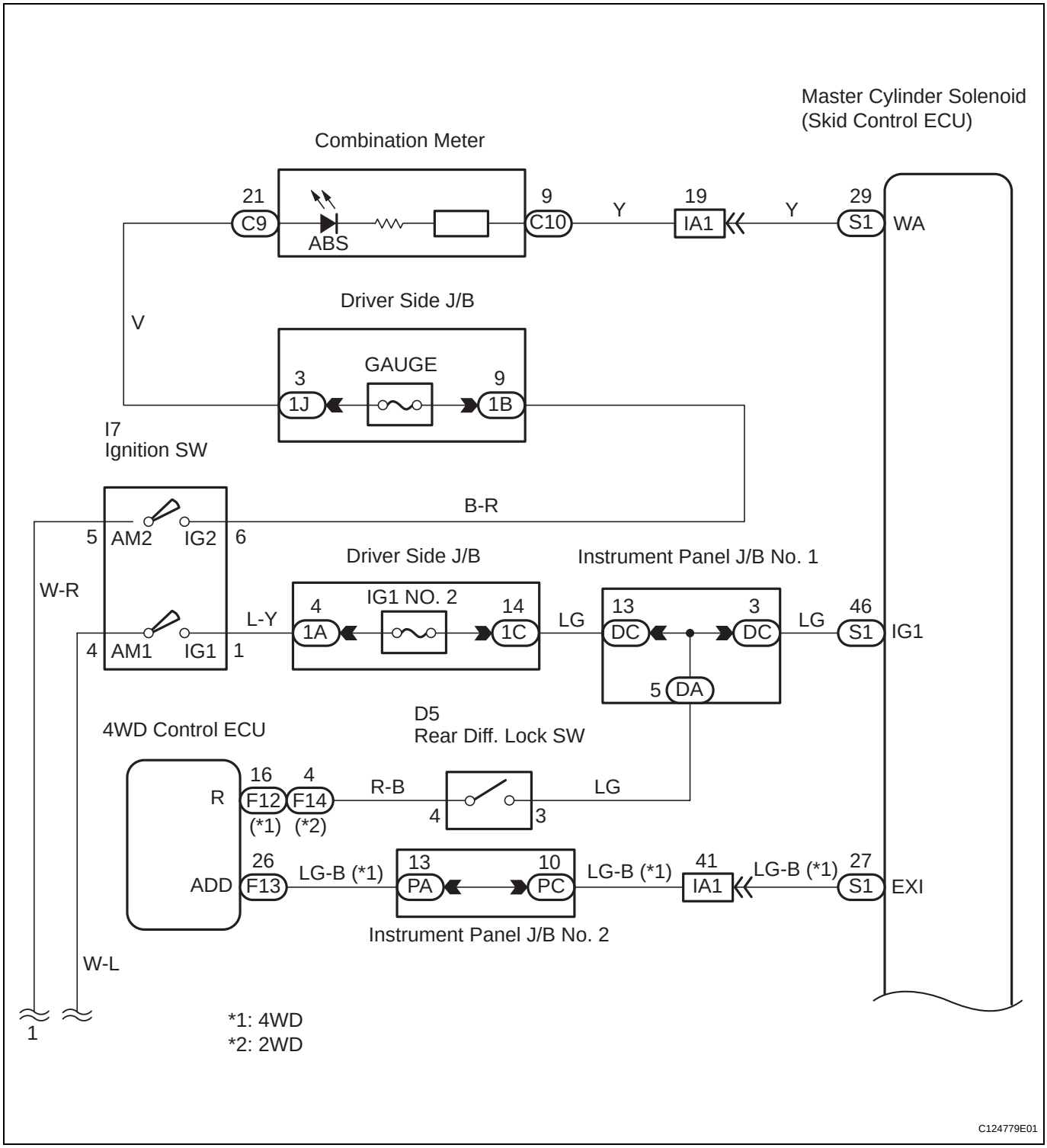

BC

cardiagn.com

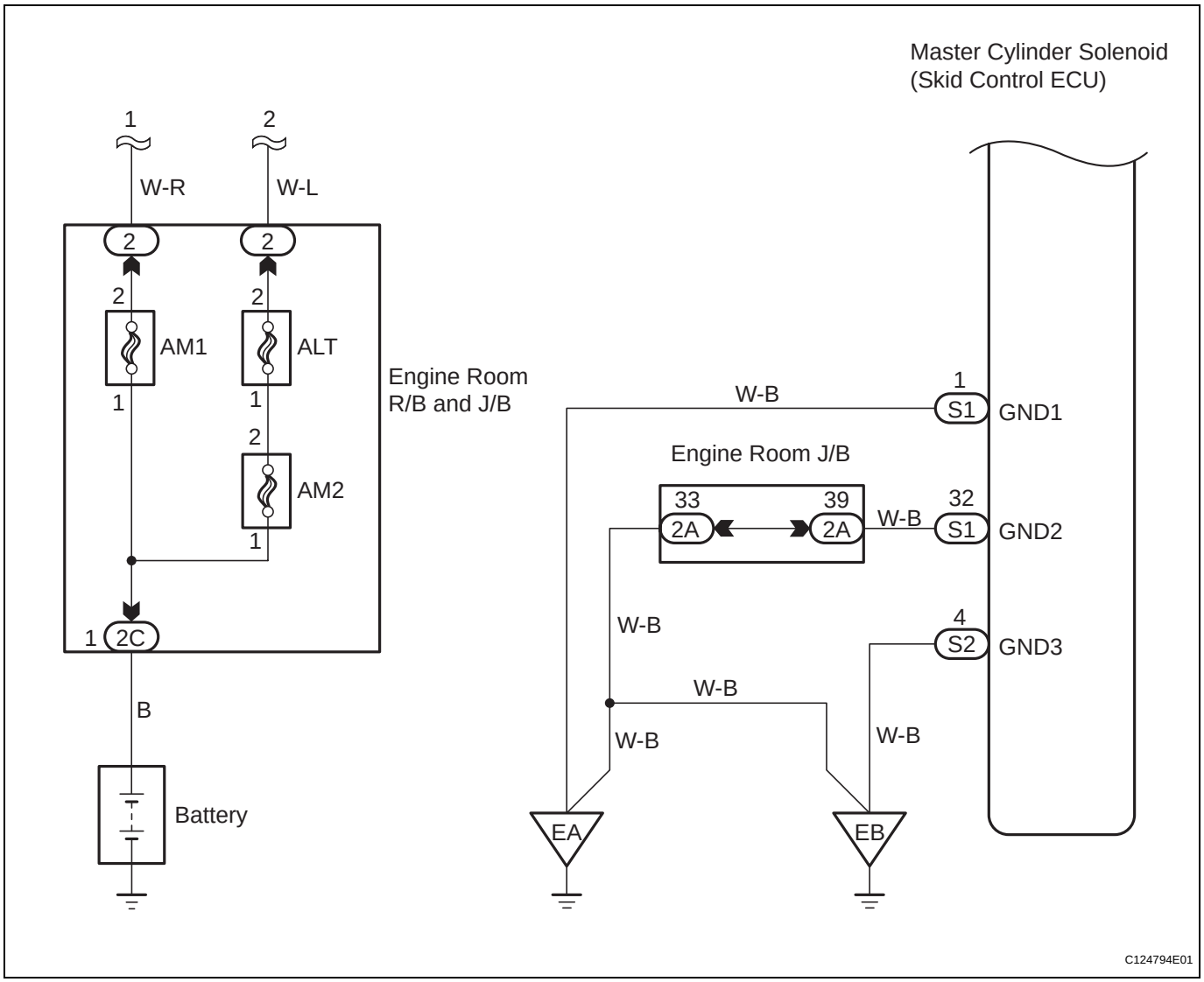

NOTICE:
When replacing the master cylinder solenoid, perform zero point calibration (See page BC-99).

1	CHECK DTC

(a) Check if DTCs for ABS are recorded.

Result	Proceed to
DTC not output	A
DTC output	B

B → **REPAIR CIRCUITS INDICATED BY OUTPUT DTCS**

A

2	INSPECT SKID CONTROL ECU CONNECTOR

(a) Check that the ECU connector is securely connected.

BC

carcdesign.com

OK:
The connector is securely connected.

NG → **CONNECT CONNECTOR CORRECTLY**

OK

3 INSPECT SKID CONTROL ECU (IG1 TERMINAL VOLTAGE)

(a) Connect the intelligent tester to the DLC3.
(b) Start the engine.
(c) Turn the intelligent tester ON.
(d) Select the DATA LIST mode on the intelligent tester.
(e) Measure the voltage output from the ECU displayed on the intelligent tester.

Item	Measurement Item / Range (Display)	Normal Condition	Diagnostic Note
IG VOLTAGE	ECU power supply voltage / TOO LOW / NORMAL / TOO HIGH	TOO HIGH: 14 V or more NORMAL: 9.5 to 14V TOO LOW: Below 9.5 V	-

B → **Go to step 6**

C → **REPAIR OR REPLACE HARNESS OR CONNECTOR**

A

BC

4 INSPECT REAR DIFFERENTIAL LOCK SWITCH

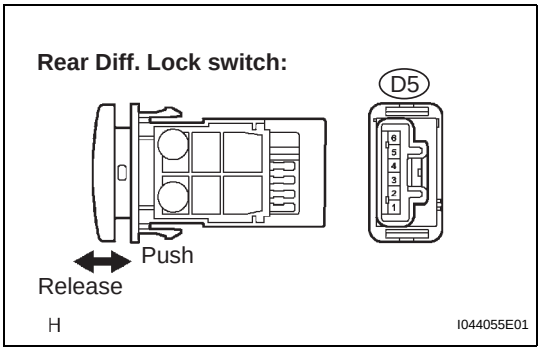

(a) Remove the rear diff. lock switch.
(b) Disconnect the rear diff. lock switch connector.
(c) Measure the resistance.
Standard

Tester Connection	Switch Condition	Specified Condition
D5-3 - D5-4	Released	10 kΩ or higher
D5-3 - D5-4	Pushed in	Below 1 Ω

(d) Reinstall the rear diff. lock switch.
(e) Reconnect the rear diff. lock switch connector.

NG → **REPLACE REAR DIFFERENTIAL LOCK SWITCH**

OK

cardiagn.com

5 CHECK HARNESS AND CONNECTOR (4WD CONTROL ECU - REAR DIFFERENTIAL LOCK SWITCH)

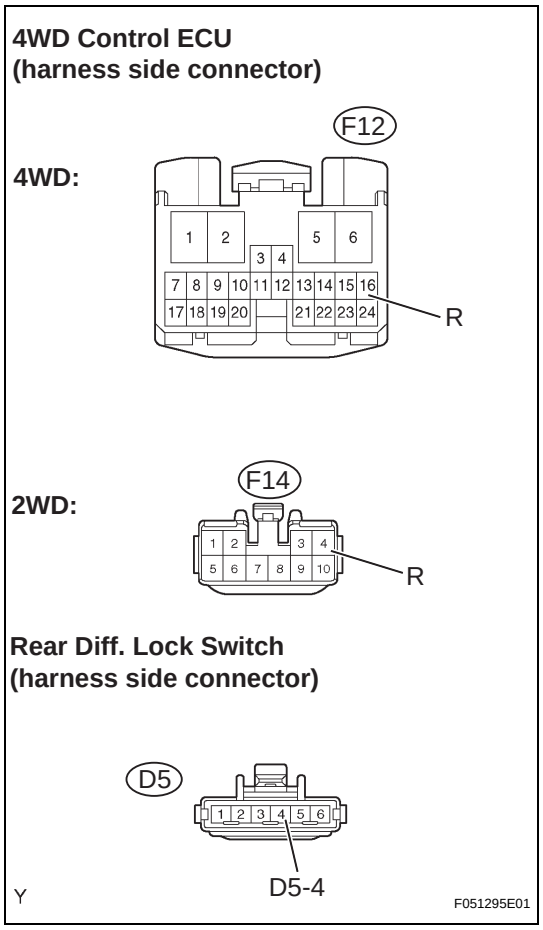

(a) Disconnect the 4WD control ECU connector.
(b) Disconnect the rear diff. lock connector.
(c) Measure the resistance.

Standard (4WD)

Tester Connection	Specified Condition
F12-16 (R) - D5-4	Below 1 Ω
F12-16 (R) - Body ground	10 kΩ or higher

Standard (2WD)

Tester Connection	Specified Condition
F14-4 (R) - D5-4	Below 1 Ω
F14-4 (R) - Body ground	10 kΩ or higher

(d) Reconnect the rear diff. lock connector.
(e) Reconnect the 4WD control ECU connector.

NG → **REPAIR OR REPLACE HARNESS OR CONNECTOR**

OK

carcoagn.com

BC

6 CHECK HARNESS AND CONNECTOR (SKID CONTROL ECU - COMBINATION METER)

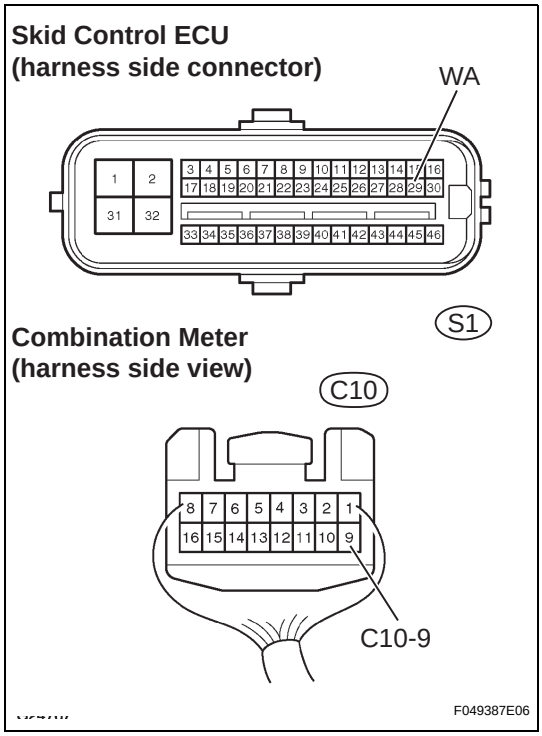

(a) Disconnect the skid control ECU connector.
(b) Disconnect the combination meter connector.
(c) Measure the resistance.
Standard

Tester Connection	Specified Condition
S1-29 (WA) - C10-9	Below 1 Ω

(d) Measure the resistance.
Standard

Tester Connection	Specified Condition
S1-29 (WA) - Body ground	10 kΩ or higher

(e) Reconnect the combination meter connector.
(f) Reconnect the skid control ECU connector.

NG → **REPAIR OR REPLACE HARNESS OR CONNECTOR**

OK

BC

7 INSPECT COMBINATION METER ASSEMBLY

(a) Check the combination meter system (See page ME-8).
OK:
Combination meter is normal.

NG → **REPLACE COMBINATION METER ASSEMBLY**

OK

REPLACE MASTER CYLINDER SOLENOID

cardiagn.com