HINT:
Face the rough side of the thrust washer marked by # to the differential case.

INSPECTION

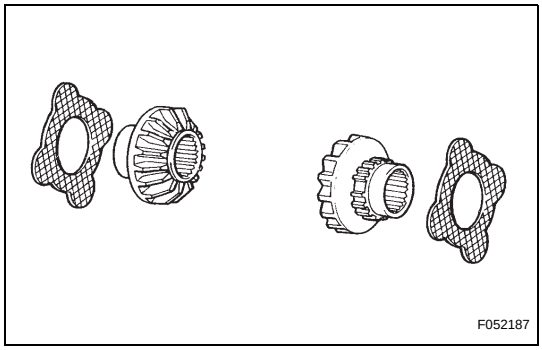

1. DIFFERENTIAL SIDE GEAR (w/ LSD Differential)

(a) Check that there is no damage or wear to the side gear.
If the side gear is damaged or worn, replace the side gear.
If replacing the side gear, also replace the thrust washer that contacts with it.

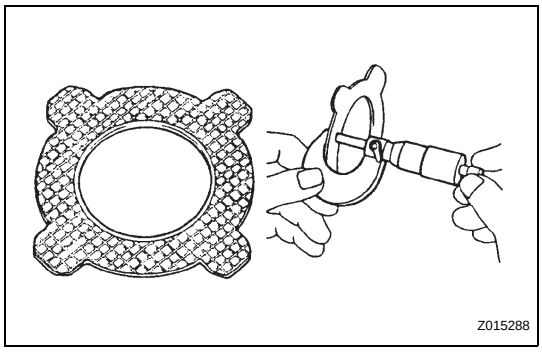

2. INSPECT REAR DIFFERENTIAL SIDE GEAR THRUST NO.1 WASHER (w/ LSD Differential)

(a) Using a micrometer, confirm that the contact surface of the thrust washer is even and check that no bare metal is showing.
Standard thickness:
1.77 to 1.86 mm (0.0697 to 0.0732 in.)
If necessary, replace the thrust washers.
HINT:
When replacing the thrust washer, also replace the clutch plate that comes into contact with it.

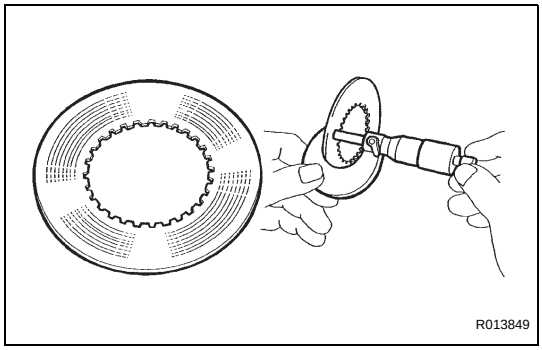

3. INSPECT CLUTCH PLATE (w/ LSD Differential)

(a) Using a micrometer, measure the contact surface of the clutch plate and check that there is no abnormal wear.
Standard thickness:
1.57 to 1.63 mm (0.0618 to 0.0642 in.)
If necessary, replace the clutch plate.

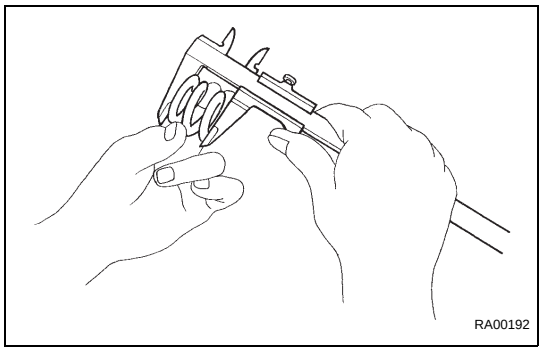

4. INSPECT REAR DIFFERENTIAL LOCK RETAINER COMPRESSION SPRING (w/ LSD Differential)

(a) Using a vernier calipers, measure the free length of the spring.
Free length:
26.35 mm (1.037 in.)

5. INSPECT DIFFERENTIAL PINION AND SIDE GEAR

(a) Check that there is no damage to the differential pinion or differential side gear.
If the differential pinion and/or differential side gear is damaged, replace the differential.

6. INSPECT DIFFERENTIAL CASE

(a) Check that the differential case is not damaged.
If the differential case is damaged, replace it.

cardiagn.com

REASSEMBLY

1. INSTALL DIFFERENTIAL CASE ASSEMBLY (w/ LSD Differential)

(a) LH side:

(1) Measure dimension A1 of the differential case, as shown in the illustration.

LH Case:

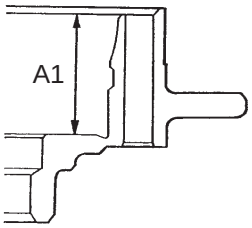

F052188E01

(2) Install the thrust washers with their fine side facing to the side gear, and clutch plates onto the side gear.
HINT:
Install the new thrust washer (Mark N) instead of the thrust washers (Mark A - M) onto the differential case side.

(3) Using SST to press down the thrust washers and clutch plates with pressure of about 10 kgf (22 lbf), measure dimension B1 as shown in the illustration.
SST 09649-17010

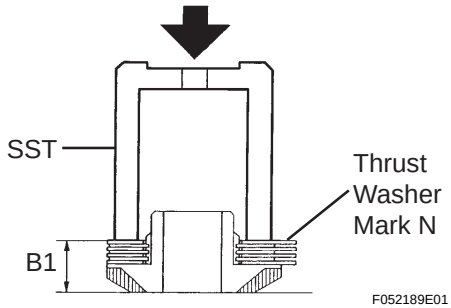

F052189E01

(4) Refer to the following table and select the proper adjusting shim(s).
Adjusting shim thickness:
A1 - B1 - 16.175 mm (0.63681 in.)

(b) RH side:

(1) Measure the differential case dimension A2, as shown in the illustration.

RH Case:

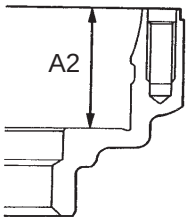

F052190E01

(2) Install the thrust washers with their fine side facing to the side gear, and clutch plates on the side gear.
HINT:
Install the new thrust washer (Mark N) instead of the thrust washers (Mark A - M) onto the differential case side.

(3) Using SST to press down the thrust washers and clutch plates with pressure of about 10 kgf (22 lbf), measure dimension B1 as shown in the illustration.
SST 09649-17010

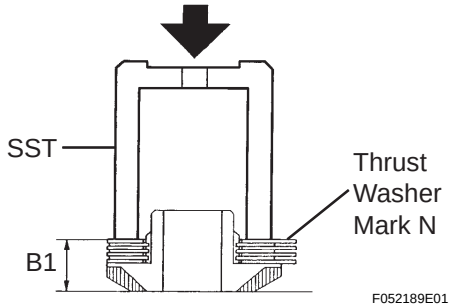

F052189E01

(4) Refer to the following table and select the proper adjusting shim(s).
Adjusting shim thickness:
A2 - B2 - 16.175 mm (0.63681 in.)
Adjust washer thickness

Thrust Washer Mark	Thickness mm (in.)
A	0.13 to 0.17 (0.0051 to 0.0067)
B	0.18 to 0.22 (0.0071 to 0.0087)
C	0.23 to 0.27 (0.0091 to 0.0106)
D	0.28 to 0.32 (0.0110 to 0.0126)
E	0.33 to 0.37 (0.0130 to 0.0146)

cardiagn.com

LH Side

B1mm \ A1mm	41.48	41.50	41.52	41.54	41.56	41.58	41.60	41.62	41.64	41.66	41.68	41.70	41.72
24.66													
24.68												C+C+E	
24.70													
24.72											C+C+D		
24.74													
24.76											C+C+C		
24.78													
24.80										E+E			
24.82													
24.84										D+E			
24.86													
24.88								D+D					
24.90													
24.92								C+D					
24.94													
24.96							C+C						
24.98													
25.00						B+C							
25.02													
25.04					B+B								
25.06													
25.08					E								
25.10													
25.12				D									
25.14													
25.16													
25.18			B										
25.20													
25.22													
25.24	#												

Reassemble another type shim or check the backlash after assembling A shim.

P

F052192E01

HINT:
Three or two adjusting shims can be used together if the total of their thickness meets the one of the above combinations, even if the combination does not exist in the above table.

cardiagn.com

RH Side

A2mm / B2mm	44.88	44.90	44.92	44.94	44.96	44.98	45.00	45.02	45.04	45.06	45.08	45.10	45.12
28.00											D+D+D		
28.02													
28.04													
28.06											C+C+E		
28.08													
28.10										C+C+D			
28.12													
28.14									C+C+C				
28.16													
28.18									E+E				
28.20								D+E					
28.22													
28.24								D+D					
28.26													
28.28							C+D						
28.30						C+C							
28.32													
28.34					B+C								
28.36													
28.38					B+B								
28.40													
28.42					E								
28.44													
28.46				D									
28.48			C										
28.50													
28.52			B										
28.54													
28.56		A											
28.58													
28.60													
28.62													
28.64													
28.66		#											
28.68													
28.70													
28.72	Less												

Reassemble another type shim or check the backlash after assembling A shim.

P

F052193E01

HINT:
Three or two adjusting shims can be used together if the total of their thickness meets the one of the above combinations, even if the combination does not exist in the above table.

cardiagn.com

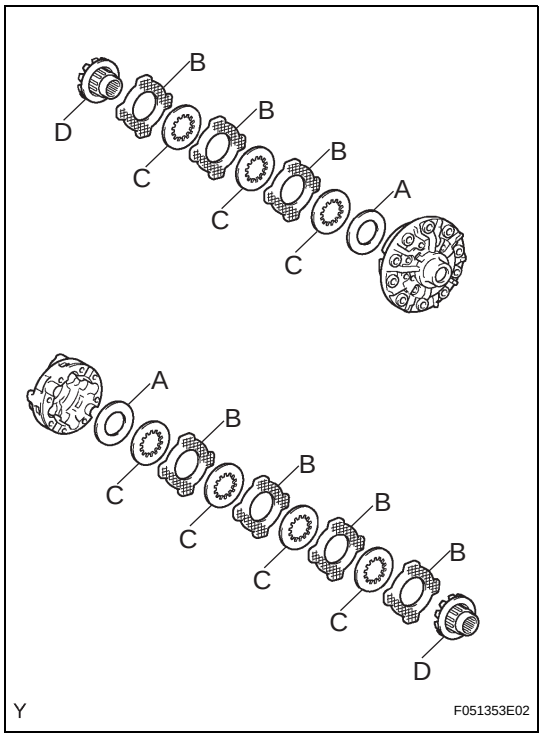

(5) Side gear thrust shim

A	Side gear thrust washer No. 1
B	Clutch plate
C	Side gear

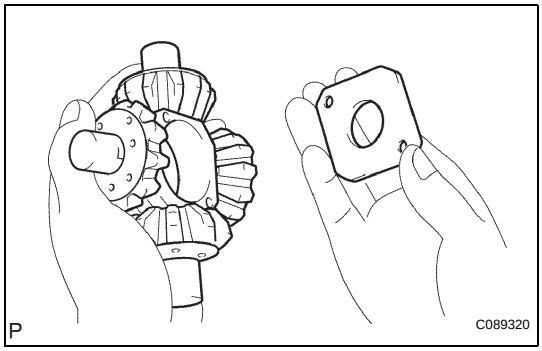

(c) Install the 4 pinion gears and thrust washers onto the spider.
(d) Align the spring RH retainer holes with the spider knock pins and install the RH retainer.
(e) Install the pinion gear and spider onto the differential RH case.
HINT:
Install the spider tightly onto the RH case while holding the spring retainer.

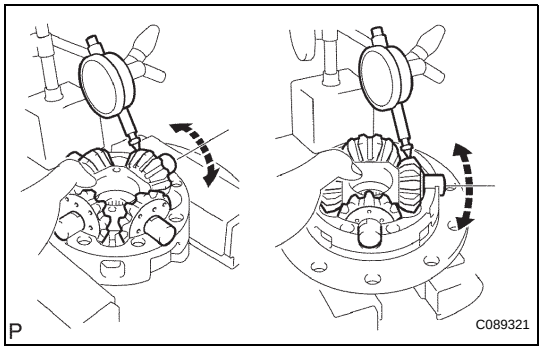

(f) Using a dial indicator, measure the side gear backlash while holding the side gear and spider.
Backlash:
0.05 to 0.20 mm (0.0020 to 0.0079 in.)
HINT:
- Measure the backlash at all 4 locations.
- Measure the backlash at the LH and RH cases.

If the backlash is not within the specification, install a adjusting shim of a different thickness.
(g) Reinstall the spider and spring RH retainer onto the differential RH case.
HINT:
Install the spider tightly onto the RH case while holding the spring retainer.
(h) Install the compression spring and spring LH retainer.

cardiagn.com

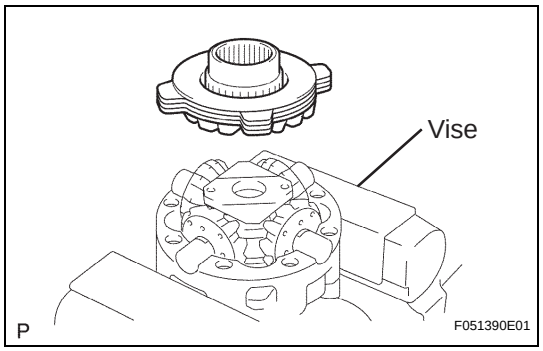

(i) Install the side gear, thrust washers and clutch plates.

(j) Align the matchmarks and assemble the RH and LH cases.
HINT:
Be careful not to drop the side gear and check the pinion and side gear alignment.

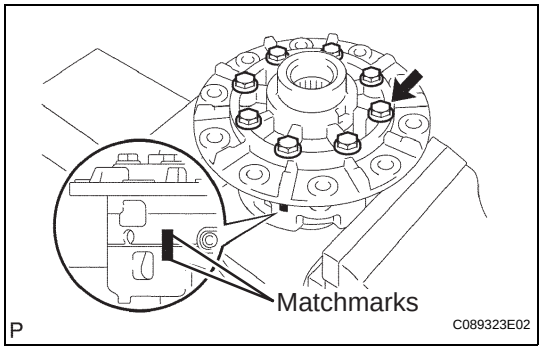

(k) Tighten the 8 bolts uniformly, a little at a time.
Torque: 47 N*m (480 kgf*cm, 35 ft.*lbf)

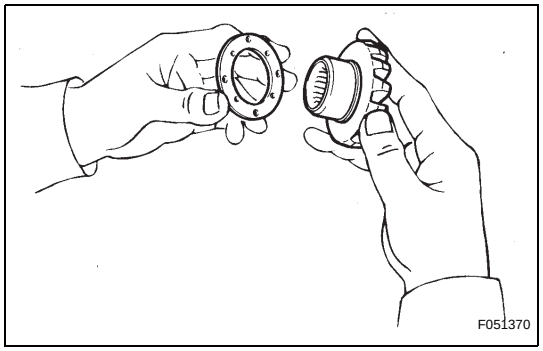

2. INSTALL DIFFERENTIAL CASE ASSEMBLY (2 Pinion Differential)

(a) Install the 2 thrust washers onto the side gears.

(b) Install the 2 side gears with the thrust washers, 2 pinion gears, 2 pinion gear thrust washers and pinion shaft.
HINT:
Align the holes for the straight pin in the differential case and pinion shaft.

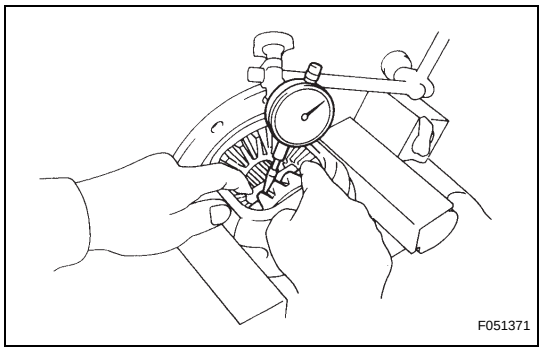

(c) Using a dial indicator, measure the side gear backlash while holding one pinion gear toward the differential case.
Backlash:
0.05 to 0.20 mm (0.0020 to 0.0079 in.)
If the backlash is not within the specified value, replace the side gear thrust washer with one of an appropriate thickness.
HINT:
Refer to the following table to select thrust washers so that the backlash is within the specified value.
Washer thickness

Thickness mm (in.)	Thickness mm (in.)
1.50 (0.0590)	1.75 (0.0689)
1.55 (0.0610)	1.80 (0.0709)
1.60 (0.0630)	1.85 (0.0728)
1.65 (0.0650)	1.90 (0.0748)
1.70 (0.0669)	-

cardiagn.com

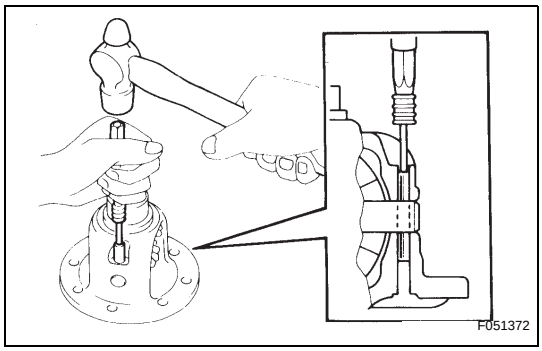

(d) Using a pin punch and hammer, install the straight pin through the holes in the differential case and pinion shaft.
(e) Using a chisel and hammer, stake the outside of the differential case pin hole.

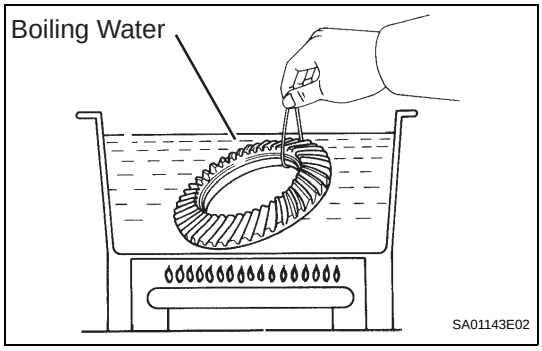

3. INSTALL DIFFERENTIAL RING GEAR

(a) Clean the contact surfaces of the differential case and ring gear.
(b) Heat the ring gear to approximately 100°C (212°F) in boiling water.
(c) Carefully take the ring gear out of the boiling water.
(d) After the moisture on the ring gear has completely evaporated, quickly install the ring gear onto the differential case.
HINT:
Align the matchmarks on the ring gear and differential case.

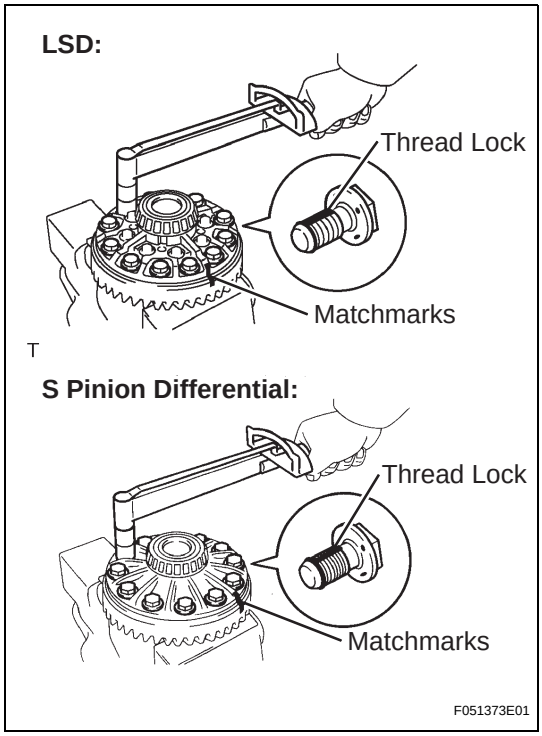

(e) After the ring gear has cooled sufficiently, torque the set bolts to which the thread lock has been applied.
Thread lock:
Part No. 08833-00100, THREE BOND 1360K or equivalent.
Torque: 125 N*m (1,270 kgf*cm, 92 ft.*lbf)

DF

cardiagn.com

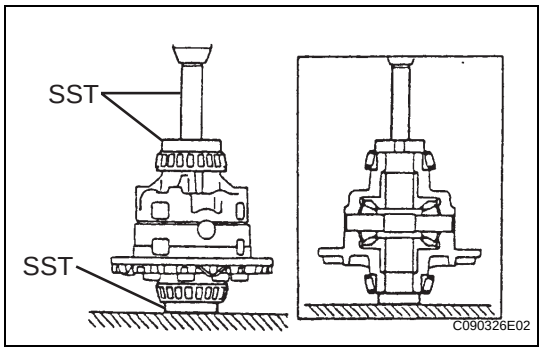

4. INSTALL REAR DIFFERENTIAL CASE BEARING

(a) Using SST and a press, install the 2 side bearings into the differential case.
SST 09950-60010 (09951-00480, 09951-00640), 09950-70010 (09951-07150)

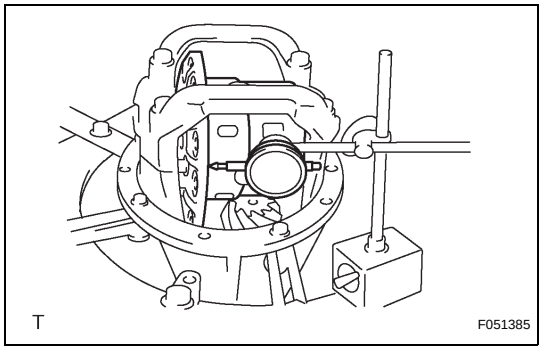

5. INSPECT DIFFERENTIAL RING GEAR RUNOUT

(a) Install the differential case onto the carrier, and install the 2 adjusting nuts so that there is no play in the bearing.
(b) Install the 2 bearing caps with the 4 bolts.
Torque: 113 N*m (1,152 kgf*cm, 83 ft.*lbf)
(c) Using a dial indicator, measure the runout of the ring gear.
Maximum runout:
0.05 mm (0.0020 in.)
(d) Remove the 2 bearing caps, 2 adjusting nuts and differential case.

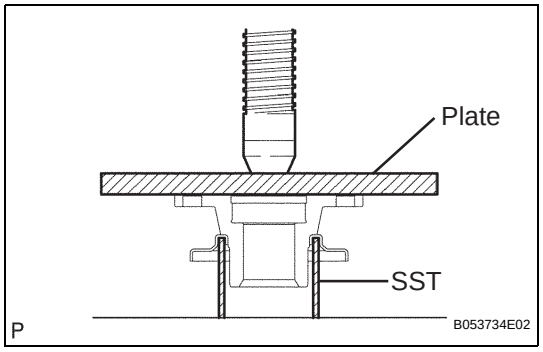

6. INSTALL REAR DIFFERENTIAL DUST DEFLECTOR

(a) Using a press, install the dust deflector.
SST 09636-20010
NOTICE:
Be careful not to damage the dust deflector.

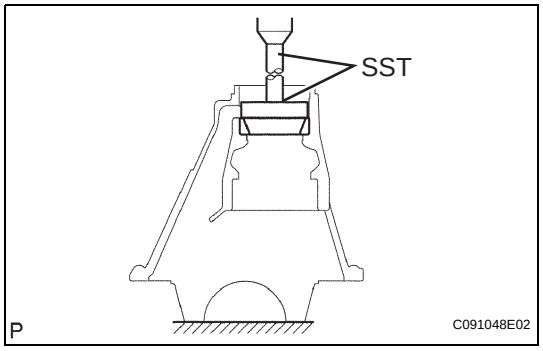

7. INSTALL REAR DRIVE PINION FRONT TAPERED ROLLER BEARING

(a) Using a brass bar and a hammer, install the oil storage ring.
(b) Using SST and a press, install the tapered roller bearing onto the carrier.
SST 09316-60011 (09316-00011, 09316-00021)

cardiagn.com

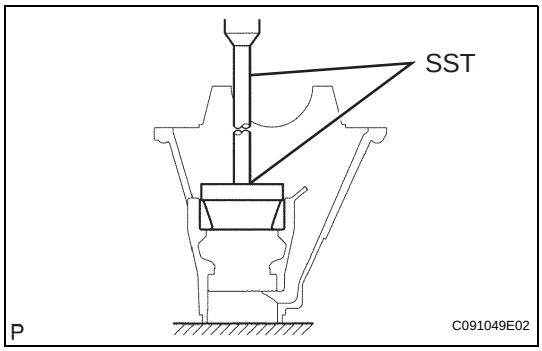

8. INSTALL REAR DRIVE PINION REAR TAPERED ROLLER BEARING

(a) Using SST and a press, install the tapered roller bearing onto the carrier.
SST 09316-60011 (09316-00041, 09316-00011)

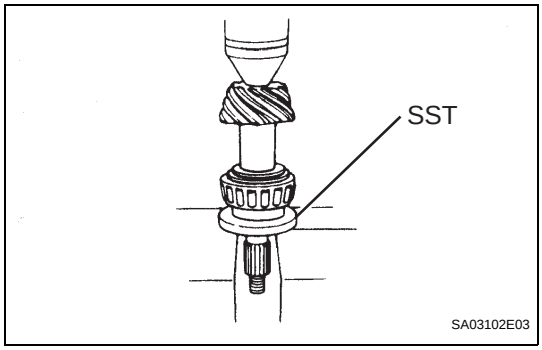

9. INSTALL REAR DRIVE PINION REAR TAPERED ROLLER BEARING

(a) Install the plate washer onto the drive pinion.
(b) Using SST and a press, install the tapered roller bearing onto the drive pinion.
SST 09506-30012

DF

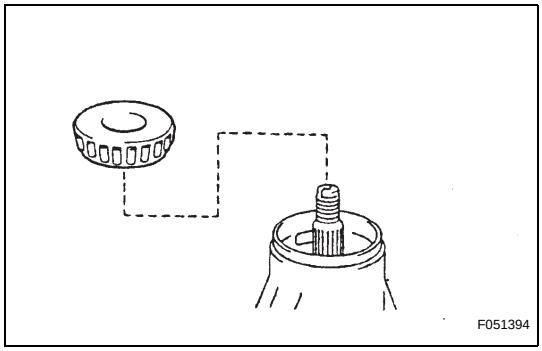

10. ADJUST DIFFERENTIAL DRIVE PINION PRELOAD

(a) Install the drive pinion and rear drive pinion tapered roller bearing.
HINT:
Assemble the spacer and oil seal after adjusting the gear contact pattern.

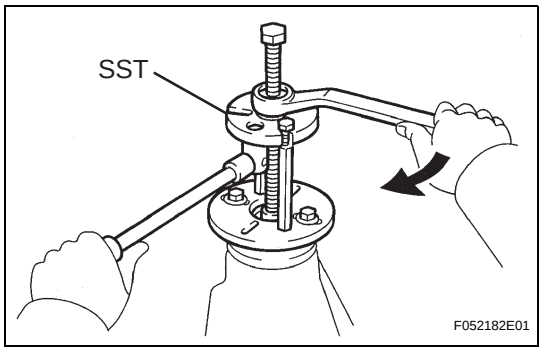

(b) Using SST, install the drive pinion companion flange.
(c) Coat the threads of the nut with hypoid gear oil LSD.
SST 09950-30012 (09951-03010, 09953-03010, 09954-03010, 09955-03030, 09956-03030)

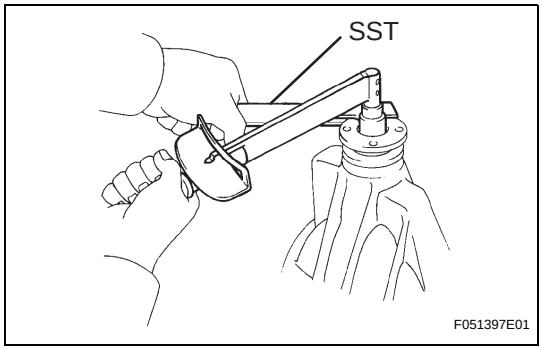

(d) Using SST to hold the drive pinion companion flange, tighten the nut.
Torque: 451 N*m (4,600 kgf*cm, 333 ft.*lbf) or less
NOTICE:
- **As there is no spacer, tighten a little at a time, being careful not to overtighten it.**
- **Apply hypoid gear oil LSD to the nut.**

SST 09330-00021

cardiagn.com

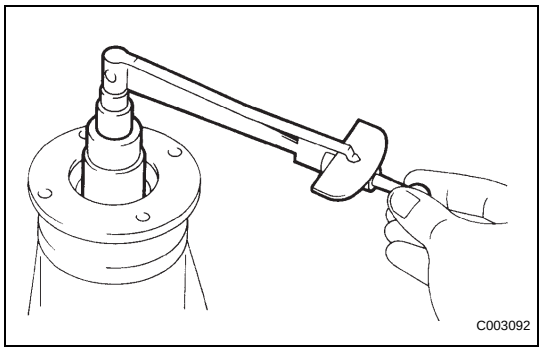

(e) Using a torque wrench, measure the preload.
Preload (at starting)

Bearing	Standard
New	1.27 to 1.86 N*m (13 to 20 kgf*cm, 11 to 16 in.*lbf)
Reused	0.78 to 1.07 N*m (8.0 to 11 kgf*cm, 6.9 to 9.5 in.*lbf)

If necessary, disassemble and inspect the differential assembly.

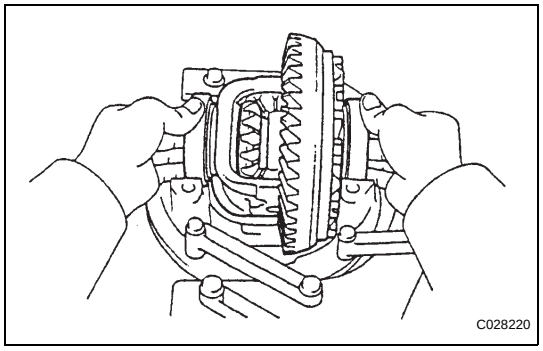

11. INSTALL DIFFERENTIAL CASE ASSEMBLY

(a) Place the 2 bearing outer races on their corresponding bearings.
HINT:
Make sure the right and left races are not interchanged.

(b) Install the differential case into the carrier.

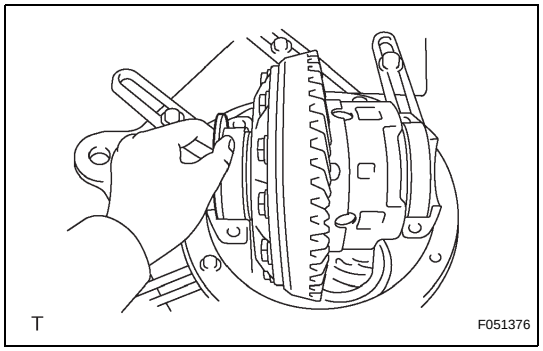

12. ADJUST DIFFERENTIAL RING GEAR BACKLASH

(a) Install the plate washer onto the ring gear back side.
HINT:
Make sure that the ring gear has backlash.

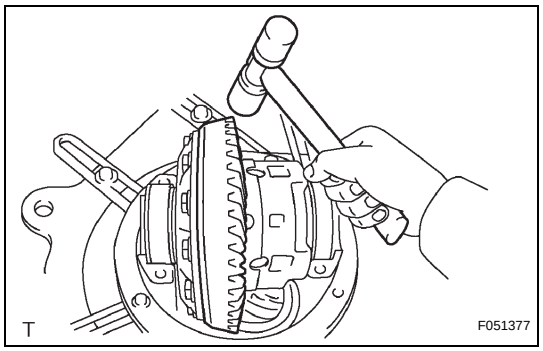

(b) Tap on the ring gear with a plastic hammer so that the washer fits into the bearing.

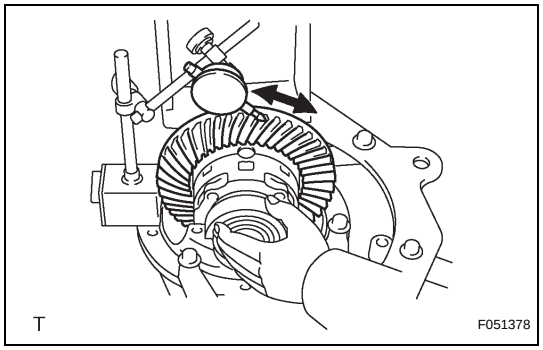

(c) Using a dial indicator, measure the ring gear backlash while holding the companion flange.
Backlash (reference):
0.13 to 0.18 mm (0.0051 to 0.0071 in.)

cardiagn.com

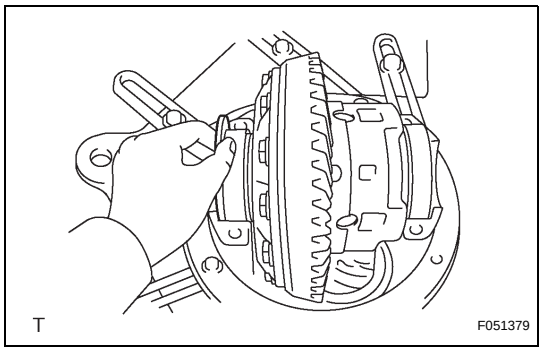

(d) Select a plate washer for the back side ring gear using the backlash as a reference.

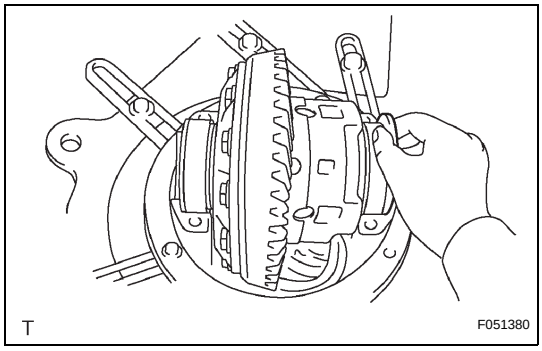

(e) Select a ring gear teeth side plate washer so that there is no clearance between the outer race and the case.
(f) Remove the 2 plate washers and differential case.
(g) Install the plate washer into the ring gear back side of the carrier.

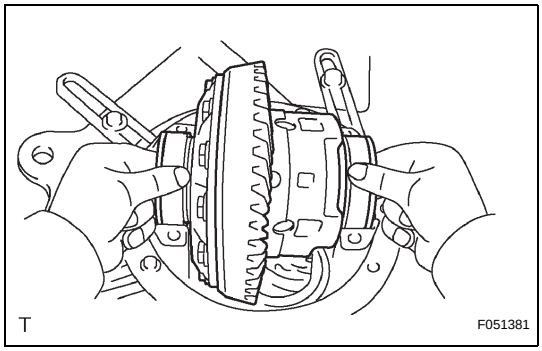

(h) Place the other plate washer onto the differential case together with the outer race, and install the differential case with the outer race into the carrier.
(i) Tap on the ring gear with a plastic hammer so that the washers fit into the bearing.

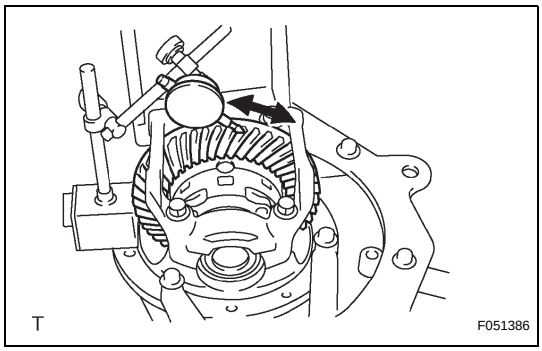

(j) Using a dial indicator, measure the ring gear backlash while holding the companion flange.
Backlash:
0.13 to 0.18 mm (0.0051 to 0.0071 in.)
If the backlash is not within the specified value, adjust it by either increasing or decreasing the thickness of washers on both sides by an equal amount.
HINT:
There should be no clearance between the plate washer and the case.
Make sure that there is a ring gear backlash.

cardiagn.com

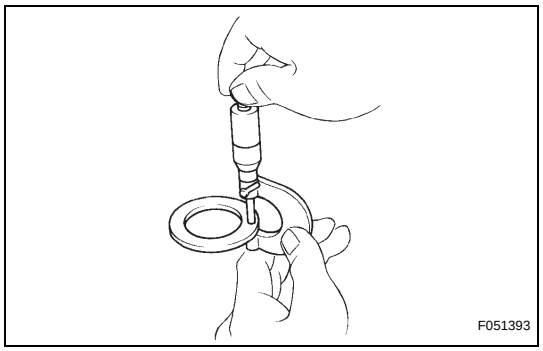

13. INSPECT SIDE BEARING PRELOAD

(a) Remove the ring gear teeth side plate washer and using a micrometer, measure the thickness.

(b) Using the backlash as a reference, install a new washer 0.06 to 0.09 mm (0.0024 to 0.0035 in.) thicker than the removed one.
HINT:
Select a washer which can be pressed in 2/3 of the way with your finger.

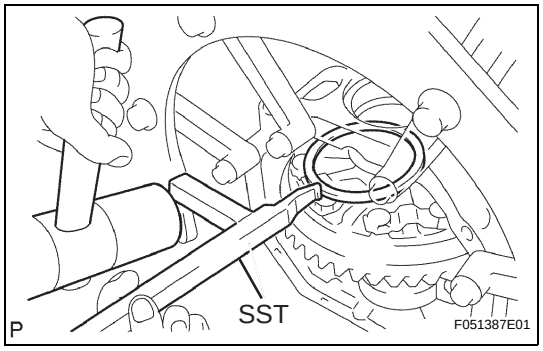

(c) Using SST and a plastic hammer, install the plate washer.

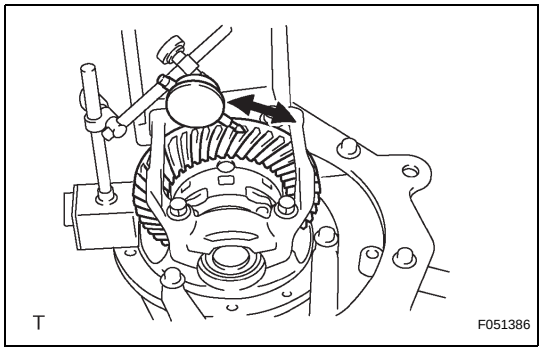

(d) Recheck the ring gear backlash.
Backlash:
0.13 to 0.18 mm (0.0051 to 0.0071 in.)
If the backlash is not within the specified value, adjust it by either increasing or decreasing the thickness of washers on both sides by an equal amount.
HINT:
The backlash will change by about 0.02 mm (0.0008 in.) corresponding to 0.03 mm (0.0012 in.) change in the plate washer.

Washer thickness

Thickness		Thickness		Thickness	
Mark	mm (in.)	Mark	mm (in.)	Mark	mm (in.)
58	2.58 (0.1016)	90	2.90 (0.1142)	22	3.22 (0.1268)
60	2.60 (0.1024)	92	2.92 (0.1150)	24	3.24 (0.1276)
62	2.62 (0.1032)	94	2.94 (0.1158)	26	3.26 (0.1284)
64	2.64 (0.1039)	96	2.96 (0.1165)	28	3.28 (0.1291)
66	2.66 (0.1047)	98	2.98 (0.1173)	30	3.30 (0.1299)
68	2.68 (0.1055)	00	3.00 (0.1181)	32	3.32 (0.1307)
70	2.70 (0.1063)	02	3.02 (0.1189)	34	3.34 (0.1315)
72	2.72 (0.1071)	04	3.04 (0.1197)	36	3.36 (0.1323)
74	2.74 (0.1079)	06	3.06 (0.1205)	38	3.38 (0.1331)
76	2.76 (0.1087)	08	3.08 (0.1213)	40	3.40 (0.1339)
78	2.78 (0.1095)	10	3.10 (0.1221)	42	3.42 (0.1347)
80	2.80 (0.1102)	12	3.12 (0.1228)	44	3.44 (0.1354)
82	2.82 (0.1110)	14	3.14 (0.1236)	46	3.46 (0.1362)
84	2.84 (0.1118)	16	3.16 (0.1244)	48	3.48 (0.1370)
86	2.86 (0.1126)	18	3.18 (0.1257)	-	-
88	2.88 (0.1134)	20	3.20 (0.1260)	-	-

cardiagn.com

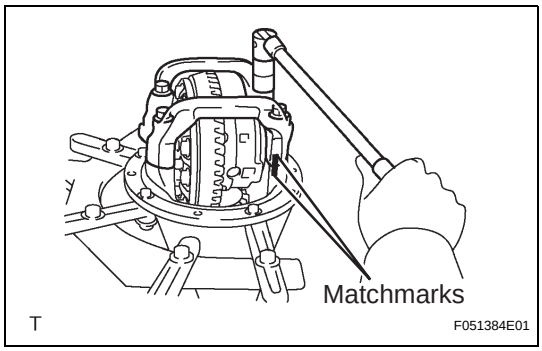

(e) Tighten the bearing cap bolts.
Torque: 113 N*m (1,152 kgf*cm, 83 ft.*lbf)

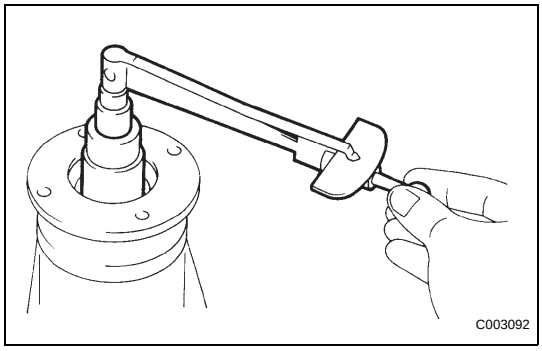

14. INSPECT TOTAL PRELOAD

(a) Using a torque wrench, measure the preload with the teeth of the drive pinion and ring gear in contact.
Total Preload (at starting):
Drive pinion preload plus 0.39 to 0.59 N*m (4.0 to 6.0 kgf*cm, 3.5 to 5.2 in.*lbf)
If necessary, disassemble and inspect the differential.

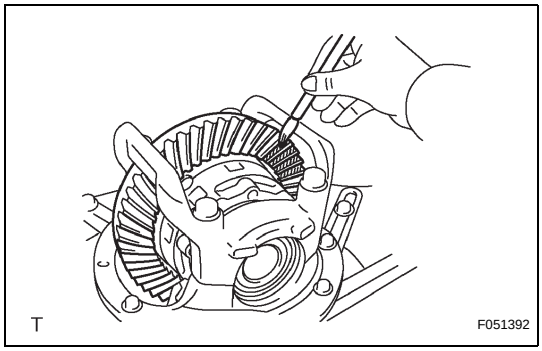

15. INSPECT TOOTH CONTACT BETWEEN RING GEAR AND DRIVE PINION

(a) Coat 3 or 4 teeth at 3 different positions on the ring gear with red lead primer.
(b) Hold the companion flange firmly and rotate the ring gear in both directions.

cardiagn.com

(c) Inspect the tooth contact pattern.

Driver Side:

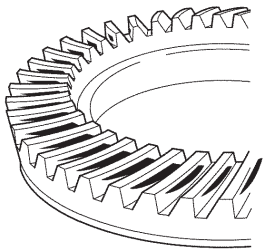

Proper Contact

Toe Contact

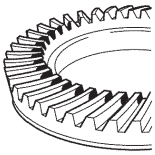

Face Contact

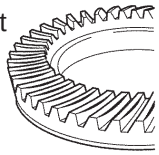

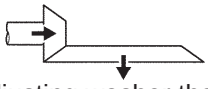

Select an adjusting washer that will bring the drive pinion closer to the ring gear.

Heel Contact

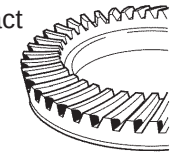

Flank Contact

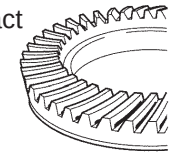

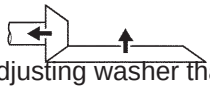

Select an adjusting washer that will shift the drive pinion away from the ring gear.

Coast Side:

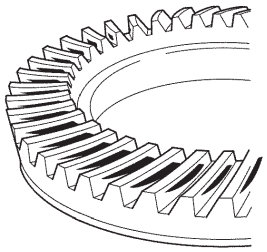

Proper Contact

Heel Contact

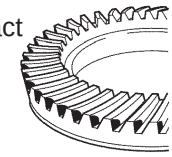

Face Contact

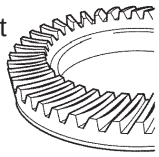

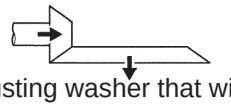

Select an adjusting washer that will shift the drive pinion closer to the ring gear.

Toe Contact

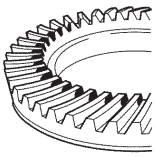

Flank Contact

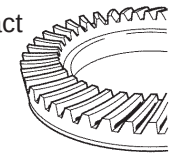

Select an adjusting washer that will bring the drive pinion away from the ring gear.

P

F052199E01

cardiagn.com

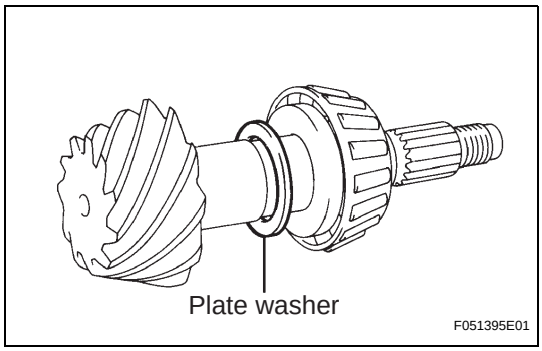

(d) If the teeth are not properly in contact, use the following chart to select an appropriate washer for correction.

Washer thickness

Thickness		Thickness		Thickness	
Mark	mm (in.)	Mark	mm (in.)	Mark	mm (in.)
87	1.87 (0.0736)	03	2.03 (0.0799)	19	2.19 (0.0862)
88	1.88 (0.0740)	04	2.04 (0.0803)	20	2.20 (0.0866)
89	1.89 (0.0744)	05	2.05 (0.0807)	21	2.21 (0.0870)
90	1.90 (0.0748)	06	2.06 (0.0811)	22	2.22 (0.0874)
91	1.91 (0.0752)	07	2.07 (0.0815)	23	2.23 (0.0878)
92	1.92 (0.0756)	08	2.08 (0.0819)	24	2.24 (0.0882)
93	1.93 (0.0760)	09	2.09 (0.0823)	25	2.25 (0.0886)
94	1.94 (0.0764)	10	2.10 (0.0827)	26	2.26 (0.0890)
95	1.95 (0.0768)	11	2.11 (0.0831)	27	2.27 (0.0894)
96	1.96 (0.0772)	12	2.12 (0.0835)	28	2.28 (0.0898)
97	1.97 (0.0776)	13	2.13 (0.0839)	-	-
98	1.98 (0.0780)	14	2.14 (0.0843)	-	-
99	1.99 (0.0784)	15	2.15 (0.0847)	-	-
00	2.00 (0.0787)	16	2.16 (0.0850)	-	-
01	2.01 (0.0791)	17	2.17 (0.0854)	-	-
02	2.02 (0.0795)	18	2.18 (0.0858)	-	-

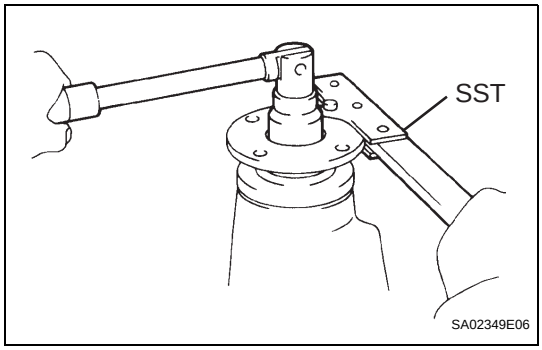

16. REMOVE REAR DRIVE PINION NUT

(a) Using SST to hold the drive pinion companion flange, remove the nut.
SST 09330-00021

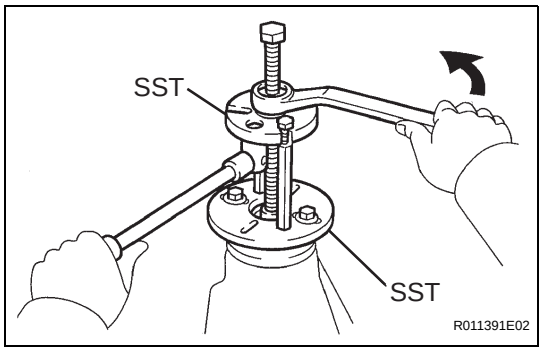

17. REMOVE REAR DRIVE PINION COMPANION FLANGE SUB-ASSEMBLY REAR

(a) Using SST, remove the drive pinion companion flange.
SST 09950-30012 (09951-03010, 09953-03010, 09954-03010, 09955-03030, 09956-03030)

cardiagn.com

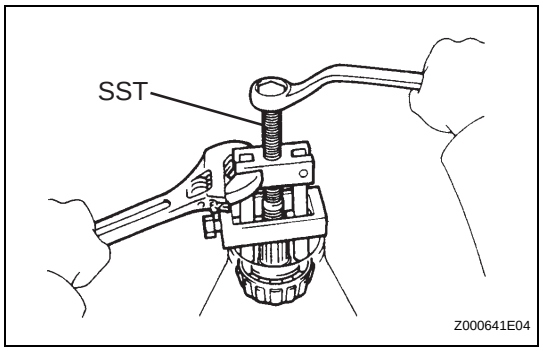

18. REMOVE REAR DRIVE PINION FRONT TAPERED ROLLER BEARING

(a) Using SST, remove the drive pinion tapered roller bearing from the drive pinion.
SST 09556-22010

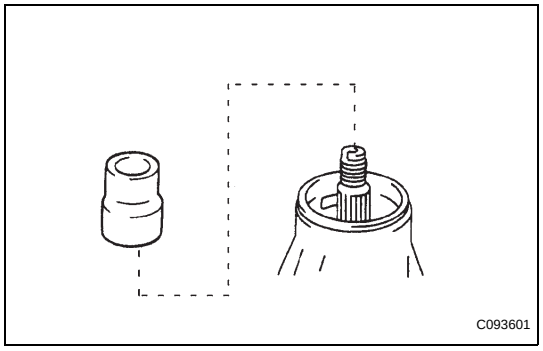

19. INSTALL REAR DIFFERENTIAL DRIVE PINION BEARING SPACER

(a) Install a new bearing spacer onto the drive pinion.

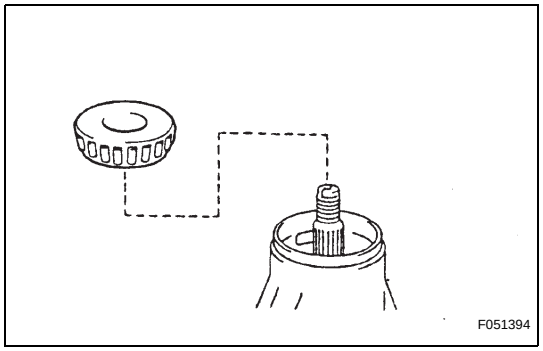

20. INSTALL REAR DRIVE PINION FRONT TAPERED ROLLER BEARING

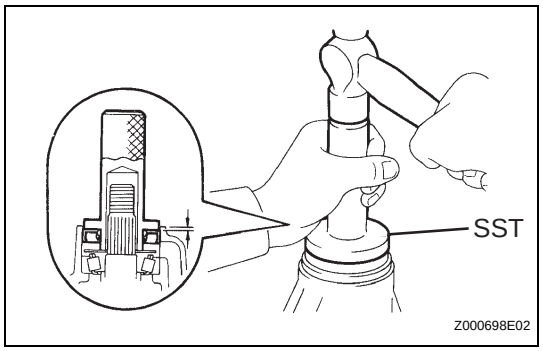

21. INSTALL REAR DIFFERENTIAL CARRIER OIL SEAL

(a) Apply MP grease to the oil seal lip.
(b) Using SST and a hammer, install a new carrier oil seal.
SST 09554-30011
Oil seal drive in depth:
-0.5 to 0.5 mm (-0.0197 to 0.0197 in)

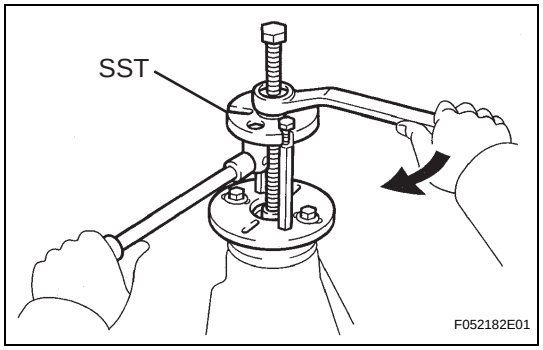

22. INSTALL REAR DRIVE PINION COMPANION FLANGE SUB-ASSEMBLY REAR

(a) Using SST, install the drive pinion companion flange onto the drive pinion.
SST 09950-30012 (09951-03010, 09953-03010, 09954-03010, 09955-03030, 09956-03030)

cardiagn.com

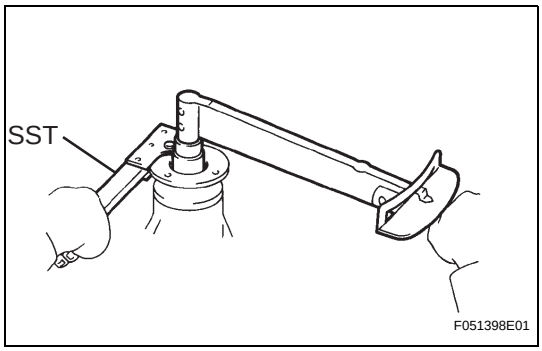

(b) Coat the threads of a new nut with hypoid gear oil LSD.

(c) Using SST to hold the flange, torque the nut.
SST 09330-00021
Torque: 451 N*m (4,600 kgf*cm, 333 ft.*lbf) or less

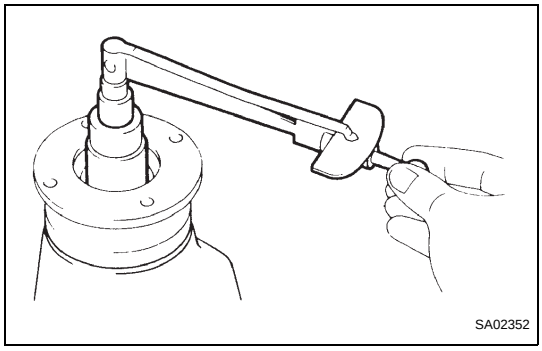

23. INSPECT DRIVE PINION PRELOAD

(a) Using a torque wrench, measure the preload of the backlash between the drive pinion and ring gear.
Preload (at starting)

Bearing	Standard
New	1.27 to 1.86 N*m (13 to 19 kgf*cm, 11 to 16 in.*lbf)
Reused	0.78 to 1.07 N*m (8.0 to 11 kgf*cm, 6.9 to 9.5 in.*lbf)

- If the preload is greater than the specification, replace the bearing spacer.
- If the preload is less than the specification, retighten the nut to 13 N*m (130 kgf*cm, 9 ft*lbf) of torque at a time until the specified preload is reached.

Torque: 451 N*m (4,600 kgf*cm, 333 ft.*lbf) or less

- If the maximum torque is exceeded while retightening the nut, replace the bearing spacer and repeat the preload adjusting procedure. Do not loosen the pinion nut to reduce the preload.

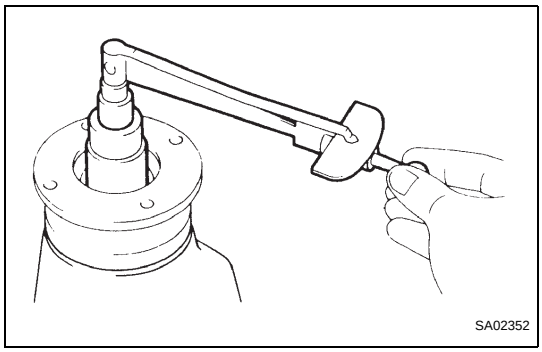

24. INSPECT TOTAL PRELOAD

(a) Using a torque wrench, measure the preload.
Total Preload (at starting):
Drive pinion preload plus 0.39 to 0.59 N*m (4 to 6 kgf*cm, 4.0 to 5.2 in.*lbf)
If the necessary, disassemble and inspect the differential.

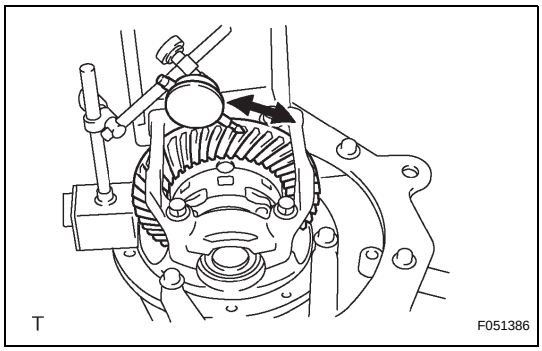

25. INSPECT DIFFERENTIAL RING GEAR BACKLASH

(a) Using a dial indicator, check the backlash of the ring gear.
Backlash:
0.13 to 0.18 mm (0.0051 to 0.0071 in.)
If the backlash is not within the specification, adjust or repair the side bearing preload as necessary.

DF

cardiagn.com

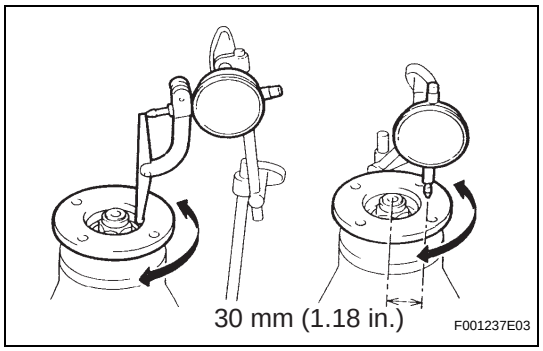

26. INSPECT RUNOUT OF REAR DRIVE PINION COMPANION FLANGE SUB-ASSEMBLY REAR

(a) Using a dial indicator, measure the vertical and horizontal runout of the drive pinion companion flange.

Maximum runout:

Vertical runout: 0.10 mm (0.0039 in.)

Lateral runout: 0.10 mm (0.0039 in.)

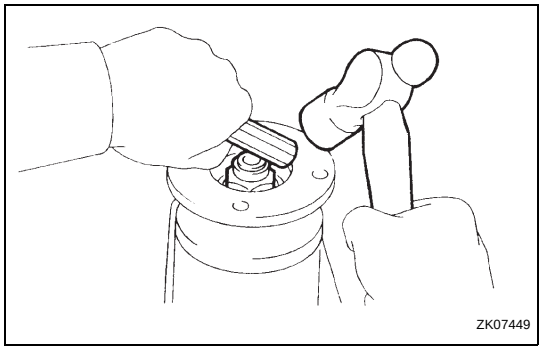

27. INSTALL REAR DRIVE PINION NUT

(a) Using a chisel and hammer, stake the drive pinion nut.

INSTALLATION

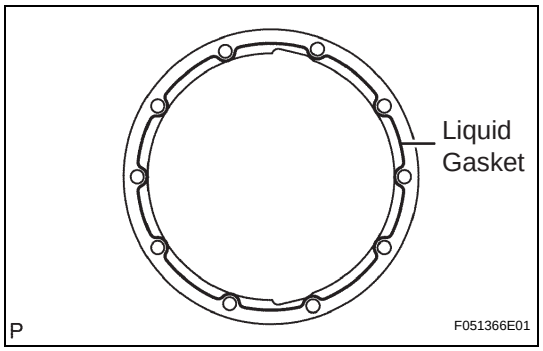

1. INSTALL REAR DIFFERENTIAL CARRIER ASSEMBLY

(a) Remove any dust and oil from the differential carrier assembly and contact surface of the axle housing.

(b) Apply liquid gasket to both sides of the gasket.

NOTICE:

Do not put the liquid gasket on the stud bolt.

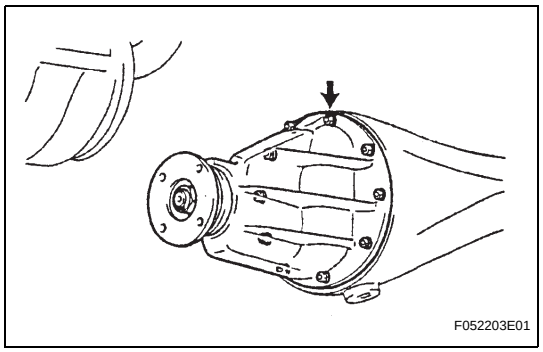

(c) Install a new gasket and the differential carrier assembly with the 10 nuts and 10 washers.

Torque: 45 N*m (459 kgf*cm, 33 ft.*lbf)

2. INSTALL REAR AXLE SHAFT WITH BACKING PLATE LH (See page AH-33)

3. INSTALL REAR AXLE SHAFT WITH BACKING PLATE RH

HINT:

Use the same procedure as for the LH side.

4. INSTALL NO.3 PARKING BRAKE CABLE ASSEMBLY (See page PB-22)

5. INSTALL NO.2 PARKING BRAKE CABLE ASSEMBLY

HINT:

Use the same procedure as for the LH side.

6. INSTALL REAR SPEED SENSOR LH (See page BC-304)

7. INSTALL REAR SPEED SENSOR RH

HINT:

Use the same procedure as for the LH side.

cardiagn.com

8. **INSTALL PROPELLER SHAFT ASSEMBLY (for 2WD Drive Type, Regular Cab) (See page PR-6)**
9. **INSTALL PROPELLER WITH CENTER BEARING SHAFT ASSEMBLY (for 2WD Drive Type, Except Regular Cab) (See page PR-13)**
10. **INSTALL PROPELLER SHAFT ASSEMBLY (for 4WD Driver Type, Regular Cab) (See page PR-25)**
11. **INSTALL PROPELLER WITH CENTER BEARING SHAFT ASSEMBLY (for 4WD Driver Type, Expect Regular Cab) (See page PR-32)**
12. **INSTALL REAR BRAKE SHOE (See page BR-71)**
13. **INSTALL FRONT BRAKE SHOE (See page BR-72)**
14. **INSPECT REAR BRAKE DRUM INSTALLATION (See page BR-73)**
15. **INSTALL REAR BRAKE DRUM SUB-ASSEMBLY (See page BR-73)**
16. **ADJUST REAR DRUM BRAKE SHOE CLEARANCE (See page BR-74)**
17. **FILL RESERVOIR WITH BRAKE FLUID (w/ VSC) (See page BR-4)**
18. **FILL RESERVOIR WITH BRAKE FLUID (w/o VSC) (See page BR-7)**
19. **BLEED MASTER CYLINDER (w/o VSC) (See page BR-7)**
20. **BLEED BRAKE LINE (w/ VSC) (See page BR-4)**
21. **BLEED BRAKE LINE (w/o VSC) (See page BR-7)**
22. **CHECK FLUID LEVEL IN RESERVOIR (w/ VSC) (See page BR-6)**
23. **CHECK FLUID LEVEL IN RESERVOIR (w/o VSC) (See page BR-8)**
24. **CHECK FOR BRAKE FLUID LEAKAGE**
25. **ADD DIFFERENTIAL OIL (See page DF-8)**
26. **INSPECT DIFFERENTIAL OIL (See page DF-8)**
27. **INSPECT FOR DIFFERENTIAL OIL LEAKAGE**
28. **INSTALL REAR WHEEL**
    Torque: 113 N*m (1,152 kgf*cm, 83 in.*lbf)
29. **INSPECT PARKING BRAKE PEDAL TRAVEL (for Automatic Transaxle) (See page PB-1)**
30. **INSPECT PARKING BRAKE LEVER TRAVEL (for Manual Transaxle) (See page PB-1)**
31. **ADJUST PARKING BRAKE PEDAL TRAVEL (for Automatic Transaxle) (See page PB-2)**

cardiagn.com

32. **ADJUST PARKING BRAKE LEVER TRAVEL (for Manual Transaxle) (See page PB-2)**

33. **CONNECT CABLE TO NEGATIVE BATTERY TERMINAL**
Torque: 3.9 N*m (40 kgf*cm, 35 in.*lbf)

34. **CHECK VSC SENSOR SIGNAL (w/ VSC)**
HINT:
(See page BC-103)

35. **CHECK ABS SENSOR SIGNAL (w/o VSC)**
HINT:
(See page BC-7)

cardiagn.com