REMOVAL

1. **DISCONNECT CABLE FROM NEGATIVE BATTERY TERMINAL**
2. **REMOVE REAR WHEEL**
3. **DRAIN BRAKE FLUID**
4. **REMOVE REAR BRAKE DRUM SUB-ASSEMBLY (See page BR-68)**
5. **REMOVE FRONT BRAKE SHOE (See page BR-68)**
6. **REMOVE REAR BRAKE SHOE (See page BR-69)**
7. **REMOVE PROPELLER SHAFT ASSEMBLY (for 2WD Drive Type, Regular Cab) (See page PR-3)**
8. **REMOVE PROPELLER WITH CENTER BEARING SHAFT ASSEMBLY (for 2WD Drive Type, Except Regular Cab) (See page PR-8)**
9. **REMOVE PROPELLER SHAFT ASSEMBLY (for 4WD Type, Regular Cab) (See page PR-22)**
10. **REMOVE PROPELLER WITH CENTER BEARING SHAFT ASSEMBLY (for 4WD Drive Type, Except Regular Cab) (See page PR-8)**
11. **DRAIN DIFFERENTIAL OIL (See page DF-8)**
12. **SEPARATE REAR SPEED SENSOR LH (See page BC-304)**
13. **SEPARATE REAR SPEED SENSOR RH**
    HINT:
    Use the same procedure as for the LH side.
14. **SEPARATE NO.3 PARKING BRAKE CABLE ASSEMBLY (See page PB-21)**
15. **SEPARATE NO.2 PARKING BRAKE CABLE ASSEMBLY**
    HINT:
    Use the same procedure as for the LH side.
16. **REMOVE REAR AXLE SHAFT WITH BACKING PLATE (See page AH-29)**
17. **REMOVE REAR AXLE SHAFT WITH BACKING PLATE**
    HINT:
    Use the same procedure as for the LH side.

cardiagn.com

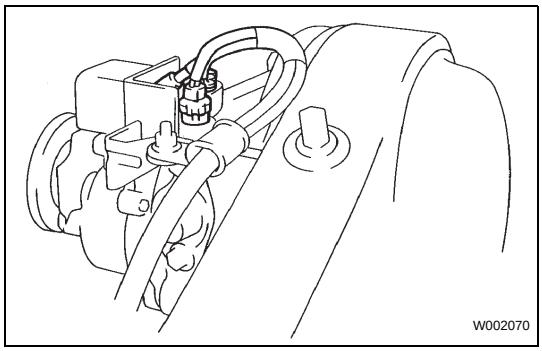

18. REMOVE REAR DIFFERENTIAL CARRIER ASSEMBLY

(a) Disconnect the differential lock actuator connector.

(b) Disconnect the rear differential lock actuator breather hose from the differential actuator assembly.

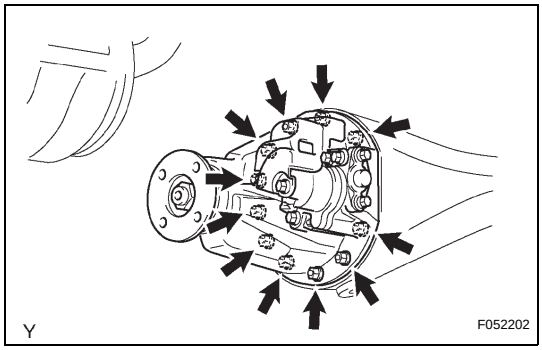

(c) Remove the 11 nuts and differential carrier assembly.

NOTICE:

Be careful not to damage the contact surfaces of the differential carrier and rear axle housing.

(d) Remove the rear differential carrier gasket from the differential carrier assembly.

DISASSEMBLY

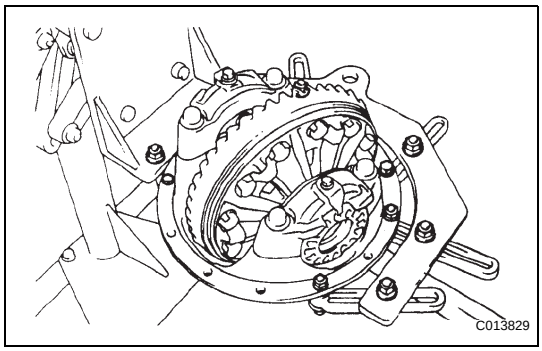

1. FIX REAR DIFFERENTIAL CARRIER ASSEMBLY

(a) Fix the rear differential carrier assembly to the overattachment.

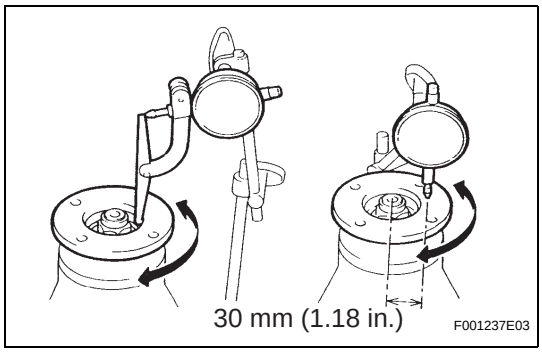

2. INSPECT REAR DRIVE PINION COMPANION FLANGE SUB-ASSEMBLY REAR

(a) Using a dial indicator, measure the runout of the companion flange vertically and horizontally.

Maximum runout:

Vertical runout: 0.10 mm (0.0039 in.)

Lateral runout: 0.10 mm (0.0039 in.)

If the runouts are not with the specifications, replace the companion flange.

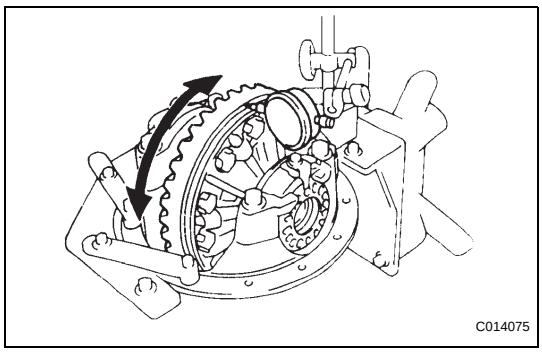

3. INSPECT RUNOUT OF DIFFERENTIAL RING GEAR

(a) Using a dial indicator, check the runout of the ring gear.

Maximum runout:

0.07 mm (0.0028 in.)

If the runout is greater than the maximum, replace the ring gear with a new one.

cardiagn.com

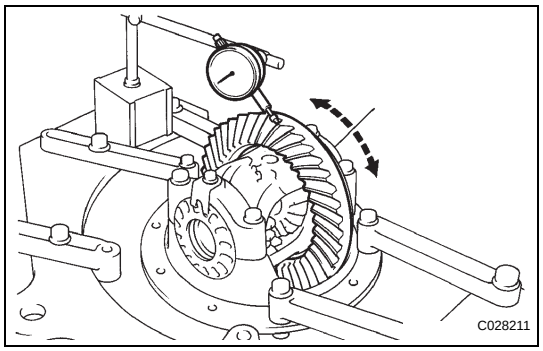

4. INSPECT DIFFERENTIAL RING GEAR BACKLASH

(a) Using a dial indicator, check the backlash of the ring gear.

Backlash:

0.13 to 0.18 mm (0.0051 to 0.0071 in.)

If the backlash is not within the specification, adjust or repair the side bearing preload as necessary.

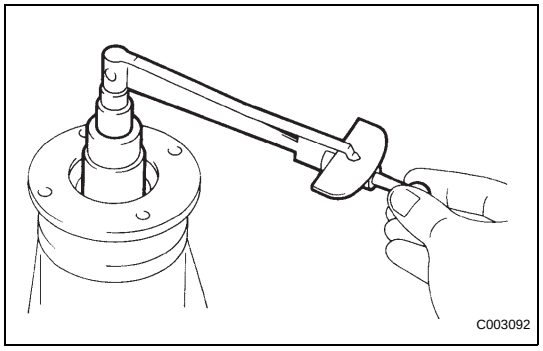

5. INSPECT DIFFERENTIAL DRIVE PINION PRELOAD

(a) Using a torque wrench, measure the preload of the backlash between the drive pinion and ring gear.

Preload (at starting):

0.56 to 0.85 N*m (5.7 to 8.7 kgf*cm, 5.0 to 7.5 in.*lbf)

If necessary, disassemble and inspect the differential assembly.

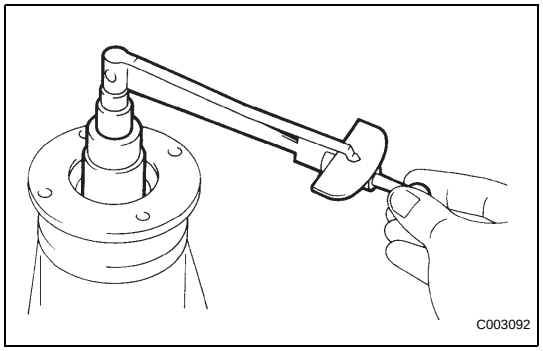

6. INSPECT TOTAL PRELOAD

(a) Using a torque wrench, measure the preload with the teeth of the drive pinion and ring gear in contact.

(b) Using a torque wrench, measure the total preload.

Total preload (at starting):

Drive pinion preload plus 0.39 to 0.59 N*m (4.0 to 6.0 kgf*cm, 3.5 to 5.2 in.*lbf)

If necessary, disassemble and inspect the differential.

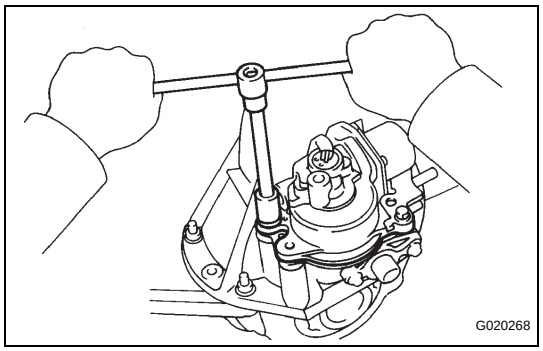

7. REMOVE DIFFERENTIAL LOCK SHIFT ACTUATOR

(a) Remove the 4 bolts and actuator from the differential carrier.

(b) Remove the O-ring.

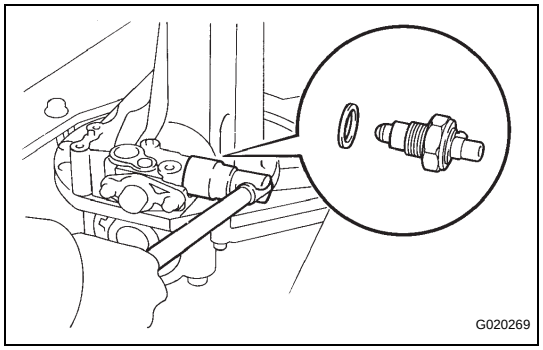

8. REMOVE NO.1 TRANSFER INDICATOR SWITCH

(a) Remove the indicator switch and gasket.

cardiagn.com

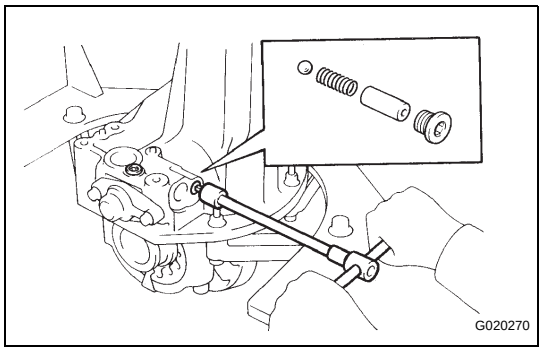

9. REMOVE REAR DIFFERENTIAL LOCK SHIFT FORK SHAFT

(a) Using a 6 mm hexagon wrench, remove the 2 screw plugs.

(b) Remove the spring seat, spring and ball.

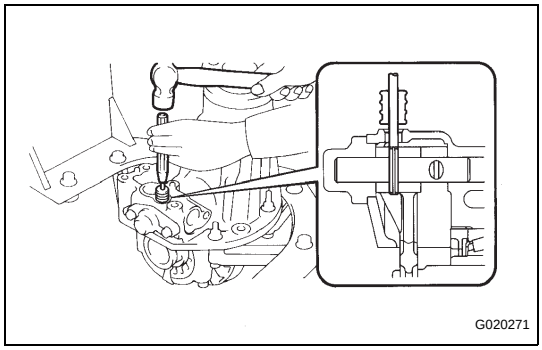

(c) Using a 5 mm pin punch and hammer, remove the slotted pin.

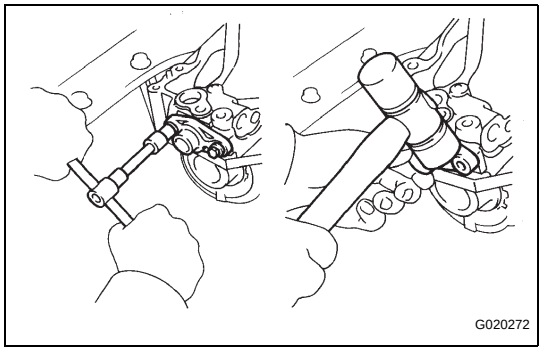

(d) Remove the 2 bolts from the shaft retainer.

(e) Using a plastic hammer, remove the shaft retainer.

(f) Remove the shift fork shaft.

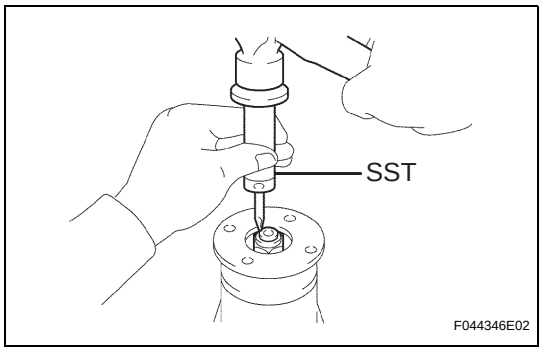

10. REMOVE REAR DRIVE PINION NUT

(a) Using SST and a hammer, loosen the staked part of the nut.
SST 09930-00010

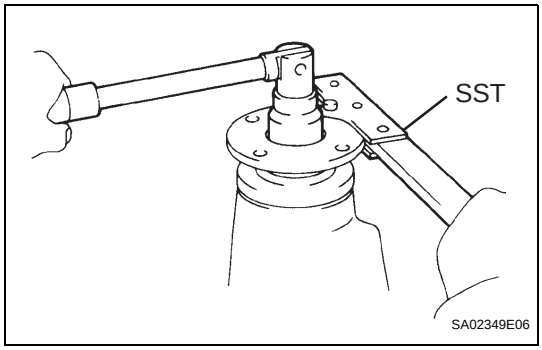

(b) Using SST to hold the drive pinion companion flange, remove the nut.
SST 09330-00021

cardiagn.com

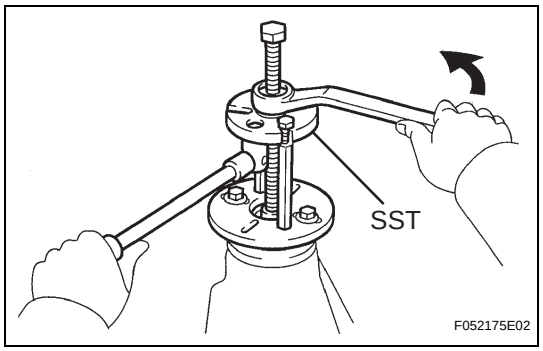

11. REMOVE REAR DRIVE PINION COMPANION FLANGE SUB-ASSEMBLY REAR

(a) Using SST, remove the drive pinion companion flange.
SST 09950-30012 (09951-03010, 09953-03010, 09954-03010, 09955-03030, 09956-03030)

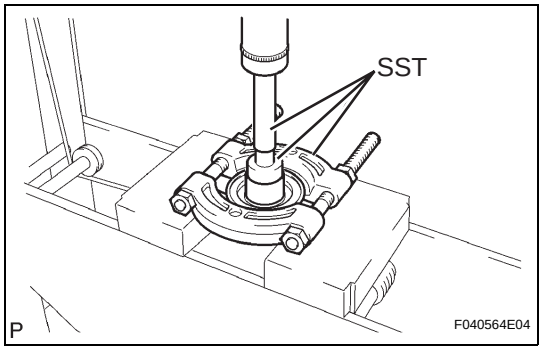

12. REMOVE REAR DIFFERENTIAL DUST DEFLECTOR

(a) Using SST and a press, remove the dust deflector.
SST 09950-60010 (09951-00380), 09950-70010 (09951-07150), 09950-00020

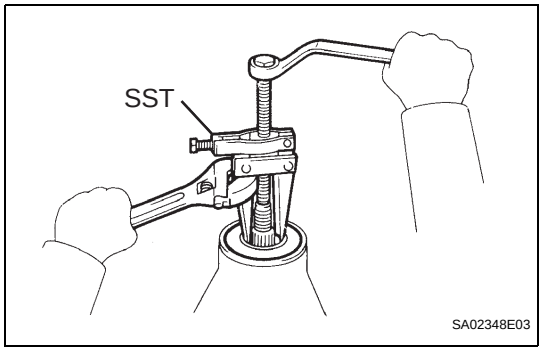

13. REMOVE REAR DIFFERENTIAL CARRIER OIL SEAL

(a) Using SST, remove the oil seal from the differential carrier.
SST 09308-10010

14. REMOVE REAR DIFFERENTIAL DRIVE PINION OIL SLINGER

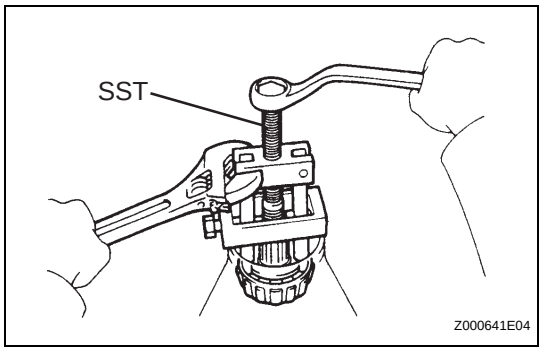

15. REMOVE REAR DRIVE PINION FRONT TAPERED ROLLER BEARING

(a) Using SST, remove the drive pinion tapered roller bearing from the drive pinion.
SST 09556-22010

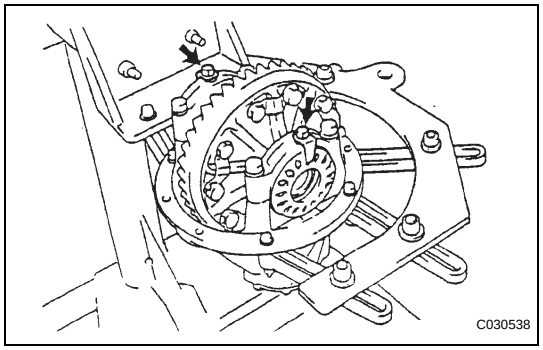

16. REMOVE REAR DIFFERENTIAL BEARING ADJUSTING NUT LOCK

(a) Remove the 2 bolts and 2 rear differential bearing adjusting nut locks.

cardiagn.com

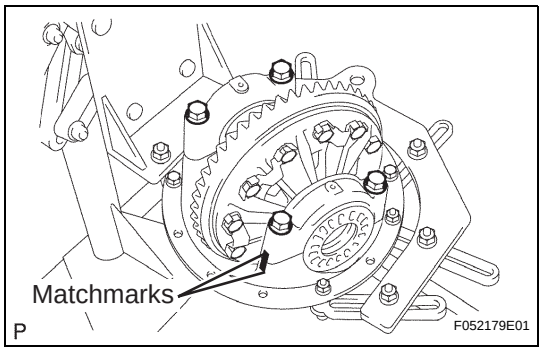

17. REMOVE DIFFERENTIAL CASE ASSEMBLY

(a) Place matchmarks on the bearing cap and differential carrier.

(b) Remove the 4 bolts and 2 differential bearing caps.

(c) Remove the 2 adjusting nuts.

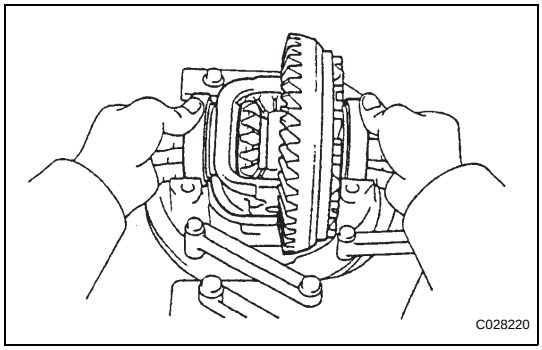

(d) Remove the rear differential case sub-assembly and 2 case bearings from the differential carrier.
HINT:
Tag the 2 case bearings outer races to show the locations for reassembly.

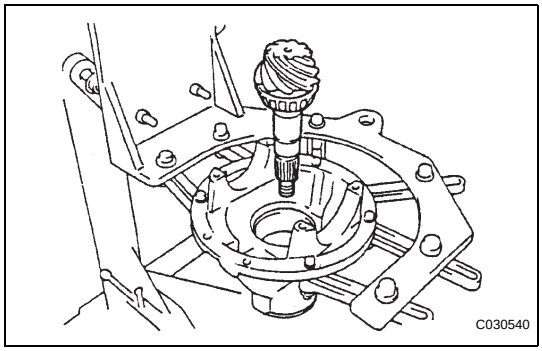

18. REMOVE DIFFERENTIAL DRIVE PINION

(a) Remove the differential drive pinion and bearing spacer from the differential carrier.

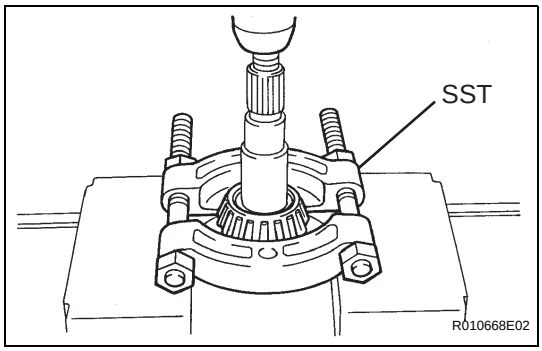

19. REMOVE REAR DRIVE PINION REAR TAPERED ROLLER BEARING

(a) Using SST and a press, remove the drive pinion tapered roller bearing from the drive pinion.
SST 09950-00020
HINT:
If either the drive pinion or ring gear is damaged, replace them as a set.

20. REMOVE REAR DIFFERENTIAL DRIVE PINION PLATE WASHER

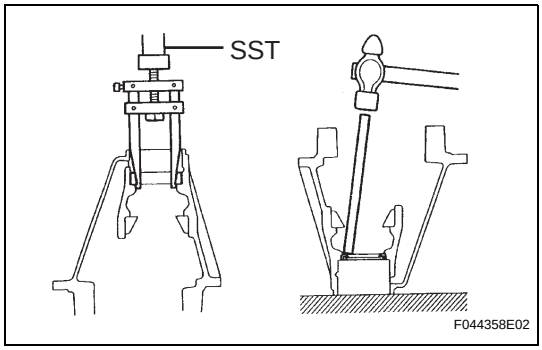

21. REMOVE REAR DRIVE PINION FRONT TAPERED ROLLER BEARING

(a) Using SST, remove the front tapered roller bearing from the carrier.
SST 09308-00010

(b) Using a brass bar and a hammer, remove the oil storage ring from the carrier.

cardiagn.com

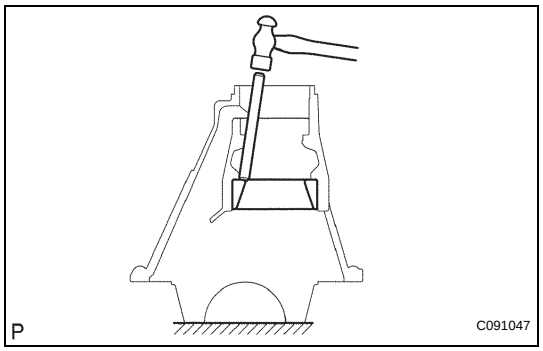

22. REMOVE REAR DRIVE PINION REAR TAPERED ROLLER BEARING

(a) Using a brass bar and a hammer, remove the rear tapered roller bearing from the carrier.

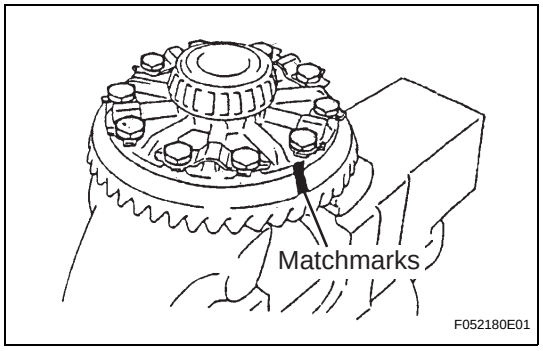

23. REMOVE DIFFERENTIAL RING GEAR

(a) Place matchmarks on the ring gear and differential case.

(b) Using a screwdriver and a hammer, unstake the lock plates.

(c) Remove the 10 ring gear set bolts and 5 lock plates.

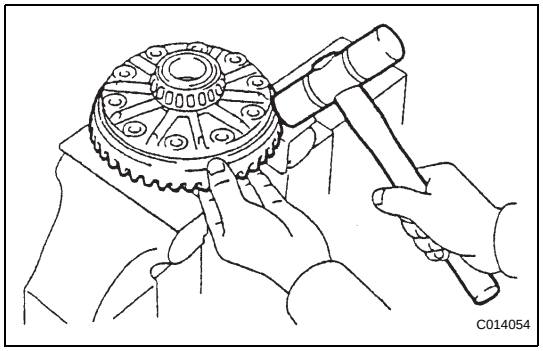

(d) Using a plastic hammer, tap on the ring gear to separate it from the differential case.

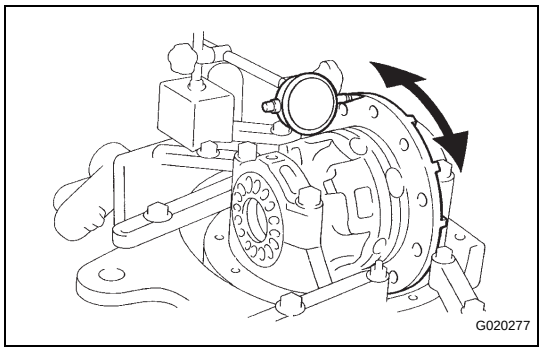

24. INSPECT DIFFERENTIAL CASE ASSEMBLY RUNOUT

(a) Install the rear differential case bearing onto the differential case.

(b) Install the differential case onto the differential carrier.

(c) Install the 2 bearing caps and 4 bolts onto the differential carrier.
Torque: 85 N*m (870 kgf*cm, 63 ft.*lbf)

(d) Inspect the differential case runout.
Maximum runout:
0.07 mm (0.0028 in.)

(e) Remove the differential case.

(f) Remove the rear differential case bearing.

cardiagn.com

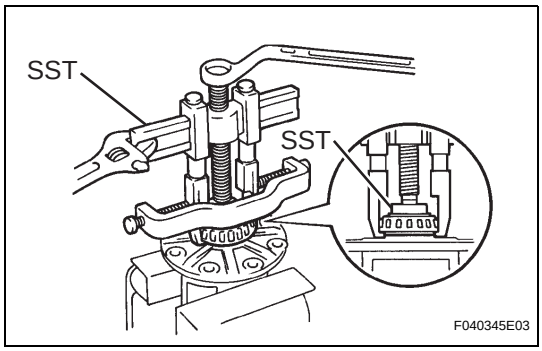

25. REMOVE REAR DIFFERENTIAL CASE BEARING

(a) Using SST, remove the 2 rear differential case bearings from the differential case.

SST 09950-40011 (09951-04020, 09952-04010, 09953-04030, 09954-04010, 09955-04061, 09957-04010, 09958-04011), 09950-60010 (09951-00360)

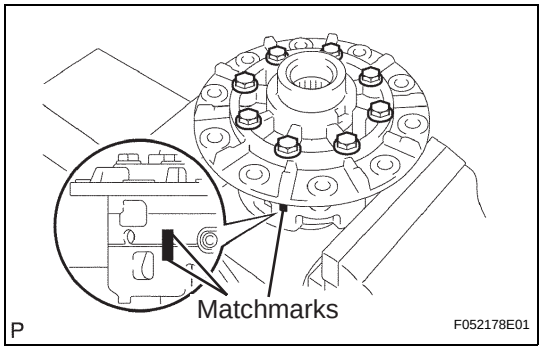

26. DISASSEMBLE DIFFERENTIAL CASE

(a) Place matchmarks on the LH and RH cases.

(b) Remove the 8 bolts.

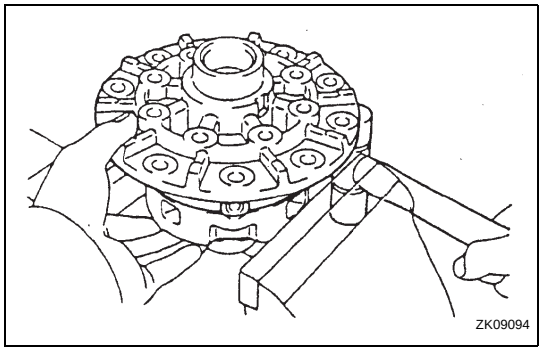

(c) Using a plastic hammer, separate the LH and RH cases.

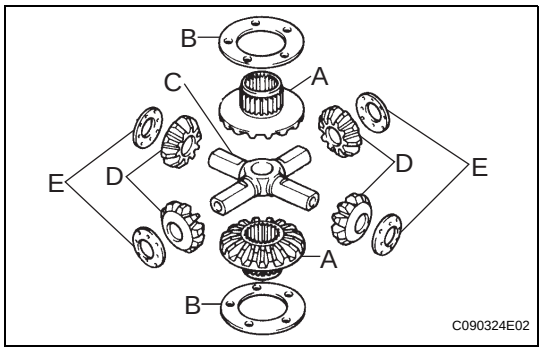

(d) Remove these parts from the differential case.

A	Side gear
B	Side gear thrust washer
C	Spider
D	Pinion gear
E	Pinion gear thrust washer

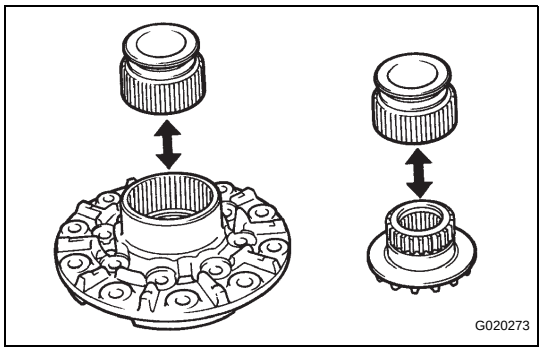

27. INSPECT REAR DIFFERENTIAL LOCK SLEEVE

(a) Install the sleeve onto the differential case (LH) and check that it moves smoothly.

(b) Install the side gear onto the sleeve and check that it moves smoothly.

cardiagn.com

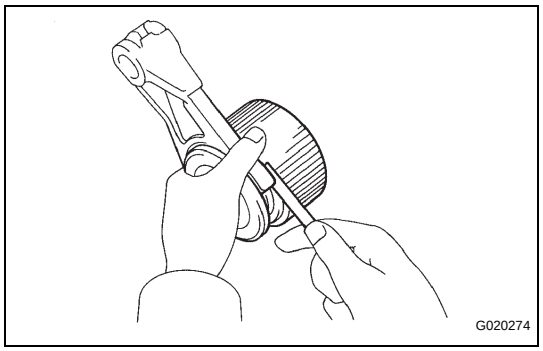

(c) Using a feeler gauge, measure the clearance between the shift fork and sleeve.
Maximum clearance:
0.15 to 0.35 mm (0.0059 to 0.0138 in.)

28. INSPECT DIFFERENTIAL PINION AND SIDE GEAR

(a) Check that there is no damage to the differential pinion and differential side gear.
If the differential pinion and/or differential side gear is damaged, replace the differential.

29. INSPECT DIFFERENTIAL CASE ASSEMBLY

(a) Check that the differential case is not damaged.
If the differential case is damaged, replace the differential case.

REASSEMBLY

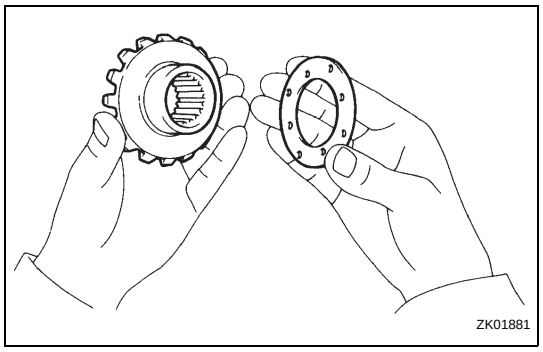

1. INSTALL DIFFERENTIAL CASE ASSEMBLY

(a) Install the rear differential side gear thrust washer onto the rear differential side gear.

(b) Install the rear differential pinion thrust washer and rear differential pinion onto the rear differential spider.

(c) Fix the differential case RH.

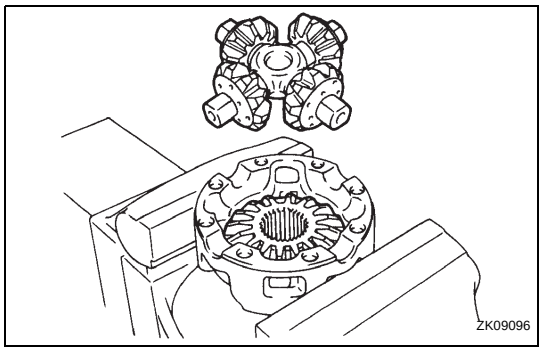

(d) Install the rear differential side gear and rear differential spider onto the differential case RH.

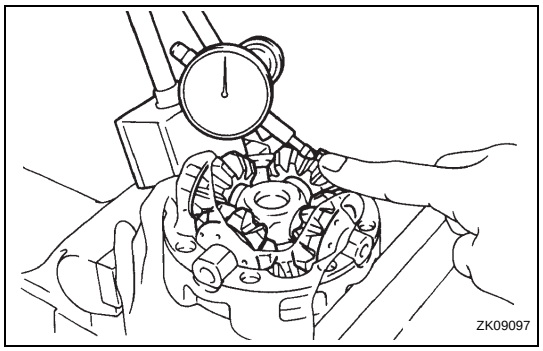

(e) Using a dial indicator, measure the differential case RH side backlash while holding the pinion toward the case.
Backlash:
0.05 to 0.20 mm (0.002 to 0.008 in.)

(f) Remove the rear differential spider from the differential case RH.

cardiagn.com

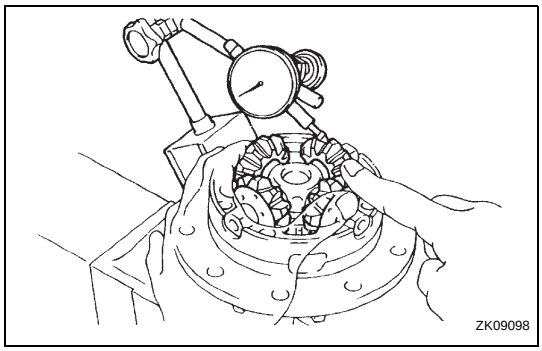

(g) Install the rear differential side gear and rear differential spider onto the differential case LH.
(h) Using a dial indicator, measure the differential case LH side backlash while holding the pinion toward the case.
Backlash:
0.05 to 0.20 mm (0.002 to 0.008 in.)
If the backlash is not within the specification, install 2 side gear thrust washers of a different thickness.
Thrust washer thickness

Thickness mm (in.)	Thickness mm (in.)
0.9 (0.0354)	1.2 (0.0472)
1.0 (0.0394)	1.3 (0.0512)
1.1 (0.0433)	-

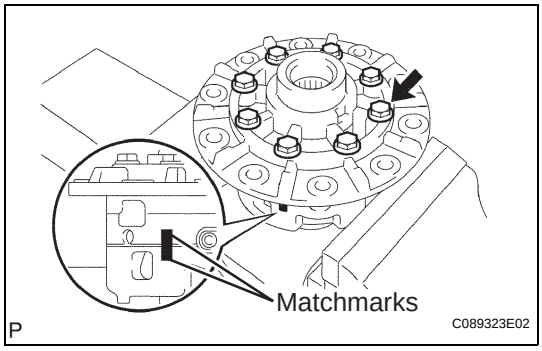

(i) Align the matchmarks and assemble the RH and LH cases.
(j) Using a plastic hammer, install the differential case.
(k) Install the 8 bolts.
Torque: 47 N*m (480 kgf*cm, 35 ft.*lbf)

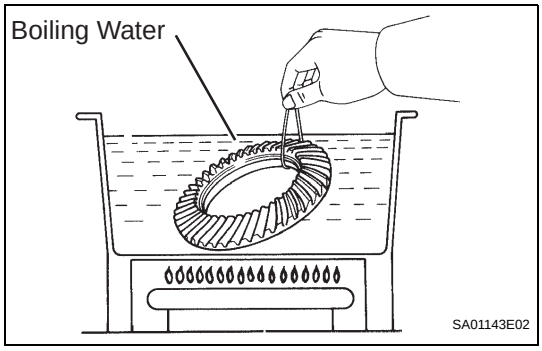

2. INSTALL DIFFERENTIAL RING GEAR
(a) Clean the contact surfaces of the differential case and ring gear.
(b) Heat the ring gear to approximately 100°C (212°F) in boiling water.
(c) Carefully take the ring gear out of the boiling water.
(d) After the moisture on the ring gear has completely evaporated, quickly install the ring gear onto the differential case.

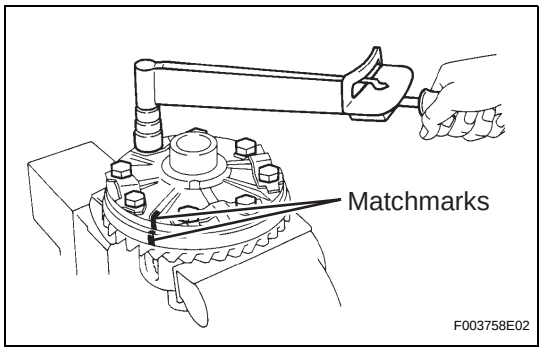

(e) Align the matchmarks on the ring gear and differential case.
(f) Temporarily install 5 new lock plates and 10 bolts.
(g) After the ring gear cools down sufficiently, torque the 8 bolts uniformly.
Torque: 97 N*m (985 kgf*cm, 71 ft.*lbf)
HINT:
Tighten the bolts in diagonal order little by little in several steps.

cardiagn.com

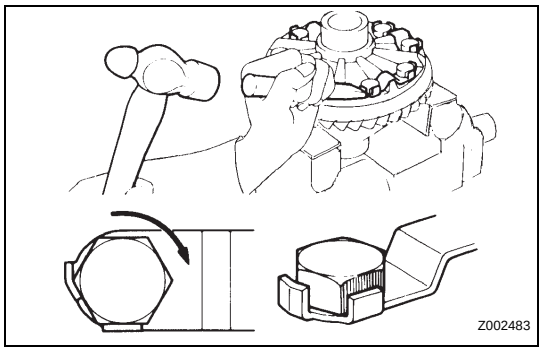

(h) Using a chisel and a hammer, stake the 5 lock plates.
HINT:
Stake one claw so that it is flush with the flat surface of the bolt.
For the claw in contact with the protruding portion of the bolt, stake only the half on the tightening side.

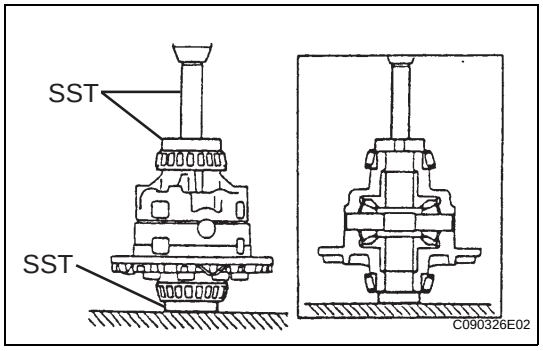

3. INSTALL REAR DIFFERENTIAL CASE BEARING

(a) Using SST and a press, install the bearing onto the differential case.
SST 09950-60010 (09951-00560, 09951-00570), 09950-70010 (09951-07150)

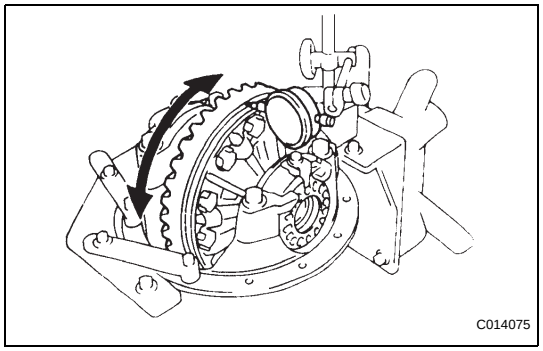

4. INSPECT DIFFERENTIAL RING GEAR RUNOUT

(a) Install the differential case onto the carrier, and install the 2 adjusting nuts so that there is no play in the bearing.
(b) Install the 2 bearing caps with the 4 bolts.
Torque: 85 N*m (870 kgf*cm, 63 ft.*lbf)
(c) Using a dial indicator, measure the runout of the ring gear.
Maximum runout:
0.07 mm (0.0028 in.)
(d) Remove the 2 bearing caps, 2 adjusting nuts and differential case.

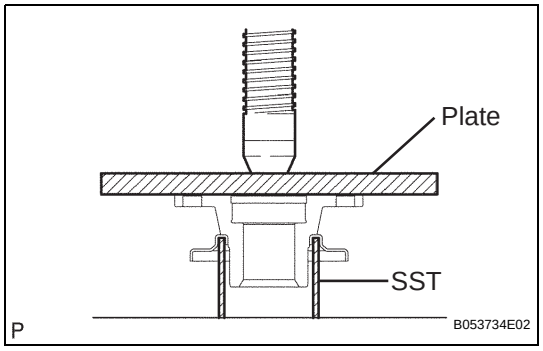

5. INSTALL REAR DIFFERENTIAL DUST DEFLECTOR

(a) Using a press, install the dust deflector.
NOTICE:
Be careful not to damage the dust deflector.
SST 09636-20010

cardiagn.com

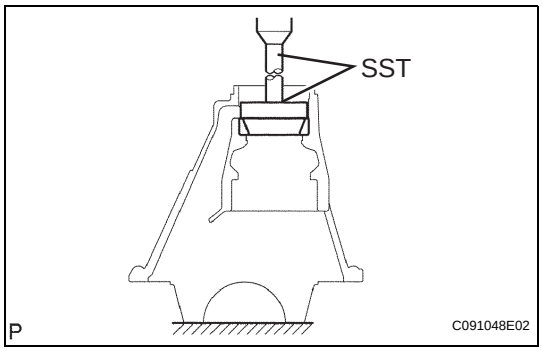

6. INSTALL REAR DRIVE PINION FRONT TAPERED ROLLER BEARING

(a) Using a brass bar and a hammer, install the oil storage ring.

(b) Using SST and a press, install the tapered roller bearing onto the carrier.
SST 09316-60011 (09316-00011, 09316-00021)

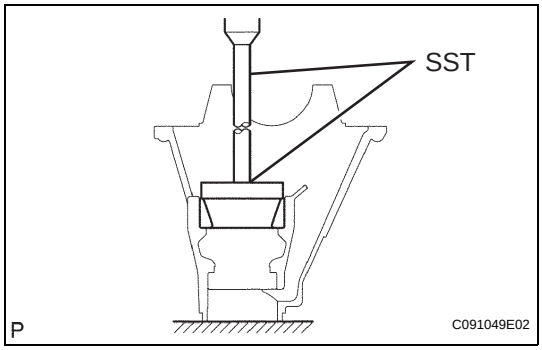

7. INSTALL REAR DRIVE PINION REAR TAPERED ROLLER BEARING

(a) Using SST and a press, install the tapered roller bearing onto the carrier.
SST 09316-60011 (09316-00041, 09316-00011)

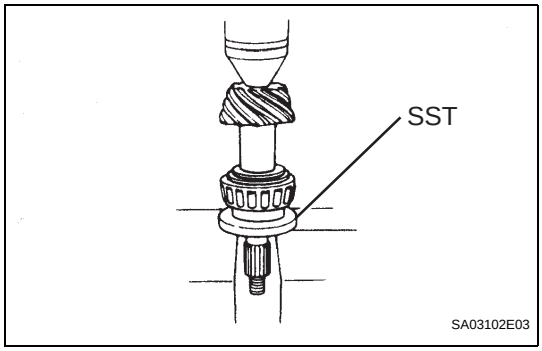

8. INSTALL REAR DRIVE PINION REAR TAPERED ROLLER BEARING

(a) Install the plate washer onto the drive pinion.

(b) Using SST and a press, install the tapered roller bearing onto the drive pinion.
SST 09506-30012

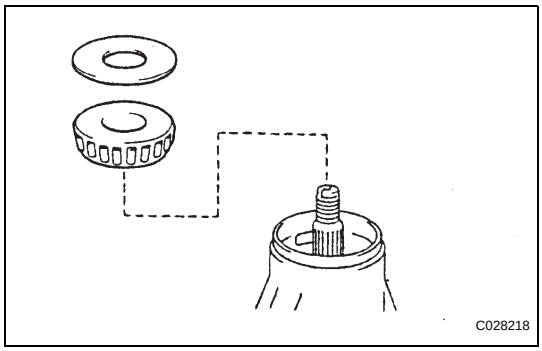

9. ADJUST DIFFERENTIAL DRIVE PINION PRELOAD

(a) Install the drive pinion, rear drive pinion tapered roller bearing and rear differential drive oil slinger.
HINT:
Assemble the spacer and oil seal after adjusting the gear contact pattern.

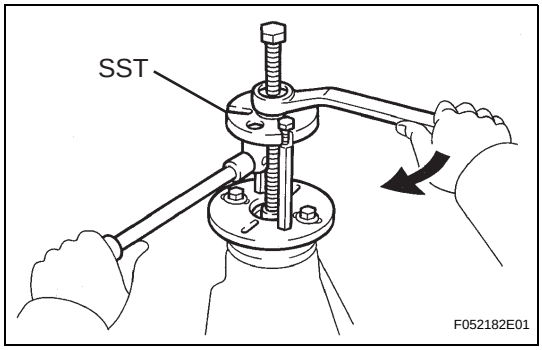

(b) Using SST, install the drive pinion companion flange.

(c) Coat the threads of the nut with hypoid gear oil LSD.
SST 09950-30012 (09951-03010, 09953-03010, 09954-03010, 09955-03030, 09956-03030)

cardiagn.com

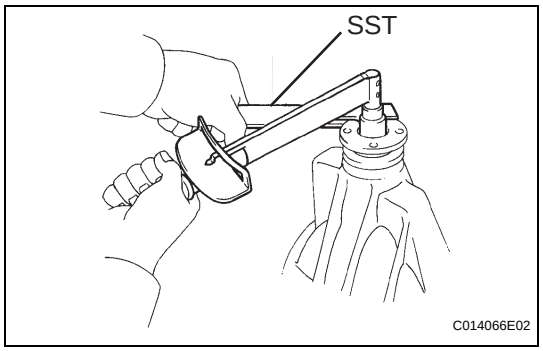

(d) Using SST to hold the drive pinion companion flange, tighten the nut.
Torque: 370 N*m (3,770 kgf*cm, 273 ft.*lbf) or less
SST 09330-00021
NOTICE:
- **As there is no spacer, tighten a little at a time, being careful not to overtighten it.**
- **Apply hypoid gear oil LSD to the nut.**

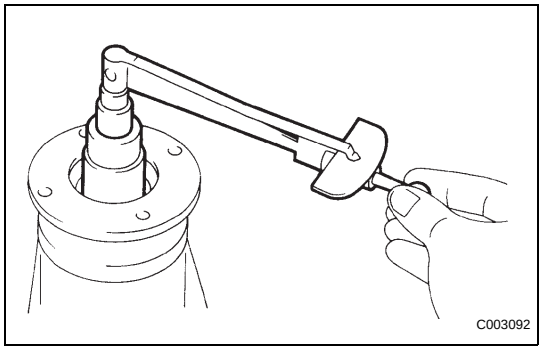

(e) Using a torque wrench, measure the preload.
Preload (at starting)

Bearing	Standard
New	1.05 to 1.64 N*m (10.7 to 16.7 kgf*cm, 9.3 to 14.5 in.*lbf)
Reused	0.56 to 0.85 N*m (5.7 to 8.7 kgf*cm, 4.9 to 7.5 in.*lbf)

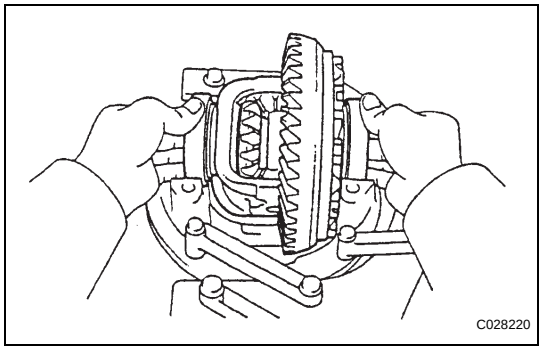

10. INSTALL DIFFERENTIAL CASE ASSEMBLY

(a) Place the 2 bearing outer races on their corresponding bearings.
HINT:
Make sure the right and left races are not interchanged.

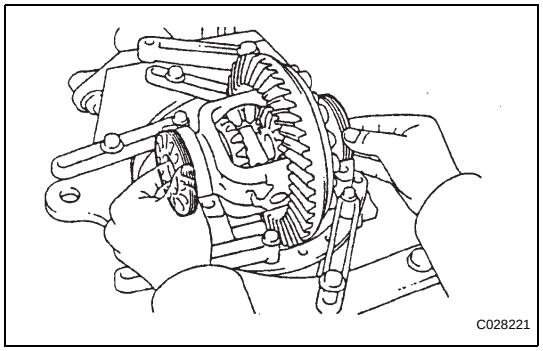

11. INSTALL REAR DIFFERENTIAL BEARING ADJUSTING NUT

(a) Install the 2 adjusting nuts into the carrier, making sure the nuts are threaded properly.

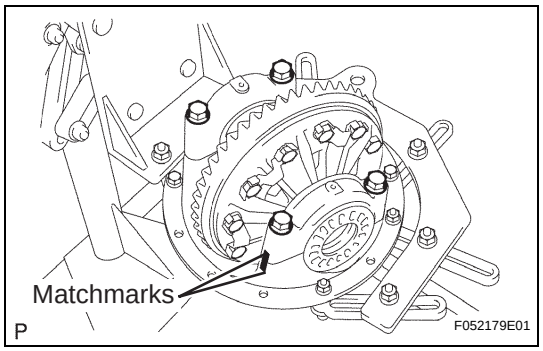

12. INSPECT AND ADJUST BACKLASH DIFFERENTIAL RING GEAR AND DIFFERENTIAL DRIVE PINION

(a) Align the matchmarks on the cap and carrier.
(b) Install the right and left bearing caps with the 4 bolts.
Torque: 85 N*m (870 kgf*cm, 63 ft.*lbf)
HINT:
If the bearing cap does not fit tightly on the carrier, the adjusting nuts are not threaded properly. Reinstall the adjusting nuts if necessary.

cardiagn.com

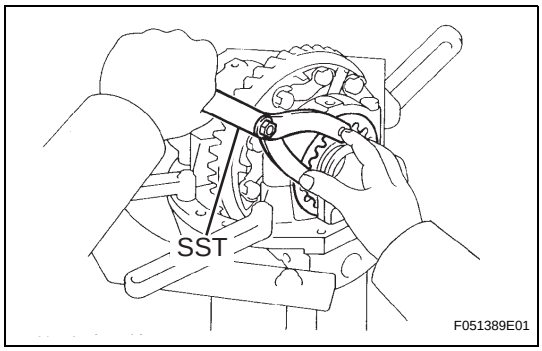

(c) Tighten the 4 bearing cap bolts to the specified torque, then loosen them to the point where the adjusting nuts can be turned by SST.
Torque: 85 N*m (870 kgf*cm, 63 ft.*lbf)

(d) Using the SST, tighten the adjusting nut on the ring gear side until the ring has a backlash of about 0.2 mm (0.008 in.).
SST 09960-10010 (09962-01000, 09963-00700)

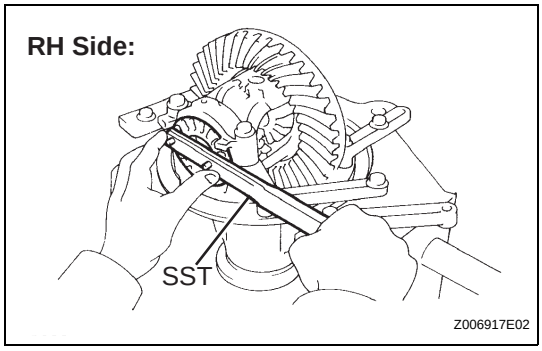

(e) While turning the ring gear, use the SST to fully tighten the adjusting nut on the drive pinion side. After the bearings have settled, loosen the adjusting nut on the drive pinion side.
SST 09504-00011

(f) Using SST, torque the adjusting nut 1 to 1.5 notches from the 0 preload position.

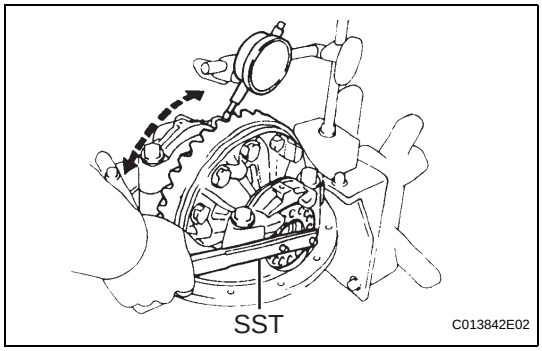

(g) Using a dial indicator, adjust the ring gear backlash until it is within the specification.
Backlash:
0.13 to 0.18 mm (0.0051 to 0.0071 in.)
HINT:
The backlash is adjusted by turning the left and right adjusting nuts for an equal amounts. For example, loosen the nut on the right side by one notch.

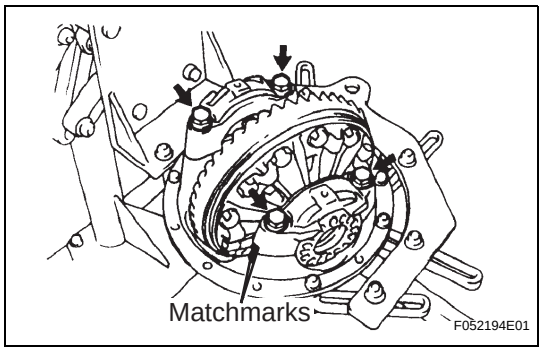

(h) Torque the bearing cap bolts.
Torque: 85 N*m (870 kgf*cm, 63 ft.*lbf)

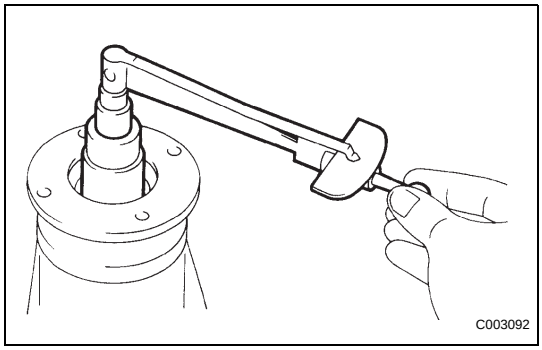

13. INSPECT TOTAL PRELOAD

(a) Using a torque wrench, measure the preload with the teeth of the drive pinion and ring gear in contact.
Total preload (at starting):
Drive pinion preload plus 0.39 to 0.59 N*m (4.0 to 6.0 kgf*cm, 3.5 to 5.2 in.*lbf)
If necessary, disassemble and inspect the differential.

cardiagn.com

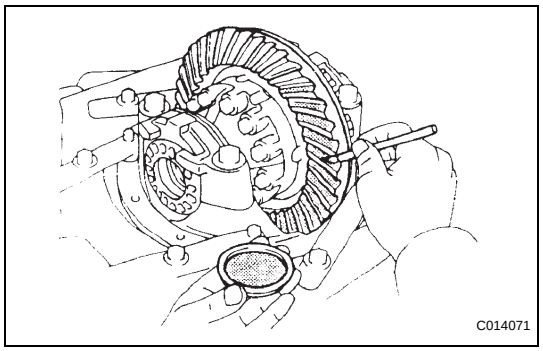

14. INSPECT TOOTH CONTACT BETWEEN RING GEAR AND DRIVE PINION

(a) Coat 3 or 4 teeth at 3 different positions on the ring gear with red lead primer.

(b) Hold the companion flange firmly and rotate the ring gear in both directions.

cardiagn.com

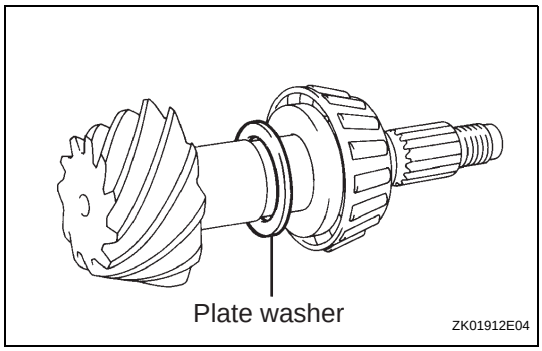

(c) Inspect the tooth contact pattern.

Driver Side:

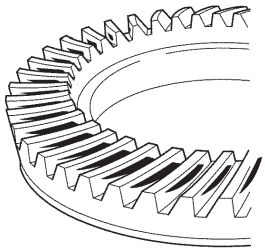

Proper Contact

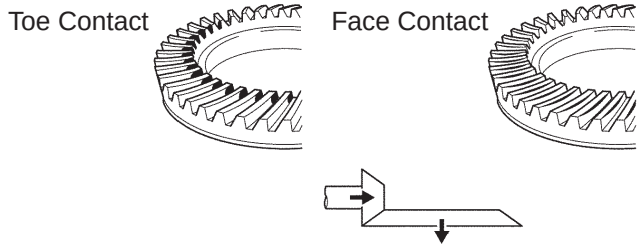

Select an adjusting washer that will bring the drive pinion closer to the ring gear.

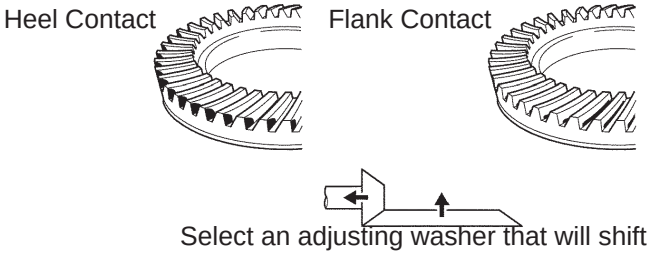

Select an adjusting washer that will shift the drive pinion away from the ring gear.

Coast Side:

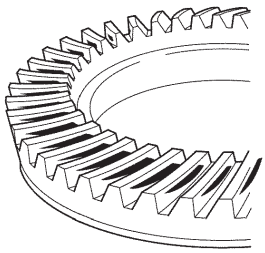

Proper Contact

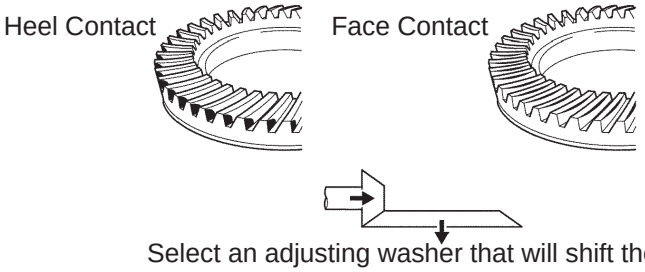

Select an adjusting washer that will shift the drive pinion closer to the ring gear.

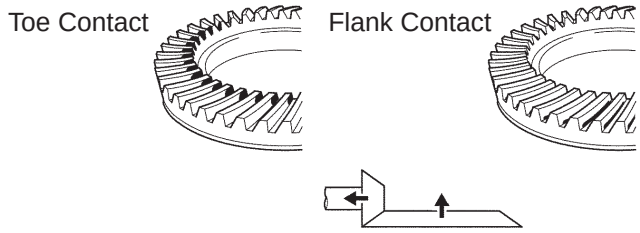

Select an adjusting washer that will bring the drive pinion away from the ring gear.

P

F052199E01

cardiagn.com

If the teeth are not engaged properly, use the following chart to select an appropriate washer for correction.

Plate Washer thickness

Thickness mm (in.)	Thickness mm (in.)
1.70 (0.0669)	2.03 (0.0799)
1.73 (0.0681)	2.06 (0.0811)
1.76 (0.0693)	2.09 (0.0823)
1.79 (0.0705)	2.12 (0.0835)
1.82 (0.0717)	2.15 (0.0847)
1.85 (0.0728)	2.18 (0.0853)
1.88 (0.0740)	2.21 (0.0870)
1.91 (0.0752)	2.24 (0.0882)
1.94 (0.0764)	2.27 (0.0894)
1.97 (0.0776)	2.30 (0.0906)
2.00 (0.0787)	2.33 (0.0917)

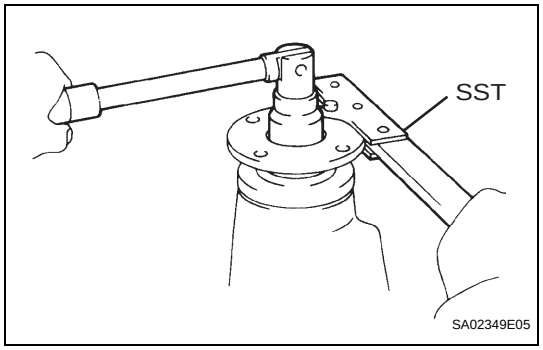

15. REMOVE REAR DRIVE PINION NUT

(a) Using SST to hold the drive pinion companion flange, remove the nut.

SST 09330-00021

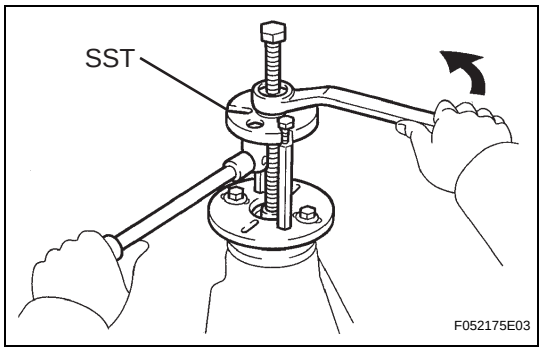

16. REMOVE REAR DRIVE PINION COMPANION FLANGE SUB-ASSEMBLY REAR

(a) Using SST, remove the drive pinion companion flange.

SST 09950-30012 (09951-03010, 09953-03010, 09954-03010, 09955-03030, 09956-03030)

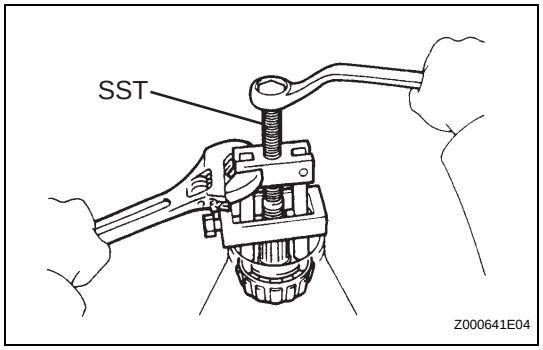

17. REMOVE REAR DRIVE PINION FRONT TAPERED ROLLER BEARING

(a) Using SST, remove the drive pinion tapered roller bearing from the drive pinion.

SST 09556-22010

cardiagn.com

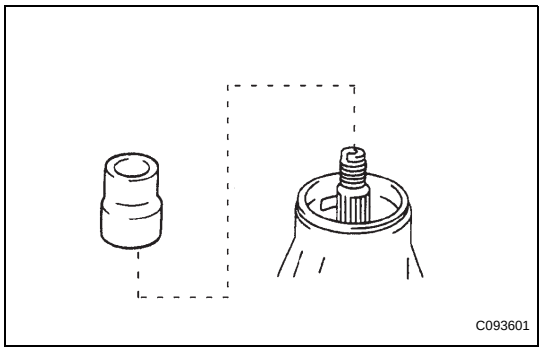

18. INSTALL REAR DIFFERENTIAL DRIVE PINION BEARING SPACER

(a) Install a new bearing spacer onto the drive pinion.

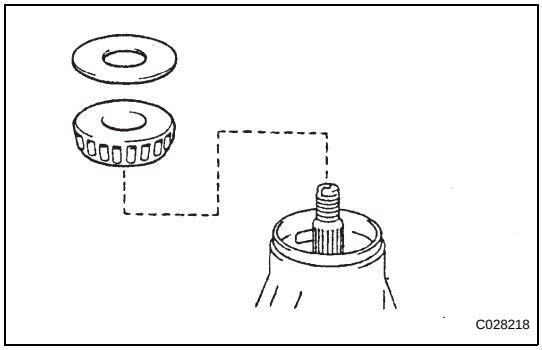

19. INSTALL REAR DRIVE PINION FRONT TAPERED ROLLER BEARING

(a) Install the drive pinion, rear drive pinion taper roller bearing and rear differential drive oil slinger.

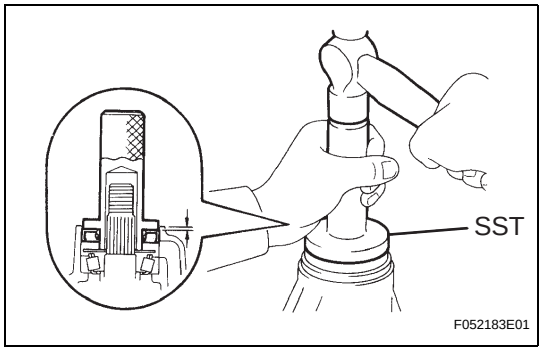

20. INSTALL REAR DIFFERENTIAL CARRIER OIL SEAL

(a) Apply MP grease to the oil seal lip.

(b) Using SST and a hammer, install a new carrier oil seal.

SST 09554-30011

Oil seal drive in depth:
0.55 to 1.45 mm (0.021 to 0.057 in.)

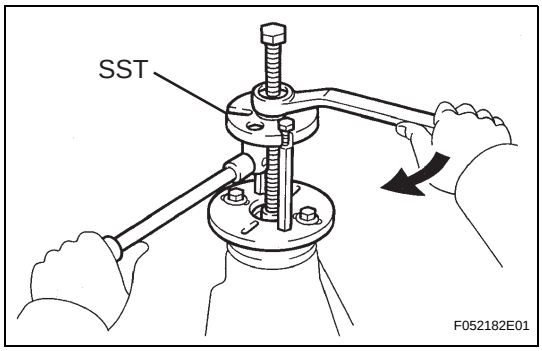

21. INSTALL REAR DRIVE PINION COMPANION FLANGE SUB-ASSEMBLY REAR

(a) Using SST, install the drive pinion companion flange onto the drive pinion.

SST 09950-30012 (09951-03010, 09953-03010, 09954-03010, 09955-03030, 09956-03030)

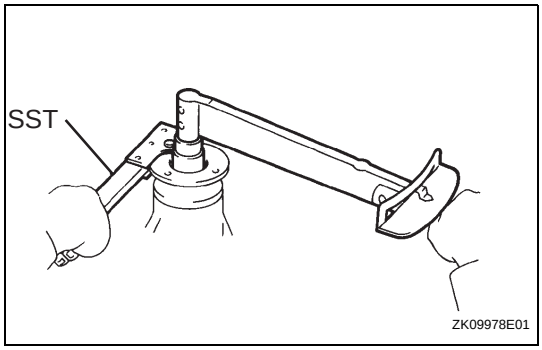

(b) Coat the threads of a new nut with hypoid gear oil LSD.

(c) Using SST to hold the flange, tighten the nut.

Torque: 370 N*m (3,770 kgf*cm, 273 ft.*lbf) or less

SST 09330-00021

cardiagn.com

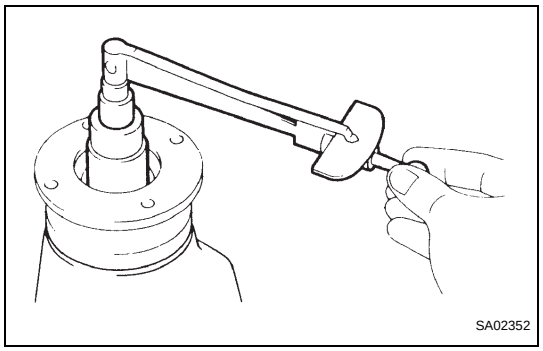

22. INSPECT DRIVE PINION PRELOAD

(a) Using a torque wrench, measure the preload of the backlash between the drive pinion and ring gear.
Preload (at starting)

Bearing	Standard
New	1.05 to 1.64 N*m (10.7 to 16.7 kgf*cm, 9.3 to 14.5 in.*lbf)
Reused	0.56 to 0.85 N*m (5.7 to 8.7 kgf*cm, 4.9 to 7.5 in.*lbf)

If the preload is greater than the specification, replace the bearing spacer.
If the preload is less than the specification, retighten the nut to 13 N*m (130 kgf*cm, 9 ft*lbf) of torque at a time until the specified preload is reached.
Torque: 370 N*m (3,770 kgf*cm, 27 ft.*lbf) or less
If the maximum torque is exceeded while retightening the nut, replace the bearing spacer and repeat the preload adjusting procedure. Do not loosen the pinion nut to reduce the preload.

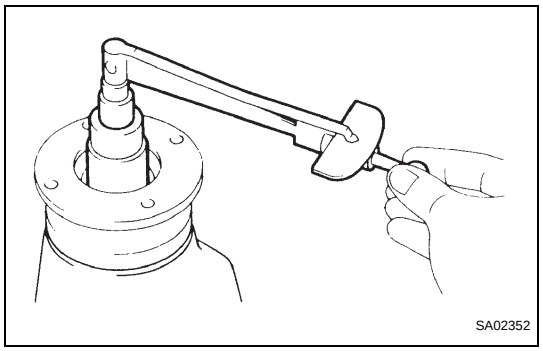

23. INSPECT TOTAL PRELOAD

(a) Using a torque wrench, measure the preload.
Total preload (at starting):
Drive pinion preload plus 0.39 to 0.59 N*m (4.0 to 6.0 kgf*cm, 3.5 to 5.2 in.*lbf)
If necessary, disassemble and inspect the differential.

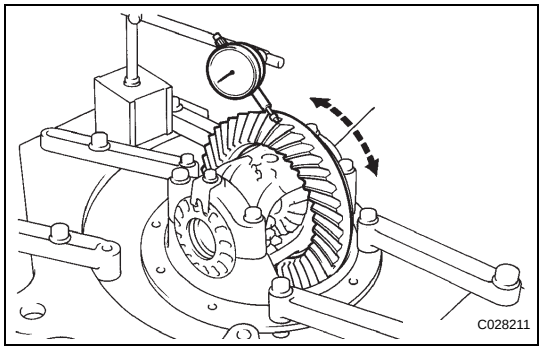

24. INSPECT DIFFERENTIAL RING GEAR BACKLASH

(a) Using a dial indicator, check the backlash of the ring gear.
Backlash:
0.13 to 0.18 mm (0.0051 to 0.0071 in.)
If the backlash is not within the specification, adjust or repair the side bearing preload as necessary.

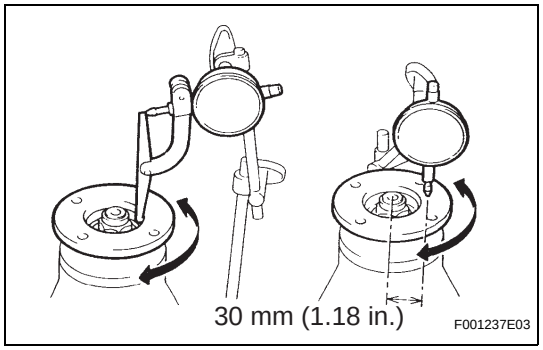

25. INSPECT RUNOUT OF REAR DRIVE PINION COMPANION FLANGE SUB-ASSEMBLY REAR

(a) Using a dial indicator, measure the runout of the drive pinion companion flange vertically and horizontally.
Maximum runout:
Vertical runout: 0.10 mm (0.0039 in.)
Lateral runout: 0.10 mm (0.0039 in.)
If the runouts are not within the specifications, replace the companion flange.

cardiagn.com

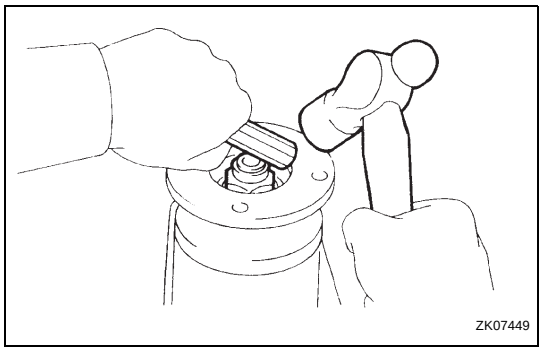

26. INSTALL REAR DRIVE PINION NUT

(a) Using a chisel and hammer, stake the drive pinion nut.

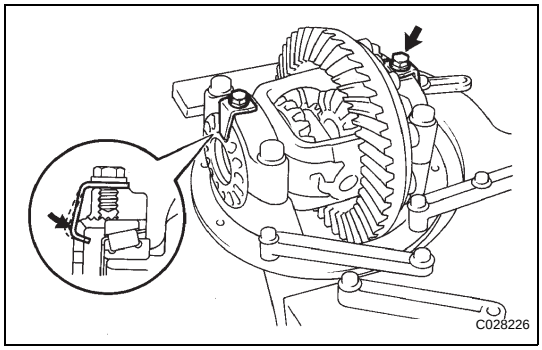

27. INSTALL REAR DIFFERENTIAL BEARING ADJUSTING NUT LOCK

(a) Install 2 new adjust locks onto the bearing caps.
Torque: 13 N*m (129 kgf*cm, 9 ft.*lbf)

(b) After tightening the bolts, bend the nut locks.

DF

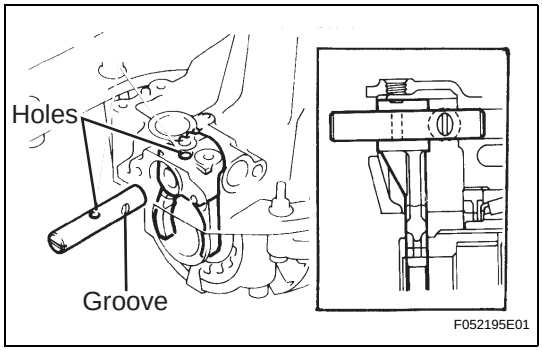

28. INSTALL REAR DIFFERENTIAL LOCK SHIFT FORK

(a) Apply MP grease onto the outer circuit of the shaft.

(b) Install the fork shaft to align the hole of the shift fork with that of the shift fork shaft.

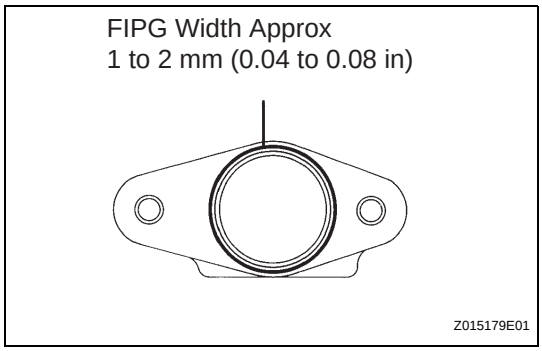

(c) Remove any FIPG material and be careful not to drop the oil shaft retainer.

(d) Apply FIPG to the carrier, as shown in the illustration.
FIPG:
Part No. 08826-00090, THREE BOND 1281 or equivalent
HINT:
Install the shaft retainer within 10 minutes of applying FIPG.

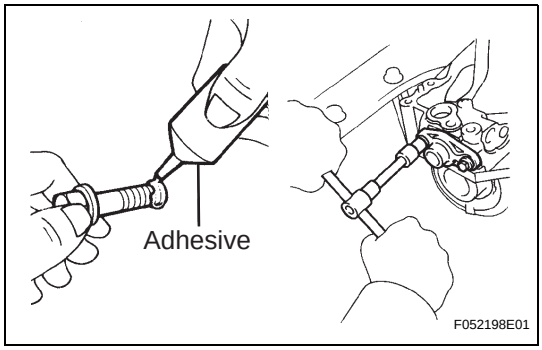

(e) Clean the threads of the bolts and retainer bolts holes with toluene or trichorethyene.

(f) Apply adhesive to 2 or 3 threads of each mount bolt end.
Adhesive:
Part No. 08833-00080, THREE BOND 1344, LOCTITE: 242 or equivalent

(g) Tighten the shaft retainer with the 2 bolts.
Torque: 24 N*m (240 kgf*cm, 17 ft.*lbf)

cardiagn.com

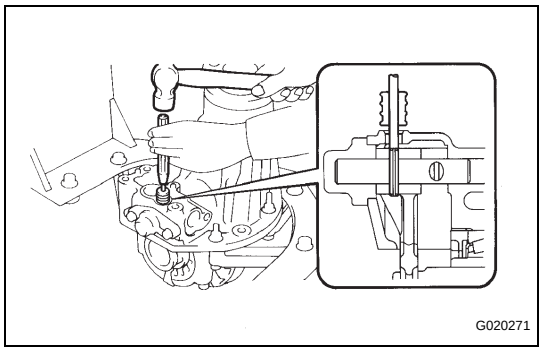

(h) Using a 5 mm pin punch and hammer, install the slotted spring pin onto the shift fork.
Torque: 22 N*m (220 kgf*cm, 16 ft.*lbf)

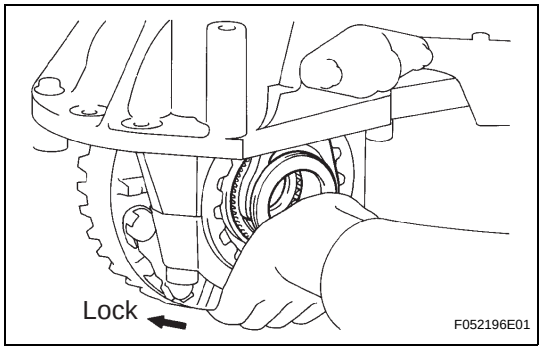

(i) Push the differential lock sleeve in deeply and hold it in position.

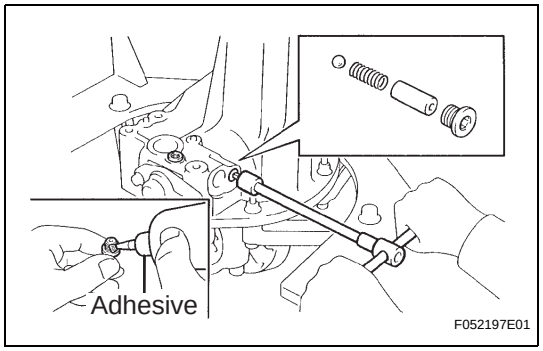

(j) Install the ball, spring and spring seat.
(k) Clean the threads of 2 plugs and plug holes with toluene or trichlorethylene.
Adhesive:
Part No. 08833-00080, THREE BOND 1344, LOCTITE: 242 or equivalent
(l) Using a 6 mm hexagon wrench, install and tighten the screw plugs.

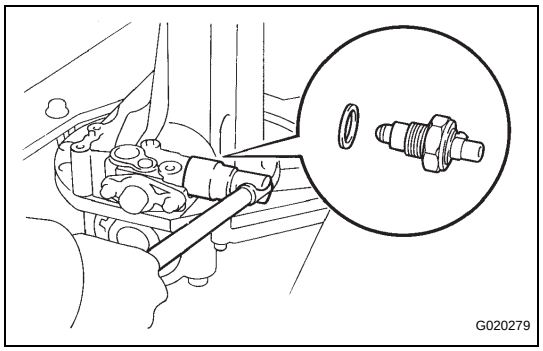

29. INSTALL NO.1 TRANSFER INDICATOR SWITCH
(a) Install the indicator switch with a new gasket.
Torque: 40 N*m (410 kgf*cm, 30 ft.*lbf)

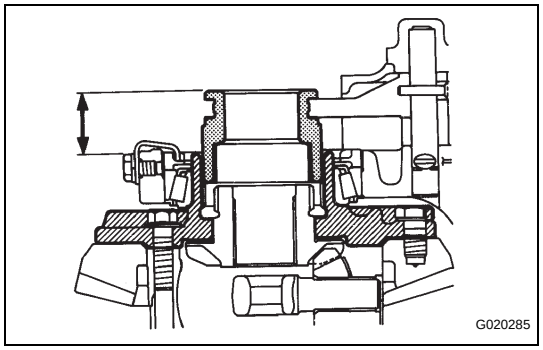

30. INSPECT REAR DIFFERENTIAL LOCK SLEEVE
(a) Measure the distance between the sleeve and tip of the differential case when the differential is FREE and LOCKED respectively.
Standard distance:
LOCKED: 17.44 to 18.86 mm (0.6866 to 0.7425 in.)
FREE: 32.40 to 33.90 mm (1.2756 to 1.3346 in.)

cardiagn.com

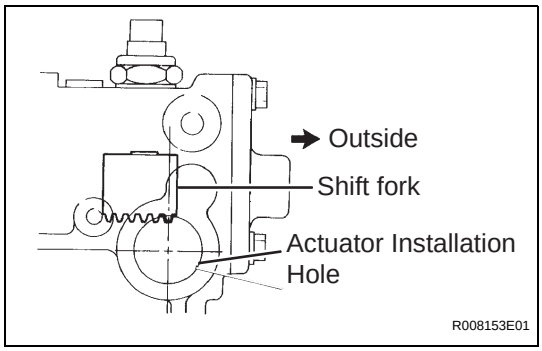

31. INSTALL DIFFERENTIAL LOCK SHIFT ACTUATOR

(a) Check that the outermost rack tooth of the shift fork is virtually above the center line of the actuator installation hole.

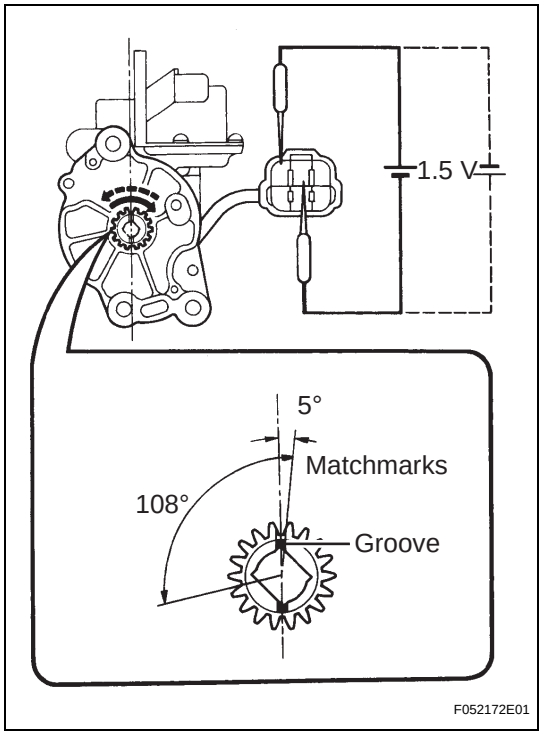

(b) Ensure that the matchmarks on the pinion of the actuator are in the range between 0 and 5 degrees clockwise above the center line of the actuator.
NOTICE:
- **If the matchmarks are not within this range, rotate the pinion.**
- **Dont supply the battery positive voltage directly between terminals.**
- **If the matchmarks come to the limit of rotation, dont apply the electric current.**

(c) Install a new O-ring onto the actuator.
(d) Apply a light coat of gear oil to the O-ring.
(e) Apply MP grease to the gear part.

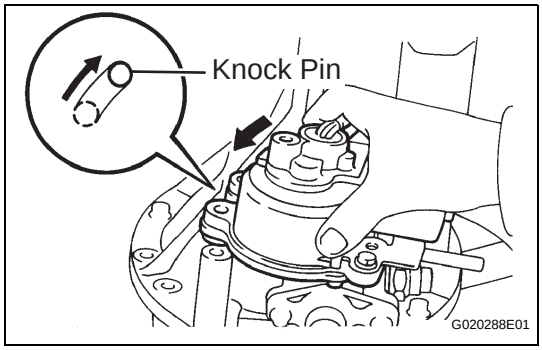

(f) Ensure that the outermost rack tooth of the shift fork fits the matchmarks on the pinion of the actuator.
(g) Install the actuator so that the long hole on the actuator side fits into the knock pin on the carrier side.
HINT:
Dont damage the O-ring of the actuator.
(h) Align the actuator with the long hole and rotate the actuator counterclockwise when the knock pin is set to the right-hand side.
(i) Install and tighten the bolts.
Torque: 27 N*m (275 kgf*cm, 20 ft.*lbf)

DF

cardiagn.com