REMOVAL

1. **DISCONNECT CABLE FROM NEGATIVE BATTERY TERMINAL**
2. **REMOVE FRONT WHEELS**
3. **REMOVE NO.2 ENGINE UNDER COVER SUB-ASSEMBLY**
   (a) Remove the 4 bolts and No. 2 engine under cover sub-assembly.
4. **REMOVE NO.1 ENGINE UNDER COVER SUB-ASSEMBLY**
   (a) Remove the 4 bolts and No. 1 engine under cover sub-assembly.
5. **DRAIN DIFFERENTIAL OIL (See page DF-8)**
6. **REMOVE FRONT PROPELLER SHAFT ASSEMBLY (See page PR-16)**
7. **REMOVE FRONT AXLE HUB LH NUT (See page DS-3)**
8. **REMOVE FRONT AXLE HUB RH NUT**
   HINT:
   Use the same procedure as for the LH side.
9. **SEPARATE FRONT STABILIZER LINK ASSEMBLY LH (See page SP-50)**
10. **SEPARATE FRONT STABILIZER LINK ASSEMBLY RH (See page SP-50)**
11. **SEPARATE FRONT SPEED SENSOR LH (See page BC-303)**
12. **SEPARATE FRONT SPEED SENSOR RH**
    HINT:
    Use the same procedure as for the LH side.
13. **SEPARATE TIE ROD END SUB-ASSEMBLY LH (See page PS-54)**
14. **SEPARATE TIE ROD END SUB-ASSEMBLY RH (See page PS-54)**
15. **REMOVE FRONT SUSPENSION LOWER ARM LH (See page DS-4)**
16. **REMOVE FRONT SUSPENSION LOWER ARM RH**
    HINT:
    Use the same procedure as for the LH side.
17. **REMOVE FRONT DRIVE SHAFT ASSEMBLY LH (See page DS-4)**
18. **REMOVE FRONT DRIVE SHAFT ASSEMBLY RH**
    HINT:
    Use the same procedure as for the LH side.
    SST 09628-62011

cardiagn.com

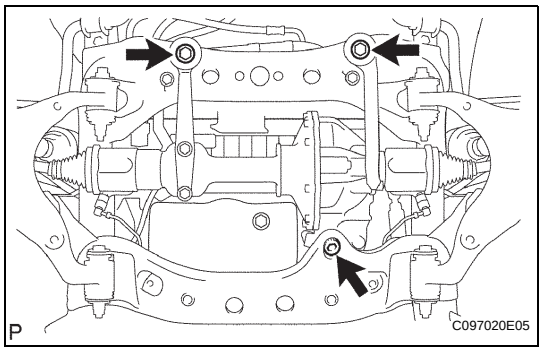

19. REMOVE FRONT DIFFERENTIAL CARRIER ASSEMBLY

(a) Remove the bolt and separate the front differential breather tube bracket.
(b) Support the front differential with a jack.
(c) Remove the front differential mount nut No. 1.
(d) Remove the 2 front mounting bolts and 2 nuts.
(e) Disconnect the actuator hose and connector.
(f) Lower the jack and remove the front differential assembly.
(g) Remove the 2 bolts and No. 3 front differential support.
(h) Remove the 5 bolts and 2 front differential supports.

DISASSEMBLY

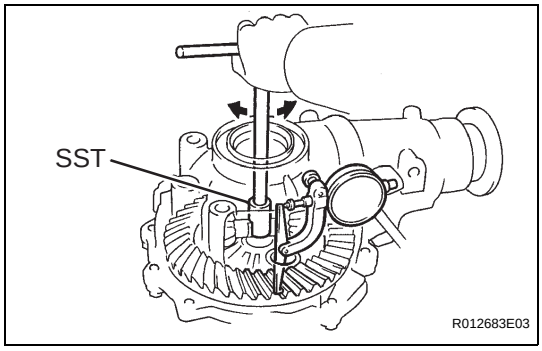

1. INSPECT BACKLASH DIFFERENTIAL RING GEAR AND DIFFERENTIAL DRIVE PINION

(a) Using SST and a dial indicator, measure the ring gear backlash.
SST 09564-32011
Backlash:
0.11 to 0.21 mm (0.0043 to 0.0083 in.)
If the backlash is not within the specification, adjust or repair the side bearing preload as necessary.

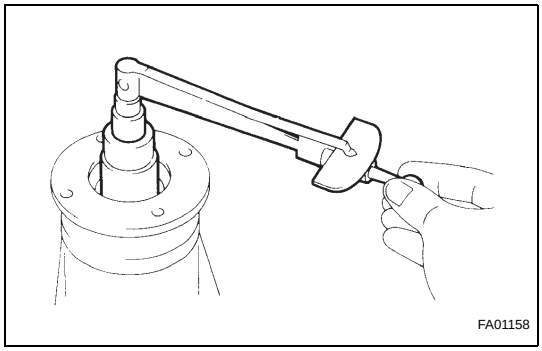

2. INSPECT DIFFERENTIAL DRIVE PINION PRELOAD

(a) Using a torque wrench, measure the preload of the backlash between the drive pinion and ring gear.
Torque: 0.49 to 0.78 N*m (5 to 8 kgf*cm, 4.3 to 6.9 in.*lbf)
If necessary, disassemble and inspect the differential assembly.

3. INSPECT TOTAL PRELOAD

(a) Using a torque wrench, measure the preload with the teeth of the drive pinion and ring gear in contact.
Total preload (at starting):
Drive pinion preload plus 0.22 to 0.88 N*m (2.2 to 8.8 kgf*cm, 2.0 to 7.8 in.*lbf)
If necessary, disassemble and inspect the differential.

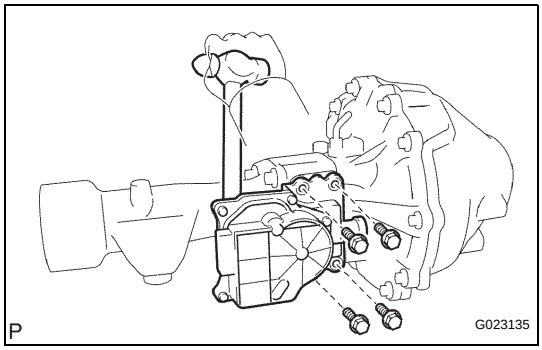

4. REMOVE DIFFERENTIAL VACUUM ACTUATOR ASSEMBLY

(a) Remove the 4 bolts.
(b) Using a hammer handle, remove the actuator assembly.

cardiagn.com

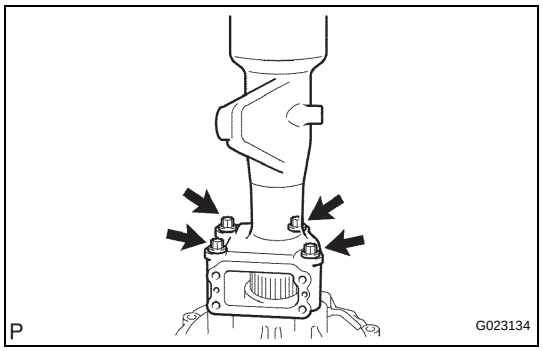

5. REMOVE FRONT DIFFERENTIAL TUBE ASSEMBLY

(a) Remove the 4 bolts.

(b) Using a plastic hammer, remove the differential tube.

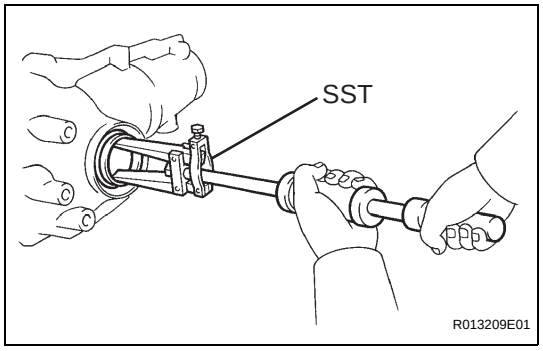

6. REMOVE DIFFERENTIAL SIDE GEAR SHAFT OIL SEAL

(a) Using SST, remove the oil seal.
SST 09308-00010

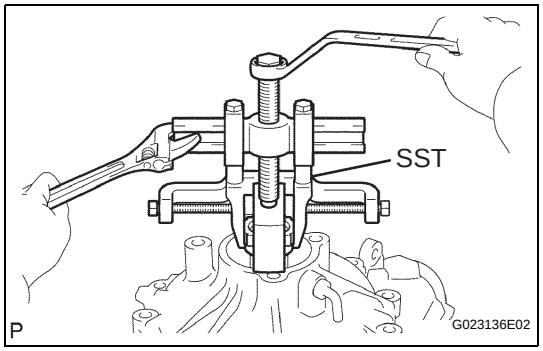

7. REMOVE DIFFERENTIAL SIDE GEAR INTER SHAFT SUB-ASSEMBLY

(a) Using SST, remove the side gear inter shaft.
SST 09350-20015 (09369-20040), 09950-40011 (09951-04010, 09952-04010, 09953-04020, 09954-04010, 09955-04011, 09957-04010, 09958-04011)

(b) Remove the snap ring from the side gear inter shaft.

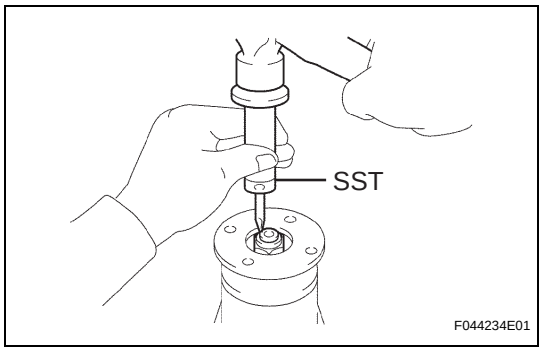

8. REMOVE FRONT DRIVE PINION COMPANION FLANGE SUB-ASSEMBLY

(a) Using SST and a hammer, remove the nut.
SST 09930-00010

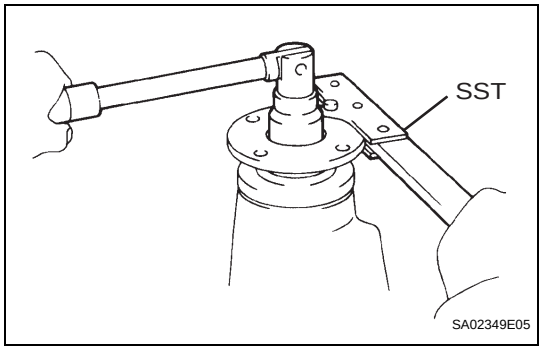

(b) Using SST to hold the companion flange, remove the nut.
SST 09330-00021

cardiagn.com

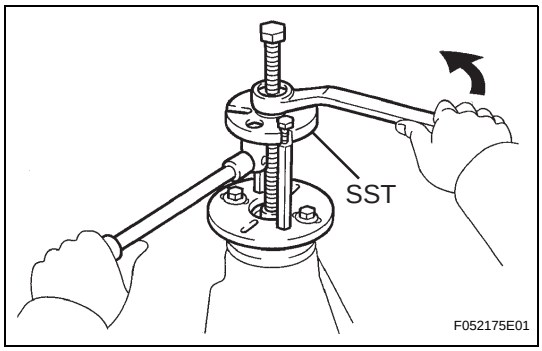

(c) Using SST, remove the companion flange.
SST 09950-30012 (09951-03010, 09953-03010, 09954-03010, 09955-03030, 09956-03020)

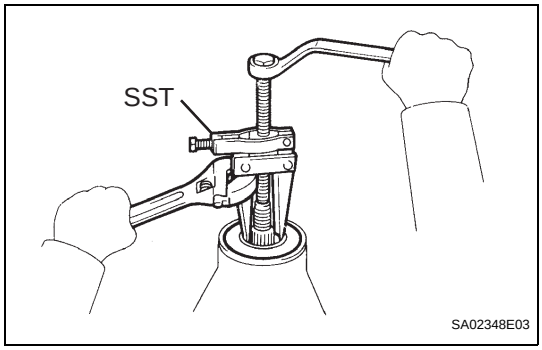

9. REMOVE FRONT DIFFERENTIAL CARRIER OIL SEAL

(a) Using SST, remove the oil seal from the differential carrier assembly.
SST 09308-10010

10. REMOVE FRONT DIFFERENTIAL DRIVE PINION OIL SLINGER

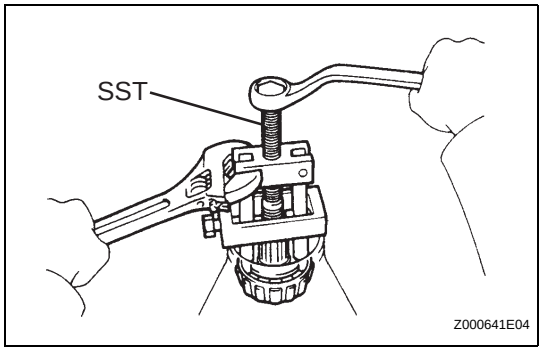

11. REMOVE FRONT DRIVE PINION REAR TAPERED ROLLER BEARING

(a) Using SST, remove the rear bearing from the drive pinion.
SST 09556-22010

(b) Remove the bearing spacer.

12. REMOVE DIFFERENTIAL SIDE BEARING RETAINER

(a) Using a screwdriver, remove the union.

(b) Remove the 10 bolts and tap out the side bearing retainer with a plastic hammer.

13. REMOVE DIFFERENTIAL CASE ASSEMBLY

14. REMOVE DIFFERENTIAL DRIVE PINION

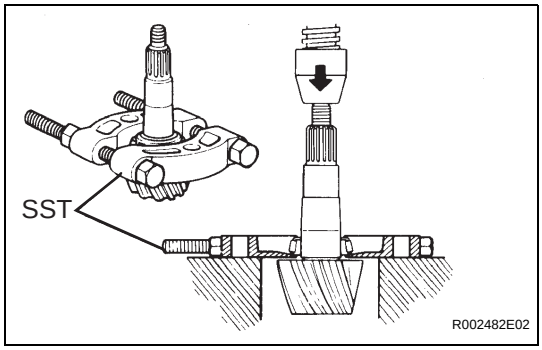

15. REMOVE FRONT DRIVE PINION FRONT TAPERED ROLLER BEARING

(a) Using SST and a press, remove the front bearing and washer from the drive pinion.
SST 09950-00020
HINT:
If the drive gear or ring gear is damaged, replace them as a set.

DF

cardiagn.com

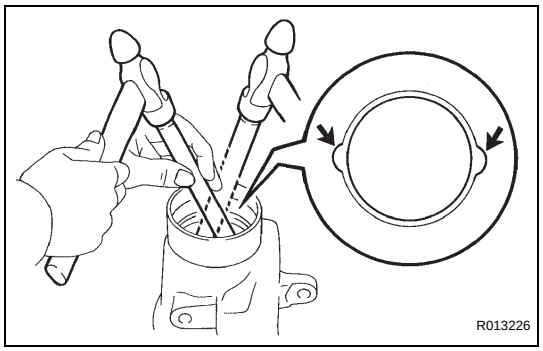

16. REMOVE FRONT BEARING OUTER RACE

(a) Using a brass bar and a hammer, remove the front bearing outer race.

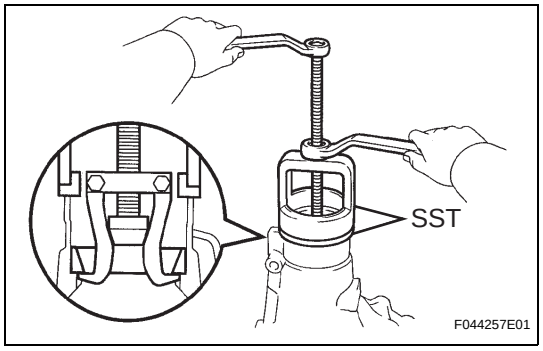

17. REMOVE REAR BEARING OUTER RACE

(a) Using SST, remove the rear bearing outer race.
SST 09502-12010, 09612-65014 (09612-01020, 09612-01050)

(b) Using a brass bar and a hammer, remove the oil storage ring.

18. REMOVE FRONT DIFFERENTIAL SIDE BEARING RETAINER DEFLECTOR

(a) Using a brass bar and hammer, remove the side bearing retainer deflector by tapping it gently.

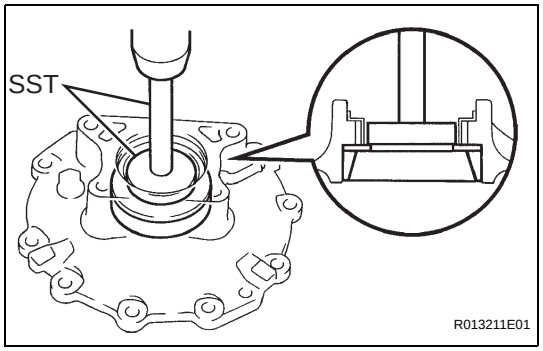

19. REMOVE SIDE BEARING OUTER RACE

HINT:
- Measure the plate washer and note its thickness.
- Tag the bearing outer races to show the location for reassembly.

(a) Using SST and a press, remove the outer race and plate washer from the bearing retainer.
SST 09950-60020 (09951-00680), 09950-70010 (09951-07150)

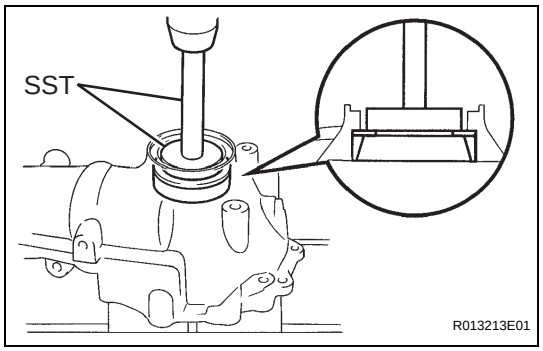

(b) Using SST and a press, remove the outer race and plate washer from the differential carrier assembly.
SST 09950-60020 (09951-00680), 09950-70010 (09951-07150)

20. REMOVE DIFFERENTIAL RING GEAR

(a) Place matchmarks on the ring gear and differential case assembly.

(b) Remove the 10 bolts.

(c) Using a plastic hammer, tap on the ring gear to separate it from the differential case assembly.

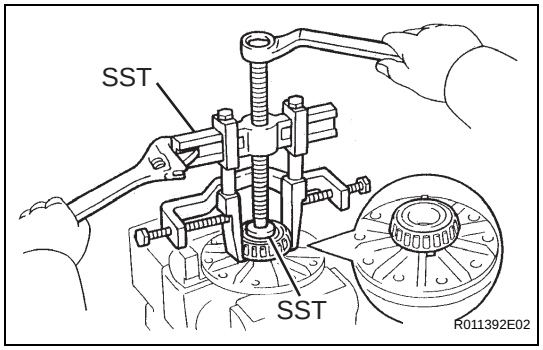

21. REMOVE FRONT DIFFERENTIAL CASE BEARING

(a) Using SST, remove the 2 differential case bearings from the differential case assembly.
SST 09950-60010 (09951-00390), 09950-40011 (09951-04020, 09952-04010, 09953-04030, 09954-04010, 09955-04061, 09957-04010, 09958-04011)

HINT:
Fix the claws of SST into the notch in the differential case assembly.

cardiagn.com

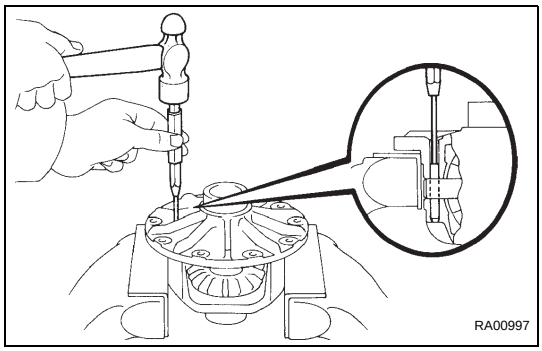

22. DISASSEMBLE DIFFERENTIAL CASE

(a) Using a pin punch and a hammer, remove the straight pin.

(b) Remove these parts from the differential case assembly.

(1) 2 Differential side gears
(2) 2 Differential side gear thrust washers
(3) Differential pinion shaft
(4) 2 Differential pinion gears
(5) 2 Differential pinion gear thrust washers

23. INSPECT DIFFERENTIAL GEAR KIT

(a) Check that there is no damage to the pinion gear and side gear.
If the pinion gear and/or side gear is damaged, replace the differential gear kit.

24. INSPECT FRONT DIFFERENTIAL CASE

(a) Check that the differential case assembly is not damaged.
If the differential case assembly is damaged, replace it.

DF

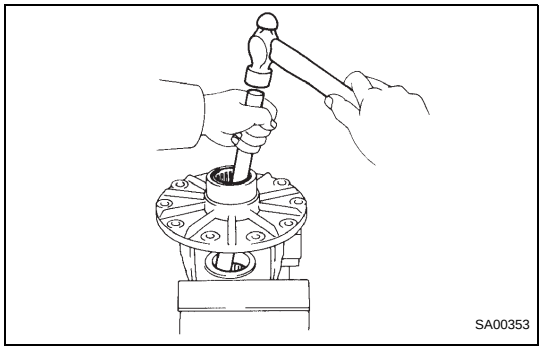

25. REMOVE FRONT DIFFERENTIAL SIDE GEAR NEEDLE ROLLER BEARING

(a) Using a brass bar and hammer, remove the 2 bearings.

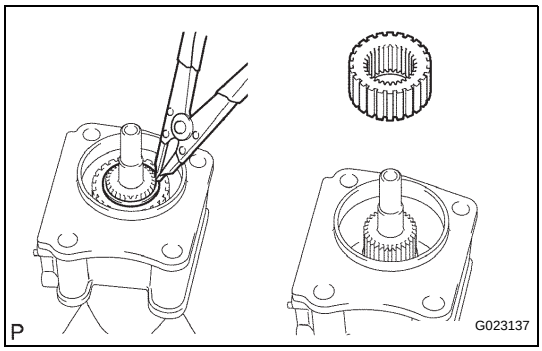

26. REMOVE DIFFERENTIAL CLUTCH HUB

(a) Using a snap ring expander, remove the snap ring.

(b) Remove the differential clutch hub.

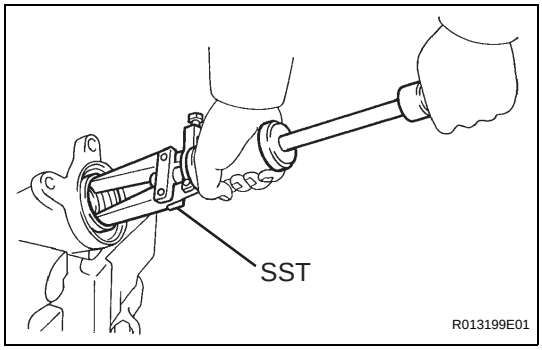

27. REMOVE DIFFERENTIAL SIDE GEAR SHAFT OIL SEAL

(a) Using SST, remove the oil seal from the differential tube.
SST 09308-00010

cardiagn.com

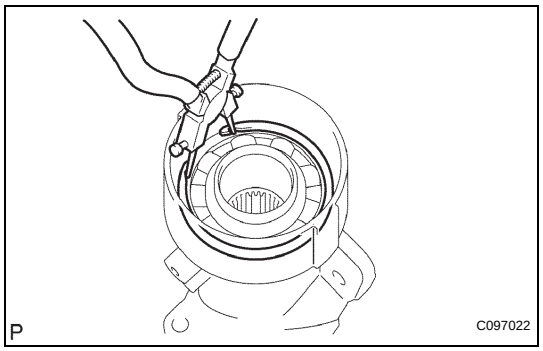

28. REMOVE DIFFERENTIAL SIDE GEAR SHAFT SUB-ASSEMBLY RH

(a) Using a snap ring expander, remove the snap ring.

(b) Remove the side gear shaft from the differential tube.

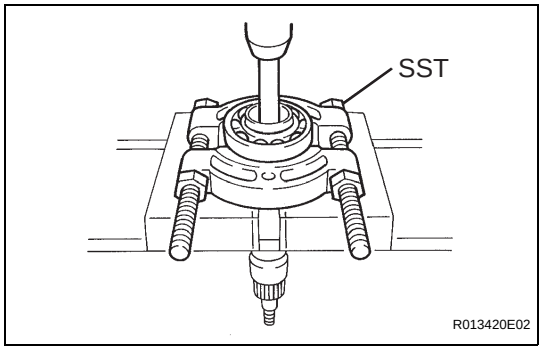

29. REMOVE FRONT DIFFERENTIAL SIDE GEAR SHAFT RH BEARING

(a) Using a snap ring expander, remove the snap ring.

(b) Using SST, a brass bar and a press, remove the bearing.

SST 09950-00020

NOTICE:

Do not damage the bearing.

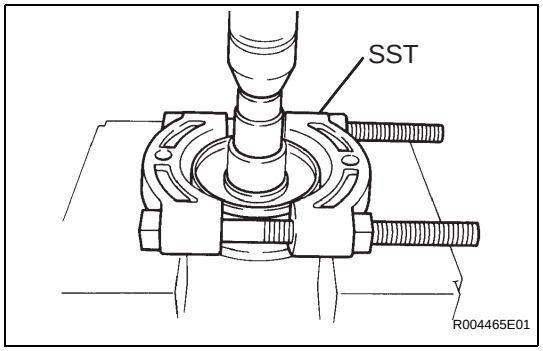

30. REMOVE FRONT DIFFERENTIAL DUST DEFLECTOR

(a) Using SST, a socket wrench and a press, remove the dust deflector.

SST 09950-00020

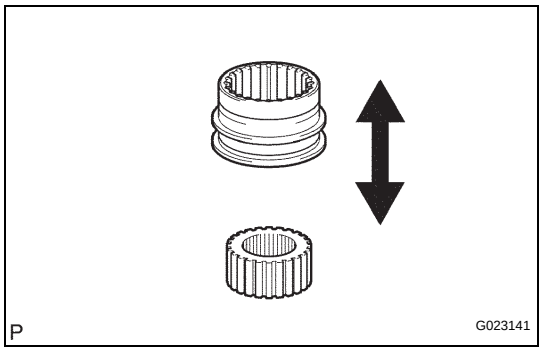

31. REMOVE DIFFERENTIAL CLUTCH SLEEVE AND DIFFERENTIAL CLUTCH HUB

(a) Check for wear and damage to the clutch hub and clutch sleeve.
If necessary, replace them.

(b) Check that the clutch sleeve slides smoothly on the clutch hub.

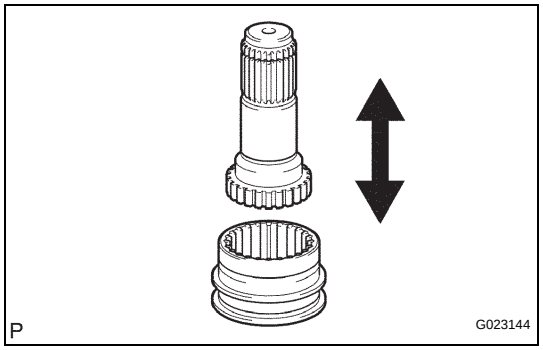

32. INSPECT DIFFERENTIAL CLUTCH SLEEVE AND CLUTCH SLEEVE FORK CLEARANCE

(a) Check for wear and damage to the clutch hub and side gear inter shaft.

(b) Check that the clutch sleeve slides smoothly on the side gear inter shaft.

cardiagn.com

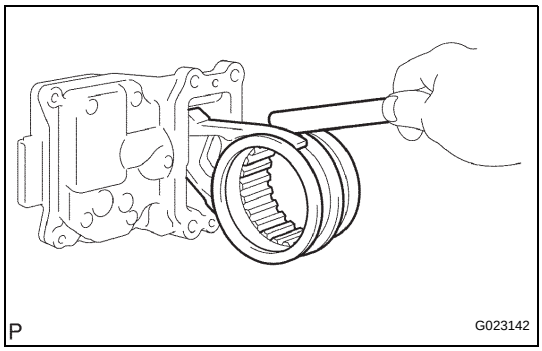

33. INSPECT DIFFERENTIAL CLUTCH SLEEVE AND CLUTCH SLEEVE FORK CLEARANCE

(a) Using a feeler gauge, measure the clearance between the sleeve fork and clutch sleeve.
Maximum clearance:
0.35 mm (0.0138 in.)
If the clearance exceeds the maximum, replace the fork or clutch sleeve.

REASSEMBLY

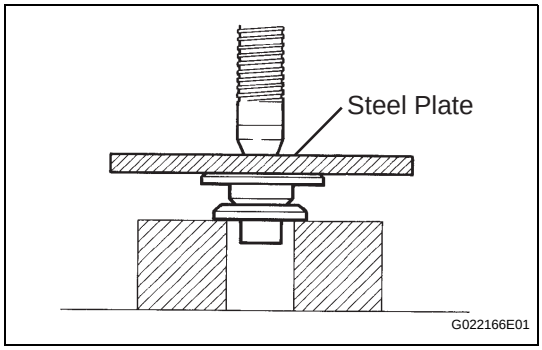

1. INSTALL FRONT DIFFERENTIAL DUST DEFLECTOR

(a) Using a steel plate and a press, install a new dust deflector.
NOTICE:
Do not damage the dust deflector.

DF

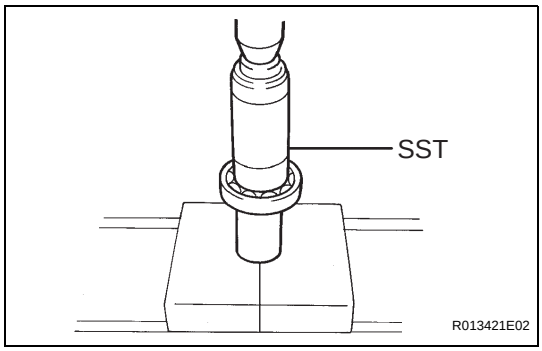

2. INSTALL FRONT DIFFERENTIAL SIDE GEAR SHAFT RH BEARING

(a) Using SST and a press, install the bearing.
SST 09223-00010
(b) Using a snap ring expander, install the snap ring.

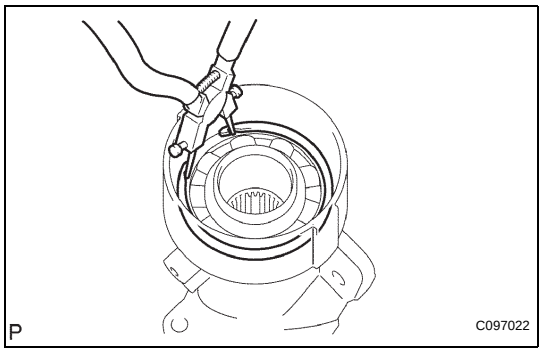

3. INSTALL DIFFERENTIAL SIDE GEAR SHAFT SUB-ASSEMBLY RH

(a) Install the side gear shaft into the differential tube.
(b) Using snap ring pliers, install the snap ring.

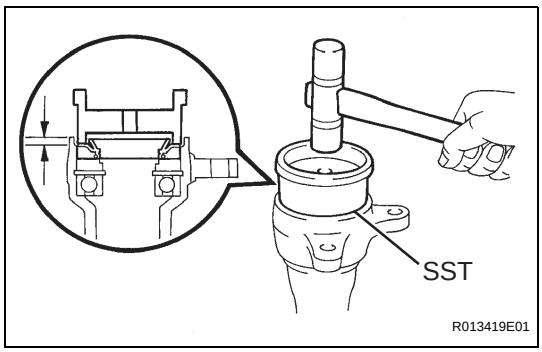

4. INSTALL DIFFERENTIAL SIDE GEAR SHAFT OIL SEAL

(a) Using SST and a plastic hammer, install a new oil seal.
SST 09608-32010
Oil seal drive in depth:
4.8 to 0.58 mm (0.1890 to 0.2284 in.)
(b) Coat the oil seal lip with MP grease.

cardiagn.com

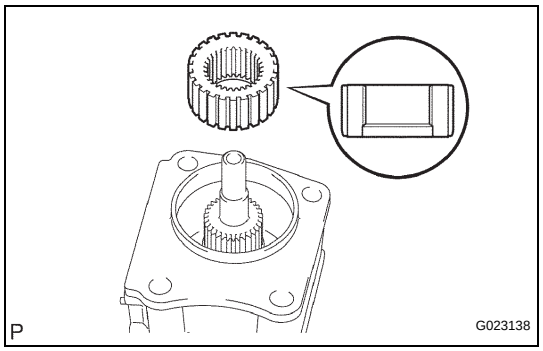

5. INSTALL DIFFERENTIAL CLUTCH HUB

(a) Install the clutch hub onto the side gear inter shaft.

(b) Using snap ring pliers, install the snap ring.

NOTICE:

Be sure to install the differential clutch hub in the correct direction.

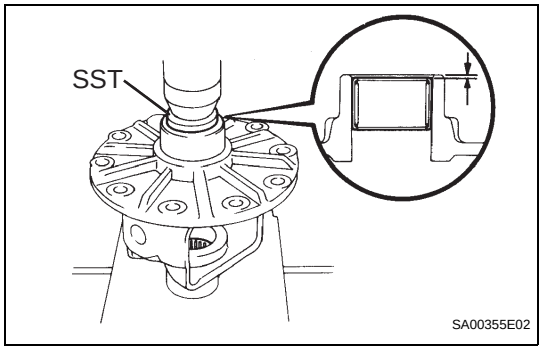

6. INSTALL FRONT DIFFERENTIAL SIDE GEAR NEEDLE ROLLER BEARING

(a) Using SST and a press, install 2 new bearings.

SST 09950-60010 (09951-00380)

Bearing press in depth:

1.4 to 2.0 mm (0.055 to 0.079 in.)

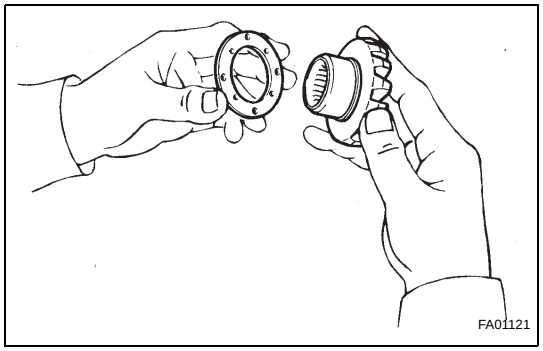

7. INSTALL FRONT DIFFERENTIAL CASE

(a) Install the 2 proper thrust washers onto the 2 side gears.

HINT:

Using the table below, select a thrust washer which will ensure that the backlash is within the specifications.

Washer thickness

Thickness mm (in.)	Thickness mm (in.)
1.50 (0.0591)	1.75 (0.0689)
1.55 (0.0610)	1.80 (0.0709)
1.60 (0.0630)	1.85 (0.0728)
1.65 (0.0650)	1.90 (0.0748)
1.70 (0.0669)	-

(b) Install the 2 side gears, 2 side gear thrust washers, 2 pinion gears, 2 pinion gear thrust washers and pinion shaft into the differential case assembly.

HINT:

Align the holes of the differential case assembly and pinion shaft.

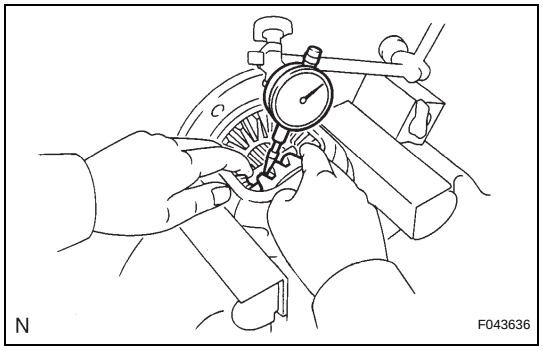

(c) Measure the side gear backlash.

(1) Using a dial indicator, measure the side gear backlash while holding one pinion gear toward the differential case assembly.

Backlash:

0 to 0.15 mm (0 to 0.0059 in.)

If the backlash is not within the specification, install a side gear thrust washer with a different thickness.

cardiagn.com

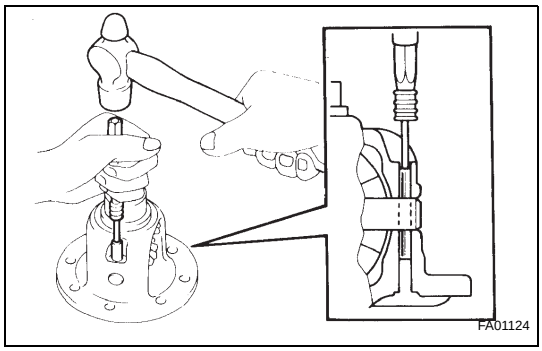

(d) Using a pin punch and hammer, install the straight pin through the differential case assembly and hole of the pinion shaft.
(e) Stake the differential case assembly.

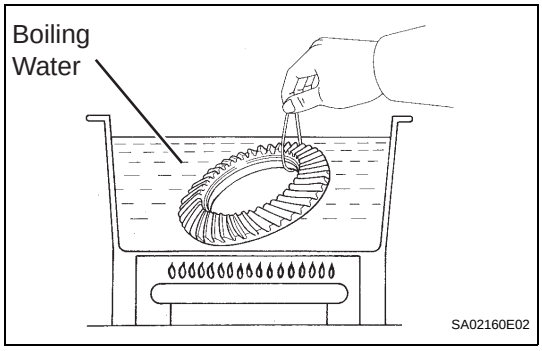

8. INSTALL DIFFERENTIAL RING GEAR

(a) Clean the contact surfaces of the differential case assembly and ring gear.
(b) Heat the ring gear to about 100°C (212°F) in boiling water.
(c) Carefully take the ring gear out of the boiling water.
(d) After any moisture on the ring gear has completely evaporated, quickly install the ring gear onto the differential case assembly.
HINT:
Align the matchmarks on the ring gear and differential case assembly.
(e) Temporarily install 10 bolts so that the bolt holes in the ring gear and differential case assembly are aligned.
(f) After the ring gear has cooled sufficiently, tighten the ring gear set bolts to which thread lock has been applied.
Torque: 97 N*m (984 kgf*cm, 71 ft.*lbf)
Thread lock:
Part No. 08833-00100, THREE BOND 1360k or equivalent

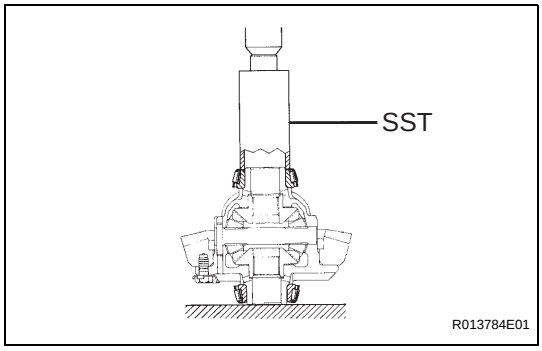

9. INSTALL FRONT DIFFERENTIAL CASE BEARING

(a) Using SST and a press, install the 2 differential case bearings into the differential case assembly.
SST 09226-10010

10. INSTALL SIDE BEARING OUTER RACE

HINT:
When replacing the 2 differential case bearings, fit 2 of the thinnest new washers to each bearing and when reusing the bearings, fit washers of the same thickness as those removed.
(a) Install a new plate washer to the side bearing retainer.

cardiagn.com

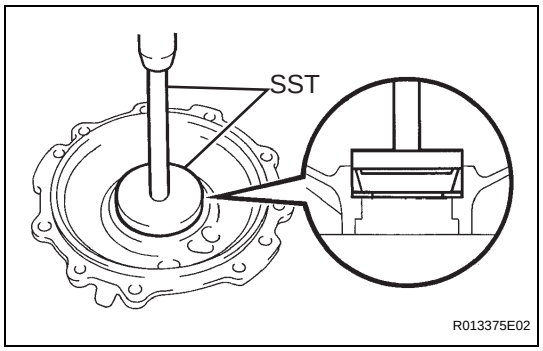

(b) Using SST and a press, install the bearing outer race onto the differential case bearing retainer assembly.
SST 09950-60020 (09951-00810), 09950-70010 (09951-07150)

(c) Install a new plate washer onto the differential carrier assembly.

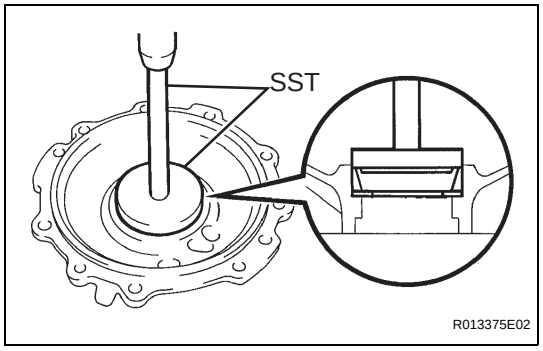

(d) Using SST and a press, install the bearing outer race onto the differential carrier assembly.
SST 09950-60020 (09951-00810), 09950-70010 (09951-07150)

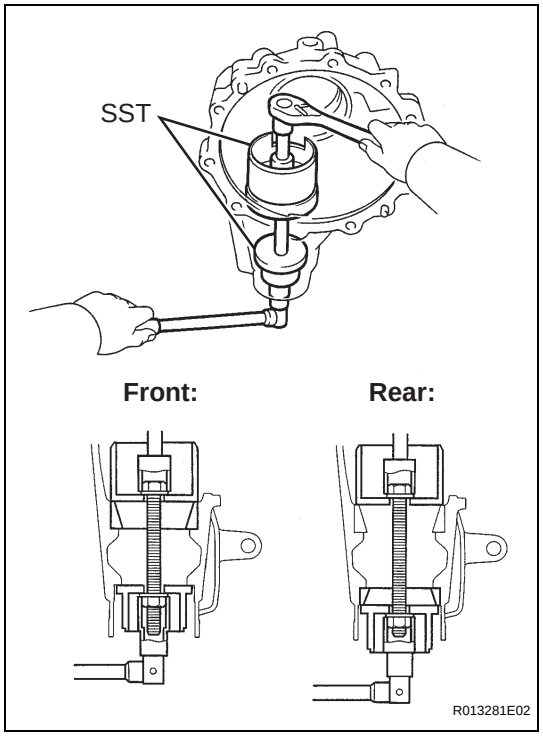

11. INSTALL FRONT BEARING OUTER RACE

(a) Using SST, install the outer race.
SST 09950-00020 (09951-00680, 09951-00890)

12. INSTALL REAR BEARING OUTER RACE

(a) Install the oil storage ring.

(b) Using SST, install the outer race.
SST 09950-00020 (09951-00680, 09951-00890)

13. INSTALL FRONT DRIVE PINION FRONT TAPERED ROLLER BEARING

(a) Install the washer onto the drive pinion.
HINT:
First, fit a washer of the same thickness as the removed washer, then after checking the tooth contact pattern, replace the washer with one of a differential thickness if necessary.

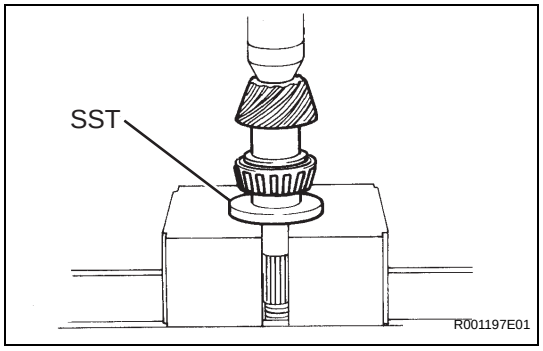

(b) Using SST and a press, install the front bearing onto the drive pinion.
SST 09506-30012

14. INSPECT DIFFERENTIAL DRIVE PINION PRELOAD

(a) Install the drive pinion.
HINT:
Assemble the spacer and oil seal after adjusting the ring gear tooth contact pattern.

cardiagn.com

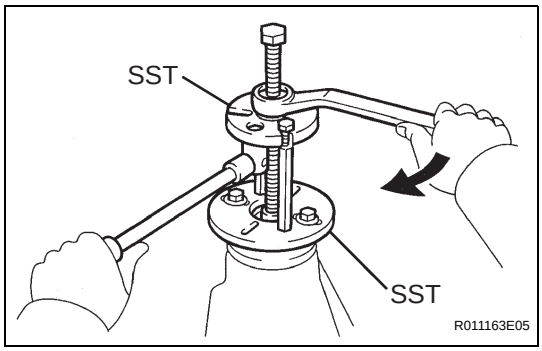

(b) Using SST, install the rear bearing, oil slinger and companion flange.
SST 09950-30012 (09951-03010, 09953-03010, 09954-03010, 09955-03030, 09956-03020)

(c) Coat the threads of the nut with hypoid gear oil.

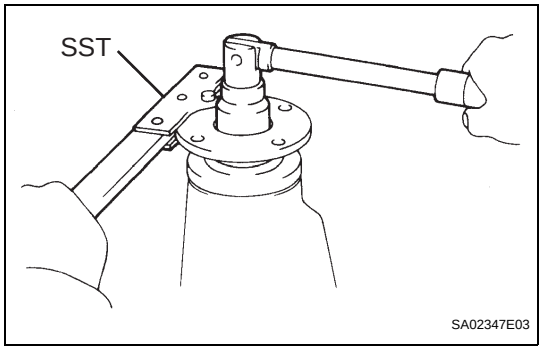

(d) Adjust the drive pinion preload by tightening the companion flange nut.

(e) Using SST to hold the companion flange, tighten the nut.
SST 09330-00021
NOTICE:
As there is no spacer, tighten the nut a little at a time, being careful not to overtighten it.

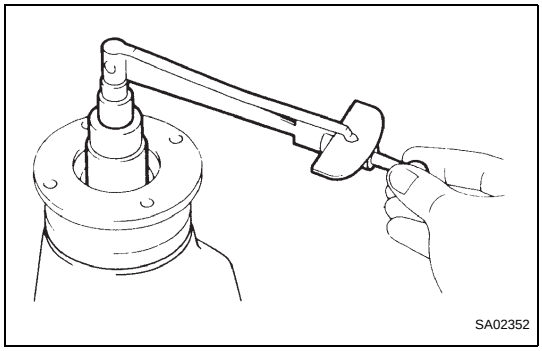

(f) Using a torque wrench, measure the preload of the backlash between the drive pinion and ring gear.
Preload (at starting)

Bearing	Standard
New	0.98 to 1.57 N*m (10 to 16 kgf*cm, 8.7 to 13.9 in.*lbf)
Reused	0.49 to 0.78 N*m (5 to 8 kgf*cm, 4.3 to 6.9 in.*lbf)

If necessary, disassemble and inspect the differential assembly.

15. INSTALL DIFFERENTIAL CASE ASSEMBLY

16. ADJUST BACKLASH DIFFERENTIAL RING GEAR AND DIFFERENTIAL DRIVE PINION

(a) Install the side bearing retainer with the 10 bolts.
Torque: 50 N*m (510 kgf*cm, 37 ft.*lbf)

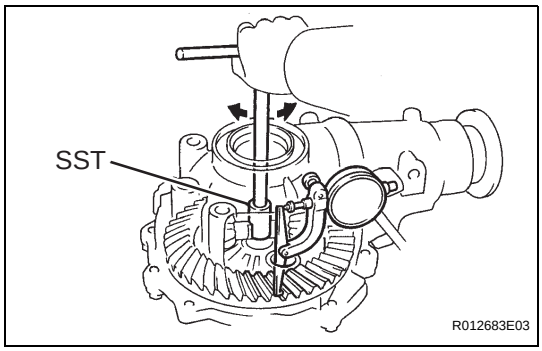

(b) Using SST and a dial indicator, measure the ring gear backlash.
SST 09564-32011
Backlash:
0.11 to 0.21 mm (0.0043 to 0.0083 in.)

(c) If it is not within the specification, adjust it by either increasing or decreasing the thickness of the washers on both sides by an equal amount.
HINT:
There should be no clearance between the plate washer and differential case.
Make sure that there is ring gear backlash.

Washer thickness

Thickness mm (in.)	Thickness mm (in.)	Thickness mm (in.)
1.58 (0.0622)	1.78 (0.0701)	1.98 (0.0780)
1.60 (0.0630)	1.80 (0.0709)	2.00 (0.0787)
1.62 (0.0638)	1.82 (0.0717)	2.02 (0.0800)

cardiagn.com

Thickness mm (in.)	Thickness mm (in.)	Thickness mm (in.)
1.64 (0.0646)	1.84 (0.0724)	2.04 (0.0803)
1.66 (0.0654)	1.86 (0.0732)	2.06 (0.0811)
1.68 (0.0661)	1.88 (0.0740)	2.08 (0.0819)
1.70 (0.0669)	1.90 (0.0748)	2.10 (0.0827)
1.72 (0.0677)	1.92 (0.0756)	2.12 (0.0835)
1.74 (0.0685)	1.94 (0.0764)	2.14 (0.0843)
1.76 (0.0693)	1.96 (0.0772)	2.16 (0.0850)

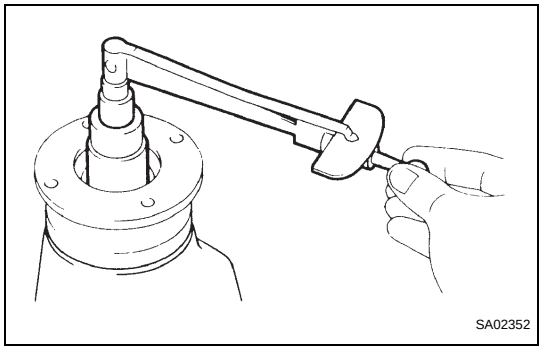

17. INSPECT TOTAL PRELOAD

(a) Using a torque wrench, measure the preload with the teeth of the drive pinion and ring gear in contact.
Total preload (at starting):
Drive pinion preload plus 0.22 to 0.88 N*m (2.2 to 8.8 kgf*cm, 2.0 to 7.8 in.*lbf)
If necessary, disassemble and inspect the differential.

18. INSPECT TOOTH CONTACT BETWEEN RING GEAR AND DRIVE PINION

(a) Remove the side bearing retainer and differential case assembly.

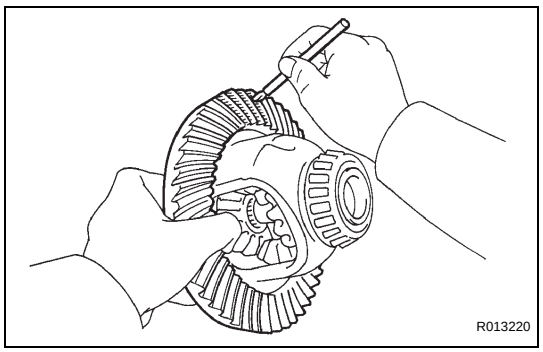

(b) Coat 3 or 4 teeth at 3 different positions on the ring gear with red lead.

(c) Install the differential case assembly and side bearing retainer.
Torque: 50 N*m (510 kgf*cm, 37 ft.*lbf)

(d) Hold the companion flange firmly and rotate the ring gear in both directions.

(e) Remove the differential case, side bearing retainer and differential case assembly.

cardiagn.com

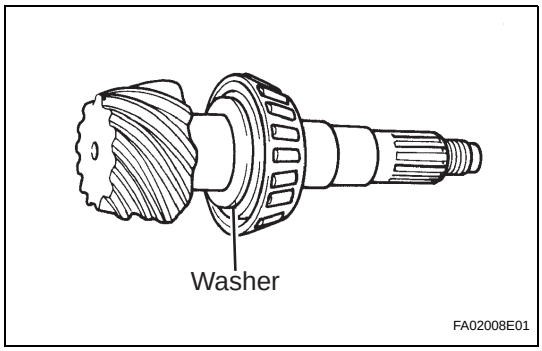

(f) Inspect the tooth contact pattern.

Driver Side:

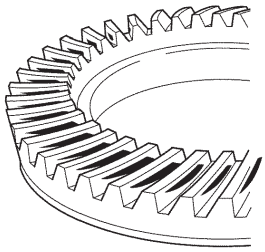

Proper Contact

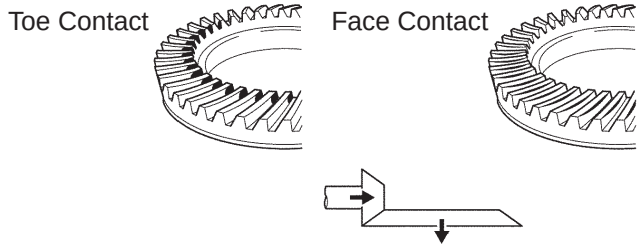

Select an adjusting washer that will bring the drive pinion closer to the ring gear.

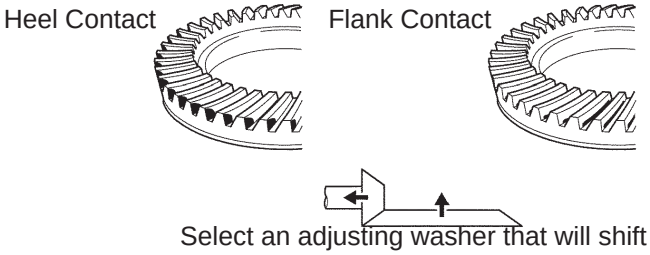

Select an adjusting washer that will shift the drive pinion away from the ring gear.

Coast Side:

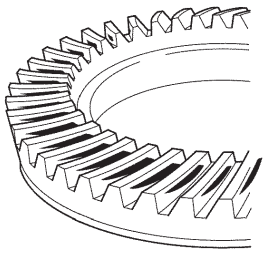

Proper Contact

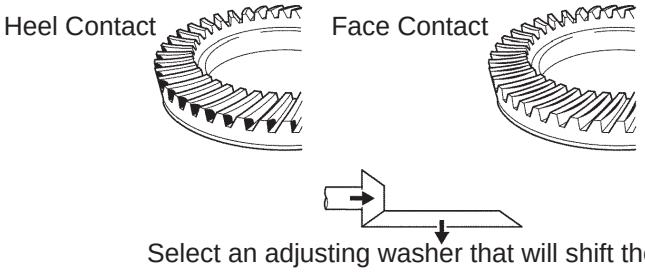

Select an adjusting washer that will shift the drive pinion closer to the ring gear.

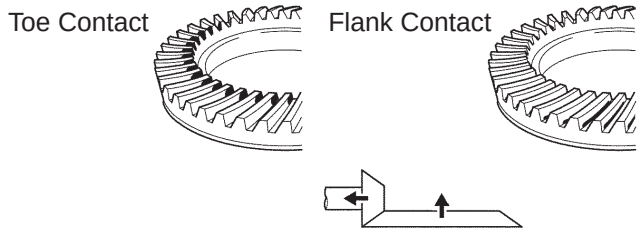

Select an adjusting washer that will bring the drive pinion away from the ring gear.

P

F052199E01

cardiagn.com

If the teeth are not engaged properly, use the following chart to select the appropriate washer for correction.

Washer thickness

Thickness mm (in.)	Thickness mm (in.)	Thickness mm (in.)
1.70 (0.0669)	1.94 (0.0764)	2.18 (0.0858)
1.73 (0.0681)	1.97 (0.0776)	2.21 (0.0870)
1.76 (0.0693)	2.00 (0.0787)	2.24 (0.0882)
1.79 (0.0705)	2.03 (0.0799)	2.27 (0.0894)
1.82 (0.0717)	2.06 (0.0811)	2.30 (0.0906)
1.85 (0.0728)	2.09 (0.0823)	2.33 (0.0917)
1.88 (0.0740)	2.12 (0.0835)	-
1.91 (0.0752)	2.15 (0.0847)	-

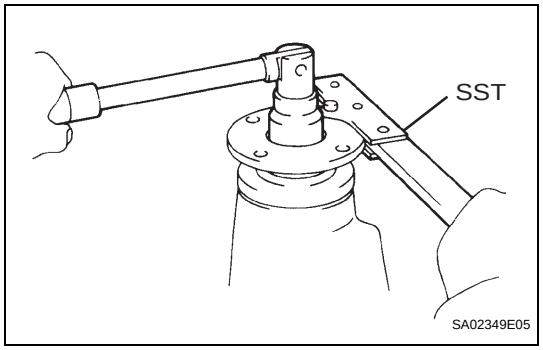

(g) Using SST to hold the companion flange, remove the nut.
SST 09330-00021

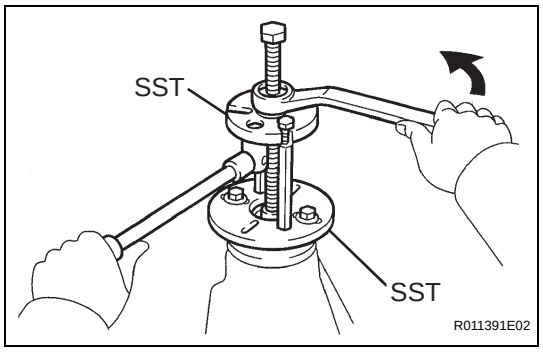

(h) Using SST, remove the companion flange.
SST 09950-30012 (09951-03010, 09953-03010, 09954-03010, 09955-03030, 09956-03020)

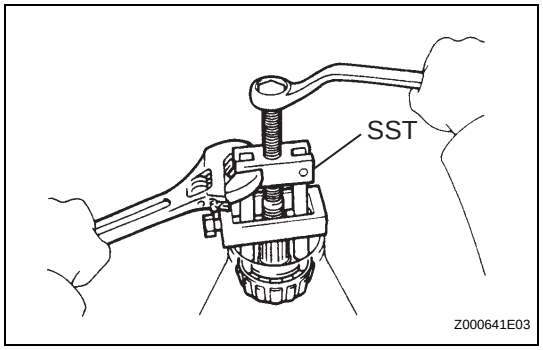

(i) Using SST, remove the rear bearing from the drive pinion.
SST 09556-22010

19. INSTALL FRONT DIFFERENTIAL DRIVE PINION BEARING SPACER
(a) Install a new bearing spacer and oil storage ring.

20. INSTALL FRONT DRIVE PINION REAR TAPERED ROLLER BEARING

21. INSTALL FRONT DIFFERENTIAL DRIVE PINION OIL SLINGER

22. INSTALL FRONT DRIVE PINION COMPANION FLANGE SUB-ASSEMBLY FRONT
(a) Place the companion flange on the drive pinion.
(b) Coat the threads of a new nut with hypoid gear oil LSD.

cardiagn.com

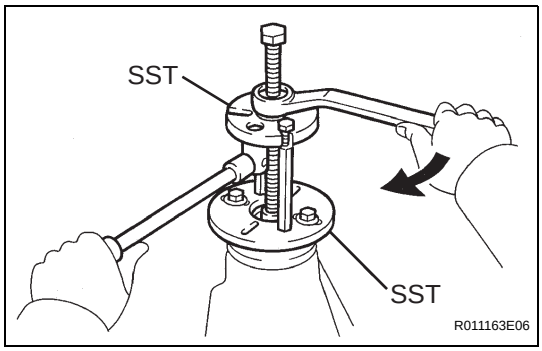

(c) Using SST and the companion flange, install the rear tapered roller bearing, then remove the companion flange.
SST 09950-30012 (09951-03010, 09953-03010, 09954-03010, 09955-03030, 09956-03020)

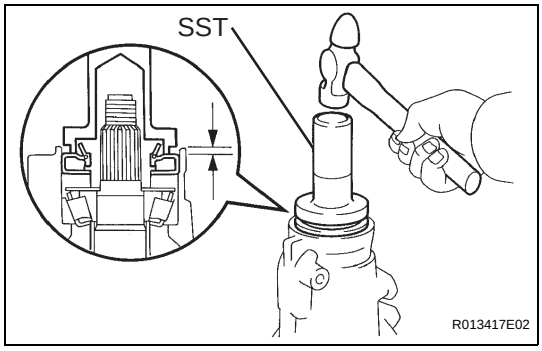

23. INSTALL FRONT DIFFERENTIAL CARRIER OIL SEAL

(a) Using SST and a hammer, install the oil seal.
SST 09554-22010
Oil seal drive in depth:
3.9 to 4.8 mm (0.153 to 0.189 in.)

(b) Coat the oil seal lip with MP grease.

DF

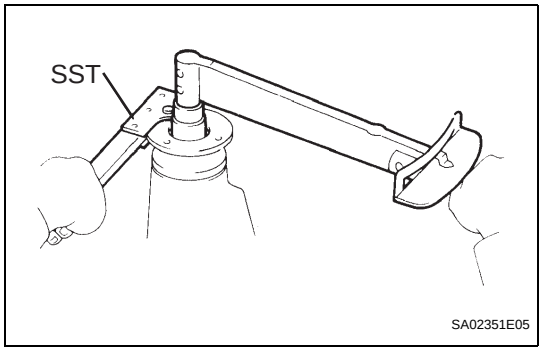

(c) Using SST to hold the flange, tighten the nut.
Torque: 370 N*m (3,773 kgf*cm, 273 ft.*lbf)
SST 09330-00021

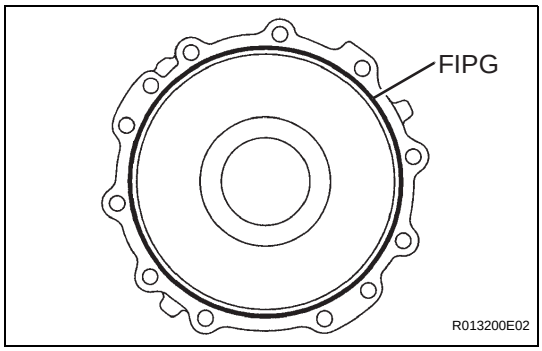

24. INSTALL DIFFERENTIAL SIDE BEARING RETAINER

(a) Remove any old FIPG material and be careful not to drop oil on the contact surfaces of the differential carrier and side bearing retainer.

(b) Clean the contact surfaces of any residual FIPG material using gasoline or alcohol.

(c) Apply FIPG to the side bearing retainer, as shown.
FIPG:
Part No. 08826-00090, THREE BOND 1281 or equivalent
HINT:
Install the side bearing retainer within 10 minutes of applying FIPG.

(d) Install the side bearing retainer with the 10 bolts.
Torque: 50 N*m (510 kgf*cm, 37 ft.*lbf)

(e) Install the union.

cardiagn.com

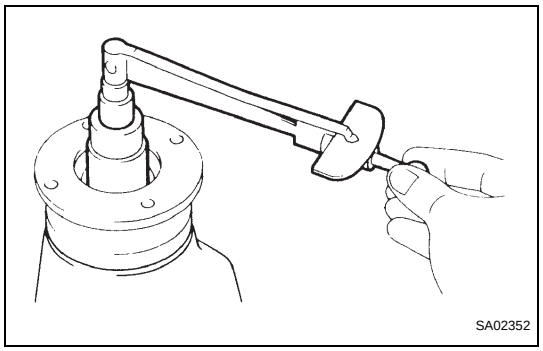

25. INSPECT DIFFERENTIAL DRIVE PINION PRELOAD

(a) Using a torque wrench, measure the preload of the backlash between the drive pinion and ring gear.
Preload (at starting)

Bearing	Standard
New	0.98 to 1.57 N*m (10 to 16 kgf*cm, 8.7 to 13.9 in.*lbf)
Reused	0.49 to 0.78 N*m (5 to 8 kgf*cm, 4.3 to 6.9 in.*lbf)

If the preload is greater than the specification, replace the bearing spacer.
If the preload is less than the specification, retighten the nut to 13 N*m (130 kgf*cm, 9 ft*lbf) a little at a time until the specified preload is reached.
Torque: 370 N*m (3,773 kgf*cm, 273 ft.*lbf) or less
If the maximum torque is exceeded while retightening the nut, replace the bearing spacer and repair the preload procedure. Do not loosen the nut to reduce the preload.

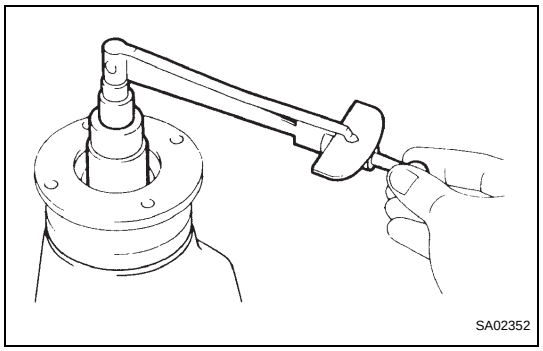

26. INSPECT TOTAL PRELOAD

(a) Using a torque wrench, measure the preload with the teeth of the drive pinion and ring gear in contact.
Total preload (at starting):
Drive pinion preload plus 0.22 to 0.88 N*m (2.2 to 8.8 kgf*cm, 2.0 to 7.8 in.*lbf)
If necessary, disassemble and inspect the differential.

27. INSPECT BACKLASH DIFFERENTIAL RING GEAR AND DIFFERENTIAL DRIVE PINION
SST 09564-32011

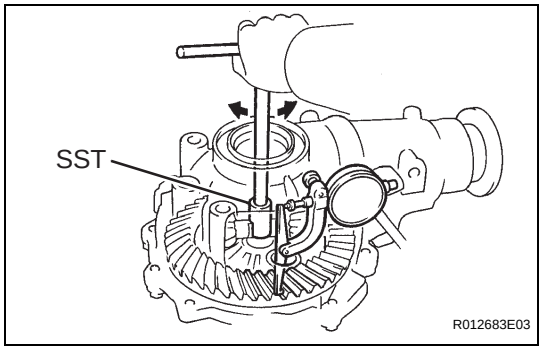

(a) Using SST and a dial indicator, measure the ring gear backlash.
Backlash:
0.11 to 0.21 mm (0.0043 to 0.0083 in.)

(b) If it is not within the specification, adjust it by either increasing or decreasing the thickness of the washers on both sides by an equal amount.
HINT:
There should be no clearance between the plate washer and differential case.
Make sure that there is ring gear backlash.

Washer thickness

Thickness mm (in.)	Thickness mm (in.)	Thickness mm (in.)
1.58 (0.0622)	1.78 (0.0701)	1.98 (0.0780)
1.60 (0.0630)	1.80 (0.0709)	2.00 (0.0787)
1.62 (0.0638)	1.82 (0.0717)	2.02 (0.0800)
1.64 (0.0646)	1.84 (0.0724)	2.04 (0.0803)
1.66 (0.0654)	1.86 (0.0732)	2.06 (0.0811)
1.68 (0.0661)	1.88 (0.0740)	2.08 (0.0819)
1.70 (0.0669)	1.90 (0.0748)	2.10 (0.0827)
1.72 (0.0677)	1.92 (0.0756)	2.12 (0.0835)
1.74 (0.0685)	1.94 (0.0764)	2.14 (0.0843)

cardiagn.com

Thickness mm (in.)	Thickness mm (in.)	Thickness mm (in.)
1.76 (0.0693)	1.96 (0.0772)	2.16 (0.0850)

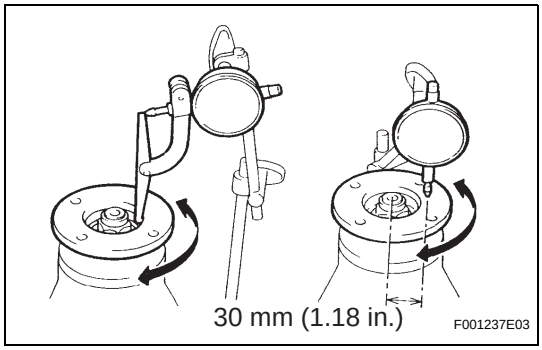

28. INSPECT AND ADJUST FRONT DRIVE PINION COMPANION FLANGE SUB-ASSEMBLY FRONT

(a) Using a dial indicator, measure the runout of the drive pinion companion flange vertically and horizontally.

Maximum runout:

Vertical runout: 0.10 mm (0.0039 in.)

Lateral runout: 0.10 mm (0.0039 in.)

If the runouts are not within the specifications, replace the companion flange.

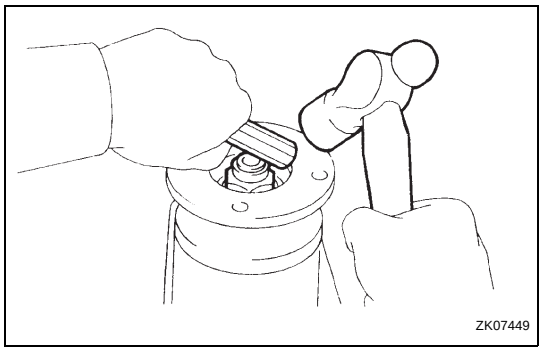

29. INSTALL FRONT DRIVE PINION COMPANION FLANGE FRONT NUT

(a) Using a chisel and hammer, stake the drive pinion nut.

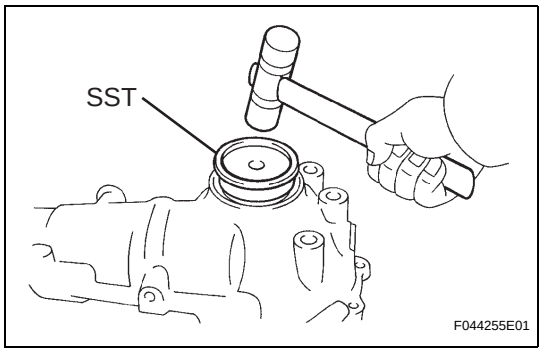

30. INSTALL DIFFERENTIAL SIDE GEAR SHAFT OIL SEAL

(a) Using SST and a plastic hammer, install a new oil seal until its surface is flush with the differential carrier end.

SST 09608-32010

(b) Coat the oil seal lip with MP grease.

Oil seal driven in depth:

-0.45 to 0.45 mm (-0.0177 to 0.0177 in.)

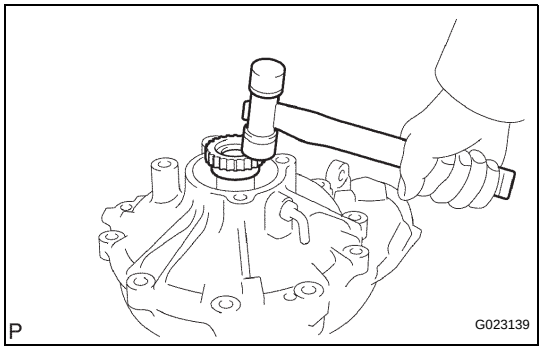

31. INSTALL DIFFERENTIAL SIDE GEAR INTER SHAFT SUB-ASSEMBLY

(a) Install a new snap ring onto the side gear inter shaft.

(b) Using a plastic hammer, install the side gear inter shaft onto the differential case.

(c) Check that there are 2 to 3 mm (0.08 to 0.12 in.) of play in the axial direction.

(d) Check that the side gear inter shaft will not come out by trying to pull it completely out by hand.

cardiagn.com

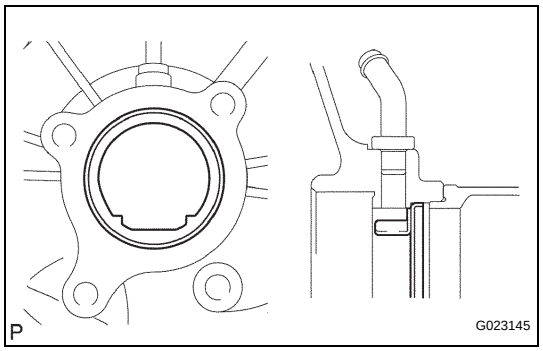

32. INSTALL FRONT DIFFERENTIAL SIDE BEARING RETAINER DEFLECTOR

(a) Using a brass bar and a hammer, install the side bearing retainer deflector.

NOTICE:

Be sure to install the side bearing retainer deflector in the correct direction.

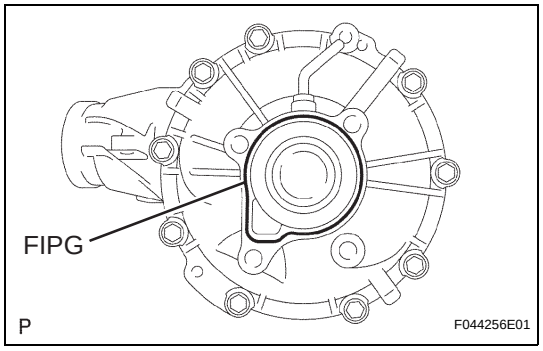

33. INSTALL FRONT DIFFERENTIAL TUBE ASSEMBLY

(a) Remove any old FIPG material and be careful not to drop oil on the contact surfaces of the differential and clutch case.

(b) Clean the contact surfaces of any residual FIPG material using gasoline or alcohol.

(c) Apply FIPG to the differential, as shown.

FIPG:

Part No. 08826-00090, THREE BOND 1281 or equivalent

HINT:

Install the differential tube within 10 minutes of applying FIPG.

(d) Install the differential tube into the differential carrier assembly.

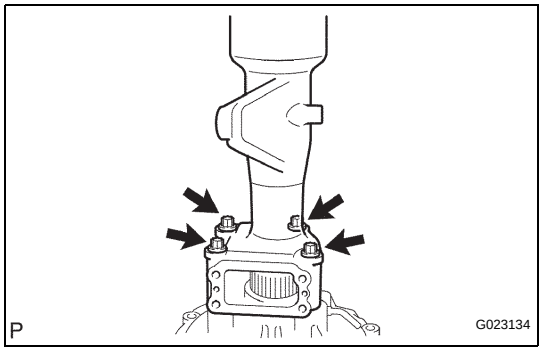

(e) Clean the threads of the 4 bolts and retainer bolt holes with toluene or trichloroethylene.

(f) Apply adhesive to 2 to 3 threads of each bolt end.

Adhesive:

Part No. 08833-00070, THREE BOND 1324 or equivalent

(g) Install the 4 bolts.

Torque: 110 N*m (1,122 kgf*cm, 81 ft.*lbf) or less

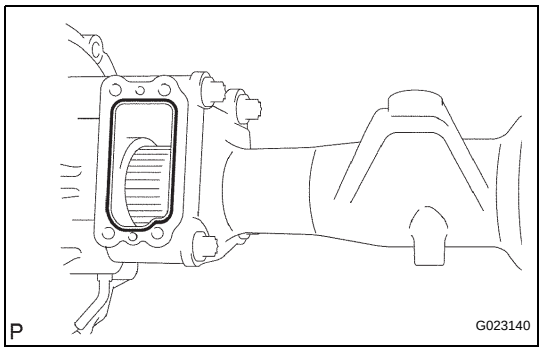

34. INSTALL DIFFERENTIAL VACUUM ACTUATOR ASSEMBLY

(a) Remove any old FIPG material and be careful not to drop oil on the contact surfaces of the actuator and clutch case.

(b) Clean the contact surfaces of any residual FIPG material using gasoline or alcohol.

(c) Apply FIPG to the differential tube, as shown.

FIPG:

Part No. 08826-00090, THREE BOND 1281 or equivalent

HINT:

Install the actuator within 10 minutes of applying FIPG.

cardiagn.com

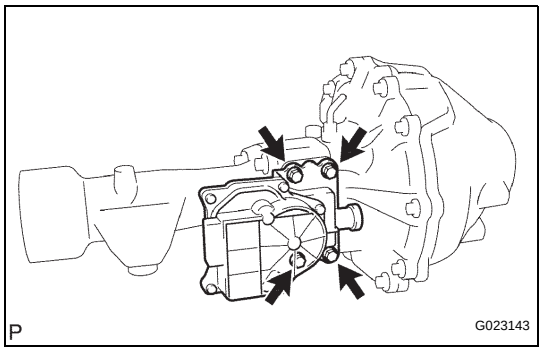

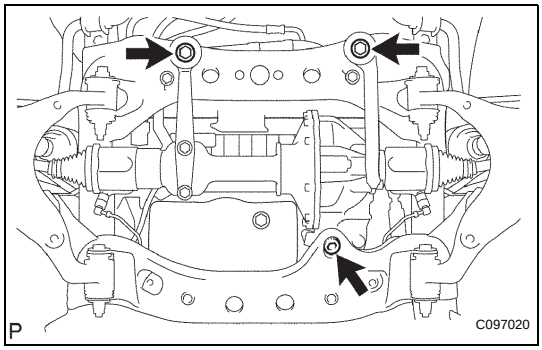

(d) Clean the threads of the 4 bolts and retainer bolt holes with toluene or trichloroethylene.
(e) Install the actuator assembly onto the differential tube.
(f) Apply adhesive to 2 to 3 threads of each bolt end.
Adhesive:
Part No. 08833-00070, THREE BOND 1281 or equivalent
(g) Install the 4 bolts.
Torque: 21 N*m (210 kgf*cm, 15 ft.*lbf)

INSTALLATION

1. **INSTALL FRONT DIFFERENTIAL CARRIER ASSEMBLY**
   (a) Connect the actuator hose and connector.
   (b) Install the No. 1 mounting support with the 3 bolts.
   Torque: 186 N*m (1,899 kgf*cm, 138 ft.*lbf)
   (c) Install the No. 2 mounting support with the 2 bolts.
   Torque: 160 N*m (1,631 kgf*cm, 118 ft.*lbf)
   (d) Install the No. 3 front differential support with the 2 bolts.
   Torque: 108 N*m (1,100 kgf*cm, 80 ft.*lbf)
   (e) Support the front differential with a jack.
   (f) Install the 2 front mounting bolts and nuts.
   Torque: 137 N*m (1,400 kgf*cm, 101 ft.*lbf)
   (g) Install the No. 1 front differential mount nut.
   Torque: 87 N*m (889 kgf*cm, 64 ft.*lbf)
   (h) Install the front differential breather tube bracket with the bolt.
   Torque: 13 N*m (129 kgf*cm, 8 ft.*lbf)
   (i) Lower the jack.
2. **INSTALL FRONT DRIVE SHAFT ASSEMBLY LH (See page DS-4)**
3. **INSTALL FRONT DRIVE SHAFT ASSEMBLY RH**
   HINT:
   Use the same procedure as for the LH side.
4. **INSTALL FRONT SUSPENSION LOWER ARM LH (See page DS-9)**
5. **INSTALL FRONT SUSPENSION LOWER ARM RH**
   HINT:
   Use the same procedure as for the LH side.
6. **INSTALL TIE ROD END SUB-ASSEMBLY LH (See page PS-68)**
7. **INSTALL TIE ROD END SUB-ASSEMBLY RH (See page PS-68)**
8. **INSTALL FRONT SPEED SENSOR LH (See page BC-303)**
9. **INSTALL FRONT SPEED SENSOR RH**
   HINT:
   Use the same procedure as for the LH side.

cardiagn.com