REMOVAL

1. **DISCONNECT CABLE FROM NEGATIVE BATTERY TERMINAL**

2. **DRAIN TRANSFER OIL**

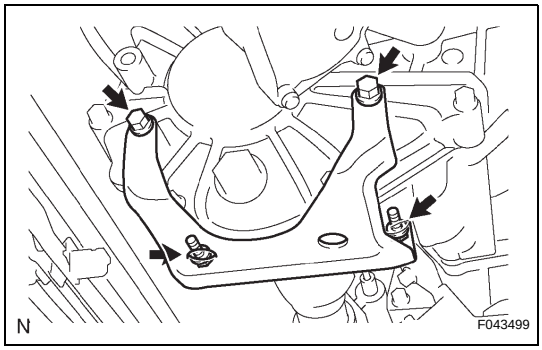

3. **REMOVE TRANSFER CASE LOWER PROTECTOR**
   (a) Remove the 4 bolts and remove the transfer case lower protector.

4. **REMOVE MANUAL TRANSMISSION ASSEMBLY (for R155F)**
   (See page MT-8)

5. **REMOVE MANUAL TRANSMISSION ASSEMBLY (for RA60F)**
   (See page MT-6)

6. **REMOVE AUTOMATIC TRANSMISSION ASSEMBLY (for A750F)**
   (See page AT-162)

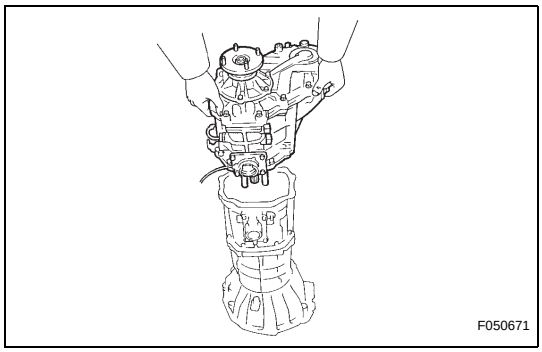

7. **REMOVE TRANSFER ASSEMBLY**
   (a) Remove the 8 transfer adaptor rear mounting bolts.
   (b) Pull the transfer straight up and remove it from the transmission.
   NOTICE:
   Take care not to damage the adaptor rear oil seal with the transfer input gear spline.

DISASSEMBLY

1. **REMOVE TRANSFER CASE COVER SUB-ASSEMBLY**
   (a) Remove the 4 bolts and the case cover sub-assembly.

2. **REMOVE BREATHER OIL DEFLECTOR SUB-ASSEMBLY**

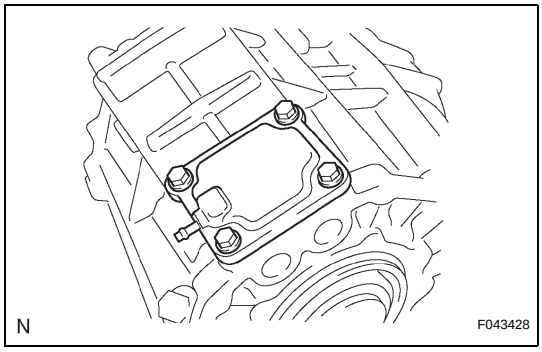

3. **REMOVE TRANSFER RH BEARING RETAINER SUB-ASSEMBLY**
   (a) Remove the 5 bolts and the front bearing retainer sub-assembly.
   HINT:
   If necessary, tap the retainer sub-assembly with a plastic hammer to remove it.

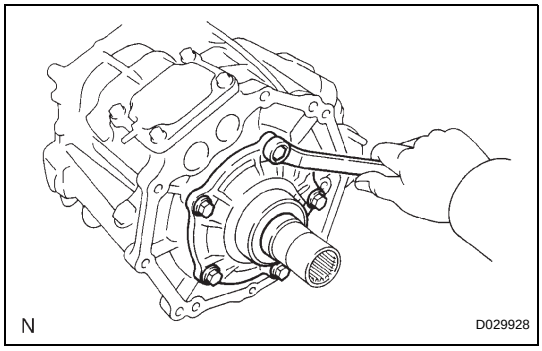

4. **REMOVE TRANSFER RH BEARING RETAINER OIL SEAL (for R155F/A750F)**
   (a) Using a screwdriver and hammer, remove the transfer RH bearing retainer oil seal.

cardiagn.com

5. REMOVE TRANSFER RH BEARING RETAINER OIL SEAL (for RA60F)

(a) Using a screwdriver and hammer, remove the 2 transfer RH bearing retainer oil seals.

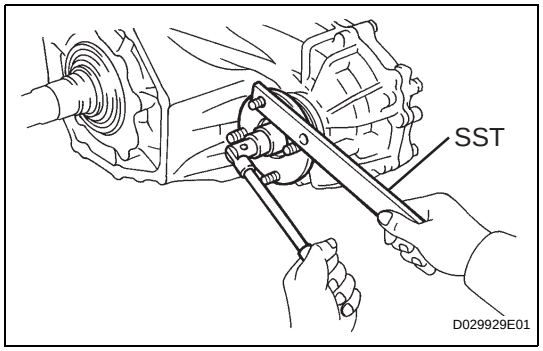

6. REMOVE OUTPUT SHAFT COMPANION FLANGE SUB-ASSEMBLY

(a) Using a chisel and hammer, loosen the staked part of the output shaft companion flange lock nut.

(b) Using SST to hold the output shaft companion flange, remove the output shaft companion flange lock nut.

SST 09330-00021

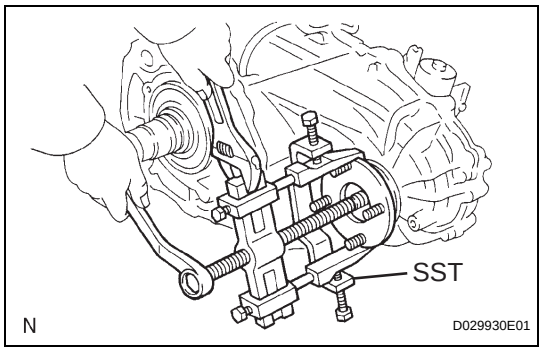

(c) Using SST, remove the output shaft companion flange sub-assembly (front side).

SST 09950-40011 (09951-04020, 09952-04010, 09953-04030, 09954-04010, 09955-04051, 09957-04010, 09958-04011)

7. REMOVE TRANSFER OUTPUT SHAFT COMPANION FLANGE OIL SEAL

(a) Using a screwdriver and hammer, remove the companion flange oil seal.

8. REMOVE OUTPUT SHAFT COMPANION FLANGE SUB-ASSEMBLY

(a) Remove the rear output shaft companion flange sub-assembly using the same procedure as for the front output shaft companion flange sub-assembly (rear side).

SST 09330-00021, 09950-40011 (09951-04020, 09952-04010, 09953-04030, 09954-04010, 09955-04051, 09957-04010, 09958-04011)

9. REMOVE TRANSFER OUTPUT SHAFT COMPANION FLANGE OIL SEAL

(a) Using a screwdriver and hammer, remove the companion flange oil seal.

10. REMOVE SPEEDOMETER DRIVEN GEAR SUB-ASSEMBLY (for R155F/RA60F)

(a) Remove the bolt and speedometer driven gear w/ sensor.

11. REMOVE SPEEDOMETER DRIVEN HOLE COVER SUB-ASSEMBLY (for A750F)

(a) Remove the bolt and speedometer hole cover sub-assembly.

cardiagn.com

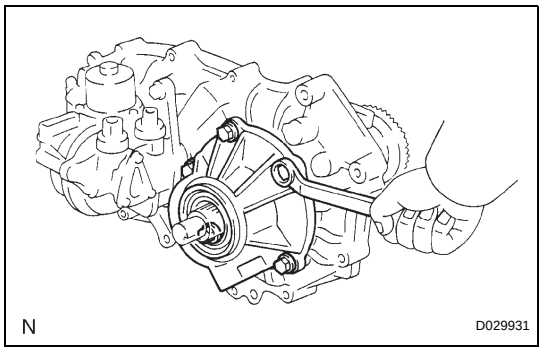

12. REMOVE TRANSFER EXTENSION HOUSING SUB-ASSEMBLY FRONT

(a) Remove the 5 bolts and extension housing sub-assembly.
HINT:
If necessary, tap the extension housing sub-assembly with a plastic hammer to remove it.

13. REMOVE TRANSFER EXTENSION HOUSING TYPE T OIL SEAL

(a) Using a screwdriver and hammer, remove the type T oil seal.

14. REMOVE TRANSFER OUTPUT WASHER

15. REMOVE TRANSFER SPEEDOMETER DRIVE GEAR

(a) Remove the speedometer drive gear.
(b) Using a magnetic finger, remove the speedometer drive gear ball.

TF

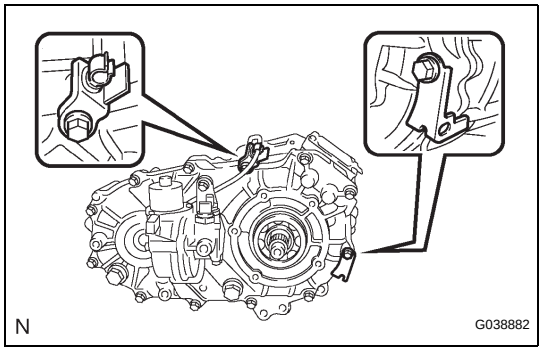

16. REMOVE TRANSFER REAR CASE

(a) Remove the 12 bolts and 2 brackets.
(b) Remove the transfer case rear.
HINT:
If necessary, tap the transfer case rear with a plastic hammer to remove it.

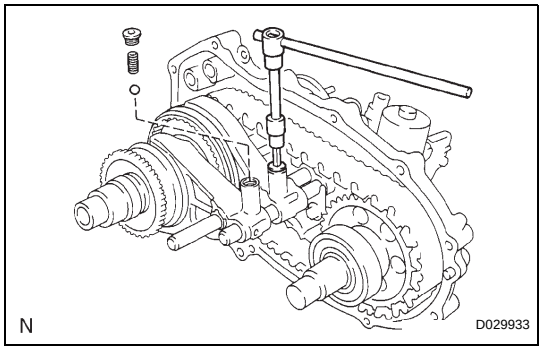

17. REMOVE TRANSFER FRONT DRIVE SHIFT FORK SHAFT

(a) Using a hexagon wrench (6 mm), remove the 2 shift detent ball spring plugs, 2 shift fork compression springs and 2 shift detent balls.

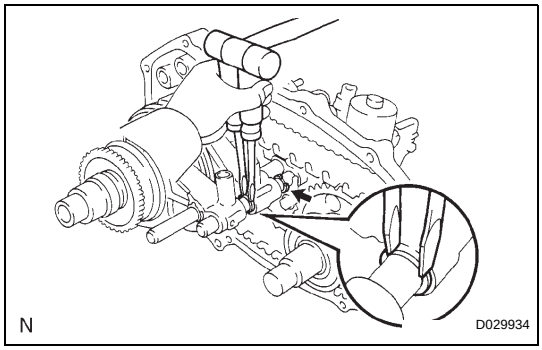

(b) Using 2 screwdrivers and a hammer, tap out the 2 shift fork shaft snap rings.

cardiagn.com

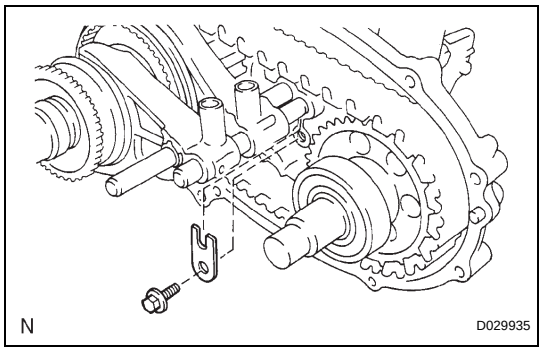

(c) Remove the bolt and shift shaft stopper.

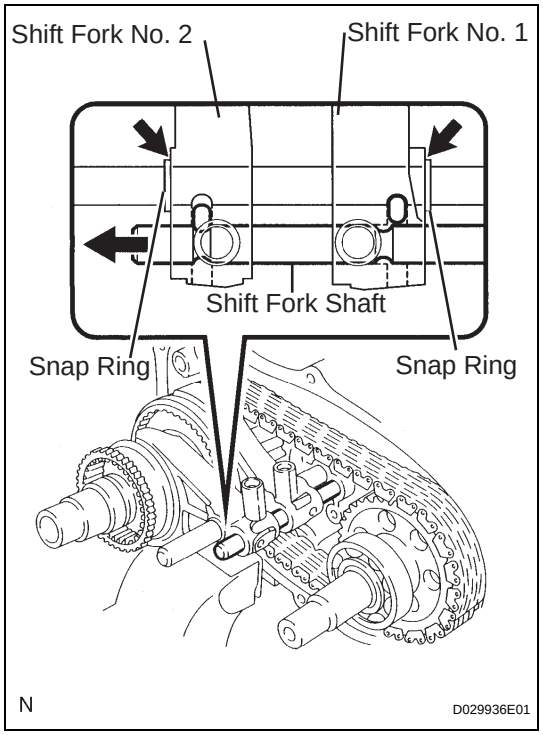

(d) To pull out the shift fork shaft, shift the shift fork No. 1 and No. 2 to the positions shown in the illustration.
(e) Pull out the shift fork shaft.

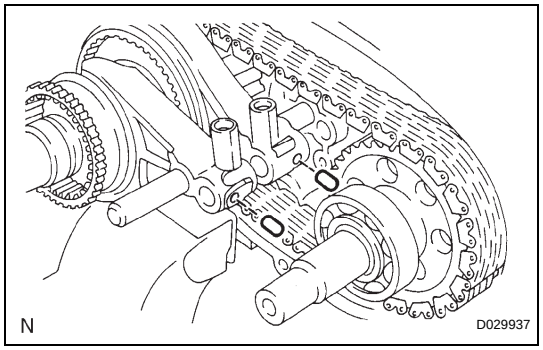

(f) Using a magnetic finger, remove the 2 shift inter lock pins.

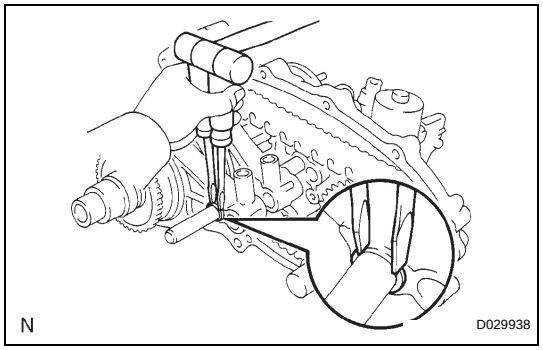

18. REMOVE REAR OUTPUT SHAFT ASSEMBLY, FRONT DRIVE CHAIN, DRIVEN SPROCKET ASSEMBLY, SHIFT FORK NO. 1 AND NO. 2

(a) Using 2 screwdrivers and a hammer, tap out the shift fork shaft snap ring.
HINT:
Remove only the snap ring on the front side of the shift fork shaft.

cardiagn.com

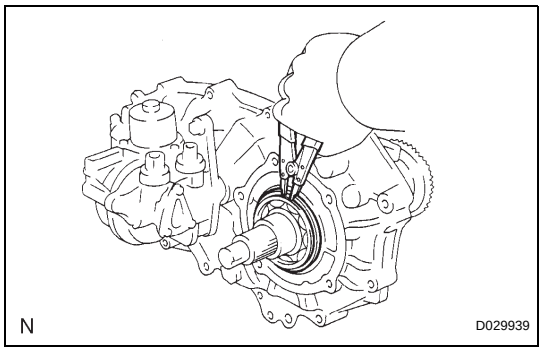

(b) Using a snap ring expander, remove the output shaft snap ring.

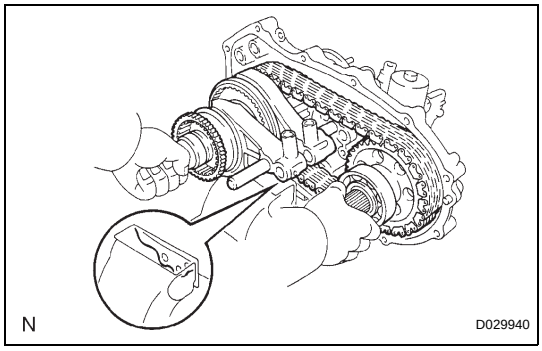

(c) Mount the transfer case rear in a vise.
(d) Using a plastic hammer, carefully tap the transfer case rear and remove the rear output shaft assembly, driven sprocket assembly, front drive chain, shift fork No. 1 and No. 2.
(e) Remove the driven sprocket assembly, front drive chain, shift fork No. 1 and No. 2 from the rear output shaft assembly.

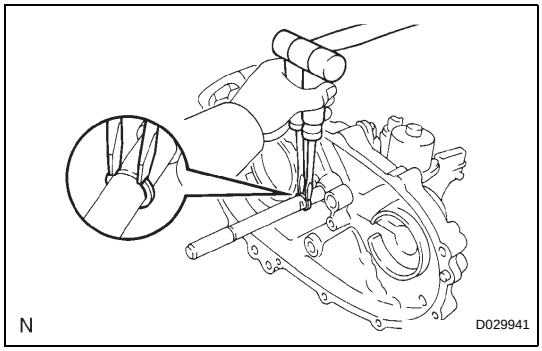

19. REMOVE TRANSFER SHIFT ACTUATOR ASSEMBLY
(a) Using 2 screwdrivers and a hammer, remove the shift fork shaft snap ring.
(b) Remove the 3 bolts and shift actuator assembly.

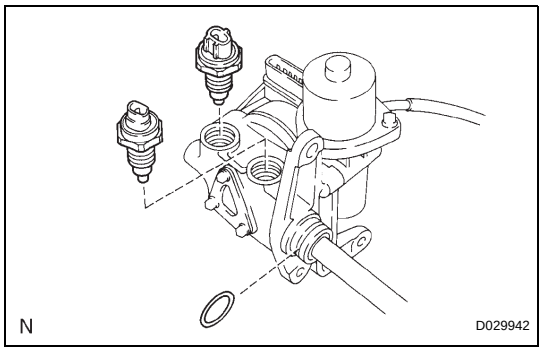

20. REMOVE TRANSFER INDICATOR SWITCH NO.1
(a) Remove the O-ring, the 2 indicator switches No. 1 and 2 gaskets.

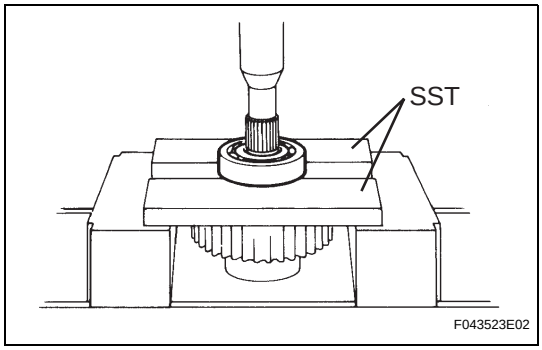

21. REMOVE TRANSFER DRIVEN SPROCKET BEARING
(a) Using SST and a press, remove the driven sprocket bearing.
SST 09527-10011

cardiagn.com

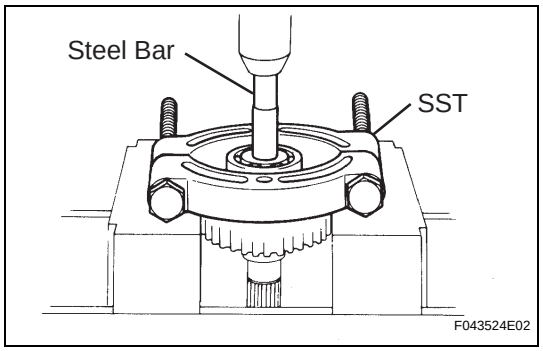

22. REMOVE TRANSFER INPUT GEAR RADIAL BALL BEARING

(a) Using SST, a press and steel bar, remove the input gear radial ball bearing.
SST 09555-55010

23. REMOVE TRANSFER CASE PLUG

(a) Remove the transfer case plug No. 1 (filler plug) and gasket.

24. REMOVE TRANSFER CASE PLUG

(a) Remove the transfer case plug (drain plug) and gasket.

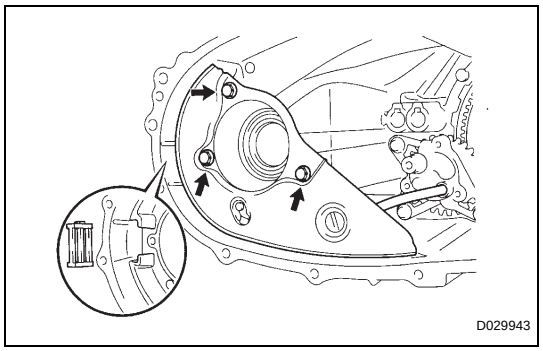

25. REMOVE TRANSFER OIL SEPARATOR SUB-ASSEMBLY

(a) Remove the 3 bolts and oil separator sub-assembly.

26. REMOVE TRANSFER CASE MAGNET

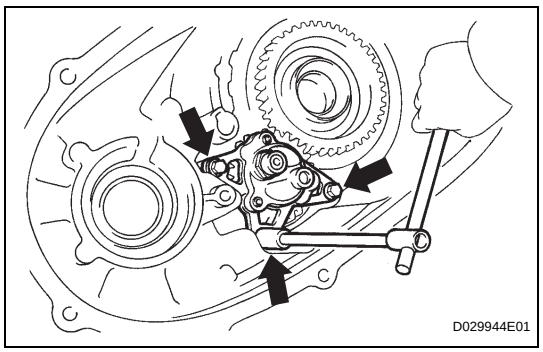

27. REMOVE TRANSFER OIL PUMP BODY SUB-ASSEMBLY

(a) Remove the 3 bolts and oil pump body sub-assembly.

28. REMOVE TRANSFER OIL PUMP GEAR

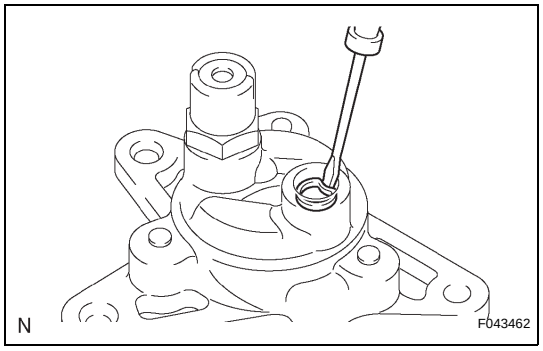

29. REMOVE TRANSFER OIL PUMP BODY O-RING

(a) Using a screwdriver, remove the oil pump body O-ring.

TF

cardiagn.com

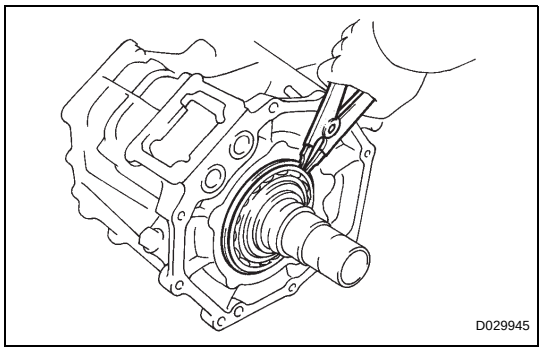

30. REMOVE LOW PLANETARY GEAR ASSEMBLY WITH INPUT SHAFT SUB-ASSEMBLY

(a) Using a snap ring expander, remove the low planetary gear bearing shaft snap ring.

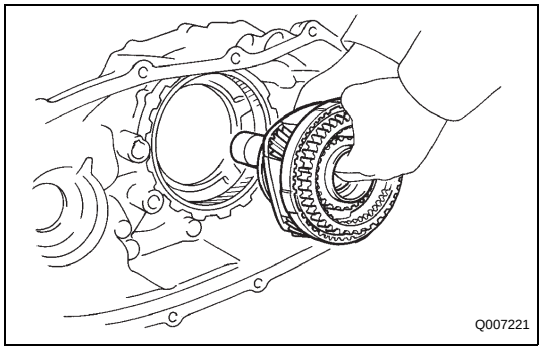

(b) Remove the low planetary gear assembly w/ input shaft assembly.

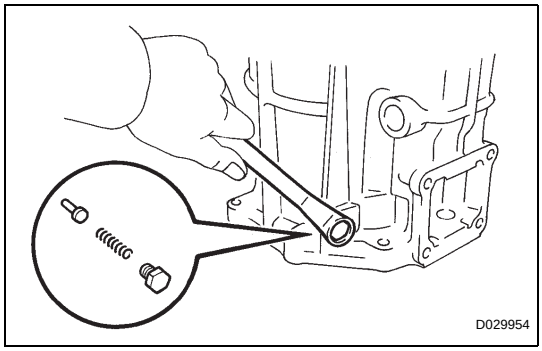

31. REMOVE TRANSFER CASE PLUG

(a) Remove the case plug.
(b) Using a magnetic finger, remove the spring and pin.

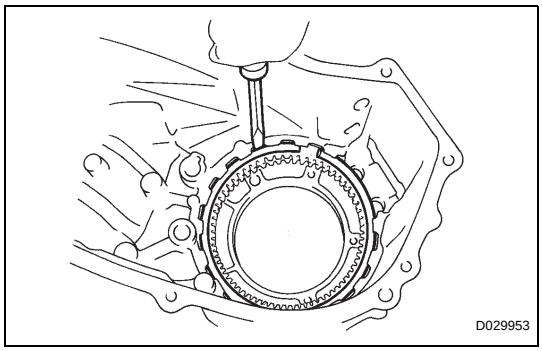

32. REMOVE TRANSFER LOW PLANETARY RING GEAR

(a) Using a screwdriver, remove the hole snap ring.
(b) Remove the low planetary ring gear from the front case.

33. REMOVE TRANSFER CASE OIL SEAL

(a) Using a screwdriver and hammer, remove the transfer case oil seal.

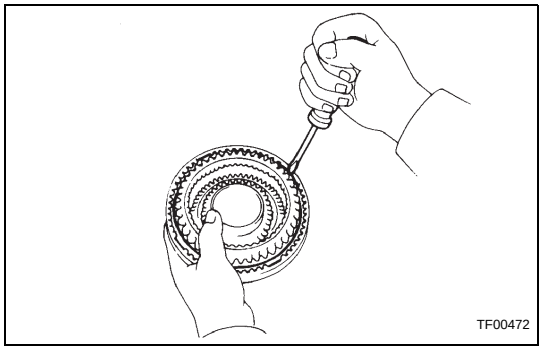

34. REMOVE TRANSFER LOW PLANETARY GEAR SPLINE PIECE

(a) Using a screwdriver, remove the low planetary gear shaft snap ring.

cardiagn.com

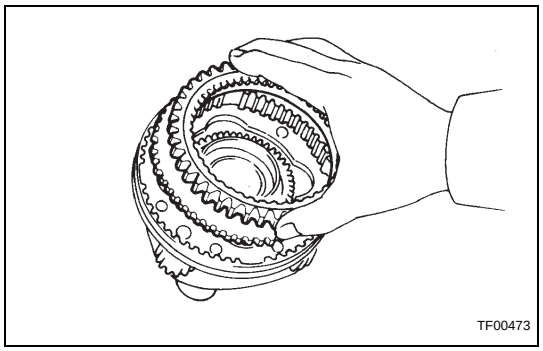

(b) Remove the low planetary gear spline piece.

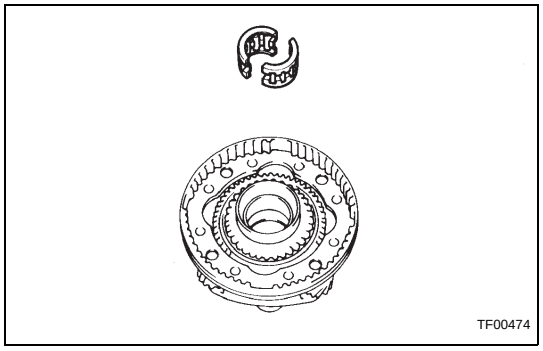

35. REMOVE TRANSFER OUTPUT SHAFT FRONT NEEDLE ROLLER BEARING

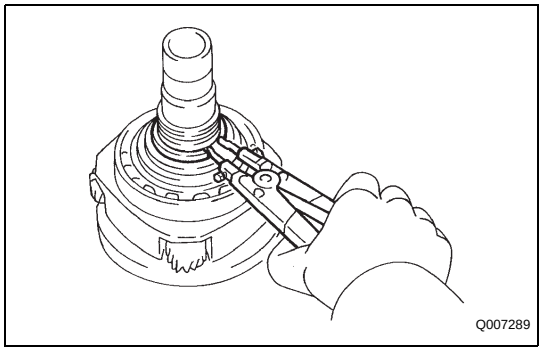

36. REMOVE TRANSFER INPUT GEAR STOPPER SHAFT SNAP RING

(a) Using a snap ring expander, remove the input gear stopper shaft snap ring.

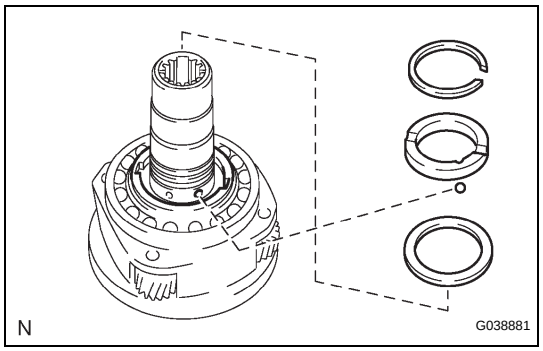

37. REMOVE TRANSFER INPUT GEAR STOPPER

38. REMOVE TRANSFER INPUT GEAR STOPPER BALL

39. REMOVE MANUAL TRANSFER PLANETARY CARRIER WASHER

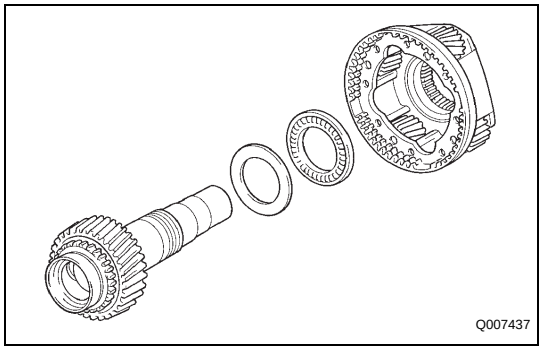

40. REMOVE TRANSFER INPUT SHAFT

41. REMOVE TRANSFER NO. 1 THRUST BEARING RACE

42. REMOVE TRANSFER LOW PLANETARY GEAR BEARING

cardiagn.com

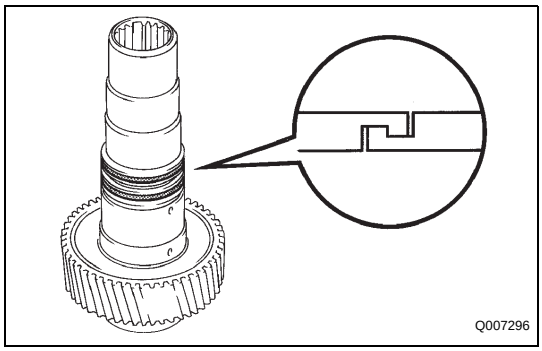

43. REMOVE TRANSFER NO. 1 INPUT SHAFT SEAL RING

(a) Remove the 2 seal rings No. 1.

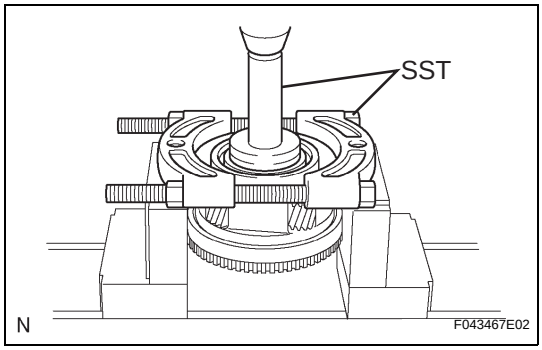

44. REMOVE TRANSFER INPUT SHAFT BEARING

(a) Using a snap ring expander, remove the input bearing shaft snap ring.

(b) Using SST and a press, remove the input shaft bearing.

SST 09554-30011, 09555-55010

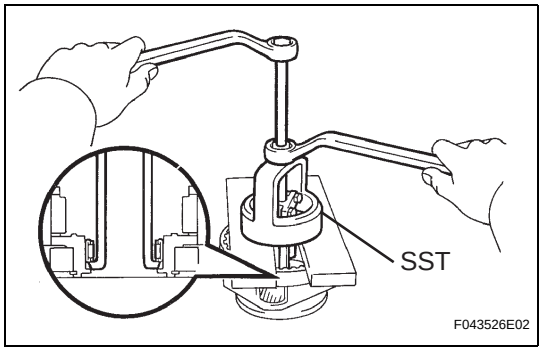

45. REMOVE TRANSFER LOW PLANETARY GEAR BEARING

(a) Using SST, remove the low planetary gear bearing.

SST 09612-65014 (09612-01030, 09612-01050)

NOTICE:

Hang SST securely to the clearance between the bearing and the low planetary gear.

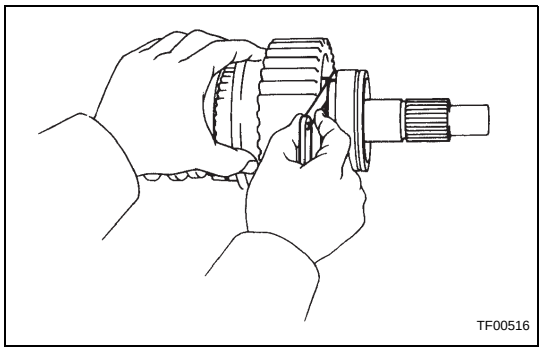

46. INSPECT DRIVE SPROCKET THRUST CLEARANCE

(a) Using a feeler gauge, measure the drive sprocket thrust clearance.

Standard clearance:

0.10 to 0.25 mm (0.0039 to 0.0098 in.)

Maximum clearance:

0.25 mm (0.0098 in.)

If the clearance exceeds the maximum, replace the drive sprocket.

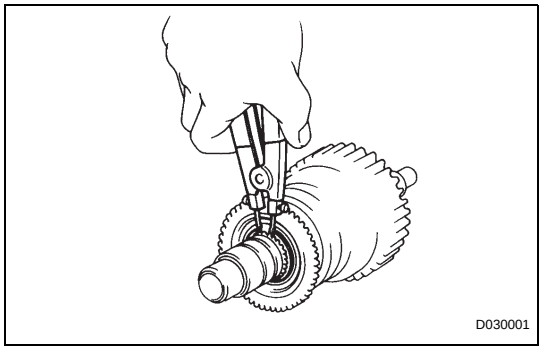

47. REMOVE TRANSFER CLUTCH HUB

(a) Using a snap ring expander, remove the clutch hub shaft snap ring.

(b) Remove the high and low clutch sleeve.

cardiagn.com

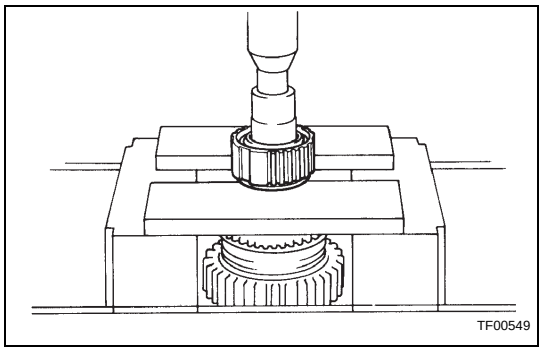

(c) Using a press, remove the clutch hub.

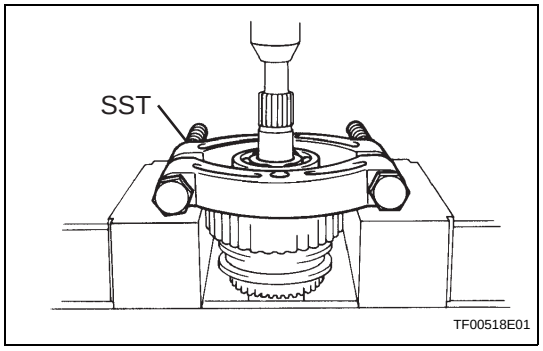

48. REMOVE TRANSFER OUTPUT SHAFT REAR RADIAL BALL BEARING

(a) Using SST and a press, remove the bearing.
SST 09555-55010

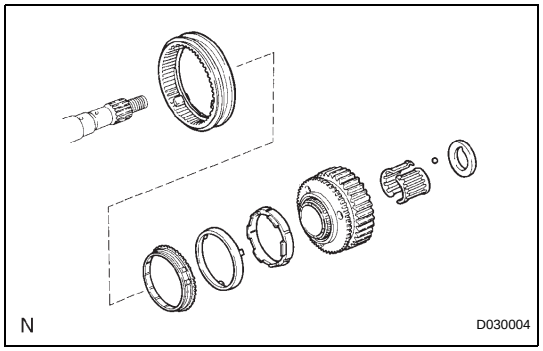

49. REMOVE TRANSFER DRIVE SPROCKET SUB-ASSEMBLY

(a) Remove the output shaft spacer and output shaft spacer ball.
(b) Remove the drive sprocket sub-assembly, synchronizer inner ring, center ring, outer ring and drive clutch sleeve together.
(c) Remove the drive sprocket bearing.
(d) Remove the synchronizer inner ring, center ring, outer ring and drive clutch sleeve.
(e) Remove the 3 synchromesh shifting keys No. 1 and the 2 synchromesh shifting key springs No. 1.

INSPECTION

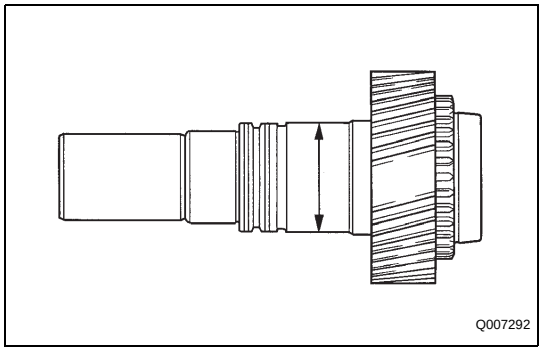

1. INSPECT TRANSFER INPUT SHAFT

(a) Using a micrometer, measure the outer diameter of the input shaft journal surface.
Minimum diameter:
47.59 mm (1.8736 in.)
If the outer diameter is less than the minimum, replace the input shaft.

cardiagn.com

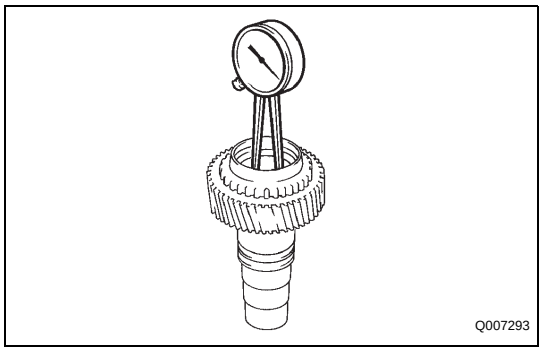

(b) Using a dial indicator, measure the inside diameter of the input shaft bushing.
Maximum diameter:
39.14 mm (1.5409 in.)
If the inside diameter exceeds the maximum, replace the input shaft.

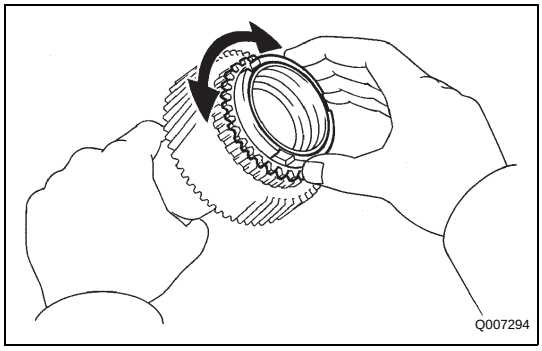

2. INSPECT SYNCHRONIZER RING

(a) Turn the ring and confirm that the input shaft and synchronizer ring are engaged with each other.

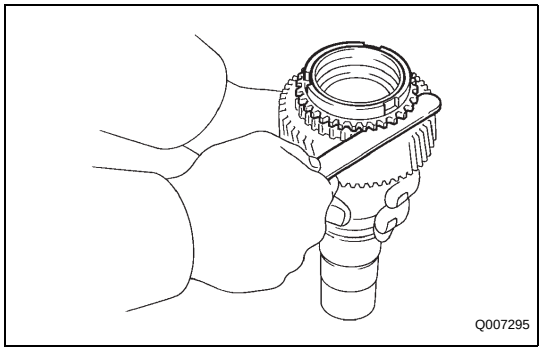

(b) Using a feeler gauge, measure the clearance between the synchronizer ring and the input shaft spline.
Standard clearance:
1.05 to 1.85 mm (0.0413 to 0.0728 in.)
Minimum clearance:
0.80 mm (0.0315 in.)
If the clearance is less than the minimum, replace the synchronizer ring.

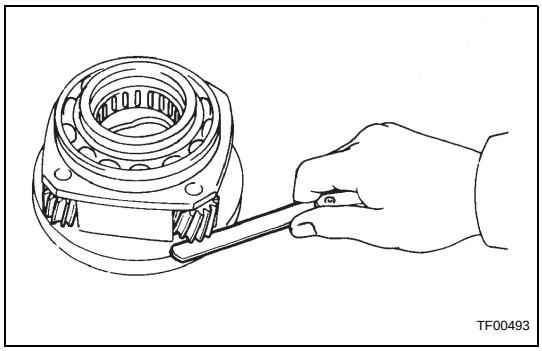

3. INSPECT PLANETARY PINION GEAR THRUST CLEARANCE

(a) Using a feeler gauge, measure the thrust clearance of the planetary pinion gear.
Standard clearance:
0.11 to 0.84 mm (0.0043 to 0.0331 in.)
Maximum clearance:
0.84 mm (0.0331 in.)
If the clearance exceeds the maximum, replace the planetary gear assembly.

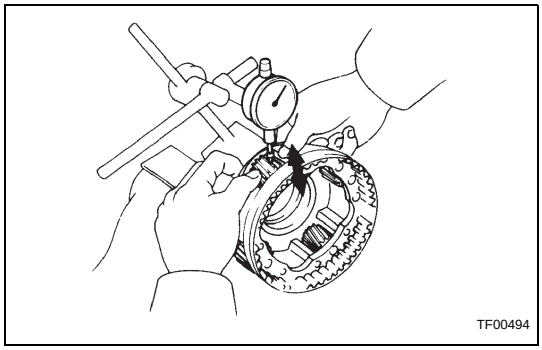

4. INSPECT PLANETARY PINION GEAR RADIAL CLEARANCE

(a) Using a dial indicator, measure the radial clearance of the planetary pinion gear.
Standard clearance:
0.009 to 0.038 mm (0.0004 to 00015 in.)
Maximum clearance:
0.038 mm (0.0015 in.)
If the clearance exceeds the maximum, replace the planetary gear assembly.

cardiagn.com

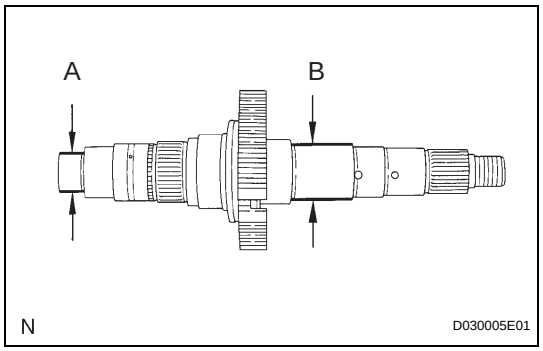

5. INSPECT TRANSFER REAR OUTPUT SHAFT

(a) Using a micrometer, measure the outer diameter of the output shaft rear journal surface.

Minimum diameter:
27.98 mm (1.1016 in.) for part A
36.98 mm (1.4561 in.) for part B

If the outer diameter is less than the minimum, replace the output shaft rear.

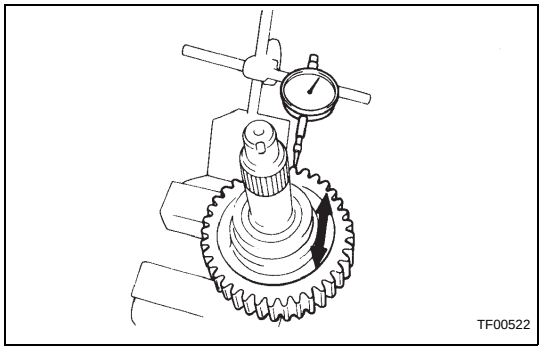

6. INSPECT DRIVE SPROCKET RADIAL CLEARANCE

(a) Using a dial indicator, measure the radial clearance between the sprocket and the shaft with the needle roller bearing installed.

Standard clearance:
0.010 to 0.055 mm (0.0004 to 0.0022 in.)
Maximum clearance:
0.055 mm (0.0022 in.)

If the clearance exceeds the maximum, replace the drive sprocket, rear output shaft and drive sprocket bearing.

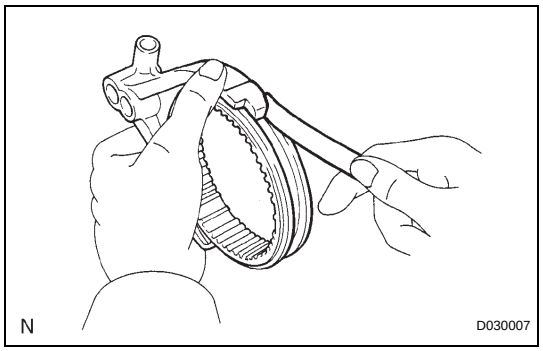

7. INSPECT GEAR SHIFT FORK NO. 1 AND HUB SLEEVE CLEARANCE

(a) Using a feeler gauge, measure the clearance between the gear shift fork No. 1 and drive clutch sleeve.

Maximum clearance:
1.0 mm (0.039 in.)

If the clearance exceeds the maximum, replace the gear shift fork No. 1 and drive clutch sleeve.

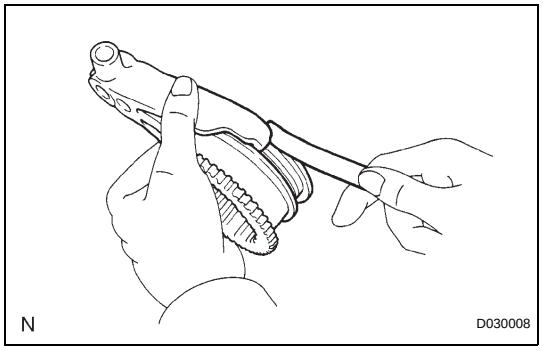

8. INSPECT GEAR SHIFT FORK NO. 2 AND HUB SLEEVE CLEARANCE

(a) Using a feeler gauge, measure the clearance between the gear shift fork No. 2 and high and low clutch sleeve.

Maximum clearance:
1.0 mm (0.039 in.)

If the clearance exceeds the maximum, replace the gear shift fork No. 2 and high and low clutch sleeve.

REASSEMBLY

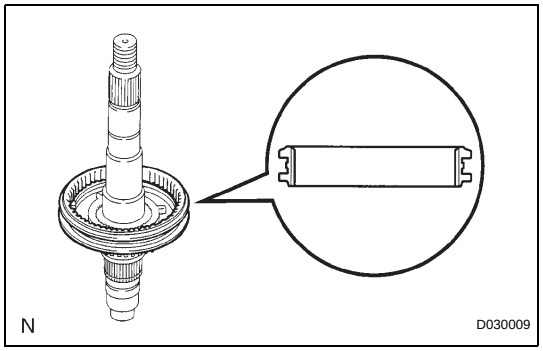

1. INSTALL FRONT DRIVE CLUTCH SLEEVE

(a) Install the drive clutch sleeve onto the rear output shaft.

NOTICE:
Make sure that the clutch sleeve is installed facing in the correct direction.

cardiagn.com

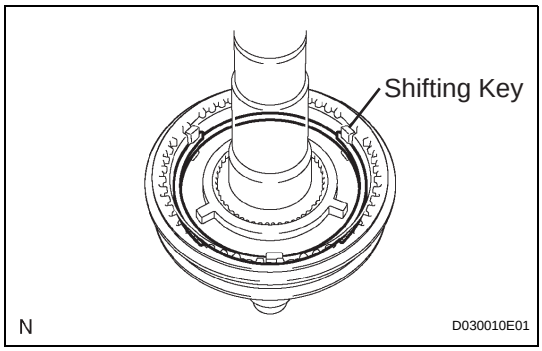

(b) Install the 3 synchromesh shifting keys No. 1 and the 2 synchromesh shifting keys spring No. 1.
NOTICE:
Install the key springs so that their end gaps are not in line.

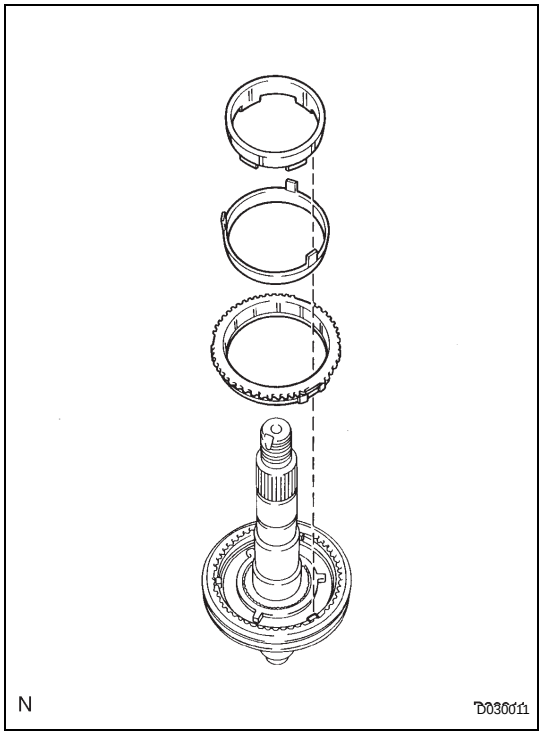

2. INSTALL TRANSFER SYNCHRONIZER RING SET

(a) Install the synchronizer outer ring onto the rear output shaft.
NOTICE:
Align the slots of the synchronizer outer ring with the shifting keys.

(b) Install the synchronizer center and the inner rings onto the rear output shaft.
NOTICE:
Align the slots of the synchronizer outer with those of the inner rings.

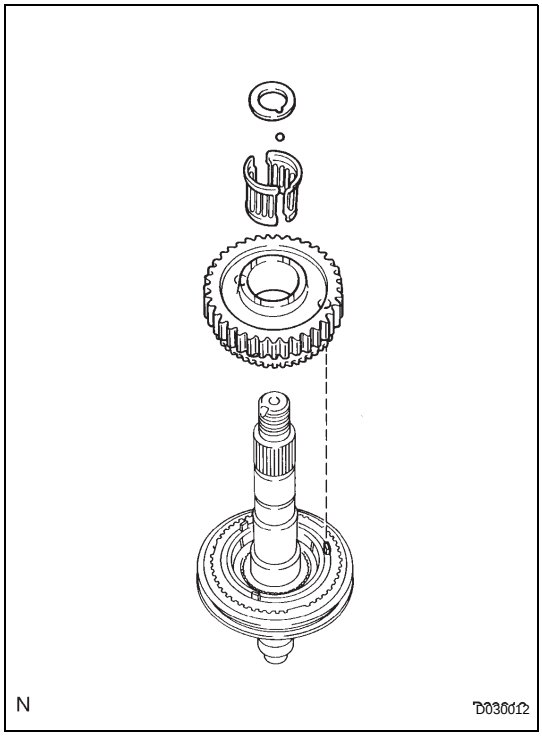

3. INSTALL TRANSFER DRIVE SPROCKET SUB-ASSEMBLY

(a) Install a new drive sprocket bearing.

(b) Install the drive sprocket sub-assembly.
NOTICE:
Align the holes in the drive sprocket with the protrusions on the synchronizer center ring.

(c) Install the output shaft spacer aligned it with the output shaft spacer ball.

cardiagn.com

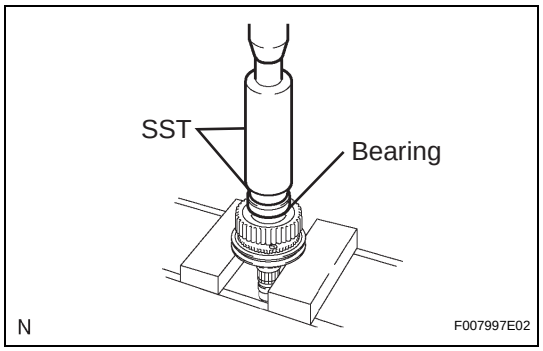

4. INSTALL TRANSFER OUTPUT SHAFT REAR RADIAL BALL BEARING

(a) Using SST and a press, install a new output shaft rear radial ball bearing with the output shaft snap ring groove toward the rear.
SST 09316-60011 (09316-00011, 09316-00071)

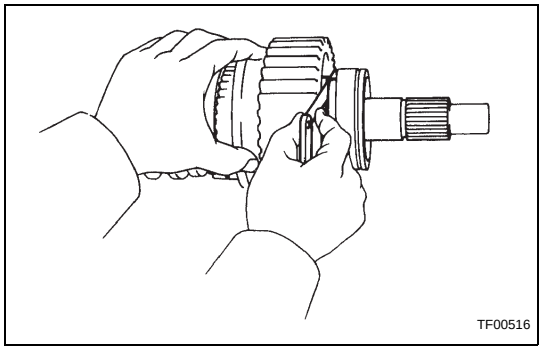

5. INSPECT DRIVE SPROCKET THRUST CLEARANCE

(a) Using a feeler gauge, measure the drive sprocket thrust clearance.
Standard clearance:
0.10 to 0.25 mm (0.0039 to 0.0098 in.)
Maximum clearance:
0.25 mm (0.0098 in.)
If the clearance exceeds the maximum, replace the drive sprocket sub-assembly.

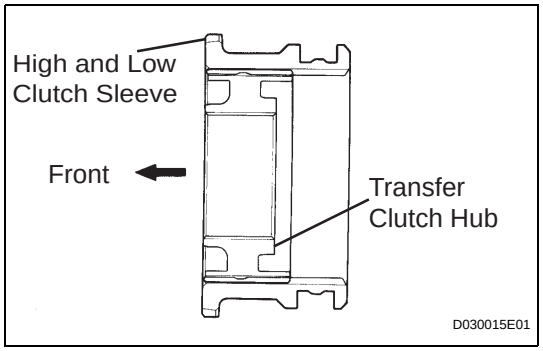

6. INSTALL TRANSFER HIGH AND LOW CLUTCH SLEEVE

(a) Install the high and low clutch sleeve onto the transfer clutch hub.
NOTICE:
Make sure that the high and low clutch hub is installed facing in the correct direction.

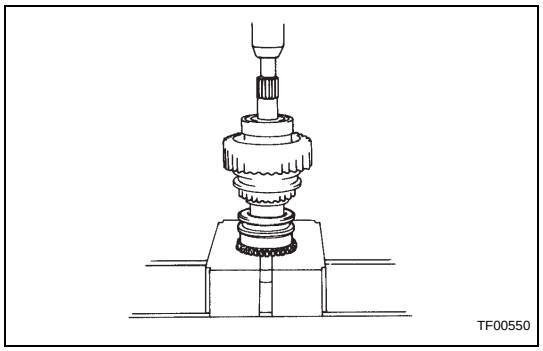

7. INSTALL TRANSFER CLUTCH HUB

(a) Using a press, install the transfer clutch hub.

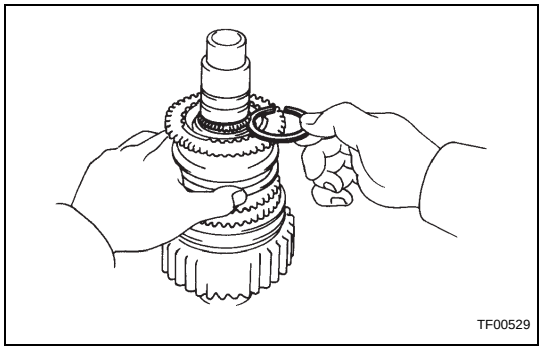

(b) Select an output shaft snap ring that allows the minimum axial play.

Mark	Thickness mm (in.)
A	2.10 to 2.15 (0.0827 to 0.0846)
B	2.15 to 2.20 (0.0846 to 0.0866)
C	2.20 to 2.25 (0.0866 to 0.0886)
D	2.25 to 2.30 (0.0886 to 0.0906)
E	2.30 to 2.35 (0.0906 to 0.0925)
F	2.35 to 2.40 (0.0925 to 0.0945)

cardiagn.com

Mark	Thickness mm (in.)
G	2.40 to 2.45 (0.0945 to 0.0965)
H	2.45 to 2.50 (0.0965 to 0.0984)
J	2.50 to 2.55 (0.0984 to 0.1004)
K	2.00 to 2.05 (0.0787 to 0.0807)
L	2.05 to 2.10 (0.0807 to 0.0827)

(c) Using a snap ring expander, install the new snap ring.

8. INSTALL TRANSFER LOW PLANETARY RING GEAR

(a) Install the low planetary ring gear onto the transfer case front.

NOTICE:
Be sure to install the low planetary ring gear facing in the correct direction.

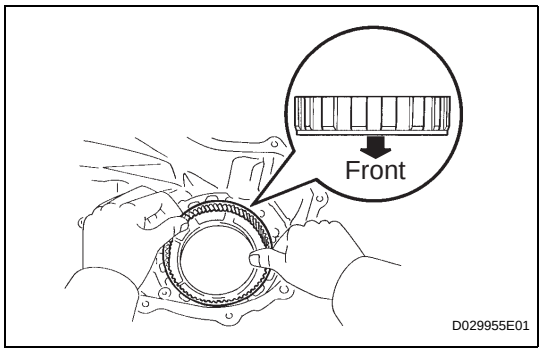

(b) Using a screwdriver, install the hole snap ring.

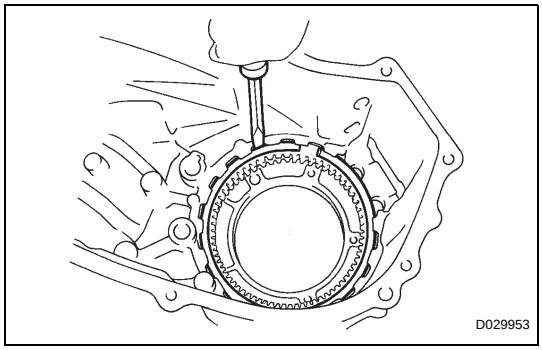

9. INSTALL TRANSFER CASE PLUG

(a) Install the pin and spring.

(b) Apply sealant to the case plug threads.

Sealant:
Part No. 08833-00080, THREE BOND 1344, LOCTITE 242 or equivalent

(c) Install the case plug.

Torque: 18.6 N*m (190 kgf*cm, 14 ft.*lbf)

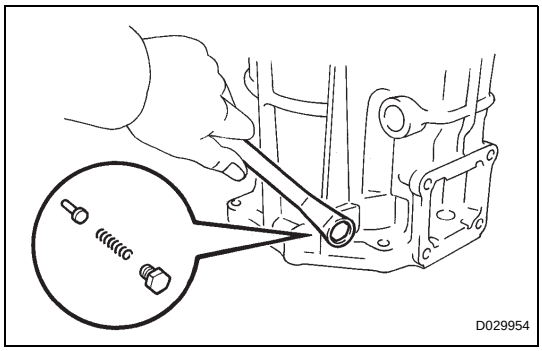

10. INSTALL TRANSFER LOW PLANETARY GEAR BEARING

(a) Using SST and a press, tap in a new low planetary gear bearing.

SST 09950-60010 (09951-00570), 09950-70010 (09951-07100)

Press in depth:
7.7 to 8.3 mm (0.303 to 0.327 in.)

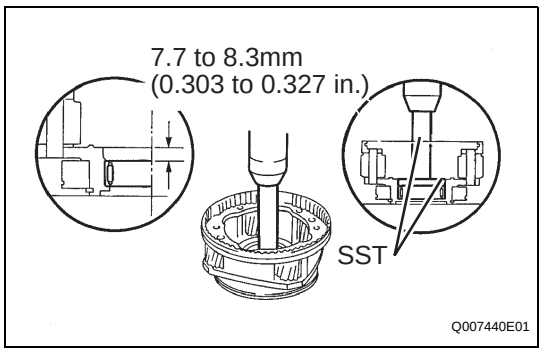

cardiagn.com

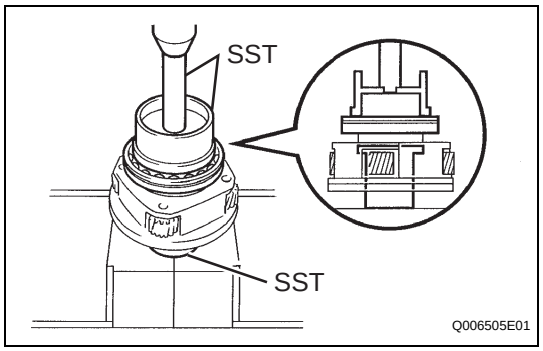

11. INSTALL TRANSFER INPUT SHAFT BEARING

(a) Using SST and a press, install a new input shaft bearing with the groove facing forward.

SST 09223-15020, 09515-30010, 09950-70010 (09951-07100)

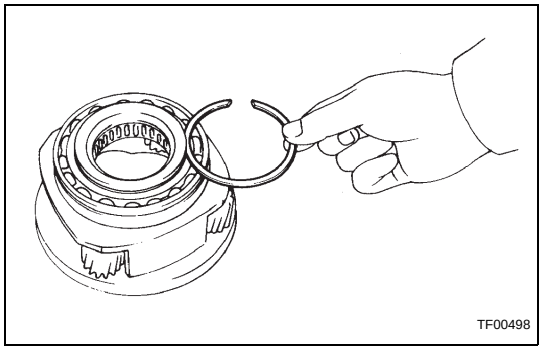

(b) Select a snap ring that allows 0.1 mm (0.004 in.) or less axial play.

Mark	Thickness mm (in.)
1	1.45 to 1.50 (0.0571 to 0.0591)
2	1.50 to 1.55 (0.0591 to 0.0610)
3	1.55 to 1.60 (0.0610 to 0.0630)
4	1.60 to 1.65 (0.0630 to 0.0650)
5	1.65 to 1.70 (0.0650 to 0.0669)

(c) Using a snap ring expander, install the new input bearing shaft snap ring.

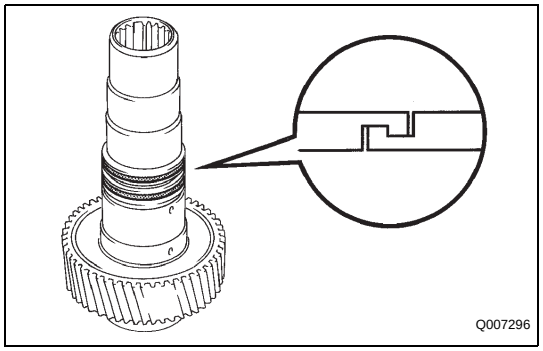

12. INSTALL TRANSFER NO. 1 INPUT SHAFT SEAL RING

(a) Apply gear oil to the 2 input shaft seal ring No. 1.

(b) Engage the rings securely to eliminate any clearance, as shown in the illustration.

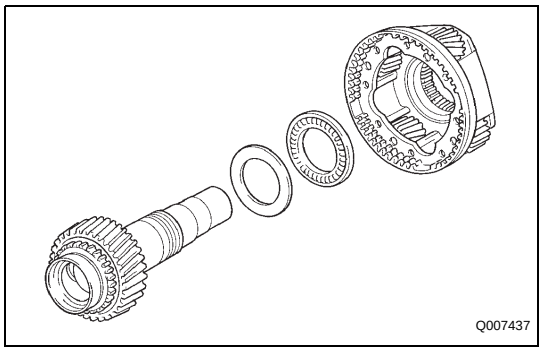

13. INSTALL TRANSFER LOW PLANETARY GEAR BEARING

NOTICE:

Be sure to install the transfer low planetary gear facing in the correct direction.

14. INSTALL TRANSFER NO. 1 THRUST BEARING RACE

15. INSTALL TRANSFER INPUT SHAFT

TF

cardiagn.com

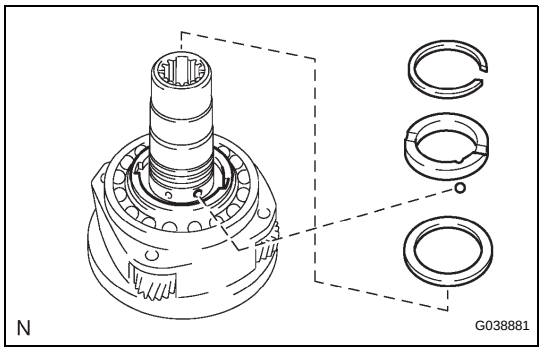

16. INSTALL MANUAL TRANSFER PLANETARY CARRIER WASHER

17. INSTALL TRANSFER INPUT GEAR STOPPER BALL

18. INSTALL TRANSFER INPUT GEAR STOPPER

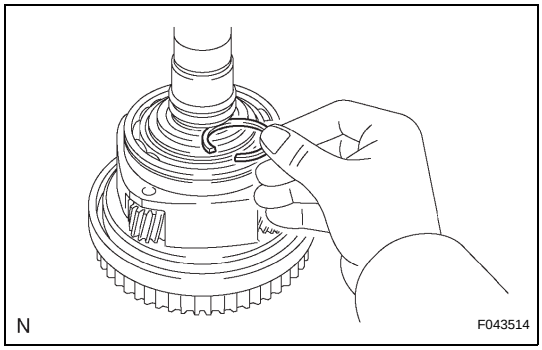

19. INSTALL TRANSFER INPUT GEAR STOPPER SHAFT SNAP RING

(a) Select an input gear stopper shaft snap ring that allows 0.05 to 0.15 mm (0.0020 to 0.0059 in.) axial play.

Mark	Thickness mm (in.)
A	2.10 to 2.15 (0.0827 to 0.0846)
B	2.15 to 2.20 (0.0846 to 0.0866)
C	2.20 to 2.25 (0.0866 to 0.0886)
D	2.25 to 2.30 (0.0886 to 0.0906)
E	2.30 to 2.35 (0.0906 to 0.0925)
F	2.35 to 2.40 (0.0925 to 0.0945)
G	2.40 to 2.45 (0.0945 to 0.0965)
H	2.45 to 2.50 (0.0965 to 0.0984)
J	2.50 to 2.55 (0.0984 to 0.1004)
K	2.55 to 2.60 (0.1004 to 0.1204)
L	2.60 to 2.65 (0.1024 to 0.1043)
M	2.65 to 2.70 (0.1043 to 0.1063)
N	2.70 to 2.75 (0.1063 to 0.1083)
P	2.75 to 2.80 (0.1083 to 0.1102)
Q	2.80 to 2.85 (0.1102 to 0.1122)
R	2.85 to 2.90 (0.1122 to 0.1142)
S	2.90 to 2.95 (0.1142 to 0.1161)
T	2.95 to 3.00 (0.1161 to 0.1181)
U	3.00 to 3.05 (0.1181 to 0.1201)

(b) Using a snap ring expander, install the new input gear stopper shaft snap ring.

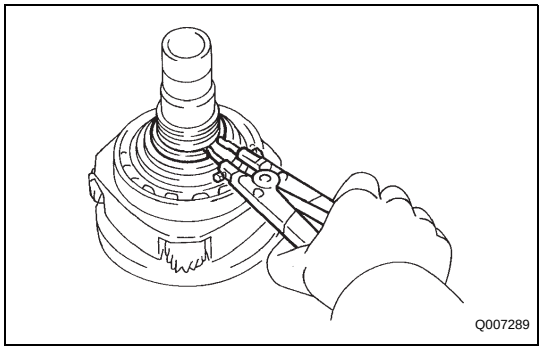

cardiagn.com

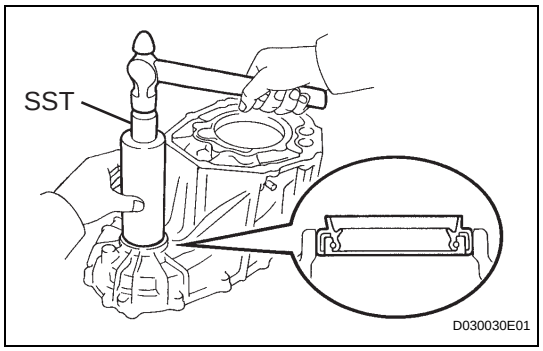

20. INSTALL TRANSFER CASE OIL SEAL

(a) Using SST and a hammer, tap in a new oil seal until its surface is flush with the case upper surface.
SST 09316-60011 (09316-00011)

(b) Coat the lip of the oil seal with MP grease.

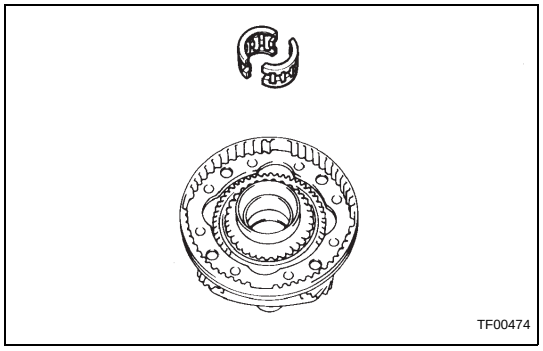

21. INSTALL TRANSFER OUTPUT SHAFT FRONT NEEDLE ROLLER BEARING

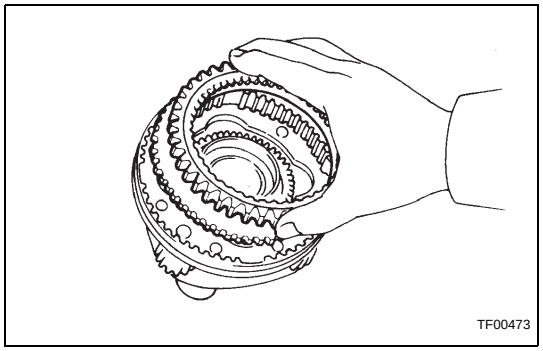

22. INSTALL TRANSFER LOW PLANETARY GEAR SPLINE PIECE

(a) Install the low planetary gear spline piece.

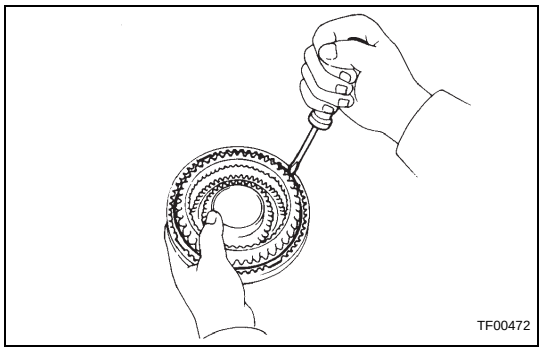

(b) Using a screwdriver, install the low planetary gear shaft snap ring.
NOTICE:
Make sure that the end gap of the snap ring is not aligned with the cutout of the planetary carrier.

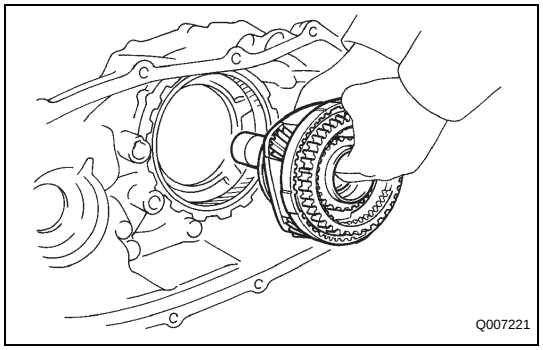

23. INSTALL LOW PLANETARY GEAR ASSEMBLY WITH INPUT SHAFT SUB-ASSEMBLY

(a) Install the low planetary gear assembly w/ input shaft sub-assembly.
HINT:
If necessary, heat the front case to about 50 to 80°C (122 to 176°F).

TF

cardiagn.com

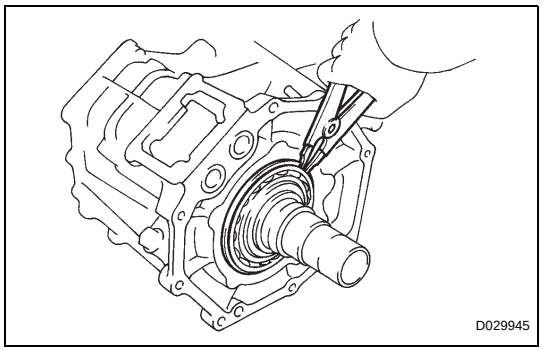

(b) Using a snap ring expander, install the shaft snap ring.

24. INSTALL TRANSFER OIL PUMP GEAR

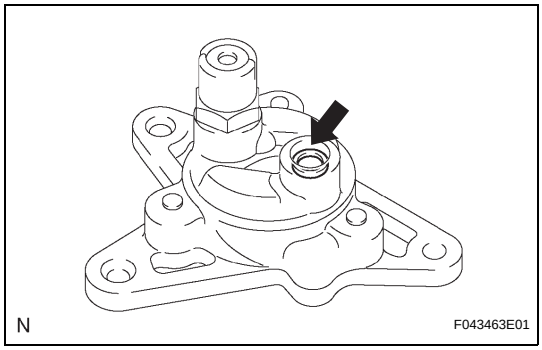

25. INSTALL TRANSFER OIL PUMP BODY O-RING

(a) Coat a new O-ring with gear oil and install it onto the oil pump body.

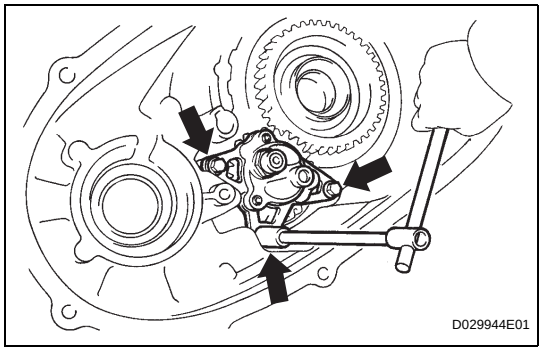

26. INSTALL TRANSFER OIL PUMP BODY SUB-ASSEMBLY

(a) Install the oil pump body sub-assembly with the 3 bolts.
Torque: 7.5 N*m (76 kgf*cm, 66 in.*lbf)

27. INSTALL TRANSFER CASE MAGNET

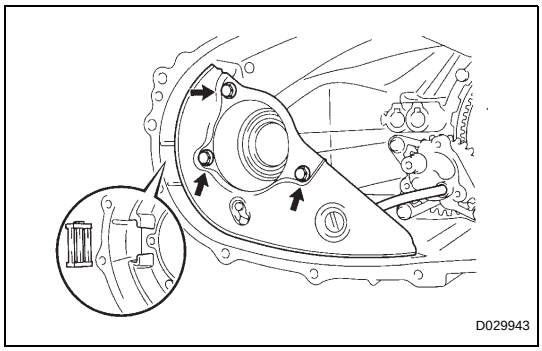

28. INSTALL TRANSFER OIL SEPARATOR SUB-ASSEMBLY

(a) Install the oil separator sub-assembly with the 3 bolts.
Torque: 7.5 N*m (76 kgf*cm, 66 in.*lbf)

29. INSTALL TRANSFER CASE PLUG

(a) Install the case plug No. 1 (filler plug) and a new gasket.
Torque: 37 N*m (377 kgf*cm, 27 ft.*lbf)

30. INSTALL TRANSFER CASE PLUG

(a) Install the case plug (drain plug) and a new gasket.
Torque: 37 N*m (377 kgf*cm, 27 ft.*lbf)

cardiagn.com

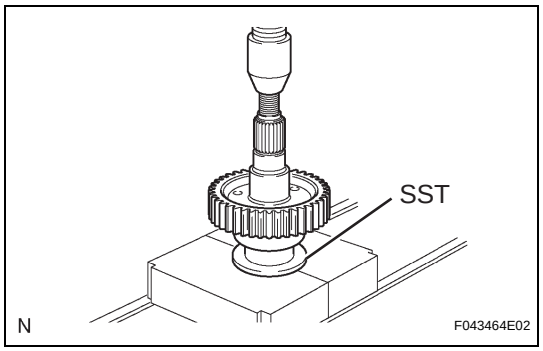

31. INSTALL TRANSFER INPUT GEAR RADIAL BALL BEARING

(a) Using SST and a press, install a new input gear radial ball bearing.
SST 09316-60011 (09316-00031)

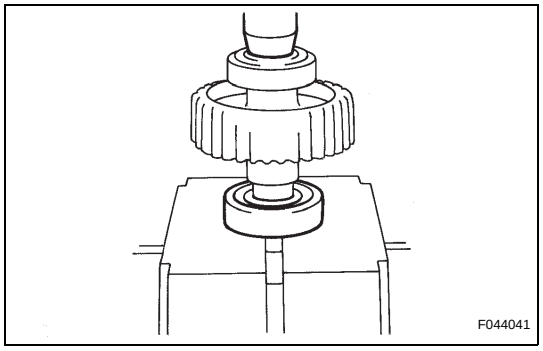

32. INSTALL TRANSFER DRIVEN SPROCKET BEARING

(a) Using a press, install a new driven sprocket bearing.

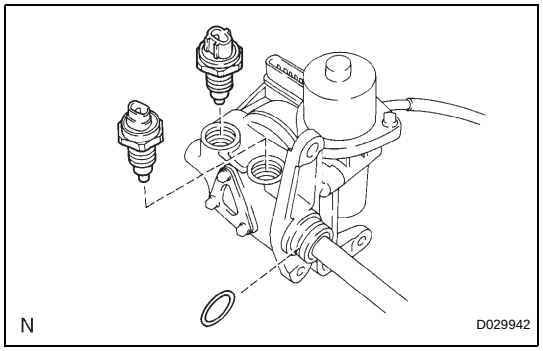

33. INSTALL TRANSFER INDICATOR SWITCH NO.1

(a) Coat a new O-ring with gear oil and install it onto the shift actuator assembly.
(b) Install 2 new gaskets and the 2 indicator switches No. 1 onto the shift actuator assembly.
Torque: 37 N*m (377 kgf*cm, 27 ft.*lbf)

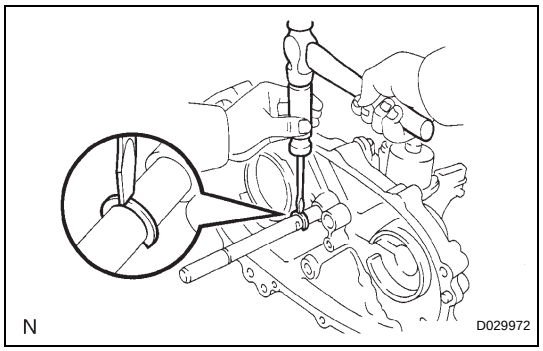

34. INSTALL TRANSFER SHIFT ACTUATOR ASSEMBLY

(a) Install the shift actuator assembly with the 3 bolts.
Torque: 20 N*m (204 kgf*cm, 15 ft.*lbf)
(b) Using a screwdriver and hammer, tap in the shift fork shaft snap ring.
HINT:
Install only the snap ring on the rear side of the shaft.

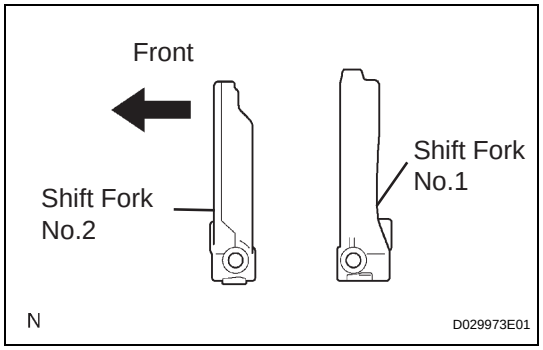

35. INSTALL REAR OUTPUT SHAFT ASSEMBLY, FRONT DRIVE CHAIN, DRIVEN SPROCKET ASSEMBLY, SHIFT FORK NO. 1 AND NO. 2

(a) Install the driven sprocket assembly, front drive chain and shift forks No. 1 and No. 2 onto the rear output shaft assembly.
NOTICE:
Make sure that the shift forks No. 1 and No. 2 are installed facing in the correct direction.

cardiagn.com

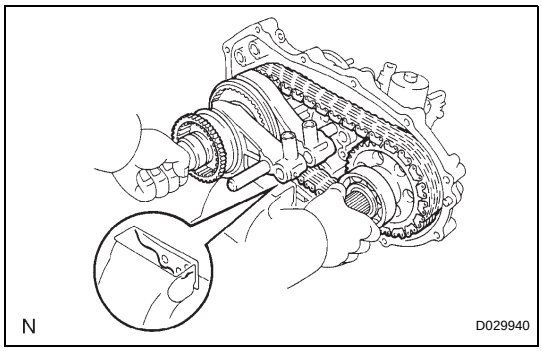

(b) Fix the case rear in a vise.

(c) Install the rear output shaft assembly, front drive chain, driven sprocket assembly and shift forks No. 1 and No. 2 onto the case rear.

NOTICE:

Do not let the clutch sleeve or shifting key drop.

HINT:

If necessary, heat the rear case to about 50 to 80°C (122 to 176°F).

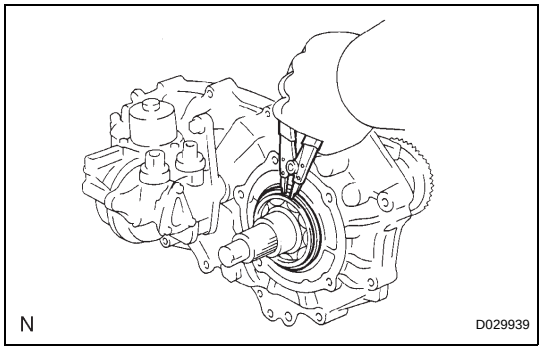

(d) Using a snap ring expander, install the output shaft snap ring.

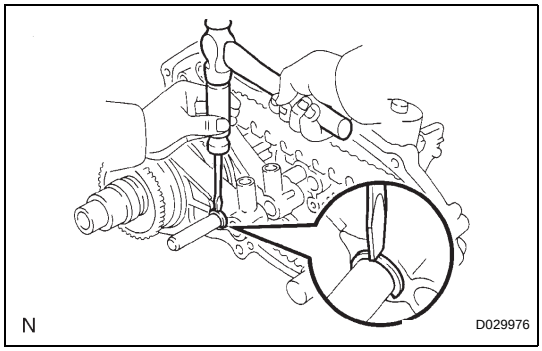

(e) Using a screwdriver and hammer, tap in the shift fork shaft snap ring.

HINT:

Check that the rear output shaft assembly and driven sprocket assembly turn smoothly.

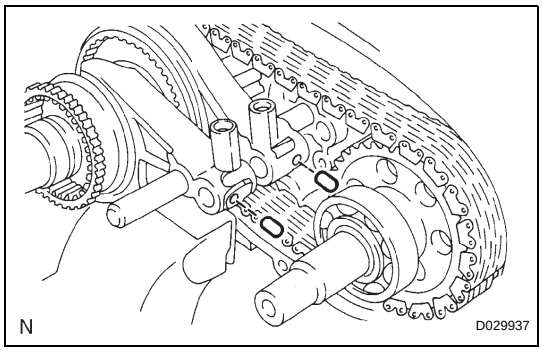

36. INSTALL TRANSFER FRONT DRIVE SHIFT FORK SHAFT

(a) Using a magnetic finger, install the 2 shift inter lock pins onto the shift forks No. 1 and No. 2.

cardiagn.com

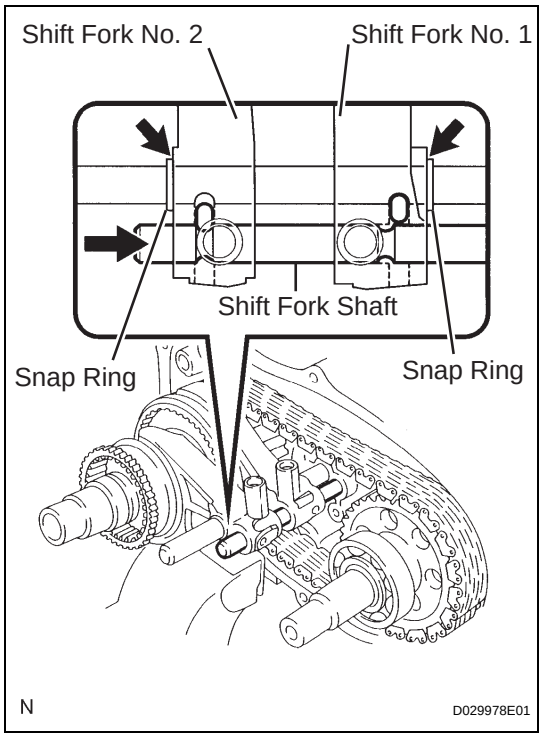

(b) To push in the shift fork shaft, shift the shift fork No. 1 and No. 2 to the positions shown in the illustration.

(c) Push in the shift fork shaft.
NOTICE:
Make sure that the shift fork shaft is installed facing in the correct direction.

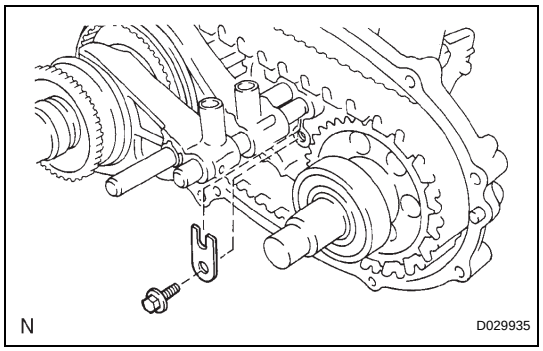

(d) Install the shift shaft stopper with the bolt.
Torque: 19 N*m (194 kgf*cm, 14 ft.*lbf)

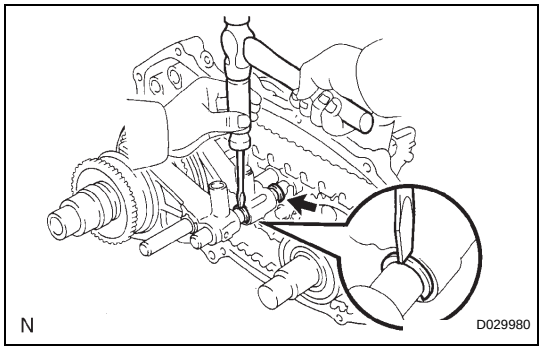

(e) Using a screwdriver and hammer, tap the 2 shift fork shaft snap rings into the shift fork shaft.

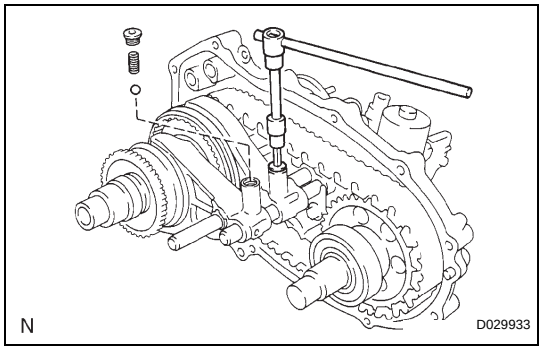

(f) Install the 2 shift detent balls and 2 compression springs onto the shift forks No. 1 and No. 2.

(g) Apply sealant to the shift detent ball spring plug threads.
Sealant:
Part No. 08833-00080, THREE BOND 1344, LOCTITE 242 or equivalent

(h) Using a hexagon wrench (6 mm), install the 2 shift detent ball spring plugs onto the shift forks No. 1 and No. 2.
Torque: 18.6 N*m (190 kgf*cm, 14 ft.*lbf)

TF

cardiagn.com

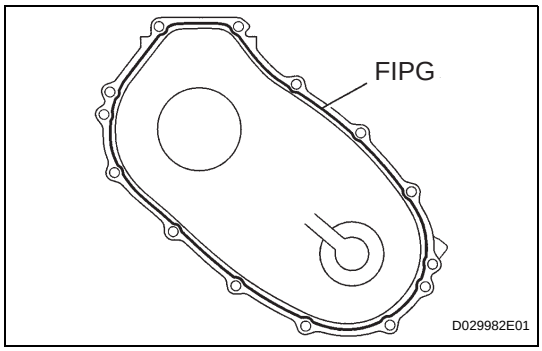

37. INSTALL TRANSFER REAR CASE

(a) Apply FIPG to the case rear, as shown in the illustration.
FIPG:
Part No. 08826-00090, THREE BOND 1281 or equivalent

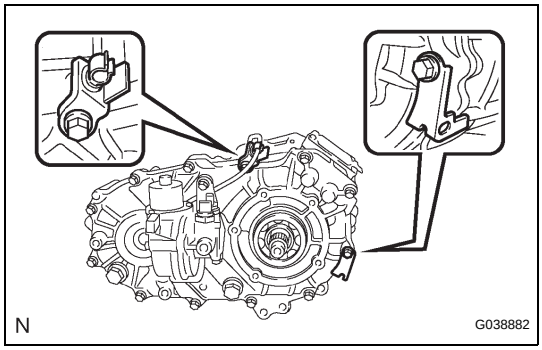

(b) Engage the 2 brackets and install the case rear with the 12 bolts.
Torque: 28 N*m (286 kgf*cm, 21 ft.*lbf)

38. INSTALL TRANSFER SPEEDOMETER DRIVE GEAR

(a) Coat the speedometer drive gear ball with MP grease and install it onto the rear output shaft assembly.
(b) Install the speedometer drive gear.

39. INSTALL TRANSFER OUTPUT WASHER

(a) Install the 2 output washers.

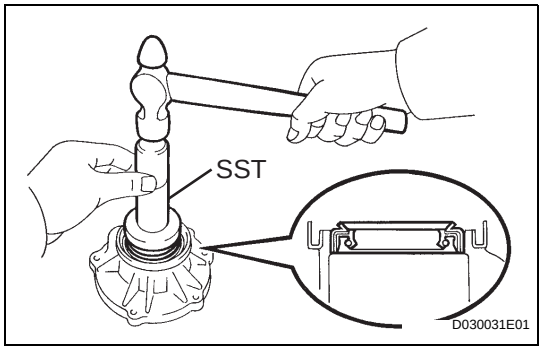

40. INSTALL TRANSFER EXTENSION HOUSING TYPE T OIL SEAL

(a) Using SST and a hammer, tap in a new extension housing type T oil seal until its surface is flush with the housing upper surface.
SST 09554-22010
(b) Coat the lip of the oil seal with MP grease.

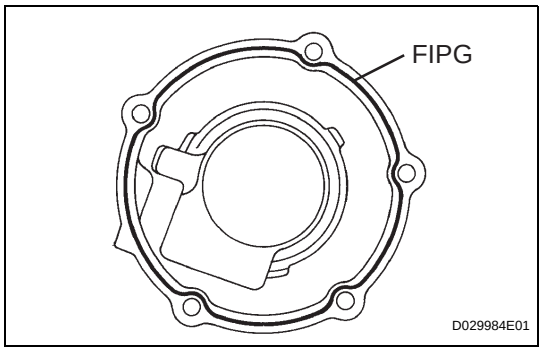

41. INSTALL TRANSFER EXTENSION HOUSING SUB-ASSEMBLY FRONT

(a) Apply FIPG to the extension housing sub-assembly, as shown in the illustration.
FIPG:
Part No. 08826-00090, THREE BOND 1281 or equivalent
(b) Apply sealant to the bolt threads.
Sealant:
Part No. 08833-00080, THREE BOND 1344, LOCTITE 242 or equivalent

cardiagn.com

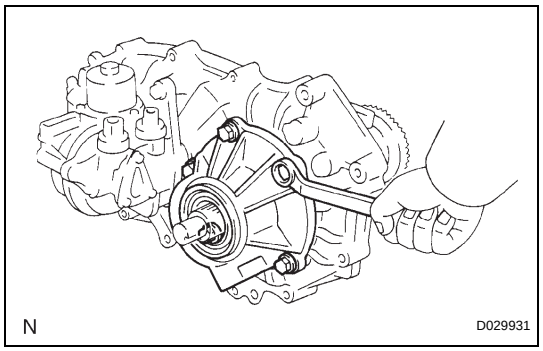

(c) Install the extension housing sub-assembly with the 5 bolts.
Torque: 12 N*m (122 kgf*cm, 9 ft.*lbf)

42. INSTALL SPEEDOMETER DRIVEN GEAR ASSEMBLY WITH SENSOR (for R155F/RA60F)

(a) Install the speedometer driven gear w/ sensor with the bolt.
Torque: 11.5 N*m (117 kgf*cm, 8 ft.*lbf)

43. INSTALL SPEEDOMETER DRIVEN HOLE COVER SUB-ASSEMBLY (for A750F)

(a) Install the speedometer driven hole cover with the bolt.
Torque: 11.5 N*m (117 kgf*cm, 8 ft.*lbf)

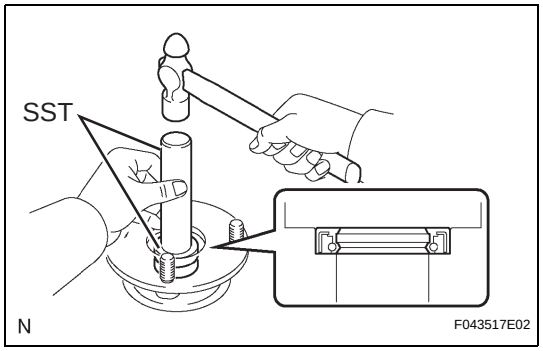

44. INSTALL TRANSFER OUTPUT SHAFT COMPANION FLANGE OIL SEAL

(a) Using SST and a hammer, tap in a new output shaft companion flange oil seal (front side).
SST 09950-60010 (09951-00320), 09950-70010 (09951-07100)

45. INSTALL TRANSFER OUTPUT SHAFT COMPANION FLANGE OIL SEAL

(a) Tap in a new output shaft companion flange oil seal using the same procedure as for the oil seal (rear side).
SST 09950-60010 (09951-00320), 09950-70010 (09951-07100)

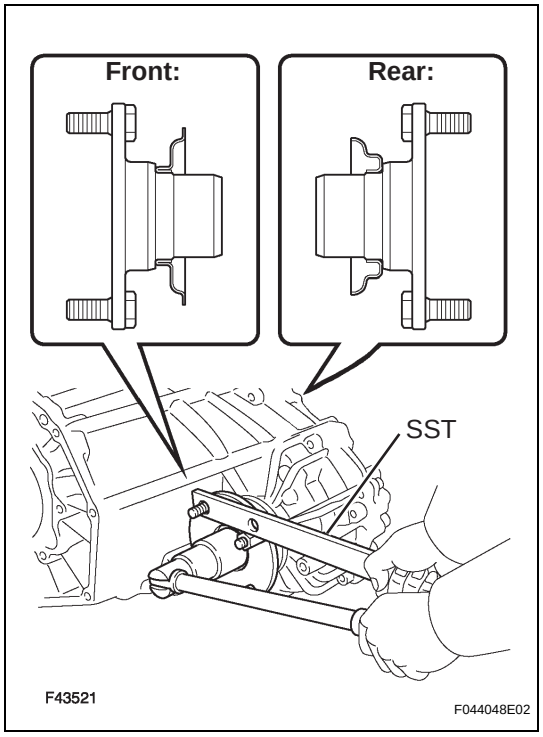

46. INSTALL OUTPUT SHAFT COMPANION FLANGE SUB-ASSEMBLY

(a) Install the companion flange sub-assembly (front side) onto the drive sprocket sub-assembly.
(b) Using SST to hold the companion flange, install a new companion flange lock nut.
SST 09330-00021
Torque: 118 N*m (1,203 kgf*cm, 87 ft.*lbf)
(c) Using a chisel and hammer, stake the companion flange lock nut.

47. INSTALL OUTPUT SHAFT COMPANION FLANGE SUB-ASSEMBLY

(a) Using SST, install the companion flange sub-assembly using the same procedure as for the companion flange sub-assembly (rear side).
SST 09330-00021

cardiagn.com

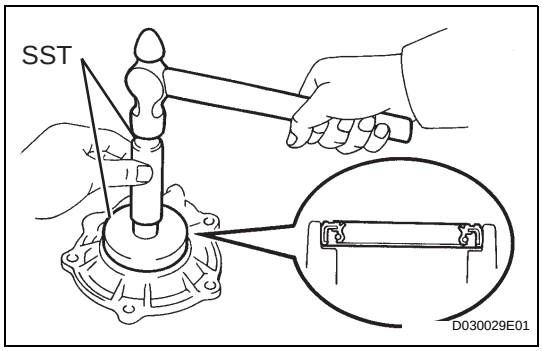

48. INSTALL TRANSFER RH BEARING RETAINER OIL SEAL (for R155F/A750F)

(a) Using SST and a hammer, tap in a new transfer cover type T oil seal until its surface is flush with the retainer upper surface.
SST 09950-60010 (09951-00590), 09950-70010 (09951-07100)

(b) Coat the lip of the oil seal with MP grease.

49. INSTALL TRANSFER RH BEARING RETAINER OIL SEAL (for RA60F)

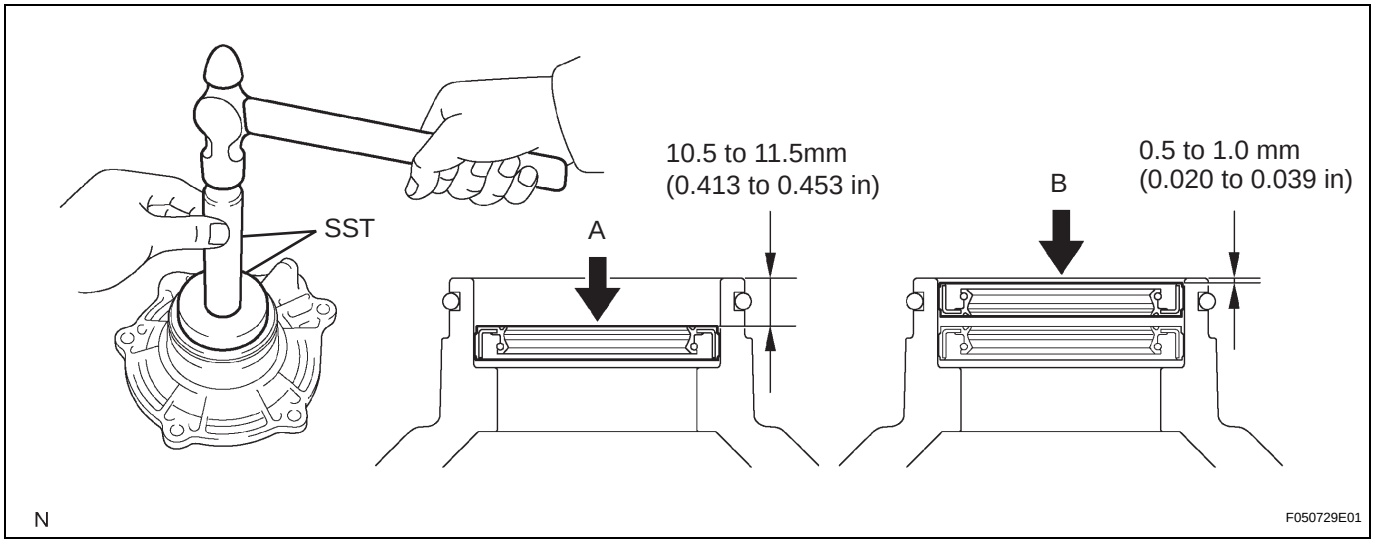

(a) Using SST and a hammer, tap in 2 new transfer cover type T oil seals A and B as shown in the illustration.
SST 09950-60010 (09951-00580), 09950-70010 (09951-07100)
Drive in depth:
10.5 to 11.5 mm (0.413 to 0.453 in.) for oil seal A
0.5 to 1.0 mm (0.020 to 0.039 in.) for oil seal B

(b) Coat the lip of the oil seal with MP grease.

(c) Install a new O-ring onto the transfer RH bearing retainer.
NOTICE:
Apply gear oil to the O-ring when installing the transfer onto the transmission.

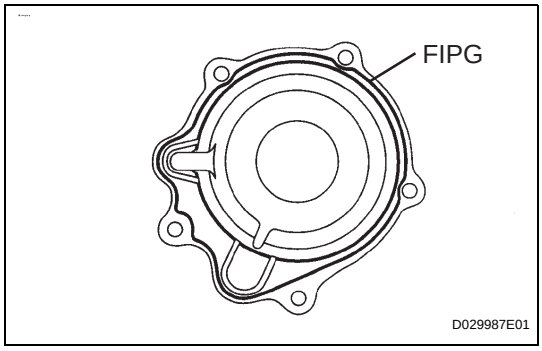

50. INSTALL TRANSFER RH BEARING RETAINER SUB-ASSEMBLY

(a) Apply FIPG to the front bearing retainer sub-assembly, as shown in the illustration.
FIPG:
Part No. 08826-00090, THREE BOND 1281 or equivalent

(b) Apply sealant to the bolt threads.
Sealant:
Part No. 08833-00080, THREE BOND 1344, LOCTITE 242 or equivalent

cardiagn.com

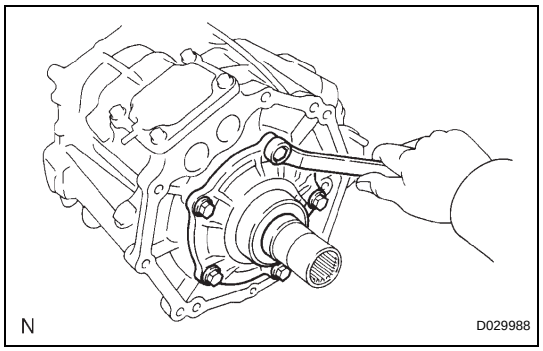

(c) Install the front bearing retainer sub-assembly with the 5 bolts.
Torque: 11.5 N*m (117 kgf*cm, 8 ft.*lbf)

51. INSTALL BREATHER OIL DEFLECTOR SUB-ASSEMBLY

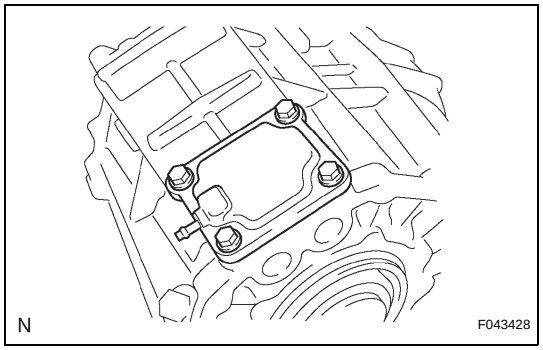

52. INSTALL TRANSFER CASE COVER SUB-ASSEMBLY
(a) Install the case cover sub-assembly with the 4 bolts.
Torque: 18 N*m (184 kgf*cm, 13 ft.*lbf)

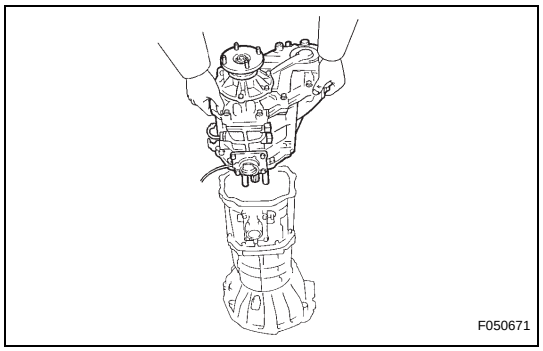

INSTALLATION

1. INSTALL TRANSFER ASSEMBLY
(a) Install the transfer assembly with the 8 bolts.
Torque: 24 N*m (244 kgf*cm, 17 ft.*lbf)
NOTICE:
Take care not to damage the adaptor rear oil seal with the transfer input gear spline.

2. INSTALL MANUAL TRANSMISSION ASSEMBLY (for R155F)
(See page MT-11)

3. INSTALL MANUAL TRANSMISSION ASSEMBLY (for RA60F)
(See page MT-8)

4. INSTALL AUTOMATIC TRANSMISSION ASSEMBLY (for A750F)
(See page AT-165)

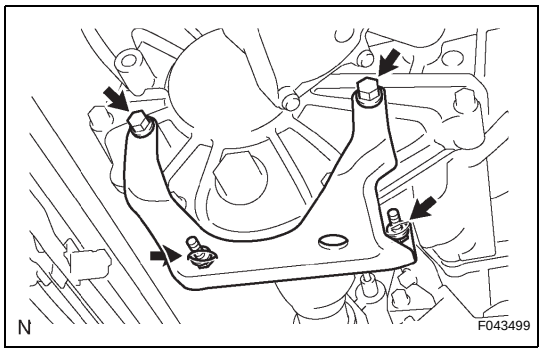

5. INSTALL TRANSFER CASE LOWER PROTECTOR
(a) Install the 4 bolts and the transfer case lower protector.
Torque: 18 N*m (184 kgf*cm, 13 ft.*lbf)

6. ADD TRANSFER OIL

7. INSPECT TRANSFER OIL (See page TF-3)

8. CONNECT CABLE TO NEGATIVE BATTERY TERMINAL
Torque: 3.9 N*m (40 kgf*cm, 35 in.*lbf)

9. CHECK FOR TRANSFER OIL LEAKAGE

10. CHECK FOR EXHAUST GAS LEAKAGE

cardiagn.com