INPUT SHAFT

COMPONENTS

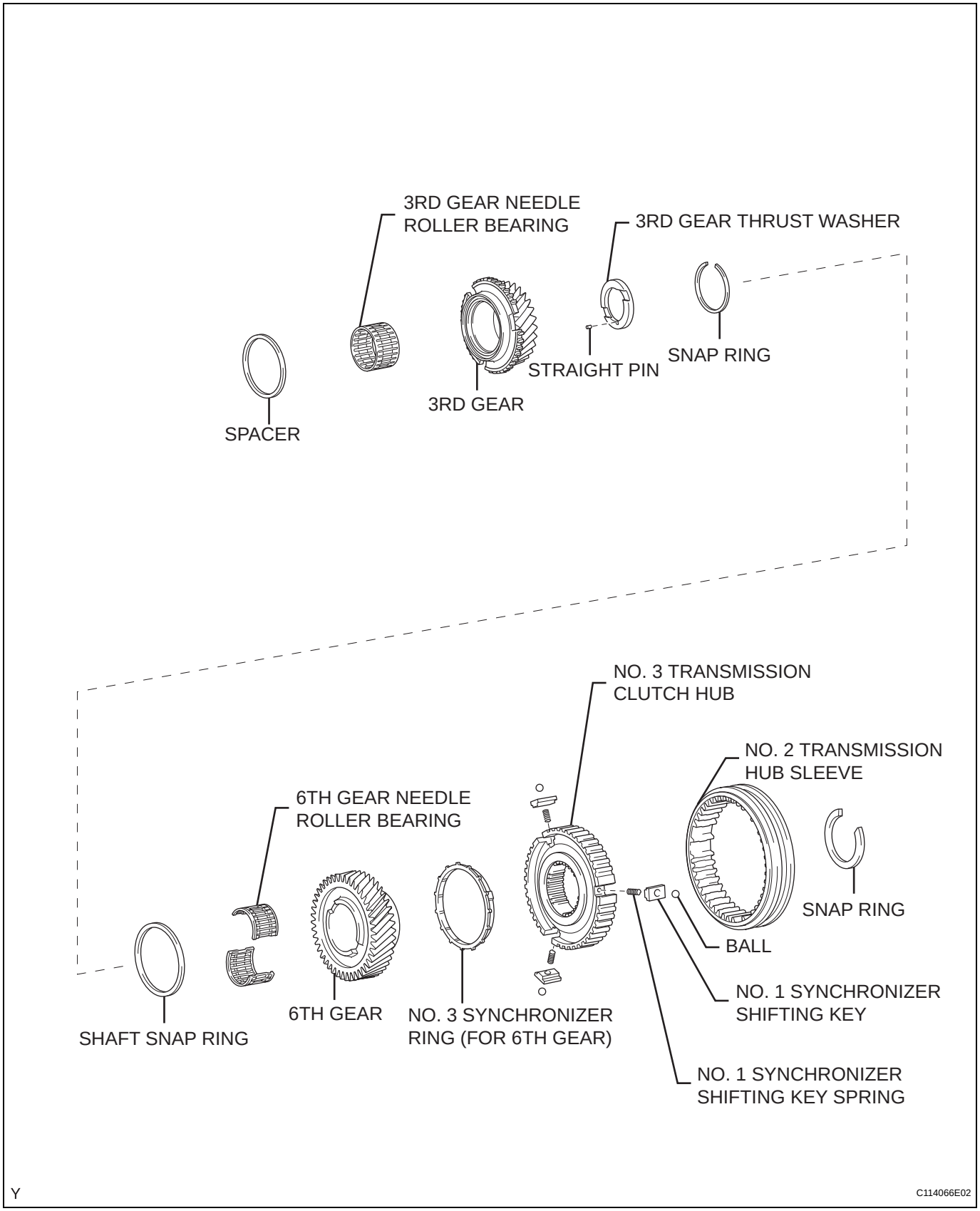

cardiagn.com

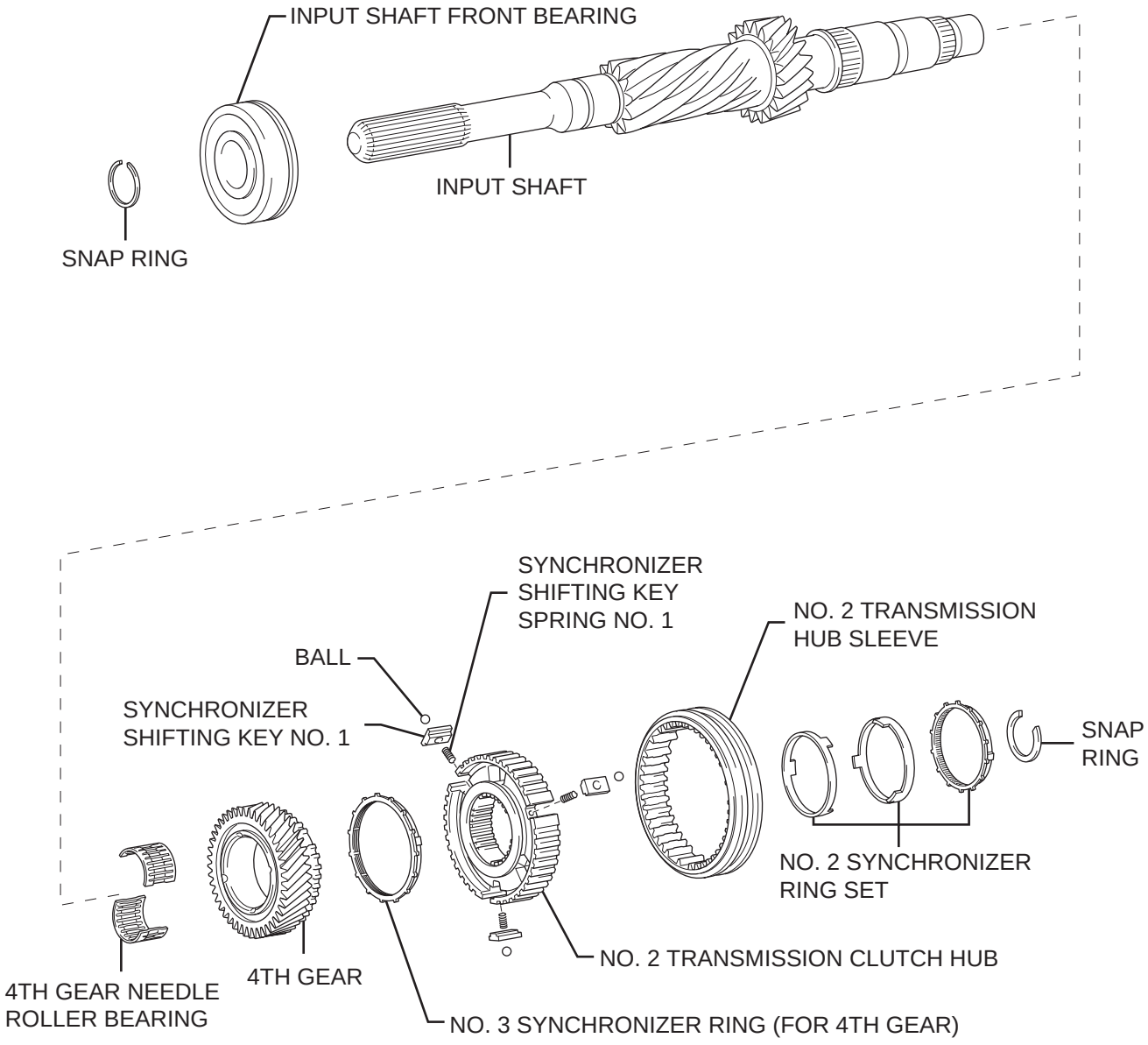

Y

C114065E03

cardiagn.com

DISASSEMBLY

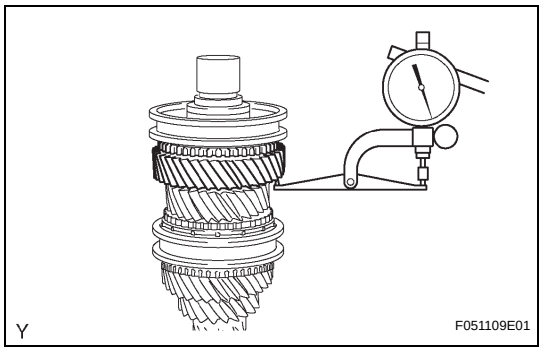

1. INSPECT 6TH GEAR THRUST CLEARANCE

(a) Using a dial indicator, measure the 6th gear thrust clearance.

Standard clearance:
0.20 to 0.49 mm (0.0079 to 0.0193 in.)

If the clearance is outside the specification, replace the synchronizer ring No. 3.

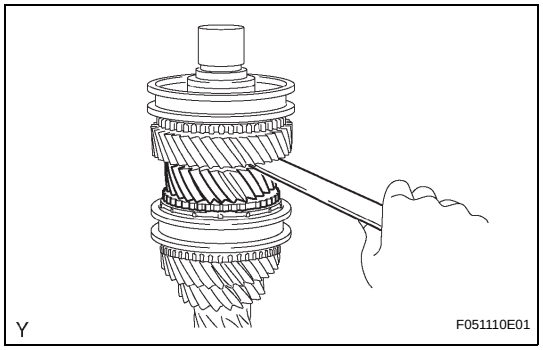

2. INSPECT 3RD GEAR THRUST CLEARANCE

(a) Using a feeler gauge, measure the 3rd gear thrust clearance.

Standard clearance:
0.09 to 0.52 mm (0.0035 to 0.0205 in.)

If the clearance is outside the specification, replace the synchronizer ring set No. 2.

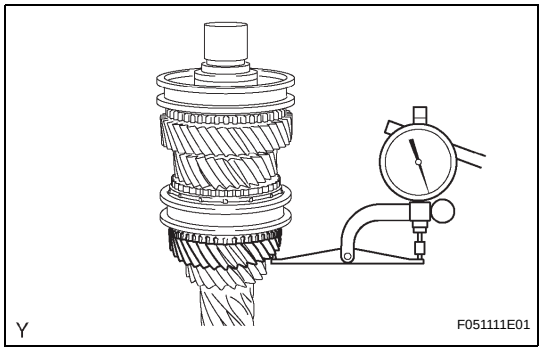

3. INSPECT 4TH GEAR THRUST CLEARANCE

(a) Using a dial indicator, measure the 4th gear thrust clearance.

Standard clearance:
0.12 to 0.38 mm (0.0047 to 0.0150 in.)

If the clearance is outside the specification, replace the synchronizer ring No. 3.

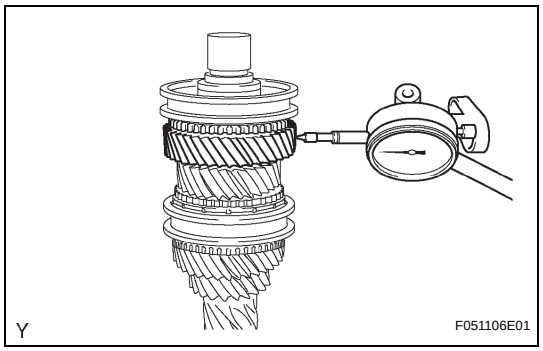

4. INSPECT 6TH GEAR RADIAL CLEARANCE

(a) Using a dial indicator, measure the 6th gear radial clearance.

Standard clearance:
0.015 to 0.065 mm (0.0006 to 0.0026 in.)

If the clearance is outside the specification, replace the defective gear, needle roller bearing or shaft.

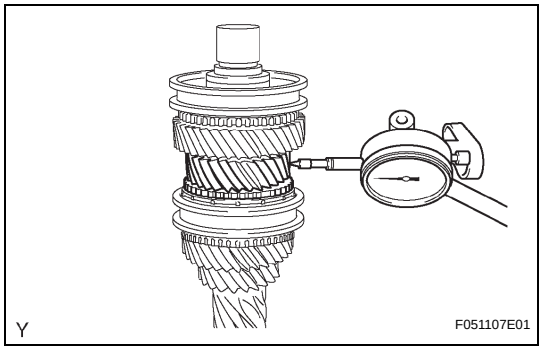

5. INSPECT 3RD GEAR RADIAL CLEARANCE

(a) Using a dial indicator, measure the 3rd gear radial clearance.

Standard clearance:
0.015 to 0.067 mm (0.0006 to 0.0026 in.)

If the clearance is outside the specification, replace the defective gear, needle roller bearing or shaft.

cardiagn.com

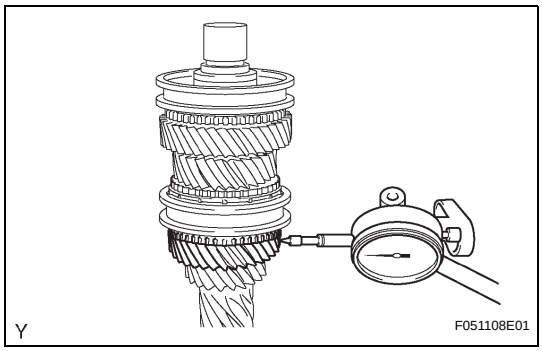

6. INSPECT 4TH GEAR RADIAL CLEARANCE

(a) Using a dial indicator, measure the 4th gear radial clearance.

Standard clearance:
0.015 to 0.067 mm (0.0006 to 0.0026 in.)

If the clearance is outside the specification, replace the defective gear, needle roller bearing or shaft.

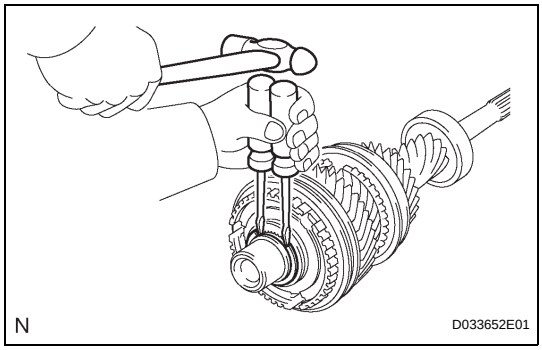

7. REMOVE TRANSMISSION CLUTCH HUB NO.3 SHAFT SNAP RING

(a) Using 2 screwdrivers and a hammer, tap out the snap ring.

HINT:
Use a shop rag to prevent the snap ring from flying off.

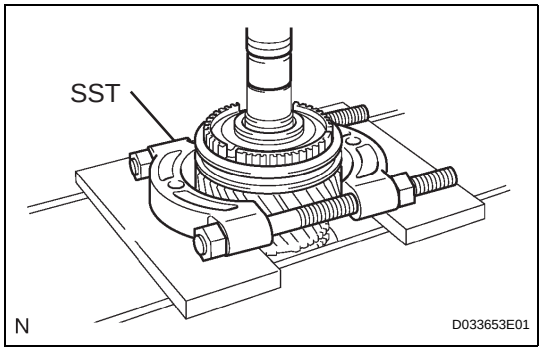

8. REMOVE 6TH GEAR

(a) Using SST and a press, remove the transmission clutch hub No. 3, hub sleeve, synchronizer ring and 6th gear from the input shaft.

SST 09950-00020, 09950-70010 (09951-07200), 09950-60010 (09951-00300)

NOTICE:
- **Do not tighten SST excessively.**
- **Support the input shaft by hand so that it does not fall off.**

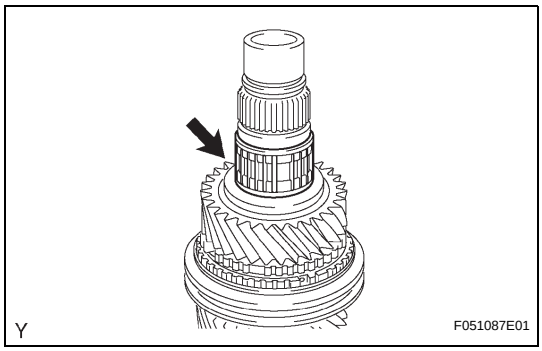

9. REMOVE 6TH GEAR NEEDLE ROLLER BEARING

(a) Remove the 6th gear needle roller bearing from the input shaft.

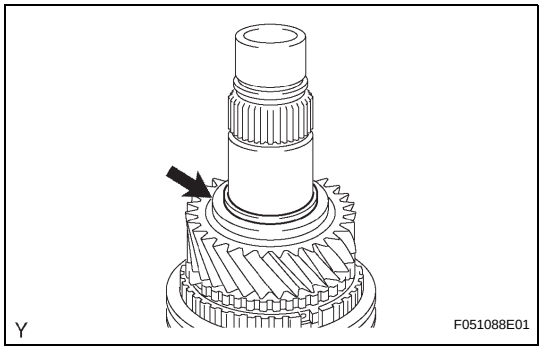

10. REMOVE SHAFT SNAP RING

(a) Remove the shaft snap ring from the input shaft.

cardiagn.com

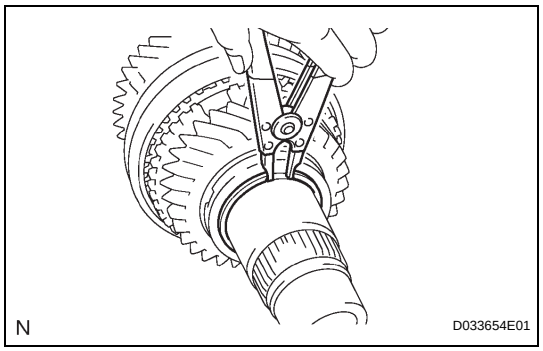

11. REMOVE GEAR THRUST WASHER SHAFT SNAP RING

(a) Using a snap ring expander, remove the snap ring from the input shaft.

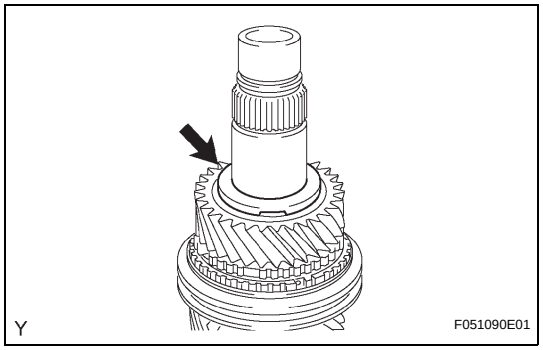

12. REMOVE 3RD GEAR THRUST WASHER

(a) Remove the 3rd gear thrust washer from the input shaft.

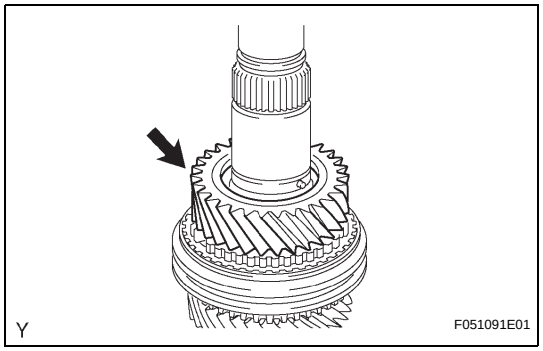

13. REMOVE 3RD GEAR

(a) Remove the 3rd gear from the input shaft.

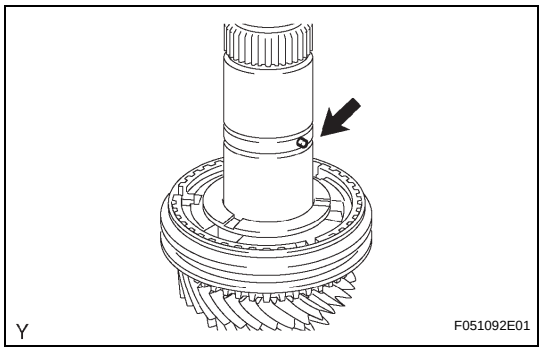

14. REMOVE STRAIGHT PIN

(a) Remove the straight pin from the input shaft.

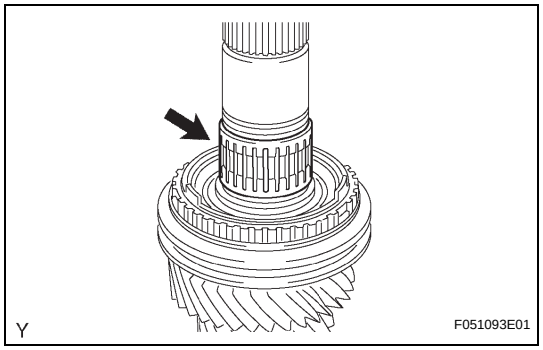

15. REMOVE 3RD GEAR NEEDLE ROLLER BEARING

(a) Remove the 3rd gear needle roller bearing from the input shaft.

MT

cardiagn.com

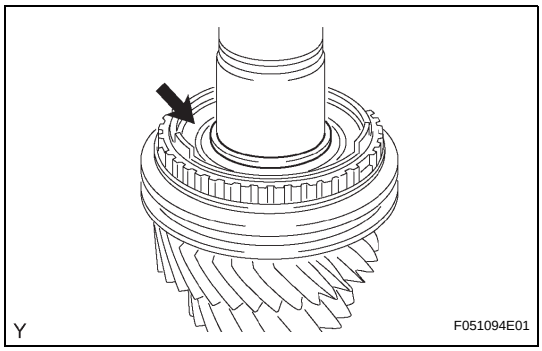

16. REMOVE SPACER

(a) Remove the spacer from the input shaft.

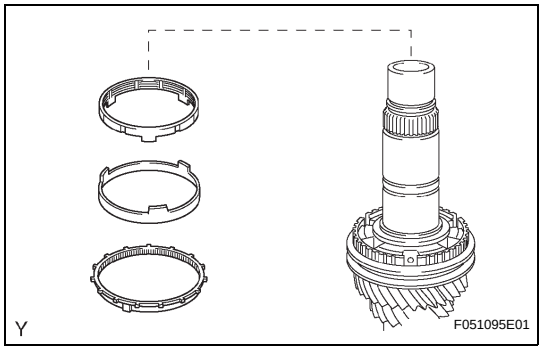

17. REMOVE NO. 2 SYNCHRONIZER RING SET

(a) Remove the synchronizer ring set No. 2 from the input shaft.

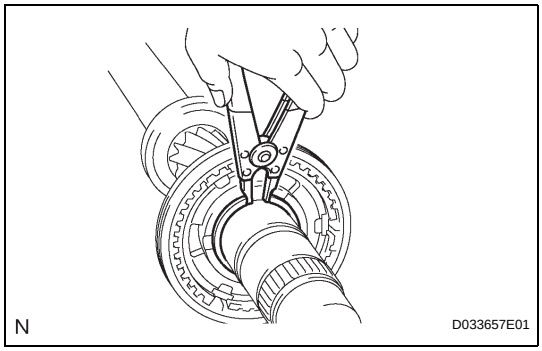

18. REMOVE CLUTCH HUB NO.2 SETTING SHAFT SNAP RING

(a) Using a snap ring expander, remove the snap ring from the input shaft.

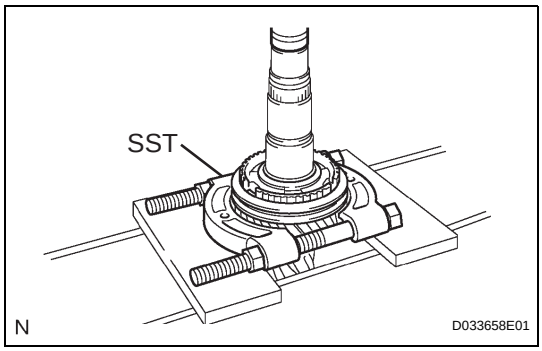

19. REMOVE 4TH GEAR

(a) Using SST and a press, remove the transmission clutch hub No. 2, hub sleeve, synchronizer ring and 4th gear from the input shaft.
SST 09950-00020
NOTICE:
Support the input shaft by hand so that it does not fall off.

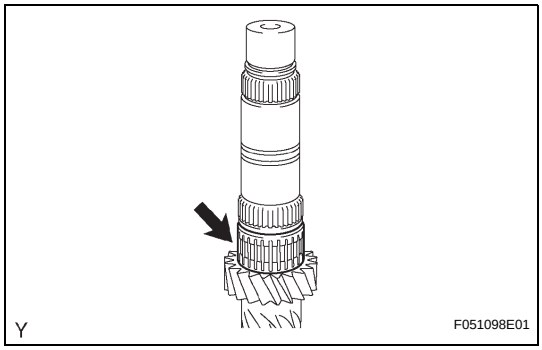

20. REMOVE 4TH GEAR NEEDLE ROLLER BEARING

(a) Remove the 4th gear needle roller bearing from the input shaft.

cardiagn.com

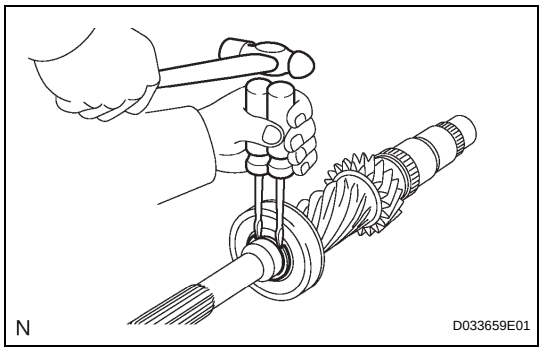

21. REMOVE INPUT SHAFT FRONT BEARING SNAP RING

(a) Using 2 screwdrivers and a hammer, tap out the snap ring.
HINT:
Use a shop rag to prevent the snap ring from flying off.

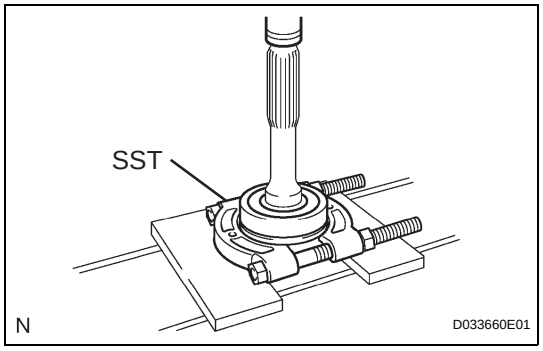

22. REMOVE INPUT SHAFT FRONT BEARING

(a) Using SST and a press, remove the input shaft front bearing from the input shaft.
SST 09950-00020
NOTICE:
Support the input shaft by hand so that it does not fall off.

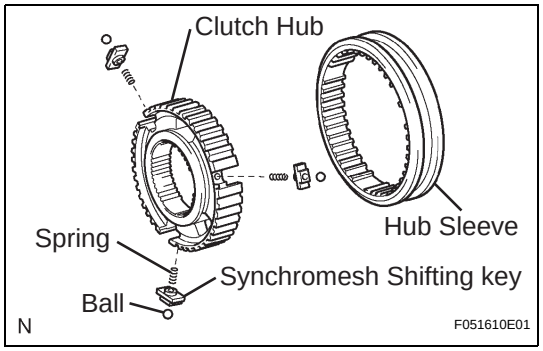

23. REMOVE NO. 2 TRANSMISSION CLUTCH HUB

(a) Remove the clutch hub, 3 synchromesh shifting keys, 3 balls and 3 springs from the hub sleeve.
HINT:
Use a shop rag to prevent the ball and spring from flying off.

24. REMOVE NO. 3 TRANSMISSION CLUTCH HUB

(a) Perform the same procedures as for clutch hub No. 2.

INSPECTION

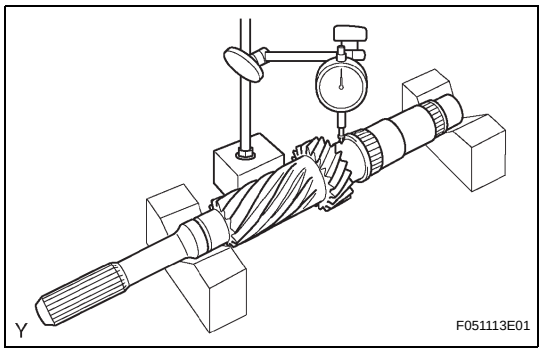

1. INSPECT INPUT SHAFT

(a) Using a dial indicator and 2 V-blocks, measure the shaft runout.
Maximum runout:
0.03 mm (0.0012 in.)
If the runout exceeds the maximum, replace the input shaft.

MT

cardiagn.com

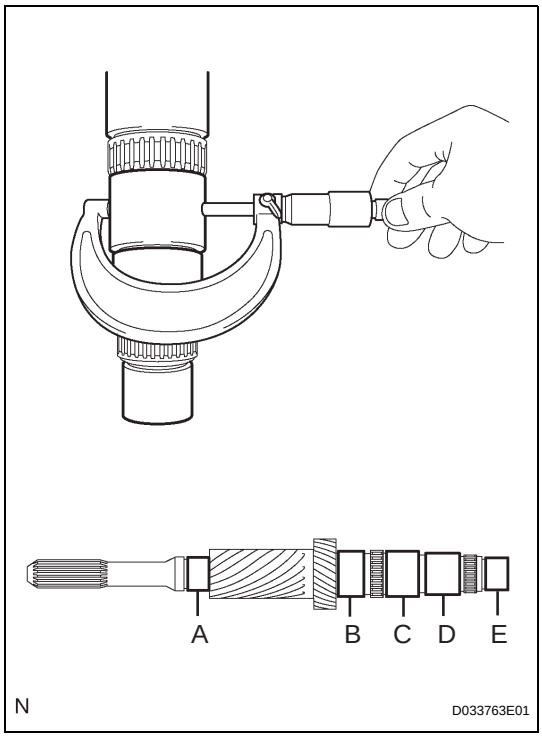

(b) Using a micrometer, measure the outer diameter of the input shaft journal surface.

Standard

Part	Outer diameter mm (in.)
A	34.002 to 34.015 (1.3387 to 1.3392)
B	44.985 to 45.000 (1.7711 to 1.7717)
C	44.985 to 45.000 (1.7711 to 1.7717)
D	41.985 to 42.000 (1.6530 to 1.6535)
E	32.967 to 32.980 (1.2979 to 1.2984)

Minimum

Part	Outer diameter mm (in.)
A	34.002 (1.3387)
B	44.985 (1.7711)
C	44.985 (1.7711)
D	41.985 (1.6530)
E	32.967 (1.2979)

If the outer diameter is less than the minimum, replace the input shaft.

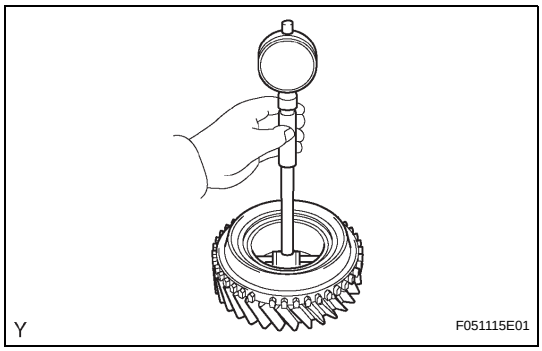

2. INSPECT 6TH GEAR

(a) Using a cylinder gauge, measure the inside diameter of the 6th gear.

Standard inside diameter:
51.015 to 51.040 mm (2.0085 to 2.0095 in.)
Maximum inside diameter:
51.040 mm (2.0095 in.)

If the inside diameter exceeds the maximum, replace the 4th gear.

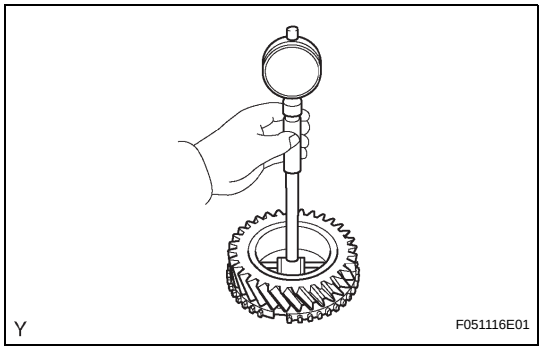

3. INSPECT 3RD GEAR

(a) Using a cylinder gauge, measure the inside diameter of the 3rd gear.

Standard inside diameter:
51.015 to 51.040 mm (2.0085 to 2.0095 in.)
Maximum inside diameter:
51.040 mm (2.0095 in.)

If the inside diameter exceeds the maximum, replace the 3rd gear.

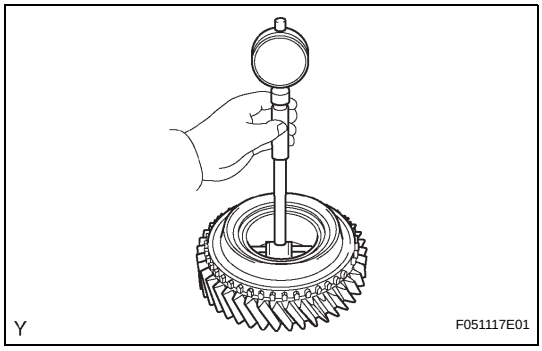

4. INSPECT 4TH GEAR

(a) Using a cylinder gauge, measure the inside diameter of the 4th gear.

Standard inside diameter:
51.015 to 51.040 mm (2.0085 to 2.0095 in.)
Maximum inside diameter:
51.040 mm (2.0095 in.)

If the inside diameter exceeds the maximum, replace the 4th gear.

cardiagn.com

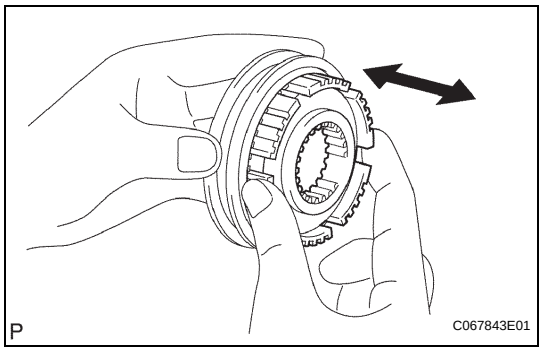

5. INSPECT NO. 2 TRANSMISSION HUB SLEEVE

(a) Check the sliding condition between the transmission hub No. 2 and transmission hub sleeve No. 2.

(b) Check that the spline gear teeth of the transmission hub sleeve No. 2 are not worn.

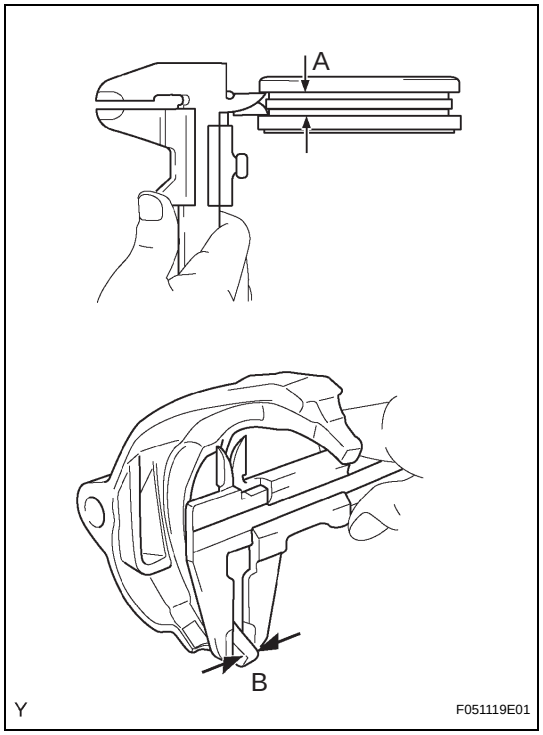

(c) Using vernier calipers, measure the width of the transmission hub sleeve No. 2 groove (A) and the thickness of the claw part on the gear shift forks No. 2 or No. 3 (B), and calculate the clearance.
Standard clearance:
(A - B);
0.26 to 0.84 mm (0.0102 to 0.0331 in.)
If the clearance is outside the specification, replace the transmission hub sleeve No. 2 and gear shift fork.

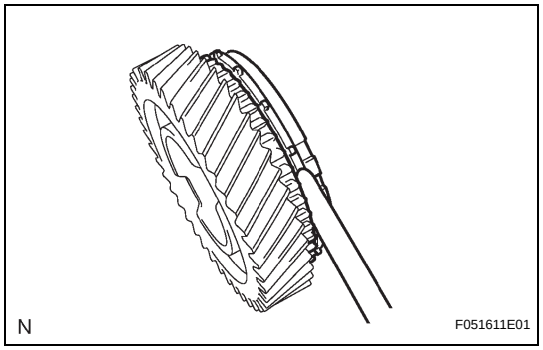

6. INSPECT NO. 3 SYNCHRONIZER RING (FOR 6TH GEAR)

(a) Using a feeler gauge, measure the clearance between the synchronizer ring and the 6th gear.
Standard clearance:
0.70 to 1.50 mm (0.0276 to 0.0591 in.)
Minimum clearance:
0.70 mm (0.0276 in.)
If the clearance is less than the minimum, replace the synchronizer ring.

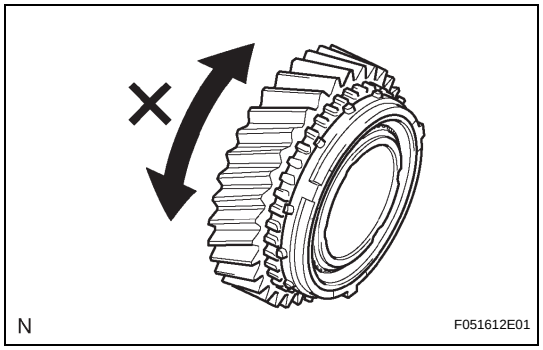

(b) Coat the 6th gear cone with gear oil. Check the braking effect of the synchronizer ring. Turn the synchronizer ring in one direction while pushing it to the 6th gear cone. Check that the ring locks.

MT

cardiagn.com

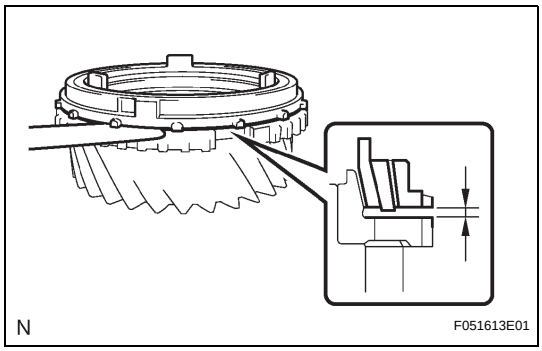

7. INSPECT NO. 2 SYNCHRONIZER RING SET

(a) Using a feeler gauge, measure the clearance between the synchronizer ring and the 3rd gear.

Standard clearance:
Inner:
1.20 to 2.20 mm (0.0472 to 0.0866 in.)
Middle:
0.60 to 1.80 mm (0.0236 to 0.0709 in.)
Outer:
0.80 to 1.80 mm (0.0315 to 0.0709 in.)
Minimum clearance:
Inner:
1.20 mm (0.0472 in.)
Middle:
0.60 mm (0.0236 in.)
Outer:
0.80 mm (0.0315 in.)

If the clearance is less than the minimum, replace the synchronizer ring.

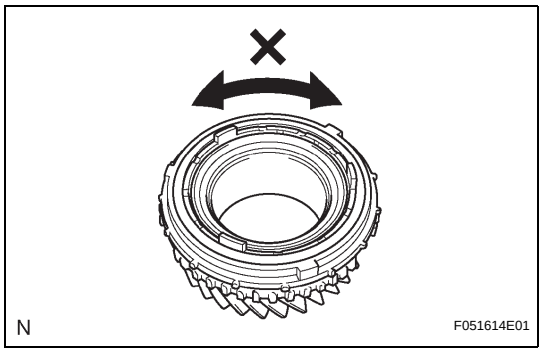

(b) Coat the 3rd gear cone with gear oil. Check the braking effect of the synchronizer ring. Turn the synchronizer ring in one direction while pushing it to the 3rd gear cone. Check that the ring locks.

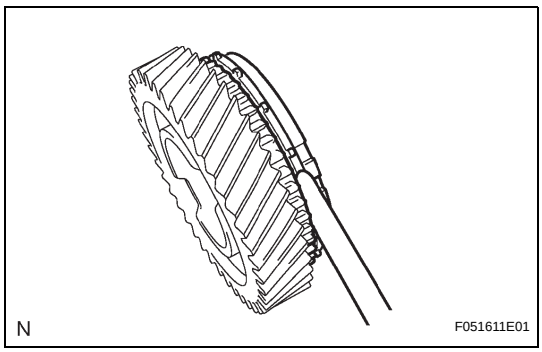

8. INSPECT NO. 3 SYNCHRONIZER RING (FOR 4TH GEAR)

(a) Using a feeler gauge, measure the clearance between the synchronizer ring and 4th gear.

Standard clearance:
0.70 to 1.50 mm (0.0276 to 0.0591 in.)
Minimum clearance:
0.70 mm (0.0276 in.)

If the clearance is less than the minimum, replace the synchronizer ring.

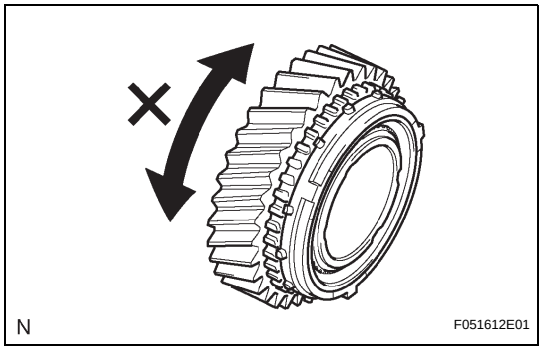

(b) Coat the 4th gear cone with gear oil. Check the braking effect of the synchronizer ring. Turn the synchronizer ring in one direction while pushing it to the 4th gear cone. Check that the ring locks.

MT

cardiagn.com

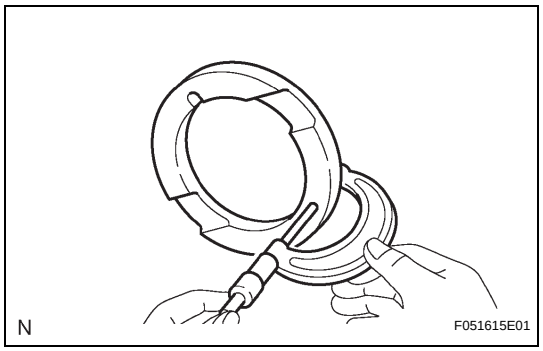

9. INSPECT 3RD GEAR THRUST WASHER

(a) Using a micrometer, measure the thrust washer thickness.

Standard thickness:
7.12 to 7.18 mm (0.2803 to 0.2827 in.)
Minimum thickness:
7.12 mm (0.2803 in.)
If the thickness is less than the minimum, replace the thrust washer.

REASSEMBLY

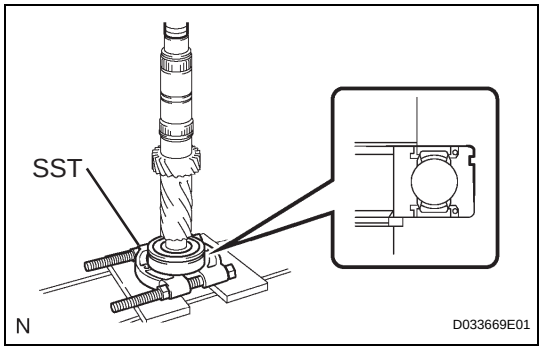

1. INSTALL INPUT SHAFT FRONT BEARING

(a) Using SST and a press, install the input shaft front bearing onto the input shaft.

SST 09950-00020
HINT:
Make sure that the groove of the bearing faces the correct direction as shown in the illustration.

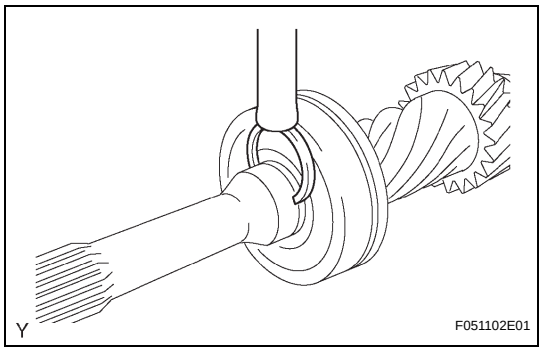

2. INSTALL INPUT SHAFT FRONT BEARING SNAP RING

(a) Select a snap ring that will allow minimum axial play.

Standard clearance:
0.1 mm (0.004 in.) or less
Snap ring thickness

Part No.	Thickness: mm (in.)	Mark
90520-31026	2.65 to 2.70 (0.1043 to 0.1063)	A
90520-31027	2.70 to 2.75 (0.1063 to 0.1083)	B
90520-31028	2.75 to 2.80 (0.1083 to 0.1102)	C
90520-31029	2.80 to 2.85 (0.1102 to 0.1122)	D
90520-31030	2.85 to 2.90 (0.1122 to 0.1142)	E
90520-31031	2.90 to 2.95 (0.1142 to 0.1161)	F

(b) Using a brass bar and hammer, install the snap ring onto the input shaft.

cardiagn.com

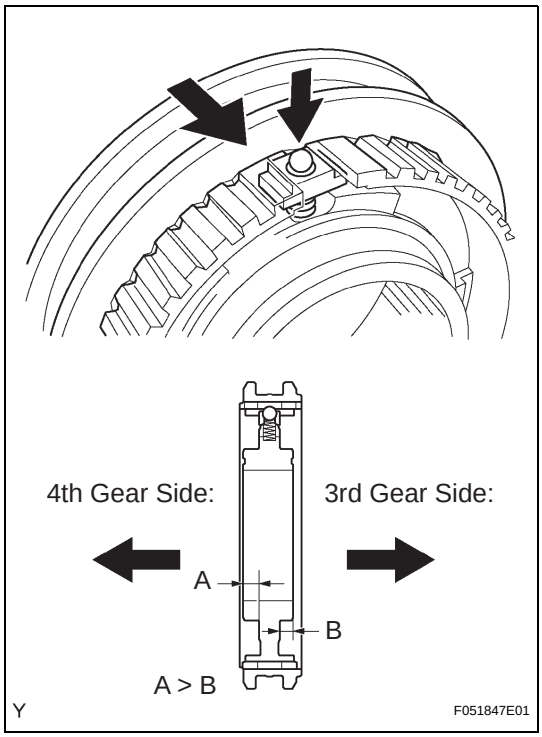

3. INSTALL NO. 2 TRANSMISSION CLUTCH HUB

(a) Apply a light coat of gear oil to the sleeve and hub.
(b) Install the clutch hub sleeve onto the clutch hub No. 2.
(c) Install the 3 shifting keys onto the clutch hub.
(d) Install the 3 shifting key springs onto the clutch hub.
(e) Place the ball in the hole of the shifting key, and install the hub sleeve while pushing in the ball.
NOTICE:
Take care to prevent the ball from flying off.
HINT:
Make sure that the clutch hub No. 2 faces the correct direction as shown in the illustration.

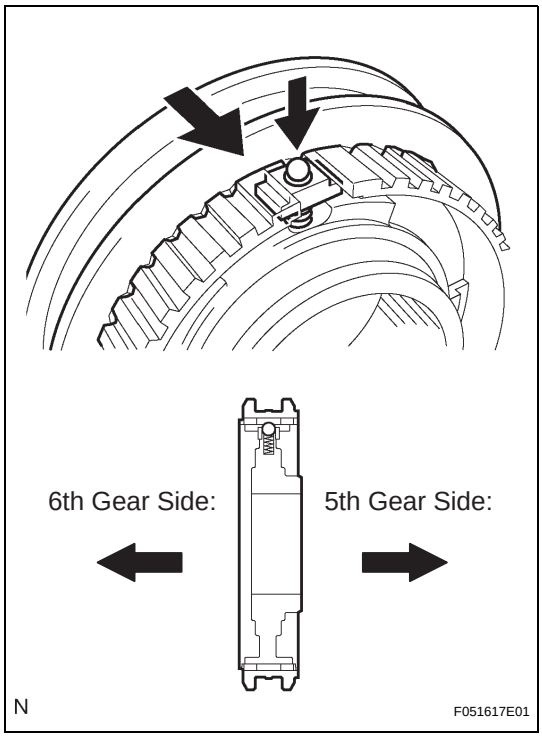

4. INSTALL NO. 3 TRANSMISSION CLUTCH HUB

(a) Apply a light coat of gear oil to the sleeve and hub.
(b) Install the clutch hub sleeve onto the clutch hub No. 3.
(c) Install the 3 shifting keys onto the clutch hub.
(d) Install the 3 shifting key springs onto the clutch hub.
(e) Place the ball in the hole of the shifting key, and install the hub sleeve while pushing in the ball.
NOTICE:
Take care to prevent the ball from flying off.
HINT:
Make sure that the clutch hub No. 3 faces the correct direction as shown in the illustration.

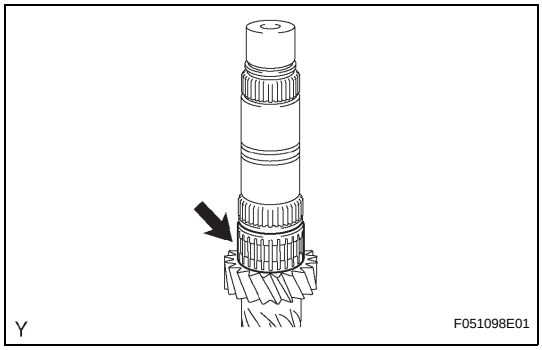

5. INSTALL 4TH GEAR NEEDLE ROLLER BEARING

(a) Coat the 4th gear needle roller bearing with gear oil, then install it onto the input shaft.

6. INSTALL 4TH GEAR

(a) Coat the 4th gear and synchronizer ring No. 3 with gear oil, then install them onto the input shaft.

cardiagn.com

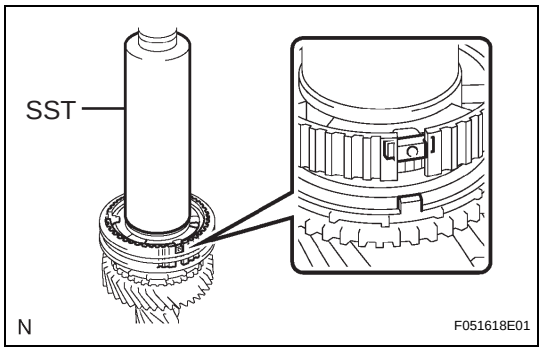

(b) Using SST and a press, install the clutch hub No. 2 onto the input shaft.
SST 09308-14010
HINT:
Align the convex portion of the synchronizer ring with the groove of the clutch hub.

(c) Install the clutch hub and confirm that the gear and synchronizer ring move smoothly.

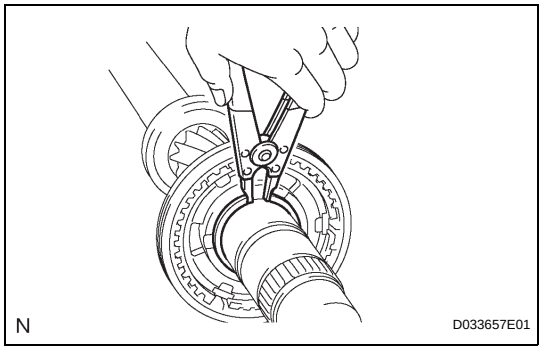

7. INSTALL CLUTCH HUB NO.2 SETTING SHAFT SNAP RING

(a) Select a snap ring that will allow minimum axial play.
Standard clearance:
0.1 mm (0.004 in.) or less
Snap ring thickness

Part No.	Thickness: mm (in.)	Mark
90520-42012	1.77 to 1.82 (0.0697 to 0.0717)	A
90520-42013	1.82 to 1.87 (0.0717 to 0.0736)	B
90520-42014	1.87 to 1.92 (0.0736 to 0.0756)	C
90520-42015	1.92 to 1.97 (0.0756 to 0.0776)	D
90520-42016	1.97 to 2.02 (0.0776 to 0.0795)	E
90520-42017	2.02 to 2.07 (0.0795 to 0.0815)	F
90520-42018	2.07 to 2.12 (0.0815 to 0.0835)	G

(b) Using a snap ring expander, install the snap ring onto the input shaft.

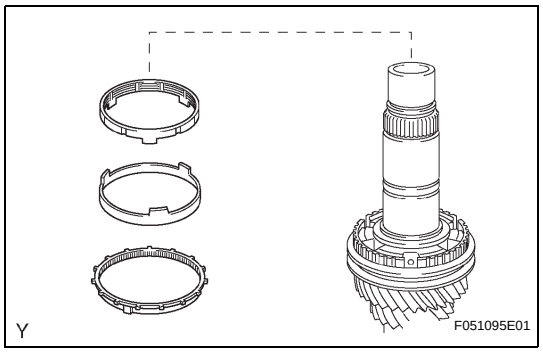

8. INSTALL NO. 2 SYNCHRONIZER RING SET

(a) Coat the synchronizer ring set No. 2 with gear oil, then install it onto the input shaft.

MT

cardiagn.com

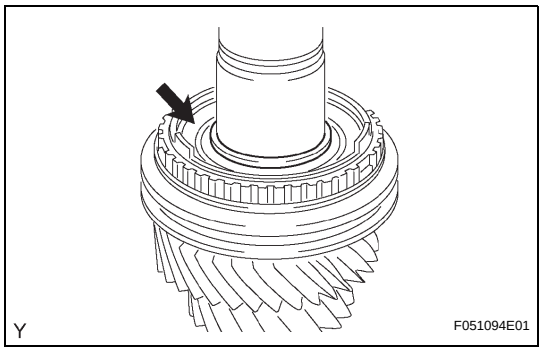

9. INSTALL SPACER

(a) Coat the spacer with gear oil, and install it onto the input shaft.

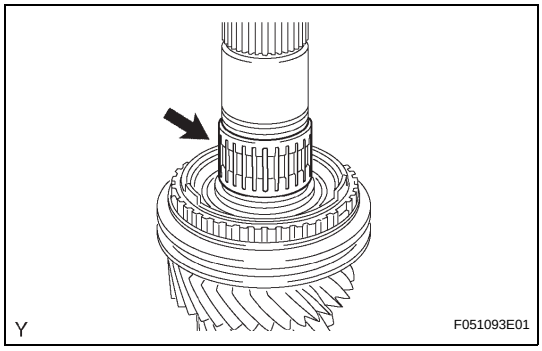

10. INSTALL 3RD GEAR NEEDLE ROLLER BEARING

(a) Coat the 3rd gear needle roller bearing with gear oil, and install it onto the input shaft.

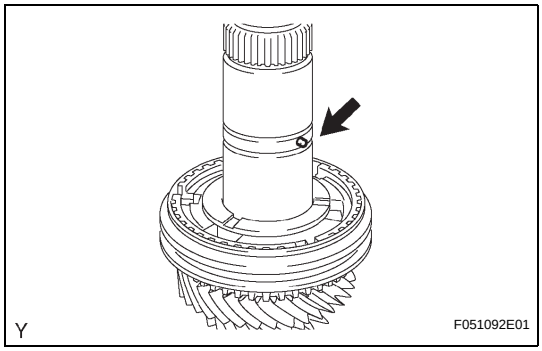

11. INSTALL STRAIGHT PIN

(a) Install the straight pin onto the input shaft.

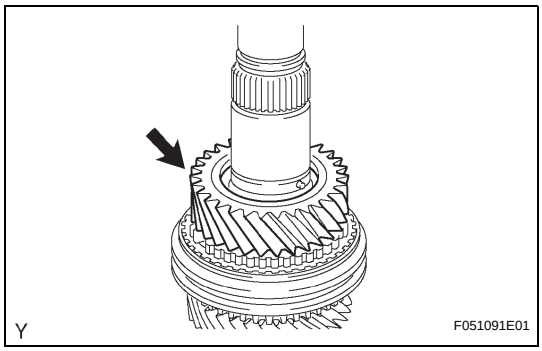

12. INSTALL 3RD GEAR

(a) Coat the 3rd gear with gear oil, and install it onto the input shaft.

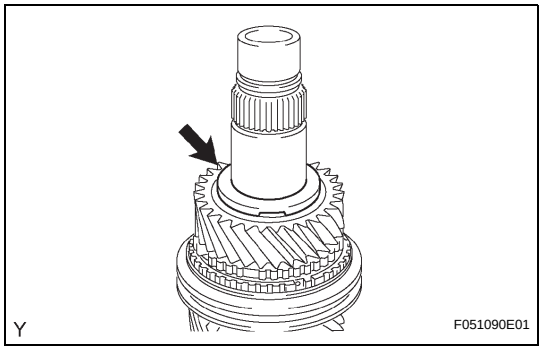

13. INSTALL 3RD GEAR THRUST WASHER

(a) Coat the 3rd gear thrust washer with gear oil, and install it onto the input shaft.
HINT:
Align the straight pin with the groove of the gear thrust washer and install it.

cardiagn.com

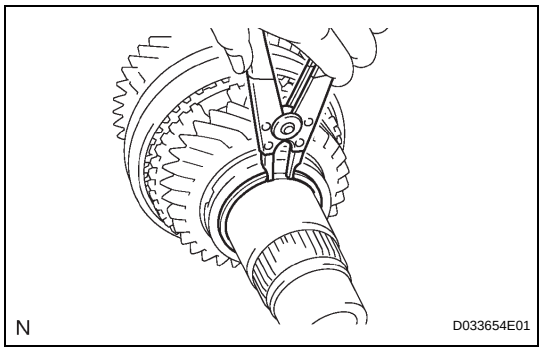

14. INSTALL GEAR THRUST WASHER SHAFT SNAP RING

(a) Select a snap ring that will allow minimum axial play.
Standard clearance:
0.1 mm (0.004 in.) or less
Snap ring thickness

Part No.	Thickness: mm (in.)	Mark
90520-39026	2.07 to 2.12 (0.0815 to 0.0835)	A
90520-39027	2.12 to 2.17 (0.0835 to 0.0854)	B
90520-39028	2.17 to 2.22 (0.0854 to 0.0874)	C
90520-39029	2.22 to 2.27 (0.0874 to 0.0894)	D
90520-39030	2.27 to 2.32 (0.0894 to 0.0913)	E
90520-39031	2.32 to 2.37 (0.0913 to 0.0933)	F

(b) Using a snap ring expander, install the snap ring onto the input shaft.

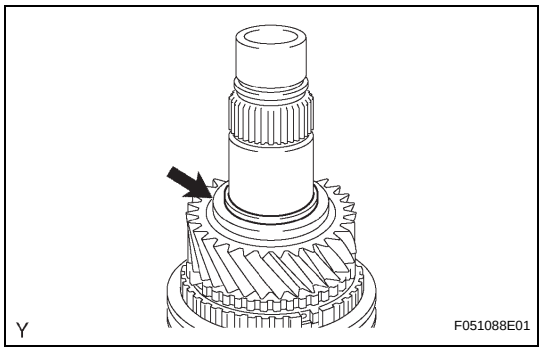

15. INSTALL SHAFT SNAP RING

(a) Coat the shaft snap ring with gear oil, and install it onto the input shaft.

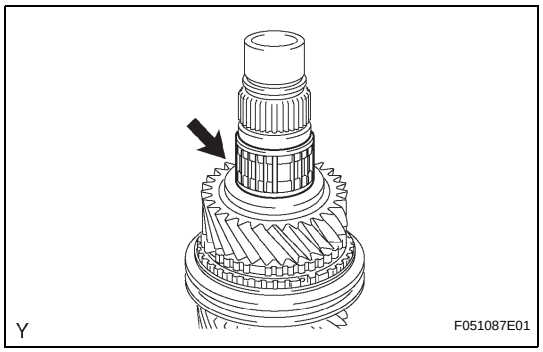

16. INSTALL 6TH GEAR NEEDLE ROLLER BEARING

(a) Coat the 6th gear needle roller bearing with gear oil, and install it onto the input shaft.

MT

cardiagn.com

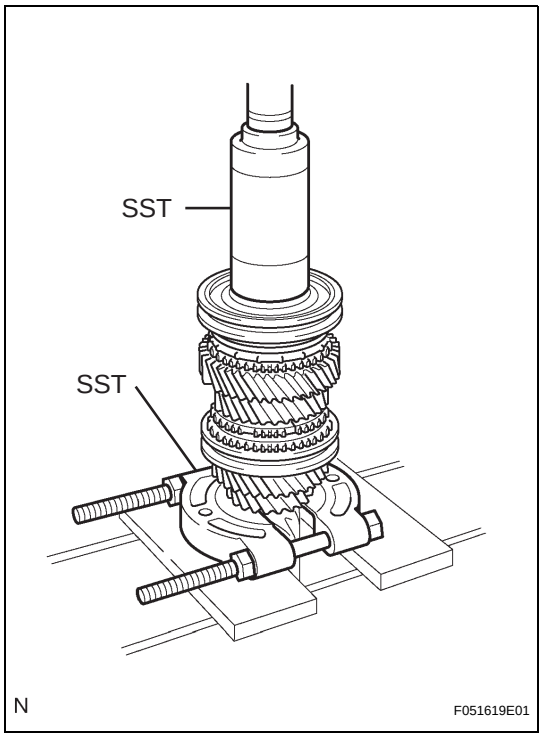

17. INSTALL 6TH GEAR

(a) Install the 6th gear onto the input shaft.
(b) Install the synchronizer ring onto the input shaft.
(c) Using SST and a press, install the clutch hub onto the input shaft.
SST 09309-37010, 09950-00020
(d) Install the clutch hub and confirm that the gear and synchronizer ring move smoothly.

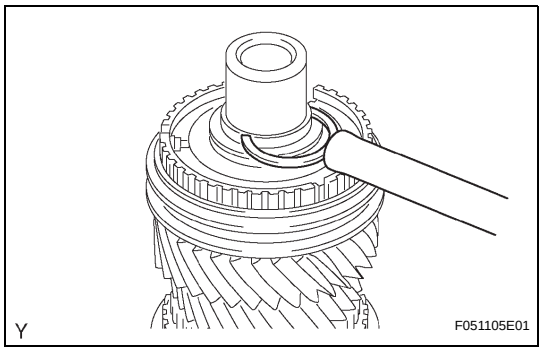

18. INSTALL TRANSMISSION CLUTCH HUB NO.3 SHAFT SNAP RING

(a) Select a snap ring that will allow minimum axial play.
Standard clearance:
0.1 mm (0.004 in.) or less
Snap ring thickness

Part No.	Thickness: mm (in.)	Mark
90520-33022	2.10 to 2.15 (0.0827 to 0.0847)	A
90520-33023	2.15 to 2.20 (0.0847 to 0.0866)	B
90520-33024	2.20 to 2.25 (0.0866 to 0.0886)	C
90520-33025	2.25 to 2.30 (0.0886 to 0.0906)	D
90520-33026	2.30 to 2.35 (0.0906 to 0.0925)	E
90520-33027	2.35 to 2.40 (0.0925 to 0.0945)	F
90520-33028	2.40 to 2.45 (0.0945 to 0.0965)	G

(b) Using a brass bar and a hammer, install the snap ring onto the input shaft.

cardiagn.com

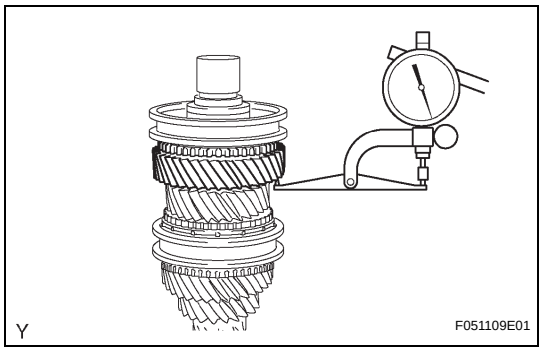

19. INSPECT 6TH GEAR THRUST CLEARANCE

(a) Using a dial indicator, measure the 6th gear thrust clearance.

Standard clearance:

0.20 to 0.49 mm (0.0079 to 0.0193 in.)

If the clearance is outside the specification, replace the synchronizer ring No. 3.

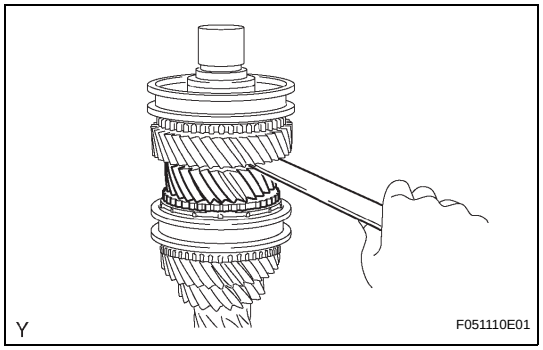

20. INSPECT 3RD GEAR THRUST CLEARANCE

(a) Using a feeler gauge, measure the 3rd gear thrust clearance.

Standard clearance:

0.09 to 0.52 mm (0.0035 to 0.0205 in.)

If the clearance is outside the specification, replace the synchronizer ring set No. 2.

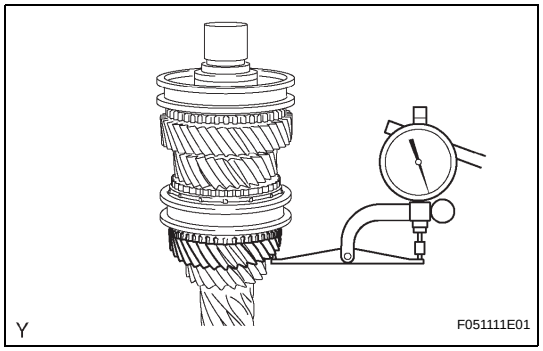

21. INSPECT 4TH GEAR THRUST CLEARANCE

(a) Using a dial indicator, measure the 4th gear thrust clearance.

Standard clearance:

0.12 to 0.38 mm (0.0047 to 0.0150 in.)

If the clearance is outside the specification, replace the synchronizer ring No. 3.

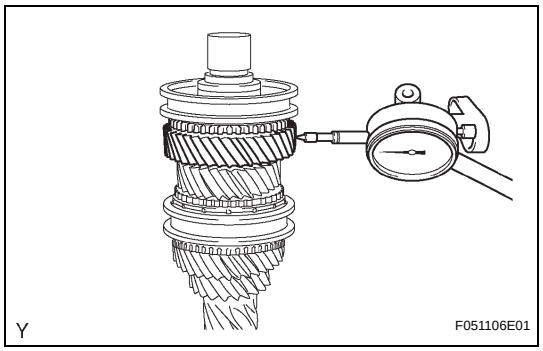

22. INSPECT 6TH GEAR RADIAL CLEARANCE

(a) Using a dial indicator, measure the 6th gear radial clearance.

Standard clearance:

0.015 to 0.065 mm (0.0006 to 0.0026 in.)

If the clearance is outside the specification, replace the defective gear, needle roller bearing or shaft.

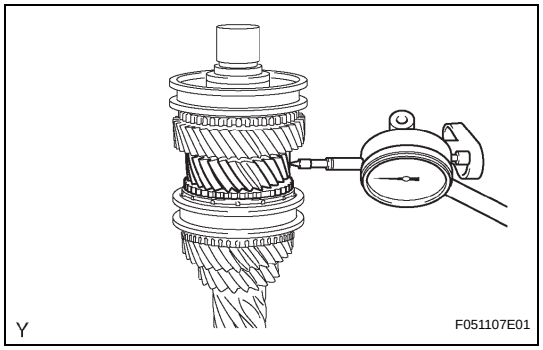

23. INSPECT 3RD GEAR RADIAL CLEARANCE

(a) Using a dial indicator, measure the 3rd gear radial clearance.

Standard clearance:

0.015 to 0.067 mm (0.0006 to 0.0026 in.)

If the clearance is outside the specification, replace the defective gear, needle roller bearing or shaft.

cardiagn.com

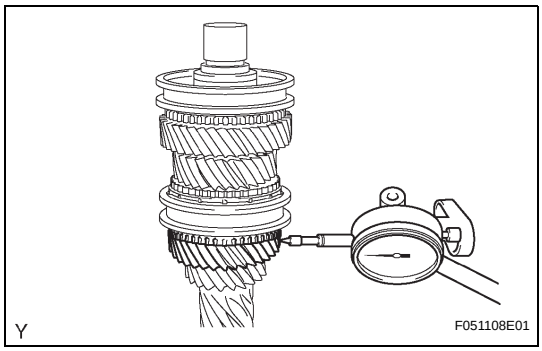

24. INSPECT 4TH GEAR RADIAL CLEARANCE

(a) Using a dial indicator, measure the 4th gear radial clearance.

Standard clearance:

0.015 to 0.067 mm (0.0006 to 0.0026 in.)

If the clearance is outside the specification, replace the defective gear, needle roller bearing or shaft.

cardiagn.com