COUNTER GEAR AND REVERSE IDLER GEAR

COMPONENTS

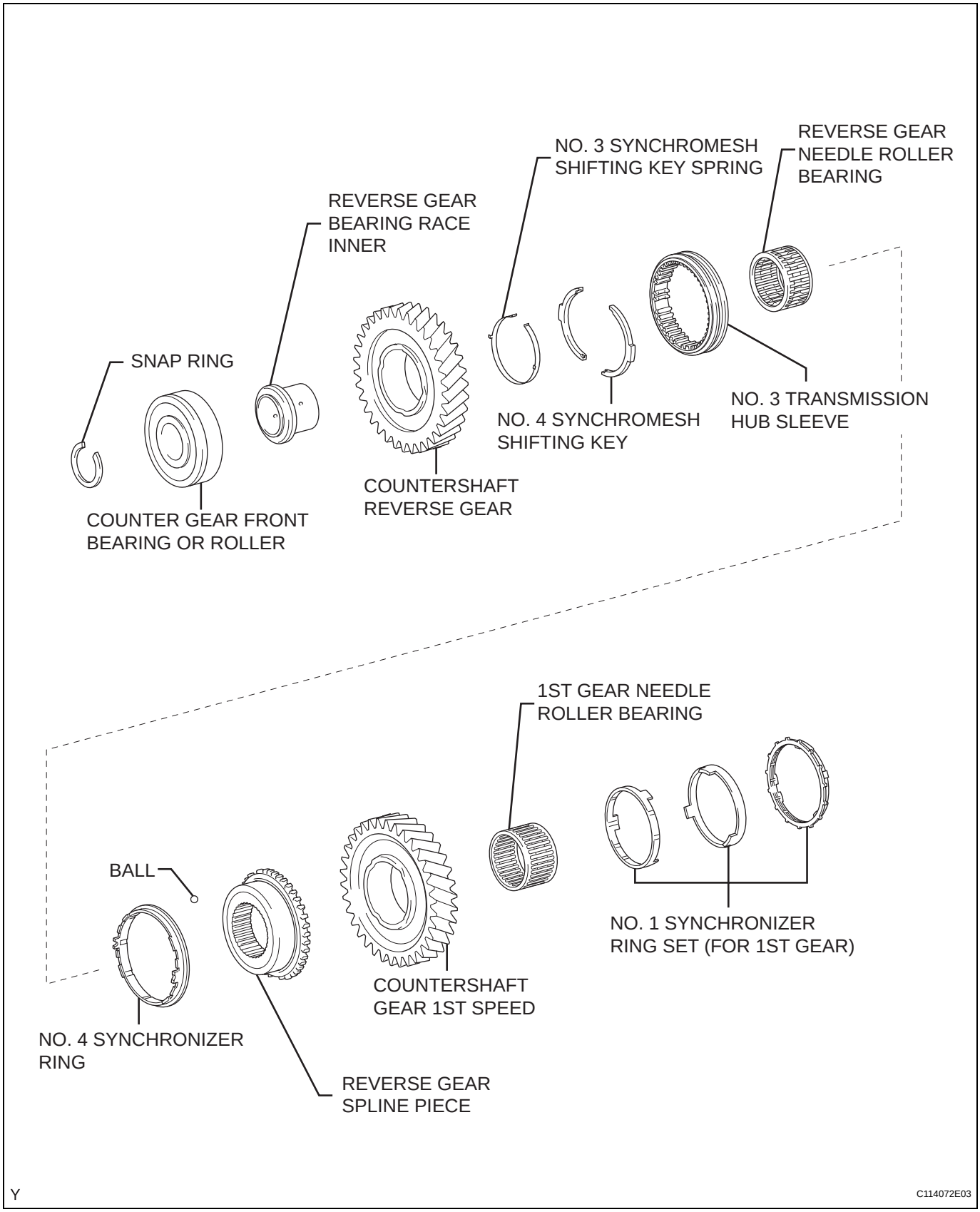

MT

cardiagn.com

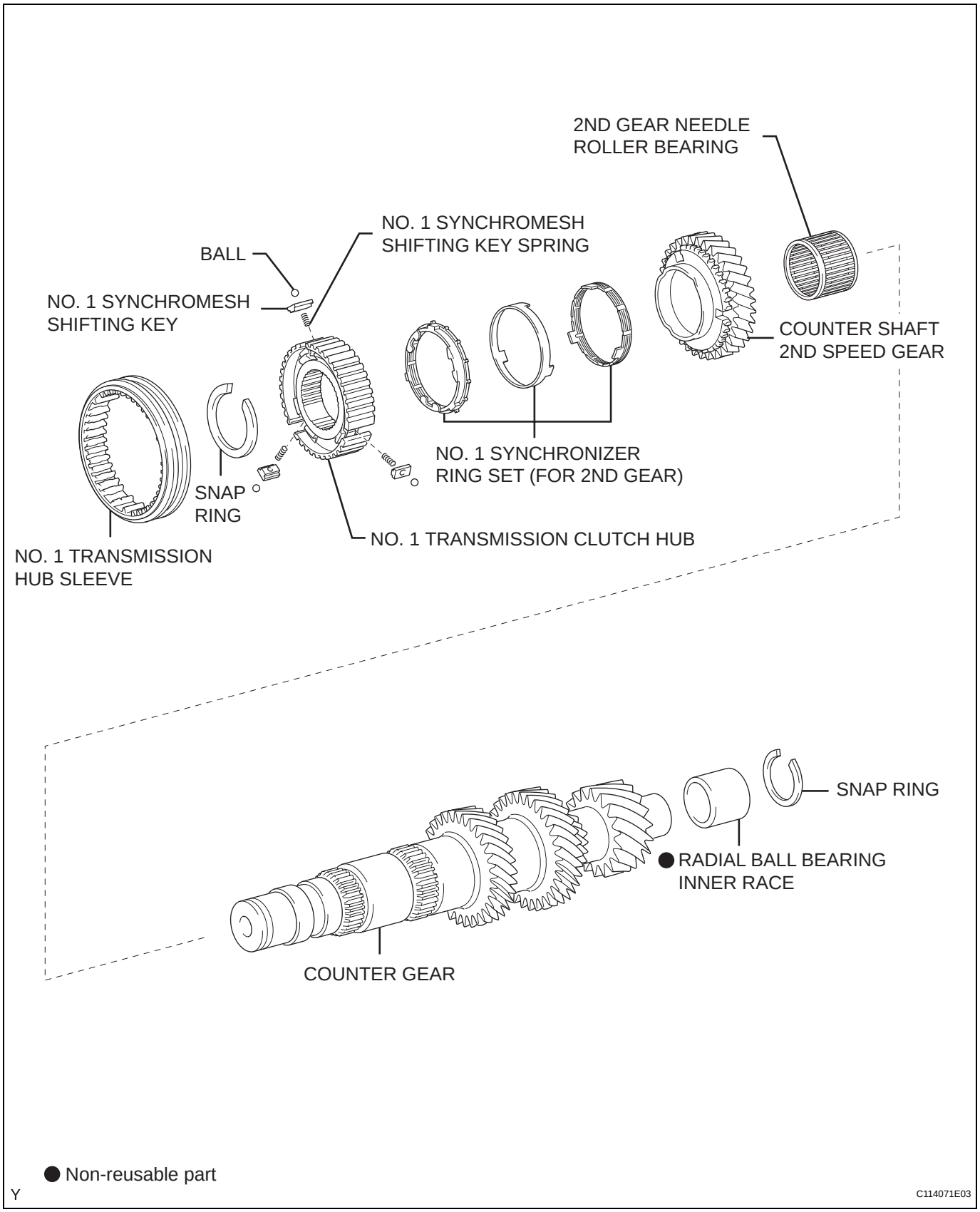

MT

cardiagn.com

DISASSEMBLY

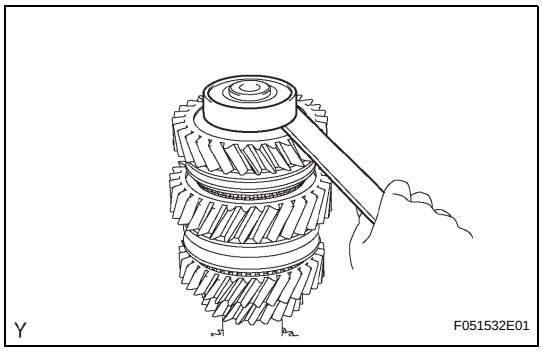

1. INSPECT REVERSE GEAR THRUST CLEARANCE

(a) Using a feeler gauge, measure the reverse gear thrust clearance.

Standard clearance:

0.12 to 0.37 mm (0.0047 to 0.0146 in.)

If the clearance is outside the specification, replace the synchronizer ring No. 4.

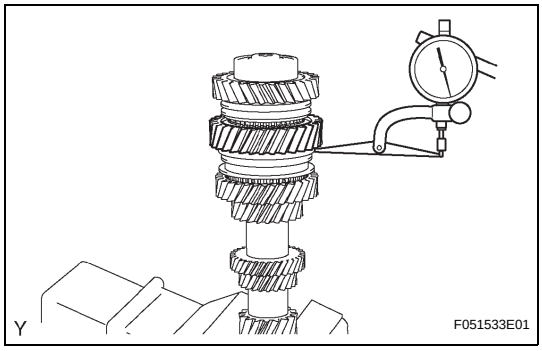

2. INSPECT 1ST GEAR THRUST CLEARANCE

(a) Using a dial indicator, measure the 1st gear thrust clearance.

Standard clearance:

0.10 to 0.43 mm (0.0039 to 0.0169 in.)

If the clearance is outside the specification, replace the synchronizer ring set No. 1.

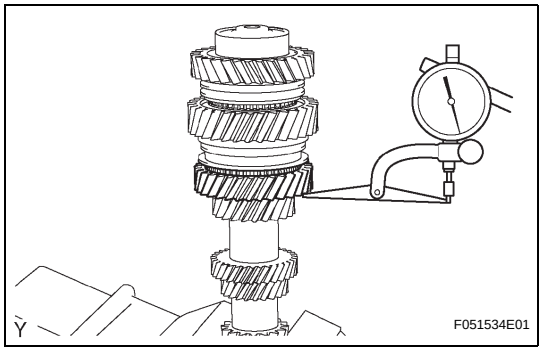

3. INSPECT 2ND GEAR THRUST CLEARANCE

(a) Using a dial indicator, measure the 2nd gear thrust clearance.

Standard clearance:

0.10 to 0.43 mm (0.0039 to 0.0169 in.)

If the clearance is outside the specification, replace the synchronizer ring set No. 1.

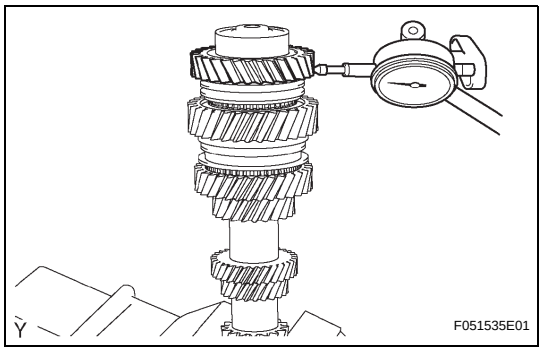

4. INSPECT REVERSE GEAR RADIAL CLEARANCE

(a) Using a dial indicator, measure the reverse gear radial clearance.

Standard clearance:

0.015 to 0.065 mm (0.0006 to 0.0026 in.)

If the clearance is outside the specification, replace the reverse gear needle roller bearing or shaft.

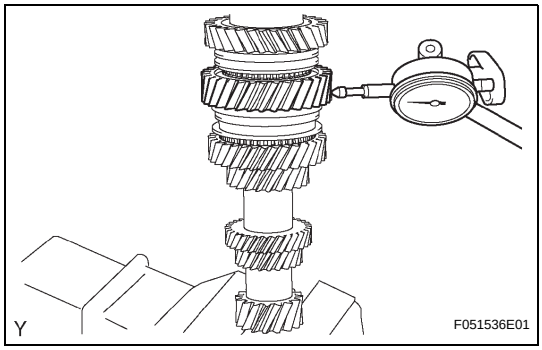

5. INSPECT 1ST GEAR RADIAL CLEARANCE

(a) Using a dial indicator, measure the 1st gear radial clearance.

Standard clearance:

0.015 to 0.067 mm (0.0006 to 0.0026 in.)

If the clearance is outside the specification, replace the 1st gear needle roller bearing or shaft.

cardiagn.com

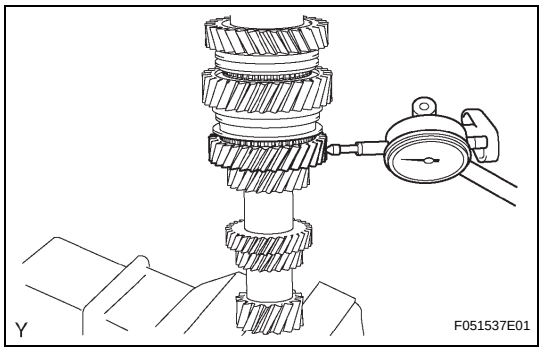

6. INSPECT 2ND GEAR RADIAL CLEARANCE

(a) Using a dial indicator, measure the 2nd gear radial clearance.

Standard clearance:
0.015 to 0.067 mm (0.0006 to 0.0026 in.)

If the clearance is outside the specification, replace the 2nd gear needle roller bearing or shaft.

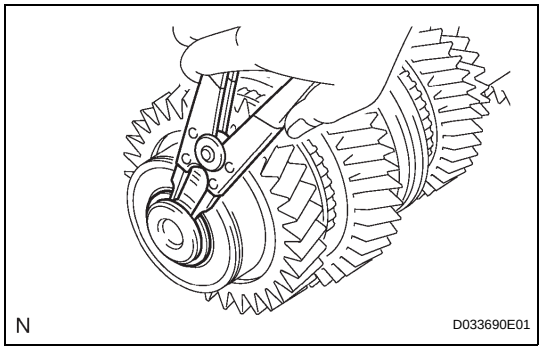

7. REMOVE NO. 1 COUNTER GEAR FRONT BEARING SNAP RING

(a) Using a snap ring expander, remove the snap ring from the counter gear.

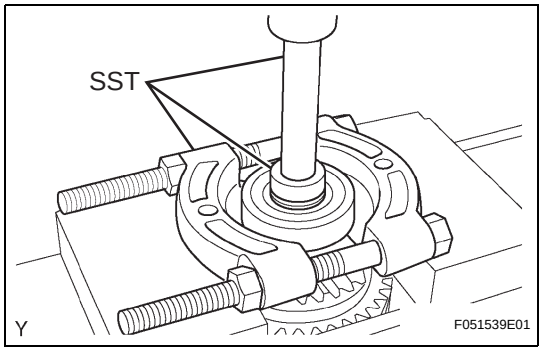

8. REMOVE COUNTER GEAR FRONT BEARING OR ROLLER

(a) Using SST and a press, remove the counter gear front bearing or roller from the counter gear.

SST 09950-00020, 09950-70010 (09951-07100), 09950-60010 (09951-00320)

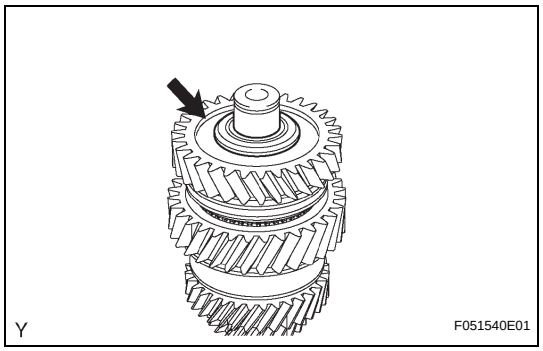

9. REMOVE REVERSE GEAR BEARING RACE INNER

(a) Remove the reverse gear bearing race inner from the counter gear.

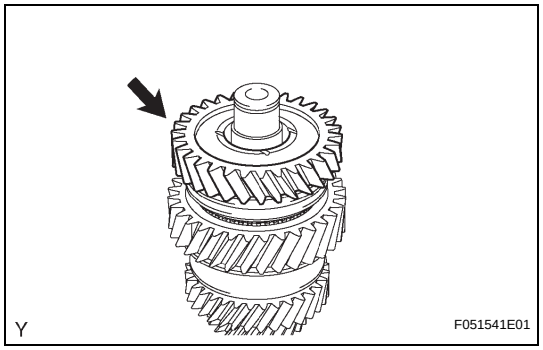

10. REMOVE COUNTERSHAFT REVERSE GEAR

(a) Remove the countershaft reverse gear from the counter gear.

(b) Remove the hub sleeve, 2 shifting keys and key spring from the countershaft reverse gear.

MT

cardiagn.com

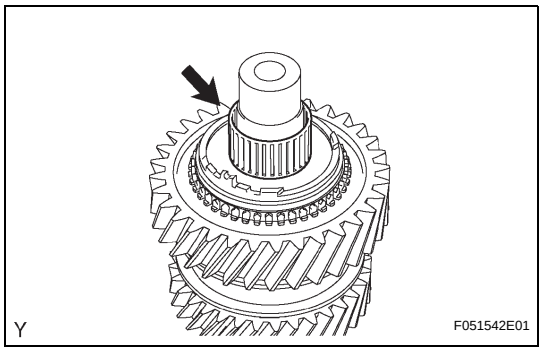

11. REMOVE REVERSE GEAR NEEDLE ROLLER BEARING

(a) Remove the reverse gear needle roller bearing from the counter gear.

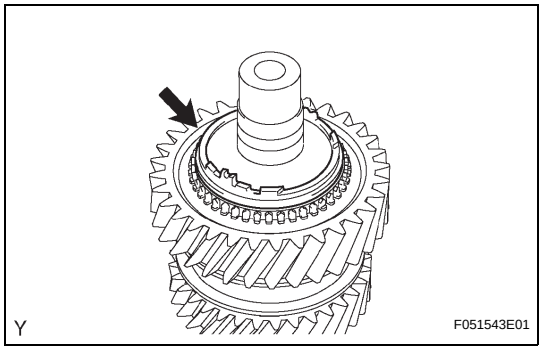

12. REMOVE NO. 4 SYNCHRONIZER RING

(a) Remove the synchronizer ring No. 4 from the counter gear.

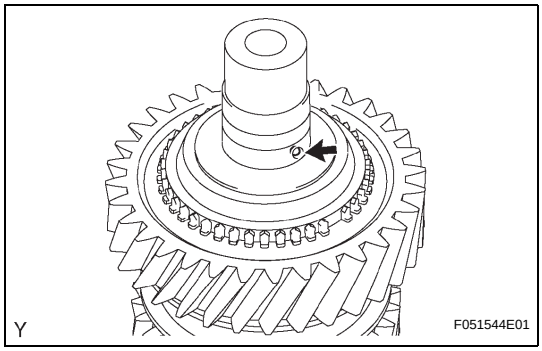

13. REMOVE BALL

(a) Remove the ball from the counter gear.

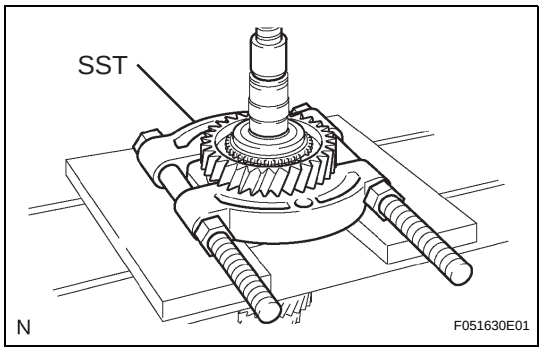

14. REMOVE COUNTERSHAFT GEAR 1ST SPEED

(a) Using a press, remove the countershaft gear 1st speed together with reverse gear spline piece from the counter gear.
SST 09950-00020

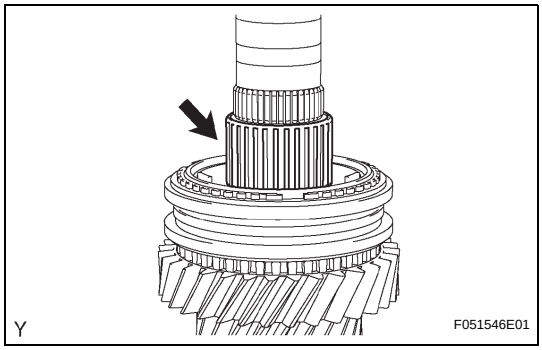

15. REMOVE 1ST GEAR NEEDLE ROLLER BEARING

(a) Remove the 1st gear needle roller bearing from the counter gear.

cardiagn.com

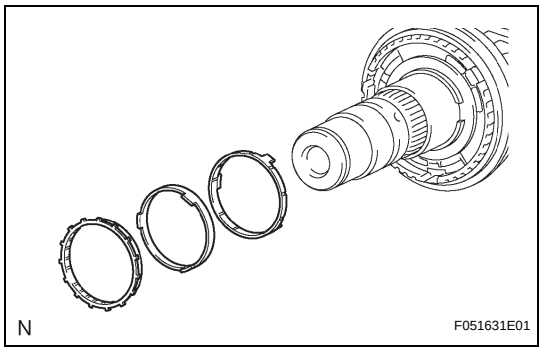

16. REMOVE NO. 1 SYNCHRONIZER RING SET (FOR 1ST GEAR)

(a) Remove the synchronizer ring set No. 1 from the counter gear.

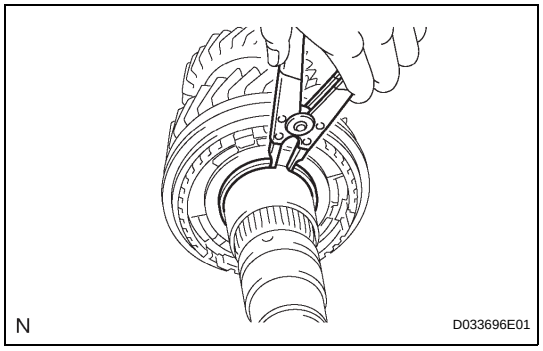

17. REMOVE CLUTCH HUB NO.1 SHAFT SNAP RING

(a) Using a snap ring expander, remove the snap ring from the counter gear.

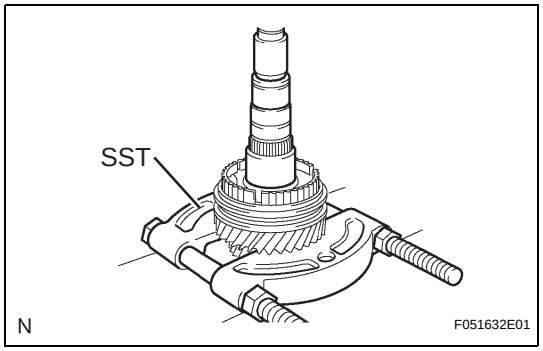

18. REMOVE COUNTER SHAFT 2ND SPEED GEAR

(a) Using a press, remove the counter shaft 2nd speed gear together with transmission clutch hub No. 1 from the counter gear.
SST 09950-00020

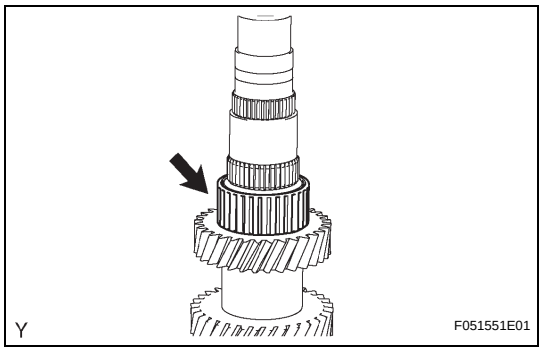

19. REMOVE 2ND GEAR NEEDLE ROLLER BEARING

(a) Remove the 2nd needle roller bearing from the counter gear.

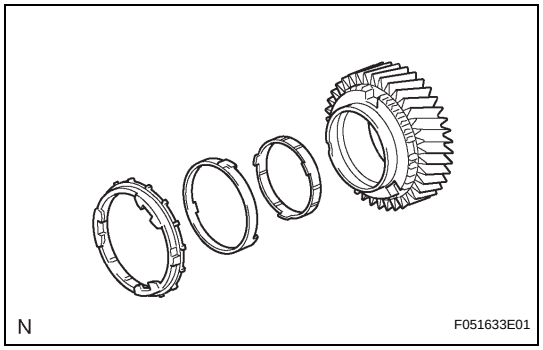

20. REMOVE NO. 1 SYNCHRONIZER RING SET (FOR 2ND GEAR)

(a) Remove the synchronizer ring set No. 1 from the 2nd gear.

MT

cardiagn.com

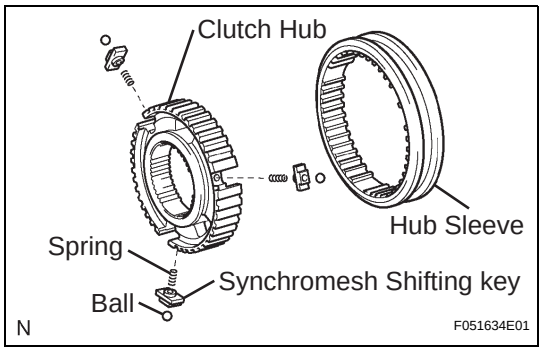

21. REMOVE NO. 1 TRANSMISSION CLUTCH HUB

(a) Remove the hub sleeve, 3 synchromesh shifting keys, 3 balls and 3 springs from the clutch hub.
HINT:
Use a shop rag to prevent the ball and spring from flying off.

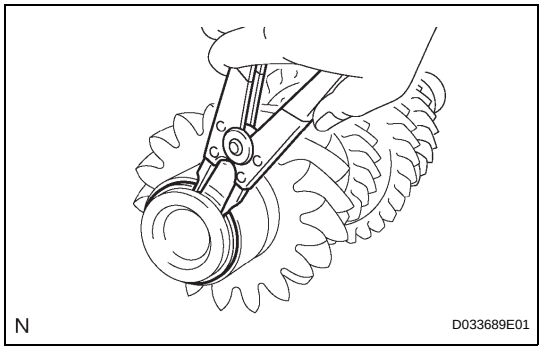

22. REMOVE SNAP RING COUNTER GEAR REAR BEARING

(a) Using a snap ring expander, remove the snap ring from the counter gear.

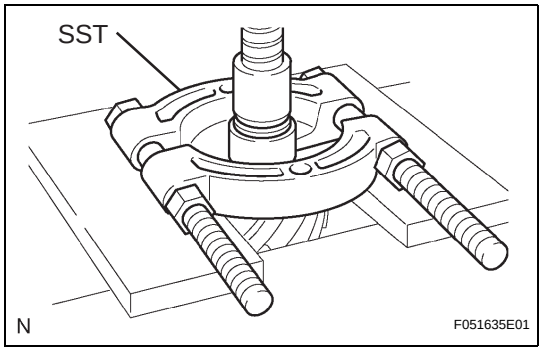

23. REMOVE RADIAL BALL BEARING INNER RACE

(a) Using SST and a press, remove the needle roller bearing inner race.
SST 09950-00020

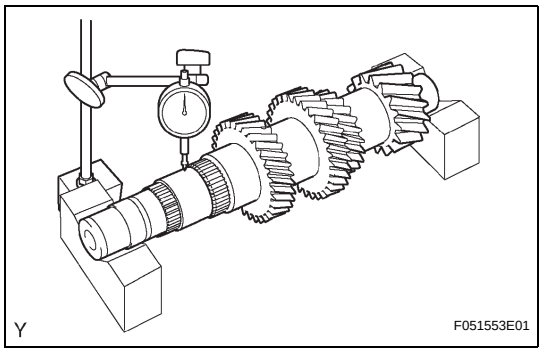

INSPECTION

1. INSPECT COUNTER GEAR

(a) Using a dial indicator and 2 V-blocks, measure the shaft runout.
Maximum runout:
0.03 mm (0.0012 in.)
If the runout exceeds the maximum, replace the counter gear.

cardiagn.com

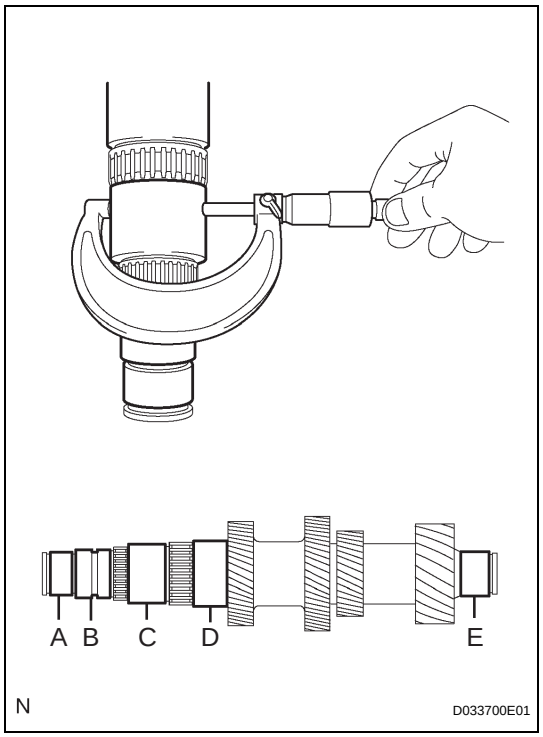

(b) Using a micrometer, measure the outer diameter of the input shaft journal surface.

Standard

Part	Outer diameter mm (in.)
A	34.002 to 34.015 (1.3387 to 1.3392)
B	36.985 to 37.000 (1.4561 to 1.4567)
C	47.985 to 48.000 (1.8892 to 1.8898)
D	53.985 to 54.000 (2.1254 to 2.1260)
E	34.002 to 34.015 (1.3387 to 1.3392)

Minimum

Part	Outer diameter mm (in.)
A	34.002 (1.3387)
B	36.985 (1.4561)
C	47.985 (1.8892)
D	53.985 (2.1254)
E	34.002 (1.3387)

If the diameter is less than the minimum, replace the counter gear shaft.

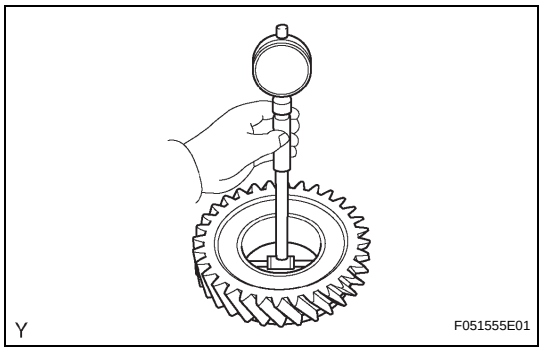

2. INSPECT COUNTERSHAFT REVERSE GEAR

(a) Using cylinder gauge, measure the inside diameter of the reverse gear.

Standard inside diameter:
51.015 to 51.040 mm (2.0085 to 2.0095 in.)
Maximum inside diameter:
51.040 mm (2.0095 in.)

If the inside diameter exceeds the maximum, replace the reverse gear.

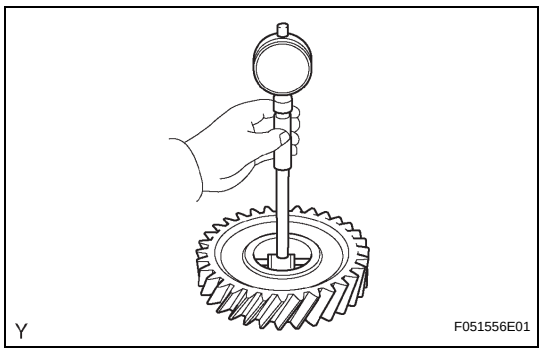

3. INSPECT COUNTERSHAFT GEAR 1ST SPEED

(a) Using cylinder gauge, measure the inside diameter of the 1st gear.

Standard inside diameter:
54.015 to 54.040 mm (2.1266 to 2.1276 in.)
Maximum inside diameter:
54.040 mm (2.1276 in.)

If the inside diameter exceeds the maximum, replace the 1st gear.

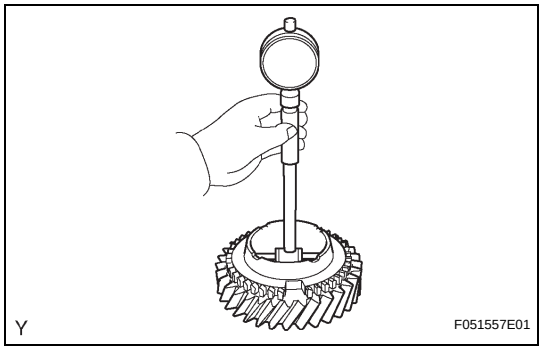

4. INSPECT COUNTER SHAFT 2ND SPEED GEAR

(a) Using cylinder gauge, measure the inside diameter of the 2nd gear.

Standard inside diameter:
60.015 to 60.040 mm (2.3628 to 2.3638 in.)
Maximum inside diameter:
60.040 mm (2.3638 in.)

If the inside diameter exceeds the maximum, replace the 2nd gear.

cardiagn.com

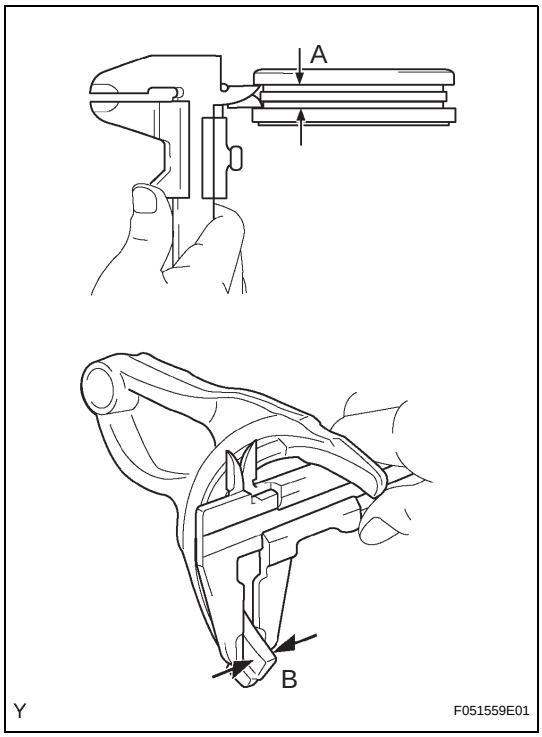

5. INSPECT NO. 3 TRANSMISSION HUB SLEEVE

(a) Using vernier calipers, measure the width of the transmission hub sleeve No. 3 groove (A) and the thickness of the claw part on the gear shift fork No. 4 (B), and calculate the clearance.

Standard clearance (A - B):
0.26 to 0.84 mm (0.0102 to 0.0331 in.)

If the clearance is outside the specification, replace the transmission hub sleeve No. 3 and gear shift fork No. 4.

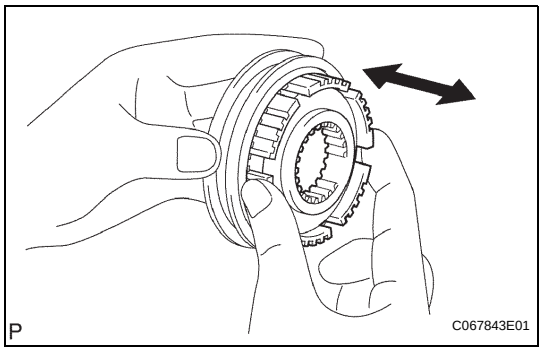

6. INSPECT NO. 1 TRANSMISSION HUB SLEEVE

(a) Check the sliding condition between the transmission hub No. 1 and transmission hub sleeve No. 1.

(b) Check that the spline gear teeth of the transmission hub sleeve No. 1 are not worn.

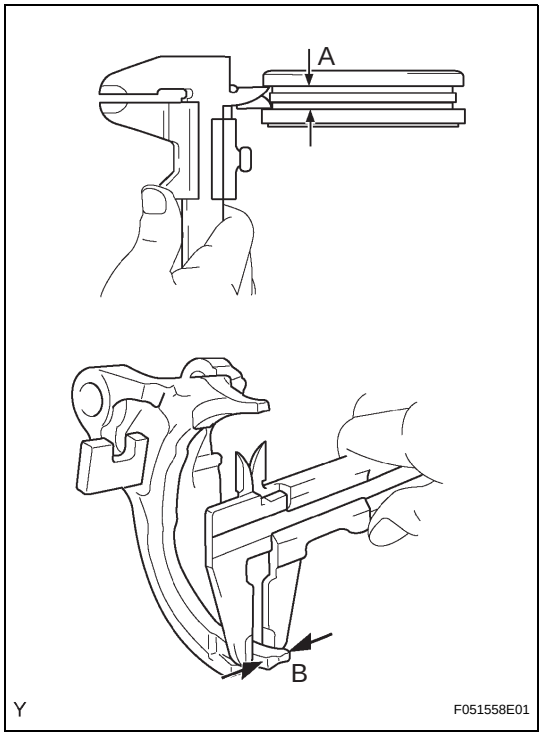

(c) Using vernier calipers, measure the width of the transmission hub sleeve No. 1 groove (A) and the thickness of the claw part on the gear shift fork No. 1 (B), and calculate the clearance.

Standard clearance (A - B):
0.15 to 0.35 mm (0.0059 to 0.0138 in.)

If the clearance is outside the specification, replace the transmission hub sleeve No. 1 and gear shift fork No. 1.

cardiagn.com

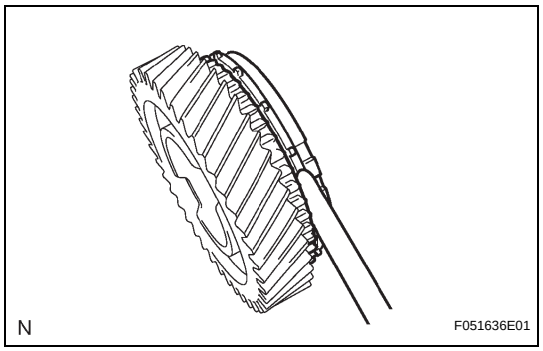

7. INSPECT NO. 4 SYNCHRONIZER RING

(a) Using a feeler gauge, measure the clearance between the synchronizer ring and reverse gear.

Standard clearance:
0.70 to 1.30 mm (0.0276 to 0.0512 in.)
Minimum clearance:
0.70 mm (0.0276 in.)
If the clearance is less than the minimum, replace the synchronizer ring.

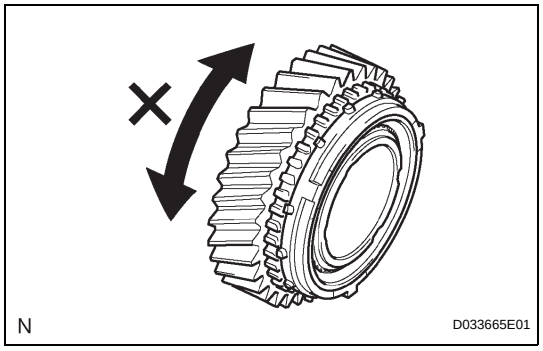

(b) Coat the reverse gear cone with gear oil. Check the braking effect of the synchronizer ring. Turn the synchronizer ring in one direction while pushing it to the reverse gear cone. Check that the ring locks.

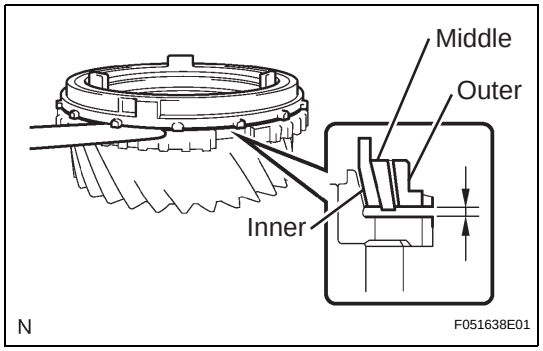

8. INSPECT NO. 1 SYNCHRONIZER RING SET (FOR 1ST GEAR)

(a) Using a feeler gauge, measure the clearance between the synchronizer ring and 1st gear.

Standard clearance:
Inner:
1.48 to 2.12 mm (0.0583 to 0.0835 in.)
Middle:
0.68 to 1.92 mm (0.0268 to 0.0756 in.)
Outer:
0.88 to 1.72 mm (0.0346 to 0.0677 in.)
Minimum clearance:
Inner:
1.48 mm (0.0583 in.)
Middle:
0.68 mm (0.0268 in.)
Outer:
0.88 mm (0.0346 in.)
If the clearance is less than the minimum, replace the synchronizer ring.

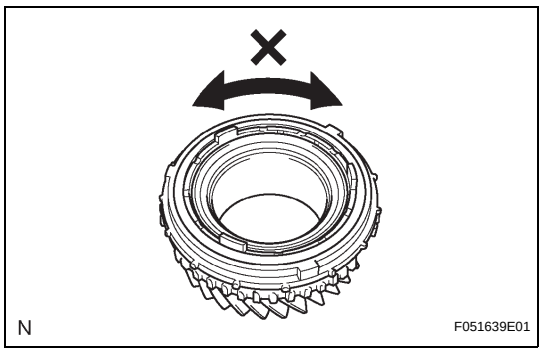

(b) Coat the 1st gear cone with gear oil. Check the braking effect of the synchronizer ring. Turn the synchronizer ring in one direction while pushing it to the 1st gear cone. Check that the ring locks.

MT

cardiagn.com

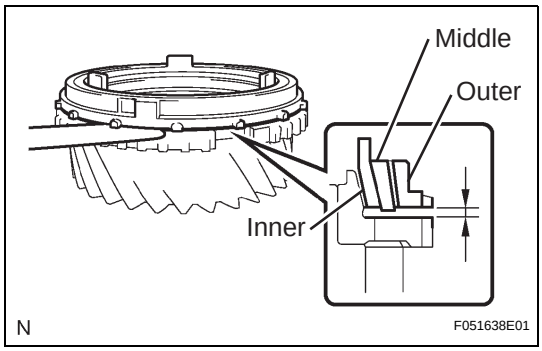

9. INSPECT NO. 1 SYNCHRONIZER RING SET (FOR 2ND GEAR)

(a) Using a feeler gauge, measure the clearance between the synchronizer ring and 2nd gear.

Standard clearance:
Inner:
1.48 to 2.12 mm (0.0583 to 0.0835 in.)
Middle:
0.68 to 1.92 mm (0.0268 to 0.0756 in.)
Outer:
0.88 to 1.72 mm (0.0346 to 0.0677 in.)
Minimum clearance:
Inner:
1.48 mm (0.0583 in.)
Middle:
0.68 mm (0.0268 in.)
Outer:
0.88 mm (0.0346 in.)

If the clearance is less than the minimum, replace the synchronizer ring.

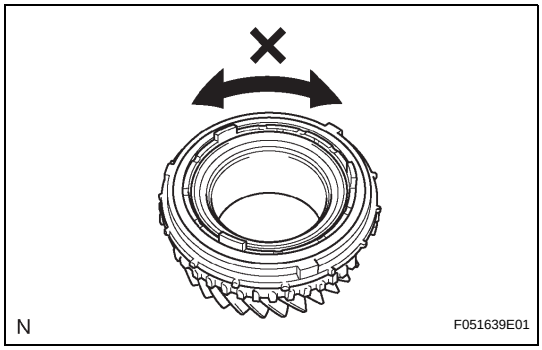

(b) Coat the 2nd gear cone with gear oil. Check the braking effect of the synchronizer ring. Turn the synchronizer ring in one direction while pushing it to the 2nd gear cone. Check that the ring locks.

REASSEMBLY

1. INSTALL RADIAL BALL BEARING INNER RACE

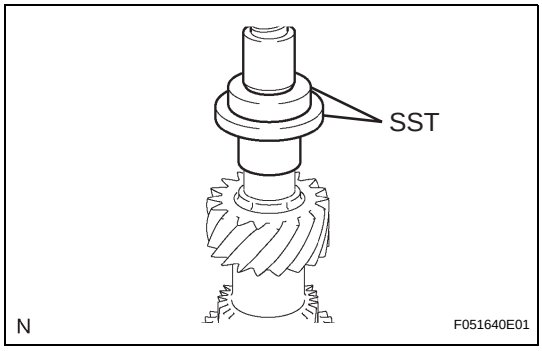

(a) Using SST and a press, install a new needle roller bearing inner race.

SST 09950-60010 (09951-00540)

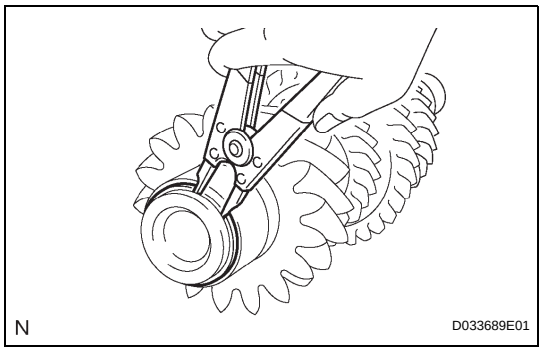

2. INSTALL SNAP RING COUNTER GEAR REAR BEARING

(a) Select a snap ring that will allow minimum axial play.

Standard clearance:
0.1 mm (0.004 in.) or less
Snap ring thickness

Part No.	Thickness: mm (in.)	Mark
90520-31015	2.35 to 2.40 (0.0925 to 0.0945)	A
90520-31016	2.40 to 2.45 (0.0945 to 0.0965)	B
90520-31017	2.45 to 2.50 (0.0965 to 0.0984)	C

cardiagn.com

Part No.	Thickness: mm (in.)	Mark
90520-31018	2.50 to 2.55 (0.0984 to 0.1004)	D
90520-31019	2.55 to 2.60 (0.1004 to 0.1024)	E
90520-31020	2.60 to 2.65 (0.1024 to 0.1043)	F
90520-31021	2.65 to 2.70 (0.1043 to 0.1063)	G
90520-31022	2.70 to 2.75 (0.1063 to 0.1083)	H
90520-31023	2.75 to 2.80 (0.1083 to 0.1102)	J
90520-31024	2.80 to 2.85 (0.1102 to 0.1122)	K
90520-31025	2.85 to 2.90 (0.1122 to 0.1142)	L
90520-31033	2.90 to 2.95 (0.1142 to 0.1161)	M

(b) Using a snap ring expander, install the snap ring onto the counter gear.

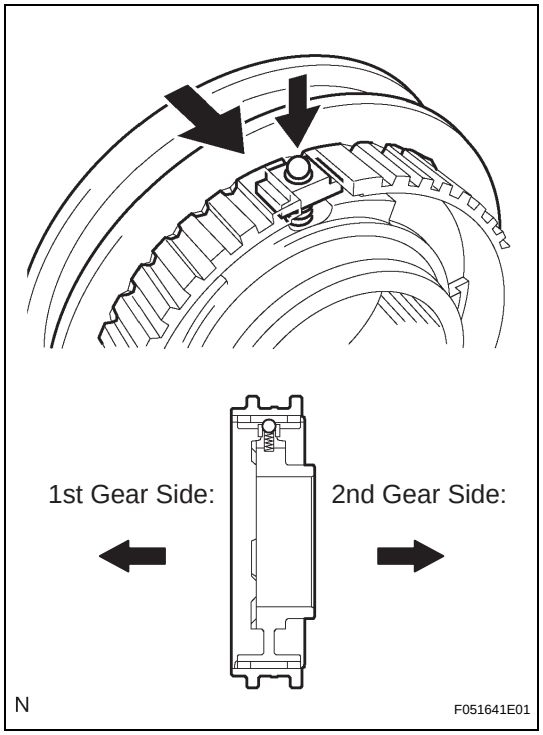

3. INSTALL NO. 1 TRANSMISSION CLUTCH HUB

(a) Apply a light coat of gear oil to the sleeve and hub.
(b) Install the clutch hub sleeve onto the clutch hub.
(c) Install the 3 shifting keys onto the clutch hub.
(d) Install the 3 shifting key springs onto the clutch hub.
(e) Place the ball in the hole of the shifting key, and install the hub sleeve while pushing in the ball.
NOTICE:
Take care to prevent the ball from flying off.

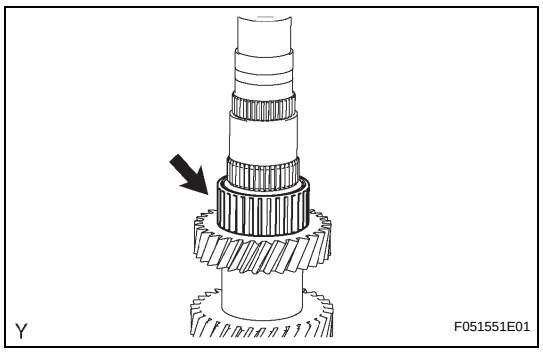

4. INSTALL 2ND GEAR NEEDLE ROLLER BEARING

(a) Coat the 2nd gear needle roller bearing with gear oil, then install it onto the counter gear.

MT

cardiagn.com

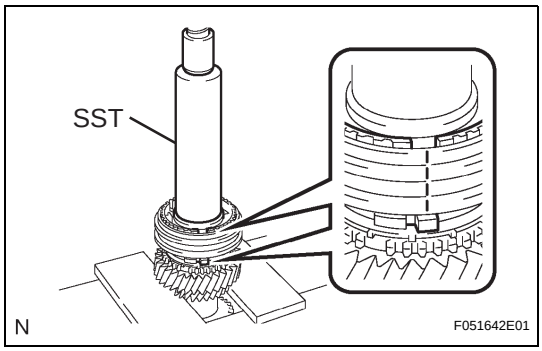

5. INSTALL COUNTER SHAFT 2ND SPEED GEAR

(a) Coat the countershaft 2nd speed gear with gear oil, then install it onto the counter gear.

(b) Coat the synchronizer ring set No. 1 with gear oil, then install it onto the counter gear.

(c) Using SST and a press, install the transmission clutch hub No. 1 onto the counter gear.

SST 09308-14010

HINT:

Align the convex portion of the synchronizer ring with the groove of the clutch hub.

(d) Install the clutch hub and confirm that the gear and synchronizer ring move smoothly.

MT

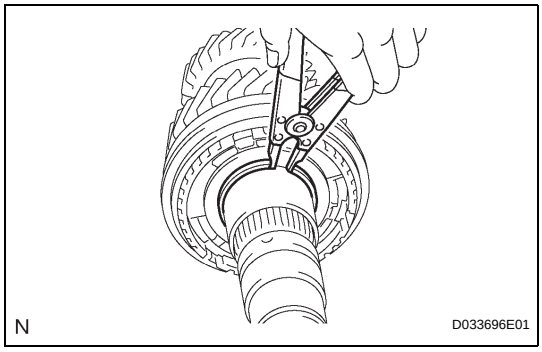

6. INSTALL CLUTCH HUB NO.1 SHAFT SNAP RING

(a) Select a snap ring that will allow minimum axial play.

Standard clearance:

0.1 mm (0.004 in.) or less

Snap ring thickness

Part No.	Thickness: mm (in.)	Mark
90520-45013	2.28 to 2.33 (0.0898 to 0.0917)	A
90520-45014	2.33 to 2.38 (0.0917 to 0.0937)	B
90520-45015	2.38 to 2.43 (0.0937 to 0.0957)	C
90520-45016	2.43 to 2.48 (0.0957 to 0.0976)	D
90520-45017	2.48 to 2.53 (0.0976 to 0.0996)	E
90520-45018	2.53 to 2.58 (0.0996 to 0.1016)	F
90520-45019	2.58 to 2.63 (0.1016 to 0.1035)	G

(b) Using a snap ring expander, install the snap ring onto the counter gear.

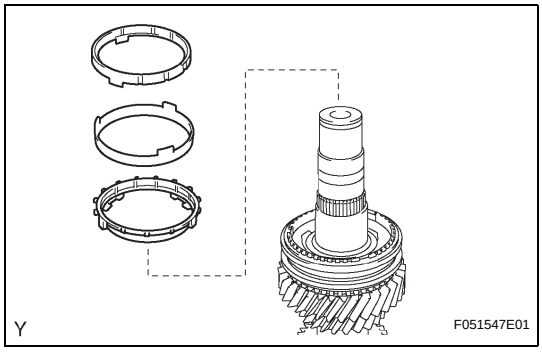

7. INSTALL NO. 1 SYNCHRONIZER RING SET

(a) Coat the synchronizer ring set No. 1 with gear oil, then install it onto the counter gear.

cardiagn.com

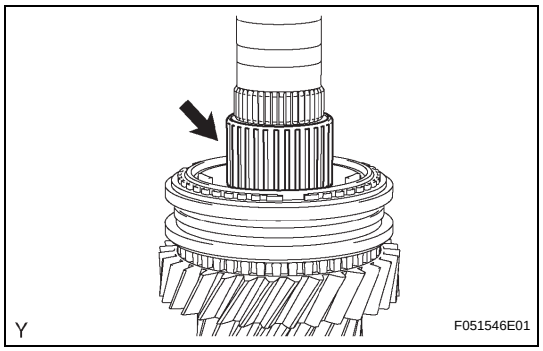

8. INSTALL 1ST GEAR NEEDLE ROLLER BEARING

(a) Coat the 1st gear needle roller bearing with gear oil, then install it onto the counter gear.

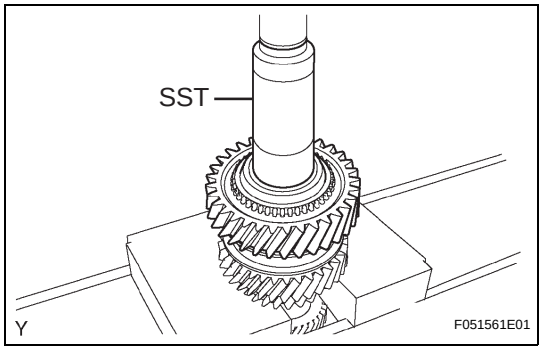

9. INSTALL COUNTERSHAFT GEAR 1ST SPEED

(a) Coat the countershaft gear 1st speed with gear oil, and install it onto the counter gear.

(b) Using SST and a press, install the reverse gear spline piece.

SST 09309-37010

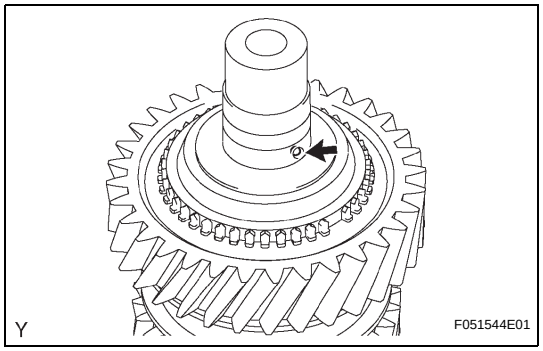

10. INSTALL BALL

(a) Install the ball into the counter gear.

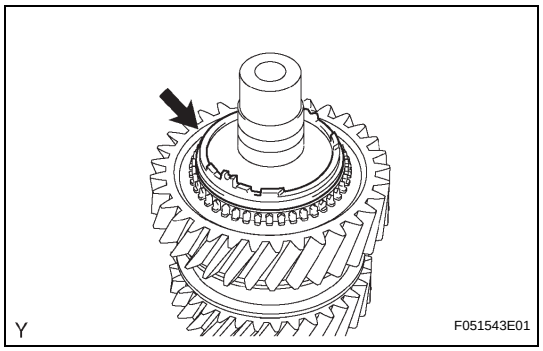

11. INSTALL NO. 4 SYNCHRONIZER RING

(a) Coat the synchronizer ring No. 4 with gear oil, and install it onto the counter gear.

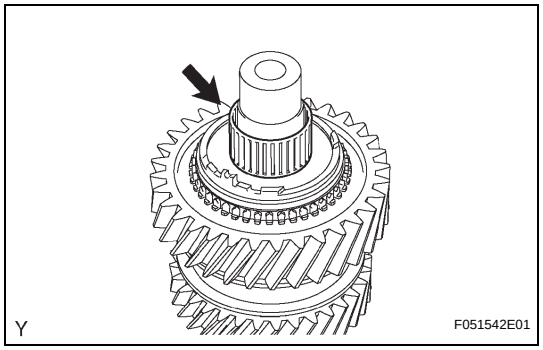

12. INSTALL REVERSE GEAR NEEDLE ROLLER BEARING

(a) Coat the reverse gear needle roller bearing with gear oil, and install it onto the counter gear.

MT

cardiagn.com

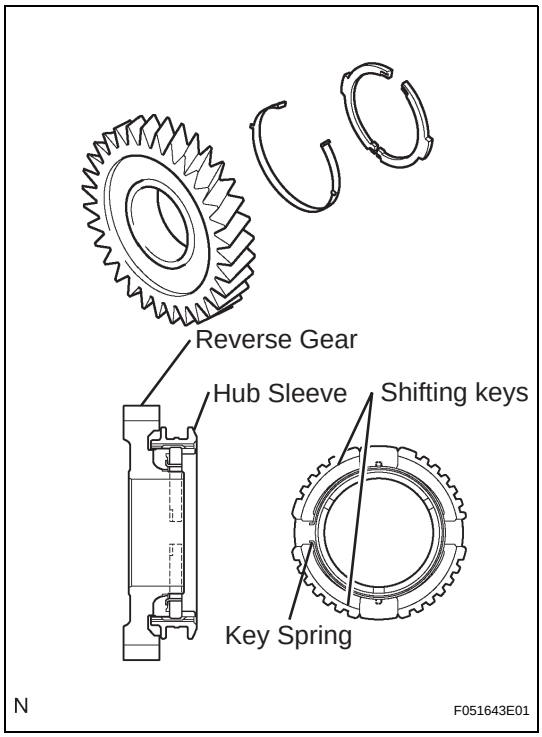

13. INSTALL COUNTERSHAFT REVERSE GEAR

(a) Install the key spring and 2 shifting keys onto the reverse gear.
HINT:
- Install the shifting key with its groove on the reverse gear side.
- Install the key spring with its claw on the reverse gear side.
- Refer to the illustration when installing the key spring.

(b) Install the hub sleeve onto the reverse gear.

(c) Coat the countershaft reverse gear with gear oil, then install it onto the counter gear.

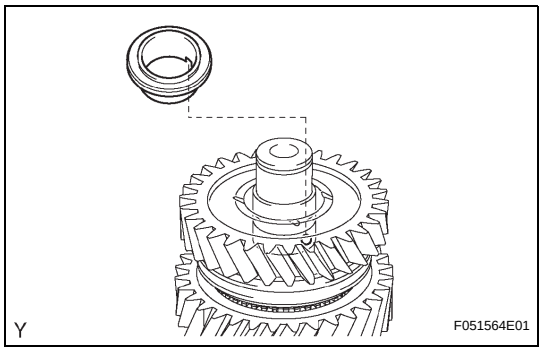

14. INSTALL REVERSE GEAR BEARING RACE INNER

(a) Align the groove of the reverse gear bearing race inner with the ball, and install them.

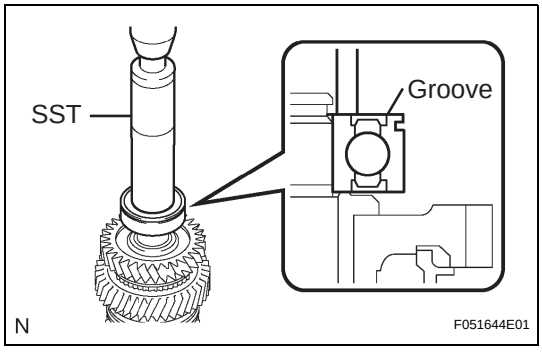

15. INSTALL COUNTER GEAR FRONT BEARING OR ROLLER

(a) Using SST and a press, install counter gear front bearing or roller onto the counter gear.
SST 09608-06041
HINT:
Make sure that the groove of the bearing faces the correct direction as shown in the illustration.

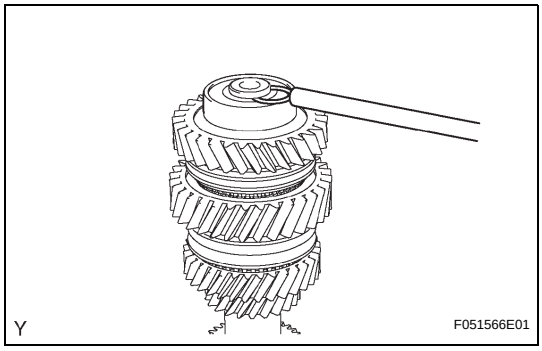

16. REMOVE NO. 1 COUNTER GEAR FRONT BEARING SNAP RING

(a) Select a snap ring that will allow minimum axial play.
Standard clearance:
0.1 mm (0.004 in.) or less
Snap ring thickness

Part No.	Thickness: mm (in.)	Mark
90520-31015	2.35 to 2.40 (0.0925 to 0.0945)	A

cardiagn.com

Part No.	Thickness: mm (in.)	Mark
90520-31016	2.40 to 2.45 (0.0945 to 0.0965)	B
90520-31017	2.45 to 2.50 (0.0965 to 0.0984)	C
90520-31018	2.50 to 2.55 (0.0984 to 0.1004)	D
90520-31019	2.55 to 2.60 (0.1004 to 0.1024)	E
90520-31020	2.60 to 2.65 (0.1024 to 0.1043)	F
90520-31021	2.65 to 2.70 (0.1043 to 0.1063)	G
90520-31022	2.70 to 2.75 (0.1063 to 0.1083)	H
90520-31023	2.75 to 2.80 (0.1083 to 0.1102)	J
90520-31024	2.80 to 2.85 (0.1102 to 0.1122)	K
90520-31025	2.85 to 2.90 (0.1122 to 0.1142)	L
0520-31033	2.90 to 2.95 (0.1142 to 0.1161)	M

(b) Using a snap ring expander, install the snap ring onto the counter gear.

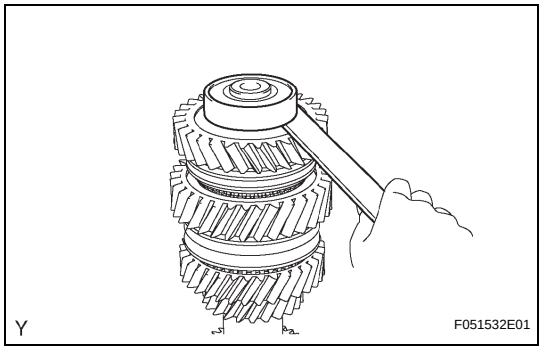

17. INSPECT REVERSE GEAR THRUST CLEARANCE

(a) Using a feeler gauge, measure the reverse gear thrust clearance.

Standard clearance:

0.12 to 0.37 mm (0.0047 to 0.0146 in.)

If the clearance is outside the specification, replace the synchronizer ring No. 4.

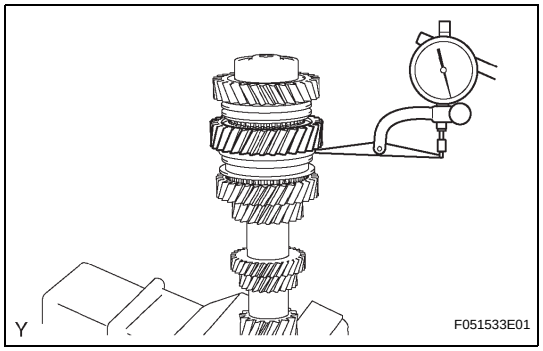

18. INSPECT 1ST GEAR THRUST CLEARANCE

(a) Using a dial indicator, measure the 1st gear thrust clearance.

Standard clearance:

0.10 to 0.43 mm (0.0039 to 0.0169 in.)

If the clearance is outside the specification, replace the synchronizer ring set No. 1.

MT

cardiagn.com

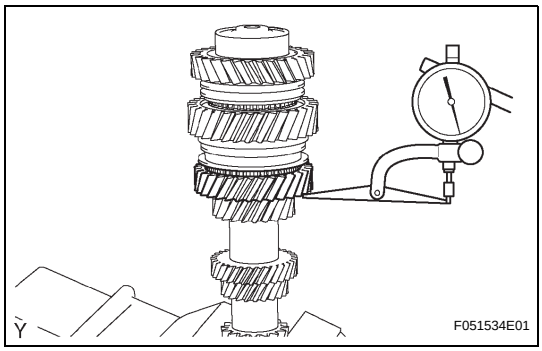

19. INSPECT 2ND GEAR THRUST CLEARANCE

(a) Using a dial indicator, measure the 2nd gear thrust clearance.

Standard clearance:

0.10 to 0.43 mm (0.0039 to 0.0169 in.)

If the clearance is outside the specification, replace the synchronizer ring set No. 1.

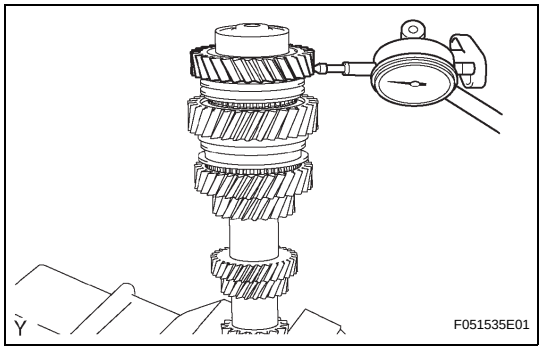

20. INSPECT REVERSE GEAR RADIAL CLEARANCE

(a) Using a dial indicator, measure the reverse gear radial clearance.

Standard clearance:

0.015 to 0.065 mm (0.0006 to 0.0026 in.)

If the clearance is outside the specification, replace the reverse gear needle roller bearing or shaft.

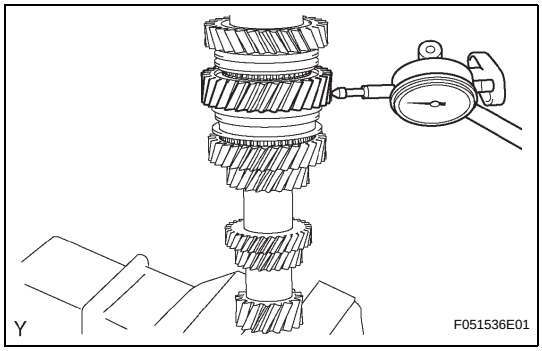

21. INSPECT 1ST GEAR RADIAL CLEARANCE

(a) Using a dial indicator, measure the 1st gear radial clearance.

Standard clearance:

0.015 to 0.067 mm (0.0006 to 0.0026 in.)

If the clearance is outside the specification, replace the 1st gear needle roller bearing or shaft.

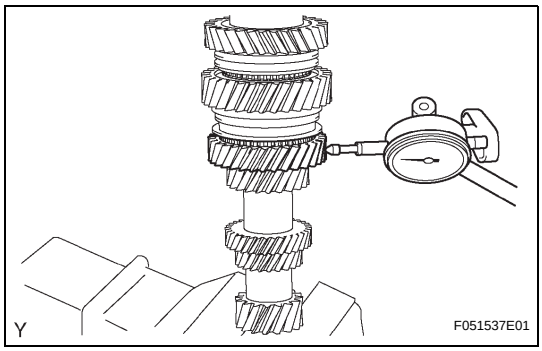

22. INSPECT 2ND GEAR RADIAL CLEARANCE

(a) Using a dial indicator, measure the 2nd gear radial clearance.

Standard clearance:

0.015 to 0.067 mm (0.0006 to 0.0026 in.)

If the clearance is outside the specification, replace the 2nd gear needle roller bearing or shaft.

cardiagn.com