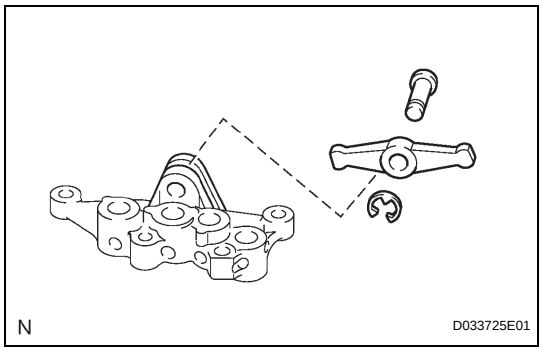

(b) Remove the shift arm pivot and shift arm.

REASSEMBLY

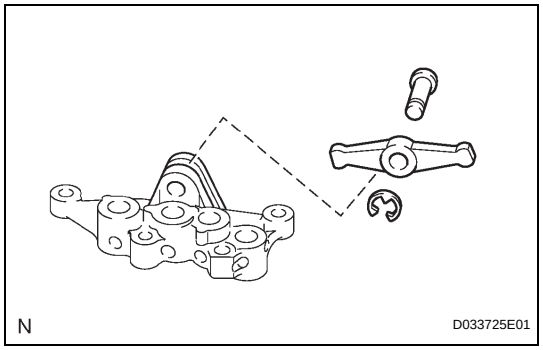

1. INSTALL 1ST AND REVERSE SHIFT ARM

(a) Install the shift arm and shift arm pivot onto the interlock bracket.

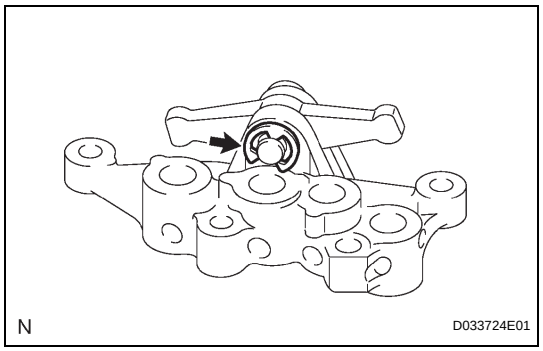

(b) Install a new E-ring onto the shift arm pivot.

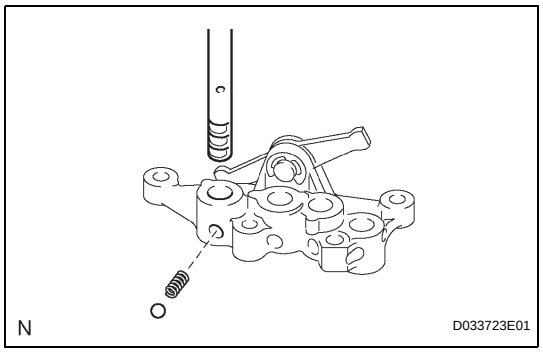

2. INSTALL NO. 4 GEAR SHIFT FORK SHAFT

(a) Install the spring and ball onto the interlock bracket.

(b) Install the shift fork shaft No. 4.

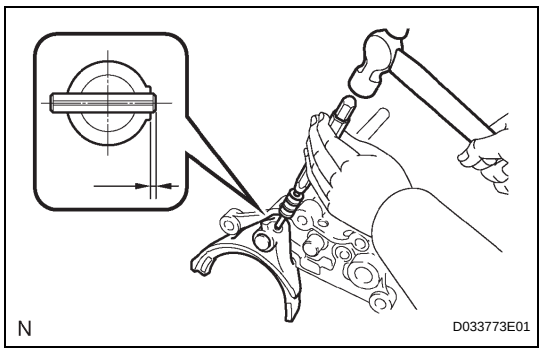

3. INSTALL NO. 4 GEAR SHIFT FORK

(a) Install the shift fork No. 4 onto the shift fork shaft No. 4.

(b) Using a pin punch (5 mm (0.20 in.)) and hammer, tap the new slotted pin into the shaft fork No. 4 and shift fork shaft No. 4.

Drive in depth:

0 to 0.5 mm (0 to 0.050 in.)

MT

cardiagn.com

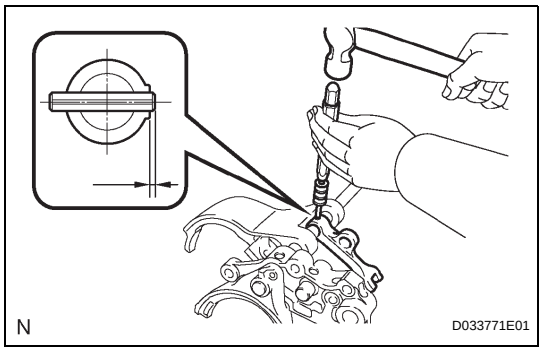

4. INSTALL NO. 1 GEAR SHIFT FORK

(a) Install the shift fork No. 1 and shift head No. 2 onto the shift fork shaft No. 4.

(b) Using a pin punch (5 mm (0.20 in.)) and hammer, tap the new slotted pin into the shaft head No. 2 and shift fork shaft No. 4.
Drive in depth:
0 to 0.5 mm (0 to 0.050 in.)

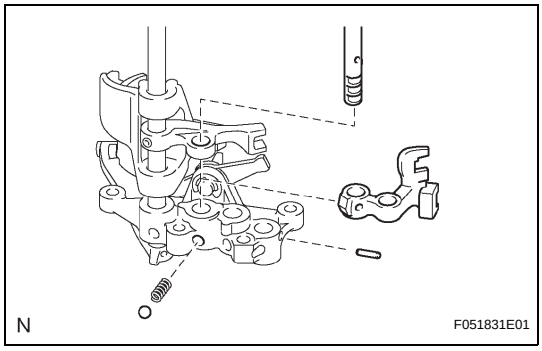

5. INSTALL NO. 1 GEAR SHIFT FORK SHAFT

(a) Apply MP grease to the interlock pin No. 1 and install it onto the interlock bracket.

(b) Install the spring and ball onto the interlock bracket.

(c) Install the shift fork shaft No. 1 onto the interlock bracket.
HINT:
Place the shift fork shaft No. 4 in the neutral position.

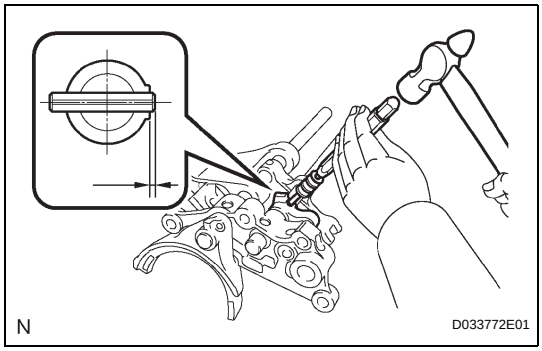

6. INSTALL NO. 1 GEAR SHIFT HEAD

(a) Install the shift head No. 1 into the shift fork shaft No. 1.

(b) Using a pin punch (5 mm (0.20 in.)) and hammer, tap the new slotted pin into the shaft head No. 1 and shift fork shaft No. 1.
Drive in depth:
0 to 0.5 mm (0 to 0.050 in.)

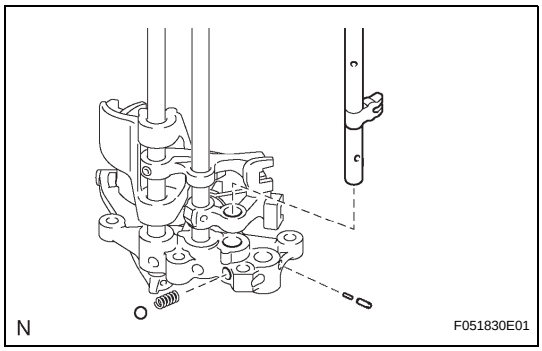

7. INSTALL NO. 2 GEAR SHIFT FORK SHAFT

(a) Apply MP grease to the interlock pins No. 2 and No. 3, then install them onto the interlock bracket.

(b) Install the spring and ball the interlock bracket.

(c) Install the shift fork shaft No. 2 onto the interlock bracket.
HINT:
Place the shift fork shafts No. 3 and No. 4 in the neutral position.

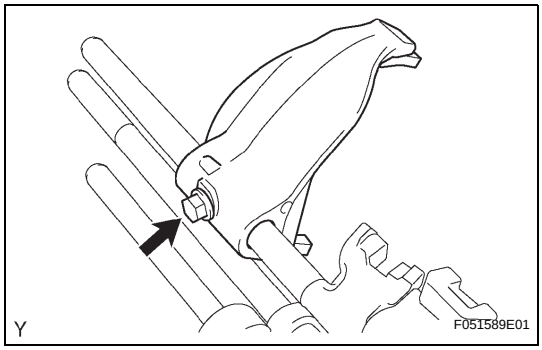

8. INSTALL NO. 2 GEAR SHIFT FORK

(a) Install the shift fork No. 2 with the bolt.
Torque: 20 N*m (199 kgf*cm, 14 ft.*lbf)

cardiagn.com

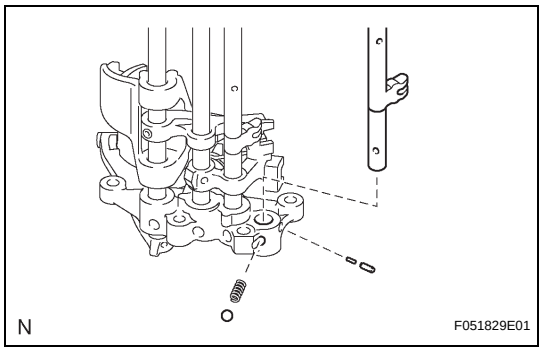

9. INSTALL NO. 3 GEAR SHIFT FORK SHAFT

(a) Apply MP grease to the interlock pins No. 2 and No. 3, then install them onto the interlock bracket.

(b) Install the spring and ball onto the interlock bracket.

(c) Install the shift fork shaft No. 3 onto the interlock bracket.

HINT:

Place the shift fork shafts No. 2, No. 1 and No. 4 in the neutral position.

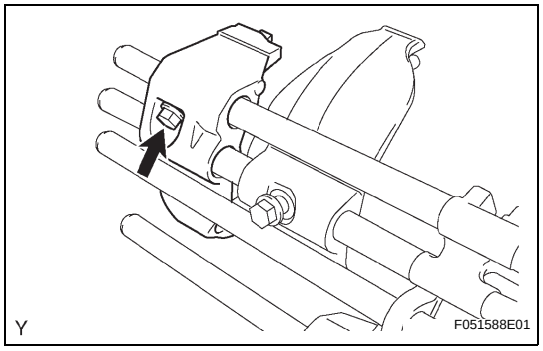

10. INSTALL NO. 3 GEAR SHIFT FORK

(a) Install the shift fork No. 3 with the bolt.

Torque: 20 N*m (199 kgf*cm, 14 ft.*lbf)

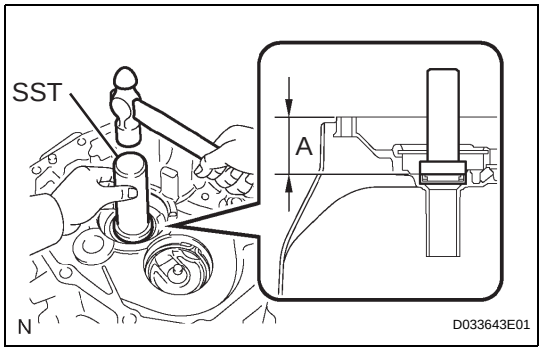

11. INSTALL TRANSMISSION CASE OIL SEAL

(a) Using SST and a hammer, tap a new oil seal into the front case in accordance with the dimension specified in the illustration.

SST 09950-70010 (09951-07100), 09950-60010 (09951-00470)

Dimension A:

60.0 to 60.8 mm (2.362 to 2.394 in.)

(b) Apply gear oil to the lip of the oil seal.

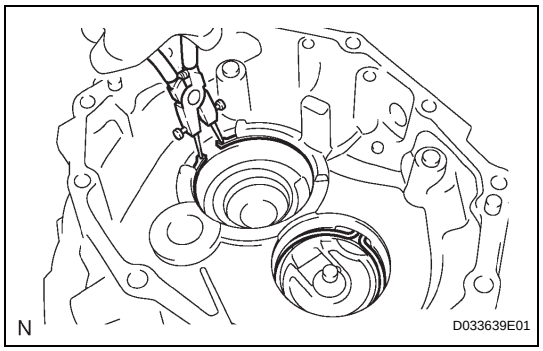

12. INSTALL FRONT BEARING SHAFT SNAP RING

(a) Using a snap ring plier, install the 2 snap rings.

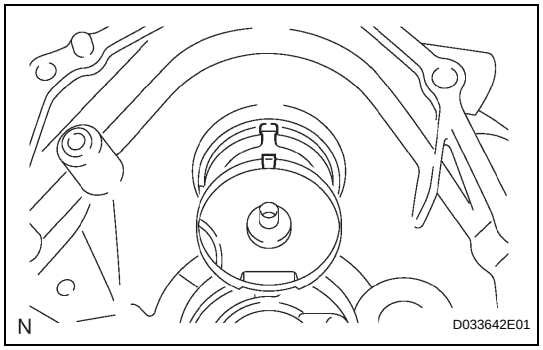

13. INSTALL NO. 1 OIL RECEIVER PIPE

(a) Install the oil receiver pipe No. 1 onto the transmission front case.

HINT:

Align the convex portion of the oil receiver pipe with the cutout of the front case and install the oil receiver pipe onto the clutch housing.

cardiagn.com

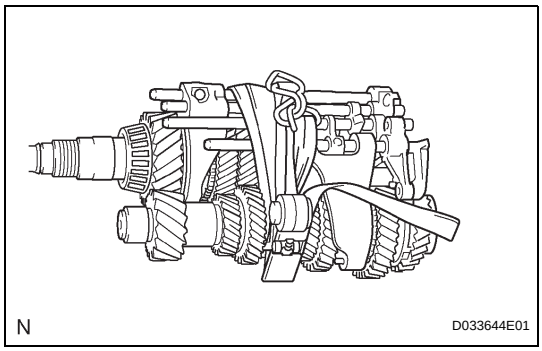

14. INSTALL TRANSMISSION FRONT CASE

(a) Apply gear oil to all sliding and rotating parts.

(b) Provisionally install the output shaft, input shaft, counter gear shaft and control assembly, and tie them with a rope or string.

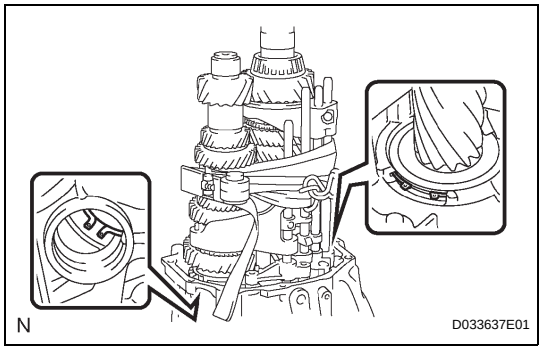

(c) Using a snap ring expander, extend the 2 snap rings and install the output shaft, input shaft, counter gear shaft and control assembly.
HINT:
Make sure that the snap ring is fitted into the grooves of the input shaft and front bearing of the counter gear shaft.

(d) Untie the output shaft, input shaft, counter gear shaft and control assembly.

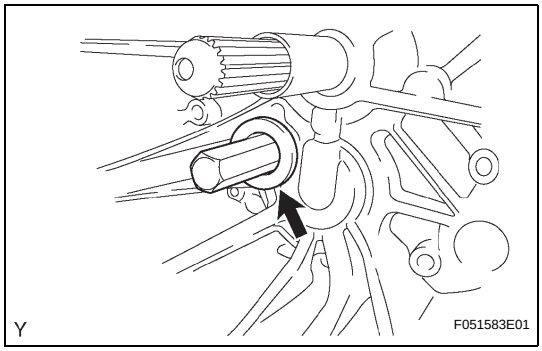

(e) Using a hexagonal wrench (24 mm), install the plug onto the front case.
Torque: 39 N*m (400 kgf*cm, 29 ft.*lbf)

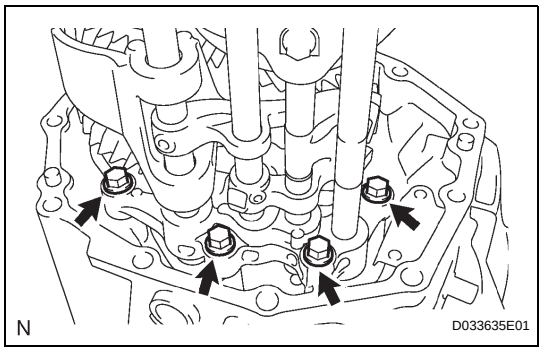

(f) Install the 4 bolts onto the interlock bracket.
Torque: 21 N*m (214 kgf*cm, 15 ft.*lbf)

cardiagn.com

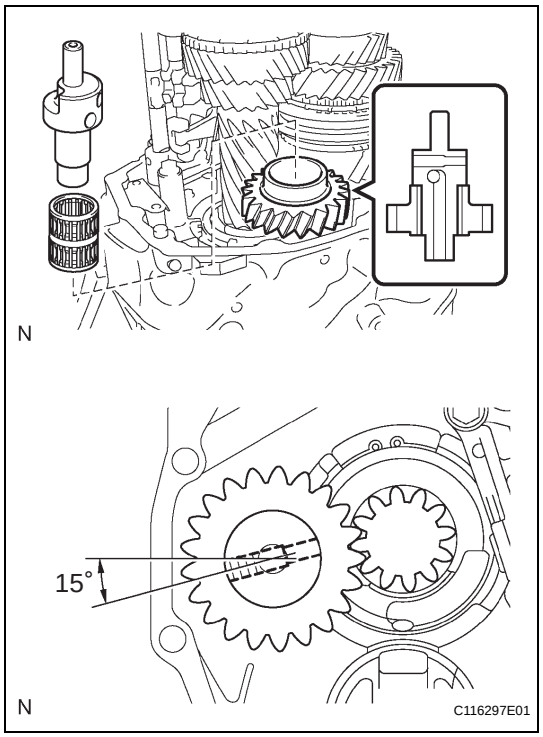

15. INSTALL REVERSE IDLER GEAR

(a) Install the reverse idler gear, reverse idler gear bearing and reverse idler gear shaft.
HINT:
Make sure that the reverse idler gear faces the correct direction as shown in the illustration.
NOTICE:
Make sure that the tapped hole portion of the reverse idler shaft is in the position shown in the illustration.

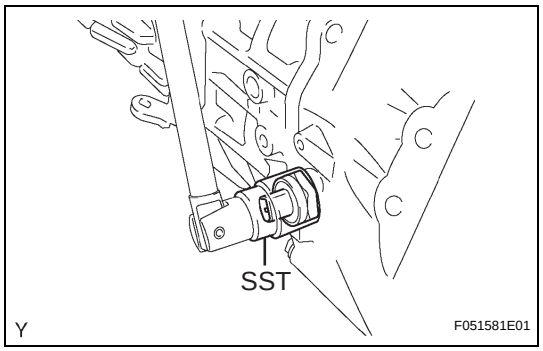

16. INSTALL BACK-UP LIGHT SWITCH ASSEMBLY

(a) Using SST, install the back-up light switch with a new gasket onto the transmission front case.
SST 09817-16011
Torque: 44 N*m (449 kgf*cm, 33 ft.*lbf)

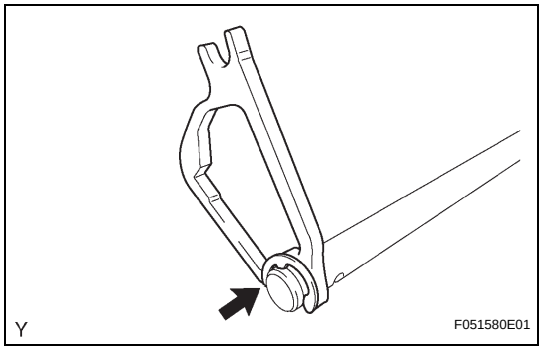

17. INSTALL SHIFT AND SELECT LEVER CAM

(a) Install the shift and select lever cam onto the shaft and install a new E-ring.

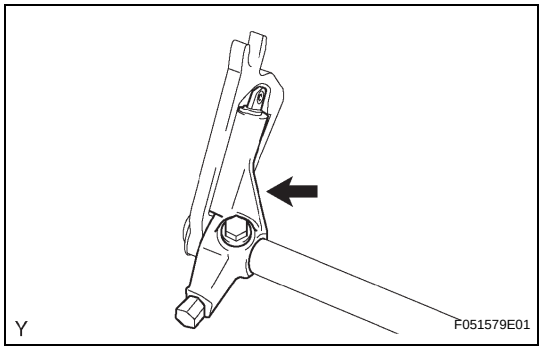

18. INSTALL SHIFT AND SELECT LEVER

(a) Install the lock ball pin and spring onto the shift and select lever.
(b) Install the shift and select lever onto the shift and select lever cam and shaft.
(c) Install the bolt onto the shift and select lever.
Torque: 33 N*m (340 kgf*cm, 25 ft.*lbf)

cardiagn.com

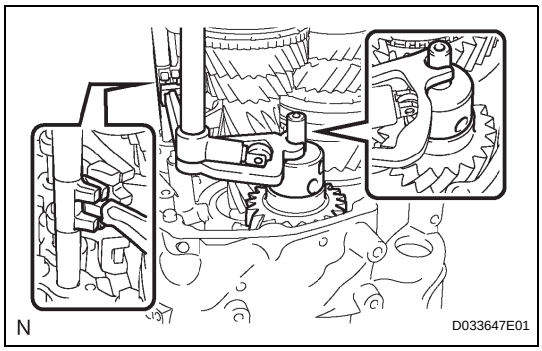

19. INSTALL SHIFT AND SELECT LEVER SHAFT

(a) Align the groove of the shift and select cam with the reverse idler shaft, and the claw with the groove of the control assembly, and install them.

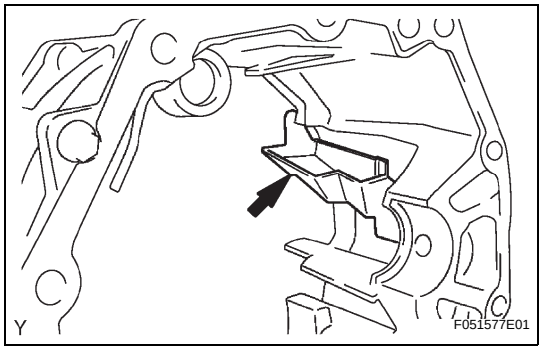

20. INSTALL NO. 2 OIL RECEIVER PIPE

(a) Install the oil receiver pipe No. 2 into the transmission middle case.

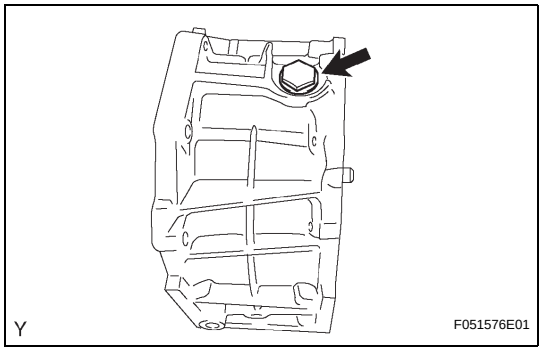

21. INSTALL DRAIN PLUG SUB-ASSEMBLY

(a) Install the drain plug with a new gasket onto the transmission middle case.
Torque: 37 N*m (377 kgf*cm, 27 ft.*lbf)

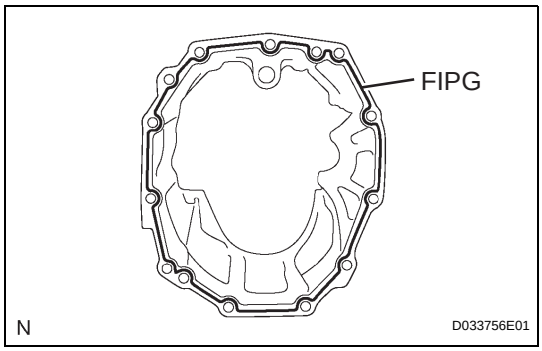

22. INSTALL TRANSMISSION MIDDLE CASE

(a) Apply FIPG to the transmission middle case, as shown in the illustration.
FIPG:
Part No. 08826-00090, THREE BOND 1281 or equivalent
NOTICE:
Parts must be assembled within 10 minutes of application. Otherwise, the packing (FIPG) material must be removed and reapplied.

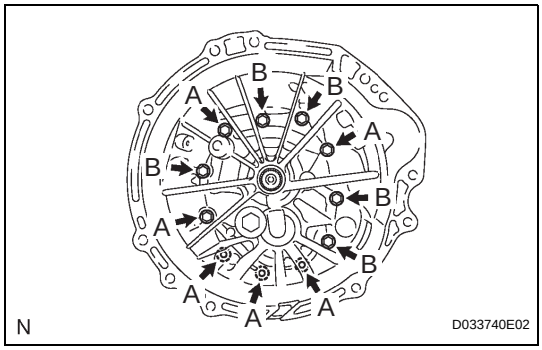

(b) Install the transmission middle case with the 11 bolts onto the transmission front case.
Torque: 40 N*m (408 kgf*cm, 30 ft.*lbf)
Bolt length:
Bolt A:
40 mm (1.57 in.)
Bolt B:
80 mm (3.15 in.)

cardiagn.com

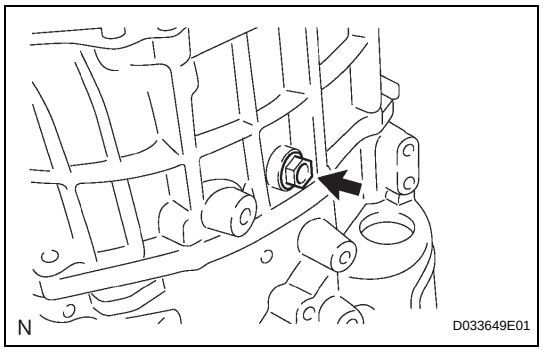

23. INSTALL REVERSE IDLER GEAR SHAFT BOLT

(a) Install a new gasket and the reverse idler gear shaft bolt onto the reverse idler gear shaft.
Torque: 28 N*m (286 kgf*cm, 21 ft.*lbf)

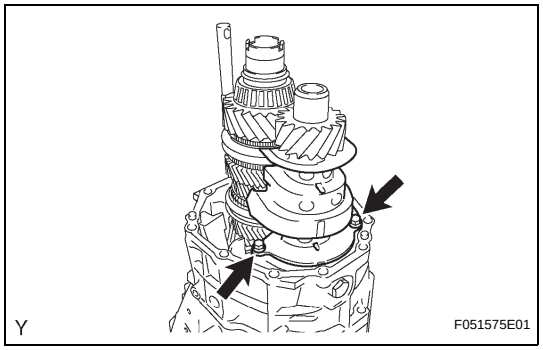

24. INSTALL TRANSMISSION OIL SEPARATOR

(a) Install the transmission oil separator with the 2 bolts.
Torque: 8.5 N*m (87 kgf*cm, 75 in.*lbf)

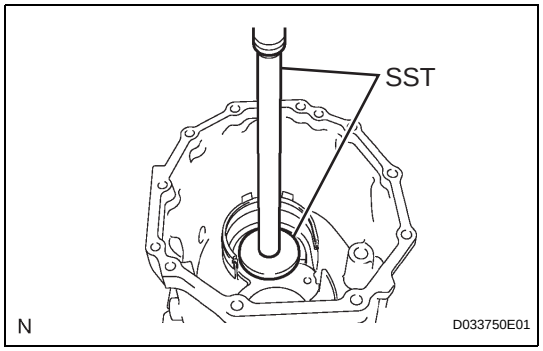

25. INSTALL COUNTER GEAR REAR RADIAL BALL BEARING

(a) Coat a new counter gear rear radial ball bearing with gear oil, and using SST and a press, install it into the transmission rear case.
SST 09950-70010 (09951-07360), 09950-60010 (09951-00650)

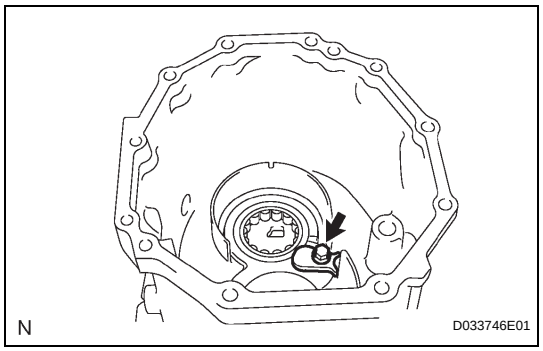

(b) Install the bearing lock plate with the bolt.
Torque: 11 N*m (115 kgf*cm, 8.3 ft.*lbf)

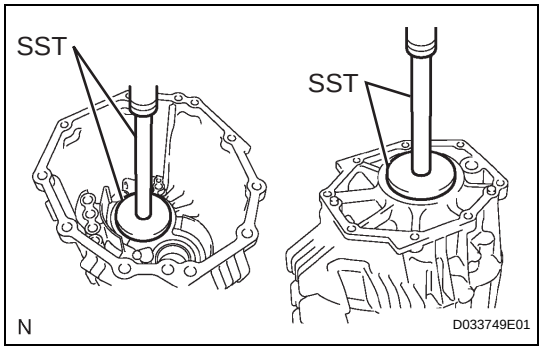

26. INSTALL OUTPUT SHAFT REAR BEARING OUTER RACE

(a) Using SST and a press, press in 2 new bearing outer races.
SST 09950-70010 (09951-07100, 09951-07360), 09950-60020 (09951-00790)

MT

cardiagn.com

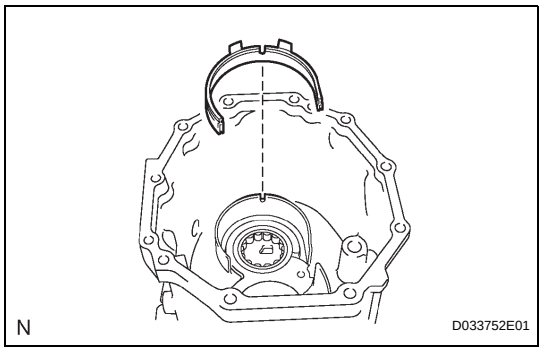

27. INSTALL OIL SEPARATOR PACKING SEAL

(a) Install the oil separator packing seal onto the transmission rear case.
HINT:
Insert the protruding part of the oil separator packing seal into the groove on the transmission rear case.

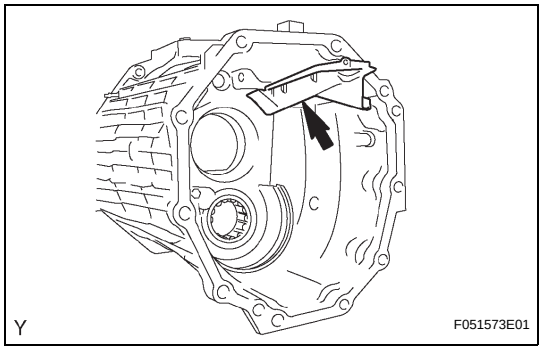

28. INSTALL EXTENSION HOUSING OIL RECEIVER PIPE

(a) Install the extension housing oil receiver pipe onto the transmission rear case.

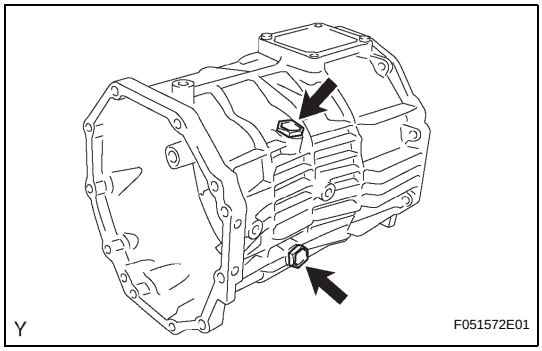

29. INSTALL MANUAL TRANSMISSION FILLER PLUG

(a) Install the 2 transmission filler plugs with 2 new gaskets onto the transmission rear case.
Torque: 37 N*m (377 kgf*cm, 27 ft.*lbf)

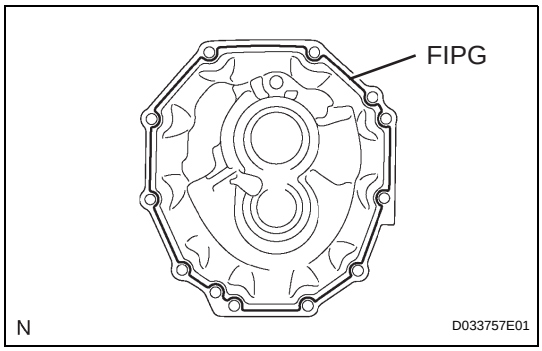

30. INSTALL TRANSMISSION REAR CASE

(a) Apply FIPG to the transmission rear case, as shown in the illustration.
FIPG:
Part No. 08826-00090, THREE BOND 1281 or equivalent
NOTICE:
Parts must be assembled within 10 minutes of application. Otherwise, the packing (FIPG) material must be removed and reapplied.

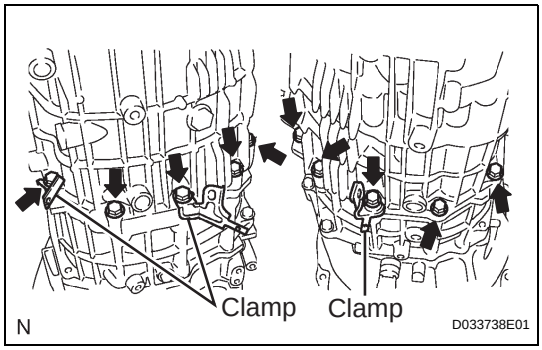

(b) Install the transmission rear case with the 10 bolts and 3 brackets onto the transmission middle case.
Torque: 40 N*m (408 kgf*cm, 30 ft.*lbf)

cardiagn.com

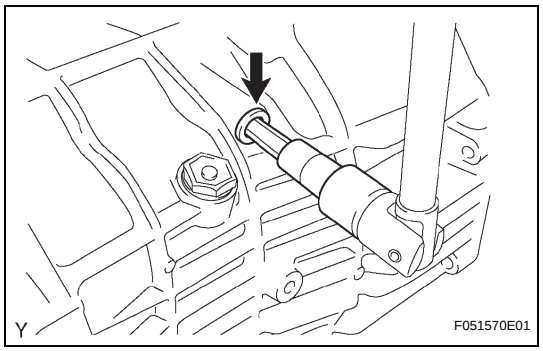

31. INSTALL SHIFT DETENT BALL PLUG

(a) Install the ball and compression spring onto the transmission rear case.

(b) Install a new shift detent ball plug, and install it onto the transmission rear case.
Torque: 25 N*m (250 kgf*cm, 18 ft.*lbf)

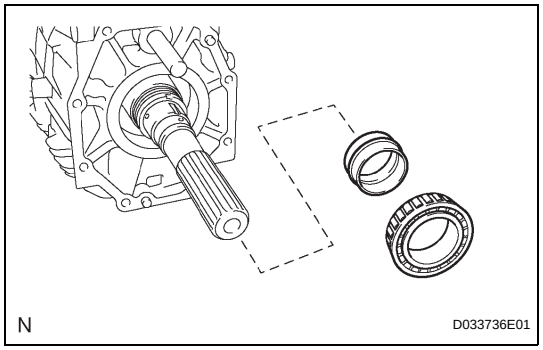

32. INSTALL OUTPUT SHAFT ADJUST NUT

(a) Using a belt and wooden block, fasten the transmission to the workbench.

(b) Install a new spacer and output shaft taper roller bearing No. 2.

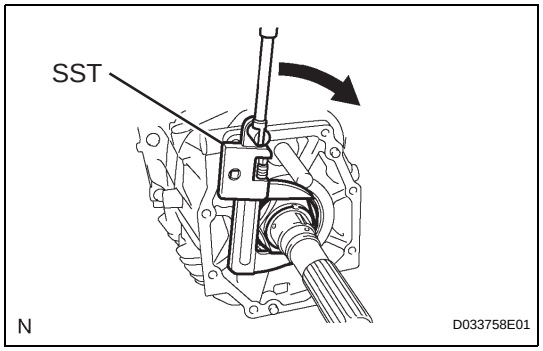

(c) Using SST, provisionally tighten a new nut until there is no slack in the output shaft.
SST 09922-10010
HINT:
No preload should be applied to the nut.

(d) Fit the bearing into the output shaft by turning the output shaft 15 times.

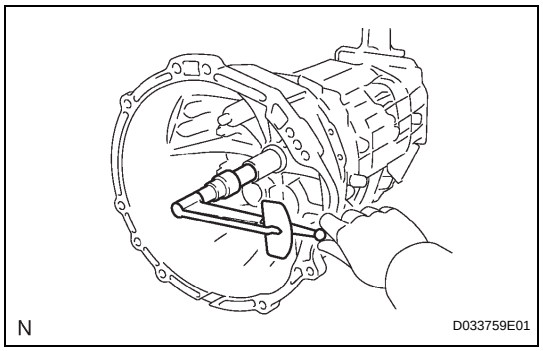

(e) Place the gearshift into 5th gear and check the initial torque of the input shaft.

(f) Using SST, tighten the nut.
SST 09922-10010

(g) Place the gearshift into 5th gear and check the initial torque of the input shaft.

(h) Confirm that the difference between (d) and (f) is within the specified values.
Preload (at starting):
0.45 to 1.35 N*m
(4.59 to 13.77 kgf*cm, 3.98 to 11.95 in.*lbf)
If the result is not as specified, tighten and adjust the output shaft adjusting nut.
NOTICE:
If the output shaft adjusting nut is loose or removed due to a large preload, always replace the spacer with a new one.

MT

cardiagn.com

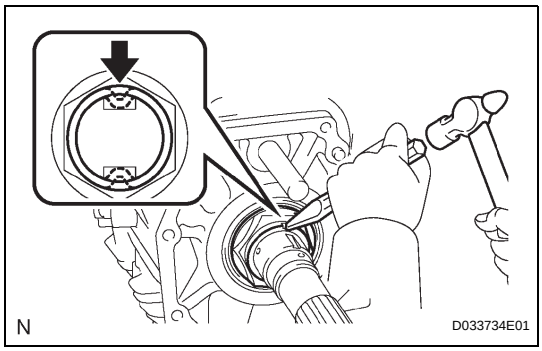

(i) Using a chisel and hammer, caulk the output shaft adjust nut.

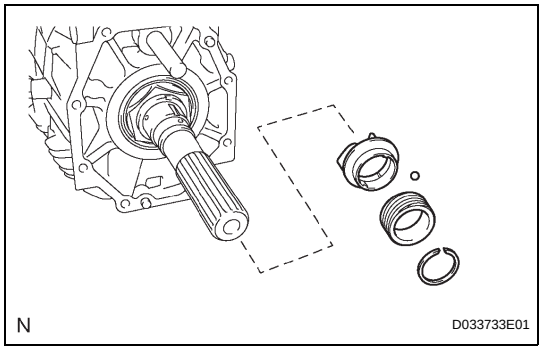

33. INSTALL SPEEDOMETER DRIVE GEAR

(a) Install the oil receiver pipe, ball and speedometer drive gear.

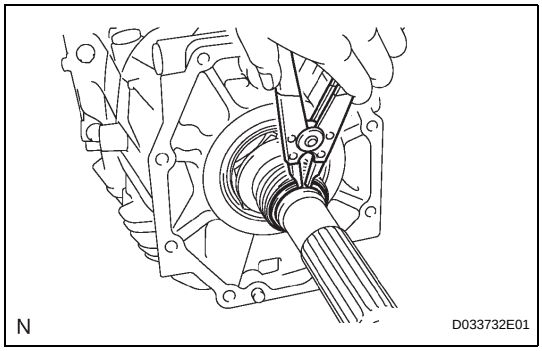

(b) Using a snap ring expander, install the snap ring.

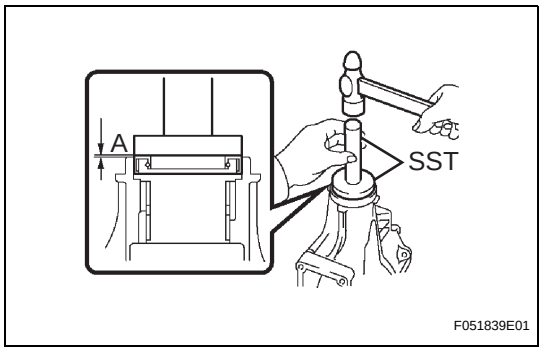

34. INSTALL MANUAL TRANSMISSION EXTENSION HOUSING OIL SEAL

(a) Using SST and a hammer, tap a new oil seal into the extension housing in accordance with the dimension specified in the illustration.

SST 09950-60020 (09951-00640), 09950-70010 (09951-07100)

Dimension A:
-0.5 to 0.5 mm (-0.197 to 0.197 in.)

(b) Apply gear oil to the lip of the oil seal.

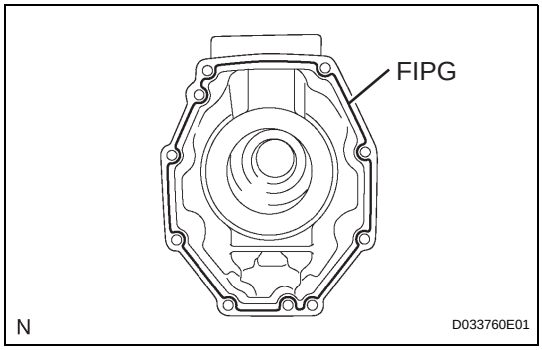

35. INSTALL EXTENSION HOUSING SUB-ASSEMBLY

(a) Apply FIPG to the extension housing, as shown in the illustration.

FIPG:
Part No. 08826-00090, THREE BOND 1281 or equivalent

NOTICE:
Parts must be assembled within 10 minutes of application. Otherwise, the packing (FIPG) material must be removed and reapplied.

cardiagn.com

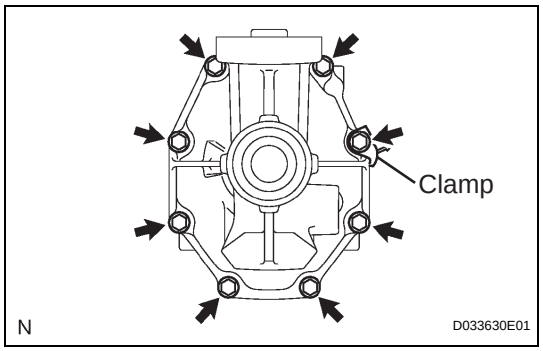

(b) Install the extension housing with the 8 bolts.
Torque: 29 N*m (296 kgf*cm, 21 ft.*lbf)

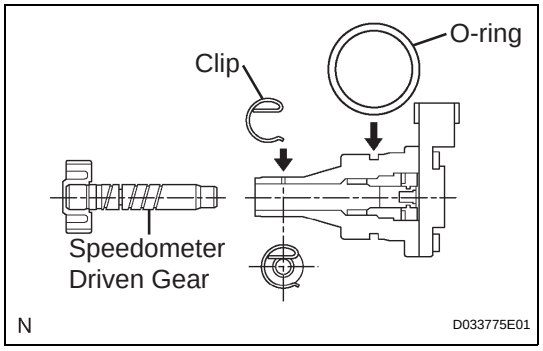

36. INSTALL SPEEDOMETER SENSOR

(a) Install a new O-ring onto the speedometer sensor.

(b) Install the speedometer driven gear into the speedometer sensor with the clip.
NOTICE:
Be sure to install the clip in the direction shown in the illustration.

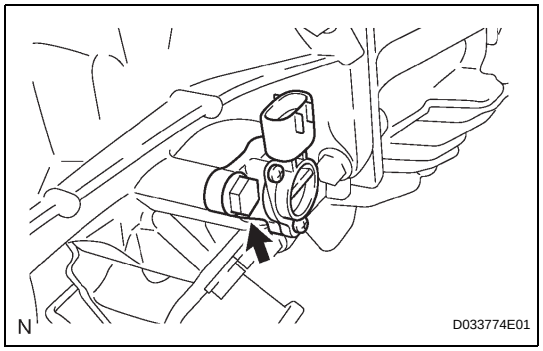

(c) Install the speedometer driven gear with the bolt.
Torque: 13 N*m (133 kgf*cm, 10 ft.*lbf)

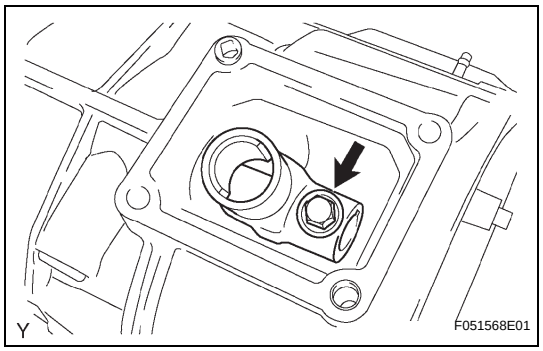

37. INSTALL SHIFT LEVER HOUSING

(a) Install the shift lever housing with the bolt.
Torque: 33 N*m (340 kgf*cm, 25 ft.*lbf)

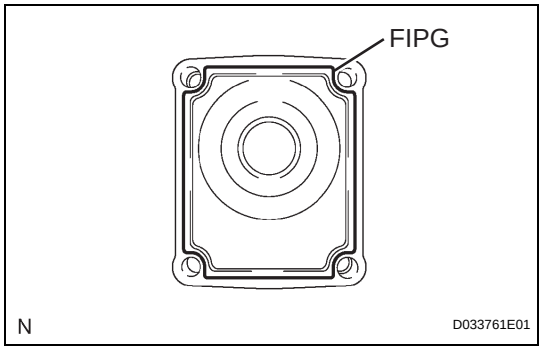

38. INSTALL FLOOR SHIFT CONTROL SHIFT LEVER RETAINER SUB-ASSEMBLY

(a) Apply FIPG to the floor shift control shift lever retainer, as shown in the illustration.
FIPG:
Part No. 08826-00090, THREE BOND 1281 or equivalent
NOTICE:
Parts must be assembled within 10 minutes of application. Otherwise, the packing (FIPG) material must be removed and reapplied.

MT

cardiagn.com

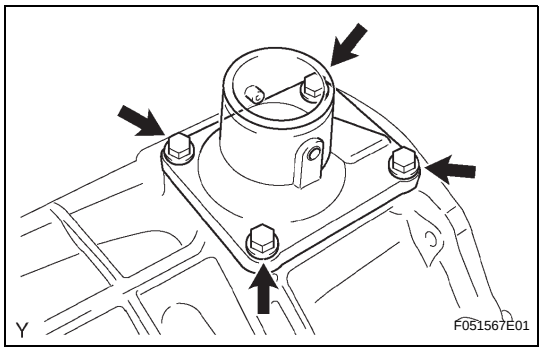

(b) Install the floor shift control shift lever retainer with the 4 bolts.
Torque: 20 N*m (204 kgf*cm, 15 ft.*lbf)

cardiagn.com