MT

MANUAL TRANSMISSION UNIT

COMPONENTS

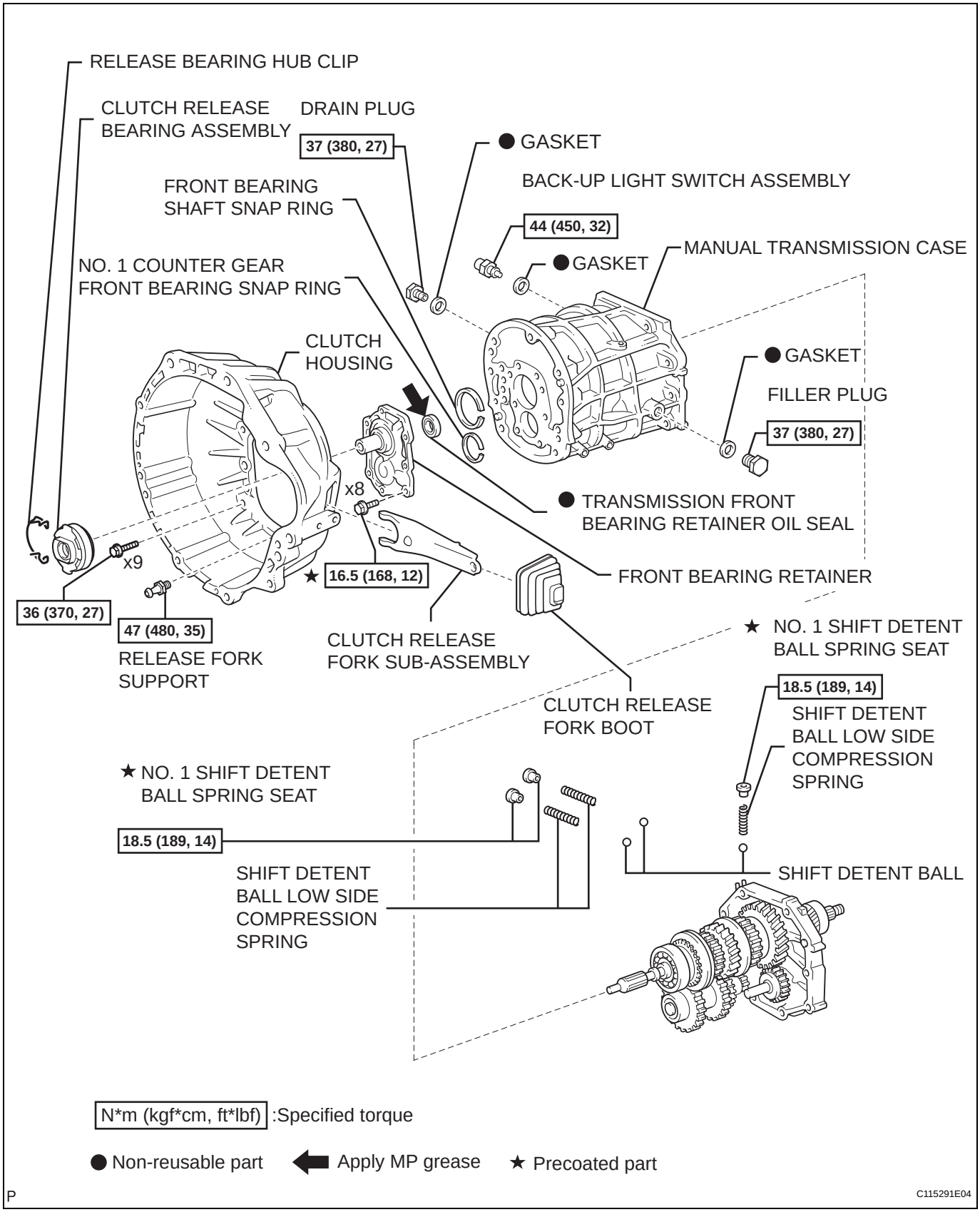

cardiagn.com

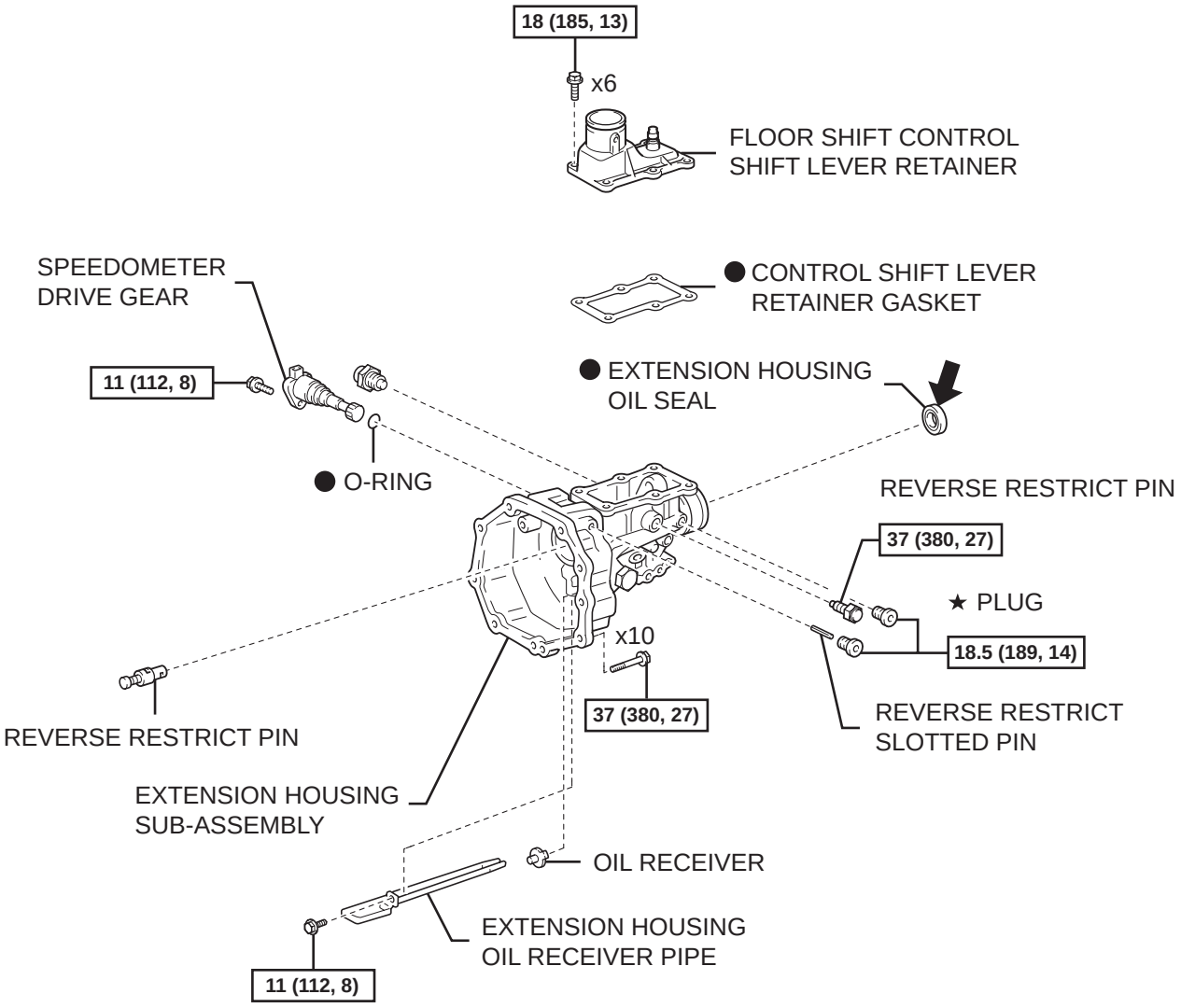

N*m (kgf*cm, ft.*lbf) : Specified torque

● Non-reusable part ★ Precoated part ⬅ Apply MP grease

P

C115292E02

cardiagn.com

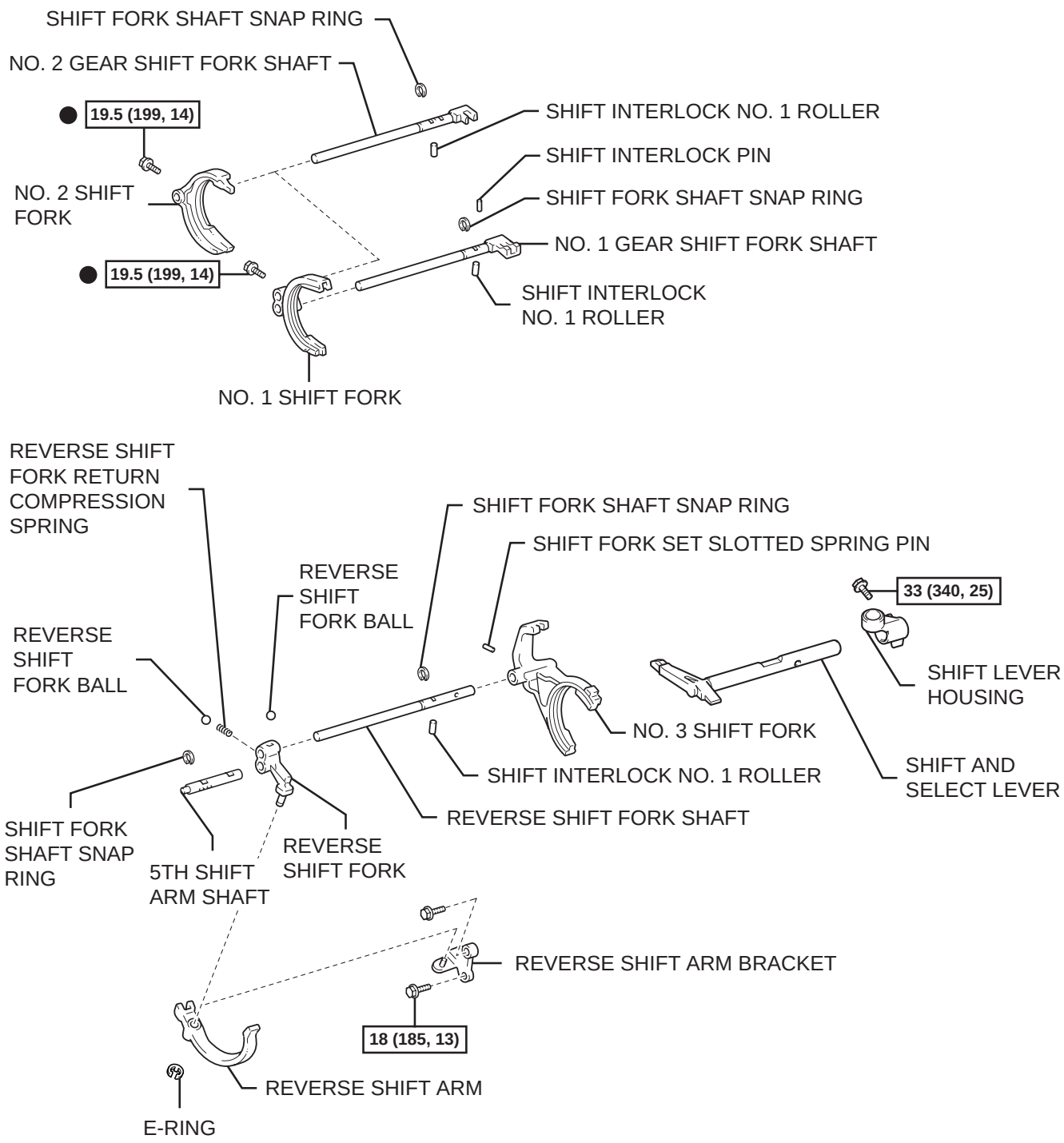

N*m (kgf*cm, ft.*lbf) : Specified torque

● Non-reusable part

P

C115289E02

cardiagn.com

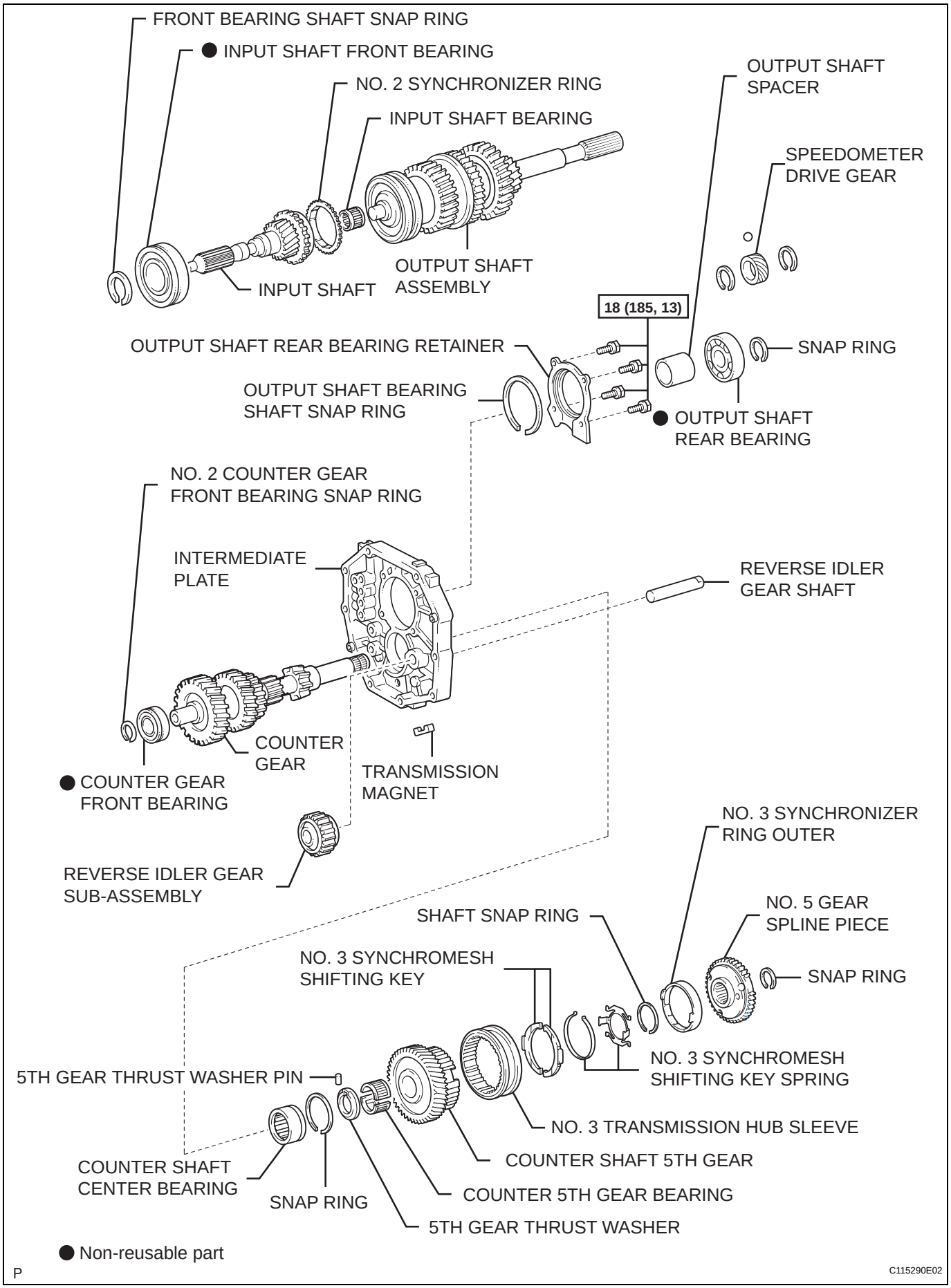

cardiagn.com

MT

DISASSEMBLY

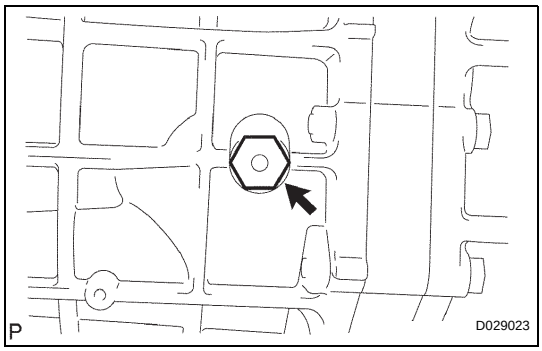

1. REMOVE MANUAL TRANSMISSION FILLER PLUG

(a) Remove the transmission filler plug and gasket from the transmission case.

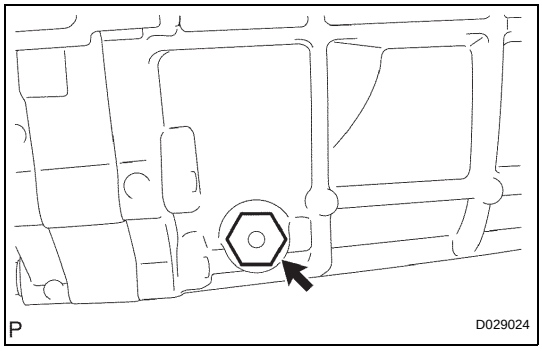

2. REMOVE DRAIN PLUG SUB-ASSEMBLY

(a) Remove the transmission drain plug and gasket from the transmission case.

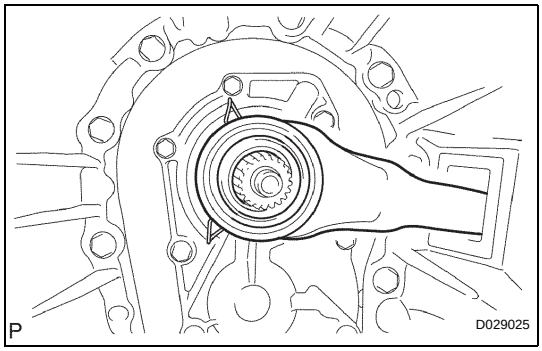

3. REMOVE CLUTCH RELEASE FORK SUB-ASSEMBLY

(a) Remove the clutch release fork and clutch release bearing from the clutch housing.

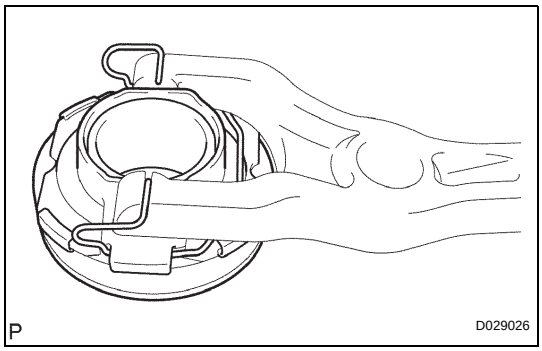

4. REMOVE CLUTCH RELEASE BEARING ASSEMBLY

(a) Remove the release bearing hub clip, and then remove the clutch release bearing from the clutch release fork.

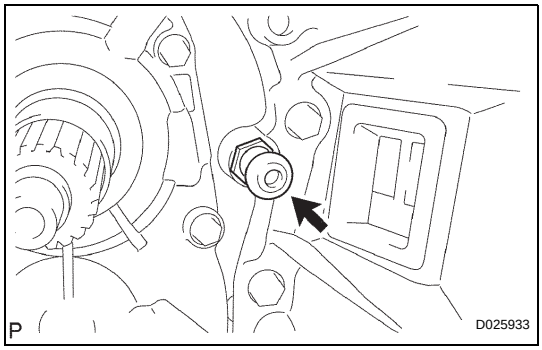

5. REMOVE RELEASE FORK SUPPORT

(a) Remove the release fork support from the clutch housing.

cardiagn.com

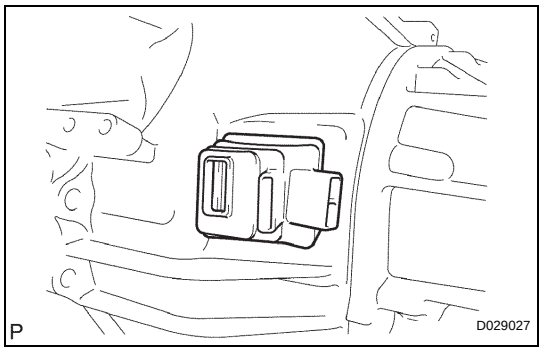

6. REMOVE CLUTCH RELEASE FORK BOOT

(a) Remove the clutch release fork boot from the clutch housing.

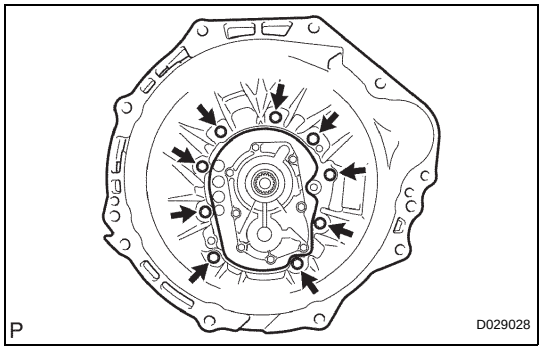

7. REMOVE CLUTCH HOUSING

(a) Remove the 9 bolts.

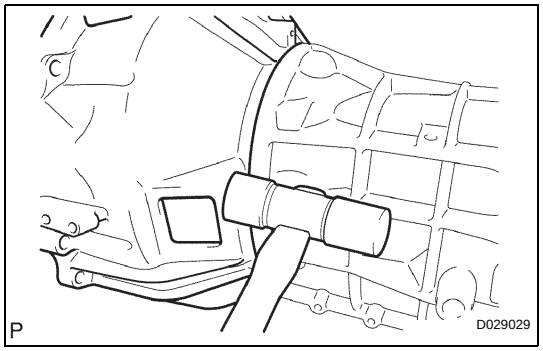

(b) Using a plastic hammer, remove the clutch housing from the transmission case.

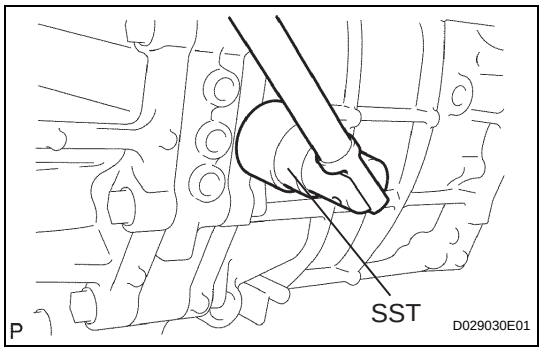

8. REMOVE BACK-UP LIGHT SWITCH ASSEMBLY

(a) Using SST, remove the back-up light switch assembly and the gasket from the transmission case.
SST 09817-16011

9. REMOVE SPEEDOMETER SENSOR

(a) Remove the bolt and speedometer sensor from the extension housing.
(b) Remove the O-ring from the speedometer sensor.

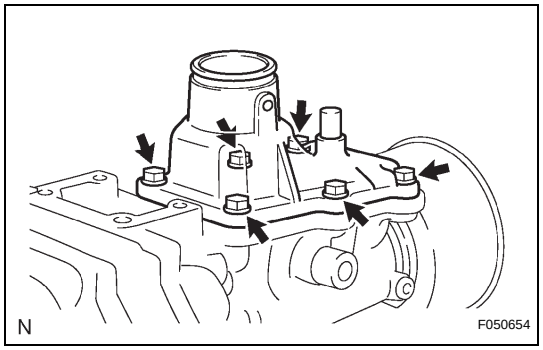

10. REMOVE FLOOR SHIFT CONTROL SHIFT LEVER RETAINER SUB-ASSEMBLY

(a) Remove the 6 bolts.
(b) Remove the floor shift control shift lever retainer gasket from the extension housing.
(c) Remove the control shift lever retainer gasket from the extension housing.

cardiagn.com

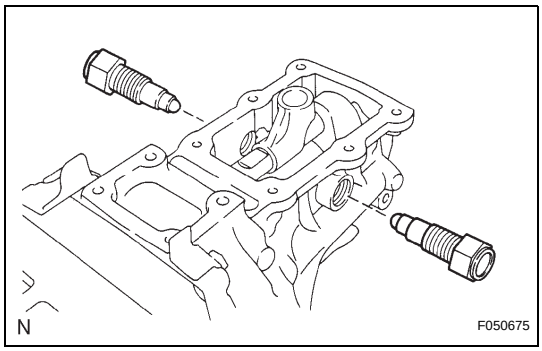

11. REMOVE REVERSE RESTRICT PIN

(a) Remove the 2 reverse restrict pins from the extension housing or transfer adapter.

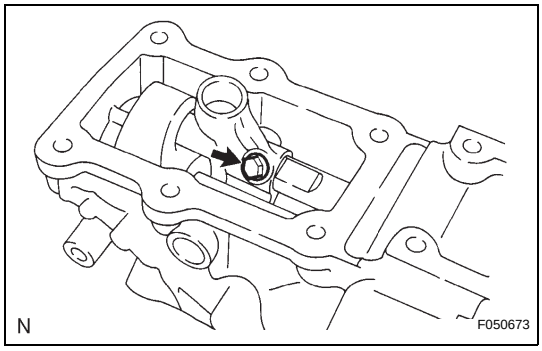

12. REMOVE EXTENSION HOUSING SUB-ASSEMBLY

(a) Remove the shift lever housing set bolt from the shift lever housing.

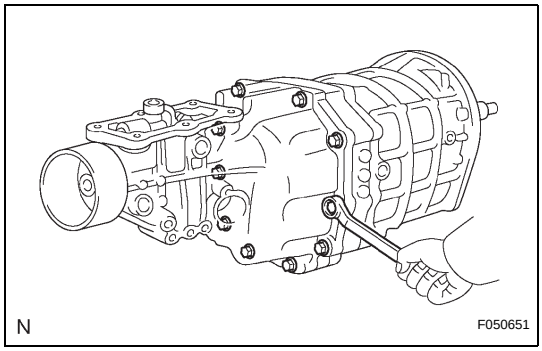

(b) Remove the 10 bolts.

(c) Using a plastic hammer, remove the extension housing, shift lever housing and shift and select lever.

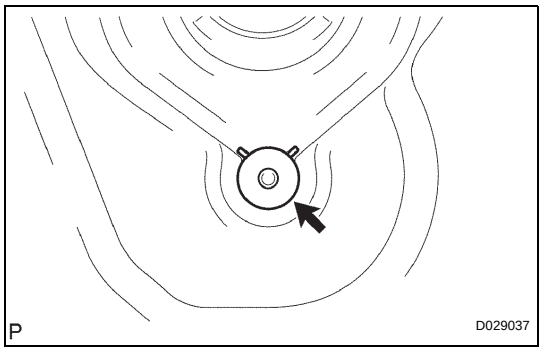

13. REMOVE OIL RECEIVER

(a) Remove the oil receiver from the extension housing.

14. REMOVE EXTENSION HOUSING OIL RECEIVER PIPE

(a) Remove the bolt and oil receiver pipe from the extension housing.

15. REMOVE REVERSE RESTRICT PIN ASSEMBLY

(a) Using a "Torx" socket wrench T40, remove the reverse restrict pin plug from the transfer adapter.

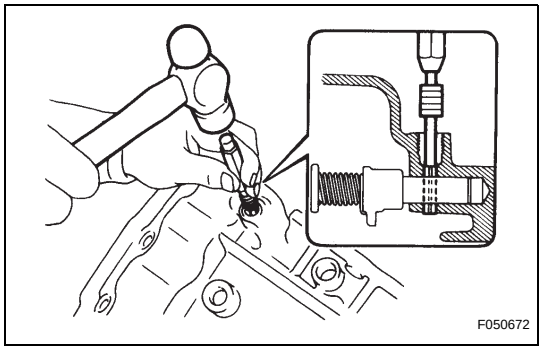

(b) Using a pin punch (5 mm) and a hammer, remove the reverse restrict pin slotted from the transfer adapter or extension housing.

cardiagn.com

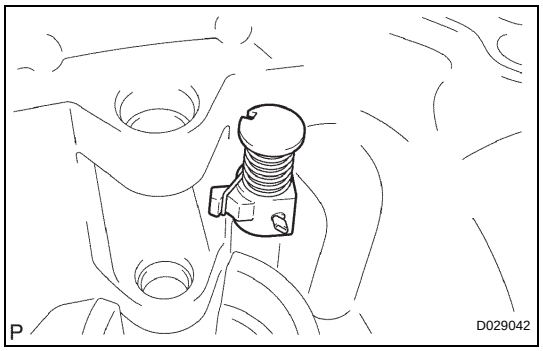

(c) Remove the reverse restrict pin from the transfer adapter or extension housing.

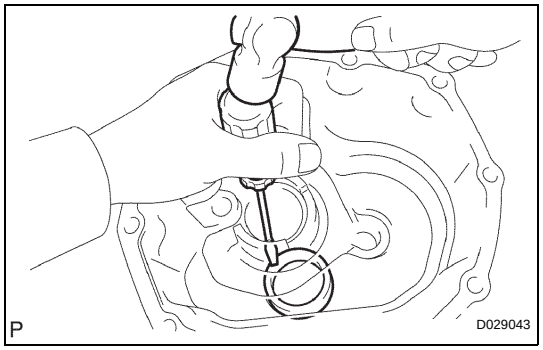

16. REMOVE MANUAL TRANSMISSION EXTENSION HOUSING OIL SEAL

(a) Using a screwdriver, remove the extension housing oil seal from the extension housing.

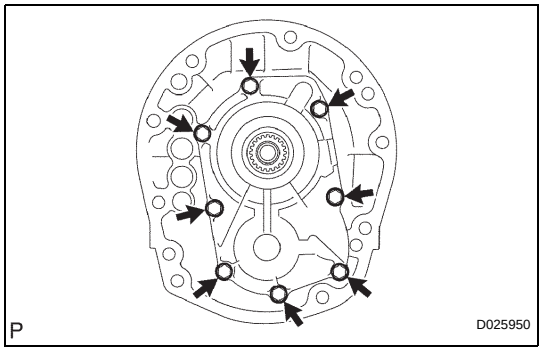

17. REMOVE FRONT BEARING RETAINER

(a) Remove the 8 bolts.

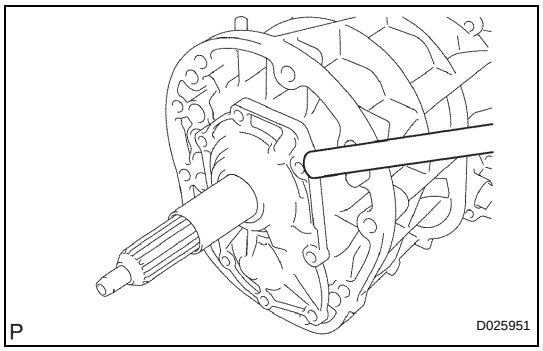

(b) Using a brass bar and a hammer, remove the front bearing retainer from the transmission case.

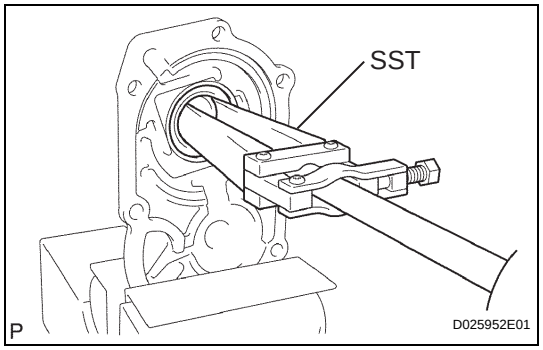

18. REMOVE TRANSMISSION FRONT BEARING RETAINER OIL SEAL

(a) Fix the front bearing retainer in a vise, between aluminum plate.

(b) Using SST, remove the transmission front bearing retainer oil seal.

SST 09308-00010

cardiagn.com

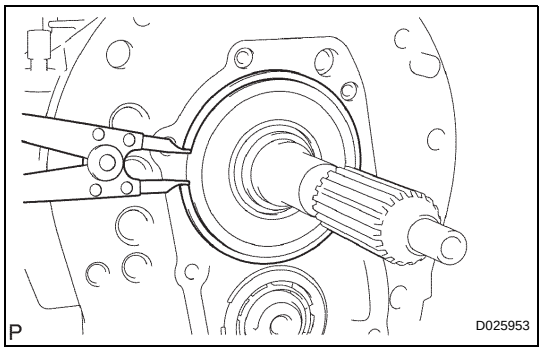

19. REMOVE FRONT BEARING SHAFT SNAP RING

(a) Using a snap ring expander, remove the front bearing shaft snap ring from the transmission case.

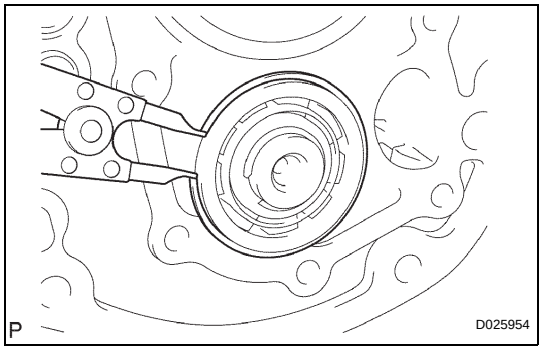

20. REMOVE NO. 1 COUNTER GEAR FRONT BEARING SNAP RING

(a) Using a snap ring expander, remove the counter gear front bearing snap ring No. 1 from the transmission case.

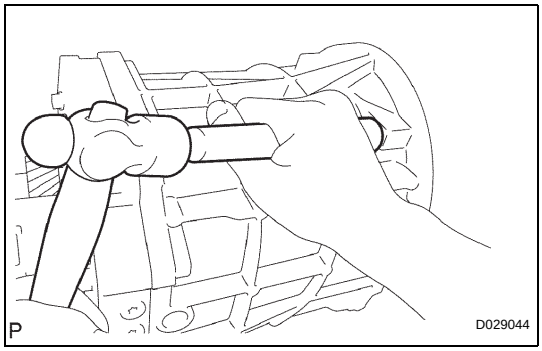

21. REMOVE MANUAL TRANSMISSION CASE

(a) Using a brass bar and a hammer, remove the transmission case from the intermediate plate.

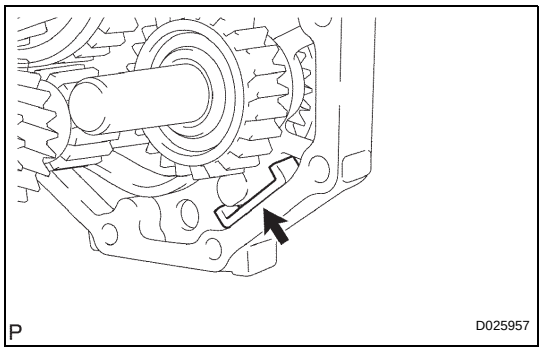

22. REMOVE TRANSMISSION MAGNET

(a) Remove the transmission magnet from the intermediate plate.

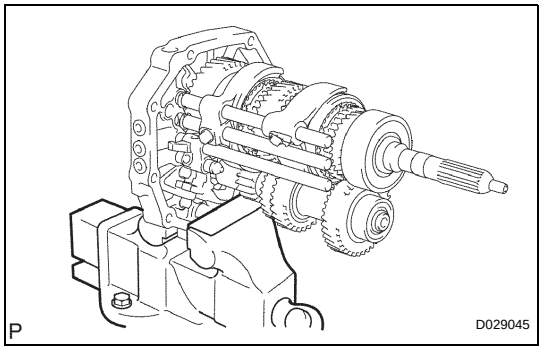

23. FIX INTERMEDIATE PLATE

(a) Fix the intermediate plate in a vice between aluminum plates.

cardiagn.com

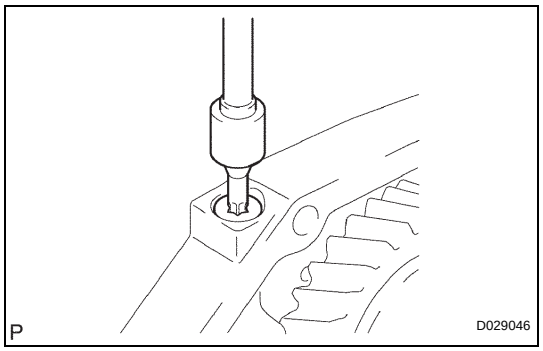

24. REMOVE NO. 1 SHIFT DETENT BALL SPRING SEAT

(a) Using a "Torx" socket wrench T40, remove the shift detent ball spring seat No. 1 from the intermediate plate.

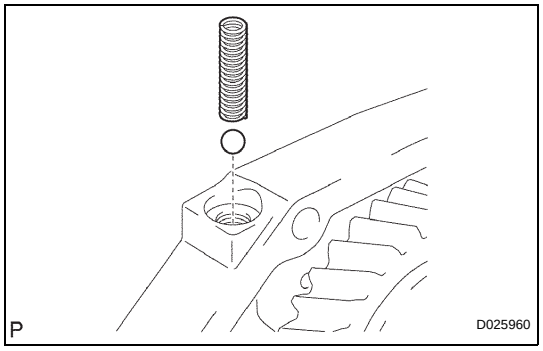

(b) Using a magnetic finger, remove the shift detent ball low side compression spring and the shift detent ball from the intermediate plate.

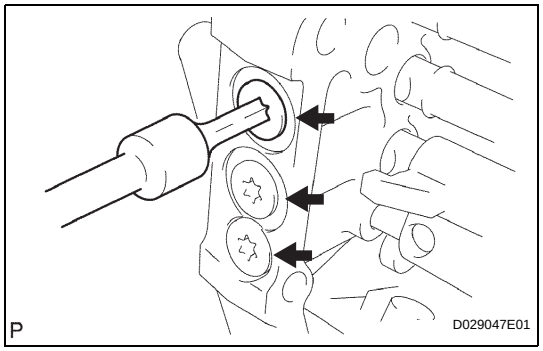

(c) Using a "Torx" socket wrench T40, remove the 3 shift detent ball spring seats No. 1 from the intermediate plate.

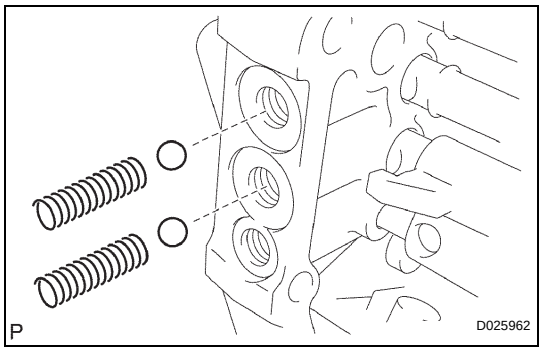

(d) Using a magnetic finger, remove the 2 shift detent ball low side compression springs and the 2 shift detent balls from the intermediate plate.

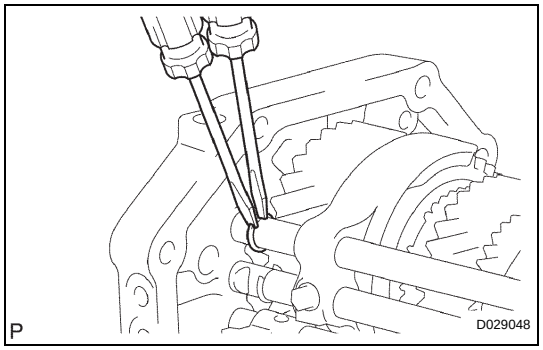

25. REMOVE NO. 2 GEAR SHIFT FORK SHAFT

(a) Using 2 screwdrivers and a hammer, remove the shift fork shaft snap ring from the gear shift fork shaft No. 2.

NOTICE:

Use a shop rag to prevent the snap ring from flying off.

cardiagn.com

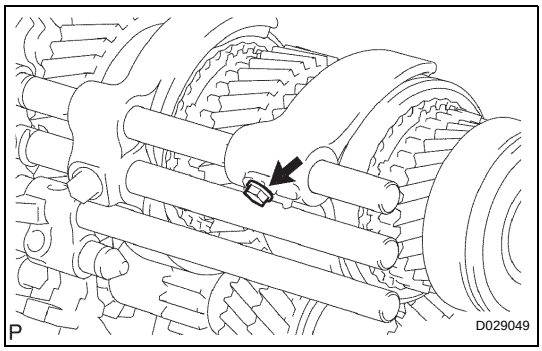

(b) Remove the shift fork set bolt from the gear shift fork No. 2.

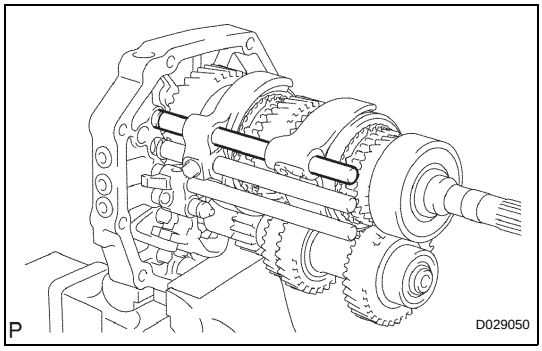

(c) Remove the gear shift fork shaft No. 2 from the intermediate plate.

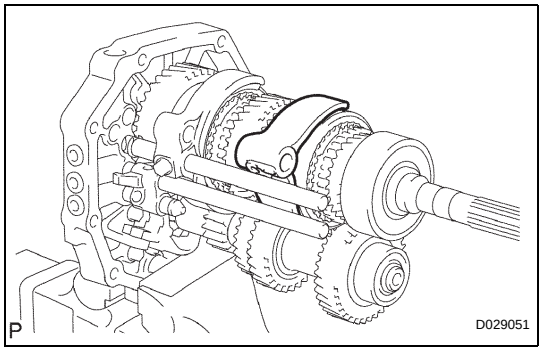

(d) Remove the gear shift fork No. 2 from the transmission hub sleeve No. 2.

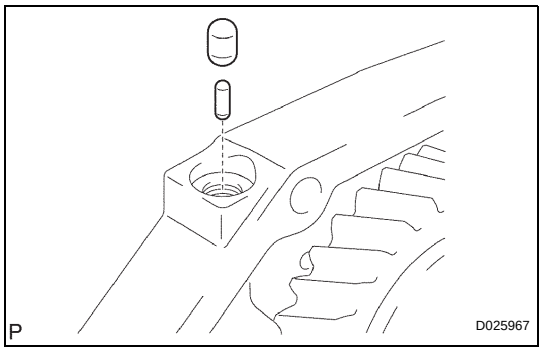

(e) Using a magnetic finger, remove the shift interlock No. 1 roller and the shift interlock pin (ball) from the intermediate plate.

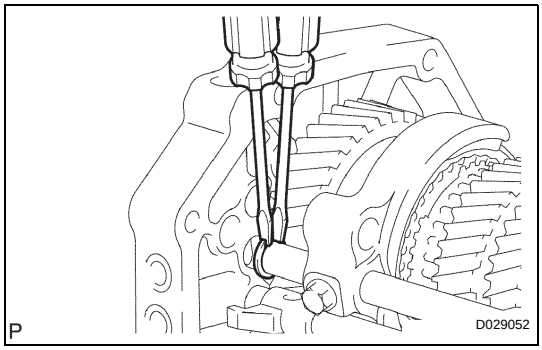

26. REMOVE NO. 1 GEAR SHIFT FORK SHAFT

(a) Using 2 screwdrivers and a hammer, remove the shift fork shaft snap ring from the gear shift fork shaft No. 1.

NOTICE:

Use a shop rag to prevent the snap ring from flying off.

cardiagn.com

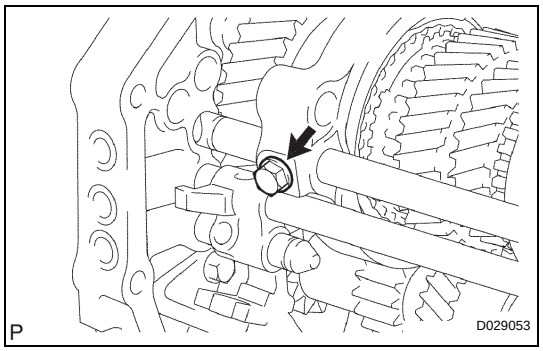

(b) Remove the shift fork set bolt from the gear shift fork No. 1.

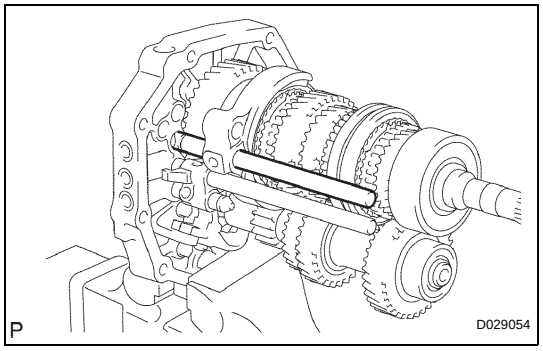

(c) Remove the gear shift fork shaft No. 1 from the intermediate plate.

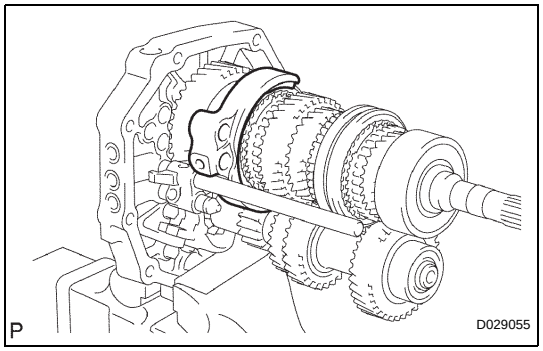

(d) Remove the gear shift fork No. 1 from the reverse gear.

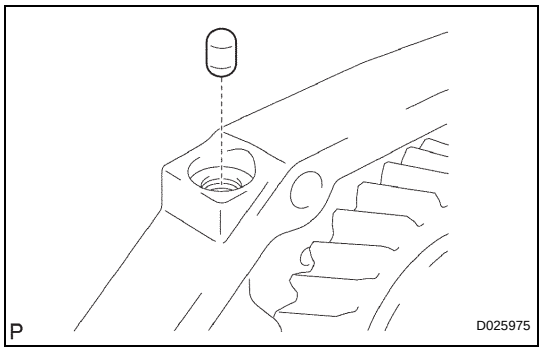

(e) Using a magnetic finger, remove the shift interlock No. 1 roller from the intermediate plate.

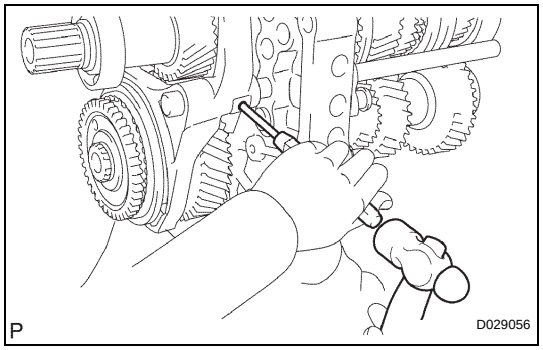

27. REMOVE REVERSE SHIFT FORK SHAFT

(a) Using a pin punch (5 mm) and a hammer, remove the shift fork set slotted spring pin from the gear shift fork No. 3.

MT

cardiagn.com

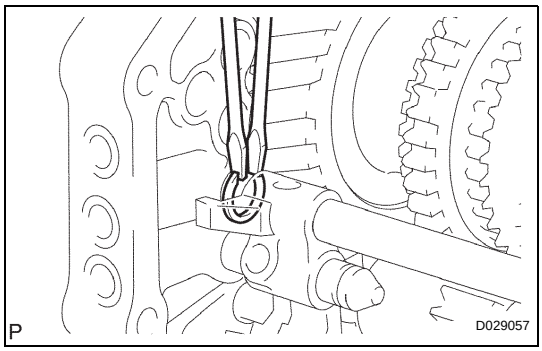

(b) Using 2 screwdrivers and a hammer, remove the shift fork shaft snap ring from the reverse shift fork shaft.
NOTICE:
Use a shop rag to prevent the snap ring from flying off.

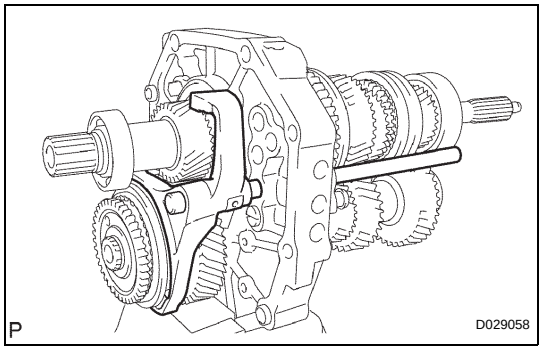

(c) Remove the gear shift fork No. 3 and reverse shift fork shaft from the intermediate plate.

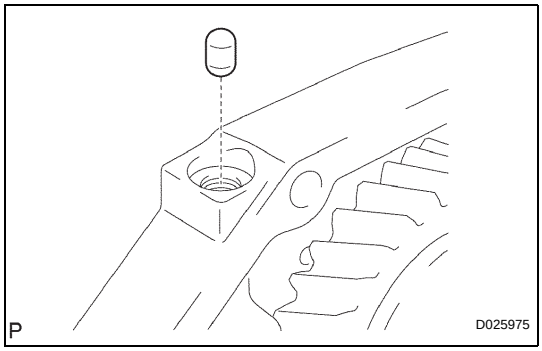

(d) Using a magnetic finger, remove the shift interlock No. 1 roller from the intermediate plate.

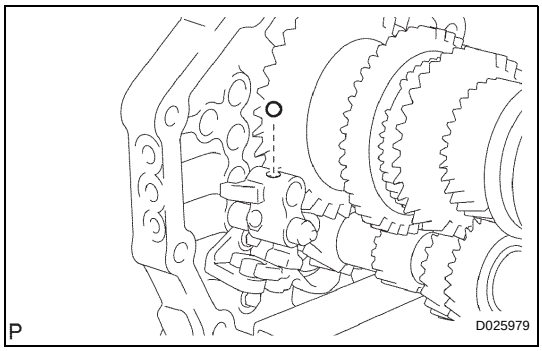

(e) Using a magnetic finger, remove the reverse shift fork ball from the reverse shift fork.

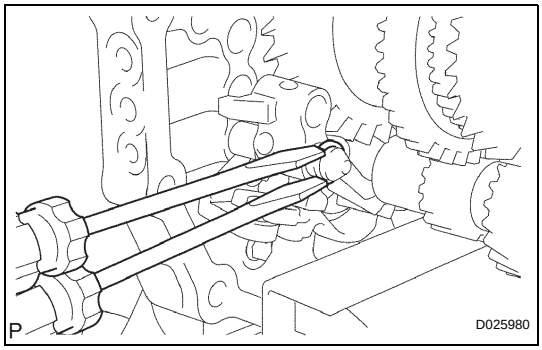

28. REMOVE 5TH SHIFT ARM SHAFT

(a) Using 2 screwdrivers and a hammer, remove the shift fork shaft snap ring from the 5th shift arm shaft.
NOTICE:
Use a shop rag to prevent the snap ring from flying off.

cardiagn.com

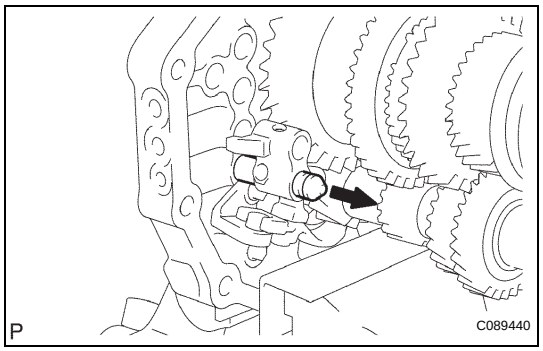

(b) Remove the 5th shift arm shaft from the intermediate plate.
NOTICE:
Cover the hole with a shop rag to prevent the reverse shift fork ball from popping out.

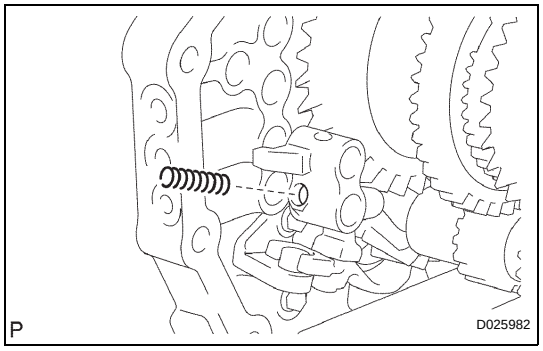

(c) Using a magnetic finger, remove the reverse shift fork return compression spring from the reverse shift fork.

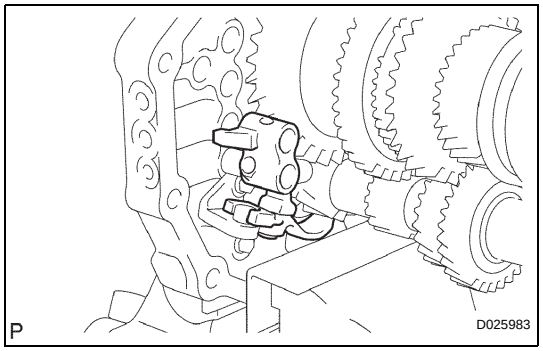

29. REMOVE REVERSE SHIFT FORK

(a) Remove the reverse shift fork together with the reverse shift arm from the intermediate plate.

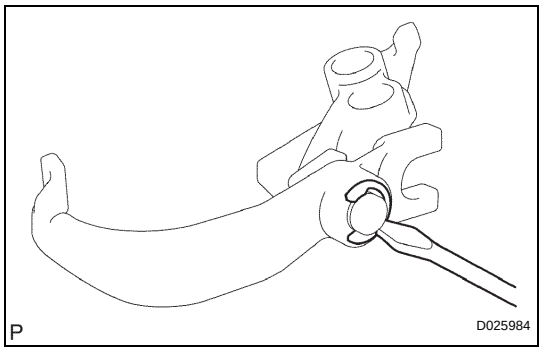

(b) Using a screwdriver, remove the reverse shift arm end shaft ring and the reverse shift fork from the reverse shift arm.

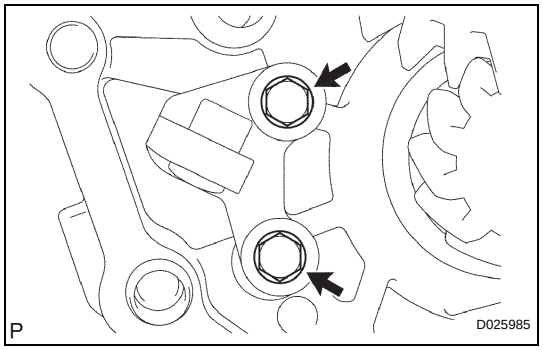

30. REMOVE REVERSE SHIFT ARM BRACKET

(a) Remove the 2 bolts and reverse shift arm bracket from the intermediate plate.

cardiagn.com

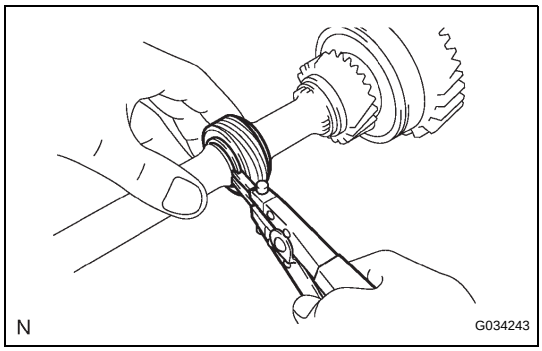

31. REMOVE SPEEDOMETER DRIVE GEAR

(a) Using snap ring pliers, remove the snap ring.
(b) Remove the speedometer driver gear and ball.
(c) Using a magnetic finger, remove the steel ball.
(d) Using snap ring pliers, remove the snap ring.

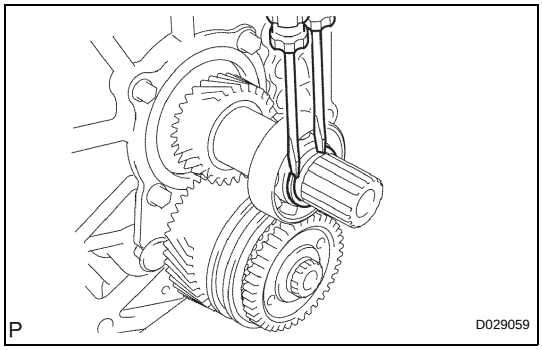

32. REMOVE OUTPUT SHAFT BEARING SHAFT SNAP RING

(a) Using 2 screwdrivers and a hammer, remove the output shaft bearing shaft snap ring from the output shaft.

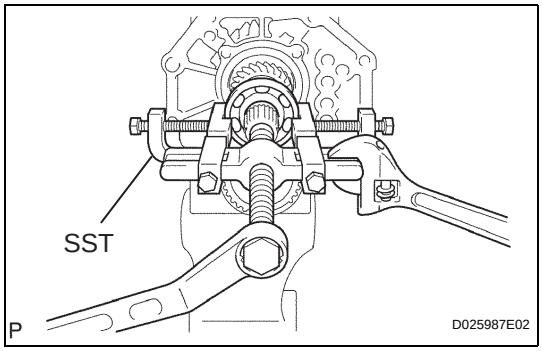

33. REMOVE OUTPUT SHAFT REAR BEARING

(a) Using SST, remove the output shaft rear bearing and output shaft spacer from the output shaft.
SST 09950-40011 (09951-04010, 09952-04010, 09953-04020, 09954-04010, 09955-04051, 09957-04010, 09958-04011)

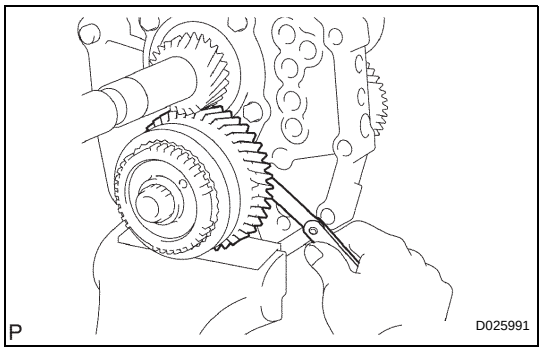

34. INSPECT COUNTER SHAFT 5TH GEAR THRUST CLEARANCE

(a) Using a feeler gauge, measure the counter shaft 5th gear thrust clearance.
Standard clearance:
0.10 to 0.35 mm (0.0039 to 0.0138 in.)

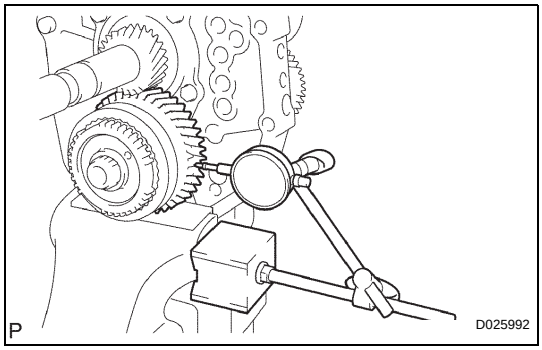

35. INSPECT COUNTER SHAFT 5TH GEAR RADIAL CLEARANCE

(a) Using a dial indicator, measure the radial clearance of the counter shaft 5th gear.
Standard clearance:
0.015 to 0.068 mm (0.0059 to 0.0027 in.)
If the clearance is not within the specified values, replace the counter 5th gear bearing with a new one.

cardiagn.com

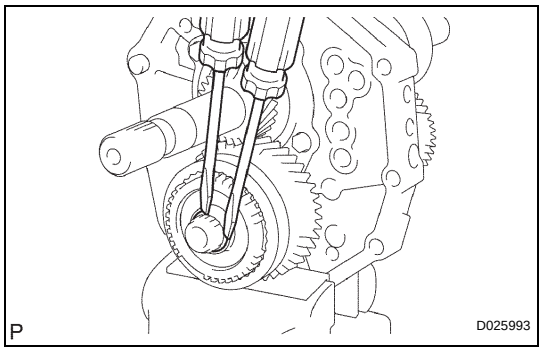

36. REMOVE COUNTER GEAR REAR SHAFT SNAP RING

(a) Using 2 screwdrivers and a hammer, remove the counter gear rear shaft snap ring from the counter gear.

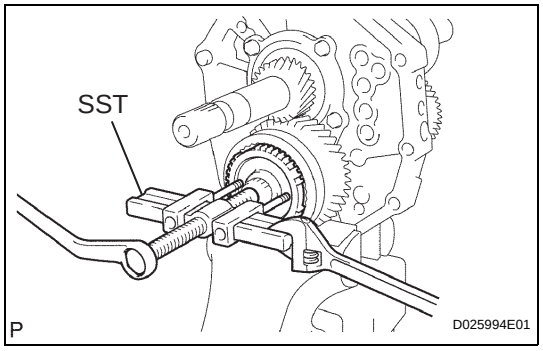

37. REMOVE NO. 5 GEAR SPLINE PIECE

(a) Using SST, remove the gear spline piece No. 5 from the counter gear.

SST 09950-50013 (09951-05010, 09952-05010, 09953-05020, 09954-05021, 09957-04010)

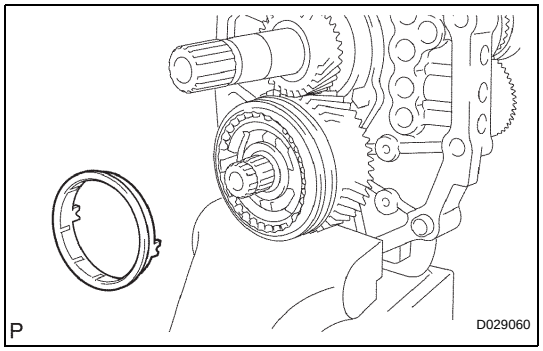

38. REMOVE NO. 3 SYNCHRONIZER RING OUTER

(a) Remove the synchronizer ring outer No. 3 from the counter gear.

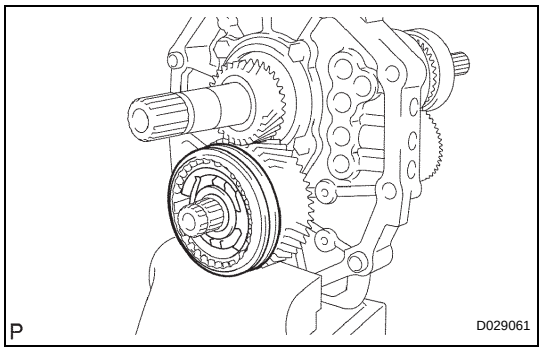

39. REMOVE COUNTER SHAFT 5TH GEAR

(a) Remove the counter shaft 5th gear and transmission hub sleeve No. 3 assembly from the counter gear.

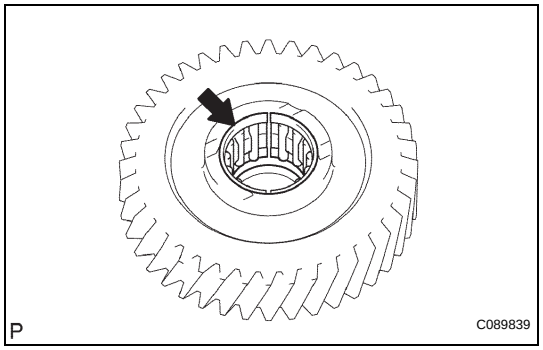

40. REMOVE COUNTER 5TH GEAR BEARING

(a) Remove the counter 5th gear bearing from the counter 5th gear.

cardiagn.com

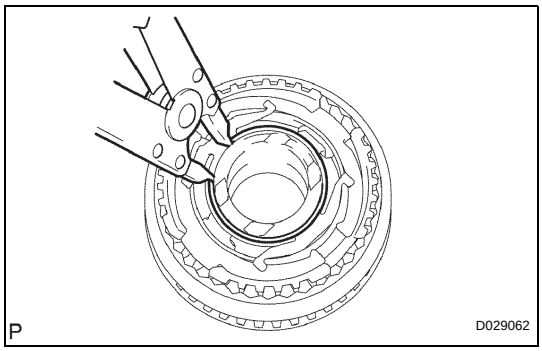

41. REMOVE NO. 3 TRANSMISSION HUB SLEEVE

(a) Using a snap ring expander, remove the snap ring.

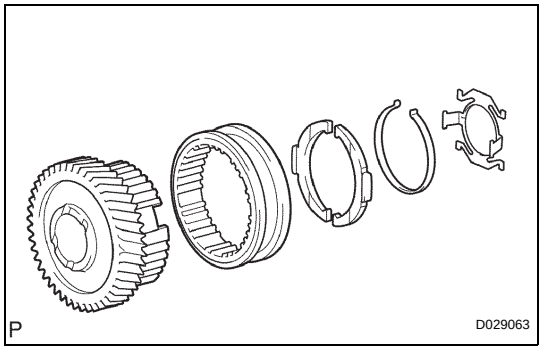

(b) Remove the transmission hub sleeve No. 3, 2 synchromesh shifting keys No. 3 and 2 synchromesh shifting key springs No. 3 from the counter shaft 5th gear.

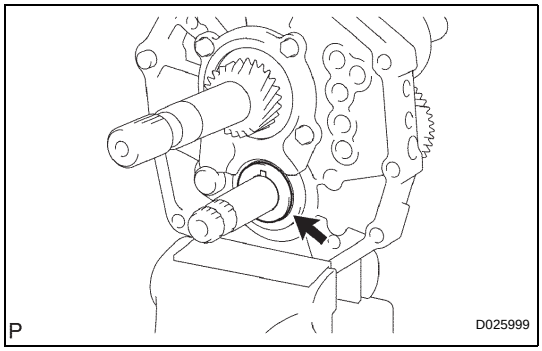

42. REMOVE 5TH GEAR THRUST WASHER

(a) Remove the 5th gear thrust washer from the counter gear.

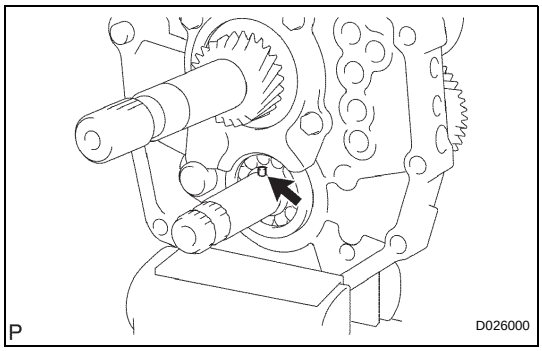

43. REMOVE 5TH GEAR THRUST WASHER PIN

(a) Remove the 5th gear thrust washer pin from the counter gear.

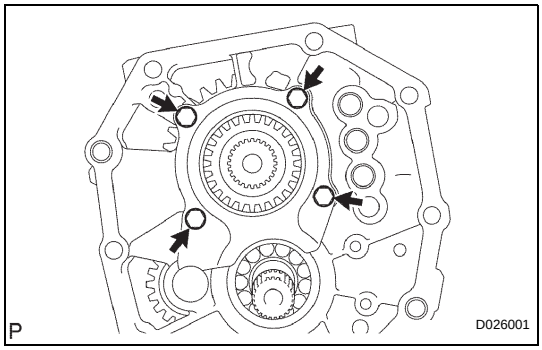

44. REMOVE OUTPUT SHAFT REAR BEARING RETAINER

(a) Remove the 4 bolts and output shaft rear bearing retainer from the intermediate plate.

cardiagn.com

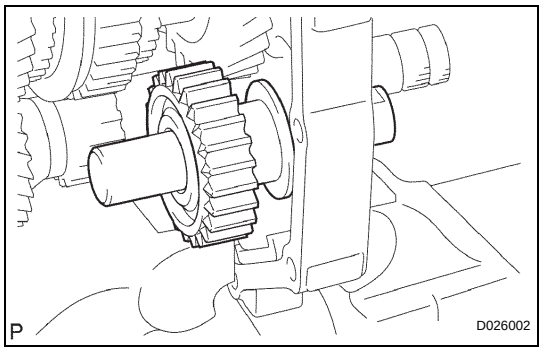

45. REMOVE REVERSE IDLER GEAR SUB-ASSEMBLY

(a) Pull out the reverse idler gear shaft to the rear side and remove the reverse idler gear from the intermediate plate.

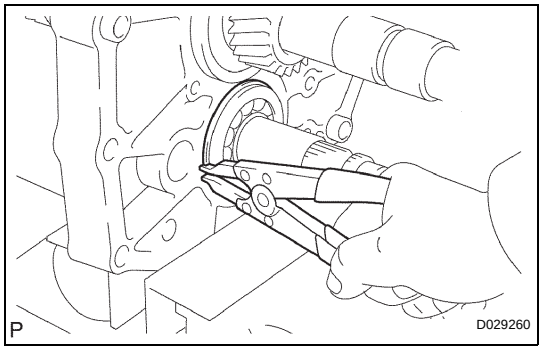

46. REMOVE COUNTER SHAFT CENTER BEARING

(a) Using a snap ring expander, remove the snap ring.

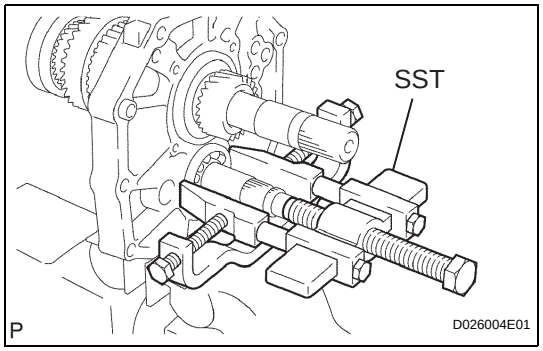

(b) Using SST, remove the counter shaft center bearing from the intermediate plate.

SST 09950-40011 (09951-04010, 09952-04010, 09953-04020, 09954-04010, 09955-04011, 09957-04010, 09958-04011)

HINT:

Remove the bearing while tapping the tip of the counter gear so that the counter gear assembly is not pushed forward into the side wall of the output shaft gear.

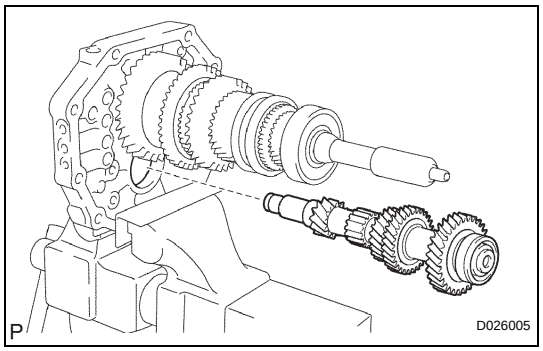

47. REMOVE COUNTER GEAR

(a) Remove the counter gear assembly from the intermediate plate.

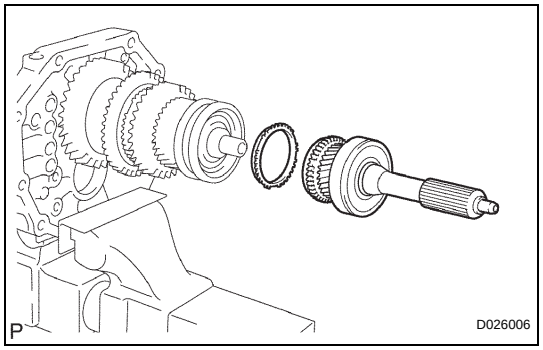

48. REMOVE INPUT SHAFT ASSEMBLY

(a) Remove the input shaft assembly and synchronizer ring No. 2 from the output shaft.

NOTICE:

Do not drop the input shaft bearing and synchronizer ring No. 2.

cardiagn.com

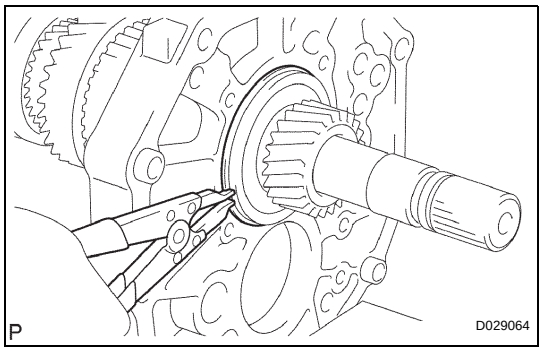

49. REMOVE OUTPUT SHAFT BEARING SHAFT SNAP RING

(a) Using a snap ring expander, remove the output shaft bearing shaft snap ring from the output shaft.

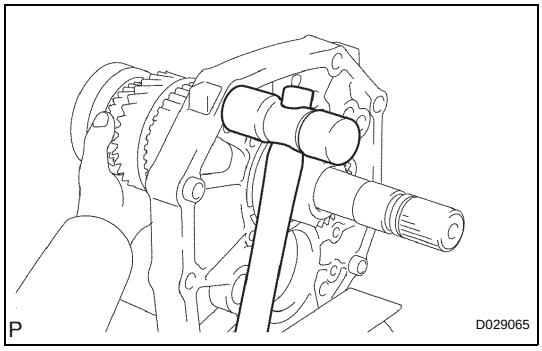

50. REMOVE OUTPUT SHAFT ASSEMBLY

(a) Using a plastic hammer, remove the output shaft assembly by tapping the intermediate plate.

INSPECTION

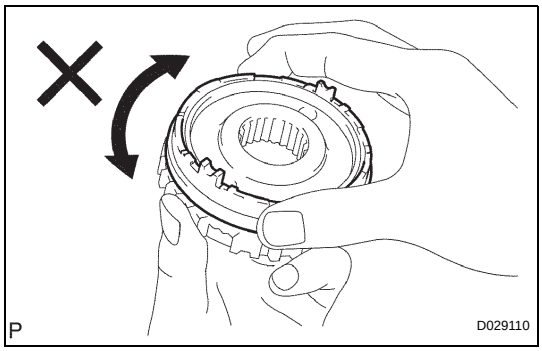

1. INSPECT NO. 3 SYNCHRONIZER RING OUTER

(a) Apply gear oil to the cone part of gear spline piece No. 5, and check that it does not turn in both directions while pushing the synchronizer ring outer No. 3 to the gear spline piece No. 5.
If it turns, replace the synchronizer ring.

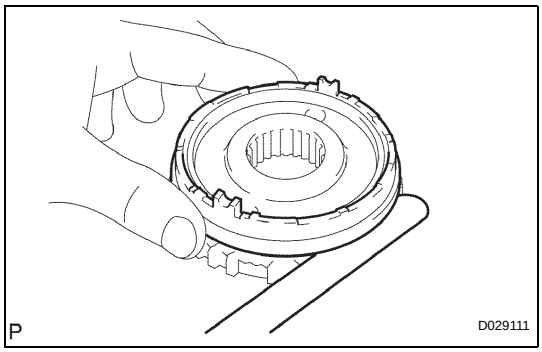

(b) Measure the clearance between the synchronizer ring outer No. 3 and gear spline piece No. 5 while pushing the synchronizer ring outer No. 3 to the cone part of the gear spline piece No. 5.
Standard clearance:
0.68 to 1.32 mm (0.0267 to 0.0610 in.)
If the clearance is not within the specified values, replace synchronizer ring outer No. 3 with a new one.

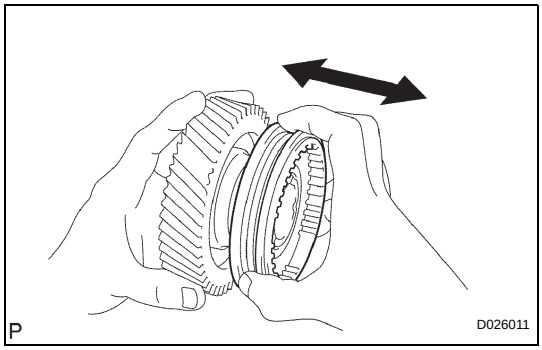

2. INSPECT NO. 3 TRANSMISSION HUB SLEEVE

(a) Check that the counter shaft 5th gear and transmission hub sleeve No. 3 slide smoothly each other.

(b) Check the tip of the spline gear of the transmission hub sleeve No. 3 for wear.
If there are any detects, replace the transmission hub sleeve No. 3.

cardiagn.com

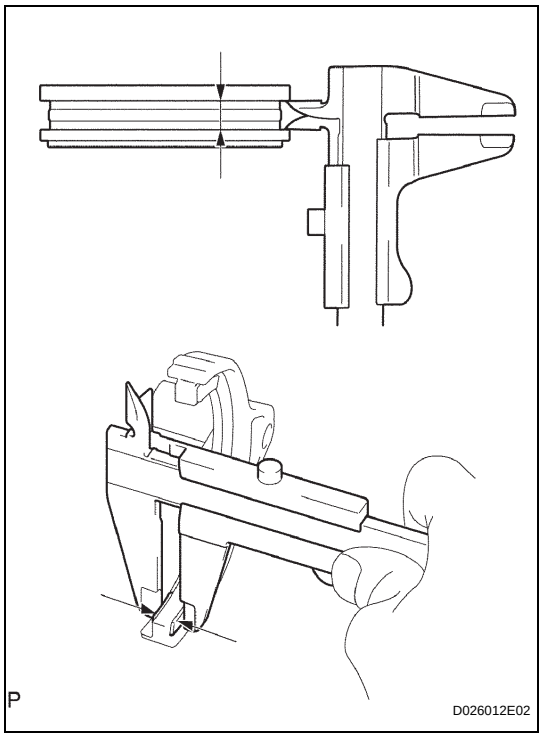

(c) Using vernier calipers, measure the transmission hub sleeve No. 3 groove and the thickness of the claw part of the shift fork No. 3 to calculate the clearance.
Standard clearance:
0.26 to 0.84 mm (0.0102 to 0.0331 in.)
If the clearance is not within the specified values, replace the transmission hub sleeve No. 3 and shift fork No. 3 with new ones.

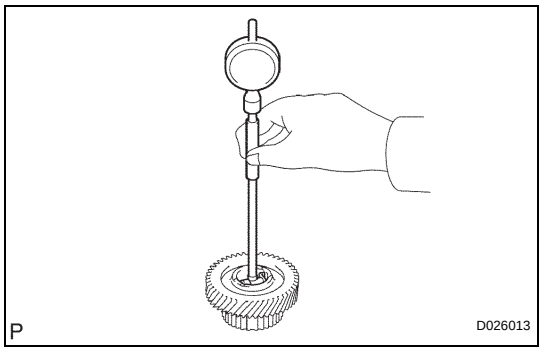

3. INSPECT COUNTERSHAFT 5TH GEAR

(a) Using a cylinder gauge, measure the inner diameter of the counter 5th gear.
Standard diameter:
38.015 to 38.040 mm (1.4967 to 1.4976 in.)
Maximum diameter:
38.040 mm (1.4976 in.)
If the diameter greater than the maximum, replace the counter shaft 5th gear with a new one.

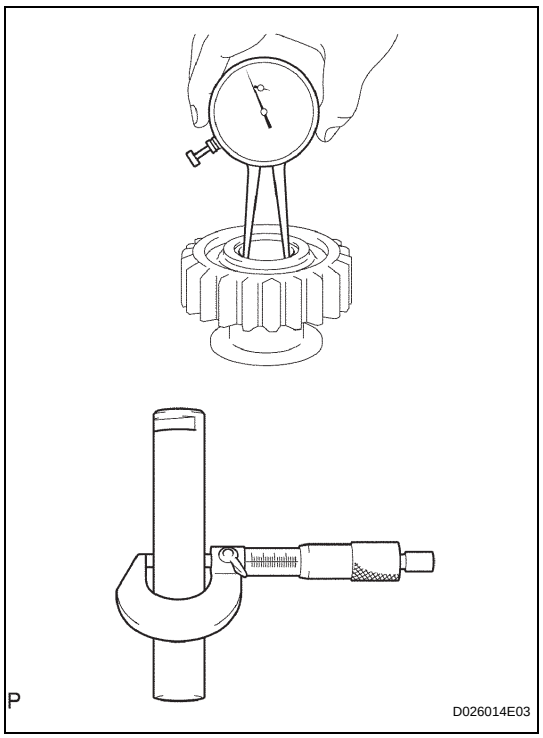

4. INSPECT REVERSE IDLER GEAR SUB-ASSY

(a) Using a caliper gauge, measure the inner diameter of the reverse idler gear.
Standard diameter:
24.040 to 24.061 mm (0.9465 to 0.9473 in.)
Maximum diameter:
24.061 mm (0.9473 in.)
If the clearance is greater than the maximum, replace the reverse idler gear with a new one.

(b) Using a micrometer, measure the outer diameter of the sliding part of the reverse idler gear on the reverse idler gear shaft.
Standard diameter:
23.979 to 24.000 mm (0.9441 to 0.9449 in.)
Minimum diameter:
23.979 mm (0.9441 in.)
If the diameter is outside the specification, replace the reverse idler gear shaft with a new one.

cardiagn.com

(c) Subtract the reverse idler gear shaft inside diameter measurement from the reverse idler gear diameter clearance.
Standard clearance:
0.040 to 0.082 mm (0.0016 to 0.0032 in.)
If the clearance is not as specified, replace the reverse idler gear or reverse idler gear shaft.

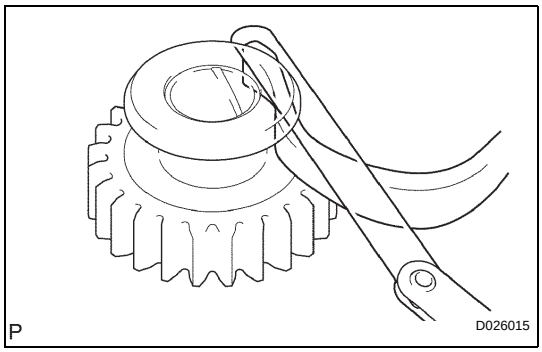

(d) Using a feeler gauge, measure the thrust clearance of the shoe part between the reverse idler gear and the reverse shift arm.
Standard clearance:
0.05 to 0.35 mm (0.0020 to 0.0138 in.)
If the clearance is outside the specification, replace the idler gear and reverse shift arm with new ones.

REASSEMBLY

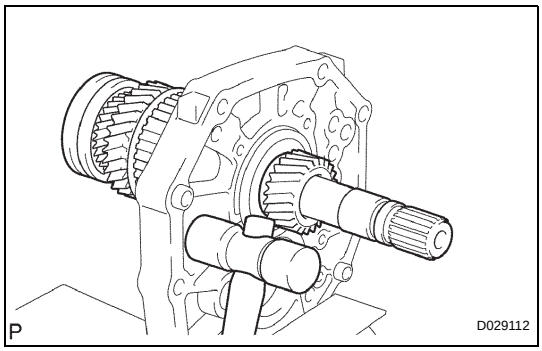

1. INSTALL OUTPUT SHAFT ASSEMBLY

(a) Apply gear oil to the sliding part of the output assembly.

(b) Using a plastic hammer, install the output shaft assembly by tapping the intermediate plate.

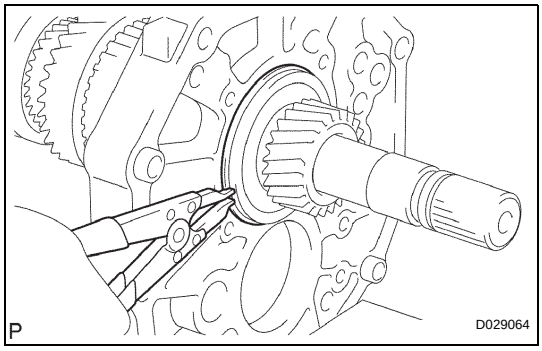

2. INSTALL OUTPUT SHAFT BEARING SHAFT SNAP RING

(a) Using a snap ring expander, install the output shaft bearing shaft snap ring onto the output shaft.

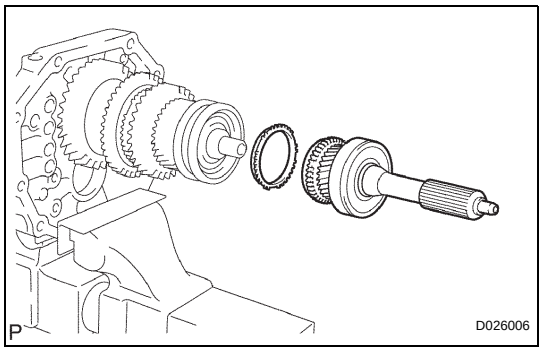

3. INSTALL INPUT SHAFT ASSEMBLY

(a) Apply gear oil to the input shaft assembly and synchronizer ring No. 2, and install them onto the output shaft.
NOTICE:
- **Install the synchronizer ring No. 2 so that its groove fits into the synchromesh shifting key No. 2.**
- **Check that the input shaft assembly rotates smoothly.**

cardiagn.com

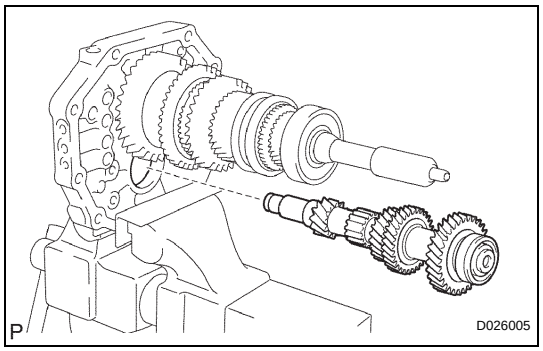

4. INSTALL COUNTER GEAR

(a) Provisionally install the counter gear assembly onto the intermediate plate.

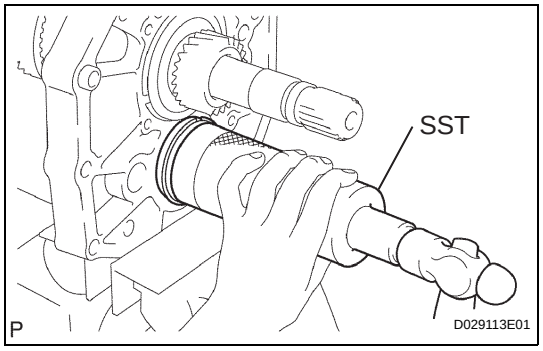

5. INSTALL COUNTER SHAFT CENTER BEARING

(a) Using SST and a hammer, install the new counter shaft center bearing onto the intermediate plate.
SST 09316-60011 (09316-00011)
HINT:
Remove the bearing while tapping the tip of the counter gear so that the counter gear assembly is not pushed forward into the side wall of the output shaft gear.

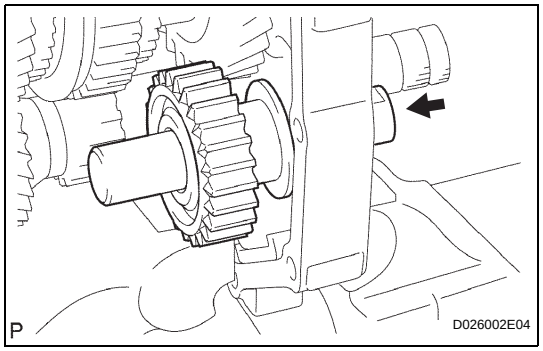

6. INSTALL REVERSE IDLER GEAR SUB-ASSEMBLY

(a) Apply gear oil to each sliding part of the reverse idler gear and the reverse idler gear shaft, and install them onto the intermediate plate.
NOTICE:
Orient the groove side of the reverse idler shaft to the rear side and install it from the rear side.

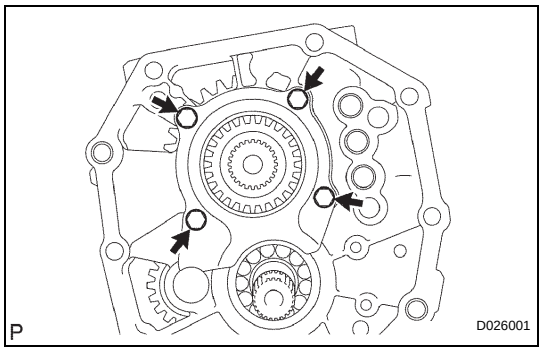

7. INSTALL OUTPUT SHAFT REAR BEARING RETAINER

(a) Install the output shaft rear bearing retainer into the groove of the reverse idler gear shaft with the 4 bolts.
Torque: 18 N*m (185 kgf*cm, 13 ft.*lbf)

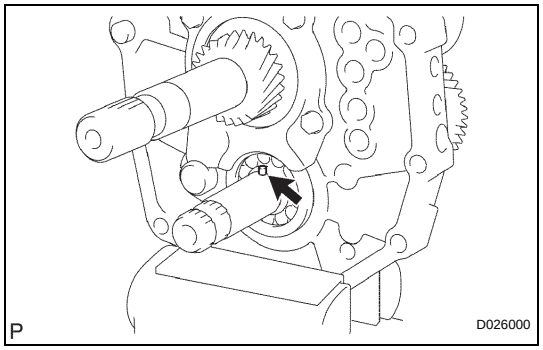

8. INSTALL 5TH GEAR THRUST WASHER PIN

(a) Apply MP grease to the 5th gear thrust washer pin, and install it onto the counter gear.

cardiagn.com

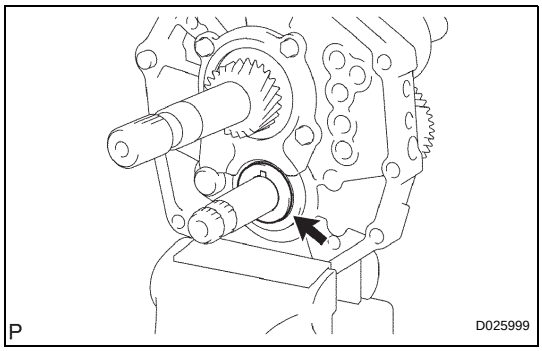

9. INSTALL 5TH GEAR THRUST WASHER

(a) Apply gear oil to the 5th gear thrust washer, and install it onto the counter gear.
NOTICE:
Install the thrust washer so that its chamfer side faces to the front side.

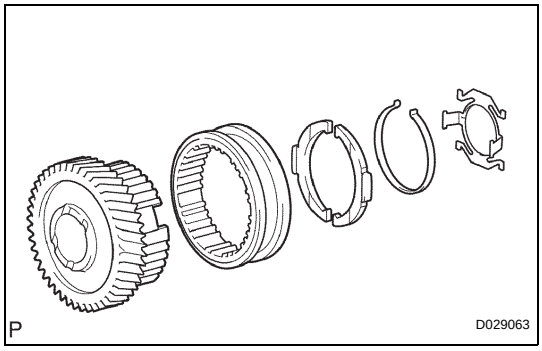

10. INSTALL NO. 3 TRANSMISSION HUB SLEEVE

(a) Apply gear oil to the sliding part of transmission hub sleeve No. 3, and install it onto the counter shaft 5th gear.
NOTICE:
Make sure that the transmission hub sleeve No. 3 and counter 5th gear are oriented in the correct direction.

(b) Install the 2 synchromesh shifting keys No. 3 and the 2 synchromesh shifting key springs onto the counter shaft 5th gear.

(c) Using a snap ring expander, install the bearing shaft snap ring onto the counter 5th gear.

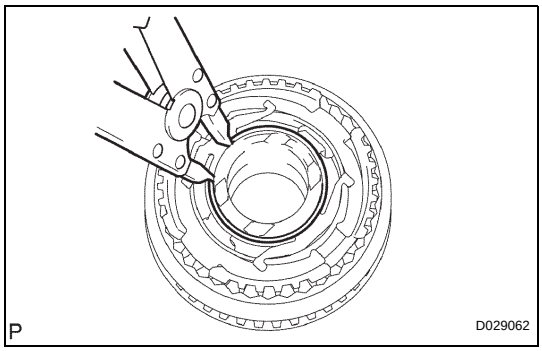

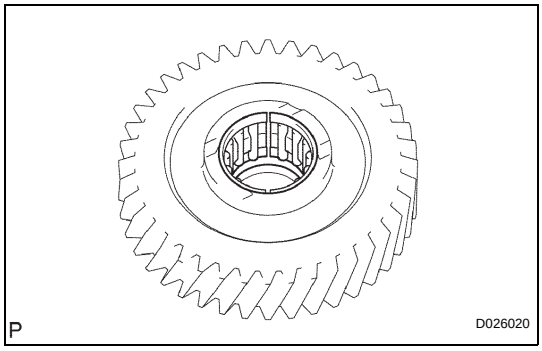

11. INSTALL COUNTER 5TH GEAR BEARING

(a) Apply gear oil to the counter 5th gear bearing and install it onto the counter 5th gear.

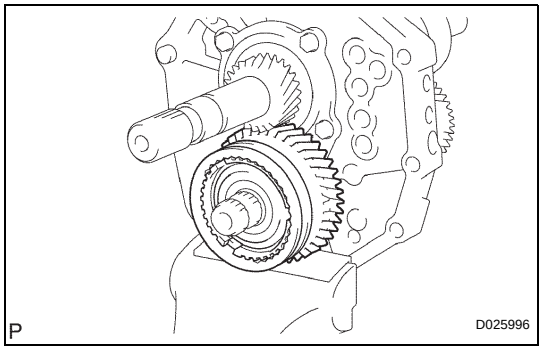

12. INSTALL COUNTER SHAFT 5TH GEAR

(a) Apply gear oil to the counter 5th gear and transmission hub sleeve No. 3 assembly, and install them onto the counter gear.

cardiagn.com

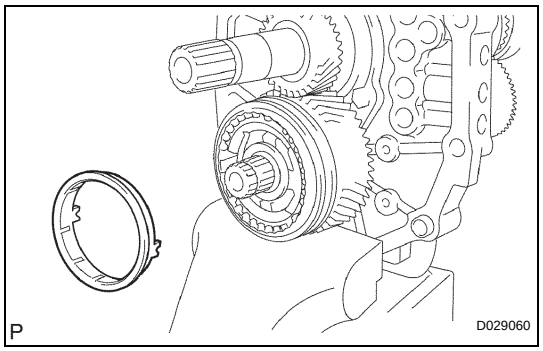

13. INSTALL NO. 3 SYNCHRONIZER RING OUTER

(a) Apply gear oil to the synchronizer ring outer No. 3, and install it onto the counter gear.

NOTICE:

Install the synchronizer ring outer No. 3 so that its groove fits into the synchromesh shifting key No. 3.

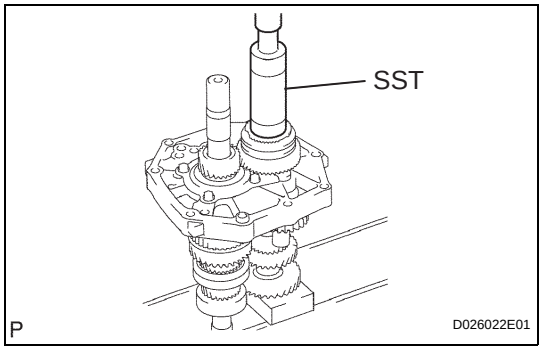

14. INSTALL NO. 5 GEAR SPLINE PIECE

(a) Using SST and a press, install the gear spline piece No. 5 onto the counter gear.

SST 09316-60011 (09316-00011)

NOTICE:

Check that the gear rotates smoothly.

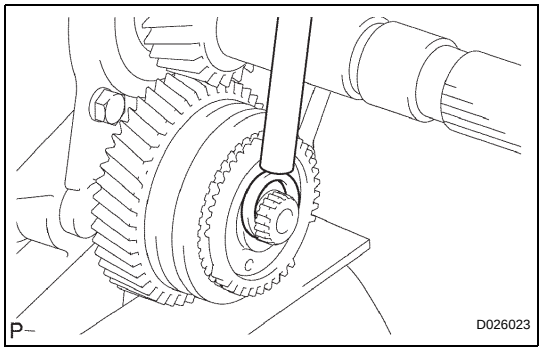

15. INSTALL COUNTER GEAR REAR SHAFT SNAP RING

(a) Select the counter gear rear shaft snap ring so that the thrust gap between gear spline piece No. 5 and counter gear rear shaft snap ring is within the specified values, and using a brass bar and a hammer, install it onto the counter gear.

Standard clearance:

0.1 mm (0.0039 in.) or less

Mark	Thickness mm (in.)
A	2.80 to 2.85 (0.1102 to 0.1122)
B	2.85 to 2.90 (0.1122 to 0.1141)
C	2.90 to 2.95 (0.1141 to 0.1160)
D	2.95 to 3.00 (0.1160 to 0.1181)
E	3.00 to 3.05 (0.1181 to 0.1200)
F	3.05 to 3.10 (0.1200 to 0.1220)
G	3.10 to 3.15 (0.1220 to 0.1240)

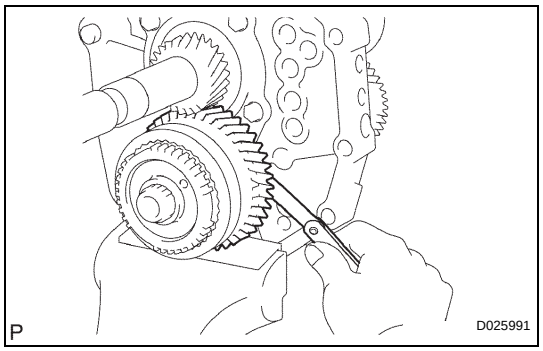

16. INSPECT COUNTER SHAFT 5TH GEAR THRUST CLEARANCE

(a) Using a feeler gauge, check the thrust clearance of the counter 5th gear.

Standard clearance:

0.10 to 0.35 mm (0.0039 to 0.0138 in.)

cardiagn.com

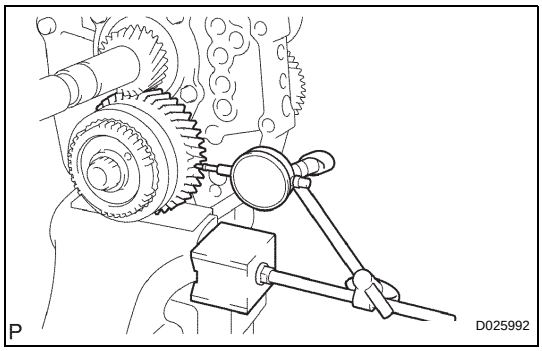

17. INSPECT COUNTER SHAFT 5TH GEAR RADIAL CLEARANCE

(a) Using a dial indicator, check the counter 5th gear radial clearance.

Standard clearance:

0.015 to 0.068 mm (0.0006 to 0.0027 in.)

If the clearance is out of specification the counter 5th gear bearing.

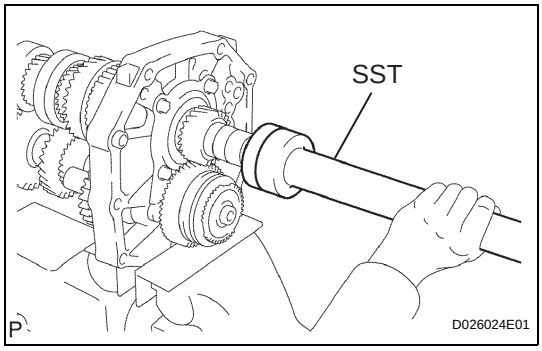

18. INSTALL OUTPUT SHAFT REAR BEARING

(a) Using SST and a press, install the new spacer and output shaft rear bearing onto the output shaft.

SST 09309-35010

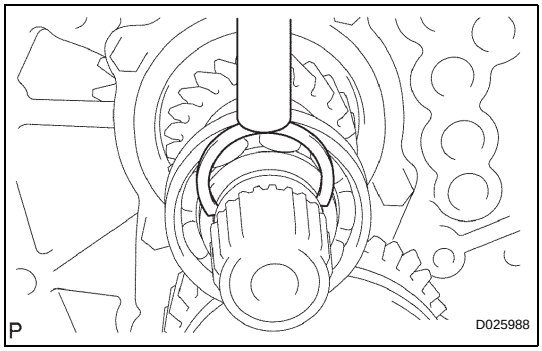

19. INSTALL OUTPUT SHAFT BEARING SHAFT SNAP RING

(a) Select an output shaft bearing shaft snap ring so the thrust gap between the snap ring and the bearing is within the specified values. Use a brass bar and hammer to install it onto the output shaft.

Standard clearance:

0.1 mm (0.0039 in.) or less

Mark	Thickness mm (in.)
A	2.65 to 2.70 (0.1043 to 0.1063)
B	2.70 to 2.75 (0.1063 to 0.1083)
C	2.75 to 2.80 (0.1083 to 0.1102)
D	2.80 to 2.85 (0.1102 to 0.1122)
E	2.85 to 2.90 (0.1122 to 0.1141)
F	2.90 to 2.95 (0.1141 to 0.1160)
G	2.95 to 3.00 (0.1160 to 0.1181)
H	3.00 to 3.05 (0.1181 to 0.1200)
J	3.05 to 3.10 (0.1200 to 0.1220)
K	3.10 to 3.15 (0.1220 to 0.1240)
L	3.15 to 3.20 (0.1240 to 0.1260)
M	3.20 to 3.25 (0.1260 to 0.1280)
N	3.25 to 3.30 (0.1280 to 0.1299)
P	3.30 to 3.35 (0.1299 to 0.1319)
Q	3.35 to 3.40 (0.1319 to 0.1339)
R	3.40 to 3.45 (0.1339 to 0.1358)
S	3.45 to 3.50 (0.1358 to 0.1378)

20. INSTALL SPEEDOMETER DRIVE GEAR

(a) Install output shaft spacer.

cardiagn.com

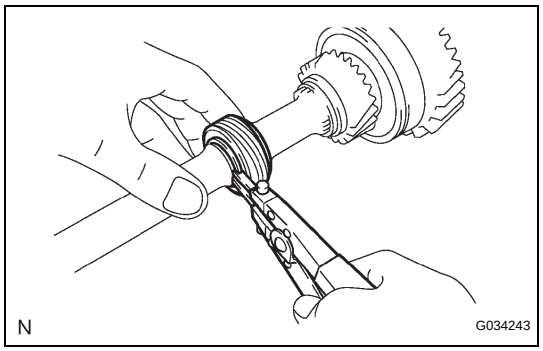

(b) Using snap ring pliers, install the snap ring.
(c) Install the ball and drive gear.
(d) Using snap ring pliers, install the snap ring.

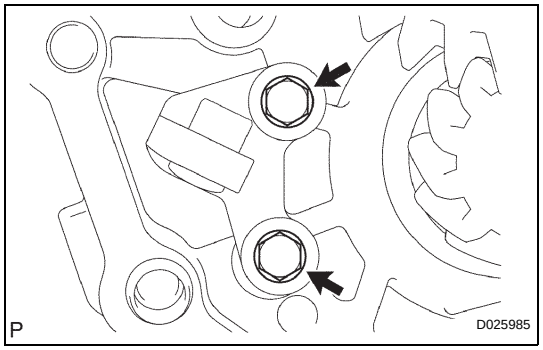

21. INSTALL REVERSE SHIFT ARM BRACKET

(a) Install the reverse shift arm bracket onto the intermediate plate with the 2 bolts.
Torque: 18 N*m (185 kgf*cm, 13 ft.*lbf)

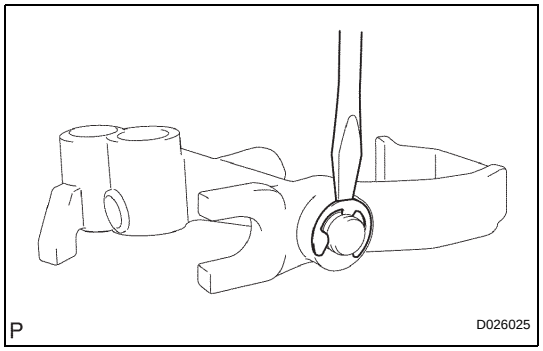

22. INSTALL REVERSE SHIFT FORK

(a) Install the reverse shift arm onto the reverse shift fork. Using a screwdriver and a hammer, install the new reverse shift arm end shaft ring.

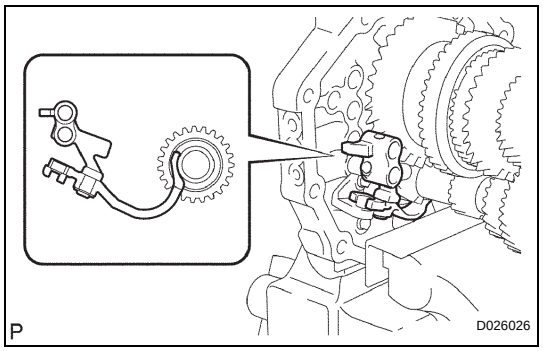

(b) Install the tip of the reverse shift arm onto the reverse idler gear. Align the cut end of the reverse shift arm with the reverse shift arm bracket pin, and install them.

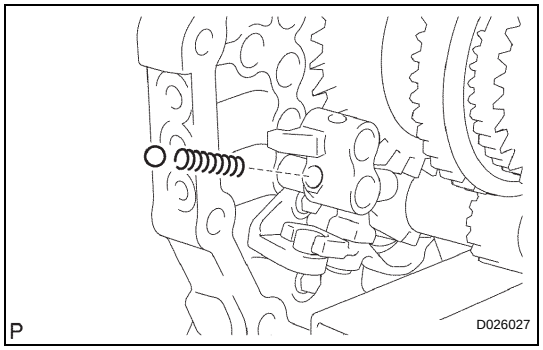

23. INSTALL 5TH SHIFT ARM SHAFT

(a) Install the reverse shift fork return compression spring and the reverse shift fork ball into the reverse shift fork.

cardiagn.com

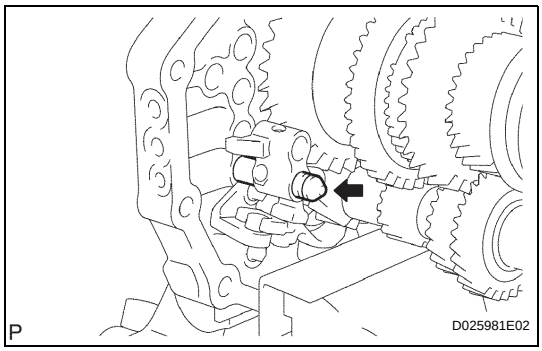

(b) Apply gear oil to the sliding part of the 5th shift arm shaft.
(c) Using a screwdriver, install the 5th shift arm shaft by pushing the reverse shift fork ball gently.

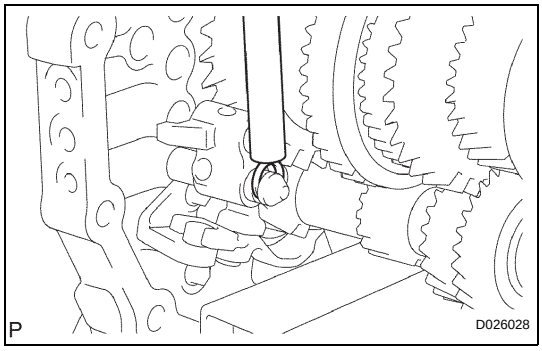

(d) Using a brass bar and a hammer, install the shift fork shaft snap ring onto the 5th shift arm shaft.

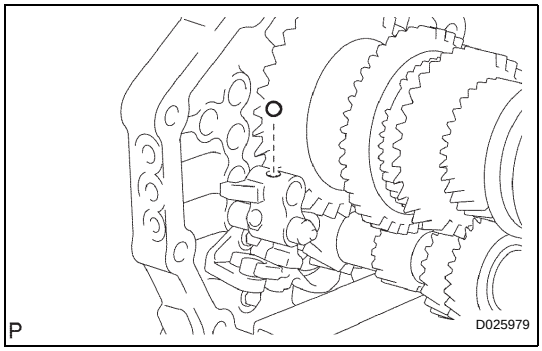

24. INSTALL REVERSE SHIFT FORK SHAFT

(a) Install the reverse shift fork ball into the reverse shift fork.

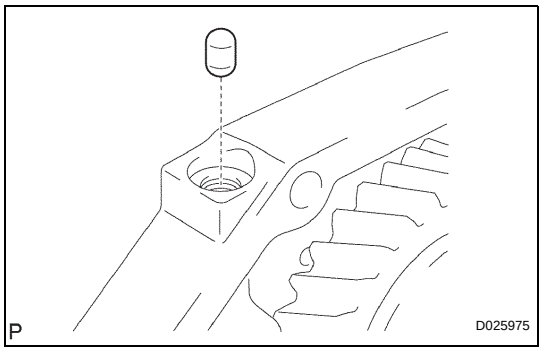

(b) Install the shift interlock No. 1 roller onto the intermediate plate.

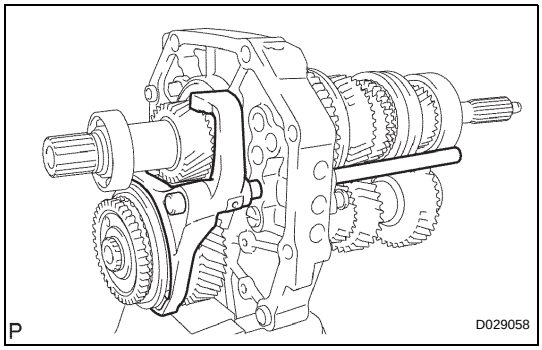

(c) Install the shift fork No. 3 onto the transmission hub sleeve No. 3 and the reverse shift fork shaft onto the intermediate plate from the front side.

cardiagn.com

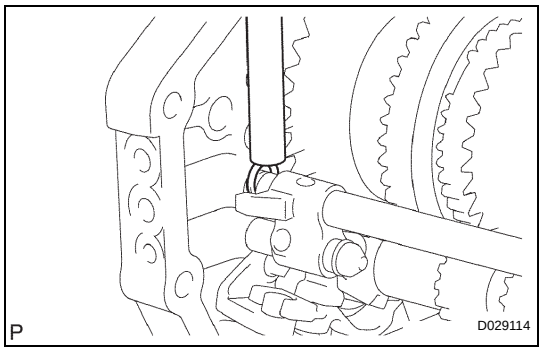

(d) Using a brass bar and a hammer, install the shift fork shaft snap ring onto the reverse shift fork shaft.

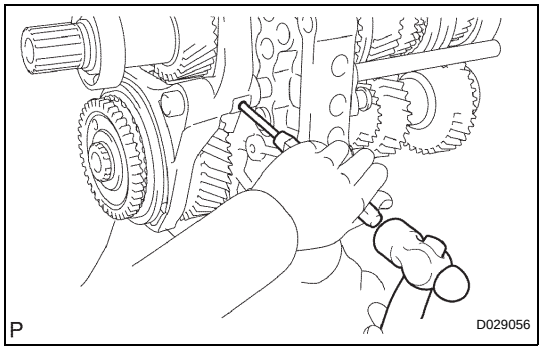

(e) Using a pin punch (5 mm) and a hammer, install the shift fork set slotted spring pin into the gear shift fork No. 3.

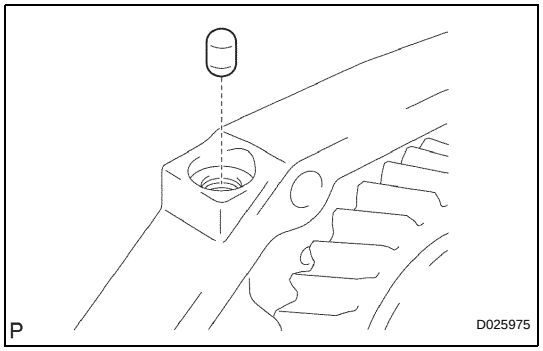

25. INSTALL NO. 1 GEAR SHIFT FORK SHAFT

(a) Install the shift interlock No. 1 roller onto the intermediate plate.

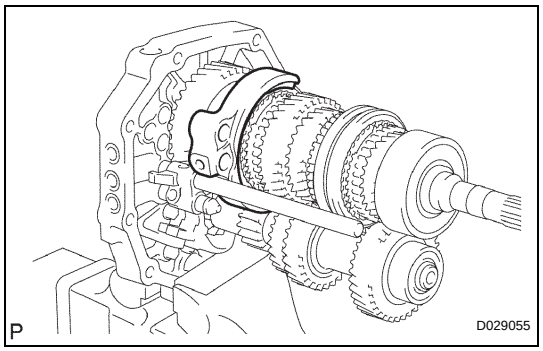

(b) Install the gear shift fork No. 1 onto the reverse gear.

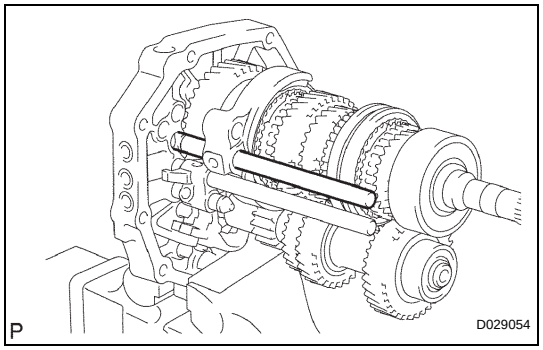

(c) Install the gear shift fork shaft No. 1 onto the intermediate plate from the rear side.

cardiagn.com

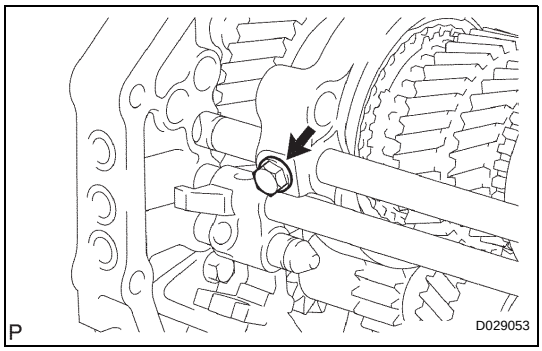

(d) Install the new shift fork set bolt onto the gear shift fork No. 1.
Torque: 19.5 N*m (199 kgf*cm, 14 ft.*lbf)

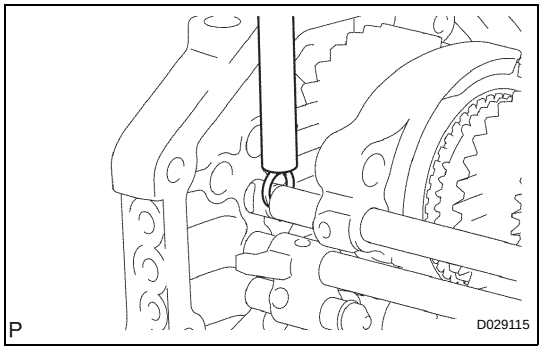

(e) Using a brass bar and a hammer, install the shift fork shaft snap ring onto the gear shift fork shaft No. 1.

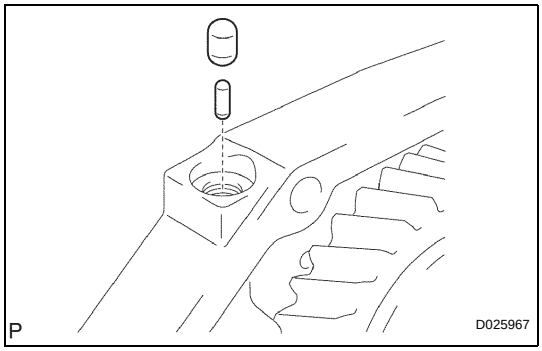

26. INSTALL NO. 2 GEAR SHIFT FORK SHAFT

(a) Install the shift interlock pin (ball) and shift interlock No. 1 roller into the intermediate plate.

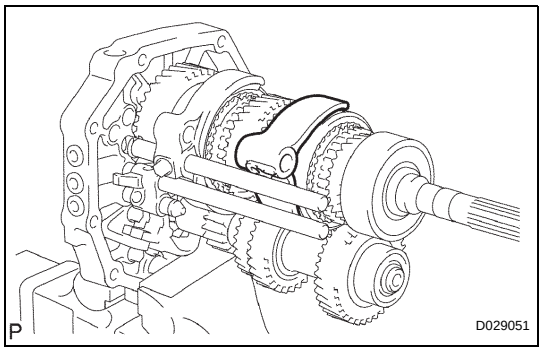

(b) Install the gear shift fork No. 2 onto the transmission hub sleeve No. 2.

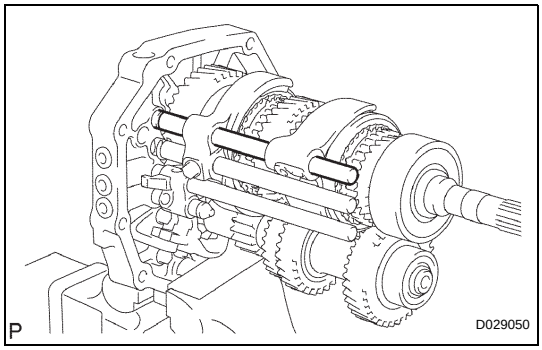

(c) Apply gear oil to the gear shift fork shaft No. 2, and install it onto the intermediate plate from the rear side.

cardiagn.com

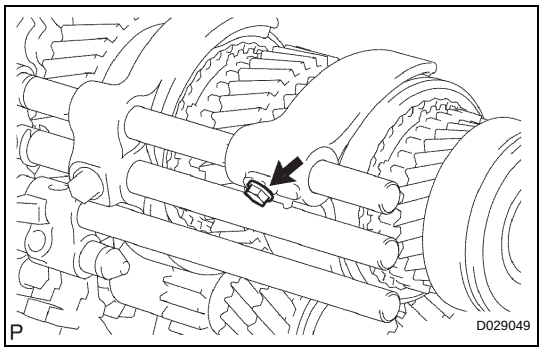

(d) Install the new shift fork set bolt onto the gear shift fork No. 2.
Torque: 19.5 N*m (199 kgf*cm, 14 ft.*lbf)

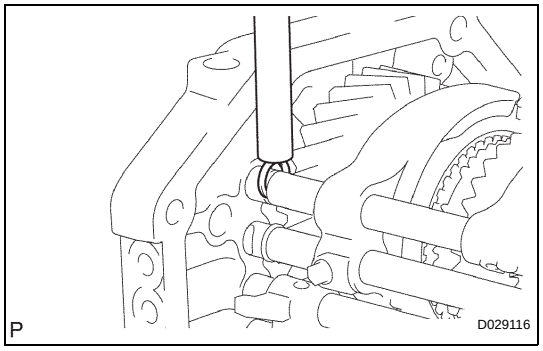

(e) Using a brass bar and a hammer, install the shift fork shaft snap ring onto the gear shift fork shaft No. 2.

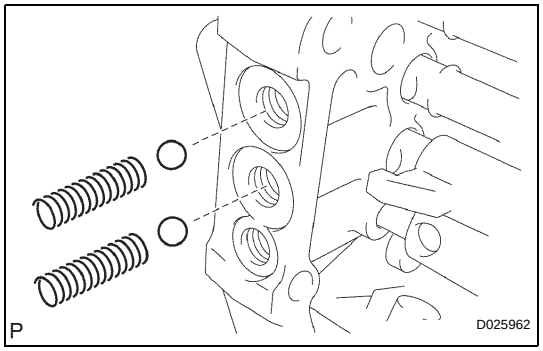

27. INSTALL NO. 1 SHIFT DETENT BALL SPRING SEAT

(a) Install the 2 shift detent ball low side compression springs and 2 shift detent balls into the intermediate plate.

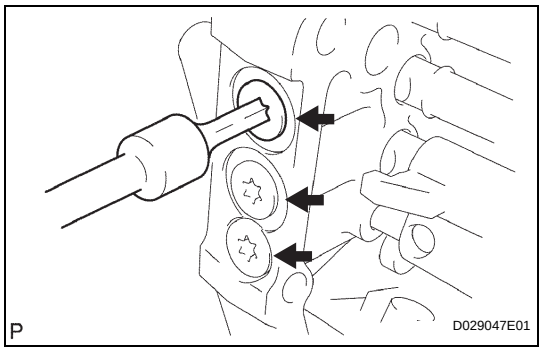

(b) Using a "Torx" socket wrench T40, install the 3 shift detent ball spring seats No. 1 onto the intermediate plate.
Torque: 18.5 N*m (189 kgf*cm, 14 ft.*lbf)

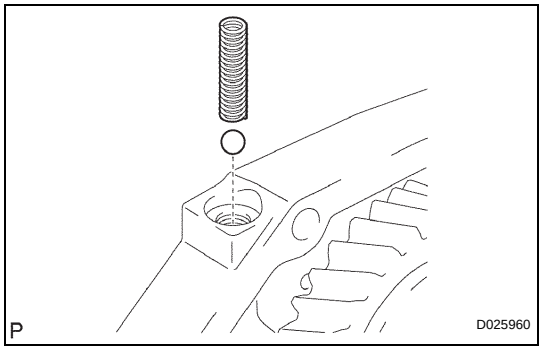

(c) Install the shift detent ball and the shift detent ball low side compression spring into the intermediate plate.

cardiagn.com

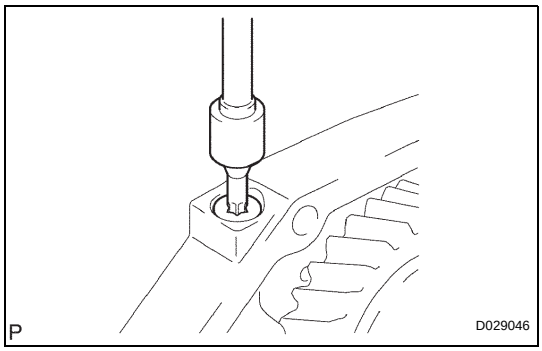

(d) Using a "Torx" socket wrench T40, install the shift detent ball spring seat No. 1 onto the intermediate plate.
Torque: 18.5 N*m (189 kgf*cm, 14 ft.*lbf)

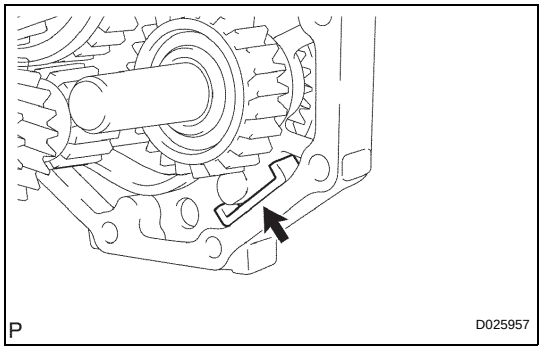

28. INSTALL TRANSMISSION MAGNET

(a) Clean the transmission magnet, and install it onto the intermediate plate.

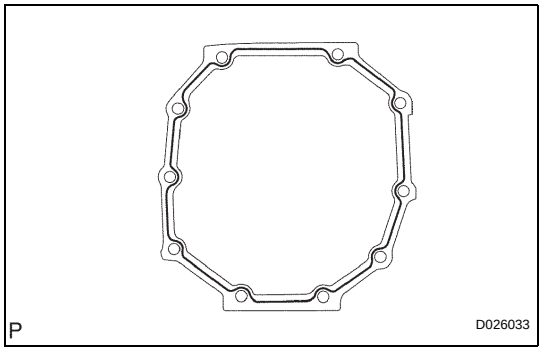

29. INSTALL MANUAL TRANSMISSION CASE

(a) Apply seal packing to the manual transmission case as shown in the illustration.
Seal packing:
Part No.08826-00090, THREE BOND 1281 or equivalent.

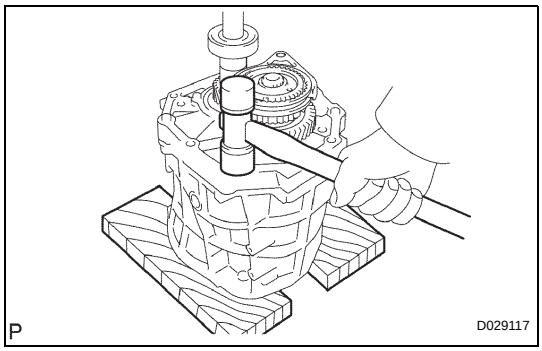

(b) Using a plastic hammer, tap the manual transmission case to attach it to the intermediate plate.

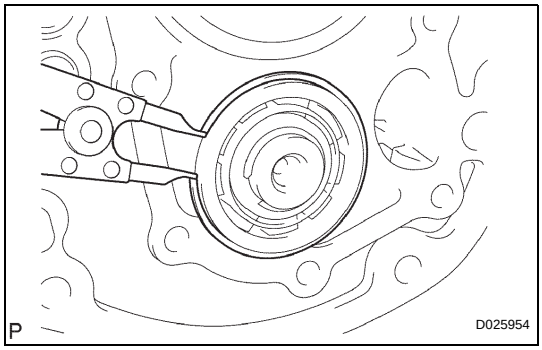

30. INSTALL NO. 1 COUNTER GEAR FRONT BEARING SNAP RING

(a) Using a snap ring expander, install the counter gear front bearing snap ring No. 1 onto the transmission case.

cardiagn.com

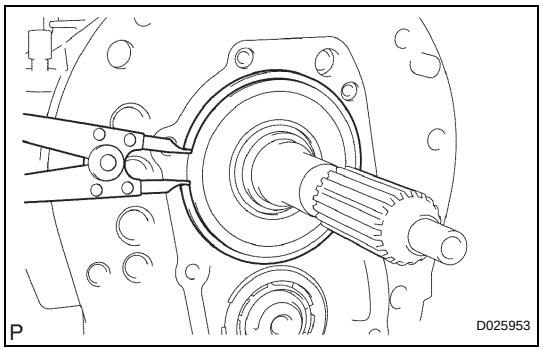

31. INSTALL FRONT BEARING SHAFT SNAP RING

(a) Using a snap ring expander, install the front bearing shaft snap ring onto the transmission case.

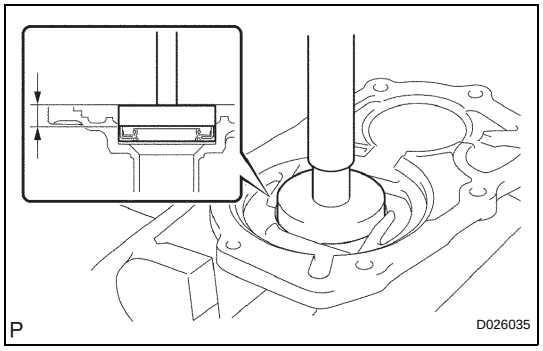

32. INSTALL TRANSMISSION FRONT BEARING RETAINER OIL SEAL

(a) Using SST and a hammer, install the new transmission front bearing retainer oil seal onto the transmission front bearing retainer.
SST 09950-60010 (09951-00300, 09951-00520, 09952-06010), 09950-70010 (09951-07100)
Drive in depth:
11.2 to 12.2 mm (0.4409 to 0.4803 in.)

(b) Coat the lip of the oil seal with MP grease.

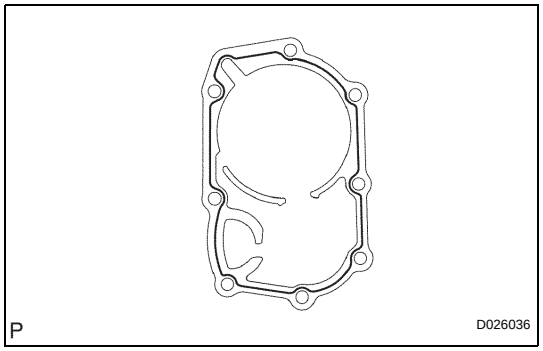

33. INSTALL FRONT BEARING RETAINER

(a) Apply seal packing to the bearing retainer front as shown in the illustration.
Seal packing:
Part No.08826-00090, THREE BOND 1281 or equivalent.

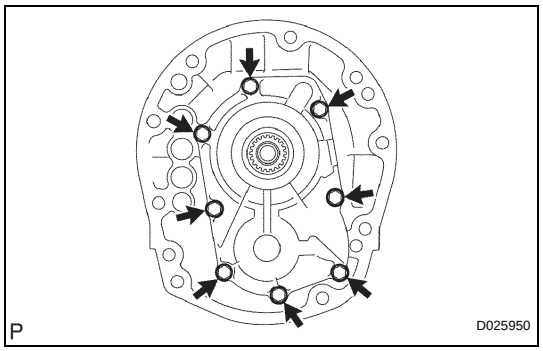

(b) Install the front bearing retainer onto the transmission case with the 8 bolts.
Torque: 16.5 N*m (168 kgf*cm, 12 ft.*lbf)

(c) Check that the input shaft and output shaft rotate smoothly.

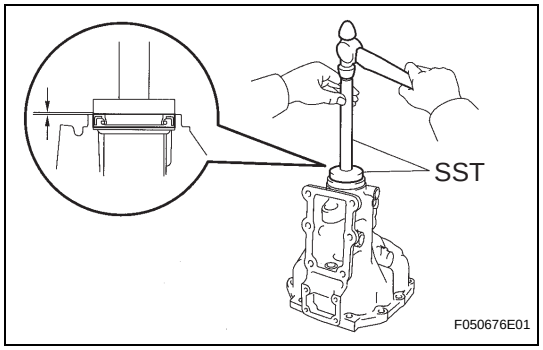

34. INSTALL MANUAL TRANSMISSION EXTENSION HOUSING OIL SEAL

(a) Using SST and a hammer, install the new extension housing oil seal onto the extension housing.
SST 09710-30050, 09950-70010 (09951-07100)
Drive in depth:
-0.5 to 0.5 mm (-0.020 to 0.020 in.)
NOTICE:
Be careful not to damage the oil seal lip.

(b) Lightly apply MP grease to the tip of the oil seal.

cardiagn.com

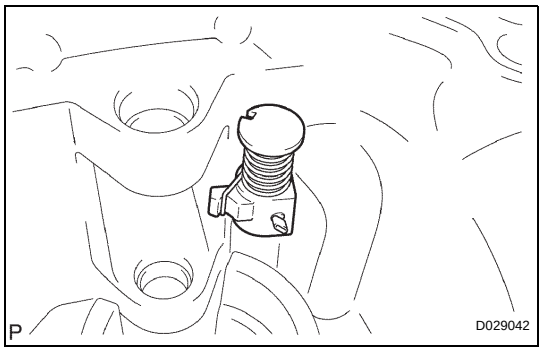

35. INSTALL REVERSE RESTRICT PIN ASSEMBLY

(a) Install the reverse restrict pin into the extension housing.

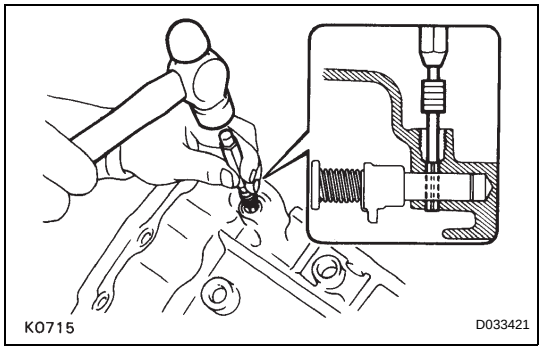

(b) Using a pin punch (5 mm) and a hammer, install the reverse restrict slotted pin into the extension housing.

(c) Using a "Torx" socket wrench T40, install the reverse restrict pin plug onto the extension housing.
Torque: 18.5 N*m (189 kgf*cm, 14 ft.*lbf)

36. INSTALL EXTENSION HOUSING OIL RECEIVER PIPE

(a) Install the oil receiver pipe with the bolt.

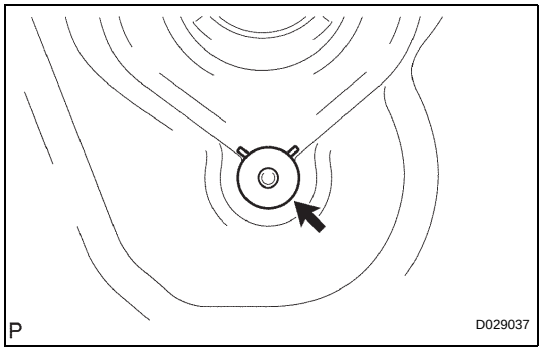

37. INSTALL OIL RECEIVER

(a) Install the oil receiver onto the extension housing.

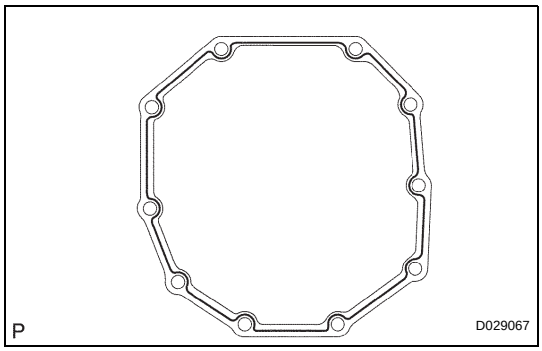

38. INSTALL EXTENSION HOUSING SUB-ASSEMBLY

(a) Apply seal packing to the extension housing as shown in the illustration.
Seal packing:
Part No. 08826-00090, THREE BOND 1218 or equivalent

(b) Insert the shift and select lever to the extension housing.

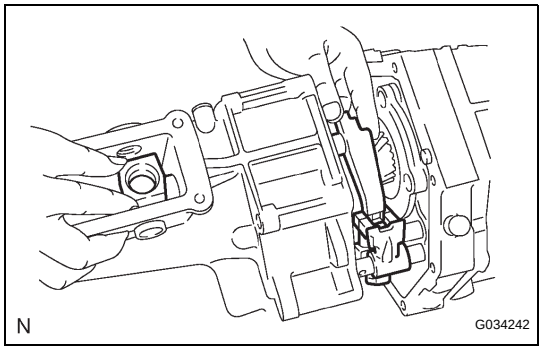

(c) Connect the shift and select lever to the fork shaft and put in the shift lever housing.

(d) Align shift and select lever to the extension housing installation hole and push in the extension housing.

cardiagn.com

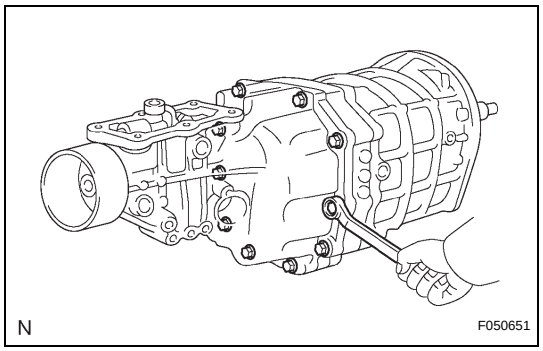

(e) Install the extension housing, onto the transmission case with the 10 bolts.
Torque: 37 N*m (380 kgf*cm, 27 ft.*lbf)

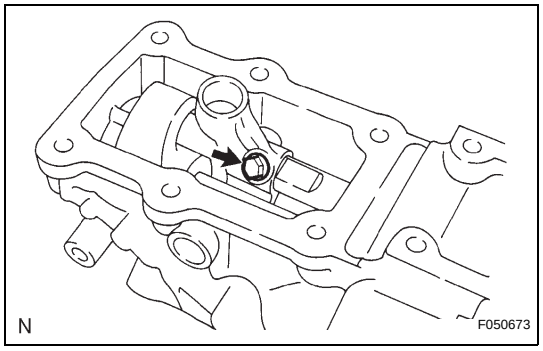

(f) Install the shift lever housing set bolt.
Torque: 33 N*m (340 kgf*cm, 25 ft.*lbf)

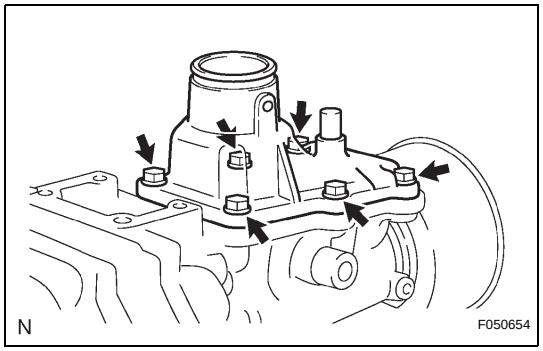

39. INSTALL FLOOR SHIFT CONTROL SHIFT LEVER RETAINER SUB-ASSEMBLY

(a) Install the floor shift control shift lever retainer and the extension housing oil deflector onto the transfer adapter with the 6 bolts.
Torque: 18 N*m (185 kgf*cm, 13 ft.*lbf)

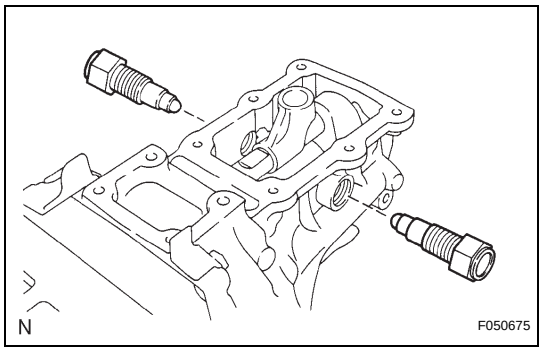

40. INSTALL REVERSE RESTRICT PIN ASSEMBLY

(a) Install the 2 reverse restrict pins into the extension housing or transfer adapter.
Torque: 37 N*m (380 kgf*cm, 27 ft.*lbf)

41. INSTALL SPEEDOMETER SENSOR

(a) Install a new O-ring onto the speedometer sensor.
(b) Install the speedometer sensor with the bolt.
Torque: 11.5 N*m (117 kgf*cm, 8 ft.*lbf)

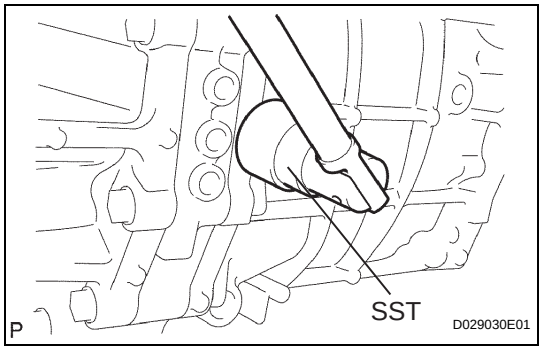

42. INSTALL BACK-UP LIGHT SWITCH ASSEMBLY

(a) Using SST, install the back-up light switch assembly and the gasket onto the transmission case.
SST 09817-16011
Torque: 44 N*m (450 kgf*cm, 32 ft.*lbf)

cardiagn.com

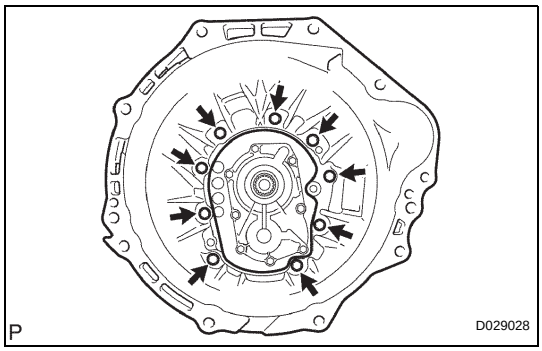

43. INSTALL CLUTCH HOUSING

(a) Install the clutch housing onto the transmission case with the 9 bolts.
Torque: 36 N*m (370 kgf*cm, 27 ft.*lbf)

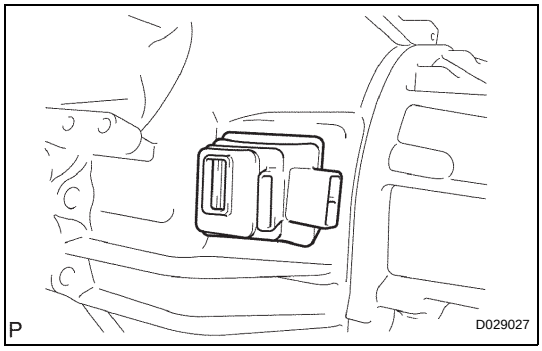

44. INSTALL CLUTCH RELEASE FORK BOOT

(a) Install the clutch release fork boot onto the clutch housing.

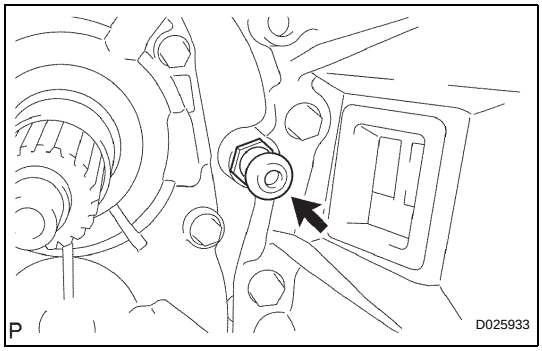

45. INSTALL RELEASE FORK SUPPORT

(a) Install the clutch release fork support onto the clutch housing.
Torque: 47 N*m (480 kgf*cm, 35 ft.*lbf)

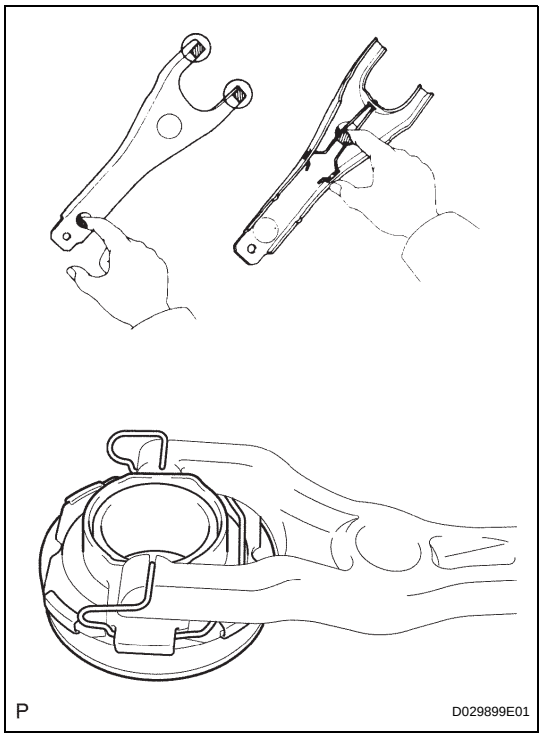

46. INSTALL CLUTCH RELEASE BEARING ASSEMBLY

(a) Apply clutch release hub grease to the clutch release bearing, and install it onto the clutch release fork.

cardiagn.com

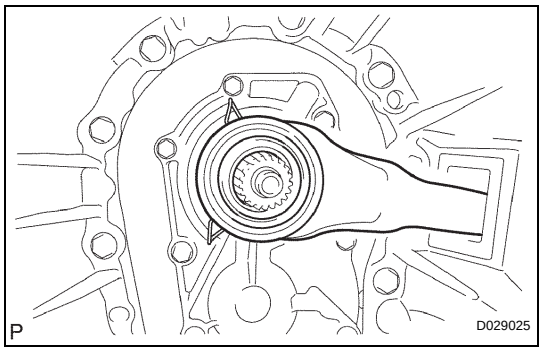

47. INSTALL CLUTCH RELEASE FORK SUB-ASSEMBLY

(a) Install the clutch release fork.

(b) Apply the clutch spline grease to the spline of the input shaft.

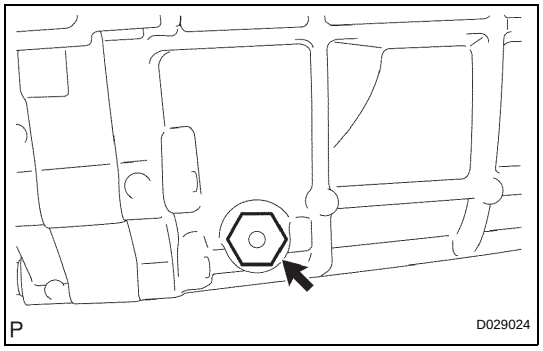

48. INSTALL DRAIN PLUG SUB-ASSEMBLY

(a) Install the drain plug onto the transmission case through a new gasket.
Torque: 37 N*m (380 kgf*cm, 27 ft.*lbf)

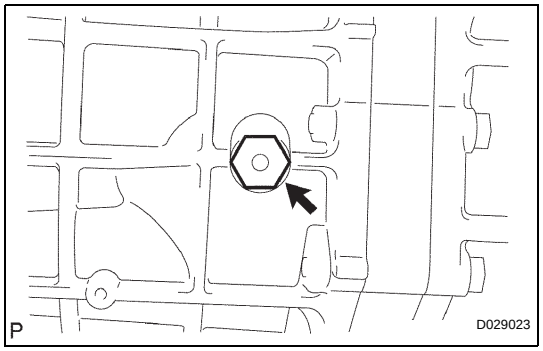

49. INSTALL MANUAL TRANSMISSION FILLER PLUG

(a) Install the filler plug onto the transmission case through a new gasket.
Torque: 37 N*m (380 kgf*cm, 27 ft.*lbf)

cardiagn.com