GENERATOR (for DENSO Made)

COMPONENTS

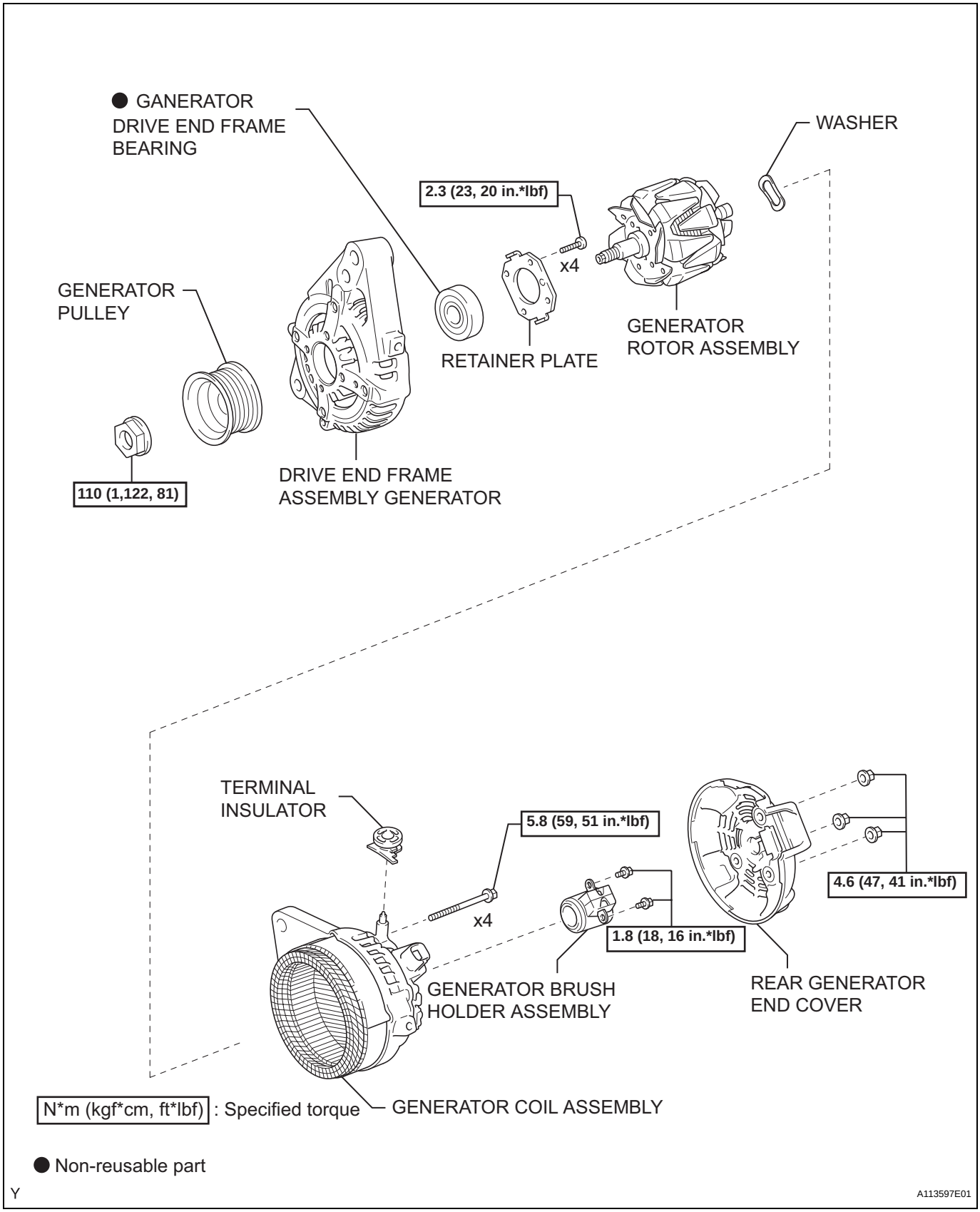

cardiagn.com

REMOVAL

1. **DISCONNECT CABLE FROM NEGATIVE BATTERY TERMINAL**
2. **REMOVE V-BANK COVER (See page ES-414)**
3. **REMOVE RADIATOR SUPPORT TO FRAME SEAL LH (See page CO-15)**
4. **REMOVE FAN SHROUD (See page CO-15)**
5. **REMOVE GENERATOR ASSEMBLY**
   (a) Disconnect the wire harness.
   (1) Remove the bolt and wire harness stay.
   (2) Disconnect the connector from the generator assembly.
   (3) Remove the terminal cap and nut.
   (4) Disconnect the wire harness from terminal B.

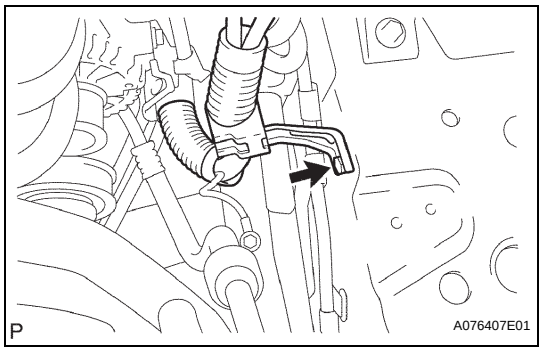

(b) Remove the 2 bolts, then separate the wire harness clamp bracket from the generator assembly.

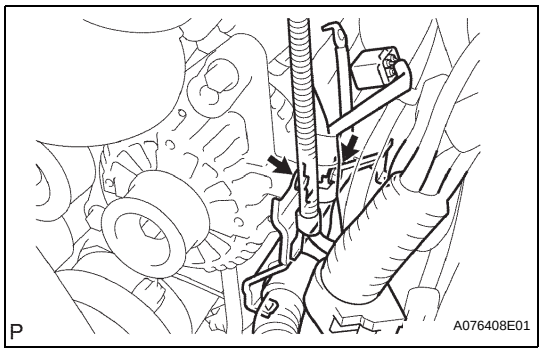

(c) Remove the 2 bolts, then remove the generator assembly.

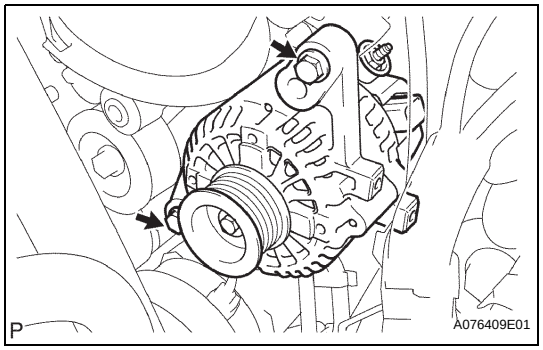

DISASSEMBLY

1. **REMOVE GENERATOR PULLEY**
   SST 09820-63010 (09820-06010, 09820-06020)
   HINT:

SST 1-A and B	09820-06010
SST 2	09820-06020

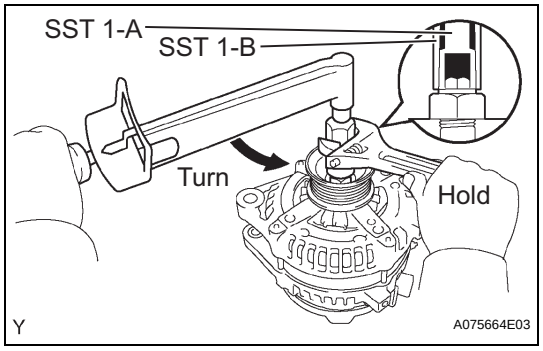

(a) Hold SST 1-A with a torque wrench, and tighten SST 1-B clockwise to the specified torque.
Torque: 39 N*m (400 kgf*cm, 29 ft.*lbf)
NOTICE:
Check that SST is secured on the rotor shaft.

cardiagn.com

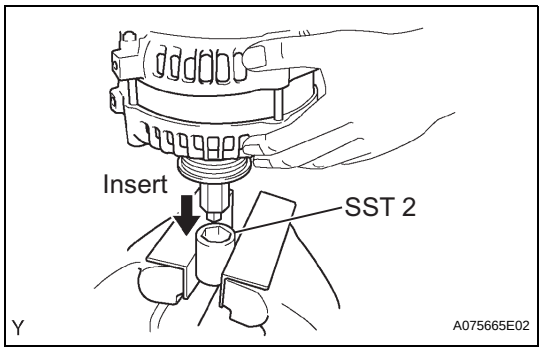

(b) Mount SST 2 in a vise.
(c) Insert SST 1-A and B into SST 2, and attach the pulley nut to SST 2.

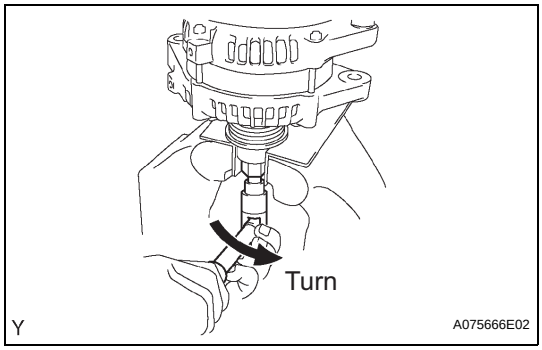

(d) To loosen the pulley nut, turn SST 1-A in the direction shown in the illustration.
NOTICE:
To prevent damage to the rotor shaft, do not loosen the pulley nut more than one-half turn.
(e) Remove the generator from SST 2.

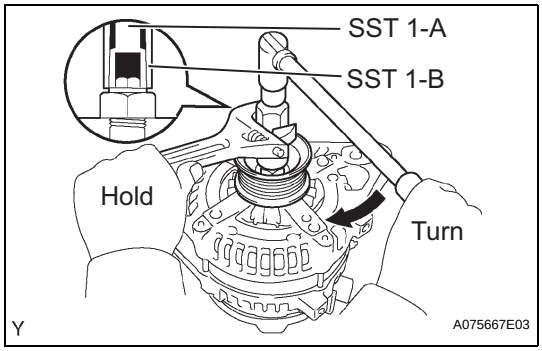

(f) Turn SST 1-B, and remove SST 1-A and B.
(g) Remove the pulley nut and pulley.

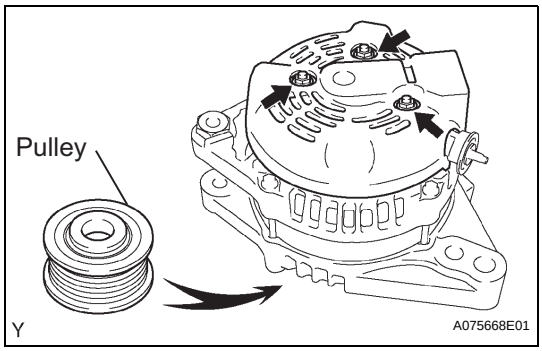

2. REMOVE REAR GENERATOR END COVER
(a) Place the generator on the pulley.
(b) Remove the 3 nuts, then remove the rear end cover.

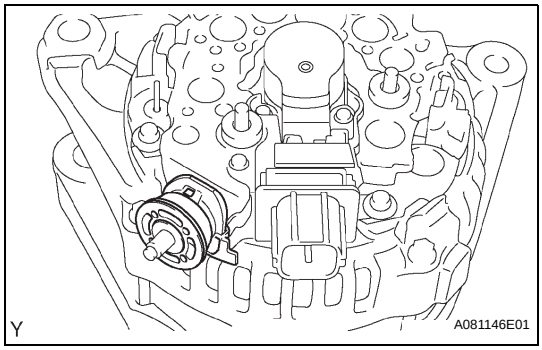

3. REMOVE TERMINAL INSULATOR

cardiagn.com

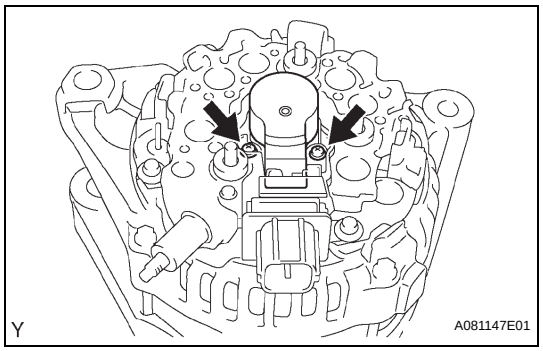

4. REMOVE GENERATOR BRUSH HOLDER ASSEMBLY

(a) Remove the plate seal.
(b) Remove the 2 nuts, then remove the brush holder.
(c) Remove the plate seal.

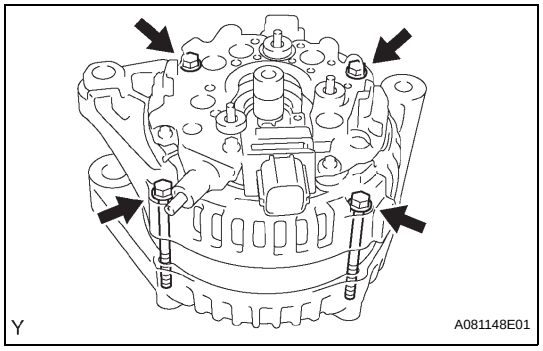

5. REMOVE GENERATOR COIL ASSEMBLY

(a) Remove the 4 bolts.

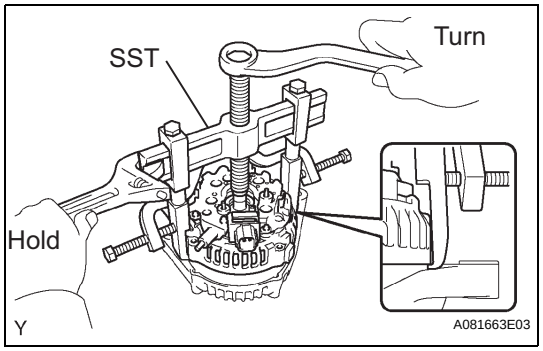

(b) Using SST, remove the coil.
SST 09950-40011 (09951-04020, 09952-04010, 09953-04020, 09954-04010, 09955-04071, 09957-04010, 09958-04011)

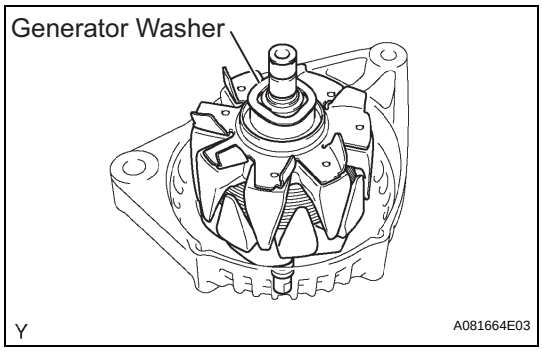

6. REMOVE GENERATOR ROTOR ASSEMBLY

(a) Remove the generator washer and the generator rotor.

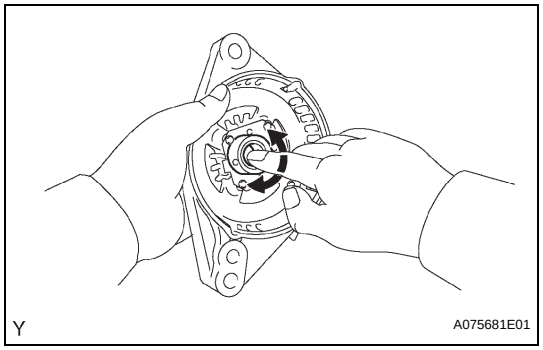

7. REMOVE GENERATOR DRIVE END FRAME BEARING

(a) Check the bearing whether it is rough or worn. If necessary, replace the bearing.

cardiagn.com

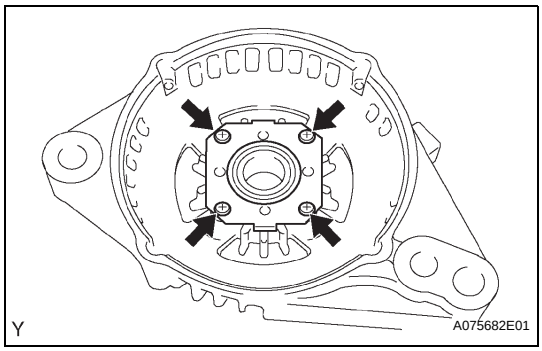

(b) Remove the 4 screws, then remove the retainer plate.

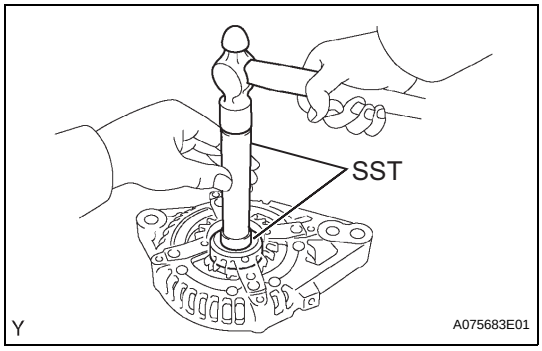

(c) Using SST, tap out the bearing.
SST 09950-60010 (09951-00250), 09950-70010 (09951-07100)

INSPECTION

1. INSPECT GENERATOR BRUSH HOLDER ASSEMBLY

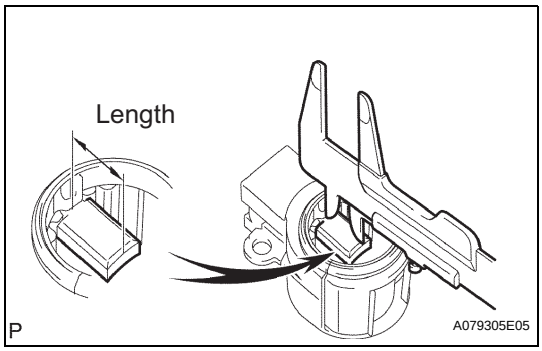

(a) Using vernier calipers, measure the exposed brush length.
Standard exposed brush length:
10.5 mm (0.413 in.)
Minimum exposed brush length:
4.5 mm (0.177 in.)
If the exposed brush length is less than the minimum, replace the brush holder.

2. INSPECT GENERATOR ROTOR ASSEMBLY

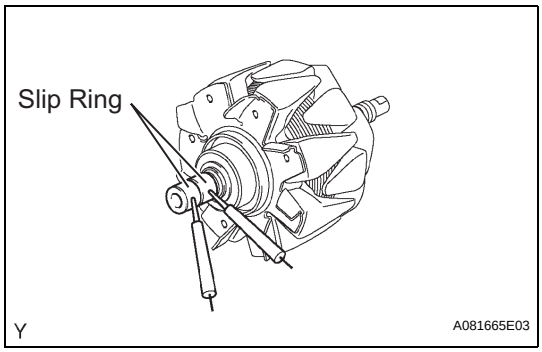

(a) Check the rotor for an open circuit.
(1) Using an ohmmeter, measure the resistance between the slip rings.
Standard:
2.3 to 2.7Ω at 20°C(68°F)
If the result is not as specified, replace the rotor.

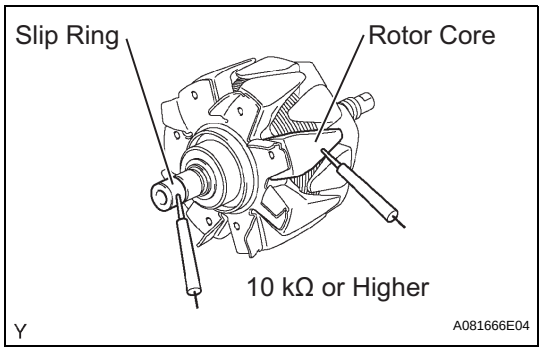

(b) Check the rotor for ground.
(1) Using an ohmmeter, measure the resistance between the slip ring and rotor.
Standard:
10 kΩ or higher
If the result is not as specified, replace the rotor.

(c) Inspect the slip rings.
(1) Check that the slip rings are not rough or scored. If rough or scored, replace the rotor.

cardiagn.com

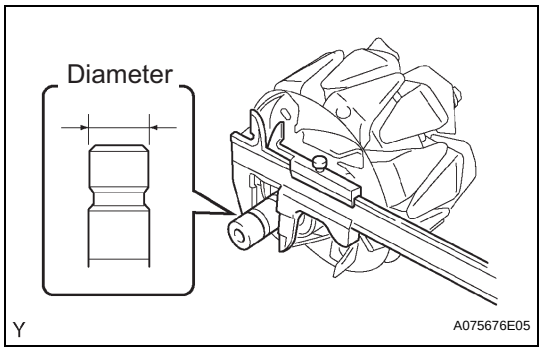

(2) Using vernier calipers, measure the slip ring diameter.
Standard diameter:
14.2 to 14.4 mm (0.559 to 0.567 in.)
Minimum diameter:
14.0 mm (0.551 in.)
If the diameter is less than the minimum, replace the rotor.

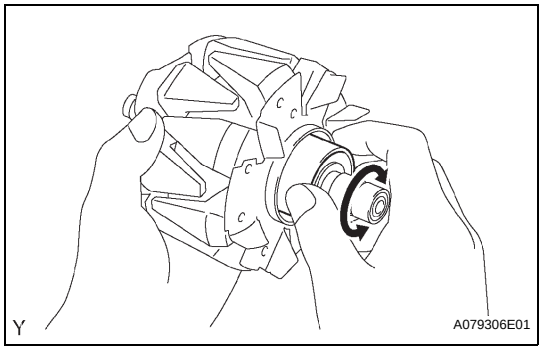

3. INSPECT GENERATOR ROTOR BEARING
(a) Check the bearing whether it is rough or worn. If necessary, replace the generator rotor.

REASSEMBLY

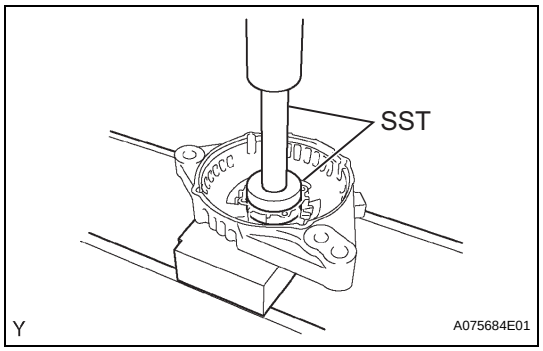

1. INSTALL GENERATOR DRIVE END FRAME BEARING
(a) Using SST and a press, press in a new bearing.
SST 09950-60010 (09951-00250), 09950-70010 (09951-07100)
(b) Install the retainer plate with the 4 screws.
Torque: 2.2 N*m (22 kgf*cm, 19 in.*lbf)

2. INSTALL GENERATOR ROTOR ASSEMBLY
(a) Place the drive end frame on the rotor.
(b) Install the rotor and washer.

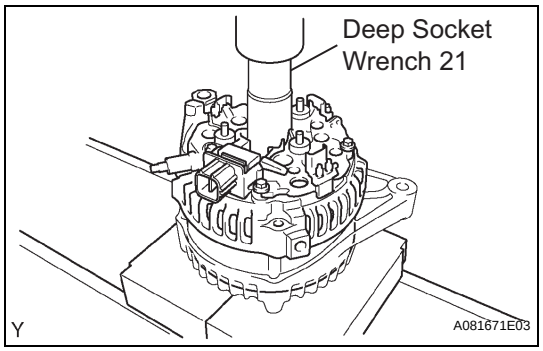

3. INSTALL GENERATOR COIL ASSEMBLY
(a) Using a deep socket wrench 21 and a press, in the generator rectifier end frame carefully.

cardiagn.com

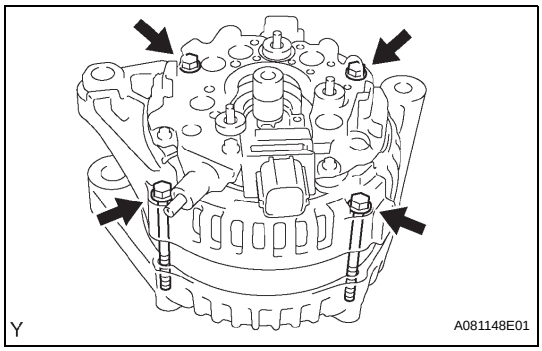

(b) Install the 4 bolts.
Torque: 5.8 N*m (59 kgf*cm, 51 in.*lbf)

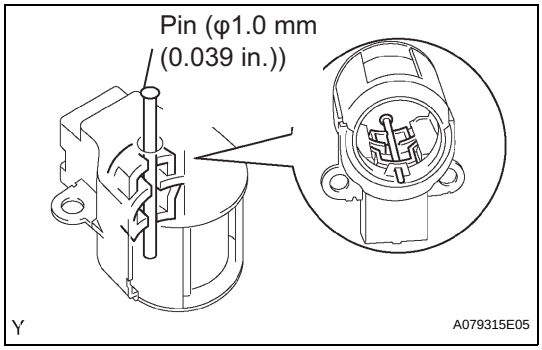

4. INSTALL GENERATOR BRUSH HOLDER ASSEMBLY

(a) While pushing the 2 brushes to inside the brush holder, insert a pin (ϕ1.0 mm (0.039 in.)) into the brush holder hole.

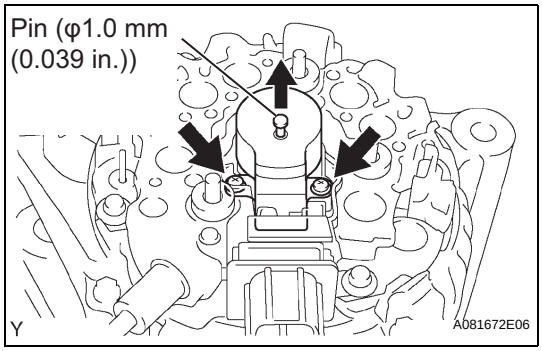

(b) Install the generator brush holder with the 2 screws.
Torque: 1.8 N*m (18 kgf*cm, 16 in.*lbf)

(c) Pull out the pin (ϕ1.0 mm (0.039 in.)) from the generator brush hold.

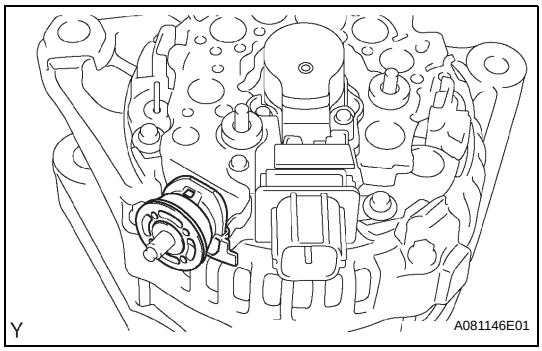

5. INSTALL TERMINAL INSULATOR

(a) Install the terminal insulator to the generator rectifier end frame.
NOTICE:
Pay attention the mounting orientation of the terminal insulator.

6. INSTALL REAR GENERATOR END COVER

(a) Install the rear end cover with the 3 nuts.
Torque: 4.6 N*m (47 kgf*cm, 41 in.*lbf)

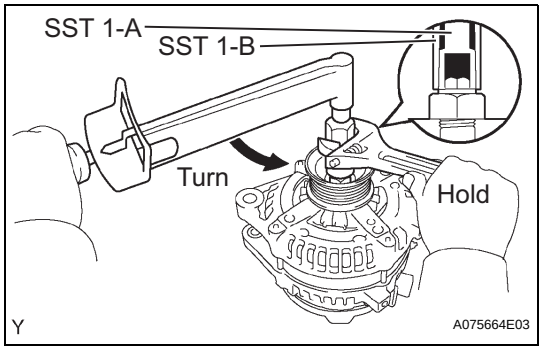

7. INSTALL GENERATOR PULLEY
SST 09820-63010 (09820-06010, 09820-06020)
HINT:

SST 1-A and B	09820-06010
SST 2	09820-06020

(a) Install the pulley onto the rotor shaft by tightening the pulley nut by hand.

(b) Hold SST 1-A with a torque wrench, and tighten SST 1-B clockwise to the specified torque.
Torque: 39 N*m (400 kgf*cm, 29 ft.*lbf)

cardiagn.com

NOTICE:
Check that SST is secured to the rotor shaft.

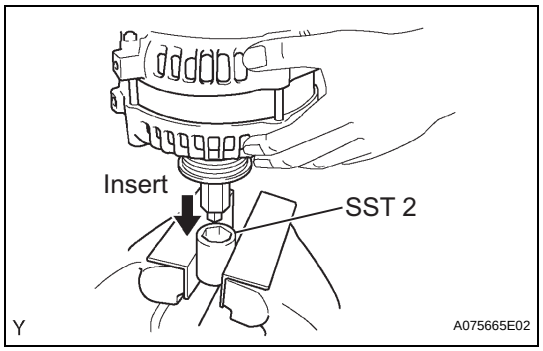

(c) Mount SST 2 in a vise.
(d) Insert SST 1-A and B into SST 2, and attach the pulley nut to SST 2.

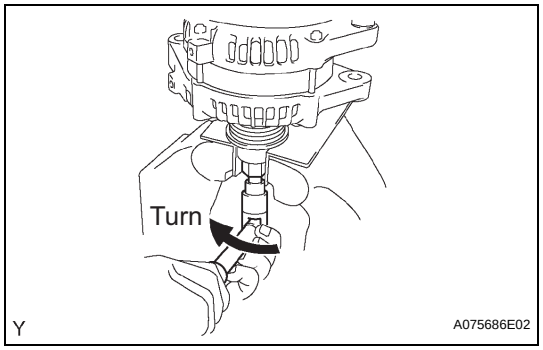

(e) Tighten the pulley nut by turning SST 1-A in the direction shown in the illustration.
Torque: 111 N*m (1,125 kgf*cm, 81 ft.*lbf)
(f) Remove the generator from SST 2.

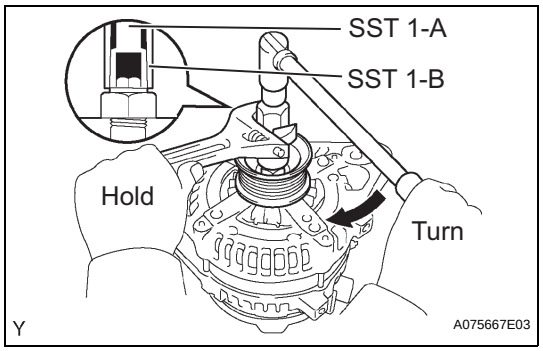

(g) Turn SST 1-B, and remove SST 1-A and B.
(h) Turn the pulley and check that the pulley moves smoothly.

cardiagn.com