# ENGINE UNIT

## COMPONENTS

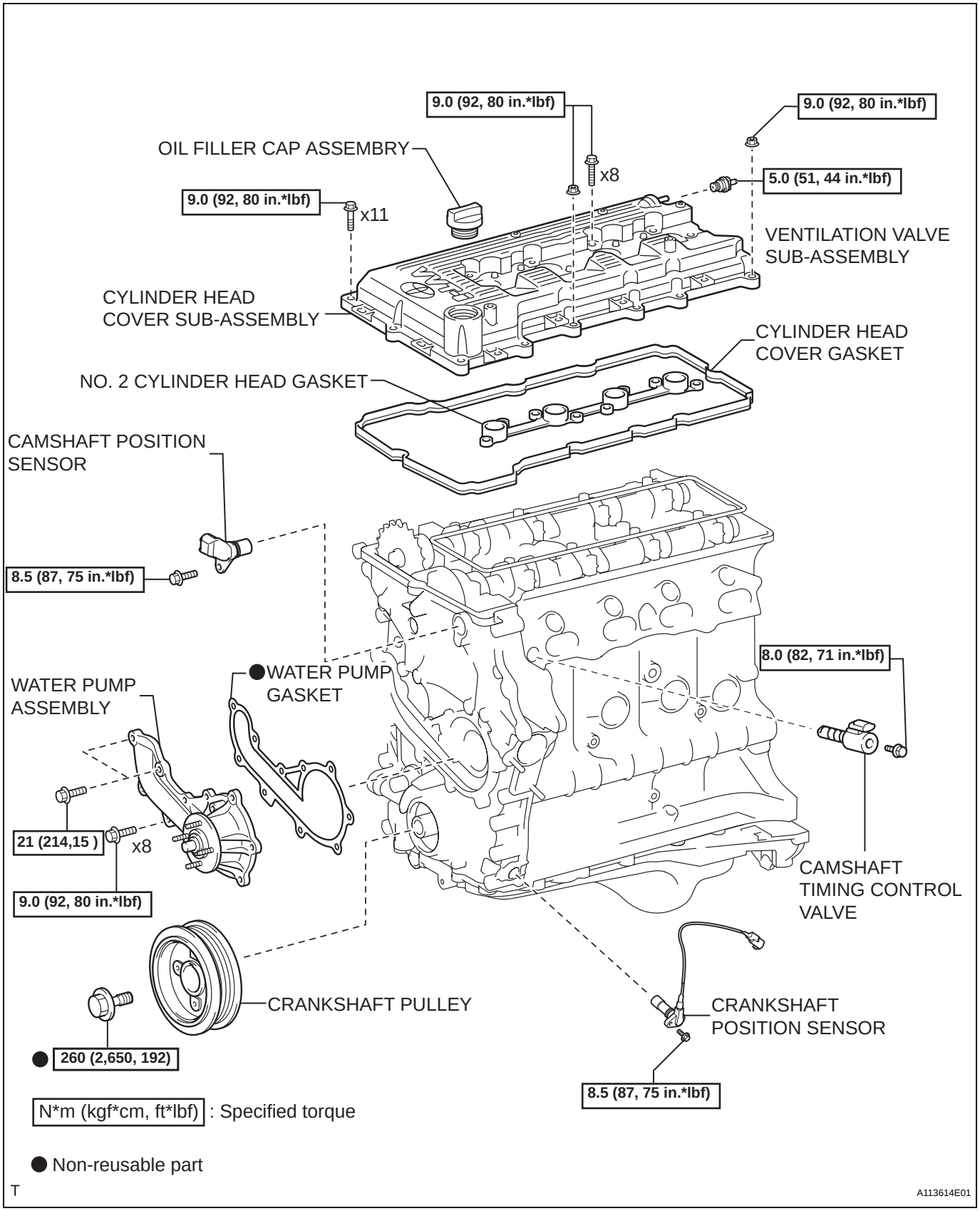


cardiagn.com

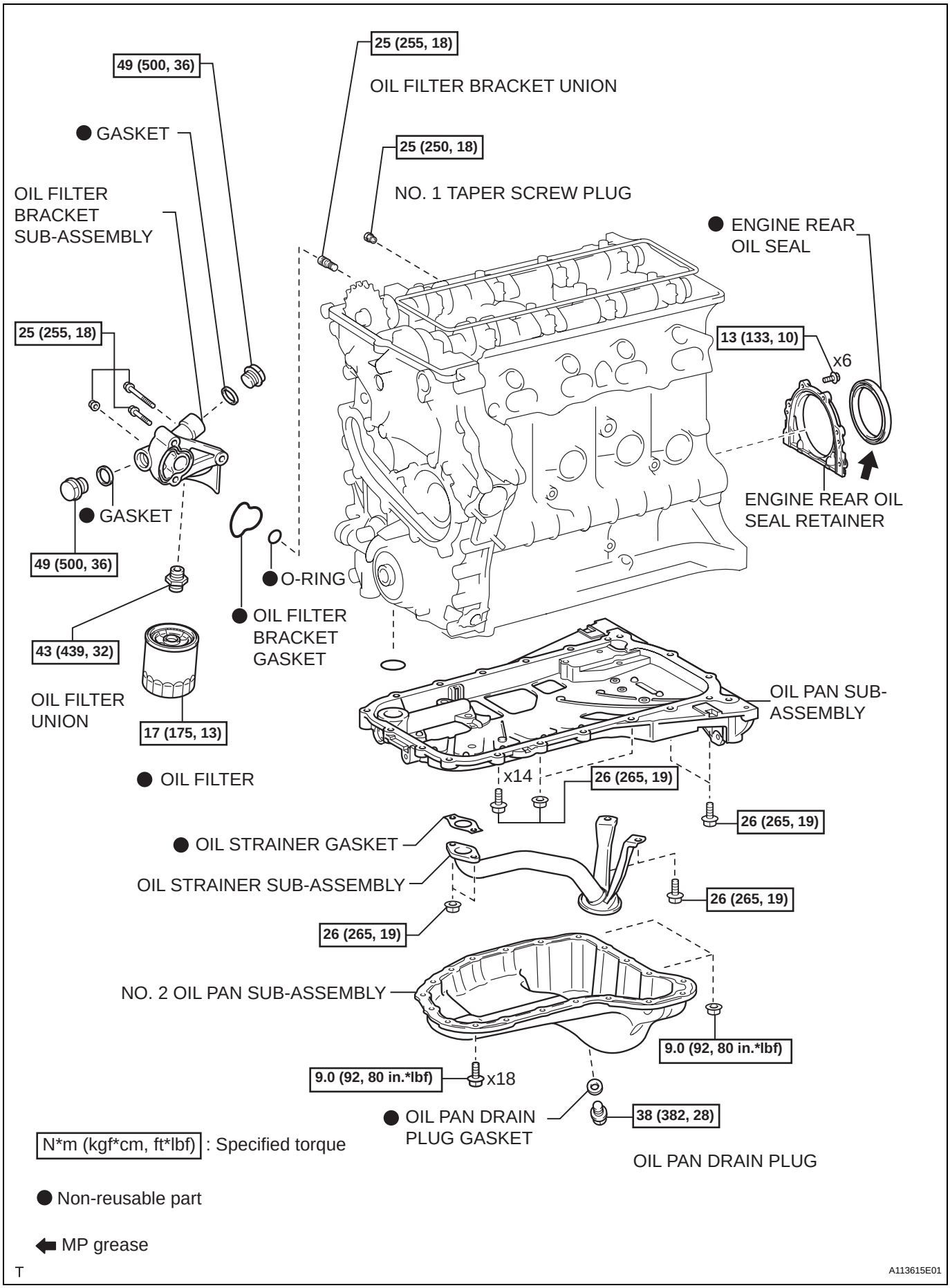


cardiagn.com

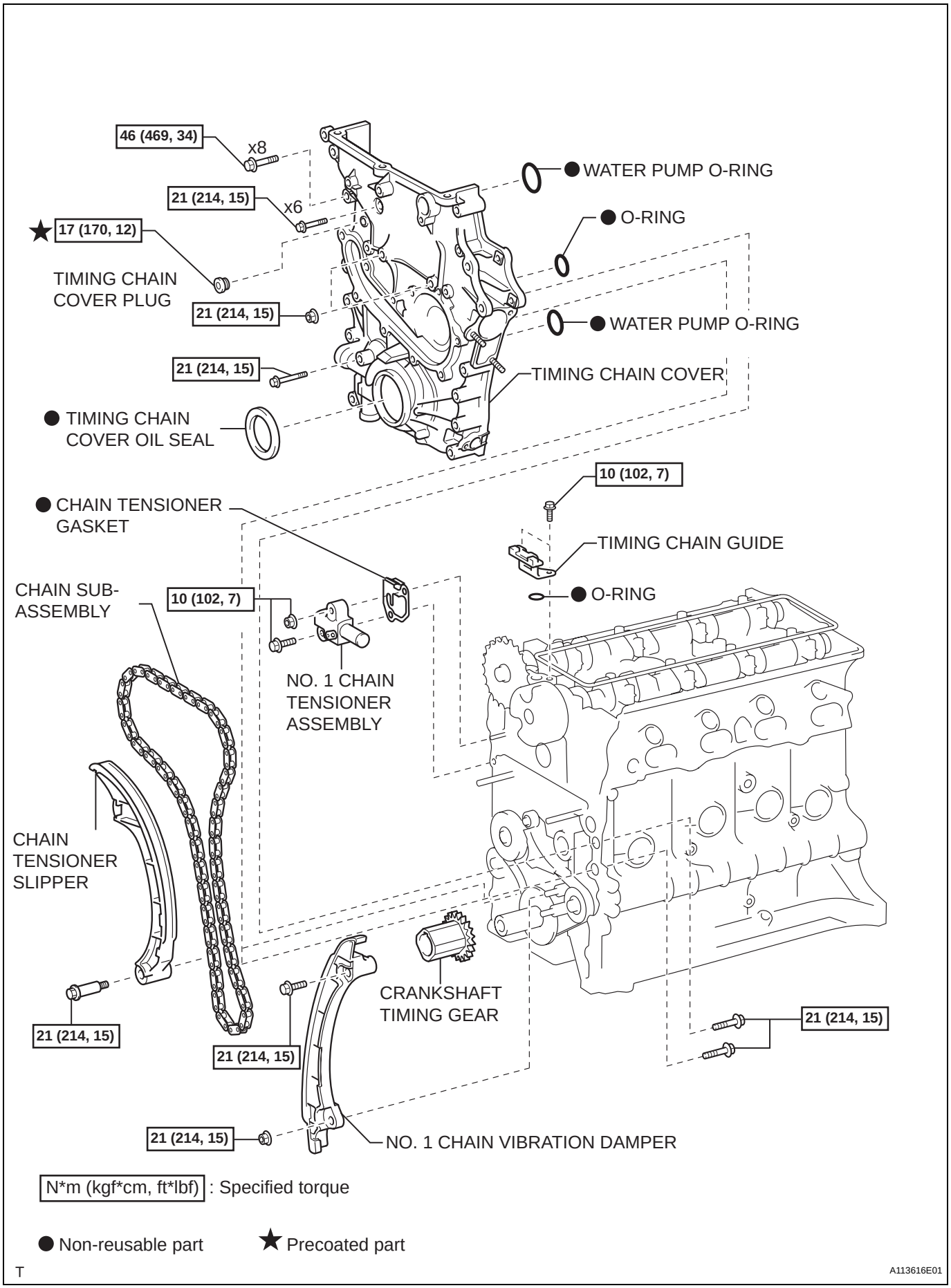


EM
cardiagn.com

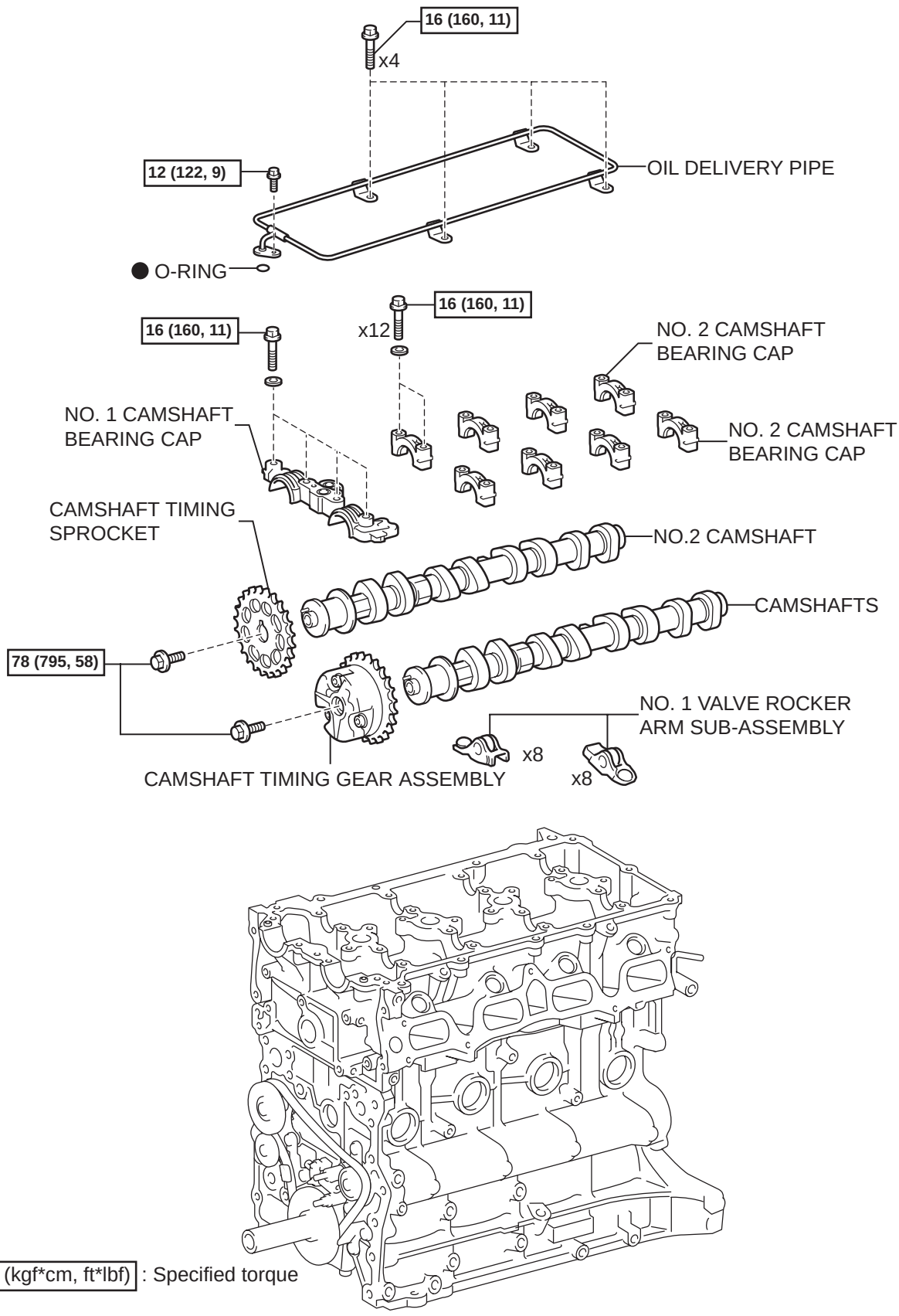


N*m (kgf*cm, ft*lbf) : Specified torque

● Non-reusable part

T

A113617E01

cardiagn.com

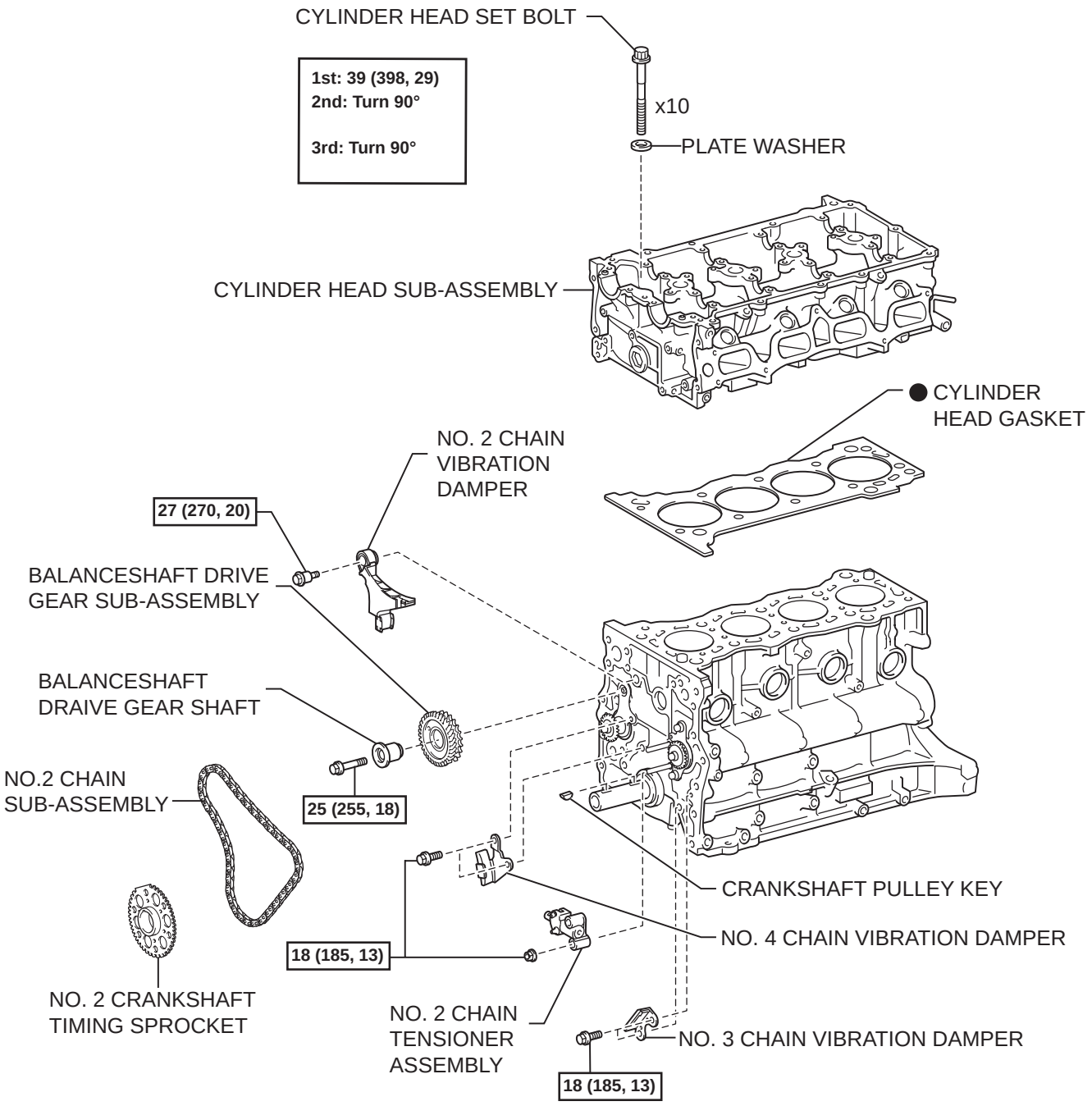


N*m (kgf*cm, ft*lbf) : Specified torque

● Non-reusable part

T

A113618E01

EM
cardiagn.com

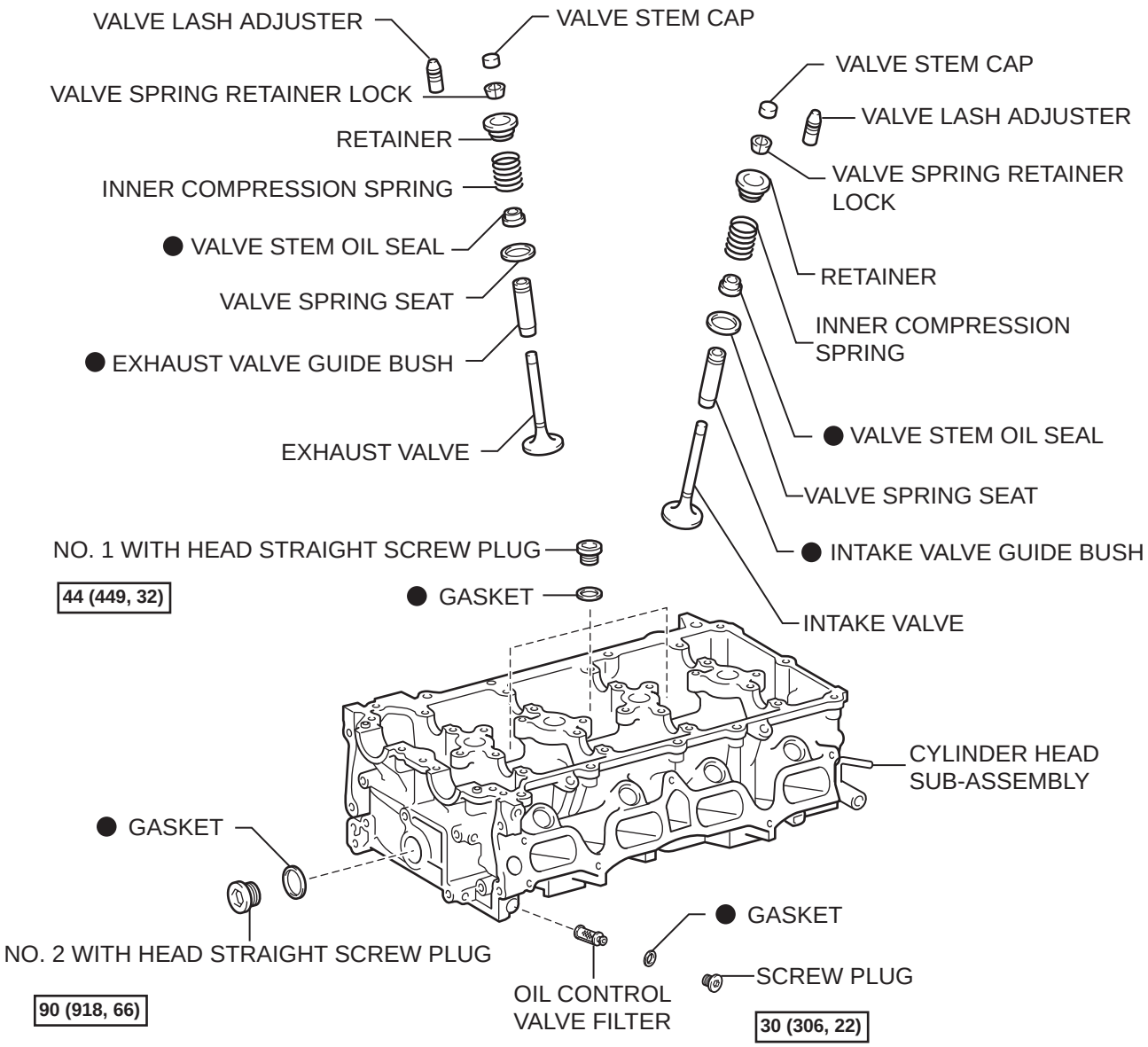


N*m (kgf*cm, ft*lbf) : Specified torque

● Non-reusable part

T

A113619E01

cardiagn.com

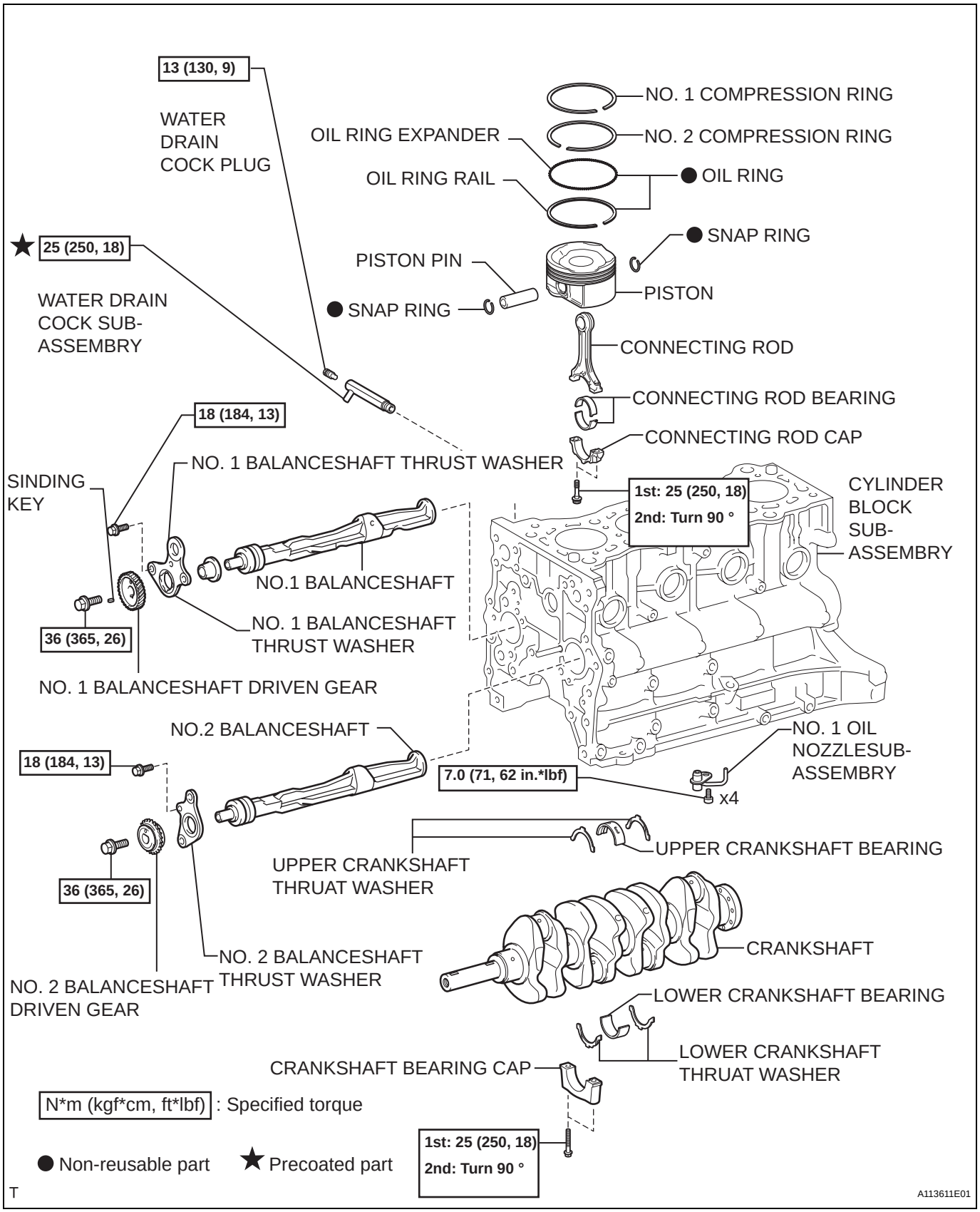


EM
cardiagn.com

# DISASSEMBLY

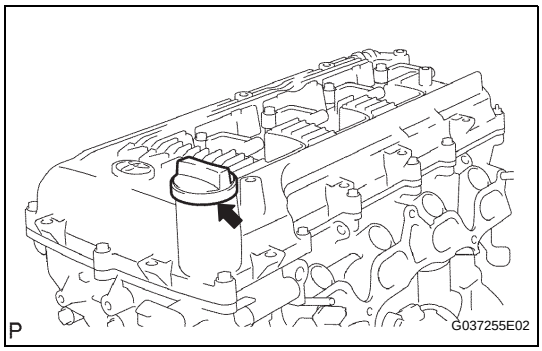


**1. REMOVE OIL FILLER CAP SUB-ASSEMBLY**

(a) Remove the oil filler cap sub-assembly.

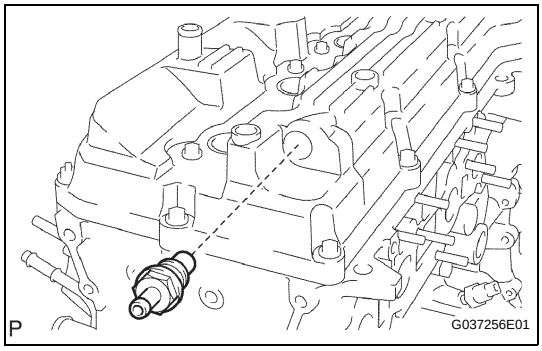


**2. REMOVE VENTILATION VALVE SUB-ASSEMBLY**

(a) Remove the ventilation valve sub-assembly.

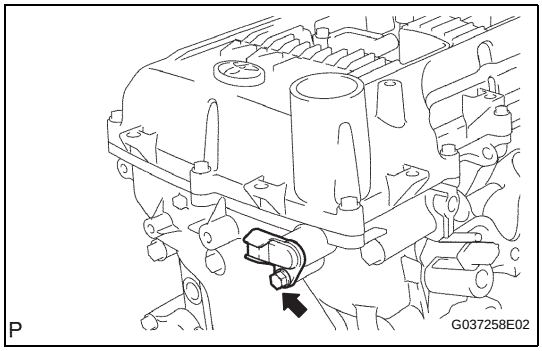


**3. REMOVE CAMSHAFT POSITION SENSOR**

(a) Remove the bolt and camshaft position sensor.

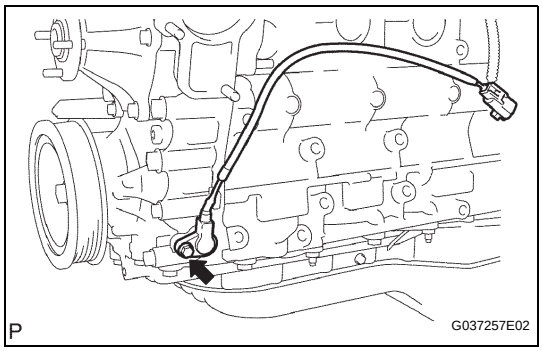


**4. REMOVE CRANKSHAFT POSITION SENSOR**

(a) Remove the bolt and crankshaft position sensor.

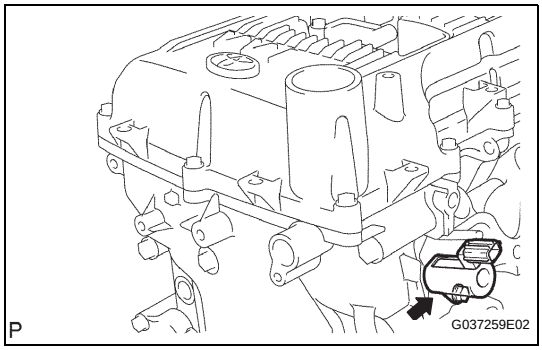


**5. REMOVE CAMSHAFT TIMING OIL CONTROL VALVE ASSEMBLY**

(a) Remove the bolt and camshaft timing oil control valve.

EM

cardiagn.com

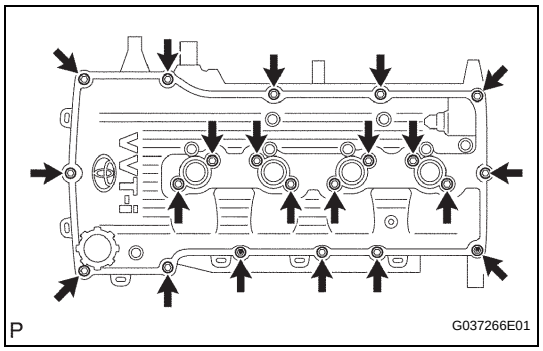


**6. REMOVE CYLINDER HEAD COVER SUB-ASSEMBLY**

(a) Remove the 19 bolts, 2 nuts, head cover and 2 gaskets.

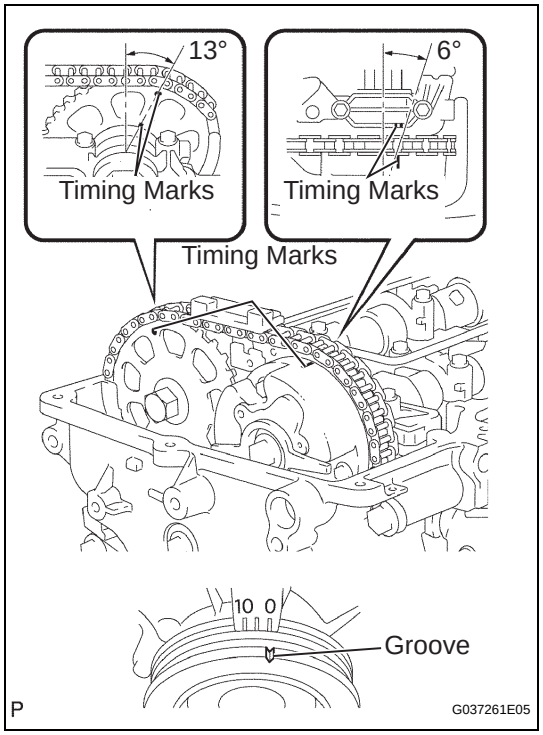


**7. REMOVE CRANKSHAFT PULLEY**

(a) Turn the crankshaft pulley, and align its groove with timing mark 0 of the timing chain cover.

(b) Check that the timing marks of the camshaft timing gear and sprocket are aligned with the timing marks of the bearing cap No.1, as shown in the illustration.

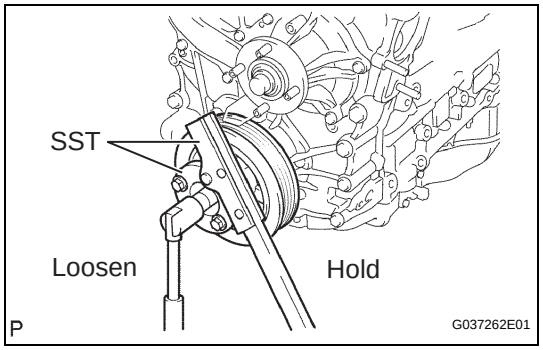


(c) Using SST, loosen the crankshaft pulley bolt.
**SST 09213-54015 (91651-60855), 09330-00021**

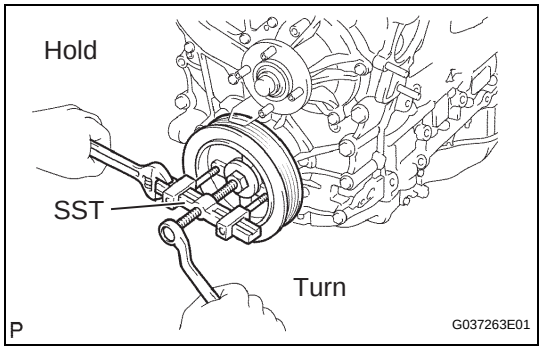


(d) Using SST, remove the crankshaft pulley bolt and crankshaft pulley.
**SST 09950-50013 (09951-05010, 09952-05010, 09953-05010, 09954-05021)**



cardiagn.com

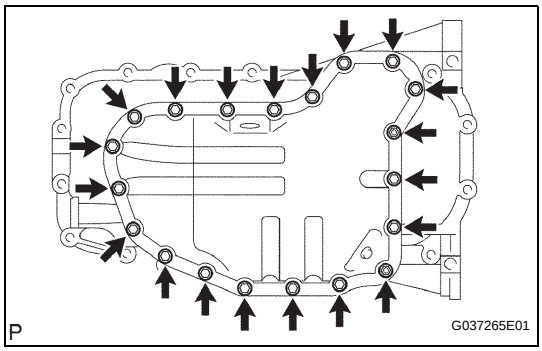


**8. REMOVE NO. 2 OIL PAN SUB-ASSEMBLY**

(a) Remove the drain plug and gasket.

(b) Remove the 18 bolts and 2 nuts.

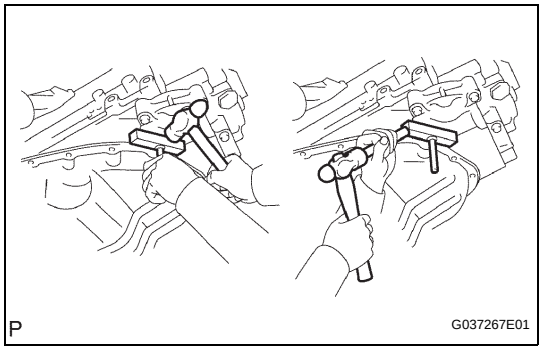


(c) Insert the blade of SST between the oil pans. Cut through the applied sealer and remove the oil pan sub-assembly No.2.

**SST 09032-00100**

**NOTICE:**

**Be careful not to damage the contact surfaces of the oil pans.**

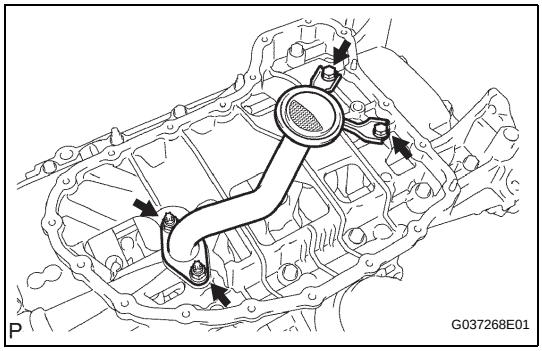


**9. REMOVE OIL STRAINER SUB-ASSEMBLY**

(a) Remove the 2 bolts, 2 nuts, oil strainer and gasket.

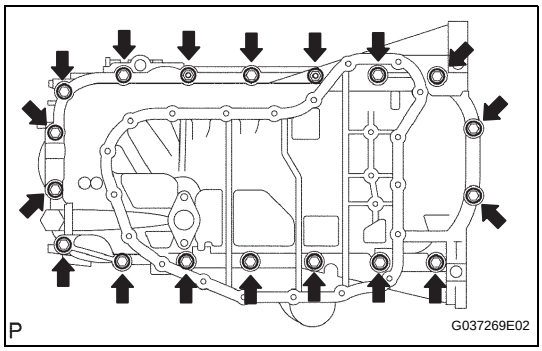


**10. REMOVE OIL PAN SUB-ASSEMBLY**

(a) Remove the 16 bolts and 2 nuts.

EM

cardiagn.com

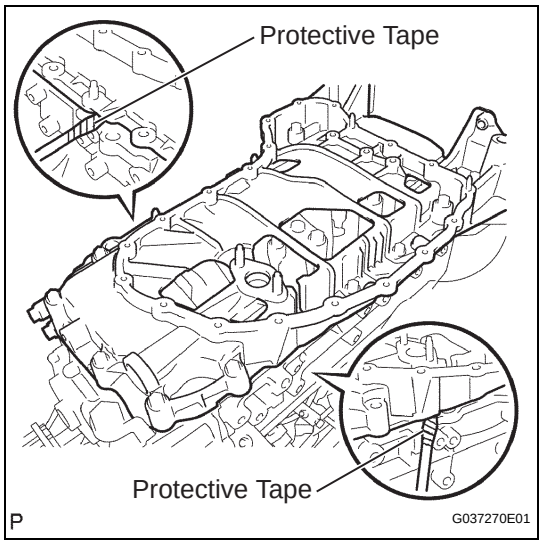


(b) Remove the oil pan by prying between the oil pan and cylinder block with a screwdriver.
**NOTICE:**
**Be careful not to damage the contact surfaces of the cylinder block and oil pan.**
HINT:
Tape the screwdriver tip before use.

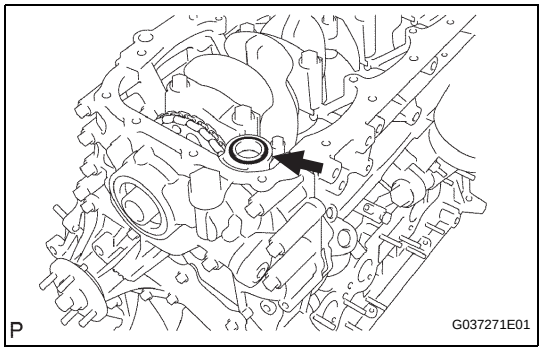


(c) Remove the O-ring.

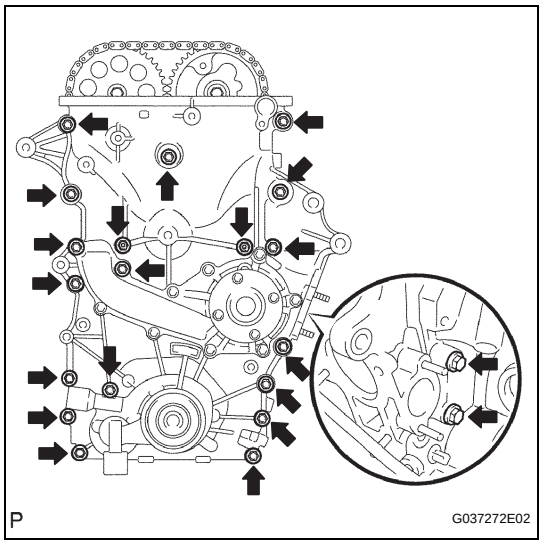


**11. REMOVE TIMING CHAIN COVER**

(a) Remove the 19 bolts and 2 nuts as shown in the illustration.



cardiagn.com

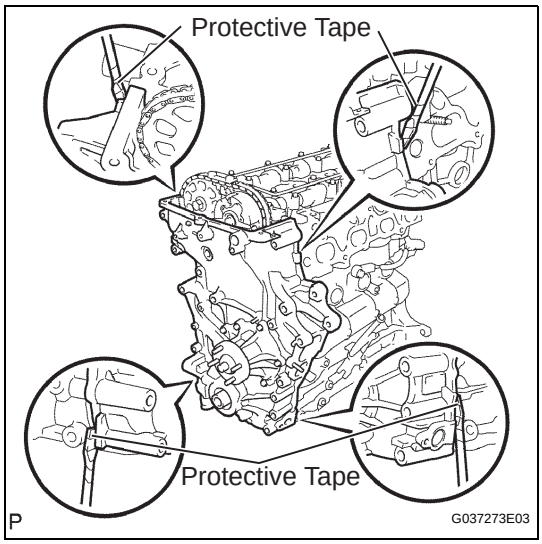


(b) Remove the timing chain cover by prying between the timing chain cover and cylinder head or cylinder block with a screwdriver.
HINT:
Tape the screwdriver tip before use.
**NOTICE:**
**Be careful not to damage the contact surfaces of the cylinder head, cylinder block and timing chain cover.**

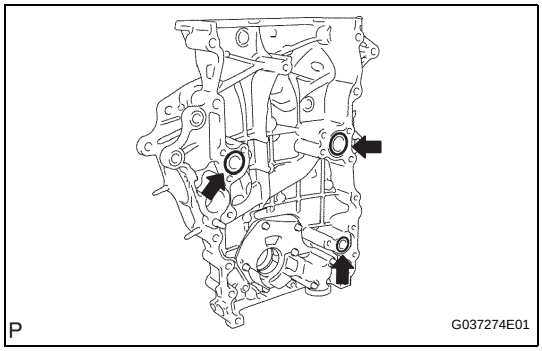


(c) Remove the 3 O-rings.

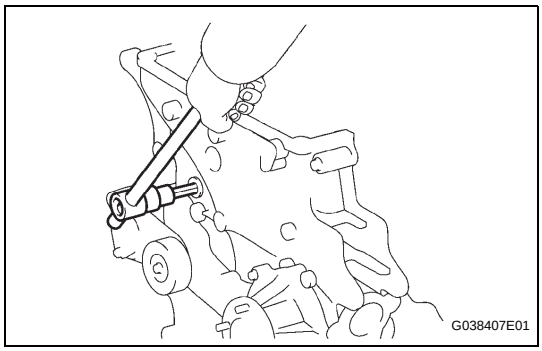


(d) Using a 10 mm socket hexagon wrench, remove the timing chain cover plug.

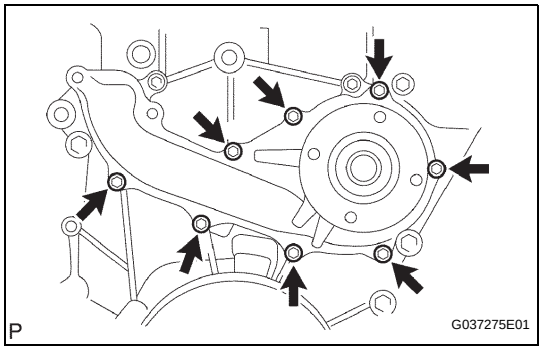


**12. REMOVE WATER PUMP ASSEMBLY**

(a) Remove the 8 bolts, water pump and gasket.

cardiagn.com

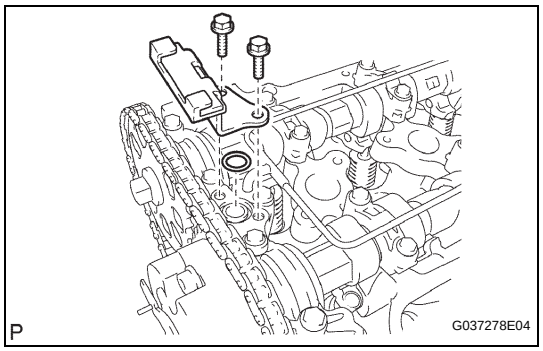


**13. REMOVE TIMING CHAIN GUIDE**

(a) Remove the 2 bolts, timing chain guide and O-ring.

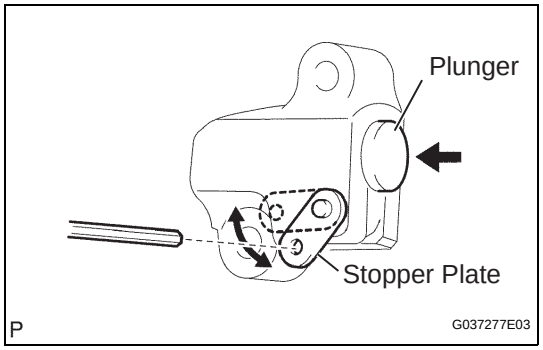


**14. REMOVE NO. 1 CHAIN TENSIONER ASSEMBLY**

**NOTICE:**

- **When the chain tensioner is removed, do not rotate the crankshaft.**
- **When the chain is removed and the camshaft needs to be rotated, rotate the crankshaft 90 degrees to the right.**

(a) Move the stopper plate upward to release the lock, and push the plunger deep into the tensioner.

(b) Move the stopper plate downward to set the lock, and insert a hexagon wrench into the stopper plate's hole.

(c) Remove the bolt, nut, chain tensioner assembly No.1 and gasket.

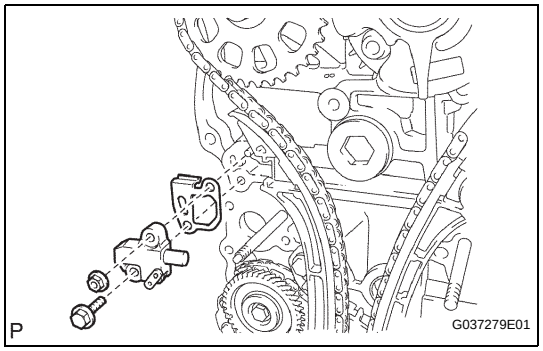


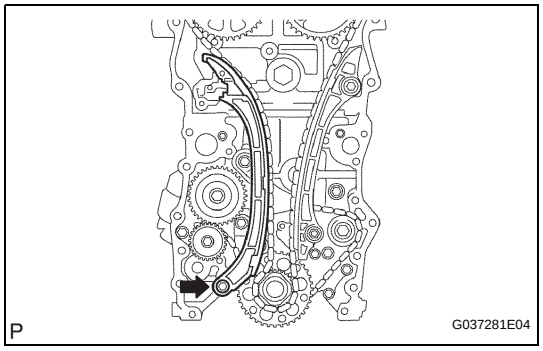


**15. REMOVE CHAIN TENSIONER SLIPPER**

(a) Remove the bolt and tensioner slipper.



cardiagn.com

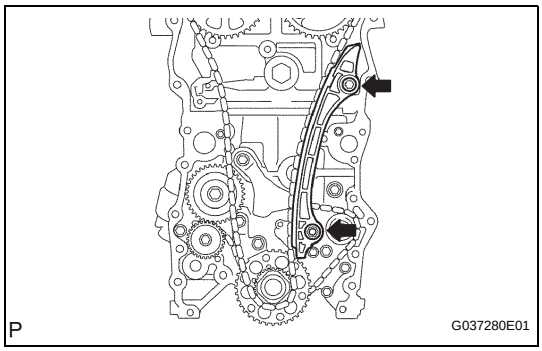


**16. REMOVE NO. 1 CHAIN VIBRATION DAMPER**

(a) Remove the bolt, nut, and vibration damper.

**17. REMOVE CHAIN SUB-ASSEMBLY**

(a) Remove the chain.

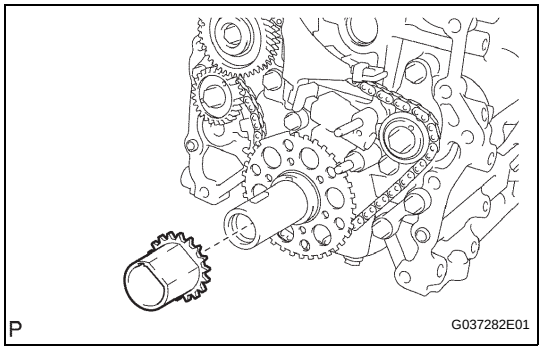


**18. REMOVE CRANKSHAFT TIMING GEAR OR SPROCKET**

(a) Remove the crankshaft timing gear from the crankshaft.

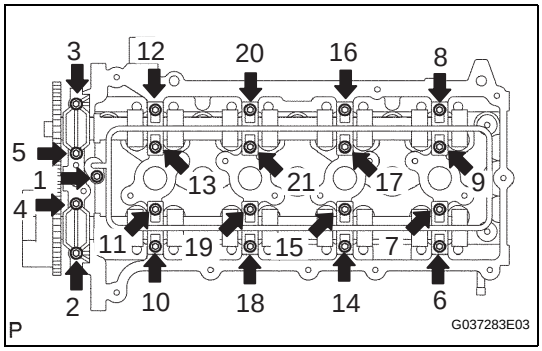


**19. REMOVE CAMSHAFT BEARING CAP**

(a) Uniformly loosen and remove the 21 bearing cap bolts and 20 washers on the camshafts in the sequence shown in the illustration.

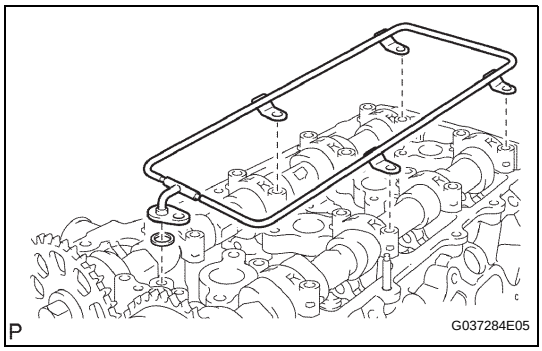


(b) Remove the oil delivery pipe and O-ring from the bearing caps.

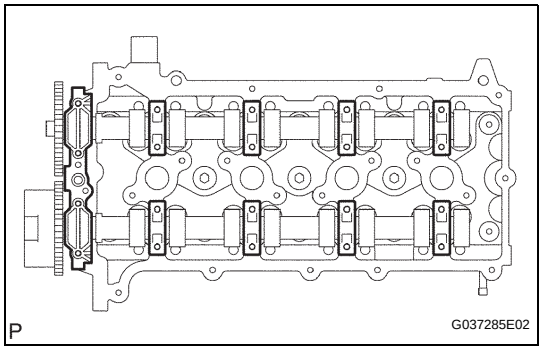


(c) Remove the 9 bearing caps.

cardiagn.com

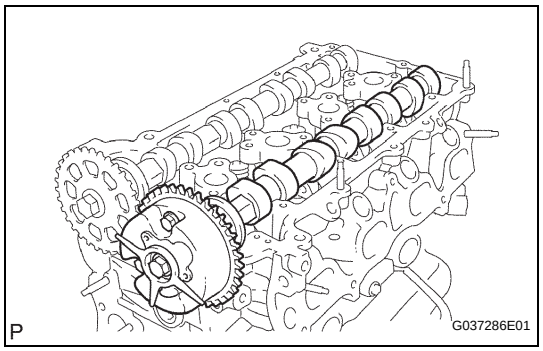


**20. REMOVE CAMSHAFT**

(a) Remove the camshaft sub-assembly.

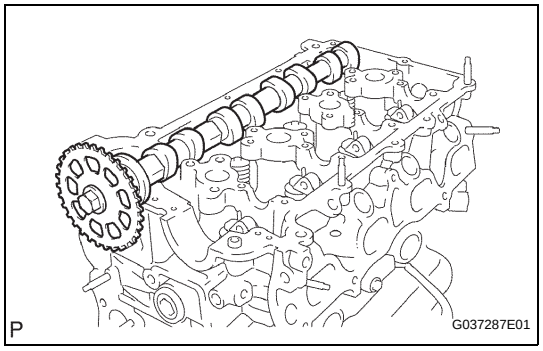


**21. REMOVE NO.2 CAMSHAFT**

(a) Remove the No.2 camshaft sub-assembly.

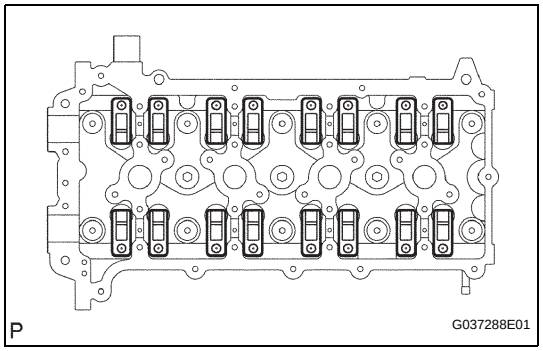


**22. REMOVE NO. 1 VALVE ROCKER ARM SUB-ASSEMBLY**

(a) Remove the 16 valve rocker arm sub-assembly.

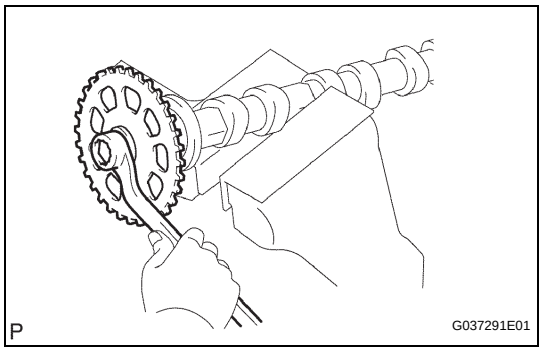


**23. REMOVE CAMSHAFT TIMING SPROCKET**

(a) Fix the camshaft with a vise and then remove the sprocket bolt and camshaft timing sprocket.
**NOTICE:**
**Be careful not to damage the camshaft.**



cardiagn.com

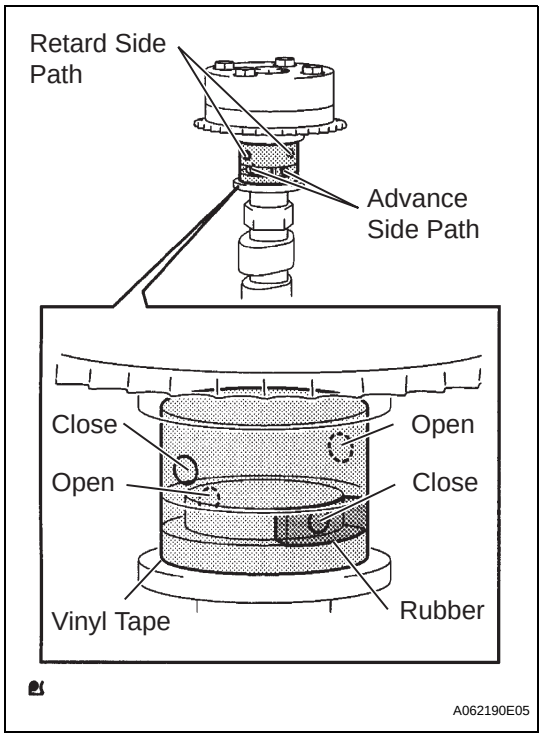


**24. REMOVE CAMSHAFT TIMING GEAR ASSEMBLY**

(a) Check the lock of the camshaft timing gear.

(1) Clamp the camshaft in a vise, and confirm that the camshaft timing gear is locked.

**NOTICE:**

**Be careful not to damage the camshaft.**

(b) Release the lock pin.

(1) Cover the 4 oil paths of the cam journal with vinyl tape as shown in the illustration.

HINT:

2 advance side paths are provided in the groove of the camshaft. Plug one of the paths with a rubber piece.

(2) Break through the tape of the advance side path and the retard side path on the opposite side to the hole of the advance side path, as shown in the illustration.

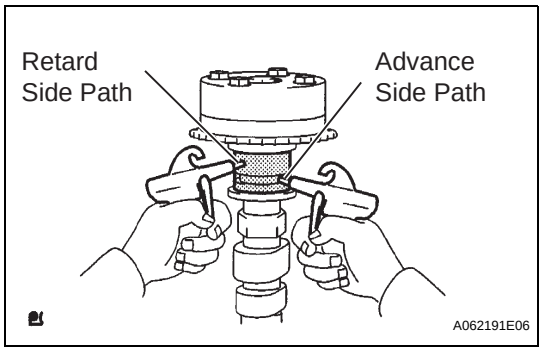


(3) Apply approximately 200 kPa (2.0 kgf*cm$^2$, 28 psi) of air pressure to the two broken paths.

**CAUTION:**

**Some oil splashing will occur. Cover the paths with a shop rag.**

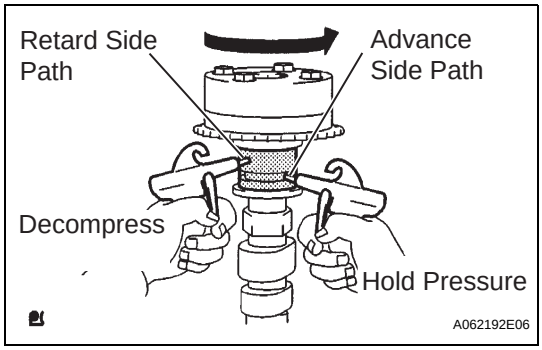


(4) Check that the camshaft timing gear revolves in the advance direction when reducing the air pressure applied to the retard side path.

**OK:**

**Gear rotates in the advance direction.**

HINT:

This operation releases the lock pin for the most retarded position.

(5) When the camshaft timing gear reaches the most advanced position, release the air pressure from the retard side path and advance side path, in that order.

**NOTICE:**

**Do not release the air pressure from the advance side path first. The gear may abruptly shift in the retard direction and break the lock pin.**



cardiagn.com

(c) Check for smooth rotation.
(1) Rotate the camshaft timing gear within its movable range several times, but do not turn it to the most retarded position. Check that the gear rotates smoothly.
**OK:**
**Gear rotates in the advance direction.**
**CAUTION:**
**Do not use an air pressure to perform the smooth operation check.**

(d) Check the lock in the most retarded position.
(1) Confirm that the camshaft timing gear is locked at the most retarded position.

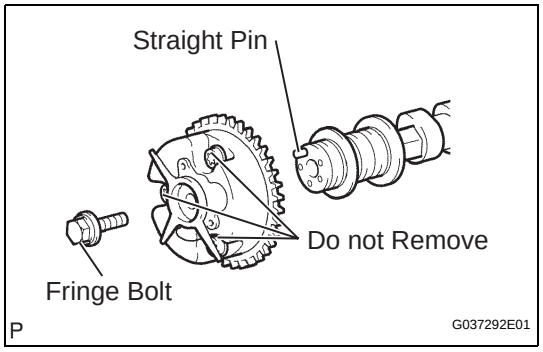


**25. REMOVE CAMSHAFT TIMING GEAR ASSEMBLY**
(a) Remove the fringe bolt and camshaft timing gear.
**NOTICE:**
- **Be sure not to remove the other 3 bolts.**
- **If planning to reuse the gear, be sure to release the straight pin lock before installing the gear.**

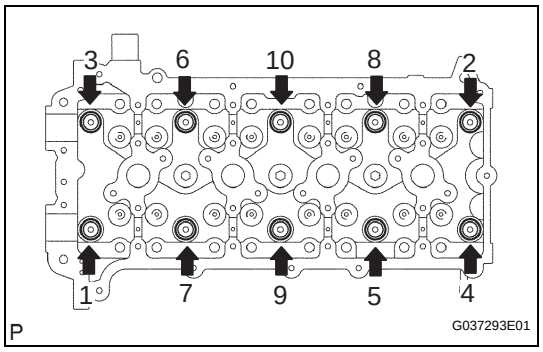


**26. REMOVE CYLINDER HEAD SUB-ASSEMBLY**
(a) Uniformly loosen the 10 bolts in the sequence shown in the illustration. Remove the 10 cylinder head bolts and plate washers.
**NOTICE:**
- **Be careful not to drop washers into the cylinder head.**
- **Head warpage or cracking could result from removing bolts in an incorrect order.**

(b) Remove the cylinder head.

**27. REMOVE CYLINDER HEAD GASKET**
(a) Remove the cylinder head and gasket.

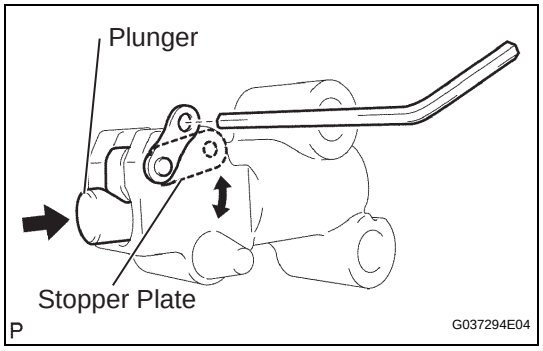


**28. REMOVE NO. 2 CHAIN VIBRATION DAMPER**
(a) Move the stopper plate downward to release the lock, and push the plunger deep into the tensioner.
(b) Move the stopper plate upward to set the lock, and insert a hexagon wrench into the stopper plate's hole.



cardiagn.com

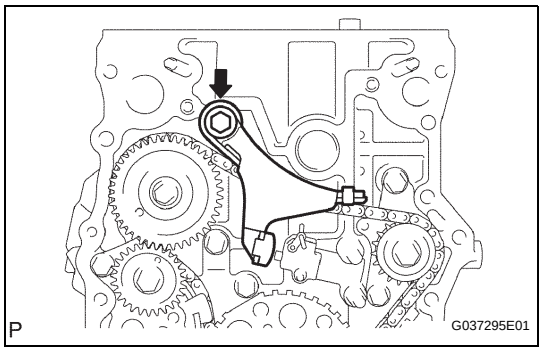


(c) Remove the bolt and chain vibration damper No.2.

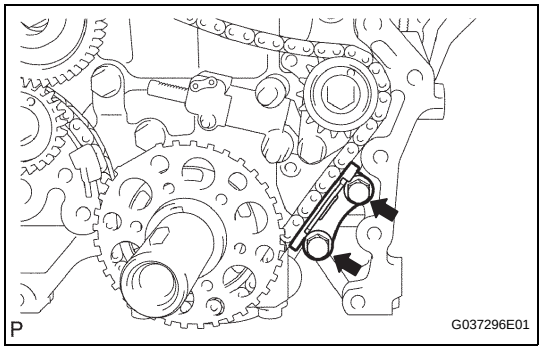


**29. REMOVE NO. 3 CHAIN VIBRATION DAMPER**

(a) Remove the 2 bolts and chain vibration damper No.3.

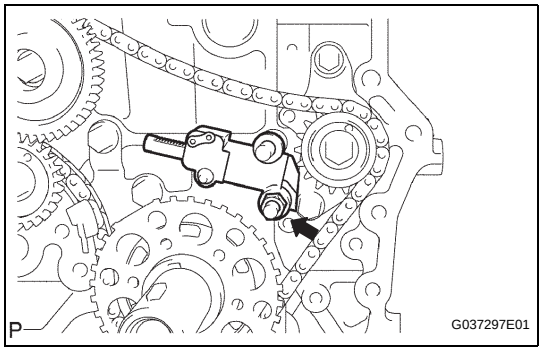


**30. REMOVE NO. 2 CHAIN TENSIONER ASSEMBLY**

(a) Remove the hexagon wrench from the tensioner assembly No.2.

(b) Remove the nut and chain tensioner assembly No.2.

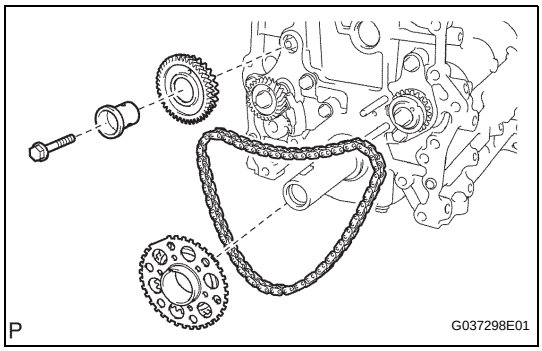


**31. REMOVE NO.2 CHAIN SUB-ASSEMBLY**

(a) Remove the bolt, balanceshaft drive gear shaft and balanceshaft drive gear.

(b) Remove the crankshaft timing sprocket No.2 and chain.

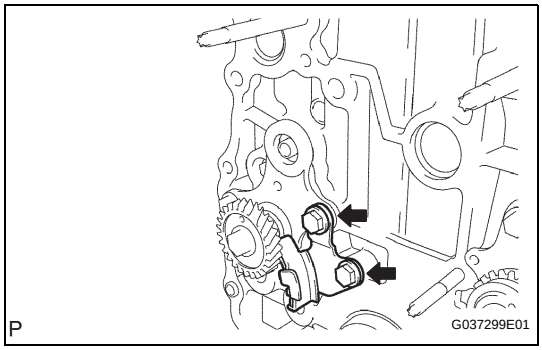


**32. REMOVE NO. 4 CHAIN VIBRATION DAMPER**

(a) Remove the 2 bolts and vibration damper No.4.

EM

cardiagn.com

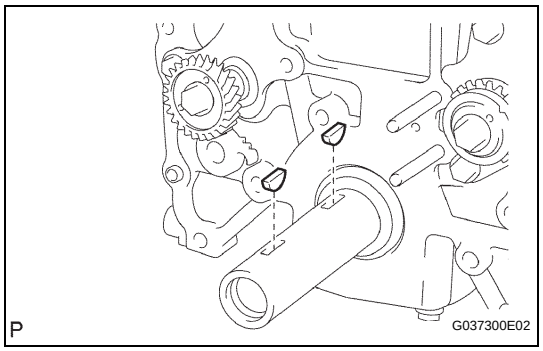


**33. REMOVE CRANKSHAFT PULLEY SET CRANKSHAFT KEY**

(a) Remove the 2 pulley set keys from the crankshaft.

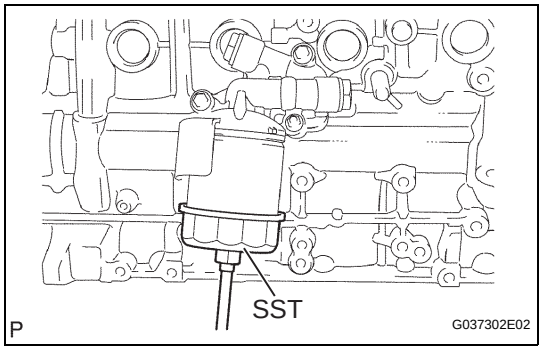


**34. REMOVE OIL FILTER SUB-ASSEMBLY**

(a) Using SST, remove the oil filter.
**SST 09228-07501**

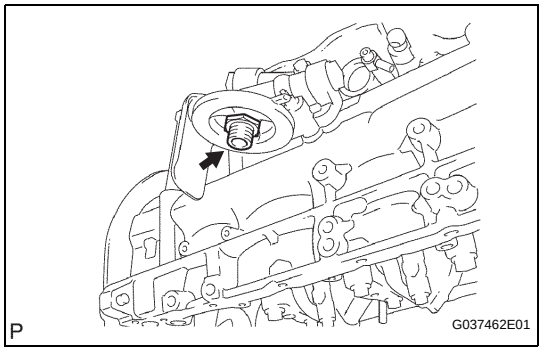


(b) Using a 27 mm socket wrench, remove the oil filter union.

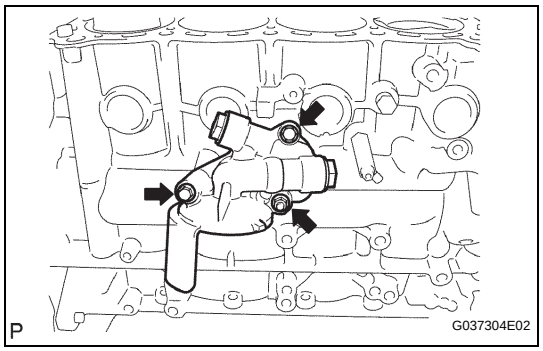


**35. REMOVE OIL FILTER BRACKET SUB-ASSEMBLY**

(a) Remove the 2 bolts and nut from the oil filter bracket.

(b) Remove the 2 screw plugs and 2 gaskets from the oil filter bracket.



cardiagn.com

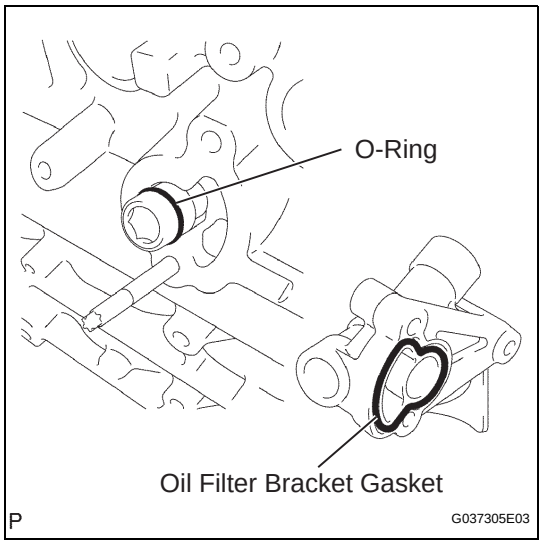


(c) Remove the oil filter bracket gasket and O-ring.

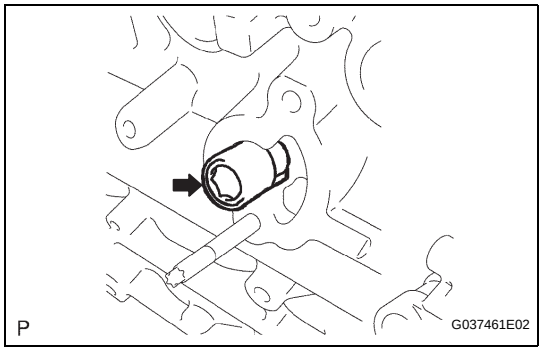


(d) Using a hexagon wrench, remove the oil filter bracket union.

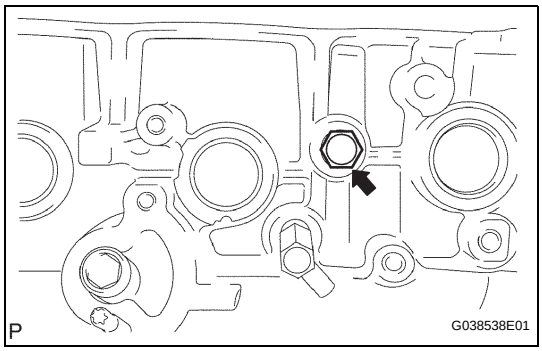


**36. REMOVE NO. 1 WITH HEAD TAPER SCREW PLUG**

(a) Remove the taper screw plug from the cylinder block.

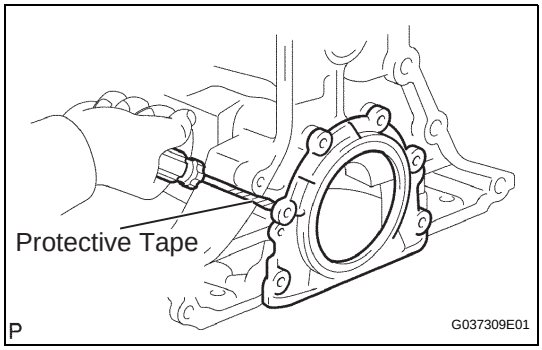


**37. REMOVE ENGINE REAR OIL SEAL RETAINER**

(a) Remove the 6 bolts.

(b) Using a screwdriver with its tip taped, pry out the oil seal retainer.
HINT:
Tape the screwdriver tip before use.

cardiagn.com

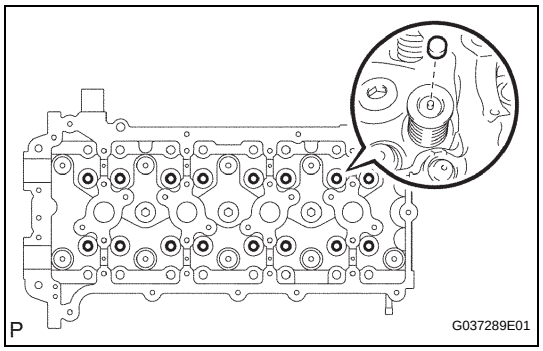


**38. REMOVE VALVE STEM CAP**

(a) Remove the valve stem caps from the cylinder head.
HINT:
Arrange the removed parts in the correct order.

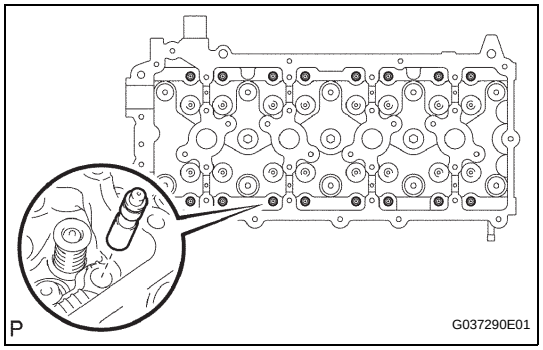


**39. REMOVE VALVE LASH ADJUSTER ASSEMBLY**

(a) Remove the valve lash adjusters from the cylinder head.
HINT:
Arrange the removed parts in the correct order.

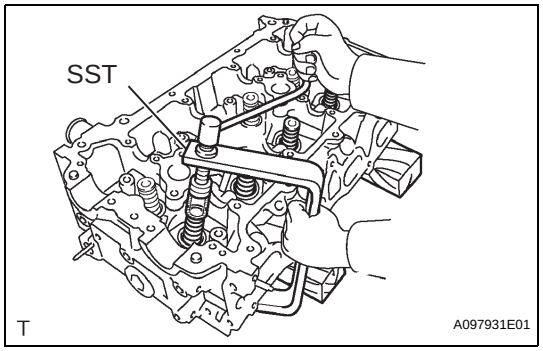


**40. REMOVE INTAKE VALVE**

(a) Using SST and wooden blocks, compress the compression spring and remove the valve retainer locks.
**SST 09202-70020 (09202-00010)**

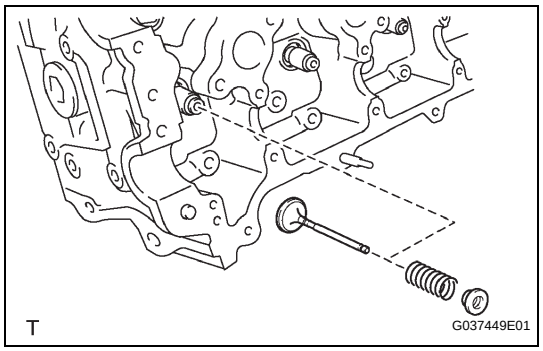


(b) Remove the retainer, compression spring, and valve.
HINT:
Arrange the removed parts in the correct order.

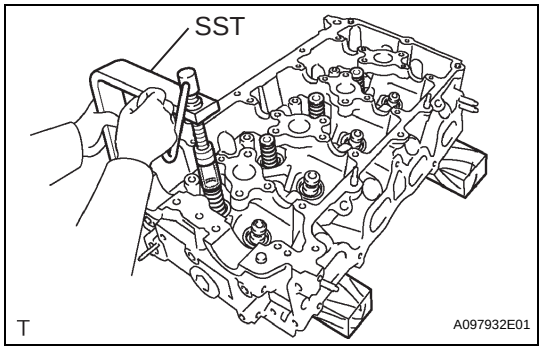


**41. REMOVE EXHAUST VALVE**

(a) Using SST and wooden blocks, compress the compression spring and remove the valve retainer locks.
**SST 09202-70020 (09202-00010)**



cardiagn.com

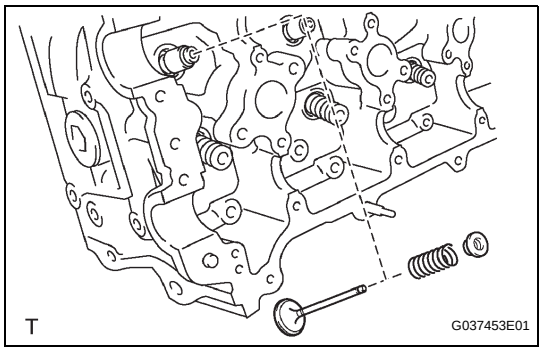


(b) Remove the retainer, compression spring, and valve.
HINT:
Arrange the removed parts in the correct order.

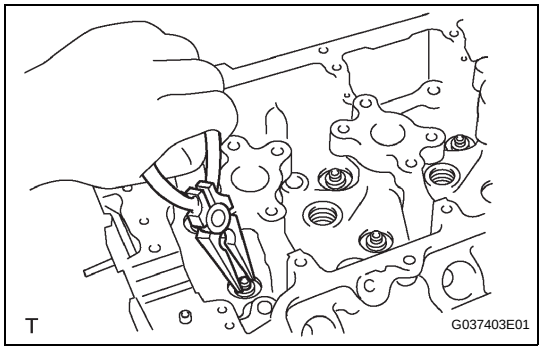


**42. REMOVE VALVE STEM OIL SEAL**
(a) Using needle-nose pliers, remove the oil seals.

**43. REMOVE VALVE SPRING SEAT**
(a) Remove the valve spring seats from the cylinder head.

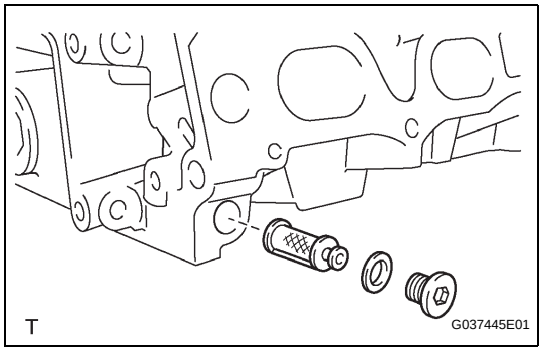


**44. REMOVE OIL CONTROL VALVE FILTER**
(a) Using an 8 mm hexagon wrench, remove the screw plug.
(b) Remove the oil control valve filter and gasket.

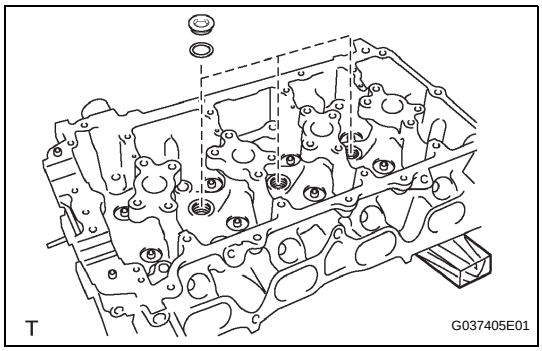


**45. REMOVE NO. 1 WITH HEAD STRAIGHT SCREW PLUG**
(a) Using a 10 mm hexagon wrench, remove the 3 screw plugs and 3 gaskets.
**NOTICE:**
**If water leaks from the w/ head straight screw plug No.1 or the plug corrodes, replace it.**

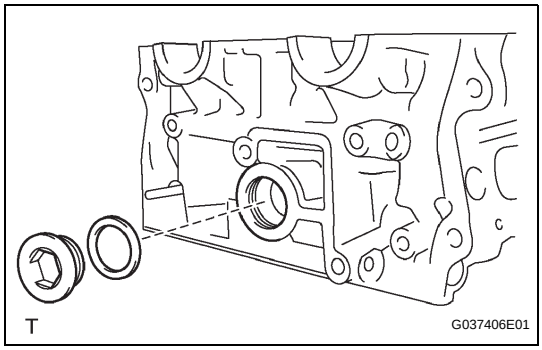


**46. REMOVE NO. 2 WITH HEAD STRAIGHT SCREW PLUG**
(a) Using a 19 mm hexagon wrench, remove the screw plug and gasket.
**NOTICE:**
**If water leaks from the w/ head straight screw plug No.2 or the plug corrodes, replace it.**

**47. REMOVE CRANKSHAFT BEARING**



cardiagn.com

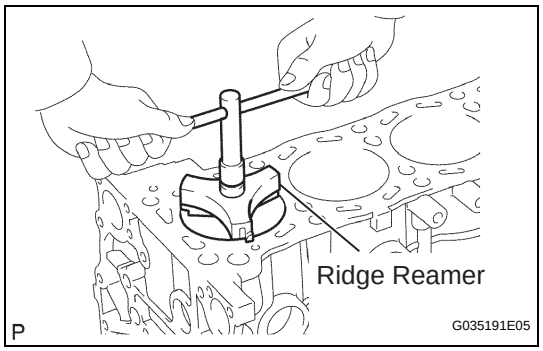


**48. REMOVE PISTON SUB-ASSEMBLY WITH CONNECTING ROD**

(a) Using a ridge reamer, remove all the carbon from the top of the cylinder.

(b) Push the piston, connecting rod assembly and upper bearing through the top of the cylinder block.
HINT:
- Keep the bearing, connecting rod and cap together.
- Arrange the piston and connecting rod assemblies in the correct order.

**49. REMOVE CONNECTING ROD BEARING**
HINT:
Arrange the removed parts in the correct order.

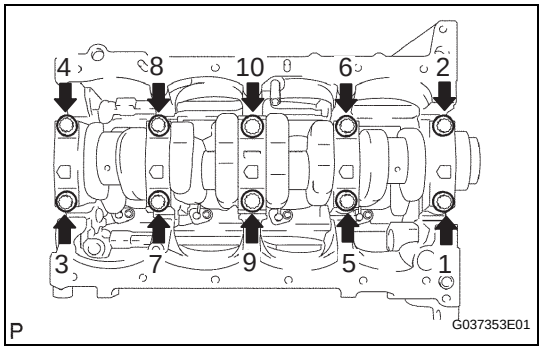


**50. REMOVE CRANKSHAFT**

(a) Uniformly loosen the 10 bearing cap bolts, in several steps, in the sequence shown in the illustration.
HINT:
- Keep the lower bearings and crankshaft bearing caps together.
- Arrange the thrust washers in the correct order.

(b) Lift out the crankshaft.

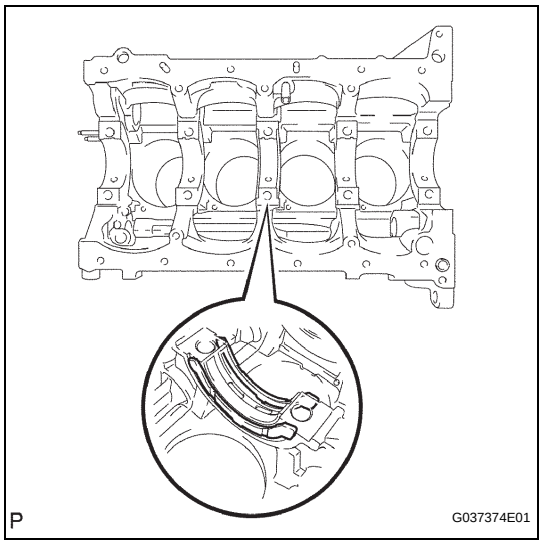


(c) Remove the upper bearings and upper thrust washers from the cylinder block.
HINT:
Arrange the main bearing caps, bearings and thrust washers in the correct order.

**51. REMOVE CRANKSHAFT BEARING**
HINT:
Arrange the removed parts in the correct order.

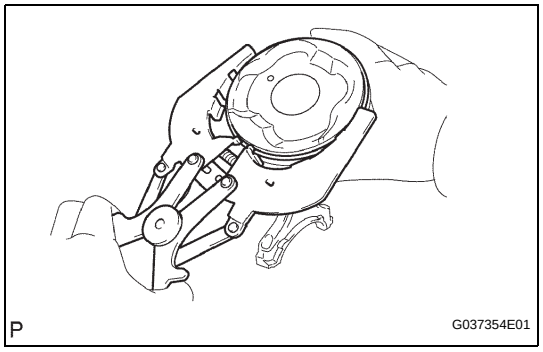


**52. REMOVE PISTON RING SET**

(a) Using a piston ring expander, remove the 2 compression rings.

(b) Using a piston ring expander, remove the oil ring rail.

(c) Remove the oil ring expander by hand.
HINT:
Arrange the piston rings in the correct order.



cardiagn.com

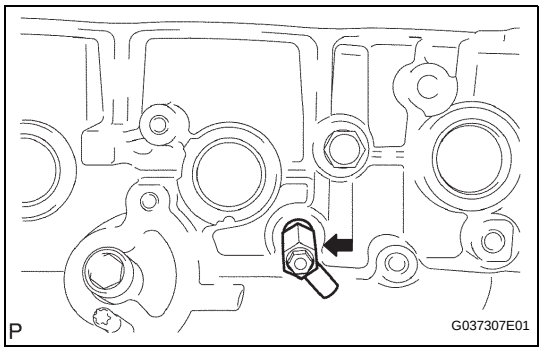


**53. REMOVE CYLINDER BLOCK WATER DRAIN COCK SUB-ASSEMBLY**

(a) Remove the water drain cock sub-assembly from the cylinder block.

(b) Remove the water drain cock plug from the water drain cock sub-assembly.

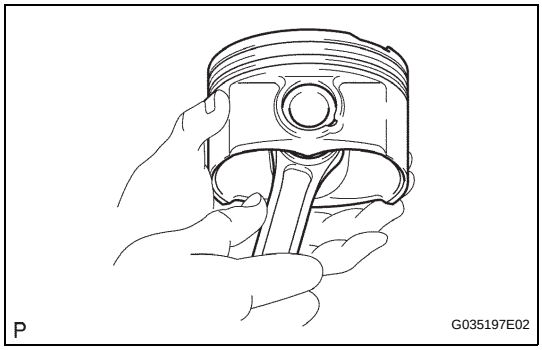


**54. REMOVE WITH PIN PISTON SUB-ASSEMBLY**

(a) Check the fitting condition between the piston and piston pin.

(1) Try to move the piston back and forth on the piston pin.
If any movement is felt, replace the piston and pin as a set.

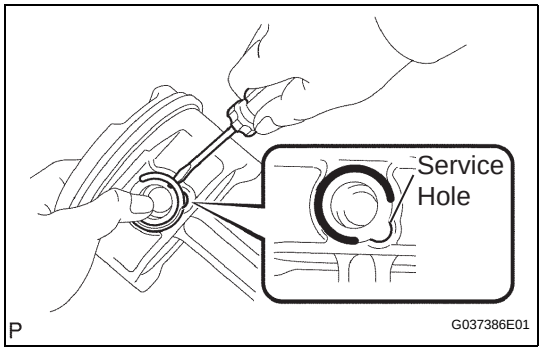


(b) Disconnect the connecting rod from the piston.

(1) Using a screwdriver, pry off the snap rings from the piston.

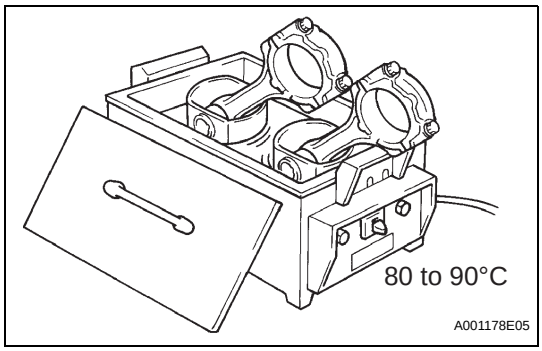


(2) Gradually heat the piston to approximately 80 to 90°C (176 to 194°F).

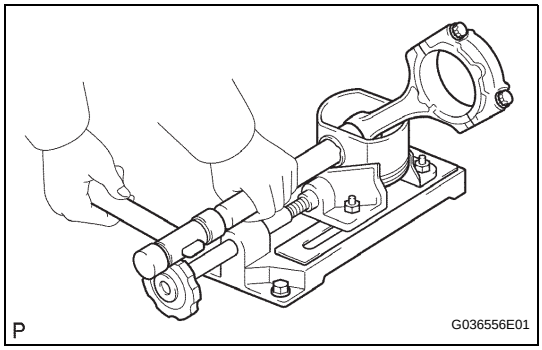


(3) Using a brass bar and plastic-faced hammer, lightly tap out the piston pin and remove the connecting rod.
HINT:
- The piston and pin are a matched set.
- Arrange the pistons, pins, rings, connecting rods and bearings in the correct order.

EM

cardiagn.com

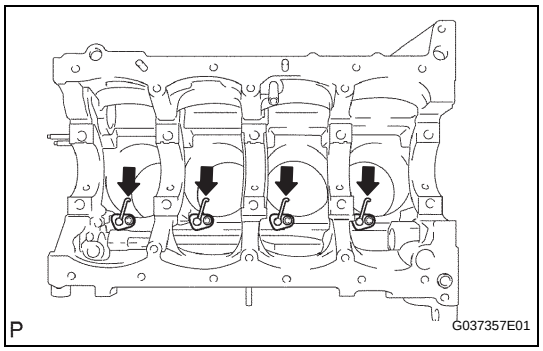


**55. REMOVE NO. 1 OIL NOZZLE SUB-ASSEMBLY**

(a) Using a 5 mm hexagon wrench, remove the oil nozzles.

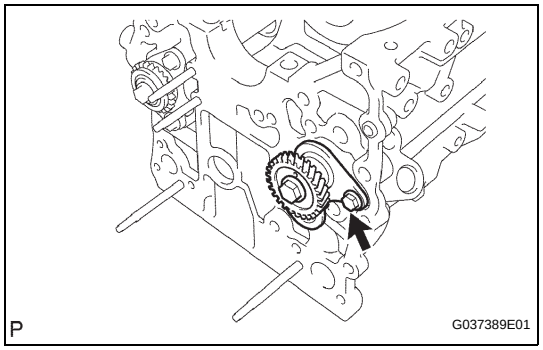


**56. REMOVE NO.1 BALANCESHAFT**

(a) Remove the bolt.

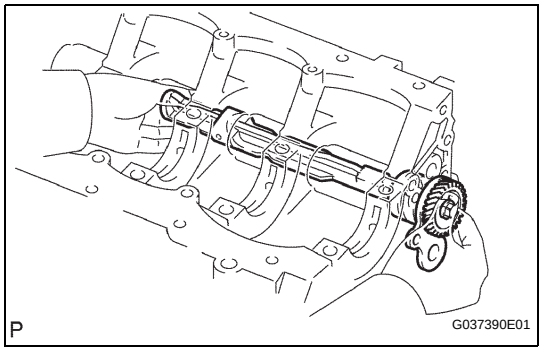


(b) Remove the balanceshaft from the cylinder block.
**NOTICE:**
**When removing the balanceshaft, make sure to support the balanceshaft with both hands and avoid scratching the balanceshaft bearing on the cylinder block side.**

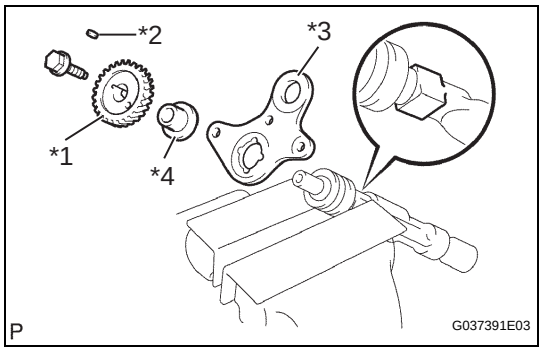


**57. REMOVE NO. 1 BALANCESHAFT DRIVEN GEAR**

(a) Mount the head portion of the balanceshaft in a vise.
**NOTICE:**
**Be careful not to damage the balanceshaft.**

(b) Remove the bolt.

(c) Remove the balanceshaft driven gear No.1 (*1), sliding key (*2), balanceshaft thrust washer No.1 (*3) and balanceshaft thrust spacer (*4).

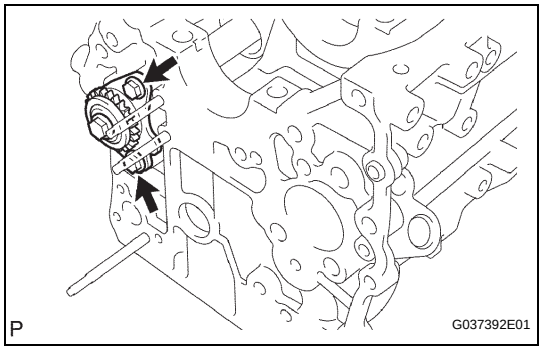


**58. REMOVE NO.2 BALANCESHAFT**

(a) Remove the 2 bolts.



cardiagn.com

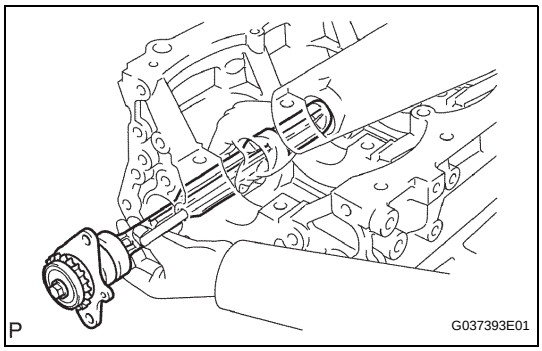


(b) Remove the balanceshaft from the cylinder block.
**NOTICE:**
**When removing the balanceshaft, make sure to support the balanceshaft with both hands and avoid scratching the balanceshaft bearing on the cylinder block side.**

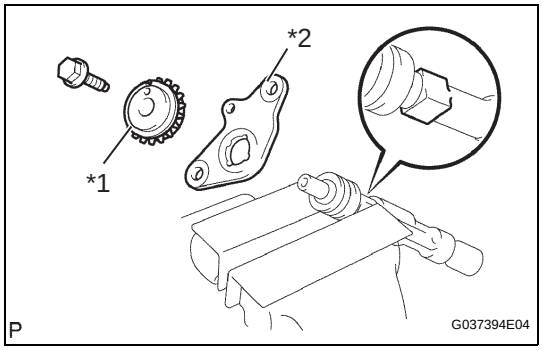


**59. REMOVE NO. 2 BALANCESHAFT DRIVEN GEAR**

(a) Mount the head portion of the balanceshaft in a vise.
**NOTICE:**
**Be careful not to damage the balanceshaft.**
(b) Remove the bolt.
(c) Remove the balanceshaft driven gear No.2 (*1) and balanceshaft thrust washer No.2 (*2).

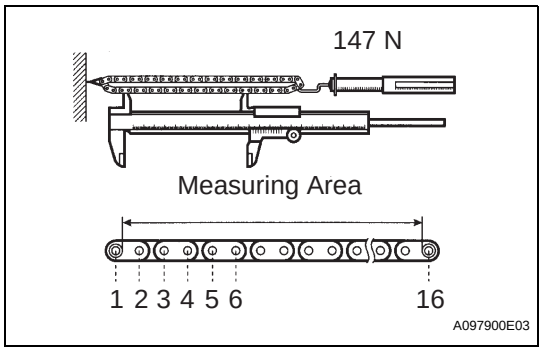


# INSPECTION

**1. INSPECT CHAIN SUB-ASSEMBLY**

(a) Pull the chain with a force of 147 N (15 kgf, 33 lbf) as shown in the illustration.
(b) Using vernier calipers, measure the length of 16 links.
**Maximum chain elongation:**
**147.5 mm (5.807 in.)**
If the elongation is greater than the maximum, replace the chain.
**NOTICE:**
**Perform the same measurement by pulling at random in 3 or more places to obtain an average.**

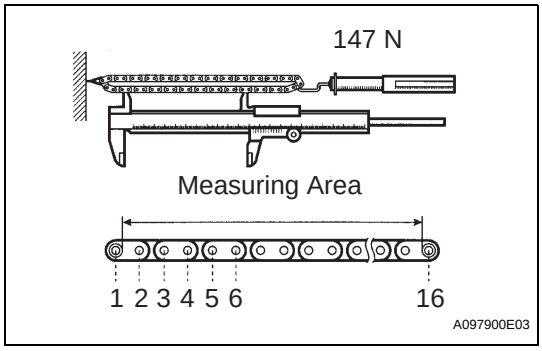


**2. INSPECT NO.2 CHAIN SUB-ASSEMBLY**

(a) Pull the chain with a force of 147 N (15 kgf, 33 lbf) as shown in the illustration.
(b) Using vernier calipers, measure the length of 16 links.
**Maximum chain elongation:**
**123.6 mm (4.866 in.)**
If the elongation is greater than the maximum, replace the chain.
**NOTICE:**
**Perform the same measurement by pulling at random in 3 or more places to obtain an average.**



cardiagn.com

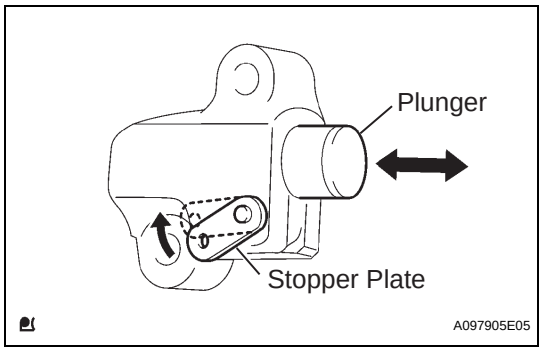


**3. INSPECT NO. 1 CHAIN TENSIONER ASSEMBLY**

(a) Move the stopper plate upward to release the lock. Push the plunger and check that it moves smoothly.

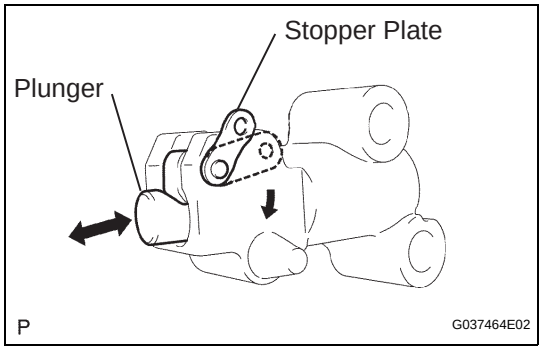


**4. INSPECT NO. 2 CHAIN TENSIONER ASSEMBLY**

(a) Move the stopper plate downward to release the lock. Push the plunger and check that it moves smoothly.

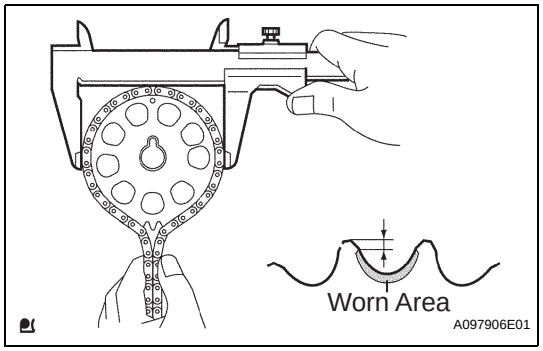


**5. INSPECT CAMSHAFT TIMING GEAR OR SPROCKET**

(a) Measure the distance between the most worn out sprocket tip and the beginning of the worn area below the tip.
**Minimum distance:**
**1.0 mm (0.039 in.)**
If the distance is less than the minimum, replace the sprocket.
HINT:
If the worn area is too small or difficult to distinguish from a normal area, perform steps (b) and (c) below.

(b) Wrap the chain around the sprocket.

(c) Using vernier calipers, measure the sprocket diameter with the chain.
**Minimum sprocket diameter (with chain):**
**113.8 mm (4.480 in.)**
HINT:
- The vernier calipers must contact the chain rollers for the measurement.
- If the diameter is less than the minimum, replace the chain and sprocket.

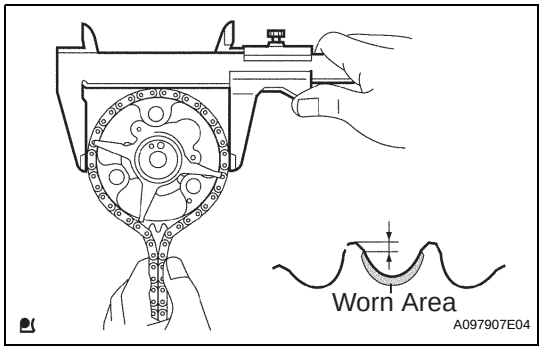


**6. INSPECT CAMSHAFT TIMING GEAR ASSEMBLY**

(a) Measure the distance between the most worn out timing gear tip and the beginning of the worn area below the tip.
**Minimum distance:**
**1.0 mm (0.039 in.)**
If the distance is less than the minimum, replace the timing gear.
HINT:
If the worn area is too small or difficult to distinguish from a normal area, perform steps (b) and (c) below.



cardiagn.com

(b) Wrap the chain around the timing gear.
(c) Using vernier calipers, measure the sprocket diameter with the chain.
**Minimum sprocket diameter (with chain):**
**113.8 mm (4.480 in.)**
HINT:
- The vernier calipers must contact the chain rollers for the measurement.
- If the diameter is less than the minimum, replace the chain and timing gear.

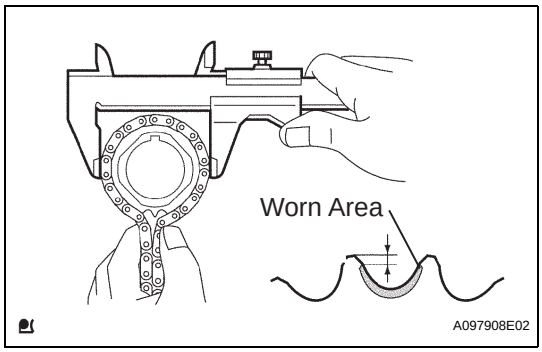


**7. INSPECT CRANKSHAFT TIMING GEAR OR SPROCKET**
(a) Measure the distance between the most worn out sprocket tip and the beginning of the worn area below the tip.
**Minimum distance:**
**1.0 mm (0.039 in.)**
If the distance is less than the minimum, replace the sprocket.
HINT:
If the worn area is too small or difficult to distinguish from a normal area, perform steps (b) and (c) below.
(b) Wrap the chain around the drive sprocket.
(c) Using vernier calipers, measure the sprocket diameter with the chain.
**Minimum sprocket diameter (with chain):**
**59.4 mm (2.338 in.)**
HINT:
- The vernier calipers must contact the chain rollers for the measurement.
- If the diameter is less than the minimum, replace the chain and sprocket.

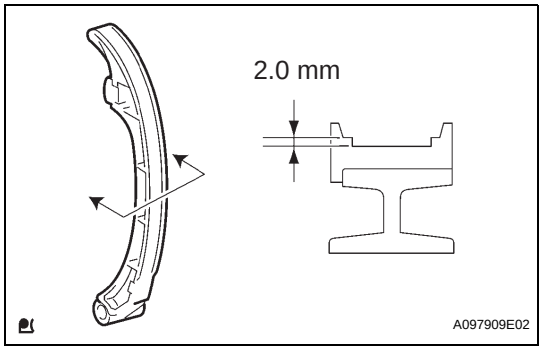


**8. INSPECT CHAIN TENSIONER SLIPPER**
(a) Using vernier calipers, measure the tensioner slipper wear.
**Maximum wear:**
**2.0 mm (0.079 in.)**
If the wear is greater than the maximum, replace the tensioner slipper.

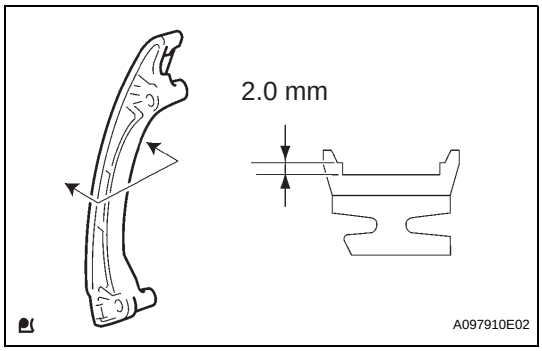


**9. INSPECT NO. 1 CHAIN VIBRATION DAMPER**
(a) Using vernier calipers, measure the vibration damper wear.
**Maximum wear:**
**2.0 mm (0.079 in.)**
If the wear is greater than the maximum, replace the vibration damper.

cardiagn.com

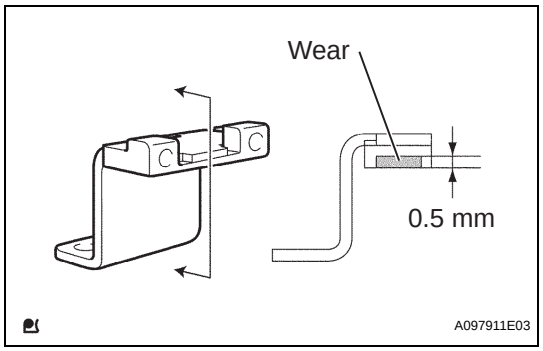


**10. INSPECT TIMING CHAIN GUIDE**

(a) Using vernier calipers, measure the chain guide wear.

**Maximum wear:**
**0.5 mm (0.020 in.)**

If the wear is greater than the maximum, replace the timing chain guide.

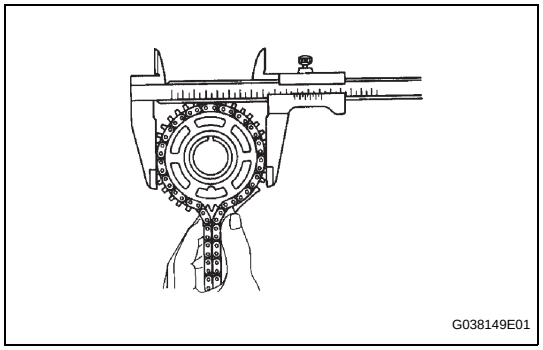


**11. INSPECT NO. 2 CRANKSHAFT TIMING SPROCKET**

(a) Wrap the chain around the sprocket.

(b) Using vernier calipers, measure the sprocket diameter with the chain.

**Minimum sprocket diameter (with chain):**
**96.7 mm (3.807 in.)**

HINT:
The vernier calipers must contact the chain rollers for the measurement.

If the diameter is less than the minimum, replace the chain and sprocket.

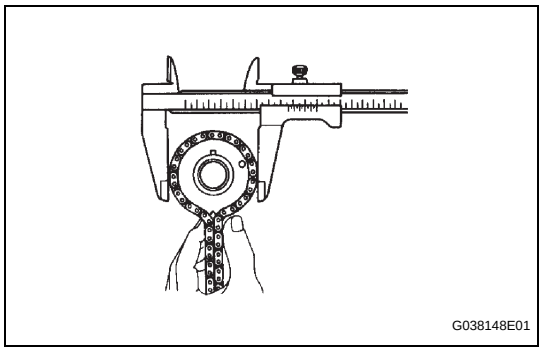


**12. INSPECT BALANCESHAFT DRIVE GEAR SUB-ASSEMBLY**

(a) Wrap the chain around the sprocket.

(b) Using vernier calipers, measure the sprocket diameter with the chain.

**Minimum sprocket diameter (with chain):**
**75.9 mm (2.988 in.)**

HINT:
The vernier calipers must contact the chain rollers for the measurement.

If the diameter is less than the minimum, replace the chain and sprocket.

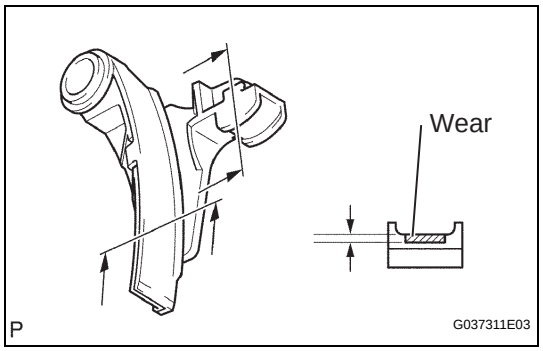


**13. INSPECT NO. 2 CHAIN VIBRATION DAMPER**

(a) Using vernier calipers, measure the vibration damper No.2 wear.

**Maximum wear:**
**1.0 mm (0.039 in.)**

If the wear is greater than the maximum, replace the vibration damper.



cardiagn.com

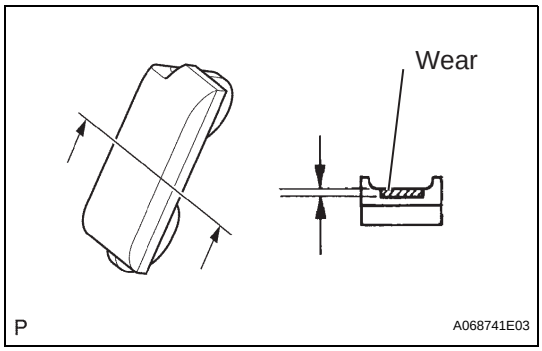


**14. INSPECT NO. 3 CHAIN VIBRATION DAMPER**

(a) Using vernier calipers, measure the vibration damper No.3 wear.
**Maximum wear:**
**1.0 mm (0.039 in.)**
If the wear is greater than the maximum, replace the vibration damper.

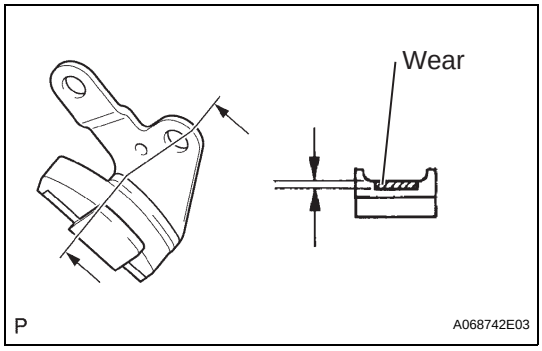


**15. INSPECT NO. 4 CHAIN VIBRATION DAMPER**

(a) Using vernier calipers, measure the vibration damper No.4 wear.
**Maximum wear:**
**1.0 mm (0.039 in.)**
If the wear is greater than the maximum, replace the vibration damper.

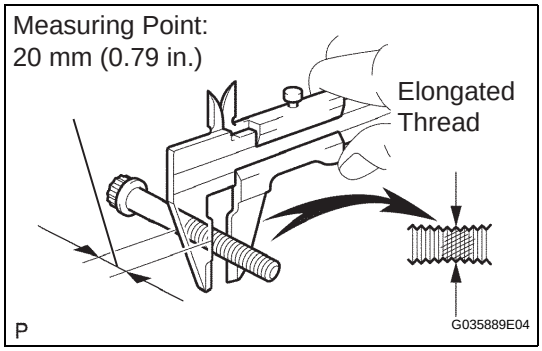


**16. INSPECT CYLINDER HEAD SET BOLT**

(a) Using vernier calipers, measure the minimum diameter of the elongated thread at the measuring point.
**Standard outside diameter:**
**10.76 to 10.97 mm (0.4236 to 0.4319 in.)**
**Minimum outside diameter:**
**10.40 mm (0.4094 in.)**
HINT:
- If a visual check reveals no excessively thin areas, check the center of the bolt (see illustration) and find the area that has the lowest diameter.
- If the diameter is less than the minimum, replace the cylinder head bolt.

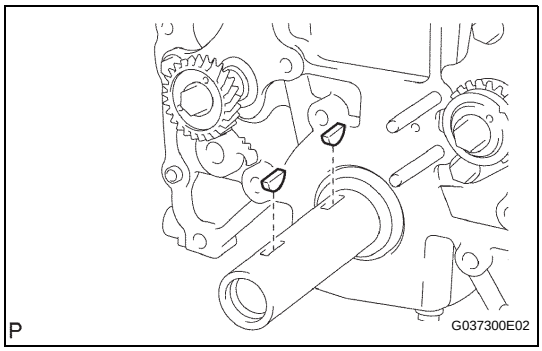


**17. INSTALL CRANKSHAFT PULLEY SET CRANKSHAFT KEY**

(a) Install the 2 pulley keys to the crankshaft.



cardiagn.com

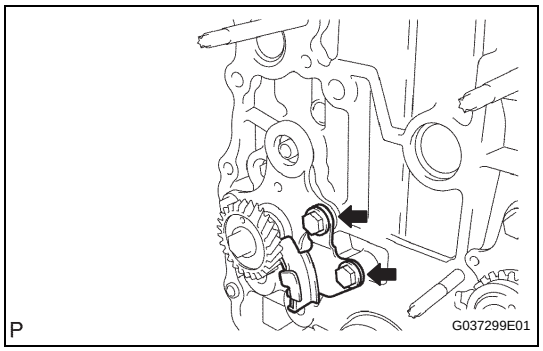


**18. INSTALL NO. 4 CHAIN VIBRATION DAMPER**

(a) Install the vibration damper No.4 with the 2 bolts.
**Torque: 18 N*m (185 kgf*cm, 13 ft.*lbf)**

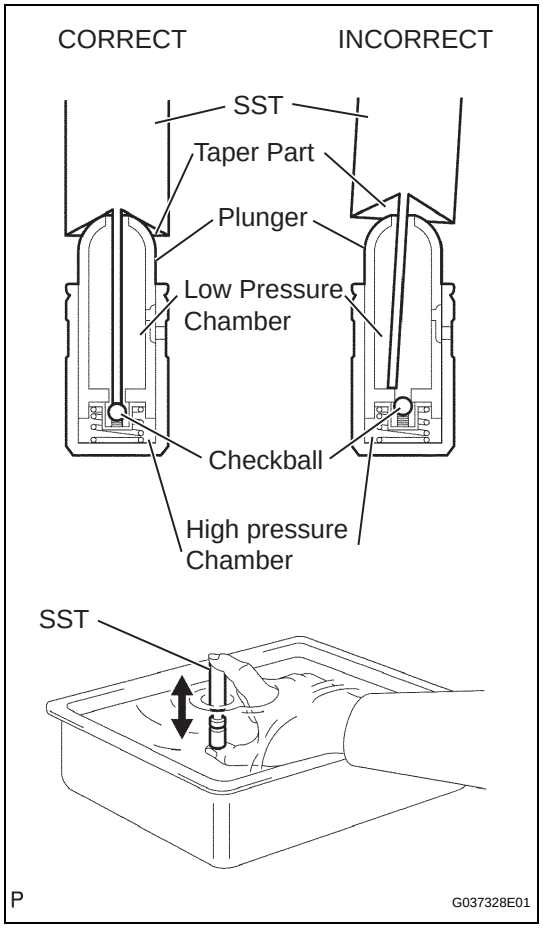


**19. INSPECT VALVE LASH ADJUSTER ASSEMBLY**

**NOTICE:**

- **Keep the lash adjuster free from dirt and foreign objects.**
- **Only use clean engine oil.**

(a) Place the lash adjuster into a container full of engine oil.

(b) Insert SST's tip into the lash adjuster's plunger and use the tip to press down on the checkball inside the plunger.
**SST 09276-75010**

(c) Squeeze the SST and lash adjuster together to move the plunger up and down 5 to 6 times.

(d) Check the movement of the plunger and bleed the air.
**OK:**
**Plunger moves up and down.**
**NOTICE:**
**When bleeding high-pressure air from the compression chamber, make sure that the tip of the SST is actually pressing the checkball as shown in the illustration. If the checkball is not pressed, air will not bleed.**

(e) After bleeding the air, remove the SST. Then quickly and firmly press the plunger with a finger.
**OK:**
**Plunger is very difficult to move.**
If the result is not as specified, replace the lash adjuster.



cardiagn.com

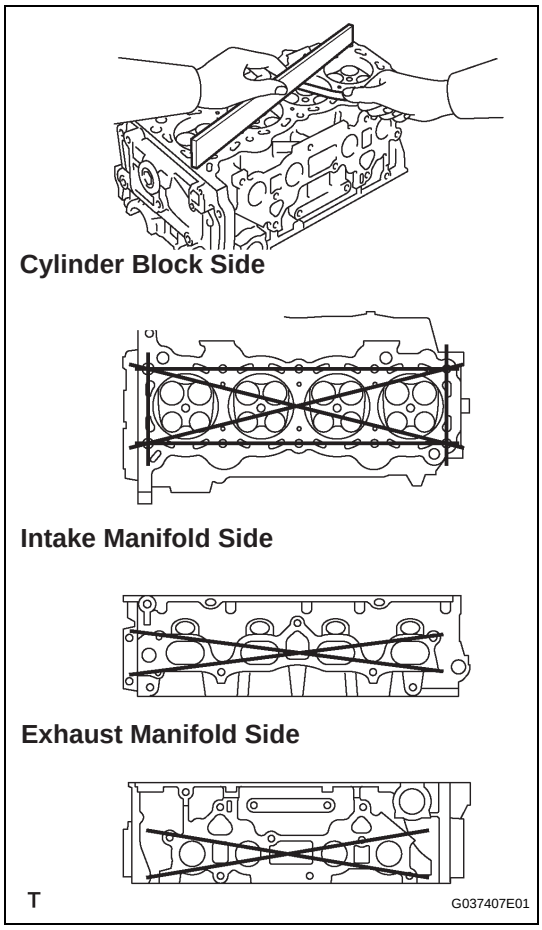


**20. INSPECT CYLINDER HEAD FOR FLATNESS**

(a) Using a precision straight edge and feeler gauge, measure the warpage of the contact surface of contacting the cylinder block and manifolds.
**Maximum warpage:**
**0.05 mm (0.0020 in.)**
If the warpage is greater than the maximum, replace the cylinder head.

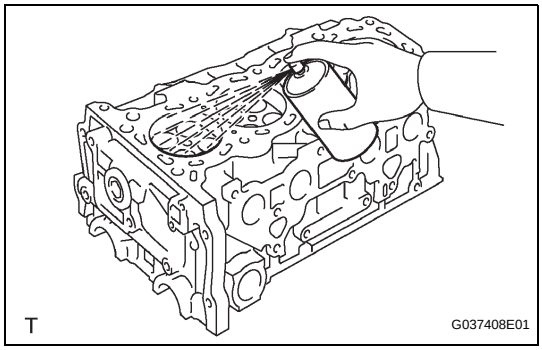


**21. INSPECT CYLINDER HEAD FOR CRACKS**

(a) Using a dye penetrate, check the intake ports, exhaust ports and cylinder surface for cracks.
If cracked, replace the cylinder head.

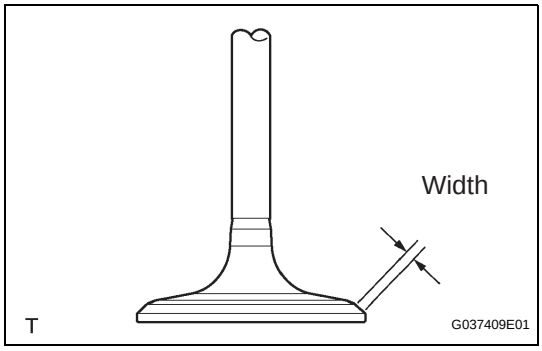


**22. INSPECT INTAKE VALVE SEAT**

(a) Apply a light coat of prussian blue (or white lead) to the valve face.
(b) Lightly press the valve face against the valve seat.
(c) Check the valve face and valve seat by using the following procedure.
  (1) If prussian blue appears around the entire valve face, the valve face is concentric. If not, replace the valve.
  (2) If prussian blue appears around the entire valve seat, the guide and valve face are concentric. If not, resurface the valve seat.
  (3) Check that the valve seat contacts in the middle of the valve face with the width between 1.0 and 1.4 mm (0.039 and 0.055 in.).



cardiagn.com

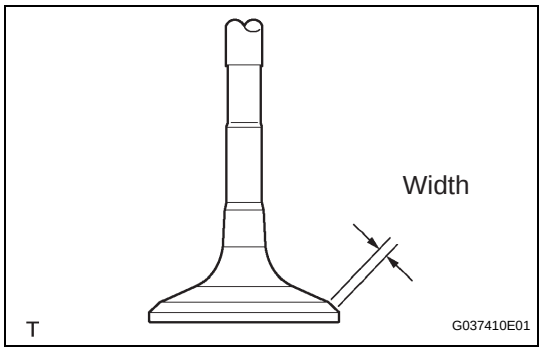


**23. INSPECT EXHAUST VALVE SEAT**

(a) Apply a light coat of prussian blue (or white lead) to the valve face.

(b) Lightly press the valve face against the valve seat.

(c) Check the valve face and valve seat by using to the following procedure.

(1) If prussian blue appears around the entire valve face, the valve face is concentric. If not, replace the valve.

(2) If prussian blue appears around the entire valve seat, the guide and valve face are concentric. If not, resurface the valve seat.

(3) Check that the valve seat contacts in the middle of the valve face with the width between 1.0 and 1.4 mm (0.039 and 0.055 in.).

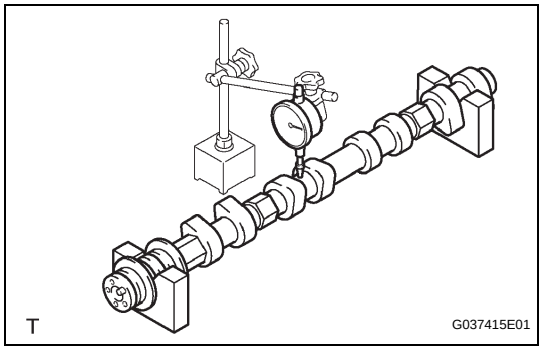


**24. INSPECT CAMSHAFT**

(a) Check the camshaft for runout.

(1) Place the camshaft on V-blocks.

(2) Using a dial indicator, measure the circle runout at the center journal.

**Maximum circle runout:**
**0.03 mm (0.0012 in.)**

If the circle runout is greater than the maximum, replace the camshaft.

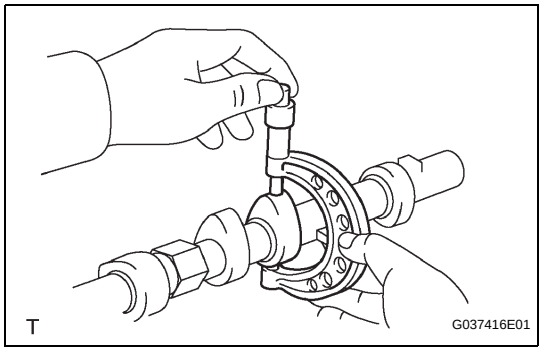


(b) Using a micrometer, measure the cam lobe height.

**Standard cam lobe height:**
**42.855 to 42.955 mm (1.6872 to1.6911 in.)**
**Minimum cam lobe height:**
**42.855 mm (1.6872 in.)**

If the cam lobe height is less than the minimum, replace the camshaft.

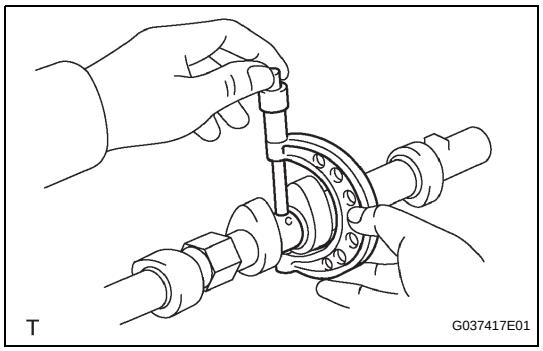


(c) Using a micrometer, measure the journal diameter.

**Standard journal diameter**

| | |
|---|---|
| **No.1 journal** | **35.949 to 35.965 mm (1.4153 to 1.4159 in.)** |
| **Other journal** | **26.959 to 26.975 mm (1.0614 to 1.0620 in.)** |

If the journal diameter is not as specified, check the oil clearance.



cardiagn.com

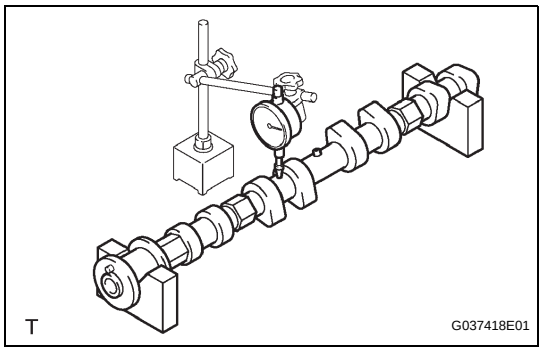


**25. INSPECT NO.2 CAMSHAFT**

(a) Check the camshaft for runout.
  (1) Place the camshaft on V-blocks.
  (2) Using a dial indicator, measure the circle runout at the center journal.
  **Maximum circle runout:**
  **0.03 mm (0.0012 in.)**
  If the circle runout is greater than the maximum, replace the camshaft.

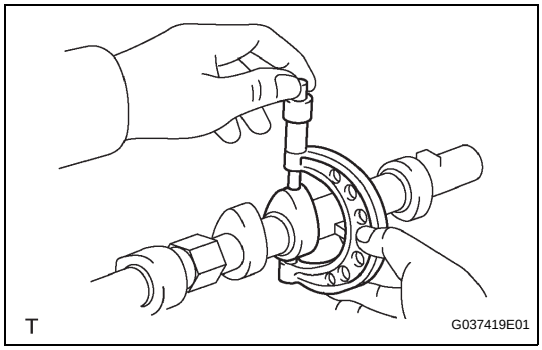


(b) Using a micrometer, measure the cam lobe height.
**Standard cam lobe height:**
**42.854 to 42.954 mm (1.687 to 1.6911 in.)**
**Minimum cam lobe height:**
**42.854 mm (1.6872 in.)**
If the cam lobe height is less than the minimum, replace the camshaft.

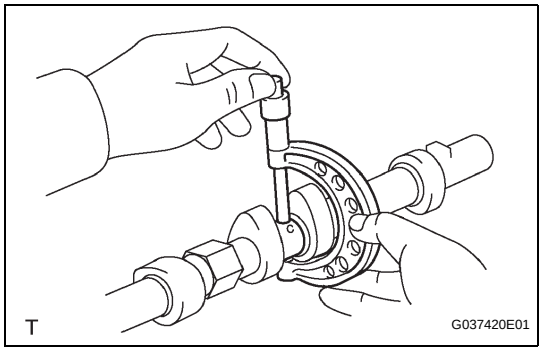


(c) Using a micrometer, measure the journal diameter.
**Standard journal diameter**

| | |
|---|---|
| **No.1 journal** | **35.949 to 35.965 mm (1.4153 to 1.4159 in.)** |
| **Other journal** | **26.959 to 26.975 mm (1.0614 to 1.0620 in.)** |

If the journal diameter is not as specified, check the oil clearance.

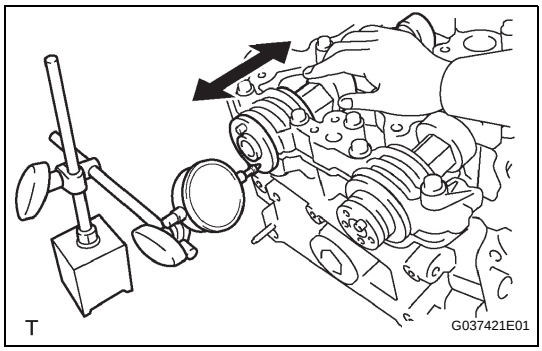


**26. INSPECT CAMSHAFT THRUST CLEARANCE**

(a) Install the camshafts.
(b) Using a dial indicator, measure the thrust clearance while moving the camshaft back and forth.
**Standard thrust clearance:**
**0.10 to 0.24 mm (0.004 to 0.009 in.)**
**Maximum thrust clearance:**
**0.26 mm (0.010 in.)**
If the thrust clearance is greater than the maximum, replace the cylinder head. If the thrust surface is damaged, replace the camshaft.

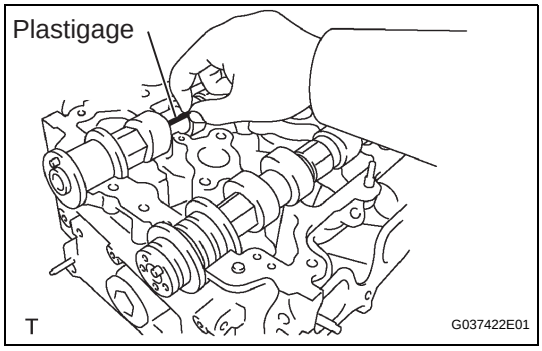


**27. INSPECT CAMSHAFT OIL CLEARANCE**

(a) Clean the bearing caps and camshaft journals.
(b) Place the camshafts on the cylinder head.
(c) Lay a strip of Plastigage across each of the camshaft journals.
(d) Install the bearing caps.
**Torque: 16 N*m (160 kgf*cm, 11 ft.*lbf)**
**NOTICE:**
**Do not turn the camshaft.**
(e) Remove the bearing caps.



cardiagn.com

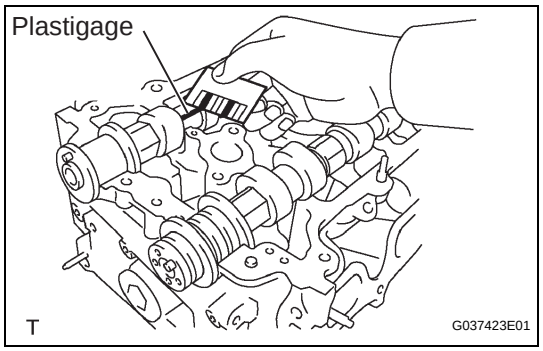


(f) Measure the Plastigage at its widest point.
**Standard oil clearance**

| | |
|---|---|
| No.1 journal | 0.035 to 0.072 mm (0.0014 to 0.0029 in.) |
| Other journal | 0.025 to 0.062 mm (0.00098 to 0.0024 in.) |

**Maximum oil clearance:**
**0.08 mm (0.003 in.)**
If the oil clearance is greater than the maximum, replace the camshaft. If necessary, replace the cylinder head.

(g) Completely remove the Plastigage.

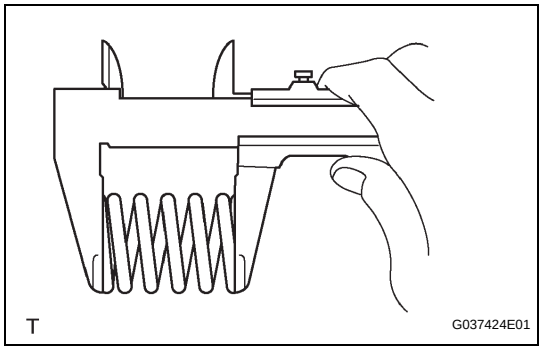


**28. INSPECT INNER COMPRESSION SPRING**

(a) Using vernier calipers, measure the free length of the inner compression spring.
**Free length:**
**48.53 mm (1.9106 in.)**
If the free length is not as specified, replace the spring.

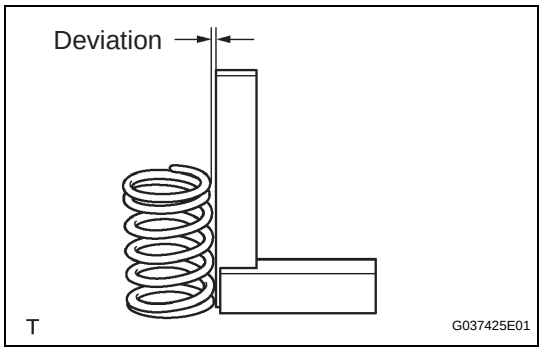


(b) Using a steel square, measure the deviation of the inner compression spring.
**Maximum deviation:**
**1.5 mm (0.059 in.)**
**Maximum angle (reference):**
**2°**
If the deviation is greater than the maximum, replace the spring.

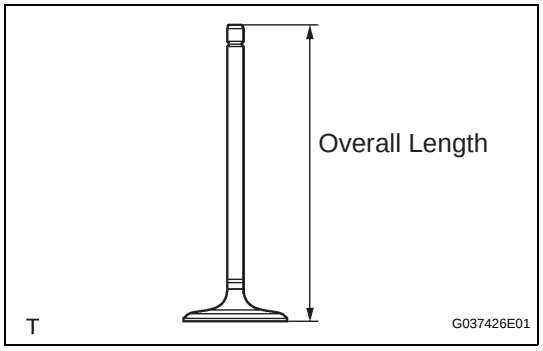


**29. INSPECT INTAKE VALVE**

(a) Using vernier calipers, measure the valve's overall length.
**Standard overall length:**
**106.26 mm (4.1835 in.)**
**Minimum overall length:**
**105.96 mm (4.1716 in.)**
If the overall length is less than the minimum, replace the valve.

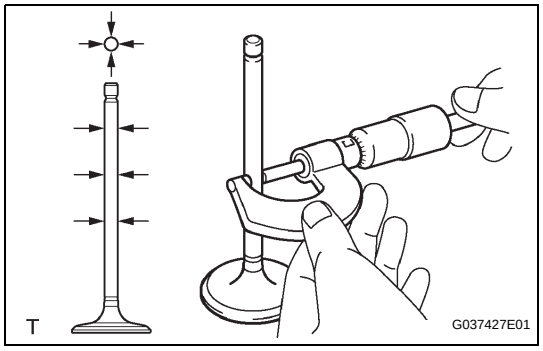


(b) Using a micrometer, measure the diameter of the valve stem.
**Valve stem diameter:**
**5.470 to 5.485 mm (0.2154 to 0.2159 in.)**



cardiagn.com

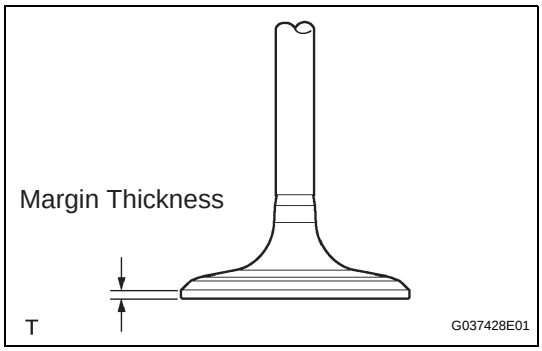


(c) Using vernier calipers, measure the valve head margin thickness.
**Standard margin thickness:**
**1.05 to 1.45 mm (0.0413 to 0.0571 in.)**
**Minimum margin thickness:**
**0.50 mm (0.0197 in.)**
Thickness If the margin thickness is less than the minimum, replace the valve.

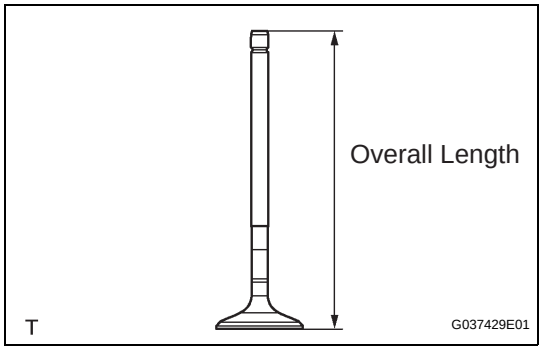


**30. INSPECT EXHAUST VALVE**

(a) Using vernier calipers, measure the valve's overall length.
**Standard overall length:**
**106.74 mm (4.2024 in.)**
**Minimum overall length:**
**106.44 mm (4.1905 in.)**
If the overall length is less than the minimum, replace the valve.

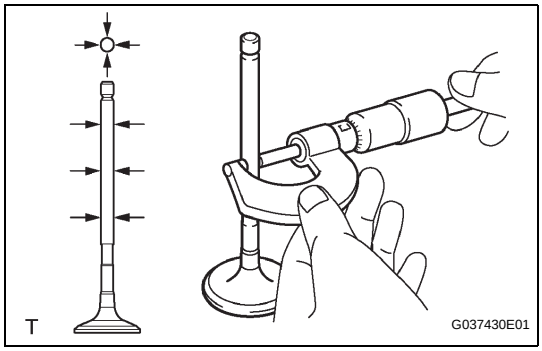


(b) Using a micrometer, measure the diameter of the valve stem.
**Valve stem diameter:**
**5.465 to 5.480 mm (0.2151 to 0.2157 in.)**

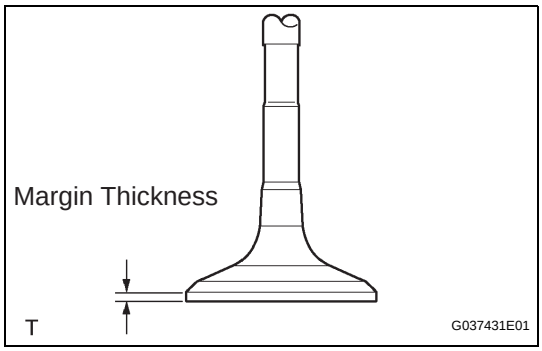


(c) Using vernier calipers, measure the valve head margin thickness.
**Standard margin thickness:**
**1.2 to 1.6 mm (0.0472 to 0.0630 in.)**
**Minimum margin thickness:**
**0.50 mm (0.0197 in.)**
If the margin thickness is less than the minimum, replace the valve.

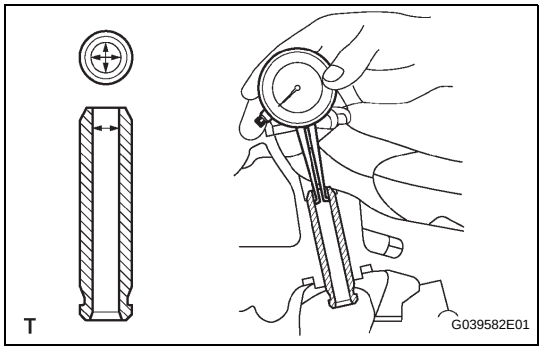


**31. INSPECT VALVE GUIDE BUSHING**

(a) Using a caliper gauge, measure the inside diameter of the guide bush.
**Bush inside diameter:**
**5.510 to 5.530 mm (0.2169 to 0.2177 in.)**

(b) Subtract the valve stem diameter measurement from the guide bush inside diameter measurement.
**Standard oil clearance:**
**0.025 to 0.060 mm (0.0010 to 0.0024 in.) (Intake)**
**0.030 to 0.065 mm (0.0012 to 0.0026 in.) (Exhaust)**



cardiagn.com

**Maximum oil clearance:**
**0.08 mm (0.0032 in.) (Intake)**
**0.10 mm (0.0039 in.) (Exhaust)**

HINT:
- If the clearance is greater than the maximum, replace the intake valve and intake guide bush.
- If the clearance is greater than the maximum, replace the exhaust valve and exhaust guide bush.

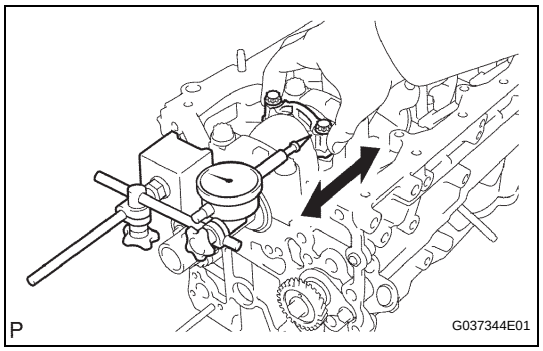


**32. INSPECT CONNECTING ROD THRUST CLEARANCE**

(a) Using a dial indicator, measure the thrust clearance while moving the connecting rod back and forth.
**Standard thrust clearance:**
**0.150 to 0.350 mm (0.0059 to 0.0138 in.)**
**Maximum thrust clearance:**
**0.40 mm (0.016 in.)**
If the thrust clearance is greater than the maximum, replace the connecting rod assembly(s). If necessary, replace the crankshaft.

**33. INSPECT CONNECTING ROD OIL CLEARANCE**

(a) Check that the matchmarks on the connecting rod and cap are aligned to ensure the correct reassembly.
HINT:
The matchmarks on the connecting rods and caps are for ensuring the correct reassembly.

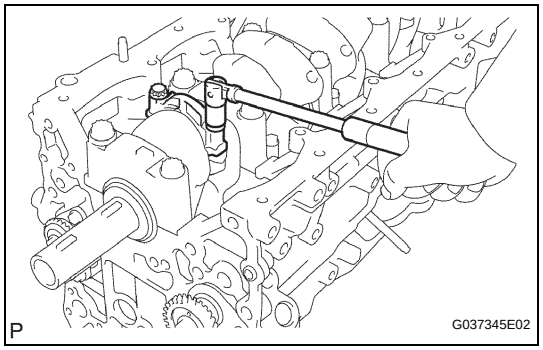


(b) Remove the 2 connecting rod cap bolts.
(c) Using the 2 removed connecting rod cap bolts, remove the connecting rod cap and lower bearing by wiggling the connecting rod cap right and left.
HINT:
Keep the lower bearing inserted to the connecting rod cap.
(d) Clean the crank pin and bearing.
(e) Check the crank pin and bearing for pitting and scratches.

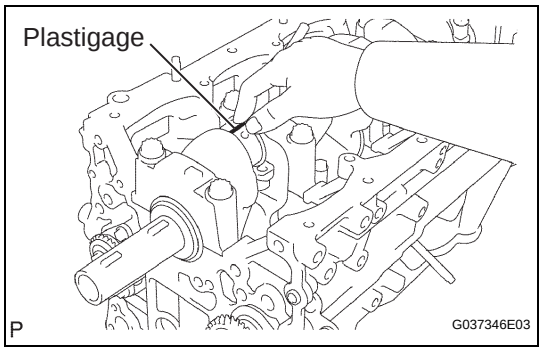


(f) Lay a strip of Plastigage on the crank pin.

cardiagn.com

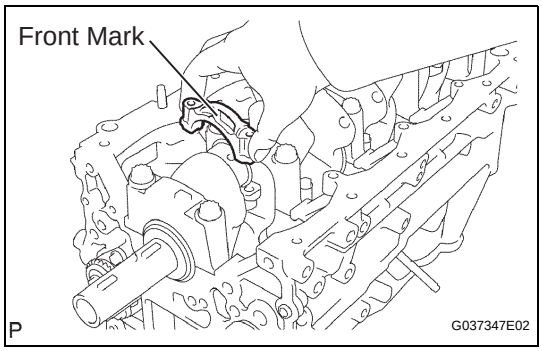


(g) Check that the front mark of the connecting rod cap is facing forward.

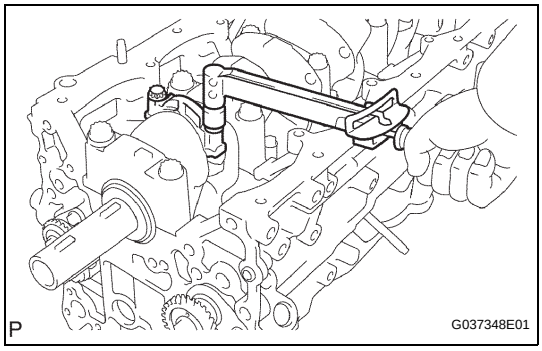


(h) Install the connecting rod cap.
**NOTICE:**
**Do not turn the crankshaft.**

(i) Remove the 2 bolts and connecting rod cap (see steps (b) and (c) above).

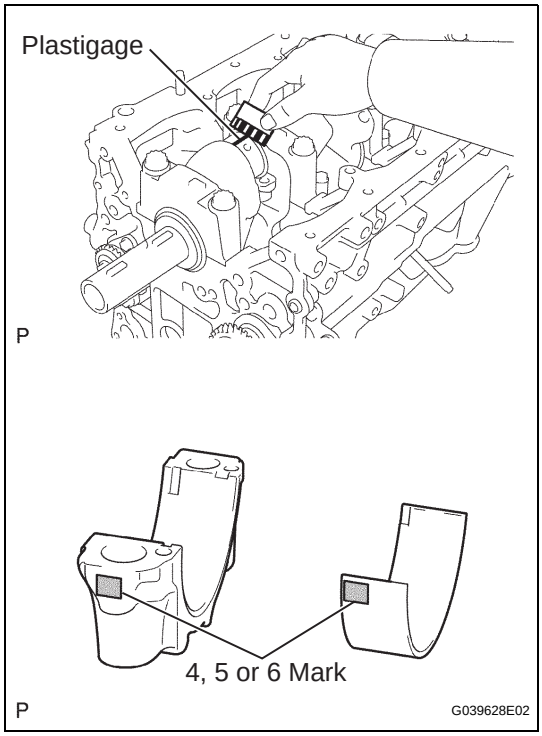


(j) Measure the Plastigage at its widest point.
**Standard oil clearance:**
**0.024 to 0.049 mm (0.0009 to 0.0019 in.)**
**Maximum oil clearance:**
**0.066 mm (0.0026 in.)**
If the oil clearance is greater than the maximum, replace the connecting rod bearings. If necessary, replace the crankshaft.
HINT:
If replacing a bearing, replace it with one that has the same number as its respective connecting rod cap. Each bearing's standard thickness is indicated by a 1, 2 and 3 mark on its surface.
**Reference**
**Crankshaft pin diameter**

| Mark | Thickness |
|---|---|
| 4 | 52.989 to 53.002 mm (2.0862 to 2.0867 in.) |
| 5 | 52.989 to 53.002 mm (2.0862 to 2.0867 in.) |
| 6 | 52.989 to 53.002 mm (2.0862 to 2.0867 in.) |

**Standard bearing center wall thickness**

| Mark | Thickness |
|---|---|
| 4 | 1.484 to 1.487 mm (0.0584 to 0.0585 in.) |
| 5 | 1.488 to 1.490 mm (0.0586 to 0.0587 in.) |
| 6 | 1.491 to 1.493 mm (0.0587 to 0.0588 in.) |

(k) Completely remove the Plastigage.



cardiagn.com

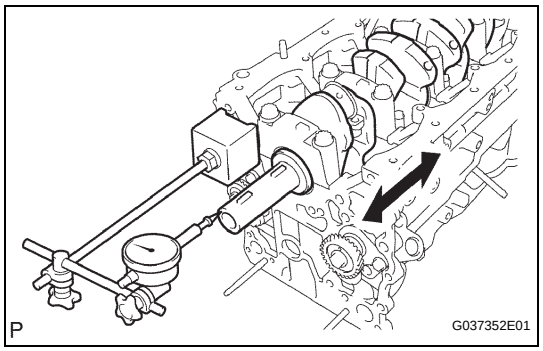


**34. INSPECT CRANKSHAFT THRUST CLEARANCE**

(a) Using a dial indicator, measure the thrust clearance while prying the crankshaft back and forth with a screwdriver.

**Standard thrust clearance:**
**0.020 to 0.220 mm (0.0008 to 0.0087 in.)**
**Maximum thrust clearance:**
**0.30 mm (0.0118 in.)**

If the thrust clearance is greater than the maximum, replace the thrust washers as a set. If necessary, replace the crankshaft.

**Thrust washer thickness:**
**2.440 to 2.490 mm (0.0961 to 0.0980 in.)**

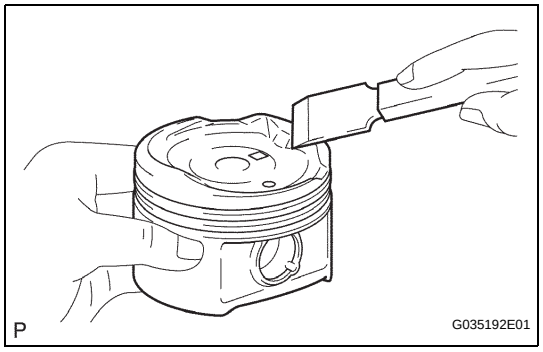


**35. CLEAN WITH PIN PISTON SUB-ASSEMBLY**

(a) Using a gasket scraper, remove the carbon from the piston top.

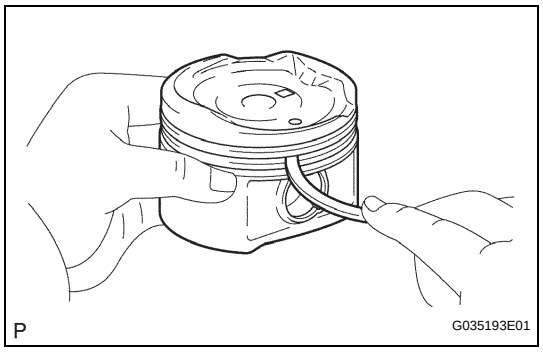


(b) Using a groove cleaning tool or broken ring, clean the piston ring grooves.

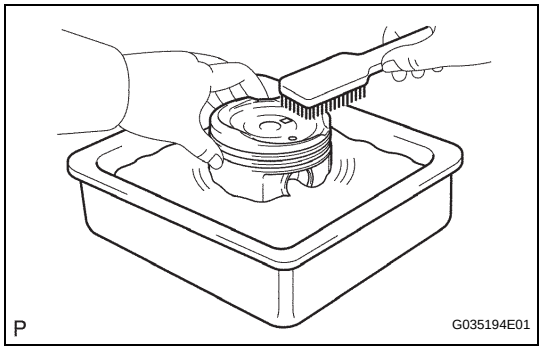


(c) Using solvent and a brush, thoroughly clean the piston.

**NOTICE:**
**Do not use a wire brush.**

**36. INSPECT NO. 1 OIL NOZZLE SUB-ASSEMBLY**

(a) Check the oil nozzles for damage or clogging.
If necessary, replace the oil nozzle.



cardiagn.com

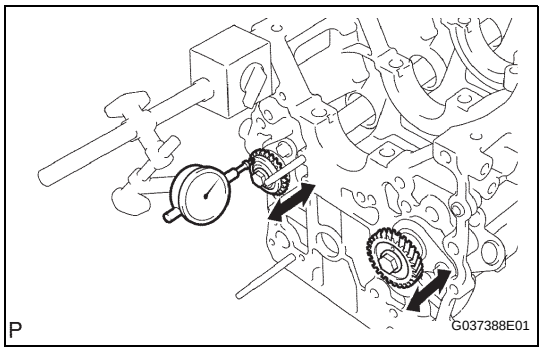


**37. INSPECT BALANCE SHAFT THRUST CLEARANCE**

(a) Using a dial indicator, measure the thrust clearance while moving the balanceshaft back and forth.

**Standard thrust clearance:**
**0.07 to 0.13 mm (0.0027 to 0.0051 in.)**

**Maximum thrust clearance:**
**0.20 mm (0.0079 in.)**

If the thrust clearance is greater than the maximum, replace the balanceshaft thrust washer. If necessary, replace the balanceshaft.

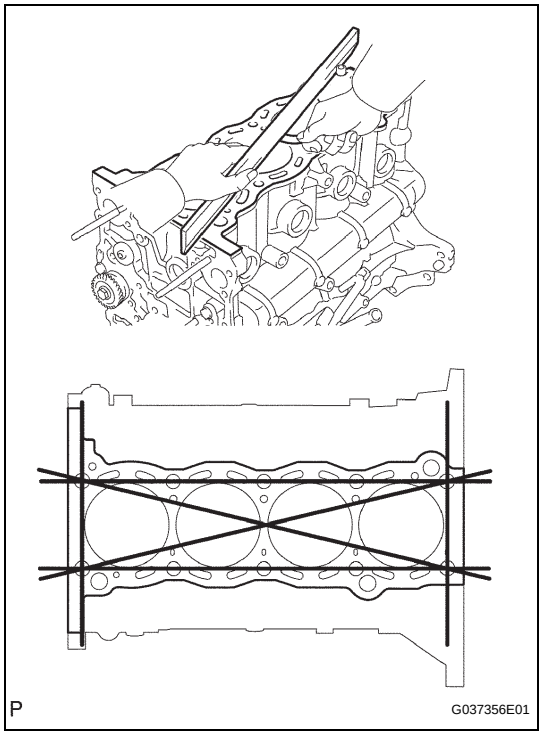


**38. INSPECT CYLINDER BLOCK FOR FLATNESS**

(a) Using a precision straight edge and feeler gauge, measure the warpage of the contact surface of the cylinder head gasket.

**Maximum warpage:**
**0.05 mm (0.0020 in.)**

If the warpage is greater than the maximum, replace the cylinder block.

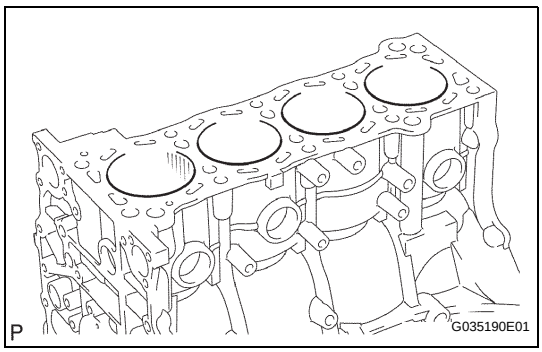


(b) Visually check the cylinder for vertical scratches. If deep scratches are present, rebore all the 4 cylinders. If necessary, replace the cylinder block.

EM

cardiagn.com

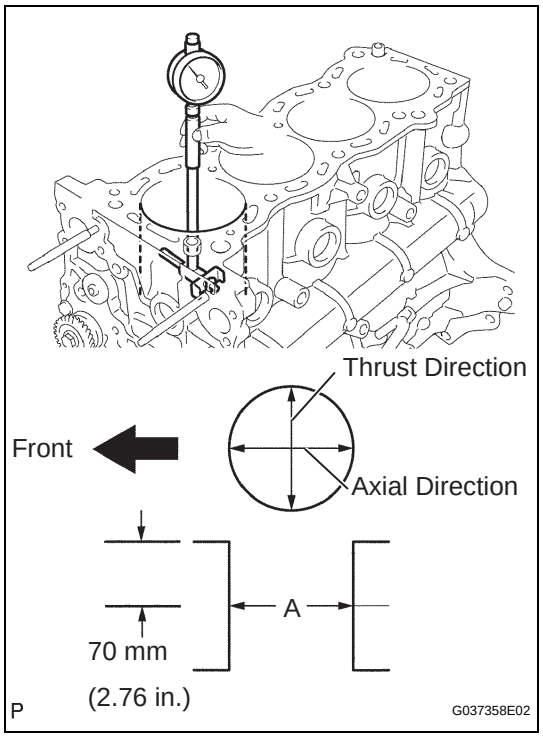


**39. INSPECT CYLINDER BORE**

(a) Using a cylinder gauge, measure the cylinder bore diameter at positions A in the thrust and axial directions.

**Standard diameter:**
**94.990 to 95.003 mm (3.7398 to 3.7403 in.)**
**Maximum difference diameter:**
**0.2 mm (0.008 in.)**

If the diameter is greater than the maximum, rebore all the 4 cylinders. If necessary, replace the cylinder block.

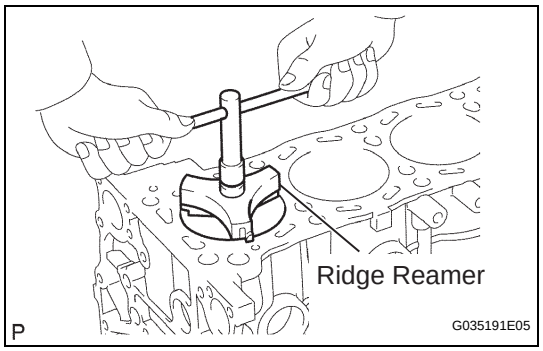


(b) Inspect the cylinder ridge.
If the wear is less than 0.2 mm (0.008 in.), using a ridge reamer, grind the top of the cylinder.

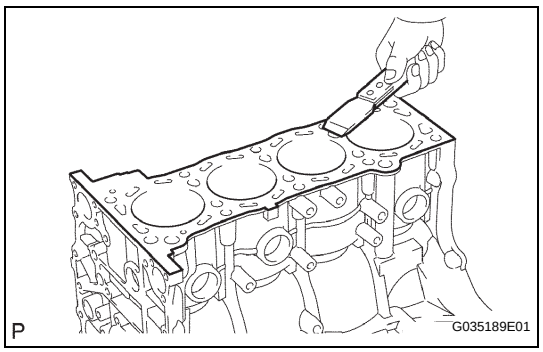


**40. CLEAN CYLINDER BLOCK**

(a) Using a gasket scraper, remove all the gasket material from the top surface of the cylinder block.

(b) Using a soft brush and solvent, thoroughly clean the cylinder block.

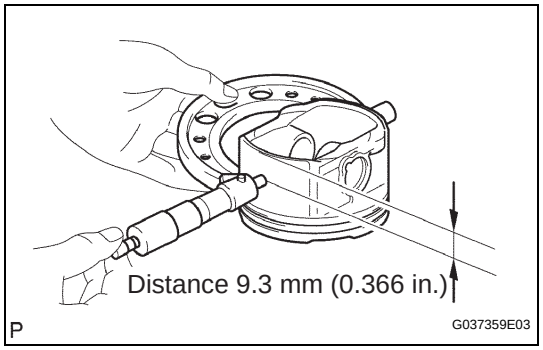


**41. INSPECT PISTON DIAMETER**

(a) Using a micrometer, measure the piston diameter at right angles to the piston center line, the indicated distance from the piston end.

**Distance:**
**9.3 mm (0.366 in.)**
**Piston diameter:**
**94.941 to 94.971 mm (3.7378 to 3.7390 in.) (for standard)**



cardiagn.com

**42. INSPECT PISTON OIL CLEARANCE**

(a) Measure the cylinder bore diameter in the thrust directions (see step 20).

(b) Subtract the piston diameter measurement from the cylinder bore diameter measurement.

**Standard oil clearance:**
**0.019 to 0.052 mm (0.0007 to 0.0020 in.)**

If the oil clearance is greater than the standard, replace all the pistons and rebore all the cylinders. If necessary, replace the cylinder block.

HINT:
- Bore all the cylinders for the O/S piston outside diameter.
- Replace all the piston rings with ones to match the O/S pistons.

(c) If the oil clearance is greater than the standard.

(1) Prepare 4 new O/S pistons.
**O/S 0.50 piston diameter:**
**95.441 to 95.451 mm (3.7575 to 3.7579 in.)**

(2) Using a micrometer, measure the piston diameter at right angles to the piston center line, the indicated distance from the piston end.
**Distance:**
**9.3 mm (0.366 in.)**

(3) Calculate the amount each cylinder is to be rebored as follows:
**Size to be rebored = P + C -H**

| P | Piston diameter |
|---|---|
| C | Piston clearance: 0.019 to 0.052 mm (0.0007 to 0.0020 in.) |
| H | Allowance for honing: 0.02 mm (0.0008 in.) or less |

(4) Bore and hone the cylinders to calculated dimensions.
**Maximum honing:**
**0.02 mm (0.0008 in.)**
**NOTICE:**
**Excess honing will destroy the finished roundness.**

**43. INSPECT RING GROOVE CLEARANCE**

(a) Using a feeler gauge, measure the clearance between a new piston ring and the wall of the ring groove.

**Ring groove clearance**

| | |
|---|---|
| No.1 | 0.020 to 0.075 mm (0.0008 to 0.0030 in.) |
| No.2 | 0.020 to 0.065 mm (0.0008 to 0.0026 in.) |
| Oil | 0.020 to 0.070 mm (0.0008 to 0.0028 in.) |

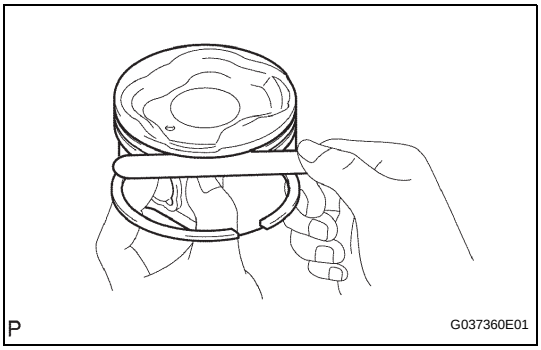


If the clearance is not as specified, replace the piston.

cardiagn.com

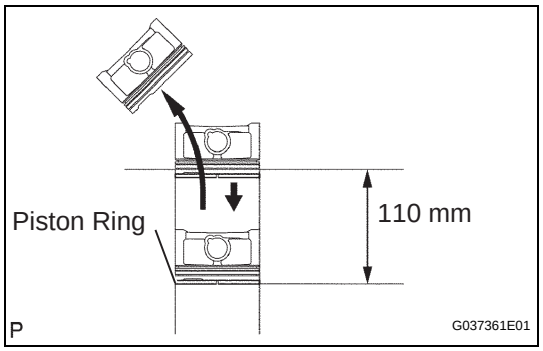


**44. INSPECT PISTON RING END GAP**

(a) Insert the piston ring into the cylinder bore.

(b) Using a piston, push the piston ring a little beyond the bottom of the ring travel, 110 mm (4.33 in.) from the top of the cylinder block.

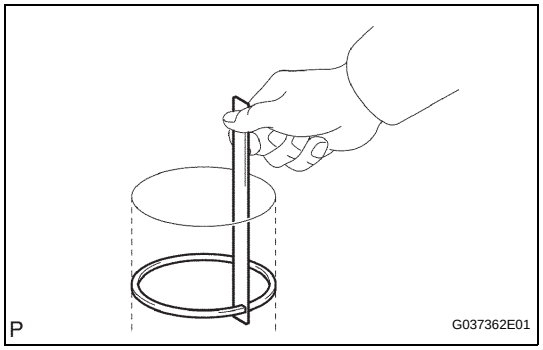


(c) Using a feeler gauge, measure the end gap.

**Standard end gap**

| | |
|---|---|
| **No.1** | **0.22 to 0.34 mm (0.0087 to 0.0134 in.)** |
| **No.2** | **0.45 to 0.57 mm (0.0177 to 0.0224 in.)** |
| **Oil** | **0.10 to 0.40 mm (0.0039 to 0.0157 in.)** |

**Maximum end gap**

| | |
|---|---|
| **No. 1** | **0.90 mm (0.0354 in.)** |
| **No.2** | **1.36 mm (0.0535 in.)** |
| **Oil** | **0.75 mm (0.0295 in.)** |

If the end gap is greater than the maximum, replace the piston ring. If the end gap is greater than the maximum, even with a new piston ring, rebore all the 4 cylinders or replace the cylinder block.

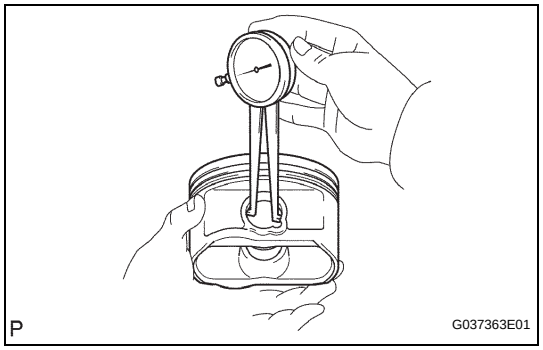


**45. INSPECT PISTON PIN OIL CLEARANCE**

(a) Using a caliper gauge, measure the inside diameter of the piston pin hole.

**Piston pin hole inside diameter:**
**22.001 to 22.010 mm (0.8662 to 0.8665 in.)**

EM

cardiagn.com

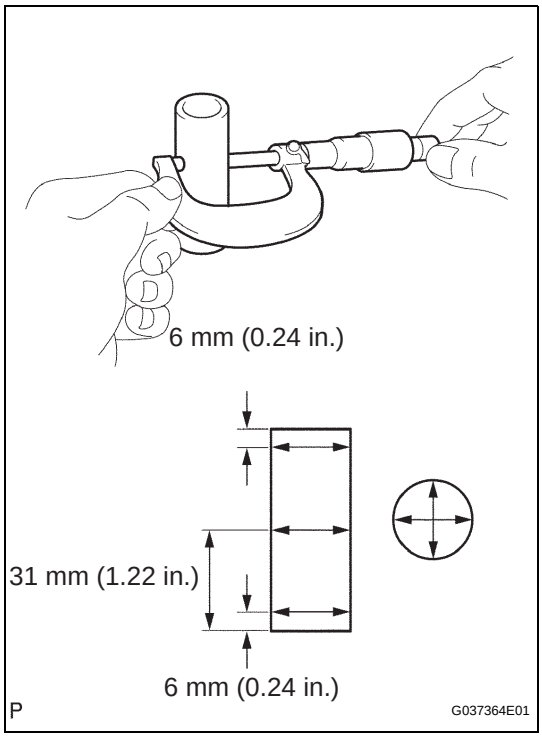


(b) Using a micrometer, measure the piston pin diameter.
**Piston pin diameter:**
**21.997 to 22.006 mm (0.8660 to 0.8664 in.)**

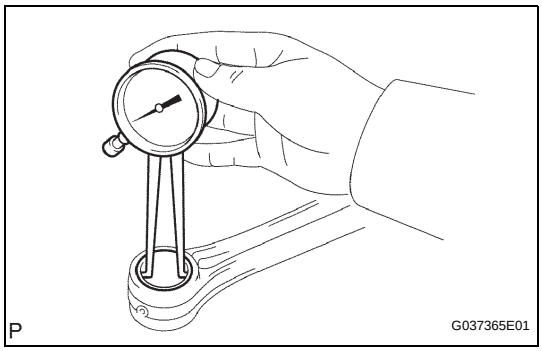


(c) Using a caliper gauge, measure the inside diameter of the connecting rod bushing.
**Bushing inside diameter:**
**22.005 to 22.014 mm (0.8663 to 0.8667 in.)**

(d) Subtract the piston pin diameter measurement from the piton pin hole diameter measurement.
**Standard oil clearance:**
**0.001 to 0.007 mm (0.00004 to 0.00028 in.)**
**Maximum oil clearance:**
**0.010 mm (0.0004 in.)**
HINT:
If the oil clearance is greater than the maximum, replace the piston and piston pin as a set.



cardiagn.com

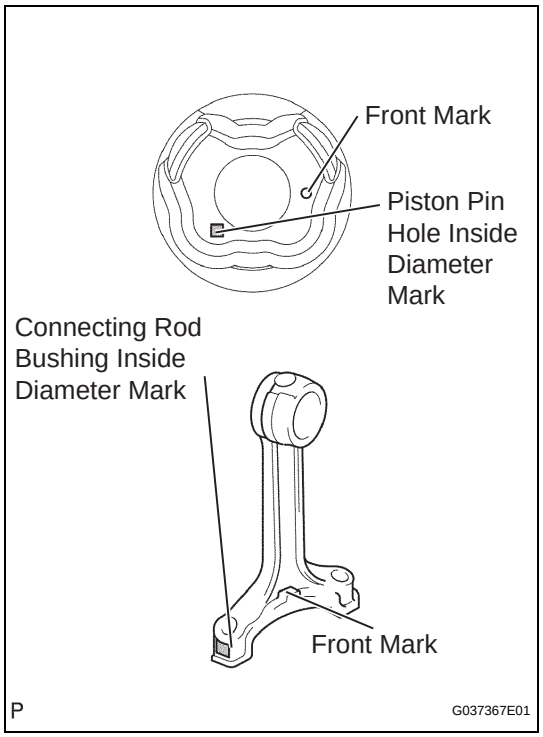


(e) Subtract the piston pin diameter measurement from the bushing inside diameter measurement.
**Standard oil clearance:**
**0.005 to 0.011 mm (0.0002 to 0.0004 in.)**
**Maximum oil clearance:**
**0.025 mm (0.0010 in.)**

(f) If the oil clearance is greater than the maximum, replace the bushing. If necessary, replace the connecting rod and piston pin as a set.

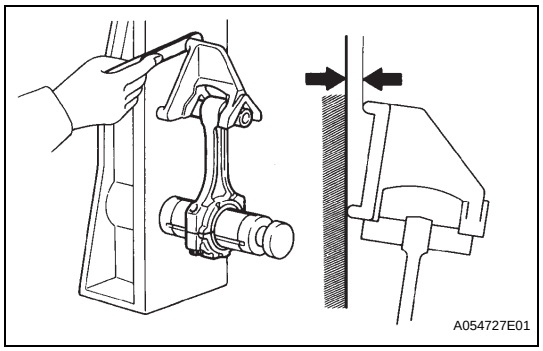


**46. INSPECT CONNECTING ROD**

(a) Using a rod aligner and feeler gauge, check the connecting rod alignment.

(1) Check for bend.
**Maximum bend:**
**0.03 mm (0.0012 in.) per 100 mm (3.94 in.)**
If the bend is greater than the maximum, replace the connecting rod sub-assembly.

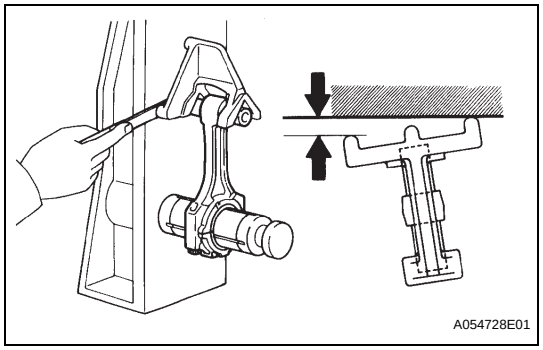


(2) Check for twist.
**Maximum twist:**
**0.15 mm (0.0059 in.) per 100 mm (3.94 in.)**
If the twist is greater than the maximum, replace the connecting rod sub-assembly.

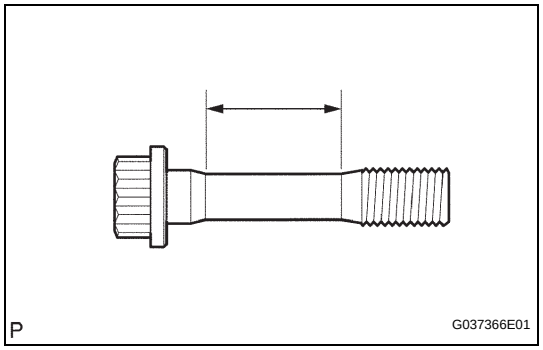


**47. INSPECT CONNECTING ROD BOLT**

(a) Using vernier calipers, measure the tension portion diameter of the bolt.
**Standard diameter:**
**7.2 to 7.3 mm (0.283 to 0.287 in.)**
**Minimum diameter:**
**7.0 mm (0.276 in.)**
If the diameter is less than the minimum, replace the bolt.



cardiagn.com

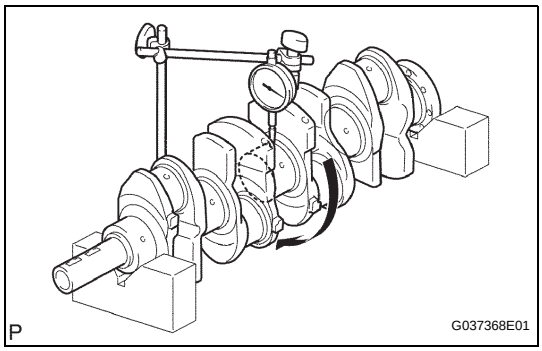


**48. INSPECT CRANKSHAFT**

(a) Inspect for circle runout.

(1) Place the crankshaft on V-blocks.

(2) Using a dial indicator, measure the circle runout at the center journal.

**Maximum circle runout:**
**0.03 mm (0.0012 in.)**

If the circle runout is greater than the maximum, replace the crankshaft.

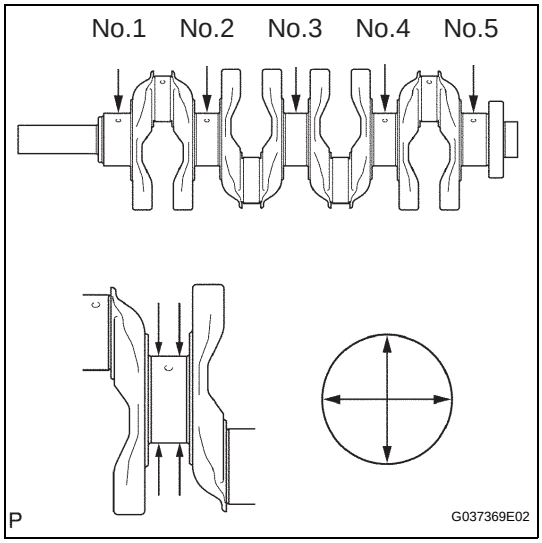


(b) Inspect the main journals.

(1) Using a micrometer, measure the diameter of each main journal.

**Standard journal diameter:**

| | |
|---|---|
| **No.3 journal** | **59.981 to 59.994 mm (2.3615 to 2.3620 in.)** |
| **Except No.3 journal** | **59.987 to 60.000 mm (2.3619 to 2.3622 in.)** |

If the diameter is not as specified, check the oil clearance (see step 30). If necessary, replace the crankshaft.

(2) Check each main journal for taper and out-of-round as shown in the illustration.

**Maximum taper and out-of-round:**
**0.005 mm (0.0002 in.)**

If the taper and out-of-round is greater than the maximum, replace the crankshaft.

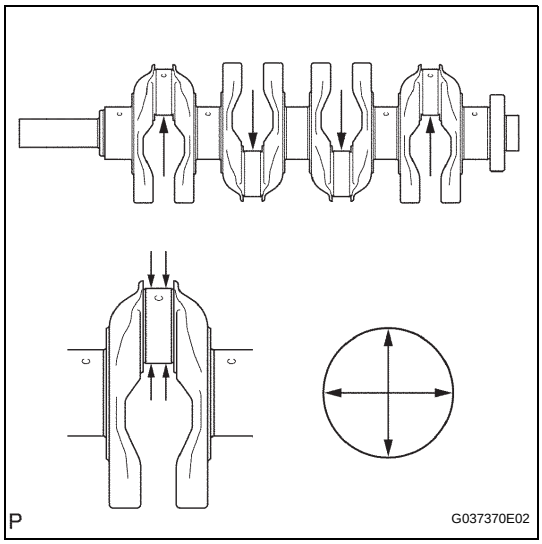


(c) Inspect the crank pin.

(1) Using a micrometer, measure the diameter of each crank pin.

**Diameter:**
**52.989 to 53.002 mm (2.0862 to 2.0867 in.)**

If the diameter is not as specified, check the oil clearance (see step 2). If necessary, replace the crankshaft.

(2) Check each crank pin for taper and out-of-round as shown in the illustration.

**Maximum taper and out-of-round:**
**0.003 mm (0.0001 in.)**

If the taper and out-of-round is greater than the maximum, replace the crankshaft.

**49. INSPECT CRANKSHAFT OIL CLEARANCE**

HINT:

- Keep the lower bearings and crankshaft bearing caps together.
- Arrange the thrust washers in the correct order.
- Keep the upper crankshaft bearings and upper thrust washers together with the cylinder block.

(a) Clean each main journal and bearing.

(b) Check each main journal and bearing for pitting and scratches.

If the journal or bearing is damaged, replace the bearing.

(c) Place the crankshaft on the cylinder block.



cardiagn.com

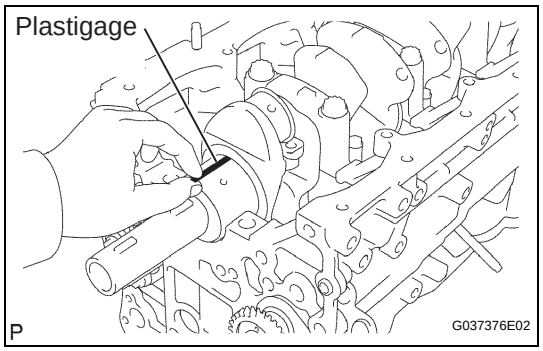


(d) Lay a strip of Plastigage across each journal.

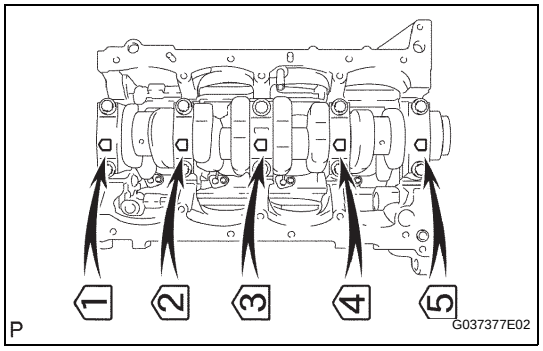


(e) Install the 5 crankshaft bearing caps in their proper locations.

(f) Install the 5 crankshaft bearing caps with the 10 bolts (see step 49).

**NOTICE:**

**Do not turn the crankshaft.**

(g) Remove the 10 bolts and 5 crankshaft bearing caps.

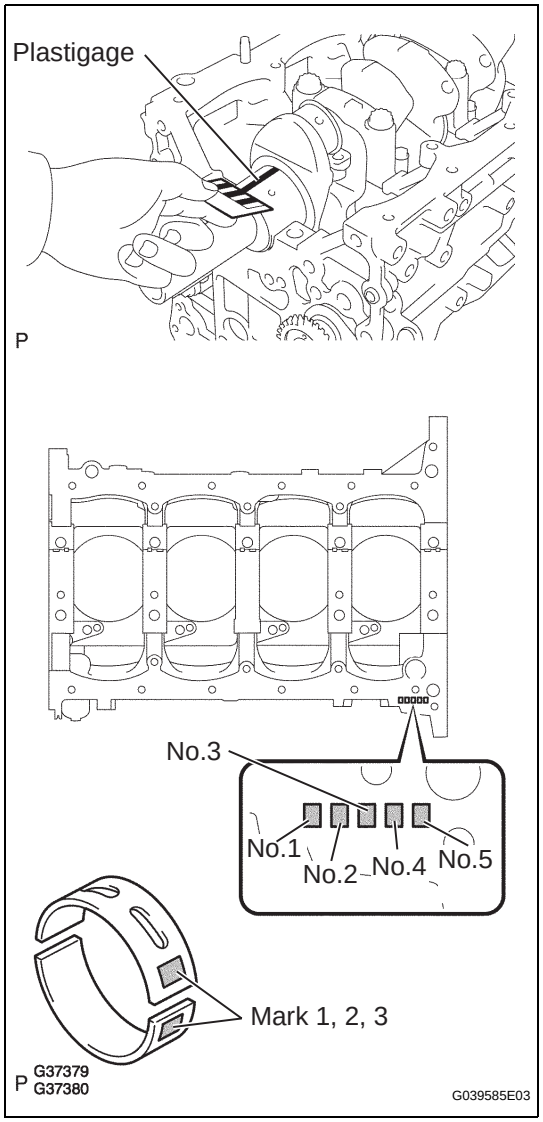


(h) Measure the Plastigage at its widest point.

**Standard oil clearance**

| Bearing Cap | Standard |
|---|---|
| No.3 | 0.030 to 0.055 mm (0.0012 to 0.0022 in.) |
| Others | 0.024 to 0.049 mm (0.0009 to 0.0019 in.) |

**Maximum oil clearance:**
**0.10 mm (0.0039 in.)**

If the oil clearance is greater than the maximum, replace the crankshaft bearing.

HINT:

- If replacing the cylinder block, measure the bearing standard clearance.
- If replacing a bearing, first check the number on the cylinder block for the bearing's respective journal. Then replace the bearing with one that has the same number. Each bearing's standard thickness is indicated by a 1, 2 or 3 mark on its surface.

**Reference**

**Cylinder block main journal bore diameter**

| Mark | Diameter |
|---|---|
| 1 | 64.004 to 64.010 mm (2.5198 to 2.5201 in.) |
| 2 | 64.011 to 64.016 mm (2.5201 to 2.5203 in.) |
| 3 | 64.017 to 64.022 mm (2.5203 to 2.5206 in.) |

**Standard bearing center wall thickness**

| Mark | Thickness |
|---|---|
| 1 | 1.987 to 1.990 mm (0.0782 to 0.0783 in.) |
| 2 | 1.991 to 1.993 mm (0.0784 to 0.0785 in.) |
| 3 | 1.994 to 1.996 mm (0.0785 to 0.0786 in.) |

(i) Completely remove the Plastigage.



cardiagn.com

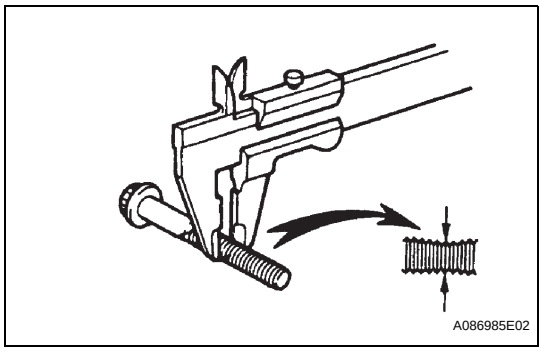


**50. INSPECT CRANKSHAFT BEARING CAP SET BOLT**

(a) Using vernier calipers, measure the minimum diameter of the compressed thread at the measuring point.

**Standard diameter:**
**10.76 to 10.97 mm (0.4236 to 0.4319 in.)**

**Minimum diameter:**
**10.66 mm (0.4197 in.)**

If the diameter is less than the minimum, replace the bolt.

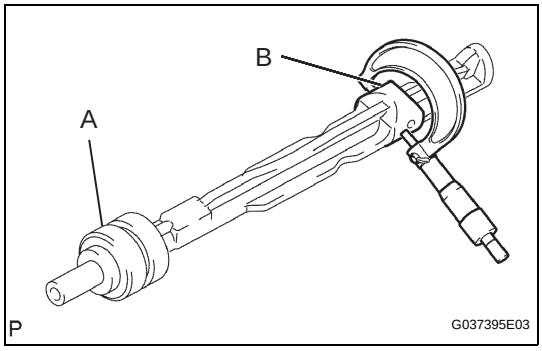


**51. INSPECT NO.1 BALANCESHAFT**

(a) Inspect the diameter of the journal.

(1) Using a micrometer, measure the diameter of the balanceshaft main journals.

**Main journal diameter**

| | |
|---|---|
| A | 37.969 to 37.985 mm (1.4948 to 1.4955 in.) |
| B | 37.449 to 37.465 mm (1.4744 to 1.4750 in.) |

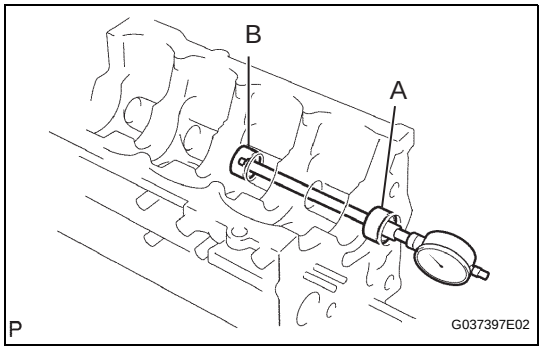


(b) Inspect the diameter of bearing.

(1) Using a cylinder gauge, measure the inside diameter of the balanceshaft bearing.

**Bearing inside diameter**

| | |
|---|---|
| A | 38.025 to 38.045 mm (1.4970 to 1.4978 in.) |
| B | 37.525 to 37.545 mm (1.4774 to 1.4781 in.) |

(c) Inspect oil clearance.

(1) Subtract the balanceshaft main journal diameter measurement from the balanceshaft bearing inside diameter measurement.

**Standard oil clearance**

| | |
|---|---|
| A | 0.040 to 0.076 mm (0.0016 to 0.0030 in.) |
| B | 0.060 to 0.096 mm (0.0024 to 0.0038 in.) |

**Maximum oil clearance:**
**0.15 mm (0.0059 in.)**

If the oil clearance is greater than the maximum, replace the cylinder block and balanceshaft.

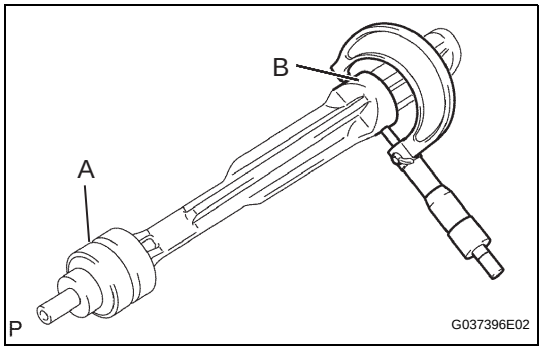


**52. INSPECT NO.2 BALANCESHAFT**

(a) Inspect the diameter of the journal.

(1) Using a micrometer, measure the diameter of the balanceshaft main journals.

**Main journal diameter**

| | |
|---|---|
| A | 37.969 to 37.985 mm (1.4948 to 1.4955 in.) |
| B | 37.449 to 37.465 mm (1.4744 to 1.4750 in.) |



cardiagn.com

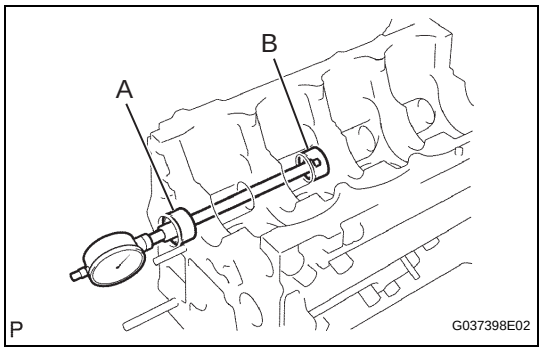


(b) Inspect the diameter of bearing.
(1) Using a cylinder gauge, measure the inside diameter of the balanceshaft bearing.
**Bearing inside diameter**

| | |
|---|---|
| **A** | **38.025 to 38.045 mm (1.4970 to 1.4978 in.)** |
| **B** | **37.525 to 37.545 mm (1.4774 to 1.4781 in.)** |

(c) Inspect oil clearance.
**Standard oil clearance**

| | |
|---|---|
| **A** | **0.040 to 0.076 mm (0.0016 to 0.0030 in.)** |
| **B** | **0.060 to 0.096 mm (0.0024 to 0.0038 in.)** |

**Maximum oil clearance:**
**0.15 mm (0.0059 in.)**
If the oil clearance is greater than the maximum, replace the cylinder block and balanceshaft.

# REPLACEMENT

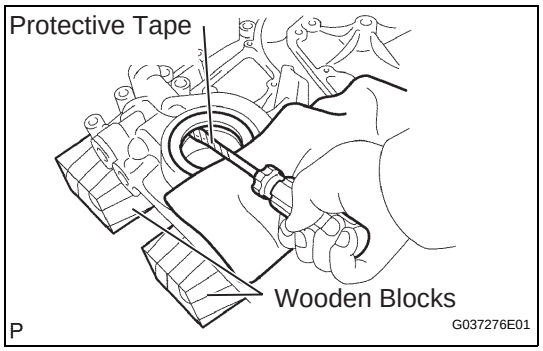


**1. REMOVE TIMING CHAIN COVER OIL SEAL**
(a) Using a screwdriver with its tip taped, pry out the oil seal.
HINT:
Tape the screwdriver tip before use.

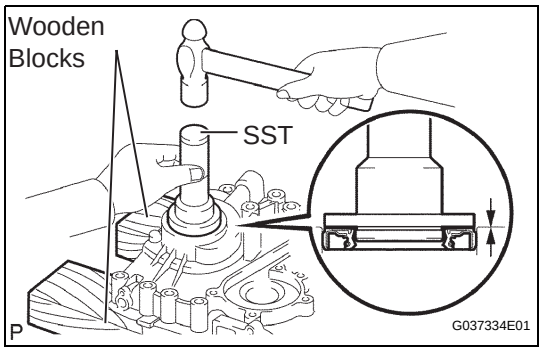


**2. INSTALL TIMING CHAIN COVER OIL SEAL**
(a) Place the timing chain cover on wooden blocks.
(b) Using SST, tap in a new oil seal until its surface is flush with the timing gear case edge.
**SST 09223-50010**
**NOTICE:**
- **Keep the lip free from foreign matter.**
- **Do not tap the oil seal at an angle.**

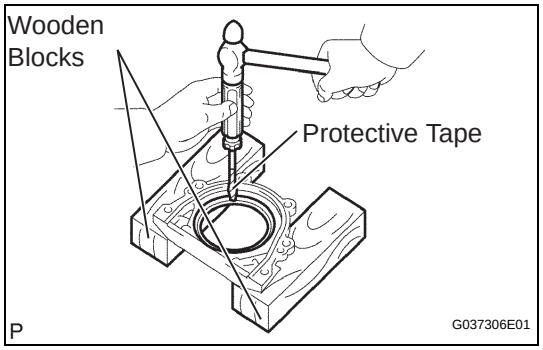


**3. REMOVE ENGINE REAR OIL SEAL**
(a) Place the oil seal retainer on wooden blocks.
(b) Using a screwdriver with its tip taped and a hammer, tap out the oil seal.
HINT:
Tape the screwdriver tip before use.



cardiagn.com

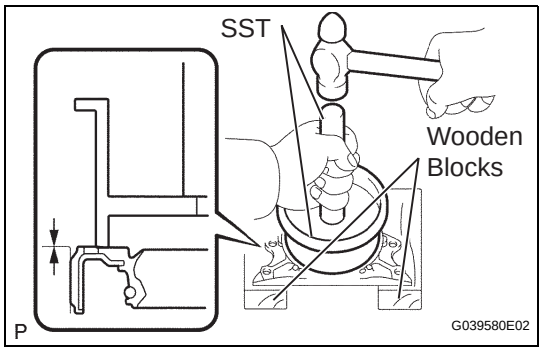


**4. INSTALL ENGINE REAR OIL SEAL**

(a) Place the oil seal retainer on wooden blocks.

(b) Using SST, tap in a new oil seal until its surface is flush with the oil seal retainer edge.
**SST 09223-15030, 09950-70010 (09951-07150)**
**NOTICE:**
- **Keep the lip free from foreign matter.**
- **Do not tap the oil seal at an angle.**

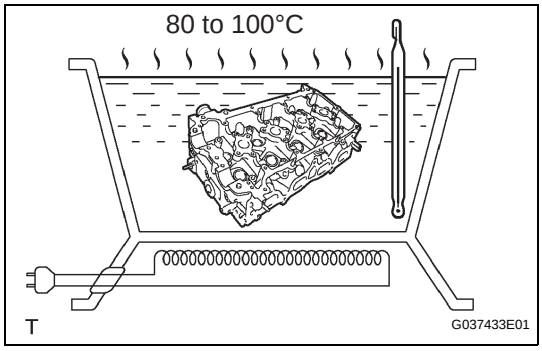


**5. REMOVE INTAKE VALVE GUIDE BUSH**

(a) Heat the cylinder head to 80 to 100 °C(176 to 212°F).

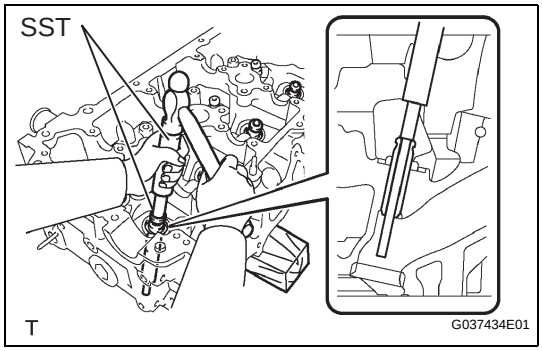


(b) Place the cylinder head on wooden blocks.

(c) Using SST and a hammer, tap out the guide bush.
**SST 09201-01055, 09950-70010 (09951-07100)**

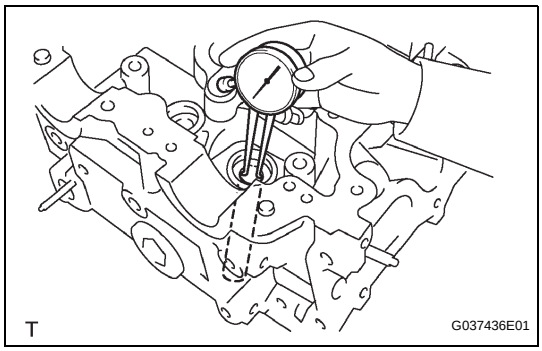


**6. INSTALL INTAKE VALVE GUIDE BUSH**

(a) Using a caliper gauge, measure the bush bore diameter of the cylinder head.
**Cylinder bore diameter:**
**10.285 to 10.306 mm (0.4049 to 0.4057)**

(b) Select a new guide bush (STD or O/S 0.05).

| Bush bore diameter | Bush size |
|---|---|
| 10.285 to 10.306 mm (0.4049 to 0.4057 in.) | Use STD |
| 10.335 to 10.356 mm (0.4069 to 0.4077 in.) | Use O/S 0.05 |

If the bush bore diameter of the cylinder head is greater than 10.306 mm (0.4057 in.), machine the bush bore to the dimension of 10.335 to 10.356 mm (0.4069 to 0.4077 in.) to install a O/S 0.05 valve guide bush.
If the bush bore diameter of the cylinder head is greater than 10.356 mm (0.4077 in.), replace the cylinder head.



cardiagn.com

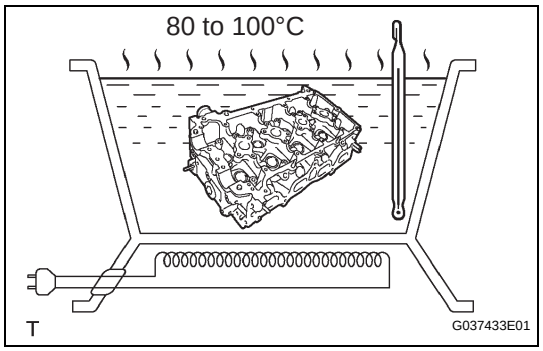


(c) Heat the cylinder head to 80 to 100°C (176 to 212°F).

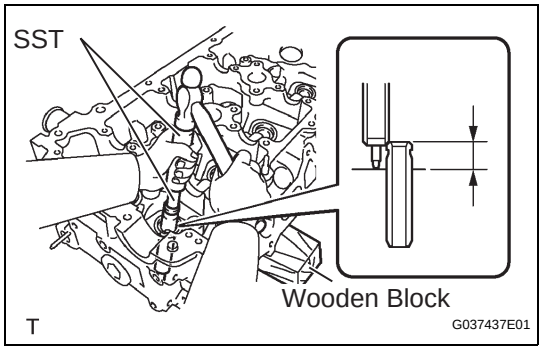


(d) Place the cylinder head on wooden blocks.
(e) Using SST, tap in a new valve guide bush to the specified protrusion height.
**SST 09201-01055, 09950-70010 (09951-07100)**
**Protrusion height (A):**
**9.8 to 10.2 mm (0.3858 to 0.4016 in.)**

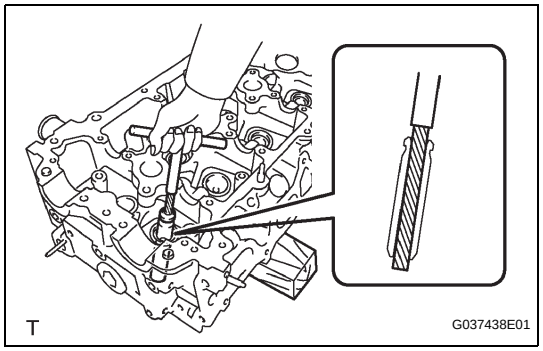


(f) Using a sharp 5.5 mm reamer, ream the valve guide bush to obtain the standard specified clearance.
**Standard oil clearance:**
**0.025 to 0.060 mm (0.0010 to 0.0023 in.)**

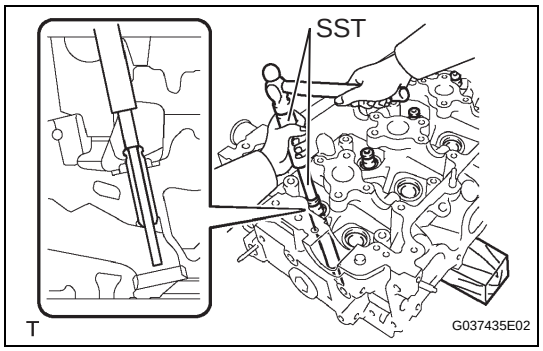


**7. REMOVE EXHAUST VALVE GUIDE BUSH**
(a) Heat the cylinder head to 80 to 100°C(176 to 212°F)
(b) Place the cylinder head on wooden blocks.
(c) Using SST and a hammer, tap out the guide bush.
**SST 09201-01055, 09950-70010 (09951-07100)**

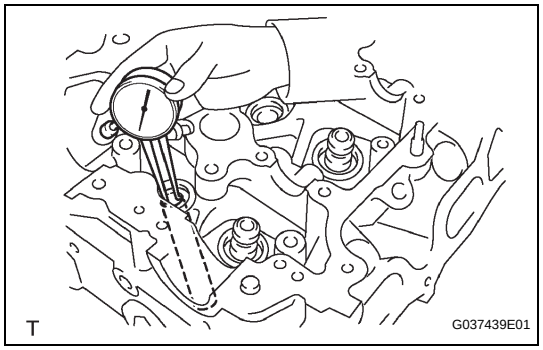


**8. INSTALL EXHAUST VALVE GUIDE BUSH**
(a) Using a caliper gauge, measure the bush bore diameter of the cylinder head.
**Cylinder bore diameter:**
**10.285 to 10.306 mm (0.4049 to 0.4057)**
(b) Select a new guide bush (STD or O/S 0.05).

| Bush bore diameter | Bush size |
|---|---|
| 10.285 to 10.306 mm (0.4049 to 0.4057 in.) | Use STD |
| 10.335 to 10.356 mm (0.4069 to 0.4077 in.) | Use O/S 0.05 |



cardiagn.com

If the bush bore diameter of the cylinder head is greater than 10.306 mm (0.4057 in.), machine the bush bore to the dimension of 10.335 to 10.356 mm (0.4069 to 0.4077 in.) to install a O/S 0.05 valve guide bush.
If the bush bore diameter of the cylinder head is greater than 10.356 mm (0.4077 in.), replace the cylinder head.

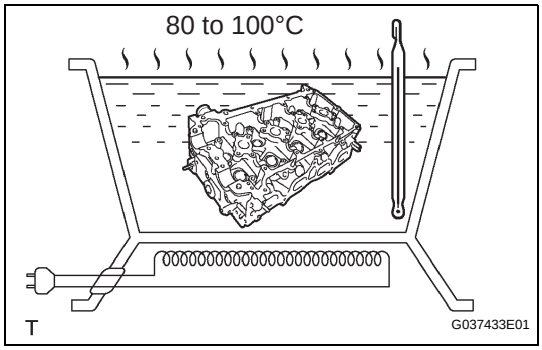


(c) Heat the cylinder head to 80 to 100°C (176 to 212°F).

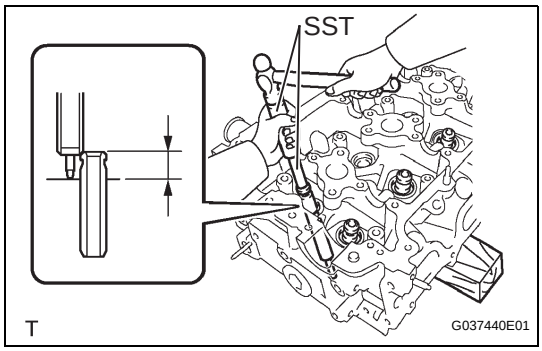


(d) Place the cylinder head on wooden blocks.
(e) Using SST, tap in a new valve guide bush to the specified protrusion height.
**SST 09201-01055, 09950-70010 (09951-07100)**
**Protrusion height (A):**
**7.6 to 8.0 mm (0.2992 to 0.3150 in.)**

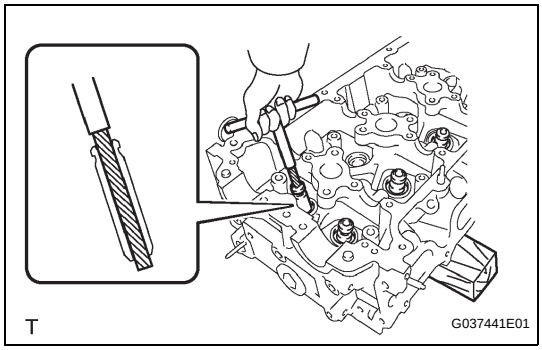


(f) Using a sharp 5.5 mm reamer, ream the valve guide bushing to obtain the standard specified clearance.
**Standard oil clearance:**
**0.030 to 0.065 mm (0.0012 to 0.0026 in.)**

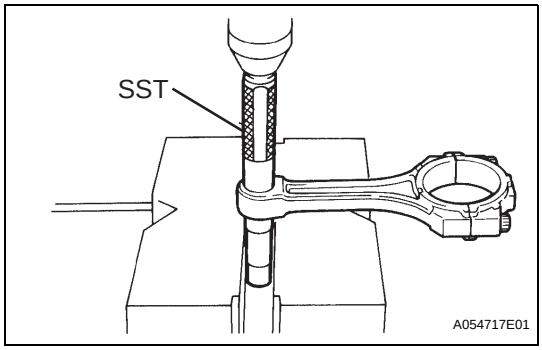


**9. REMOVE CONNECTING ROD SMALL END BUSH**
(a) Using SST and a press, press out the bush.
**SST 09222-30010**

cardiagn.com

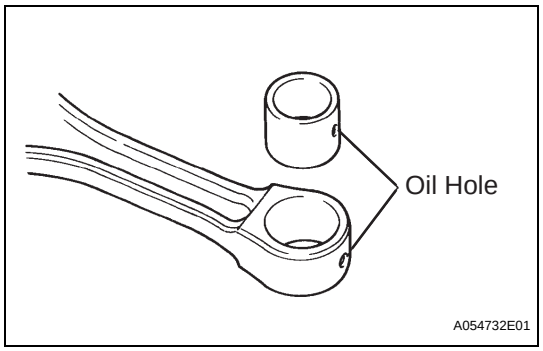


**10. INSTALL CONNECTING ROD SMALL END BUSH**

(a) Align the oil holes of a new bush and the connecting rod.

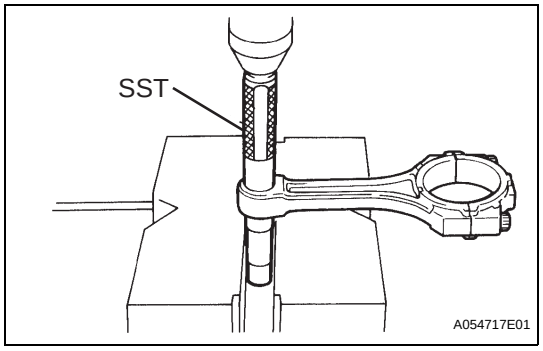


(b) Using SST and a press, press in the bush.
**SST 09222-30010**

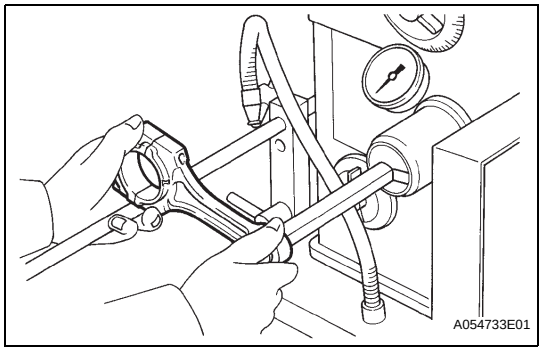


(c) Using a pin hole grinder, hone the bush to obtain the standard specified clearance (see step 26.) between the bush and piston pin.

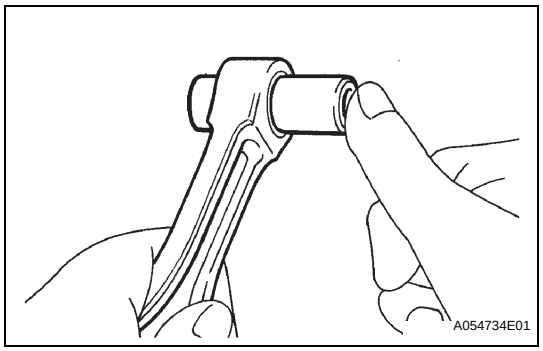


(d) Check that the piston pin fits at normal room temperature.
(1) Coat the piston pin with engine oil, and push it into the connecting rod with your thumb.

# REASSEMBLY

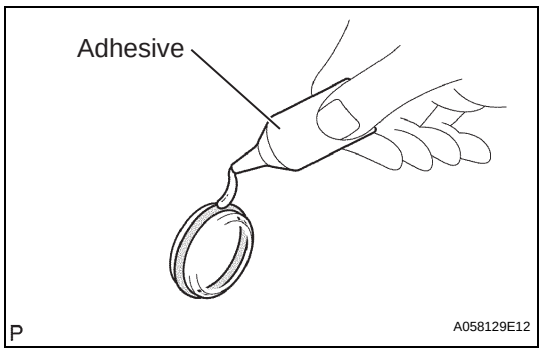


**1. INSTALL TIGHT PLUG**

**NOTICE:**
**If water leaks from the tight plug or the plug corrodes, replace it.**

(a) Apply adhesive around the tight plugs.
**Adhesive:**
**Part No. 08833-00070, THREE BOND 1324 or equivalent.**

EM

cardiagn.com

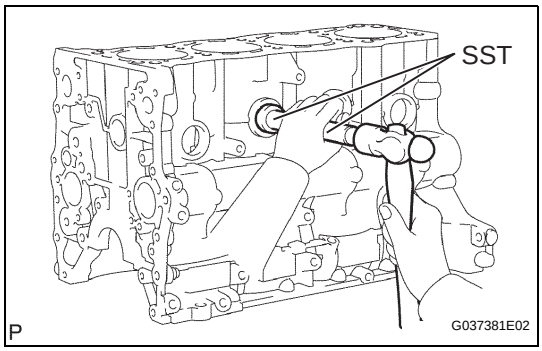


(b) Using SST and a hammer, tap in new tight plugs as shown in the illustration.

(c) Using SST, tap in the 8 tight plugs A and C.
**SST 09950-60010 (09951-00350), 09950-70010 (09951-07100)**

(d) Using SST, tap in the tight plug B.
**SST 09950-60010 (09951-00300), 09950-70010 (09951-07100)**

(e) Using SST, tap in the 3 tight plugs D.
**SST 09950-60010 (09951-00400), 09950-70010 (09951-07100)**

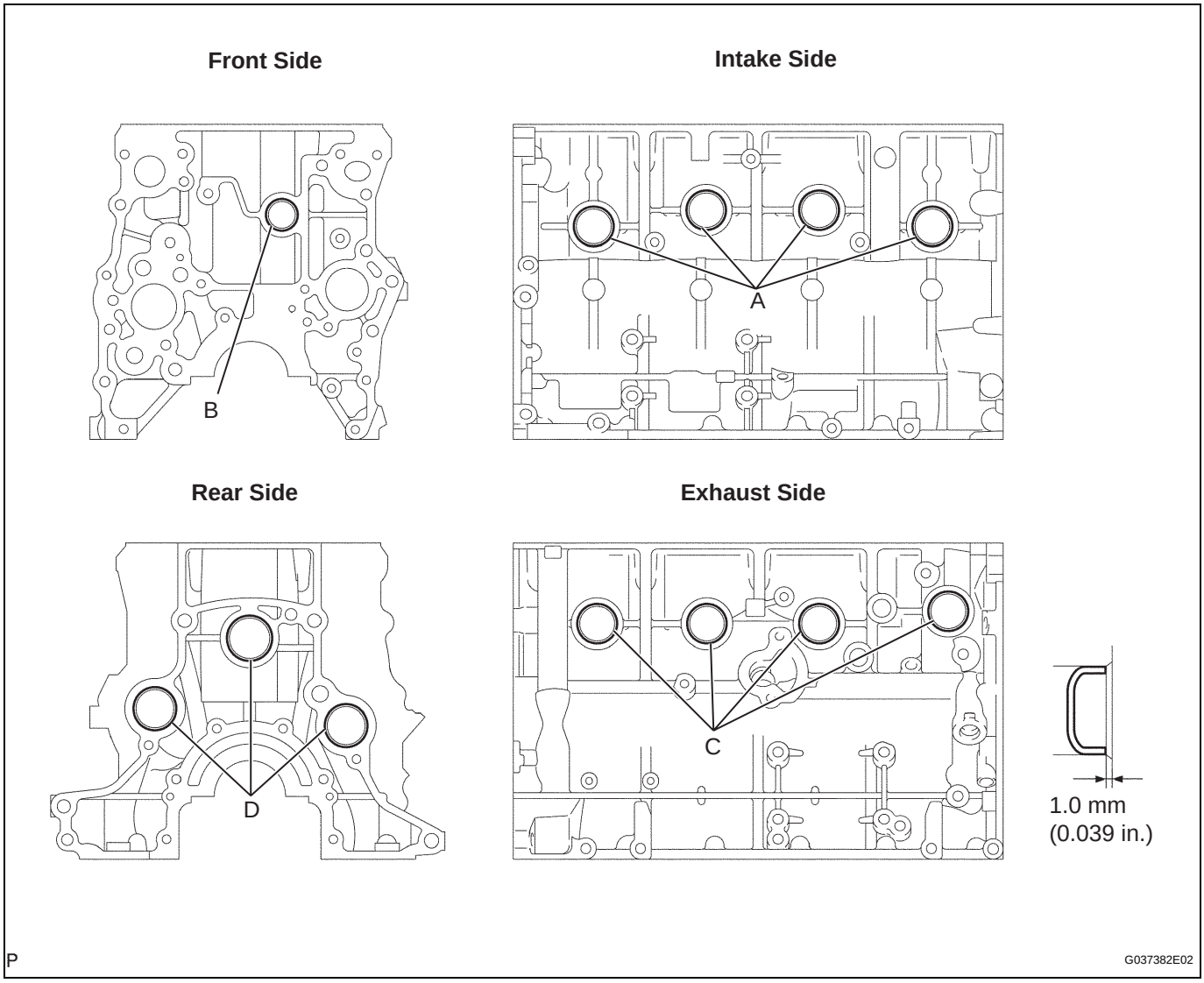


**2. INSTALL STUD BOLT**

(a) Using an E7 "torx" socket wrench, install the stud bolts B and D.
**Torque: 7.5 N*m (77 kgf*cm, 66 in.*lbf) for stud bolts B and D**

(b) Using an E8 "torx" socket wrench, install the stud bolts A.
**Torque: 7.5 N*m (77 kgf*cm, 66 in.*lbf) for stud bolts A**



cardiagn.com

(c) Apply adhesive to the hole for the stud bolt C on the cylinder block. Using an E7 "torx" socket wrench, install the stud bolts C.

**Torque: 7.5 N*m (77 kgf*cm, 66 in.*lbf) for stud bolt C**

**NOTICE:**

**If the stud bolt is deformed or the threads are damaged, replace it.**

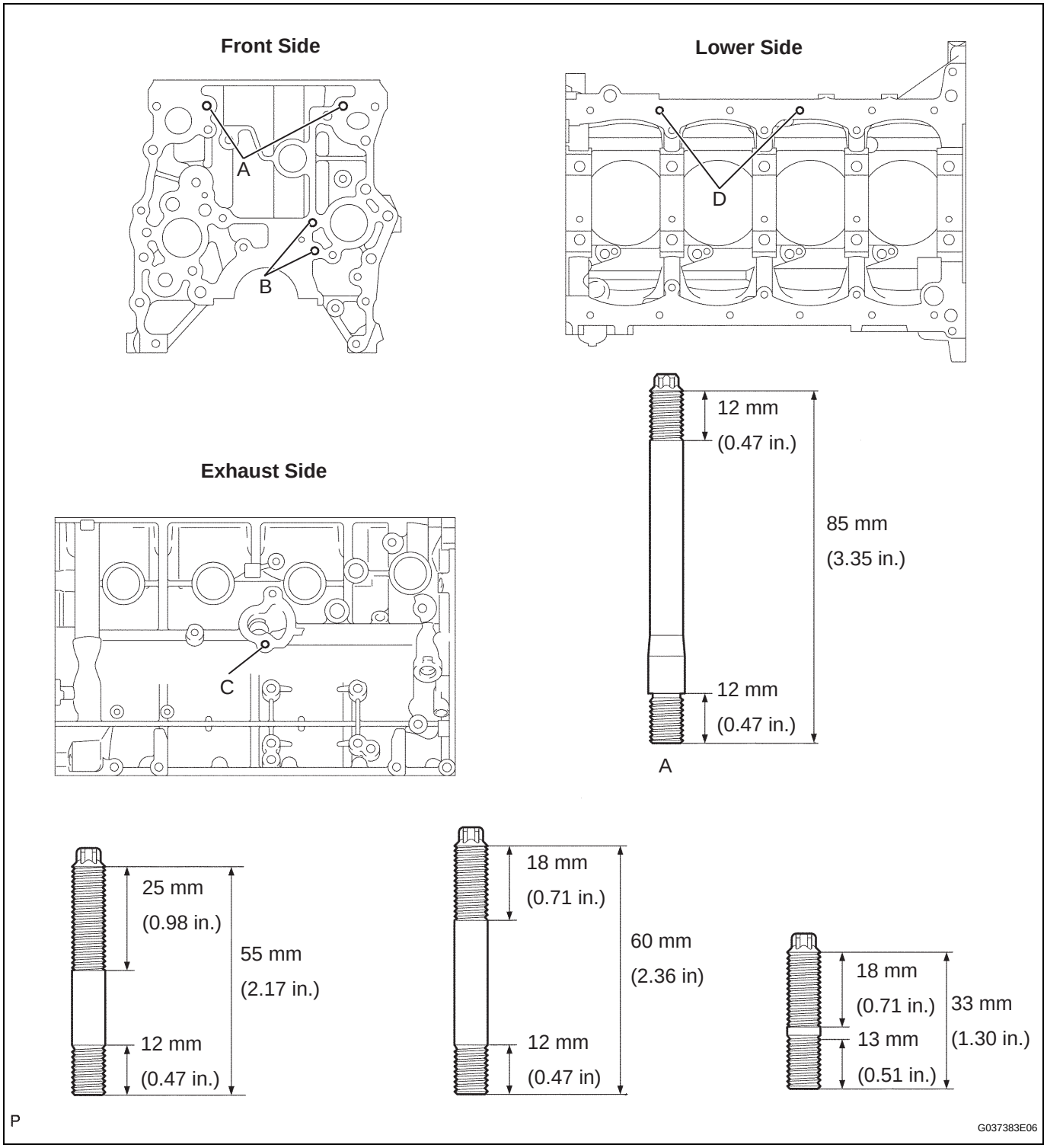


cardiagn.com

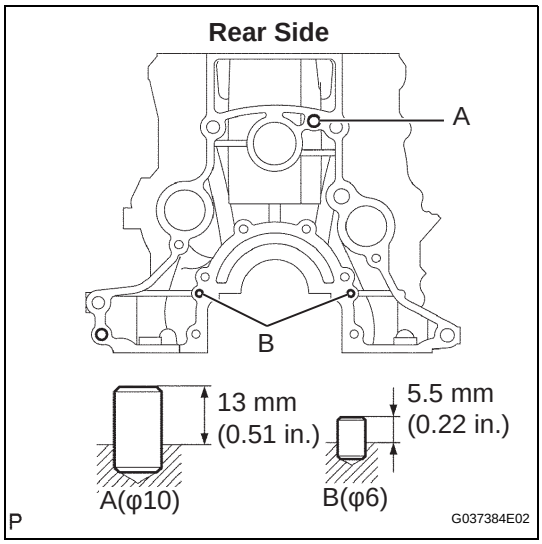


**3. INSTALL STRAIGHT PIN**

(a) Using a plastic-faced hammer, tap in new straight pins to the cylinder block.

**4. INSTALL RING PIN**

(a) Using a plastic-faced hammer, tap in new ring pins to the cylinder block.

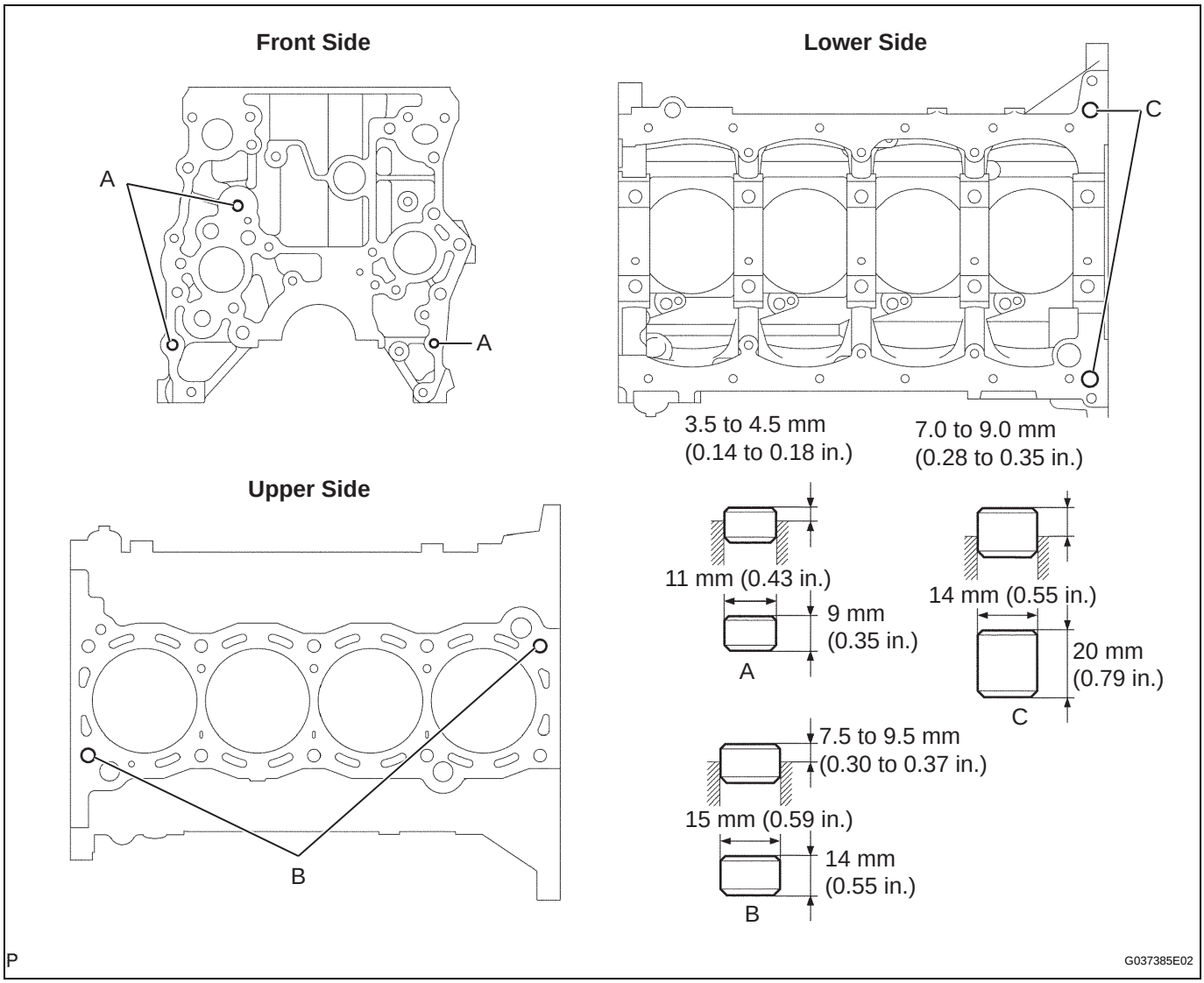


EM

cardiagn.com

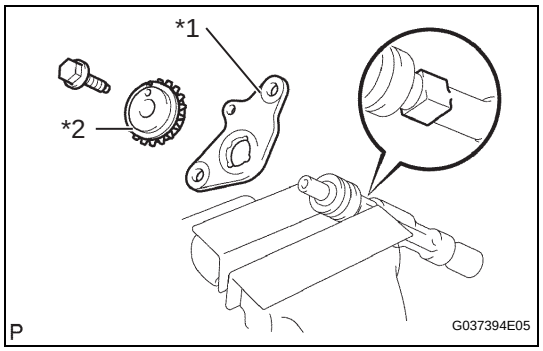


**5. INSTALL NO. 2 BALANCESHAFT DRIVEN GEAR**

(a) Mount the head portion of the balanceshaft in a vise.
**NOTICE:**
**Be careful not to damage the balanceshaft.**

(b) Install the balanceshaft thrust washer No.2 (* 1) and balanceshaft driven gear No.2 (* 2).

(c) Install and torque the bolt.
**Torque: 36 N*m (365 kgf*cm, 26 ft.*lbf)**

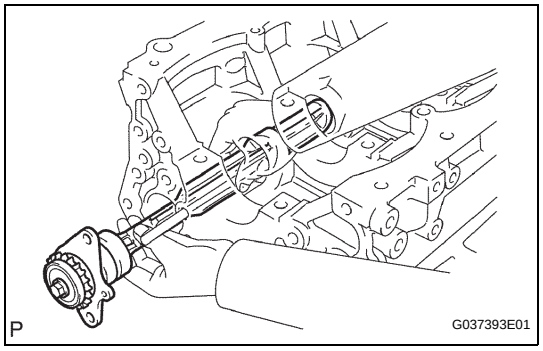


**6. INSTALL NO.2 BALANCESHAFT**

(a) Install the balanceshaft to the cylinder block.
**NOTICE:**
**When installing the balanceshaft, make sure to support the balanceshaft with both hands and avoid scratching the balanceshaft bearing on the cylinder block side.**

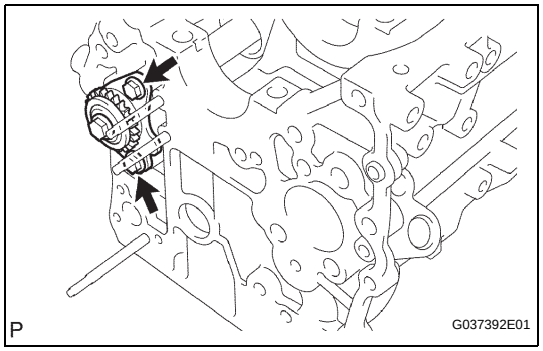


(b) Install and torque the 2 bolts.
**Torque: 18 N*m (184 kgf*cm, 13 ft.*lbf)**

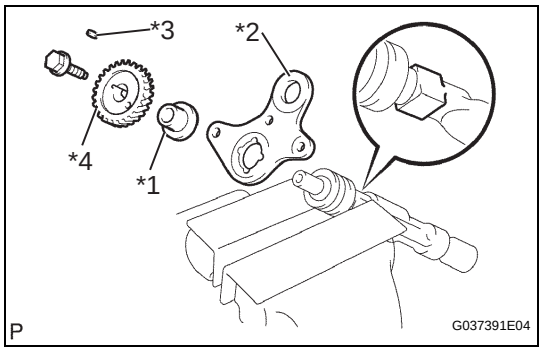


**7. INSTALL NO. 1 BALANCESHAFT DRIVEN GEAR**

(a) Mount the head portion of the balanceshaft in a vise.
**NOTICE:**
**Be careful not to damage the balanceshaft.**

(b) Install the balanceshaft thrust spacer (* 1), balanceshaft thrust washer No.1 (* 2), sliding key (* 3) and balanceshaft driven gear No.1 (* 4).

(c) Install and torque the bolt.
**Torque: 36 N*m (365 kgf*cm, 26 ft.*lbf)**

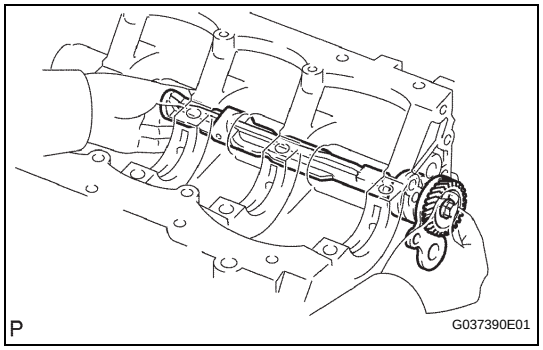


**8. INSTALL NO.1 BALANCESHAFT**

(a) Install the No.1 balanceshaft to the cylinder block.
**NOTICE:**
**When installing the balanceshaft, make sure to support the balanceshaft with both hands and avoid scratching the balanceshaft bearing on the cylinder block side.**



cardiagn.com

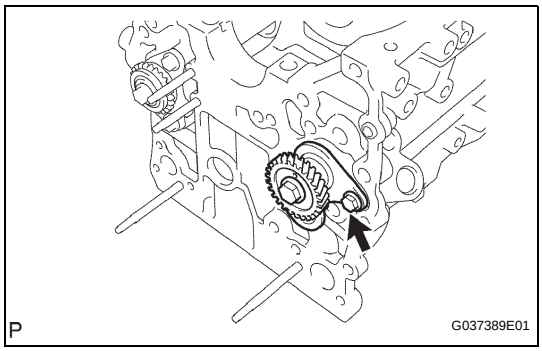


(b) Install and torque the bolt.
**Torque: 18 N*m (184 kgf*cm, 13 ft.*lbf)**

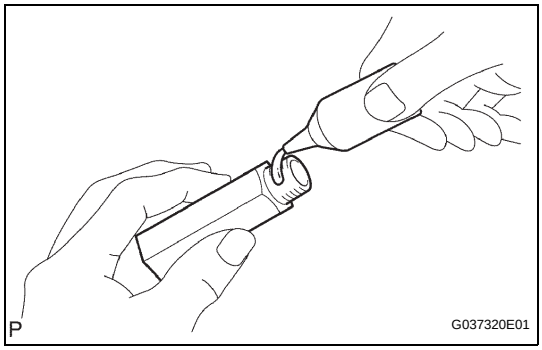


**9. INSTALL CYLINDER BLOCK WATER DRAIN COCK SUB-ASSEMBLY**

(a) Apply adhesive around the drain cock.

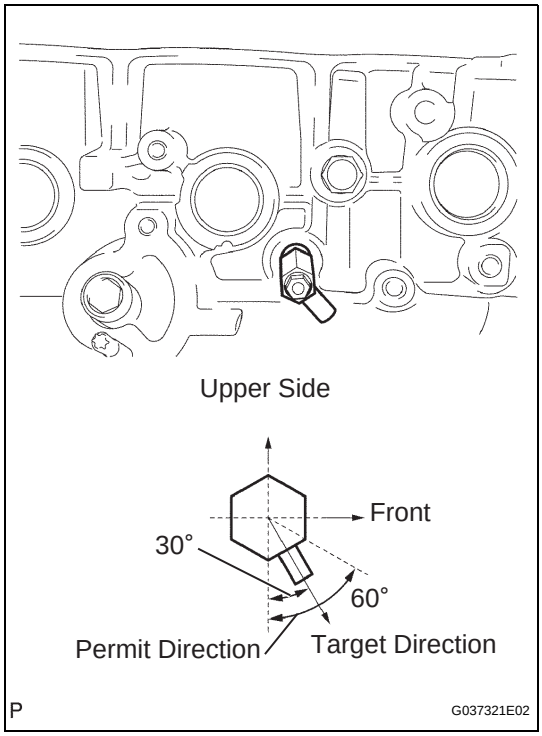


(b) Install the cylinder block water drain cock as shown in the illustration.
**Torque: 25 N*m (250 kgf*cm, 18 in.*lbf)**

(c) Install the water drain cock plug to the water drain cock sub-assembly.
**Torque: 13 N*m (130 kgf*cm, 9 in.*lbf)**

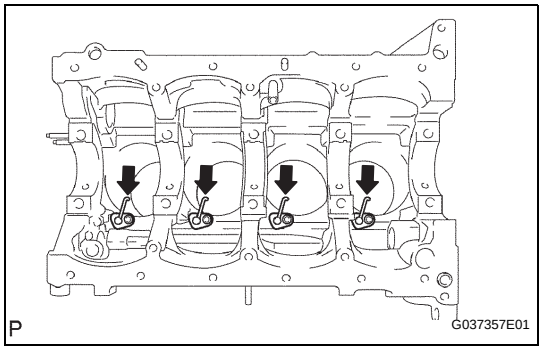


**10. INSTALL NO. 1 OIL NOZZLE SUB-ASSEMBLY**

(a) Using an E7 "torx" socket wrench, install the oil nozzles.
**Torque: 7.0 N*m (71 kgf*cm, 62 in.*lbf)**

EM

cardiagn.com

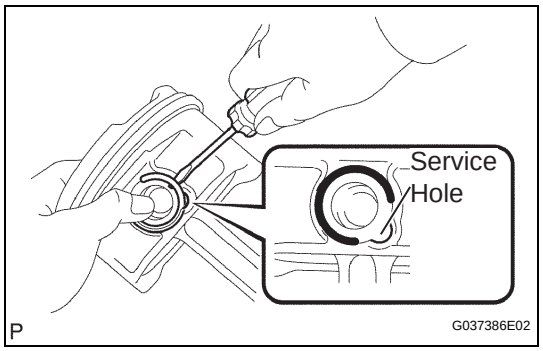


**11. INSTALL WITH PIN PISTON SUB-ASSEMBLY**

(a) Assemble the piston and connecting rod.

(1) Using a screwdriver, install a new snap ring at one end of the piston pin hole.

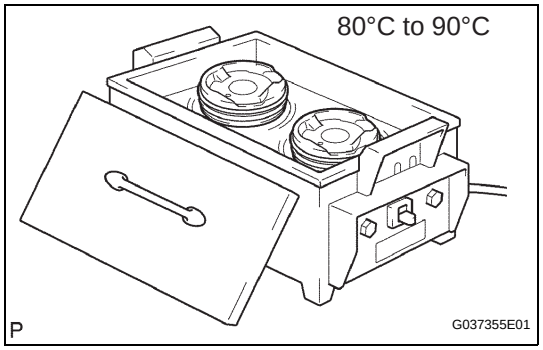


(2) Gradually heat the piston to approximately 80 to 90°C (176 to 194°F).

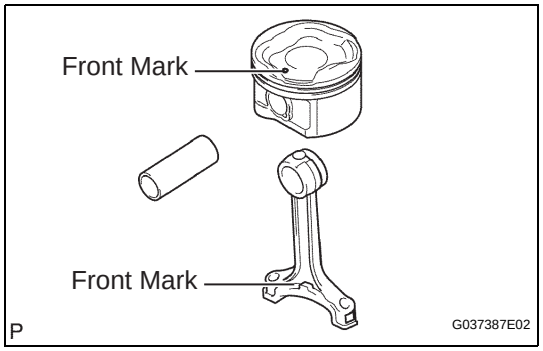


(3) Coat the piston pin with engine oil.

(4) Align the front marks of the piston and connecting rod, and push in the piston pin with your thumb.
HINT:
The piston and pin are a matched set.

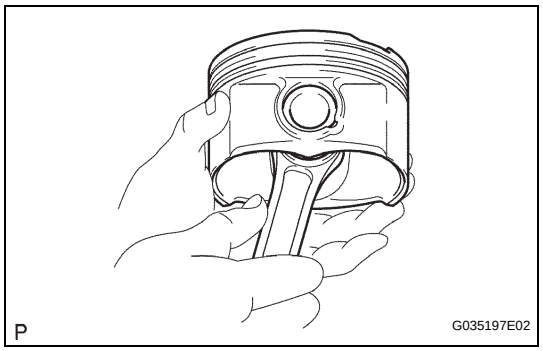


(5) Check the fitting condition between the piston and piston pin by trying to move the piston back and forth on the piston pin.

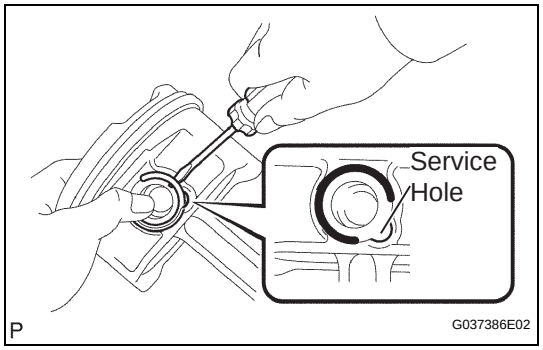


(6) Using a screwdriver, install a new snap ring at the other end of the piston pin hole.



cardiagn.com

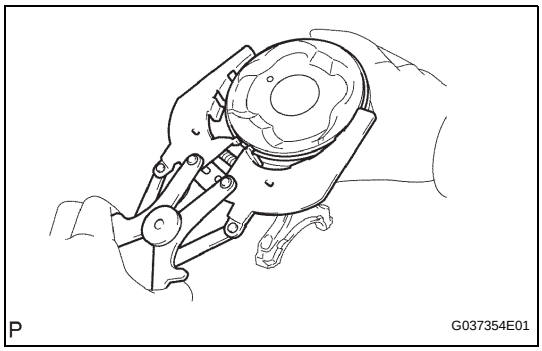


**12. INSTALL PISTON RING SET**

(a) Install the oil ring expander by hand.

(b) Using a piston ring expander, install the oil ring rail.

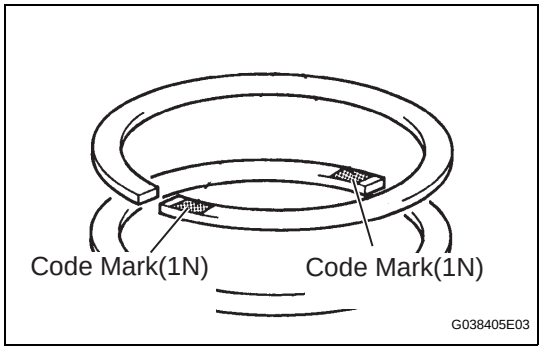


(c) Using a piston ring expander, install the 2 compression rings so that the painted marks are positioned as shown in the illustration.
HINT:
- Install the compression ring No.1 with the code mark (1N) facing upward.
- Install the compression ring No.2 with the code mark (2N) facing upward.

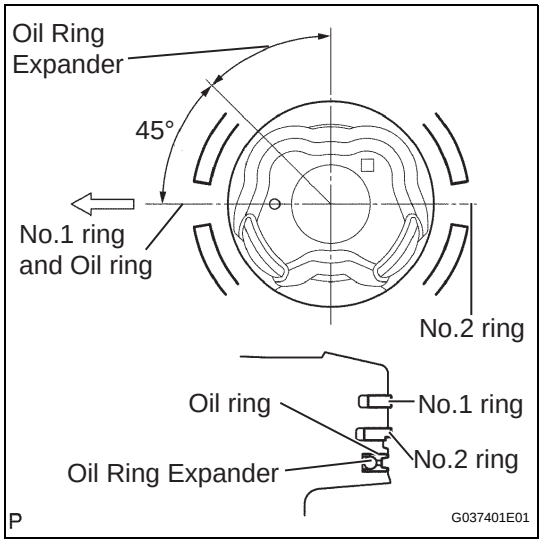


(d) Position the piston rings so that the ring ends are as shown in the illustration.
**NOTICE:**
**Do not align the ring ends.**

**13. INSTALL CRANKSHAFT BEARING**

**NOTICE:**
- **Do not apply engine oil to the bearing's contact area and backside.**
- **The crankshaft bearing cap bolt is tightened in 2 progressive steps.**

(a) Clean the main journal, and the both surfaces of the bearing.

cardiagn.com

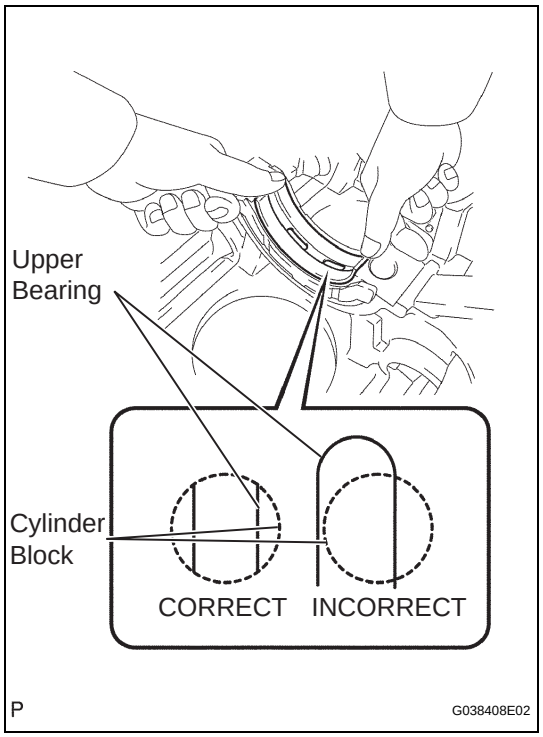


(b) Install the upper bearing.
(1) Install the upper bearing to the cylinder block as shown in the illustration.
**NOTICE:**
**Do not apply engine oil to the bearing's contact area and backside.**

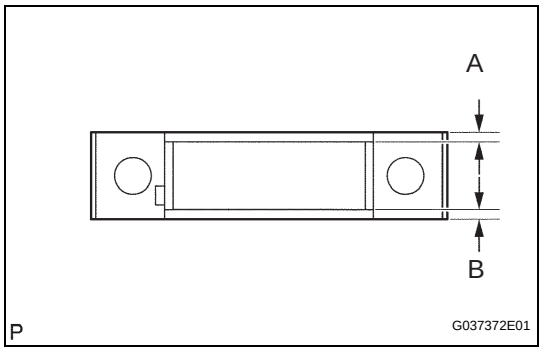


(c) Install the lower bearing.
(1) Install the lower bearing to the bearing cap.
(2) Using vernier calipers, measure the distance between the bearing cap's edge and the lower bearing's edge.
**Dimension (A - B):**
**0.3 mm (0.0118 in.) or less**
HINT:

| Journal | Dimension (A) |
|---|---|
| #1, 5 | 3.75 mm (0.1476 in.) |
| #3 | 1.75 mm (0.0689 in.) |
| #2, 4 | 2.75 mm (0.1083 in.) |

**NOTICE:**
**Do not apply engine oil to the bearing's contact area and backside.**

(d) With the upper bearing and lower bearing installed, use a plastic-faced hammer to install the bearing caps to the cylinder block.
**NOTICE:**
**Make sure that the bearing caps are installed in the correct positions and direction.**



cardiagn.com

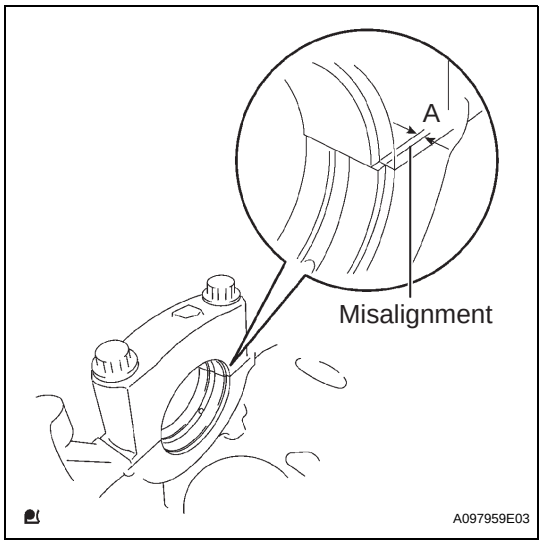


(e) Using vernier calipers, measure the amount of misalignment between the upper bearing and lower bearing, as shown in the illustration.
**Standard:**
**0.9 mm (0.035 in.) or less**

(f) Remove the bearing cap.

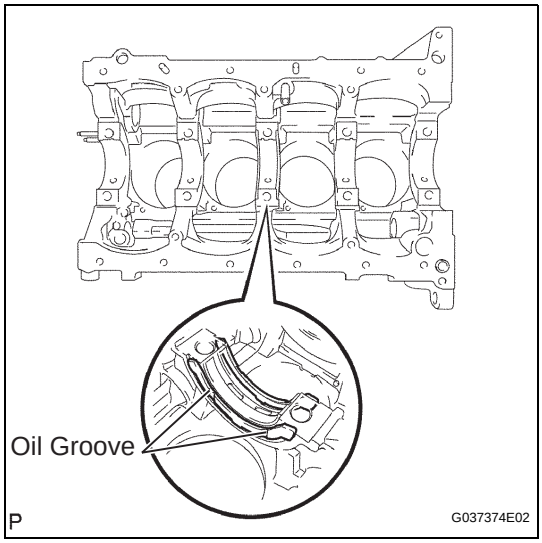


(g) Install the crankshaft thrust washer upper to the cylinder block.
(1) Install the 2 thrust washers under the No.3 journal position of the cylinder block with the oil grooves facing outward.
**NOTICE:**
**Be careful when installing the thrust bearing upper and lower as they are similar but cannot be interchanged.**

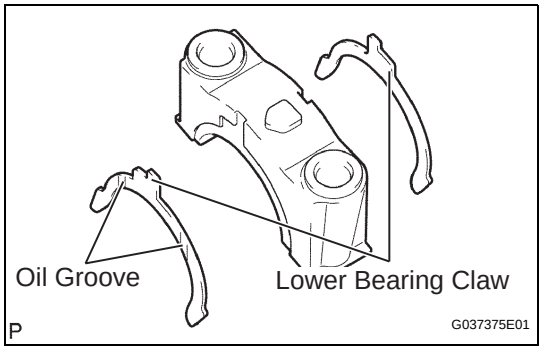


(h) Install the 2 thrust washers on the No.3 bearing cap with the grooves facing outward.
**NOTICE:**
**Be careful when installing the thrust bearing upper and lower as they are similar but cannot be interchanged. The bearing lower has a claw as shown in the illustration.**

(i) Apply engine oil to the lower bearing.

**14. INSTALL CRANKSHAFT**

(a) Apply engine oil to the upper bearing, then place the crankshaft on the cylinder block.



cardiagn.com

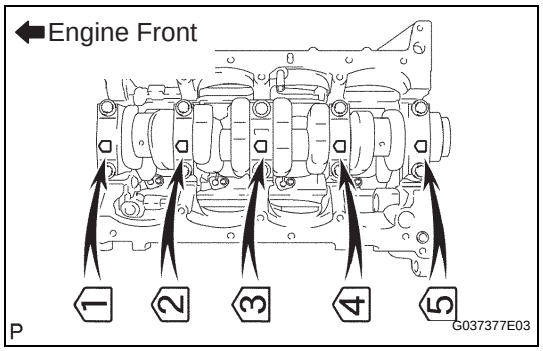


(b) Install the 5 crankshaft bearing caps in their proper locations.

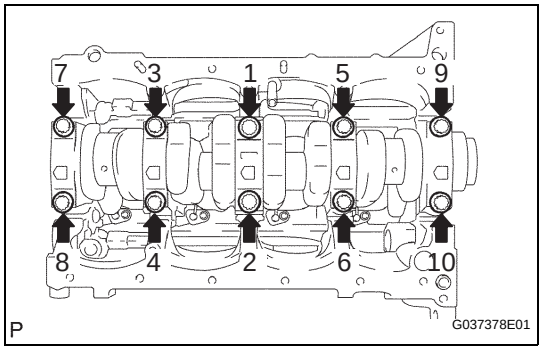


(c) Install the crankshaft bearing cap bolts.
HINT:
The main bearing cap bolts are tightened in 2 progressive steps.

(d) Step 1
(1) Install and uniformly tighten the 10 main bearing cap bolts in the sequence shown in the illustration.
**Torque: 39 N*m (398 kgf*cm, 29 ft.*lbf)**
If any of the main bearing cap bolts does not meet the torque specification, replace the main bearing cap bolt.

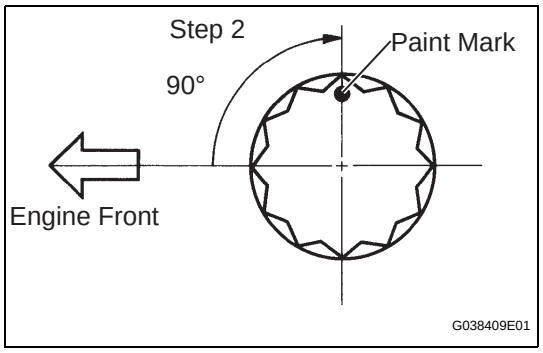


(e) Step 2
(1) Mark the front of the bearing cap bolts with paint.
(2) Retighten the bearing cap bolts by 90° in the order above.
(3) Check that the painted mark is now at a 90° angle to the front.

(f) Check that the crankshaft turns smoothly.

(g) Check the crankshaft thrust clearance (see step 5).

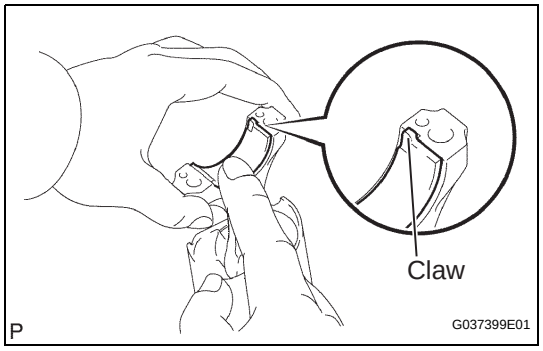


**15. INSTALL CONNECTING ROD BEARING**

(a) Align the bearing claw with the groove of the connecting rod or connecting cap.

(b) Install the bearings in the connecting rod and connecting rod cap.
**NOTICE:**
**Clean the backside of the bearing and the bearing surface of the connecting rod.**

**16. INSTALL PISTON SUB-ASSEMBLY WITH CONNENTING ROD**

(a) Apply engine oil to the cylinder walls, the pistons, and the surfaces of connecting rod bearings.



cardiagn.com

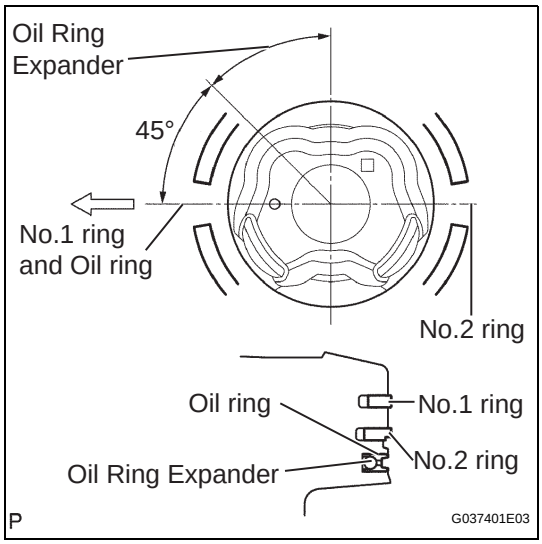


(b) Position the piston rings so that the ring ends are as shown in the illustration.
**CAUTION:**
**Do not align the ring ends.**

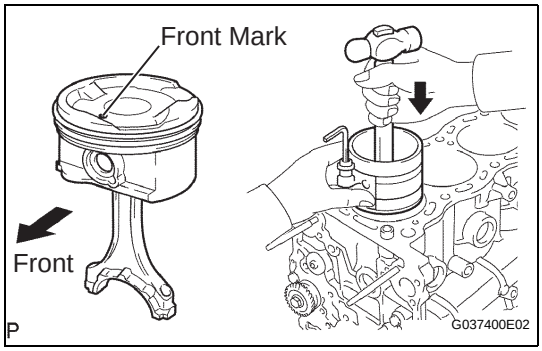


(c) Using a piston ring compressor, push the correctly numbered piston and connecting rod assembly into the cylinder with the front mark of the piston facing forward.
(d) Match the numbered connecting rod cap with the connecting rod.
**NOTICE:**
- **Match the numbered connecting rod cap with the connecting rod.**

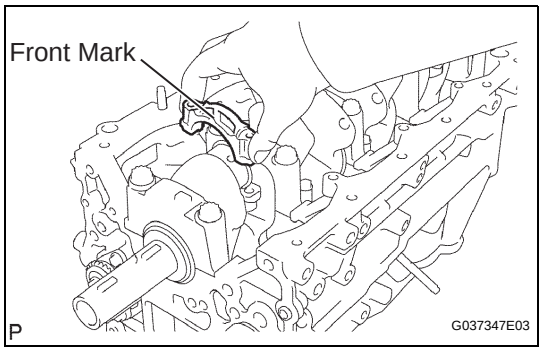


(e) Check that the front mark of the connecting rod cap is facing forward.
(f) Apply a light coat of engine oil to the threads and under the heads of the connecting rod cap bolts.

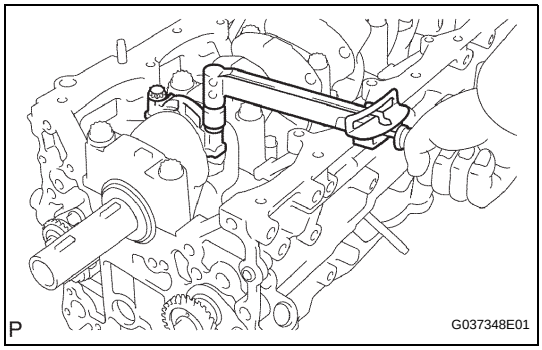


(g) Install and alternately tighten the bolts of the connecting rod cap in several steps.
**Torque: 25 N*m (250 kgf*cm, 18 ft.*lbf)**



cardiagn.com

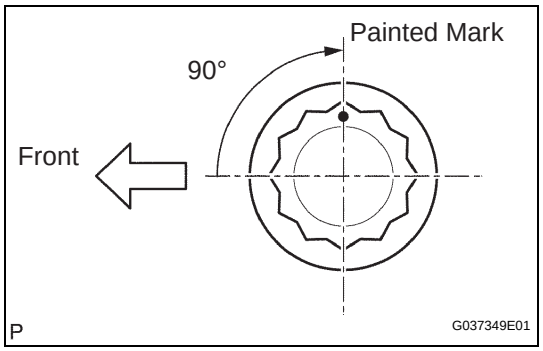


(h) Mark the front side of each connecting cap bolt with paint.
(i) Retighten the cap bolts by 90° as shown.
(j) Check that the painted mark is now at a 90° angle to the front.
(k) Check that the crankshaft turns smoothly.
(l) Check the connecting rod thrust clearance (see step 1).

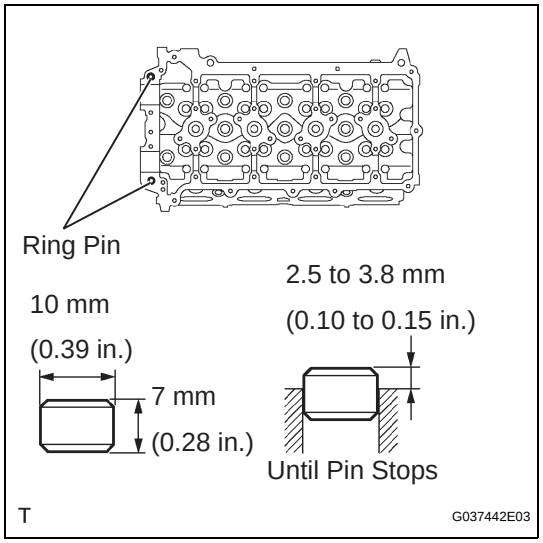


**17. INSTALL CAMSHAFT BEARING CAP SETTING RING PIN**

**NOTICE:**

**It is not necessary to remove with head pin unless it is being replaced.**

(a) Using a plastic-faced hammer, tap in a new ring pin until the pin stops.

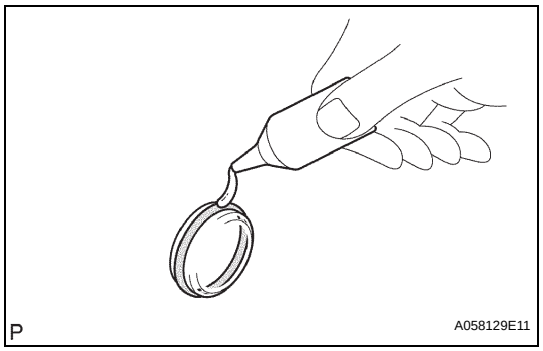


**18. INSTALL NO. 1 TIGHT PLUG**

**NOTICE:**

**If water leaks from the tight plug or the plug corrodes, replace it.**

(a) Apply adhesive to the tight plug hole of the cylinder head.

**Adhesive:**

**Part No. 08833-00070, THREE BOND 1324 or equivalent.**



cardiagn.com

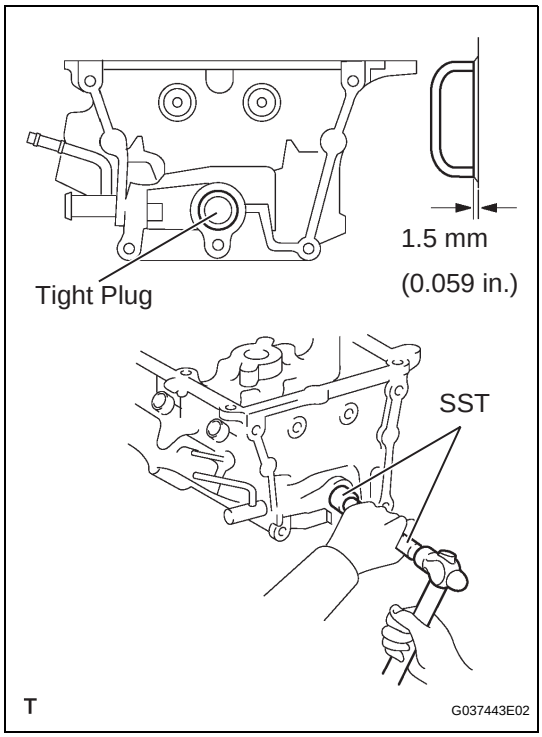


(b) Using SST, tap in a new tight plug to the cylinder head as shown in the illustration.
**SST 09950-60010 (09951-00250), 09950-70010 (09951-07100)**

**19. INSTALL STUD BOLT**
**NOTICE:**
**If the stud bolt is deformed or the threads are damaged, replace it.**

(a) Using E6 and E7 "torx" socket wrenchs, install the stud bolts.
**Torque: 3.0 N*m (31 kgf*cm, 27 in.*lbf) for stud bolt A**
**7.5 N*m (76 kgf*cm, 66 in.*lbf) for stud bolt B**
**9.5 N*m (97 kgf*cm, 84 in.*lbf) for stud bolt C**



cardiagn.com

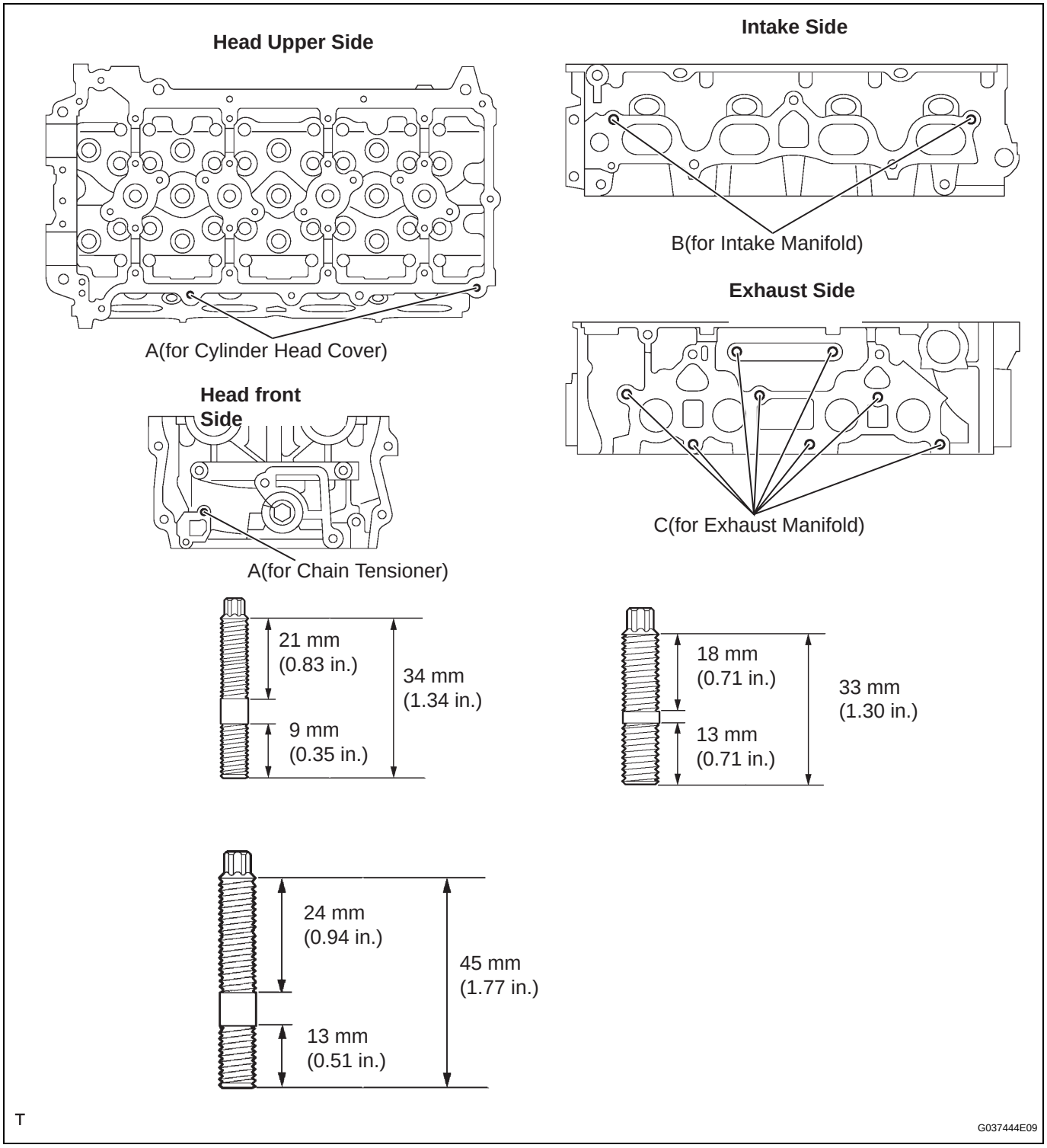


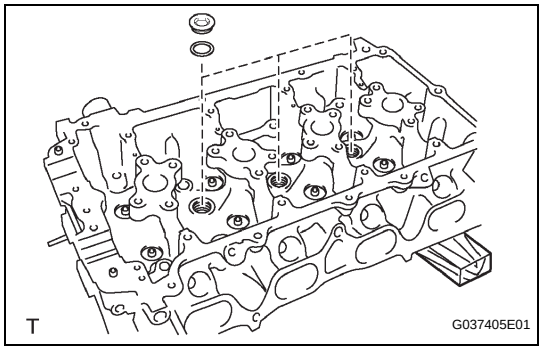


**20. INSTALL NO. 1 WITH HEAD STRAIGHT SCREW PLUG**

(a) Using a 10 mm hexagon wrench, install 3 new gaskets and the straight screw plugs.
**Torque: 44 N*m (449 kgf*cm, 32 ft.*lbf)**



cardiagn.com

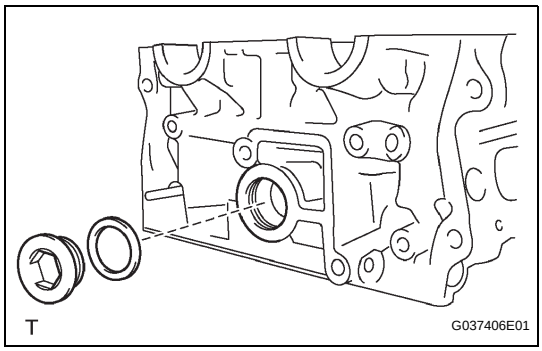


**21. INSTALL NO. 2 WITH HEAD STRAIGHT SCREW PLUG**

(a) Using a 19 mm hexagon wrench, install a new gasket and the straight screw plug.
**Torque: 90 N*m (918 kgf*cm, 66 ft.*lbf)**

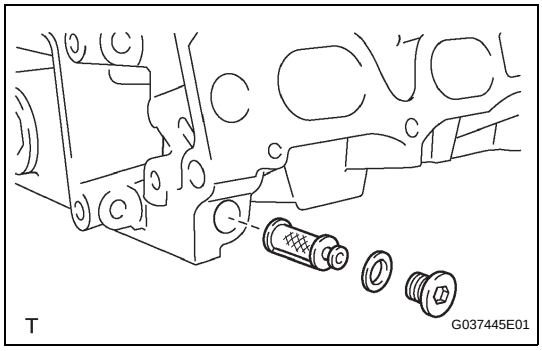


**22. INSTALL OIL CONTROL VALVE FILTER**

(a) Check that no foreign matter is on the mesh part of the filter.
If foreign objects are present, clean the part thoroughly.

(b) Using a 8 mm hexagon wrench, install a new gasket and the oil control valve filter with the screw plug.
**Torque: 30 N*m (306 kgf*cm, 22 ft.*lbf)**

**23. INSTALL VALVE SPRING SEAT**

(a) Install the valve spring seats to the cylinder head.

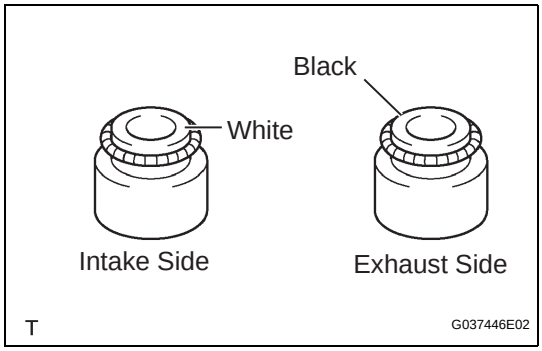


**24. INSTALL VALVE STEM OIL SEAL**

(a) Apply a light coat of engine oil to new oil seals.
**NOTICE:**
**Pay attention when installing the intake and exhaust oil seals. For example, installing the intake oil seal into the exhaust side or installing the exhaust oil seal to the intake side can cause installation problems later.**
HINT:
The intake valve oil seals are white and the exhaust valve oil seals are black.

(b) Using SST, push in the oil seals.
**SST 09201-41020**
**NOTICE:**
**Failure to use SST will cause the seal to be damaged or improperly seated.**

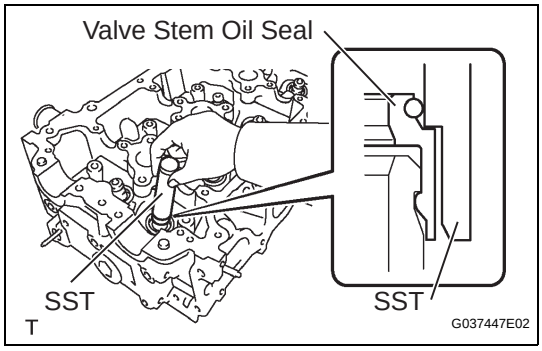


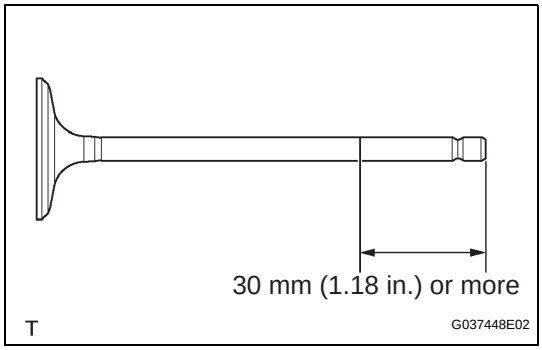


**25. INSTALL INTAKE VALVE**

(a) Apply plenty of engine oil to the tip area of the intake valve shown in the illustration.

cardiagn.com

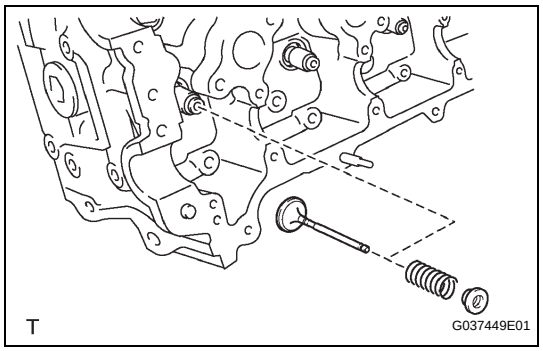


(b) Install the valve, compression spring and spring retainer to the cylinder head.
**NOTICE:**
**Install the same parts in the same combination to the original locations.**

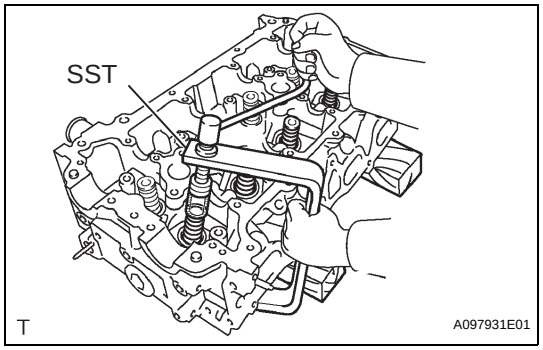


(c) Using SST and wooden blocks, compress the spring and install the 2 retainer locks.
**SST 09202-70020 (09202-00010)**

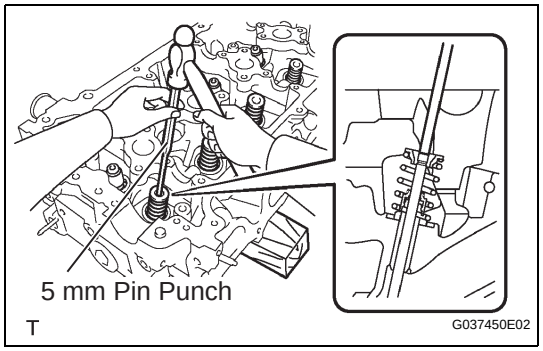


(d) Using a 5 mm pin punch and plastic-faced hammer, lightly tap the valve stem tip to ensure a proper fit.
**NOTICE:**
**Be careful not to damage the valve stem tip.**

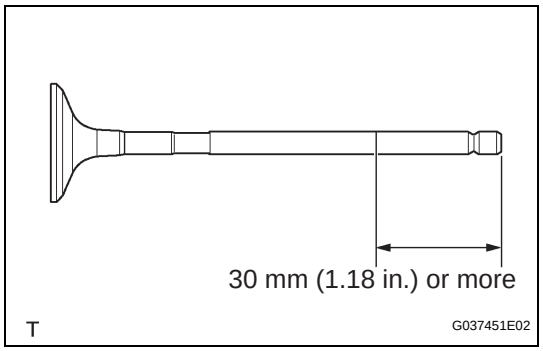


**26. INSTALL EXHAUST VALVE**

(a) Apply plenty of engine oil to the tip area of the intake valve shown in the illustration.

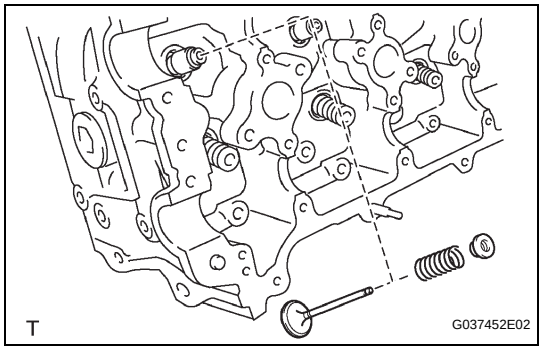


(b) Install the valve, compression spring and spring retainer to the cylinder head.
**NOTICE:**
**Install the same parts in the same combination to the original locations.**

EM
cardiagn.com

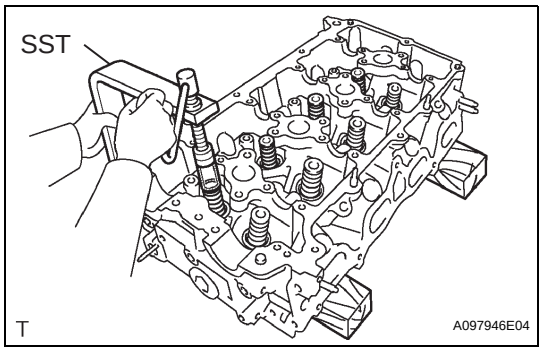


(c) Using SST and wooden blocks, compress the spring and install the 2 retainer locks.
**SST 09202-70020 (09202-00010)**

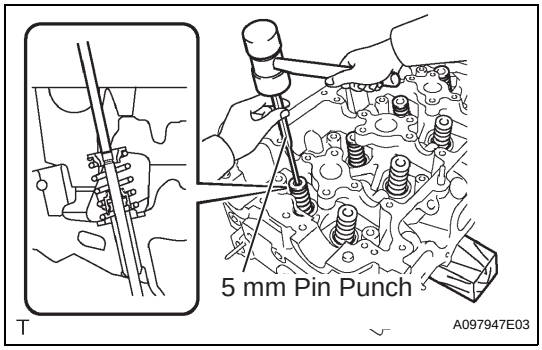


(d) Using a 5 mm pin punch and plastic-faced hammer, lightly tap the valve stem tip to ensure a proper fit.
**NOTICE:**
**Be careful not to damage the valve stem tip.**

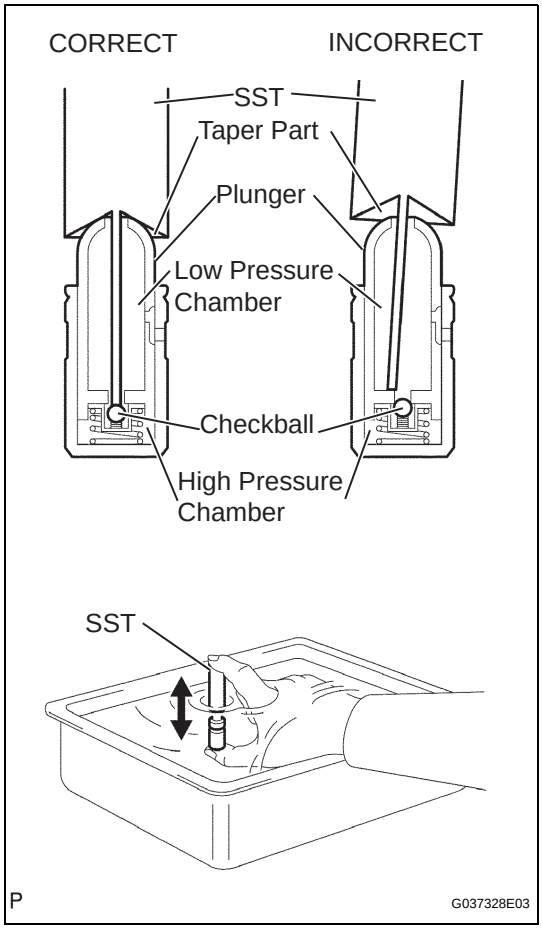


**27. INSTALL VALVE LASH ADJUSTER ASSEMBLY**
**NOTICE:**
- **Keep the lash adjuster free from dirt and foreign objects.**
- **Only use clean engine oil.**

(a) Place the lash adjuster into a container full of engine oil.
(b) Insert SST's tip into the lash adjuster's plunger and use the tip to press down on the checkball inside the plunger.
**SST 09276-75010**
(c) Squeeze the SST and lash adjuster together to move the plunger up and down 5 to 6 times.
(d) Check the movement of the plunger and bleed the air.
**OK:**
**Plunger moves up and down.**
**NOTICE:**
**When bleeding high-pressure air from the compression chamber, make sure that the tip of the SST is actually pressing the checkball as shown in the illustration. If the checkball is not pressed, air will not bleed.**
(e) After bleeding the air, remove the SST. Then quickly and firmly press the plunger with a finger.
**OK:**
**Plunger is very difficult to move.**
If the result is not as specified, replace the lash adjuster.

cardiagn.com

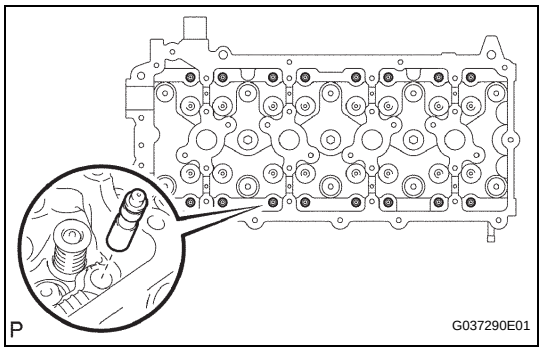


(f) Install the lash adjusters.
**NOTICE:**
**Install the lash adjuster to the original position.**

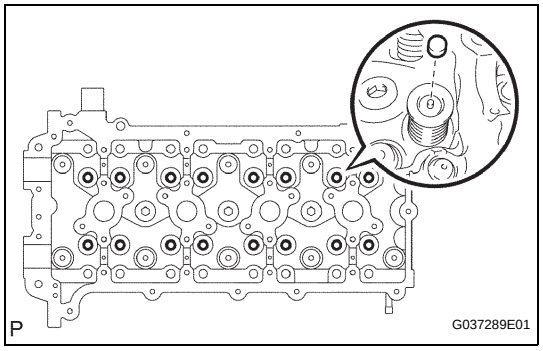


**28. INSTALL VALVE STEM CAP**
(a) Apply a light coat of engine oil to the valve stem caps.
(b) Install the valve stem caps to the cylinder head.

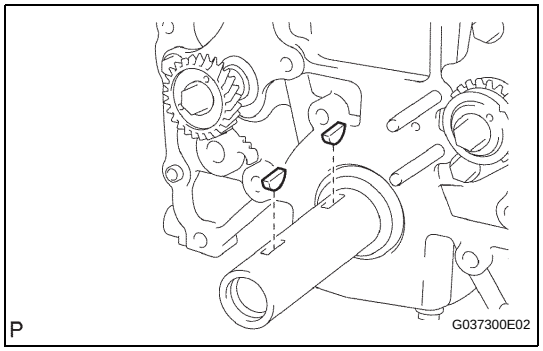


**29. INSTALL CRANKSHAFT PULLEY SET CRANKSHAFT KEY**
(a) Install the 2 pulley keys to the crankshaft.

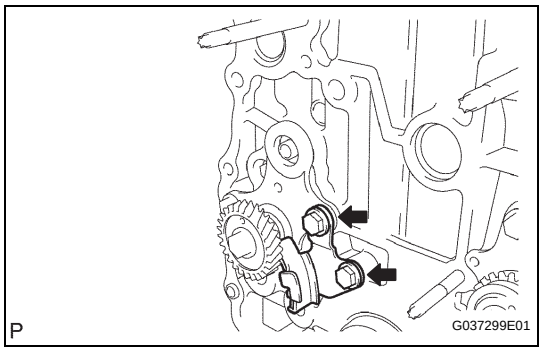


**30. INSTALL NO. 4 CHAIN VIBRATION DAMPER**
(a) Install the vibration damper No.4 with the 2 bolts.
**Torque: 18 N*m (185 kgf*cm, 13 ft.*lbf)**

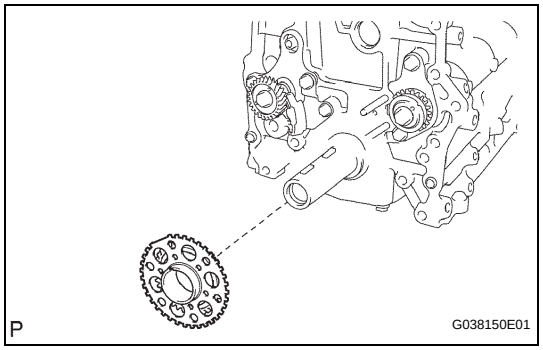


**31. INSTALL NO.2 CHAIN SUB-ASSEMBLY**
(a) Install the timing sprocket No.2 as shown in the illustration.
**NOTICE:**
**Check that the No.1 cylinder is at TDC and that the weights of the No.1 and No.2 balanceshafts are at the bottom side.**
HINT:
Install the sensor plate with the front mark facing forward.



cardiagn.com

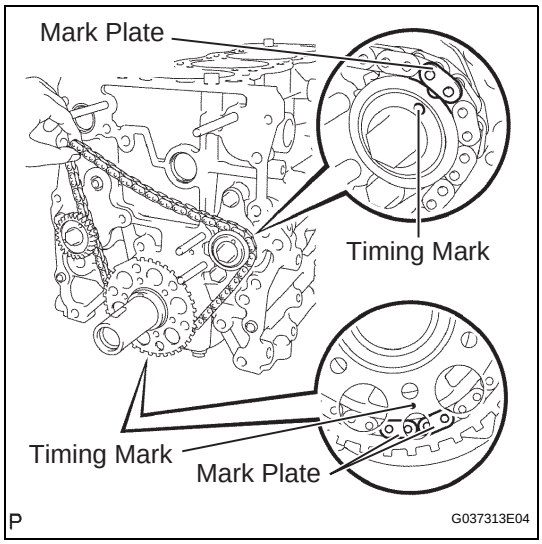


(b) As shown in the illustration, install the chain on the sprocket and gear with the painted marks aligned with the timing marks on the sprocket and gear.

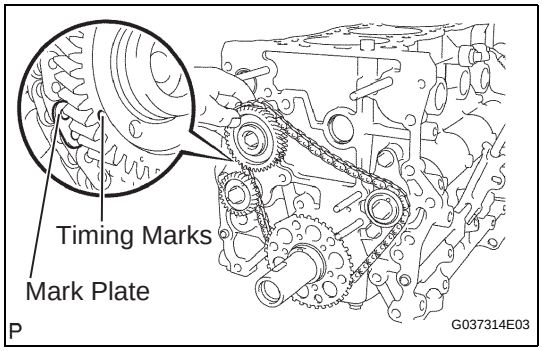


(c) Fit the other mark link of the crankshaft timing sprocket behind the large timing mark of the balanceshaft drive gear.

(d) Insert the balanceshaft drive gear shaft through the balanceshaft drive gear so that it fits into the thrust plate hole.

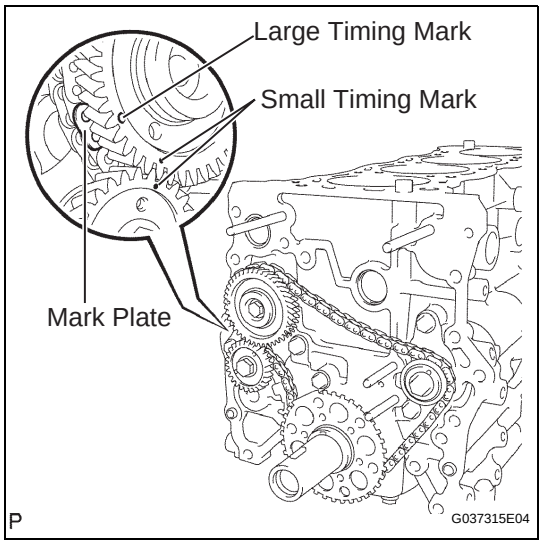


(e) Align the small timing mark of the balanceshaft drive gear with the timing mark of the balanceshaft timing gear.

(f) Install the bolt to the balanceshaft drive gear and tighten it.
**Torque: 25 N*m (255 kgf*cm, 18 ft.*lbf)**

EM

cardiagn.com

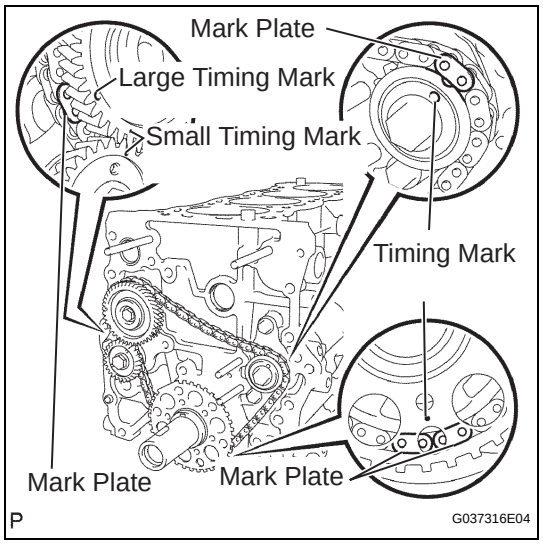


(g) Check that each timing mark is matched with the corresponding mark link.
**NOTICE:**
**Check that the No.1 cylinder is at TDC and that the weights of the No.1 and No.2 balanceshafts are at the bottom side.**

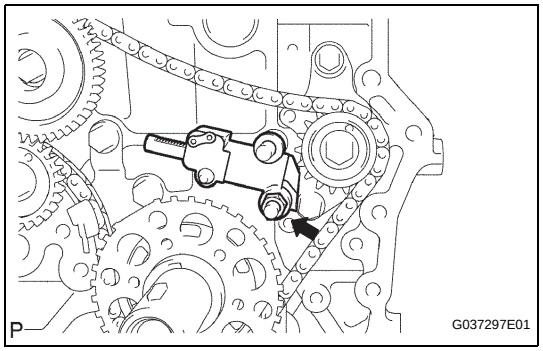


**32. INSTALL NO. 2 CHAIN TENSIONER ASSEMBLY**

(a) Install the chain tensioner assembly No.2 with the nut.
**Torque: 18 N*m (185 kgf*cm, 13 ft.*lbf)**
**NOTICE:**
**Assemble the chain tensioner with the pin installed, then remove the pin after assembly. When doing this, avoid pushing the vibration damper against the chain.**

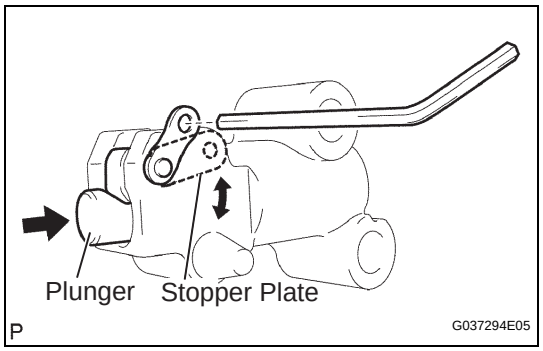


(b) Move the stopper plate downward to release the lock, and push the plunger deep into the tensioner.
(c) Move the stopper plate upward to set the lock, and insert a hexagon wrench into the stopper plate's hole.

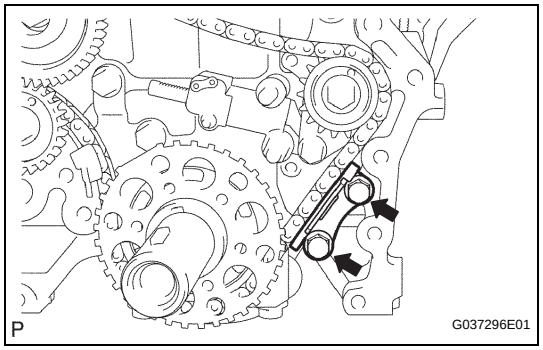


**33. INSTALL NO. 3 CHAIN VIBRATION DAMPER**

(a) Install the chain vibration damper No.3 with the 2 bolts.
**Torque: 18 N*m (185 kgf*cm, 13 ft.*lbf)**



cardiagn.com

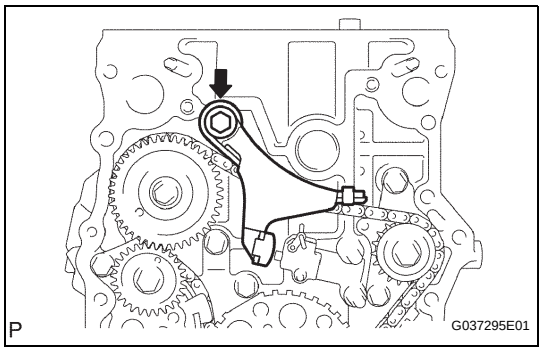


**34. INSTALL NO. 2 CHAIN VIBRATION DAMPER**

(a) Install the chain vibration damper No.2 with the bolt.
**Torque: 27 N*m (270 kgf*cm, 20 ft.*lbf)**

(b) Remove a pin from the chain tensioner assy No.2 and release the plunger.

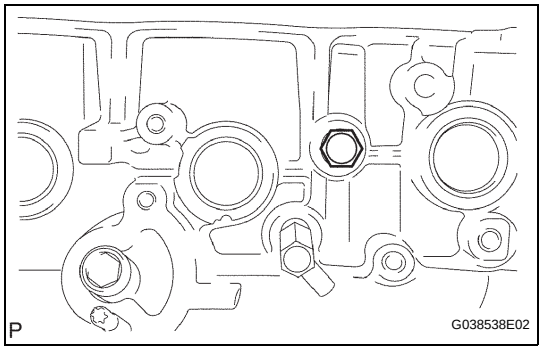


**35. INSTALL NO. 1 WITH HEAD TAPER SCREW PLUG**

(a) Install the screw plug No.1 to the cylinder block.
**Torque: 25 N*m (250 kgf*cm, 18 ft.*lbf)**

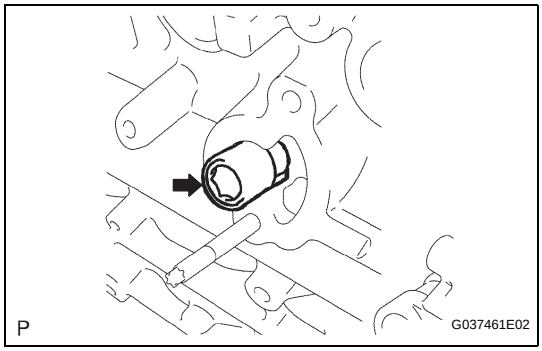


**36. INSTALL OIL FILTER BRACKET SUB-ASSEMBLY**

(a) Using a hexagon wrench, install the oil filter bracket union.
**Torque: 25 N*m (255 kgf*cm, 18 ft.*lbf)**

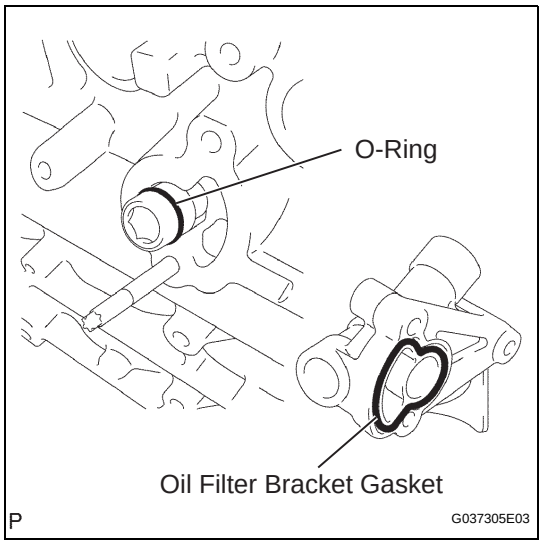


(b) Install a new oil filter bracket gasket to the oil filter bracket.

(c) Install a new O-ring to the oil filter bracket union.
**NOTICE:**
**Apply a light coat of engine oil to the new O-ring and oil filter bracket.**

(d) Install 2 new gaskets and the 2 screw plugs to the oil filter bracket.
**Torque: 49 N*m (500 kgf*cm, 36 ft.*lbf)**



cardiagn.com

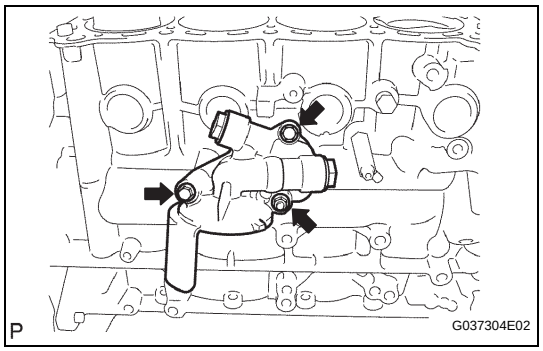


(e) Install the oil filter bracket with the 2 bolts and nut.
**Torque: 25 N*m (255 kgf*cm, 18 ft.*lbf)**

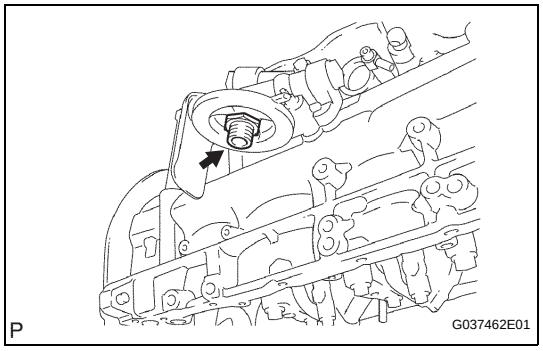


(f) Using a 27 mm socket wrench, install the oil filter union.
**Torque: 43 N*m (439 kgf*cm, 32 ft.*lbf)**

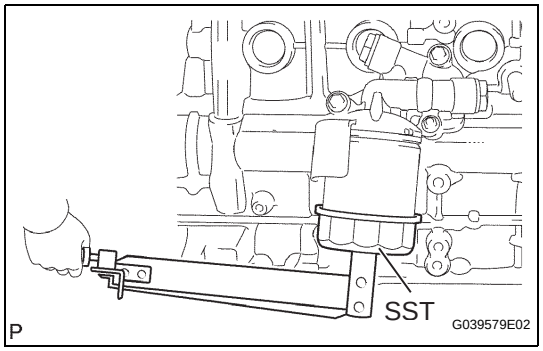


**37. INSTALL OIL FILTER SUB-ASSEMBLY**

(a) Check and clean the oil filter installation surface.
(b) Apply clean engine oil to the gasket of a new oil filter.
(c) Lightly screw the oil filter into place, and tighten it until the gasket contacts the seat.
(d) Using SST, tighten the oil filter.
**SST 09228-07501**
(1) When using a torque wrench:
Using a torque wrench, tighten the oil filter.
**Torque: 17 N*m (175 kgf*cm, 13 ft.*lbf)**
(2) When not using a torque wrench:
Tighten it an additional 3/4 turn.

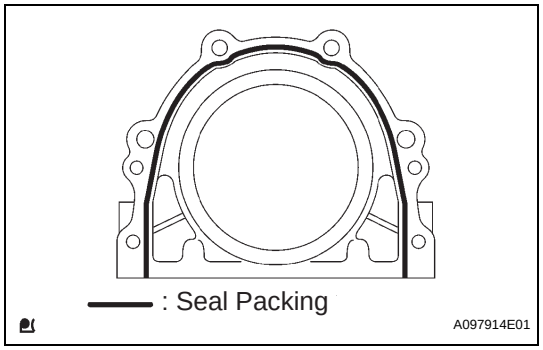


**38. INSTALL ENGINE REAR OIL SEAL RETAINER**

(a) Apply seal packing in a continuous bead as shown in the illustration.
**Seal packing:**
**Part No. 08826-00080 or equivalent**
**Seal width:**
**2 to 3 mm (0.079 to 0.118 in.)**
**NOTICE:**
- **Remove any oil from the contact surface.**
- **Install the crankcase within 3 minutes after applying seal packing.**
- **Do not start the engine for at least 4 hours after installing.**

(b) Install the oil seal retainer with the 6 bolts.
**Torque: 13 N*m (133 kgf*cm, 10 ft.*lbf)**



cardiagn.com

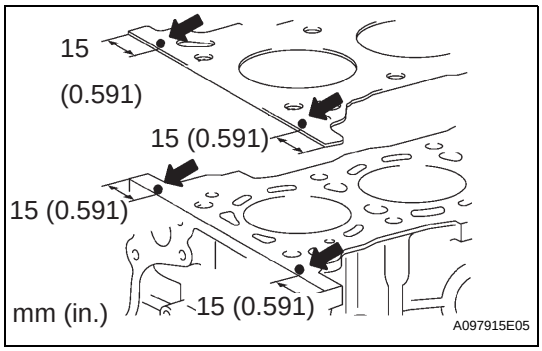


**39. INSTALL CYLINDER HEAD GASKET**

(a) Apply a continuous bead (seal width: 4 to 7 mm (0.15 to 0.28 in.)) of seal packing to the cylinder block upper side and cylinder head gasket upper side as shown in the illustration.

**Seal packing:**
**Part No. 08826-00100 or equivalent**
**Seal width:**
**4 to 7 mm (0.15 to 0.28 in.)**
**NOTICE:**
- **Remove any oil from the contact surface.**
- **Install the cylinder head gasket within 3 minutes after applying the seal packing.**
- **Install the cylinder head bolt within 15 minutes after applying the seal packing.**
- **Do not put into engine oil within 4 hours of installation.**

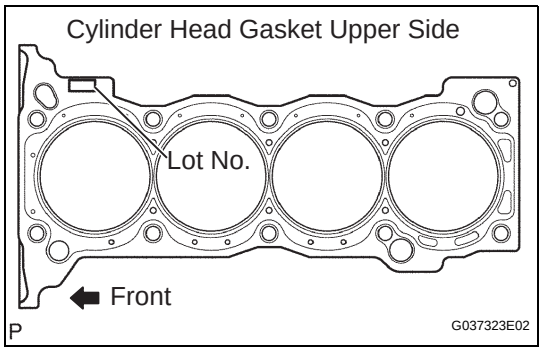


(b) Install a new cylinder head gasket on the cylinder block surface with the Lot No. stamp upper side facing upward.

**NOTICE:**
- **Make sure that the installation direction is correct.**
- **Place the cylinder head gently to avoid damaging the gasket with the bottom part of the head.**

**40. INSTALL CYLINDER HEAD SUB-ASSEMBLY**

HINT:
The cylinder head bolts are tightened in 3 progressive steps.

(a) Place the cylinder head on the cylinder block.

(b) Apply a light coat of engine oil to the threads and under the heads of the cylinder head bolts.

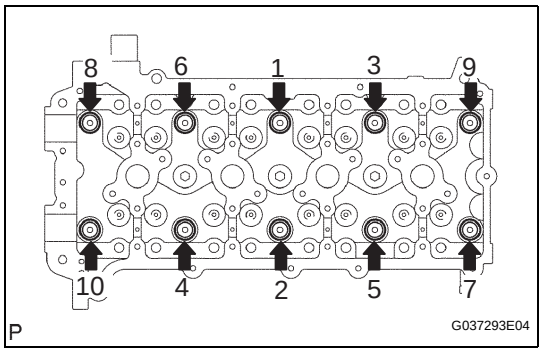


(c) Step 1

(1) Install and uniformly tighten the 10 cylinder head bolts with the plate washers, in several steps, in the sequence shown.
**Torque: 39 N*m (398 kgf*cm, 29 ft.*lbf)**

cardiagn.com

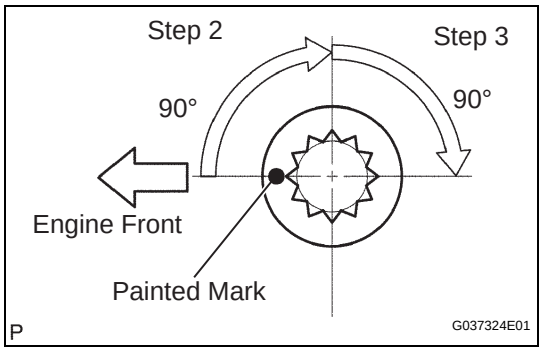


(d) Step 2
  (1) Mark the cylinder head bolt head with paint as shown in the illustration.
  (2) Retighten the cylinder head bolts by 90°.
(e) Step 3
  (1) Retighten the cylinder head bolts by an additional 90°.
  (2) Check that the painted mark is now facing rearward.

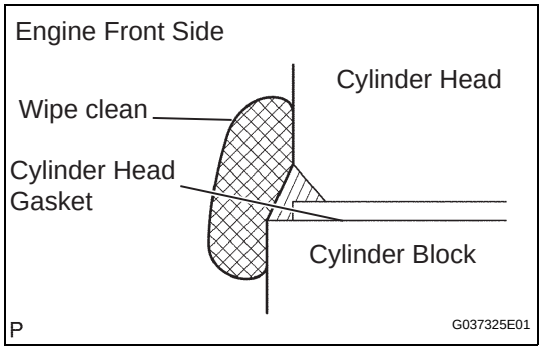


(f) Seal packing will seep out on the engine's front side. Thoroughly wipe clean any seal packing.

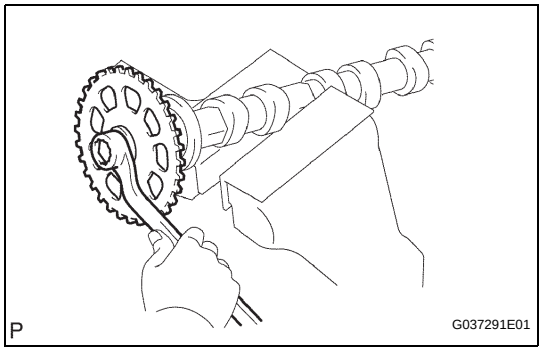


**41. INSTALL CAMSHAFT TIMING SPROCKET**

(a) Clamp the camshaft in a vise and then install the camshaft timing sprocket to the camshaft with the sprocket bolt.
**Torque: 78 N*m (795 kgf*cm, 58 ft.*lbf)**
**NOTICE:**
**Be careful not to damage the camshaft in the vise.**

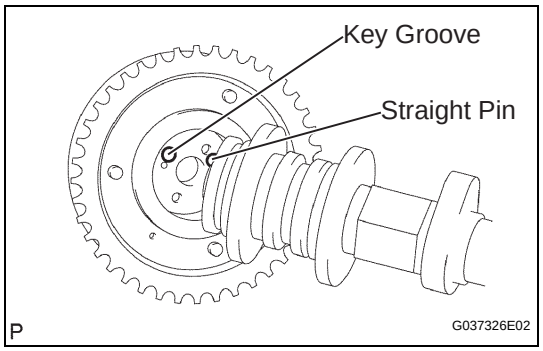


**42. INSTALL CAMSHAFT TIMING GEAR ASSEMBLY**

(a) Put the camshaft timing gear and camshaft together by aligning the key groove and straight pin.
(b) Lightly press the gear against the camshaft, and turn the gear. Push further at the position where the pin enters the groove.
**CAUTION:**
**Be sure not to turn the camshaft timing gear in the retard direction (the right angle).**
(c) Check that there is no clearance between the gear's fringe and the camshaft.
(d) Tighten the fringe bolt with the camshaft timing gear fixed.
**Torque: 78 N*m (795 kgf*cm, 58 ft.*lbf)**
(e) Check that the camshaft timing gear can move in the retard direction (the right angle), and is locked at the most retarded position.



cardiagn.com

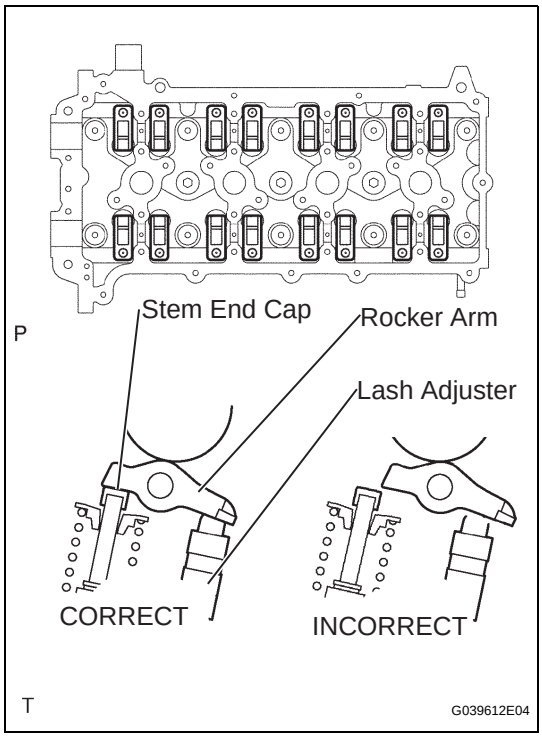


**43. INSTALL NO. 1 VALVE ROCKER ARM SUB-ASSEMBLY**

(a) Set the 16 rocker arms to the lash adjusters.
**NOTICE:**
**Before and after setting the camshaft and No.2 camshaft, firmly set the rocker arm to the lash adjuster.**

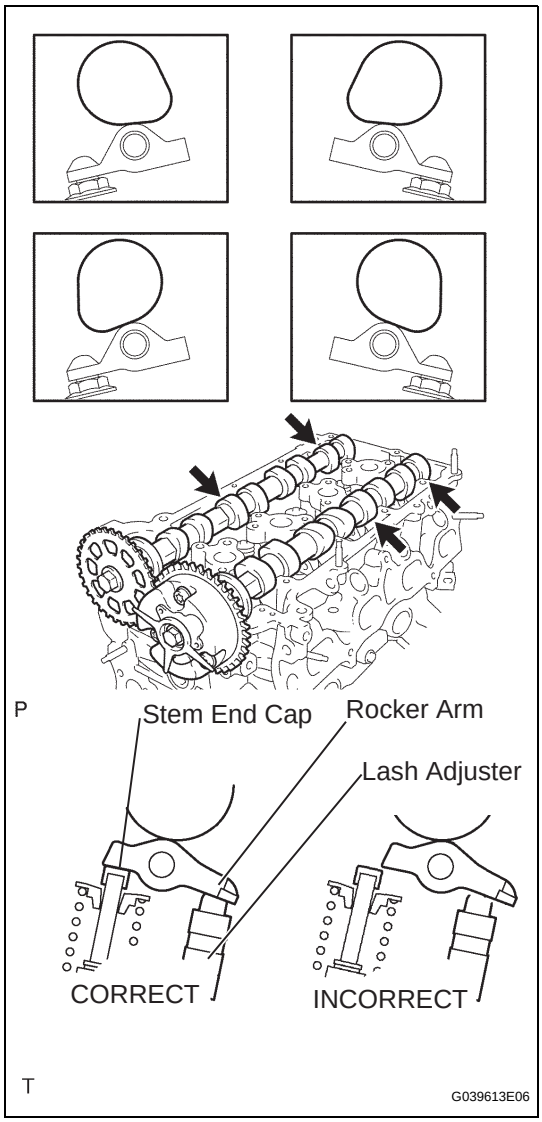


**44. INSTALL CAMSHAFTS**

(a) Apply clean engine oil to the camshaft's cam portion and the cylinder head journals.

(b) Set the camshaft and No.2 camshaft as shown in the illustration.
**NOTICE:**
**Before and after setting the camshaft and No.2 camshaft, firmly set the rocker arm to the lash adjuster.**

cardiagn.com

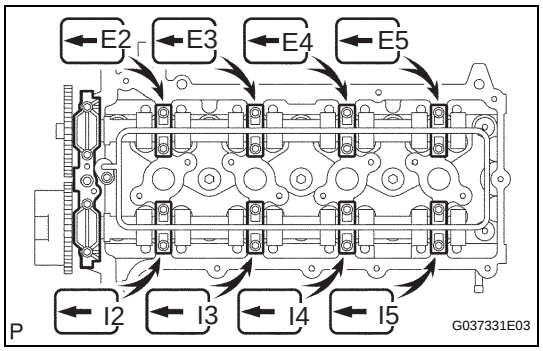


**45. INSTALL CAMSHAFT BEARING CAP**

(a) Temporarily install the camshaft bearing cap No.1.

(b) Check the proper location of each camshaft bearing cap No.2 and install them.

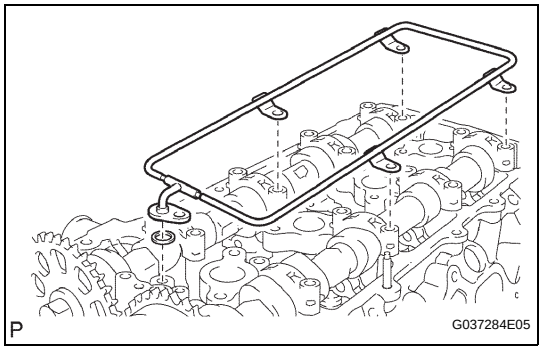


(c) Install a new O-ring to the camshaft bearing cap No.1.

(d) Temporarily install the oil delivery pipe.

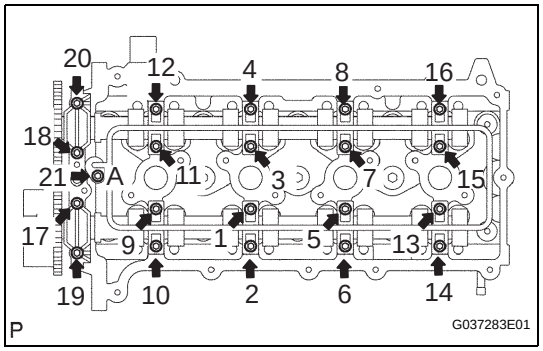


(e) Tighten the 21 bolts and 20 washers in the order shown in the illustration.
**Torque: 12 N*m (122 kgf*cm, 9 ft.*lbf) for bolt A**
**16 N*m (160 kgf*cm, 11 ft.*lbf) for except bolt A**

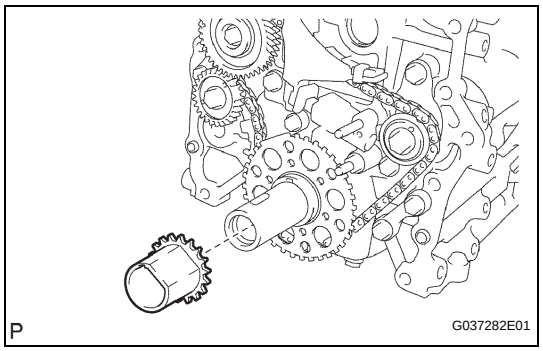


**46. INSTALL CRANKSHAFT TIMING SPROCKET**

(a) Install the timing sprocket as shown in the illustration.

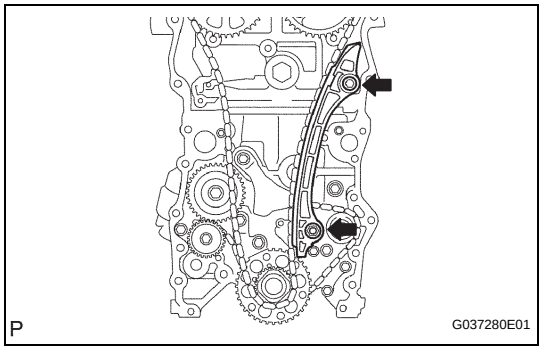


**47. INSTALL NO. 1 CHAIN VIBRATION DAMPER**

(a) Install the vibration damper with the bolt and nut.
**Torque: 21 N*m (214 kgf*cm, 15 ft.*lbf)**



cardiagn.com

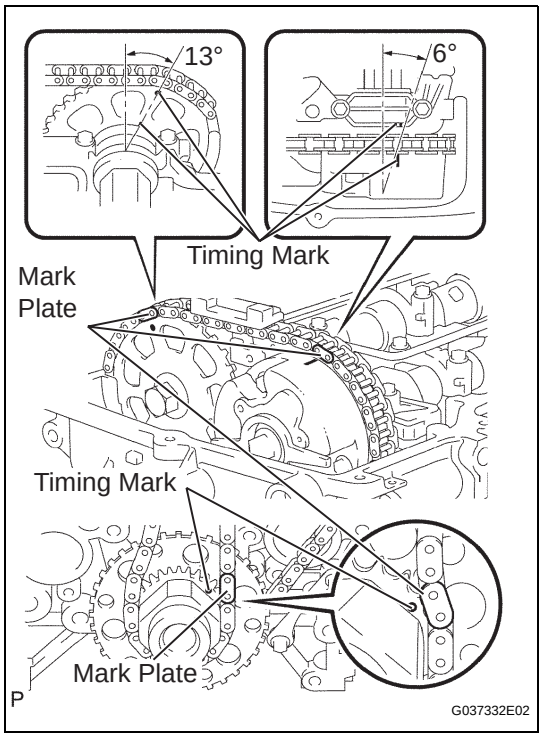


**48. INSTALL CHAIN SUB-ASSEMBLY**

(a) As shown in the illustration, install the chain on the sprocket and gear with the painted marks aligned with the timing marks on the sprocket and gear.
HINT:
- The camshaft mark plate is yellow.
- The crankshaft mark plate is orange.

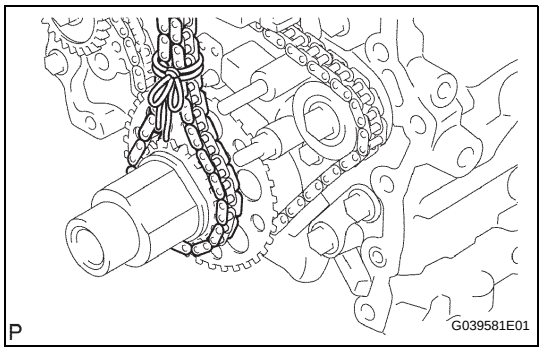


(b) Use a rope to tie the chain of the crankshaft timing sprocket. Tie the rope near the sprocket.
**NOTICE:**
**After the chain tensioner has been installed, the rope must be removed.**
HINT:
The rope is tied so that the chain will not jump a tooth.

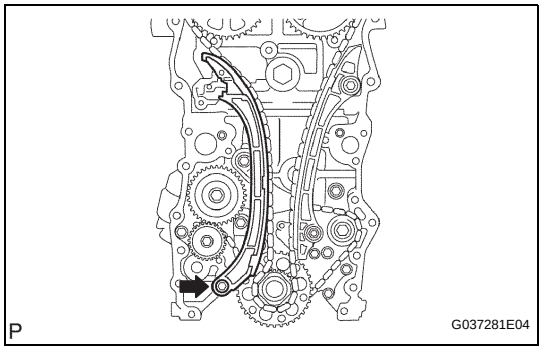


**49. INSTALL CHAIN TENSIONER SLIPPER**

(a) Install the tensioner slipper with the bolt.
**Torque: 21 N*m (214 kgf*cm, 15 ft.*lbf)**

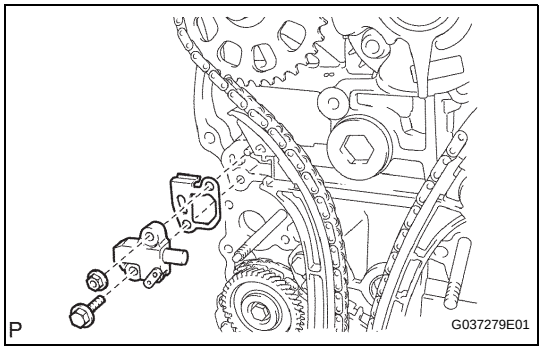


**50. INSTALL NO. 1 CHAIN TENSIONER ASSEMBLY**

(a) Install a new gasket and the chain tensioner No.1 with the bolt and nut.
**Torque: 10 N*m (102 kgf*cm, 7 ft.*lbf)**

EM

cardiagn.com

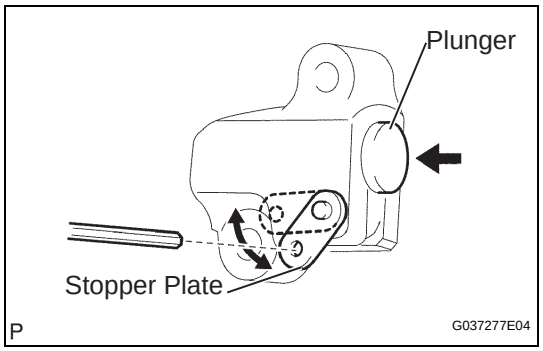


(b) Move the stopper plate upward to release the lock, and push the plunger deep into the tensioner.
(c) Move the stopper plate downward to set the lock, and insert a hexagon wrench into the stopper plate's hole.

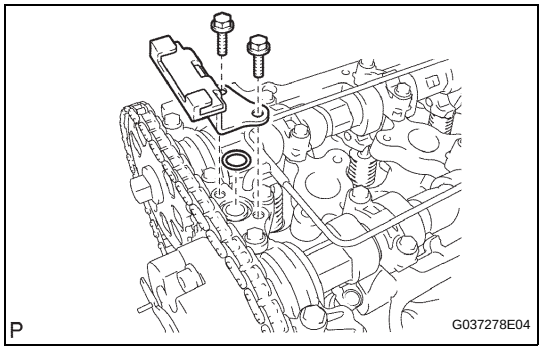


**51. INSTALL TIMING CHAIN GUIDE**

(a) Install a new O-ring and the chain guide with the 2 bolts.
**Torque: 10 N*m (102 kgf*cm, 7 ft.*lbf)**

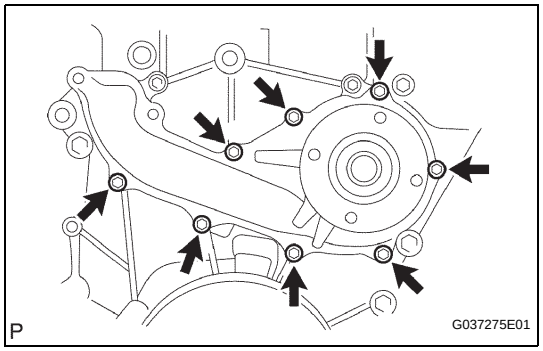


**52. INSTALL WATER PUMP ASSEMBLY**

(a) Install a new gasket and the water pump with the 8 bolts.
**Torque: 9.0 N*m (92 kgf*cm, 80 in.*lbf)**

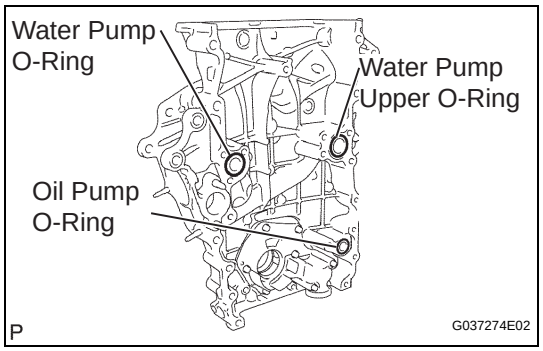


**53. INSTALL TIMING CHAIN COVER**

(a) Install 3 new O-rings to the timing chain cover as shown in the illustration.

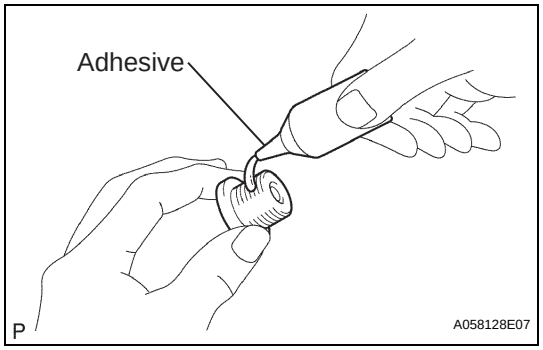


(b) Apply adhesive to the timing gear case plug.
**Adhesive:**
**Part No. 08833-00070, THREE BOND 1324 or equivalent**



cardiagn.com

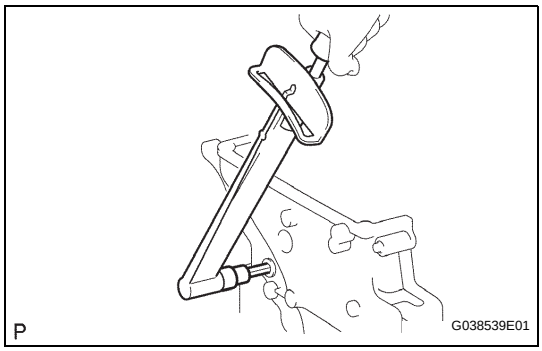


(c) Using a 10 mm socket hexagon wrench, install the timing chain cover plug.
**Torque: 17 N*m (170 kgf*cm, 12 ft.*lbf)**

(d) Apply seal packing in a continuous bead to the timing chain cover as shown in the following illustration.
**Seal packing:**
**Part No. 08826-00080 or equivalent**

**Seal width**

| Position | Specified Condition |
|---|---|
| A - A, | 2.5 to 3.0 mm (0.098 to 0.118 in.) |
| B - B, C - C | 4.0 to 4.5 mm (0.157 to 0.177 in.) |
| D - D | 2.5 to 3.0 mm (0.098 to 0.118 in.) |
| E | 2.5 to 3.5 mm (0.098 to 0.138 in.) |

EM

**NOTICE:**
- **Be sure to clean and degrease the contact surfaces, especially 4 areas indicated by * in the illustration.**
- **When the contact surfaces are wet, wipe off with an oil-free cloth before applying seal packing.**
- **Install the crankcase within 3 minutes and tighten the bolts within 15 minutes after applying seal packing.**
- **Do not start the engine for at least 4 hours after installing.**

cardiagn.com

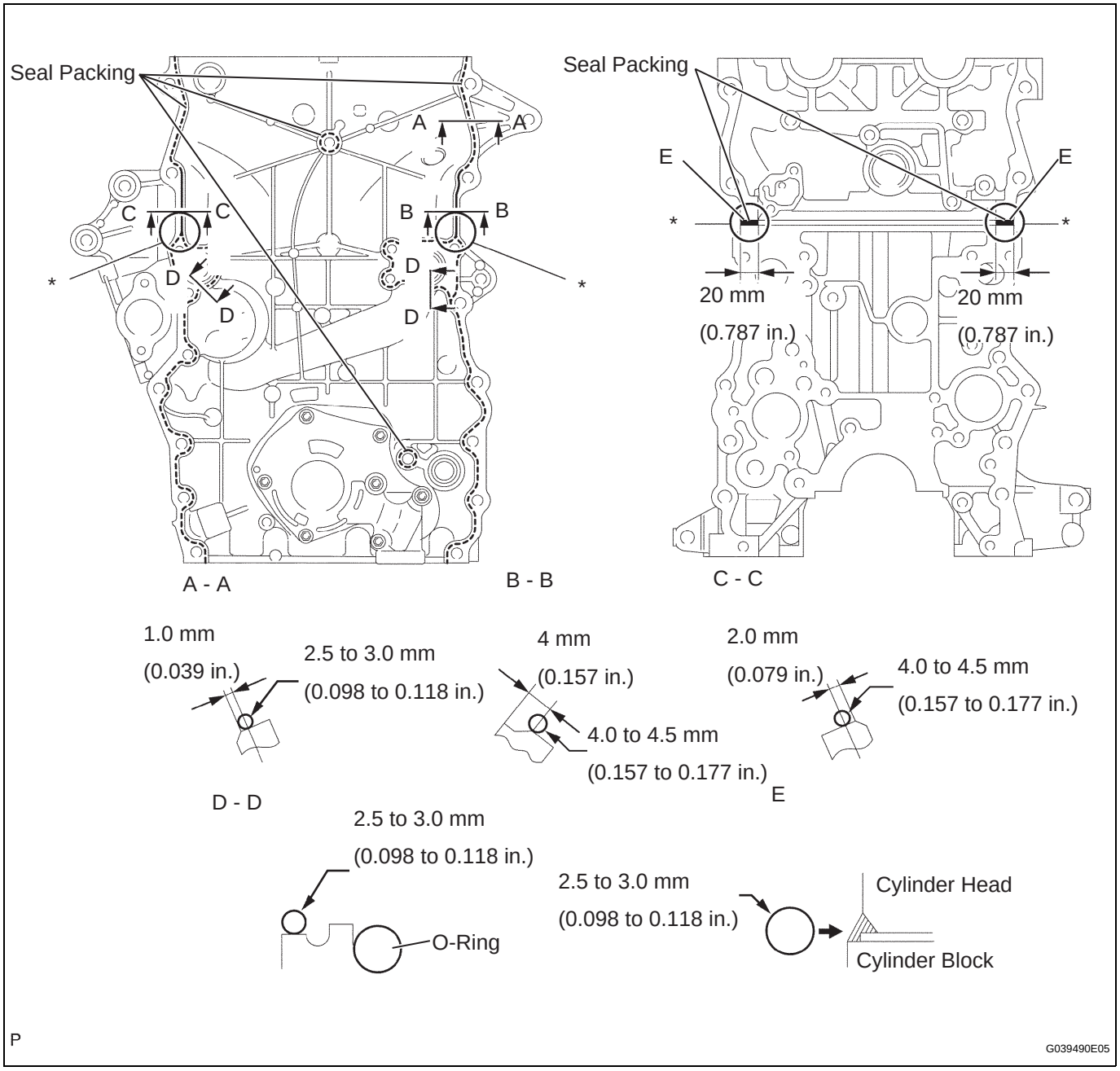


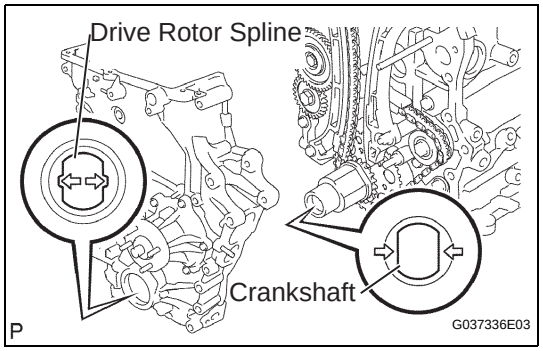


(e) Align the oil pump's drive rotor spline and the crankshaft as shown in the illustration. Install the spline and chain cover to the crankshaft.

(f) Temporarily install the the timing chain cover with the 19 bolts and 2 nuts, but do not tighten the bolts and nuts yet.

(g) Excluding bolts A, fully tighten the bolts and nuts in this order: Area 1, Area 2 and Area 3.
**Torque: 21 N*m (214 kgf*cm, 15 ft.*lbf)**
HINT:
Bolt length:
75 mm (2.95 in.) for bolt A (M10)
75 mm (2.95 in.) for bolt B (M8)
87 mm (3.43 in.) for bolt C
95 mm (3.74 in.) for bolt D



cardiagn.com

(h) Fully tighten the bolts labeled A in this order: Area 2 and Area 3.
**Torque: 46 N*m (469 kgf*cm, 34 ft.*lbf)**

(i) Fully tighten the bolts labeled E in Area 4.
**Torque: 21 N*m (214 kgf*cm, 15 ft.*lbf)**
HINT:
Bolt length: 35 mm (1.37 in.) for bolt E

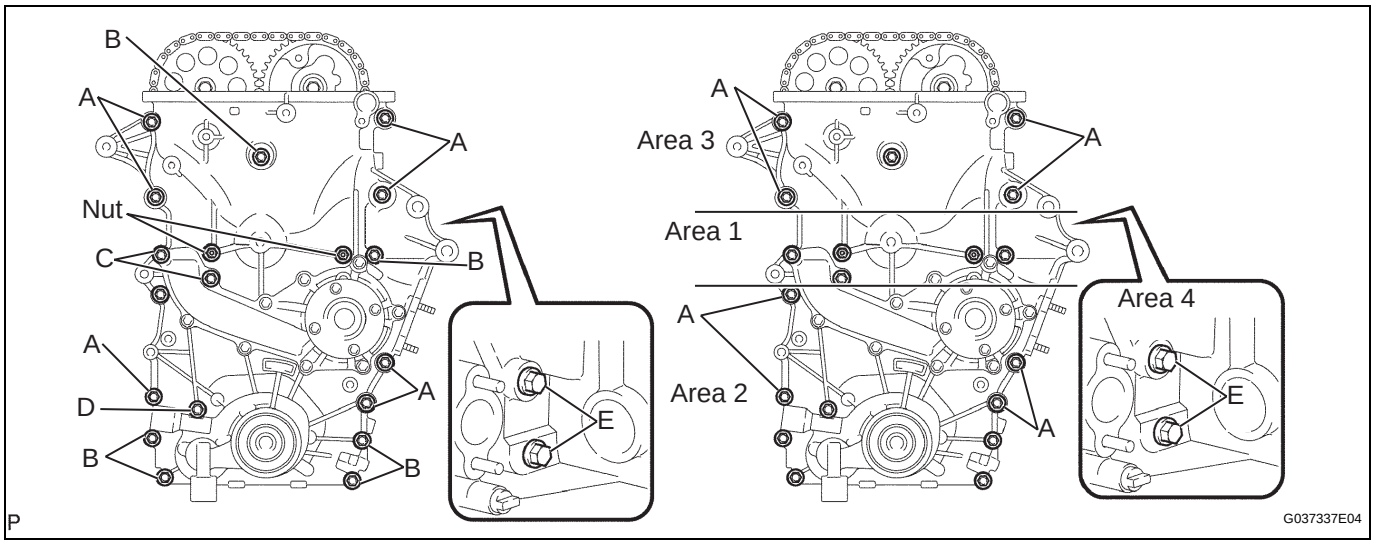


**54. INSTALL OIL PAN SUB-ASSEMBLY**

(a) Install the stud bolt.

(1) Using an E5 "torx" socket wrench, install the stud bolts labeled A for the oil pan as shown in the illustration.

(2) Using an E7 "torx" socket wrench, install the stud bolts labeled B for the oil strainer as shown in the illustration.
**Torque: 7.5 N*m (76 kgf*cm, 66 in.*lbf) for stud bolt A**
**3.0 N*m (31 kgf*cm, 27 in.*lbf) for stud bolt B**

cardiagn.com

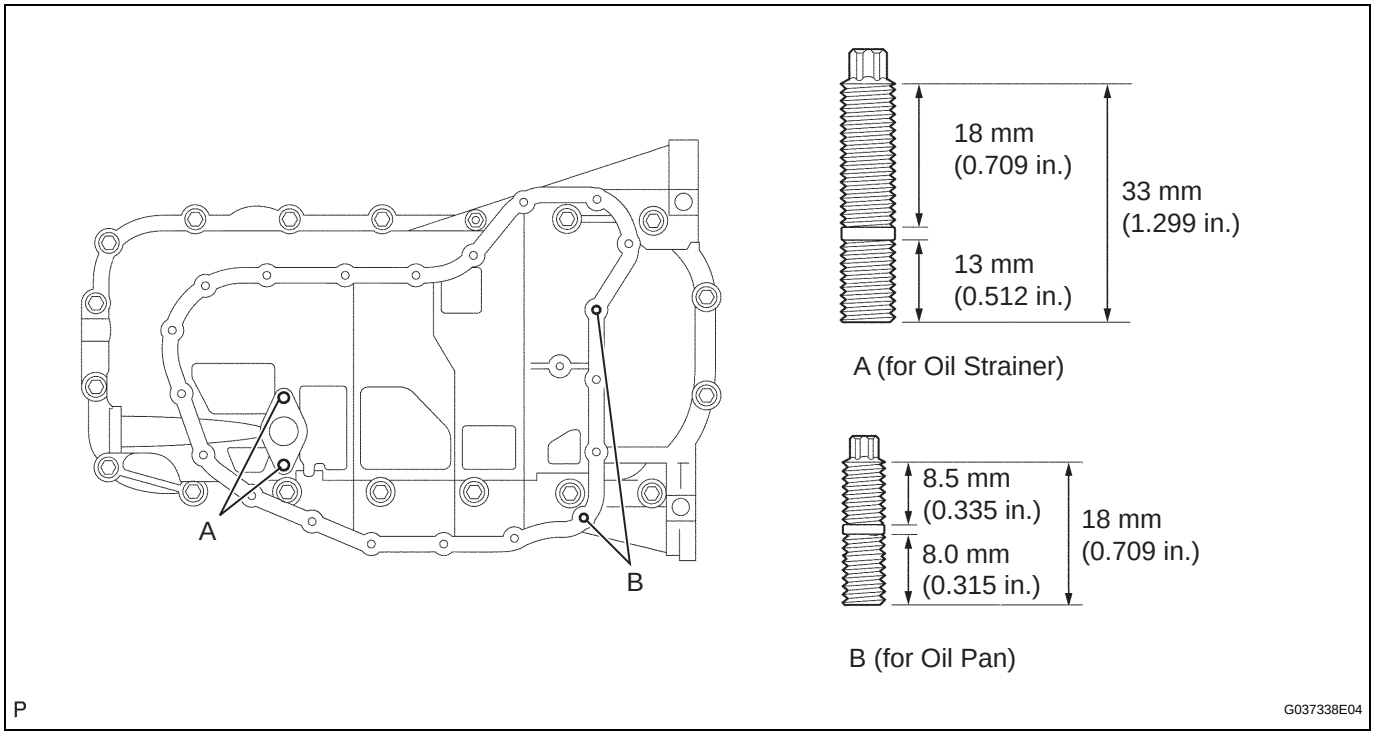


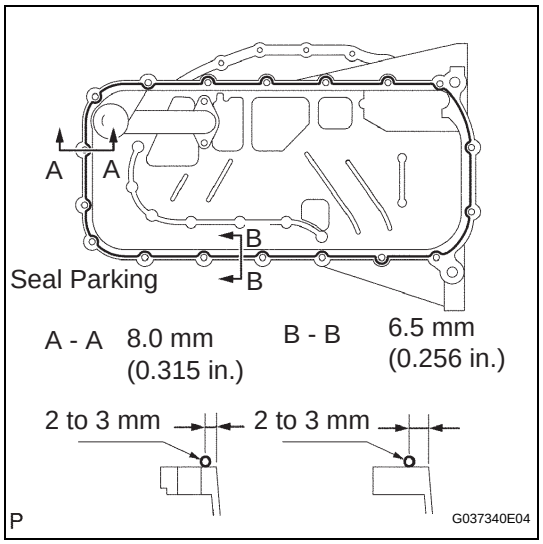


(b) Apply seal packing in a continuous bead as shown in the illustration.

**Seal packing:**
**No. 08826-00080 or equivalent**
**Seal width:**
**2 to 3 mm (0.08 to 0.12 in.)**
**NOTICE:**
- **Remove any oil from the contact surface.**
- **Install the crankcase within 3 minutes after applying seal packing.**
- **Do not start the engine for at least 4 hours after installing.**

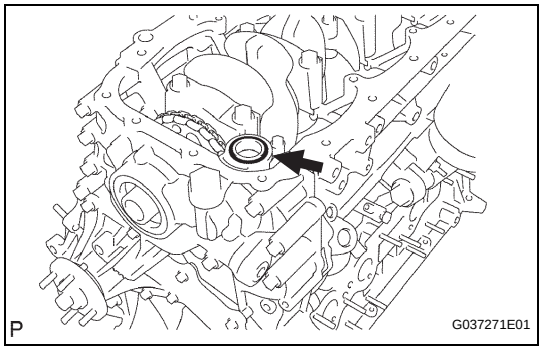


(c) Install a new O-ring.

EM
cardiagn.com

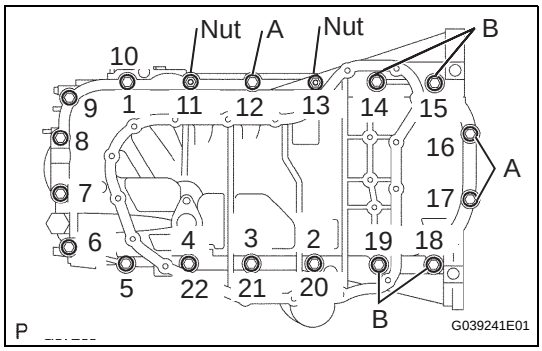


(d) Temporarily install the oil pan with the 16 bolts and 2 nuts.
HINT:
Bolt length:
20 mm (0.79 in.) for bolt A
40 mm (1.57 in.) for bolt B

(e) Uniformly tighten the 16 bolts and 2 nuts in the sequence shown in the illustration.
**Torque: 26 N*m (265 kgf*cm, 19 ft.*lbf)**

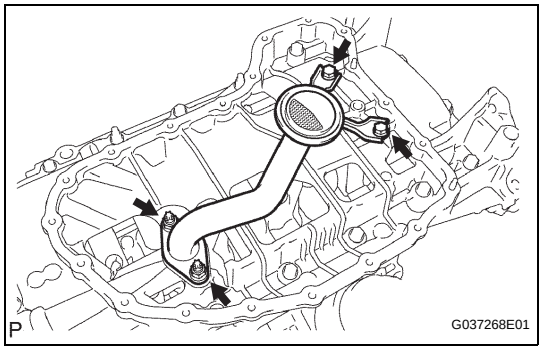


**55. INSTALL OIL STRAINER SUB-ASSEMBLY**

(a) Install a new gasket and the oil strainer with the 2 bolts and 2 nuts.
**Torque: 26 N*m (265 kgf*cm, 19 ft.*lbf)**

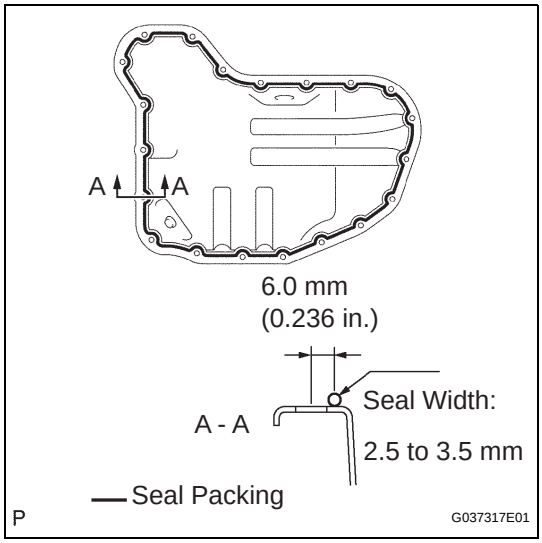


**56. INSTALL NO. 2 OIL PAN SUB-ASSEMBLY**

(a) Apply seal packing in a continuous bead as shown in the illustration.
**Seal packing:**
**Part No. 08826-00080 or equivalent**
**Seal width:**
**2.5 to 3.5 mm (0.098 to 0.138 in.)**
**NOTICE:**
- **Remove any oil from the contact surface.**
- **Install the crankcase within 3 minutes after applying seal packing.**
- **Do not start the engine for at least 4 hours after installing.**

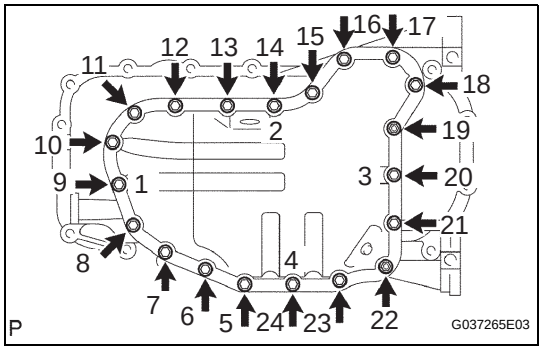


(b) Temporarily install the oil pan with the 18 bolts and 2 nuts.

(c) Uniformly tighten the 18 bolts and 2 nuts in the sequence shown in the illustration.
**Torque: 9.0 N*m (92 kgf*cm, 80 in.*lbf)**

(d) Install a new gasket and the drain plug.
**Torque: 38 N*m (382 kgf*cm, 28 ft.*lbf)**



cardiagn.com

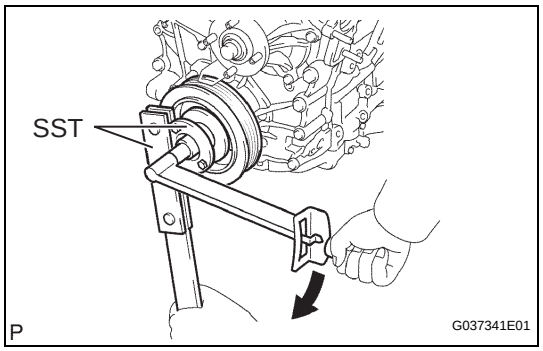


**57. INSTALL CRANKSHAFT PULLEY**

(a) Align the pulley set key with the key groove of the pulley, and slide on the pulley.

(b) Using SST, install the new pulley bolt.
**SST 09213-54015 (91651-60855), 09330-00021**
**Torque: 260 N*m (2,650 kgf*cm, 192 ft.*lbf)**
**NOTICE:**
**Do not reuse the pulley bolt.**

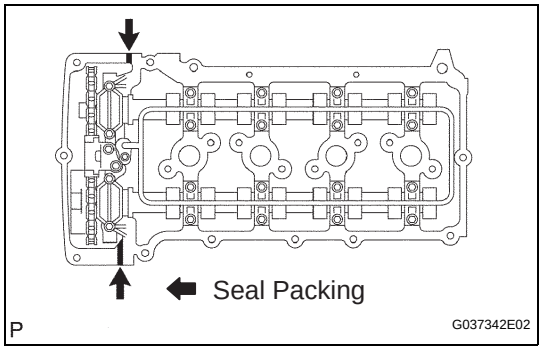


**58. INSTALL CYLINDER HEAD COVER SUB-ASSEMBLY**

(a) Apply seal packing as shown in the illustration.

(b) Install the 2 gaskets to the head cover.
**Seal packing:**
**Part No. 08826-00080 or equivalent**
**NOTICE:**
- **Remove any oil from the contact surface.**
- **Install the crankcase within 3 minutes after applying seal packing.**
- **Do not start the engine for at least 4 hours after installing.**

(c) Temporarily install the cover with the 19 bolts and 2 nuts.

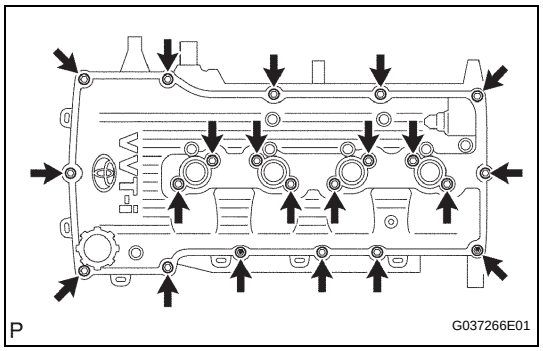


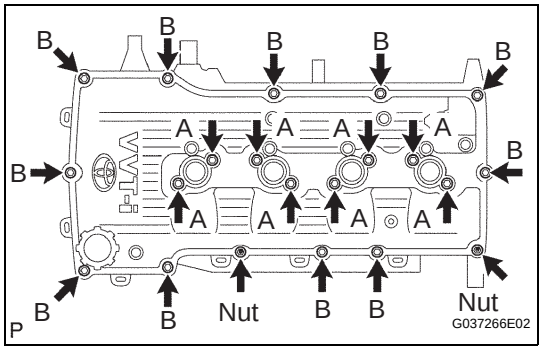


(d) Fully tighten the bolts (A) shown in the illustration.
**Torque: 9.0 N*m (92 kgf*cm, 80 in.*lbf)**

(e) Fully tighten the bolts (B) shown in the illustration.
**Torque: 9.0 N*m (92 kgf*cm, 80 in.*lbf)**
HINT:
Make sure the tightening torque of bolts (A).

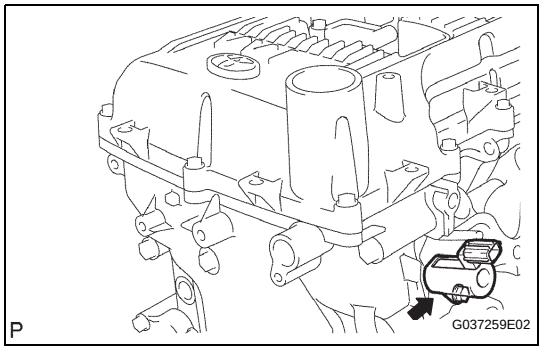


**59. INSTALL CAMSHAFT TIMING OIL CONTROL VALVE ASSEMBLY**

(a) Install the camshaft timing oil control valve assembly with the bolt.
**Torque: 8.0 N*m (82 kgf*cm, 71 in.*lbf)**

EM

cardiagn.com

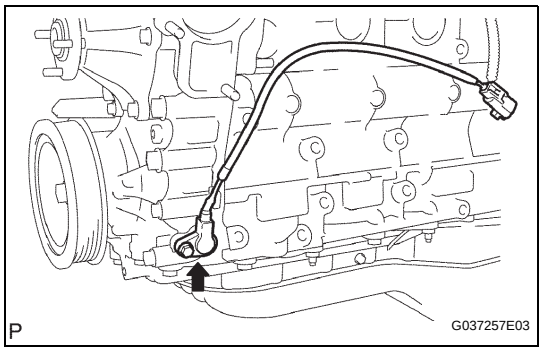


**60. INSTALL CRANKSHAFT POSITION SENSOR**

(a) Apply engine oil to the O-ring.

(b) Install the crankshaft position sensor with the bolt.
**Torque: 8.5 N*m (87 kgf*cm, 75 in.*lbf)**

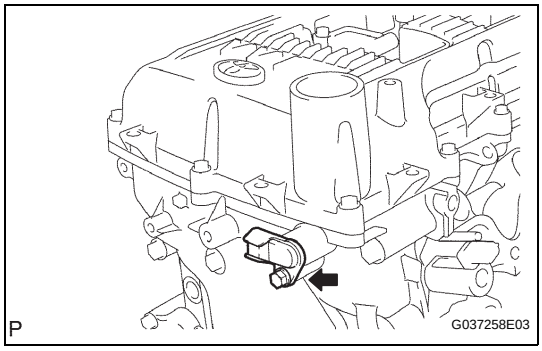


**61. INSTALL CAMSHAFT POSITION SENSOR**

(a) Apply engine oil to the O-ring.

(b) Install the camshaft position sensor with the bolt.
**Torque: 8.5 N*m (87 kgf*cm, 75 in.*lbf)**

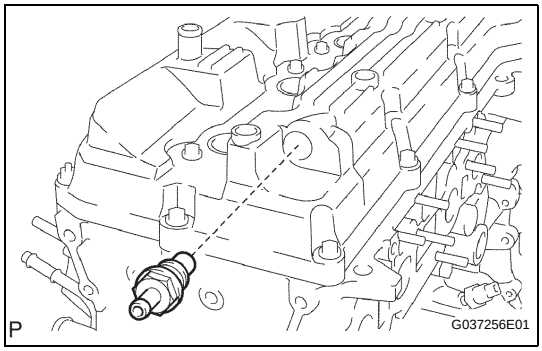


**62. INSTALL VENTILATION VALVE SUB-ASSEMBLY**

(a) Install the ventilation valve sub-assembly.
**Torque: 5.0 N*m (51 kgf*cm, 44 in.*lbf)**

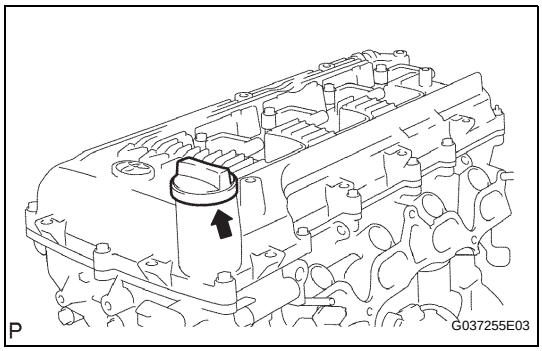


**63. INSTALL OIL FILLER CAP SUB-ASSEMBLY**

(a) Install the oil filler cap assembly.



cardiagn.com