REMOVAL

1. **DISCONNECT CABLE FROM NEGATIVE BATTERY TERMINAL**
2. **REMOVE NO. 1 ENGINE UNDER COVER SUB-ASSEMBLY (for 4WD)**
   (a) Remove the 4 bolts, then remove the No. 1 engine under cover.
3. **DRAIN ENGINE COOLANT (See page CO-3)**
4. **REMOVE RADIATOR SUPPORT TO FRAME SEAL LH (See page CO-12)**
5. **REMOVE FAN SHROUD (See page CO-13)**
6. **REMOVE AIR CLEANER CAP SUB-ASSEMBLY (See page EC-14)**
7. **REMOVE INTAKE AIR CONNECTOR (See page ES-452)**
8. **REMOVE CYLINDER HEAD COVER SUB-ASSEMBLY**
   (a) Disconnect the ignition coil connectors.
   (b) Disconnect the throttle with motor body connector.
   (c) Disconnect the VSV connector.
   (d) Disconnect the camshaft position sensor connector.
   (e) Disconnect the engine wire harness clamps.

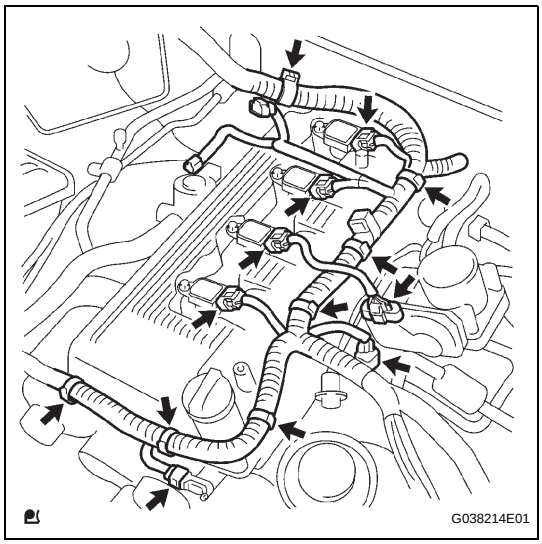

   (f) Remove the bolts, then remove the ignition coils.

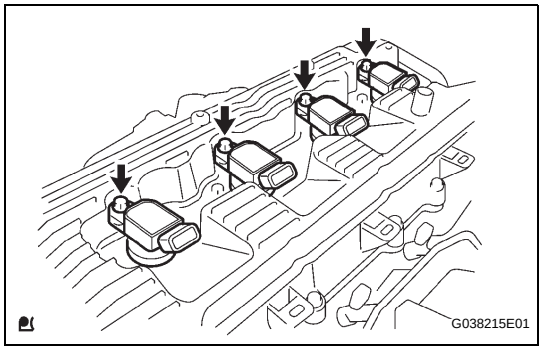

cardiagn.com

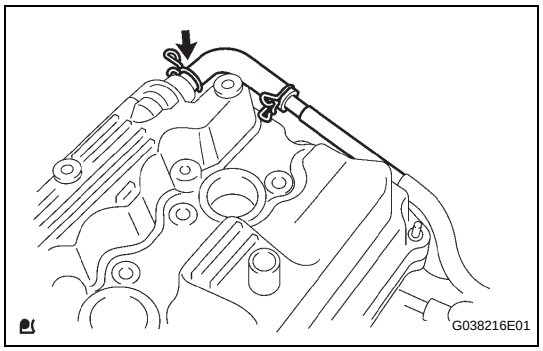

(g) Disconnect the ventilation hose.

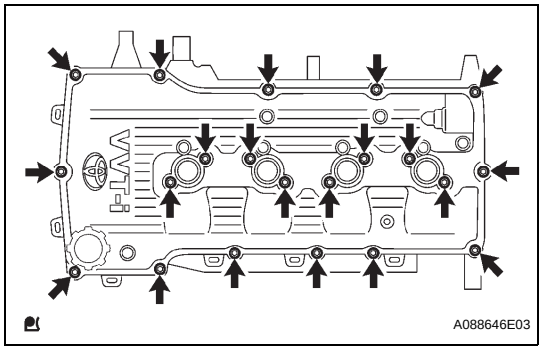

(h) Remove the 19 bolts and 2 nuts, then remove the cylinder head cover.

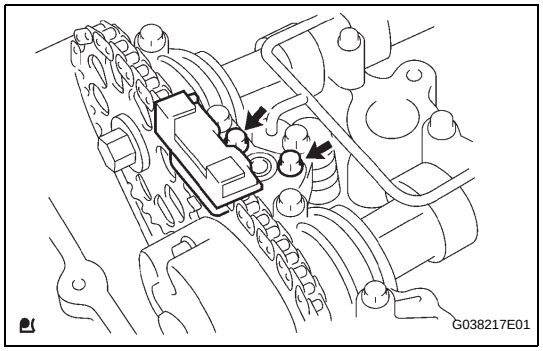

9. REMOVE TIMING CHAIN GUIDE

(a) Remove the 2 bolts, then remove the timing chain guide.

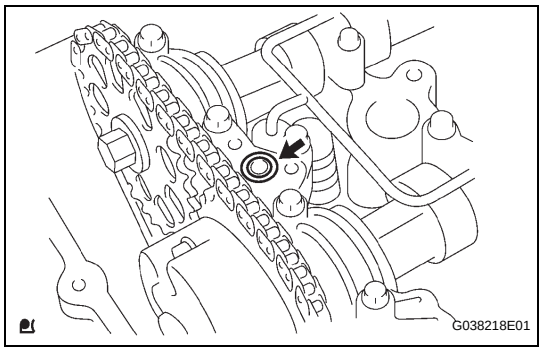

(b) Remove the O-ring.

cardiagn.com

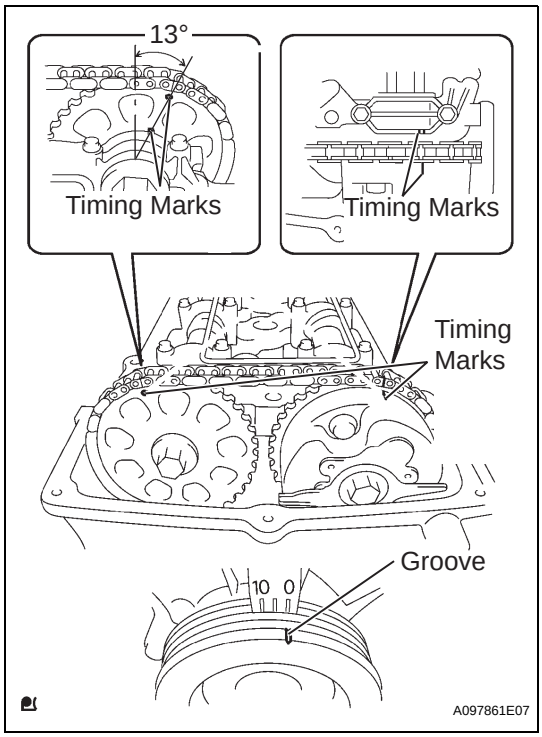

10. REMOVE CAMSHAFT

(a) Set the No. 1 cylinder to the TDC/compression.
  (1) Turn the crankshaft pulley clockwise and align its timing mark notch with the timing mark "0".
  (2) Check that the timing marks of the camshaft timing gear are located as illustrated.
  HINT:
  If not, turn the crankshaft to align the marks.

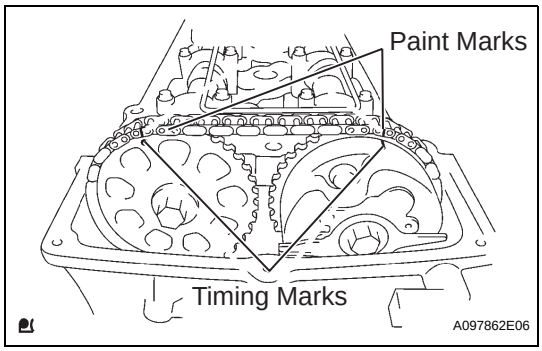

(b) Place paint marks on the timing chain plates that align with timing marks of the camshaft timing gear.

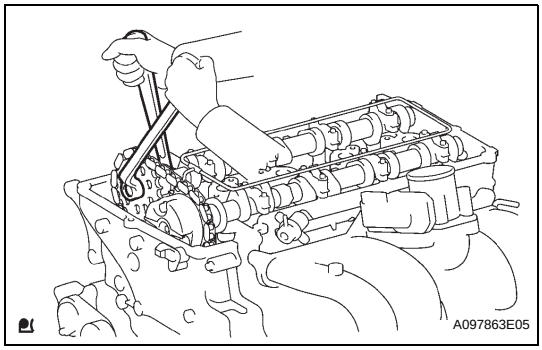

(c) Hold the hexagonal lobe of the No. 2 camshaft with an adjustable wrench.
  NOTICE:
  Be careful not to damage the camshaft oil delivery pipe.
(d) Loosen the bolt.

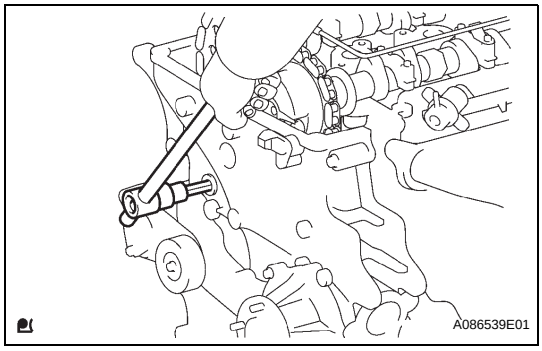

(e) Using 10 mm socket hexagon wrench, remove the head straight screw plug.

EM

cardiagn.com

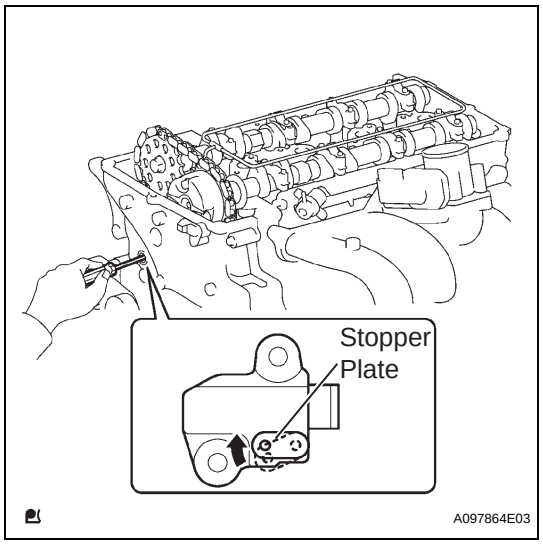

(f) Insert a screwdriver into the service hole of the chain tensioner to hold the stopper plate of the chain tensioner lifted up.
HINT:
Lifting up the stopper plate of the chain tensioner unlocks the plunger.

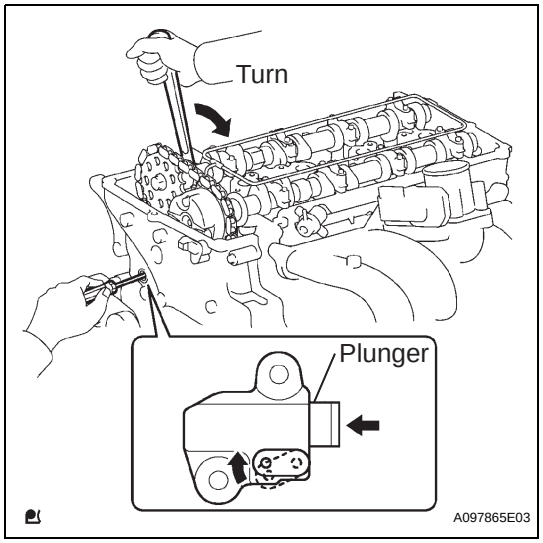

(g) While keeping the stopper plate of the chain tensioner lifted up, slightly rotate the hexagonal lobe of the No. 2 camshaft clockwise with an adjustable wrench so the plunger of the chain tensioner is pushed.
HINT:
When the No. 2 camshaft is slightly rotated clockwise, the plunger is pushed.
NOTICE:
Be careful not to damage the camshaft oil delivery pipe.

(h) Keeping the adjustable wrench installed, remove the screwdriver with the plunger pushed in.
NOTICE:
Do not move the adjustable wrench.
HINT:
Removing the screwdriver lifts down the stopper plate and locks the plunger.

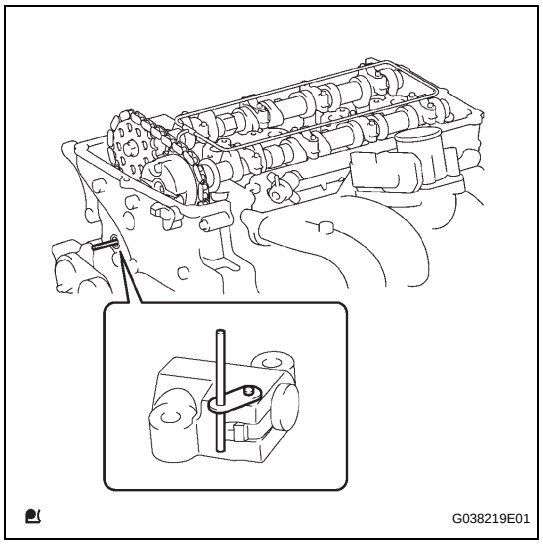

(i) Insert a 3.0 mm (0.118 in.) diameter bar into the hole of the stopper plate with the stopper plate of the chain tensioner lifted down and locked.
HINT:
If a 3.0 mm (0.118 in.) diameter bar cannot be inserted into the hole of the stopper plate, rotate the No. 2 camshaft slightly to the left and right. Then a 3.0 mm (0.118 in.) diameter bar can be inserted easily.

(j) Secure the 3.0 mm (0.118 in.) diameter bar with tape.

cardiagn.com

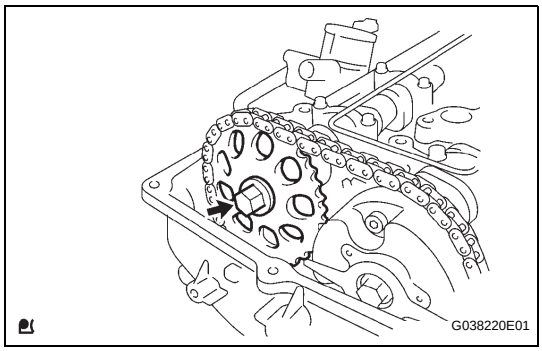

(k) Remove the bolt, then remove the camshaft timing gear.

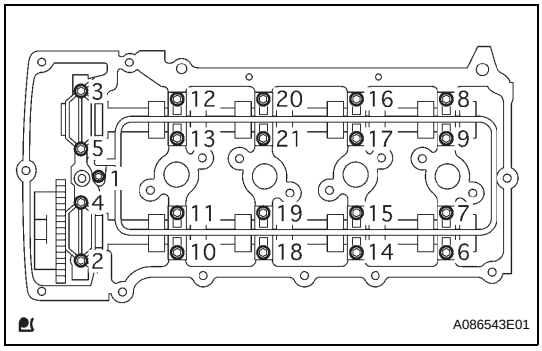

(l) Using several steps, uniformly loosen and remove the 21 bearing cap bolts in the sequence shown in the illustration.
NOTICE:
Place the camshaft on a flat surface and loosen the bolts uniformly.

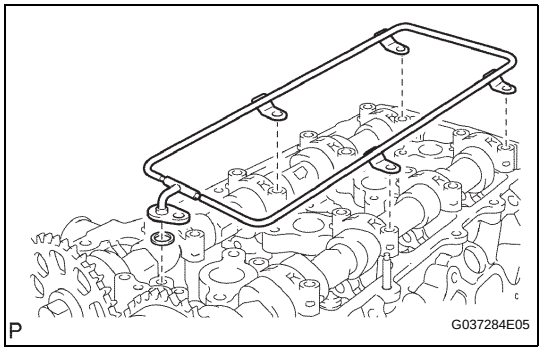

(m) Remove the camshaft oil delivery pipe and O-ring.

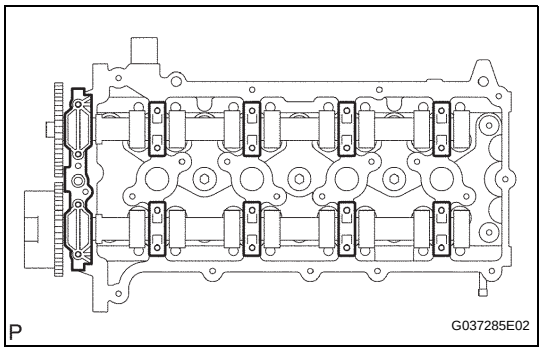

(n) Remove the camshaft bearing cap No. 1 and 8 camshaft bearing caps No. 2.

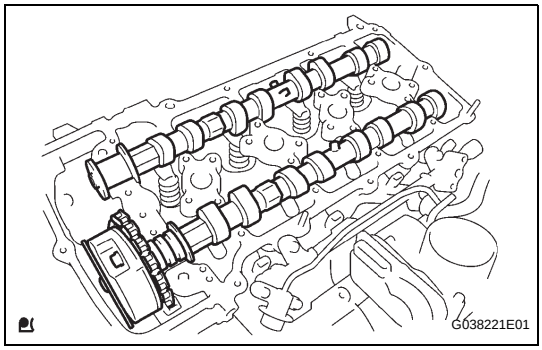

(o) Remove the camshaft and No. 2 camshaft.
NOTICE:
- **Do not pry the camshaft with a tool by applying excessive force to it.**
- **Do not damage the cylinder head when removing the camshafts.**

cardiagn.com

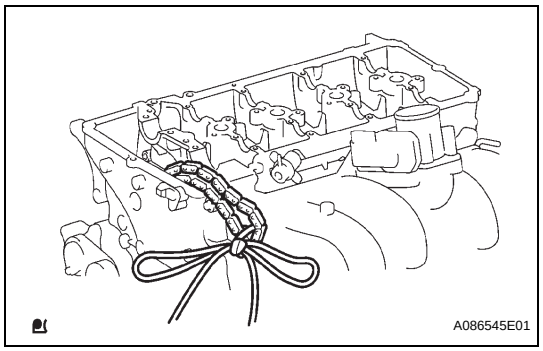

(p) Tie the chain with a piece of string or wire.
NOTICE:
Prevent foreign objects from getting into the engine compartment with a shop rag.

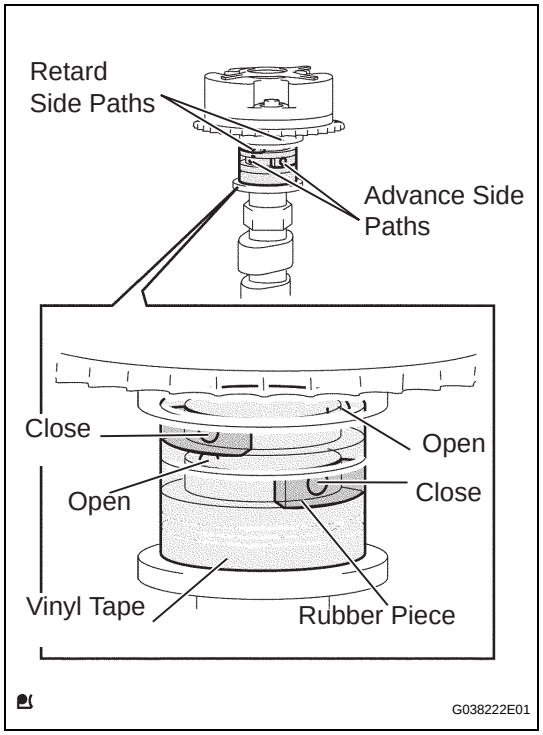

11. REMOVE CAMSHAFT TIMING GEAR ASSEMBLY

(a) Clamp the camshaft in a vise, then check that the camshaft timing gear does not rotate.
NOTICE:
Do not damage the camshaft by clamping it in a vise too tightly.

(b) Cover the 4 oil paths of the cam journal with vinyl tape as shown in the illustration.
HINT:
One of the 2 grooves located on the cam journal is for retarding cam timing (upper) and the other is for advancing cam timing (lower). Each groove has 2 oil paths. Plug one of the 2 oil paths for each groove with a piece of rubber before wrapping the cam journal with the tape.

(c) Puncture the tape covering the advance side path and retard side path on the opposite side.

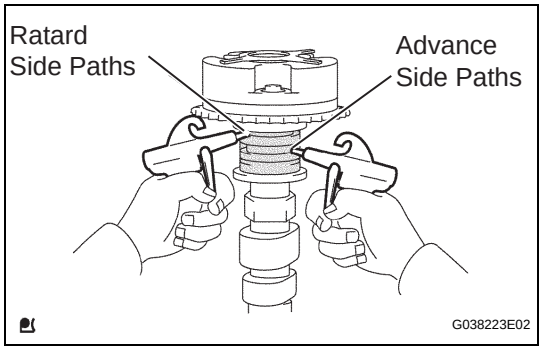

(d) Apply air pressure at approximately 200 kPa (2.0 kgf/cm^2, 29 psi) into the 2 paths (the advance side path and retard side path) from the 2 punctures.
NOTICE:
When applying air pressure, cover the paths with a shop rag to prevent oil splashes.

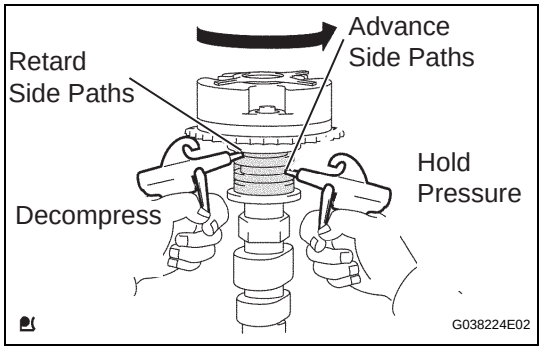

(e) Confirm that the camshaft timing gear revolves in the advance direction when reducing the air pressure on the retard side path.
HINT:
The lock pin is released and the camshaft timing gear revolves in the advance direction.

EM
cardiagn.com

(f) When the camshaft timing gear reaches the most advanced position, release the air pressure on the retard side path, then release the air pressure on the advance side path.
NOTICE:
If the air pressure on the advance side path is released first, the camshaft timing gear assembly occasionally shifts in the retard direction abruptly. This may damage the lock pin. Be sure to release the air pressure on the retard side path first.

(g) Remove the fringe bolt of the camshaft timing gear.
NOTICE:
Be sure not to remove the other 3 bolts.

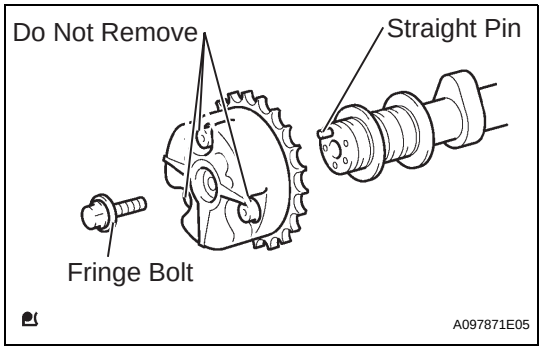

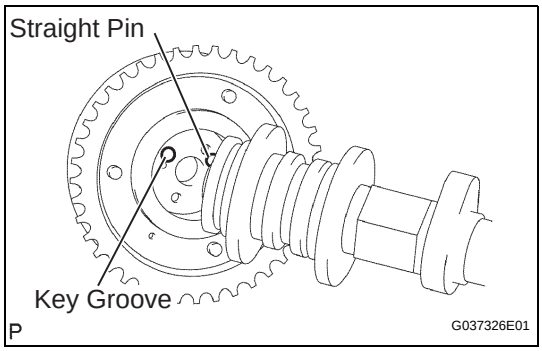

INSTALLATION

1. INSTALL CAMSHAFT TIMING GEAR ASSEMBLY

(a) Put the camshaft timing gear and camshaft together by aligning the key groove and straight pin.

(b) Gently press the gear against the camshaft, and turn the gear. Push further at the position where the pin fits into the groove.
CAUTION:
Be sure not to turn the camshaft timing gear to the retard angle side (to the right angle).

(c) Check that there is no clearance between the gear's fringe and the camshaft.

(d) Tighten the fringe bolt with the camshaft timing gear fixed.
Torque: 78 N*m (795 kgf*cm, 58 ft.*lbf)

(e) Check that the camshaft timing gear can move to the retard angle side (the right angle), and is locked in the extreme retard position.

cardiagn.com

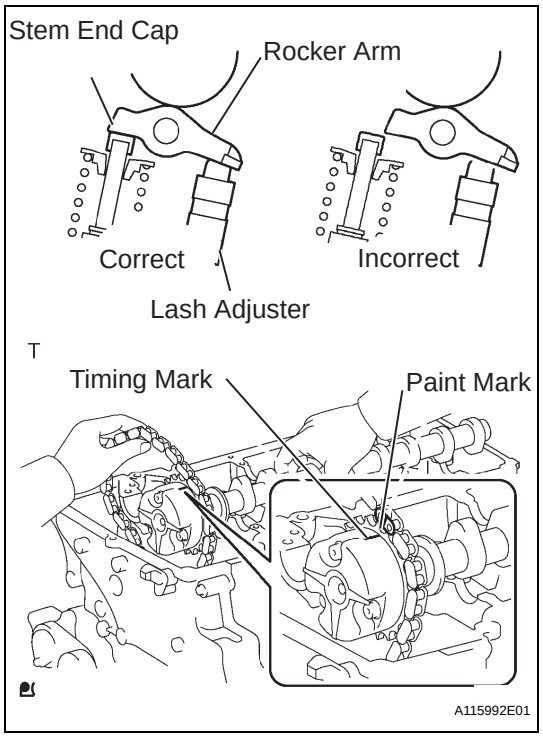

2. INSTALL CAMSHAFT

NOTICE:

Check that the valve rocker arm is correctly set as shown in the illustration.

(a) Apply clean engine oil to the camshaft's cam portion and the cylinder head journals.

(b) Install the chain onto the camshaft timing gear, with the painted mark of the link aligned with the timing mark of the camshaft timing gear.

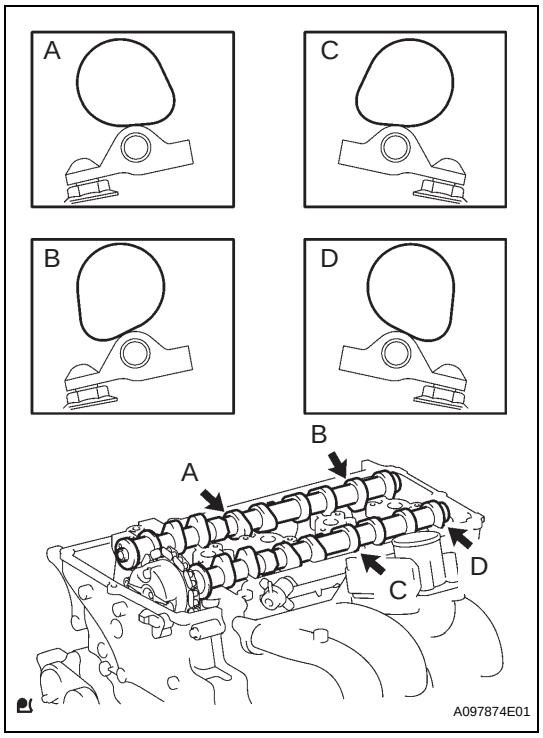

(c) Set the 2 camshafts as shown in the illustration.

NOTICE:

Align the paint mark with the timing mark before setting the camshaft.

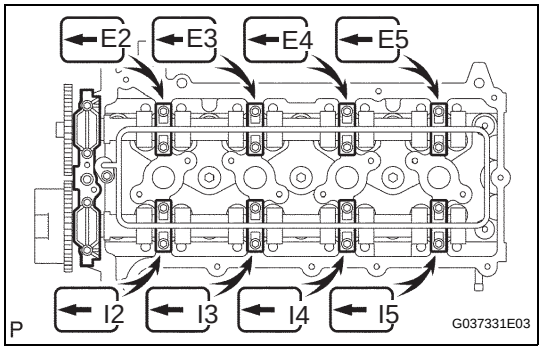

(d) Provisionally install the No. 1 camshaft bearing cap.

(e) Check the proper location of each No. 2 camshaft bearing cap and install each one.

cardiagn.com

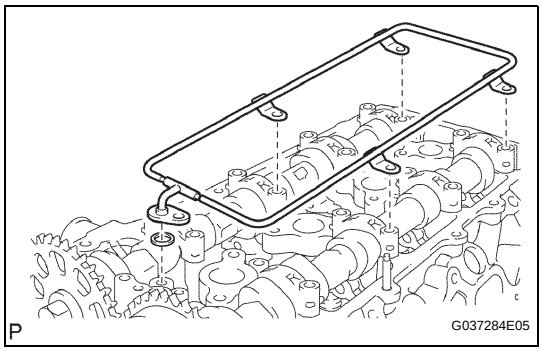

(f) Install a new O-ring onto the No. 1 camshaft bearing cap.

(g) Provisionally install the camshaft oil delivery pipe.

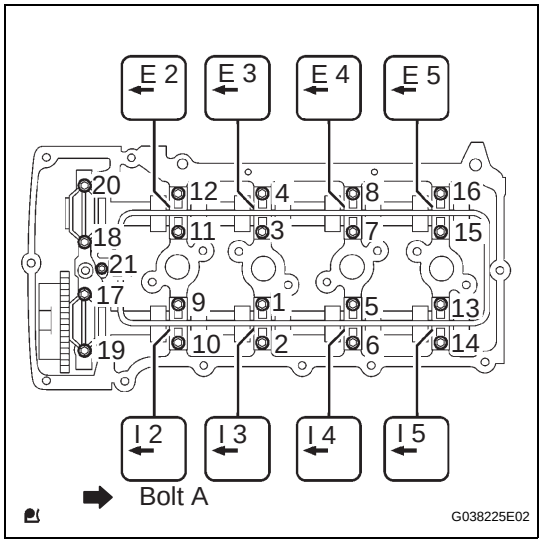

(h) Tighten the bolts in the order shown in the illustration.
Torque: 12 N*m (122 kgf*cm, 9 ft.*lbf) for bolt A
16 N*m (158 kgf*cm, 11 ft.*lbf) for bolts except bolt A

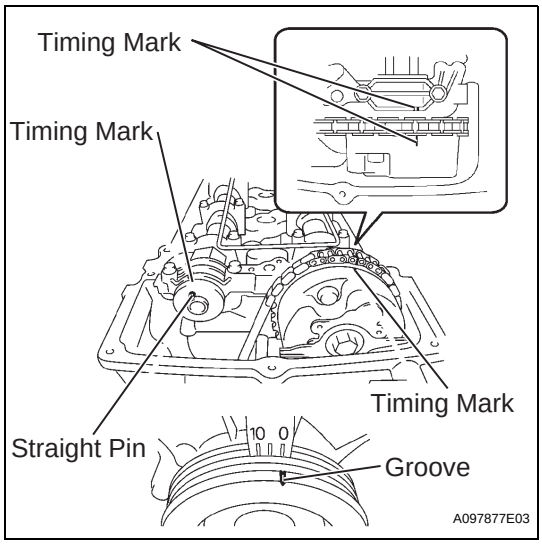

(i) Check that each timing mark is set in the position shown in the illustration.

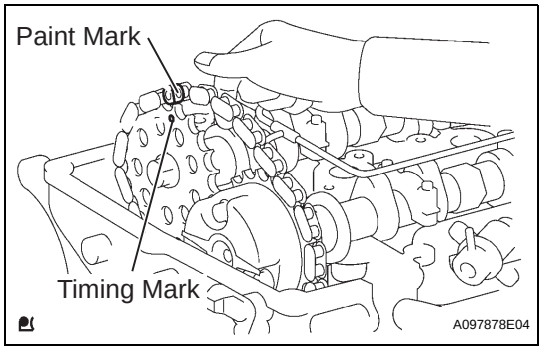

(j) Install the timing chain onto the camshaft timing gear, with the paint mark aligned with the timing mark on the camshaft timing gear.

cardiagn.com

(k) Align the No. 2 camshaft straight pin and camshaft timing gear straight pin hole. Then install the camshaft timing gear onto the No. 2 camshaft.
NOTICE:
If the straight pin and straight pin hole are difficult to align, slightly rotate the No. 2 camshaft to the left and right using the hexagonal lobe of the camshaft. Then attempt to align them again.

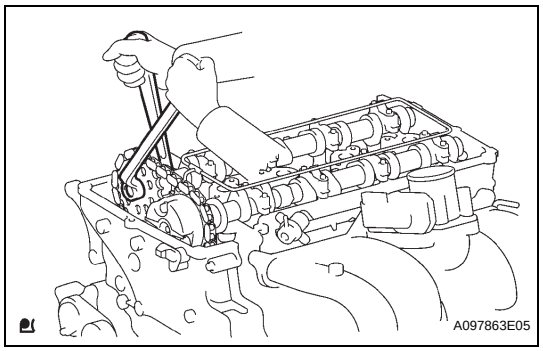

(l) Hold the hexagonal lobe of the No. 2 camshaft with the adjustable wrench.
(m) Tighten the bolt.
Torque: 78 N*m (795 kgf*cm, 58 ft.*lbf)
(n) Remove the 3.0 mm (0.118 in.) diameter bar from the chain tensioner.
(o) Apply adhesive to 2 or 3 threads of the timing gear case with head straight screw plug.
Adhesive:
Part No. 08833-00070, THREE BOND 1324 or equivalent

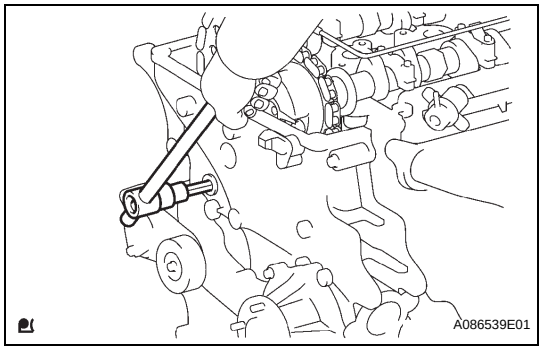

(p) Using a 10 mm socket hexagon wrench, install the timing gear case with head straight screw plug.
Torque: 17 N*m (170 kgf*cm, 12 ft.*lbf)

3. INSTALL TIMING CHAIN GUIDE

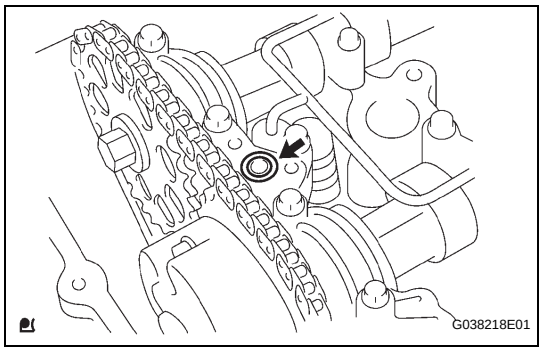

(a) Install a new O-ring onto the camshaft bearing cap.

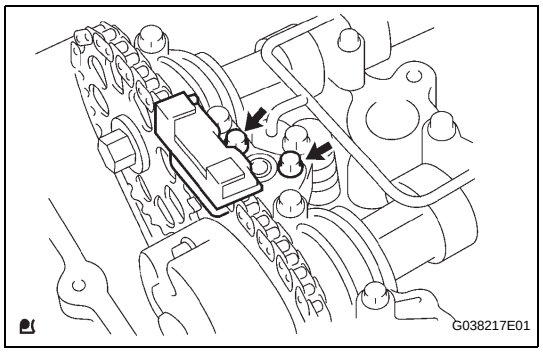

(b) Install the timing chain guide with the 2 bolts.
Torque: 10 N*m (102 kgf*cm, 7 ft.*lbf)

cardiagn.com

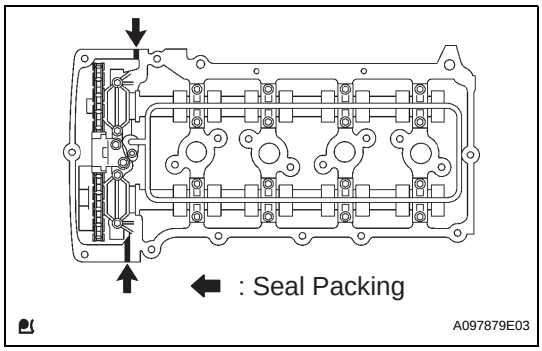

4. INSTALL CYLINDER HEAD COVER SUB-ASSEMBLY

(a) Apply seal packing to the 2 locations shown in the illustration.
Seal packing:
Part No. 08826-00080 or equivalent
NOTICE:
- **Remove any oil from the contact surface.**
- **Install the cylinder head cover within 3 minutes of applying the seal packing.**
- **Do not apply engine oil for at least 2 hours of installation.**

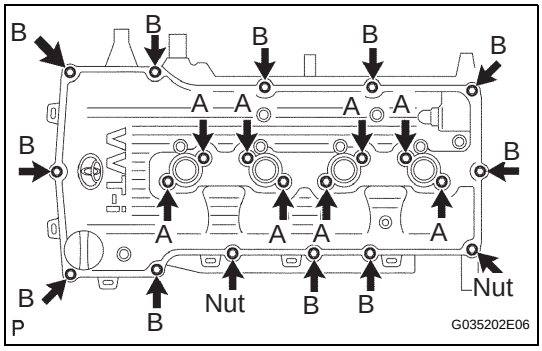

(b) Provisionally install the cylinder head cover with the 19 bolts and 2 nuts.
(c) Tighten bolts A shown in the illustration.
Torque: 9.0 N*m (92 kgf*cm, 80 in.*lbf)
(d) Tighten bolts B and nuts shown in the illustration.
Torque: 9.0 N*m (92 kgf*cm, 80 in.*lbf)
(e) Tighten bolts A again.
Torque: 9.0 N*m (92 kgf*cm, 80 in.*lbf)

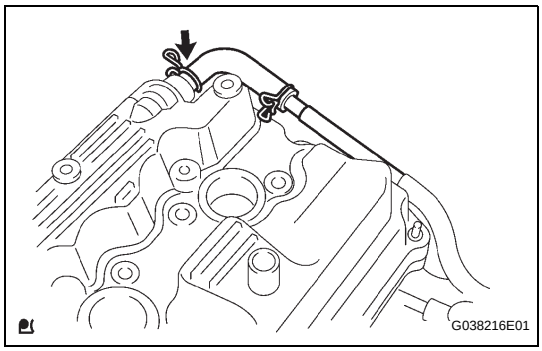

(f) Connect the ventilation hose.

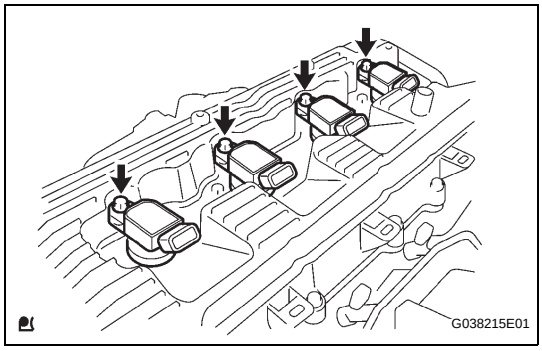

(g) Install the ignition coils with the bolts.
Torque: 9.0 N*m (92 kgf*cm, 80 in.*lbf)

EM

cardiagn.com

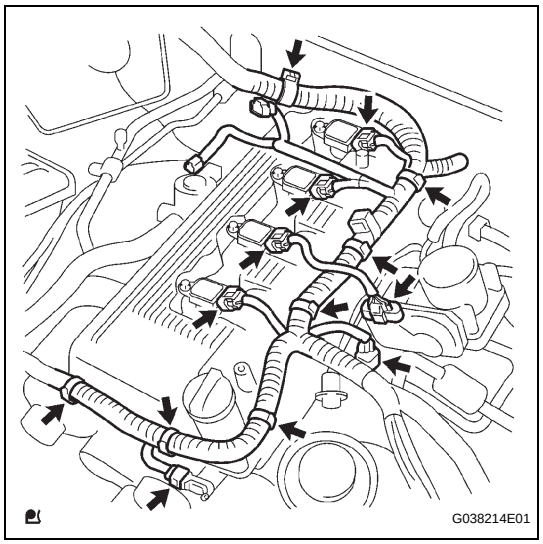

(h) Install the engine wire harness clamps.
(i) Connect the camshaft position sensor connector.
(j) Connect the VSV connector.
(k) Connect the throttle with motor body connector.
(l) Connect the ignition coil connectors.

5. INSTALL INTAKE AIR CONNECTOR (See page ES-455)

6. INSTALL AIR CLEANER CAP SUB-ASSEMBLY (See page EC-17)

7. INSTALL FAN SHROUD (See page CO-18)

8. INSTALL RADIATOR SUPPORT TO FRAME SEAL LH (See page CO-19)

9. CONNECT CABLE TO NEGATIVE BATTERY TERMINAL
Torque: 3.9 N*m (40 kgf*cm, 35 in.*lbf)

10. ADD ENGINE COOLANT (See page CO-3)

11. CHECK FOR ENGINE COOLANT LEAKAGE (See page CO-2)

12. CHECK FOR ENGINE OIL LEAKAGE

13. INSTALL NO. 1 ENGINE UNDER COVER SUB-ASSEMBLY (for Pre Runner and 4WD Type)
(a) Install the No. 1 engine under cover with the 4 bolts.
Torque: 30 N*m (306 kgf*cm, 22 ft.*lbf)

cardiagn.com