REMOVAL

1. **REMOVE HOOD SUB-ASSEMBLY**
2. **DISCHARGE FUEL SYSTEM PRESSURE**
   (See page FU-1)
3. **REMOVE NO. 1 ENGINE UNDER COVER SUB-ASSEMBLY (for 4WD and Pre-Runner)**
   (a) Remove the 4 bolts, then remove the No. 1 engine under cover.
4. **REMOVE NO. 2 ENGINE UNDER COVER SUB-ASSEMBLY (for 4WD and Pre-Runner, Regular Cab)**
   (a) Remove the 4 bolts, then remove the No. 2 engine under cover.
5. **DRAIN ENGINE OIL (See page LU-3)**
6. **DRAIN ENGINE COOLANT (See page CO-3)**
7. **REMOVE BATTERY**
8. **REMOVE BATTERY TRAY**
9. **REMOVE RADIATOR SUPPORT TO FRAME SEAL LH (See page CO-12)**
10. **REMOVE FAN SHROUD (See page CO-13)**
11. **REMOVE AIR CLEANER CAP SUB-ASSEMBLY (See page EC-14)**
12. **REMOVE AIR CLEANER FILTER ELEMENT SUB-ASSEMBLY**
13. **REMOVE AIR CLEANER CASE**
    (a) Remove the 3 bolts, then remove the air cleaner case.
14. **SEPARATE VANE PUMP ASSEMBLY**
    (a) Disconnect the vane pump connector.
    (b) Remove the 2 bolts, then separate the vane pump.
    HINT:
    Do not disconnect the hose. Hang the vane pump with a rope.
15. **REMOVE NO. 2 RADIATOR HOSE**

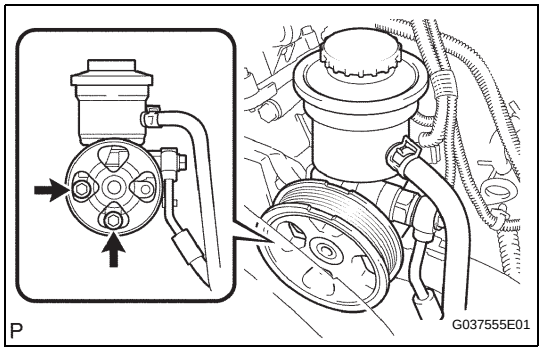

16. **SEPARATE COMPRESSOR AND MAGNETIC CLUTCH (w/ Air Conditioning System)**
    (a) Remove the bolt shown in the illustration.

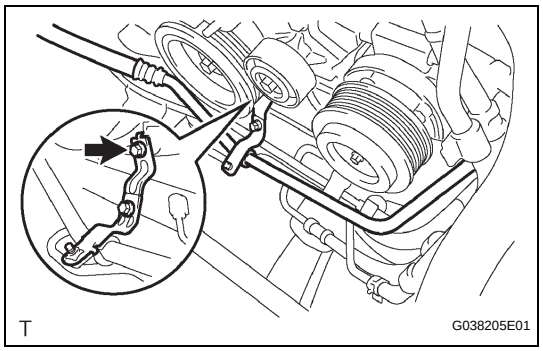

EM
cardiagn.com

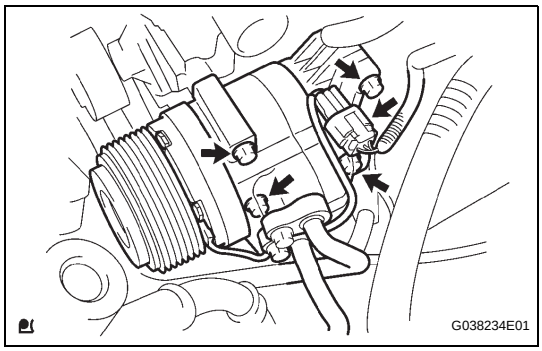

(b) Disconnect the compressor and magnetic clutch connector.

(c) Remove the 4 bolts, then separate the compressor and magnetic clutch.
HINT:
Do not disconnect the hose. Hang the vane pump with a rope.

17. REMOVE RADIATOR HOSE INLET

18. SEPARATE WATER HOSE SUB-ASSEMBLY (See page EM-92)

19. DISCONNECT FUEL HOSE (See page FU-11)

20. DISCONNECT FUEL HOSE NO.2 (See page FU-11)

21. SEPARATE FUEL VAPOR FEED HOSE ASSEMBLY (See page EM-93)

22. DISCONNECT NO. 1 AIR INJECTION HOSE (See page EM-93)

23. DISCONNECT ENGINE WIRE (See page EM-93)

24. REMOVE EXHAUST PIPE ASSEMBLY (See page EX-2)

25. REMOVE FRONT EXHAUST PIPE ASSEMBLY (See page EX-2)

26. REMOVE MANUAL TRANSMISSION UNIT ASSEMBLY

Transmission	See page
R155	MT-6
R155F	MT-8

27. REMOVE AUTOMATIC TRANSMISSION ASSEMBLY (See page AT-109)

28. REMOVE ENGINE ASSEMBLY (See page EM-93)

29. REMOVE CLUTCH COVER ASSEMBLY (for Manual Transmission)

Transmission	See page
R155	CL-30
R155F	CL-35

30. REMOVE CLUTCH DISC ASSEMBLY (for Manual Transmission)

Transmission	See page
R155	CL-30
R155F	CL-35

31. REMOVE FLYWHEEL SUB-ASSEMBLY (for Manual Transmission) (See page EM-77)

32. REMOVE DRIVE PLATE AND RING GEAR SUB-ASSEMBLY (for Automatic Transmission) (See page EM-78)

cardiagn.com

33. REMOVE REAR END PLATE

(a) Remove the 2 bolts, then remove the rear end plate.

34. REMOVE INTAKE AIR CONNECTOR (See page ES-452)

35. REMOVE GENERATOR ASSEMBLY (See page CH-7)

36. REMOVE V-RIBBED BELT TENSIONER ASSEMBLY (See page CO-5)

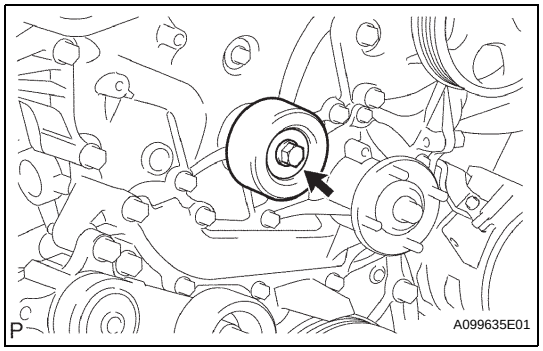

37. REMOVE NO. 1 IDLER PULLEY SUB-ASSEMBLY

(a) Remove the bolt and No. 1 idler pulley sub-assembly.

38. REMOVE IDLE PULLEY ASSEMBLY WITH BRACKET (w/ Air Conditioning System) (See page ES-446)

39. REMOVE CRANKSHAFT POSITION SENSOR (See page ES-444)

40. REMOVE CAMSHAFT POSITION SENSOR (See page ES-444)

41. REMOVE NO. 1 INTAKE MANIFOLD TO HEAD GASKET (See page ES-463)

42. REMOVE CYLINDER HEAD COVER SUB-ASSEMBLY (See page EM-38)

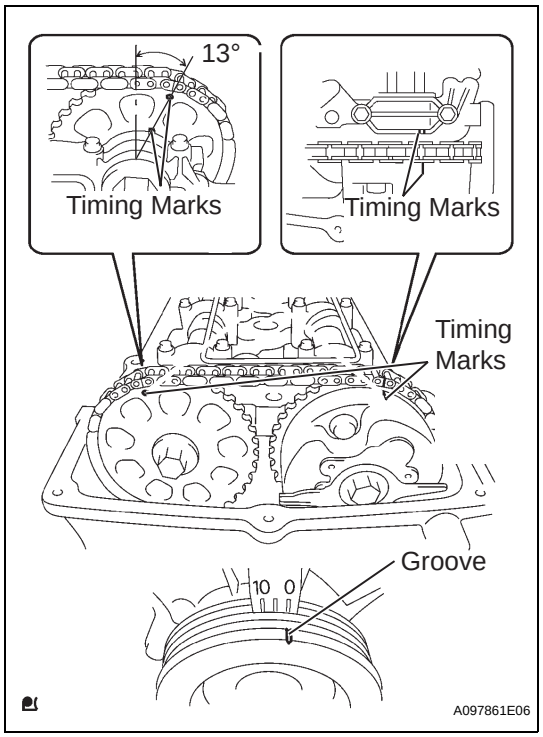

43. REMOVE CRANKSHAFT PULLEY

(a) Set the No. 1 cylinder to the TDC/ compression.

(1) Turn the crankshaft pulley clockwise and align its timing mark notch with the timing mark "0".

(2) Check that the timing marks of the camshaft timing gear are located as illustrated.
HINT:
If not, turn the crankshaft to align the marks.

cardiagn.com

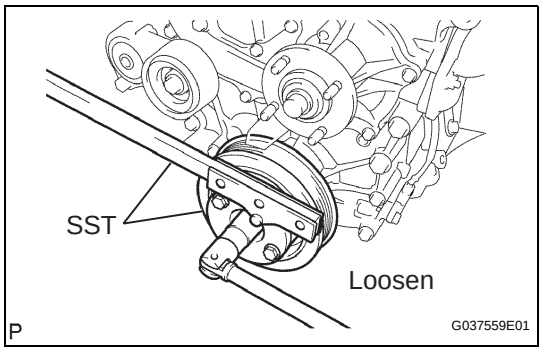

(b) Using SST, loosen the crankshaft pulley bolt.
SST 09213-54015 (91651-60855), 09330-00021
HINT:
Loosen the crankshaft pulley bolt until only 2 or 3 threads are still installed in the crankshaft.

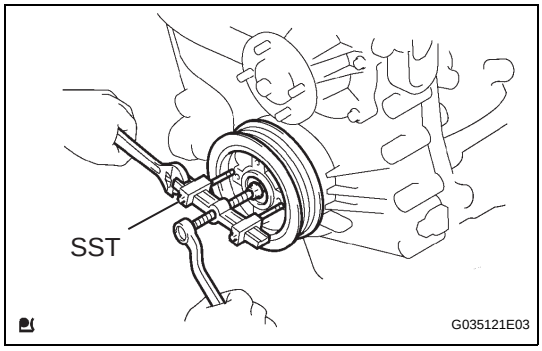

(c) Using SST, remove the crankshaft pulley and crankshaft pulley bolt.
SST 09950-50013 (09951-05010, 09952-05010, 09953-05010, 09954-05021)

44. REMOVE OIL LEVEL GAGE SUB-ASSEMBLY

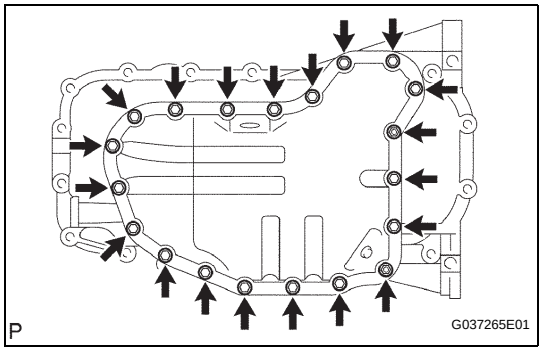

45. REMOVE NO. 2 OIL PAN SUB-ASSEMBLY

(a) Remove the 18 bolts and 2 nuts.

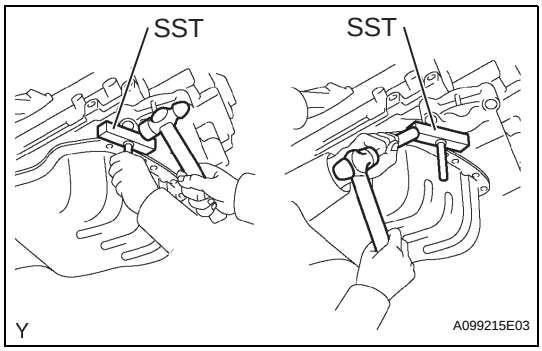

(b) Insert the blade of SST between the pans. Cut through the applied sealer and remove the oil pan.
SST 09032-00100
NOTICE:
Be careful not to damage the contact surface of the oil pans.

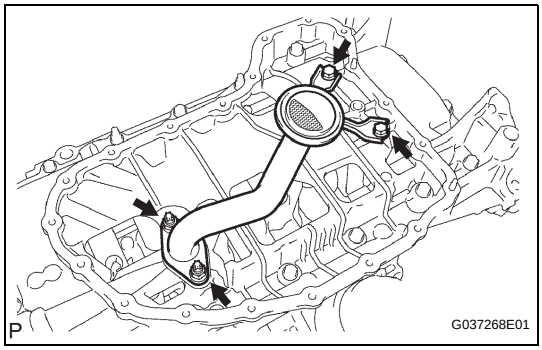

46. REMOVE OIL STRAINER SUB-ASSEMBLY

(a) Remove the 2 bolts, 2 nuts, oil strainer and gasket.

cardiagn.com

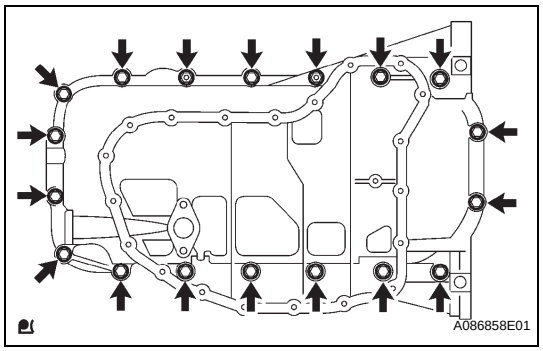

47. REMOVE OIL PAN SUB-ASSEMBLY

(a) Remove the 16 bolts and 2 nuts.

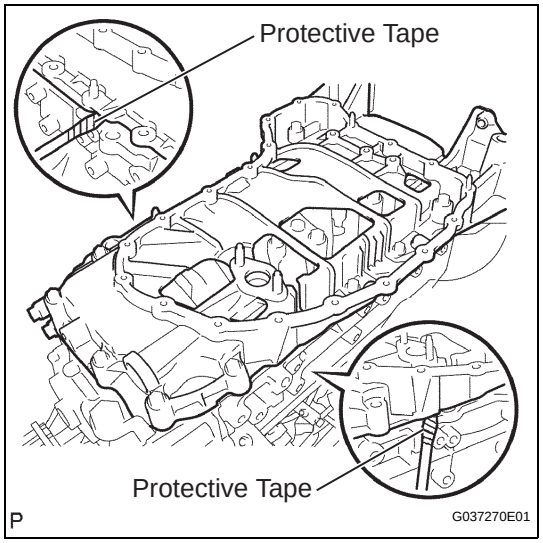

(b) Remove the oil pan by prying between the oil pan and cylinder block with a screwdriver.
HINT:
Tape the screwdriver tip before use.
NOTICE:
Be careful not to damage the contact surfaces of the cylinder block and oil pan.

48. REMOVE TIMING CHAIN COVER (See page LU-21)

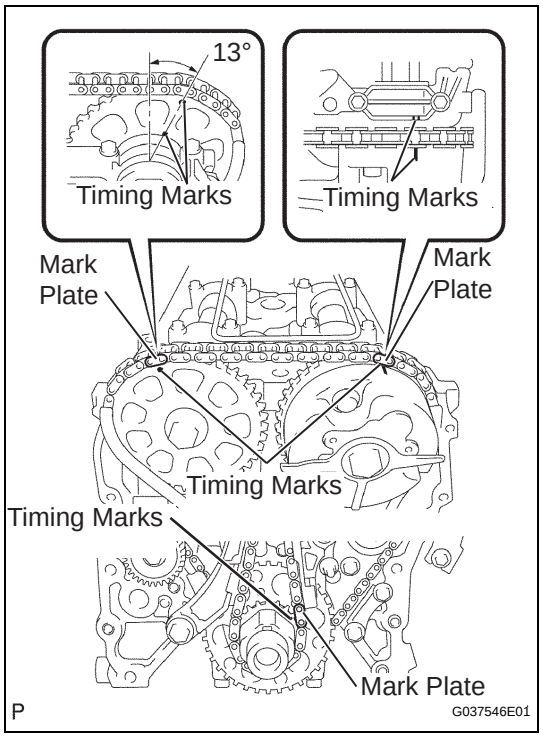

49. REMOVE TIMING CHAIN GUIDE

(a) Make sure that each matchmark is in the position shown in the illustration.

cardiagn.com

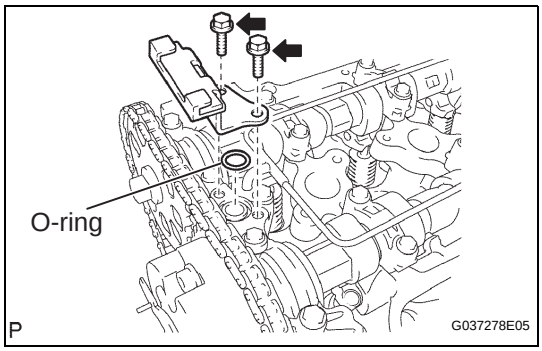

(b) Remove the 2 bolts, timing chain guide and O-ring.

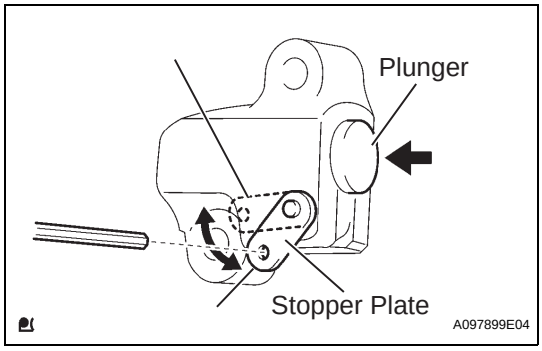

50. REMOVE NO. 1 CHAIN TENSIONER ASSEMBLY

NOTICE:

- **When the chain tensioner is removed, do not rotate the crankshaft.**
- **When the chain is removed and the camshaft needs to be rotated, rotate the crankshaft 90° to the right.**

(a) Move the stopper plate upward to release the lock, and push the plunger deep into the tensioner.

(b) Move the stopper plate downward to set the lock, and insert a 3.0 mm (0.118 in.) diameter bar into the stopper plate hole.

(c) Remove the bolt, nut, chain tensioner and gasket.

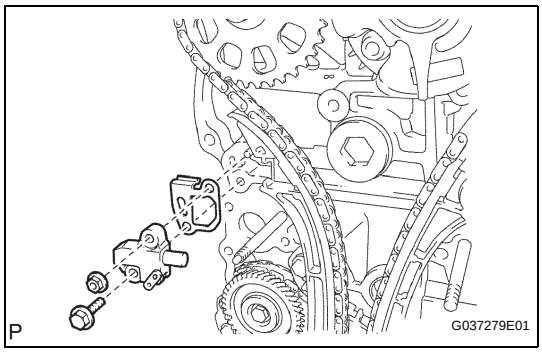

51. REMOVE CHAIN TENSIONER SLIPPER

(a) Remove the bolt and tensioner slipper.

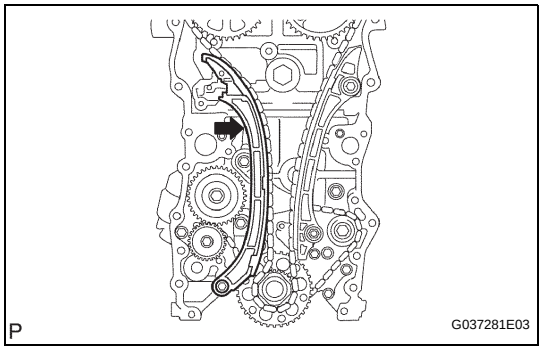

cardiagn.com

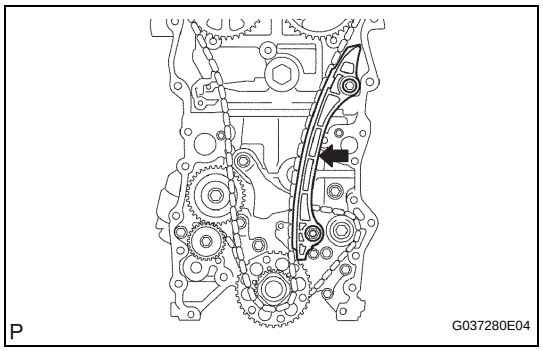

52. REMOVE NO. 1 CHAIN VIBRATION DAMPER

(a) Remove the 2 bolts and vibration damper.

53. REMOVE CHAIN SUB-ASSEMBLY

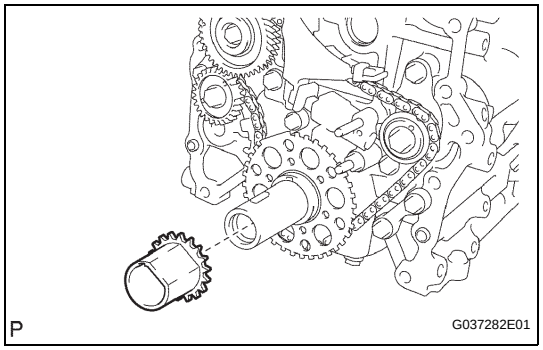

54. REMOVE CRANKSHAFT TIMING GEAR OR SPROCKET

(a) Remove the crankshaft timing gear from the crankshaft.

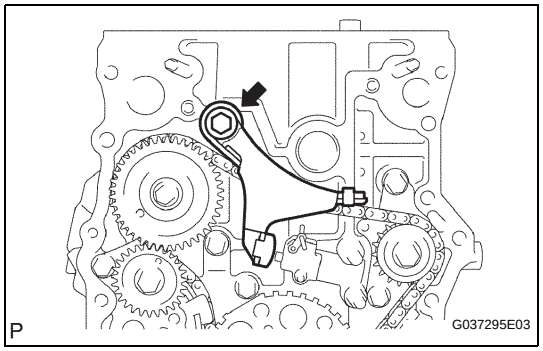

55. REMOVE NO. 2 CHAIN VIBRATION DAMPER

(a) Remove the bolt and No. 2chain vibration damper.

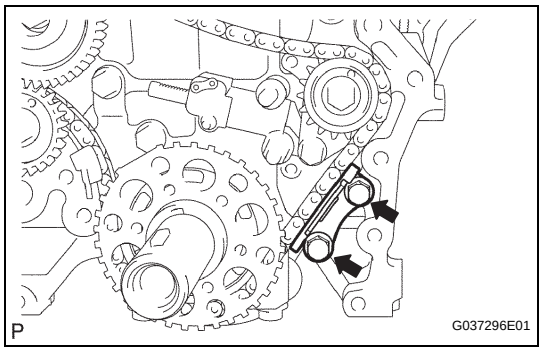

56. REMOVE NO. 3 CHAIN VIBRATION DAMPER

(a) Remove the 2 bolts and No. 3chain vibration damper.

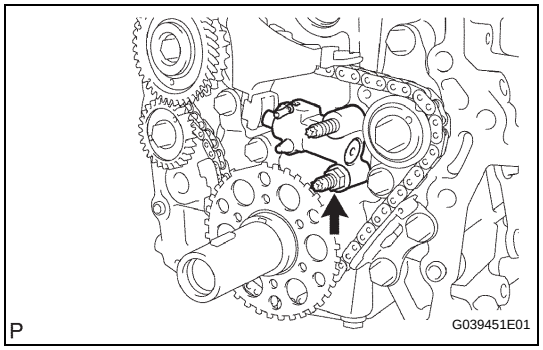

57. REMOVE NO. 2 CHAIN TENSIONER ASSEMBLY

(a) Remove the nut and No. 2 chain tensioner assembly.

cardiagn.com

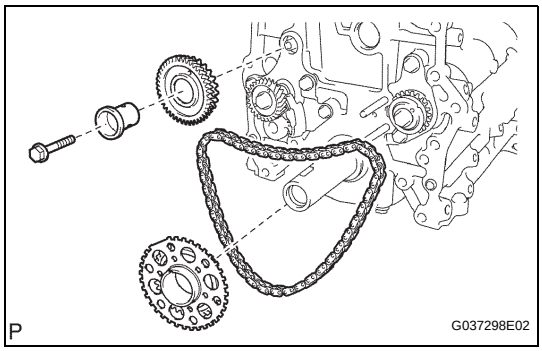

58. REMOVE NO.2 CHAIN SUB-ASSEMBLY

(a) Remove the bolt, balanceshaft drive gear shaft and balanceshaft drive gear.

(b) Remove the crankshaft timing sprocket No. 2 and chain.

INSTALLATION

1. INSTALL NO.2 CHAIN SUB-ASSEMBLY

(a) Install the chain with its mark links aligned with the timing marks on the crankshaft timing sprocket and balanceshaft timing sprocket.

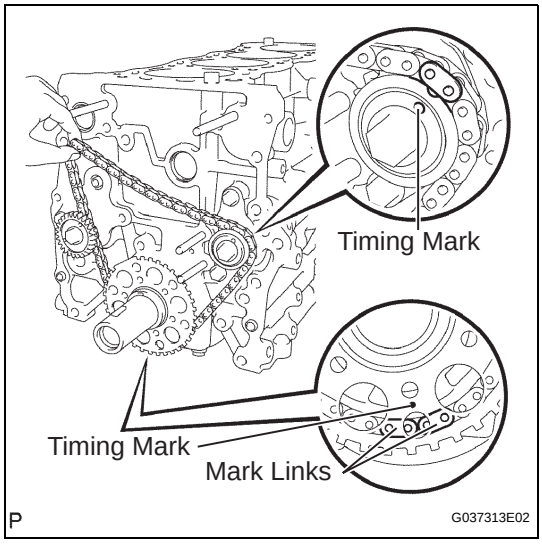

(b) Bring the other mark link of the crankshaft timing sprocket behind the large timing mark of the balanceshaft drive gear.

(c) Insert the balanceshaft drive gear shaft through the balanceshaft drive gear so that it fits into the thrust plate hole.

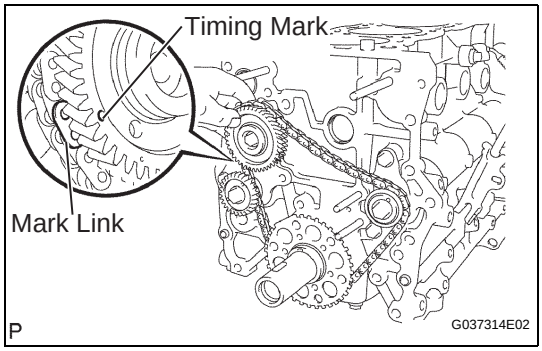

(d) Align the small timing mark of the balanceshaft drive gear with the timing mark of the balanceshaft timing gear.

(e) Install the bolt onto the balanceshaft drive gear and tighten it.
Torque: 25 N*m (250 kgf*cm, 18 ft.*lbf)

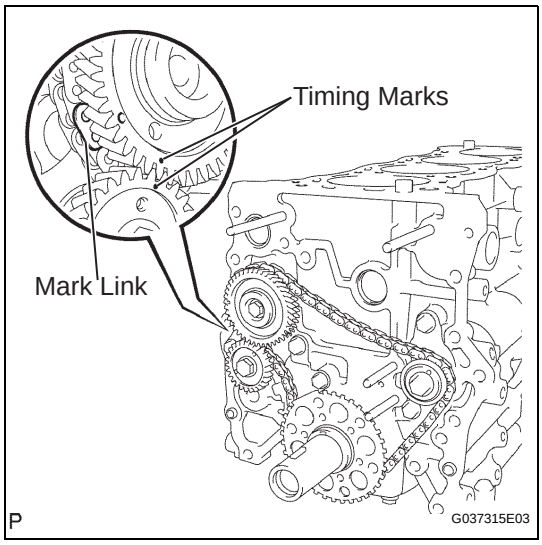

cardiagn.com

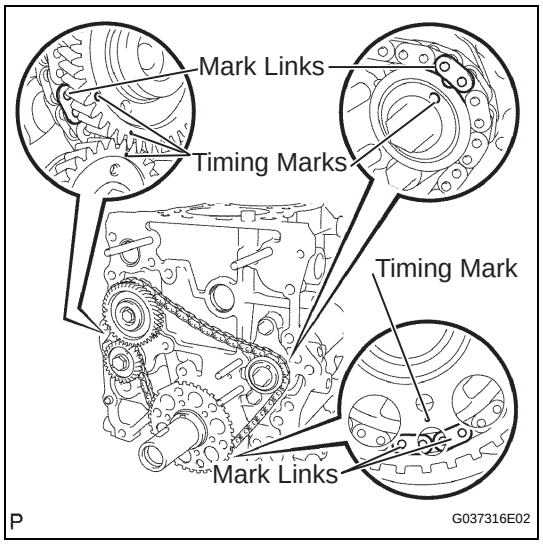

(f) Check that each timing mark is aligned with the corresponding mark link.

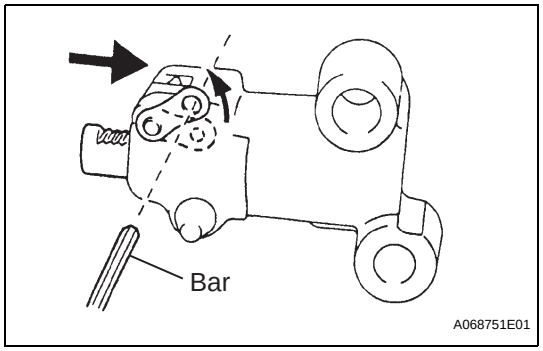

2. INSTALL NO. 2 CHAIN TENSIONER ASSEMBLY

(a) Install the chain tensioner with the nut.
Torque: 18 N*m (185 kgf*cm, 13 ft.*lbf)
NOTICE:
Assemble the chain tensioner with the 3.0 mm (0.118 in.) diameter bar installed, then remove the bar after assembly. When doing this, avoid pushing the vibration damper against the chain.

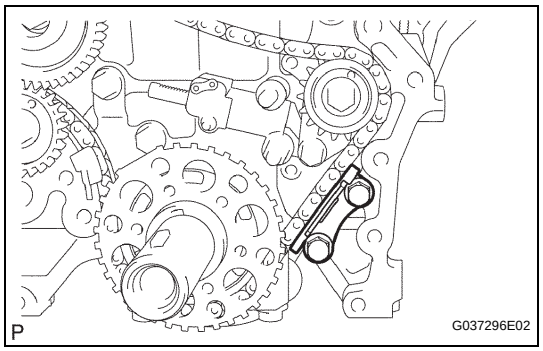

3. INSTALL NO. 3 CHAIN VIBRATION DAMPER

(a) Install the No. 3 chain vibration damper with the 2 bolts.
Torque: 18 N*m (185 kgf*cm, 13 ft.*lbf)

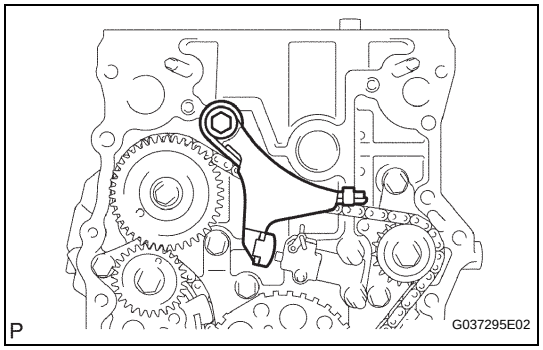

4. INSTALL CHAIN VIBRATION DAMPER NO.2

(a) Install the chain vibration damper with the bolt.
Torque: 27 N*m (270 kgf*cm, 20 ft.*lbf)

(b) Remove the pin from the chain tensioner and release the plunger.

cardiagn.com

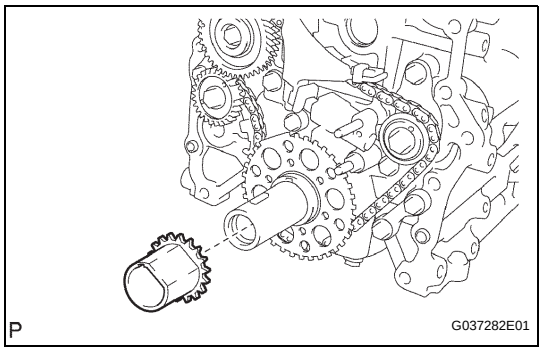

5. INSTALL CRANKSHAFT TIMING GEAR OR SPROCKET

(a) Install the timing sprocket as shown in the illustration.

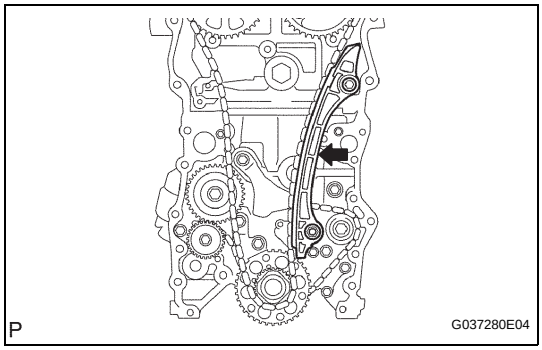

6. INSTALL NO. 1 CHAIN VIBRATION DAMPER

(a) Install the vibration damper with the bolt and nut.
Torque: 21 N*m (214 kgf*cm, 15 ft.*lbf)

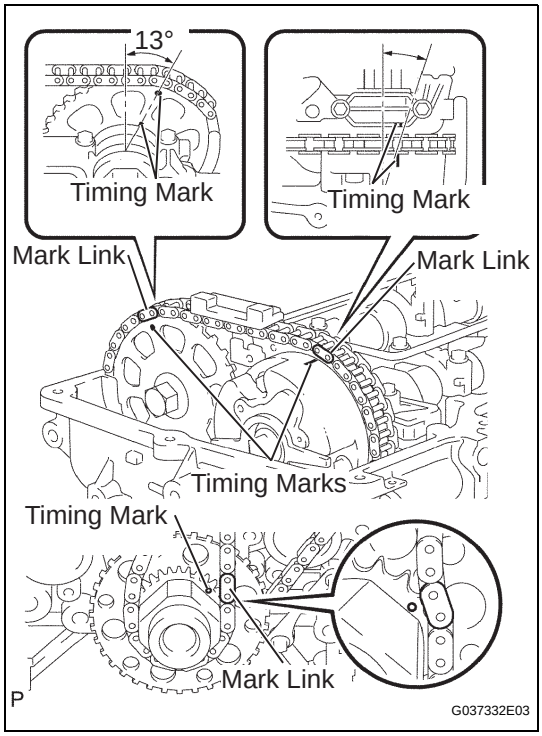

7. INSTALL CHAIN SUB-ASSEMBLY

(a) As shown in the illustration, install the chain onto the sprocket and gear with the painted marks aligned with the timing marks on the sprocket and gear.
HINT:
- The camshaft mark plate is orange.
- The crankshaft mark plate is yellow.

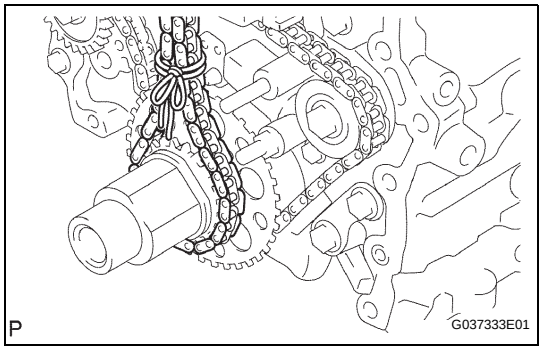

(b) Use a rope to tie the chain of the crankshaft timing sprocket. Tie the rope near the sprocket.
NOTICE:
After the chain tensioner has been installed, the rope must be removed.
HINT:
The rope is tied to prevent gear jumping.

cardiagn.com

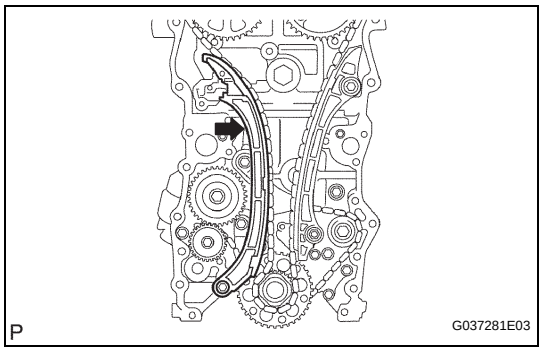

8. INSTALL CHAIN TENSIONER SLIPPER

(a) Install the tensioner slipper with the bolt.
Torque: 21 N*m (214 kgf*cm, 15 ft.*lbf)

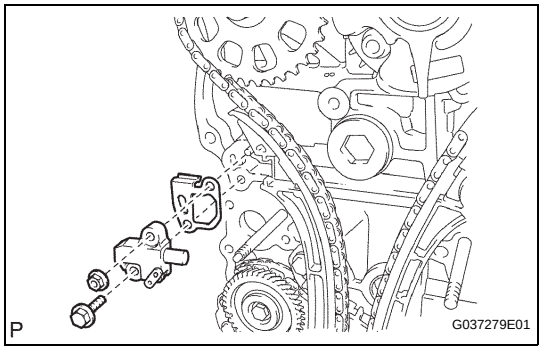

9. INSTALL NO. 1 CHAIN TENSIONER ASSEMBLY

(a) Install a new gasket and the chain tensioner with the bolt and nut.
Torque: 10 N*m (102 kgf*cm, 7 ft.*lbf)

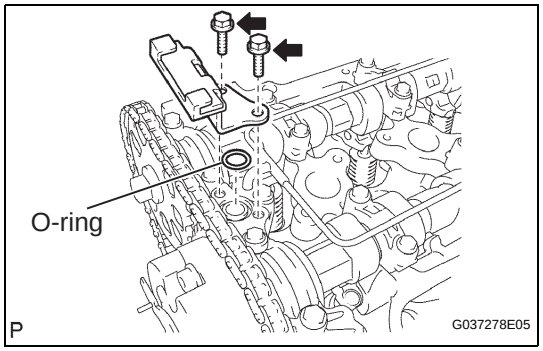

10. INSTALL TIMING CHAIN GUIDE

(a) Install a new O-ring and the chain guide with the 2 bolts.
Torque: 10 N*m (102 kgf*cm, 7 ft.*lbf)

11. INSTALL TIMING CHAIN COVER (See page LU-24)

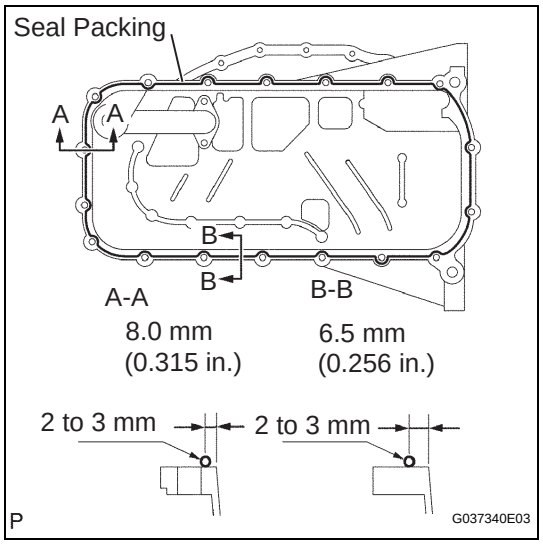

12. INSTALL OIL PAN SUB-ASSEMBLY

(a) Apply continuous beads of seal packing to the places shown in the illustration.
Seal packing:
Part No. 08826-00080 or equivalent
Seal width:
2 to 3 mm (0.079 to 0.118 in.)
NOTICE:
- **Remove any oil from the contact surface.**
- **Install the crankcase within 3 minutes of applying the seal packing.**
- **Do not start the engine for at least 2 hours after installation.**

cardiagn.com

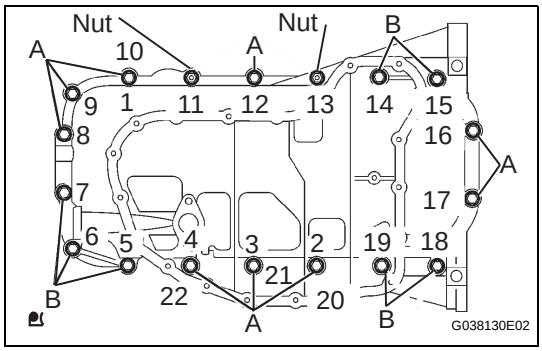

(b) Loosely install the oil pan with the 16 bolts and 2 nuts.
HINT:
Bolt length:
20 mm (0.79 in.) for bolt A,
40 mm (1.57 in.) for bolt B

(c) Uniformly tighten the 16 bolts and 2 nuts in the sequence shown in the illustration.
Torque: 26 N*m (265 kgf*cm, 19 ft.*lbf)

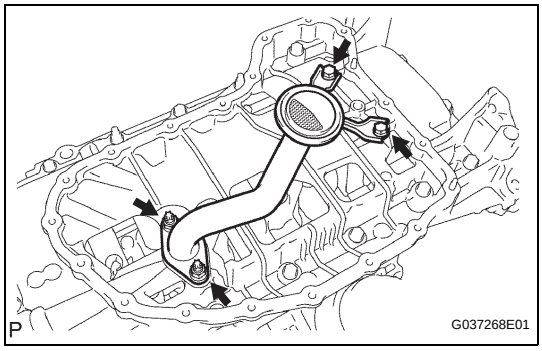

13. INSTALL OIL STRAINER SUB-ASSEMBLY

(a) Install a new gasket and the oil strainer with the 2 bolts and 2 nuts.
Torque: 26 N*m (265 kgf*cm, 19 ft.*lbf)

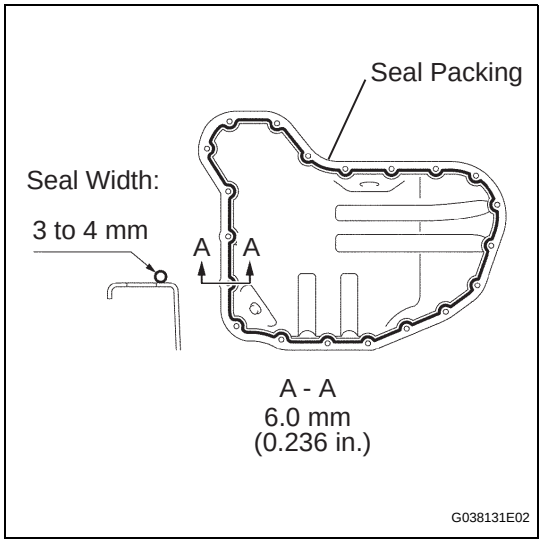

14. INSTALL NO. 2 OIL PAN SUB-ASSEMBLY

(a) Apply continuous beads of seal packing to the places shown in the illustration.
Seal packing:
Part No. 08826-00080 or equivalent
Seal width:
3 to 4 mm (0.118 to 0.157 in.)
NOTICE:
- **Remove any oil from the contact surface.**
- **Install the crankcase within 3 minutes of applying the seal packing.**
- **Do not start the engine for at least 2 hours after installation.**

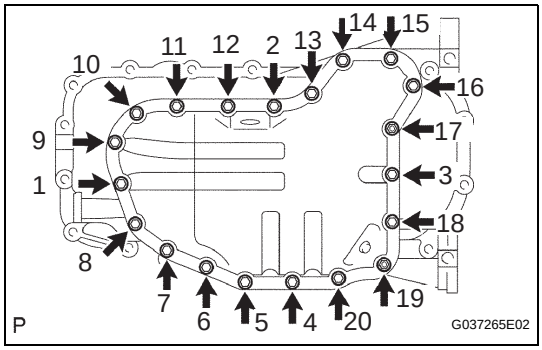

(b) Provisionally install the oil pan with the 18 bolts and 2 nuts.

(c) Uniformly tighten the 18 bolts and 2 nuts in the sequence shown in the illustration.
Torque: 9.0 N*m (92 kgf*cm, 80 in.*lbf)

(d) Install a new gasket and the drain plug.

15. INSTALL OIL LEVEL GAGE SUB-ASSEMBLY

16. INSTALL CRANKSHAFT PULLEY (See page EM-75)

17. INSTALL CYLINDER HEAD COVER SUB-ASSEMBLY (See page EM-48)

18. INSTALL NO. 1 INTAKE MANIFOLD TO HEAD GASKET (See page EM-38)

19. INSTALL CAMSHAFT POSITION SENSOR (See page ES-444)

cardiagn.com

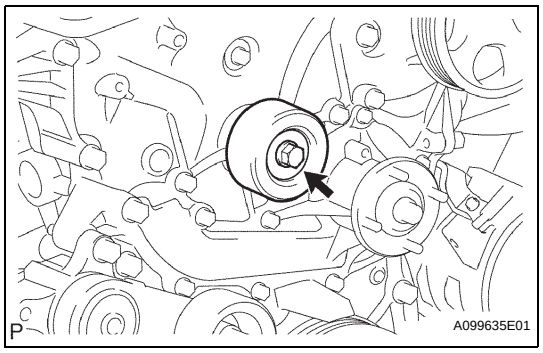

20. INSTALL CRANKSHAFT POSITION SENSOR (See page ES-444)

21. INSTALL IDLE PULLEY ASSEMBLY WITH BRACKET (w/ Air Conditioning System) (See page ES-444)

22. INSTALL NO. 1 IDLER PULLEY SUB-ASSEMBLY

(a) Install the No. 1 idler pulley sub-assembly with the bolt.
Torque: 43 N*m (438 kgf*cm, 32 ft.*lbf)

23. INSTALL V-RIBBED BELT TENSIONER ASSEMBLY (See page CO-6)

24. INSTALL GENERATOR ASSEMBLY (See page CH-13)

25. INSTALL INTAKE AIR CONNECTOR (See page ES-455)

26. INSTALL REAR END PLATE

(a) Install the rear end plate with the 2 bolts.
Torque: 18 N*m (184 kgf*cm, 13 ft.*lbf)

27. INSTALL DRIVE PLATE AND RING GEAR SUB-ASSEMBLY (for Automatic Transmission) (See page EM-79)

28. INSTALL FLYWHEEL SUB-ASSEMBLY (for Manual Transmission) (See page EM-79)

29. INSTALL CLUTCH DISC ASSEMBLY (for Manual Transmission)

Transmission	See page
R155	CL-32
R155F	CL-37

30. INSTALL CLUTCH COVER ASSEMBLY (for Manual Transmission)

Transmission	See page
R155	CL-32
R155F	CL-37

31. INSTALL ENGINE ASSEMBLY (See page EM-98)

32. INSTALL AUTOMATIC TRANSMISSION ASSEMBLY (See page AT-113)

33. INSTALL MANUAL TRANSMISSION UNIT ASSEMBLY

Transmission	See page
R155	MT-9
R155F	MT-11

34. INSTALL EXHAUST PIPE ASSEMBLY FRONT (See page EX-2)

35. INSTALL EXHAUST PIPE ASSEMBLY TAIL (See page EX-2)

36. CONNECT ENGINE WIRE

37. CONNECT NO. 1 AIR INJECTION HOSE (See page EM-99)

cardiagn.com

38. CONNECT FUEL VAPOR FEED HOSE ASSEMBLY (See page EM-99)

39. CONNECT NO. 2 FUEL HOSE (See page FU-17)

40. CONNECT FUEL HOSE (See page FU-17)

41. INSTALL WATER HOSE SUB-ASSEMBLY (See page EM-99)

42. INSTALL RADIATOR HOSE INLET

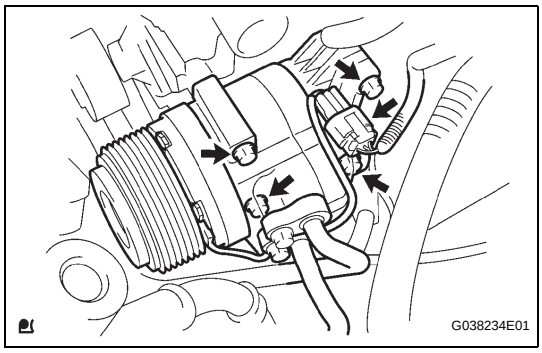

43. INSTALL COMPRESSOR AND MAGNETIC CLUTCH (w/ Air Conditioning System)

(a) Install the compressor and magnetic clutch with the 4 bolts.
Torque: 21 N*m (214 kgf*cm, 16 ft.*lbf)

(b) Connect the compressor and magnetic clutch connector.

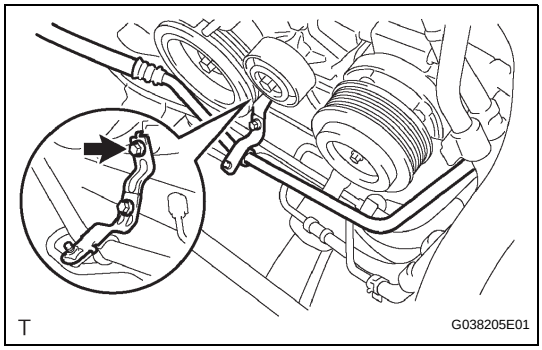

(c) Install the bolt shown in the illustration.
Torque: 7.5 N*m (76 kgf*cm, 66 in.*lbf)

44. INSTALL NO. 2 RADIATOR HOSE

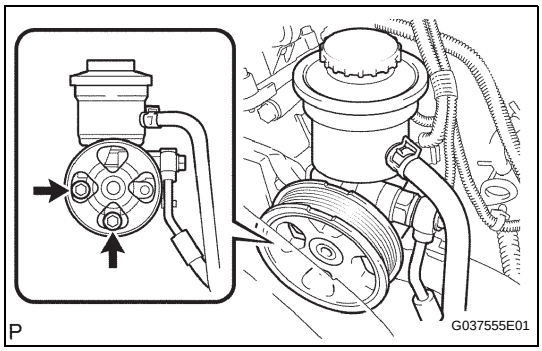

45. INSTALL VANE PUMP ASSEMBLY

(a) Install the vane pump with the 2 bolts.
Torque: 21 N*m (214 kgf*cm, 16 ft.*lbf)

(b) Connect the vane pump connector.

46. INSTALL AIR CLEANER CASE

(a) Install the air cleaner case with the 3 bolts.
Torque: 12 N*m (122 kgf*cm, 9 ft.*lbf)

47. INSTALL AIR CLEANER FILTER ELEMENT SUB-ASSEMBLY

48. INSTALL AIR CLEANER CAP SUB-ASSEMBLY (See page EC-17)

49. INSTALL FAN SHROUD (See page CO-18)

50. INSTALL RADIATOR SUPPORT TO FRAME SEAL LH (See page CO-19)

51. INSTALL BATTERY TRAY

52. INSTALL BATTERY

53. ADD ENGINE OIL (See page LU-4)

54. ADD ENGINE COOLANT (See page CO-3)

55. CHECK FOR ENGINE OIL LEVEL

cardiagn.com

56. CHECK FOR FUEL LEAKAGE

57. CHECK FOR ENGINE COOLANT LEAKAGE (See page CO-2)

58. CHECK FOR OIL LEAKAGE

59. CHECK FOR EXHAUST GAS LEAKAGE

60. INSTALL NO. 1 ENGINE UNDER COVER SUB-ASSEMBLY (for 4WD and Pre-Runner)

(a) Install the No. 1 engine under cover with the 4 bolts.
Torque: 30 N*m (306 kgf*cm, 22 ft.*lbf)

61. INSTALL NO. 2 ENGINE UNDER COVER SUB-ASSEMBLY (for 4WD and Pre-Runner, Regular Cab)

(a) Install the No. 2 engine under cover with the 4 bolts.
Torque: 30 N*m (306 kgf*cm, 22 ft.*lbf)

62. INSTALL HOOD SUB-ASSEMBLY

(See page ED-7)

cardiagn.com