REASSEMBLY

1. INSTALL STUD BOLT

(a) Install the stud bolts as shown in the illustration.

Torque: 11 N*m (112 kgf*cm, 8.1 ft.*lbf) for stud bolt A
4.5 N*m (46 kgf*cm, 40 in.*lbf) for stud bolt B

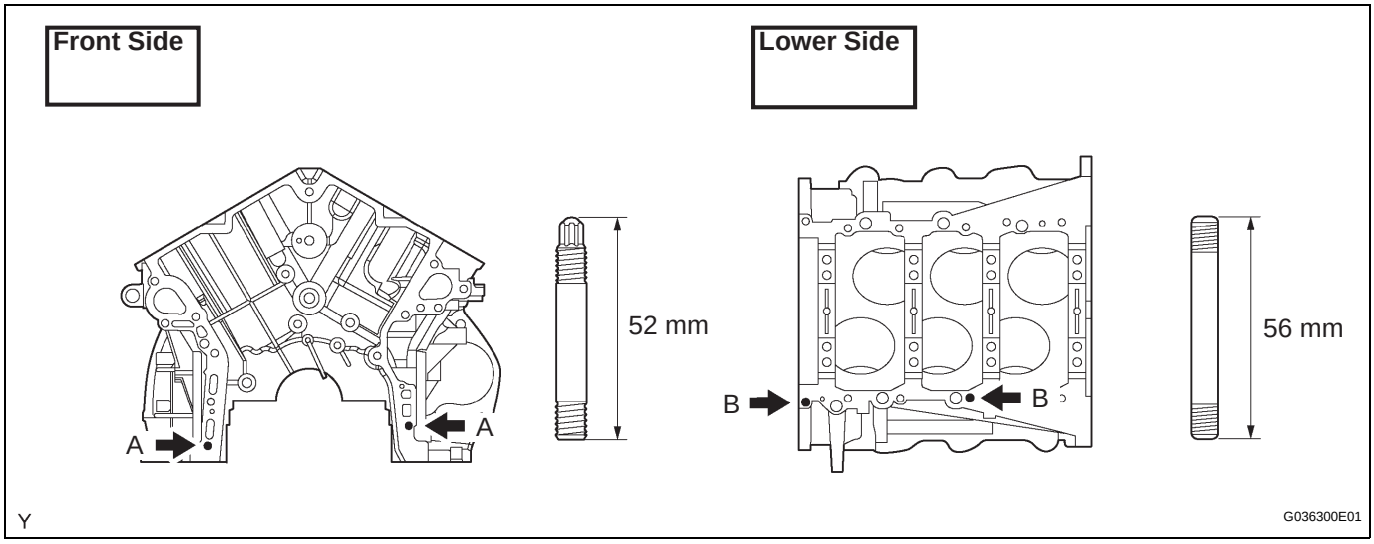

2. INSTALL STRAIGHT PIN

(a) Using a plastic-faced hammer, tap into the new straight pin.

Standard protrusion:
Pin A 22.5 to 23.5 mm (0.886 to 0.925 in.)
Pin B 10.5 to 11.5 mm (0.413 to 0.453 in.)
Pin C 8.5 to 9.5 mm (0.335 to 0.374 in.)
Pin D 5.5 to 6.5 mm (0.217 to 0.256 in.)

cardiagn.com

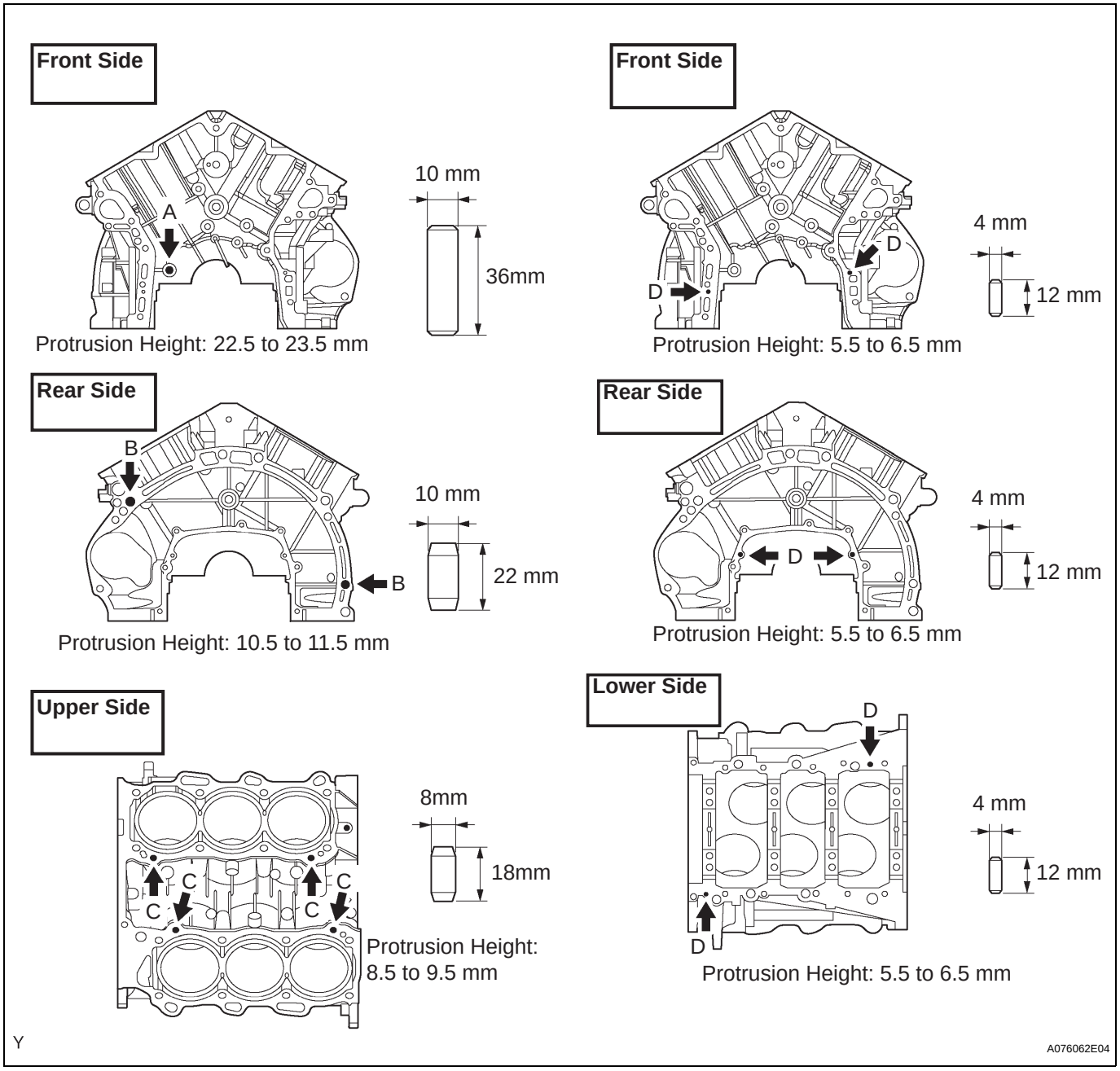

3. INSTALL TIGHT PLUG

(a) Apply adhesive around tight plugs.

Adhesive:

part No. 08833-00070, THREE BOND 1324 or equivalent.

(b) Using SST, install the tight plugs as shown in the illustration.

SST 09550-60010 (09951-00350), 09950-70010 (09951-07150)

Standard depth:

0.2 to 1.2 mm (0.008 to 0.047 in.)

cardiagn.com

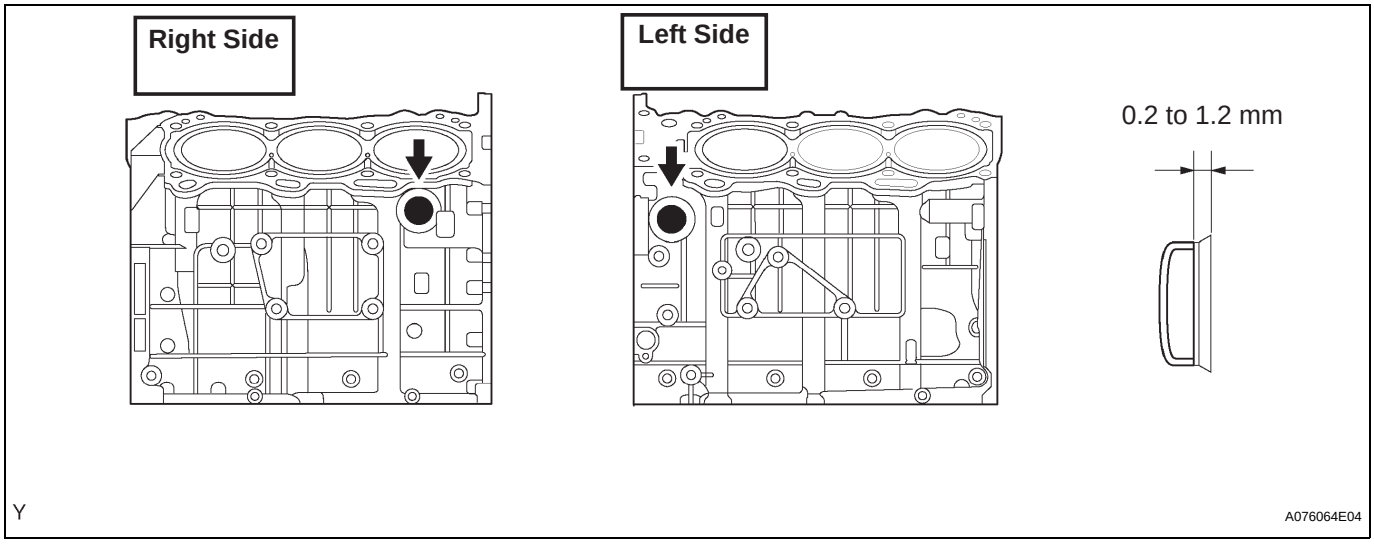

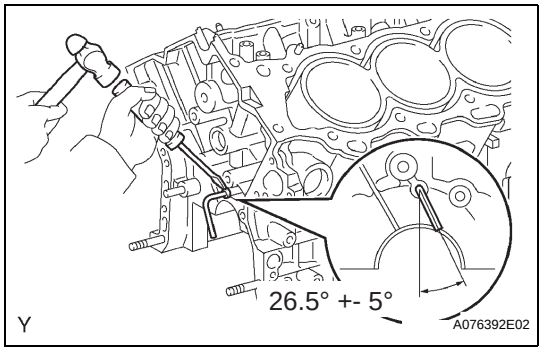

4. INSTALL OIL JET

(a) Using a screw driver and hammer, tap in a oil jet.

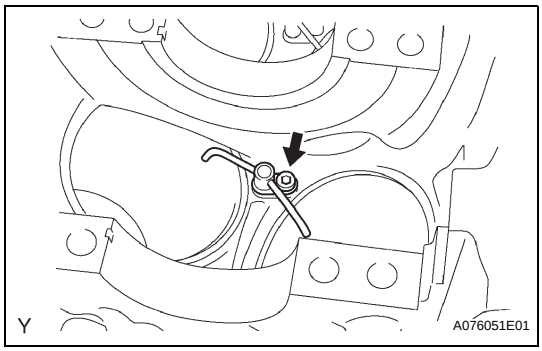

5. INSTALL NO.1 SUB-ASSEMBLY OIL NOZZLE

(a) Using a 5 mm socket hexagon wrench, install the 3 oil nozzles.
Torque: 9.0 N*m (92 kgf*cm, 80 in.*lbf)

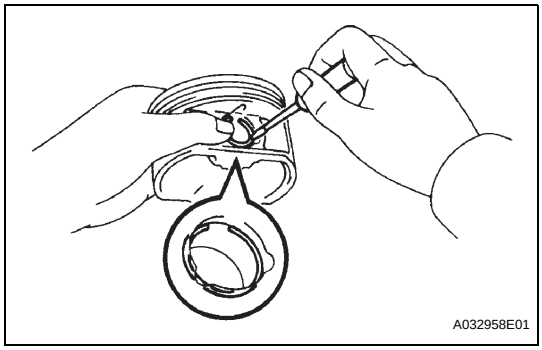

6. INSTALL HOLE SNAP RING

(a) Using a small screwdriver, install a new snap ring onto one side of the piston pin hole.
HINT:
Check that an end gap of the snap ring is not overlapped with the pin hole cutout portion of the piston.

cardiagn.com

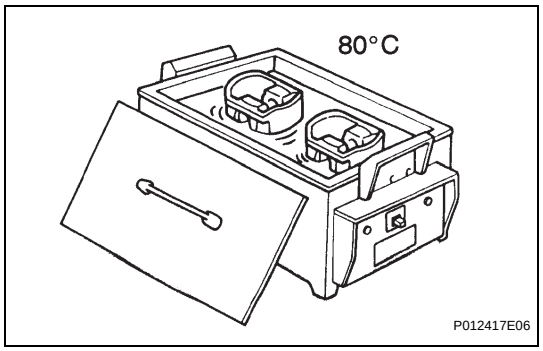

7. INSTALL WITH PIN PISTON SUB-ASSEMBLY

(a) Gradually heat the piston to about 80°C (176°F).

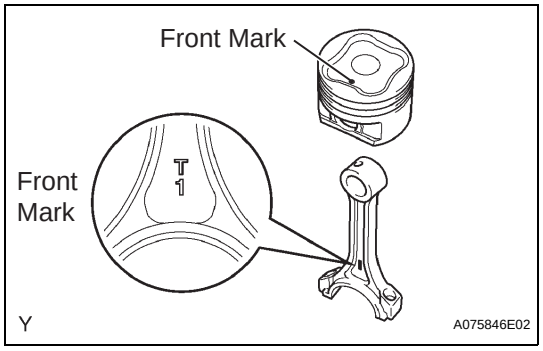

(b) Coat the piston pin with engine oil.

(c) Align the front marks of the piston and connecting rod, and push in the piston pin with thumb.

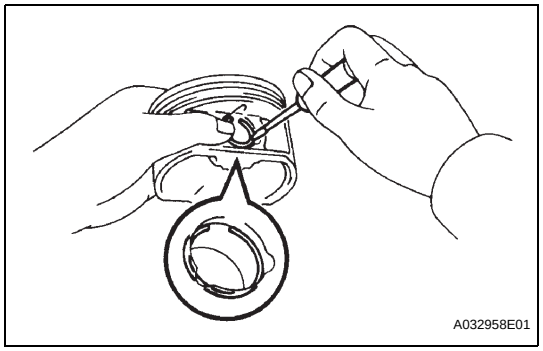

8. INSTALL HOLE SNAP RING

(a) Using a small screwdriver, install a new snap ring onto the other side of the piston pin hole.
HINT:
Make sure that the gap in the snap ring does not overlap with the pin hole cutout portion of the piston.

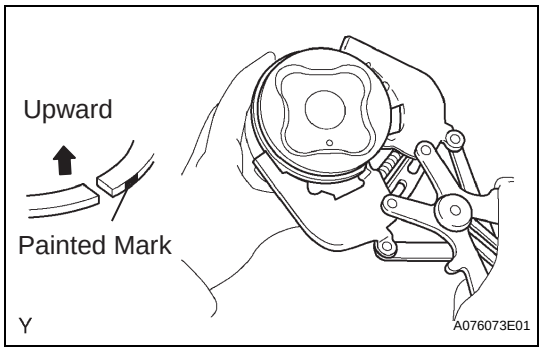

9. INSTALL PISTON RING SET

(a) Install the oil ring expander and 2 side rails by hand.

(b) Using a piston ring expander, install the 2 compression rings.
NOTICE:
Mark Install the compression ring No. 2 with the painted mark facing upward.

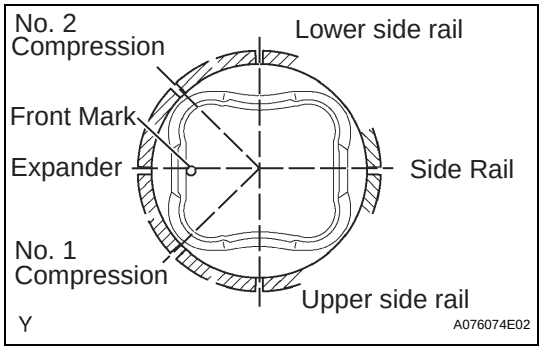

(c) Position the piston rings so that the ring ends are as shown.

EM

cardiagn.com

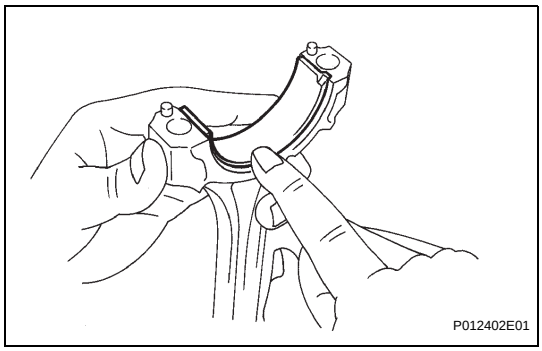

10. INSTALL CONNECTING ROD BEARING

(a) Align the bearing claw with the groove of the connecting rod or connecting cap.

NOTICE:

Clean the back side of the bearing and the bearing surface of the connecting rod and keep them free of oils and fats.

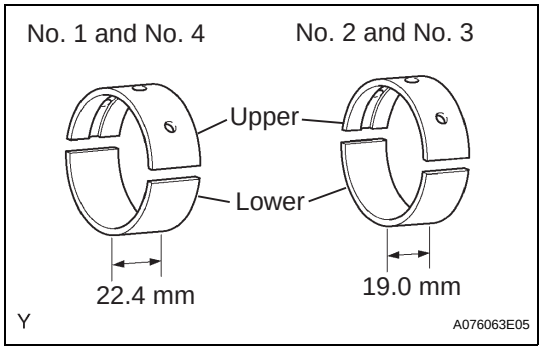

11. INSTALL CRANKSHAFT BEARING

HINT:

There are 2 types of main bearings with different widths (19.0 mm (0.748 in.) and 22.4 mm (0.882 in.)) for use in the inspection. Install the 22.4mm (0.882 in.) bearings in the No. 1 and No. 4 cylinder block journal positions with the main bearing cap. Install the 19.0 mm (0.748 in.) bearings in the No. 2 and No. 3 positions.

(a) Clean each main journal and bearing.

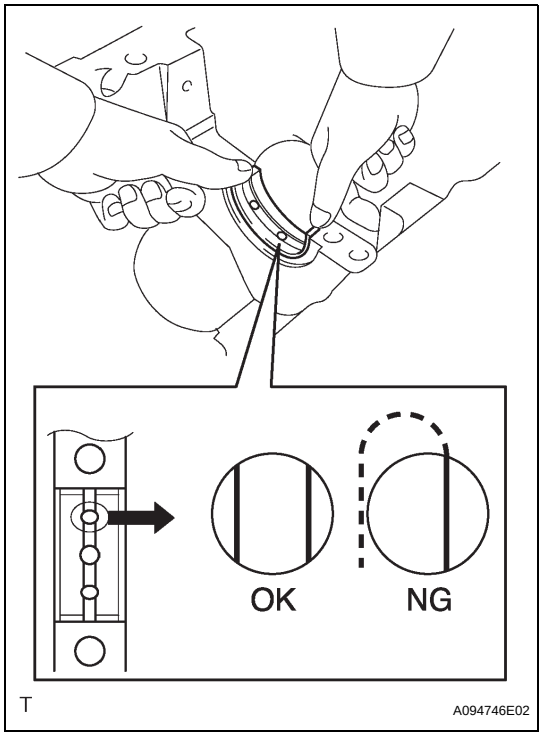

(b) Install the 4 upper bearings.

(1) Install the upper bearings near the center of the cylinder block.

NOTICE:

- **The width of the No. 1 and No. 4 journal bearings is different from that of the No. 2 and No. 3 journal bearings. Therefore, confirm whether it is the correct journal bearing prior to installation.**
- **Do not apply engine oil to the bearing installation surfaces of the cylinder block and the back side of the bearings.**
- **Check that the oil groove on the cylinder block can be seen through the oil supply holes of the upper bearing.**

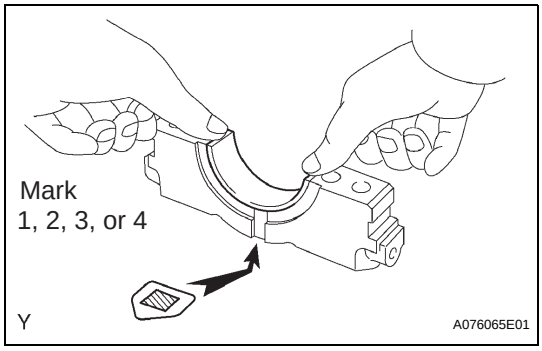

(c) Install the 4 lower bearings.

(1) Install the lower bearings near the center of the cylinder block.

NOTICE:

Do not apply engine oil to the bearing and its contact surface.

HINT:

A number marked on each main bearing cap indicates the installation position.

cardiagn.com

12. INSTALL CRANKSHAFT

(a) Apply engine oil to the upper bearing and install the crankshaft onto the cylinder block.

(b) Install the 2 upper thrust washers onto the No. 2 journal position of the cylinder block.
   (1) Push the crankshaft toward the front (rear) side.
   (2) Install the 2 upper thrust washers with the oil grooves facing outward.

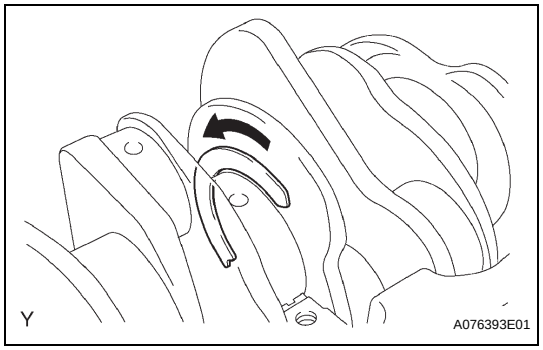

(c) Install the 2 lower thrust washers onto the No. 2 bearing cap with the grooves facing outward.

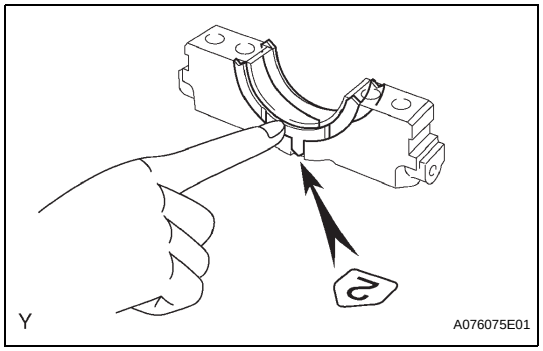

(d) Examine the front marks and numbers, check the sequence number is as shown in the illustration and install the bearing caps on the cylinder block.

(e) Apply a light coat of engine oil to the threads of bearing cap bolts.

(f) Temporarily install the 8 main bearing cap bolts in the inside positions.

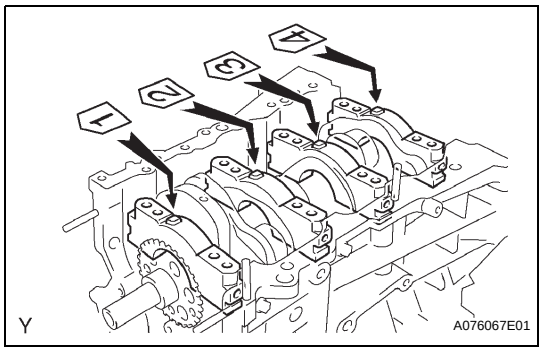

(g) Install the main bearing caps. Tighten the 2 bolts for each bearing cap until the clearance between the bearing cap and the cylinder block is under 6 mm (0.23 in.).

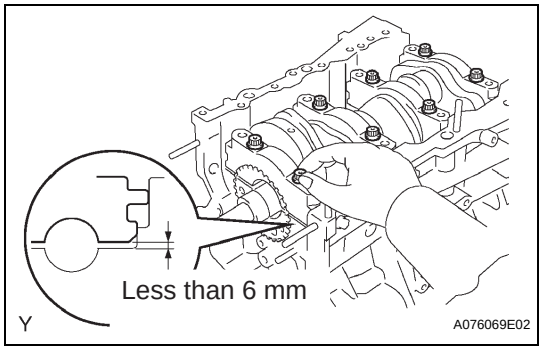

EM

cardiagn.com

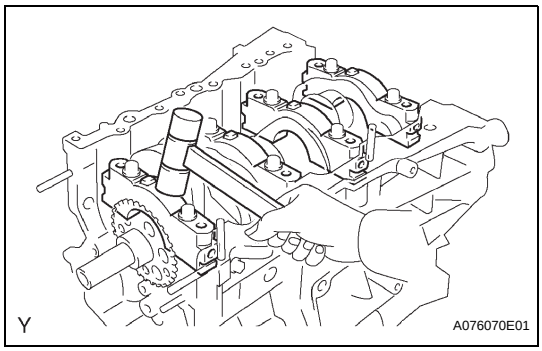

(h) Using a plastic-faced hammer, lightly tap the bearing cap to ensure a proper fit.
(i) Apply a light coat of engine oil to the threads of main bearing cap bolts.

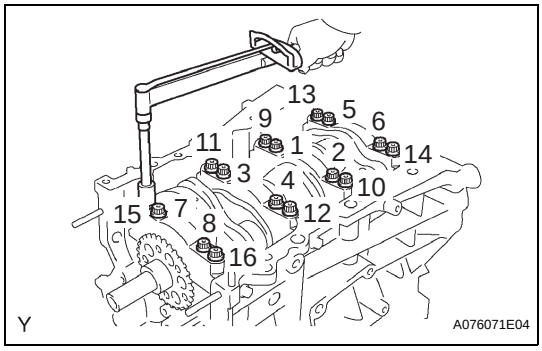

(j) Install the 16 main bearing cap bolts. Using several steps, tighten the bolts uniformly in the sequence shown in the illustration.
Torque: 61 N*m (622 kgf*cm, 45 ft.*lbf)

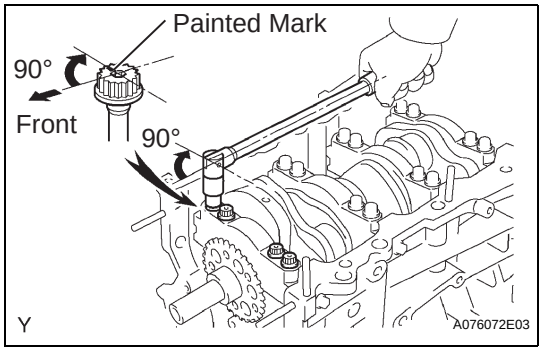

(k) Mark the front side of the bearing cap bolts with paint.
(l) Retighten the bearing cap bolts 90° in the sequence as shown.
(m) Check that the painted mark is now at a 90° angle from the front.
(n) Check that the crankshaft turns smoothly.

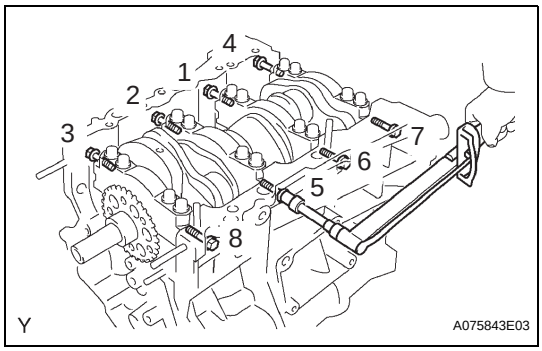

(o) Using several steps, tighten the 8 main bearing cap bolts uniformly in the sequence shown in the illustration.
Torque: 25 N*m (255 kgf*cm, 18 ft.*lbf)

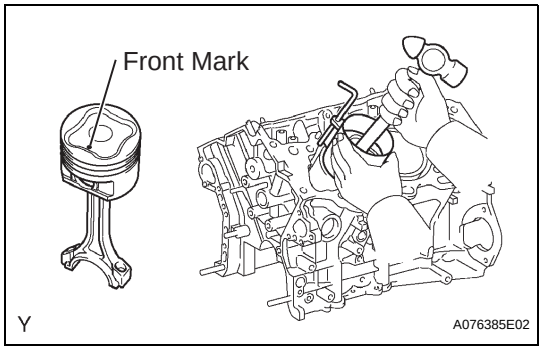

13. INSTALL PISTON SUB-ASSEMBLY WITH CONNECTIONG ROD

(a) Apply engine oil to the cylinder walls, pistons, and surfaces of connecting rod bearings.
(b) Check the position of the piston ring ends.

cardiagn.com

(c) Using a piston ring compressor, push the correct number piston and connecting rod into each cylinder with the front mark of the piston facing forward.

NOTICE:

- **Clean the back side of the bearing and the bearing surface of the connecting rod cap and keep them free of oils and fats.**
- **Match the numbered connecting rod cap with the connecting rod.**

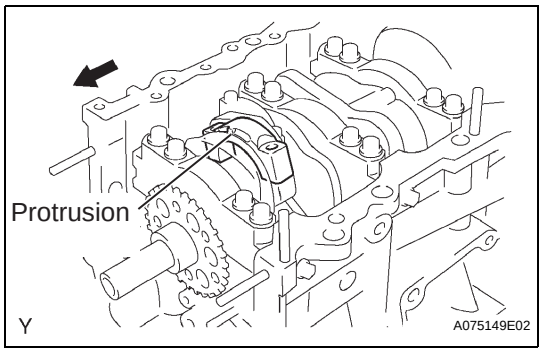

(d) Check that the protrusion of the connecting rod cap is facing in the correct direction.

(e) Apply a light coat of engine oil to the threads of the connecting rod cap bolts.

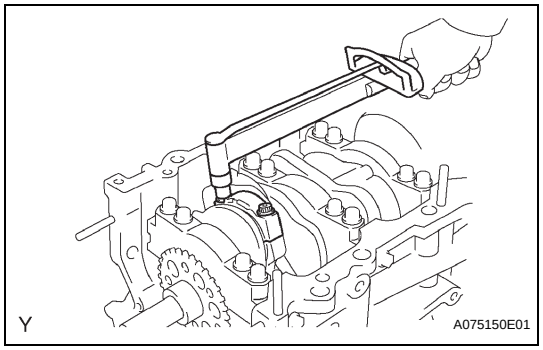

(f) Using SST, tighten the bolts alternately to the specified torque.

Torque: 25 N*m (250 kgf*cm, 18 ft.*lbf)

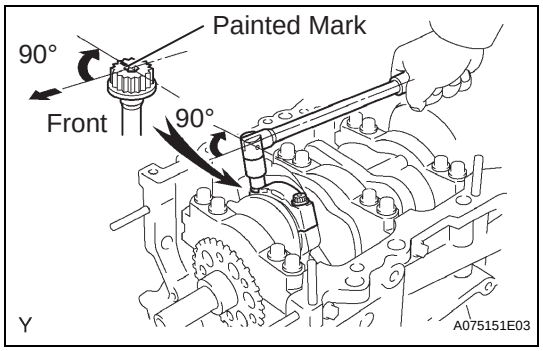

(g) Mark the front side of the each connecting cap bolt with paint.

(h) Retighten the cap bolts 90° as shown.

(i) Check that the crankshaft turns smoothly.

14. INSTALL RING PIN

(a) Using a plastic-faced hammer, tap in the new ring pins to the specified protrusion height.

Specified protrusion height:
2.7 to 3.3 mm (0.106 to 0.130 in.)

EM

cardiagn.com

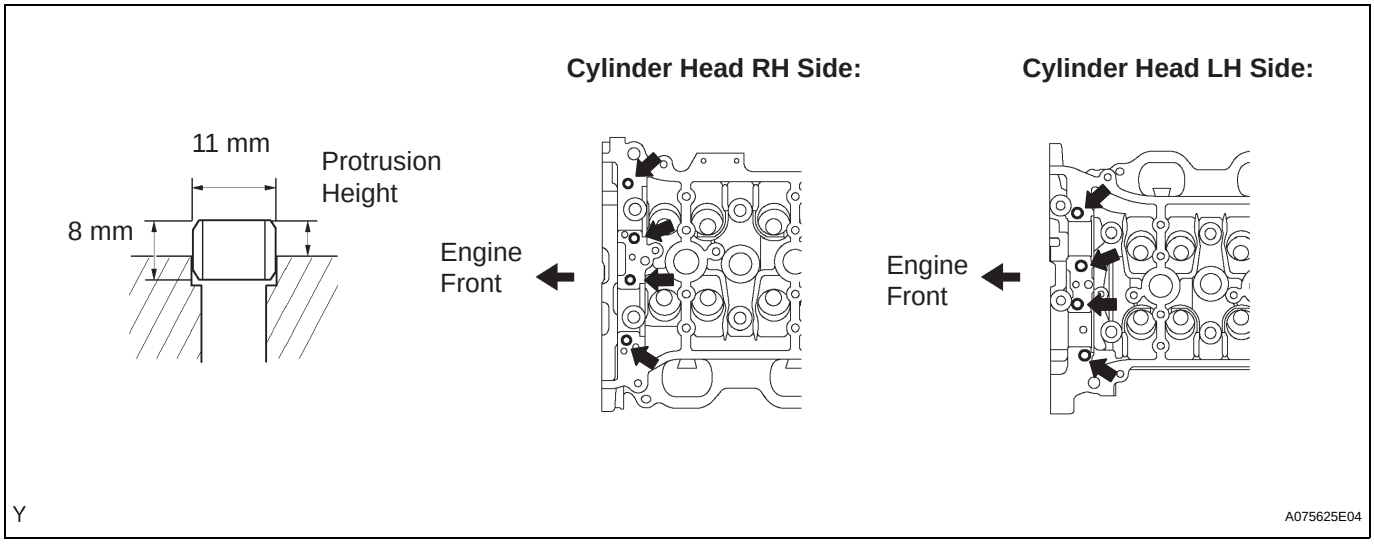

15. INSTALL STRAIGHT PIN

(a) Using a plastic-faced hammer, tap in the new straight pins to the specified protrusion height.
Specified protrusion height

A	**17.5 to 19.5 mm (0.689 to 0.768 in.)**
B	**7.5 to 8.5 mm (0.295 to 0.335 in.)**
C	**7.0 to 9.0 mm (0.276 to 0.354 in.)**

cardiagn.com

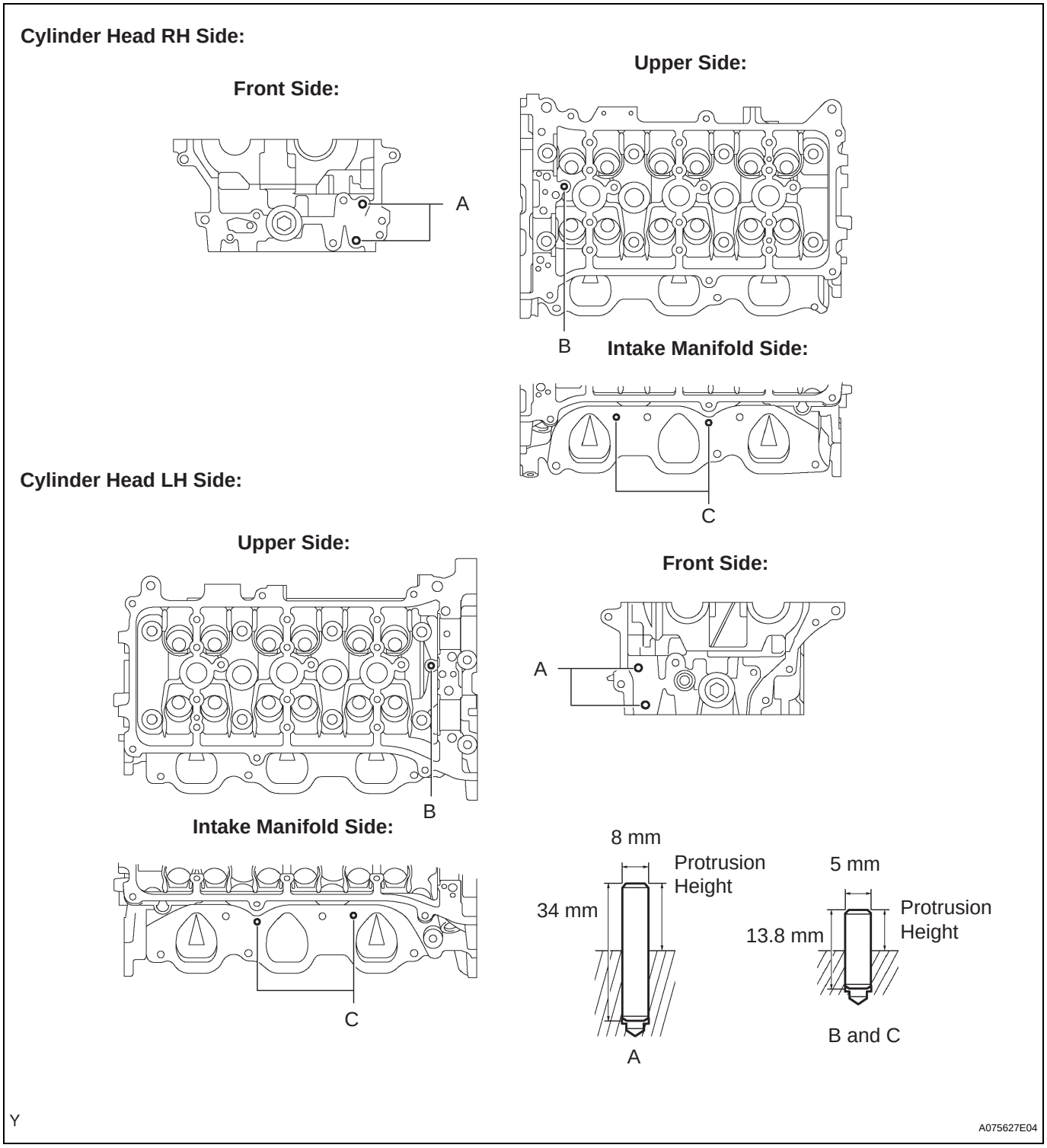

16. INSTALL STUD BOLT

(a) Using the torx socket wrenchs E5 and E7, install the stud bolts.

Torque: 4.0 N*m (41 kgf*cm, 35 in.*lbf) for stud bolt A
9.0 N*m (92 kgf*cm, 80 in.*lbf) for stud bolt B
4.0 N*m (41 kgf*cm, 35 in.*lbf) for stud bolt C

cardiagn.com

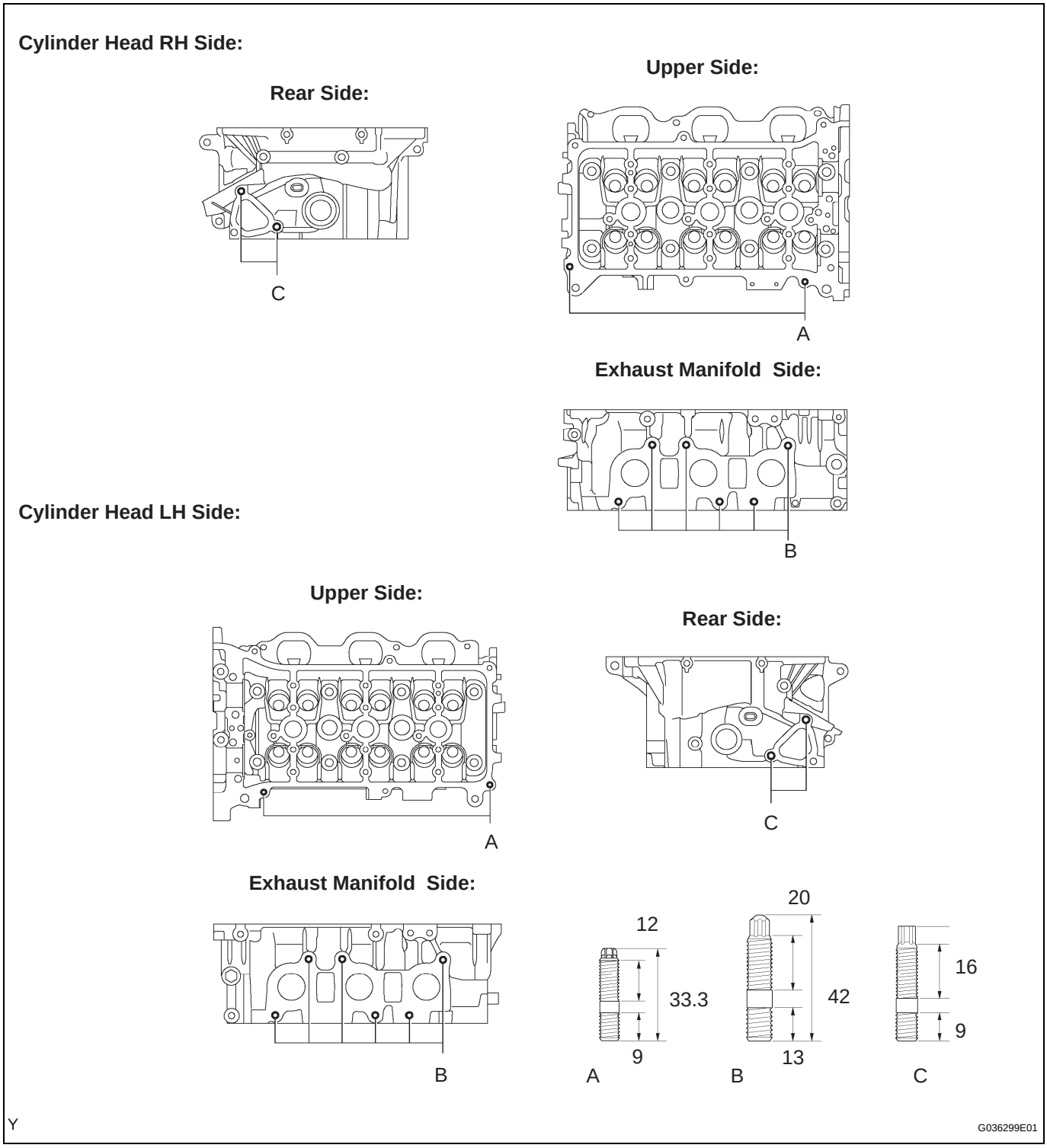

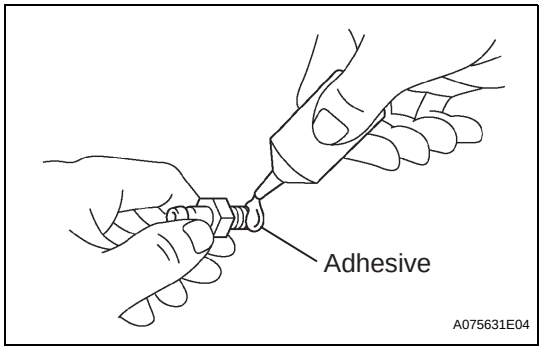

17. INSTALL UNION

(a) Apply adhesive to 2 or 3 threads of the bolt end.
Adhesive:
Part No. 08833-00070, THREE BOND 1324 or equivalent

(b) Using a deep socket wrench 12, install the unions.
Torque: 15 N*m (150 kgf*cm, 11 ft.*lbf)

cardiagn.com

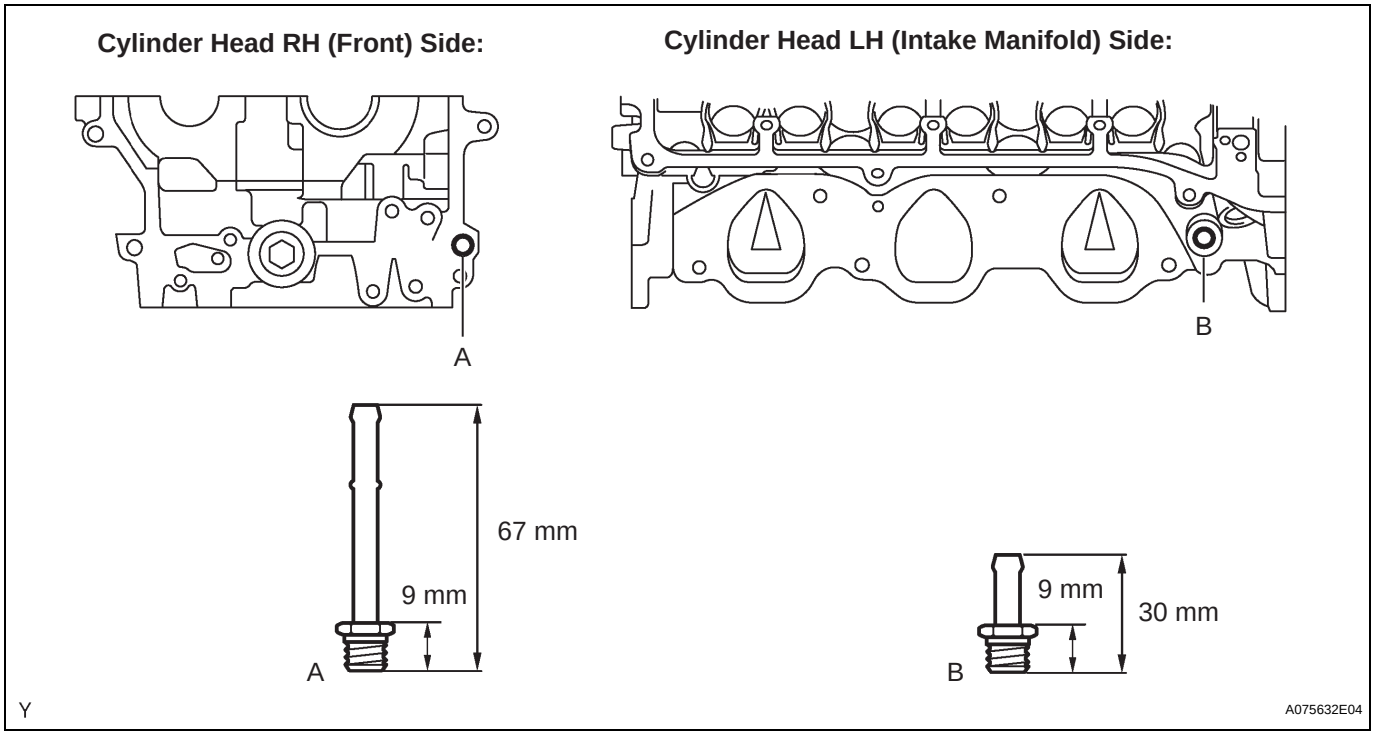

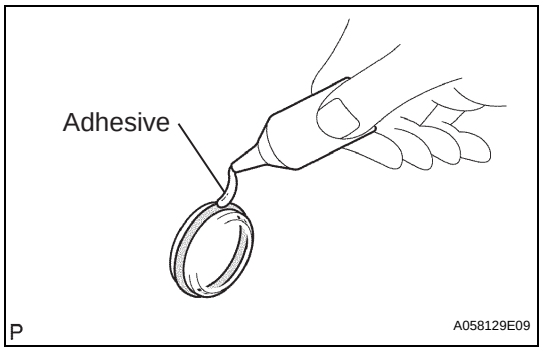

18. INSTALL TIGHT PLUG

(a) Apply adhesive around the tight plug.

(b) Using SST, tap in the tight plugs to the specified depth.

SST 09950-60010 (09951-00250), 09950-70010 (09951-07150)

Specified depth:
1.5 mm (0.059 in.)

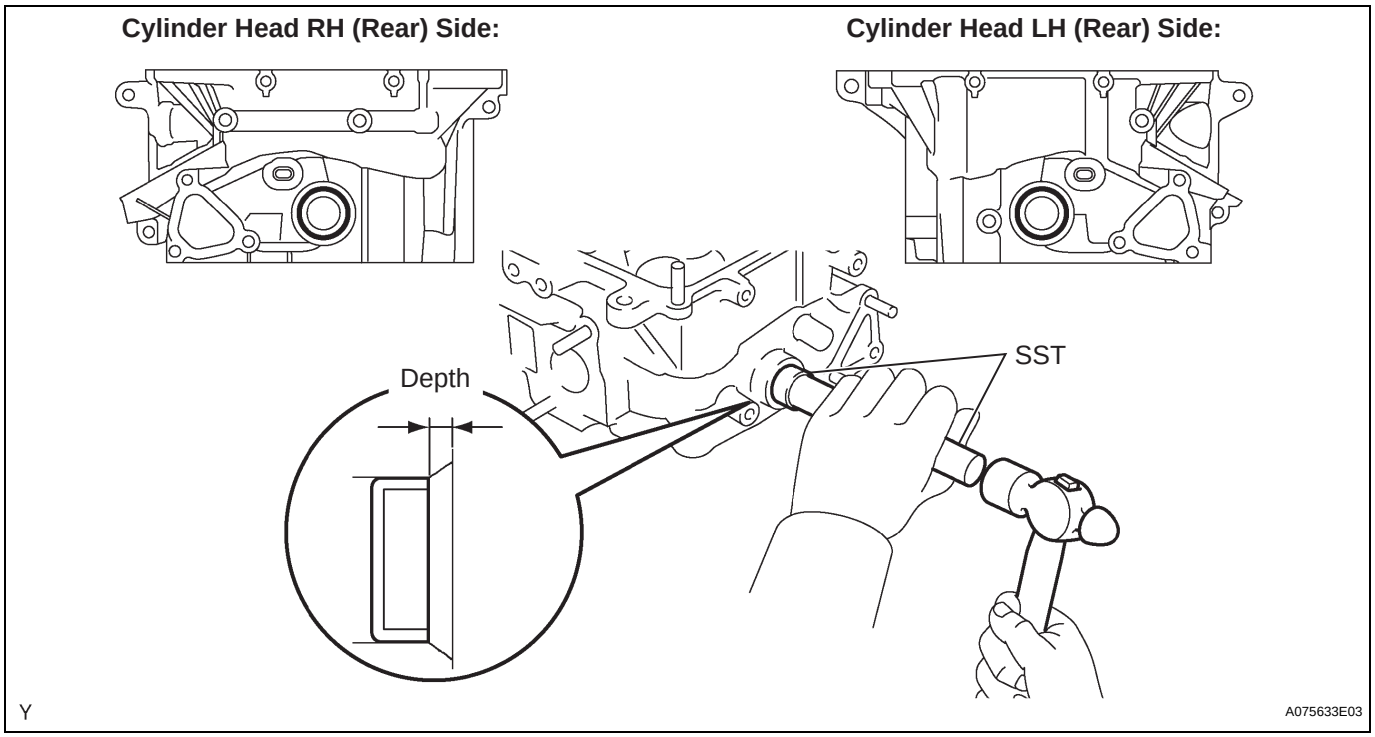

cardiagn.com

19. INSTALL WITH HEAD STRAIGHT SCREW PLUG

(a) Using a straight hexagon wrench 14, install a new gasket and straight screw plug.
Torque: 80 N*m (816 kgf*cm, 59 ft.*lbf)

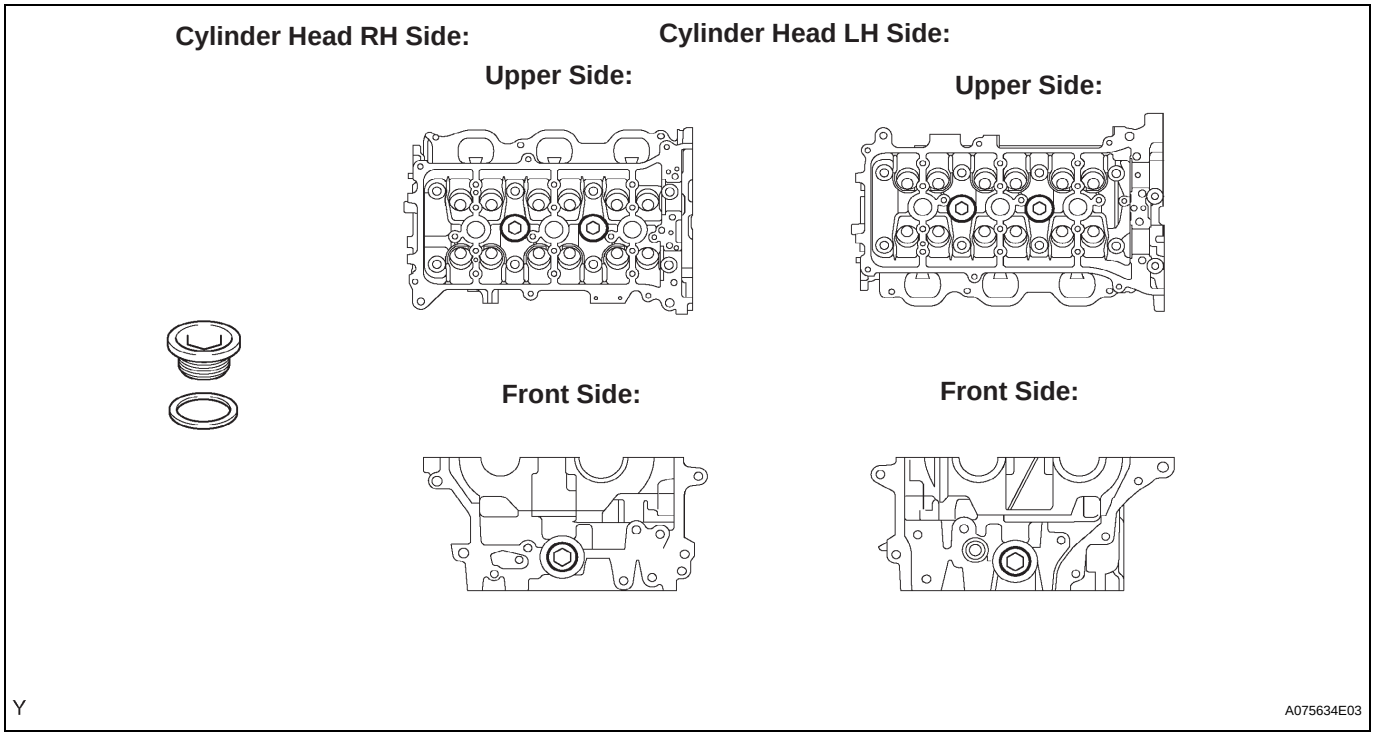

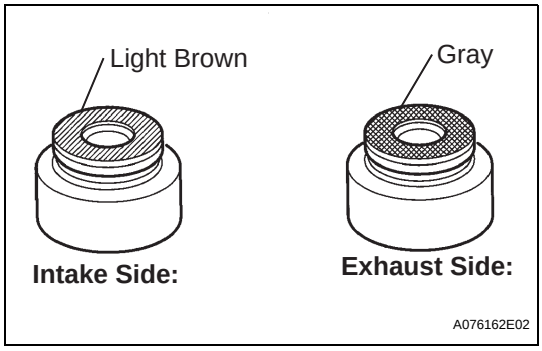

20. INSTALL VALVE STEM OIL O SEAL OR RING

HINT:
The intake valve stem oil seal is light brown and the exhaust valve stem oil seal is gray.

(a) Apply a light coat of engine oil to the valve guide bush.

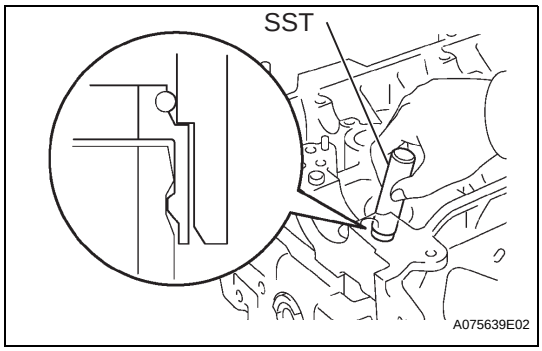

(b) Using SST, push in a new valve stem oil seal.
SST 09201-41020

cardiagn.com

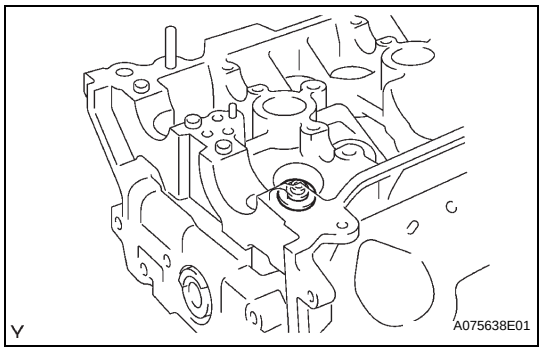

21. INSTALL VALVE SPRING SEAT

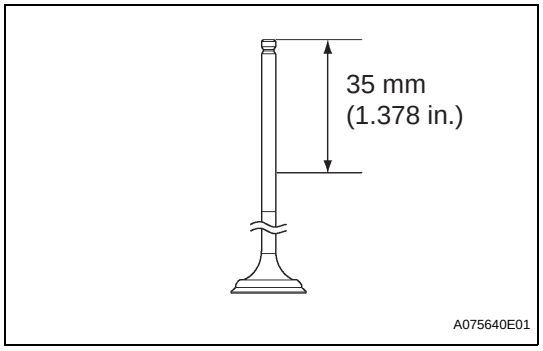

22. INSTALL VALVE

(a) Apply the engine oil to the valve as shown in the illustration.

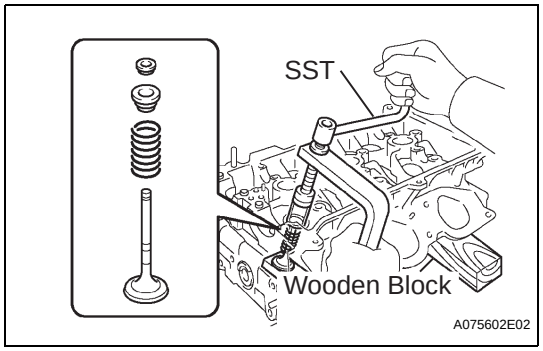

(b) Place the cylinder head on a wooden block.
(c) Install the valve, inner compression spring and valve spring retainer.
(d) Using SST, compress the inner compression spring and place the 2 valve spring retainer rocks around the valve stem.
SST 09202-70020 (09202-00010)

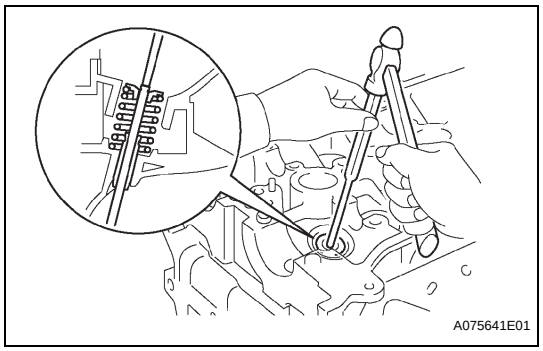

(e) Using a pin punch 5, lightly tap the valve stem tip to ensure a proper fit.
NOTICE:
Be careful not to damage the valve stem tip.

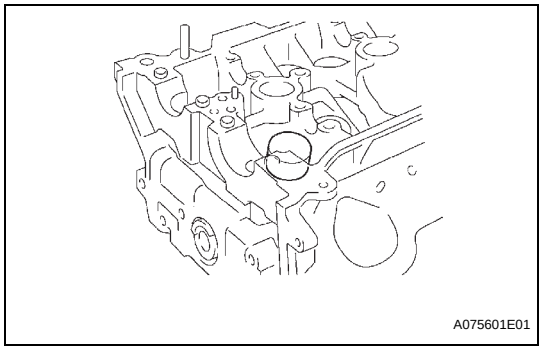

23. INSTALL VALVE LIFTER

(a) Apply the engine oil to the valve stem end and valve lifter, and install the valve lifter onto the valve stem.
(b) Check that the valve lifter rotates smoothly by hand.

24. INSTALL REAR ENGINE OIL SEAL RETAINER

(a) Remove any old packing material and be careful not to drop any oil on the contact surfaces of the oil seal retainer and cylinder block.

cardiagn.com

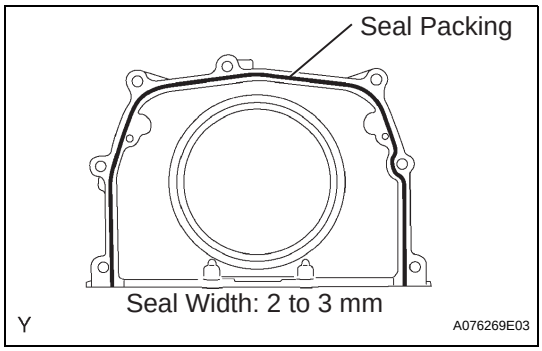

(b) Apply a continuous bead of seal packing (diameter 2 to 3 mm (0.08 to 0.12 in.)) to the oil seal retainer as shown in the illustration.
Seal packing:
Part No. 08826-00080 or equivalent
NOTICE:
Parts must be assembled within 3 minutes of application. Otherwise, the seal packing must be removed and reapplied.

(c) Install the oil seal retainer with the 5 bolts and 2 nuts.
Torque: 9.0 N*m (92 kgf*cm, 80 in.*lbf)
10 N*m (102 kgf*cm, 7.4 ft.*lbf)

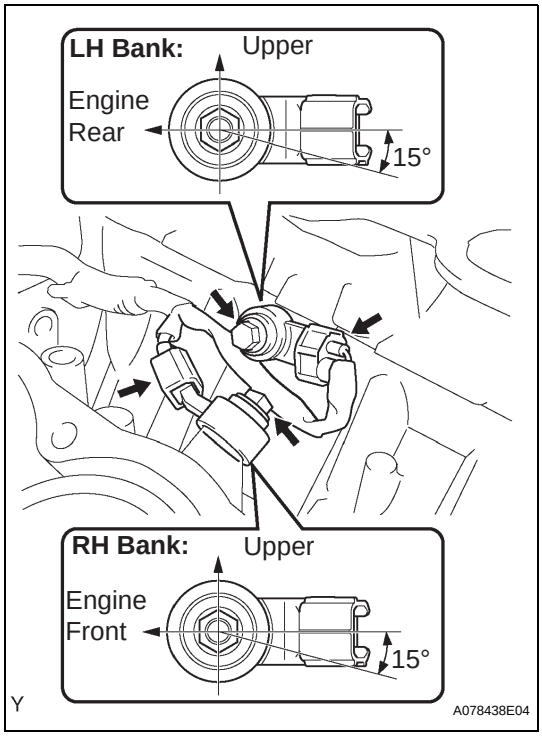

25. INSTALL KNOCK CONTROL SENSOR

(a) Install the 2 knock sensors with the 2 bolts as shown in the illustration.
Torque: 20 N*m (204 kgf*cm, 15 ft.*lbf)

(b) Connect the knock sensor connectors.

(c) Connect the knock sensor wire.

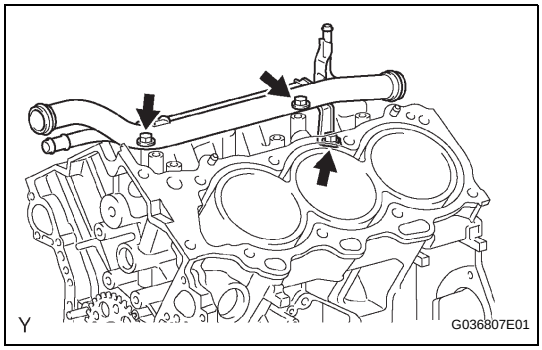

26. INSTALL NO.1 WATER OUTLET PIPE

(a) Install the water outlet pipe with the 3 bolts.
Torque: 10 N*m (102 kgf*cm, 7.4 ft.*lbf)

27. INSTALL CYLINDER HEAD GASKET

(a) Remove any old packing material and be careful not to drop any oil on the contact surfaces of the cylinder head and cylinder block.

cardiagn.com

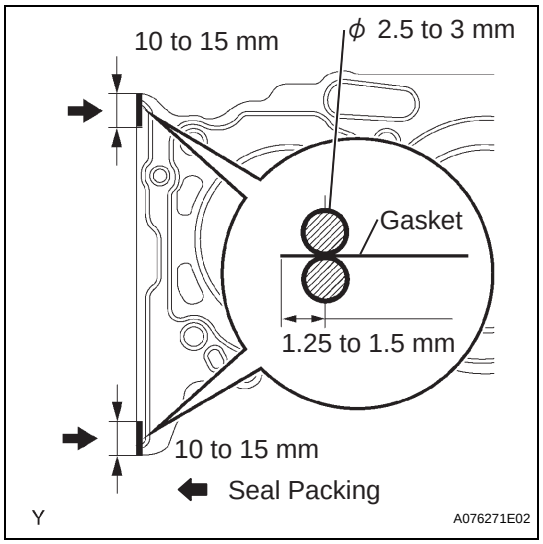

(b) Apply a continuous bead of seal packing (diameter 2.5 to 3 mm (0.098 to 0.118 in.)) to a new cylinder head gasket as shown in the illustration.
Seal packing:
Part No. 08826-00080 or equivalent
NOTICE:
Install the cylinder head within 3 minutes of applying the seal packing. After installation, cylinder head bolts must be tightened within 15 minutes. Otherwise, the seal packing must be removed and reapplied.

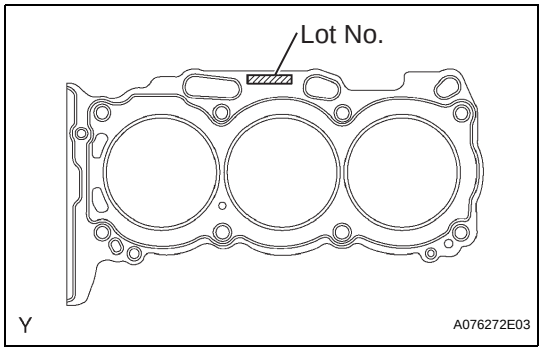

(c) Place the cylinder head gasket on the cylinder block surface with the Lot No. stamp upward.
NOTICE:
- **Be careful of the installation direction.**
- **Place the cylinder head carefully in order not to damage the gasket with the bottom part of the head.**

28. INSTALL CYLINDER HEAD SUB-ASSEMBLY

(a) Place the RH cylinder head on the cylinder head gasket.

(b) Install the 8 cylinder head bolts.
HINT:
- The cylinder head bolts are tightened in 2 successive steps (steps (3) and (5)).
- If any cylinder head bolts are broken or deformed, replace them.

(1) Apply a light coat of engine oil to the threads and under the heads of the cylinder head bolts.

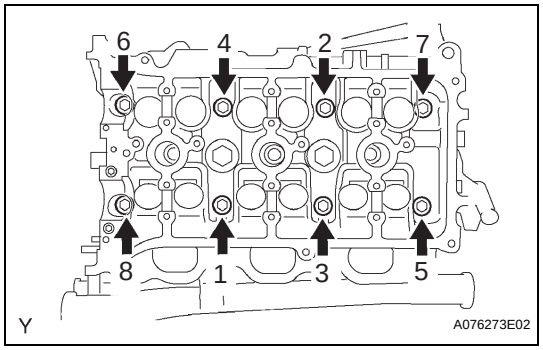

(2) Using several steps, uniformly install and tighten the 10 cylinder head bolts and plate washers with a bi-hexagon wrench 10 mm in the sequence shown in the illustration.
Torque: 36 N*m (367 kgf*cm, 27 ft.*lbf)
If any cylinder head bolts do not meet the torque specification, replace them.
NOTICE:
Do not drop the washers into the cylinder head.

EM

cardiagn.com

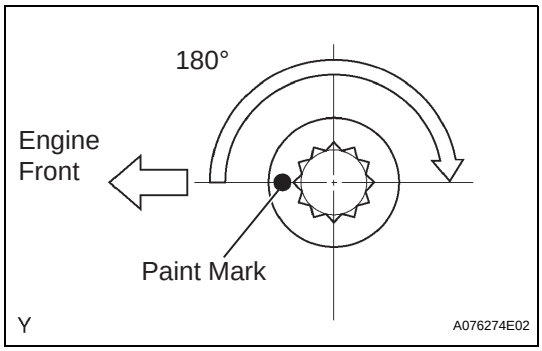

(3) Mark the front of the cylinder head bolt with paint.
(4) Retighten the cylinder head bolts by 180° as shown.
(5) Check that the painted marks are now at 180° from the engine front.

29. INSTALL NO.2 CYLINDER HEAD GASKET

(a) Remove any old packing material and be careful not to drop any oil on the contact surfaces of the cylinder head and cylinder block.

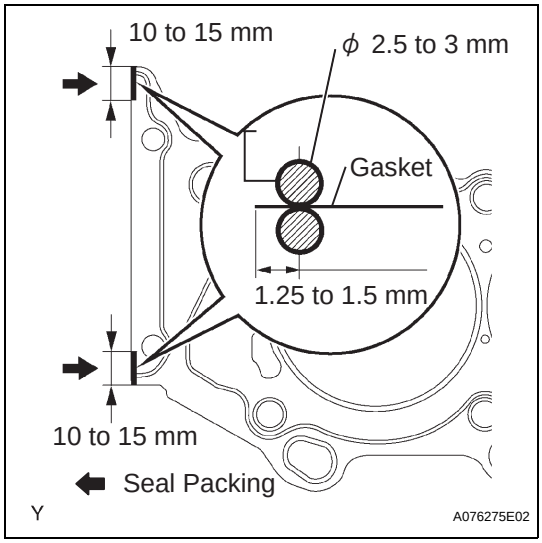

(b) Apply a continuous bead of seal packing (Diameter 2.5 to 3 mm (0.098 to 0.118 in.)) to a new cylinder head gasket as shown in the illustration.
Seal packing:
Part No. 08826-00080 or equivalent
NOTICE:
Install the cylinder head within 3 minutes of applying the seal packing. After installation, cylinder head bolts must be tightened within 15 minutes. Otherwise, the seal packing must be removed and reapplied.

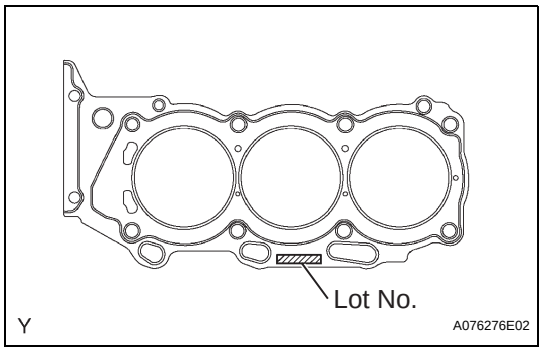

(c) Place the cylinder head gasket on the cylinder block surface with the Lot No. stamp upward.
NOTICE:
- **Be careful of the installation direction.**
- **Place the cylinder head carefully in order not to damage the gasket with the bottom part of the head.**

30. INSTALL CYLINDER HEAD LH

(a) Place the LH cylinder head on the cylinder head gasket.
(b) Install the 8 cylinder head bolts.
HINT:
- The cylinder head bolts are tightened in 2 successive steps (steps (3) and (5)).
- If any cylinder head bolts are broken or deformed, replace them.

(1) Apply a light coat of engine oil to the threads and under the heads of the cylinder head bolts.

EM

cardiagn.com

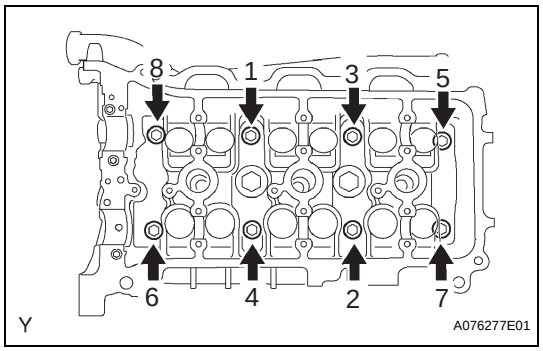

(2) Using several steps, uniformly install and tighten the 8 cylinder head bolts and plate washers with a bi-hexagon wrench 10 mm in the sequence shown in the illustration.
Torque: 36 N*m (367 kgf*cm, 27 ft.*lbf)
If any cylinder head bolts do not meet the torque specification, replace them.
NOTICE:
Do not drop the washers into the cylinder head.

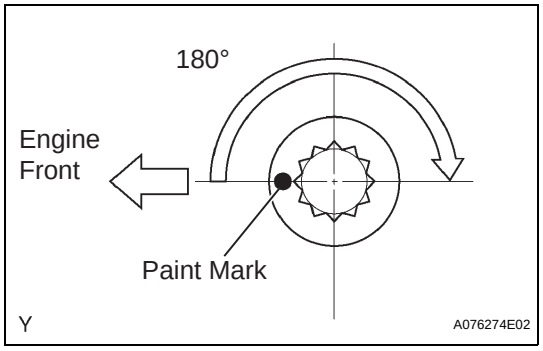

(3) Mark the front of the cylinder head bolt with paint.
(4) Retighten the cylinder head bolts by 180° as shown.
(5) Check that the painted marks are now at 180° from the engine front.

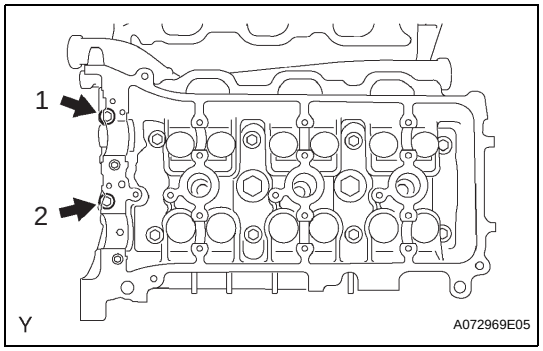

(c) Install the 2 cylinder head bolts.
(1) Apply a light coat of engine oil to the threads of the cylinder head bolts.
(2) Using several steps, uniformly install and tighten the 10 cylinder head bolts and plate washers with a bi-hexagon wrench 10 mm in the sequence shown in the illustration.
Torque: 30 N*m (306 kgf*cm, 22 ft.*lbf)

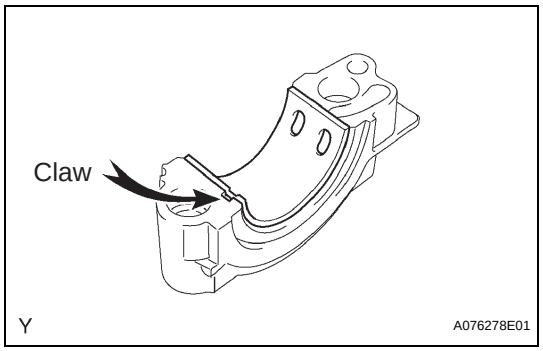

31. INSTALL NO.1 CAMSHAFT BEARING
(a) Align the bearing claw with the claw groove of the bearing cap, and push in the camshaft bearing.
NOTICE:
- **Install the bearing while aligning it with the oil hole in the bearing cap.**
- **Clean the back side of the bearing and the surface of the bearing cap and keep them free of oils and fats.**

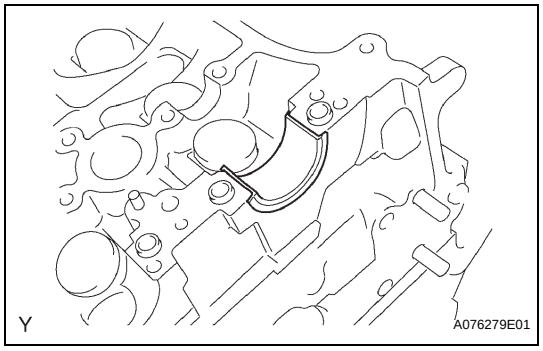

32. INSTALL NO.2 CAMSHAFT BEARING
(a) Install camshaft bearing No. 2 onto the cylinder head.
NOTICE:
Clean the back side of the bearing and the bearing surface of the cylinder head and keep them free of oils and fats.

cardiagn.com

33. INSTALL CAMSHAFTS

NOTICE:

Keep the camshaft level while it is being removed. The camshaft thrust clearance is very small and failing to keep it level could crack or damage the cylinder head journal surface, which receives the thrust. This could subsequently lead the camshaft to seize or break. Perform the following steps to avoid such problems.

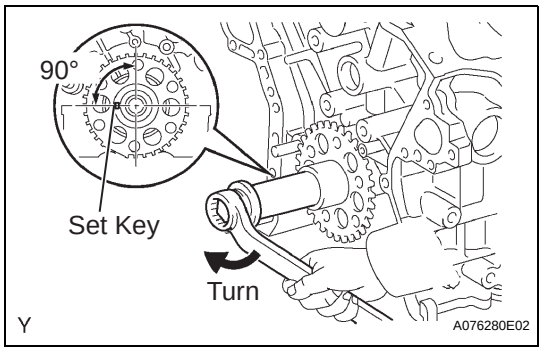

(a) Set the crankshaft position.

(1) Using the crankshaft pulley set bolt, turn the crankshaft, and set the crankshaft set key in the left horizontal position as indicated.

NOTICE:

Setting the crankshaft at the wrong angle could cause the piston head and valve head to come into contact with each other when the camshaft is installed. This could cause damage, so always set the camshaft at the correct angle.

(b) Apply new engine oil to the thrust portion and journal of the camshafts.

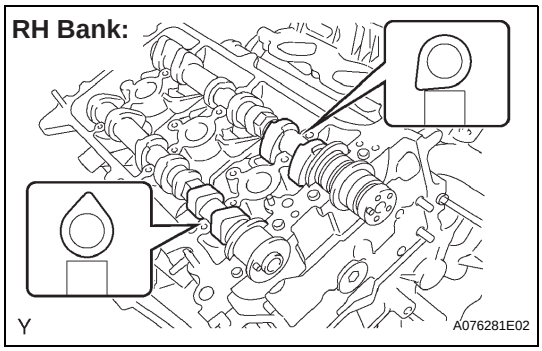

(c) Install the camshaft of the RH bank.

(1) Place the 2 camshafts on the RH cylinder head with the No. 1 cam lobes facing as shown the illustration.

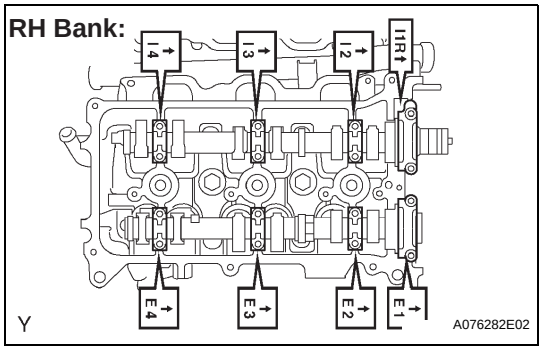

(2) Install the 8 bearing caps in their correct locations.

(3) Apply a light coat of engine oil to the threads of the bearing cap bolts.

cardiagn.com

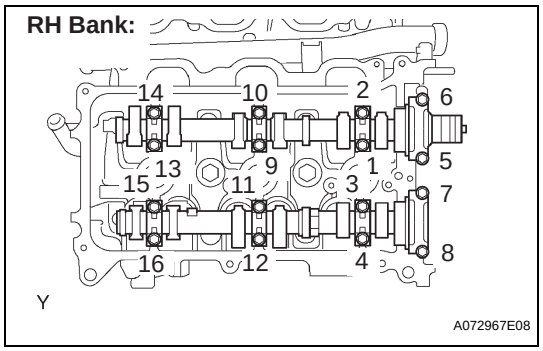

(4) Using several steps, uniformly tighten the 16 bearing cap bolts in the sequence shown in the illustration.
Torque: 9.0 N*m (92 kgf*cm, 80 in.*lbf) for 10 mm (0.39 in.) head
24 N*m (245 kgf*cm, 18 ft.*lbf) for 12 mm (0.47 in.) head

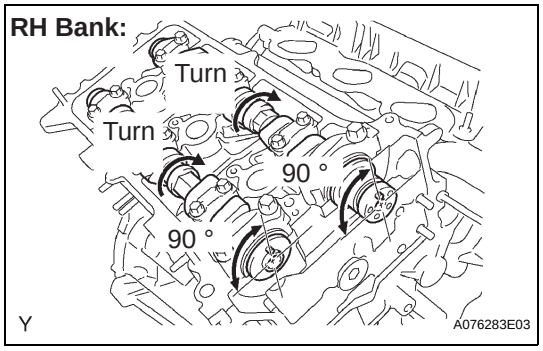

(5) Using a wrench, turn the camshafts clockwise until each camshaft knock pin comes to a position 90° to the cylinder head.

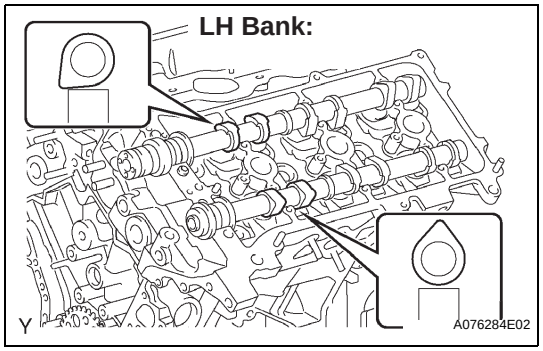

(d) Install the camshafts of the LH bank.
(1) Place the 2 camshafts on the LH cylinder head with the No.1 cam lobes facing as shown the illustration.

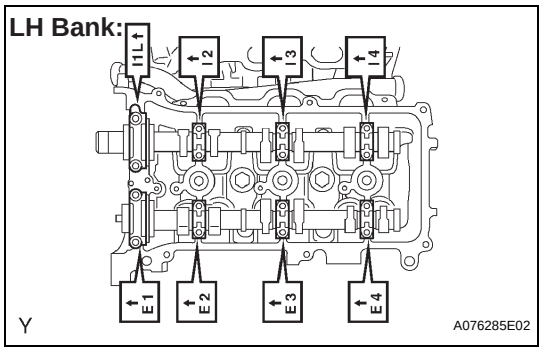

(2) Install the 8 bearing caps in the correct locations as shown.
(3) Apply a light coat of engine oil to the threads and under the heads of the bearing cap bolts.

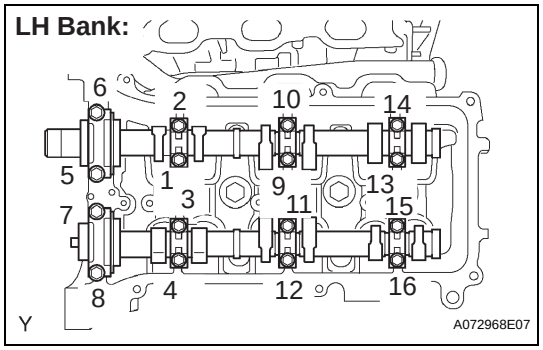

(4) Using several steps, uniformly tighten the 16 bearing cap bolts in the sequence shown in the illustration.
Torque: 9.0 N*m (92 kgf*cm, 80 in.*lbf) for 10 mm (0.39 in.) head
24 N*m (245 kgf*cm, 18 ft.*lbf) for 12 mm (0.47 in.) head

cardiagn.com

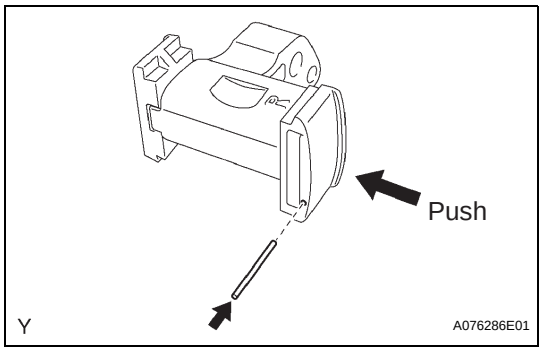

34. INSTALL NO.2 CHAIN TENSIONER ASSEMBLY

(a) While pushing in the tensioner, insert a pin of ϕ 1.0 mm (0.039 in.) into the hole to fix it.

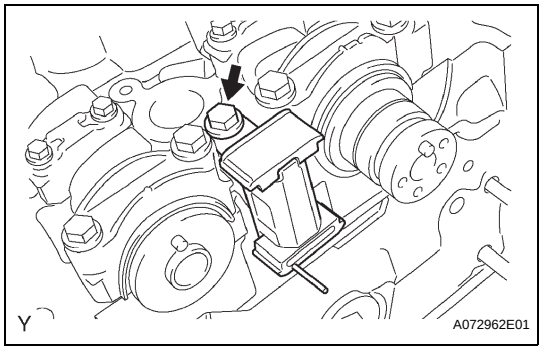

(b) Install the chain tensioner No. 2 with the bolt.
Torque: 19 N*m (194 kgf*cm, 14 ft.*lbf)

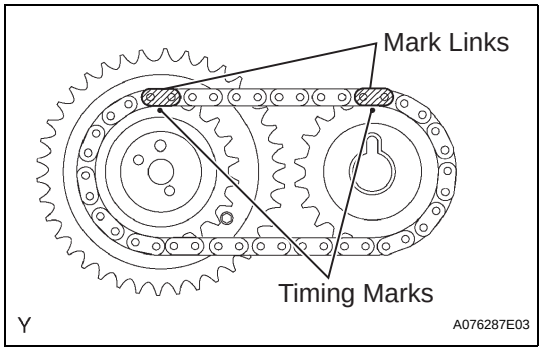

35. INSTALL CAMSHAFT TIMING GEARS AND NO.2 CHAIN (for Bank 1)

(a) Align the yellow mark links with the timing marks (1 dot mark) of camshaft timing gears as shown in the illustration.

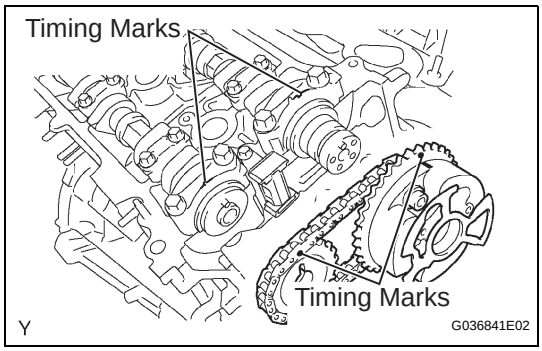

(b) Align the timing marks on the camshaft timing gears with the timing marks on the bearing caps, and install the camshaft timing gears with the chain onto the RH camshafts.

(c) Temporarily install the 2 camshaft timing gear bolts.
NOTICE:
Do not push the camshaft timing gear assembly onto the camshaft forcibly when installing it.

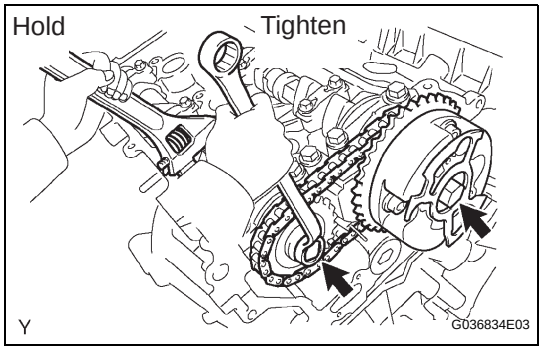

(d) Hold the hexagonal portion of the camshaft with a wrench, and tighten the 2 bolts.
Torque: 100 N*m (1,020 kgf*cm, 74 ft.*lbf)

(e) Remove the pin from the chain tensioner No. 2.

cardiagn.com

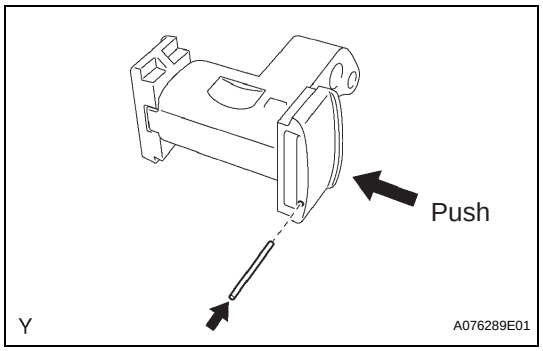

36. INSTALL NO.3 CHAIN TENSIONER ASSEMBLY

(a) While pushing in the tensioner, insert a pin of ϕ 1.0 mm (0.039 in.) into the hole to hold it.

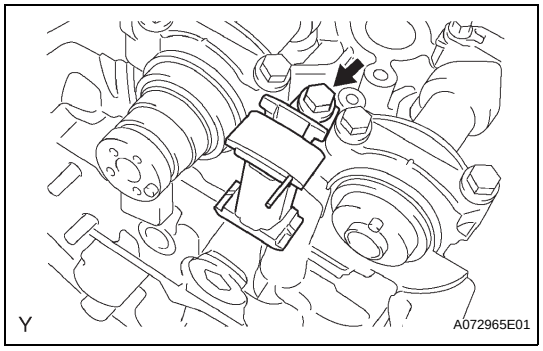

(b) Install the chain tensioner No. 3 with the bolt.
Torque: 19 N*m (194 kgf*cm, 14 ft.*lbf)

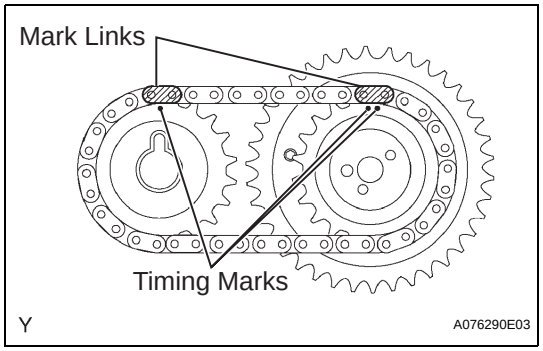

37. INSTALL CAMSHAFT TIMING GEARS AND NO.2 CHAIN (for Bank 2)

(a) Align the yellow mark links with the timing marks (1 dot mark and 2 dot marks) on camshaft timing gears as shown in the illustration.

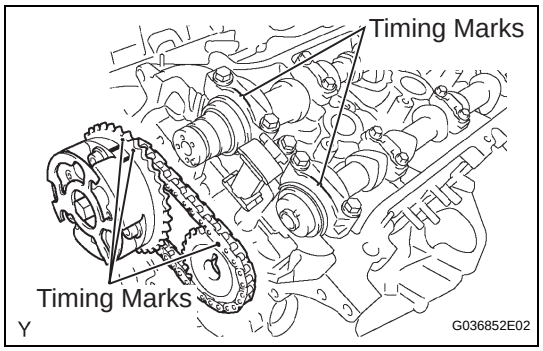

(b) Align the timing marks on the camshaft timing gears with the timing marks on the bearing caps, and install the camshaft timing gears with the chain onto the LH camshafts.

(c) Temporarily install the 2 camshaft timing gear bolts.
NOTICE:
Do not push camshaft timing gear assembly onto the camshaft forcibly when installing it.

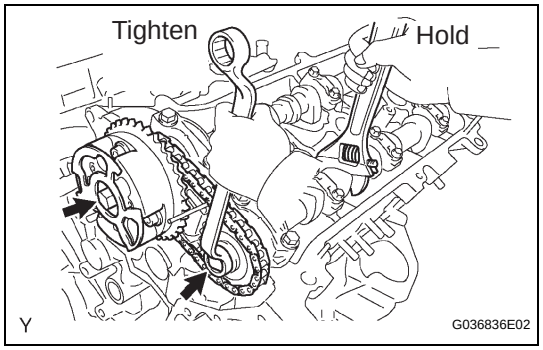

(d) Hold the hexagonal portion of the camshaft with a wrench, and tighten the 2 bolts.
Torque: 100 N*m (1,020 kgf*cm, 74 ft.*lbf)

(e) Remove the pin from the chain tensioner No. 3.

EM

cardiagn.com

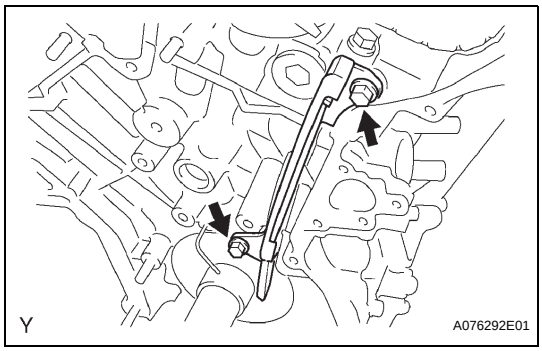

38. INSTALL NO.1 CHAIN VIBRATION DAMPER

(a) Install the chain vibration damper No. 1 with the 2 bolts.
Torque: 19 N*m (194 kgf*cm, 14 ft.*lbf)

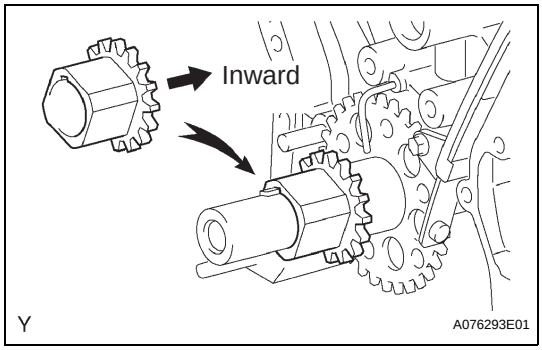

39. INSTALL CRANKSHAFT TIMING GEAR OR SPROCKET

(a) Align the timing gear set key with the key groove of the timing gear.
(b) Install the timing gear onto the crankshaft with the gear side facing inward.

40. INSTALL CHAIN TENSIONER SLIPPER

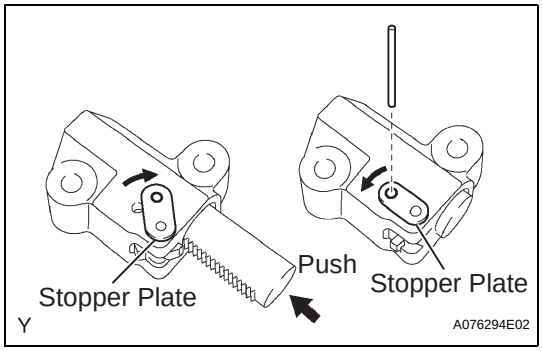

41. INSTALL NO.1 CHAIN TENSIONER ASSEMBLY

(a) While turning the stopper plate of the tensioner clockwise, push in the plunger of the tensioner as shown in the illustration.
(b) While turning the stopper plate of the tensioner counterclockwise, insert a bar of ϕ 3.5 mm (0.138 in.) into the holes in the stopper plate and tensioner to fix the stopper plate.
(c) Install the chain tensioner with the 2 bolts.
Torque: 10 N*m (102 kgf*cm, 7.4 ft.*lbf)

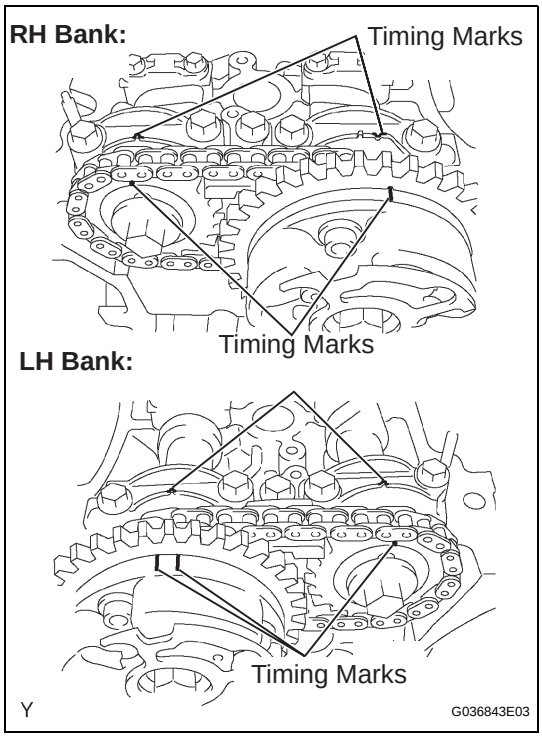

42. INSTALL CHAIN SUB-ASSEMBLY

(a) Set the No. 1 cylinder to TDC/ compression.
(1) Align the timing marks of the camshaft timing gears and bearing caps.

cardiagn.com

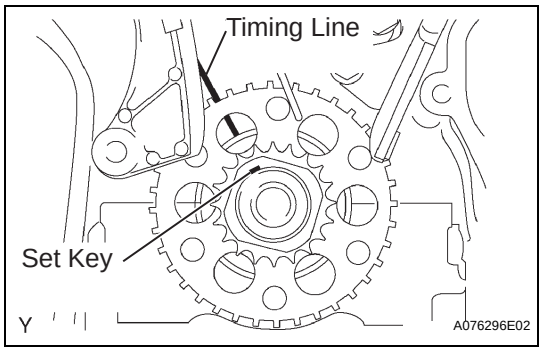

(2) Using the crankshaft pulley set bolt, turn the crankshaft to align the crankshaft set key with the timing line of the cylinder block.

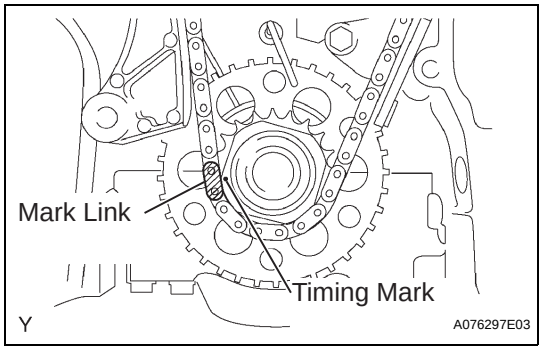

(b) Align the yellow mark link with the timing mark of the crankshaft timing gear.

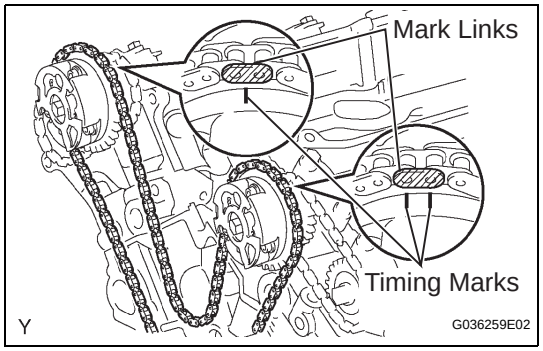

(c) Align the orange mark links with the timing marks of the camshaft timing gears, and install the chain.

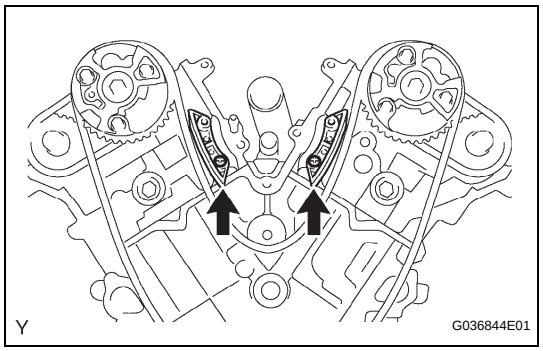

43. INSTALL NO.2 CHAIN VIBRATION DAMPER

(a) Instal the 2 chain vibration dampers No. 2.

44. INSTALL IDLE SPROCKET ASSEMBLY

(a) Apply a light coat of engine oil to rotating surface of the idle gear shaft No. 1.

EM

cardiagn.com

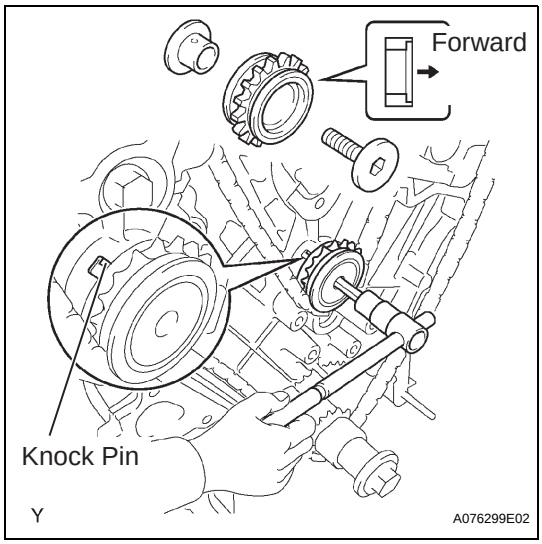

(b) Temporarily install the idle gear shaft No. 1 together with the idle gear shaft No. 2 while aligning the knock pin of the idle gear shaft No. 1 with the knock pin groove of the cylinder block.
NOTICE:
Be careful of the idle gear direction.

(c) Using a 10 mm hexagon wrench, tighten the idle gear shaft No. 2.
Torque: 60 N*m (612 kgf*cm, 44 ft.*lbf)

(d) Remove the bar from the chain tensioner.

45. INSTALL TIMING CHAIN OR BELT COVER SUB-ASSEMBLY

(a) Remove any old packing material and be careful not to drop any oil on the contact surfaces of the timing chain cover, cylinder head and cylinder block.

EM

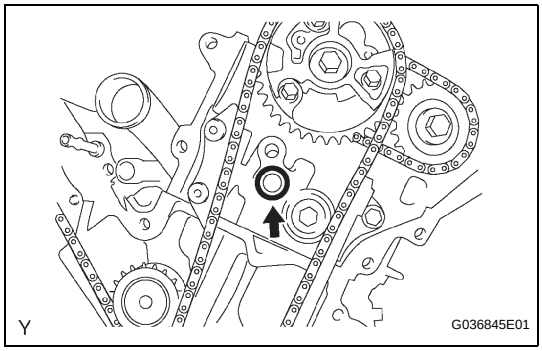

(b) Install a new O-ring onto the LH cylinder head as shown in the illustration.

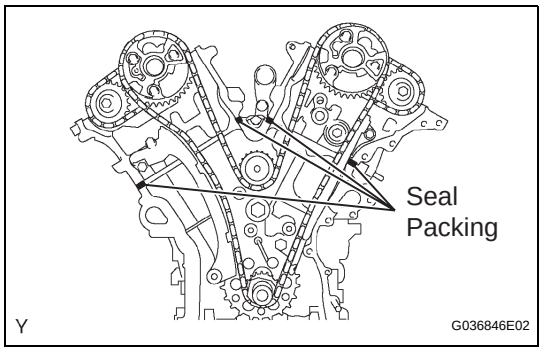

(c) Apply a continuous bead of seal packing (diameter 3 to 4 mm (0.12 to 0.16 in.)) to 4 locations as shown in the illustration.
Seal packing:
Part No. 08826-00080 or equivalent

cardiagn.com

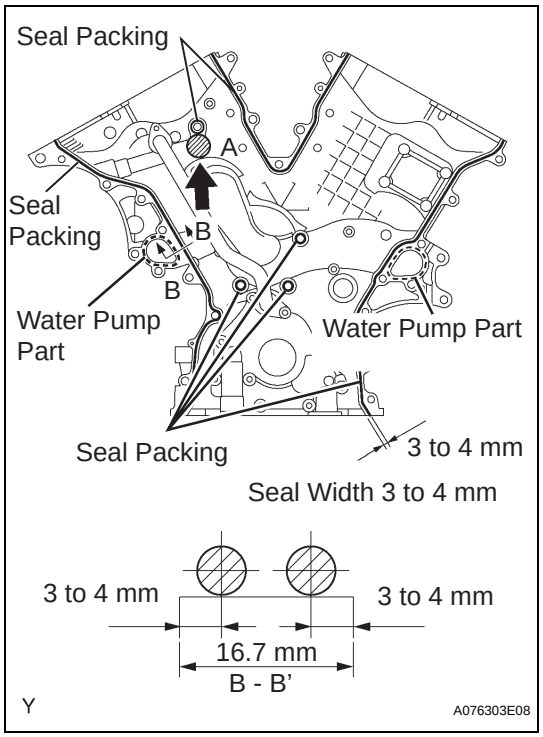

(d) Apply a continuous bead of seal packing (diameter 3 to 4 mm (0.12 to 0.16 in.)) to the timing chain cover as shown in the illustration.

Seal packing:

Water pump part: Part No. 08826-00100 or equivalent

Other part: Part No. 08826-00080 or equivalent

NOTICE:

- **Install the timing chain cover within 3 minutes of applying the seal packing. After installation, the timing chain cover bolts and nuts must be tightened within 15 minutes. Otherwise, the seal packing must be removed and reapplied.**
- **Do not apply seal packing to A as shown in the illustration.**

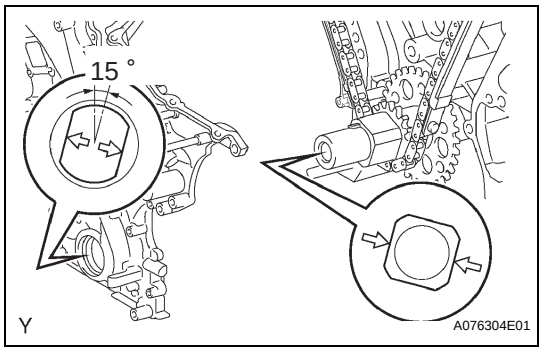

(e) Align the key way of the oil pump drive rotor with the rectangular portion of the crankshaft timing gear, and slide the timing chain cover into place.

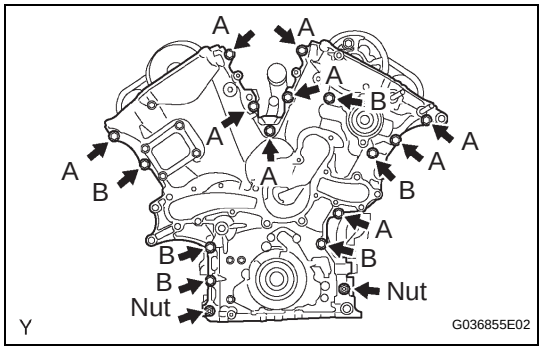

(f) Install the timing chain cover with the 15 bolts and 2 nuts. Tighten the bolts and nuts uniformly in several steps.

Torque: 23 N*m (235 kgf*cm, 17 ft.*lbf)

NOTICE:

- **Take care not to wrap the chain and slipper beyond the timing chain cover seal line.**
- **After installing the timing chain cover, install the water pump within 15 minutes.**

HINT:

Each bolt length is as follows:

Bolt	length
A	25 mm (0.98 in.)
B	55 mm (2.17 in.)

EM

cardiagn.com

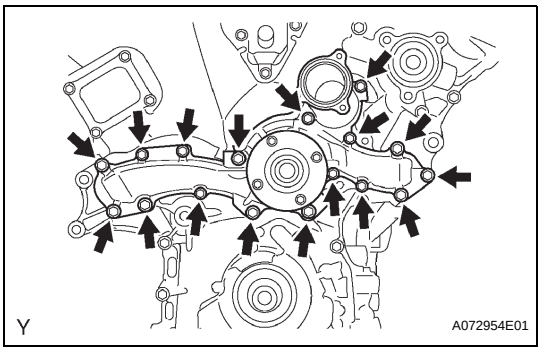

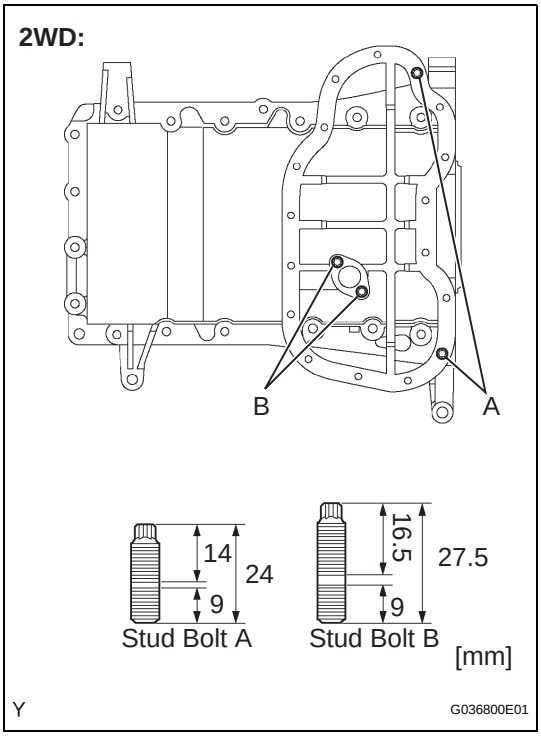

46. INSTALL WATER PUMP ASSEMBLY

(a) Install a new gasket and the water pump with the 17 bolts.

Torque: 9.0 N*m (92 kgf*cm, 80 in.*lbf) for 10 mm (0.39 in.) head
23 N*m (235 kgf*cm, 17 ft.*lbf) for 12 mm (0.47 in.) head

47. INSTALL OIL PAN SUB-ASSEMBLY

(a) Remove any old packing material and be careful not to drop any oil on the contact surfaces of the cylinder block, rear oil seal retainer and oil pan.

(b) Install the 4 stud bolts (for 2WD).
Torque: 4.0 N*m (41 kgf*cm, 35 in.*lbf)

cardiagn.com

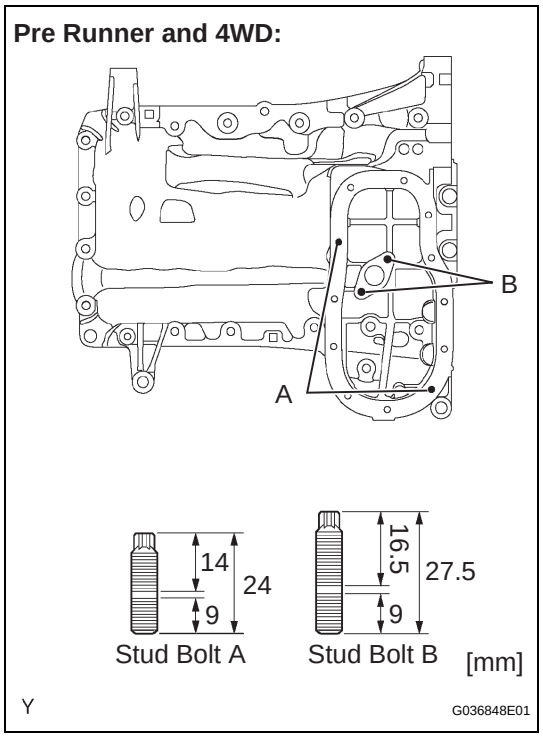

(c) Install the 4 stud bolts (for Pre Runner and 4WD).
Torque: 4.0 N*m (41 kgf*cm, 35 in.*lbf)

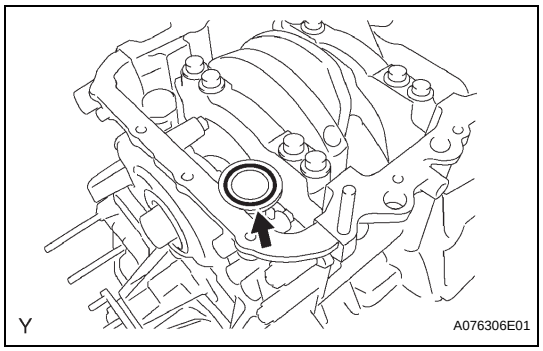

(d) Install a new O-ring onto the oil pump.

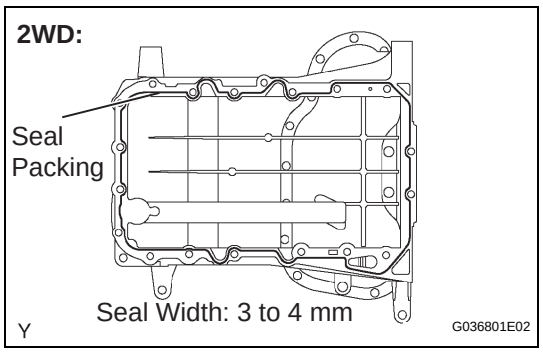

(e) Apply a continuous bead of seal packing (diameter 3 to 4 mm (0.12 to 1.16 in.)) to the oil pan as shown in the illustration (for 2WD).
Seal packing:
Part No. 08826-00080 or equivalent
NOTICE:
Install the oil pan within 3 minutes of applying the seal packing. After installation, the oil pan bolts and nuts must be tightened within 15 minutes. Otherwise, the seal packing must be removed and reapplied.

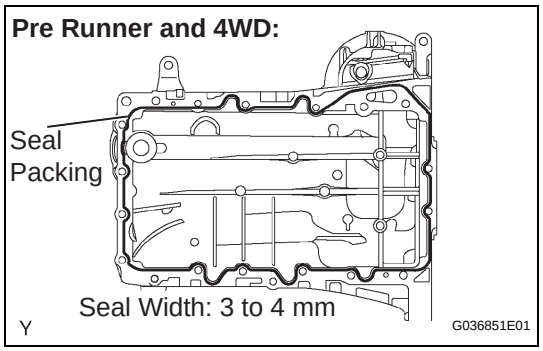

(f) Apply a continuous bead of the seal packing (diameter 3 to 4 mm (0.12 to 0.16 in.)) to the oil pan as shown in the illustration (for Pre Runner and 4WD).
Seal packing:
Part No. 08826-00080 or equivalent

cardiagn.com

NOTICE:
Install the oil pan within 3 minutes of applying the seal packing. After installation, the oil pan bolts and nuts must be tightened within 15 minutes. Otherwise, the seal packing must be removed and reapplied.

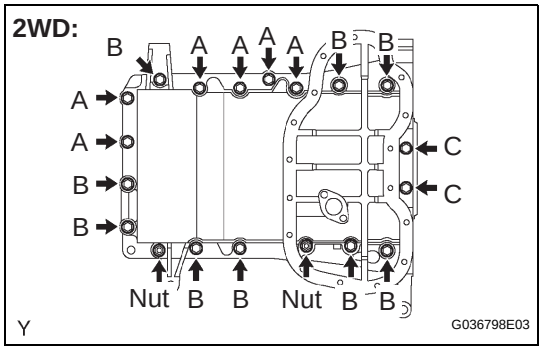

(g) Install the oil pan with the 17 bolts and 2 nuts. Tighten the bolts and nuts uniformly in several steps (for 2WD).
Torque: 10 N*m (102 kgf*cm, 7.4 ft.*lbf) for 10 mm (0.39 in.) head
Torque: 21 N*m (214 kgf*cm, 16 ft.*lbf) for 12 mm (0.47 in.) head
HINT:
Each bolt length is as follows:

Bolt	length
A	25 mm (0.98 in.)
B	45 mm (1.77 in.)
C	14 mm (0.55 in.)

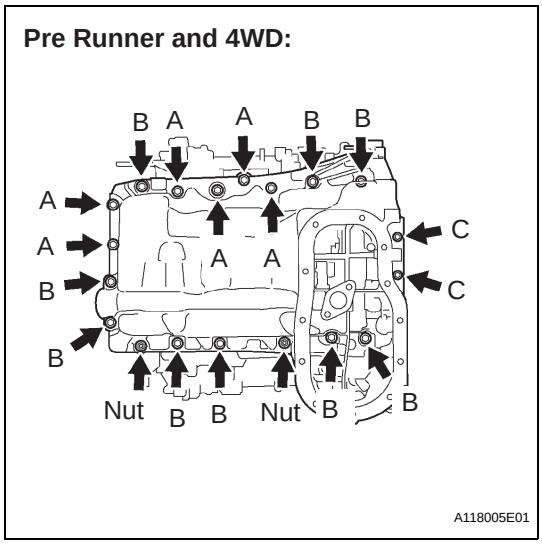

(h) Install the oil pan with the 17 bolts and 2 nuts. Tighten the bolts and nuts uniformly in several steps (for Pre Runner and 4WD).
Torque: 10 N*m (102 kgf*cm, 7 ft.*lbf) for 10 mm (0.39 in.) head
21 N*m (214 kgf*cm, 16 ft.*lbf) for 12 mm (0.47 in.) head
HINT:
Each bolt length is as follows:

Bolt	length
A	25 mm (0.98 in.)
B	45 mm (1.77 in.)
C	14 mm (0.55 in.)

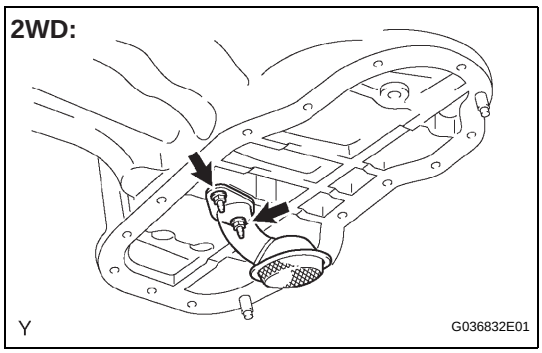

48. INSTALL OIL STRAINER SUB-ASSEMBLY

(a) Install a new gasket, then install the oil strainer with the 2 nuts (for 2WD).
Torque: 9.0 N*m (92 kgf*cm, 80 in.*lbf)

cardiagn.com

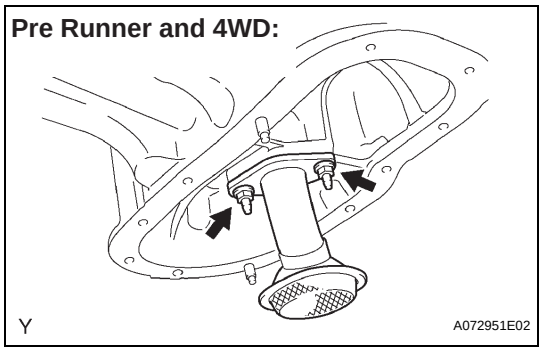

(b) Install a new gasket, then install the oil strainer with the 2 nuts (for Pre Runner and 4WD).
Torque: 9.0 N*m (92 kgf*cm, 80 in.*lbf)

49. INSTALL NO.2 OIL PAN SUB-ASSEMBLY

(a) Remove any old packing material and be careful not to drop any oil on the contact surfaces of the oil pan and oil pan No. 2.

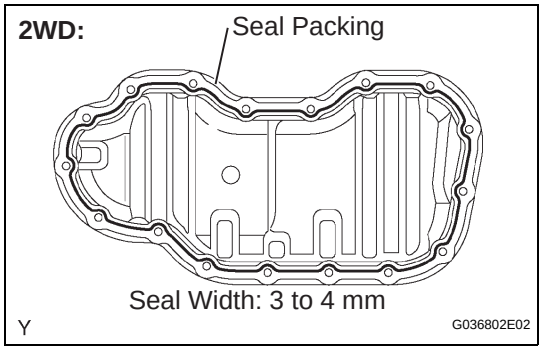

(b) Apply a continuous bead of the seal packing (diameter 3 to 4 mm (0.12 to 0.16 in.)) as shown in the illustration (for 2WD).
Seal packing:
Part No. 08826-00080 or equivalent
NOTICE:
Install the oil pan No. 2 within 3 minutes of applying the seal packing. After installation, oil pan No. 2 bolts and nuts must be tightened within 15 minutes. Otherwise, the seal packing must be removed and reapplied.

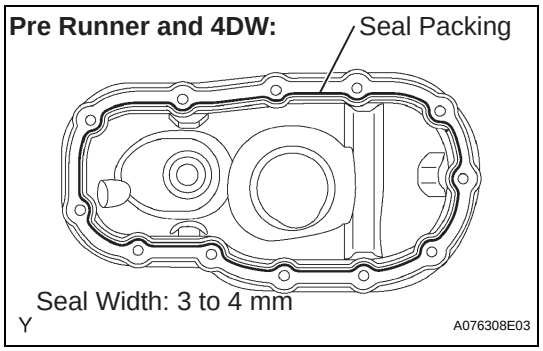

(c) Apply a continuous bead of seal packing (diameter 3 to 4mm(0.12 to 0.16 in.)) as shown in the illustration (for Pre Runner and 4WD).
Seal packing:
Part No. 08826-00080 or equivalent
NOTICE:
Install the oil pan No. 2 within 3 minutes of applying the seal packing. After installation, the oil pan No. 2 bolts and nuts must be tightened within 15 minutes. Otherwise, the seal packing must be removed and reapplied.

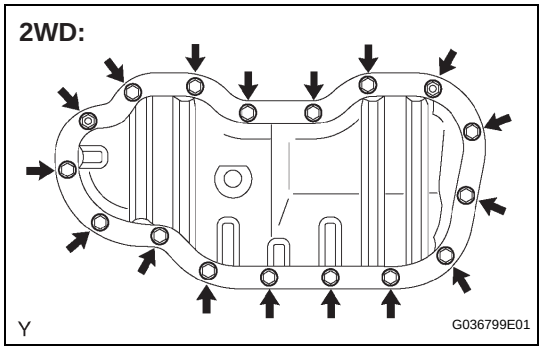

(d) Install the oil pan No. 2 with the 15 bolts and 2 nuts. Tighten the bolts and nuts uniformly in several steps (for 2WD).
Torque: 9.0 N*m (92 kgf*cm, 80 in.*lbf) for bolts
10 N*m (102 kgf*cm, 7.4 ft.*lbf) for nut

cardiagn.com

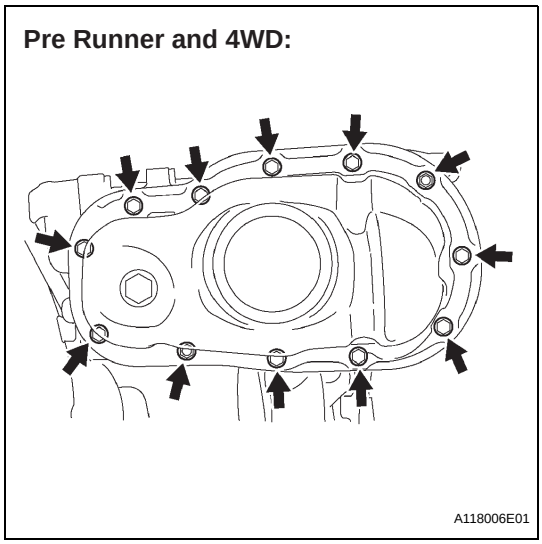

(e) Install the oil pan No. 2 with the 10 bolts and 2 nuts. Tighten the bolts and nuts uniformly in several steps (for Pre Runner and 4WD).
Torque: 9.0 N*m (92 kgf*cm, 80 in.*lbf) for bolts
10 N*m (102 kgf*cm, 7.4 ft.*lbf)

50. INSTALL OIL PAN DRAIN PLUG

(a) Install the drain plug with a new gasket.
Torque: 40 N*m (408 kgf*cm, 30 ft.*lbf)

EM

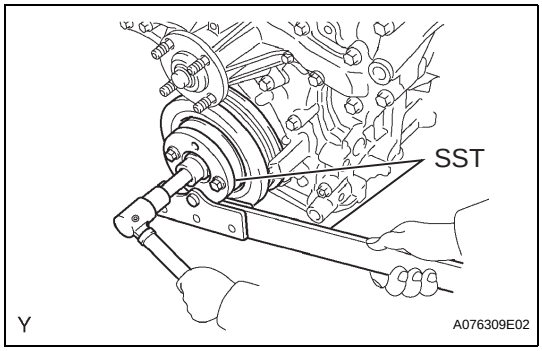

51. INSTALL CRANKSHAFT PULLEY

(a) Using SST, fix the pulley and tighten the bolt.
SST 09213-54015 (91651-60855), 09330-00021
Torque: 250 N*m (2,549 kgf*cm, 185 ft.*lbf)

52. SET NO.1 CYLINDER TO TDC/COMPRESSION

53. INSPECT VALVE CLEARANCE

54. ADJUST VALVE CLEARANCE

55. INSTALL CYLINDER HEAD COVER SUB-ASSEMBLY

(a) Remove any old packing material and be careful not to drop any oil on the contact surfaces of the cylinder head, timing chain cover and cylinder head cover.

(b) Install the gasket onto the cylinder head cover.

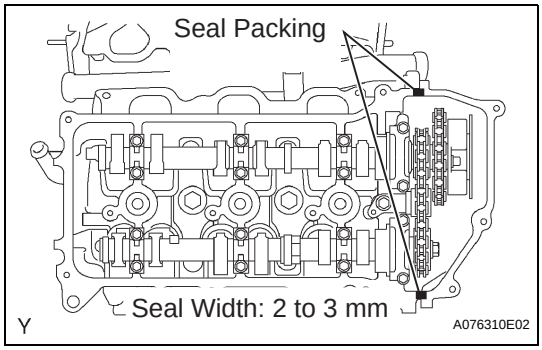

(c) Apply a continuous bead of seal packing (diameter 2 to 3 mm (0.08 to 0.12 in.)) to the cylinder head and timing chain cover as shown in the illustration.
Seal packing:
Part No. 08826-00080 or equivalent
NOTICE:
Install the cylinder head cover within 3 minutes of applying the seal packing. After installation, the cylinder head cover bolts and nuts must be tightened within 15 minutes. Otherwise the seal packing must be removed and reapplied.

(d) Install the seal washers onto the bolts.

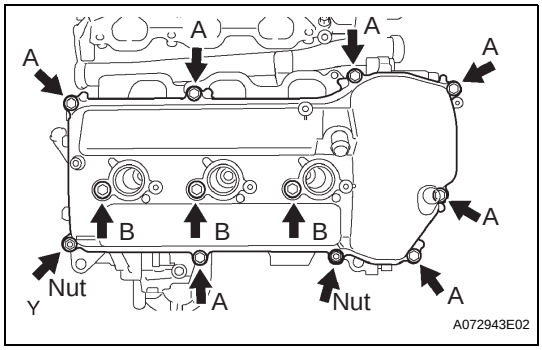

(e) Install the cylinder head cover with the 10 bolts and 2 nuts. Tighten the bolts and nuts uniformly in several steps.
Torque: 10 N*m (102 kgf*cm, 7.4 ft.*lbf) for bolts A
9.0 N*m (92 kgf*cm, 80 in.*lbf) for bolts B
9.0 N*m (92 kgf*cm, 80 in.*lbf) for nuts
HINT:
Each bolt length is as follows:

cardiagn.com

Bolt	length
A	25 mm
B	60 mm (2.36 in.)

56. INSTALL CYLINDER HEAD COVER SUB-ASSEMBLY LH

(a) Remove any old packing material and be careful not to drop any oil on the contact surfaces of the cylinder head, timing chain cover and cylinder head cover.

(b) Apply adhesive to the threads of the ventilation valve.
Adhesive:
Part No. 08833-00070, THREE BOND 1324 or equivalent

(c) Install the ventilation valve onto the cylinder head cover.
Torque: 27 N*m (275 kgf*cm, 20 ft.*lbf)

(d) Install the gasket onto the cylinder head cover.

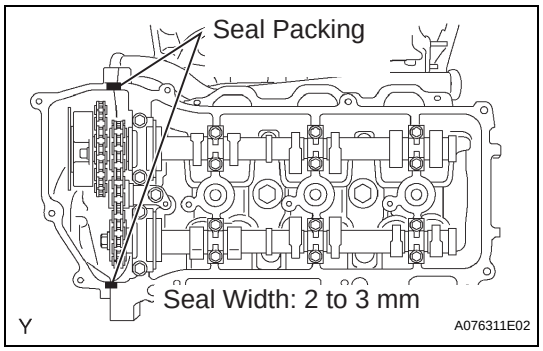

(e) Apply a continuous bead of seal packing (diameter 2 to 3 mm (0.08 to 0.12 in.)) to the cylinder head and timing chain cover as shown in the illustration.
Seal packing:
Part No. 08826-00080 or equivalent
NOTICE:
Install the cylinder head cover of 3 minutes of applying the seal packing. After installation, the cylinder head cover bolts and nuts must be tightened within 15 minutes. Otherwise, the seal packing must be removed and reapplied.

(f) Install the seal washers onto the bolts.

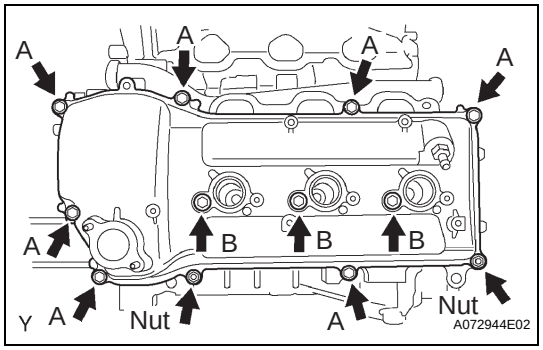

(g) Install the cylinder head cover with the 10 bolts and 2 nuts. Tighten the bolts and nuts uniformly in several steps.
Torque: 10 N*m (102 kgf*cm, 7.4 ft.*lbf) for bolts A
9.0 N*m (92 kgf*cm, 80 in.*lbf) for bolts B
9.0 N*m (92 kgf*cm, 80 in.*lbf) for nuts
HINT:
Each bolt length is as follows:

Bolt	length
A	25 mm (0.98 in.)
B	60 mm (2.36 in.)

cardiagn.com

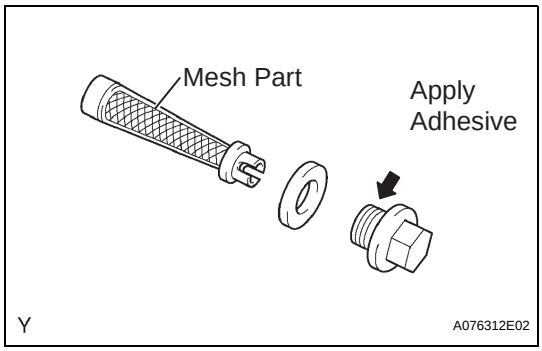

57. INSTALL OIL CONTROL VALVE FILTER

(a) Check that no foreign objects on the mesh part of the 2 filters.
(b) Install 2 new gaskets onto each new plug.
(c) Insert the filters into the plugs.
(d) Apply adhesive to 2 or 3 threads of the plugs.
Adhesive:
Part No. 08833-00080, THREE BOND 1344 LOCTITE 242 or equivalent
(e) Install the plugs onto each cylinder head.
Torque: 62 N*m (632 kgf*cm, 46 ft.*lbf)

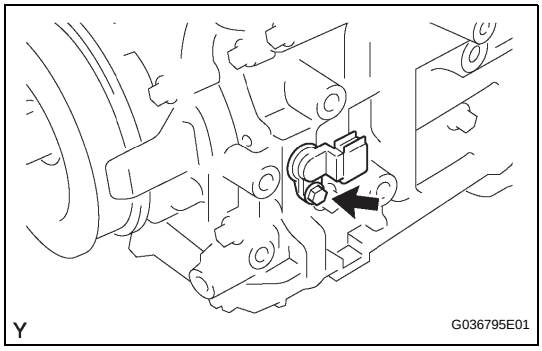

58. INSTALL CRANKSHAFT POSITION SENSOR

(a) Install the crankshaft position sensor with the bolt.
Torque: 10 N*m (102 kgf*cm, 7.4 ft.*lbf)

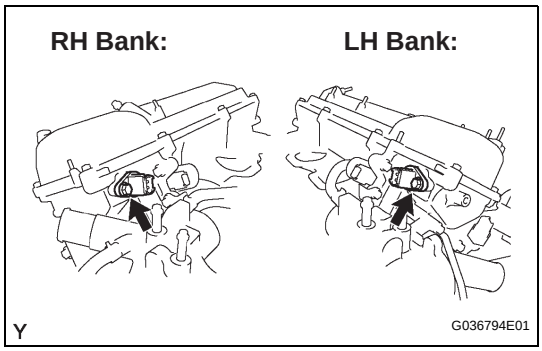

59. INSTALL VVT SENSOR

(a) Apply a light coat of engine oil to the O-ring of each VVT sensor.
(b) Install the 2 VVT sensors with the 2 bolts.
Torque: 8.0 N*m (82 kgf*cm, 71 in.*lbf)

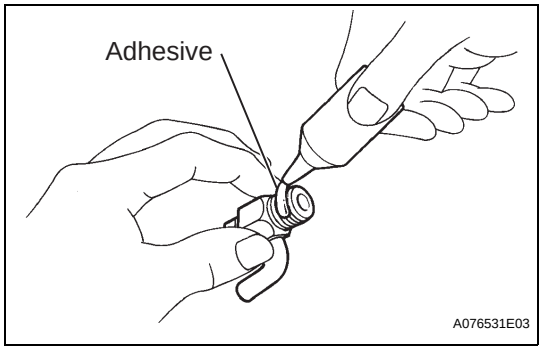

60. INSTALL CYLINDER BLOCK WATER DRAIN COCK SUB-ASSEMBLY

(a) Apply adhesive to 2 or 3 threads of the drain cocks end.
Adhesive:
Part No. 08833-00070, THREE BOND 1324 or equivalent

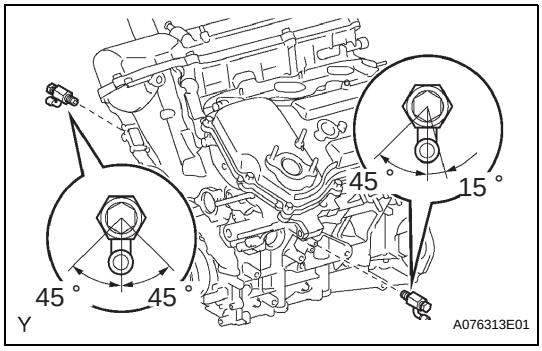

(b) Tighten the drain cocks to the specified torque, and rotate them clockwise as shown in the illustration.
Torque: 25 N*m (255 kgf*cm, 18 ft.*lbf)
NOTICE:
- **Do not rotate the drain cocks more than 1 complete revolution (360°) after tightening the drain cocks to the specified torque.**
- **Do not loosen the drain cocks after setting it correctly.**

EM

cardiagn.com

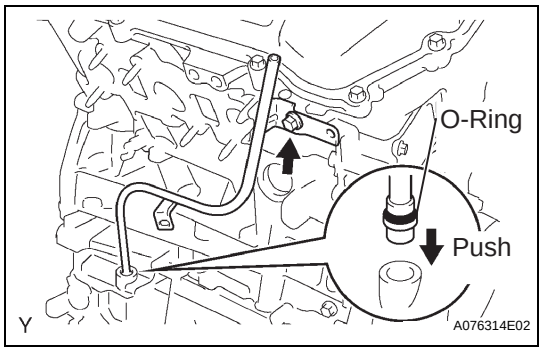

61. INSTALL OIL LEVEL GAGE GUIDE

(a) Install a new O-ring onto the oil level gauge guide.
(b) Apply a light coat of engine oil to the O-ring.
(c) Push the oil level gauge guide end into the guide hole of the oil pan.
(d) Install the oil level gauge guide with the bolt.
Torque: 9.0 N*m (92 kgf*cm, 80 in.*lbf)

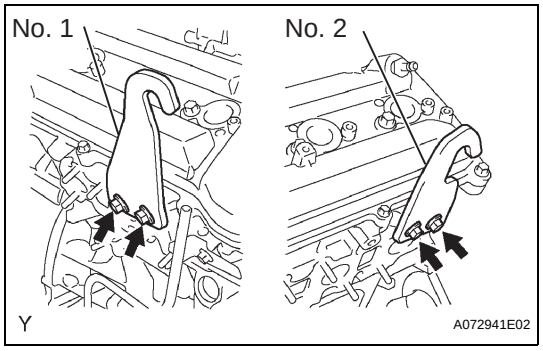

62. INSTALL ENGINE HANGERS

(a) Install the engine hanger with the 2 bolts.
Torque: 33 N*m (336 kgf*cm, 24 ft.*lbf)
(b) Install the engine hanger with the 2 bolts.
Torque: 33 N*m (336 kgf*cm, 24 ft.*lbf)

REPAIR

1. REPAIR VALVE SEAT

NOTICE:
Use a cutter to gradually make the intake valve seat smoother.

(a) If the seating is too high on the valve face, use 30° and 45° cutters to correct the seat.

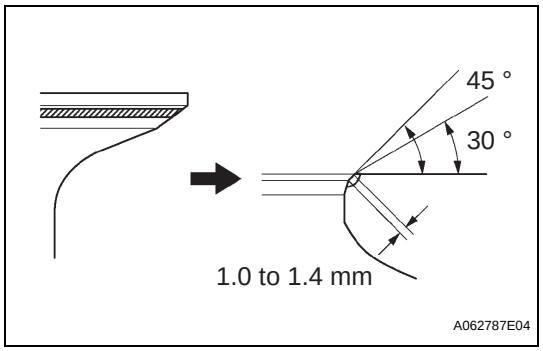

(b) Intake side:
If the seating is too low on the valve face, use 60° and 45° cutters to correct the seat.

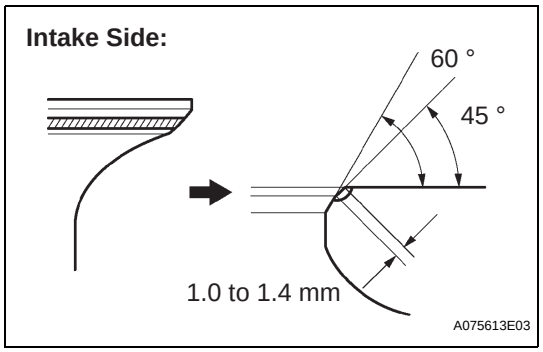

(c) Exhaust side:
If the seating is too low on the valve face, use 75° and 45° cutters to correct the seat.

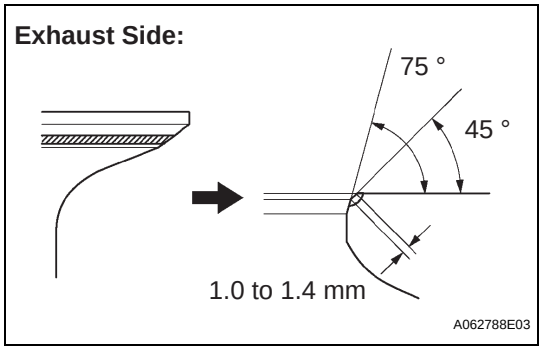

cardiagn.com

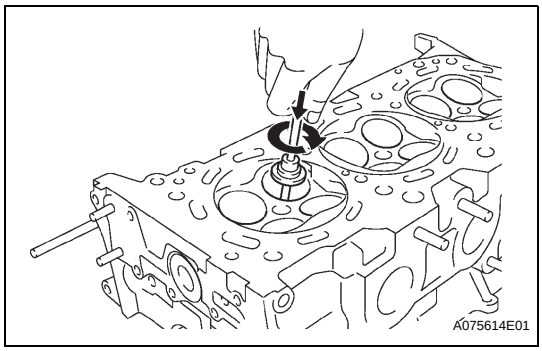

(d) Lap the valve and valve seat with an abrasive compound by hand.
(e) After lapping, clean the valve and valve seat.

cardiagn.com