DTC	P0504	Brake Switch "A" / "B" Correlation

DESCRIPTION

The stop light switch is a duplex system that transmits two signals: STP and ST1-. These two signals are used by the ECM to monitor whether or not the brake system is working properly. If the signals, which indicate the brake pedal is being depressed and released, are detected simultaneously, the ECM interprets this as a malfunction in the stop light switch and sets the DTC.

HINT:

The normal conditions are as shown in the table below. The signals can be read using an intelligent tester.

Signals	Brake Pedal Released	In Transition	Brake Pedal Depressed
STP	OFF	ON	ON
ST1-	ON	ON	OFF

DTC No.	DTC Detection Conditions	Trouble Areas
P0504	Conditions (a), (b) and (c) continue for 0.5 seconds or more (1 trip detection logic): (a) Ignition switch ON (b) Brake pedal released (c) STP signal OFF when ST1- signal OFF	• Short in stop light switch signal circuit • STOP fuse • Stop light switch • ECM

cardiagn.com

WIRING DIAGRAM

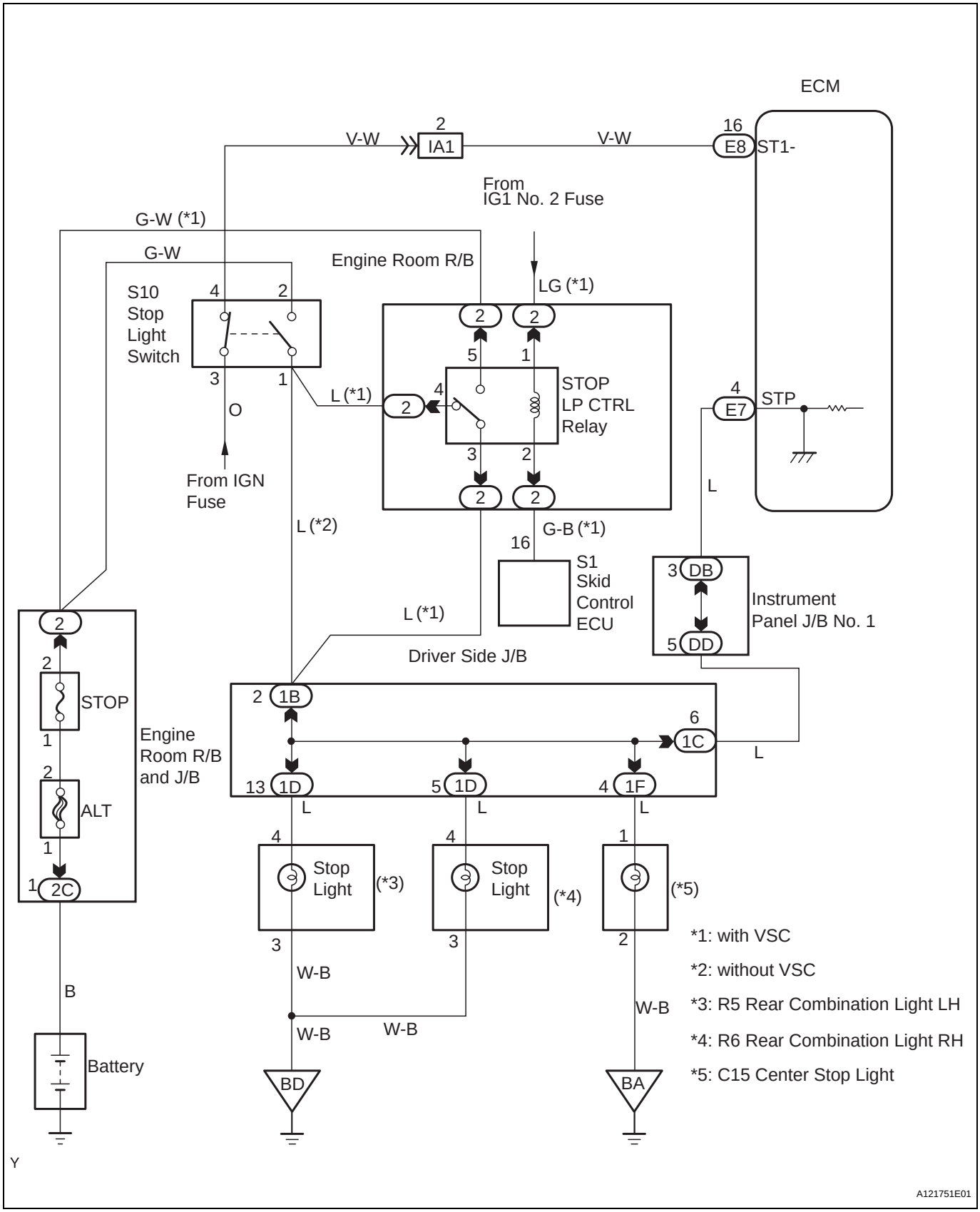

cardiagn.com

HINT:
Read freeze frame data using an intelligent tester. Freeze frame data record the engine condition when malfunctions are detected. When troubleshooting, freeze frame data can help determine if the vehicle was moving or stationary, if the engine was warmed up or not, if the air-fuel ratio was lean or rich, and other data, from the time the malfunction occurred.

1 CHECK OPERATION OF STOP LIGHT

(a) Check whether the stop lights turn on and off normally when the brake pedal is depressed and released.

OK:
Stop lights turn ON when brake pedal is depressed.

NG → **REPAIR OR REPLACE STOP LIGHT SWITCH CIRCUIT**

OK

2 INSPECT STOP LIGHT SWITCH ASSEMBLY

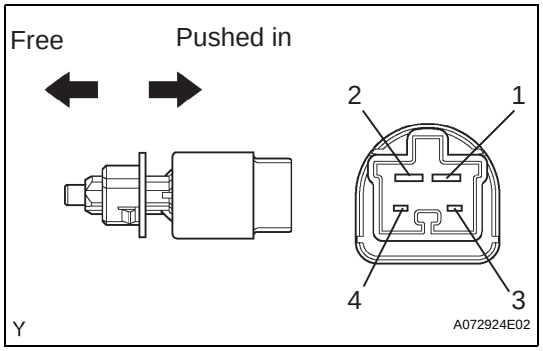

(a) Remove the stop light switch assembly.
(b) Check the resistance.
Standard Resistance

Switch Positions	Tester Connections	Specified Conditions
Switch pin free	1 - 2	Below 1 Ω
Switch pin free	3 - 4	10 kΩ or higher
Switch pin pushed in	1 - 2	10 kΩ or higher
Switch pin pushed in	3 - 4	Below 1 Ω

(c) Reinstall the stop light switch assembly.

NG → **REPLACE STOP LIGHT SWITCH ASSEMBLY**

OK

cardiagn.com

3 READ DATA LIST (STP SIGNAL AND ST1 - VOLTAGE)

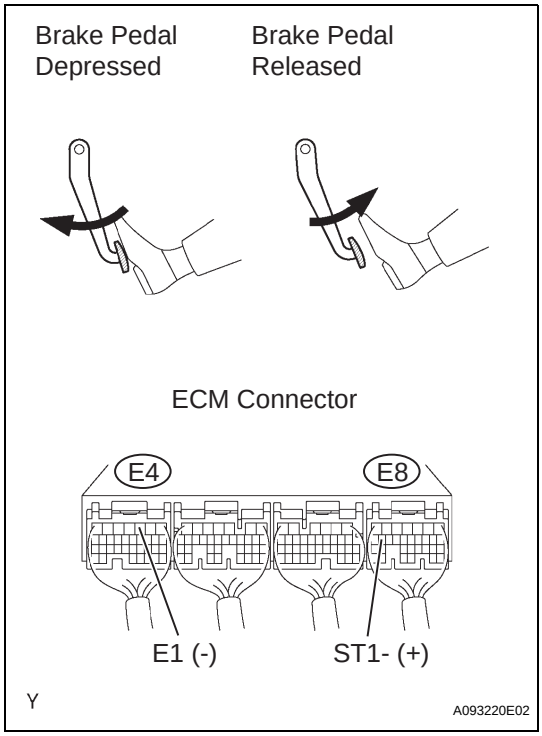

(a) Connect an intelligent tester to the DLC3.
(b) Turn the ignition switch to ON and turn the tester ON.
(c) Select the following menu items: DIAGNOSIS / ENHANCED OBD II / DATA LIST / PRIMARY / STOP LIGHT SW.
(d) Check the STP signal when the brake pedal is depressed and released.
Standard

Brake Pedal Operations	Specified Conditions
Depressed	STP signal ON
Released	STP signal OFF

(e) Measure the voltage between the terminals of the ECM connectors.
Standard Voltage

Tester Connections	Brake Pedal Operations	Specified Conditions
ST1- (E8-16) - E1 (E4-3)	Depressed	Below 1.5 V
ST1- (E8-16) - E1 (E4-3)	Released	7.5 to 14 V

OK → **CHECK FOR INTERMITTENT PROBLEMS**

NG

4 CHECK HARNESS AND CONNECTOR (STOP LIGHT SWITCH - ECM)

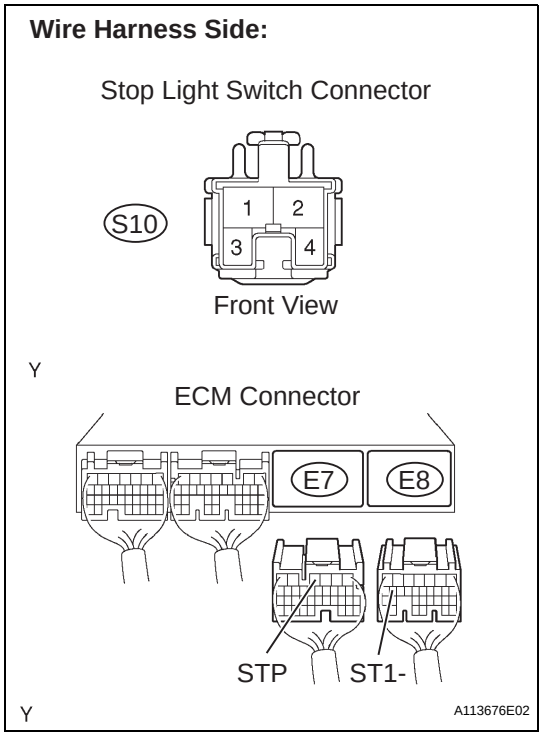

(a) Disconnect the S10 stop light switch connector.
(b) Disconnect the E7 and E8 ECM connectors.
(c) Check the resistance.
Standard Resistance (Check for open)

Tester Connections	Specified Conditions
Stop light switch (S10-1) - STP (E7-4)	Below 1 Ω
Stop light switch (S10-4) - ST1- (E8-16)	Below 1 Ω

(d) Reconnect the stop light switch connector.
(e) Reconnect the ECM connector.

NG → **REPAIR OR REPLACE HARNESS OR CONNECTOR**

cardiagn.com

OK

REPLACE ECM

cardiagn.com