2018 TITAN

OWNER'S MANUAL
and MAINTENANCE INFORMATION

For your safety, read carefully and keep in this vehicle.

FOREWORD

This manual was prepared to help you understand the operation and maintenance of your vehicle so that you may enjoy many miles (kilometers) of driving pleasure. Please read through this manual before operating your vehicle.

A separate Warranty Information Booklet explains details about the warranties covering your vehicle. The "Maintenance and schedules" section of this manual explains details about maintaining and servicing your vehicle. Additionally, a separate Customer Care/Lemon Law Booklet (U.S. only) will explain how to resolve any concerns you may have with your vehicle, and clarify your rights under your state's lemon law.

A NISSAN dealership knows your vehicle best. When you require any service or have any questions, they will be glad to assist you with the extensive resources available to them.

In addition to factory-installed options, your vehicle may also be equipped with additional accessories installed prior to delivery. It is recommended that you visit a NISSAN dealer for details concerning the particular accessories with which you vehicle is equipped. It is important that you familiarize yourself with all disclosures, warnings, cautions and instructions concerning proper use of such accessories prior to operating the vehicle and/or accessory. It is recommended that you visit a NISSAN dealer for details concerning the particular accessories with which your vehicle is equipped.

READ FIRST—THEN DRIVE SAFELY

Before driving your vehicle, please read this Owner's Manual carefully. This will ensure familiarity with controls and maintenance requirements assisting you in the safe operation of your vehicle.

⚠ WARNING

IMPORTANT SAFETY INFORMATION REMINDERS!

Follow these important driving rules to help ensure a safe and comfortable trip for you and your passengers!

- **NEVER drive under the influence of alcohol or drugs.**
- **ALWAYS observe posted speed limits and never drive too fast for conditions.**
- **ALWAYS give your full attention to driving and avoid using vehicle features or taking other actions that could distract you.**
- **ALWAYS use your seat belts and appropriate child restraint systems. Preteen children should be seated in the rear seat (if so equipped).**

- **ALWAYS provide information about the proper use of vehicle safety features to all occupants of the vehicle.**
- **ALWAYS review this Owner's Manual for important safety information.**

For descriptions specified for 4-wheel drive models, a 4x4 mark is placed at the beginning of the applicable sections/items.

As with other vehicles with features for off-road use, failure to operate 4-wheel drive models correctly may result in loss of control or a collision. For additional information, refer to "Driving safety precautions" in the "Starting and driving" section of this manual.

ON-PAVEMENT AND OFF-ROAD DRIVING

This vehicle will handle and maneuver differently from an ordinary passenger car because it has a higher center of gravity for off-road use. As with other vehicles with features of this type, failure to operate this vehicle correctly may result in loss of control or an accident.

For additional information, refer to "On-pavement and off-road driving precautions", "Avoiding collision and rollover" and "Driving safety precautions" in the "Starting and driving" section of this manual.

MODIFICATION OF YOUR VEHICLE

This vehicle should not be modified. Modification could affect its performance, safety, emissions or durability and may even violate governmental regulations. In addition, damage or performance problems resulting from modifications may not be covered under NISSAN warranties.

⚠ WARNING

Installing an aftermarket On-Board Diagnostic (OBD) plug-in device that uses the port during normal driving, for example remote insurance company monitoring, remote vehicle diagnostics, telematics or engine reprogramming, may cause interference or damage to vehicle systems. We do not recommend or endorse the use of any aftermarket OBD plug-in devices, unless specifically approved by NISSAN. The vehicle warranty may not cover damage caused by any aftermarket plug-in device.

WHEN READING THE MANUAL

This manual includes information for all features and equipment available on this model. Features and equipment in your vehicle may vary depending on model, trim level, options selected, order, date of production, region or availability. Therefore, you may find information about features or equipment that are not included or installed on your vehicle.

All information, specifications and illustrations in this manual are those in effect at the time of printing. NISSAN reserves the right to change specifications, performance, design or component suppliers without notice and without obligation. From time to time, NISSAN may update or revise this manual to provide Owners with the most accurate information currently available. Please carefully read and retain with this manual all revision updates sent to you by NISSAN to ensure you have access to accurate and up-to-date information regarding your vehicle. Current versions of vehicle Owner's Manuals and any updates can also be found in the Owner section of the NISSAN website at **https://owners.nissanusa.com/nowners/navigation/manualsGuide**. If you have questions concerning any information in your Owner's Manual, contact NISSAN Consumer Affairs. For contact information, refer to the NISSAN CUSTOMER CARE PROGRAM page in this Owner's Manual.

IMPORTANT INFORMATION ABOUT THIS MANUAL

You will see various symbols in this manual. They are used in the following ways:

⚠ WARNING

This is used to indicate the presence of a hazard that could cause death or serious personal injury. To avoid or reduce the risk, the procedures must be followed precisely.

⚠ CAUTION

This is used to indicate the presence of a hazard that could cause minor or moderate personal injury or damage to your vehicle. To avoid or reduce the risk, the procedures must be followed carefully.

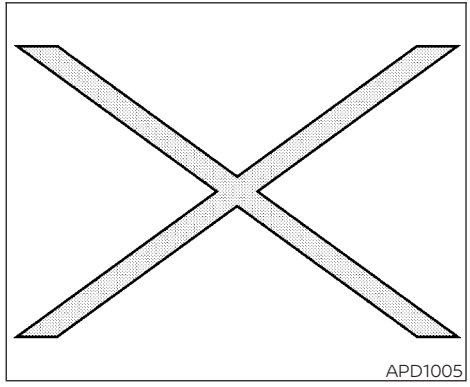

If you see this symbol, it means **"Do not do this"** or **"Do not let this happen."**

If you see a symbol similar to these in an illustration, it means the arrow points to the front of the vehicle.

Arrows in an illustration that are similar to these indicate movement or action.

Arrows in an illustration that are similar to these call attention to an item in the illustration.

CALIFORNIA PROPOSITION 65 WARNING

⚠ WARNING

Engine exhaust, some of its constituents, and certain vehicle components contain or emit chemicals known to the State of California to cause cancer and birth defects or other reproductive harm. In addition, certain fluids contained in vehicles and certain products of component wear contain or emit chemicals known to the State of California to cause cancer and birth defects or other reproductive harm.

Operating, servicing and maintaining a passenger vehicle or off-road vehicle can expose you to chemicals including engine exhaust, carbon monoxide, phthalates, and lead, which are known to the State of California to cause cancer and birth defects or other reproductive harm. To minimize exposure, avoid breathing exhaust, do not idle the engine except as necessary, service your vehicle in a well-ventilated area and wear gloves or wash your hands frequently when servicing your vehicle. For more information go to www.P65Warnings.ca.gov.

CALIFORNIA PERCHLORATE ADVISORY

Some vehicle parts, such as lithium batteries, may contain perchlorate material. The following advisory is provided: "Perchlorate Material – special handling may apply. For additional information, refer to www.dtsc.ca.gov/hazardouswaste/perchlorate/".

BLUETOOTH® is a trademark owned by Bluetooth SIG, Inc. and licensed to Visteon and Bosch.

SiriusXM® services require a subscription after trial period and are sold separately or as a package. The satellite service is available only in the 48 contiguous USA and DC. SiriusXM® satellite service is also available in Canada; see www.siriusxm.ca.

© 2017 NISSAN NORTH AMERICA, INC.
All rights reserved. No part of this Owner's Manual may be reproduced or stored in a retrieval system, or transmitted in any form, or by any means, electronic, mechanical, photocopying, recording or otherwise, without the prior written permission of Nissan North America, Inc.

NISSAN CUSTOMER CARE PROGRAM

NISSAN CARES . . .
Both NISSAN and your NISSAN dealer are dedicated to serving all your automotive needs. Your satisfaction with your vehicle and your NISSAN dealer are our primary concerns. Your NISSAN dealer is always available to assist you with all your automobile sales and service needs.

However, if there is something that your NISSAN dealer cannot assist you with or you would like to provide NISSAN directly with comments or questions, please contact the NISSAN Consumer Affairs Department using our toll-free number:

For U.S. customers
1-800-NISSAN-1
(1-800-647-7261)

For Canadian customers
1-800-387-0122

The Consumer Affairs Department will ask for the following information:

- Your name, address, and telephone number
- Vehicle identification number (attached to the top of the instrument panel on the driver's side)
- Date of purchase
- Current odometer reading
- Your NISSAN dealer's name
- Your comments or questions

OR

You can write to NISSAN with the information at:

For U.S. customers
Nissan North America, Inc.
Consumer Affairs Department
P.O. Box 685003
Franklin, TN 37068-5003
or via e-mail at:
nnaconsumeraffairs@nissan-usa.com

For Canadian customers
Nissan Canada Inc.
5290 Orbitor Drive
Mississauga, Ontario L4W 4Z5
or via e-mail at:
information.centre@nissancanada.com

If you prefer, visit us at:
www.nissanusa.com (for U.S. customers)
or
www.nissan.ca (for Canadian customers)

We appreciate your interest in NISSAN and thank you for buying a quality NISSAN vehicle.

Table of Contents

Illustrated table of contents	0
Safety—Seats, seat belts and supplemental restraint system	1
Instruments and controls	2
Pre-driving checks and adjustments	3
Monitor, climate, audio, phone and voice recognition systems	4
Starting and driving	5
In case of emergency	6
Appearance and care	7
Do-it-yourself	8
Maintenance and schedules	9
Technical and consumer information	10
Index	11

0 Illustrated table of contents

Air bags, seat belts and child restraints 0-2
Exterior front 0-3
Exterior rear 0-4
Passenger compartment. 0-5
Instrument panel. 0-6
Engine compartment check locations 0-8
Warning and indicator lights. 0-11

AIR BAGS, SEAT BELTS AND CHILD RESTRAINTS

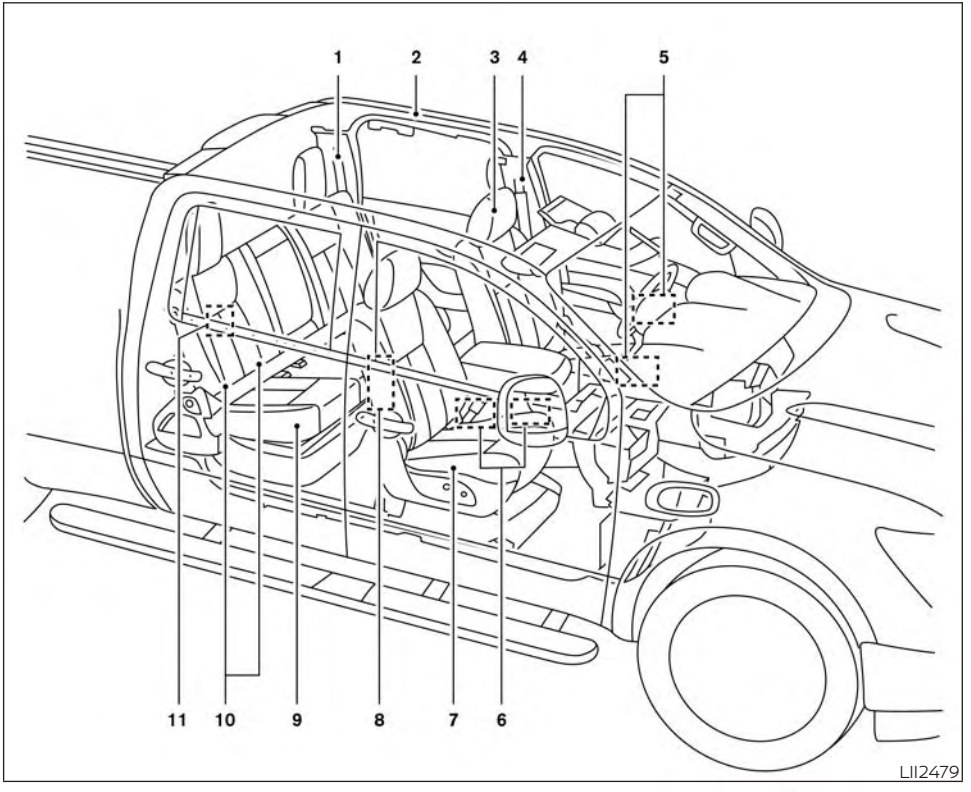

1. Rear seat belts (Crew and King Cab® models only) (if so equipped) (P. 1-15)
2. Roof-mounted curtain side-impact and rollover supplemental air bag (P. 1-53)
3. Head restraints/headrests (P. 1-10)
4. Front seat belts with pretensioner(s) and shoulder height adjuster (P. 1-15, 1-53)
5. Supplemental air bags (P. 1-53)
6. Occupant classification sensors (weight sensors) (if so equipped) (P. 1-53)
7. Front seats (P. 1-2)
8. Front seat-mounted side-impact supplemental air bag (P. 1-53)
9. Rear seats (Crew and King Cab® models only) (if so equipped) (P. 1-2)
10. LATCH (Lower Anchors and Tethers for CHildren) system (Crew and King Cab® models only) (if so equipped) (P. 1-26)
11. Top tether strap anchor (Crew and King Cab® models only) (if so equipped) (P. 1-26)

Refer to the page number indicated in parentheses for operating details.

NOTE:

Crew Cab model shown, Single and King Cab® models similar.

EXTERIOR FRONT

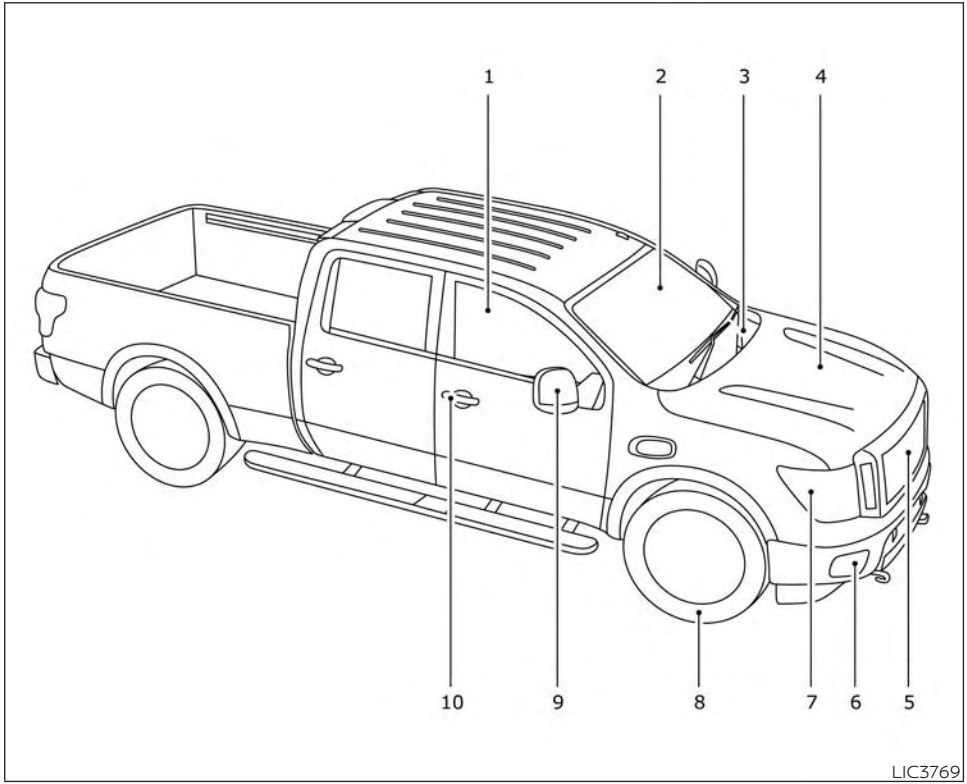

1. Power windows (P. 2-87)
2. Windshield (P. 8-20)
3. Wiper and washer switch (P. 2-51)
4. Engine hood (P. 3-25)
5. Front view camera (if so equipped) (P. 4-17)
6. Front fog lights (if so equipped) (P. 2-59)
   Daytime Running Light (DRL) system (if so equipped) (P. 2-54)
7. Headlight and turn signal switches (P. 2-54, 2-58)
   Replacing bulbs (P. 8-28)
   Daytime Running Light (DRL) system (P. 2-54)
8. Tire pressure (P. 8-34)
   Flat tire (P. 6-3)
   Tire chains (P. 8-34)
9. Mirrors (P. 3-32)
   Side view camera (if so equipped) (P. 4-17)
10. Door locks (P. 3-5)
    NISSAN Intelligent Key® (P. 3-10)

Refer to the page number indicated in parentheses for operating details.

NOTE:

Crew Cab model shown, Single and King Cab® models similar.

EXTERIOR REAR

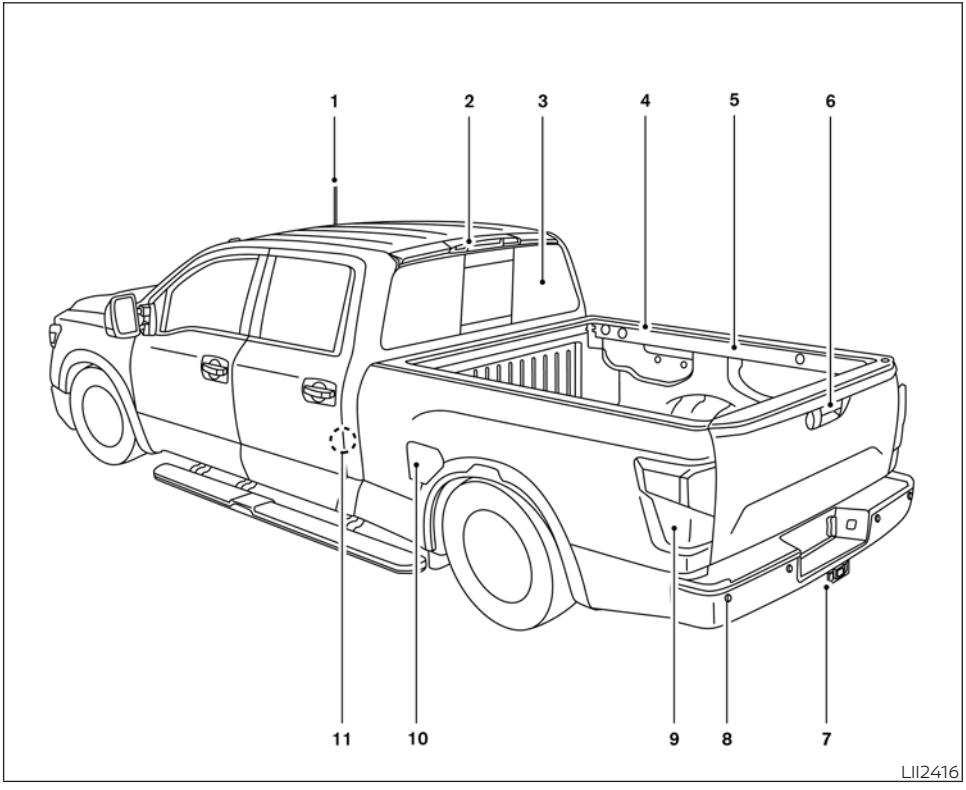

1. Antenna (P. 4-88)
2. Cargo lamp (P. 2-60)
3. Rear sliding window (P. 2-87)
4. Bed liner storage bins (if so equipped) (P. 2-75)
5. Under rail bed lamps (if so equipped) (P. 2-60)
6. Truck box (P. 3-37)
   Tailgate (P. 3-37)
   Rearview camera (P. 4-10)
7. Towing (P. 10-36)
8. Rear sonar sensors (if so equipped) (P. 5-64)
9. Replacing bulbs (P. 8-28)
10. Fuel-filler cap* (P. 3-25)
    Fuel-filler door* (P. 3-25)
    Fuel recommendation* (P. 10-2)
11. Child safety rear door lock (Crew Cab models only) (P. 3-5)

*: For diesel models, refer to the separate Titan Diesel Owner's Manual.

Refer to the page number indicated in parentheses for operating details.

NOTE:

Crew Cab model shown, Single and King Cab® models similar.

PASSENGER COMPARTMENT

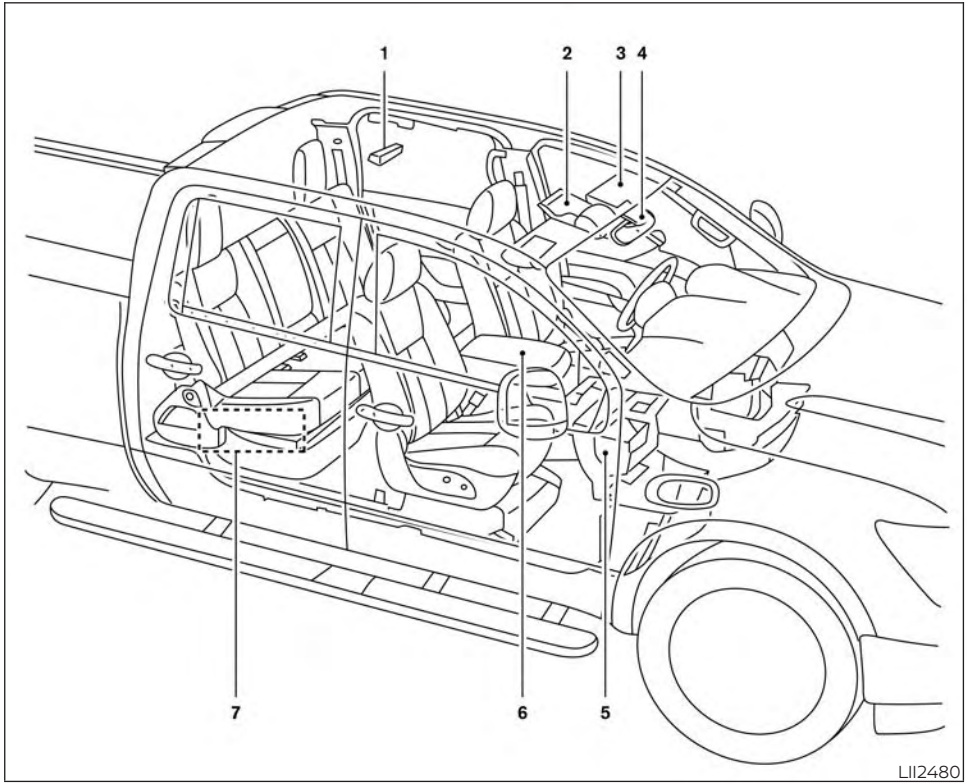

1. Interior lights (if so equipped) (P. 2-91)
2. Map lights (if so equipped) (P. 2-91)
   Console light (if so equipped) (P. 2-91)
3. Sun visors (P. 3-30)
4. Rearview mirror (P. 3-32)
5. Glove box (P. 2-75)
6. Console box (if so equipped) (P. 2-75)
   Cup holders (P. 2-75)
7. Spare tire tools location (Crew and King Cab® models only) (P. 6-3)

Refer to the page number indicated in parentheses for operating details.

NOTE:

Crew Cab model shown, Single and King Cab® models similar.

INSTRUMENT PANEL

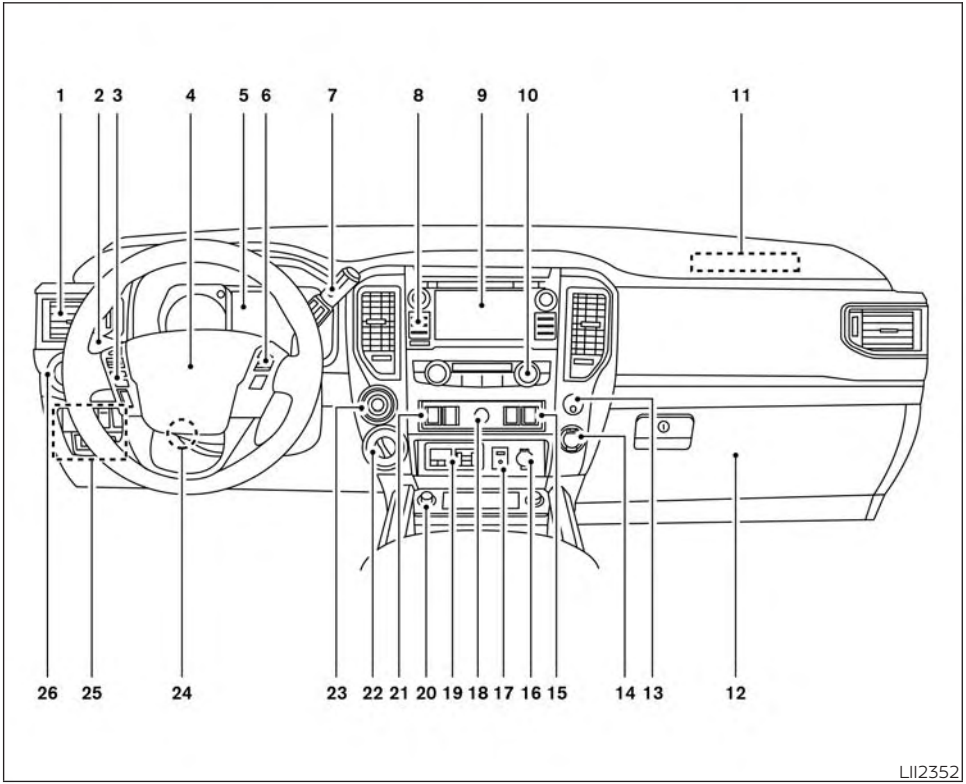

1. Vents (P. 4-34)
2. Turn signal switch (P. 2-58)
   Wiper and washer switch (P. 2-51)
3. Steering wheel switch for audio control (P. 4-87)
   Bluetooth® Hands-Free Phone System (P. 4-87, 4-133)
   Vehicle information display controls (P. 2-33)
4. Driver supplemental air bag (P. 1-53)
   Horn (P. 2-59)
5. Meters and gauges (P. 2-6)
   Warning and indicator lights (P. 2-21)
6. Cruise control main/set switches (P. 5-41)
7. Shift lever (P. 5-16)
   Tow mode switch (P. 2-70)
8. Audio controls (P. 4-48)
9. Center display (P. 4-4)
10. Climate controls (P. 4-34)
11. Front passenger supplemental air bag (P. 1-53)
12. Glove box (P. 2-75)
13. Front passenger air bag status light (if so equipped) (P. 1-53)
14. Power outlet (P. 2-71)

15. Heated steering wheel switch (if so equipped) (P. 2-64)
    Warning Systems switch (if so equipped) (P. 2-64)
16. Power outlet (P. 2-71)
17. Auxiliary jack (P. 4-48)
    USB port (P. 4-48)
18. Hazard warning flasher switch (P. 6-2)
19. Trailer Brake Controller Unit (TBCU) (if so equipped) (P. 2-71)
20. Climate control seat switch (if so equipped) (P. 2-60)
    Heated front seat switches (if so equipped) (P. 2-61)
21. Vehicle Dynamic Control (VDC) OFF switch (P. 2-65)
    Front and rear sonar system OFF switch (if so equipped) (P. 5-64)
22. 4WD shift switch (if so equipped) (P. 5-45)
23. Push-button ignition switch (P. 5-11)
24. Tilt and telescopic steering wheel control (P. 3-29)
25. Headlight aiming control (if so equipped) (P. 2-54)
    Power inverter switch (if so equipped) (P. 2-68)
    Cargo lamp switch (P. 2-60)
    Electronic locking rear differential (E-Lock) system switch (if so equipped) (P. 2-67)
    Hill descent control system switch (if so equipped) (P. 2-66)
26. Headlight switch (P. 2-54)
    Fog light switch (if so equipped) (P. 2-59)
    Instrument brightness control switches (P. 2-54)
    Trip reset switch (P. 2-6)

Refer to the page number indicated in parenthesis for operating details.

ENGINE COMPARTMENT CHECK LOCATIONS

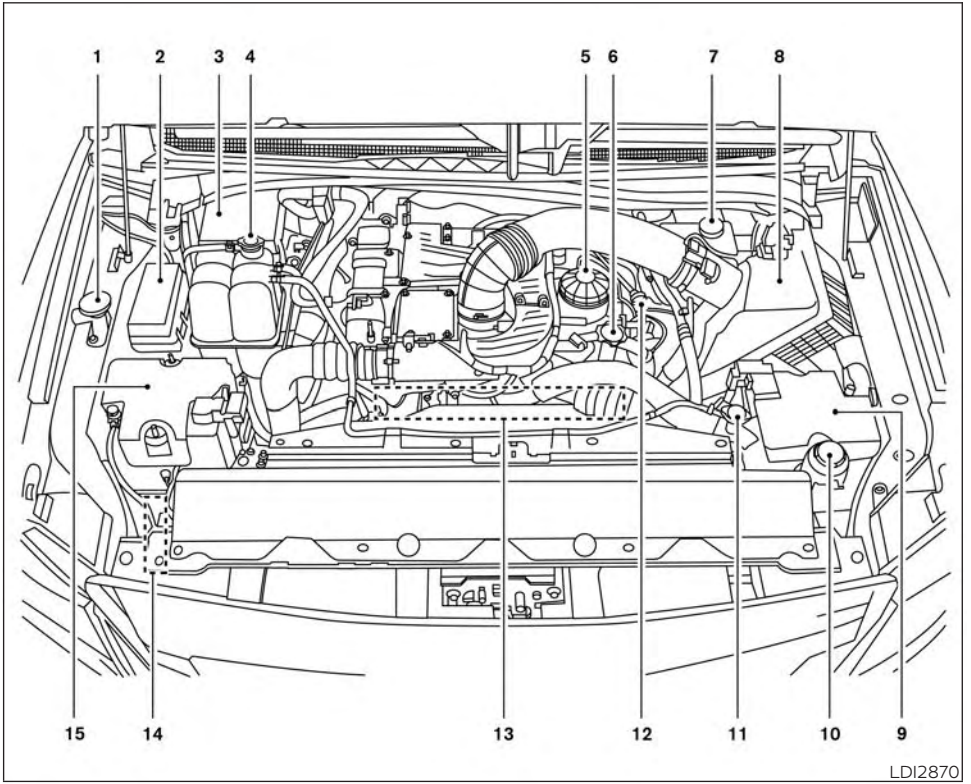

Cummins 5.0 L engine

1. Windshield-washer fluid reservoir (P. 8-14)
2. Fuse box (P. 8-22)
3. Fuse/Fusible link box (P. 8-22)
4. Engine coolant reservoir*
5. Fuel filter (Stage 2)*
6. Engine oil filler cap*
7. Brake fluid reservoir (P. 8-13)
8. Air cleaner*
9. Battery (P. 8-15)
10. Power steering fluid reservoir (P. 8-12)
11. Radiator cap*
12. Engine oil dipstick*
13. Drive belt location*
14. Fuse/Fusible link box (P. 8-22)
15. Battery (P. 8-15)

*: Refer to the separate Titan Diesel Owner's Manual.

Refer to the page number indicated in parentheses for operating details.

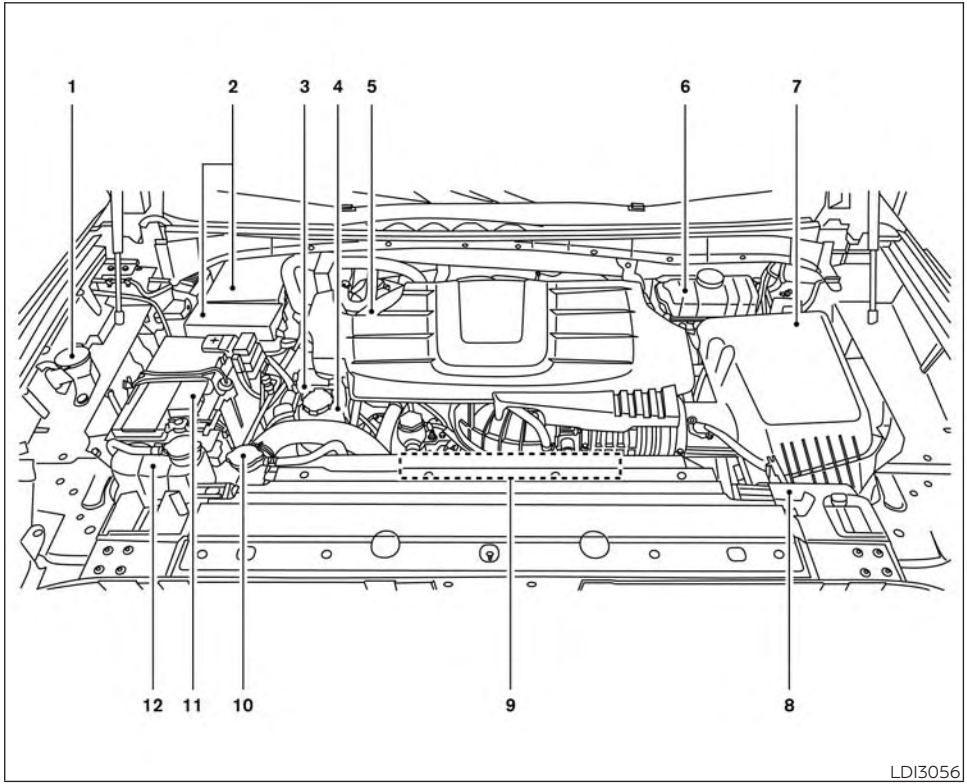

VK56VD engine (non-XD model)

1. Windshield-washer fluid reservoir (P. 8-14)
2. Fuse box (P. 8-22)
3. Engine oil dipstick (P. 8-7)
4. Power steering fluid reservoir (P. 8-12)
5. Engine oil filler cap (P. 8-7)
6. Brake fluid reservoir (P. 8-13)
7. Air cleaner (P. 8-19)
8. Fuse/Fusible link box (P. 8-22)
9. Drive belt location (P. 8-17)
10. Radiator cap (P. 8-5)
11. Battery (P. 8-15)
12. Engine coolant reservoir (P. 8-5)

Refer to the page number indicated in parentheses for operating details.

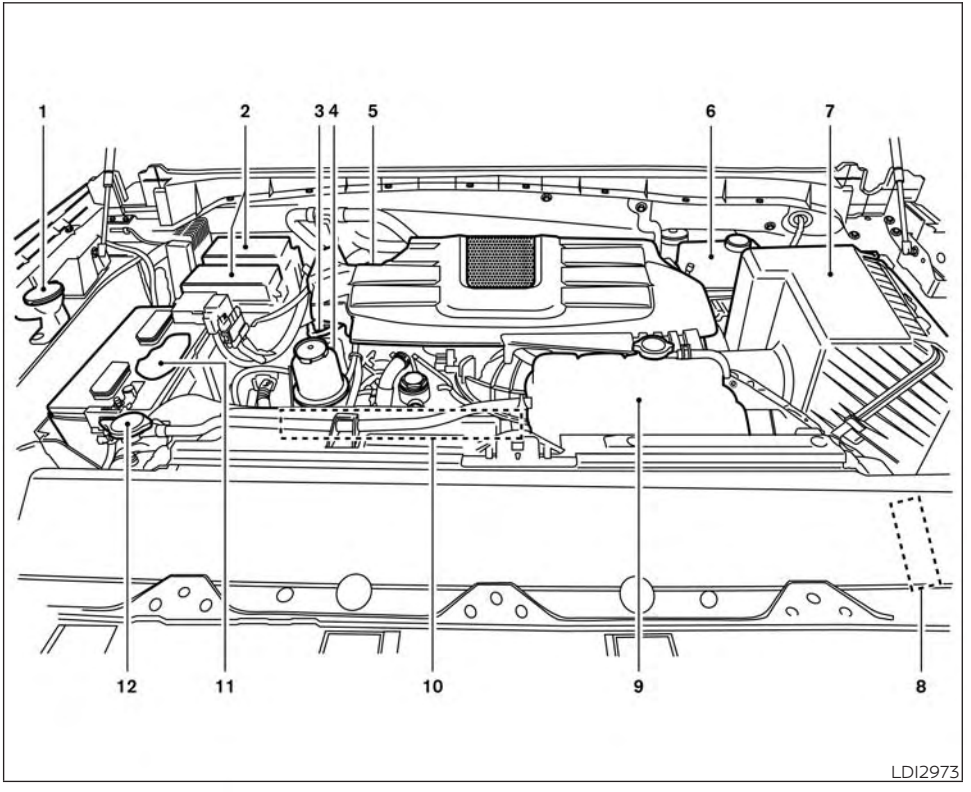

VK56VD engine (XD model)

1. Windshield-washer fluid reservoir (P. 8-14)
2. Fuse box (P. 8-22)
3. Engine oil dipstick (P. 8-7)
4. Power steering fluid reservoir (P. 8-12)
5. Engine oil filler cap (P. 8-7)
6. Brake fluid reservoir (P. 8-13)
7. Air cleaner (P. 8-19)
8. Fuse/Fusible link box (P. 8-22)
9. Engine coolant reservoir (P. 8-5)
10. Drive belt location (P. 8-17)
11. Battery (P. 8-15)
12. Radiator cap (P. 8-5)

Refer to the page number indicated in parentheses for operating details.

WARNING AND INDICATOR LIGHTS

Warning light	Name	Page
4WD	4–Wheel Drive (4WD) warning light (if so equipped)	2-22
ABS or	Anti-lock Braking System (ABS) warning light	2-23
AT CHECK	Automatic Transmission check warning light	2-23
A / T OIL TEMP	Automatic Transmission oil temperature warning light	2-23
ATP	Automatic Transmission park warning light (4x4 model)	2-23

Warning light	Name	Page
BRAKE or	Brake warning light	2-24
	Charge warning light	2-25
	Diesel Particulate Filter (DPF) warning light (if so equipped)	2-25
	Door open warning light	2-25
	Driver seat belt warning and chime	2-25
	Engine oil pressure warning light	2-25

Warning light	Name	Page
	Low DEF warning light (if so equipped)	2-25
	Low fuel warning light (if so equipped)	2-25
	Low tire pressure warning light	2-26
	Low windshield washer fluid warning light (if so equipped)	2-27
	Malfunction warning light (red) (if so equipped)	2-27
	Master warning light (if so equipped)	2-28

Warning light	Name	Page
KEY	NISSAN Intelligent Key® warning light (if so equipped)	2-28
P SHIFT	P position selecting warning light (if so equipped)	2-28
	Passenger seat belt warning light (if so equipped)	2-28
	Supplemental air bag warning light	2-29
	Water in Fuel warning light (if so equipped)	2-29

Indicator light	Name	Page
DIFF LOCK	Electronic locking rear differential (E-Lock) system ON indicator light (if so equipped)	2-29
	Engine start operation indicator (if so equipped)	2-30
	Front fog light indicator light (if so equipped)	2-30
OFF 2	Front passenger air bag status light (if so equipped)	2-30
	High beam indicator light (blue)	2-30
	Hill descent control system ON indicator light (if so equipped)	2-30

Indicator light	Name	Page
	Malfunction Indicator Light (MIL) (yellow)	2-30
	Security indicator light	2-31
	Side light and headlight indicator light (green) (if so equipped)	2-31
	Slip indicator light	2-31
TOW	TOW mode ON indicator light	2-31
	Turn signal/ hazard indicator lights	2-31
OFF	Vehicle Dynamic Control (VDC) OFF indicator light	2-32

MEMO

1 Safety—Seats, seat belts and supplemental restraint system

Seats 1-2
Front manual bench seat adjustment (Single Cab models and if so equipped for King Cab® and Crew Cab models) 1-3
Front manual captain's chair seat adjustment (if so equipped for passenger seat for King Cab® and Crew Cab models) 1-4
Front power captain's chair seat adjustment (if so equipped for Crew Cab and King Cab® models) 1-5
Front armrests (if so equipped) 1-7
Rear armrests (Crew Cab models and if so equipped for King Cab® models) 1-7
Flexible seating 1-7
Head restraints/Headrests 1-10
Adjustable head restraint/headrest components 1-12
Non-adjustable head restraint/headrest components 1-12
Remove 1-12
Removable (without Dual Head Restraint/Headrest DVD System only) 1-13
Install 1-13
Adjust 1-14
Seat belts 1-15
Precautions on seat belt usage 1-15
Seat belt warning light 1-18
Pregnant women 1-18
Injured persons 1-18
Three-point type seat belt with retractor 1-18
Seat belt extenders 1-23
Seat belt maintenance 1-23
Child safety 1-24
Infants 1-25
Small children 1-25
Larger children 1-25
Child restraints 1-26

Precautions on child restraints 1-26
LATCH (Lower Anchors and Tethers for CHildren) system (Crew Cab models and King Cab® models with rear bench seat) 1-29
Top tether anchor point locations 1-31
Rear-facing child restraint installation using LATCH (Crew Cab models and King Cab® models with rear bench seat) 1-32
Rear-facing child restraint installation using the seat belts (Crew Cab models and King Cab® models with rear bench seat) 1-34
Rear-facing child restraint installation using the seat belts (Single Cab models and King Cab® Rear Seat Delete models) 1-36
Forward-facing child restraint installation using LATCH (Crew Cab models and King Cab® models with rear bench seat). 1-37
Forward-facing child restraint installation using the seat belts — rear bench seat (Crew Cab models and King Cab® models with rear bench seat). 1-40
Forward-facing child restraint installation using the seat belts — passenger seat and center seat (Single Cab models and King Cab® Rear Seat Delete models) 1-44
Booster seats 1-49
Supplemental Restraint System (SRS). 1-53
Precautions on SRS (with NISSAN Advanced Air Bag System) (if so equipped) 1-53
Precautions on SRS (without NISSAN Advanced Air Bag System) (if so equipped) 1-68
Front seat-mounted side-impact supplemental air bag and roof-mounted curtain side-impact and rollover supplemental air bag systems 1-78
Seat belt with pretensioner(s) (front seats) 1-79
Supplemental air bag warning labels 1-80
Supplemental air bag warning light. 1-81

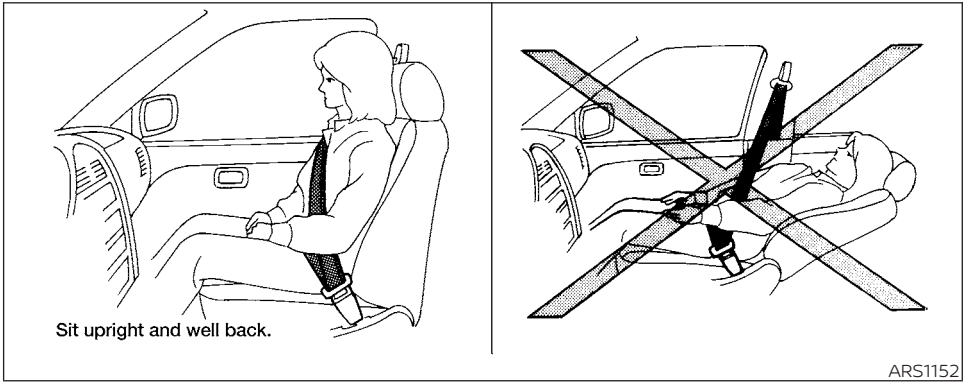

⚠WARNING

- **Do not ride in a moving vehicle when the seatback is reclined. This can be dangerous. The shoulder belt will not be against your body. In an accident, you could be thrown into it and receive neck or other serious injuries. You could also slide under the lap belt and receive serious internal injuries.**

- **For the most effective protection when the vehicle is in motion, the seat should be upright. Always sit well back and upright in the seat with both feet on the floor and adjust the seat properly. For additional information, refer to "Precautions on seat belt usage" in this section.**
- **After adjustment, gently rock in the seat to make sure it is securely locked.**

- **Do not leave children unattended inside the vehicle. They could unknowingly activate switches or controls or make the vehicle move. Unattended children could become involved in serious accidents.**
- **To help avoid risk of injury or death through unintended operation of the vehicle and/or its systems, do not leave children, people who require the assistance of others or pets unattended in your vehicle. Additionally, the temperature inside a closed vehicle on a warm day can quickly become high enough to cause a significant risk of injury or death to people and pets.**
- **Do not adjust the driver's seat while driving so full attention may be given to vehicle operation. The seat may move suddenly and could cause loss of control of the vehicle.**
- **The seatback should not be reclined any more than needed for comfort. Seat belts are most effective when the passenger sits well back and straight up in the seat. If the seatback is reclined, the risk of sliding under the lap belt and being injured is increased.**

⚠ CAUTION

When adjusting the seat positions, be sure not to contact any moving parts to avoid possible injuries and/or damage.

FRONT MANUAL BENCH SEAT ADJUSTMENT (Single Cab models and if so equipped for King Cab® and Crew Cab models)

Your vehicle seats can be adjusted manually. For additional information about adjusting the seats, refer to the steps outlined in this section.

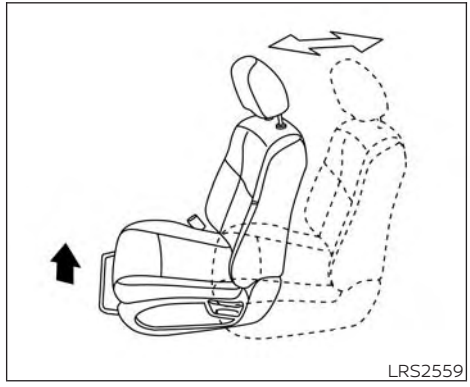

Forward and backward

Pull the lever up and hold it while you slide the seat forward or backward to the desired position. Release the lever to lock the seat in position.

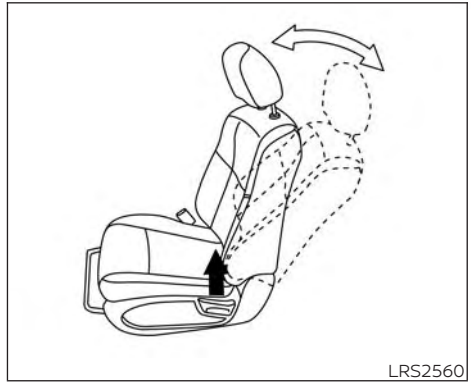

Reclining

To recline the seatback, pull the lever up and lean back. To bring the seatback forward, pull the lever up and lean your body forward. Release the lever to lock the seatback in position.

The reclining feature allows adjustment of the seatback for occupants of different sizes for added comfort and to help obtain proper seat belt fit. For additional information, refer to "Precautions on seat belt usage" in this section. Also, the seatback can be reclined to allow occupants to rest when the vehicle is stopped and the shift lever is in the P (Park) position.

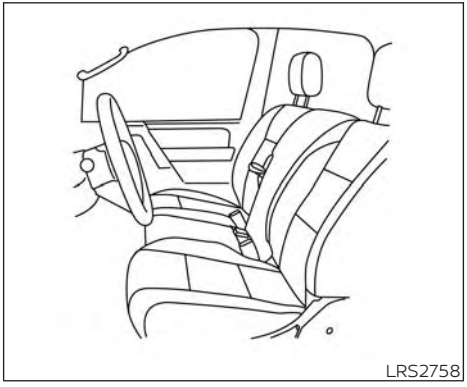

Front center bench seat adjustment

The front center bench seat folds down by pulling on the strap. It does not have adjustments in between the upright and the folded down positions. It is either in seating position or armrest position.

FRONT MANUAL CAPTAIN'S CHAIR SEAT ADJUSTMENT (if so equipped for passenger seat for King Cab® and Crew Cab models)

Your vehicle seats can be adjusted manually. For additional information about adjusting the seats, refer to the steps outlined in this section.

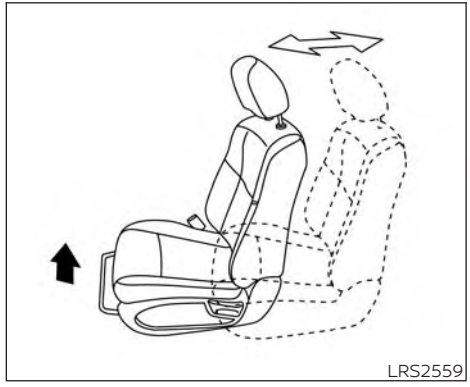

Forward and backward

Pull the lever up and hold it while you slide the seat forward or backward to the desired position. Release the lever to lock the seat in position.

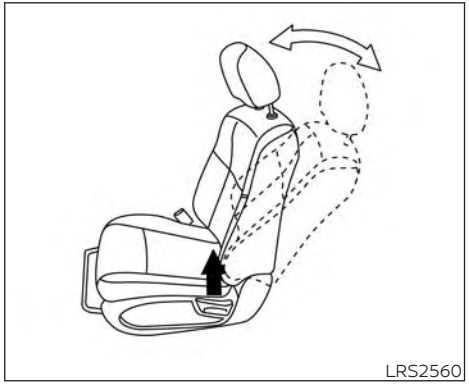

Reclining

To recline the seatback, pull the lever up and lean back. To bring the seatback forward, pull the lever up and lean your body forward. Release the lever to lock the seatback in position.

The reclining feature allows adjustment of the seatback for occupants of different sizes for added comfort and to help obtain proper seat belt fit. For additional information, refer to "Precautions on seat belt usage" in this section. Also, the seatback can be reclined to allow occupants to rest when the vehicle is stopped and the shift lever is in the P (Park) position.

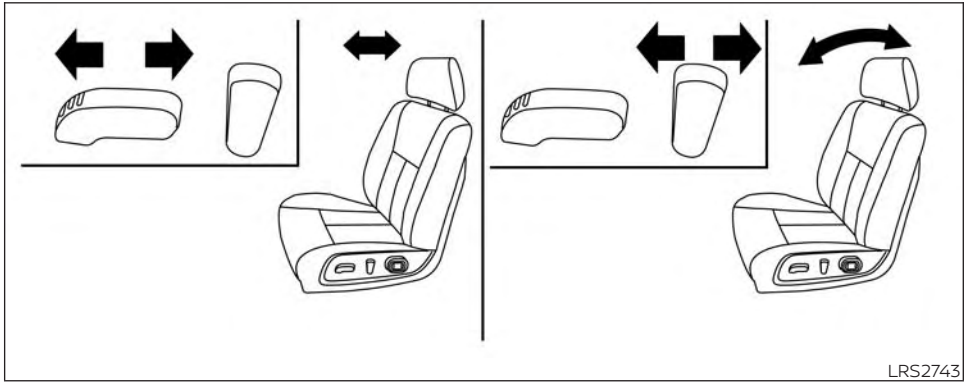

FRONT POWER CAPTAIN'S CHAIR SEAT ADJUSTMENT (if so equipped for Crew Cab and King Cab® models)

Operating tips

- The power seat motor has an auto-reset overload protection circuit. If the motor stops during operation, wait 30 seconds then reactivate the switch.
- Do not operate the power seat switch for a long period of time when the engine is off. This will discharge the battery.

For additional information, refer to "Automatic drive positioner" in the "Pre-driving checks and adjustments" section of this manual.

Forward and backward

Moving the switch as shown will slide the seat forward or backward to the desired position.

Reclining

Move the recline switch as shown until the desired angle is obtained.

The reclining feature allows adjustment of the seatback for occupants of different sizes for added comfort and to help obtain proper seat belt fit. For additional information, refer to "Precautions on seat belt usage" in this section. Also, the seatback can be reclined to allow occupants to rest when the vehicle is stopped and the shift lever is in P (Park).

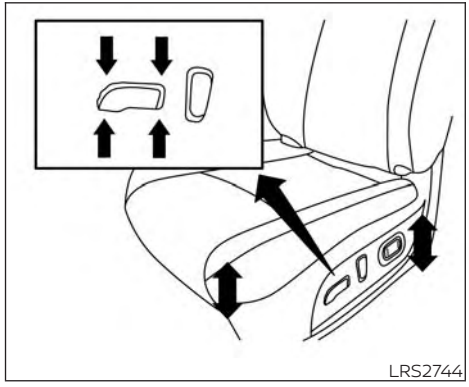

Seat lifter (driver's seat)

Move the switch as shown to adjust the angle and height of the seat cushion.

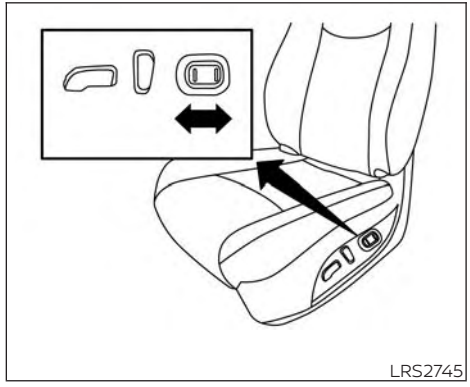

Lumbar support (driver's seat)

The lumbar support feature provides adjustable lower back support to the driver. Push the switch as shown to adjust the seatback lumbar area.

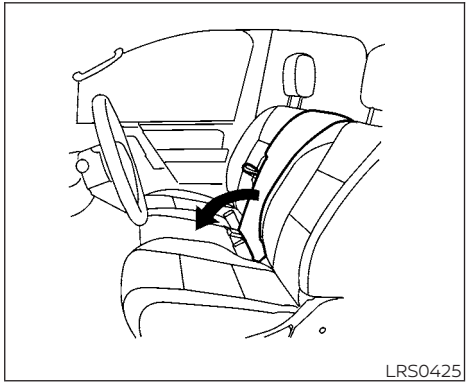

FRONT ARMRESTS (if so equipped)

To use the center armrest on the front bench seat, pull on the strap in between the front passenger and center seats and fold it down to the resting position.

REAR ARMRESTS (Crew Cab models and if so equipped for King Cab® models)

To use the center armrest on the bench seats, pull on the tab in the center of the seat and fold it down as shown.

FLEXIBLE SEATING

⚠ WARNING

- **Never allow anyone to ride in the cargo area or on the rear seats (if so equipped) when they are in the fold-down position. In a collision, people riding in these areas without proper restraints are more likely to be seriously injured or killed.**
- **Do not allow people to ride in any area of your vehicle that is not equipped with seats and seat belts. Be sure everyone in your vehicle is in a seat and using a seat belt properly.**
- **Do not allow more than one person to use the same seat belt.**
- **Do not fold down the rear seats when the occupants are in the rear seat area or any luggage is on the rear seats.**
  - **Make sure that the seat path is clear before moving the seat.**
  - **Be careful not to allow hands or feet to get caught or pinched in the seat.**

- **Head restraints/headrests should be adjusted properly as they may provide significant protection against injury in an accident. Always replace and adjust them properly if they have been removed for any reason.**
- **If the head restraints/headrests are removed for any reason, they should be securely stored to prevent them from causing injury to passengers or damage to the vehicle in case of sudden braking or an accident.**
- **When returning the seatbacks to the upright position, be certain they are completely secured in the latched position. If they are not completely secured, passengers may be injured in an accident or sudden stop.**
- **Properly secure all cargo to help prevent it from sliding or shifting. Do not place cargo higher than the seatbacks. In a sudden stop or collision, unsecured cargo could cause personal injury.**

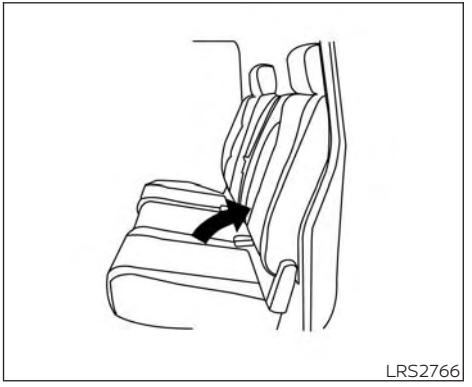
LRS2766

Folding the rear bench seat up (Crew Cab models and King Cab® models with rear bench seat)

To fold the rear bench seat up for storage capacity behind the front seats or to remove the jacking tools from the storage area:

1. Lift the front of the seat cushion up.

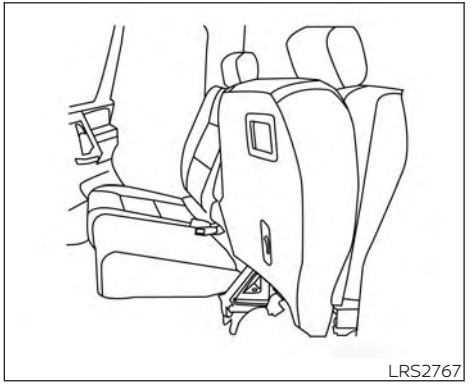
LRS2767

2. Fold the bottom of the seat cushion toward the back of the vehicle until it locks in place.

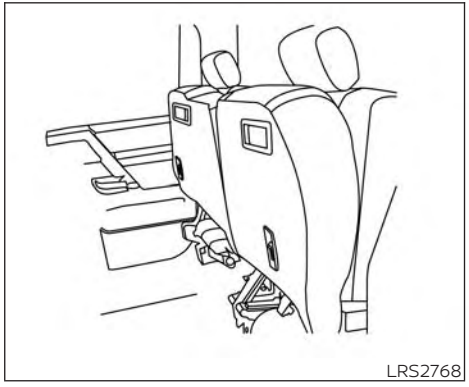
LRS2768

3. Repeat this process to raise and secure the seat cushion on the other side of the vehicle for maximum storage capacity.

To return the rear bench seat to a seating position, pull the latch on the bottom of the seat cushions to release the seat from the locked position. **Make sure to properly push the seat cushion down into place.**

⚠ WARNING

- **When the vehicle is being used to carry cargo, properly secure all cargo to help prevent it from sliding or shifting. Do not place cargo higher than the seatbacks. In a sudden stop or collision, unsecured cargo could cause personal injury.**
- **Do not allow people to ride in any area of your vehicle that is not equipped with seats and seat belts. Be sure everyone in your vehicle is in a seat and using a seat belt properly. Never ride in the rear seat unless the seat bottom cushions are in place.**
- **When returning the seatbacks to the upright position, be certain they are completely secured in the latched position. If they are not completely secured, passengers may be injured in an accident or sudden stop.**

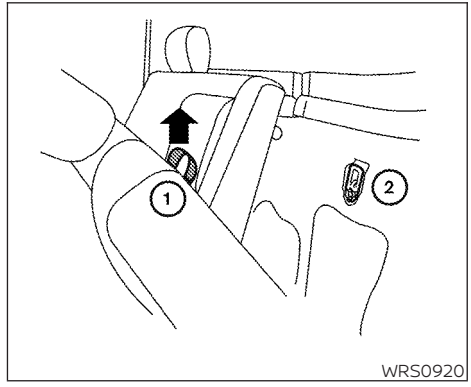

WRS0920

Folding the rear bench seat down (Crew Cab models and King Cab® models with rear bench seat)

The rear bench seat can be tilted forward to access the child restraint anchor point locations.

To tilt the seatback forward, pull the strap up ① and tilt the seatback. The child restraint anchor points ② can be accessed behind the rear bench seatback.

⚠ WARNING

Never allow anyone to ride in the cargo area or on the rear seat when it is in the fold-down position. Use of these areas by passengers without proper restraints could result in serious injury or death in an accident or sudden stop.

⚠ WARNING

Head restraints/headrests supplement the other vehicle safety systems. They may provide additional protection against injury in certain rear end collisions. Adjustable head restraints/headrests must be adjusted properly, as specified in this section. Check the adjustment after someone else uses the seat. Do not attach anything to the head restraint/headrest stalks or remove the head restraint/headrest. Do not use the seat if the head restraint/headrest has been removed. If the head restraint/headrest was removed, reinstall and properly adjust the head restraint/headrest before an occupant uses the seating position. Failure to follow these instructions can reduce the effectiveness of the head restraints/headrests. This may increase the risk of serious injury or death in a collision.

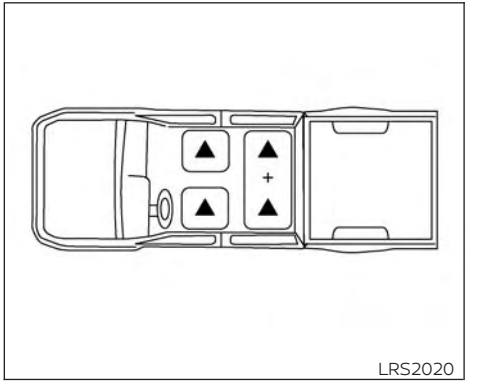

Front bucket seat

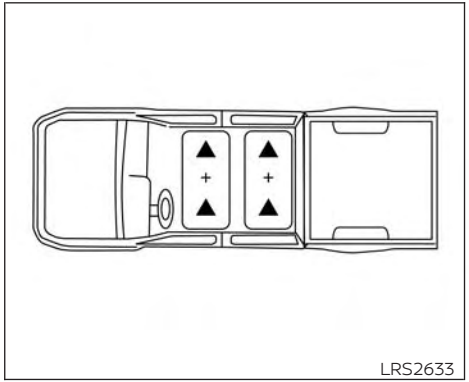

Front bench seat

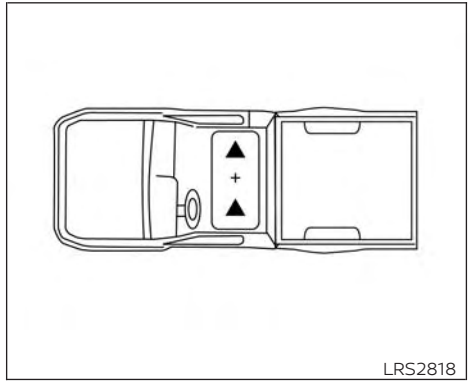

Front bench seat only

The illustration shows the seating positions equipped with head restraints/headrests.

▲ Indicates the seating position is equipped with a head restraint.

■ Indicates the seating position is equipped with a headrest.

+ Indicates the seating position is not equipped with a head restraint or headrest (if applicable).

- Your vehicle is equipped with a head restraint/headrest that may be integrated, adjustable or non-adjustable.
- Adjustable head restraints/headrests have multiple notches along the stalk(s) to lock them in a desired adjustment position.
- The non-adjustable head restraints/headrests have a single locking notch to secure them to the seat frame.
- Proper Adjustment:
  - For the adjustable type, align the head restraint/headrest so the center of your ear is approximately level with the center of the head restraint/headrest.
  - If your ear position is still higher than the recommended alignment, place the head restraint/headrest at the highest position.
- If the head restraint/headrest has been removed, ensure that it is reinstalled and locked in place before riding in that designated seating position.

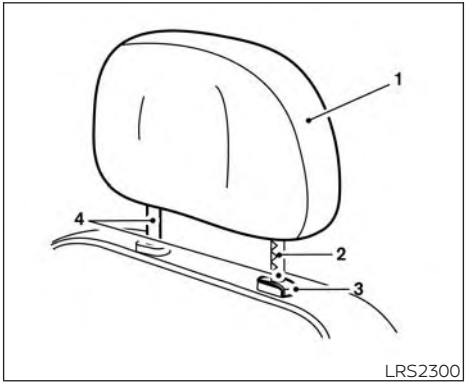

ADJUSTABLE HEAD RESTRAINT/ HEADREST COMPONENTS

1. Removable head restraint/headrest
2. Multiple notches
3. Lock knob
4. Stalks

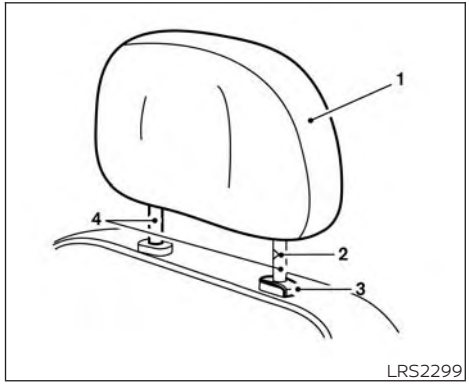

NON-ADJUSTABLE HEAD RESTRAINT/HEADREST COMPONENTS

1. Removable head restraint/headrest
2. Single notch
3. Lock knob
4. Stalks

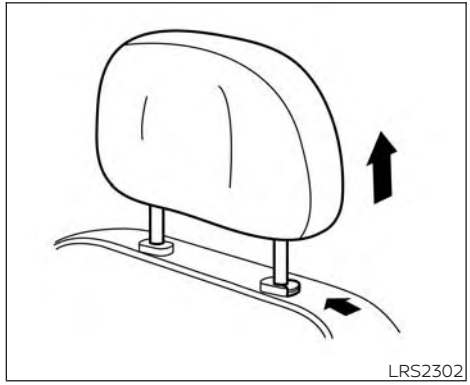

REMOVE

Use the following procedure to remove the head restraint/headrest:

1. Pull the head restraint/headrest up to the highest position.
2. Push and hold the lock knob.
3. Remove the head restraint/headrest from the seat.
4. Store the head restraint/headrest properly in a secure place so it is not loose in the vehicle.

5. Reinstall and properly adjust the head restraint/headrest before an occupant uses the seating position.

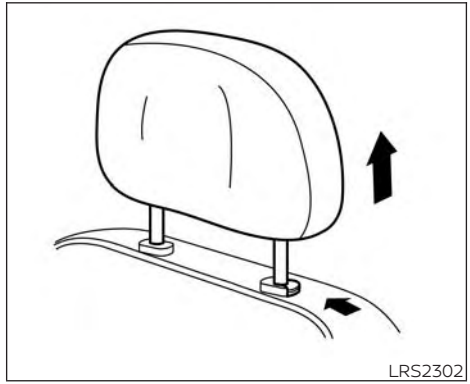

REMOVABLE (without Dual Head Restraint/Headrest DVD System only)

⚠ CAUTION

Do not remove head restraint/headrest from vehicles equipped with Dual Head Restraint/Headrest DVD System. Removal may damage the system wiring.

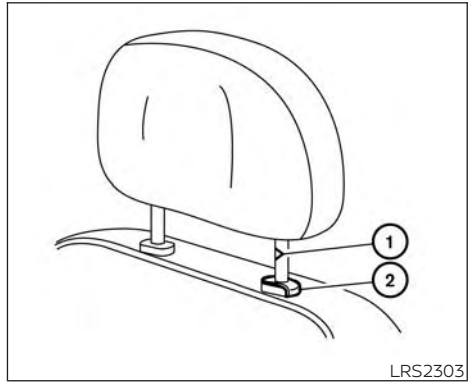

INSTALL

1. Align the head restraint/headrest stalks with the holes in the seat. Make sure that the head restraint/headrest is facing the correct direction. The stalk with the notch (notches) ① must be installed in the hole with the lock knob ②.
2. Push and hold the lock knob and push the head restraint/headrest down.
3. Properly adjust the head restraint/headrest before an occupant uses the seating position.

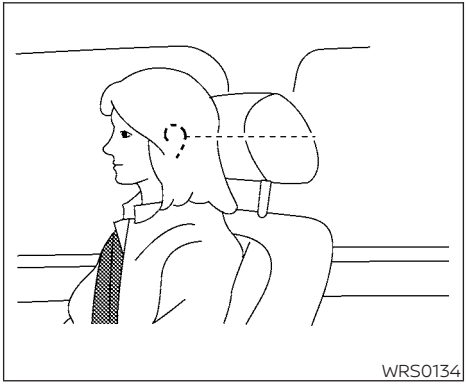

ADJUST

For adjustable head restraint/headrest

Adjust the head restraint/headrest so the center is level with the center of your ears. If your ear position is still higher than the recommended alignment, place the head restraint/headrest at the highest position.

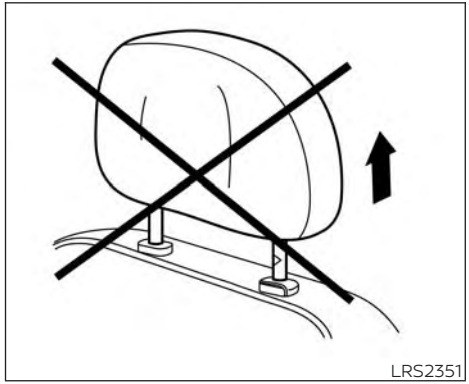

For non-adjustable head restraint/ head-rest

Make sure the head restraint/headrest is positioned so the lock knob is engaged in the notch before riding in that designated seating position.

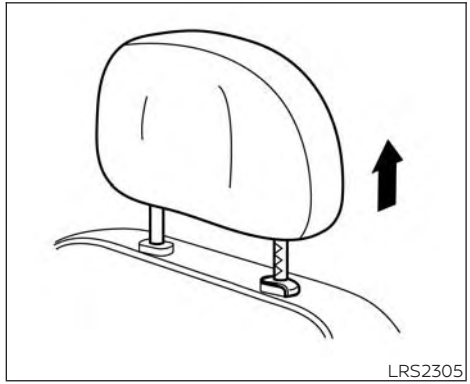

Raise

To raise the head restraint/headrest, pull it up.

Make sure the head restraint/headrest is positioned so the lock knob is engaged in the notch before riding in that designated seating position.

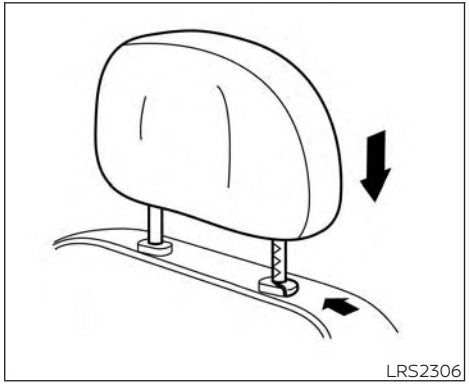

Lower

To lower, push and hold the lock knob and push the head restraint/headrest down.

Make sure the head restraint/headrest is positioned so the lock knob is engaged in the notch before riding in that designated seating position.

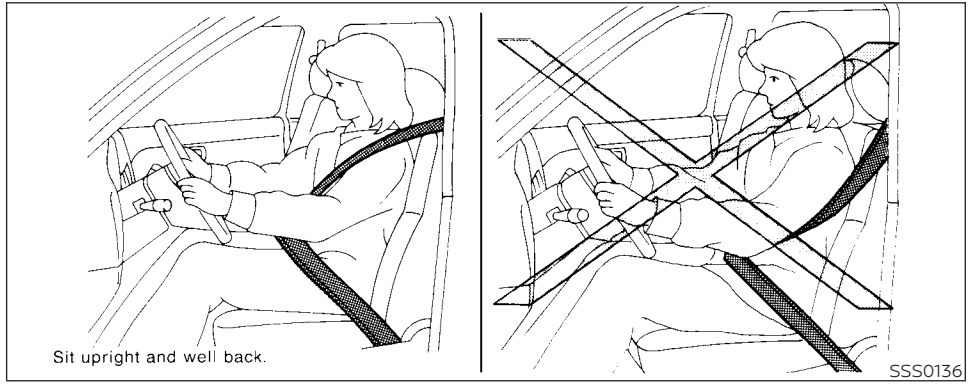

PRECAUTIONS ON SEAT BELT USAGE

If you are wearing your seat belt properly adjusted and you are sitting upright and well back in your seat with both feet on the floor, your chances of being injured or killed in a collision and/or the severity of injury may be greatly reduced. NISSAN strongly encourages you and all of your passengers to buckle up every time you drive, even if your seating position includes a supplemental air bag.

Most U.S. states and Canadian provinces or territories specify that seat belts be worn at all times when a vehicle is being driven.

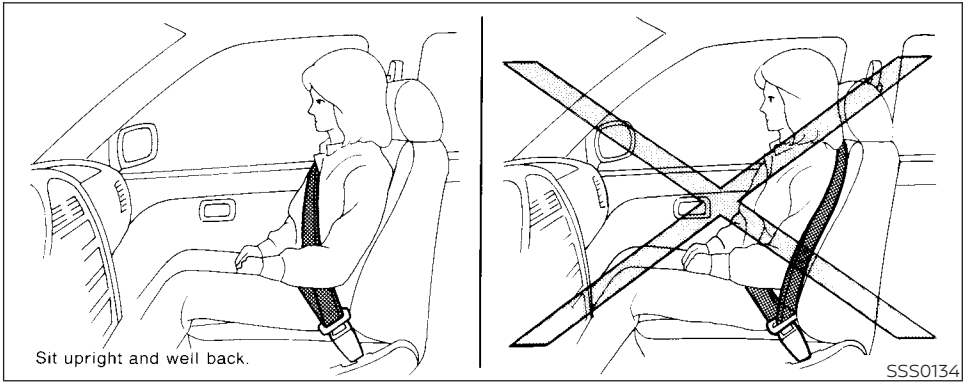

⚠ WARNING

- **Every person who drives or rides in this vehicle should use a seat belt at all times. Children should be in the rear seats (if so equipped) and in an appropriate restraint.**

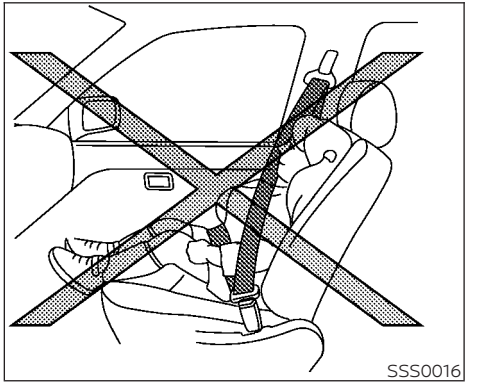

⚠ WARNING

- **The seat belt should be properly adjusted to a snug fit. Failure to do so may reduce the effectiveness of the entire restraint system and increase the chance or severity of injury in an accident. Serious injury or death can occur if the seat belt is not worn properly.**

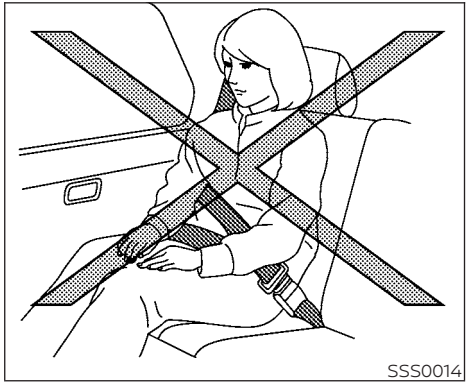

⚠ WARNING

- **Always route the shoulder belt over your shoulder and across your chest. Never put the belt behind your back, under your arm or across your neck. The belt should be away from your face and neck, but not falling off your shoulder.**
- **Position the lap belt as low and snug as possible AROUND THE HIPS, NOT THE WAIST. A lap belt worn too high could increase the risk of internal injuries in an accident.**
- **Be sure the seat belt tongue is securely fastened to the proper buckle.**
- **Do not wear the seat belt inside out or twisted. Doing so may reduce its effectiveness.**
- **Do not allow more than one person to use the same seat belt.**
- **Never carry more people in the vehicle than there are seat belts.**
- **If the seat belt warning light glows continuously while the ignition is turned ON with all doors closed and all seat belts fastened, it may indicate a malfunction in the system. Have the system checked. It is recommended that you visit a NISSAN dealer for this service.**
- **No changes should be made to the seat belt system. For example, do not modify the seat belt, add material, or install devices that may change the seat belt routing or tension. Doing so may affect the operation of the seat belt system. Modifying or tampering with the seat belt system may result in serious personal injury.**
- **Once seat belt pretensioner(s) have activated, they cannot be reused and must be replaced together with the retractor. It is recommended that you visit a NISSAN dealer for this service.**
- **All seat belt assemblies, including retractors and attaching hardware, should be inspected after any collision. It is recommended that you visit a NISSAN dealer for this service. NISSAN recommends that all seat belt assemblies in use during a collision be replaced unless the collision was minor and the belts show no damage and continue to operate properly. Seat belt assemblies not in use during a collision should also be inspected and replaced if either damage or improper operation is noted.**
- **All child restraints and attaching hardware should be inspected after any collision. Always follow the restraint manufacturer's inspection instructions and replacement recommendations. The child restraints should be replaced if they are damaged.**

SEAT BELT WARNING LIGHT

Both the driver's and passenger's front seats are equipped with a seat belt warning light. The warning light, located on the instrument panel, will show the status of the driver and passenger seat belt.

NOTE:

The front passenger seat belt warning light will illuminate for a period of time. If the seat is occupied and seat belt is latched within that period of time, the light will go out.

For additional information, refer to "Warning lights, indicator lights and audible reminders" in the "Instruments and controls" section of this manual.

PREGNANT WOMEN

NISSAN recommends that pregnant women use seat belts. The seat belt should be worn snug and always position the lap belt as low as possible around the hips, not the waist. Place the shoulder belt over your shoulder and across your chest. Never run the lap/shoulder belt over your abdominal area. Contact your doctor for specific recommendations.

INJURED PERSONS

NISSAN recommends that injured persons use seat belts. Check with your doctor for specific recommendations.

THREE-POINT TYPE SEAT BELT WITH RETRACTOR

⚠ WARNING

- **Every person who drives or rides in this vehicle should use a seat belt at all times. Children should be in the rear seats (if so equipped) and in an appropriate restraint.**
- **Do not ride in a moving vehicle when the seatback is reclined. This can be dangerous. The shoulder belt will not be against your body. In an accident, you could be thrown into it and receive neck or other serious injuries. You could also slide under the lap belt and receive serious internal injuries.**
- **For the most effective protection when the vehicle is in motion, the seat should be upright. Always sit well back and upright in the seat with both feet on the floor and adjust the seat belt properly.**

- **Do not allow children to play with the seat belts. Most seating positions are equipped with Automatic Locking Retractor (ALR) mode seat belts. If the seat belt becomes wrapped around a child's neck with the ALR mode activated, the child can be seriously injured or killed if the seat belt retracts and becomes tight. This can occur even if the vehicle is parked. Unbuckle the seat belt to release the child. If the seat belt cannot be unbuckled or is already unbuckled, release the child by cutting the seat belt with a suitable tool (such as a knife or scissors) to release the seat belt.**

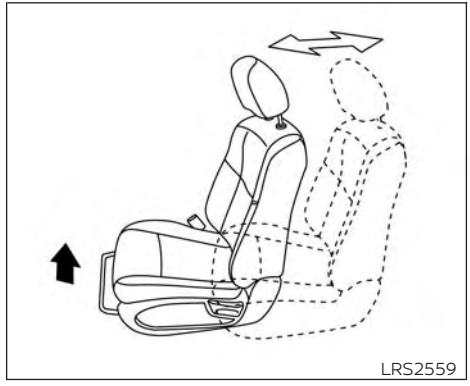

Manual front seat shown (Single Cab models and if so equipped for King Cab® and Crew Cab models)

Fastening the seat belts

1. Adjust the seat. For additional information, refer to "Seats" in this section.

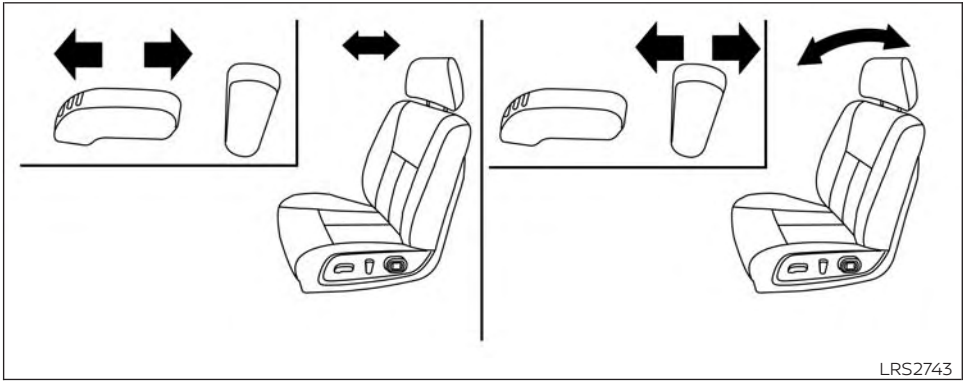

Front power captain's chair seat shown (if so equipped for King Cab® and Crew Cab models)

2. Slowly pull the seat belt out of the retractor and insert the tongue into the buckle Ⓐ until you hear and feel the latch engage.

   - **The retractor is designed to lock during a sudden stop or on impact. A slow pulling motion permits the seat belt to move and allows you some freedom of movement in the seat.**
   - **If the seat belt cannot be pulled from its fully retracted position, firmly pull the belt and release it. Then smoothly pull the belt out of the retractor.**

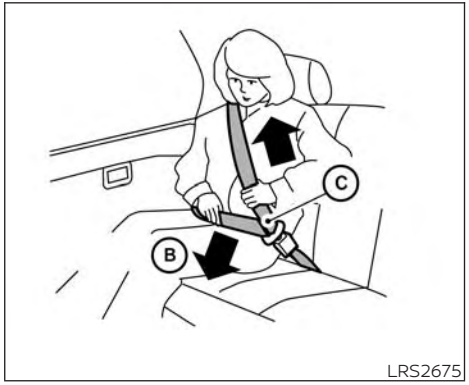

LRS2675

3. Position the lap belt portion **low and snug on the hips** Ⓑ as shown.
4. Pull the shoulder belt portion toward the retractor to take up extra slack Ⓒ. Be sure the shoulder belt is routed over your shoulder and across your chest.

The front passenger seat, front center seat (if so equipped), and the rear seating positions' (if so equipped) three-point seat belts have two modes of operation:

- Emergency Locking Retractor (ELR)
- Automatic Locking Retractor (ALR)

The ELR mode allows the seat belt to extend and retract to allow the driver and passengers some freedom of movement in the seat. The ELR locks the seat belt when the vehicle slows down rapidly or during certain impacts.

The ALR mode (child restraint mode) locks the seat belt for child restraint installation.

When the ALR mode is activated, the seat belt cannot be extended again until the seat belt tongue is detached from the buckle and fully retracted. The seat belt returns to the ELR mode after the seat belt fully retracts. For additional information, refer to "Child restraints" in this section.

The ALR mode should be used only for child restraint installation. During normal seat belt use by an occupant, the ALR mode should not be activated. If it is activated, it may cause uncomfortable seat belt tension. It can also change the operation of the front passenger air bag. For additional information, refer to "Supplemental Restraint System (SRS)" in this section.

⚠ WARNING

When fastening the seat belts, be certain that the seatbacks are completely secured in the latched position. If they are not completely secured, passengers may be injured in an accident or sudden stop.

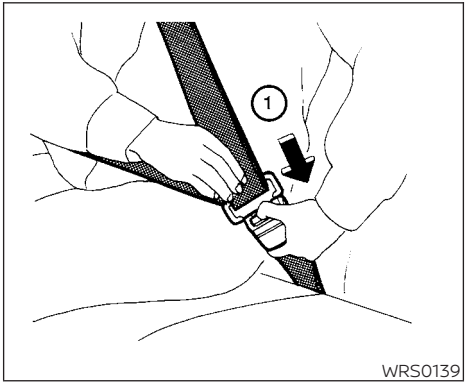

Unfastening the seat belts

To unfasten the seat belt, press the button on the buckle ①. The seat belt automatically retracts.

Checking seat belt operation

Seat belt retractors are designed to lock seat belt movement by two separate methods:

- When the seat belt is pulled quickly from the retractor
- When the vehicle slows down rapidly

To increase your confidence in the seat belts, check the operation as follows:

- Grasp the shoulder belt and pull forward quickly. The retractor should lock and restrict further belt movement.

If the retractor does not lock during this check, get the system checked. It is recommended that you visit a NISSAN dealer for this service, or to learn more about seat belt operation.

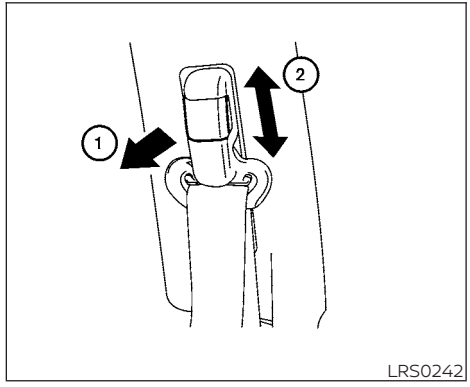

Shoulder belt height adjustment (front seats)

The shoulder belt anchor height should be adjusted to the position best for you. For additional information, refer to "Precautions on seat belt usage" in this section. To adjust, pull out the adjustment button ① and move the shoulder belt anchor to the desired position ②, so the belt passes over the center of the shoulder. The belt should be away from your face and neck, but not falling off your shoulder. Release the adjustment button to lock the shoulder belt anchor into position.

⚠ WARNING

- **After adjustment, release the adjustment button and try to move the shoulder belt anchor up and down to make sure it is securely fixed in position.**
- **The shoulder belt anchor height should be adjusted to the position best for you. Failure to do so may reduce the effectiveness of the entire restraint system and increase the chance or severity of injury in an accident.**

SEAT BELT EXTENDERS

If, because of body size or driving position, it is not possible to properly fit the lap/shoulder belt and fasten it, an extender that is compatible with the installed seat belts is available for purchase. The extender adds approximately 8 in (200 mm) of length and may be used for either the driver or front passenger seating position. It is recommended that you visit a NISSAN dealer for assistance with purchasing an extender if an extender is required.

⚠ WARNING

- **Only NISSAN seat belt extenders, made by the same company which made the original equipment seat belts, should be used with NISSAN seat belts.**
- **Adults and children who can use the standard seat belt should not use an extender. Such unnecessary use could result in serious personal injury in the event of an accident.**
- **Never use seat belt extenders to install child restraints. If the child restraint is not secured properly, the child could be seriously injured or killed in a collision or a sudden stop.**

SEAT BELT MAINTENANCE

- **To clean the seat belt webbing,** apply a mild soap solution or any solution recommended for cleaning upholstery or carpet. Then wipe with a cloth and allow the seat belts to dry in the shade. Do not allow the seat belts to retract until they are completely dry.
- **If dirt builds up in the shoulder belt guide of the seat belt anchors,** the seat belts may retract slowly. Wipe the shoulder belt guide with a clean, dry cloth.
- **Periodically check to see that the seat belt and the metal components,** such as buckles, tongues, retractors, flexible wires and anchors, work properly. If loose parts, deterioration, cuts or other damage on the webbing is found, the entire seat belt assembly should be replaced.

⚠ WARNING

Do not allow children to play with the seat belts. Most seating positions are equipped with Automatic Locking Retractor (ALR) mode seat belts. If the seat belt becomes wrapped around a child's neck with the ALR mode activated, the child can be seriously injured or killed if the seat belt retracts and becomes tight. This can occur even if the vehicle is parked. Unbuckle the seat belt to release the child. If the seat belt cannot be unbuckled or is already unbuckled, release the child by cutting the seat belt with a suitable tool (such as a knife or scissors) to release the seat belt.

Children need adults to help protect them. They need to be properly restrained.

In addition to the general information in this manual, child safety information is available from many other sources, including doctors, teachers, government traffic safety offices, and community organizations. Every child is different, so be sure to learn the best way to transport your child.

There are three basic types of child restraint systems:

- Rear-facing child restraints
- Forward-facing child restraints
- Booster seats

The proper restraint depends on the child's size. Generally, infants up to about 1 year and less than 20 lbs. (9 kg) should be placed in rear-facing child restraints. Forward-facing child restraints are available for children who outgrow rear-facing child restraints and are at least 1 year old. Booster seats are used to help position a vehicle lap/shoulder belt on a child who can no longer use a forward-facing child restraint.

⚠ WARNING

Infants and children need special protection. The vehicle's seat belts may not fit them properly. The shoulder belt may come too close to the face or neck. The lap belt may not fit over their small hip bones. In an accident, an improperly fitting seat belt could cause serious or fatal injury. Always use appropriate child restraints.

All U.S. states and Canadian provinces or territories require the use of approved child restraints for infants and small children. For additional information, refer to "Child restraints" in this section.

A child restraint may be secured in the vehicle by using either the LATCH (Lower Anchors and Tethers for CHildren) system or with the vehicle seat belt. For additional information, refer to "Child restraints" in this section.

NISSAN recommends that all pre-teens and children be restrained in the rear seat (if so equipped). Studies show that children are safer when properly restrained in the rear seat than in the front seat.

This is especially important because your vehicle has a supplemental restraint system (air bag system) for the front passenger. For additional information, refer to "Supplemental Restraint System (SRS)" in this section.

INFANTS

Infants up to at least 1 year old should be placed in a rear-facing child restraint. NISSAN recommends that infants be placed in child restraints that comply with Federal Motor Vehicle Safety Standards or Canadian Motor Vehicle Safety Standards. You should choose a child restraint that fits your vehicle and always follow the manufacturer's instructions for installation and use.

SMALL CHILDREN

Children that are over 1 year old and weigh at least 20 lbs. (9 kg) should remain in a rear-facing child restraint as long as possible up to the height or weight limit of the child restraint. Children who outgrow the height or weight limit of the rear-facing child restraint and are at least 1 year old should be secured in a forward-facing child restraint with a harness. Refer to the manufacturer's instructions for minimum and maximum weight and height recommendations. NISSAN recommends that small children be placed in child restraints that comply with Federal Motor Vehicle Safety Standards or Canadian Motor Vehicle Safety Standards. You should choose a child restraint that fits your vehicle and always follow the manufacturer's instructions for installation and use.

LARGER CHILDREN

Children should remain in a forward-facing child restraint with a harness until they reach the maximum height or weight limit allowed by the child restraint manufacturer.

Once a child outgrows the height or weight limit of the harness-equipped forward-facing child restraint, NISSAN recommends that the child be placed in a commercially available booster seat to obtain proper seat belt fit. For a seat belt to fit properly, the booster seat should raise the child so that the shoulder belt is properly positioned across the chest and the top, middle portion of the shoulder. The shoulder belt should not cross the neck or face and should not fall off the shoulder. The lap belt should lie snugly across the lower hips or upper thighs, not the abdomen. A booster seat can only be used in seating positions that have a three-point type seat belt. The booster seat should fit the vehicle seat and have a label certifying that it complies with Federal Motor Vehicle Safety Standards or Canadian Motor Vehicle Safety Standards.

A booster seat should be used until the child can pass the seat belt fit test below:

- Are the child's back and hips against the vehicle seatback?
- Is the child able to sit without slouching?
- Do the child's knees bend easily over the front edge of the seat with feet flat on the floor?
- Can the child safely wear the seat belt (lap belt low and snug across the hips and shoulder belt across mid-chest and shoulder)?
- Is the child able to use the properly adjusted head restraint/headrest?
- Will the child be able to stay in position for the entire ride?

LRS2690

If you answered no to any of these questions, the child should remain in a booster seat using a three-point type seat belt.

NOTE:

Laws in some communities may follow different guidelines. Check local and state regulations to confirm your child is using the correct restraint system before traveling.

⚠ WARNING

Never let a child stand or kneel on any seat and do not allow a child in the cargo area. The child could be seriously injured or killed in a sudden stop or collision.

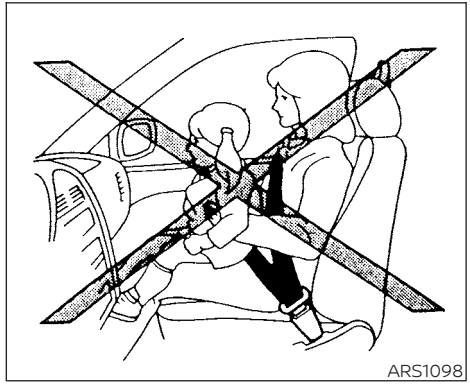
ARS1098

PRECAUTIONS ON CHILD RESTRAINTS

⚠ WARNING

- **Failure to follow the warnings and instructions for proper use and installation of child restraints could result in serious injury or death of a child or other passengers in a sudden stop or collision:**
  - **The child restraint must be used and installed properly. Always follow all of the child restraint manufacturer's instructions for installation and use.**

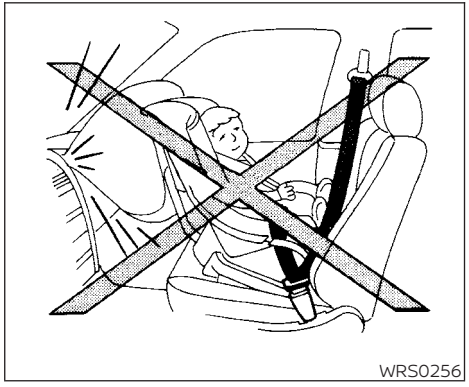

- Infants and children should never be held on anyone's lap. Even the strongest adult cannot resist the forces of a collision.
- Do not put a seat belt around both a child and another passenger.
- NISSAN recommends that all child restraints be installed in the rear seat (if so equipped). Studies show that children are safer when properly restrained in the rear seat (if so equipped) than in the front seat. If you must install a forward-facing child restraint in the front seat, refer to "Forward-facing child restraint installation using the seat belts — passenger seat and center seat (Single Cab models and King Cab® Rear Seat Delete models)" in this section.
- Even with the NISSAN Advanced Air Bag System (if so equipped), never install a rear-facing child restraint in the front seat. An inflating air bag could seriously injure or kill a child. A rear-facing child restraint must only be used in the rear seat (if so equipped).
- Be sure to purchase a child restraint that will fit the child and vehicle. Some child restraints may not fit properly in your vehicle.
- Child restraint anchorages are designed to withstand only those loads imposed by correctly fitted child restraints. Under no circumstances are they to be used to attach adult seat belts, or other items or equipment to the vehicle. Doing so could damage the child restraint anchorages. The child restraint will not be properly installed using the damaged anchorage, and a child could be seriously injured or killed in a collision.
- Never use the anchor points for adult seat belts, or other items.
- A child restraint with a top tether strap should not be used in the front passenger seat.
- Keep seatbacks as upright as possible after fitting the child restraint.
- Infants and children should always be placed in an appropriate child restraint while in the vehicle.

- **When the child restraint is not in use, keep it secured with the LATCH system or a seat belt. In a sudden stop or collision, loose objects can injure occupants or damage the vehicle.**

⚠ CAUTION

A child restraint in a closed vehicle can become very hot. Check the seating surface and buckles before placing a child in the child restraint.

Vehicles equipped with rear seats are equipped with a universal child restraint anchor system, referred to as the LATCH (Lower Anchors and Tethers for CHildren) system. Some child restraints include rigid or webbing-mounted attachments that can be connected to these anchors. For additional information, refer to "LATCH (Lower Anchors and Tethers for CHildren) system (Crew Cab models and King Cab® models with rear bench seat)" in this section.

If you do not have a LATCH compatible child restraint, the vehicle seat belts can be used.

Several manufacturers offer child restraints for infants and children of various sizes. When selecting any child restraint, keep the following points in mind:

- Choose only a restraint with a label certifying that it complies with Federal Motor Vehicle Safety Standard 213 or Canadian Motor Vehicle Safety Standard 213.
- Check the child restraint in your vehicle to be sure it is compatible with the vehicle's seat and seat belt system.
- If the child restraint is compatible with your vehicle, place your child in the child restraint and check the various adjustments to be sure the child restraint is compatible with your child. Choose a child restraint that is designed for your child's height and weight. Always follow all recommended procedures.
- If the combined weight of the child and child restraint is less than 65 lbs. (29.5 kg), you may use either the LATCH anchors or the seat belt to install the child restraint (not both at the same time).
- If the combined weight of the child and child restraint is greater than 65 lbs. (29.5 kg), use the vehicle's seat belt (not the lower anchors) to install the child restraint.
- Be sure to follow the child restraint manufacturer's instructions for installation.

All U.S. states and Canadian provinces or territories require that infants and small children be restrained in an approved child restraint at all times while the vehicle is being operated. Canadian law requires the top tether strap on forward-facing child restraints be secured to the designated anchor point on the vehicle.

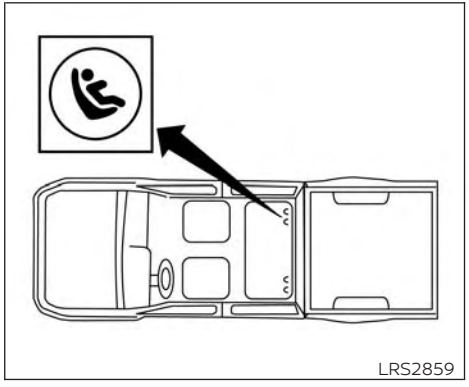

LATCH system lower anchor locations

LATCH (Lower Anchors and Tethers for CHildren) SYSTEM (Crew Cab models and King Cab® models with rear bench seat)

Your vehicle is equipped with special anchor points that are used with LATCH system compatible child restraints. This system may also be referred to as the ISOFIX or ISOFIX compatible system. With this system, you do not have to use a vehicle seat belt to secure the child restraint unless the combined weight of the child and child restraint exceeds 65 lbs. (29.5 kg). If the combined weight of the child and child restraint is greater than 65 lbs. (29.5 kg) use the vehicle's seat belt (not the lower anchors) to install the child restraint. Be sure to follow the child restraint manufacturer's instructions for installation.

The LATCH anchor points are provided to install child restraints in the rear outboard seating positions only. Do not attempt to install a child restraint in the center position using the LATCH anchors.

LATCH lower anchor

⚠ WARNING

Failure to follow the warnings and instructions for proper use and installation of child restraints could result in serious injury or death of a child or other passengers in a sudden stop or collision:

- **Attach LATCH system compatible child restraints only at the locations shown in the illustration.**
- **Do not secure a child restraint in the center rear seating position using the LATCH lower anchors. The child restraint will not be secured properly.**
- **Inspect the lower anchors by inserting your fingers into the lower anchor area. Feel to make sure there are no obstructions over the anchors such as seat belt webbing or seat cushion material. The child restraint will not be secured properly if the lower anchors are obstructed.**

Child restraint anchorages are designed to withstand only those loads imposed by correctly fitted child restraints. Under no circumstances are they to be used to attach adult seat belts, or other items or equipment to the vehicle. Doing so could damage the child restraint anchorages. The child restraint will not be properly installed using the damaged anchorage, and a child could be seriously injured or killed in a collision.

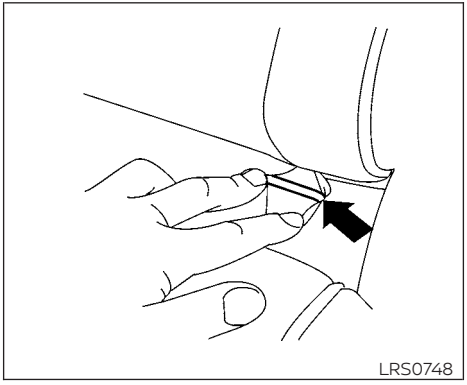

LATCH lower anchor location

LATCH lower anchor location

The LATCH lower anchors are located as shown. A label is attached to the seatback to help you locate the LATCH lower anchors.

LATCH lower anchor point locations

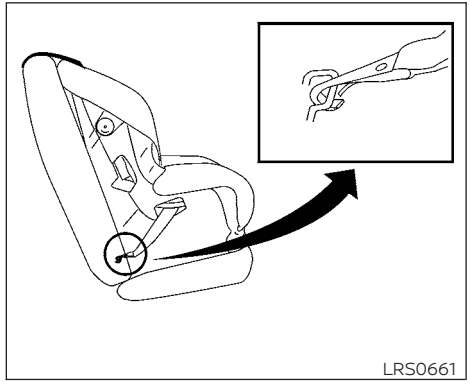

LATCH webbing-mounted attachment

Installing child restraint LATCH lower anchor attachments

LATCH compatible child restraints include two rigid or webbing-mounted attachments that can be connected to two anchors located at certain seating positions in your vehicle. With this system, you do not have to use a vehicle seat belt to secure the child restraint. Check your child restraint for a label stating that it is compatible with LATCH. This information may also be in the instructions provided by the child restraint manufacturer.

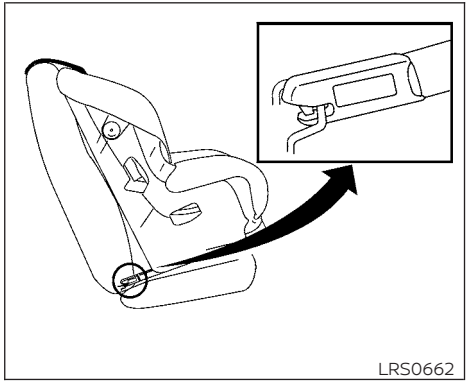

LATCH rigid-mounted attachment

When installing a child restraint, carefully read and follow the instructions in this manual and those supplied with the child restraint.

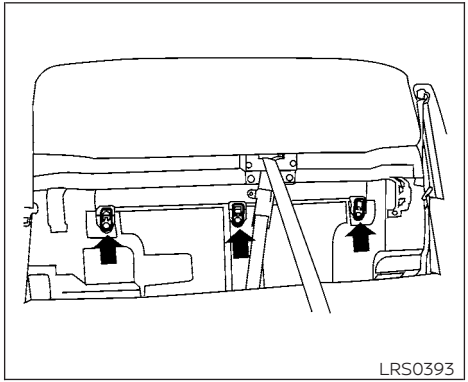

Crew Cab models and King Cab® models with rear bench seat

TOP TETHER ANCHOR POINT LOCATIONS

Anchor points are located in the following locations:

- Under the rear window behind the bench seat (Single Cab models) or behind the rear bench seat (Crew Cab models and King Cab® models with rear bench seat) as shown.

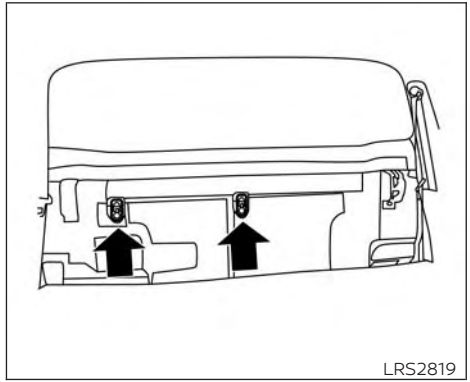

Single Cab models

- On the back of the passenger and center seats (King Cab® Rear Seat Delete models) as shown.

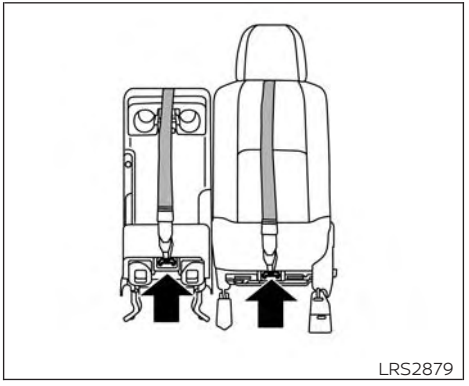

King Cab® Rear Seat Delete models

REAR-FACING CHILD RESTRAINT INSTALLATION USING LATCH (Crew Cab models and King Cab® models with rear bench seat)

For additional information, refer to all Warnings and Cautions in the "Child safety" and "Child restraints" sections of this manual before installing a child restraint.

Do not use the lower anchors if the combined weight of the child and the child restraint exceeds 65 lbs. (29.5 kg). If the combined weight of the child and the child restraint is greater than 65 lbs. (29.5 kg), use the vehicle's seat belt (not the lower anchors) to install the child restraint. Be sure to follow the child restraint manufacturer's instructions for installation.

Follow these steps to install a rear-facing child restraint in the rear bench seats using the LATCH system:

1. Position the child restraint on the seat. Always follow the child restraint manufacturer's instructions.

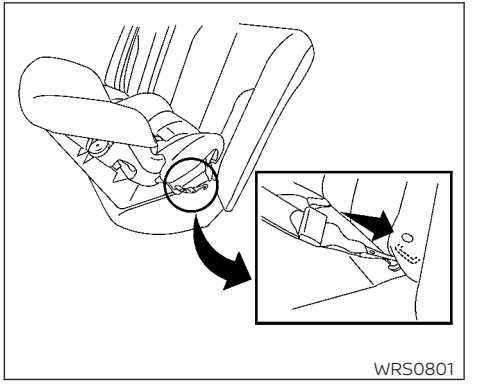

Rear-facing webbing-mounted – step 2

2. Secure the child restraint anchor attachments to the LATCH lower anchors. Check to make sure the LATCH attachment is properly attached to the lower anchors.

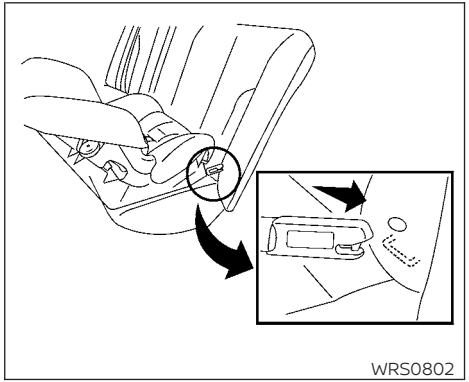

Rear-facing rigid-mounted – step 2

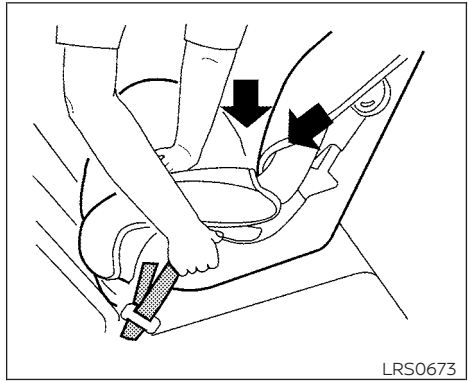

Rear-facing – step 3

3. For child restraints that are equipped with webbing-mounted attachments, remove any additional slack from the anchor attachments. Press downward and rearward firmly in the center of the child restraint with your hand to compress the vehicle seat cushion and seatback while tightening the webbing of the anchor attachments.

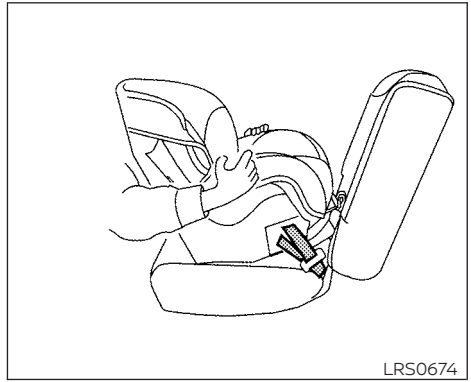

Rear-facing – step 4

4. After attaching the child restraint, test it before you place the child in it. Push it from side to side while holding the child restraint near the LATCH attachment path. The child restraint should not move more than 1 inch (25 mm), from side to side. Try to tug it forward and check to see if the LATCH attachment holds the restraint in place. If the restraint is not secure, tighten the LATCH attachment as necessary, or put the restraint in another seat and test it again. You may need to try a different child restraint or try installing by using

the vehicle seat belt (if applicable). Not all child restraints fit in all types of vehicles.

5. Check to make sure the child restraint is properly secured prior to each use. If the child restraint is loose, repeat steps 2 through 4.

REAR-FACING CHILD RESTRAINT INSTALLATION USING THE SEAT BELTS (Crew Cab models and King Cab® models with rear bench seat)

⚠ WARNING

The three-point seat belt with Automatic Locking Retractor (ALR) must be used when installing a child restraint. Failure to use the ALR mode will result in the child restraint not being properly secured. The restraint could tip over or be loose and cause injury to a child in a sudden stop or collision.

For additional information, refer to all Warnings and Cautions in the "Child safety" and "Child restraints" sections of this manual before installing a child restraint.

Do not use the lower anchors if the combined weight of the child and the child restraint exceeds 65 lbs. (29.5 kg). If the combined weight of the child and the child restraint is greater than 65 lbs. (29.5 kg), use the vehicle's seat belt (not the lower anchors) to install the child restraint. Be sure to follow the child restraint manufacturer's instructions for installation.

Follow these steps to install a rear-facing child restraint using the vehicle seat belts in the rear seats:

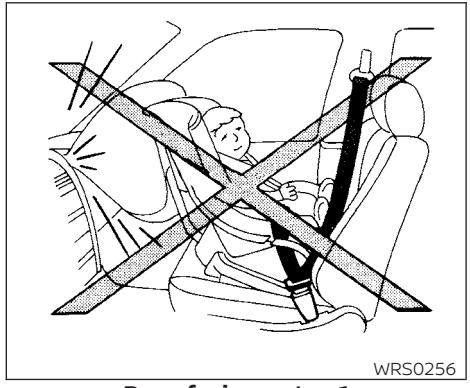

Rear-facing – step 1

1. **Child restraints for infants must be used in the rear-facing direction and therefore must not be used in the front seat.** Position the child restraint on the seat. Always follow the child restraint manufacturer's instructions.

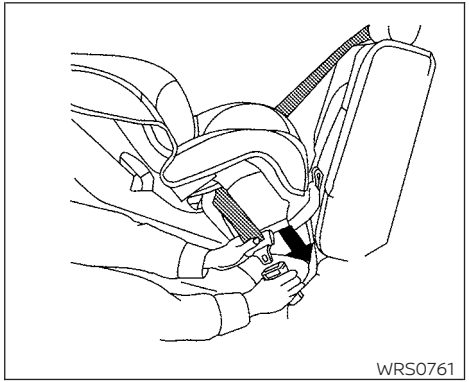

Rear-facing – step 2

2. Route the seat belt tongue through the child restraint and insert it into the buckle until you hear and feel the latch engage. Be sure to follow the child restraint manufacturer's instructions for belt routing.

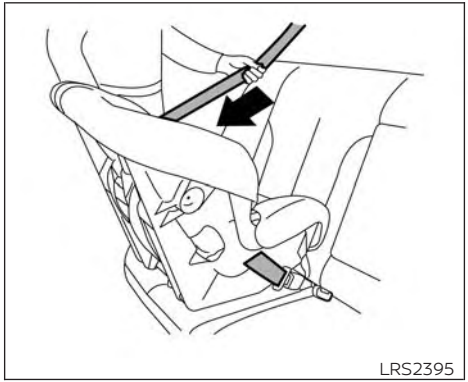

Rear-facing – step 3

3. Pull the shoulder belt until the belt is fully extended. At this time, the seat belt retractor is in the ALR mode (child restraint mode). It reverts to the ELR mode when the seat belt is fully retracted.

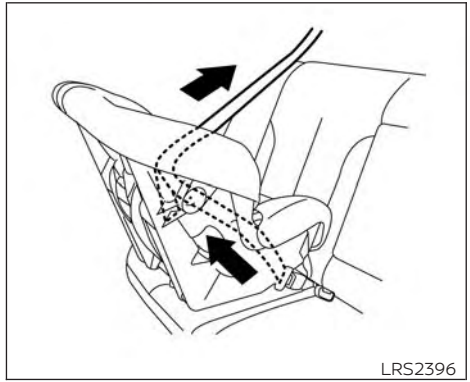

Rear-facing – step 4

4. Allow the seat belt to retract. Pull up on the shoulder belt to remove any slack in the belt.

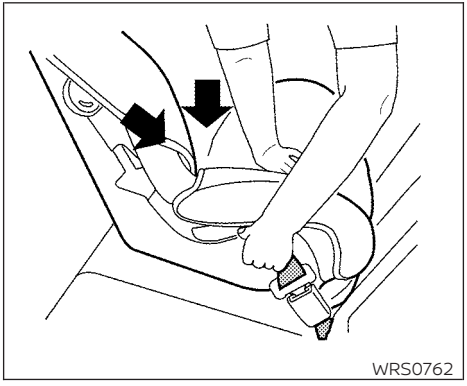

Rear-facing – step 5

5. Remove any additional slack from the seat belt; press downward and rearward firmly in the center of the child restraint to compress the vehicle seat cushion and seatback while pulling up on the seat belt.

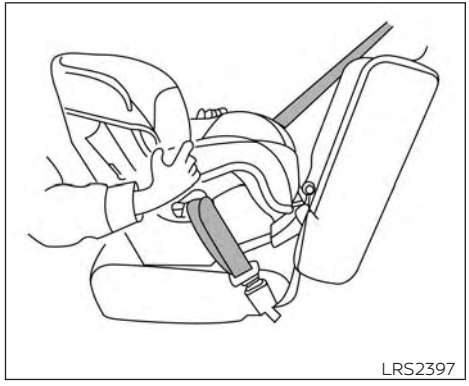

Rear-facing – step 6

6. After attaching the child restraint, test it before you place the child in it. Push it from side to side while holding the child restraint near the seat belt path. The child restraint should not move more than 1 inch (25 mm), from side to side. Try to tug it forward and check to see if the belt holds the restraint in place. If the restraint is not secure, tighten the seat belt as necessary, or put the restraint in another seat and test it again. You may need to try a different child restraint. Not all child restraints fit in all types of vehicles.
7. Check to make sure that the child restraint is properly secured prior to each use. If the seat belt is not locked, repeat steps 1 through 6.

After the child restraint is removed and the seat belt fully retracted, the ALR mode (child restraint mode) is canceled.

REAR-FACING CHILD RESTRAINT INSTALLATION USING THE SEAT BELTS (Single Cab models and King Cab® Rear Seat Delete models)

⚠ WARNING

- **Never install a rear-facing child restraint in the front seat. An inflating supplemental air bag could seriously injure or kill your child.**
- **Never let an infant who requires the use of a rear-facing child restraint ride in this vehicle.**

FORWARD-FACING CHILD RESTRAINT INSTALLATION USING LATCH (Crew Cab models and King Cab® models with rear bench seat)

For additional information, refer to all Warnings and Cautions in the "Child safety" and "Child restraints" sections of this manual before installing a child restraint.

Do not use the lower anchors if the combined weight of the child and the child restraint exceeds 65 lbs. (29.5 kg). If the combined weight of the child and the child restraint is greater than 65 lbs. (29.5 kg), use the vehicle's seat belt (not the lower anchors) to install the child restraint. Be sure to follow the child restraint manufacturer's instructions for installation.

Follow these steps to install a forward-facing child restraint in the rear bench seats using the LATCH system:

1. Position the child restraint on the seat. Always follow the child restraint manufacturer's instructions.

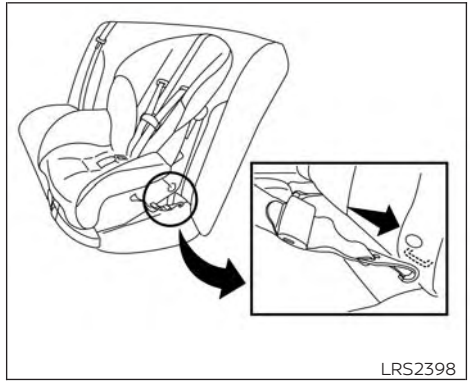

Forward-facing webbing-mounted – step 2

2. Secure the child restraint anchor attachments to the LATCH lower anchors. Check to make sure the LATCH attachment is properly attached to the lower anchors.

   If the child restraint is equipped with a top tether strap, route the top tether strap and secure the tether strap to the tether anchor point. For additional information, refer to "Installing top tether strap" in this section.

   Do not install child restraints that require the use of a top tether strap in seating positions that do not have a top tether anchor.

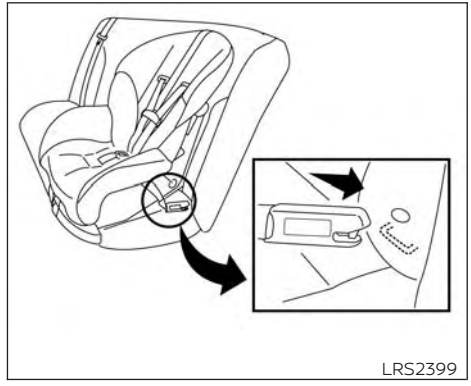

Forward-facing rigid-mounted – step 2

3. The back of the child restraint should be secured against the vehicle seatback.

   If necessary, adjust or remove the head restraint/headrest to obtain the correct child restraint fit. If the head restraint/headrest is removed, store it in a secure place. **Be sure to reinstall the head restraint/headrest when the child restraint is removed.** For additional information, refer to "Head restraints/headrests" in this section.

If the seating position does not have an adjustable head restraint/headrest and it is interfering with the proper child restraint fit, try another seating position or a different child restraint.

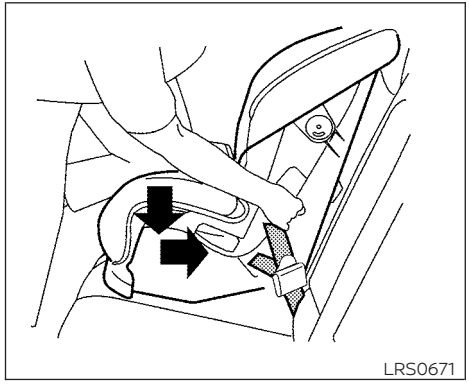

Forward-facing – step 4

4. For child restraints that are equipped with webbing-mounted attachments, remove any additional slack from the anchor attachments. Press downward and rearward firmly in the center of the child restraint with your knee to compress the vehicle seat cushion and seatback while tightening the webbing of the anchor attachments.

5. Tighten the tether strap according to the manufacturer's instructions to remove any slack.

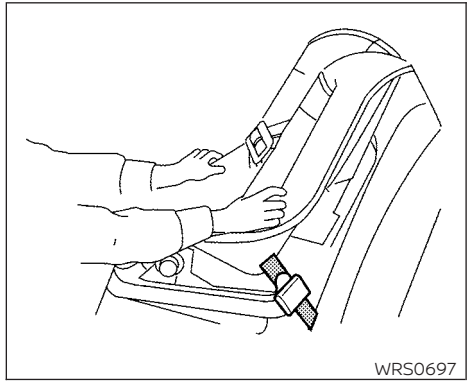

Forward-facing – step 6

6. After attaching the child restraint, test it before you place the child in it. Push it from side to side while holding the child restraint near the LATCH attachment path. The child restraint should not move more than 1 inch (25 mm), from side to side. Try to tug it forward and check to see if the LATCH attachment holds the restraint in place. If the restraint is not secure, tighten the LATCH attachment as necessary, or put the restraint in another seat and test it again. You may need to try a different child restraint. Not all child restraints fit in all types of vehicles.

7. Check to make sure the child restraint is properly secured prior to each use. If the child restraint is loose, repeat steps 3 through 6.

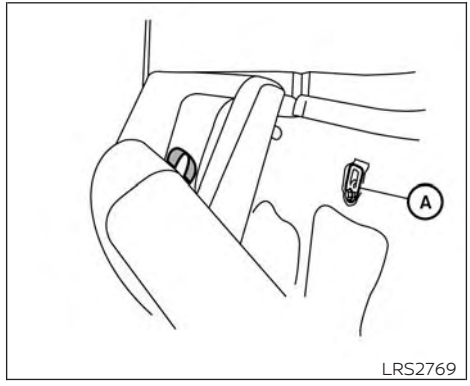

Rear bench seat

Ⓐ Anchor points

Installing top tether strap

The child restraint top tether strap must be used when installing the child restraint with the LATCH lower anchor attachments.

First, secure the child restraint with the LATCH lower anchors (rear bench outboarding seating positions only).

Rear bench seat

OUTBOARD SEATING POSITIONS

1. Remove the head restraint/headrest and store it in a secure place. Be sure to reinstall the head restraint/headrest when the child restraint is removed. For additional information, refer to "Head restraints/headrests" in this section for head restraint/headrest adjustment, removal and installation information.
2. Position the top tether strap over the seatback.
3. Secure the tether strap to the tether anchor point as shown.
4. Tighten the tether strap according to the manufacturer's instructions to remove any slack.

If you have any questions when installing a top tether strap, it is recommended that you visit a NISSAN dealer for this service.

⚠ WARNING

Child restraint anchorages are designed to withstand only those loads imposed by correctly fitted child restraints. Under no circumstances are they to be used to attach adult seat belts, or other items or equipment to the vehicle. Doing so could damage the child restraint anchorages. The child restraint will not be properly installed using the damaged anchorage, and a child could be seriously injured or killed in a collision.

FORWARD-FACING CHILD RESTRAINT INSTALLATION USING THE SEAT BELTS — REAR BENCH SEAT (Crew Cab models and King Cab® models with rear bench seat)

⚠ WARNING

The three-point seat belt with Automatic Locking Retractor (ALR) must be used when installing a child restraint. Failure to use the ALR mode will result in the child restraint not being properly secured. The restraint could tip over or be loose and cause injury to a child in a sudden stop or collision.

For additional information, refer to all Warnings and Cautions in the "Child safety" and "Child restraints" sections of this manual before installing a child restraint.

Do not use the lower anchors if the combined weight of the child and the child restraint exceeds 65 lbs. (29.5 kg). If the combined weight of the child and the child restraint is greater than 65 lbs. (29.5 kg), use the vehicle's seat belt (not the lower anchors) to install the child restraint. Be sure to follow the child restraint manufacturer's instructions for installation.

Follow these steps to install a forward-facing child restraint using the vehicle seat belt in the rear seats:

1. **If you must install a child restraint in the front seat, it should be placed in a forward-facing direction only. Move the seat to the rearmost position. Child restraints for infants must be used in the rear-facing direction and therefore must not be used in the front seat.**
2. Position the child restraint on the seat. Always follow the child restraint manufacturer's instructions.

   The back of the child restraint should be secured against the vehicle seatback.

   If necessary, adjust or remove the head restraint/headrest to obtain the correct child restraint fit. If the head restraint/headrest is removed, store it in a secure place. **Be sure to reinstall the head restraint/headrest when the child restraint is removed.** For additional information, refer to "Head restraints/headrests" in this section.

If the seating position does not have an adjustable head restraint/headrest and it is interfering with the proper child restraint fit, try another seating position or a different child restraint.

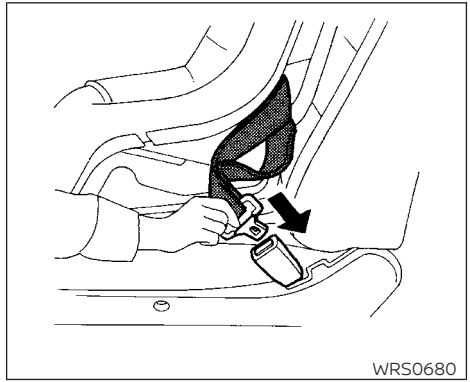

Forward-facing – step 3

3. Route the seat belt tongue through the child restraint and insert it into the buckle until you hear and feel the latch engage. Be sure to follow the child restraint manufacturer's instructions for belt routing.

   If the child restraint is equipped with a top tether strap, route the top tether strap and secure the tether strap to the tether anchor point (rear seat installation only). For additional information, refer to "Installing top tether strap" in this section.

Do not install child restraints that require the use of a top tether strap in seating positions that do not have a top tether anchor.

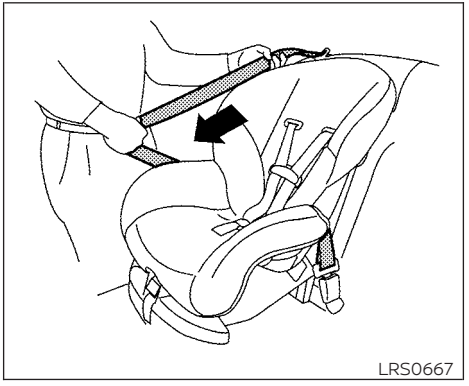

Forward-facing – step 4

4. Pull the shoulder belt until the belt is fully extended. At this time, the seat belt retractor is in the ALR mode (child restraint mode). It reverts to ELR mode when the seat belt is fully retracted.

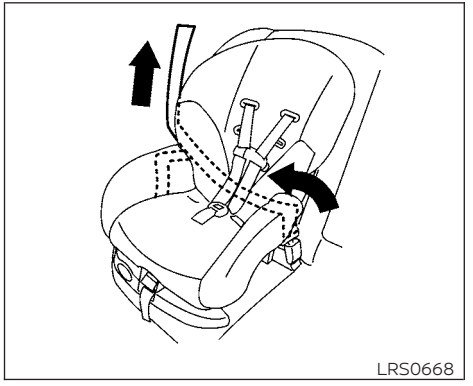

Forward-facing – step 5

5. Allow the seat belt to retract. Pull up on the shoulder belt to remove any slack in the belt.

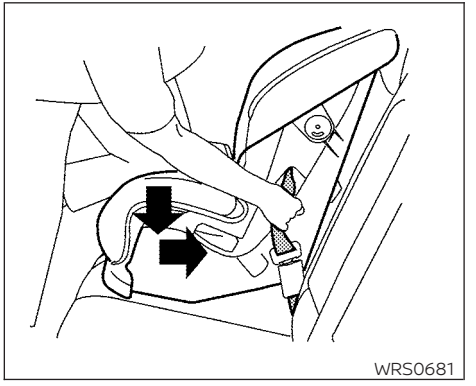

Forward-facing – step 6

6. Remove any additional slack from the seat belt; press downward and rearward firmly in the center of the child restraint with your knee to compress the vehicle seat cushion and seatback while pulling up on the seat belt.

7. Tighten the tether strap according to the manufacturer's instructions to remove any slack.

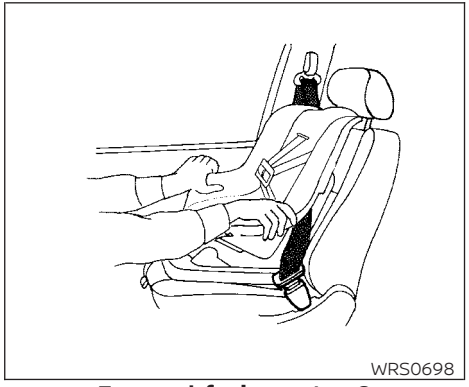

Forward-facing – step 8

8. After attaching the child restraint, test it before you place the child in it. Push it from side to side while holding the child restraint near the seat belt path. The child restraint should not move more than 1 inch (25 mm), from side to side. Try to tug it forward and check to see if the seat belt holds the restraint in place. If the restraint is not secure, tighten the seat belt as necessary, or put the restraint in another seat and test it again. You may need to try a different child restraint. Not all child restraints fit in all types of vehicles.
9. Check to make sure the child restraint is properly secured prior to each use. If the seat belt is not locked, repeat steps 3 through 8.

After the child restraint is removed and the seat belt is fully retracted, the ALR mode (child restraint mode) is canceled.

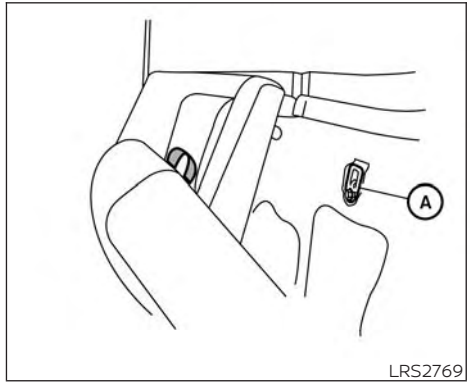

Ⓐ Anchor points

Installing top tether strap

The child restraint top tether strap must be used when installing the child restraint with seat belts.

First, secure the child restraint with the seat belt.

Rear bench seat

OUTBOARD SEATING POSITIONS

1. Remove the head restraint/headrest and store it in a secure place. Be sure to reinstall the head restraint/headrest when the child restraint is removed. For additional information, refer to "Head restraints/headrests" in this section.
2. Position the top tether strap as shown.
3. Secure the tether strap to the tether anchor point as shown.
4. Tighten the tether strap according to the manufacturer's instructions to remove any slack.

CENTER SEATING POSITION

1. Position the top tether strap as shown.
2. Secure the tether strap to the tether anchor point as shown.
3. Tighten the tether strap according to the manufacturer's instructions to remove any slack.

If you have any questions when installing a top tether strap, it is recommended that you visit a NISSAN dealer for this service.

⚠ WARNING

Child restraint anchorages are designed to withstand only those loads imposed by correctly fitted child restraints. Under no circumstances are they to be used to attach adult seat belts, or other items or equipment to the vehicle. Doing so could damage the child restraint anchorages. The child restraint will not be properly installed using the damaged anchorage, and a child could be seriously injured or killed in a collision.

FORWARD-FACING CHILD RESTRAINT INSTALLATION USING THE SEAT BELTS — PASSENGER SEAT AND CENTER SEAT (Single Cab models and King Cab® Rear Seat Delete models)

⚠ WARNING

The three-point seat belt with Automatic Locking Retractor (ALR) must be used when installing a child restraint. Failure to use the ALR mode will result in the child restraint not being properly secured. The restraint could tip over or be loose and cause injury to a child in a sudden stop or collision. Also, it can change the operation of the front passenger air bag. For additional information, refer to "Front passenger air bag and status light" in this section.

For additional information, refer to all Warnings and Cautions in the "Child safety" and "Child restraints" sections of this manual before installing a child restraint.

Do not use the lower anchors if the combined weight of the child and the child restraint exceeds 65 lbs. (29.5 kg). If the combined weight of the child and the child restraint is greater than 65 lbs. (29.5 kg), use the vehicle's seat belt (not the lower anchors) to install the child restraint. Be sure to follow the child restraint manufacturer's instructions for installation.

Follow these steps to install a forward-facing child restraint using the vehicle seat belt:

1. **If you must install a child restraint in the front seat, it should be placed in a forward-facing direction only. Move the seat to the rearmost position. Child restraints for infants must be used in the rear-facing direction and therefore must not be used in the front seat.**
2. Position the child restraint on the seat. Always follow the child restraint manufacturer's instructions.

   The back of the child restraint should be secured against the vehicle seatback.

If necessary, adjust or remove the head restraint/headrest to obtain the correct child restraint fit. If the head restraint/headrest is removed, store it in a secure place. **Be sure to reinstall the head restraint/headrest when the child restraint is removed.** For additional information, refer to "Head restraints/headrests" in this section.

If the seating position does not have an adjustable head restraint/headrest and it is interfering with the proper child restraint fit, try another seating position or a different child restraint.

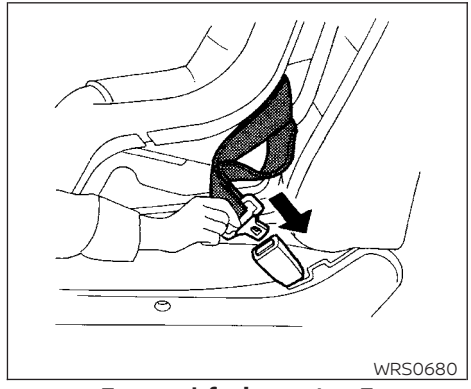

Forward-facing – step 3

3. Route the seat belt tongue through the child restraint and insert it into the buckle until you hear and feel the latch engage. Be sure to follow the child restraint manufacturer's instructions for belt routing.

   If the child restraint is equipped with a top tether strap, route the top tether strap and secure the tether strap to the tether anchor point. For additional information, refer to "Installing top tether strap" in this section.

Do not install child restraints that require the use of a top tether strap in seating positions that do not have a top tether anchor.

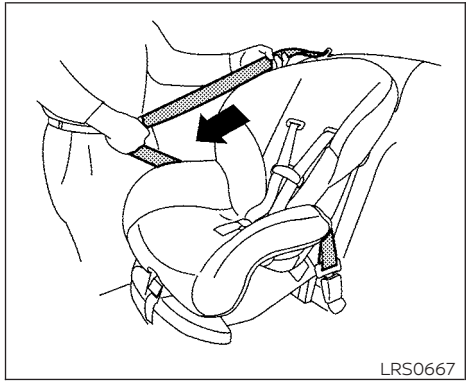

Forward-facing – step 4

4. Pull the shoulder belt until the belt is fully extended. At this time, the seat belt retractor is in the ALR mode (child restraint mode). It reverts to ELR mode when the seat belt is fully retracted.

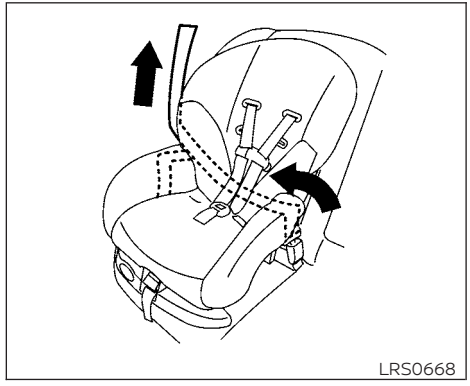

Forward-facing – step 5

5. Allow the seat belt to retract. Pull up on the shoulder belt to remove any slack in the belt.

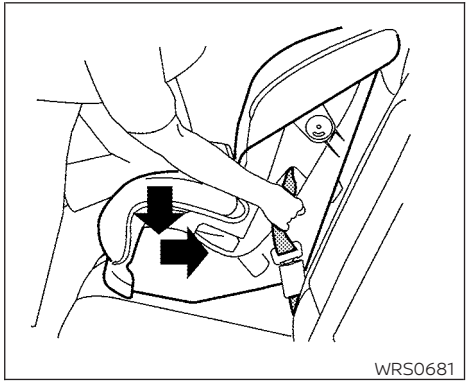

Forward-facing – step 6

6. Remove any additional slack from the seat belt; press downward and rearward firmly in the center of the child restraint with your knee to compress the vehicle seat cushion and seatback while pulling up on the seat belt.

7. Tighten the tether strap according to the manufacturer's instructions to remove any slack.

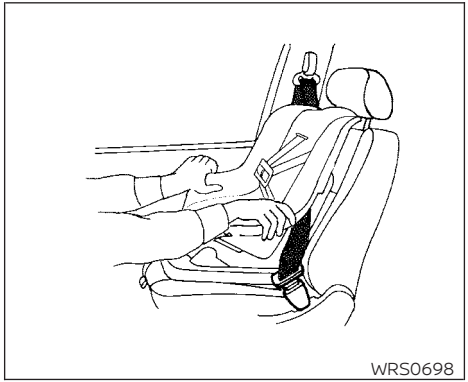

Forward-facing – step 8

8. After attaching the child restraint, test it before you place the child in it. Push it from side to side while holding the child restraint near the seat belt path. The child restraint should not move more than 1 inch (25 mm), from side to side. Try to tug it forward and check to see if the seat belt holds the restraint in place. If the restraint is not secure, tighten the seat belt as necessary, or put the restraint in another seat and test it again. You may need to try a different child restraint. Not all child restraints fit in all types of vehicles.

9. Check to make sure the child restraint is properly secured prior to each use. If the seat belt is not locked, repeat steps 3 through 8.

Forward-facing — step 10

10. If the child restraint is installed in the front passenger seat, place the ignition switch in the ON position. The front passenger air bag status light (if so equipped) may or may not illuminate, depending on the size of the child and the type of child restraint being used. For additional information, refer to "Front passenger air bag and status light" in this section.

After the child restraint is removed and the seat belt is fully retracted, the ALR mode (child restraint mode) is canceled.

Installing top tether strap

The child restraint top tether strap must be used when installing the child restraint with seat belts.

First, secure the child restraint with the seat belt.

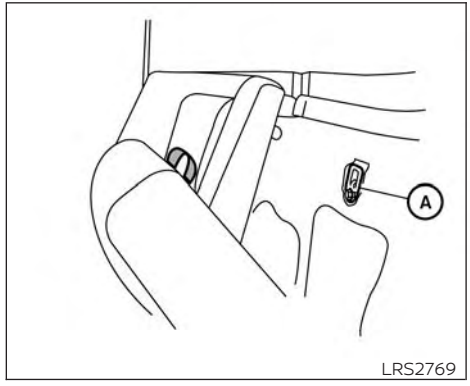

Single Cab models

Ⓐ Anchor points

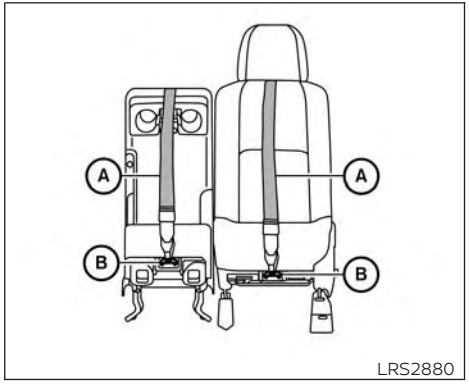

King Cab® Rear Seat Delete models

Ⓐ Top tether straps

Ⓑ Anchor points

Bench seat

PASSENGER SEATING POSITION

1. Remove the head restraint/headrest and store it in a secure place. Be sure to reinstall the head restraint/headrest when the child restraint is removed. For additional information, refer to "Head restraints/headrests" in this section.
2. Position the top tether strap over the seatback.
3. Secure the tether strap to the tether anchor point as shown.
4. Tighten the tether strap according to the manufacturer's instructions to remove any slack.

CENTER SEATING POSITION

1. Position the top tether strap over the seatback.
2. Secure the tether strap to the tether anchor point as shown.
3. Tighten the tether strap according to the manufacturer's instructions to remove any slack.

If you have any questions when installing a top tether strap, it is recommended that you visit a NISSAN dealer for this service.

⚠ WARNING

Child restraint anchorages are designed to withstand only those loads imposed by correctly fitted child restraints. Under no circumstances are they to be used to attach adult seat belts, or other items or equipment to the vehicle. Doing so could damage the child restraint anchorages. The child restraint will not be properly installed using the damaged anchorage, and a child could be seriously injured or killed in a collision.

BOOSTER SEATS

For additional information on installing a booster seat in your vehicle, follow the instructions outlined in this section.

Precautions on booster seats

⚠ WARNING

If a booster seat and seat belt are not used properly, the risk of a child being injured or killed in a sudden stop or collision greatly increases:

- **Make sure the shoulder portion of the belt is away from the child's face and neck and the lap portion of the belt does not cross the stomach.**
- **Make sure the shoulder belt is not behind the child or under the child's arm.**
- **A booster seat must only be installed in a seating position that has a lap/shoulder belt.**

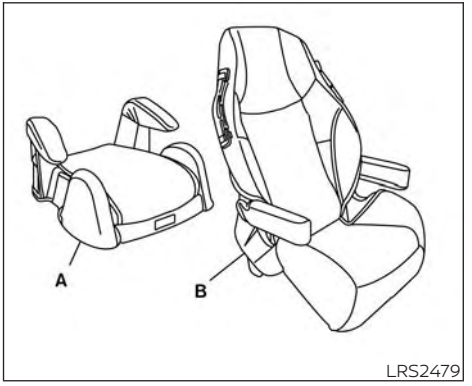

A. Low back booster seat

B. High back booster seat

Booster seats of various sizes are offered by several manufacturers. When selecting any booster seat, keep the following points in mind:

- Choose only a booster seat with a label certifying that it complies with Federal Motor Vehicle Safety Standard 213 or Canadian Motor Vehicle Safety Standard 213.
- Check the booster seat in your vehicle to be sure it is compatible with the vehicle's seat and seat belt system.

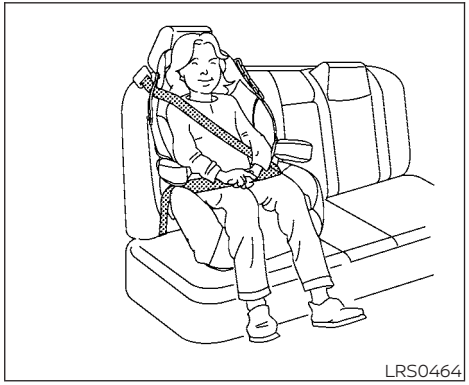

- Make sure the child's head will be properly supported by the booster seat or vehicle seat. The seatback must be at or above the center of the child's ears. For example, if a low back booster seat is chosen, the vehicle seatback must be at or above the center of the child's ears. If the seatback is lower than the center of the child's ears, a high back booster seat should be used.
- If the booster seat is compatible with your vehicle, place the child in the booster seat and check the various adjustments to be sure the booster seat is compatible with the child. Always follow all recommended procedures.

All U.S. states and Canadian provinces or territories require that infants and small children be restrained in an approved child restraint at all times while the vehicle is being operated.

The instructions in this section apply to booster seat installation in the rear seats (if so equipped) or the front passenger seat.

Booster seat installation

⚠ WARNING

To avoid injury to child, do not use the lap/shoulder belt in the Automatic Locking Retractor (ALR) mode when using a booster seat with the seat belts.

For additional information, refer to all Warnings and Cautions in the "Child safety", "Child restraints" and "Booster seats" sections of this manual before installing a child restraint.

Follow these steps to install a booster seat in the rear seat (if so equipped) or in the front passenger seat:

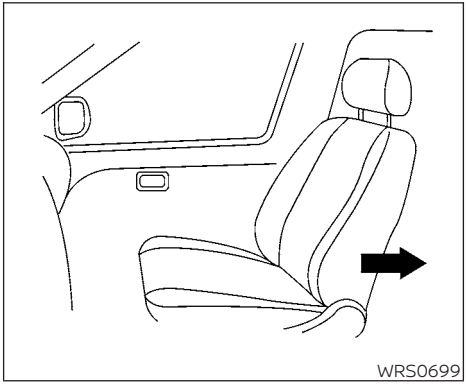

1. **If you must install a booster seat in the front seat, move the seat to the rearmost position.**
2. Position the booster seat on the seat. Only place it in a front-facing direction. Always follow the booster seat manufacturer's instructions.

Front passenger position

3. The booster seat should be positioned on the vehicle seat so that it is stable.

   If necessary, adjust or remove the head restraint/headrest to obtain the correct booster seat fit. If the head restraint/headrest is removed, store it in a secure place. **Be sure to reinstall the head restraint/headrest when the booster seat is removed.** For additional information, refer to "Head restraints/headrests" in this section.

   If the seating position does not have an adjustable head restraint/headrest and it is interfering with the proper booster seat fit, try another seating position or a different booster seat.
4. Position the lap portion of the seat belt low and snug on the child's hips. Be sure to follow the booster seat manufacturer's instructions for adjusting the seat belt routing.
5. Pull the shoulder belt portion of the seat belt toward the retractor to take up extra slack. Be sure the shoulder belt is positioned across the top, middle portion of the child's shoulder. Be sure to follow the booster seat manufacturer's instructions for adjusting the seat belt routing.
6. Follow the warnings, cautions and instructions for properly fastening a seat belt shown in "Three-point type seat belt with retractor" in this section.

WRS0475

7. If the booster seat is installed in the front passenger seat, place the ignition switch in the ON position. The front passenger air bag status light (if so equipped) may or may not illuminate, depending on the size of the child and the type of booster seat being used. For additional information, refer to "Front passenger air bag and status light" in this section.

PRECAUTIONS ON SRS (with NISSAN Advanced Air Bag System) (if so equipped)

This SRS section contains important information concerning the following systems:

- Driver and front passenger supplemental front-impact air bag (NISSAN Advanced Air Bag System)
- Front seat-mounted side-impact supplemental air bag
- Roof-mounted curtain side-impact and rollover supplemental air bag
- Seat belt with pretensioner(s) (front seats)

Supplemental front-impact air bag system

The NISSAN Advanced Air Bag System can help cushion the impact force to the head and chest of the driver and right front passenger in certain frontal collisions.

Front seat-mounted side-impact supplemental air bag system

This system can help cushion the impact force to the chest area of the driver and right front passenger in certain side impact collisions. The side air bag is designed to inflate on the side where the vehicle is impacted.

Roof-mounted curtain side-impact and rollover supplemental air bag system

This system can help cushion the impact force to the head of occupants in front and rear outboard seating positions (if so equipped) in certain side impact or rollover collisions. In a side impact, the curtain air bags are designed to inflate on the side where the vehicle is impacted. In a rollover, curtain air bags are designed to inflate and remain inflated for a short time.

The SRS is designed to **supplement** the crash protection provided by the seat belts and is **not a substitute** for them. Seat belts should always be correctly worn and the occupant seated a suitable distance away from the steering wheel, instrument panel and door finishers. For additional information, refer to "Seat belts" in this section.

The supplemental air bags operate only when the ignition switch is in the ON or START position.

After turning the ignition key to the ON position, the supplemental air bag warning light illuminates. The supplemental air bag warning light will turn off after about 7 seconds if the system is operational.

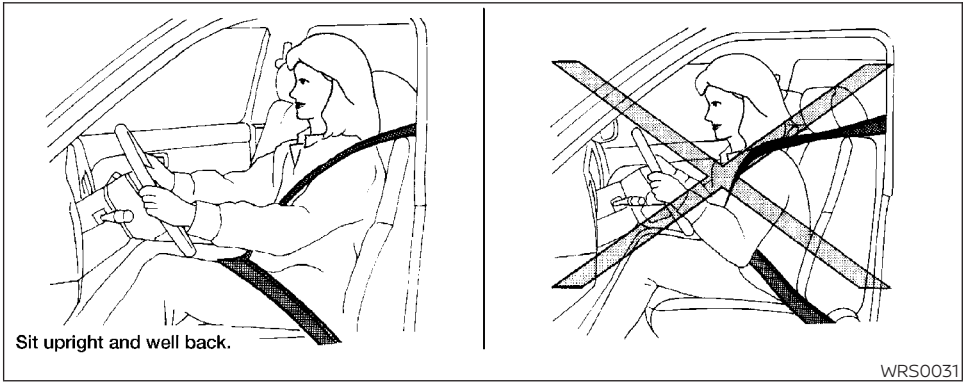

⚠ WARNING

- **The front air bags ordinarily will not inflate in the event of a side impact, rear impact, rollover, or lower severity frontal collision. Always wear your seat belts to help reduce the risk or severity of injury in various kinds of accidents.**
- **The front passenger air bag will not inflate if the passenger air bag status light is lit or if the front passenger seat is unoccupied. For additional information, refer to "Front passenger air bag and status light" in this section.**
- **The seat belts and the front air bags are most effective when you are sitting well back and upright in the seat. The front air bags inflate with great force. Even with the NISSAN Advanced Air Bag System, if you are unrestrained, leaning forward, sitting sideways or out of position in any way, you are at greater risk of injury or death in a crash. You may also receive serious or fatal injuries from the front air bag if you are up against it when it inflates. Always sit back against the seatback and as far away as practical from the steering wheel or instrument panel. Always properly use the seat belts.**
- **The driver and front passenger seat belt buckles are equipped with sensors that detect if the seat belts are fastened. The NISSAN Advanced Air Bag System monitors the severity of a collision and inflates the air bags as needed. Failure to properly wear seat belts can increase the risk or severity of injury in an accident.**
- **The front passenger seat is equipped with an occupant classification sensor (weight sensor) that turns the front passenger air bag OFF under some conditions. This sensor is only used in this seat. Failure to be properly seated and wearing the seat belt can increase the risk or severity of injury in an accident. For additional information, refer to "Front passenger air bag and status light" in this section.**
- **Keep hands on the outside of the steering wheel. Placing them inside the steering wheel rim could increase the risk that they are injured when the front air bag inflates.**

- **The air bag system monitors the severity of a collision and then inflates the air bags as needed. Failure to properly wear seat belts can increase the risk or severity of injury in an accident.**

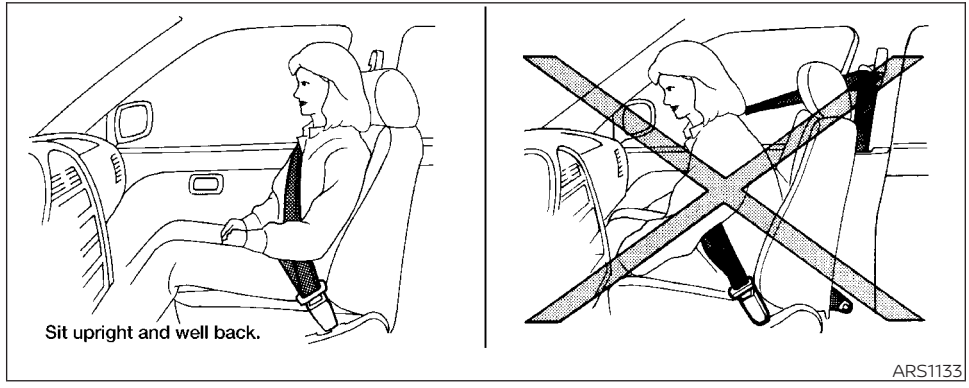

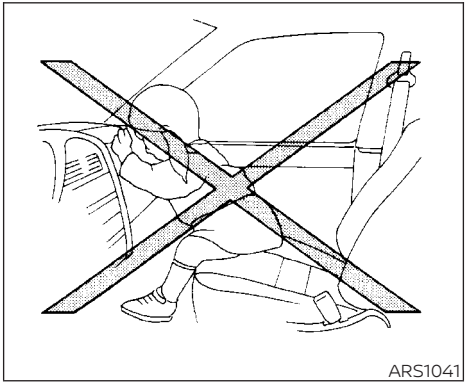

WARNING

- **Never let children ride unrestrained or extend their hands or face out of the window. Do not attempt to hold them in your lap or arms. Some examples of dangerous riding positions are shown in the illustrations.**

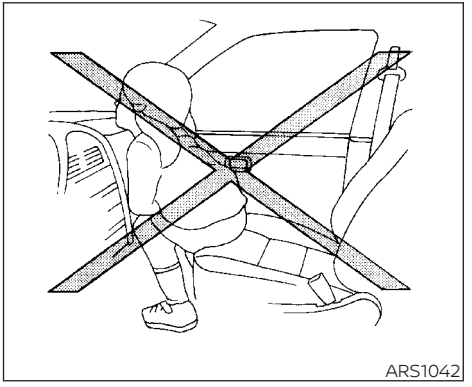

WARNING

- **Children may be severely injured or killed when the front air bags, side air bags or curtain air bags inflate if they are not properly restrained. Pre-teens and children should be properly restrained in the rear seat (if so equipped), if possible.**

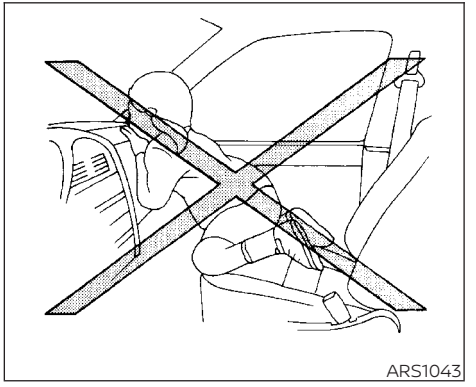

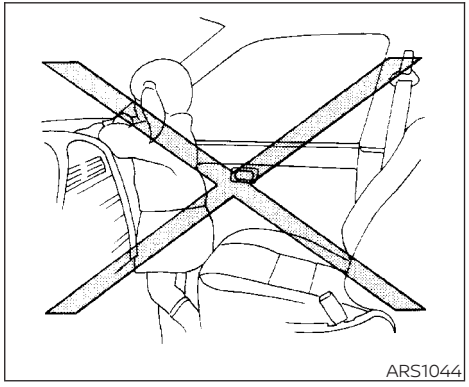
ARS1044

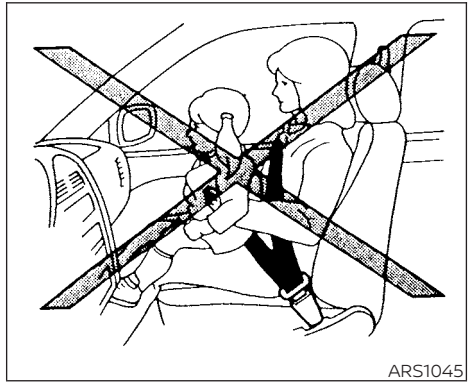
ARS1045

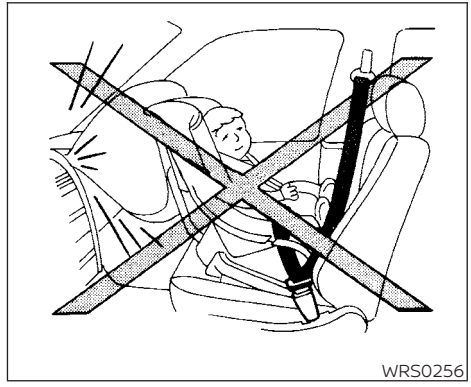
WRS0256

⚠ WARNING

- **Even with the NISSAN Advanced Air Bag System, never install a rear-facing child restraint in the front seat. An inflating air bag could seriously injure or kill a child. A rear-facing child restraint must only be used in the rear seat (if so equipped).**

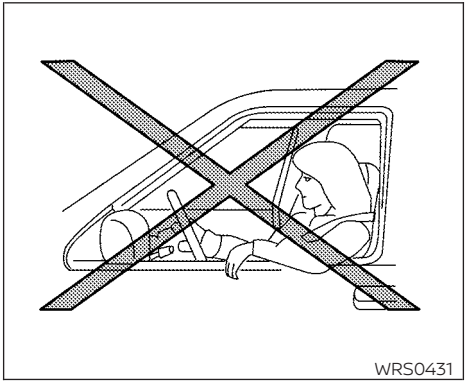

Do not lean against doors or windows.

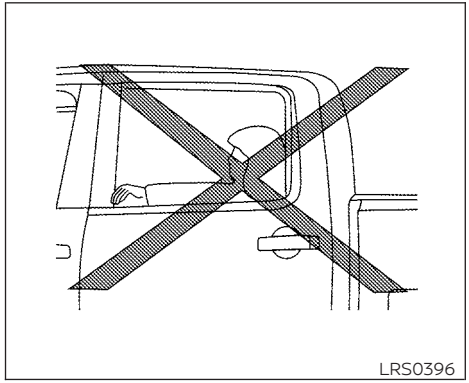

Do not lean against doors or windows.

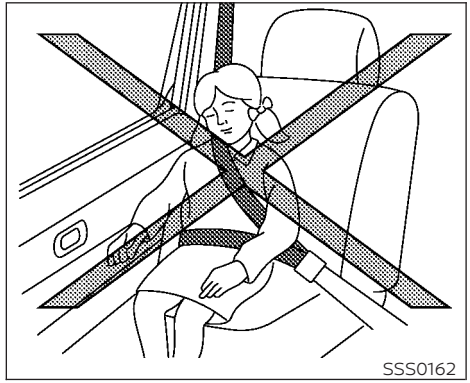

Do not lean against doors or windows.

⚠ WARNING

Front seat-mounted side-impact supplemental air bags and roof-mounted curtain side-impact and roll-over supplemental air bags:

- **The side air bags and curtain air bags ordinarily will not inflate in the event of a frontal impact, rear impact, or lower severity side collision. Always wear your seat belts to help reduce the risk or severity of injury in various kinds of accidents.**

⚠ WARNING

- **The seat belts, the side air bags and curtain air bags are most effective when you are sitting well back and upright in the seat. The side air bag and curtain air bag inflate with great force. Do not allow anyone to place their hand, leg or face near the side air bag on the side of the seatback of the front seat or near the side roof rails. Do not allow anyone sitting in the front seats or rear outboard seats (if so equipped) to extend their hand out of the window or lean against the door. Some examples of dangerous riding positions are shown in the previous illustrations.**

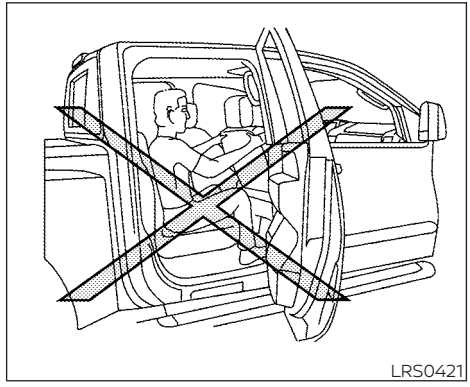
LRS0421

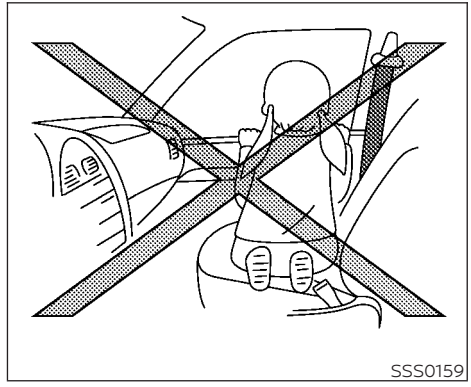
SSS0159

⚠ WARNING

- **When sitting in the rear seat (if so equipped), do not hold onto the seatback of the front seat. If the side air bag inflates, you may be seriously injured. Be especially careful with children, who should always be properly restrained. Some examples of dangerous riding positions are shown in the illustrations.**
- **Do not use seat covers on the front seatbacks. They may interfere with side air bag inflation.**

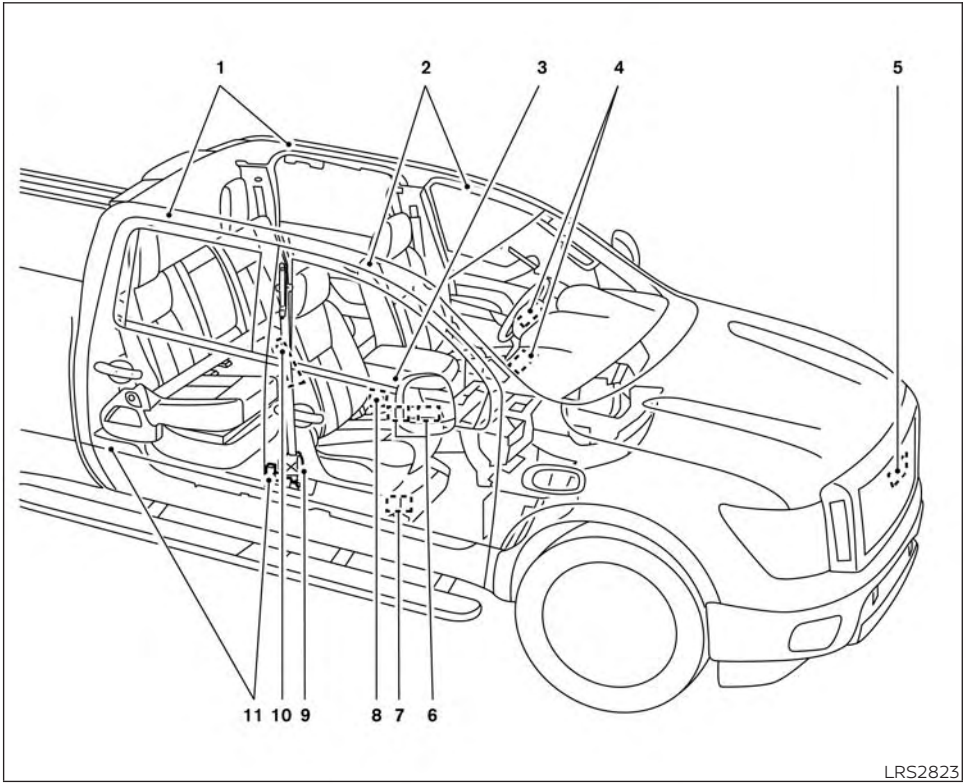

NISSAN Advanced Air Bag System (front seats)

1. Roof-mounted curtain side-impact and rollover supplemental air bag inflators
2. Roof-mounted curtain side-impact and rollover supplemental air bags
3. Air bag Control Unit (ACU)
4. Supplemental front-impact air bag modules
5. Crash zone sensor
6. Occupant classification sensor (weight sensor)
7. Occupant classification system control unit
8. Seat belt buckle switches
9. Seat belt with pretensioner(s) (front seats)
10. Front seat-mounted side-impact supplemental air bag modules
11. Satellite sensors

⚠ WARNING

To ensure proper operation of the passenger's NISSAN Advanced Air Bag System, please observe the following items.

- **Do not allow a passenger in the rear bench seats (if so equipped) to push or pull on the seatback pocket.**
- **Do not place heavy loads heavier than 1 kg (2.2 lbs.) on the seatback, head restraint or in the seatback pocket.**
- **Do not store luggage behind the seat that can press into the seatback.**
- **Do not position the front passenger seat so it contacts the rear bench seats (if so equipped). If the front seat does contact the rear bench seats (if so equipped), the air bag system may determine a sensor malfunction has occurred and the front passenger air bag status light may illuminate and the supplemental air bag warning light may flash.**
- **If a forward-facing child restraint is installed in the front passenger seat, do not position the front passenger seat so the child restraint contacts the instrument panel. If the child restraint does contact the instrument panel, the system may determine the seat as occupied and the passenger air bag may deploy in a collision. Also the front passenger air bag status light may not illuminate. For additional information, refer to "Child restraints" in this section.**
- **Confirm the operating condition with the front passenger air bag status light.**
- **If you notice that the front passenger air bag status light is not operating as described in this section, get the occupant classification system checked. It is recommended that you take your vehicle to a NISSAN dealer for this service.**
- **Until you have confirmed with a dealer that your passenger seat occupant classification system is working properly, position the occupants in the rear seating positions (if so equipped). Do not use the front seat or transport a child in the vehicle (Single Cab and King Cab® Rear Seat Delete models only).**

This vehicle is equipped with the NISSAN Advanced Air Bag System for the driver and front passenger seats. **All of the information, cautions and warnings in this manual still apply and must be followed.**

The driver supplemental front-impact air bag is located in the center of the steering wheel. The front passenger supplemental front-impact air bag is mounted in the dashboard above the glove box. The front air bags are designed to inflate in higher severity frontal collisions, although they may inflate if the forces in another type of collision are similar to those of a higher severity frontal impact. They may not inflate in certain frontal collisions. Vehicle damage (or lack of it) is not always an indication of proper front air bag system operation.

The NISSAN Advanced Air Bag System monitors information from the crash zone sensor and the Air bag Control Unit (ACU). Inflator operation is based on the severity of a collision and seat belt usage for the driver. For the front passenger, the occupant classification sensor is also monitored. Based upon the information from the sensor, only one front air bag may inflate in a crash, depending on the crash severity. Additionally, the front passenger air bag may be automatically turned off under some conditions, depending on the weight detected on the front passenger seat and how the seat belt is used. If the front passenger air bag is OFF, the front passenger air bag status light will be illuminated (if the seat is unoccupied, the light will not be illuminated, but the air bag will be off). For additional information, refer to "Front passenger air bag and status light" in this section. One front air bag inflating does not indicate improper performance of the system.

If you have any questions about your air bag system, it is recommended that you contact NISSAN or a NISSAN dealer. If you are considering modification of your vehicle due to a disability, you may also contact NISSAN. Contact information is contained in the front of this Owner's Manual.

When a front air bag inflates, a fairly loud noise may be heard, followed by the release of smoke. This smoke is not harmful and does not indicate a fire. Care should be taken to not inhale it, as it may cause irritation and choking. Those with a history of a breathing condition should get fresh air promptly.

Front air bags, along with the use of seat belts, help to cushion the impact force on the face and chest of the front occupants. They can help save lives and reduce serious injuries. However, an inflating front air bag may cause facial abrasions or other injuries. Front air bags do not provide restraint to the lower body.

Even with NISSAN Advanced Air Bags, seat belts should be correctly worn and the driver and front passenger seated upright as far as practical away from the steering wheel or instrument panel. The front air bags inflate quickly in order to help protect the front occupants. Because of this, the force of the front air bag inflating can increase the risk of injury if the occupant is too close to, or is against, the front air bag module during inflation.

The front air bags deflate quickly after a collision.

The front air bags operate only when the ignition switch is in the ON position.

After placing the ignition switch in the ON position, the supplemental air bag warning light illuminates. The supplemental air bag warning light will turn off after about 7 seconds if the system is operational.

Front passenger air bag and status light

⚠ WARNING

The front passenger air bag is designed to automatically turn OFF under some conditions. Read this section carefully to learn how it operates. Proper use of the seat, seat belt and child restraints is necessary for most effective protection. Failure to follow all instructions in this manual concerning the use of seats, seat belts and child restraints can increase the risk or severity of injury in an accident.

Status light

The front passenger seat is equipped with an occupant classification sensor (weight sensor) that turns the front passenger air bag on or off depending on the weight applied to the front passenger seat. The status of the front passenger air bag (ON or OFF) is indicated by the front passenger air bag status light which is located on the instrument panel.

After the ignition switch is placed in the "ON" position, the front passenger air bag status light on the instrument panel illuminates for about 7 seconds and then turns off or remains illuminated depending on the front passenger seat occupied status. The light operates as follows:

- Unoccupied front passenger's seat: The light is OFF and the front passenger air bag is OFF and will not inflate in a crash.
- Front passenger seat occupied by a small adult, child or child restraint as outlined in this section: The light may or may not illuminate, depending on the size of the occupant or the type of child restraint being used. When the light is illuminated, the front passenger air bag is OFF and will not inflate in a crash. For additional information, refer to "Front passenger air bag" in this section.
- Occupied front passenger seat and the passenger meets the conditions as outlined in this section: The light is OFF to indicate that the front passenger air bag is operational.

In addition to the above, certain objects placed on the front passenger seat may also cause the light to operate as described above depending on their weight.

For additional information, refer to "Normal operation" and "Troubleshooting" in this section.

Front passenger air bag

The front passenger air bag is designed to automatically turn OFF when the vehicle is operated under some conditions as described below in accordance with U.S. regulations. If the front passenger air bag is OFF, it will not inflate in a crash. The driver air bag and other air bags in your vehicle are not part of this system.

The purpose of the regulation is to help reduce the risk of injury or death from an inflating air bag to certain front passenger seat occupants, such as children, by requiring the air bag to be automatically turned OFF under some conditions. Certain sensors are used to meet the requirements.

The occupant classification sensor in this vehicle is a weight sensor. It is designed to detect an occupant and objects on the seat by weight. For example, if a child up to the approximate size and weight of a one year old is properly restrained in the front passenger seat, the NISSAN Advanced Air Bag System is designed to turn the front passenger air bag OFF. For a properly restrained child who is larger than the approximate size and weight of a one year old, the front passenger air bag may or may not be automatically turned OFF, depending on the size of the child and the type of child restraint being used. After installing the child restraint and positioning the child, place the ignition switch in the ON position: if the front passenger air bag status light is illuminated, the air bag is OFF. If the front passenger air bag status light is not illuminated, the air bag will inflate in a crash.

Front passenger seat adult occupants who are properly seated and using the seat belt as outlined in this manual should not cause the front passenger air bag to be automatically turned OFF. For small adults it may be turned OFF, however if the occupant takes his/her weight off the seat cushion (for example, by not sitting upright, by sitting on an edge of the seat, or by otherwise being out of position), this could cause the sensor to turn the air bag OFF. Always be sure to be seated and wearing the seat belt properly for the most effective protection by the seat belt and supplemental air bag.

NISSAN recommends that pre-teens and children be properly restrained in a rear seat (if so equipped). NISSAN also recommends that appropriate child restraints and booster seats be properly installed in a rear seat (if so equipped). If this is not possible, the occupant classification sensor is designed to operate as described above to turn the front passenger air bag OFF for specified child restraints as required by the regulations. Failing to properly secure child restraints and to use the ALR mode may allow the restraint to tip or move in a collision or sudden stop. This can also result in the passenger air bag inflating in a crash instead of being OFF. For additional information, refer to “Child restraints” in this section.

If the front passenger seat is not occupied, the front passenger air bag is designed not to inflate in a crash. However, heavy objects placed on the seat could result in air bag inflation, because of the object’s weight detected by the occupant classification sensor. Other conditions could also result in air bag inflation, such as if a child is standing on the seat, or if two children are on the seat, contrary to the instructions in this manual. Always be sure that you and all vehicle occupants are seated and restrained properly.

Using the front passenger air bag status light, you can monitor when the front passenger air bag is automatically turned OFF

with the seat occupied. The light will not illuminate when the front passenger seat is unoccupied.

If an adult occupant is in the seat but the front passenger air bag status light is illuminated (indicating that the air bag is OFF), it could be that the person is a small adult, or is not sitting on the seat properly or not using the seat belt properly.

If a child restraint must be used in the front seat, the front passenger air bag status light may or may not be illuminated, depending on the size of the child and the type of child restraint being used. Always make sure that the child restraint is installed properly, the seat belt is used properly and the occupant is positioned properly.

If necessary, a NISSAN dealer can check system operation by using a special tool. Until you have confirmed with a dealer that your air bag is working properly, reposition the occupant or child restraint in a rear seat (if so equipped). Do not use the front seat or transport a child in the vehicle (Single Cab and King Cab® Rear Seat Delete models only).

The NISSAN Advanced Air Bag System and front passenger air bag status light will take a few seconds to register a change in the front passenger seat status. For example, if a large adult who is sitting in the front passenger seat exits the vehicle, the front passenger air bag status light will go from OFF to ON for a few seconds and then to OFF. This is normal system operation and does not indicate a malfunction.

If a malfunction occurs in the front passenger air bag system, the supplemental air bag warning light , located in the meter and gauges area of the instrument panel, will blink. Have the system checked. It is recommended that you visit a NISSAN dealer for this service.

Normal operation

In order for the occupant classification sensor system to classify the front passenger based on weight, please follow the precautions and steps outlined below:

Precautions

- Make sure that there are no objects weighing over 2.2 lbs. (1 kg) hanging on the seat or placed in the seatback pocket.
- Make sure that a child restraint or other object is not pressing against the rear of the seatback.
- Make sure that a rear passenger is not pushing or pulling on the back of the front passenger seat.
- Make sure that the front passenger seat or seatback is not forced back against an object on the seat or floor behind it.
- Make sure that there is no object placed under the front passenger seat.

Steps

1. Adjust the seat as outlined in the "Seats" section of this manual. Sit upright, leaning against the seatback, and centered on the seat cushion with your feet comfortably extended to the floor.
2. Make sure there are no objects on your lap.
3. Fasten the seat belt as outlined in the "Seat belts" section of this manual.
4. Remain in this position for 30 seconds allowing the system to classify the front passenger before the vehicle is put into motion.
5. Ensure proper classification by checking the front passenger air bag status light.

NOTE:

This vehicle's occupant classification sensor system locks the classification during driving so it is important that you confirm that the front passenger is properly classified prior to driving. Also, the occupant classification sensor system may recalculate the weight of the occupant when the vehicle comes to a stop (i.e. stop light, stop sign, etc.), so front passenger seat occupants should continue to remain seated as outlined above.

Troubleshooting

If you think the front passenger air bag status light is incorrect:

1. If the light is ON with no front passenger and no objects on the front passenger seat:

This may be due to the following conditions that may be interfering with the weight sensors:

- An object weighing over 1 kg (2.2 lbs.) hanging on the seat or placed in the seatback pocket.
- A child restraint or other object pressing against the rear of the seatback.
- A rear passenger pushing or pulling on the back of the front passenger seat.
- Forcing the front seat or seatback against an object on the seat or floor behind it.
- An object placed under the front passenger seat.
- An object placed between the seat cushion and center console or between the seat cushion and the door.

If the vehicle is moving, please come to a stop when it is safe to do so. Check and correct any of the above conditions. Restart the vehicle and wait 1 minute.

NOTE:

A system check will be performed during which the front passenger air bag status light will remain lit for about 7 seconds initially.

If the light is still ON after this, the vehicle should be checked as soon as possible. It is recommended that you visit a NISSAN dealer for this service.

2. If the light is ON with an adult occupying the front passenger seat:

- Occupant is a small adult — the air bag light is functioning as intended. The front passenger air bag is suppressed.

However, if the occupant is not a small adult, then this may be due to the following conditions that may be interfering with the weight sensors:

- Occupant is not sitting upright, leaning against the seatback, and centered on the seat cushion with his/her feet comfortably extended to the floor.
- A child restraint or other object pressing against the rear of the seatback.
- A rear passenger pushing or pulling on the back of the front passenger seat.
- Forcing the front seat or seatback against an object on the seat or floor behind it.
- An object placed under the front passenger seat.
- An object placed between the seat cushion and center console or between the seat cushion and the door.

If the vehicle is moving, please come to a stop when it is safe to do so. Check and correct any of the above conditions. Restart the vehicle and wait 1 minute.

NOTE:

A system check will be performed during which the front passenger air bag status light will remain lit for about 7 seconds initially.

If the light is still ON after this, the person should be advised not to ride in the front passenger seat and the vehicle should be checked as soon as possible. It is recommended that you visit a NISSAN dealer for this service.

Other supplemental front-impact air bag precautions

⚠ WARNING

- **Do not place any objects on the steering wheel pad or on the instrument panel. Also, do not place any objects between any occupant and the steering wheel or instrument panel. Such objects may become dangerous projectiles and cause injury if the front air bags inflate.**
- **Immediately after inflation, several front air bag system components will be hot. Do not touch them; you may severely burn yourself.**
- **No unauthorized changes should be made to any components or wiring of the supplemental air bag system. This is to prevent accidental inflation of the supplemental air bag or damage to the supplemental air bag system.**
- **Do not make unauthorized changes to your vehicle's electrical system, suspension system or front end structure. This could affect proper operation of the front air bag system.**
- **Tampering with the front air bag system may result in serious personal injury. Tampering includes changes to the steering wheel and the instrument panel assembly by placing material over the steering wheel pad and above the instrument panel or by installing additional trim material around the air bag system.**
- **Removing or modifying the front passenger seat may affect the function of the air bag system and result in serious personal injury.**
- **Modifying or tampering with the front passenger seat may result in serious personal injury. For example, do not change the front seats by placing material on the seat cushion or by installing additional trim material, such as seat covers, on the seat that are not specifically designed to assure proper air bag operation. Additionally, do not stow any objects under the front passenger seat or the seat cushion and seatback. Such objects may interfere with the proper operation of the occupant classification sensor (weight sensor).**
- **No unauthorized changes should be made to any components or wiring of the seat belt system. This may affect the front air bag system. Tampering with the seat belt system may result in serious personal injury.**

- **It is recommended that you visit a NISSAN dealer for work on and around the front air bag. It is also recommended that you visit a NISSAN dealer for installation of electrical equipment. The Supplemental Restraint System (SRS) wiring harnesses* should not be modified or disconnected. Unauthorized electrical test equipment and probing devices should not be used on the air bag system.**
- **A cracked windshield should be replaced immediately by a qualified repair facility. A cracked windshield could affect the function of the supplemental air bag system.**

***The SRS wiring harness connectors are yellow and orange for easy identification.**

When selling your vehicle, we request that you inform the buyer about the front air bag system and guide the buyer to the appropriate sections in this Owner's Manual.

PRECAUTIONS ON SRS (without NISSAN Advanced Air Bag System) (if so equipped)

This SRS section contains important information concerning the following systems:

- Driver and front passenger supplemental front-impact air bag
- Front seat-mounted side-impact supplemental air bag
- Roof-mounted curtain side-impact and rollover supplemental air bag
- Seat belt with pretensioner(s) (front seats)

Supplemental front-impact air bag system

This system can help cushion the impact force to the head and chest of the driver and right front passenger in certain frontal collisions.

Front seat-mounted side-impact supplemental air bag system

This system can help cushion the impact force to the chest area of the driver and right front passenger in certain side impact collisions. The side air bag is designed to inflate on the side where the vehicle is impacted.

Roof-mounted curtain side-impact and rollover supplemental air bag system

This system can help cushion the impact force to the head of occupants in front and rear outboard seating positions in certain side impact or rollover collisions. In a side impact, the curtain air bags are designed to inflate on the side where the vehicle is impacted. In a rollover, curtain air bags are designed to inflate and remain inflated for a short time.

The SRS is designed to **supplement** the crash protection provided by the seat belts and is **not a substitute** for them. Seat belts should always be correctly worn and the occupant seated a suitable distance away from the steering wheel, instrument panel and door finishers. For additional information, refer to "Seat belts" in this section.

The supplemental air bags operate only when the ignition switch is in the ON or START position.

After turning the ignition key to the ON position, the supplemental air bag warning light illuminates. The supplemental air bag warning light will turn off after about 7 seconds if the system is operational.

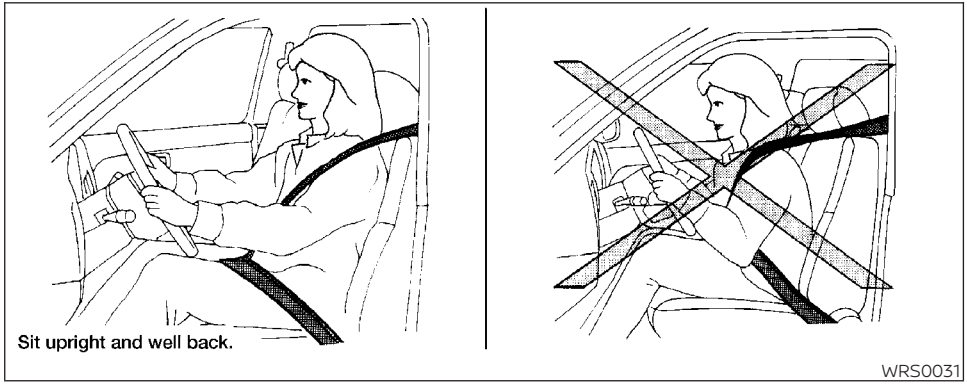

⚠ WARNING

- **The front air bags ordinarily will not inflate in the event of a side impact, rear impact, rollover, or lower severity frontal collision. Always wear your seat belts to help reduce the risk or severity of injury in various kinds of accidents.**

- **The seat belts and the front air bags are most effective when you are sitting well back and upright in the seat. The front air bags inflate with great force. If you are unrestrained, leaning forward, sitting sideways or out of position in any way, you are at greater risk of injury or death in a crash. You may also receive serious or fatal injuries from the front air bag if you are up against it when it inflates. Always sit back against the seatback and as far away as practical from the steering wheel or instrument panel. Always properly use the seat belts.**

- **The driver and front passenger seat belt buckles are equipped with sensors that detect if the seat belts are fastened. The air bag system monitors the severity of a collision and inflates the air bags as needed. Failure to properly wear seat belts can increase the risk or severity of injury in an accident.**

- **Keep hands on the outside of the steering wheel. Placing them inside the steering wheel rim could increase the risk that they are injured when the front air bag inflates.**

- **The air bag system monitors the severity of a collision and then inflates the air bags as needed. Failure to properly wear seat belts can increase the risk or severity of injury in an accident.**

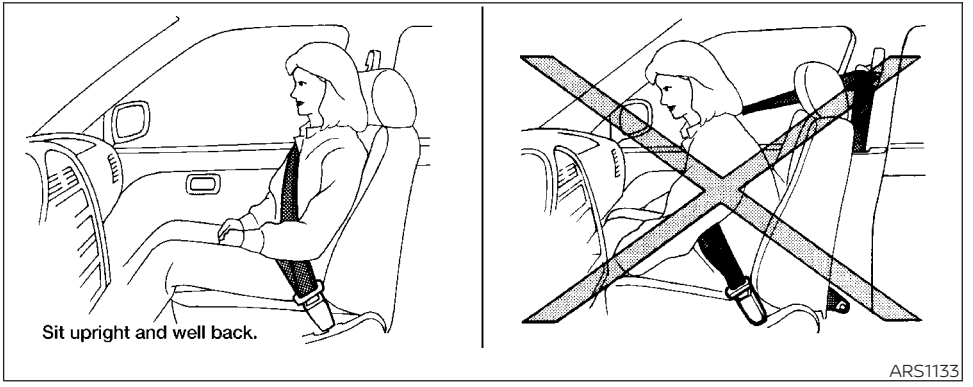

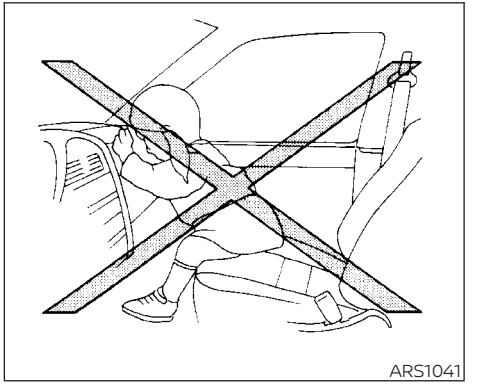

⚠ WARNING

- **Never let children ride unrestrained or extend their hands or face out of the window. Do not attempt to hold them in your lap or arms. Some examples of dangerous riding positions are shown in the illustrations.**

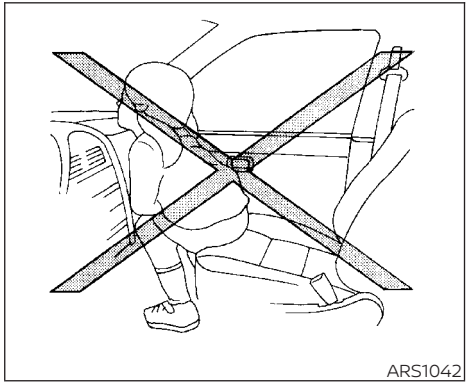
ARS1042

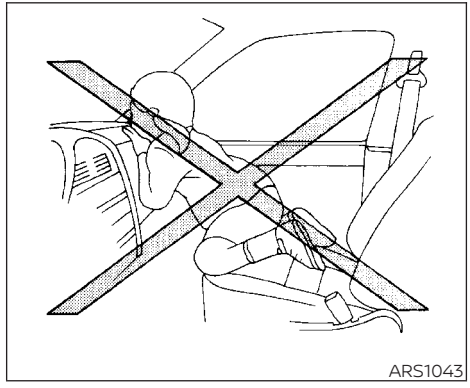
ARS1043

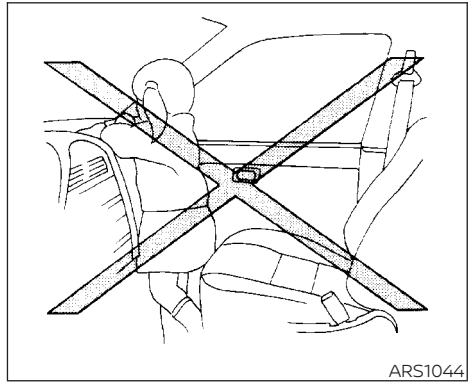
ARS1044

⚠ WARNING

- **Children may be severely injured or killed when the front air bags, side air bags or curtain air bags inflate if they are not properly restrained. Pre-teens and children should be properly restrained in the rear seat, if possible.**

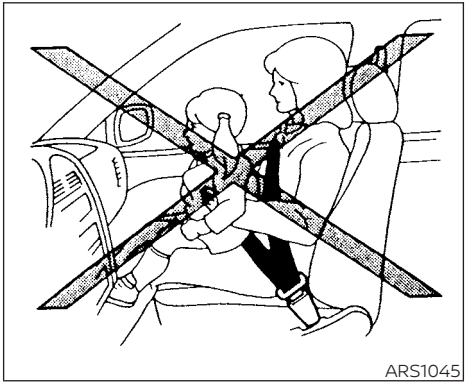
ARS1045

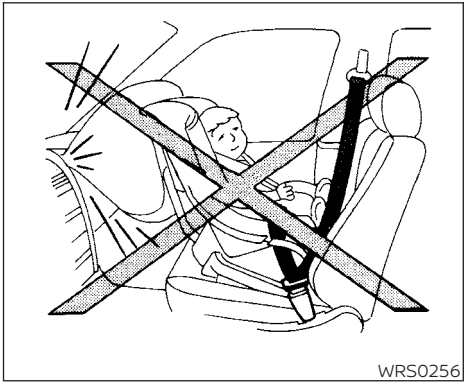
WRS0256

WARNING

- **Even with the air bag system, never install a rear-facing child restraint in the front seat. An inflating air bag could seriously injure or kill a child. A rear-facing child restraint must only be used in the rear seat.**

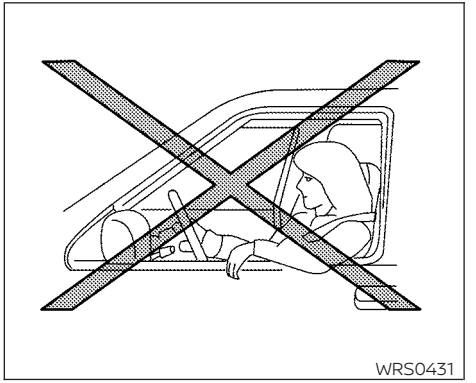
WRS0431

Do not lean against doors or windows.

WARNING

Front seat-mounted side-impact supplemental air bags and roof-mounted curtain side-impact and roll-over supplemental air bags:

- **The side air bags and curtain air bags ordinarily will not inflate in the event of a frontal impact, rear impact, or lower severity side collision. Always wear your seat belts to help reduce the risk or severity of injury in various kinds of accidents.**

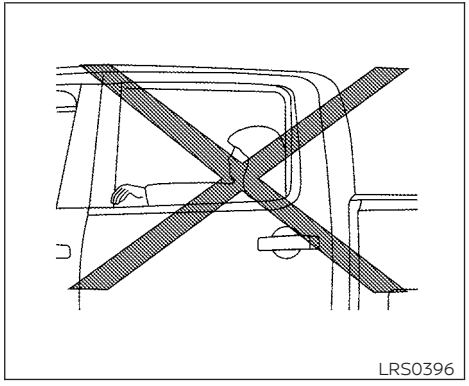

Do not lean against doors or windows.

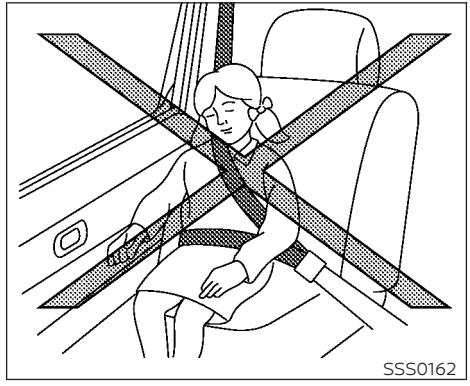

Do not lean against doors or windows.

⚠ WARNING

- **The seat belts, the side air bags and curtain air bags are most effective when you are sitting well back and upright in the seat. The side air bag and curtain air bag inflate with great force. Do not allow anyone to place their hand, leg or face near the side air bag on the side of the seatback of the front seat or near the side roof rails. Do not allow anyone sitting in the front seats or rear outboard seats to extend their hand out of the window or lean against the door. Some examples of dangerous riding positions are shown in the previous illustrations.**

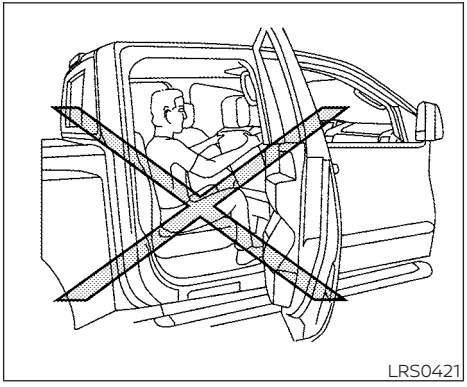
LRS0421

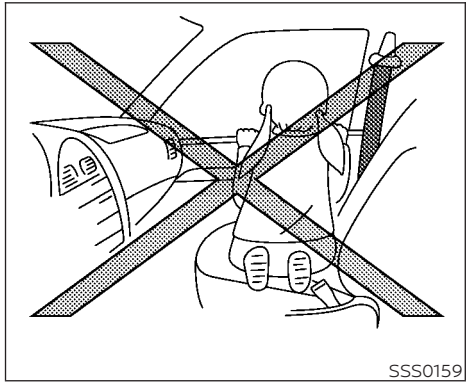
SSS0159

⚠ WARNING

- **When sitting in the rear seat, do not hold onto the seatback of the front seat. If the side air bag inflates, you may be seriously injured. Be especially careful with children, who should always be properly restrained. Some examples of dangerous riding positions are shown in the illustrations.**
- **Do not use seat covers on the front seatbacks. They may interfere with side air bag inflation.**

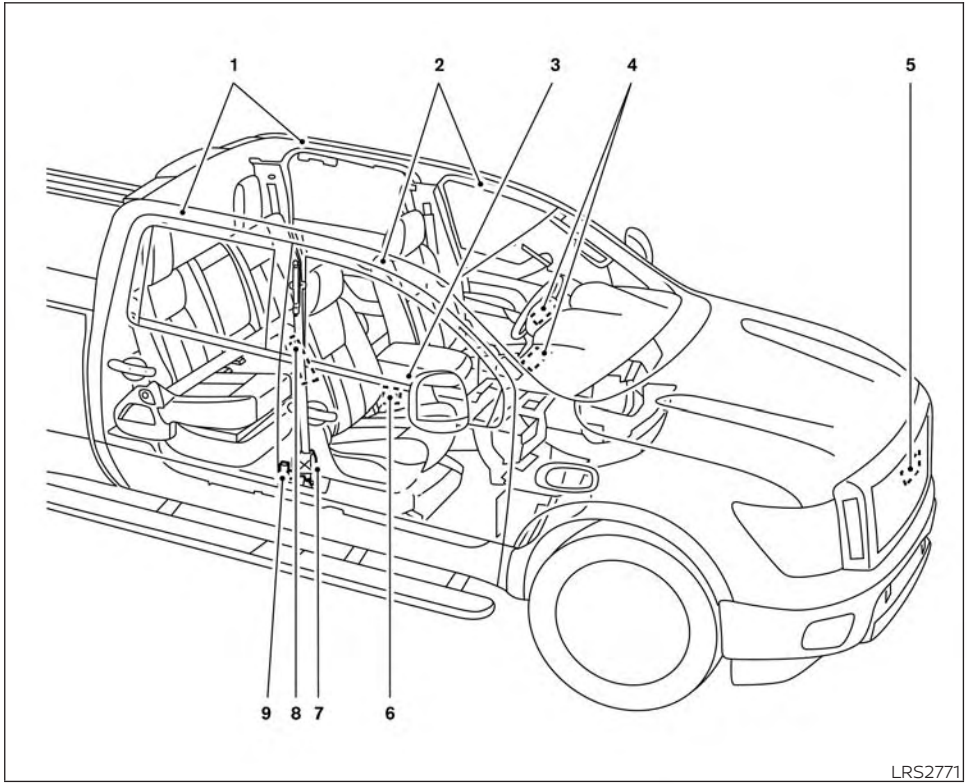

Supplemental air bag system

1. Roof-mounted curtain side-impact and rollover supplemental air bags inflators
2. Roof-mounted curtain side-impact and rollover supplemental air bags
3. Air bag Control Unit (ACU)
4. Supplemental front-impact air bag modules
5. Crash zone sensor
6. Seat belt buckle switches
7. Seat belt with pretensioner(s) (front seats)
8. Front seat-mounted side-impact supplemental air bag modules
9. Satellite sensors

This vehicle is equipped with supplemental front air bag system for the driver and right front passenger seats. This system is designed to meet certification requirements under U.S. regulations. It is also permitted in Canada. **However, all of the information, cautions and warnings in this manual still apply and must be followed.**

The driver supplemental front-impact air bag is located in the center of the steering wheel. The front passenger supplemental front-impact air bag is mounted in the dashboard above the glove box. The supplemental front air bags are designed to inflate in higher severity frontal collisions, although they may inflate if the forces in another type of collision are similar to those of a higher severity frontal impact. They may not inflate in certain frontal collisions. Vehicle damage (or lack of it) is not always an indication of proper front air bag system operation.

The supplemental air bag system monitors information from the crash zone sensor, the Air bag Control Unit (ACU) and seat belt buckle sensors that detect if the seat belts are fastened. Inflator operation is based on the severity of a collision and whether the seat belts are being used. Only one front air bag may inflate in a crash, depending on the crash severity and whether the front occupants are belted or unbelted. This does not indicate improper performance of the system. If you have any questions about the performance of your air bag system, it is recommended that you visit a NISSAN dealer to obtain information about the system.

If you have any questions about your air bag system, it is recommended that you visit a NISSAN dealer to obtain information about the system. If you are considering modification of your vehicle due to a disability, you may also contact NISSAN. Contact information is contained in the beginning of this Owner's Manual.

When a front air bag inflates, a fairly loud noise may be heard, followed by the release of smoke. This smoke is not harmful and does not indicate a fire. Care should be taken to not inhale it, as it may cause irritation and choking. Those with a history of a breathing condition should get fresh air promptly.

Front air bags, along with the use of seat belts, help to cushion the impact force on the face and chest of the driver and right front passenger. They can help save lives and reduce serious injuries. However, an inflating front air bag may cause facial abrasions or other injuries. Front air bags do not provide restraint to the lower body.

Seat belts should be correctly worn and the driver and passenger seated upright as far as practical away from the steering wheel or instrument panel. The front air bags inflate quickly in order to help protect the front occupants. Because of this, the force of the front air bag inflating can increase the risk of injury if the occupant is too close to, or is against, the front air bag module during inflation.

The front air bags deflate quickly after a collision.

The front air bags operate only when the ignition switch is in the ON or START position.

After turning the ignition key to the ON position, the supplemental air bag warning light illuminates. The supplemental air bag warning light will turn off after about 7 seconds if the system is operational.

⚠ WARNING

- **Do not place any objects on the steering wheel pad or on the instrument panel. Also, do not place any objects between any occupant and the steering wheel or instrument panel. Such objects may become dangerous projectiles and cause injury if the front air bag inflates.**

- **Immediately after inflation, several front air bag system components will be hot. Do not touch them; you may severely burn yourself.**
- **No unauthorized changes should be made to any components or wiring of the supplemental air bag system. This is to prevent accidental inflation of the supplemental air bag or damage to the supplemental air bag system.**
- **Do not make unauthorized changes to your vehicle's electrical system, suspension system or front end structure. This could affect proper operation of the front air bag system.**
- **If your vehicle has front recovery hooks as original factory equipment do not remove or modify them. If it was not equipped with front recovery hooks do not install them. Either action could affect proper operation of the front air bag system resulting in injury or death.**
- **Tampering with the front air bag system may result in serious personal injury. Tampering includes changes to the steering wheel and the instrument panel assembly by placing material over the steering wheel pad and above the instrument panel or by installing additional trim material around the air bag system.**
- **No unauthorized changes should be made to any components or wiring of the seat belt system. This may affect the front air bag system. Tampering with the seat belt system may result in serious personal injury.**
- **It is recommended that you visit a NISSAN dealer for work on and around the front air bag. It is also recommended that you visit a NISSAN dealer for installation of electrical equipment. The Supplemental Restraint System (SRS) wiring harness* should not be modified or disconnected. Unauthorized electrical test equipment and probing devices should not be used on the air bag system.**
- **A cracked windshield should be replaced immediately by a qualified repair facility. A cracked windshield could affect the function of the supplemental air bag system.**

***The SRS wiring harness connectors are yellow and orange for easy identification.**

When selling your vehicle, we request that you inform the buyer about the front air bag system and guide the buyer to the appropriate sections in this Owner's Manual.

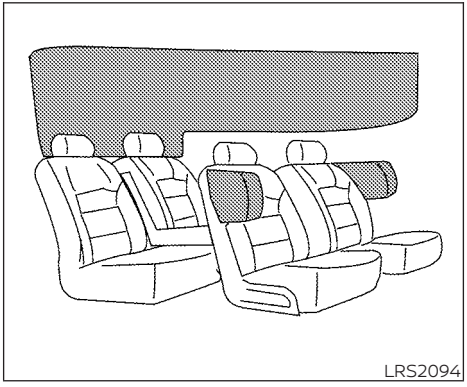

FRONT SEAT-MOUNTED SIDE-IMPACT SUPPLEMENTAL AIR BAG AND ROOF-MOUNTED CURTAIN SIDE-IMPACT AND ROLLOVER SUPPLEMENTAL AIR BAG SYSTEMS

The side air bags are located in the outside of the seatback of the front seats. The curtain air bags are located in the side roof rails. **All of the information, cautions and warnings in this manual must be followed.** The side air bags and curtain air bags are designed to inflate in higher severity side collisions, although they may inflate if the forces in another type of collision are similar to those of a higher severity impact. They are designed to inflate on the side where the vehicle is impacted. They may not inflate in certain side collisions.

Curtain air bags are also designed to inflate in certain types of rollover collisions or near rollovers. As a result, certain vehicle movements (for example, during severe off-roading) may cause the curtain air bags to inflate.

Vehicle damage (or lack of it) is not always an indication of proper side air bag and curtain air bag operation.

When the side air bags and curtain air bags inflate, a fairly loud noise may be heard, followed by release of smoke. This smoke is not harmful and does not indicate a fire. Care should be taken not to inhale it, as it may cause irritation and choking. Those with a history of a breathing condition should get fresh air promptly.

Side air bags, along with the use of seat belts, help to cushion the impact force on the chest of the front occupants. Curtain air bags help to cushion the impact force to the head of occupants in the front and rear outboard seating positions. They can help save lives and reduce serious injuries. However, an inflating side air bag or curtain air bag may cause abrasions or other injuries. Side air bags and curtain air bags do not provide restraint to the lower body.

The seat belts should be correctly worn and the driver and front passenger seated upright as far as practical away from the side air bag. Rear seat passengers should be seated as far away as practical from the door finishers and side roof rails. The side air bags and curtain air bags inflate quickly in order to help protect the occupants. Because of this, the force of the side air bag and curtain air bag inflating can increase the risk of injury if the occupant is too close to, or is against, these air bag modules during inflation. The side air bag will deflate quickly after the collision is over.

The curtain air bags will remain inflated for a short time.

The side air bags and curtain air bags operate only when the ignition switch is in the ON or START position.

After placing the ignition switch in the ON position, the supplemental air bag warning light illuminates. The supplemental air bag warning light will turn off after about 7 seconds if the system is operational.

⚠ WARNING

- **Do not place any objects near the seatback of the front seats. Also, do not place any objects (an umbrella, bag, etc.) between the front door finisher and the front seat. Such objects may become dangerous projectiles and cause injury if a side air bag inflates.**
- **Right after inflation, several side air bag and curtain air bag system components will be hot. Do not touch them; you may severely burn yourself.**
- **No unauthorized changes should be made to any components or wiring of the side air bag and curtain air bag systems. This is to prevent damage to or accidental inflation of the side air bag and curtain air bag systems.**
- **Do not make unauthorized changes to your vehicle's electrical system, suspension system or side panel. This could affect proper operation of the curtain air bag systems.**
- **Tampering with the side air bag system may result in serious personal injury. For example, do not change the front seats by placing material near the seatbacks or by installing additional trim material, such as seat covers, around the side air bag.**
- **It is recommended that you visit a NISSAN dealer for work on and around the side air bag and curtain air bag. It is also recommended that you visit a NISSAN dealer for installation of electrical equipment. The SRS wiring harnesses* should not be modified or disconnected. Unauthorized electrical test equipment and probing devices should not be used on the side air bag or curtain air bag systems.**

***The SRS wiring harness or connectors are yellow or orange for easy identification.**

When selling your vehicle, we request that you inform the buyer about the side air bag and curtain air bag systems and guide the buyer to the appropriate sections in this Owner's Manual.

SEAT BELT WITH PRETENSIONER(s) (front seats)

⚠ WARNING

- **The pretensioner(s) cannot be reused after activation. They must be replaced together with the retractor and buckle as a unit.**
- **If the vehicle becomes involved in a collision but pretensioner(s) are not activated, be sure to have the pretensioner system checked and, if necessary, replaced. It is recommended that you visit a NISSAN dealer for this service.**
- **No unauthorized changes should be made to any components or wiring of the pretensioner system. This is to prevent damage to or accidental activation of the pretensioner(s). Tampering with the pretensioner system may result in serious personal injury.**

- **It is recommended that you visit a NISSAN dealer for work on and around the pretensioner system. It is also recommended that you visit a NISSAN dealer for installation of electrical equipment. Unauthorized electrical test equipment and probing devices should not be used on the pretensioner system.**
- **If you need to dispose of the pretensioner(s) or scrap the vehicle, it is recommended that you visit a NISSAN dealer for this service. Incorrect disposal procedures could cause personal injury.**

The pretensioner system may activate with the supplemental air bag system in certain types of collisions. Working with the seat belt retractor, the pretensioner(s) help tighten the seat belt when the vehicle becomes involved in certain types of collisions, helping to restrain front seat occupants.

The pretensioner(s) are encased within the seat belt retractor and to the seat belt anchor affixed to the floor of the vehicle. These seat belts are used the same way as conventional seat belts.

When pretensioner(s) activate, smoke is released and a loud noise may be heard. This smoke is not harmful and does not indicate a fire. Care should be taken not to inhale it, as it may cause irritation and choking. Those with a history of a breathing condition should get fresh air promptly.

After the pretensioner(s') activation, load limiters allow the seat belt to release webbing (if necessary) to reduce forces against the chest.

The supplemental air bag warning light is used to indicate malfunctions in the pretensioner system. For additional information, refer to "Supplemental air bag warning light" in this section. If the operation of the supplemental air bag warning light indicates there is a malfunction, have the system checked. It is recommended that you visit a NISSAN dealer for this service.

When selling your vehicle, we request that you inform the buyer about the pretensioner system and guide the buyer to the appropriate sections in this Owner's Manual.

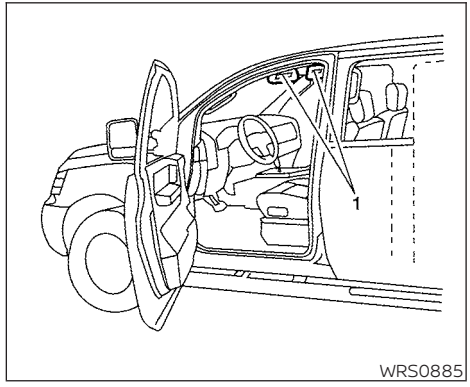

1. SRS Air bag warning labels

The warning labels are located on the surface of the sun visor.

SUPPLEMENTAL AIR BAG WARNING LABELS

Warning labels about the supplemental front-impact air bag system are placed in the vehicle as shown in the illustration.

⚠ WARNING

Do not use a rear-facing child restraint on a seat protected by an air bag in front of it. If the air bag deploys, it may cause serious injury or death.

SUPPLEMENTAL AIR BAG WARNING LIGHT

The supplemental air bag warning light, displaying in the instrument panel, monitors the circuits for the air bag systems, pretensioner(s) and all related wiring. When the ignition switch is placed in the ON position, the supplemental air bag warning light illuminates for about 7 seconds and then turns off. This means the system is operational.

If any of the following conditions occur, the front air bag, side air bag, curtain air bag and pretensioner systems need servicing:

- The supplemental air bag warning light remains on after approximately 7 seconds.
- The supplemental air bag warning light flashes intermittently.
- The supplemental air bag warning light does not come on at all.

Under these conditions, the front air bag, side air bag, curtain air bag or pretensioner systems may not operate properly. They must be checked and repaired. It is recommended that you visit a NISSAN dealer for this service.

⚠ WARNING

If the supplemental air bag warning light is on, it could mean that the front air bag, side air bag, curtain air bag and/or pretensioner systems will not operate in an accident. To help avoid injury to yourself or others, have your vehicle checked as soon as possible. It is recommended that you visit a NISSAN dealer for this service.

Repair and replacement procedure

The front air bags, side air bags, curtain air bags and pretensioner(s) are designed to inflate on a one-time-only basis. As a reminder, unless it is damaged, the supplemental air bag warning light remains illuminated after inflation has occurred. These systems should be repaired and/or replaced as soon as possible. It is recommended that you visit a NISSAN dealer for this service.

When maintenance work is required on the vehicle, the front air bags, side air bags, curtain air bags, pretensioner(s) and related parts should be pointed out to the person performing the maintenance. The ignition switch should always be placed in the LOCK position when working under the hood or inside the vehicle.

⚠ WARNING

- **Once a front air bag, side air bag, or curtain air bag has inflated, the air bag module will not function again and must be replaced. Additionally, the activated pretensioner(s) must also be replaced. The air bag module and pretensioner(s) should be replaced. It is recommended that you visit a NISSAN dealer for this service. However, the air bag module and pretensioner(s) cannot be repaired.**
- **The front air bag, side air bag, curtain air bag systems and the pretensioner system should be inspected if there is any damage to the front end or side portion of the vehicle. It is recommended that you visit a NISSAN dealer for this service.**
- **If you need to dispose of the supplemental air bag or pretensioner systems or scrap the vehicle, it is recommended that you visit a NISSAN dealer. Incorrect disposal procedures could cause personal injury.**
- **If there is an impact to your vehicle from any direction, your Occupant Classification Sensor (OCS) (if so equipped) should be checked to verify it is still functioning correctly. It is recommended that you visit a NISSAN dealer for this service. The OCS (weight sensor) (if so equipped) should be checked even if no air bags deploy as a result of the impact. Failure to verify proper OCS (weight sensor) (if so equipped) function may result in an improper air bag deployment resulting in injury or death.**

2 Instruments and controls

Instrument panel 2-4
Meters and gauges 2-6
Speedometer and odometer 2-7
Tachometer 2-9
Engine coolant temperature gauge 2-9
Fuel gauge 2-10
Auxiliary gauges (if so equipped) 2-11
Diesel Exhaust Fluid (DEF) Level (if so equipped) 2-12
Off-road monitor (if so equipped) 2-13
Trip computer (if so equipped) 2-13
Compass (if so equipped) 2-18
Warning lights, indicator lights and audible reminders 2-21
Checking lights 2-22
Warning lights 2-22
Indicator lights 2-29
Audible reminders 2-32
Vehicle information display (if so equipped) 2-32
How to use the vehicle information display 2-33
Startup display 2-33
Settings 2-34
Vehicle information display warnings and indicators 2-41
Diesel warnings and indicators (if so equipped) 2-47
Security systems 2-48
Vehicle security system 2-48
NISSAN Vehicle Immobilizer System 2-49
Wiper and washer switch 2-51
Switch operation 2-51
Rain-sensing auto wiper system (if so equipped) 2-52
Rear window and/or outside mirror defroster switch (if so equipped) 2-53
Headlight switch 2-54
Headlight control switch 2-54
Daytime Running Lights (DRL) system (Type A) (if so equipped) 2-57
LED Daytime Running Lights (DRL) system (Type B) (if so equipped) 2-57
Instrument brightness control 2-58
Turn signal switch 2-58
Fog light switch (if so equipped) 2-59
Horn 2-59

Cargo lamp switch 2-60
Climate controlled seat switches
(if so equipped) 2-60
Heated seat switches (if so equipped) 2-61
Heated rear seat switches (if so equipped). 2-62
Heated steering wheel switch (if so equipped) . . 2-64
Warning systems switch (if so equipped) 2-64
Vehicle Dynamic Control (VDC) OFF switch. 2-65
Hill descent control switch (if so equipped). 2-66
Electronic locking rear differential (E-Lock)
system switch (if so equipped). 2-67
Power inverter switch (if so equipped) 2-68
Front and rear sonar system OFF switch
(if so equipped) 2-69
Tow mode switch 2-70
E-call (SOS) switch (if so equipped). 2-70
Trailer Brake Controller Unit (TBCU)
(if so equipped) 2-71
Power outlets 2-71
12v Outlets 2-71
120v outlets (if so equipped) 2-73
Extended storage switch 2-74
Storage 2-75
Front-door pockets. 2-75
Rear-door pockets (if so equipped) 2-76
Console side pockets (if so equipped). 2-76
Seatback pockets (if so equipped) 2-76
Under-seat storage (if so equipped) 2-77
Console box storage trays
(if so equipped) 2-78
Glove box. 2-78
Console box (if so equipped). 2-79
Center armrest storage (if so equipped) 2-80
Under front seat storage bin
(if so equipped) 2-81
Overhead sunglasses storage
(if so equipped) 2-81
Cup holders 2-82
Grocery hooks (if so equipped). 2-85
Bed liner storage bins (if so equipped) 2-85
Cargo hooks (if so equipped) 2-86
C-Channel cargo hooks (if so equipped) 2-86
Windows 2-87
Power windows 2-87
Rear power window switch
(if so equipped) 2-89
Rear sliding window (if so equipped) 2-90
Interior lights 2-91

Console light (if so equipped) 2-92
Map lights (if so equipped) 2-92
Personal Lights (if so equipped) 2-93
HomeLink® Universal Transceiver (if so equipped) 2-93
Programming HomeLink® 2-94
Programming HomeLink® for Canadian customers and gate openers 2-95
Operating the HomeLink® Universal Transceiver 2-96
Programming trouble-diagnosis 2-96
Clearing the programmed information 2-96
Reprogramming a single HomeLink® button 2-97
If your vehicle is stolen 2-97

INSTRUMENT PANEL

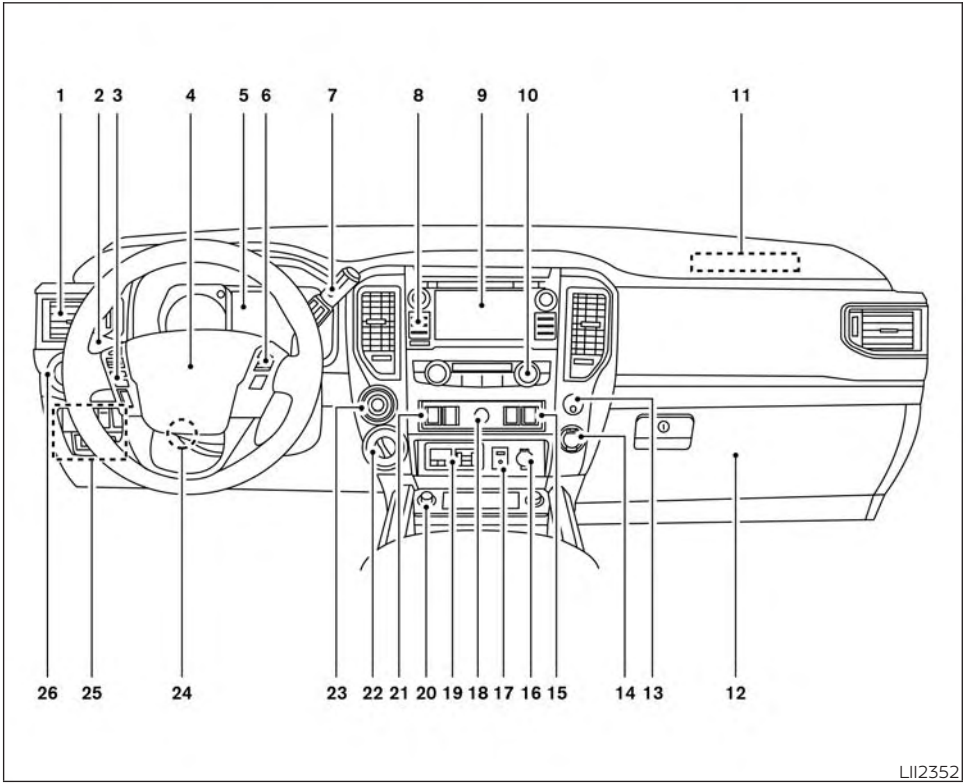

1. Vents (P. 4-34)
2. Turn signal switch (P. 2-58)
   Wiper and washer switch (P. 2-51)
3. Steering wheel switch for audio control (P. 4-87)
   Bluetooth® Hands-Free Phone System (P. 4-87, 4-133)
   Vehicle information display controls (P. 2-33)
4. Driver supplemental air bag (P. 1-53)
   Horn (P. 2-59)
5. Meters and gauges (P. 2-6)
   Warning and indicator lights (P. 2-21)
6. Cruise control main/set switches (P. 5-41)
7. Shift lever (P. 5-16)
   Tow mode switch (P. 2-70)
8. Audio controls (P. 4-48)
9. Center display (P. 4-4)
10. Climate controls (P. 4-34)
11. Front passenger supplemental air bag (P. 1-53)
12. Glove box (P. 2-75)
13. Front passenger air bag status light (if so equipped) (P. 1-53)
14. Power outlet (P. 2-71)

15. Heated steering wheel switch (if so equipped) (P. 2-64)
    Warning Systems switch (if so equipped) (P. 2-64)
16. Power outlet (P. 2-71)
17. Auxiliary jack (P. 4-48)
    USB port (P. 4-48)
18. Hazard warning flasher switch (P. 6-2)
19. Trailer Brake Controller Unit (TBCU) (if so equipped) (P. 2-71)
20. Climate control seat switch (if so equipped) (P. 2-60)
    Heated front seat switches (if so equipped) (P. 2-61)
21. Vehicle Dynamic Control (VDC) OFF switch (P. 2-65)
    Front and rear sonar system OFF switch (if so equipped) (P. 5-64)
22. 4WD shift switch (if so equipped) (P. 5-45)
23. Push-button ignition switch (P. 5-11)
24. Tilt and telescopic steering wheel control (P. 3-29)
25. Headlight aiming control (if so equipped) (P. 2-54)
    Power inverter switch (if so equipped) (P. 2-68)
    Cargo lamp switch (P. 2-60)
    Electronic locking rear differential (E-Lock) system switch (if so equipped) (P. 2-67)
    Hill descent control system switch (if so equipped) (P. 2-66)
26. Headlight switch (P. 2-54)
    Fog light switch (if so equipped) (P. 2-59)
    Instrument brightness control switches (P. 2-54)
    Trip reset switch (P. 2-6)

Refer to the page number indicated in parenthesis for operating details.

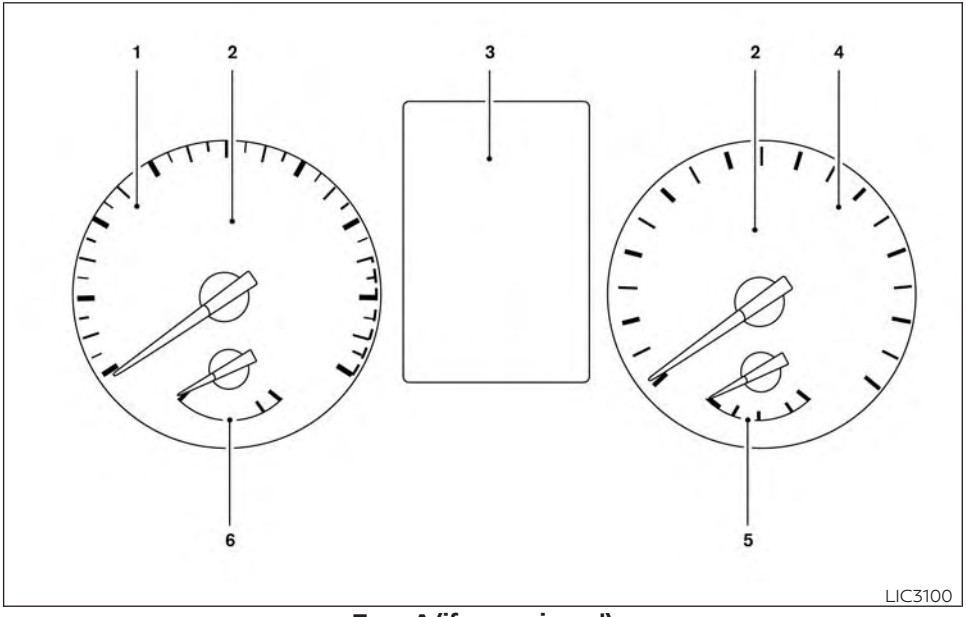

Type A (if so equipped)

1. Tachometer
2. Warning and indicator lights
3. Vehicle information display
   Odometer
   Outside temperature display
4. Speedometer
5. Fuel gauge
6. Engine coolant temperature gauge

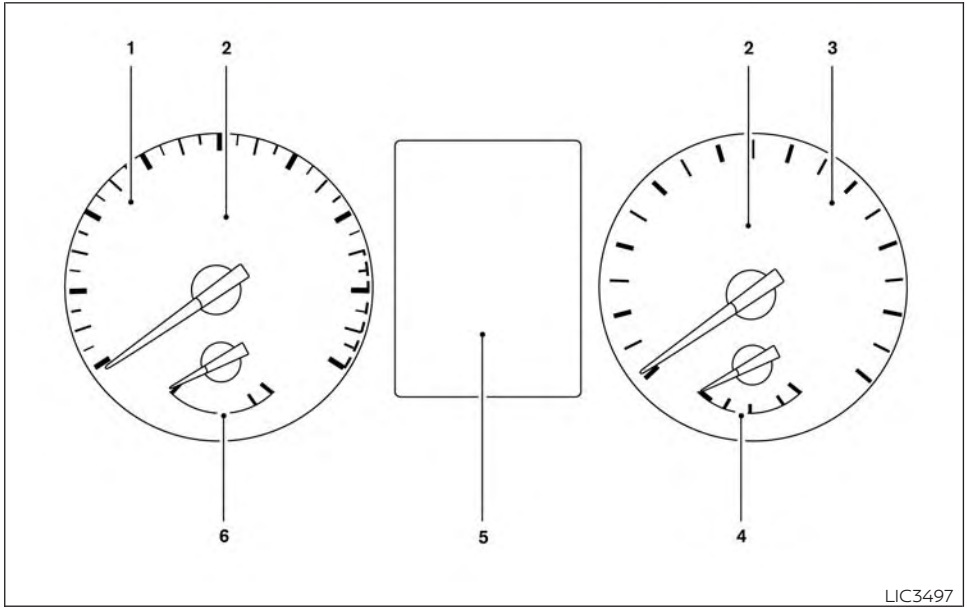

Type B (if so equipped)

1. Tachometer
2. Warning and indicator lights
3. Speedometer
4. Fuel gauge
5. Trip computer
   Odometer
   Outside temperature display
6. Engine coolant temperature gauge

SPEEDOMETER AND ODOMETER

This vehicle is equipped with a speedometer and odometer. The speedometer is located on the right side of the meter cluster. The odometer is located in the vehicle information display (Type A) (if so equipped) or the trip computer (Type B) (if so equipped) to the left of the speedometer and can be accessed with the vehicle in the ON position.

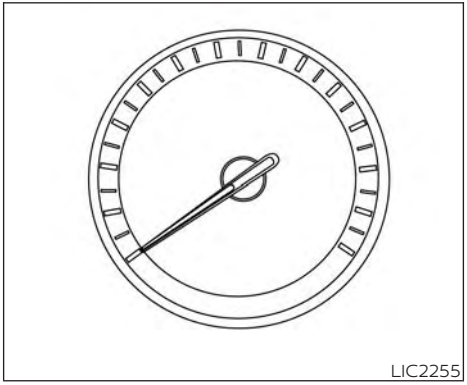

Speedometer

The speedometer indicates the vehicle speed.

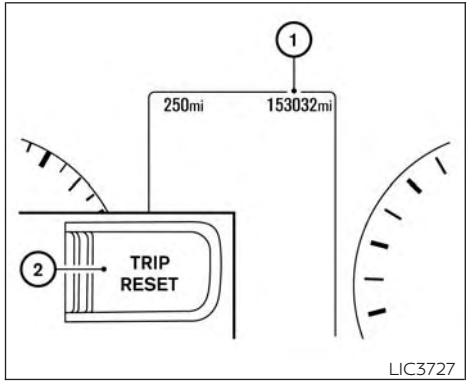

Type A (if so equipped)

Odometer/Twin trip odometer

The odometer and the twin trip odometer ① are displayed in the vehicle information display (Type A) (if so equipped) or the trip computer (Type B) (if so equipped) when the ignition switch is placed in the ON position.

The odometer records the total distance the vehicle has been driven.

The twin trip odometer records the distance of individual trips.

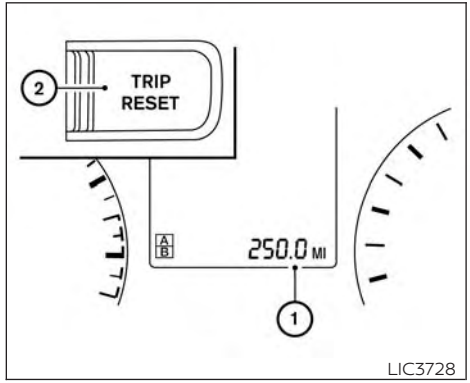

Type B (if so equipped)

Changing the display

Push the TRIP RESET switch ② on the left side of the instrument panel to change the display as follows:

ODO → Trip A → Trip B → ODO

Resetting the trip odometer

Pushing the TRIP RESET switch ② for about 2 seconds resets the currently displayed trip odometer to zero.

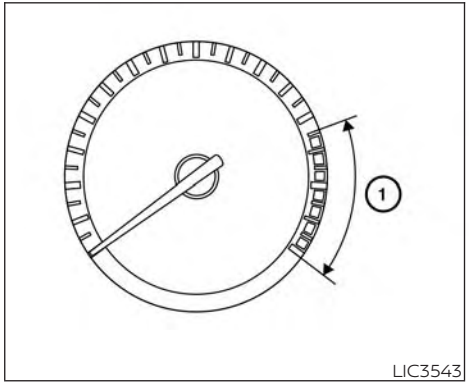

TACHOMETER

The tachometer indicates engine speed in revolutions per minute (rpm). Do not rev engine into the red zone ①.

⚠ CAUTION

When engine speed approaches the red zone, reduce engine speed. Operating the engine in the red zone may cause serious engine damage.

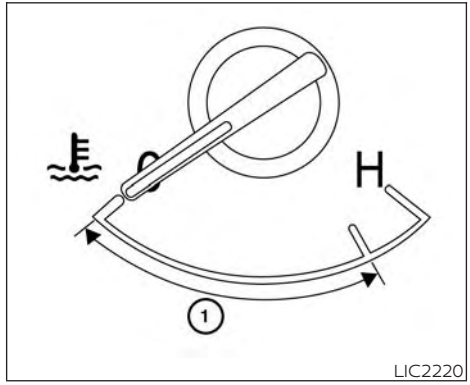

ENGINE COOLANT TEMPERATURE GAUGE

The gauge indicates the engine coolant temperature. The engine coolant temperature is within the normal range ① when the gauge needle points within the zone shown in the illustration.

The engine coolant temperature varies with the outside air temperature and driving conditions.

⚠ CAUTION

If the gauge indicates coolant temperature near the hot (H) end of the normal range, reduce vehicle speed to decrease temperature. If the gauge is over the normal range, stop the vehicle as soon as safely possible. If the engine is overheated, continued operation of the vehicle may seriously damage the engine. For additional information, refer to "If your vehicle overheats" in the "In case of emergency" section of this manual for immediate action required.

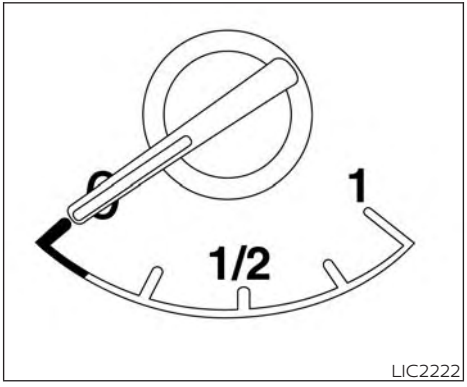

FUEL GAUGE

The gauge indicates the **approximate** fuel level in the tank.

The gauge may move slightly during braking, turning, acceleration, or going up or down hills.

The gauge needle returns to 0 (Empty) after the ignition switch is placed in the OFF position.

The low fuel warning light comes on when the amount of fuel in the tank is getting low.

Refill the fuel tank before the gauge registers 0 (Empty).

The ◀⛽ indicates that the fuel-filler door is located on the driver's side of the vehicle.

⚠ CAUTION

- **If the vehicle runs out of fuel, the Malfunction Indicator Light (MIL) may come on. Refuel as soon as possible. If the vehicle has run out of fuel, the system will need to be primed. Turn the key switch to ON for 20–30 seconds and then back OFF. Repeat 3–4 times or until the fuel pressure builds. Once primed, start the vehicle. After a few driving trips. the light should turn off. If the light remains on after a few driving trips, have the vehicle inspected. It is recommended that you visit a NISSAN dealer for this service.**
- **For additional information, refer to "Malfunction Indicator Light (MIL)" in this section.**

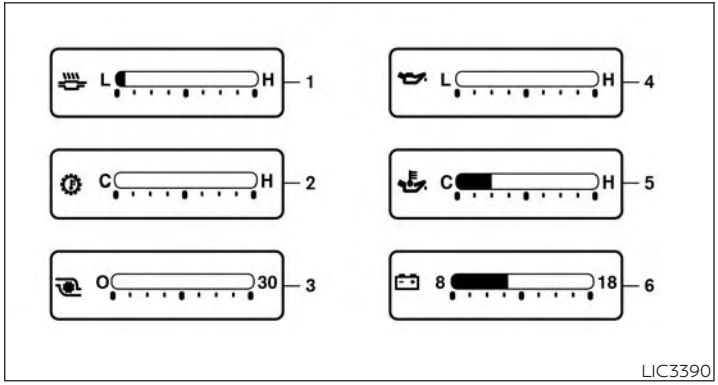

AUXILIARY GAUGES (if so equipped)

1. Exhaust temperature gauge (if so equipped)
2. Automatic Transmission fluid temperature gauge
3. Turbo meter (if so equipped)
4. Engine oil pressure gauge
5. Engine oil temperature gauge
6. Voltmeter

Exhaust temperature gauge (if so equipped)

For additional information, refer to the "Titan Diesel Owner's Manual".

Automatic Transmission fluid temperature gauge

This gauge indicates the temperature of the automatic transmission fluid.

⚠ CAUTION

- **This gauge is not designed to indicate low automatic transmission fluid level. Use the dipstick to check the fluid level. For additional information, refer to "6- speed automatic transmission fluid" in the "Do-it-yourself" section of this manual.**
- **If the gauge indicates automatic transmission fluid temperature over the normal range, stop the vehicle as soon as safely possible. It is recommended that you have the vehicle checked by a NISSAN dealer. Continued operation of the vehicle may seriously damage the transmission.**

Turbo meter (if so equipped)

For additional information, refer to the "Titan Diesel Owner's Manual".

Engine oil pressure gauge

The gauge indicates the engine lubrication system oil pressure while the engine is running. The bar should be in the middle of the gauge when the engine is running.

⚠ CAUTION

- **This gauge is not designed to indicate low engine oil level. Use the dipstick to check the oil level. For additional information, refer to "Engine oil" in the "Do-it-yourself" section of this manual.**
- **If the gauge needle does not move with the proper amount of engine oil, it is recommended that you have the vehicle checked by a NISSAN dealer. Continued vehicle operation in such a condition could cause serious damage to the engine.**

Engine oil temperature gauge

This gauge measures the temperature of the engine oil.

Voltmeter

When the ignition switch is placed in the ON position, the voltmeter indicates the battery voltage. When the engine is running, it indicates the generator voltage.

While cranking the engine, the volts drop below the normal range. If the range is not within the normal range (11 – 15 volts) while the engine is running, it may indicate that the charging system is not functioning properly. Have the system checked. It is recommended that you visit a NISSAN dealer for this service.

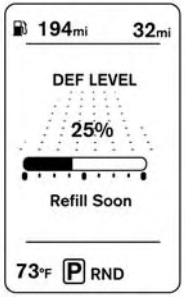

LIC3479

DIESEL EXHAUST FLUID (DEF) LEVEL (if so equipped)

This gauge measures the DEF level remaining in the vehicle. For additional information, refer to "Fuel and refueling" in the "Titan Diesel Owner's Supplement".

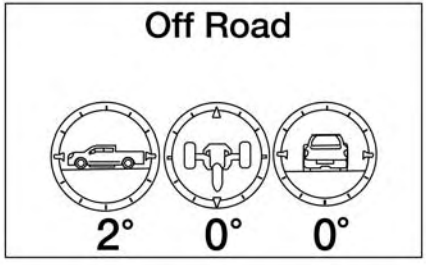

LIC3417

OFF-ROAD MONITOR (if so equipped)

The off-road monitor displays the various slopes of the vehicle.

The Pitch Gauge (left) indicates the angle of the vehicle position up or down. The value will be displayed below the gauge while the vehicle graphic will rotate to indicate condition pointed up or down.

The Tire Angle (center) indicates the angle of the tires based on turning of the steering wheel. The graphic image will show the actual vehicle tire position while the angle is to be displayed below as reference.

The Roll Gauge (right) indicates the angle of the vehicle position left and right. The value will be displayed below the gauge while the vehicle graphic will rotate to indicate condition of the vehicle leaning to the left or right.

TRIP COMPUTER (if so equipped)

When the ignition switch is placed in the ON position, the modes of the trip computer can be selected by pressing the ◀▶ buttons on the steering wheel. The following modes can be selected:

- Range
- Average fuel economy
- Average speed
- Time
- Tire info
- Settings

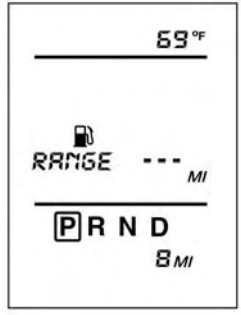

LIC3504

Range

The range mode provides you with an estimation of the distance that can be driven before refueling. The range is constantly being calculated, based on the amount of fuel in the fuel tank and the actual fuel economy which will depend on driving conditions. Dashes (—) indicate that fuel remaining volume cannot be read by the fuel pump and should be refilled as soon as possible.

The display is updated every 30 seconds.

NOTE:

When driving uphill or rounding curves, the fuel in the tank shifts, which may momentarily change the display.

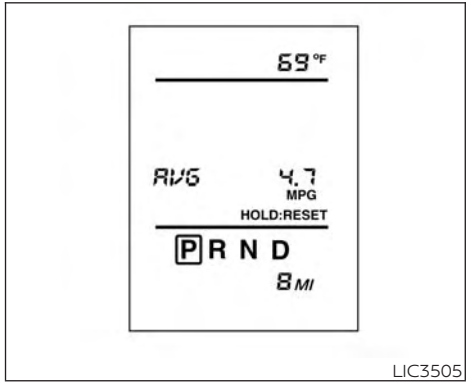

LIC3505

Average fuel economy

The average fuel economy mode shows the average fuel economy since the last reset. Resetting is done by pressing the ENTER button on the steering wheel for more than approximately 1 second. The display is updated every 30 seconds. At about the first 1/3 mile (500 m) after a reset, the display shows (----).

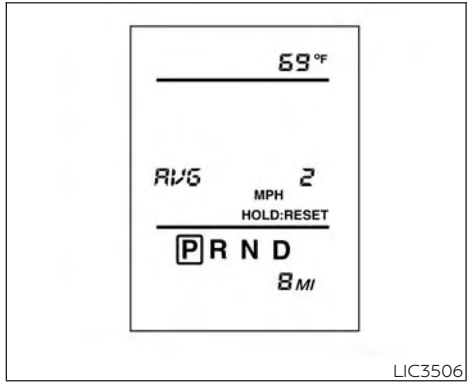

LIC3506

Average speed

The average speed mode shows the average vehicle speed since last reset. Resetting is done by pressing the ENTER button on the steering wheel for more than approximately 1 second. The display is updated every 30 seconds. The first 30 seconds after a reset, the display shows (----).

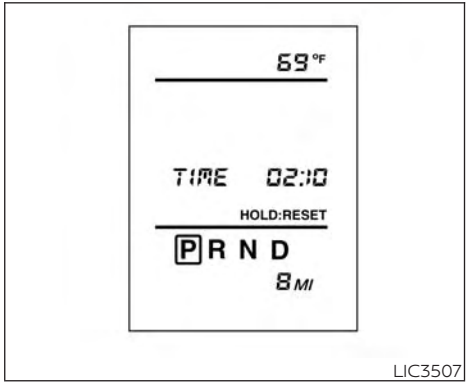

LIC3507

Time

The time mode shows the time the vehicle has been on since the last reset. The displayed time can be reset by pressing the ENTER button on the steering wheel for more than approximately 1 second.

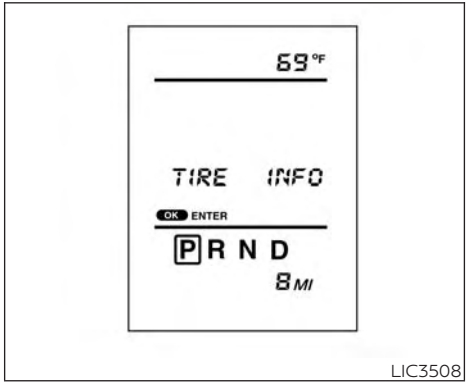

LIC3508

Tire info

The tire info mode shows the pressure of each tire. To see the individual tire pressures, press the ENTER button when the desired tire is shown. The tire pressures are displayed as follows:

- FL (Front Left)
- FR (Front Right)
- RL (Rear Left)
- RR (Rear Right)

To return to the main menu selections, scroll to "EXIT" and press ENTER.

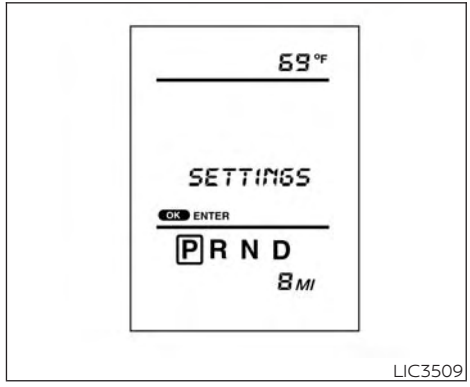

LIC3509

Settings

The settings mode allows the user to change the trip computer display units and set maintenance reminders. To select the desired menu item, press the ENTER button when it is shown. The menu items are displayed as follows:

- Engine Oil
- Oil Filter
- Rotation
- Other
- Units

To return to the main menu selections, scroll to "EXIT" and press ENTER.

Engine oil

The engine oil menu item allows the user to set a maintenance reminder at a specific interval. To set the reminder, press the ENTER button when "ENGINE OIL" is shown. Using the ◀▶ buttons, set the desired interval to receive a maintenance reminder.

To reset the mileage, press and hold the ENTER button for approximately 1 second.

To return to the main menu selections, scroll to "EXIT" and press ENTER.

For additional information, refer to "Maintenance schedules" in the "Maintenance and schedules" section of this manual.

Oil filter

The oil filter menu item allows the user to set a maintenance reminder at a specific interval. To set the reminder, press the ENTER button when "OIL FILTER" is shown. Using the ◀▶ buttons, set the desired interval to receive a maintenance reminder.

To reset the mileage, press and hold the ENTER button for approximately 1 second.

To return to the main menu selections, scroll to "EXIT" and press ENTER.

For additional information, refer to "Maintenance schedules" in the "Maintenance and schedules" section of this manual.

Rotation

The rotation menu item allows the user to set a maintenance reminder at a specific interval. To set the reminder, press the ENTER button when "ROTATION" is shown. Using the ◀▶ buttons, set the desired interval to receive a maintenance reminder.

To reset the mileage, press and hold the ENTER button for approximately 1 second.

To return to the main menu selections, scroll to "EXIT" and press ENTER.

For additional information, refer to "Maintenance schedules" in the "Maintenance and schedules" section of this manual.

⚠ WARNING

The tire replacement indicator is not a substitute for regular tire checks, including tire pressure checks. For additional information, refer to "Changing wheels and tires" in the "Do-it-yourself" section of this manual. Many factors including tire inflation, alignment, driving habits and road conditions affect tire wear and when tires should be replaced. Setting the tire replacement indicator for a certain driving distance does not mean your tires will last that long. Use the tire replacement indicator as a guide only and always perform regular tire checks. Failure to perform regular tire checks, including tire pressure checks could result in tire failure. Serious vehicle damage could occur and may lead to a collision, which could result in serious personal injury or death.

Other

The other menu item allows the user to set a maintenance reminder at a specific interval to check various other maintenance items (ie. air filter, brakes, coolant). To set the reminder, press the ENTER button when "OTHER" is shown. Using the ◀▶ buttons, set the desired interval to receive a maintenance reminder.

To reset the mileage, press and hold the ENTER button for approximately 1 second.

To return to the main menu selections, scroll to "EXIT" and press ENTER.

For additional information, refer to "Maintenance schedules" in the "Maintenance and schedules" section of this manual.

Units

The units menu item allows the user to change the trip computer units to US or METRIC. To select the units, press the ENTER button when desired unit is shown.

To return to the main menu selections, scroll to "EXIT" and press ENTER.

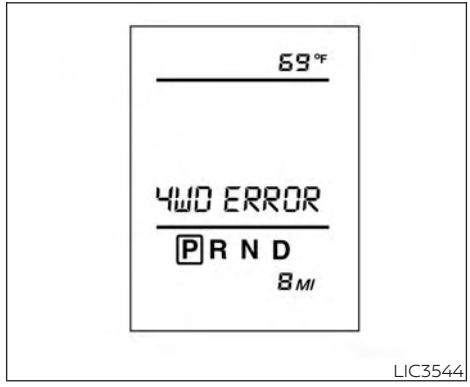

4WD error

The "4WD ERROR" message appears in the center of the trip computer when there is a malfunction with the 4-wheel drive system. For additional information, refer to "4-Wheel Drive (4WD) warning light" in this section.

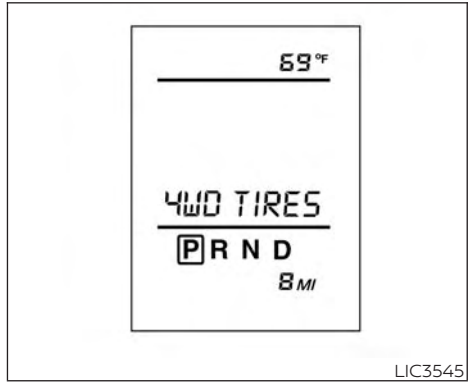

4WD tires

The "4WD TIRES" message appears in the center of the trip computer when there is a large difference in wheel rotation. If this messages appears, switch the vehicle into 2WD mode. For additional information, refer to "Using 4-Wheel Drive (4WD)" in the "Starting and driving" section of this manual.

COMPASS (if so equipped)

This unit measures terrestrial magnetism and indicates the direction of the vehicle's heading.

With the ignition switch placed in the ON position, press the button as described in the chart below to activate various features of the automatic anti-glare rearview mirror.

Press and hold the button for about:	Feature: (Press button again for about 1 second to change settings)
1 second	Compass display toggles on/off
5 seconds	Compass zone can be changed to correct false compass readings
9 seconds	Compass enters calibration mode

For information about the automatic anti-glare feature, refer to "Automatic anti-glare rearview mirror" in the "Pre-driving checks and adjustments" section of this manual.

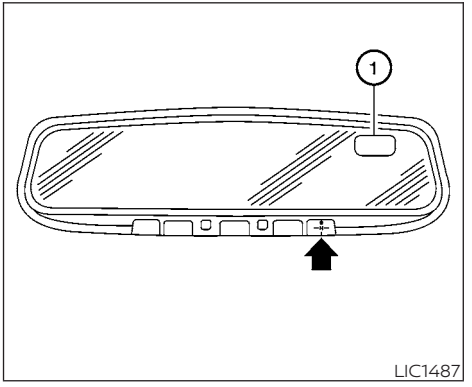

Press the button for about 1 second when the ignition switch is placed in the ON position to toggle the compass display ① on or off. The display will indicate the direction of the vehicle's heading.

N: North
E: East
S: South
W: West

If the display reads "C", calibrate the compass by driving the vehicle in three complete circles at less than 5 mph (8 km/h).

You can also calibrate the compass by driving your vehicle on your everyday route. The compass will be calibrated once it has tracked three complete circles.

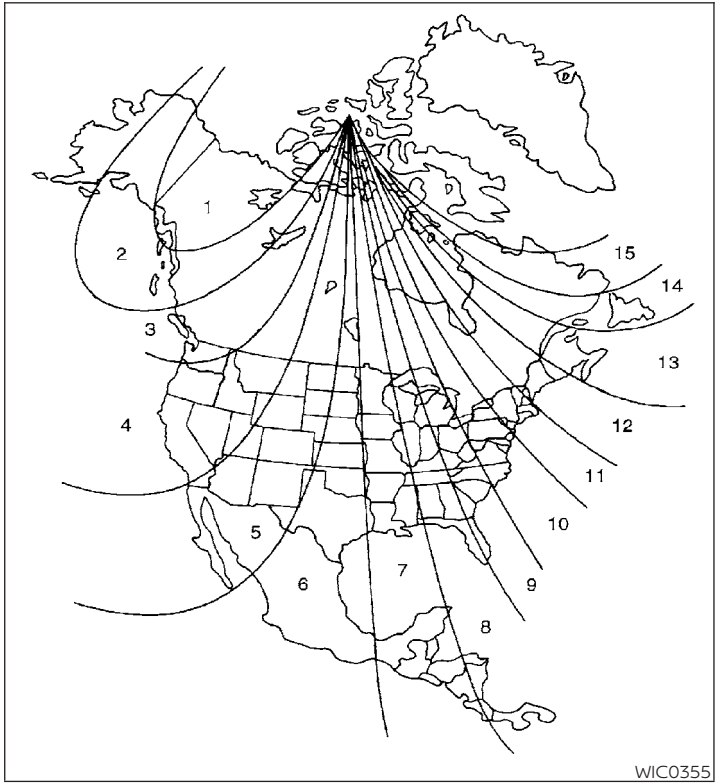

Zone variation change procedure

The difference between magnetic north and geographical north is known as variance. In some areas, this difference can sometimes be great enough to cause false compass readings. Follow these instructions to set the variance for your particular location if this happens:

1. Press and hold the ⏻ button for about 11 seconds or the -N- button for about 8 seconds. The current zone number will appear in the display. Release the button.
2. Find your current location on the zone map. Refer to the illustration.
3. Press the ⏻ or the -N- button repeatedly to toggle through the zone numbers until the desired number appears in the display. Once you have selected a zone number, the display will show a compass direction within a few seconds.

NOTE:

Use zone number 5 for Hawaii.

Inaccurate compass direction

The compass display is equipped with automatic correction function. If the correct direction is not shown, follow this procedure.

1. With the display turned on, press and hold the -N- for about 10 seconds. The "C" icon in the compass display will illuminate.
2. Calibrate the compass by driving the vehicle in three complete circles at a maximum speed of 5 mph (8 km/h).
3. After completing the circles, the display should return to normal.

⚠ CAUTION

- **Do not install a ski rack, antenna, etc., which are attached to the vehicle by means of a magnet. They affect the operation of the compass.**
- **When cleaning the mirror, use a paper towel or similar material dampened with glass cleaner. Do not spray glass cleaner directly on the mirror as it may cause the liquid cleaner to enter the mirror housing.**

WARNING LIGHTS, INDICATOR LIGHTS AND AUDIBLE REMINDERS

4WD 4-Wheel Drive (4WD) warning light (if so equipped)	Low fuel warning light (if so equipped)	Front fog light indicator light (if so equipped)
ABS or (ABS) Anti-lock Braking System (ABS) warning light	Low tire pressure warning light	OFF 2 Front passenger air bag status light (if so equipped)
AT CHECK Automatic Transmission check warning light	Low windshield washer fluid warning light (if so equipped)	High beam indicator light (blue)
A / T OIL TEMP Automatic Transmission oil temperature warning light	Malfunction warning light (red) (if so equipped)	Hill descent control system ON indicator light (if so equipped)
ATP Automatic Transmission park warning light (4x4 model)	Master warning light (if so equipped)	Malfunction Indicator Light (MIL) (yellow)
BRAKE or (!) Brake warning light	KEY NISSAN Intelligent Key® warning light (if so equipped)	Security indicator light
Charge warning light	P SHIFT P position selecting warning light (if so equipped)	Side light and headlight indicator light (green) (if so equipped)
Diesel Particulate Filter (DPF) warning light (if so equipped)	Passenger seat belt warning light (if so equipped)	Slip indicator light
Door open warning light	Supplemental air bag warning light	TOW TOW mode ON indicator light

Driver seat belt warning light and chime	Water in Fuel warning light (if so equipped)	Turn signal/hazard indicator lights
Engine oil pressure warning light	DIFF LOCK Electronic locking rear differential (E-Lock) system ON indicator light (if so equipped)	OFF Vehicle Dynamic Control (VDC) OFF indicator light
Low DEF warning light (if so equipped)	Engine start operation indicator light (if so equipped)	

CHECKING LIGHTS

With all doors closed, apply the parking brake, fasten the seat belts and place the ignition switch in the ON position without starting the engine. The following lights (if so equipped) will come on:

, , 4WD , or BRAKE

The following lights (if so equipped) will come on briefly and then go off:

or ABS , , , OFF , , , DIFF LOCK , ATP , AT CHECK

If any light does not come on or operate in a way other than described, it may indicate a burned-out bulb and/or a system malfunction. Have the system checked. It is recommended that you visit a NISSAN dealer for this service.

Some indicators and warnings are also displayed on the vehicle information display between the speedometer and tachometer. For additional information, refer to "Vehicle information display" in this section.

WARNING LIGHTS

For additional information, refer to "Vehicle information display" in this section.

4WD 4-Wheel Drive (4WD) warning light (if so equipped)

The 4WD warning light comes on when the key switch is turned to ON. It turns off soon after the engine is started.

If the engine or vehicle is not functioning properly, the warning light will either remain illuminated or blink. For additional information, refer to "Using 4-Wheel Drive (4WD)" in the "Starting and driving" section of this manual.

⚠ CAUTION

- **If the warning light comes on or blinks during operation, have your vehicle checked. It is recommended that you visit a NISSAN dealer for this service.**
- **Do not drive on dry hard surface roads in the 4H or 4LO position. If the 4WD warning light turns on when you are driving on dry hard surface roads:**
  - **in the 4H position, shift the 4WD shift switch to 2WD.**

- **in the 4LO position, stop the vehicle, move the shift lever to the N (Neutral) position with the brake pedal depressed, and shift the 4WD shift switch to 2WD.**

- **If the warning light is still on after the above operation, have your vehicle checked. It is recommended that you visit a NISSAN dealer for this service as soon as possible.**

ABS or (ABS) Anti-lock Braking System (ABS) warning light

When the ignition switch is placed in the ON position, the ABS warning light illuminates and then turns off. This indicates the ABS is operational.

If the ABS warning light illuminates while the engine is running or while driving, it may indicate the ABS is not functioning properly. Have the system checked. It is recommended that you visit a NISSAN dealer for this service.

If an ABS malfunction occurs, the anti-lock function is turned off. The brake system then operates normally but without anti-lock assistance. For additional information, refer to "Brake system" in the "Starting and driving" section of this manual.

AT CHECK Automatic Transmission check warning light

When the ignition switch is placed in the ON position, the light comes on for about 2 seconds. If the light comes on at any other time, it may indicate the automatic transmission system is not functioning properly. Have the system checked. It is recommended that you visit a NISSAN dealer for this service.

A/T OIL TEMP Automatic Transmission oil temperature warning light

This light comes on when the automatic transmission oil temperature is too high. If the light comes on while driving, reduce the vehicle speed as soon as safely possible until the light turns off.

⚠ CAUTION

Continued vehicle operation when the A/T oil temperature warning light is on may damage the automatic transmission.

ATP Automatic Transmission park warning light (4x4 model)

⚠ WARNING

- **If the 4WD mode indicator is off or the ATP warning light is on, this indicates that the automatic transmission P (Park) position will not function and could result in the vehicle moving unexpectedly, causing serious personal injury or property damage. Always set the parking brake. For additional information, refer to "Using 4-wheel drive (4WD)" in the "Starting and driving" section of this manual.**

- **If the ATP light is on, this indicates that the automatic transmission P (Park) position will not function and the transfer case is in neutral.**

- **When parking, always make sure that the 4WD shift indicator light illuminates and the parking brake is set. Failure to engage the transfer position in 2WD, 4H or 4LO could result in the vehicle moving unexpectedly, resulting in serious personal injury or property damage.**

- **Shift the 4WD switch into the 2WD, 4H or 4LO position again to turn off the ATP warning light when the shift lever is in the P position and the ATP warning light is on. (Before shifting the 4WD switch into the 4LO position, move the shift lever to the N position once, shift the shift lever into P again and make sure the ATP warning light is off.)**

This light indicates that the automatic transmission parking function is not engaged. If the transfer control is not secured in any drive position while the shift lever is in the P (Park) position, the transmission will disengage and the drive wheels will not lock.

BRAKE or Brake warning light

This light functions for both the parking brake and the foot brake systems.

Parking brake indicator

When the ignition switch is placed in the ON position, the light comes on when the parking brake is applied.

Low brake fluid warning light

When the ignition switch is placed in the ON position, the light warns of a low brake fluid level. If the light comes on while the engine is running, with the parking brake not applied, stop the vehicle and perform the following:

1. Check the brake fluid level. Add brake fluid as necessary. For additional information, refer to "Brake fluid" in the "Do-it-yourself" section of this manual.
2. If the brake fluid level is correct, have the warning system checked. It is recommended that you visit a NISSAN dealer for this service.

WARNING

- **Your brake system may not be working properly if the warning light is on. Driving could be dangerous. If you judge it to be safe, drive carefully to the nearest service station for repairs. Otherwise, have your vehicle towed because driving it could be dangerous.**
- **Pressing the brake pedal with the engine stopped and/or a low brake fluid level may increase your stopping distance and braking will require greater pedal effort and pedal travel.**
- **If the brake fluid level is below the MINIMUM or MIN mark on the brake fluid reservoir, do not drive until the brake system has been checked. It is recommended that you visit a NISSAN dealer for this service.**

Anti-lock Braking System (ABS) warning indicator

When the parking brake is released and the brake fluid level is sufficient, if both the brake warning light and the ABS warning light illuminate, it may indicate the ABS is not functioning properly. Have the brake system checked and, if necessary, repaired. It is recommended that you visit a NISSAN dealer for this service. Avoid high-speed driving and abrupt braking. For additional information, refer to "Anti-lock Braking System (ABS) warning light" in this section.

Charge warning light

If this light comes on while the engine is running, it may indicate the charging system is not functioning properly. Turn the engine off and check the generator belt. If the belt is loose, broken, missing, or if the light remains on, have the system checked. It is recommended that you visit a NISSAN dealer for this service.

CAUTION

- **Do not ground electrical accessories directly to the battery terminal. Doing so will bypass the variable voltage control system (if so equipped) and the vehicle battery may not charge completely. For additional information, refer to "Variable voltage control system" in the "Do-it-yourself" section of this manual.**
- **Do not continue driving if the generator belt is loose, broken or missing.**

Diesel Particulate Filter (DPF) warning light (if so equipped)

For additional information, refer to the "Titan Diesel Owner's Manual".

Door open warning light

This light comes on when any of the doors are not closed securely while the ignition switch is in the ON position.

Driver seat belt warning light and chime

The light and chime remind you to fasten your seat belt. The light illuminates whenever the ignition switch is placed in the ON position and remains illuminated until the driver's seat belt is fastened. At the same time, the chime sounds for about 6 seconds unless the driver's seat belt is securely fastened.

For additional information, refer to "Seat belts" in the "Safety—Seats, seat belts and supplemental restraint system" section of this manual.

Engine oil pressure warning light

This light warns of low engine oil pressure. If the light flickers or comes on during normal driving, pull off the road in a safe area, stop the engine **immediately,** and call a NISSAN dealer or other authorized repair shop.

The engine oil pressure warning light is not designed to indicate a low oil level. Use the dipstick to check the oil level. For additional information, refer to "Engine oil" in the "Do-it-yourself" section of this manual.

CAUTION

Running the engine with the engine oil pressure warning light on could cause serious damage to the engine almost immediately. Such damage is not covered by warranty. Turn off the engine as soon as it is safe to do so.

Low DEF warning light (if so equipped)

For additional information, refer to the "Titan Diesel Owner's Manual".

Low fuel warning light (if so equipped)

This light comes on when the fuel level in the fuel tank is getting low. Refuel as soon as it is convenient, preferably before the fuel gauge reaches 0 (Empty). **There will be a small reserve of fuel in the tank when the fuel gauge reaches 0 (Empty).**

Low tire pressure warning light

Your vehicle is equipped with a TPMS that monitors the tire pressure of all tires except the spare.

The low tire pressure warning light warns of low tire pressure or indicates that the TPMS is not functioning properly.

After the ignition switch is placed in the ON position, this light illuminates for about 1 second and turns off.

Low tire pressure warning

If the vehicle is being driven with low tire pressure, the warning light will illuminate. A "Tire Pressure Low - Add Air" warning also appears in the vehicle information display (if so equipped).

When the low tire pressure warning light illuminates, you should stop and adjust the tire pressure of all four tires to the recommended COLD tire pressure shown on the Tire and Loading Information label located in the driver's door opening. The low tire pressure warning light does not automatically turn off when the tire pressure is adjusted. After the tire is inflated to the recommended pressure, the vehicle must be driven at speeds above 16 mph (25 km/h) to activate the TPMS and turn off the low tire pressure warning light. Use a tire pressure gauge to check the tire pressure.

For vehicles with a vehicle information display, the "Tire Pressure Low - Add Air" warning appears each time the ignition switch is placed in the ON position as long as the low tire pressure warning light remains illuminated.

For additional information, refer to "Vehicle information display" in this section, "Tire Pressure Monitoring System (TPMS)" in the "Starting and driving" and "In case of emergency" sections of this manual.

TPMS malfunction

If the TPMS is not functioning properly, the low tire pressure warning light will flash for approximately 1 minute when the ignition switch is placed in the ON position. The light will remain on after 1 minute. Have the system checked. It is recommended that you visit a NISSAN dealer for this service. The "Tire Pressure Low — Add Air" warning does not appear if the low tire pressure warning light illuminates to indicate a TPMS malfunction.

For additional information, refer to "Tire Pressure Monitoring System (TPMS)" in the "Starting and driving" section and "Tire pressure" in the "Do-it-yourself" section of this manual.

WARNING

- **Radio waves could adversely affect electric medical equipment. Those who use a pacemaker should contact the electric medical equipment manufacturer for the possible influences before use.**
- **If the light does not illuminate with the ignition switch placed in the ON position, have the vehicle checked as soon as possible. It is recommended that you visit a NISSAN dealer for this service.**

- **If the light illuminates while driving, avoid sudden steering maneuvers or abrupt braking, reduce vehicle speed, pull off the road to a safe location and stop the vehicle as soon as possible. Driving with under-inflated tires may permanently damage the tires and increase the likelihood of tire failure. Serious vehicle damage could occur and may lead to an accident and could result in serious personal injury or death. Check the tire pressure for all four tires. Adjust the tire pressure to the recommended COLD tire pressure show on the Tire and Loading Information label located in the driver's door opening to turn the low tire pressure warning light off. If the light still illuminates while driving after adjusting the tire pressure, a tire may be flat or the TPMS may be malfunctioning. If you have a flat tire, replace it with a spare tire as soon as possible. If no tire is flat and all tires are properly inflated, have the vehicle checked. It is recommended that you visit a NISSAN dealer for this service.**
- **When replacing a wheel without the TPMS such as the spare tire, the TPMS will not function and the low tire pressure warning light will flash for approximately 1 minute. The light will remain on after 1 minute. Have your tires replaced and/or TPMS system reset as soon as possible. It is recommended that you visit a NISSAN dealer for these services.**
- **Replacing tires with those not originally specified by NISSAN could affect the proper operation of the TPMS.**

⚠ CAUTION

- **The TPMS is not a substitute for the regular tire pressure check. Be sure to check the tire pressure regularly.**
- **If the vehicle is being driven at speeds of less than 16 mph (25 km/h), the TPMS may not operate correctly.**
- **Be sure to install the specified size of tires to the four wheels correctly.**

Low windshield-washer fluid warning light (if so equipped)

This light comes on when the windshield-washer fluid is at a low level. Add windshield-washer fluid as necessary. For additional information, refer to "Windshield-washer fluid" in the "Do-it-yourself" section of this manual.

Malfunction warning light (red) (if so equipped)

If this warning light illuminates this indicates either the coolant temperature is above a critical threshold or the exhaust temperatures are above a critical threshold. When illuminated this lamp indicates the need to stop the engine as soon as it can be safely done. The engine must remain shut down until the engine can be repaired. For additional information, refer to the "Titan Diesel Owner's Manual".

CAUTION

- **Continuing vehicle operation without proper servicing of the engine control system could lead to poor driveability, reduced fuel economy, and damage to the engine control system, which may affect the vehicle's warranty coverage.**
- **Failure to drain the water from the fuel filter can cause serious damage to the engine. It is recommended that you contact a NISSAN dealer as soon as possible.**

Master warning light (if so equipped)

This light comes on when various vehicle information display warnings appear.

- No key warning
- Low fuel warning
- Low windshield-washer fluid warning
- Parking brake release warning
- Door open warning
- Loose fuel cap warning
- Check tire pressure warning
- 4WD error (if so equipped)
- Front & rear tire size differences (if so equipped)

NISSAN Intelligent Key® warning light (if so equipped)

After the ignition switch is placed in the ON position, this light comes on for about 2 seconds and then turns off. This light illuminates or blinks as follows:

- The light blinks in yellow when the door is closed with the Intelligent Key left outside the vehicle and the ignition switch in the ACC or ON position. Make sure that the Intelligent Key is inside the vehicle.
- The light blinks in green when the Intelligent Key battery is running out of power. Replace the battery with a new one. For additional information, refer to "Battery" in the "Do-it-yourself" section of this manual.
- The light illuminates in yellow when it warns of a malfunction with the Intelligent Key system.

If the warning light illuminates in yellow while the engine is stopped, it may be impossible to start the engine. If the light comes on while the engine is running, you can drive the vehicle. Have the system checked. It is recommended that you visit a NISSAN dealer for this service.

For additional information, refer to "NISSAN Intelligent Key®" in the "Pre-driving checks and adjustments" section of this manual.

P position selecting warning light (if so equipped)

The light blinks red and the warning buzzer sounds if you are outside of the vehicle with the Intelligent Key and the engine is off, but the shift lever is not in the P (Park) position.

When the warning light blinks, place the ignition switch in the ON position, move the shift lever to the P (Park) position, then place the ignition switch in the LOCK position.

Passenger seat belt warning light (if so equipped)

The light reminds you to notify the passenger to fasten their seat belt. The light illuminates whenever the ignition is placed in the ON or START position and remains illuminated until the passenger's seat belt is fastened.

The light will remain on for a period of time when the vehicle is shifted out of P (Park) and the passenger seat belt is unfastened. If the passenger seat belt is fastened, the light will turn off.

For additional information, refer to "Seat belts" in the "Safety-Seats, seat belts and supplemental restraint system" section of this manual for precautions on seat belt usage.

Supplemental air bag warning light

When the ignition switch is placed in the ON or START position, the supplemental air bag warning light illuminates for about 7 seconds and then turns off. This means the system is operational.

If any of the following conditions occur, the front air bag, side air bag, curtain air bag, and pretensioner seat belt systems need servicing:

- The supplemental air bag warning light remains on after approximately 7 seconds.
- The supplemental air bag warning light flashes intermittently.
- The supplemental air bag warning light does not come on at all.

It is recommended that you visit a NISSAN dealer for these services.

Unless checked and repaired, the supplemental restraint system (air bag system) and/or the pretensioner(s) may not function properly. For additional information, refer to "Supplemental Restraint System (SRS)" in the "Safety—Seats, seat belts and supplemental restraint system" section of this manual.

WARNING

If the supplemental air bag warning light is on, it could mean that the front air bag, side air bag, curtain air bag and/or pretensioner systems will not operate in an accident. To help avoid injury to yourself or others, have your vehicle checked as soon as possible. It is recommended that you visit a NISSAN dealer for this service.

Water in Fuel warning light (if so equipped)

For additional information, refer to the "Titan Diesel Owner's Manual".

INDICATOR LIGHTS

For additional information, refer to "Vehicle information display" in this section.

DIFF LOCK Electronic locking rear differential (E-Lock) system ON indicator light (if so equipped)

This light comes on when the electronic locking rear differential (E-Lock) system clutch is fully engaged.

The indicator light flashes when the system is first turned on. When the system fully engages, the light remains on. If the switch is on and the indicator light continues to flash, the system is not engaged.

For additional information, refer to "Electronic locking rear differential (E-Lock) system switch" in this section and "Electronic locking rear differential (E-Lock) system" in the "Starting and driving" section of this manual.

Engine start operation indicator light (if so equipped)

This indicator illuminates when the ignition switch is in the ACC or ON position with the shift lever in the P (Park) position.

Automatic transmission models: This indicator means that the engine will start by pushing the push-button ignition switch with the brake pedal depressed.

Front fog light indicator light (if so equipped)

The front fog light indicator light illuminates when the front fog lights are on. For additional information, refer to "Fog light switch" in this section.

Front passenger air bag status light (if so equipped)

The front passenger air bag status light will be lit and the passenger front air bag will be off depending on how the front passenger seat is being used.

For additional information, refer to "Front passenger air bag and status light" in the "Safety — Seats, seat belts and supplemental restraint system" section of this manual.

High beam indicator light (blue)

This blue light comes on when the headlight high beams are on and goes out when the low beams are selected.

The high beam indicator light also comes on when the passing signal is activated.

Hill descent control system ON indicator light (if so equipped)

When the ignition switch is placed in the ON position, this light comes on briefly and then turns off.

The light comes on when the hill descent control system is activated.

If the hill descent control switch is on and the indicator light blinks, the system may be disabled.

You may feel or hear the system working; this is normal.

If the indicator light does not come on when the hill descent switch is on, the system may not be functioning properly. Have the system checked. It is recommended that you visit a NISSAN dealer for this service.

For additional information, refer to "Hill descent control system ON indicator light" in this section and "Hill descent control system" in the "Starting and driving" section of this manual.

Malfunction Indicator Light (MIL) (yellow)

If this indicator light comes on steady or blinks while the engine is running, it may indicate a potential emission control malfunction.

If this indicator light comes on steady for 20 seconds and then blinks for 10 seconds when the engine is not running, it indicates that the vehicle is not ready for an emission control system inspection/maintenance test. For additional information, refer to "Readiness for inspection/maintenance (I/M) test" in the "Technical and consumer information" section of this manual.

Operation

The MIL will come on in one of two ways:

- MIL on steady — An emission control system malfunction has been detected. Check the fuel-filler cap if the Loose Fuel Cap warning appears in the vehicle information display (if so equipped) or the trip computer (if so equipped). If the fuel-filler cap is loose or missing, tighten or install the cap and continue to drive the vehicle. The light should turn off after a few driving trips. If the light does not turn off after a few driving trips, have the vehicle inspected. It is recommended that you visit a NISSAN dealer for this service. You do not need to have your vehicle towed to the dealer.
- MIL blinking — An engine misfire has been detected which may damage the emission control system. To reduce or avoid emission control system damage:
  - do not drive at speeds above 45 mph (72 km/h).
  - avoid hard acceleration or deceleration.
  - avoid steep uphill grades.
  - if possible, reduce the amount of cargo being hauled or towed.

The MIL may stop blinking and come on steady. Have the vehicle inspected. It is recommended that you visit a NISSAN dealer for this service. You do not need to have your vehicle towed to the dealer.

⚠ CAUTION

Continued vehicle operation without having the emission control system checked and repaired as necessary could lead to poor driveability, reduced fuel economy, and possible damage to the emission control system.

Security indicator light

This light blinks whenever the ignition switch is placed in the LOCK, OFF or ACC position. This function indicates the security system equipped on the vehicle is operational.

For additional information, refer to "Security systems" in this section.

Side light and headlight indicator light (green) (if so equipped)

The side light and headlight indicator light illuminates when the side light or headlight position is selected. For additional information, refer to "Headlight switch" in this section.

Slip indicator light

This indicator will blink when the Vehicle Dynamic Control (VDC) system is operating, thus alerting that the vehicle is nearing its traction limits. The road surface may be slippery.

TOW mode ON indicator light

This light comes on when the tow mode function is on.

Turn signal/hazard indicator lights

The appropriate light flashes when the turn signal switch is activated.

Both lights flash when the hazard switch is turned on.

Vehicle Dynamic Control (VDC) OFF indicator light

This indicator light comes on when the VDC OFF switch is pushed to off. This indicates the VDC system is not operating.

Push the VDC OFF switch again or restart the engine and the system will operate normally. For additional information, refer to "Vehicle Dynamic Control (VDC) system" in the "Starting and driving" section of this manual.

The VDC light also comes on when you place the ignition switch in the ON position. The light will turn off after about 2 seconds if the system is operational. If the light stays on or comes on along with the indicator light while you are driving, have the VDC system checked. It is recommended that you visit a NISSAN dealer for this service.

While the VDC system is operating, you might feel a slight vibration or hear the system working when starting the vehicle or accelerating, but this is normal.

AUDIBLE REMINDERS

Brake pad wear warning

The disc brake pads have audible wear warnings. When a disc brake pad requires replacement, it makes a high pitched scraping sound when the vehicle is in motion, whether or not the brake pedal is depressed. Have the brakes checked as soon as possible if the warning sound is heard.

Light reminder chime

With the ignition switch placed in the OFF position, a chime sounds when the driver's door is opened if the headlights or parking lights are on.

Turn the headlight control switch off before leaving the vehicle.

NISSAN Intelligent Key® door buzzer

The Intelligent Key door buzzer sounds if the Intelligent Key is left inside the vehicle when locking the doors. When the buzzer sounds, be sure to check both the vehicle and the Intelligent Key. For additional information, refer to "NISSAN Intelligent Key®" in the "Pre-driving checks and adjustments" section of this manual.

VEHICLE INFORMATION DISPLAY (if so equipped)

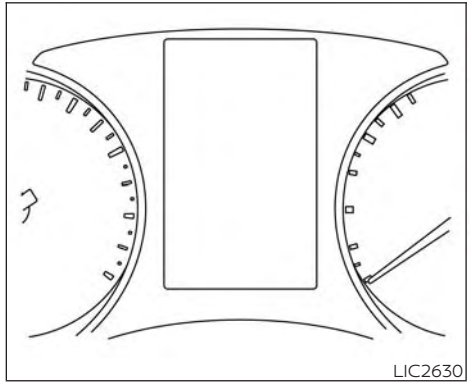

The vehicle information display is located to the left of the speedometer. It displays such items as:

- Vehicle settings
- Trip computer information
- Drive system warnings and settings (if so equipped)
- Cruise control system information
- Blind Spot Warning (BSW) system (if so equipped)
- Rear Cross Traffic Alert (RCTA) system (if so equipped)

- NISSAN Intelligent Key® operation information
- Indicators and warnings
- Tire Pressure information

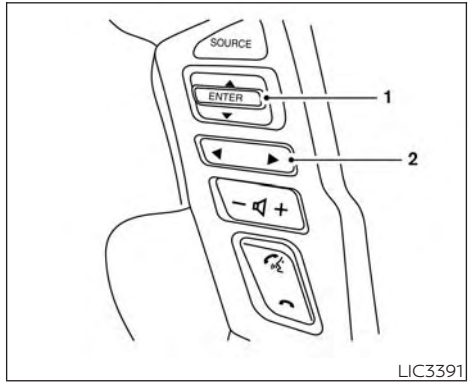

HOW TO USE THE VEHICLE INFORMATION DISPLAY

The vehicle information display can be navigated using the ENTER and ◀▶ buttons located on the steering wheel.

1. ENTER — press to select the vehicle information menu items. Additionally, use the UP/DOWN ▲▼ function to navigate the menu items
2. ◀▶ — move LEFT/RIGHT to navigate through the items in the vehicle information display

The ENTER button also controls audio functions. For additional information, refer to "Steering wheel switch for audio control" in the "Monitor, climate, audio, phone and voice recognition systems" section of this manual.

STARTUP DISPLAY

When the vehicle is placed in the ON or ACC (if so equipped) position, the vehicle information display may display the following screens:

- Home
- Off Road
- Auxiliary Gauges (if so equipped)
- DEF Level (if so equipped)
- Trip
- Fuel Economy
- Navigation (if so equipped)
- Audio
- Driving Aids (if so equipped)
- Tire Pressures
- Warning Confirmation
- Settings

Warning Confirmation will only display if there are any warnings present. For additional information, refer to "Vehicle information display warnings and indicators" in this section.

To control which items display in the vehicle information display, refer to "Settings" in this section.

SETTINGS

The setting mode allows you to change the information displayed in the vehicle information display:

- Driver Assistance (if so equipped)
- Meter Settings
- Vehicle Settings
- Towing Settings (if so equipped)
- Alarm (if so equipped)
- Maintenance
- Unit
- Language
- Factory Reset

Driver Assistance (if so equipped)

The driver assistance menu allows the user to change the various driving and parking aids.

Menu item		Result
Driving Aids (if so equipped)		Displays available driving aids. For additional information, refer to "Blind Spot Warning (BSW)" and "Rear Cross Traffic Alert (RCTA)" in the "Starting and driving" section of this manual.
	Blind Spot (BSW)	Allows user to turn the Blind Spot Warning (BSW) and Rear Cross Traffic Alert (RCTA) systems on or off. For additional information, refer to "Blind Spot Warning (BSW)" and "Rear Cross Traffic Alert (RCTA)" in the "Starting and driving" section of this manual.
Parking Aids (if so equipped)		Displays available parking aids. For additional information, refer to "Front and rear sonar system" in the "Starting and driving" section of this manual.
	Moving Object (if so equipped)	Allows user to turn the Moving Object Detection (MOD) on or off. For additional information, refer to "Moving Object Detection (MOD)" in the "Monitor, climate, audio, phone and voice recognition systems" section of this manual.
	Sensor (if so equipped)	Allows the user to turn the sensors on, off, or front only.
	Display	Allows user to turn the display on or off in the vehicle information display.
	Volume	Allows user to adjust the volume of warning chimes.
	Range	Allows user to set a specific range for the sensors to engage.

Meter Settings

The meter settings allow the user to change the settings for the vehicle information display.

Menu item		Result
Main Menu Selection		Allows user to customize the screens shown in the vehicle information display.
	Home	Allows user to turn the home screen on or off in the vehicle information display.
	Off Road	Allows user to turn the off road monitor on or off in the vehicle information display. For additional information, refer to “Off Road Monitor” in this section.
	Auxiliary Gauges	Allows user to turn the auxiliary gauges on or off in the vehicle information display. For additional information, refer to “Auxiliary gauges” in this section.
	DEF Level (if so equipped)	Allows user to turn the DEF LEVEL meter on or off in the vehicle information display. For additional information, refer to the separate “Titan Diesel Owner’s Manual”.
	4x4–i (if so equipped)	Allows user to turn the 4x4–i screen on or off in the vehicle information display. For additional information, refer to “Using 4–wheel drive (4WD)” in the “Starting and driving” section of this manual.
	Trip	Allows user to turn the trip on or off in the vehicle information display.
	Fuel Economy (if so equipped)	Allows user to turn the fuel economy on or off in the vehicle information display.
	Navigation (if so equipped)	Allows user to turn the navigation on or off in the vehicle information display. For additional information, refer to the separate “NissanConnect® Owner’s Manual”.
	Audio	Allows user to turn the audio screen on or off in the vehicle information display. For additional information, refer to “Audio” in the “Monitor, climate, audio, phone and voice recognition systems” section of this manual.
	Driving Aids (if so equipped)	Allows user to turn the driving aids on or off in the vehicle information display.
	Tire Pressures	Allows user to turn the tire pressures screen on or off in the vehicle information display.
	TPMS (if so equipped)	Allows user to set tire pressure targets.
Body Color		Allows user to change the color of the vehicle shown in the vehicle information display.
ECO Drive Report		Allows user to access the ECO drive report.
	Display	Allows user to turn the ECO drive report on or off.
	View History	Allows user to view and reset ECO drive report history.
Welcome Effect		Allows user to customize the available welcome effects.

Vehicle Settings

The vehicle settings allow the user to change the settings for lights, wipers, locking, keys, and other vehicle settings.

Menu item			Result
Lighting			Displays available lighting features of the vehicle.
	Welcome Light (if so equipped)		Allows user to turn the welcome light on or off.
	Auto Room Lamp		Allows user to turn the auto room lamp feature on or off.
	Light Sensitivity (if so equipped)		Allows user to change when the lights illuminate based on the brightness outside the vehicle.
	Light Off Delay (if so equipped)		Allows user to change the duration of time that the automatic headlights stay on after the vehicle is shut off.
Turn indicator			Displays available turn indicator options.
	3 Flash Pass		Allows user to turn the 3 flash pass on or off.
Locking			Displays available locking options.
	I-Key Door Lock (if so equipped)		Allows user to turn I-key door lock on or off. When turned on, the request switch on the door is activated.
	Selective Unlock		Allows user to turn selective unlock on or off. When turned on, only the driver's door is unlocked after the door unlock operation. When the door handle request switch on the driver's or front passenger's side door is pushed to be unlocked, only the corresponding door is unlocked first. All the doors can be unlocked if the door unlock operation is performed again within 1 minute. When this item is turned off, all the doors will be unlocked after the door unlock operation is performed once.
	Answer Bk. Horn		Allows user to turn answer back horn on or off.
	Auto Door Unlock (if so equipped)		Displays available options for the auto door unlock.
		Off	Doors will have to be manually unlocked.
		IGN Off	Doors will unlock when the ignition is turned off.
		Shift into P	Doors will unlock when the vehicle is shifted into P (Park).
Wipers			Displays available wiper options.
	Rain Sensor (if so equipped)		Allows user to turn the rain sensor feature on or off. For additional information, refer to "Wiper and washer switch" in this section.
	Speed Dependent (if so equipped)		Allows user to turn the speed dependent feature on or off. For additional information, refer to "Wiper and washer switch" in this section.

Menu item		Result
Memory Seat (ADP) (if so equipped)		Displays available memory seat options.
	Exit Seat Slide	Allows the user to turn the exit seat slide on or off. When turned on, this feature will move the driver's seat backward for an easy exit when the ignition is turned off and the driver's door is opened. After getting into the vehicle and placing the ignition switch in the ACC position, the driver's seat will move to the previous set position. For additional information, refer to "Automatic drive positioner" in the "Pre-driving checks and adjustments" section of this manual.
	Exit Steering Up	Allows the user to turn the exit steering up feature on or off. When turned on, this feature will move the steering wheel upward for an easy exit when the ignition is turned off and the driver's door is opened. After getting into the vehicle and placing the ignition switch in the ACC position, the steering wheel moves to the previous position. For additional information, refer to "Automatic drive positioner" in the "Pre-driving checks and adjustments" section of this manual.
	Reverse Tilt Mirror (if so equipped)	Displays reverse tilt mirror information.
Towing Settings (if so equipped)		Displays available towing settings options.
	Trailer light check	Allows user to select a mode in which the vehicle will test various lights that could affect a trailer if connected properly. This feature can also be activated using the NISSAN Intelligent Key®. For additional information, refer to "NISSAN Intelligent Key®" in the "Pre-driving checks and adjustments" and "Towing a trailer" in the Technical and consumer information" sections of this manual.

Alarm

The alarm menu allows the user to set specific alarms for various items on the vehicle.

Menu item	Result
Outside Temp.	Allows user to turn the outside temp. alarm on or off.
Timer Alert	Allows user to set the timer alert alarm.
Navigation (if so equipped)	Allows user to turn the navigation alarm on or off.
Phone	Allows user to turn the phone alarm on or off.
Mail	Allows user to turn the mail alarm on or off.

Maintenance

The maintenance menu allows the user to set reminders for various vehicle maintenance items.

⚠ WARNING

The tire replacement indicator is not a substitute for regular tire checks, including tire pressure checks. For additional information, refer to "Changing wheels and tires" in the "Do-it-yourself" section of this manual. Many factors including tire inflation, alignment, driving habits and road conditions affect tire wear and when tires should be replaced. Setting the tire replacement indicator for a certain driving distance does not mean your tires will last that long. Use the tire replacement indicator as a guide only and always perform regular tire checks. Failure to perform regular tire checks, including tire pressure checks could result in tire failure. Serious vehicle damage could occur and may lead to a collision, which could result in serious personal injury or death.

Menu item		Result
Maintenance		Allows user to cycle through various maintenance items and set reminders to perform maintenance at specific intervals.
	Oil Control System (if so equipped)	Allows user to view the oil control system maintenance interval.
	Oil Filter (if so equipped)	Allows user to set an oil filter reminder at a specific interval or reset the current one.
	Oil and Filter (if so equipped)	Allows user to set an oil and filter reminder at a specific interval or reset the current one.
	Air Filter	Allows user to set an air filter reminder at a specific interval or reset the current one.
	Tire	Allows user to set a tire reminder at a specific interval or reset the current one.
	Brake Pad	Allows user to set a brake pad reminder at a specific interval or reset the current one.
	Brake Fluid	Allows user to set a brake fluid reminder at a specific interval or reset the current one.
	Battery	Allows user to set a battery reminder at a specific interval or reset the current one.
	Transmission Fluid	Allows user to set a transmission fluid reminder at a specific interval or reset the current one.
	Engine Coolant	Allows user to set an engine coolant reminder at a specific interval or reset the current one.
	DEF Level (if so equipped)	Allows user to set a DEF level reminder at a specific interval or reset the current one.
	Spark Plug (if so equipped)	Allows user to set a spark plug reminder at a specific interval or reset the current one.
	Other	Allows user to set a reminder, other than for the maintenance items listed above, at a specific interval or reset the current one.

Unit

The units menu allows the user to change the units shown in the vehicle information display.

Menu item	Result
Mileage	Displays available mileage display units.
Pressure	Displays available pressure display units.
Temperature	Displays available temperature display units.

Language

The language menu allows the user to change the languages displayed in the vehicle information display.

Menu item	Result
Language	Displays available language options for the vehicle information display.

Factory Reset

The factory reset menu allows the user to restore the vehicle information display settings to factory status.

Menu item	Result
Factory Reset	Allows user to reset the vehicle information display settings to the original factory settings. Once selected, the user can confirm or deny the reset.

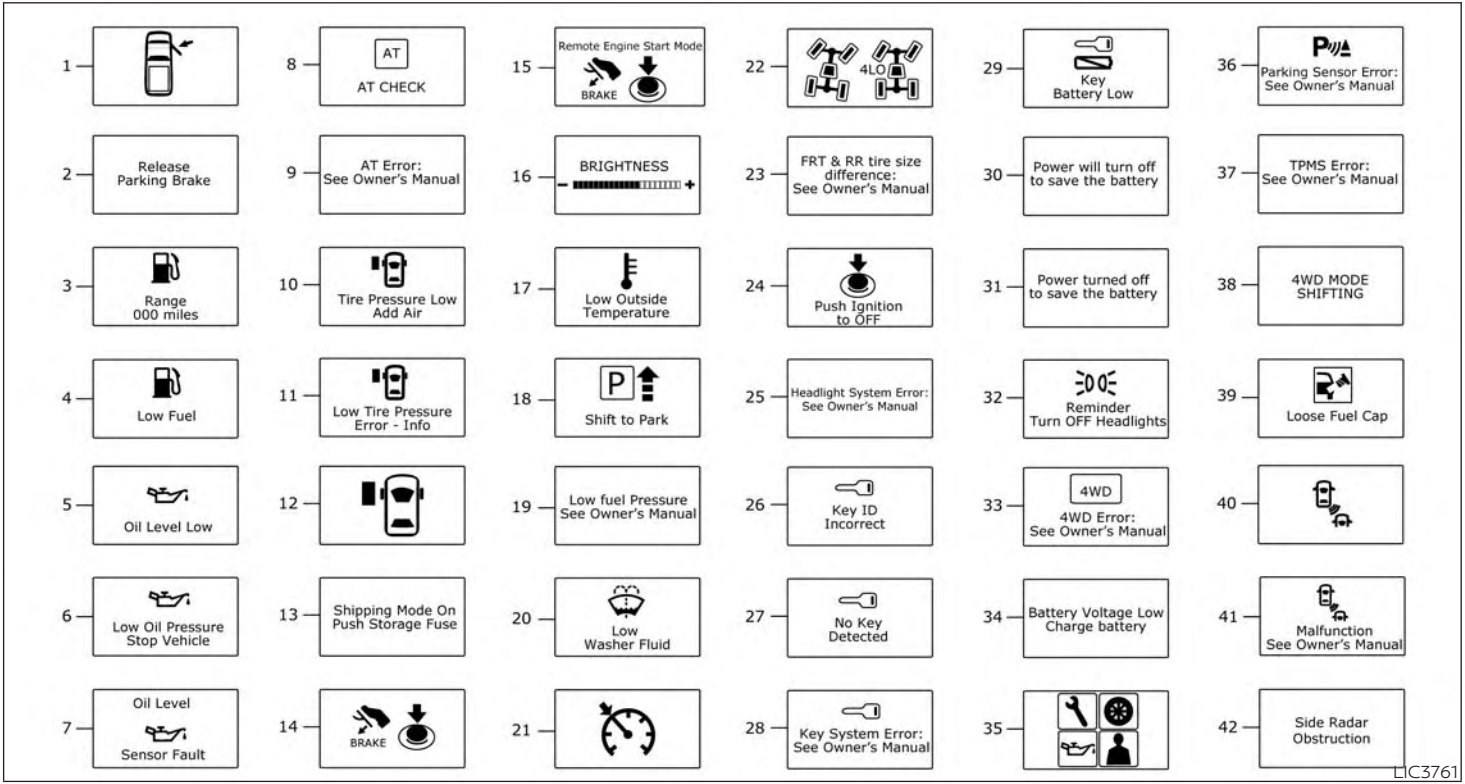
1
8
AT
AT CHECK
15
Remote Engine Start Mode
BRAKE
22
4LO
29
Key
Battery Low
36
Parking Sensor Error:
See Owner's Manual
2
Release
Parking Brake
9
AT Error:
See Owner's Manual
16
BRIGHTNESS
23
FRT & RR tire size
difference:
See Owner's Manual
30
Power will turn off
to save the battery
37
TPMS Error:
See Owner's Manual
3
Range
000 miles
10
Tire Pressure Low
Add Air
17
Low Outside
Temperature
24
Push Ignition
to OFF
31
Power turned off
to save the battery
38
4WD MODE
SHIFTING
4
Low Fuel
11
Low Tire Pressure
Error - Info
18
P
Shift to Park
25
Headlight System Error:
See Owner's Manual
32
Reminder
Turn OFF Headlights
39
Loose Fuel Cap
5
Oil Level Low
12
19
Low fuel Pressure
See Owner's Manual
26
Key ID
Incorrect
33
4WD
4WD Error:
See Owner's Manual
40
6
Low Oil Pressure
Stop Vehicle
13
Shipping Mode On
Push Storage Fuse
20
Low
Washer Fluid
27
No Key
Detected
34
Battery Voltage Low
Charge battery
41
Malfunction
See Owner's Manual
7
Oil Level
Sensor Fault
14
BRAKE
21
28
Key System Error:
See Owner's Manual
35
42
Side Radar
Obstruction
LIC3761

VEHICLE INFORMATION DISPLAY WARNINGS AND INDICATORS

1. Door Open
2. Release Parking Brake
3. Range XX miles
4. Low Fuel
5. Oil Level Low (For Diesel engines only)
6. Low Oil Pressure Stop Vehicle (For Diesel engines only)
7. Oil Level Sensor Fault (For Diesel engines only)
8. AT (Automatic Transmission) CHECK
9. AT (Automatic Transmission) Error: See Owner's Manual
10. Tire Pressure Low - Add Air
11. Low Tire Pressure Error — Info
12. Flat Tire
13. Shipping Mode On Push Storage Fuse
14. Push brake and start button to drive
15. Remote Engine Start Mode (if so equipped)
16. Brightness indicator
17. Low Outside Temperature
18. Shift to Park
19. Low fuel Pressure: See Owner's Manual
20. Low Washer Fluid
21. Cruise control indicator
22. 4WD shift indicators (if so equipped)
23. FRT & RR tire size difference: See Owner's Manual (if so equipped)
24. Push Ignition to OFF
25. Headlight System Error: See Owner's Manual (if so equipped)
26. Key ID Incorrect
27. No Key Detected
28. Key System Error: See Owner's Manual
29. Key Battery Low
30. Power will turn off to save the battery
31. Power turned off to save the battery
32. Reminder: Turn OFF Headlights
33. 4WD Error: See Owner's Manual (if so equipped)
34. Battery Voltage Low Charge Battery
35. Maintenance indicators
36. Parking Sensor Error: See Owner's Manual (if so equipped)
37. TPMS Error: See Owner's Manual
38. 4WD MODE SHIFTING (if so equipped)
39. Loose Fuel Cap (if so equipped)
40. Blind Spot Warning (BSW) and Rear Cross Traffic Alert (RCTA) indicator (if so equipped)
41. Malfunction: See Owner's Manual (if so equipped)
42. Side Radar Obstruction (if so equipped)

Door Open

This warning illuminates when a door has been opened.

Release Parking Brake

This warning illuminates in the message area of the vehicle information display when the parking brake is set and the vehicle is driven. Press the brake pedal to release the parking brake.

Range XX miles

This warning illuminates to indicate the approximate distance remaining before the fuel reaches 0 (Empty).

Low Fuel

This warning illuminates when the fuel level in the fuel tank is getting low. Refuel as soon as it is convenient, preferably before the fuel gauge reaches 0 (Empty). **There will be a small reserve of fuel in the tank when the fuel gauge needle reaches 0 (Empty).**

Oil Level Low (For Diesel engines only)

If the Oil Level Low indicator is displayed, the engine oil level is low. If the low level reminder is displayed, check the level using the engine oil dipstick.

⚠ CAUTION

The oil level should be checked regularly using the engine oil dipstick. Operating with an insufficient amount of oil can damage the engine and such damage is not covered by the warranty.

Low Oil Pressure Stop Vehicle (For Diesel engines only)

This warning appears in the message area of the vehicle information display if low oil pressure is detected. This gauge is not designed to indicate low oil level. **The low oil pressure warning is not designed to indicate a low oil level.** Use the dipstick to check the oil level. For additional information, refer to "Engine oil" in the "Do-it-yourself" section of this manual.

Oil Level Sensor Fault (For Diesel engines only)

This warning appears in the message area of the vehicle information display if the oil level sensor malfunctions. It is recommended that you visit a NISSAN dealer to have this system checked.

AT (Automatic Transmission) CHECK

If the AT Check warning appears while the engine is running, or while driving, it may indicate that the AT is not functioning properly and may need servicing. Have the system checked, and if necessary, repaired promptly. It is recommended that you visit a NISSAN dealer for this service.

AT (Automatic Transmission) Error: See Owner's Manual

If this message appears while the engine is running, or while driving, it may indicate that the AT is not functioning properly and may need servicing. Have the system checked, and if necessary, repaired promptly. It is recommended that you visit a NISSAN dealer for this service.

Tire Pressure Low - Add Air

This warning appears when the low tire pressure warning light in the meter illuminates and low tire pressure is detected. The warning appears each time the ignition switch is placed in the ON position as long as the low tire pressure warning light remains illuminated. If this warning appears, stop the vehicle and adjust the tire pressures of all four tires to the recommended COLD tire pressure shown on the Tire and Loading Information label. For additional information, refer to "Low tire pressure warning light" in this section and "Tire Pressure Monitoring System (TPMS)" in the "Starting and driving" section of this manual.

Low Tire Pressure Error — Info

This warning appears when the low tire pressure warning light in the meter illuminates and low tire pressure is detected. Press the button for information about the low tire pressure. For additional information, refer to "Low tire pressure warning light" in this section and "Tire Pressure Monitoring System (TPMS)" in the "Starting and driving" section of this manual.

Flat Tire

This warning appears when the low tire pressure warning light in the meter illuminates and one or more flat tires are detected while driving.

Shipping Mode On Push Storage Fuse

This warning may appear if the extended storage switch is not pushed in. When this warning appears, push in the extended storage switch to turn off the warning. For additional information, refer to "Extended storage switch" in this section.

Push brake and start button to drive

This indicator appears when the shift lever is in the P (Park) position.

This indicator means that the engine will start by pushing the ignition switch with the brake pedal depressed. You can start the engine from any position of the ignition switch.

Remote Engine Start Mode (if so equipped)

This warning appears in the vehicle information display when the vehicle has been started using the remote start function. To start the vehicle, apply the brake and place the ignition switch in the ON position.

Brightness indicator

This indicator appears when the vehicle information display screen brightness is being adjusted.

Low Outside Temperature

This warning appears if the outside temperature is below 37°F (3°C). The temperature can be changed to display in Celsius or Fahrenheit. For additional information, refer to "Settings" in this section.

Shift to Park

This warning illuminates when the ignition switch is in the ACC or OFF position and the shift lever is not in the P (Park) position. Also, a chime sounds when the ignition switch is in the ACC or OFF position.

If this warning illuminates, move the shift lever to the P (Park) position and start the engine.

Low fuel Pressure: See Owner's Manual

This warning appears when the fuel pressure is low. Check the fuel level and refuel if needed. If the warning remains illuminated, have the system checked. It is recommended that you visit a NISSAN dealer for this service. For additional information, refer to "Diesel fuel system" in the "Introduction" of the "Titan Diesel Owner's Manual".

⚠ CAUTION

Since the fuel pump is lubricated by the fuel itself, prolonged driving with low fuel levels may cause progressive damage to the fuel pump. This may cause the pump to fail.

Low Washer Fluid

This warning illuminates when the windshield-washer fluid is at a low level. Add windshield-washer fluid as necessary. For additional information, refer to "Windshield-washer fluid" in the "Do-it-yourself" section of this manual.

Cruise control indicator

This indicator shows the cruise control system status.

For additional information, refer to "Cruise control" in the "Starting and driving" section of this manual.

4WD shift indicators (if so equipped)

These indicators show which 4WD mode is selected. For additional information, refer to "Using 4–wheel drive (4WD)" in the "Starting and driving" section of this manual.

FRT & RR tire size difference: See Owner's Manual (if so equipped)

This warning may appear if there is a large difference between the diameters of the front and rear wheels. Pull off the road in a safe area, with the engine idling. Check that all the tire sizes are the same, that the tire pressure is correct and that the tires are not excessively worn. For additional information, refer to "Wheels and tires" in the "Technical and consumer information" of this manual.

Push Ignition to OFF

After the Push ignition to OFF warning illuminates, the warning will illuminate if the ignition switch is placed in the ACC position when the shift lever is moved to the P (Park) position.

To turn off the Push warning, place the ignition switch in the ON position and then in the LOCK position.

Headlight System Error: See Owner's Manual (if so equipped)

This warning appears when the LED headlights are not functioning properly.

If this warning appears, have your system checked. It is recommended that you visit a NISSAN dealer for this service.

Key ID Incorrect

This warning appears when the ignition switch is placed from the OFF position and the Intelligent Key is not recognized by the system. You cannot start the engine with an unregistered key.

For additional information, refer to "NISSAN Intelligent Key®" in the "Pre-driving checks and adjustments" section of this manual.

No Key Detected

This warning appears when the Intelligent Key is left outside the vehicle with the ignition switch in the ON position. Make sure the Intelligent Key is inside the vehicle.

For additional information, refer to "NISSAN Intelligent Key®" in the "Pre-driving checks and adjustments" section of this manual.

Key System Error: See Owner's Manual

After the ignition switch is pushed to the ON position, this light comes on for a period of time and then turns off.

The Key System Error message warns of a malfunction with the Intelligent Key system. If the light comes on while the engine is stopped, it may be impossible to start the engine.

If the light comes on while the engine is running, you can drive the vehicle. However, in these cases, have the system checked. It is recommended that you visit a NISSAN dealer for this service.

Key Battery Low

This indicator illuminates when the Intelligent Key battery is running out of power.

If this indicator illuminates, replace the battery with a new one. For additional information, refer to "Battery replacement" in the "Do-it-yourself" section of this manual.

Power will turn off to save the battery

This message appears in the vehicle information display after a period of time if the ignition switch is in the ACC or the ON position and if the vehicle is in P (Park). For additional information, refer to "Push-button ignition switch positions" in the "Starting and driving" section of this manual.

Power turned off to save the battery

This warning appears after the ignition switch is automatically turned off to save the battery.

Reminder: Turn OFF Headlights

This warning appears when the headlights are left in the ON position when exiting the vehicle. Place the headlight switch in the OFF or AUTO position. For additional information, refer to "Headlight switch" in this section.

4WD Error: See Owner's Manual (if so equipped)

This warning appears when the 4-wheel drive system is not functioning properly while the engine is running.

Battery Voltage Low Charge Battery

This warning appears when the battery is low and needs to be charged.

Maintenance indicators

When engine oil service is due, one or more of these icons will appear automatically to remind you. For additional information, refer to "Engine oil" in the "Do-it-yourself" section of this manual.

These will also appear when the user-set reminders are met. For additional information, refer to "Vehicle information display" in this section.

Parking Sensor Error: See Owner's Manual (if so equipped)

This warning illuminates when there is an error with the system. For additional information, refer to "Front and rear sonar system" in the "Starting and driving" section of this manual.

TPMS Error: See Owner's Manual

This warning appears when there is an error with your TPMS. If this warning comes on, have the system checked. It is recommended that you visit a NISSAN dealer for this service.

4WD MODE SHIFTING (if so equipped)

This message appears when the vehicle is shifting into 4WD. For additional information, refer to "Using 4–wheel drive (4WD)" in the "Starting and driving" section of this manual.

Loose Fuel Cap (if so equipped)

This warning appears when the fuel-filler cap is not tightened correctly after the vehicle has been refueled. For additional information, refer to "Fuel-filler door" in the "Pre-driving checks and adjustments" section of this manual.

Blind Spot Warning (BSW) and Rear Cross Traffic Alert (RCTA) indicator (if so equipped)

This indicator shows when the BSW and RCTA systems are engaged.

For additional information, refer to "Blind Spot Warning (BSW)" and "Rear Cross Traffic Alert (RCTA)" in the "Starting and driving" section of this manual.

Malfunction: See Owner's Manual (if so equipped)

This warning appears when one or more of the following systems (if so equipped) is not functioning properly:

- Blind Spot Warning (BSW)
- Rear Cross Traffic alert (RCTA)

If one or more of these warning appears, have the system checked. It is recommended that you visit a NISSAN dealer for this service.

Side Radar Obstruction (if so equipped)

This message appears when the Blind Spot Warning (BSW) or Rear Cross Traffic Alert (RCTA) systems become unavailable because a radar blockage is detected. For additional information, refer to "Blind Spot Warning (BSW)" or "Rear Cross Traffic Alert (RCTA)" in the "Starting and driving" section of this manual.

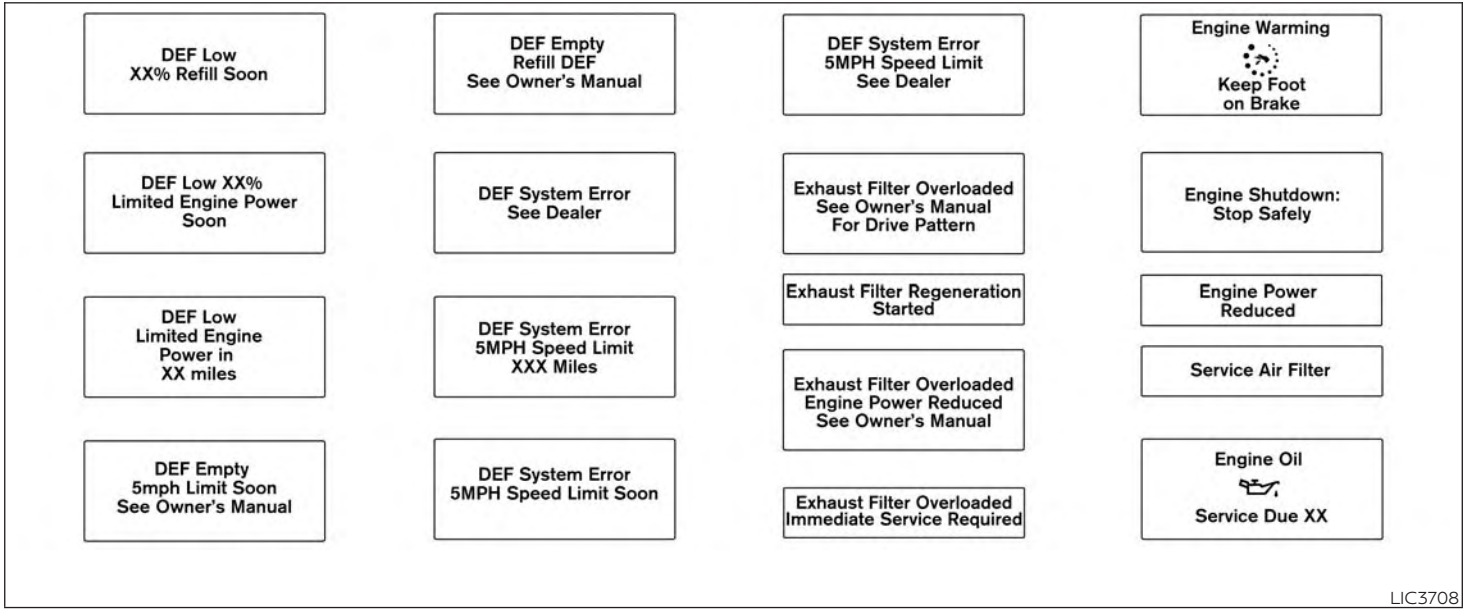

DIESEL WARNINGS AND INDICATORS (if so equipped)

These warning and indicators apply to the diesel-only models. For additional information, refer to the "Titan Diesel Owner's Manual."

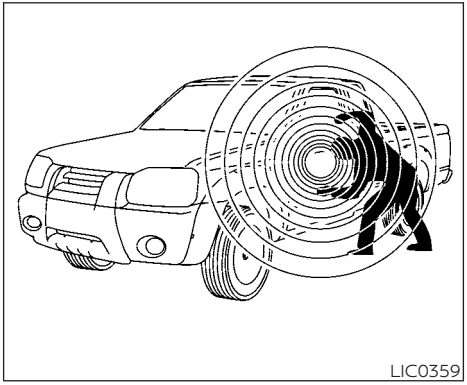
LIC0359

Your vehicle has two types of security systems:

- Vehicle security system
- NISSAN Vehicle Immobilizer System

VEHICLE SECURITY SYSTEM

The vehicle security system provides visual and audible alarm signals if someone opens the doors or hood when the system is armed. It is not, however, a motion detection-type system that activates when a vehicle is moved or when a vibration occurs.

The system helps deter vehicle theft but cannot prevent it, nor can it prevent the theft of interior or exterior vehicle components in all situations. Always secure your vehicle even if parking for a brief period. Never leave your keys in the ignition, and always lock the vehicle when unattended. Be aware of your surroundings, and park in secure, well-lit areas whenever possible.

Many devices offering additional protection, such as component locks, identification markers, and tracking systems, are available at auto supply stores and specialty shops. A NISSAN dealer may also offer such equipment. Check with your insurance company to see if you may be eligible for discounts for various theft protection features.

How to arm the vehicle security system

1. Close all windows. **(The system can be armed even if the windows are open.)**
2. Remove the Intelligent Key from the vehicle.
3. Close all doors. Lock all doors. The doors can be locked with the Intelligent Key, door handle request switch, or mechanical key.
4. Confirm that the security indicator light stays on for about 30 seconds. The vehicle security system is now pre-armed. The vehicle security system will automatically shift into the armed phase. The security light begins to flash once every three seconds. If during the pre-armed phase one of the following occurs, the system will not arm:

- Any door is unlocked with the mechanical key, the Intelligent Key or door request switch.
- Ignition switch is placed in ACC or ON position.
- **If the key is turned slowly when locking the door, the system may not arm. Furthermore, if the key is turned beyond the vertical position toward the unlock position to remove the key, the system may be disarmed when the key is removed. If the indicator light fails to glow for a period of time, unlock the door once and lock it again.**

- **Even when the driver and/or passengers are in the vehicle, the system will activate with all the doors, hood and locked with the ignition switch placed in the LOCK position. When placing the ignition switch in the ACC or ON position, the system will be released.**
- **The lockable bedside storage compartment (if so equipped) is not protected by the vehicle security system.**

Vehicle security system activation

The vehicle security system will give the following alarm:

- The headlights blink and the horn sounds intermittently.
- The alarm automatically turns off after a period of time. However, the alarm reactivates if the vehicle is tampered with again. The alarm can be shut off by unlocking the driver's door with the key or by pressing the button on the key fob.

The alarm is activated by:

- Opening a door without using the key or key fob (even if the door is unlocked by using the inside lock knob or the power door lock switch).

How to stop an activated alarm

The alarm stops only by unlocking the driver's door with the key or by pressing the button on the key fob.

NISSAN VEHICLE IMMOBILIZER SYSTEM

The NISSAN Vehicle Immobilizer System will not allow the engine to start without the use of a registered key.

If the engine fails to start using a registered key (for example, when interference is caused by another registered key, an automated toll road device or automatic payment device on the key ring), restart the engine using the following procedures:

1. Leave the ignition switch placed in the ON position for approximately 5 seconds.
2. Place the ignition switch in the OFF or LOCK position and wait approximately 10 seconds.
3. Repeat steps 1 and 2.
4. Restart the engine while holding the device (which may have caused the interference) separate from the registered key.

If the no start condition re-occurs, NISSAN recommends placing the registered key on a separate key ring to avoid interference from other devices.

FCC Notice:

For USA:

This device complies with part 15 of the FCC Rules. Operation is subject to the following two conditions: (1) This device may not cause harmful interference, and (2) this device must accept any interference received, including interference that may cause undesired operation.

NOTE:

Changes or modifications not expressly approved by the party responsible for compliance could void the user's authority to operate the equipment.

For Canada:

This device complies with Industry Canada licence-exempt RSS standard(s). Operation is subject to the following two conditions: (1) this device may not cause interference, and (2) this device must accept any interference, including interference that may cause undesired operation of the device.

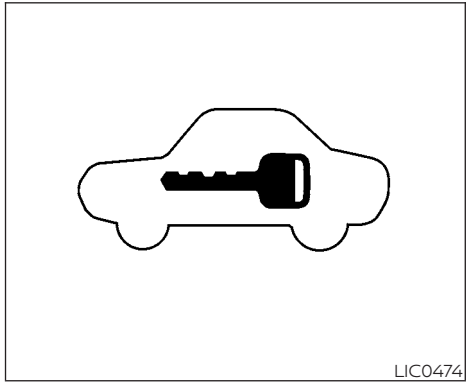

Security indicator light

The security indicator light blinks whenever the ignition switch is placed in the OFF, LOCK or ACC position.

This function indicates the NISSAN Vehicle Immobilizer System is operational.

If the NISSAN Vehicle Immobilizer System is malfunctioning, the light will remain on while the ignition switch is placed in the ON position.

If the light still remains on and/or the engine will not start, seek service for the NISSAN Vehicle Immobilizer System service as soon as possible. Please bring all registered keys that you have. It is recommended that you visit a NISSAN dealer for this service.

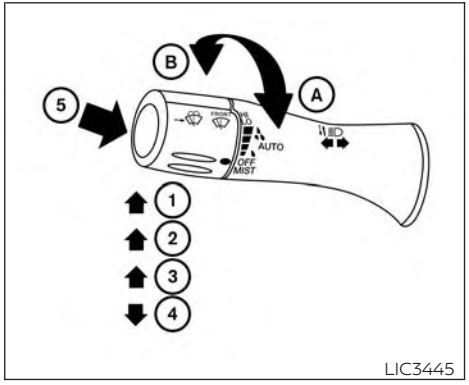

Type A (if so equipped)

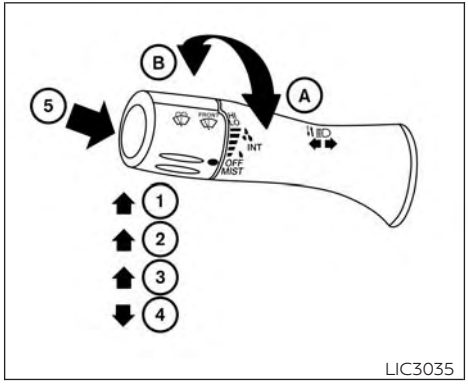

Type B (if so equipped)

SWITCH OPERATION

⚠ WARNING

In freezing temperatures the washer solution may freeze on the windshield and obscure your vision which may lead to an accident. Warm the windshield with the defroster before you wash the windshield.

⚠ CAUTION

- **Do not operate the washer continuously for more than 30 seconds.**
- **Do not operate the washer if the windshield-washer fluid reservoir is empty.**
- **Do not fill the windshield-washer fluid reservoir with windshield-washer fluid concentrates at full strength. Some methyl alcohol based windshield-washer fluid concentrates may permanently stain the grille if spilled while filling the windshield-washer fluid reservoir.**
- **Pre-mix windshield-washer fluid concentrates with water to the manufacturer's recommended levels before pouring the fluid into the windshield-washer fluid reservoir. Do not use the windshield-washer fluid reservoir to mix the windshield-washer fluid concentrate and water.**

NOTE:

If the windshield wiper operation is interrupted by snow or ice, the wiper may stop moving to protect its motor. If this occurs, turn the wiper switch to the OFF position and remove the snow or ice that is on and around the wiper arms. In approximately 1 minute, turn the switch on again to operate the wiper.

The windshield wiper and washer operates when the ignition switch is in the ON position.

Rotate the end of the lever to operate the wiper at the following speed:

① Intermittent (INT) — intermittent operation can be adjusted by turning the knob toward Ⓐ (Slower) or Ⓑ (Faster). Also, the intermittent operation speed varies in accordance with the vehicle speed. (For example, when the vehicle speed is high, the intermittent operation speed will be faster.)

② Low (LO) — continuous low speed operation

③ High (HI) — continuous high speed operation

Rotate the lever the opposite direction ④ to have one sweep operation (MIST) of the wiper.

Press the button on the end of the lever ⑤ to operate the washer. The wiper will also operate several times.

NOTE:

The Speed Dependent feature may be disabled. For additional information, refer to "Vehicle information display" in this section.

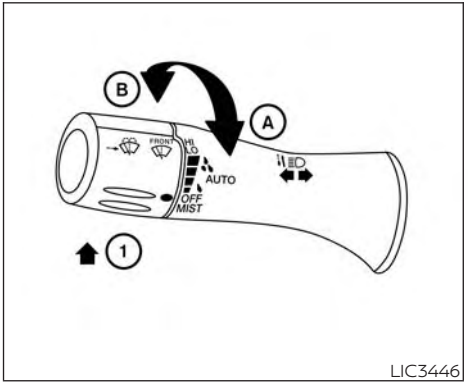

RAIN-SENSING AUTO WIPER SYSTEM (if so equipped)

⚠ CAUTION

- **Do not touch the rain sensor and around it when the wiper switch is in the AUTO position and the ignition switch is in the ON position. The wipers may operate unexpectedly and cause an injury or may damage a wiper.**
- **The rain-sensing auto wipers are intended for use during rain. If the switch is left in the AUTO position, the wipers may operate unexpectedly when dirt, fingerprints, oil film or insects are stuck on or around the sensor. The wipers may also operate when exhaust gas or moisture affect the rain sensor.**
- **When the windshield glass is coated with water repellent, the speed of the rain-sensing auto wipers may be higher even though the amount of the rainfall is small.**
- **Be sure to turn off the rain-sensing auto wiper system when you use a car wash.**
- **The rain-sensing auto wipers may not operate if rain does not hit the rain sensor even if it is raining.**
- **Using Genuine NISSAN wiper blades is recommended for proper operation of the rain-sensing auto wiper system. For additional information, refer to "Windshield wiper blades" in the "Do-it-yourself" section of this manual.**

The rain-sensing auto wiper system can automatically turn on the wipers and adjust the wiper speed depending on the rainfall and the vehicle speed by using the rain sensor located on the upper part of the windshield.

To set the rain-sensing auto wiper system, rotate the lever to the AUTO position ①. The wiper will sweep once while the ignition switch is in the ON position.

The rain sensor sensitivity level can be adjusted by turning the knob toward the front Ⓑ (High) or toward the rear Ⓐ (Low).

- High — High sensitive operation
- Low — Low sensitive operation

To turn the rain-sensing auto wiper system off, rotate the lever to the OFF position, or rotate the lever to the LO or HI position.

NOTE:

The Rain Sensor feature may be disabled. For additional information, refer to "Vehicle information display" in this section.

REAR WINDOW AND/OR OUTSIDE MIRROR DEFROSTER SWITCH (if so equipped)

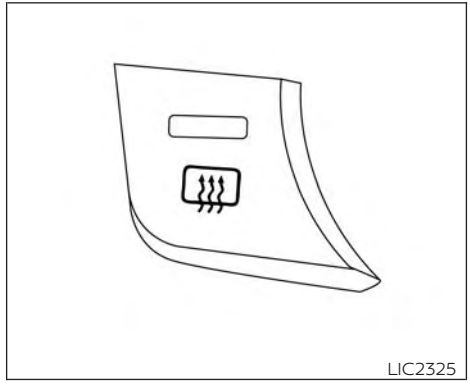

Type A (if so equipped)

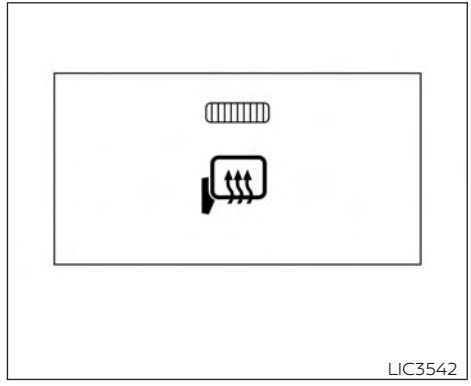

Type B (if so equipped)

To defrost the rear window glass and/or outside mirrors, start the engine and push the rear window/outside mirror defroster switch on. The indicator light on the switch will illuminate. Push the switch again to turn the defroster off.

The defroster automatically turns off after approximately 15 minutes.

NOTE:

If the rear power window (if so equipped) is open while the defroster switch is on, the rear window defroster will automatically shut off. The heated outside mirrors (if so equipped) will remain on. The rear window defroster will automatically turn on when the rear power window is fully closed if the switch is on.

⚠ CAUTION

When cleaning the inner side of the rear window, be careful not to scratch or damage the rear window defroster.

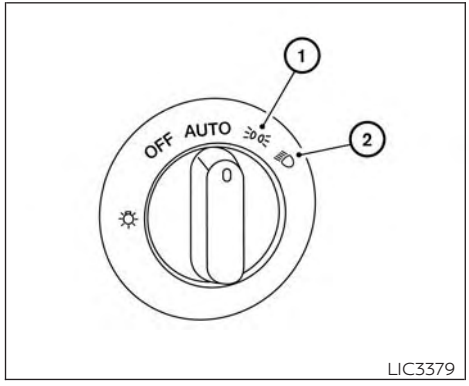

Type A (if so equipped)

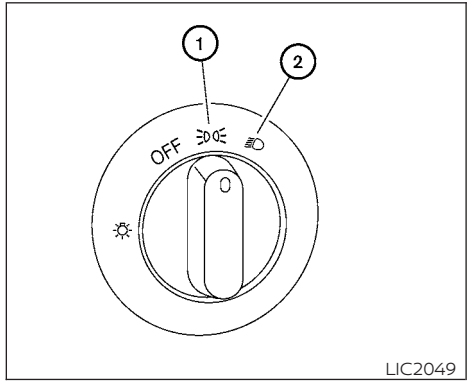

Type B (if so equipped)

HEADLIGHT CONTROL SWITCH

Lighting

① Rotate the switch to the position, and the front parking, tail, license plate, map lights (if so equipped), and instrument panel lights will come on.

② Rotate the switch to the position, and the headlights will come on. All other lights, except the map lights (if so equipped), will remain on.

⚠ CAUTION

Use the headlights with the engine running to avoid discharging the vehicle battery.

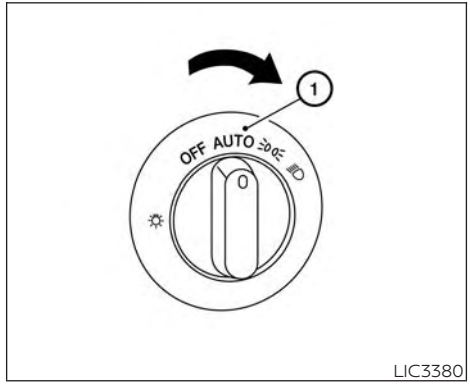

LIC3380

Autolight system (if so equipped)

The autolight system allows the headlights to be set so they turn on and off automatically. The autolight system can:

- Turn on the headlights, front parking, tail, license plate and instrument panel lights automatically when it is dark.
- Turn off all the lights when it is light.
- Keep all the lights on for a period of time after you place the ignition switch in the OFF position and all doors are closed.

NOTE:

Autolight activation sensitivity and the time delay for autolight shutoff can be adjusted. For additional information, refer to "Vehicle information display" in this section.

To turn on the autolight system:

1. Turn the headlight switch to the AUTO position ①.
2. Place the ignition switch in the ON position.
3. The autolight system automatically turns the headlights on and off.

Initially, if the ignition switch is placed in the OFF position and a door is opened and left open, the headlights remain on for a period of time. If another door is opened while the headlights are on, then the timer is reset.

To turn the autolight system off, turn the switch to the OFF, , or position.

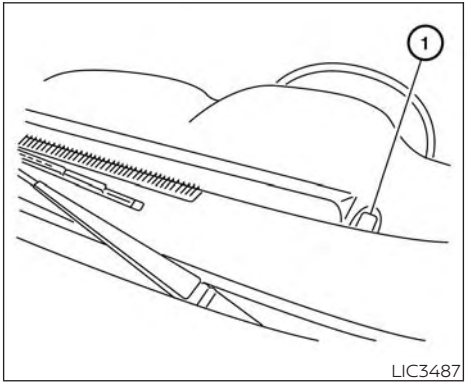

Be sure you do not put anything on top of the autolight sensor ① located on the top side of the instrument panel. The autolight sensor controls the autolight; if it is covered, the autolight sensor reacts as if it is dark out and the headlights will illuminate. If this occurs while parked with the engine off and the ignition switch placed in the ON position, your vehicle's battery could become discharged.

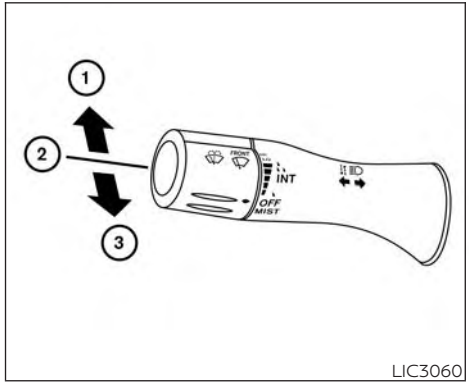

Headlight beam select

① To select the high beam function, ensure the low beams are on using the headlight control switch, then push the lever forward. The high beam lights come on and the blue indicator light illuminates.

② Pull the lever back to return to the low beam.

③ Pulling and releasing the lever flashes the headlight high beams on and off. The low beams need not be engaged for this function.

Battery saver system

If the ignition switch is placed in the OFF position while the headlight switch is in the or position, the headlights will turn off after a period of time.

After the headlights automatically turn off with the headlight switch in the or position, the headlights will illuminate again if the headlight switch is moved to the OFF position and then turned to the or position.

⚠ CAUTION

Even though the battery saver feature automatically turns off the headlights after a period of time, you should turn the headlight switch to the OFF position when the engine is not running to avoid discharging the vehicle battery.

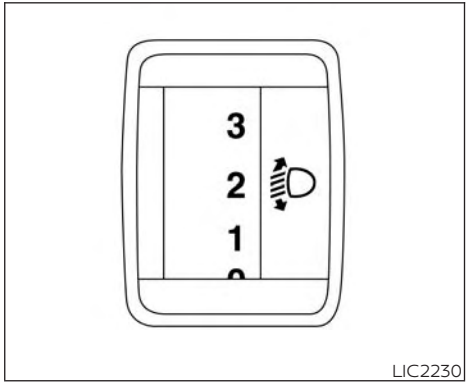

Manual headlight aiming control (if so equipped)

Depending on the number of occupants in the vehicle and the load it is carrying, the headlight axis may be higher than desired. If the vehicle is traveling on a hilly road, the headlights may directly hit the rearview mirror of the vehicle ahead or the windshield of the oncoming vehicle. The light axis can be lowered with the operation of the switch.

The larger the number designated on the switch, the lower the axis.

When traveling without a heavy load or on a flat road, select position 0.

Select the switch position by referring to the following sample.

Vehicle Load	Switch Position
Driver only or Driver/front passenger	0
Driver/front seat passenger/ rear seat passengers	1
Driver/front seat passenger/ rear seat passengers/cargo or driver/cargo/no trailer	2
Fully loaded/no trailer	3

DAYTIME RUNNING LIGHTS (DRL) SYSTEM (Type A) (if so equipped)

The lights in the fog light area automatically illuminate at 100% intensity when the engine is started and the parking brake released. The Daytime Running Lights (DRL) operate with the headlight switch in the OFF position.

If the parking brake is applied before the engine is started, the DRL do not illuminate.

The DRL illuminate when the parking brake is released. The DRL remain on while the engine is running.

It is necessary at dusk to turn the headlight switch on for interior controls and switches to illuminate, as those remain off while the switch is in the OFF position.

⚠ WARNING

When the DRL system is active, tail lights on your vehicle are not on. It is necessary at dusk to turn on your headlights. Failure to do so could cause an accident injuring yourself and others.

LED DAYTIME RUNNING LIGHTS (DRL) SYSTEM (Type B) (if so equipped)

The LED portion of the headlights automatically illuminates at 100% intensity when the engine is started and the parking brake released. The LED Daytime Running Lights (LED DRL) operate with the headlight switch in the OFF position. When you turn the headlight switch to the position for full illumination, the LED lights switch from LED DRL to the park function.

If the parking brake is applied before the engine is started, the LED DRL do not illuminate. The LED DRL illuminate when the parking brake is released. The LED DRL remain on while the engine is running.

It is necessary at dusk to turn the headlight switch ON for interior controls and switches to illuminate, as those remain off while the switch is in the OFF position.

⚠ WARNING

When the LED DRL system is active, tail lights on your vehicle are not on. It is necessary at dusk to turn on your headlights. Failure to do so could cause an accident injuring yourself and others.

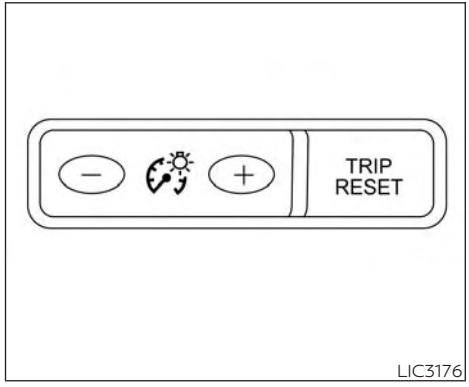

INSTRUMENT BRIGHTNESS CONTROL

Press the "+" button to increase the brightness of instrument panel lights.

Press the "-" button to decrease the brightness of instrument panel lights.

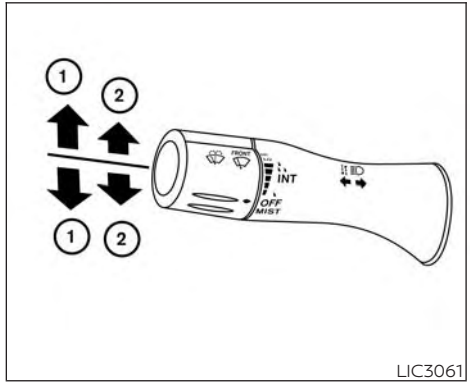

TURN SIGNAL SWITCH

Turn signal

① Move the lever up or down to signal the turning direction. When the turn is completed, the turn signal cancels automatically.

Lane change signal

② Move the lever up or down until the turn signal begins to flash, but the lever does not latch, to signal a lane change. Hold the lever until the lane change is completed.

Move the lever up or down until the turn signal begins to flash, but the lever does not latch, and release the lever. The turn signal will automatically flash three times.

Choose the appropriate method to signal a lane change based on road and traffic conditions.

NOTE:

The 3 flash pass turn indicator may be disabled. For additional information, refer to "Vehicle information display" in this section.

FOG LIGHT SWITCH (if so equipped)

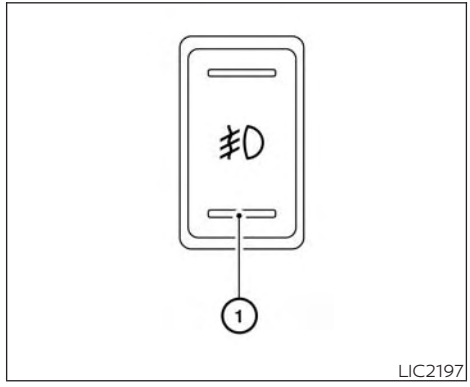

LIC2197

To turn the fog lights on, turn the headlight switch to the position, then push the fog light switch ① on.

To turn the fog lights on with the headlight switch in the AUTO position (if so equipped), the headlights must be on, then push the fog light switch on.

To turn the fog lights off, push the fog light switch again.

The headlights must be on and the low beams selected for the fog lights to operate. The fog lights automatically turn off when the high beam headlights are selected.

HORN

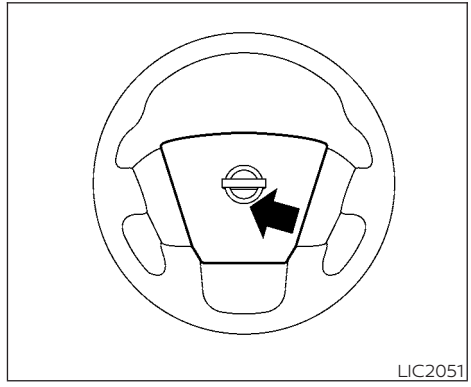
LIC2051

To sound the horn, push near the horn icon on the steering wheel.

⚠ WARNING

Do not disassemble the horn. Doing so could affect proper operation of the supplemental front air bag system. Tampering with the supplemental front air bag system may result in serious personal injury.

CARGO LAMP SWITCH

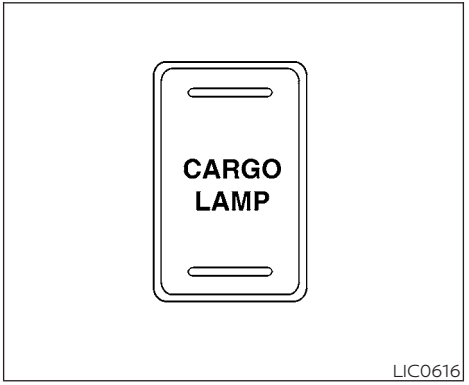

To turn on the cargo lamp and the under rail bed lamps (if so equipped) push the switch down to the ON position. The tailgate lights (if so equipped) will also illuminate when the cargo lamp switch is in the ON position.

⚠ CAUTION

Do not use for extended periods of time with the engine stopped. This could result in a discharged battery.

CLIMATE CONTROLLED SEAT SWITCHES (if so equipped)

⚠ WARNING

Do not use or allow occupants to use the climate controlled seats if you or the occupants cannot monitor seat temperatures or have an inability to feel pain in those body parts in contact with the seat. Use of the climate controlled seats by such people could result in serious injury.

⚠ CAUTION

- **The battery could run down if the climate control seat is operated while the engine is not running.**
- **Do not use the climate control seat for extended periods or when no one is using the seat.**
- **Do not put anything on the seat which insulates heat, such as a blanket, cushion, seat cover, etc. Otherwise, the seat may become overheated.**
- **Do not place anything hard or heavy on the seat or pierce it with a pin or similar objects. This may result in damage to the climate controlled seat.**
- **Any liquid spilled on the seat should be removed immediately with a dry cloth.**
- **The climate controlled seat has an air filter. Do not operate the climate controlled seat without an air filter. This may result in damage to the system.**
- **When cleaning the seat, never use gasoline, benzine, thinner, or any similar materials.**
- **If any malfunctions are found or the climate controlled seat does not operate, turn the switch off and have the system checked. It is recommended that you visit a NISSAN dealer for this service.**

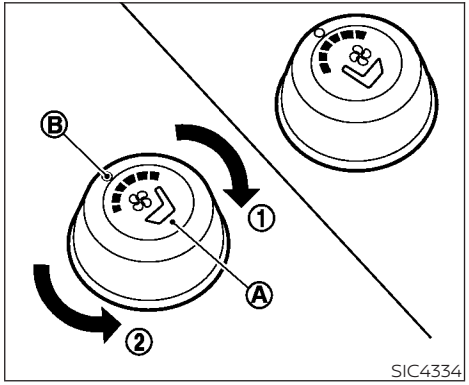

The climate controlled seat warms up or cools down the front seat by blowing warm or cool air from under the surface of the seat. The climate control switch is located on the center console.

The climate controlled seat can be operated as follows:

1. Start the engine.
2. Turn the control knob Ⓐ to the heat side ① or the cool side ②. The indicator light Ⓑ on the control knob will illuminate.
3. Adjust the desired amount of air using the control knob. The climate controlled seat blower remains on low speed for approximately 60 seconds after turning the switch on or selecting the desired temperature.
4. When the vehicle's interior is warmed or cooled, or before you leave the vehicle, be sure to turn the control knob to the Off (center) position. The indicator light Ⓑ on the control knob goes off with the switch in the off (center) position.

To check the air filter for the climate controlled seat, it is recommended that you contact a NISSAN dealer.

⚠ WARNING

Do not use or allow occupants to use the seat heater if you or the occupants cannot monitor elevated seat temperatures or have an inability to feel pain in body parts that contact the seat. Use of the seat heater by such people could result in serious injury.

⚠ CAUTION

- **Do not use the seat heater for extended periods or when no one is using the seat.**
- **Do not put anything on the seat which insulates heat, such as a blanket, cushion, seat cover, etc. Otherwise, the seat may become overheated.**
- **Do not place anything hard or heavy on the seat or pierce it with a pin or similar object. This may result in damage to the heater.**
- **Any liquid spilled on the heated seat should be removed immediately with a dry cloth.**
- **When cleaning the seat, never use gasoline, benzine, thinner, or any similar materials.**

- **If any malfunctions are found or the heated seat does not operate, turn the switch off and have the system checked. It is recommended that you visit a NISSAN dealer for this service.**
- **The battery could run down if the seat heater is operated while the engine is not running.**

HEATED REAR SEAT SWITCHES (if so equipped)

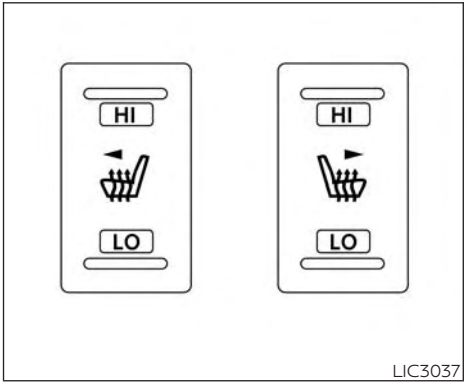

1. Start the engine.
2. Push the LO or HI position of the switch, as desired, depending on the temperature. The indicator light in the switch will illuminate.

   The heater is controlled by a thermostat, automatically turning the heater on and off. The indicator light will remain on as long as the switch is on.
3. When the seat is warmed or before you leave the vehicle, be sure to turn the switch off.

⚠ WARNING

Do not use or allow occupants to use the seat heater if you or the occupants cannot monitor elevated seat temperatures or have an inability to feel pain in body parts that contact the seat. Use of the seat heater by such people could result in serious injury.

⚠ CAUTION

- **The battery could run down if the seat heater is operated while the engine is not running.**
- **Do not use the seat heater for extended periods or when no one is using the seat.**
- **Do not put anything on the seat which insulates heat, such as a blanket, cushion, seat cover, etc. Otherwise, the seat may become overheated.**
- **Do not place anything hard or heavy on the seat or pierce it with a pin or similar object. This may result in damage to the heater.**
- **Any liquid spilled on the heated seat should be removed immediately with a dry cloth.**

- **When cleaning the seat, never use gasoline, benzine, thinner, or any similar materials.**
- **If any malfunctions are found or the heated seat does not operate, turn the switch off and have the system checked. It is recommended that you visit a NISSAN dealer for this service.**

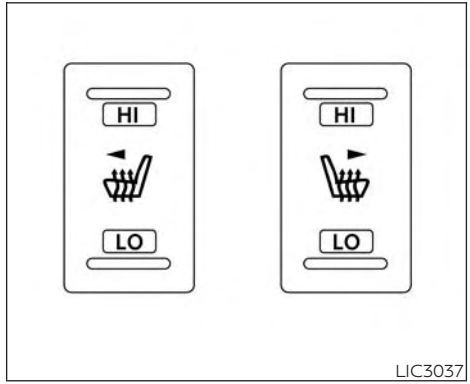

The rear seats are warmed by built-in heaters. The switches are located on the rear of the front center console and can be operated independently of each other.

1. Start the engine.
2. Push the LO or HI position of the switch, as desired. The indicator light in the switch will illuminate.

   The heater is controlled by a thermostat, automatically turning the heater on and off. The indicator light will remain on as long as the switch is on.
3. When the seat is warmed or before you leave the vehicle, be sure to turn the switch off.

HEATED STEERING WHEEL SWITCH (if so equipped)

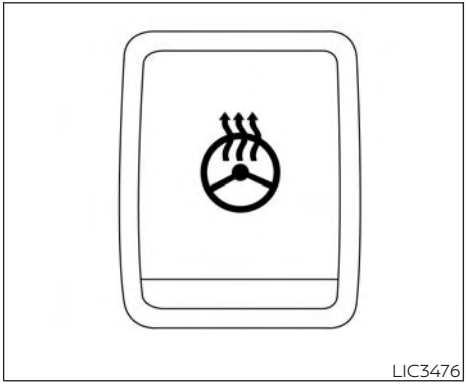

The heated steering wheel system is designed to operate only when the surface temperature of the steering wheel is below 68°F (20°C).

Push the heated steering wheel switch to warm the steering wheel after the engine starts. The indicator light will come on.

If the surface temperature of the steering wheel is below 68°F (20°C), the system will heat the steering wheel and cycle off and on to maintain a temperature above 68°F (20°C). The indicator light will remain on as long as the system is on.

Push the switch again to turn the heated steering wheel system off manually. The indicator light will go off. The switch will turn off automatically 30 minutes after activation, once this happens the switch will need to be pressed again to restart the cycle.

NOTE:

If the surface temperature of the steering wheel is above 68°F (20°C) when the switch is turned on, the system will not heat the steering wheel. This is not a malfunction.

WARNING SYSTEMS SWITCH (if so equipped)

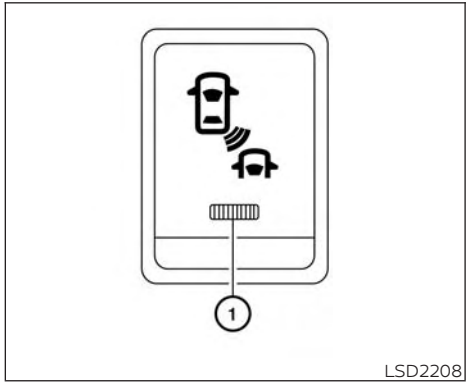

The warning systems switch is used to turn on and off the Blind Spot Warning (BSW) system that is activated using the settings menu on the vehicle information display.

When the warning systems switch is turned off, the indicator ① on the switch is off. The indicator will also be off if the warning system is deactivated using the settings menu.

The BSW system will turn on the BSW/RCTA indicator light, located next to the outside mirrors, if the radar detects a vehicle in the detection zone. If the turn signal is activated in the direction of the detected vehicle, a chime sounds twice and the

BSW/RCTA indicator light will flash. For additional information, refer to "Blind Spot Warning (BSW)" in the "Starting and driving" section of this manual.

VEHICLE DYNAMIC CONTROL (VDC) OFF SWITCH

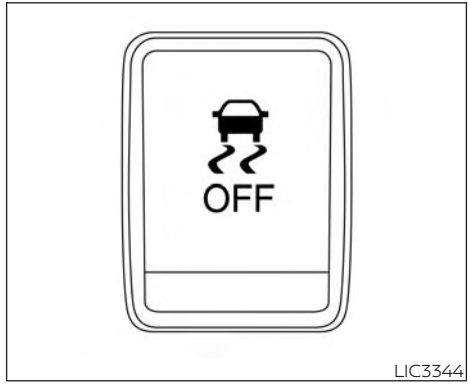

The vehicle should be driven with the VDC system on for most driving conditions.

If the vehicle is stuck in mud or snow, the VDC system reduces the engine output to reduce wheel spin. The engine speed will be reduced even if the accelerator is depressed to the floor. If maximum engine power is needed to free a stuck vehicle, turn the VDC system off.

To turn off the VDC system, push the VDC OFF switch. The indicator will come on.

Push the VDC OFF switch again or restart the engine to turn on the system. For additional information, refer to "Vehicle Dynamic Control (VDC) system" in the "Starting and driving" section of this manual.

HILL DESCENT CONTROL SWITCH (if so equipped)

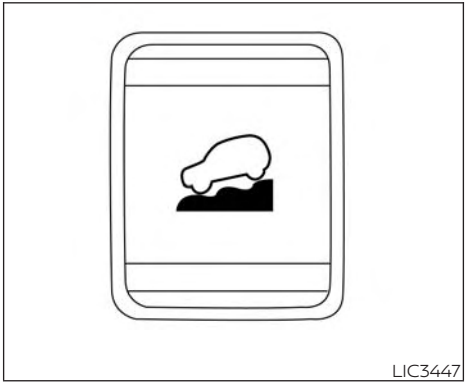

⚠ WARNING

- **Never rely solely on the hill descent control system to control vehicle speed when driving on steep downhill grades. Always drive carefully when using the hill descent control system and decelerate the vehicle speed by depressing the brake pedal if necessary. Be especially careful when driving on frozen, muddy or extremely steep downhill roads. Failure to control vehicle speed may result in a loss of control of the vehicle and possible serious injury or death.**
- **The hill descent control may not control the vehicle speed on a hill under all load or road conditions. Always be prepared to depress the brake pedal to control vehicle speed. Failure to do so may result in a collision or serious personal injury.**

⚠ CAUTION

When the hill descent control system operates continuously for a long time, the temperature of the brake pads may increase and the hill descent control system may be temporarily disabled (the indicator light will blink). If the indicator light does not come on continuously after blinking, stop using the system.

The hill descent control system is designed to reduce driver workload when going down steep hills. The hill descent control system helps to control vehicle speed so the driver can concentrate on steering the vehicle.

To activate the hill descent control system:

- activate the 4H or 4LO switch,
- the transmission shift lever must be in forward or reverse gear,
- the hill descent control system switch must be ON.

The vehicle speed must be kept below 15 mph (25 km/h).

The hill descent control indicator light will come on when the system is activated. Also, the stop/tail lights illuminate while the hill descent control system applies the brakes to control vehicle speed.

You may hear a noise from under the hood or feel a vibration from the actuator when it is operating. This is normal and indicates the hill descent control system is working properly.

If the accelerator or brake pedal is depressed while the hill descent control system is on, the system will stop operating temporarily. As soon as the accelerator or brake pedal is released, the hill descent control system begins to function again if the hill descent control operating conditions are fulfilled.

The hill descent control indicator light blinks if the switch is on and all conditions for system activation are not met or if the system becomes disengaged for any reason.

To turn off the hill descent control system, push the switch to the OFF position.

For additional information, refer to "Hill descent control system ON indicator light" in this section and "Hill descent control system" in the "Starting and driving" section of this manual.

ELECTRONIC LOCKING REAR DIFFERENTIAL (E-Lock) SYSTEM SWITCH (if so equipped)

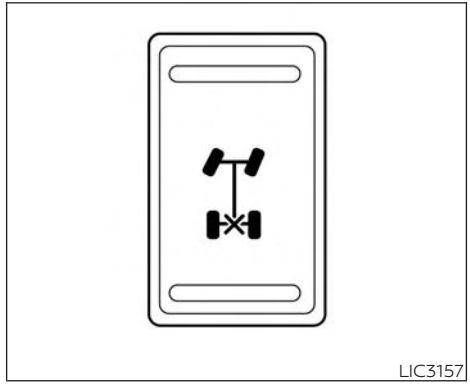

The E-Lock system can help provide added traction if the vehicle is stuck or becoming stuck.

To activate the E-Lock system:

- the 4WD switch must be in the 4LO position (4-wheel drive vehicles),
- the vehicle must be stopped or moving at 4 mph (7 km/h) or less, and
- the E-Lock system switch must be turned ON.

When the E-Lock system switch is turned ON, the indicator light will flash until the system engages. However, if all operation conditions listed above are not met or the system becomes disengaged, the indicator light will continue to flash.

The Anti-lock Braking System (ABS) system is disabled and the ABS light illuminates when the E-Lock system is on.

For additional information, refer to "Electronic locking rear differential (E-Lock) system" in the "Starting and driving" section of this manual for further explanation and system limitations.

⚠ WARNING

- **Never leave the E-Lock system ON when driving on paved or hard-surfaced roads. Turning the vehicle may result in the rear wheels slipping and result in an accident and personal injury. After using the E-Lock system to free the vehicle, turn the system OFF.**

- **Use the E-lock system only in an emergency when it is not possible to free a stuck vehicle even using 4LO. Never use the E-Lock system on a slippery road surface such as snow or ice surface. Using the E-Lock system when driving in these road conditions may cause unexpected movement of the vehicle during engine braking, accelerating or turning, which may result in an accident and serious personal injury.**
- **Observe the above warnings. Otherwise, loss of normal steering control may result. This may result in an accident and serious personal injury.**

⚠ CAUTION

- **After using the E-Lock system, or during normal driving, turn the switch OFF to prevent possible damage to drivetrain components from extended use.**
- **When the E-Lock system is in operation, turning the vehicle becomes difficult. This can be dangerous, especially at high speeds. Doing so could damage drivetrain components.**
- **Do not operate the E-Lock system when the vehicle is turning or when one side wheel is rotating. Otherwise, the drivetrain components could be damaged.**
- **The E-Lock system operates only when the engine is running.**
- **In 4H mode, the E-Lock system does not operate when the E-Lock system switch is turned to the ON position. (The E-Lock system indicator light will flash.)**
- **Avoid quick starts while the E-Lock system is in operation. Otherwise the drivetrain components could be damaged.**
- **Observe the above cautions. Otherwise, loss of normal steering may result.**

POWER INVERTER SWITCH (if so equipped)

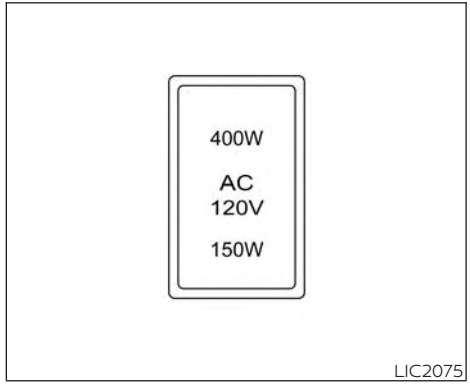

To use the outlets for devices that require 120v power, place the ignition in the ON position and push the power inverter switch.

The 400W or 150W on the switch will illuminate according to the mode selected. Only the 150W is available when the ignition switch is placed in the ON position and the vehicle is being driven. For additional information, refer to "120v outlets" in this section regarding using devices that require the power inverter switch activated.

FRONT AND REAR SONAR SYSTEM OFF SWITCH (if so equipped)

⚠ CAUTION

- **Use power outlets with the engine running to avoid discharging the vehicle battery.**
- **Do not attempt to use this while driving.**
- **Do not use double adapters or more than one electrical accessory, doing so could significantly drain the battery of your vehicle.**

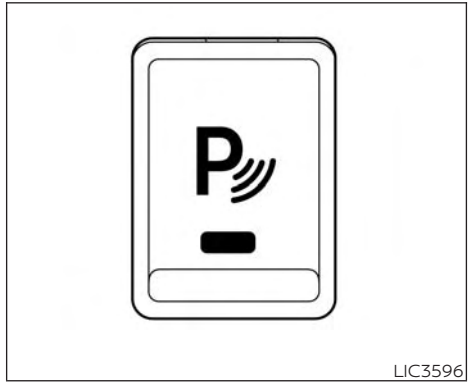

The Front and rear sonar system OFF switch on the instrument panel allows the driver to turn the Front and rear sonar system, Moving Object Detection (MOD), and Rear Cross Traffic Alert (RCTA) system on and off. To turn the systems on and off, the ignition switch must be in the ON position.

The indicator light on the switch will illuminate when the systems are turned on.

If the indicator light flashes when the Front and rear sonar system, MOD, or RCTA systems are not turned off, it may indicate a malfunction in one or more of these systems.

The Front and rear sonar system, MOD, or RCTA systems will be turned on automatically under the following conditions:

- When the ignition switch is switched from the OFF position to the ON position.
- When the shift lever is shifted into the R (Reverse) position.
- When the vehicle speed increases to 6 mph (10 km/h) and decreases.

The automatic turning on function can be turned on and off for these systems in the vehicle information display (if so equipped). For additional information, refer to "Settings" in the "Instrument and controls" section of this manual.

For additional information, refer to "Front and rear sonar system" in the "Starting and driving" section of this manual, or the "Moving Object Detection (MOD)" in the "Monitor, climate, audio, phone and voice recognition systems" section of this manual.

TOW MODE SWITCH

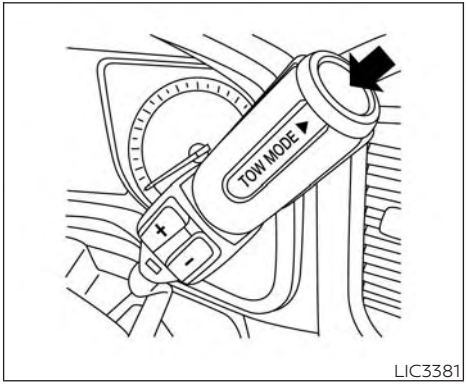

LIC3381

Tow mode should be used when pulling a heavy trailer or hauling a heavy load. Driving the vehicle in the tow mode with no trailer/load or light trailer/light load will not cause any damage. However, fuel economy may be reduced, and the transmission/engine driving characteristics may feel unusual.

Push the tow mode switch to activate tow mode. The TOW indicator light illuminates when tow mode is selected. Push the tow mode switch again to turn tow mode off.

Tow mode is automatically canceled when the ignition switch is placed in the OFF position.

For additional information, refer to "Tow mode" in the "Technical and consumer information" section of this manual.

E-CALL (SOS) SWITCH (if so equipped)

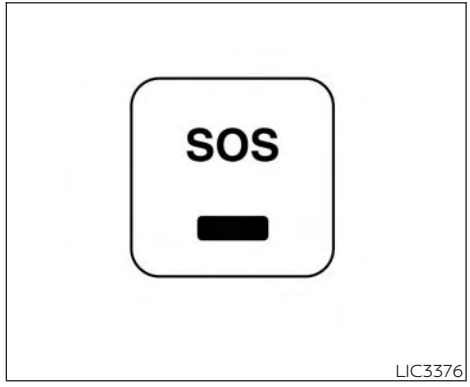

LIC3376

The E-call (SOS) system switch is used in combination with a NissanConnect® Services subscription to call for assistance in case of an emergency.

Pushing the switch will (with a paid subscription) reach a Response Specialist that will provide assistance based on the situation described by the vehicle's occupant. For additional information, or to enroll your vehicle, refer to www.NissanUSA.com/connect or call 855-426-6628.

TRAILER BRAKE CONTROLLER UNIT (TBCU) (if so equipped)

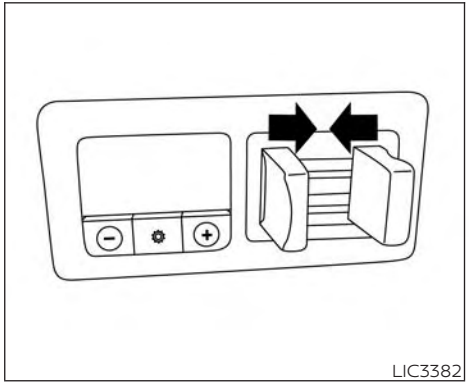

The TBCU on the instrument panel allows the driver to adjust the braking force applied to the trailer brakes.

For additional information, refer to "Towing a trailer" in the "Technical and consumer information" section of this manual.

POWER OUTLETS

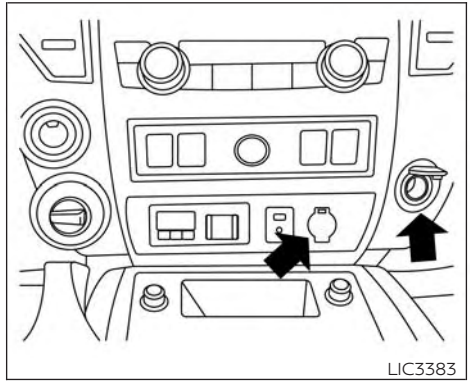

Instrument panel

12V OUTLETS

The power outlets are for powering electrical accessories such as cellular telephones.

The power outlets located on the instrument panel, inside the center armrest (if so equipped), and on the back of the center console (if so equipped) are powered only when the ignition switch is placed in the ACC or ON position.

Open the cap to use a power outlet.

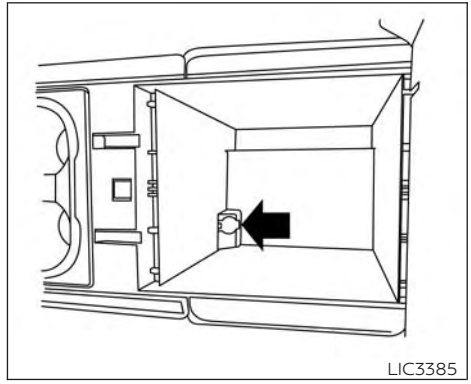

Inside center console (if so equipped)

⚠ CAUTION

- **The outlet and plug may be hot during or immediately after use.**
- **Only certain power outlets are designed for use with a cigarette lighter unit. Do not use any other power outlet for an accessory lighter. It is recommended that you visit a NISSAN dealer for additional information.**
- **Do not use with accessories that exceed a 12 volt, 120W (10A) power draw.**

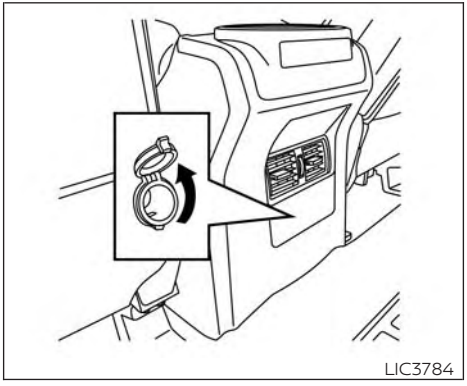

Rear center console (if so equipped)

- **Do not use double adapters or more than one electrical accessory.**
- **Use power outlets with the engine running to avoid discharging the vehicle battery.**
- **Avoid using power outlets when the air conditioner, headlights, or rear window defroster (if so equipped) is on.**
- **Before inserting or disconnecting a plug, be sure the electrical accessory being used is turned OFF.**
- **Push the plug in as far as it will go. If good contact is not made, the plug may overheat or the internal temperature fuse may open.**
- **When not in use, be sure to close the cap. Do not allow water or any other liquid to contact the outlet.**

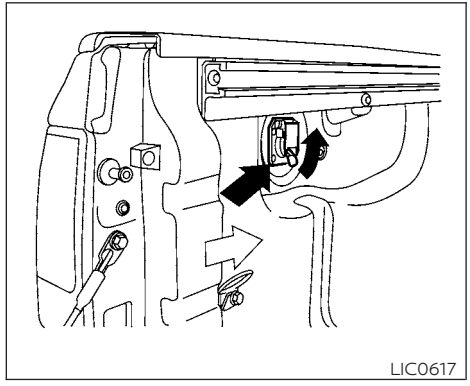

In truck box (if so equipped)

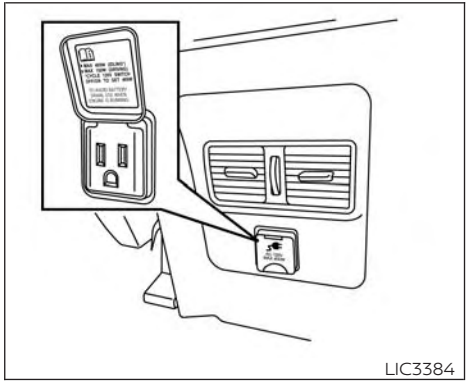

Center console (if so equipped)

120V OUTLETS (if so equipped)

		Before Drive (idling) (Park)		When shifting out of Park		When shifting back to (idling) (Park)		Switch Reset	
Options	**What is plugged IN**	**Indicator**	**Inverter Status**	**Indicator**	**Inverter Status**	**Indicator**	**Inverter Status**	**Indicator**	**Inverter Status**
	Nothing plugged but switch is on	150 and 400	ON	150	ON	150 and 400	ON	NOT NECESSARY	NOT NECESSARY
	Device<150W	150 and 400	ON	150	ON	150 and 400	ON	NOT NECESSARY	NOT NECESSARY
	150W>device<400W	150 and 400	ON	OFF	OFF	ON	ON	150 and 400	ON
	Device>400W	150 and 400	OFF	OFF	OFF	OFF	OFF	OFF**	OFF**

** OFF means that the inverter system cannot be reset until a device that is within the specified range of operation is plugged in. Therefore, the switch indicators and inverter would remain OFF. There may be a very short period of time where the switch indicators are on, but once the inverter reaches its peak saturation point (temp and power level). it will shut off both the inverter and the switch indicators.

Do not use the outlet located in the truck box with accessories that exceed 120 volt. Do not use double adapters or more than one electrical accessory. When the dual wall bed liner is installed (if so equipped), the power outlet is still accessible through the access door in the bed liner.

⚠ CAUTION

- **Operation of the 120 volt system with the ignition in the ON position and the engine not running (idle) will drain the battery charge. This could lead to a dead battery or no start condition.**
- **The outlet and plug may be hot during or immediately after use.**
- **Use power outlets with the engine running to avoid discharging the vehicle battery.**
- **Do not use double adaptors or more than one electrical accessory.**
- **Avoid using power outlets when the air conditioner, headlights or rear window defroster is on.**
- **Before inserting or disconnecting a plug, be sure the electrical accessory being used is turned OFF.**
- **Push the plug in as far as it will go. If good contact is not made, the plug may overheat or the internal temperature fuse may open.**
- **When not in use, be sure to close the cap. Do not allow water or any other liquid to contact the outlet.**

EXTENDED STORAGE SWITCH

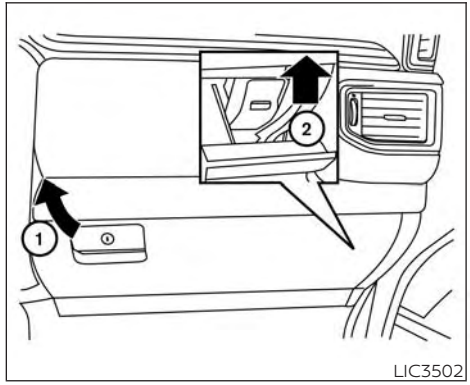

The extended storage switch is used when shipping the vehicle. It is located in the fuse panel inside the glove box. To reach it, open the glove box ① on the instrument panel, then open the fuse panel cover ②.

If any electrical equipment does not operate, ensure the extended storage switch is ON by pushing it fully in place, as shown.

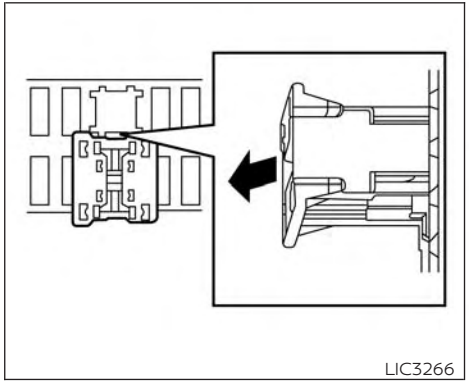

Pulled position

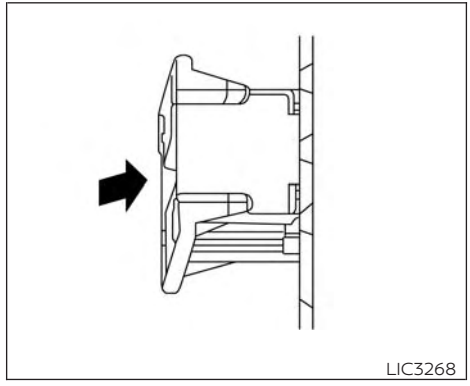

Pushed position

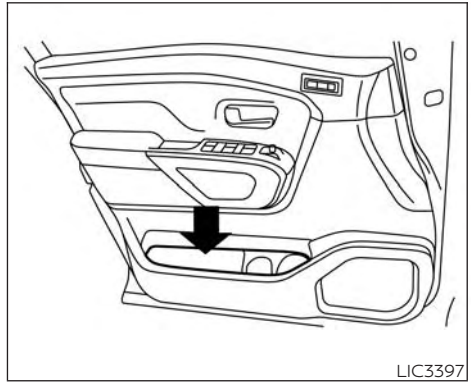

FRONT-DOOR POCKETS

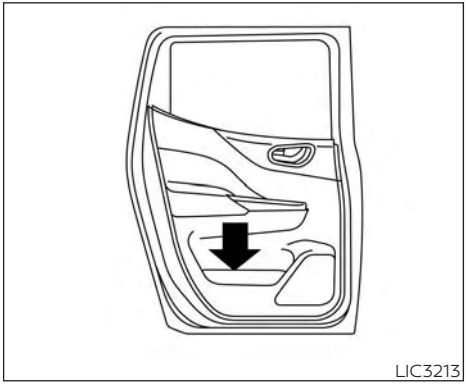

REAR-DOOR POCKETS (if so equipped)

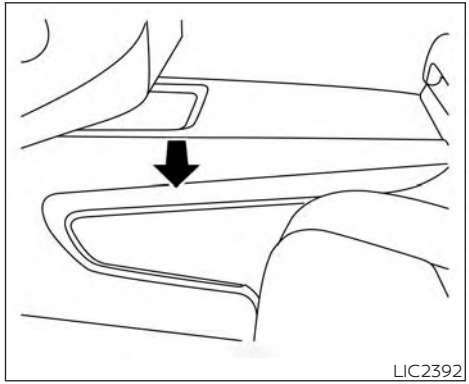

CONSOLE SIDE POCKETS (if so equipped)

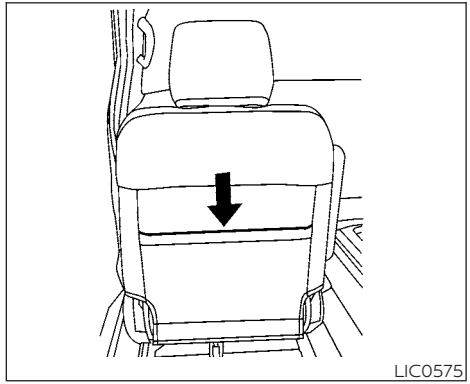

SEATBACK POCKETS (if so equipped)

The seatback pocket(s) may be located on the back of the driver's and/or passenger's seat, there may be one or two pockets equipped. The pockets can be used to store maps.

⚠ WARNING

To ensure proper operation of the passenger's NISSAN Advanced Air Bag System, please observe the following items:

- **Do not allow a passenger in the rear seat to push or pull on the seatback pocket or head restraint/headrest.**
- **Do not place heavy loads heavier than 2.2 lbs. (1 kg) on the seatback, head restraint/headrest or in the seatback pocket.**

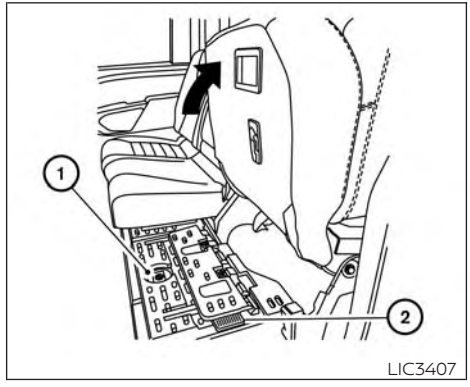

Rear seat (driver's side shown)

UNDER-SEAT STORAGE (if so equipped)

To access the storage bin, lift the bench seat toward the rear of the vehicle, then lift the cover the same direction. The cover may be locked ① if so equipped.

⚠ CAUTION

To avoid damaging the tray under the seat, cargo in the trays should not exceed 20 lbs. (9.08kg).

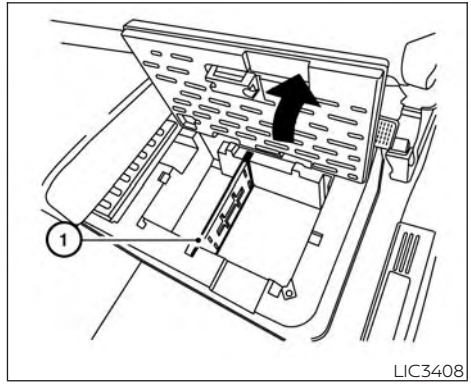

To adjust the divider ①, pull it straight up and reposition it to the desired location, sliding it straight down.

Both sides of the storage bin, under the rear seat on the driver's and passenger's sides, operate similarly. They can be accessed simultaneously or independently of each other.

Further, to create a flat floor space for storage, rather than access the storage bin, lift the bench seat as before, then lift the tab ② and rotate the bin cover toward the front of the vehicle. Use the tab as a leg to support the cover as the new floor space.

Cargo can be secured to the extended floor with bungee cords. Secure the bungee cords to the loops in the extended floor.

⚠ CAUTION

- **To avoid damaging the extended floor, the weight secured should not exceed 247 lbs. (112 kg).**
- **To avoid damaging the bungee hook loops, do not exceed 35 lbs. (16 kg) of force to any given loop.**

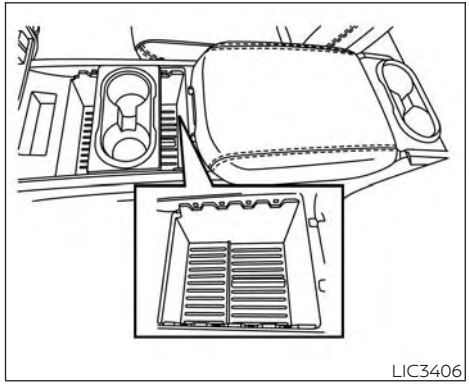

CONSOLE BOX STORAGE TRAYS (if so equipped)

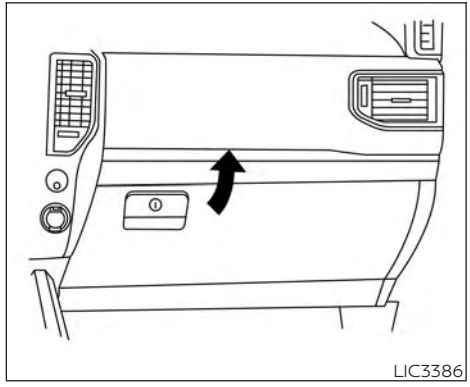

GLOVE BOX

Open the glove box by pulling the handle.

Use the master key to lock or unlock the glove box lock. The valet key cannot be used to lock or unlock the glove box lock.

⚠ WARNING

Keep glove box lid closed while driving to help prevent injury in an accident or a sudden stop.

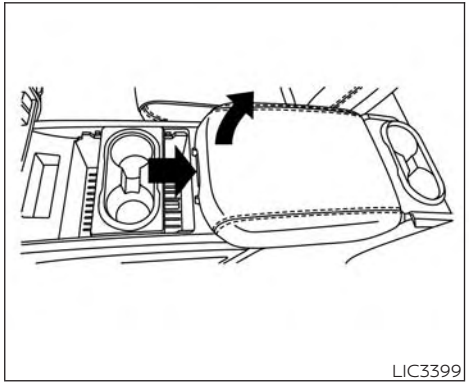

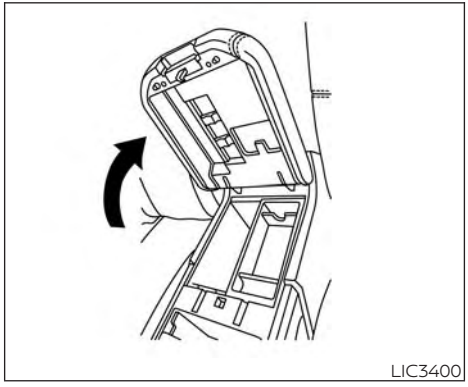

CONSOLE BOX (if so equipped)

⚠ WARNING

The center console box should not be used while driving so full attention may be given to vehicle operation.

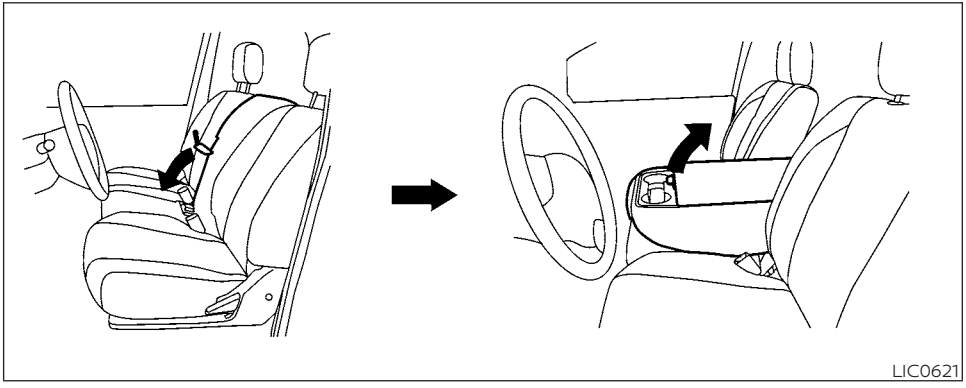

CENTER ARMREST STORAGE (if so equipped)

To access the center armrest storage area, lower the center armrest and lift the lid.

⚠ CAUTION

The center armrest storage should not be used while driving so full attention may be given to vehicle operation.

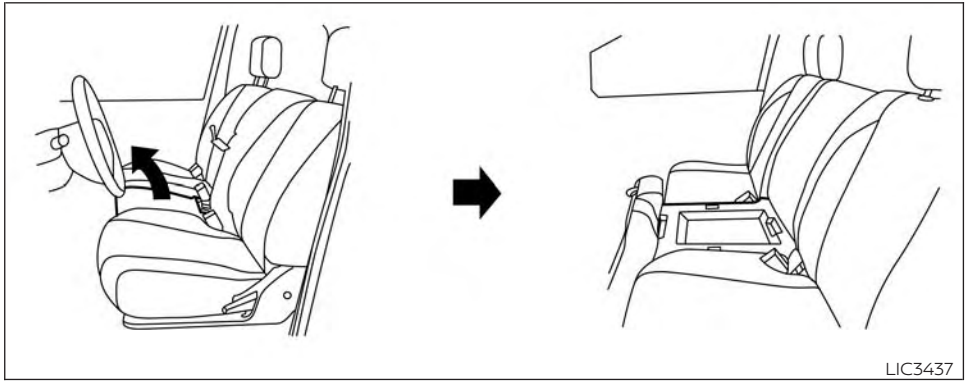

Bench seat (center)

UNDER FRONT SEAT STORAGE BIN (if so equipped)

To access the storage bin, lift the center of the front bench seat toward the front of the vehicle.

⚠ CAUTION

- **To avoid damaging the tray under the seat, cargo in the tray should not exceed 20 lbs. (9.08 kg).**
- **The cushion storage bin should not be used while driving so full attention may be given to vehicle operation.**

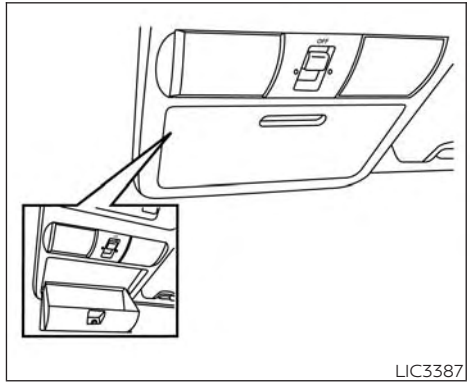

OVERHEAD SUNGLASSES STORAGE (if so equipped)

To open the sunglasses holder, push and release.

Only store one pair of sunglasses in the holder.

⚠ WARNING

Keep the sunglasses holder closed while driving to avoid obstructing the driver's view and to help prevent an accident.

⚠ CAUTION

- **Do not use for anything other than sunglasses.**
- **Do not leave sunglasses in the sunglasses holder while parking in direct sunlight. The heat may damage the sunglasses.**

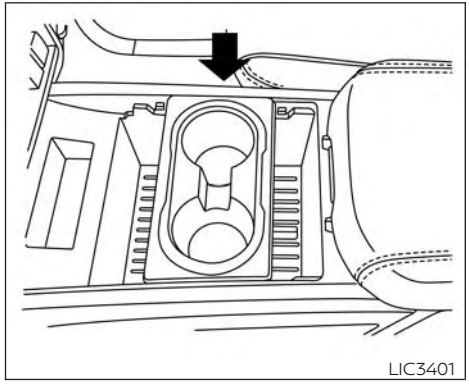

Front — Type A (if so equipped)

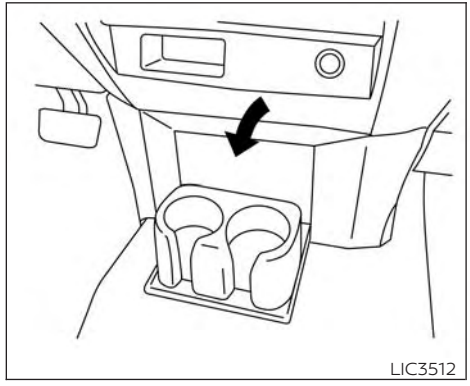

Front — Type B (if so equipped)

CUP HOLDERS

⚠ WARNING

Avoid abrupt starting and braking when the cup holder is being used to prevent spilling the drink. If the liquid is hot, it can scald you or your passenger.

⚠ CAUTION

Use only soft cups in the cup holder. Hard objects can injure you in an accident.

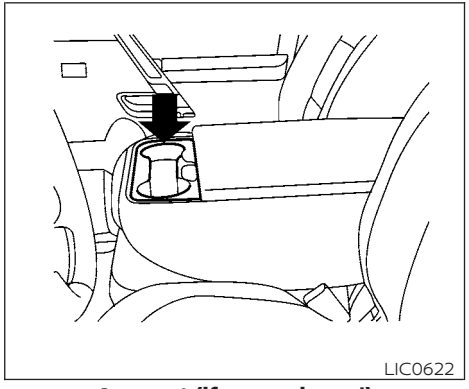

Armrest (if so equipped)

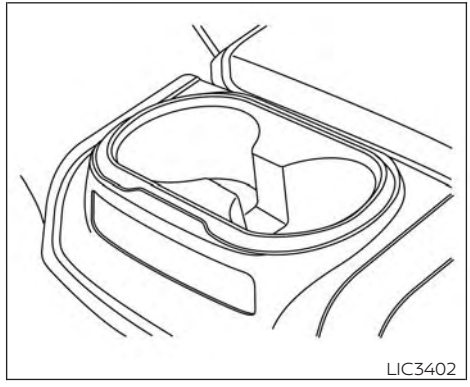

2nd row (rear of front console) (if so equipped)

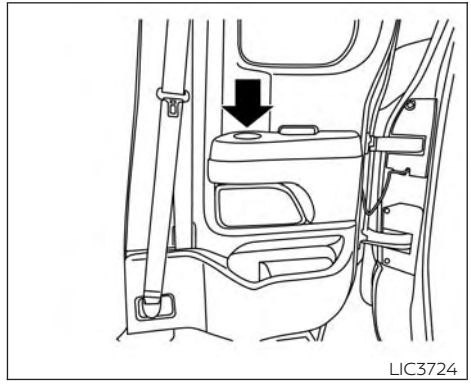

2nd row (door armrest) (if so equipped)

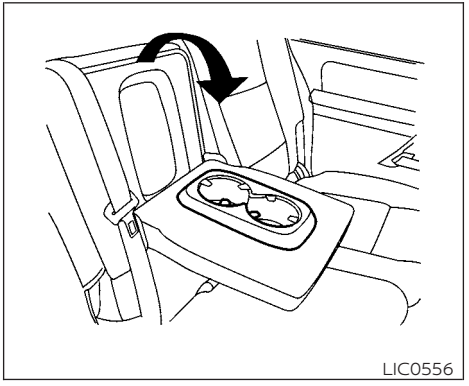

2nd row bench (if so equipped)

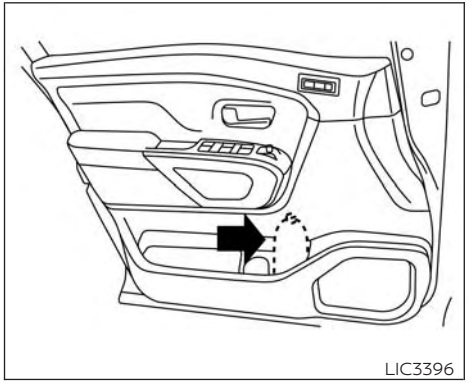

Front bottle holder

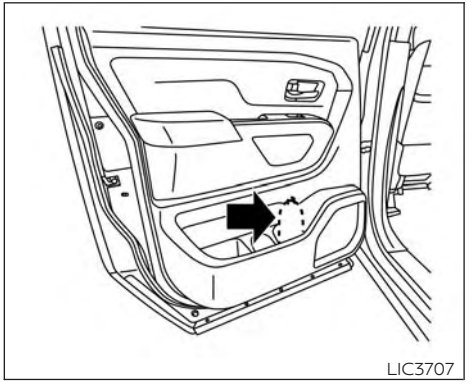

Rear bottle holder (if so equipped)

⚠ CAUTION

- **Do not use bottle holder for any other objects that could be thrown about in the vehicle and possibly injure people during sudden braking or an accident.**
- **Do not use bottle holder for open liquid containers.**

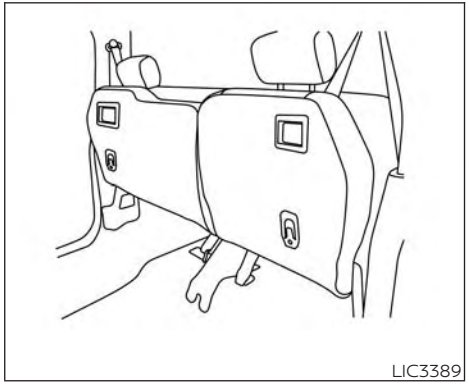

GROCERY HOOKS (if so equipped)

The grocery hooks allow for standard size plastic grocery bags to hang side by side.

To access the grocery hooks, fold up the rear bench seat. For additional information, refer to "Folding the rear bench seat up" in the "Safety — Seats, seat belts and supplemental restraint system" section of this manual.

⚠ CAUTION

Do not apply a total load of more than 18 lbs. (8 kg) to a single grocery hook.

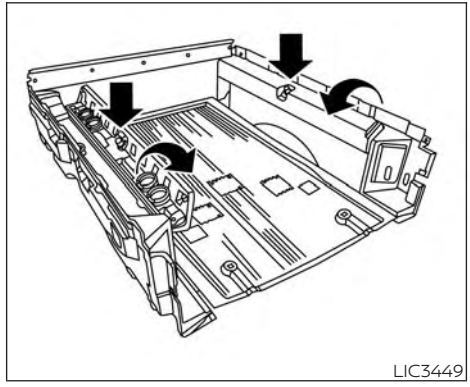

BED LINER STORAGE BINS (if so equipped)

To open the bed liner storage bins on the top of the wheel wells, unlock the bin and lift the lid toward the inside of the truck bed.

To close, replace the lid and lock the bin.

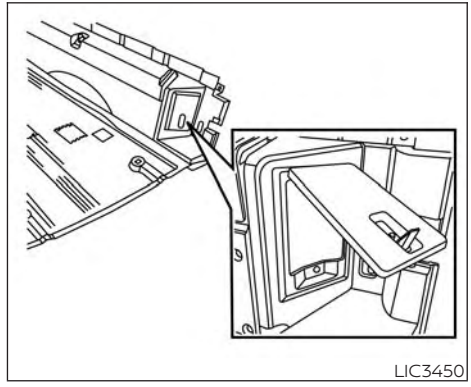

To open the bed liner storage bins on the tail gate end of the bed liner, lift the tab away from the truck bed, pull the lid up and away from the truck.

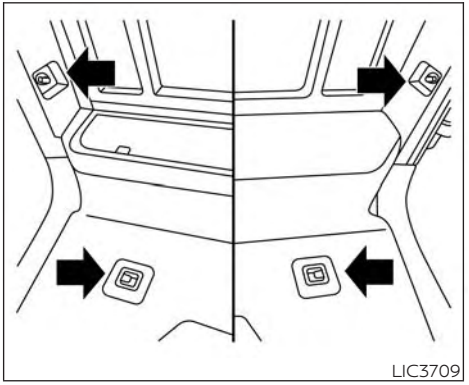
LIC3709

CARGO HOOKS (if so equipped)

When securing items using cargo hooks, located on the rear door pillars, do not apply a load more than 110 lbs. (490 N) to a single hook.

The cargo hooks that are located on the floor should have loads less than 110 lbs. (490 N) to a single hook.

The cargo hooks can be used to secure cargo with ropes or other types of straps.

⚠ WARNING

- **Properly secure all cargo with ropes or straps to help prevent it from sliding or shifting. Do not place cargo higher than the seatbacks. In a sudden stop or collision, unsecured cargo could cause personal injury.**
- **Use suitable ropes and hooks to secure cargo.**
- **Never allow anyone to ride in the cargo area. It is extremely dangerous to ride in a cargo area inside of a vehicle. In a collision, people riding in these areas are more likely to be seriously injured or killed.**
- **Do not allow people to ride in any area of your vehicle that is not equipped with seats and seat belts.**
- **The child restraint top tether strap may be damaged by contact with items in the cargo area. Secure any items in the cargo area. Your child could be seriously injured or killed in a collision if the top tether strap is damaged.**
- **Be sure everyone in your vehicle is in a seat and using a seat belt properly.**

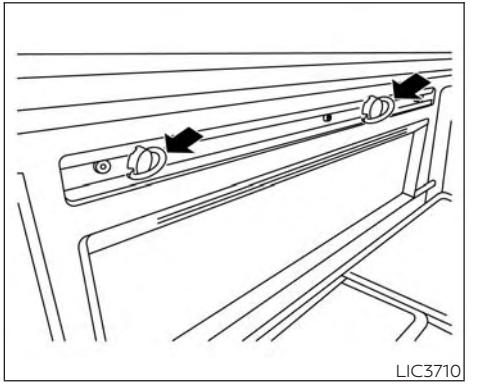
LIC3710

C-CHANNEL CARGO HOOKS (if so equipped)

The C-Channel cargo hooks, located on the back panel, can be used to secure cargo with ropes or other types of straps.

When securing items using C-Channel cargo hooks, located on the back panel, do not apply a load more than 110 lbs. (490 N) to a single hook.

⚠ WARNING

- **Properly secure all cargo with ropes or straps to help prevent it from sliding or shifting. Do not place cargo higher than the seatbacks. In a sudden stop or collision, unsecured cargo could cause personal injury.**
- **Use suitable ropes and hooks to secure cargo.**
- **Never allow anyone to ride in the cargo area. It is extremely dangerous to ride in a cargo area inside of a vehicle. In a collision, people riding in these areas are more likely to be seriously injured or killed.**
- **Do not allow people to ride in any area of your vehicle that is not equipped with seats and seat belts.**
- **The child restraint top tether strap may be damaged by contact with items in the cargo area. Secure any items in the cargo area. Your child could be seriously injured or killed in a collision if the top tether strap is damaged.**
- **Be sure everyone in your vehicle is in a seat and using a seat belt properly.**

POWER WINDOWS

⚠ WARNING

- **Make sure that all passengers have their hands, etc., inside the vehicle while it is in motion and before closing the windows. Use the window lock switch to prevent unexpected use of the power windows.**
- **To help avoid risk of injury or death through unintended operation of the vehicle and/or its systems, including entrapment in windows or inadvertent door lock activation, do not leave children, people who require the assistance of others or pets unattended in your vehicle. Additionally, the temperature inside a closed vehicle on a warm day can quickly become high enough to cause a significant risk of injury or death to people and pets.**

The power windows operate when the ignition switch is placed in the ON position, or for a period of time after the ignition switch is placed in the OFF position. If the driver's or passenger's door is opened during this period of time, the power to the windows is canceled.

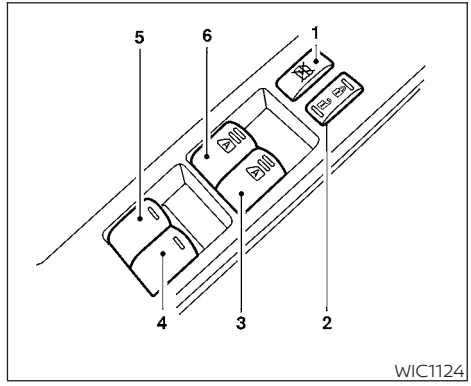

1. Window lock button
2. Power door lock switch
3. Front passenger side automatic window switch
4. Right rear passenger window switch (if so equipped)
5. Left rear passenger window switch (if so equipped)
6. Driver side automatic window switch

Driver's side power window switch

The driver's side control panel is equipped with switches to open or close the front and rear (if so equipped) passenger windows.

To open a window, push the switch and hold it down. To close a window, pull the switch and hold it up. To stop the opening or closing function at any time, simply release the switch.

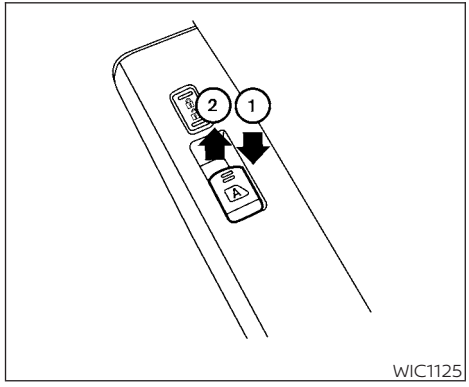

WIC1125

Front passenger's power window switch

The passenger's window switch operates only the corresponding passenger's window. To open the window, push the switch and hold it down ①. To close the window, pull the switch up ②.

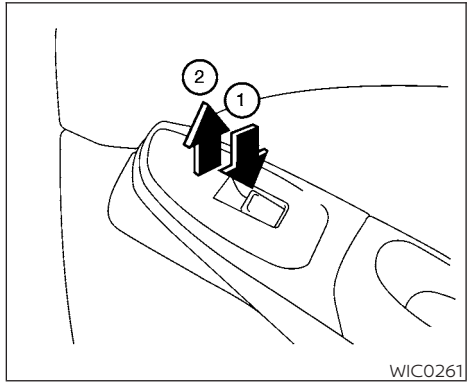

WIC0261

Rear power window switch (if so equipped)

The rear power window switches open or close only the corresponding windows. To open the window, push the switch and hold it down ①. To close the window, pull the switch up ②.

Locking passengers' windows

When the window lock switch is depressed, only the driver's side window can be opened or closed. Push it again to cancel the window lock function.

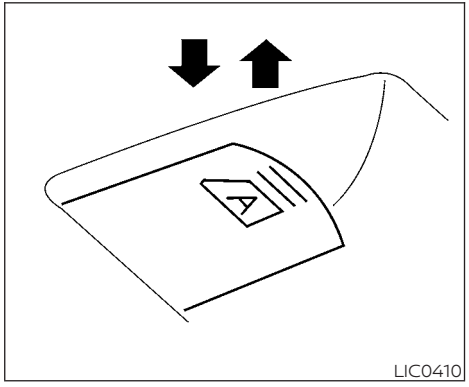

LIC0410

Automatic operation

To fully open a window equipped with automatic operation, push the window switch down to the second detent and release it; it need not be held. The window automatically opens all the way. To stop the window, lift the switch up while the window is opening.

To fully close a window equipped with automatic operation, pull the switch up to the second detent and release it; it need not be held. To stop the window, push the switch down while the window is closing.

Auto-reverse function

The auto-reverse function can be activated when a window is closed by automatic operation.

Depending on the environment or driving conditions, the auto-reverse function may be activated if an impact or load similar to something being caught in the window occurs.

⚠WARNING

There are some small distances immediately before the closed position which cannot be detected. Make sure that all passengers have their hands, etc., inside the vehicle before closing the window.

If the vehicle's battery is disconnected, replaced, or jump started, the power window auto-reverse function may not operate properly. Have the power window auto-reverse system re-initialized. It is recommended that you visit a NISSAN dealer for this service.

If the control unit detects something caught in a window equipped with automatic operation as it is closing, the window will be immediately lowered.

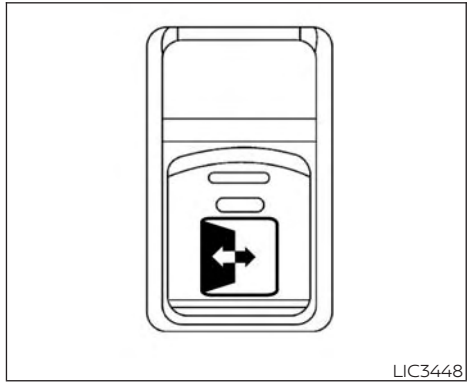
LIC3448

REAR POWER WINDOW SWITCH (if so equipped)

⚠WARNING

- **You must ensure all occupants and objects are free of the rear window area prior to and during operation. Failure to do so may result in injury and/or damage to the rear window system.**
- **The rear window is not designed to carry long items through it.**

- **Do not place objects through the opened rear window. Do not use the rear window as a cargo area pass-through. This may result in damage to the rear window system, or personal injury.**

⚠ WARNING

- **To help avoid risk of injury or death through unintended operation of the vehicle and or its systems, including entrapment in windows or inadvertent door lock activation, do not leave children, people who require the assistance of others or pets unattended in your vehicle. Additionally, the temperature inside a closed vehicle on a warm day can quickly become high enough to cause a significant risk of injury or death to people and pets.**

To open the rear power window, push in and hold the switch.

To close the rear power window, pull out and hold the switch.

To stop the opening or closing function at any time, simply release the switch.

NOTE:

If the rear power window is opened while the defroster switch is on, the rear window defroster (if so equipped) will automatically shut off. The heated outside mirrors (if so equipped) will remain on. The rear window defroster will automatically turn on when the rear power window is fully closed if the switch is on.

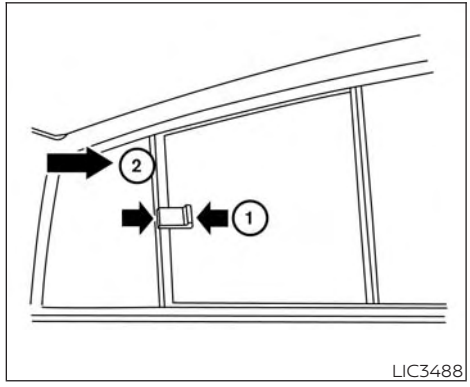

REAR SLIDING WINDOW (if so equipped)

⚠ WARNING

- **You must ensure all occupants and objects are free of the rear window area prior to and during operation. Failure to do so may result in injury and/or damage to the rear window system.**
- **The rear window is not designed to carry long items through it.**

- **Do not place objects through the opened rear window. Do not use the rear window as a cargo area pass-through. This may result in damage to the rear window system, or personal injury.**

Squeeze the handles of the lever ①, then slide the window open ②.

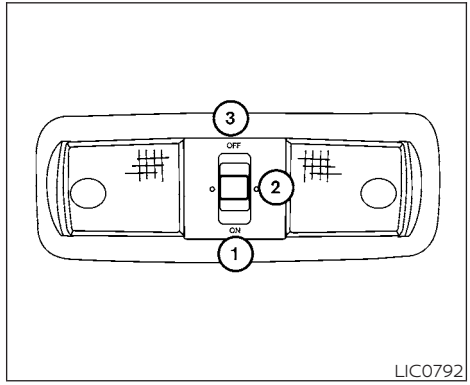

The interior light has a three-position switch and operates regardless of ignition switch position.

When the switch is in the ON position ①, the interior lights illuminate, regardless of door position. The lights will go off after a period of time unless the ignition switch is placed in the ON position.

When the switch is in the DOOR or normal operation position ②, the interior lights, puddle lights (if so equipped), and cargo light will stay on for a period of time when:

- The doors are unlocked by the key fob, a key or the power door lock switch while all doors are closed and the ignition switch is in the OFF position.
- The driver's door is opened and then closed while the key is removed from the ignition switch.
- The key is removed from the ignition switch while all doors are closed.

The lights will turn off while the timer is activated when:

- The driver's door is locked by the key fob, a key, or the power door lock switch.
- The ignition switch is turned ON.

When the switch is in the OFF position ③, the interior lights do not illuminate, regardless of door position. The puddle lights (if so equipped) and cargo light come on when any front or rear passenger door is opened.

The lights will turn off automatically after a period of time while doors are open to prevent the battery from becoming discharged.

⚠ CAUTION

Do not use for extended periods of time with the engine stopped. This could result in a discharged battery.

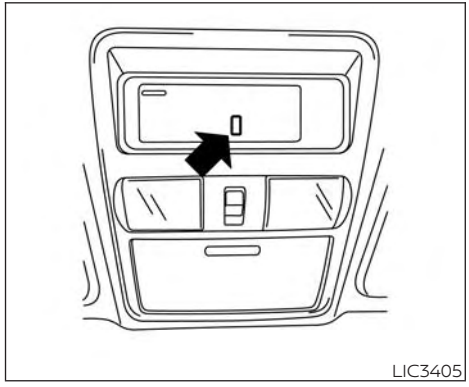

LIC3405

CONSOLE LIGHT (if so equipped)

The console light will turn on whenever the parking lights or headlights are illuminated.

The console light brightness can be adjusted with the illumination brightness control.

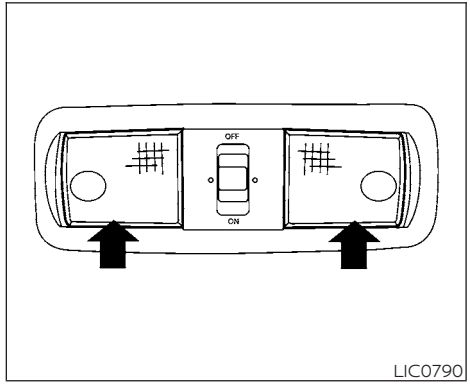

LIC0790

MAP LIGHTS (if so equipped)

To turn the map lights on, push the switches. To turn them off, push the switches again.

⚠ CAUTION

Do not use for extended periods of time with the engine stopped. This could result in a discharged battery.

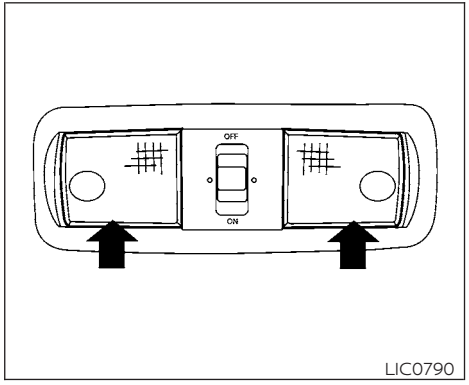

Rear personal lights

PERSONAL LIGHTS (if so equipped)

To turn the rear personal lights on, push the switch. To turn them off, push the switch again.

HOMELINK® UNIVERSAL TRANSCEIVER (if so equipped)

The HomeLink® Universal Transceiver provides a convenient way to consolidate the functions of up to three individual hand-held transmitters into one built-in device.

HomeLink® Universal Transceiver:

- Will operate most radio frequency devices such as garage doors, gates, home and office lighting, entry door locks and security systems.
- Is powered by your vehicle's battery. No separate batteries are required. If the vehicle's battery is discharged or is disconnected, HomeLink® will retain all programming.

When the HomeLink® Universal Transceiver is programmed, retain the original transmitter for future programming procedures (Example: new vehicle purchases). Upon sale of the vehicle, the programmed HomeLink® Universal Transceiver buttons should be erased for security purposes. For additional information, refer to "Programming HomeLink®" in this section.

⚠ WARNING

- **Do not use the HomeLink® Universal Transceiver with any garage door opener that lacks safety stop and reverse features as required by federal safety standards. (These standards became effective for opener models manufactured after April 1, 1982). A garage door opener which cannot detect an object in the path of a closing garage door and then automatically stop and reverse, does not meet current federal safety standards. Using a garage door opener without these features increases the risk of serious injury or death.**
- **During the programming procedure your garage door or security gate will open and close (if the transmitter is within range). Make sure that people or objects are clear of the garage door, gate, etc. that you are programming.**

- **Your vehicle's engine should be turned off while programming the HomeLink® Universal Transceiver. Do not breathe exhaust gases; they contain colorless and odorless carbon monoxide. Carbon monoxide is dangerous. It can cause unconsciousness or death.**

PROGRAMMING HOMELINK®

If you have any questions or are having difficulty programming your HomeLink® buttons, refer to the HomeLink® web site at: www.homelink.com or call 1-800-355-3515.

NOTE:

Place the ignition switch in the ACC position when programming HomeLink®. It is also recommended that a new battery be placed in the hand-held transmitter of the device being programmed to HomeLink® for quicker programming and accurate transmission of the radio frequency.

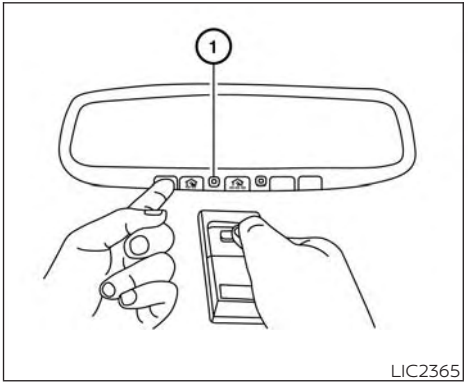

LIC2365

1. Position the end of your hand-held transmitter 1–3 in (2–8 cm) away from the HomeLink® surface, keeping the HomeLink® indicator light ① in view.

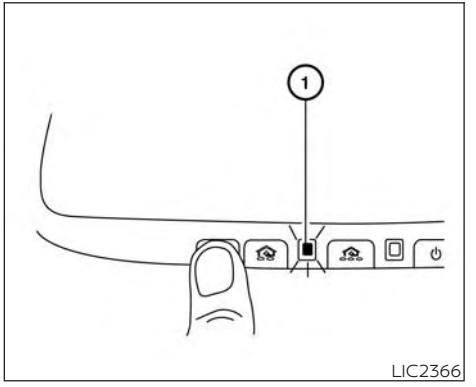

LIC2366

2. Using both hands, simultaneously press and hold the desired HomeLink® button and hand-held transmitter button. DO NOT release until the HomeLink® indicator light ① flashes slowly and then rapidly. When the indicator light flashes rapidly, both buttons may be released. (The rapid flashing indicates successful programming.)

NOTE:

Some devices may require you to replace Step 2 with the cycling procedure noted in "Programming HomeLink® for Canadian customers and gate openers" in this section.

3. Press and hold the programmed HomeLink® button and observe the indicator light.
   - If the indicator light ① **is solid/continuous, programming is complete** and your device should activate when the HomeLink® button is pressed and released.
   - If the indicator light ① blinks **rapidly for 2 seconds and then turns to a solid/continuous light, continue with Steps 4-6** for a rolling code device. A second person may make the following steps easier. Use a ladder or other device. Do not stand on your vehicle to perform the next steps.
4. At the receiver located on the garage door opener motor in the garage, locate the "learn" or "smart" button (the name and color of the button may vary by manufacturer but it is usually located near where the hanging antenna wire is attached to the unit). If there is difficulty locating the button, reference the garage door opener's manual.
5. Press and release the "learn" or "smart" button.
6. Return to the vehicle and firmly press and hold the trained HomeLink® button for 2 seconds and release. Repeat the "press/hold/release" sequence up to three times to complete the training process. HomeLink® should now activate your rolling code equipped device.
7. If you have any questions or are having difficulty programming your HomeLink® buttons, refer to the HomeLink® web site at: www.homelink.com or call 1-800-355-3515.

PROGRAMMING HOMELINK® FOR CANADIAN CUSTOMERS AND GATE OPENERS

Canadian radio-frequency laws require transmitter signals to "time-out" (or quit) after several seconds of transmission – which may not be long enough for HomeLink® to pick up the signal during training. Similar to this Canadian law, some U.S. gate operators are designed to "timeout" in the same manner.

If you live in Canada or you are having difficulties training a gate operator **or** garage door opener by using the "Training" procedures, **replace** "Programming HomeLink®" **Step 2** with the following:

NOTE:

When programming a garage door opener, etc., unplug the device during the "cycling" process to prevent possible damage to the garage door opener components.

1. For additional information, refer to "Programming HomeLink®" step 1 in this section.
2. Using both hands, simultaneously press and hold the desired HomeLink® button and the hand-held transmitter button. During training, your hand-held transmitter may automatically stop transmitting. Continue to press and hold the desired HomeLink® button while you press and re-press ("cycle") your hand-held transmitter every 2 seconds until the frequency signal has been learned. The HomeLink® indicator light will flash slowly and then

rapidly after several seconds upon successful training. DO NOT release until the HomeLink® indicator light flashes slowly and then rapidly. When the indicator light flashes rapidly, both buttons may be released. The rapid flashing indicates successful training.
Proceed with "Programming HomeLink®" step 3 to complete.
If the device was unplugged during the programming procedure, remember to plug it back in when programming is completed.

OPERATING THE HOMELINK® UNIVERSAL TRANSCEIVER

The HomeLink® Universal Transceiver, after it is programmed, can be used to activate the programmed device. To operate, simply press and release the appropriate programmed HomeLink® Universal Transceiver button. The amber indicator light will illuminate while the signal is being transmitted.

For convenience, the hand-held transmitter of the device may also be used at any time.

PROGRAMMING TROUBLE-DIAGNOSIS

If the HomeLink® does not quickly learn the hand-held transmitter information:

- Replace the hand-held transmitter batteries with new batteries.
- Position the hand-held transmitter with its battery area facing away from the HomeLink® surface.
- Press and hold both the HomeLink® and hand-held transmitter buttons without interruption.
- Position the hand-held transmitter 1 - 3 inches (26 - 76 mm) away from the HomeLink® surface. Hold the transmitter in that position for up to 15 seconds. If HomeLink® is not programmed within that time, try holding the transmitter in another position – keeping the indicator light in view at all times.

If you have any questions or are having difficulty programming your HomeLink® buttons, refer to the HomeLink® web site at: www.homelink.com or call 1-800-355-3515.

CLEARING THE PROGRAMMED INFORMATION

The following procedure clears the programmed information from both buttons. Individual buttons cannot be cleared. However, individual buttons can be reprogrammed. For additional information, refer to "Reprogramming a single HomeLink® button" in this section.

To clear all programming:

1. Press and hold the two outer HomeLink® buttons until the indicator light begins to flash in approximately 10 seconds. Do not hold for longer than 20 seconds.
2. Release both buttons.

HomeLink® is now in the programming mode and can be programmed at any time beginning with "Programming HomeLink®" - Step 1.

REPROGRAMMING A SINGLE HOMELINK® BUTTON

To reprogram a HomeLink® Universal Transceiver button, complete the following:

1. Press and hold the desired HomeLink® button. **DO NOT** release the button.
2. The indicator light will begin to flash after 20 seconds. Without releasing the HomeLink® button, proceed with "Programming HomeLink®" - Step 1.

For questions or comments, contact HomeLink® at: www.homelink.com or 1–800–355–3515 (except Mexico).

The HomeLink® Universal Transceiver button has now been reprogrammed. The new device can be activated by pressing the HomeLink® button that was just programmed. This procedure will not affect any other programmed HomeLink® buttons.

IF YOUR VEHICLE IS STOLEN

If your vehicle is stolen, you should change the codes of any non-rolling code device that has been programmed into HomeLink®. Consult the Owner's Manual of each device or call the manufacturer or dealer of those devices for additional information.

When your vehicle is recovered, you will need to reprogram the HomeLink® Universal Transceiver with your new transmitter information.

FCC Notice:

For USA:

This device complies with Part 15 of the FCC Rules. Operation is subject to the following two conditions: (1) This device may not cause interference, and (2) this device must accept any interference received, including interference that may cause undesired operation.

NOTE:

Changes or modifications not expressly approved by the party responsible for compliance could void the user's authority to operate the equipment.

For Canada:

This device complies with Industry Canada licence-exempt RSS standard(s). Operation is subject to the following two conditions: (1) this device may not cause interference, and (2) this device must accept any interference, including interference that may cause undesired operation of the device.

3 Pre-driving checks and adjustments

Keys . . . 3-2
NISSAN Intelligent Key® . . . 3-2
NISSAN Vehicle Immobilizer System keys . . . 3-4
Doors . . . 3-5
Locking with key . . . 3-6
Locking with inside lock knob . . . 3-6
Locking with power door lock switch . . . 3-6
Rear doors (King Cab® models) . . . 3-7
Automatic door locks (if so equipped) . . . 3-8
Child safety rear door lock (if so equipped) . . . 3-9
NISSAN Intelligent Key® . . . 3-10
Operating range . . . 3-11
Door locks/unlocks precaution . . . 3-12
NISSAN Intelligent Key® Operation . . . 3-12
How to use the remote keyless entry function . . . 3-15
Warning signals . . . 3-20
Troubleshooting guide . . . 3-20
Remote Engine Start (if so equipped) . . . 3-22
Remote Engine Start operating range . . . 3-22
Remote starting the vehicle . . . 3-23
Extending engine run time . . . 3-23
Canceling a Remote Engine Start . . . 3-23
Conditions the Remote Engine Start will not work . . . 3-24
Hood . . . 3-25
Fuel-filler door . . . 3-25
Diesel fuel engines . . . 3-26
Gasoline fuel engines . . . 3-26
Steering wheel . . . 3-29
Manual operation (if so equipped) . . . 3-29
Automatic operation (if so equipped) . . . 3-29
Sun visors . . . 3-30
Vanity mirrors (if so equipped) . . . 3-31
Card holder (driver's side only) . . . 3-31
Mirrors . . . 3-32
Manual anti-glare rearview mirror (if so equipped) . . . 3-32
Automatic anti-glare rearview mirror (if so equipped) . . . 3-32
Outside mirrors . . . 3-33
Truck box . . . 3-37
Tailgate . . . 3-37
Tie down hooks . . . 3-41
Automatic drive positioner (if so equipped) . . . 3-42
Memory storage function . . . 3-42

Entry/exit function 3-43
System operation 3-44

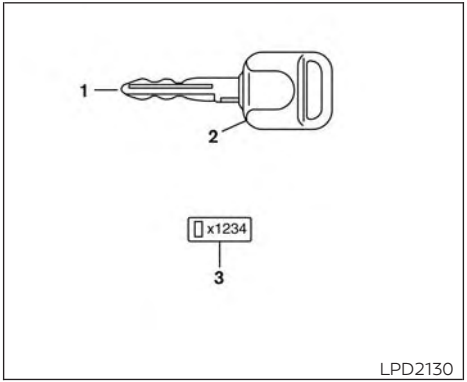

Type A (if so equipped)

1. Master key
2. Transponder chip
3. Key number plate

A key number plate is supplied with your keys. Record the key number and keep it in a safe place (such as your wallet), not in the vehicle. If you lose your keys, it is recommended that you visit a NISSAN dealer for duplicates by using the key number. NISSAN does not record key numbers so it is very important to keep track of your key number plate.

A key number is only necessary when you have lost all your keys. If you still have a key, it can be duplicated without knowing the key number.

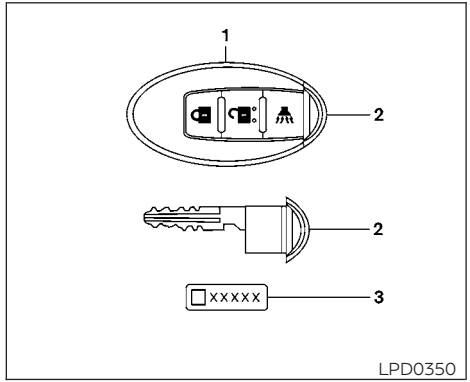

Type B (if so equipped)

1. Intelligent Key (two sets)
2. Mechanical key
3. Key number plate (one plate)

NISSAN INTELLIGENT KEY®

Your vehicle can only be driven with the Intelligent Keys which are registered to your vehicle's Intelligent Key system components and NISSAN Vehicle Immobilizer System components.

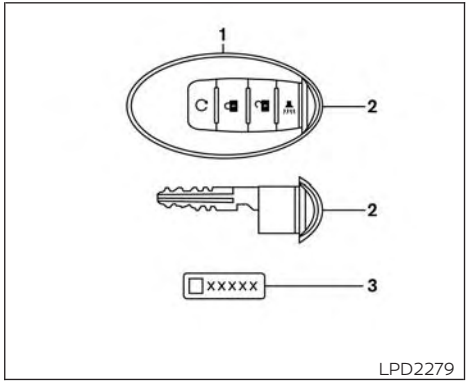

Type C (if so equipped)

Never leave the keys in the vehicle.

As many as four Intelligent Keys can be registered and used with one vehicle. The new keys must be registered prior to the use with the Intelligent Key system and NISSAN Vehicle Immobilizer System of your vehicle. It is recommended that you visit a NISSAN dealer for this service. Since the registration process requires erasing all memory in the Intelligent Key components when registering new keys, be sure to take all Intelligent Keys that you have to the NISSAN dealer.

A key number plate is supplied with your keys. Record the key number and keep it in a safe place (such as your wallet), not in the vehicle. If you lose your keys, it is recommended that you visit a NISSAN dealer for duplicates by using the key number. NISSAN does not record key numbers so it is very important to keep track of your key number plate.

A key number is only necessary when you have lost all keys and do not have one to duplicate from. If you still have a key, it can be duplicated without knowing the key number.

⚠ CAUTION

Listed below are conditions or occurrences which will damage the Intelligent Key:

- **Do not allow the Intelligent Key, which contains electrical components, to come into contact with water or salt water. This could affect the system function.**
- **Do not drop the Intelligent Key.**
- **Do not strike the Intelligent Key sharply against another object.**
- **Do not change or modify the Intelligent Key.**
- **Wetting may damage the Intelligent Key. If the Intelligent Key gets wet, immediately wipe until it is completely dry.**
- **Do not place the Intelligent Key for an extended period in an area where temperatures exceed 60°C (140°F).**
- **Do not attach the Intelligent Key with a key holder that contains a magnet.**
- **Do not place the Intelligent Key near equipment that produces a magnetic field, such as a TV, audio equipment and personal computers.**

If an Intelligent Key is lost or stolen, NISSAN recommends erasing the ID code of that Intelligent Key from the vehicle. This may prevent the unauthorized use of the Intelligent Key to operate the vehicle. For information regarding the erasing procedure, it is recommended that you visit a NISSAN dealer.

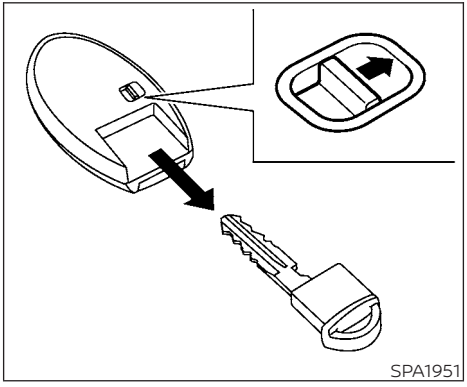

Mechanical key

The Intelligent Key contains the mechanical key.

To remove the mechanical key, release the lock knob on the back of the Intelligent Key.

To install the mechanical key, firmly insert it into the Intelligent Key until the lock knob returns to the lock position.

Use the mechanical key to lock or unlock the driver's door or tailgate.

⚠ CAUTION

Always carry the mechanical key installed in the Intelligent Key slot.

For additional information, refer to "Doors" or "Tailgate" in this section.

Valet hand-off

When you have to leave a key with a valet, give them the Intelligent Key itself, keep the mechanical key and master key with you to protect your belongings.

To prevent the glove box from being opened during valet hand-off, follow the procedures below:

1. Remove the mechanical key from the Intelligent Key.
2. Lock the glove box with the mechanical key or master key.
3. Hand the Intelligent Key without the mechanical key to the valet, keep the mechanical and master key with you.

For additional information, refer to "Storage" in the "Instruments and controls" section of this manual and "Tailgate" in this section.

NISSAN VEHICLE IMMOBILIZER SYSTEM KEYS

You can only drive your vehicle using the Intelligent Keys which are registered to the NISSAN Vehicle Immobilizer System components in your vehicle.

The mechanical key can be used for all the locks.

Never leave the keys in the vehicle.

Additional or replacement keys:

If you still have a key, the key number is not necessary when you need extra NISSAN Vehicle Immobilizer System keys. Your existing key can be duplicated without knowing the key number. As many as four NISSAN Vehicle Immobilizer System keys can be used with one vehicle. You should bring all NISSAN Vehicle Immobilizer System keys that you have to the NISSAN dealer for registration. This is because the registration process will erase the memory of all key codes previously registered into the NISSAN Vehicle Immobilizer System. After the registration process, these components will only recognize keys coded into the NISSAN Vehicle Immobilizer System during registration. Any key that is not

given to the dealer at the time of registration will no longer be able to start your vehicle.

⚠ CAUTION

Do not allow the immobilizer system key, which contains an electrical transponder, to come into contact with water or salt water. This could affect system function.

When the doors are locked using one of the following methods, the doors cannot be opened using the inside or outside door handles. The doors must be unlocked to open the doors.

⚠ WARNING

- **Always have the doors locked while driving. Along with the use of seat belts, this provides greater safety in the event of an accident by helping to prevent persons from being thrown from the vehicle. This also helps keep children and others from unintentionally opening the doors, and will help keep out intruders.**
- **Before opening any door, always look for and avoid oncoming traffic.**
- **To help avoid risk of injury or death through unintended operation of the vehicle and/or its systems, including entrapment in windows and/or inadvertent door lock activation, do not leave children, people who require the assistance of others and/or pets unattended in your vehicle. Additionally, the temperature inside a closed vehicle on a warm day can quickly become high enough to cause a significant risk of injury or death to people and/or pets.**

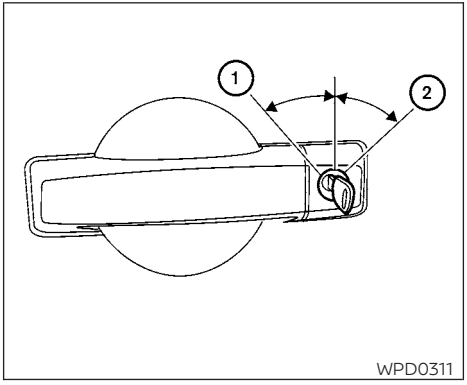

Driver's side

LOCKING WITH KEY

To lock or unlock the vehicle, turn the key as shown.

Manual

To lock a door, turn the key toward the front of the vehicle ①. To unlock, turn the key toward the rear ②.

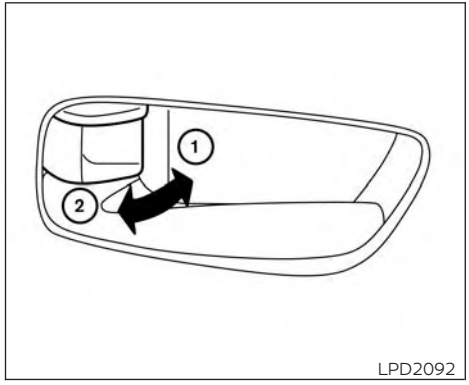

Inside lock

LOCKING WITH INSIDE LOCK KNOB

To lock the door without the key, move the inside lock to the lock position ①, then close the door.

To unlock the door without the key, move the inside lock knob to the unlock position ②.

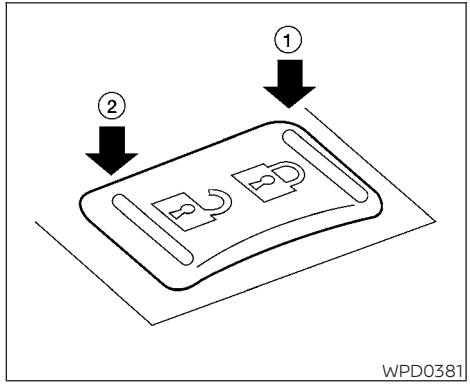

LOCKING WITH POWER DOOR LOCK SWITCH

To lock all the doors and the tailgate lock (if so equipped) without a key, push the door lock switch (driver's or front passenger's side) to the lock position ①. When locking the door this way, be certain not to leave the key inside the vehicle.

To unlock all the doors and the tailgate lock (if so equipped) without a key, push the door lock switch (driver's or front passenger's side) to the unlock position ②.

Lockout protection

With the Intelligent Key left in the vehicle, if all doors are closed, a chime will sound after the last door is closed and all doors will unlock automatically.

These functions help to prevent the Intelligent Key from being accidentally locked inside the vehicle.

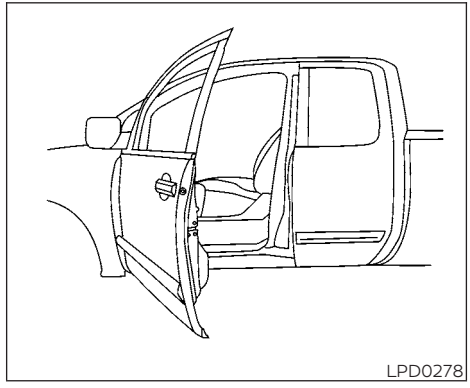

REAR DOORS (King Cab® models)

1. Open the driver's or passenger's door.

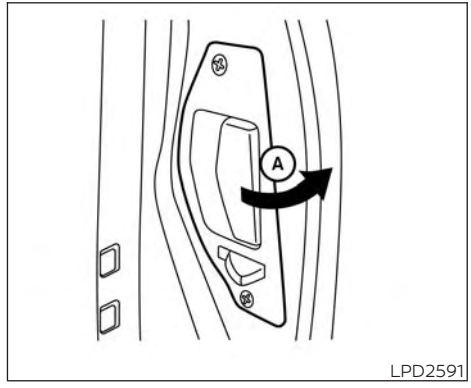

2. From the outside, pull the door handle Ⓐ toward you.

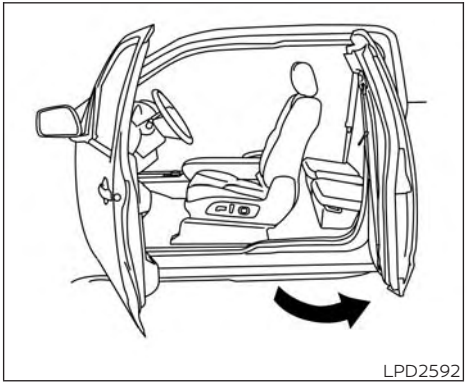
LPD2592

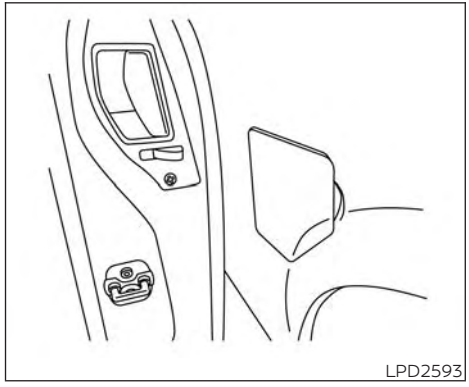
LPD2593

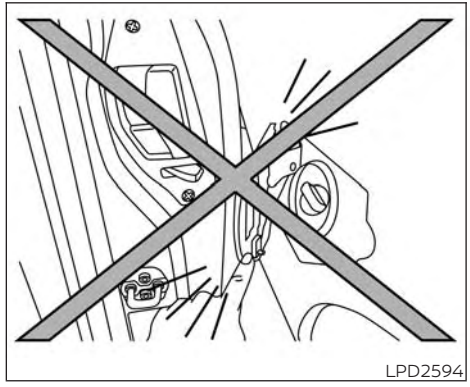
LPD2594

3. Open the door to the desired position.

⚠ CAUTION

Be careful when opening and exiting the driver's side rear door if the fuel-filler door is open. This may cause damage to the driver's side rear door or fuel-filler door if you open fully and they make contact.

AUTOMATIC DOOR LOCKS (if so equipped)

- All doors lock automatically when the vehicle speed reaches 15 mph (24 km/h).

NOTE:

The automatic door unlock function can be changed using the "Vehicle Settings" of the vehicle information display. For additional information refer to "Vehicle information display" in the "Instruments and Controls" section of this manual (if so equipped).

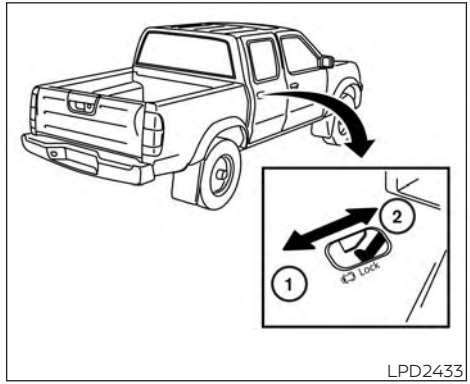

LPD2433

CHILD SAFETY REAR DOOR LOCK (if so equipped)

Child safety locks help prevent the rear doors from being opened accidentally, especially when small children are in the vehicle.

The child safety lock levers are located on the edge of the rear doors.

When the lever is in the unlock position ②, the door can be opened from the outside or the inside.

When the lever is in the LOCK position ①, the door can be opened only from the outside.

⚠ WARNING

- **Radio waves could adversely affect electric medical equipment. Those who use a pacemaker should contact the electric medical equipment manufacturer for the possible influences before use.**
- **The Intelligent Key transmits radio waves when the buttons are pressed. The FAA advises the radio waves may affect aircraft navigation and communication systems. Do not operate the Intelligent Key while on an airplane. Make sure the buttons are not operated unintentionally when the unit is stored for a flight.**
- **Never leave the Intelligent Key in the vehicle when you leave the vehicle.**

The Intelligent Key system can operate all the door locks using the remote control function or pushing the request switch on the vehicle without taking the key out from a pocket or purse. The operating environment and/or conditions may affect the Intelligent Key system operation.

Be sure to read the following before using the Intelligent Key system.

⚠ CAUTION

Be sure to carry the Intelligent Key with you when operating the vehicle.

The Intelligent Key is capable of receiving and transmitting radio waves. The Intelligent Key system transmits weak radio waves from various distances. Environmental conditions may interfere with the operation of the Intelligent Key system under the following operating conditions:

- When operating near a location where strong radio waves are transmitted, such as a TV tower, power station and broadcasting station.
- When in possession of wireless equipment, such as a cellular telephone, transceiver, or a CB radio.
- When the Intelligent Key is in contact with or covered by metallic materials.
- When any type of radio wave remote control is used nearby.
- When the Intelligent Key is placed near an electric appliance such as a personal computer.
- When the vehicle is parked near a parking meter.

In such cases, correct the operating conditions before using the Intelligent Key function or use the mechanical key.

Although the life of the battery varies depending on the operating conditions, the battery's life is approximately two years. If the battery is discharged, replace it with a new one.

When the Intelligent Key battery is low, a yellow indicator illuminates with the message "Warning, Key ID Incorrect" in the vehicle information display (if so equipped). When the Intelligent Key battery is low, the NISSAN Intelligent Key® warning light (if so equipped) will blink green. For additional information, refer to "Vehicle information display warnings and indicators" in the "Instruments and controls" section of this manual.

Since the Intelligent Key is capable of receiving radio waves, if the key is left near equipment which transmits strong radio waves, such as signals from a TV and personal computer, the battery life may become shorter.

For additional information, refer to "Battery replacement" in the "Do-it-yourself" section of this manual.

As many as four Intelligent Keys can be registered and used with one vehicle. For information about the purchase and use of additional Intelligent Keys, it is recommended that you visit a NISSAN dealer.

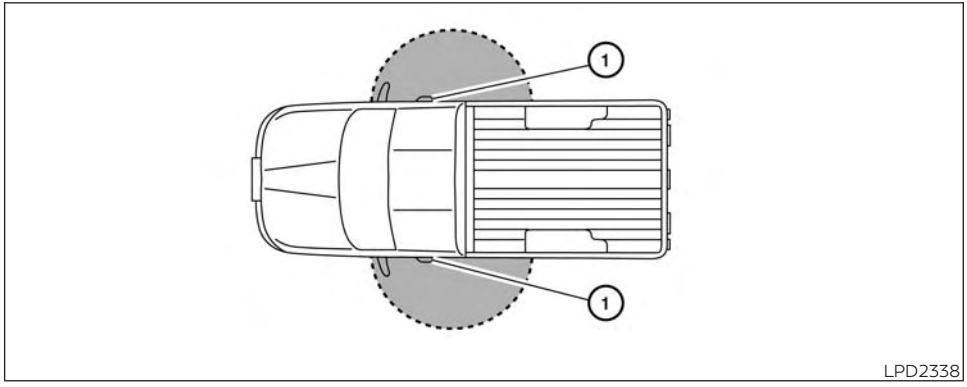

OPERATING RANGE

The Intelligent Key functions can only be used when the Intelligent Key is within the specified operating range from the request switch ① (if so equipped).

When the Intelligent Key battery is discharged or strong radio waves are present near the operating location, the Intelligent Key operating range becomes narrower, and the Intelligent Key may not function properly.

The operating range is within 31.50 in (80 cm) from each request switch ①.

If the Intelligent Key is too close to the door glass or handle, the request switches may not function.

When the Intelligent Key is within the operating range, it is possible for anyone, even someone who does not carry the Intelligent Key, to push the request switch to lock/unlock the doors.

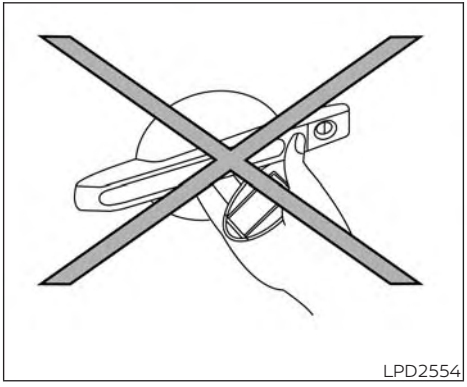

DOOR LOCKS/UNLOCKS PRECAUTION

- Do not push the door handle request switch with the Intelligent Key held in your hand as illustrated. The close distance to the door handle will cause the Intelligent Key system to have difficulty recognizing that the Intelligent Key is outside the vehicle.
- After locking with the door handle request switch, verify the doors are securely locked by testing them.
- To prevent the Intelligent Key from being left inside the vehicle, make sure you carry the Intelligent Key with you and then lock the doors.
- Do not pull the door handle before pushing the door handle request switch. The door will be unlocked but will not open. Release the door handle once and pull it again to open the door.

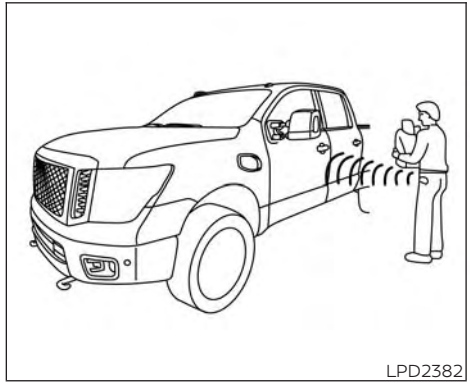

NISSAN INTELLIGENT KEY® OPERATION

You can lock or unlock the doors without taking the Intelligent Key out of your pocket or bag.

When you carry the Intelligent Key with you, you can lock or unlock all doors by pushing the door handle request switch within the range of operation.

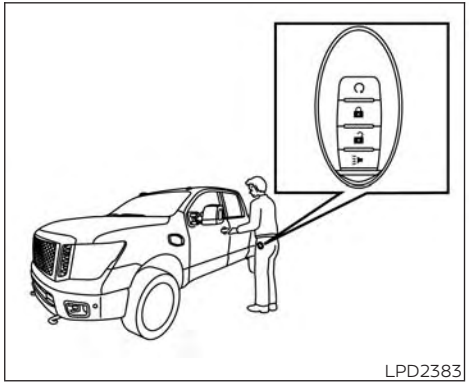
LPD2383

Locking doors

1. Move the shift lever to the P (Park) position, place the ignition switch in the LOCK position and make sure you carry the Intelligent Key with you.
2. Close all doors.
3. Push the door handle request switch (if so equipped) while carrying the Intelligent Key with you.
4. All doors and the tailgate lock (if so equipped) will lock.

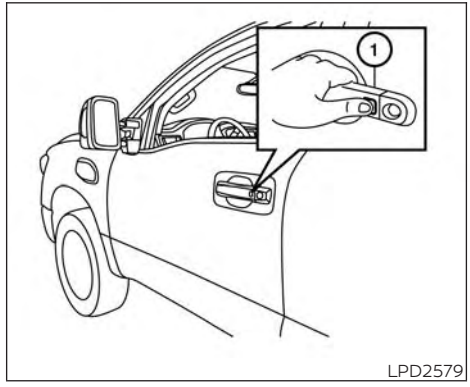

LPD2579

5. The hazard indicator lights flash twice, the outside chirp sounds twice, and the front and tail lights may turn on for 10 seconds.

NOTE:

- **Request switches (if so equipped) for all doors can be deactivated when the "I-Key Door Lock" setting is switched to OFF in the Vehicle Settings of the vehicle information display (if so equipped). For additional information, refer to "Vehicle information display" in the "Instruments and controls" section of this manual.**
- **Doors and the tailgate lock (if so equipped) will lock with the door handle request switch ① while the ignition switch is not in the LOCK position.**
- **Doors and the tailgate lock (if so equipped) will not lock by pushing the door handle request switch if any door is open. However, doors will lock with the mechanical key even if any door is open.**
- **Doors and the tailgate lock (if so equipped) do not lock with the door handle request switch if the Intelligent Key is inside the vehicle. A beep will sound to warn you. However, when an Intelligent Key is inside the vehicle, doors can be locked with another Intelligent Key.**

⚠ CAUTION

- **After locking the doors using the request switch (if so equipped), make sure that the doors have been securely locked by operating the door handles.**
- **When locking the doors using the request switch (if so equipped), make sure to have the Intelligent Key in your possession before operating the request switch (if so equipped) to prevent the Intelligent Key from being left in the vehicle.**
- **The request switch is operational only when the Intelligent Key has been detected by the Intelligent Key system.**

Lockout protection

To prevent the Intelligent Key from being accidentally locked in the vehicle, lockout protection is equipped with the Intelligent Key system.

When any door is open, the doors are locked, and then the Intelligent Key is put inside the vehicle and all the doors are closed; a chime will sound and the lock will automatically unlock.

NOTE:

The doors may not lock when the Intelligent Key is in the same hand that is operating the request switch to lock the door. Put the Intelligent Key in a purse, pocket or your other hand.

⚠ CAUTION

The lockout protection may not function under the following conditions:

- **When the Intelligent Key is placed on top of the instrument panel.**
- **When the Intelligent Key is placed inside the glove box or a storage bin.**
- **When the Intelligent Key is placed inside the door pockets.**
- **When the Intelligent Key is placed inside or near metallic materials.**

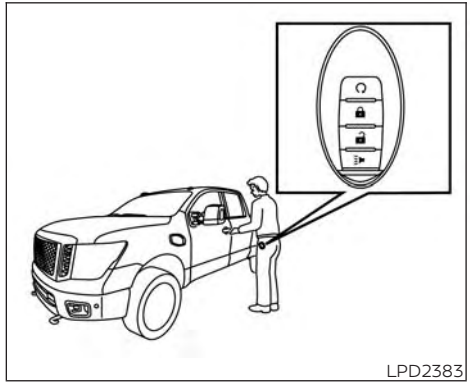

Unlocking doors

1. Carry the Intelligent Key.
2. Push the door handle request switch (if so equipped).
3. The door will unlock and the hazard indicator lights flash once, the outside chirp sounds once, and the front and tail lights may turn on for 30 seconds.
4. Push the door handle request switch again within one minute.
5. The outside chirp will sound once and the remaining doors and tailgate lock (if so equipped) will unlock.

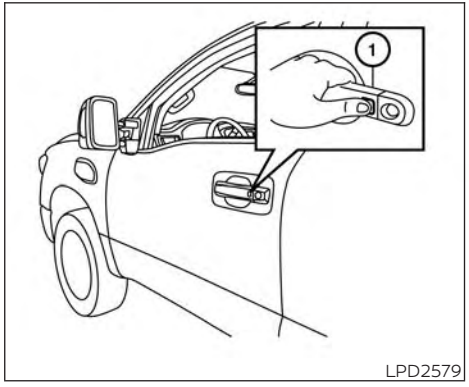

NOTE:

- **If "Selective Unlock" is turned OFF in the Vehicle Settings, all doors and tailgate lock (if so equipped) will unlock upon the first request switch ① press.**
- **The request switch can be deactivated when the "I-Key Door Lock" is switched to OFF in the Vehicle Settings of the vehicle information display (if so equipped). For additional information, refer to "Vehicle information display" in the "Instruments and controls" section of this manual.**

If a door handle is pulled while unlocking the doors, that door may not be unlocked. Returning the door handle to its original position will unlock the door. If the door does not unlock after returning the door handle, push the door handle request switch to unlock the door.

All doors will be locked automatically unless one of the following operations is performed within one minute after pushing the request switch.

- Opening any door.
- Pushing the ignition switch.

The interior light timer illuminates for a period of time when a door is unlocked and the room light switch is in the DOOR position.

The interior light can be turned off without waiting by performing one of the following operations:

- Placing the ignition switch in the ON position.
- Locking the doors and tailgate lock (if so equipped) with the remote control.
- Switching the room light switch to the OFF position.
- Switching the "Auto Room Lamp" to the OFF position in Vehicle Settings of the vehicle information display (if so equipped). For additional information, refer to "Vehicle information display" in the "Instruments and controls" section of this manual.

HOW TO USE THE REMOTE KEYLESS ENTRY FUNCTION

The remote keyless entry function can operate all door locks using the remote keyless function of the Intelligent Key. The remote keyless function can operate at a distance of 33 ft (10 m) away from the vehicle. The operating distance depends upon the conditions around the vehicle.

The remote keyless entry function will not function under the following conditions:

- When the Intelligent Key is not within the operational range.
- When the Intelligent Key battery is discharged.

⚠ CAUTION

When locking the doors using the Intelligent Key, be sure not to leave the key in the vehicle.

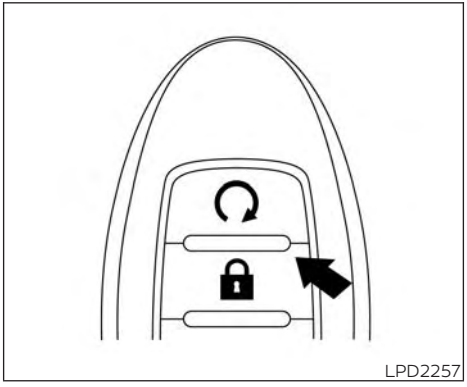

LPD2257

Locking doors

1. Place the ignition switch in the LOCK position.
2. Close all doors and tailgate.
3. Press the button on the Intelligent Key.
4. The hazard indicator lights flash twice, the horn beeps once, and the front and tail lights may turn on for 10 seconds.
5. All doors and tailgate lock (if so equipped) will be locked.

CAUTION

After locking the doors using the Intelligent Key, be sure that the doors have been securely locked by operating the door handles.

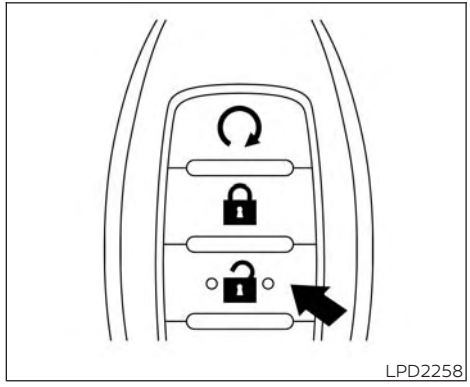

LPD2258

Unlocking doors

1. Press the button on the Intelligent Key.
2. The driver's door will unlock, the hazard indicator light flash once, and the front and tail lights may turn on for 30 seconds.
3. Press the button again within one minute.
4. The remaining doors and tailgate lock (if so equipped) will unlock.

NOTE:

If Selective Unlock is turned off in the Vehicle Settings, all doors and tailgate lock (if so equipped) will unlock upon the first 🔓 press of the Intelligent Key remote. For additional information, refer to "Vehicle information display" in the "Instruments and controls" section of this manual.

All doors and tailgate lock (if so equipped) will be locked automatically unless one of the following operations is performed within one minute after pressing the 🔓 button:

- Opening any doors.
- Pushing the ignition switch.

The interior light illuminates for a period of time when a door is unlocked and the room light switch is in the DOOR position.

The light can be turned off without waiting by performing one of the following operations:

- Placing the ignition switch in the ON position.
- Locking the doors with the Intelligent Key.
- Switching the room light switch to the OFF position.
- Switching the Auto Room Lamp to the OFF position in Vehicle Settings of the vehicle information display (if so equipped). For additional information, refer to "Vehicle information display" in the "Instruments and controls" section of this manual.

Opening windows (if so equipped)

The Intelligent Key allows you to simultaneously open windows equipped with automatic operation.

- To open the windows, press the 🔓 button on the Intelligent Key for **longer than 3 seconds** after all doors are unlocked.

The door windows will open while pressing the 🔓 button on the Intelligent Key.

The door windows cannot be closed by using the Intelligent Key.

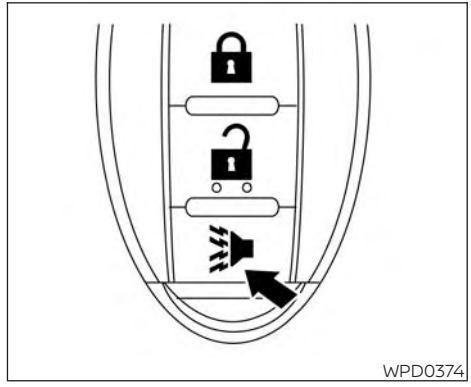

Using the panic alarm

If you are near your vehicle and feel threatened, you may activate the panic alarm to call attention by pressing and holding the button on the Intelligent Key for **longer than 1 second.**

The panic alarm and headlights will stay on for a period of time.

The panic alarm stops when:

- It has run for a period of time, or
- Any button is pressed on the Intelligent Key.
- The request switch (if so equipped) on the driver's door is pushed and the Intelligent Key is in range of the door handle.

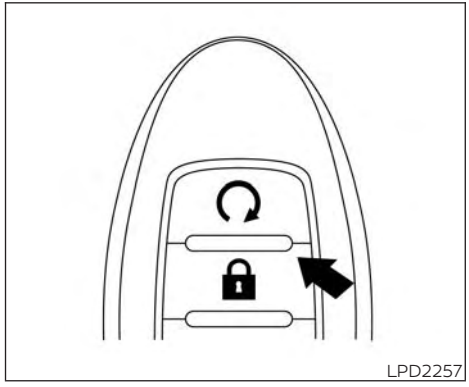

Trailer light check (if so equipped)

This functionality allows the customer to confirm trailer light operation, without the need of a second person to press the brake pedal or activate each turn signal light. The trailer light check can be performed by the Intelligent Key or through the Vehicle Settings in the vehicle information display (if so equipped). For additional information, refer to "Vehicle information display" in the "Instruments and controls" section of this manual.

To activate the trailer light check function with your Intelligent Key, perform the following:

1. Aim the Intelligent Key at the vehicle.
2. Press and release the LOCK button.
3. Within 2 seconds, press and hold the LOCK button again for at least 2 seconds, until the horn beeps once and the park lights turn on.

The following events will occur:

- The left turn signal light on the vehicle and the trailer will flash for 5 seconds.
- The right turn signal light on the vehicle and the trailer will flash for 5 seconds.
- The brake lights on the vehicle and the trailer will turn ON for 5 seconds.

NOTE:

If the ignition switch is in the OFF position, the park lights will turn off after the events above occur. If ignition switch is in the ON position, lights will stay on for 45 seconds after trailer light check. If the trailer lights do not work properly, check the connections and bulbs. If the vehicle lights do not turn on, check the bulbs. If the trailer light check routine fails to start, ensure the following vehicle conditions:

- The vehicle is NOT moving, 0 mph (0 km/h)
- Brake switch is NOT depressed
- Left or right flasher is OFF
- Trailer light check configuration is NOT disabled and available in the meter towing settings
- The hazard switch is NOT turned ON
- The shift position is fully in P (Park) position
- Vehicle is within Remote Keyless Entry range

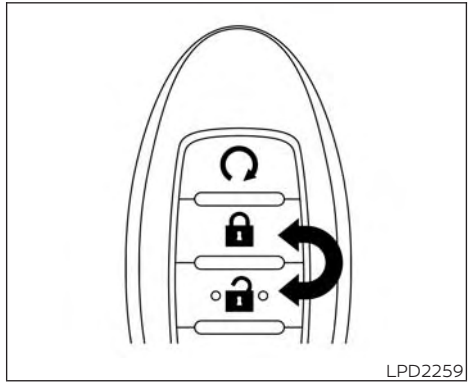

Answer back horn feature

If desired, the answer back horn feature can be deactivated using the Intelligent Key. When it is deactivated and the LOCK button is pressed, the hazard indicator lights flash twice. When the UNLOCK button is pressed, neither the hazard indicator lights nor the horn operates.

NOTE:

If you change the answer back horn and light flash feature with the Intelligent Key while the ignition is in the ON position, the vehicle information display screen (if so equipped) will show the previous mode. The vehicle information display screen (if so equipped) will show the current mode after the ignition switch has been cycled from the OFF to the ON position. The vehicle information display screen (if so equipped) can also be used to change the answer back horn mode. For additional information refer to "Vehicle information display" in the "Instruments and controls" section of this manual.

To deactivate: Press and hold the and buttons **for at least 2 seconds.** The hazard indicator lights will flash three times to confirm that the answer back horn feature has been deactivated.

To activate: Press and hold the and buttons **for at least 2 seconds once more.**
The hazard indicator lights will flash once and the horn will sound once to confirm that the horn beep feature has been reactivated.

Deactivating the horn beep feature does not silence the horn if the alarm is triggered.

WARNING SIGNALS

To help prevent the vehicle from moving unexpectedly by erroneous operation of the Intelligent Key or to help prevent the vehicle from being stolen, a chime or chirp sounds from inside and outside the vehicle and a warning is displayed in the instrument panel.

When a chime or beep sounds or a warning is displayed, be sure to check the vehicle and the Intelligent Key.

For additional information, refer to "Troubleshooting guide" in this section and "Vehicle information display" in the "Instruments and controls" section of this manual.

TROUBLESHOOTING GUIDE

Verify the location of all Intelligent Keys that are programmed for the vehicle. If another Intelligent Key is in range or inside the vehicle, the vehicle system may respond differently than expected.

Symptom		Possible Cause	Remedy
When pushing the ignition switch to stop the engine	The red "Shift to Park" warning appears on the vehicle information display (if so equipped) and the inside warning chime sounds continuously.	The shift lever is not in the P (Park) position.	Move the shift lever to the P (Park) position.
When opening the driver's door to get out of the vehicle	The door open warning appears on the display and the inside warning chime sounds continuously.	The ignition switch is in the ACC position.	Place the ignition switch in the ON position or close the driver's door.
When closing the door after getting out of the vehicle	The yellow "No Key Detected" warning appears on the vehicle information display (if so equipped), the outside chime sounds three times and the inside warning chime sounds for approximately three seconds.	The Intelligent Key is not detected inside of the vehicle.	Place the ignition switch in the OFF position.
	The red "Shift to Park" warning appears on the vehicle information display (if so equipped) and the inside and outside chimes sound continuously.	The ignition switch is in the ACC or OFF position and the shift lever is not in the P (Park) position.	Carry the Intelligent Key with you.
When closing the door with the inside lock knob turned to LOCK	The outside chime sounds for approximately three seconds and all the doors unlock.	The Intelligent Key is inside the vehicle.	Carry the Intelligent Key with you.

Symptom		Possible Cause	Remedy
When pushing the door handle request switch or the button on the Intelligent Key to lock the door	The outside chime sounds for approximately three seconds.	The Intelligent Key is inside the vehicle.	Carry the Intelligent Key with you.
When pushing the ignition switch to start the engine	The Intelligent Key battery indicator appears on the display.	The battery charge is low.	Replace the battery with a new one. For additional information, refer to "Battery replacement" in the "Do-it-yourself" section of this manual.
	The yellow "Key ID Incorrect" warning appears on the vehicle information display (if so equipped).	The Intelligent Key is not detected inside of the vehicle.	Carry the registered Intelligent Key with you.

REMOTE ENGINE START (if so equipped)

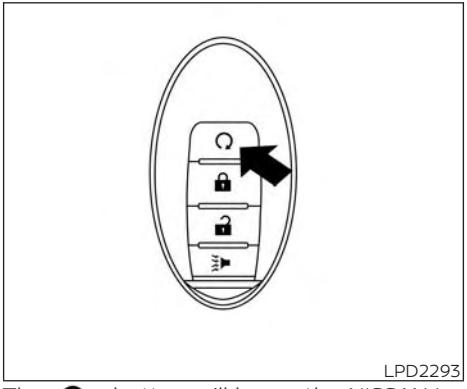

The button will be on the NISSAN Intelligent Key® if the vehicle has Remote Engine Start. This feature allows the engine to start from outside the vehicle.

The following features may be affected when the Remote Engine Start feature is used:

- Vehicles with a manual climate control system (if so equipped) will default to the last used heating or cooling mode.
- Vehicles with an automatic climate control system (if so equipped) will default to either heating or cooling mode. For additional information, refer to "Remote Engine Start with Intelligent Climate Control" in the "Monitor, climate, audio, phone and voice recognition systems" section of this manual.

Laws in some local communities may restrict the use of remote starters. For example, some laws require a person using Remote Engine Start to have the vehicle in view. Check local regulations for any requirements.

Other conditions may affect the function of the Remote Engine Start feature. For additional information, refer to "Conditions the Remote Engine Start will not work" in this section.

Other conditions can affect the performance of the Intelligent Key transmitter. For additional information, refer to "NISSAN Intelligent Key®" in this section.

REMOTE ENGINE START OPERATING RANGE

⚠ WARNING

To help avoid risk of injury or death through unintended operation of the vehicle and/or its systems, including entrapment in windows or inadvertent door lock activation, do not leave children, people who require the assistance of others or pets unattended in your vehicle. Additionally, the temperature inside a closed vehicle on a warm day can quickly become high enough to cause a significant risk of injury or death to people and pets.

⚠ CAUTION

When the Intelligent Key battery is discharged or other strong radio wave sources are present near the operating location, the Intelligent Key operating range becomes narrower, and the Intelligent Key may not function properly.

The Remote Engine Start function can only be used when the Intelligent Key is within the specified operating range from the vehicle.

The Remote Engine Start operating range is approximately 197 ft (60 m) from the vehicle.

REMOTE STARTING THE VEHICLE

To use the Remote Engine Start feature to start the engine perform the following:

1. Aim the Intelligent Key at the vehicle.
2. Press the button to lock all doors.
3. Within 5 seconds press and hold the button until the turn signal lights flash and the tail lamps turn on. If the vehicle is not within view press and hold the button for at least 2 seconds.

The following events will occur when the engine starts:

- The parking lights will turn on and remain on as long as the engine is running.
- The doors will be locked and the climate control system may come on.
- The engine will continue to run for 10 minutes. Repeat the steps to extend the time for an additional 10 minutes. For additional information, refer to "Extending engine run time" in this section.

Depress and hold the brake then push the push-button ignition switch to the ON position before driving. For additional information, refer to "Driving the vehicle" in the "Starting and driving" section of this manual.

EXTENDING ENGINE RUN TIME

The Remote Engine Start feature can be extended one time by performing the steps listed in "Remote starting the vehicle" in this section. Run time will be calculated as follows:

- The first 10 minute run time will start when the Remote Engine Start function is performed.
- The second 10 minutes will start immediately when the Remote Engine Start function is performed again. For example, if the engine has been running for 5 minutes, and 10 minutes are added, the engine will run for a total of 15 minutes.
- Extending engine run time will count towards the two Remote Engine Start limit.

A maximum of two Remote Engine Starts, or a single Remote Engine Start with an extension, are allowed between ignition cycles. The ignition switch must be cycled to the ON position and then back to the OFF position before the Remote Engine Start procedure can be used again.

CANCELING A REMOTE ENGINE START

To cancel a Remote Engine Start, perform one of the following:

- Aim the Intelligent Key at the vehicle and press until the parking lights turn off.
- Turn on the hazard warning flashers.
- Cycle the ignition switch ON and then OFF.
- The extended engine run time has expired.
- The first 10 minute timer has expired.
- The engine hood has been opened.
- The shift lever is moved out of park.
- The alarm sounds due to illegal entry into the vehicle.

- The ignition switch is pushed without an Intelligent Key in the vehicle.
- The ignition switch is pushed with an Intelligent Key in the vehicle but the brake pedal is not depressed.

CONDITIONS THE REMOTE ENGINE START WILL NOT WORK

The Remote Engine Start will not operate if any of the following conditions are present:

- "Remote Engine Start" is turned off in the "Locking" section of the Vehicle Settings menu.
- The ignition switch is placed in the ON position.
- The hood is not securely closed.
- The hazard warning lights are on.
- The engine is still running. The engine must be completely stopped. Wait at least 6 seconds if the engine goes from running to off. This is not applicable when extending engine run time.
- The button is not pressed and held for at least 2 seconds.
- The button is not pressed and held within 5 seconds of pressing the lock button.
- The brake is pressed.
- The doors are not closed and locked.
- The I-Key Indicator Light remains solid in the vehicle information display (if so equipped).
- The alarm sounds due to illegal entry into the vehicle.
- Two Remote Engine Starts, or a single Remote Engine Start with an extension, have already been used.
- The vehicle is not in P (Park).
- There is a detected registered key already inside of the vehicle.
- The remote start function has been switched to the OFF position in Vehicle Settings of the vehicle information display (if so equipped). For additional information, refer to "Vehicle information display" in the "Instruments and controls" section of this manual.

The Remote Engine Start may display a warning or indicator in the vehicle information display (if so equipped). For additional information, refer to "Vehicle information display" in the "Instruments and controls" section of this manual.

HOOD

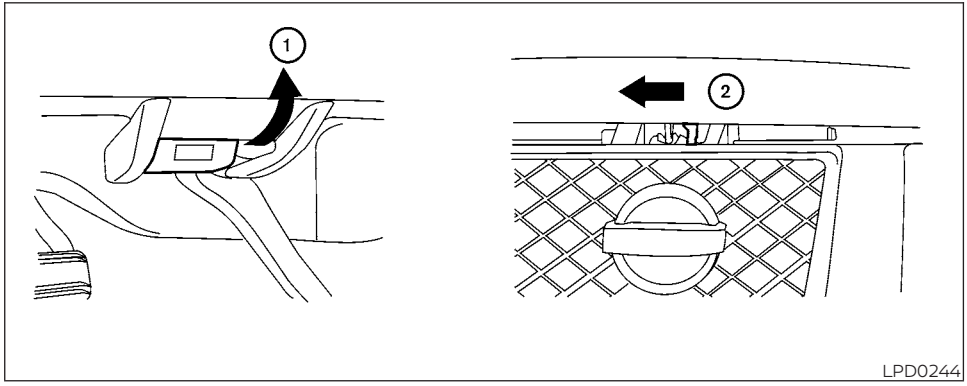

1. Pull the hood lock release handle ① located below the driver side instrument panel. The hood will spring up slightly.
2. Push the lever at the front of the hood to the side ② as illustrated with your fingertips and raise the hood.

When closing the hood, lower it slowly and make sure it locks into place.

⚠ WARNING

- **Make sure the hood is completely closed and latched before driving. Failure to do so could cause the hood to fly open and result in an accident.**
- **If you see steam or smoke coming from the engine compartment, to avoid injury do not open the hood.**

FUEL-FILLER DOOR

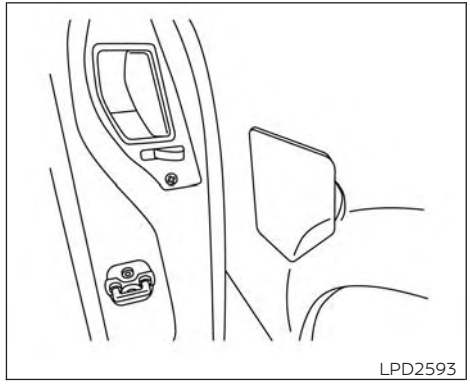

King Cab® models only

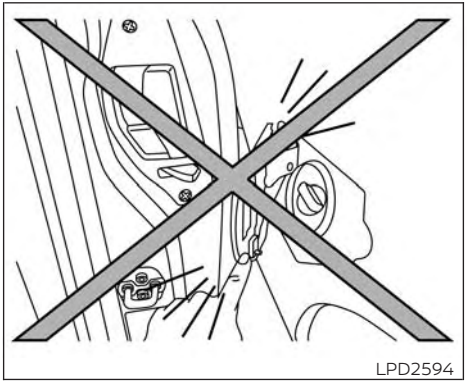

King Cab® models only

⚠ CAUTION

Be careful when opening and exiting the driver's side rear door if the fuel-filler door is open. This may cause damage to the driver's side rear door or fuel-filler door if you open fully and they make contact.

DIESEL FUEL ENGINES

For additional information, refer to the separate Titan Diesel Owner's Manual.

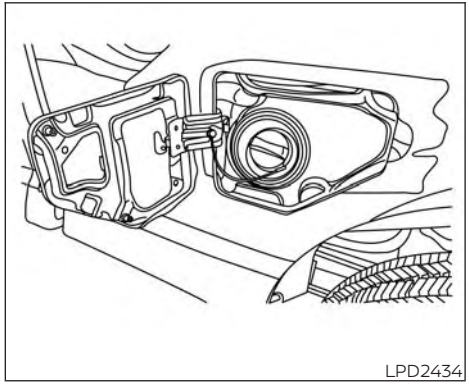

GASOLINE FUEL ENGINES

⚠ WARNING

- **Gasoline is extremely flammable and highly explosive under certain conditions. You could be burned or seriously injured if it is misused or mishandled. Always stop the engine and do not smoke or allow open flames or sparks near the vehicle when refueling.**

- **Do not attempt to top off the fuel tank after the fuel pump nozzle shuts off automatically. Continued refueling may cause fuel overflow, resulting in fuel spray and possibly a fire.**
- **Use only an original equipment type fuel-filler cap as a replacement. It has a built-in safety valve needed for proper operation of the fuel system and emission control system. An incorrect cap can result in a serious malfunction and possible injury. It could also cause the Malfunction Indicator Light (MIL) to come on.**
- **Never pour fuel into the throttle body to attempt to start your vehicle.**
- **Do not fill a portable fuel container in the vehicle or trailer. Static electricity can cause an explosion of flammable liquid, vapor or gas in any vehicle or trailer. To reduce the risk of serious injury or death when filling portable fuel containers:**
  - **Always place the container on the ground when filling.**
  - **Do not use electronic devices when filling.**
  - **Keep the pump nozzle in contact with the container while you are filling it.**
  - **Use only approved portable fuel containers for flammable liquid.**

CAUTION

- **Do not use E-15 or E-85 fuel in your vehicle. For additional information, refer to "Fuel recommendation" in the "Technical and consumer information" section of this manual.**
- **The Loose Fuel Cap warning message will appear if the fuel-filler cap is not properly tightened. It may take a few driving trips for the message to be displayed. Failure to tighten the fuel-filler cap properly after the Loose Fuel Cap warning message appears may cause the Malfunction Indicator Light (MIL) to illuminate.**
- **Failure to tighten the fuel-filler cap properly may cause the Malfunction Indicator Light (MIL) to illuminate. If the light illuminates because the fuel-filler cap is loose or missing, tighten or install the cap and continue to drive the vehicle. The light should turn off after a few driving trips. If the light does not turn off after a few driving trips, have the vehicle inspected. It is recommended that you visit a NISSAN dealer for this service.**
- **For additional information, refer to "Malfunction Indicator Light (MIL)" in the "Instruments and controls" section of this manual.**
- **If fuel is spilled on the vehicle body, flush it away with water to avoid paint damage.**

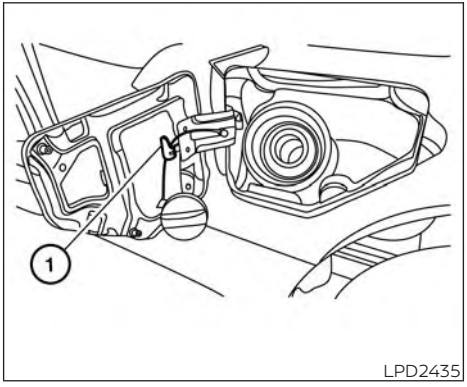

LPD2435

To remove the fuel-filler cap:

1. Turn the fuel-filler cap counterclockwise to remove.
2. Loop the tether strap around the hook ① while refueling.

To install the fuel-filler cap:

1. Insert the fuel-filler cap straight into the fuel-filler tube.
2. Turn the fuel-filler cap clockwise until a single click is heard.

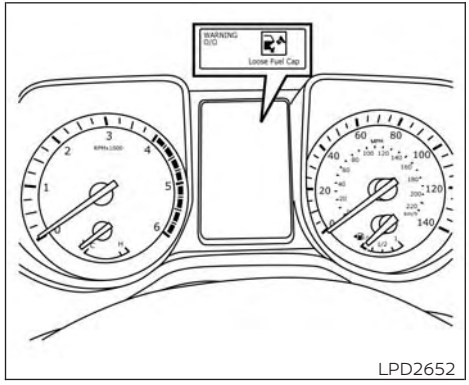

LPD2652

Type A (if so equipped)

Loose Fuel Cap warning

The Loose Fuel Cap warning appears in the vehicle information display (if so equipped) or trip computer Ⓐ(if so equipped) when the fuel-filler cap is not tightened correctly after the vehicle has been refueled. It may take a few driving trips for the message to be displayed. To turn off the warning, perform the following:

1. Remove and install the fuel-filler cap as previously described as soon as possible.

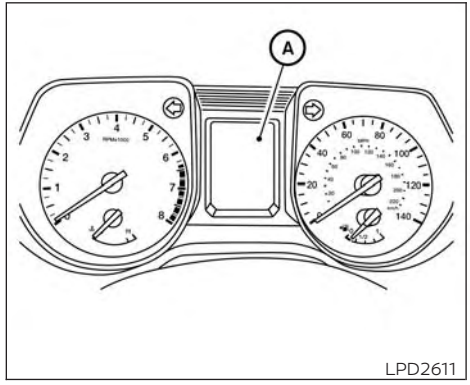

LPD2611

Type B (if so equipped)

2. Tighten the fuel-filler cap until a single click is heard.

⚠ WARNING

- **Do not adjust the steering wheel while driving. You could lose control of your vehicle and cause an accident.**
- **Do not adjust the steering wheel any closer to you than is necessary for proper steering operation and comfort. The driver's air bag inflates with great force. If you are unrestrained, leaning forward, sitting sideways or out of position in any way, you are at greater risk of injury or death in a crash. You may also receive serious or fatal injuries from the air bag if you are up against it when it inflates. Always sit back against the seatback and as far away as practical from the steering wheel. Always use the seat belts.**

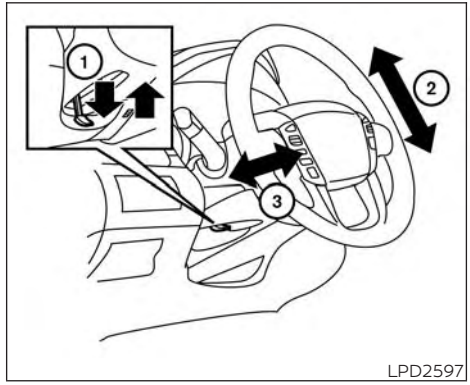

LPD2597

MANUAL OPERATION (if so equipped)

Tilt and telescopic operation

Pull the lock lever ① down:

- Adjust the steering wheel up or down in direction ② to the desired position.
- Adjust the steering wheel forward or backward in direction ③ to the desired position.

Push the lock lever ① up firmly to lock the steering wheel in place.

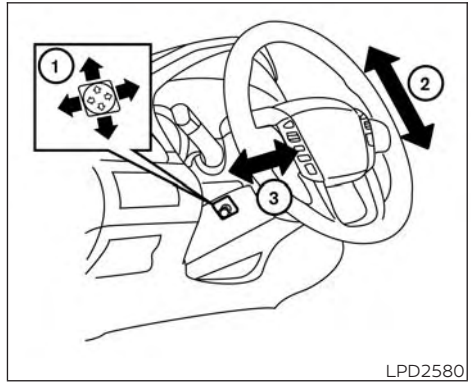

LPD2580

AUTOMATIC OPERATION (if so equipped)

Tilt and telescopic operation

To adjust the steering wheel move the switch ① in the following directions:

- Adjust the steering wheel up or down in direction ② to the desired tilt position.
- Adjust the steering wheel forward or backward in direction ③ to the desired telescopic position.

⚠ CAUTION

For vehicles with automatic drive positioner: Failure to reset the tilt and telescoping functions of the steering wheel, after the vehicle's battery has been discharged, may prevent the steering wheel position from being adjusted.

For vehicles with automatic drive positioner: Both the tilt and telescopic steering operation must be reset after the vehicle's battery has been discharged in order to prevent the tilt and telescopic operation from locking in one position. When the battery has been recharged or replaced, perform the following:

- For tilt operation: Adjust the switch ① so the steering wheel moves to the highest position ② that can be reached.
- For telescopic operation: Adjust the switch ① so the steering wheel moves to the most forward and backward position ③ that can be reached.

Performing these operations resets the range of the steering wheel's tilt and telescopic function.

Entry/Exit function (if so equipped)

The automatic drive positioner system (if so equipped) will make the steering wheel move up automatically when the driver's door is opened and the ignition switch is in the LOCK position. This lets the driver get into and out of the seat more easily. The steering wheel moves back into position when the driver's door is closed and the ignition switch is pushed.

For additional information, refer to "Automatic drive positioner" in this section.

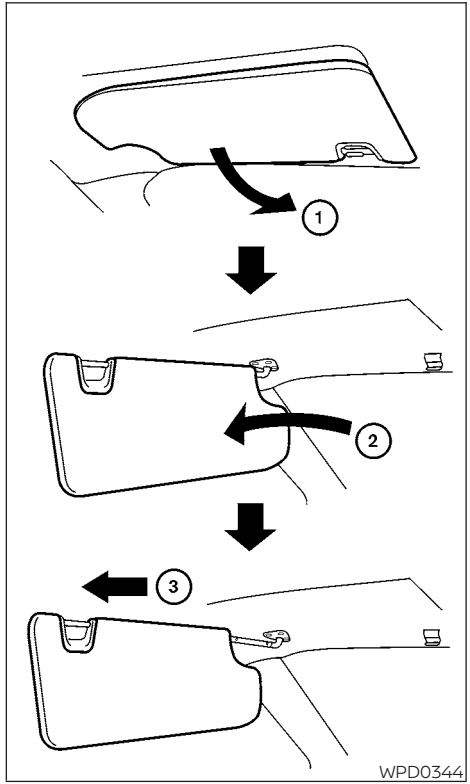

1. To block glare from the front, swing down ① the sun visor.
2. To block glare from the side, remove the sun visor from the center mount and swing the visor to the side ②.
3. To extend the sun visor, slide ③ in or out as needed.

⚠ CAUTION

- **Do not store the sun visor before returning the extension to its original position.**
- **Do not pull the extension sun visor forcedly downward.**

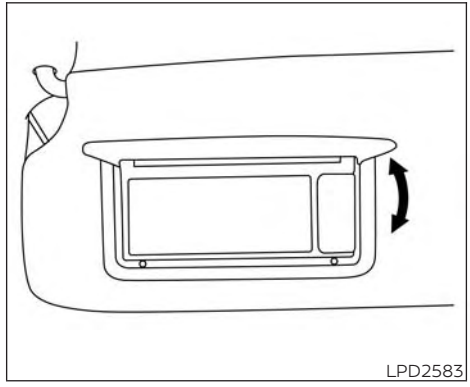

VANITY MIRRORS (if so equipped)

To access the vanity mirror, pull the sun visor down and flip open the mirror cover. Some vanity mirrors are illuminated and turn on when the mirror cover is open.

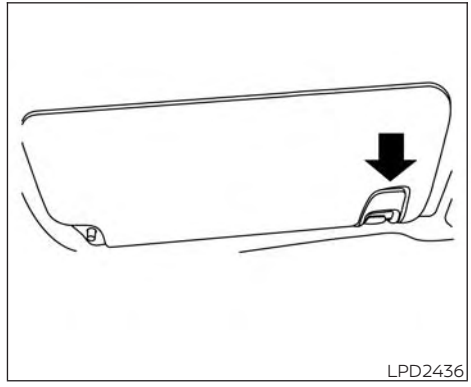

CARD HOLDER (driver's side only)

To access the card holder, slide card in the card holder. Do not view information while operating the vehicle.

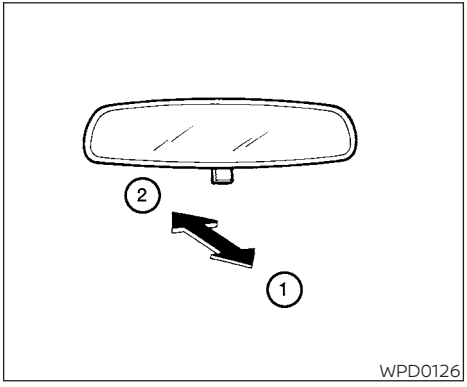

MANUAL ANTI-GLARE REARVIEW MIRROR (if so equipped)

Use the night position ① to reduce glare from the headlights of vehicles behind you at night.

Use the day position ② when driving in daylight hours.

⚠ WARNING

Use the night position only when necessary, because it reduces rear view clarity.

AUTOMATIC ANTI-GLARE REARVIEW MIRROR (if so equipped)

The inside mirror is designed so that it automatically dims during night time conditions and according to the intensity of the headlights of the vehicle following you. The automatic anti-glare feature is activated when the ignition switch is in the ON position.

The indicator light ② will illuminate when the automatic anti-glare feature is operating.

NOTE:

Do not hang any objects over the sensors ① or apply glass cleaner to the sensors. Doing so will reduce the sensitivity of the sensors, resulting in improper operation.

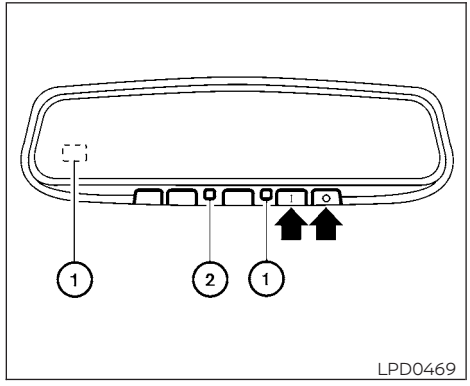

Type A - Without compass (if so equipped)

Type A (if so equipped)

To turn off the automatic anti-glare feature, press the O button. The indicator light will turn off.

To turn on the automatic anti-glare feature again, press the | button. The indicator light will turn on.

For additional information, refer to the "HomeLink® Universal Transceiver" in the "Instruments and controls" section of this manual.

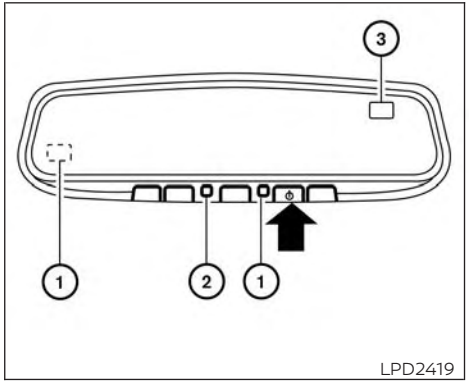

Type B - With compass (if so equipped)

Type B (if so equipped)

- To turn off the anti-glare feature, press the ⏻ button. The indicator light will turn off.
- To turn on the anti-glare feature, press the ⏻ button again. The indicator light will turn on.

For additional information about the compass and compass features ③, refer to "Compass" in the "Instruments and controls" section of this manual.

For additional information, refer to the "HomeLink® Universal Transceiver" in the "Instruments and controls" section of this manual.

OUTSIDE MIRRORS

⚠ WARNING

- **Objects viewed in the outside mirror on the passenger side are closer than they appear. Be careful when moving to the right. Using only this mirror could cause an accident. Use the inside mirror or glance over your shoulder to properly judge distances to other objects.**
- **Do not adjust the mirrors while driving. You could lose control of your vehicle and cause an accident.**

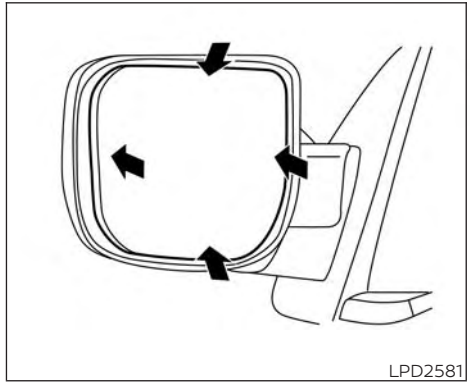

Manual control type (if so equipped)

The outside mirrors can be moved in any direction for a better rear view.

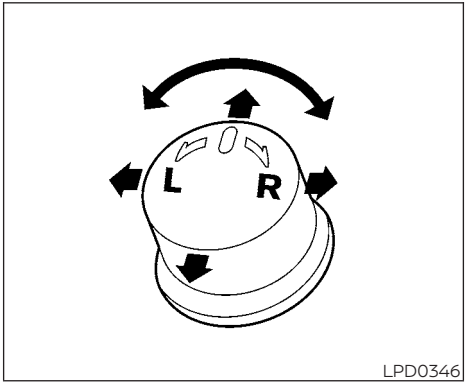

Electric control type (if so equipped)

The outside mirror remote control will operate only when the ignition switch is placed in the ACC or ON position.

Rotate the control dial to select the right or left mirror. Adjust the mirror to the desired position by moving the control dial.

Return the control dial to the center (neutral) position to prevent accidentally moving the mirror.

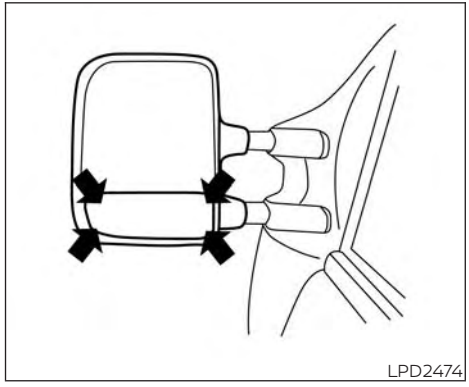

Trailer tow mirrors (if so equipped)

⚠ WARNING

Objects viewed in the convex portion of the trailer tow mirror are closer than they appear. Be careful when changing lanes or turning. Using only the convex mirror could cause an accident. Use the other mirrors or glance over your shoulder to properly judge distances to other objects.

Use the outside mirror remote control to adjust the top portion of the trailer tow mirror.

The lower portion of the trailer tow mirror can be moved manually in any direction for a better rear view.

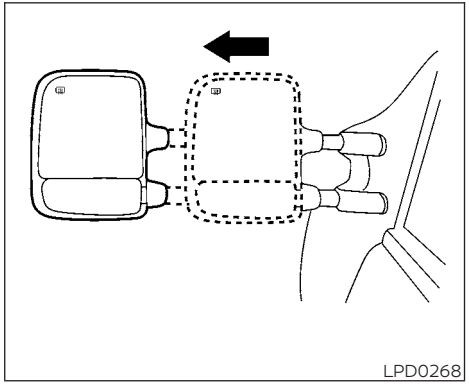

Pull the trailer tow mirror outward to extend it to the desired position for better visibility while towing a trailer.

⚠ WARNING

Do not extend or retract mirrors while driving. You may lose control of your vehicle and cause an accident.

⚠ CAUTION

Driving in tight spaces with mirrors extended may cause damage to the vehicle.

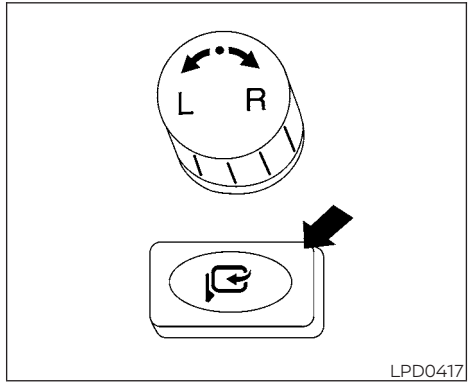

Power folding outside mirrors (if so equipped)

⚠ CAUTION

Do not manually fold the power folding mirrors. Manually folding the mirrors can damage the mirrors.

Push the switch to open or close the mirrors.

If one of the mirrors are manually operated or bumped, the mirror body can become loose at the pivot point. To correct electronic mirror operation, cycle the mirrors by pushing the "CLOSE" switch until completely closed, then push the "OPEN" switch until the mirrors are in the open position.

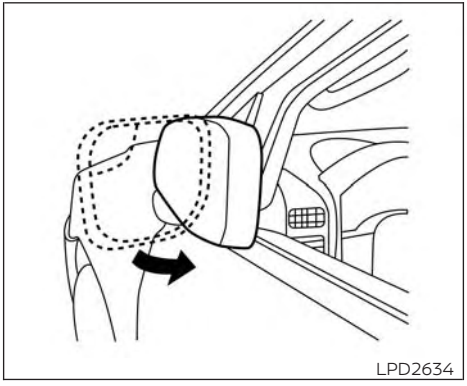

Type A (if so equipped)

Manual folding outside mirrors (if so equipped)

Pull the outside mirror toward the door to fold it.

Reverse tilt-down feature (if so equipped)

The reverse tilt-down feature will turn both outside mirror surfaces downward to provide better rear visibility close to the vehicle when the mirror control switch is in either the L or R position.

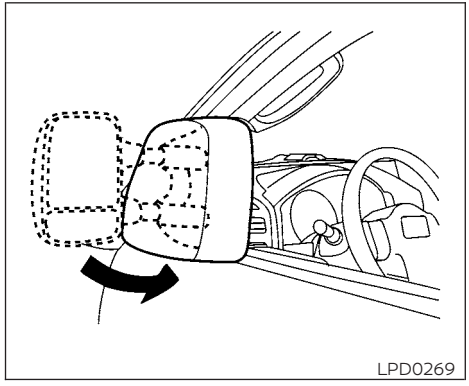

Type B (if so equipped)

The mirrors automatically return to their original position when you shift out of R (Reverse).

The outside mirror surfaces will return to their original position when one of the following conditions has occurred:

- The shift lever is moved to any position other than R (Reverse).
- The outside mirror control switch is set to the neutral or center position.
- The ignition switch is placed in the OFF position.

NOTE:

If the outside mirror control switch is in the "center" position, the mirror surface will NOT turn downward when the shift lever is moved to R (Reverse).

For additional information, refer to "Automatic drive positioner" in this section.

Automatic anti-glare outside mirror (if so equipped)

The outside mirror will automatically dim during nighttime conditions to reduce the glare from the headlights of trailing vehicles. The automatic anti-glare feature operates only when the ignition switch is placed in the ON position.

The automatic anti-glare feature will be on when starting the vehicle. The indicator light on the automatic anti-glare rearview mirror will illuminate when the automatic anti-glare feature is operating.

To turn off the anti-glare feature, press the ⏻ button on the rearview mirror. The indicator light will turn off.
To turn on the anti-glare feature again, press the ⏻ button on the rearview mirror. The indicator light will turn on.

For additional information on the automatic anti-glare rearview mirror, refer to "Automatic anti-glare rearview mirror" in this section.

Heated mirrors (if so equipped)

Some outside mirrors can be heated to defrost, defog, or de-ice for improved visibility. For additional information, refer to "Rear window and/or outside mirror defroster switch" in the "Instruments and controls" section of this manual.

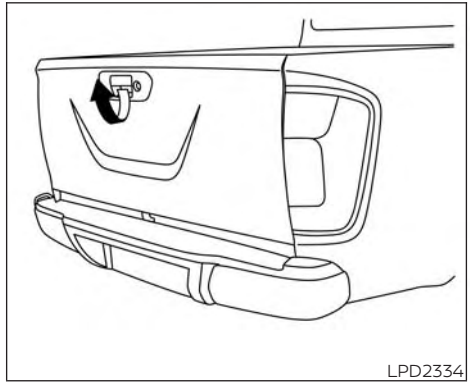

TAILGATE

Opening the tailgate

Pull the tailgate handle upward and lower the tailgate. The support cables hold the tailgate open.

When closing the tailgate, make sure the latches are securely locked.

Do not drive the vehicle with the tailgate down, unless equipped with NISSAN's Bed Extender (accessory) or equivalent in the extended position.

For additional information on proper truck box loading, refer to "Vehicle loading information" in the "Technical and consumer information" section of this manual.

⚠ WARNING

- **Never allow anyone to ride in the cargo area or on the rear seat (if so equipped) when it is in the folded position. Use of these areas by passengers without proper restraints could result in serious injury or death in an accident or sudden stop.**
- **It is extremely dangerous to ride in a cargo area inside a vehicle. In a collision, people riding in these areas are more likely to be seriously injured or killed.**
- **Do not allow people to ride in any area of your vehicle that is not equipped with seats and seat belts.**
- **Be sure everyone in your vehicle is in a seat and using a seat belt properly.**

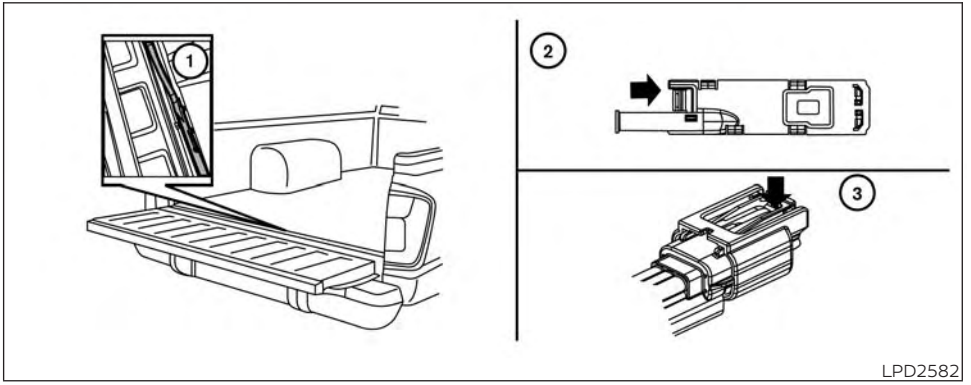

Disconnecting the rear camera (if so equipped)

Before removing the tailgate disconnect the rear camera by performing the following:

1. Open the tailgate to access the rear camera connector bracket ① located on the rear sill.
2. Remove the connector bracket ② from the sill by pressing the locking tab inward, in the direction shown, while pulling the bracket apart.
3. Disconnect the chassis wiring harness ③ by pressing inward on the locking tab, in the direction shown, while pulling the connectors apart. Hold the connector firmly to prevent the connector in the chassis harness from falling into the sill.
4. Use the supplied chassis plug and bracket and connect them to the chassis wiring harness to avoid contamination to the terminals which will lead to malfunction of the rear camera.
5. Insert the bracket back into the sill.
6. Take the tailgate plug from the glove box and connect it to the tailgate wiring harness to avoid contamination which will lead to malfunction of the rear camera.
7. Remove the tailgate. For additional information, refer to "Removing the tailgate" in this section.

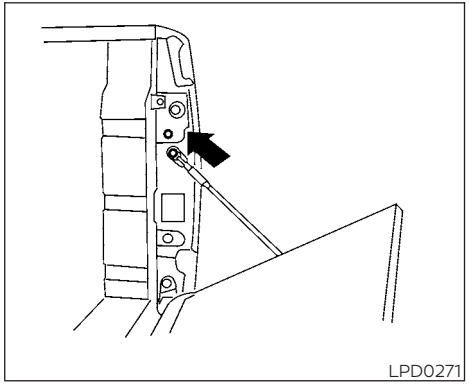

Removing the tailgate

1. Disconnect the wiring harness for the rear camera (if so equipped). For additional information, refer to "Disconnecting the rear camera" in this section.
2. Release the tailgate support cables.

⚠ CAUTION

- **The tailgate is heavy. Two people should remove or install it. Be careful not to drop it during removal.**
- **After releasing the support cables, do not let the tailgate rest on the bumper.**

3. Hold the tailgate at a 45 degree angle.
4. Pull the tailgate out from the left side hinge.
5. Slide the tailgate out of the right side hinge.

Installing the tailgate

1. Insert the tailgate into the right side hinge.
2. Hold the tailgate at a 45 degree angle and insert into the left side hinge.
3. Continue to hold the tailgate at a 45 degree angle and attach the tailgate support cables.
4. For vehicles with rear camera: Be sure the tailgate harness is not hanging below the tailgate and keep the tailgate open. For additional information, refer to "Connecting the rear camera" in this section before closing the tailgate.
5. For vehicles without rear camera: Close the tailgate securely.

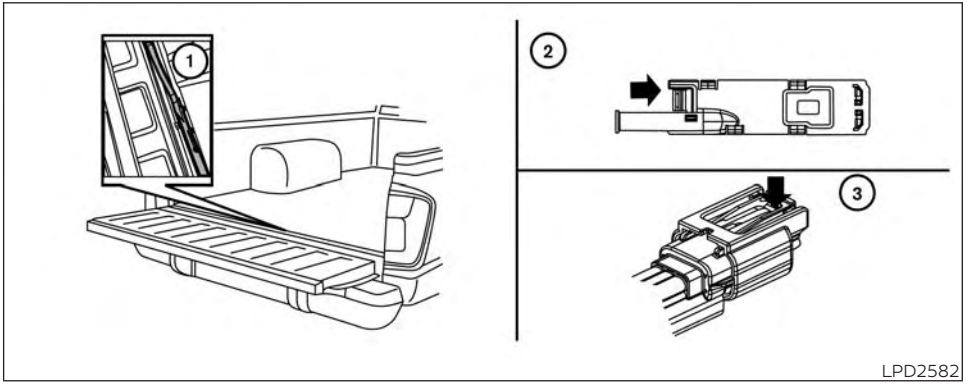

Connecting the rear camera (if so equipped)

Before closing the tailgate reconnect the rear camera by performing the following:

1. After attaching the rear tailgate to the truck, keep the tailgate open and check that the tailgate harness is not hanging below the tailgate.
2. Remove the connector bracket ② from the sill by pressing the locking tab inward, in the direction shown, while pulling the bracket apart.
3. Disconnect the chassis plug and bracket from the chassis wiring harness ③. Keep the connector and bracket in a safe place such as the glove box.
4. Disconnect the tailgate plug from the tailgate wiring harness. Keep the tailgate plug in a safe place such as the glove box.
5. Connect the tailgate wiring harness to the chassis wiring harness.
6. Securely fix the rear camera connector bracket ① to the rear sill.
7. Close the tailgate securely.

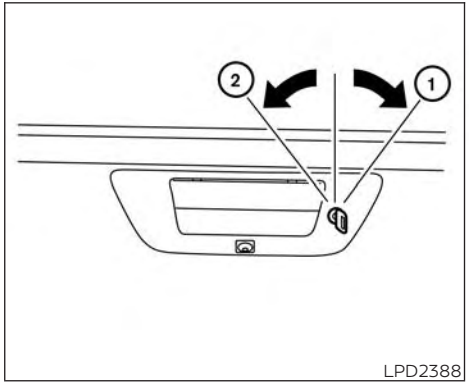

LPD2388

Locking the tailgate

To unlock the tailgate, turn the key toward the passenger side of the vehicle ①. To lock, turn the key toward the driver side ②.

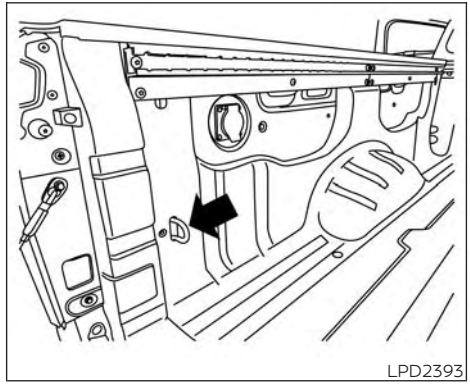
LPD2393

TIE DOWN HOOKS

For your convenience, tie down hooks are placed at each corner of the truck box. These may be used to help secure cargo loaded into the truck box.

- The weight of the cargo load must be evenly distributed over the rear axles.
- All cargo should be securely fastened with ropes or straps to prevent it from shifting or sliding within the vehicle.

⚠ WARNING

- **Properly secure all cargo with ropes or straps to help prevent it from sliding or shifting. In a sudden stop or collision, unsecured cargo could cause personal injury.**

AUTOMATIC DRIVE POSITIONER (if so equipped)

The automatic drive positioner system has two features:

- Memory storage function
- Entry/exit function

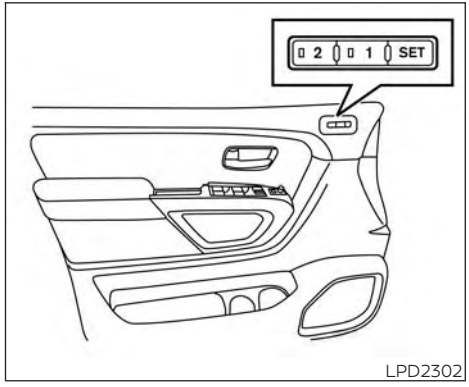

MEMORY STORAGE FUNCTION

Two positions for the driver's seat, steering column, and outside mirrors (if so equipped) can be stored in the automatic drive positioner memory. Follow these procedures to use the memory system.

1. Place the ignition in the ON or ACC position (the vehicle should be stopped while setting the memory).
2. Adjust the driver's seat, steering column, and outside mirrors (if so equipped) to the desired positions by manually operating each adjusting switch. For additional information, refer to "Seats" in the "Safety—Seats, seat belts and supplemental restraint system" section of this manual, and "Steering wheel" and "Outside mirrors" in this section.
3. Push the SET switch and, within 5 seconds, push the memory switch (1 or 2).
4. The indicator light for the pushed memory switch will come ON and stay ON for approximately 5 seconds.
5. The chime will sound if the memory has been stored.

NOTE:

If a NEW memory position is stored in the same memory switch, the previous memory position will be overwritten by the new stored position.

Confirming memory storage

Push the SET switch.

- If a memory position has been stored in the switch (1 or 2) then the indicator light for the respective switch will stay ON for approximately 5 seconds.

Linking a key fob to a stored memory position

Each key fob can be linked to a stored memory position (memory switch 1 or 2) with the following procedure.

1. Follow steps 1-3 in the "Memory storage function" section for storing the memory position.
2. The indicator light for the pushed memory switch will come ON. While the indicator light is ON for 5 seconds, press the button on the key fob. The hazard lights will flash twice. The indicator light of the linked memory switch will blink and click twice. After the indicator light goes off, the key fob is linked to that memory setting.

Once it is linked, when the ignition switch is placed in the OFF position, pressing the button on the key fob will move the driver's seat, steering wheel and outside mirrors to the linked memory switch position.

NOTE:

If a new memory position is stored in the linked memory switch, then the key fob will link the new position and overwrites the previous position.

ENTRY/EXIT FUNCTION

This system is designed so that the driver's seat and automatic operation steering column will automatically move when the shift lever is in the P (Park) position. This allows the driver to get into and out of the driver's seat more easily.

The driver's seat will slide backward and the steering column will move up:

- When the driver's door is opened with the ignition switch placed in the OFF position.
- When the ignition switch is changed from ACC to OFF with the driver's door open.

The driver's seat and steering wheel will return to the previous position:

- When the ignition switch is changed from ACC or ON while the shift lever is in the P (Park) position.

The entry/exit function can be adjusted or canceled through the vehicle settings in the vehicle information display (if so equipped) by performing the following:

- Switch the Exit Seat Slide from ON to OFF.
- Switch the Exit Steering UP from ON to OFF.

Restarting the entry/exit function

If the battery cable is disconnected, or if the fuse opens, the stored memory positions will be lost and some of the functions will be restricted:

1. Drive the vehicle over 25 mph (40 km/h).

OR

2. Open and close the driver's door more than two times with the ignition switch in the OFF position.

The entry/exit function should now work properly.

SYSTEM OPERATION

The automatic drive positioner system will not work or will stop operating under the following conditions:

- When the vehicle speed is above 0 mph (0 km/h) or 4 mph (7km/h) for some limited functions such as linking a key fob to the meter when the power source is turned on from off or during the exit function.
- When any of the memory switches are pushed while the automatic drive positioner is operating.
- When the adjusting switch for the driver's seat and steering column is turned on while the automatic drive positioner is operating.
- When the seat has already been moved to the memorized position.
- When no seat position is stored in the memory switch.
- When the shift lever is moved from P (Park) to any other position.

MEMO

4 Monitor, climate, audio, phone and voice recognition systems

Control panel buttons — color screen with Navigation System (if so equipped) 4-4
How to use the touch-screen. 4-5
How to use the ↩ BACK button. 4-7
How to use the [APPS] button 4-7
☼/☽ button. 4-9
How to use the CAMERA button 4-9
RearView Monitor (if so equipped) 4-10
RearView Monitor system operation 4-11
How to read the displayed lines. 4-12
Difference between predicted and actual distances. 4-12
Adjusting the screen 4-14
RearView Monitor system limitations 4-15
System maintenance. 4-16
Intelligent Around View Monitor (if so equipped) 4-17
Intelligent Around View Monitor system operation. 4-18
Difference between predicted and actual distances. 4-22
How to park with predicted course lines 4-23
How to switch the display 4-25
Adjusting the screen 4-25
Intelligent Around View Monitor system limitations 4-26
System maintenance. 4-28
Moving Object Detection (MOD) (if so equipped) 4-29
MOD system operation 4-30
Turning MOD on and off 4-32
MOD system limitations 4-32
System maintenance. 4-33
Vents. 4-34
Heater and air conditioner (manual) (if so equipped) 4-34
Controls 4-35
Heater operation 4-36
Air conditioner operation 4-38
Air flow charts 4-39
Heater and air conditioner (automatic) (if so equipped) 4-43
Automatic operation 4-44
Manual operation 4-45
Operating tips 4-47
Servicing air conditioner. 4-48
Audio system. 4-48

Radio 4-48
FM radio reception 4-49
AM radio reception 4-49
Satellite radio reception (if so equipped) 4-49
Audio operation precautions 4-50
FM/AM radio with compact disc (CD) player (if so equipped) 4-57
FM/AM/SAT radio with compact disc (CD) player (Type A) (if so equipped) 4-61
FM/AM/SAT radio with compact disc (CD) player (Type B) (if so equipped) 4-67
USB (Universal Serial Bus) Connection Port (models without Navigation System) (if so equipped) 4-74
USB (Universal Serial Bus) Connection Port (models with Navigation System) (if so equipped) 4-76
iPod®* player operation without Navigation System (if so equipped) 4-78
iPod®* player operation with Navigation System (if so equipped) 4-81
Bluetooth® streaming audio without Navigation System (if so equipped) 4-84
Bluetooth® streaming audio with Navigation System (if so equipped) 4-85
CD care and cleaning 4-86
Steering wheel switch for audio control 4-87
Antenna 4-88
NissanConnect® Mobile Apps (if so equipped) . . . 4-88
NissanConnect® Services (if so equipped) 4-89
Siri® Eyes Free 4-89
Requirements 4-89
Siri® Activation 4-90
Operating Siri® Eyes Free 4-90
Changing Siri® Eyes Free settings (models without navigation system) 4-91
Changing Siri® Eyes Free settings (models with navigation system) 4-91
Troubleshooting guide 4-92
NISSAN Mobile Entertainment System (MES) (if so equipped) 4-93
Front panel buttons 4-94
Front panel buttons operation 4-96
Wireless Headphone Operation 4-97
Remote control operation 4-98

Remote Control Buttons 4-99
General operating instructions 4-102
How to use the DVD OSD Menu 4-103
How to use the Monitor OSD Menu 4-109
Playing a CD 4-111
Playing Audio Files 4-112
Playing Image Files 4-113
Playing Video Files 4-114
Charging a USB Device 4-115
Connecting an External Auxiliary A/V Source — Input 4-115
Connecting an External A/V Monitor — Output 4-116
Selecting Monitor A or B as the Source 4-116
Troubleshooting guide 4-116
Specifications 4-117
FCC Notice 4-118
FCC Warning 4-118
ITE Notice 4-118
WEEE Notice 4-119
Macrovision Notice 4-119
Dolby Digital 4-119
Car phone or CB radio 4-120
Bluetooth® Hands-Free Phone System without Navigation System (if so equipped) 4-120
Regulatory information 4-122
Using the system 4-123
Control buttons 4-124
Connecting procedure 4-125
Voice commands 4-126
Making a call 4-127
Receiving a call 4-128
During a call 4-128
Ending a call 4-128
Text messaging 4-128
Bluetooth® settings 4-130
Manual control 4-132
Troubleshooting guide 4-132
Bluetooth® Hands-Free Phone System with Navigation System (if so equipped) 4-133
Regulatory information 4-135
Voice commands 4-135
Connecting procedure 4-136
Vehicle phonebook 4-136
Making a call 4-136
Receiving a call 4-137
During a call 4-137

Ending a call. 4-137
Text messaging 4-137
Bluetooth® settings 4-139
Phone settings 4-140
Troubleshooting guide 4-141
NISSAN Voice Recognition System
(if so equipped) 4-142
Using the system. 4-142
System features 4-143
Bluetooth® Hands-Free Phone System
voice commands. 4-144
Navigation system voice commands 4-145
Audio system voice commands 4-145
Information voice commands 4-146
My Apps voice commands 4-146
Help voice commands. 4-146
Troubleshooting guide 4-147

CONTROL PANEL BUTTONS — COLOR SCREEN WITH NAVIGATION SYSTEM (if so equipped)

⚠ WARNING

- **Positioning of the heating or air conditioning controls and display controls should not be done while driving in order that full attention may be given to the driving operation.**
- **Do not disassemble or modify this system. If you do, it may result in accidents, fire, or electrical shock.**
- **Do not use this system if you notice any abnormality, such as a frozen screen or lack of sound. Continued use of the system may result in accident, fire or electric shock.**
- **In case you notice any foreign object in the system hardware, spill liquid on it, or notice smoke or smell coming from it, stop using the system immediately. Ignoring such conditions may lead to accidents, fire or electrical shock. It is recommended that you visit a NISSAN dealer for servicing.**

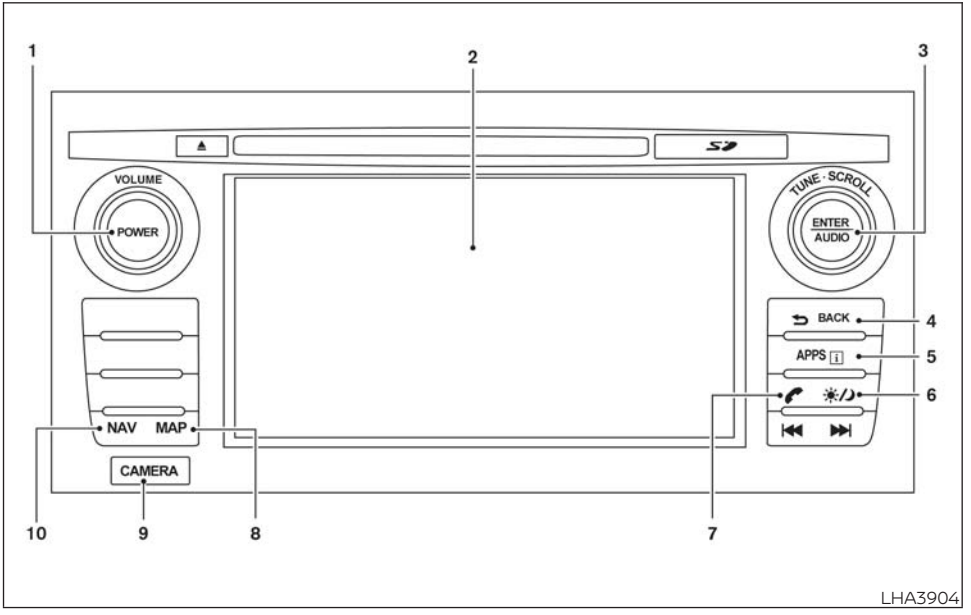

1. POWER button/VOLUME control knob
2. Display screen
3. ENTER/AUDIO button / TUNE-SCROLL knob
4. BACK button
5. APPS button
6. (brightness control) button
7. button**
8. MAP button*

9. CAMERA button

10. NAV button*

* For additional information regarding the navigation system control buttons, refer to the separate NissanConnect® Owner's Manual.

** For additional information regarding the Bluetooth® Hands-Free Phone System control button, refer to "Bluetooth® Hands-Free Phone System with Navigation System" in this section.

When you use this system, make sure the engine is running.

If you use the system with the engine not running (ignition ON or ACC) for a long time, it will discharge the battery, and the engine will not start.

Reference symbols:

"Example" — Words marked in quotes refer to a key shown only on the display. These keys can be selected by touching the screen.

HOW TO USE THE TOUCH-SCREEN

⚠ CAUTION

- **The glass display screen may break if it is hit with a hard or sharp object. If the glass screen breaks, do not touch it. Doing so could result in an injury.**
- **To clean the display, never use a rough cloth, alcohol, benzine, thinner or any kind of solvent or paper towel with a chemical cleaning agent. They will scratch or deteriorate the panel.**
- **Do not splash any liquid such as water or car fragrance on the display. Contact with liquid will cause the system to malfunction.**

To help ensure safe driving, some functions cannot be operated while driving.

The on-screen functions that are not available while driving will be "grayed out" or muted.

Park the vehicle in a safe location and then operate the navigation system.

⚠ WARNING

- **ALWAYS give your full attention to driving.**
- **Avoid using vehicle features that could distract you. If distracted, you could lose control of your vehicle and cause an accident.**

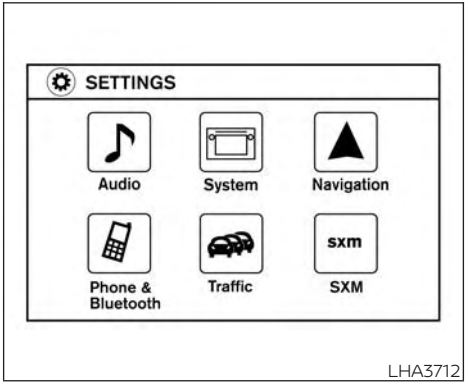

Touch-screen operation

Menu Item		Result
Selecting the item		Touch an item to select . To select the "Audio" key, touch the "Audio" key on the screen. Press the ↩ BACK button to return to the previous screen.
Adjusting the item		Touch the "+" key or the "—" key to adjust the settings of an item. Touch the up arrow to scroll up the page one item at a time. Touch the down arrow to scroll down the page one item at a time.
Inputting characters		Touch the letter or number key. There are some options available when inputting characters.
	123/ABC	Changes the available character set to numbers.
	Space	Inserts a space.
	Delete	Deletes the last inputted character with one touch. Touch and hold the "Delete" key to delete all of the characters.
	OK	Completes the character input.

Touch-screen maintenance

If you clean the display screen, use a dry, soft cloth. If additional cleaning is necessary, use a small amount of neutral detergent with a soft cloth. Never spray the screen with water or detergent. Dampen the cloth first and then wipe the screen.

HOW TO USE THE ⮌ BACK BUTTON

Press the ⮌ BACK button to return to the previous screen.

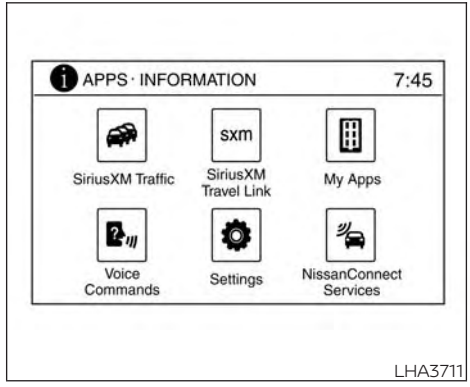

LHA3711

HOW TO USE THE [APPS] BUTTON

For additional information about the "SiriusXM Travel Link", and "Traffic" features, refer to the separate NissanConnect® Owner's Manual.

For additional information about the "My Apps" key, refer to "NissanConnect® Mobile Apps" in this section.

For additional information about the "Voice Commands" key, refer to "NISSAN Voice Recognition System" in this section.

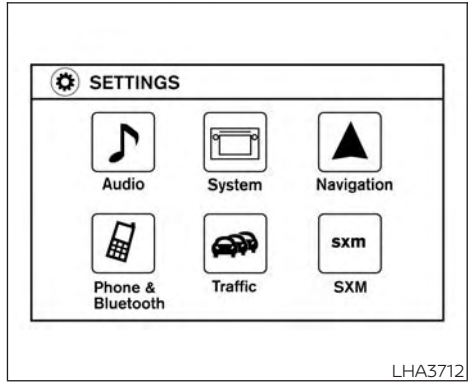

LHA3712

To select and/or adjust several functions, features and modes that are available for your vehicle:

1. Press the [APPS] button.
2. Touch the "Settings" key.
3. Touch the desired item.

Menu item			Result
Audio			For additional information, refer to “Audio system” in this section.
Phone & Bluetooth			For additional information, refer to “Bluetooth® Hands-Free Phone System with Navigation System” in this section.
System			Touch this key to select and/or adjust various functions of this system. A screen with additional options will appear.
	Display		Touch this key to adjust the appearance of the display.
		Brightness	Adjusts the brightness of the display.
		Display Mode	Adjusts to fit the level of lighting in the vehicle. Touch key to cycle through options. “Day” and “Night” modes are suited for the respective times of day while “Auto” controls the display automatically.
		Scroll Direction	Adjusts the direction of the menu scroll. Choose to either move up or down.
	Clock /Date		Touch this key to adjust the time.
		Time Format	The clock can be set to 12 hours or 24 hours.
		Date Format	Select from five possible formats for displaying the day, month, and year.
		Clock Mode	Adjust the mode for the clock. “Auto” uses the system’s GPS to automatically maintain the time. “Manual” allows you to set the clock using the “Set Clock Manually” key. “Time Zone” will be selected from the option below.
		Set Clock / Date Manually	Adjust the clock manually, Touch the “+” or “-” keys to adjust the hours, minutes, day, month and year up or down. “Clock Mode” must be set to manual for this option to be available.
		Daylight Savings Time	Adjusts the daylight savings time on or off.
		Time Zone	Choose the applicable time zone from the list.
	Language		Touch this key to change the language on the display.
	NissanConnect Services Settings (if so equipped)		Touch this key to connect to NissanConnect® Service.
	Camera Settings		Touch this key to change the camera settings.
		Display Mode	Touch this key to select the touch-screen display mode (day, night, or automatic).
		Brightness	Adjust touch-screen brightness using the TUNE-SCROLL knob/ ENTER button.
		Contrast	Adjust touch-screen contrast using the TUNE-SCROLL knob/ ENTER button.
		Color	Adjust touch-screen color using the TUNE-SCROLL knob/ ENTER button.

Menu item		Result
	Temperature Unit	Touch this key to change the temperature unit being displayed (Fahrenheit or Celsius).
	Touchscreen Click	Toggles the touch-screen click feature on or off. When activated a click sound will be heard every time a key on the screen is touched.
	System Beeps	Toggle the system beep tones feature on or off. When activated, a beep sound will be heard when a pop-up message appears on the screen or a button on the unit (such as the ☼/☽ button) is pressed and held for 2 seconds.
	Return to Factory Settings/Clear Memory	Touch this key to return all settings to default and to clear the memory.
	Software Licenses	Touch this key to display software licensing information.
	Minimize Voice Feedback	Touch this key to turn ON or OFF to control the voice feedback.
	System Software Version	Touch this key to display software version information.
Traffic		Touch this key to display traffic settings. For additional information, refer to the separate NissanConnect® Owner's Manual.
Navigation		For additional information, refer to the separate NissanConnect® Owner's Manual.
SXM		Touch this key to start SiriusXM® radio. For additional information, refer to "Audio system" in this section.

☼/☽ BUTTON

To change the display brightness, press the ☼/☽ button and use the TUNE-SCROLL knob / ENTER-AUDIO button to adjust the brightness. Pressing the button again will change the display to day or night display mode.
If no operation is performed within 5 seconds, the display will return to the previous display.

Press and hold the ☼/☽ button for more than 2 seconds to turn the display off. Press the button again to turn the display on.

HOW TO USE THE CAMERA BUTTON

For additional information, refer to "Rear-View Monitor" or "Intelligent Around View Monitor" in this section.

REARVIEW MONITOR (if so equipped)

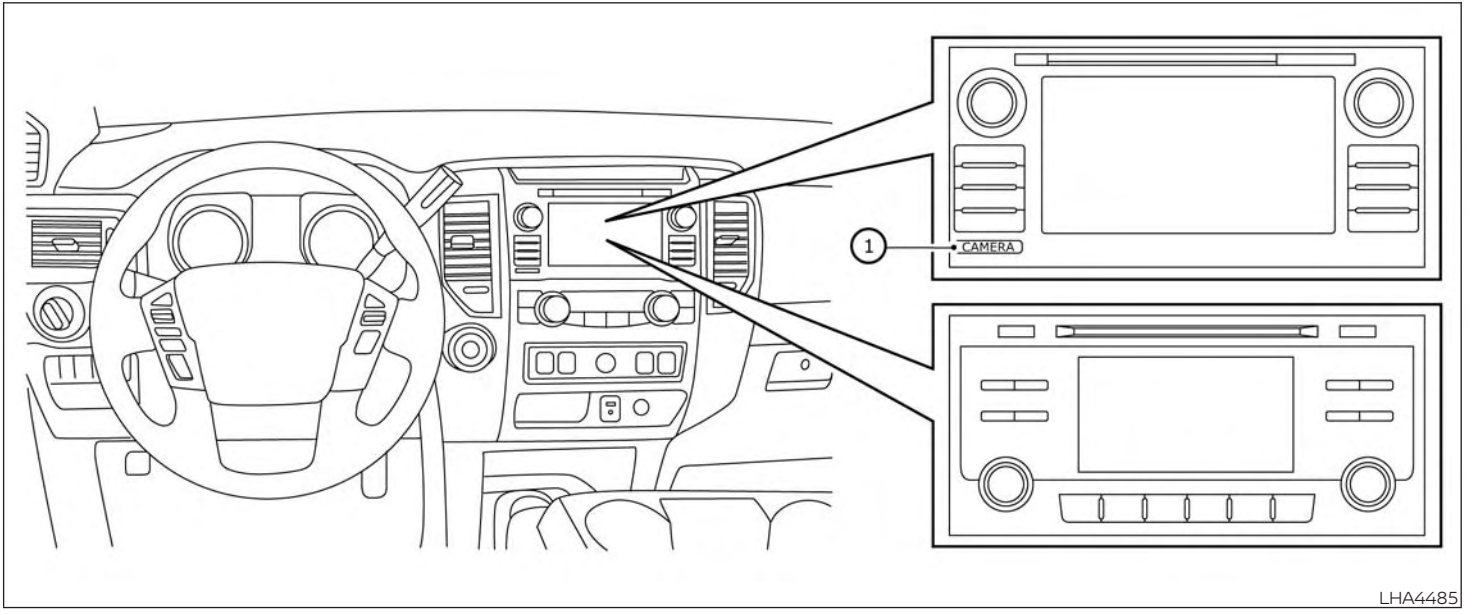

1. CAMERA button (if so equipped)

⚠ WARNING

- **Failure to follow the warnings and instructions for proper use of the RearView Monitor system could result in serious injury or death.**
- **RearView Monitor is a convenience feature and is not a substitute for proper backing. Always turn and look out the windows and check mirrors to be sure that it is safe to move before operating the vehicle. Always back up slowly.**
- **The system is designed as an aid to the driver in showing large stationary objects directly behind the vehicle, to help avoid damaging the vehicle.**
- **The distance guide line and the vehicle width line should be used as a reference only when the vehicle is on a level paved surface. The distance viewed on the monitor is for reference only and may be different than the actual distance between the vehicle and displayed objects.**

⚠ CAUTION

Do not scratch the camera lens when cleaning dirt or snow from the front of the camera.

The RearView Monitor system automatically shows a rear view of the vehicle when the shift lever is shifted into the R (Reverse) position. While in R (Reverse), pressing the CAMERA button (if so equipped) will cycle through guideline options. The radio can still be heard while the RearView Monitor is active.

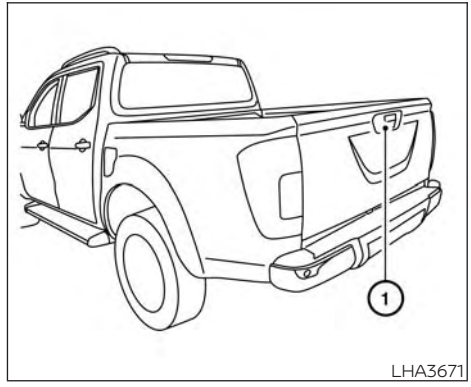

To display the rear view, the RearView Monitor system uses a camera located just above the vehicle's license plate ① on the tailgate.

REARVIEW MONITOR SYSTEM OPERATION

With the ignition switch in the ON position, move the shift lever to the R (Reverse) position to operate the RearView Monitor.

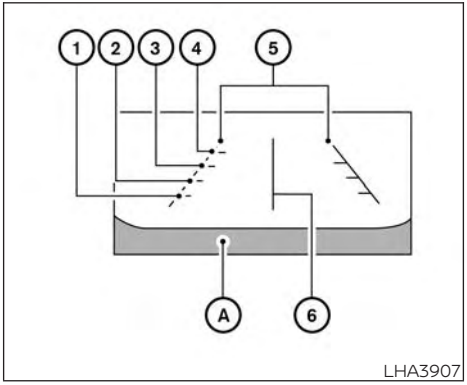

LHA3907

HOW TO READ THE DISPLAYED LINES

Guiding lines which indicate the vehicle width and distances to objects with reference to the vehicle body line Ⓐ are displayed on the monitor.

Distance guide lines

Indicate distances from the vehicle body.

- Red line ①: approx. 1.5 ft (0.5 m)
- Yellow line ②: approx. 3 ft (1 m)
- Green line ③: approx. 7 ft (2 m)
- Green line ④: approx. 10 ft (3 m)

Vehicle width guide lines ⑤

Indicate the vehicle width when backing up.

Center guide lines (if so equipped) ⑥

Indicates the vehicle's center to improve trailer hitching guidance.

DIFFERENCE BETWEEN PREDICTED AND ACTUAL DISTANCES

The displayed guidelines and their locations on the ground are for approximate reference only. Objects on uphill or downhill surfaces or projecting objects will be actually located at distances different from those displayed in the monitor relative to the guidelines (refer to illustrations). When in doubt, turn around and view the objects as you are backing up, or park and exit the vehicle to view the positioning of objects behind the vehicle.

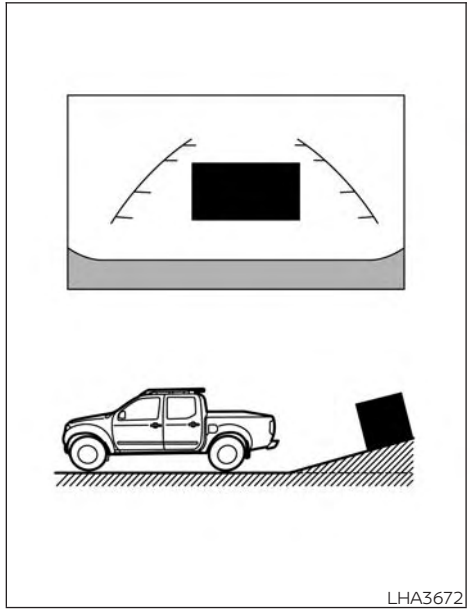
LHA3672

Backing up on a steep uphill

When backing up the vehicle up a hill, the distance guide lines and the vehicle width guide lines are shown closer than the actual distance. Note that any object on the hill is further than it appears on the monitor.

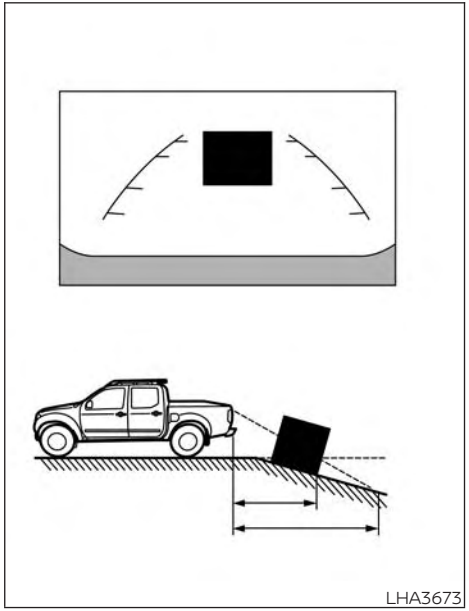

Backing up on a steep downhill

When backing up the vehicle down a hill, the distance guide lines and the vehicle width guide lines are shown farther than the actual distance. Note that any object on the hill is closer than it appears on the monitor.

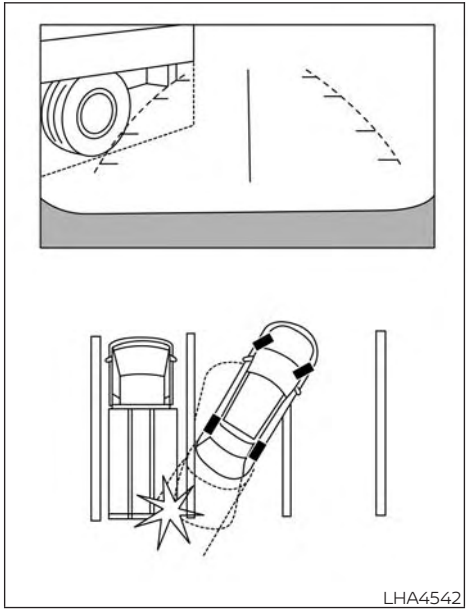

Backing up near a projecting object

The vehicle may seem to nearly clear the object in the display. However, the vehicle may hit the object if it projects over the actual backing up course.

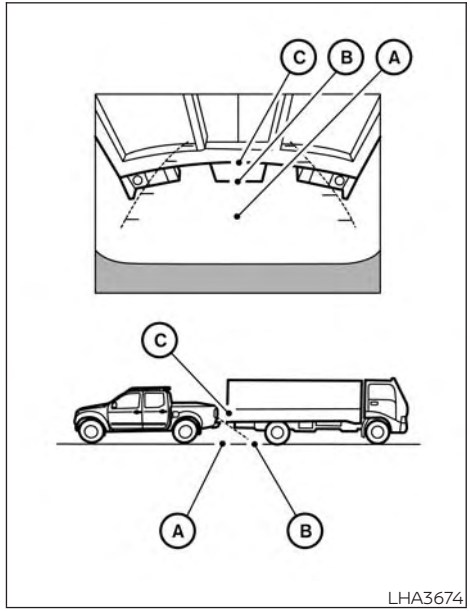

Backing up behind a projecting object

The position Ⓒ is shown farther than the position Ⓑ in the display. However, the position Ⓒ is actually at the same distance as the position Ⓐ. The vehicle may hit the

object when backing up to the position Ⓐ if the object projects over the actual backing up course.

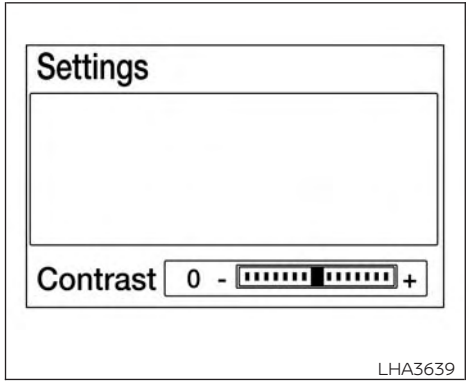

Models without navigation system

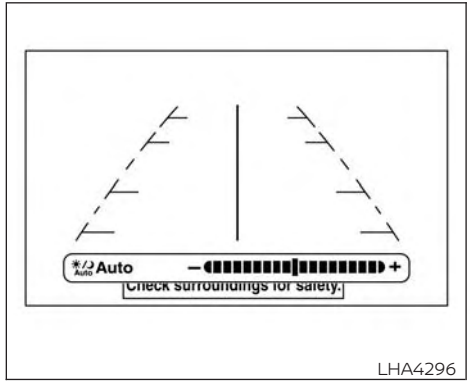

Models with navigation system

ADJUSTING THE SCREEN

The procedure for adjusting the display settings of the screen differs depending on the type of screen present on the vehicle.

For vehicles without navigation system

1. Firmly apply the brake and place the shift lever in R (Reverse)
2. Press the ENTER/SETTING button.
3. The screen will display the Brightness settings.
4. Turn the TUNE/FOLDER or TUNE/SCROLL knob to adjust the setting up or down.
5. Press the ENTER/SETTING button again to display the Contrast settings.
6. Turn the TUNE/FOLDER or TUNE/SCROLL knob to adjust the setting up or down.
7. Press the ENTER/SETTING button to complete the adjustment.

- Do not adjust the display settings of the RearView Monitor while the vehicle is moving.

For vehicles with navigation system

1. Firmly apply the brake and place the shift lever in R (Reverse)
2. Press the ☼/☽ button on the control panel.
3. The screen will display the Night settings.
4. Turn the TUNE/SCROLL knob to adjust the setting up or down.
5. Press the ☼/☽ button again to access the Auto settings.
6. Turn the TUNE/SCROLL knob to adjust the setting up or down.

- Do not adjust the display settings of the RearView Monitor while the vehicle is moving.

REARVIEW MONITOR SYSTEM LIMITATIONS

⚠ WARNING

Listed below are the system limitations for RearView Monitor. Failure to operate the vehicle in accordance with these system limitations could result in serious injury or death.

- **The system cannot completely eliminate blind spots and may not show every object.**
- **Underneath the bumper and the corner areas of the bumper cannot be viewed on the RearView Monitor because of its monitoring range limitation. The system will not show small objects below the bumper, and may not show objects close to the bumper or on the ground.**
- **Objects viewed in the RearView Monitor differ from actual distance because a wide-angle lens is used.**
- **Objects in the RearView Monitor will appear visually opposite compared to when viewed in the rearview and outside mirrors.**
- **Use the displayed lines as a reference. The lines are highly affected by the number of occupants, fuel level, vehicle position, road conditions and road grade.**
- **Make sure that the tailgate is securely closed when backing up.**
- **Do not put anything on the rearview camera. The rearview camera is installed on the tailgate.**
- **When washing the vehicle with high pressure water, be sure not to spray it around the camera. Otherwise, water may enter the camera unit causing water condensation on the lens, a malfunction, fire or an electric shock.**
- **Do not strike the camera. It is a precision instrument. Otherwise, it may malfunction or cause damage resulting in a fire or an electric shock.**

The following are operating limitations and do not represent a system malfunction:

- When the temperature is extremely high or low, the screen may not clearly display objects.
- When strong light directly shines on the camera, objects may not be displayed clearly.
- Vertical lines may be seen in objects on the screen. This is due to strong reflected light from the bumper.
- The screen may flicker under fluorescent light.

- The colors of objects on the RearView Monitor may differ somewhat from the actual color of objects.
- Objects on the monitor may not be clear in a dark environment.
- There may be a delay when switching between views.
- If dirt, rain or snow accumulate on the camera, RearView Monitor may not display objects clearly. Clean the camera.
- Do not use wax on the camera lens. Wipe off any wax with a clean cloth dampened with a diluted mild cleaning agent, then wipe with a dry cloth.

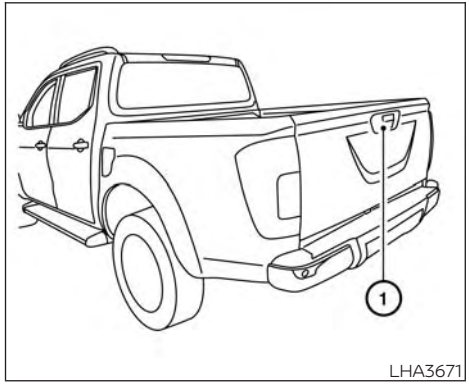

SYSTEM MAINTENANCE

⚠ CAUTION

- **Do not use alcohol, benzine or thinner to clean the camera. This will cause discoloration.**
- **Do not damage the camera as the monitor screen may be adversely affected.**

If dirt, rain or snow accumulates on the camera ①, the RearView Monitor may not display objects clearly. Clean the camera by wiping it with a cloth dampened with a diluted mild cleaning agent and then wiping it with a dry cloth.

INTELLIGENT AROUND VIEW MONITOR (if so equipped)

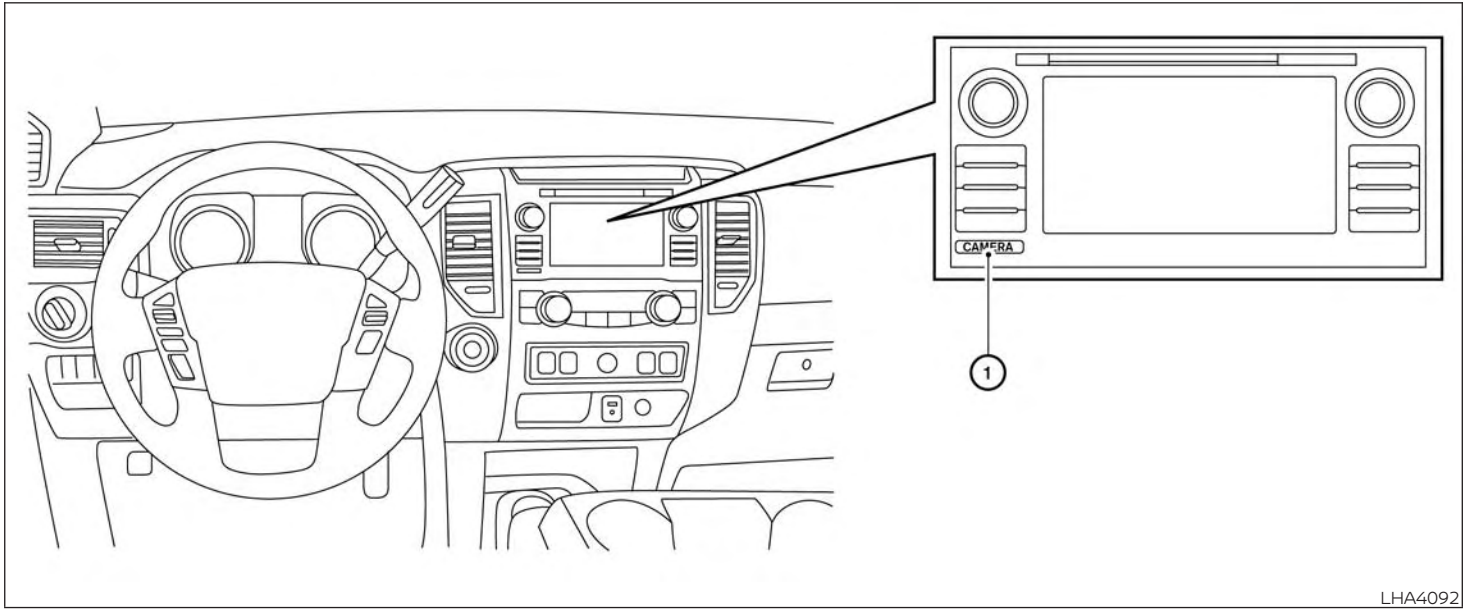

1. CAMERA button

⚠ WARNING

- **Failure to follow the warnings and instructions for the proper use of the Intelligent Around View Monitor system could result in serious injury or death.**
- **The Intelligent Around View Monitor is a convenience feature and is not a substitute for proper vehicle operation because it has areas where objects cannot be viewed. The four corners of the vehicle in particular, are areas where objects do not always appear in the bird's-eye, front, or rear views. Always check your surroundings to be sure that it is safe to move before operating the vehicle. Always operate the vehicle slowly.**
- **The driver is always responsible for safety during parking and other maneuvers.**

⚠ CAUTION

Do not scratch the camera lens when cleaning dirt or snow from the front of the camera.

The Intelligent Around View Monitor system is designed as an aid to the driver in situations such as slot parking or parallel parking.

The monitor displays various views of the position of the vehicle in a split screen format. Not all views are available at all times.

Available views:

- Front View
  An approximately 150–degree view of the front of the vehicle.
- Rear View
  An approximately 150–degree view of the rear of the vehicle.
- Bird's-Eye View
  The surrounding views of the vehicle from above.
- Front-Side View
  The view around and ahead of the front passenger's side wheel.
- Rear-Wide View
  An approximately 180–degree view of the rear of the vehicle.

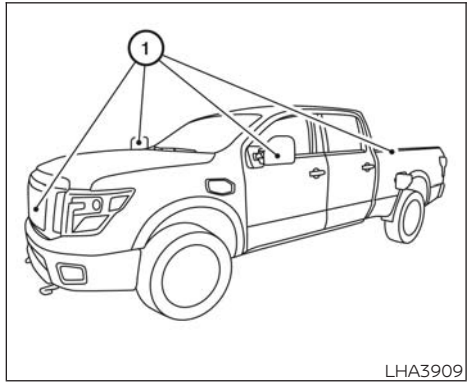

LHA3909

To display the multiple views, the Intelligent Around View Monitor system uses cameras located in the front grille, on the vehicle's outside mirrors and one on the tailgate ①.

INTELLIGENT AROUND VIEW MONITOR SYSTEM OPERATION

With the ignition switch in the ON position, move the shift lever to the R (Reverse) position to operate the Intelligent Around View Monitor.

When the camera is first activated with the bird's-eye view in the display, a red icon (if so equipped) will flash on the screen. This indicates that the sonar system (if so equipped) is activated. For additional information on the front and rear sonar system (if so equipped), refer to "Front and rear sonar system" in the "Starting and driving" section of this manual.

The screen displayed on the Intelligent Around View Monitor will automatically return to the previous screen 3 minutes after the CAMERA button has been pressed with the shift lever in a position other than the R (Reverse) position.

Available views

⚠ WARNING

- **The distance guide lines and the vehicle width lines should be used as a reference only when the vehicle is on a paved, level surface. The apparent distance viewed on the monitor may be different than the actual distance between the vehicle and displayed objects.**
- **Use the displayed lines and the bird's-eye view as a reference. The lines and the bird's-eye view are greatly affected by the number of occupants, cargo, fuel level, vehicle position, road condition and road grade.**
- **If the tires are replaced with different sized tires, the predicted course lines and the bird's-eye view may be displayed incorrectly.**
- **When driving the vehicle up a hill, objects viewed in the monitor are further than they appear. When driving the vehicle down a hill, objects viewed in the monitor are closer than they appear.**
- **Objects in the rear view will appear visually opposite compared to when viewed in the monitor and outside mirrors.**
- **Use the mirrors or actually look to properly judge distances to other objects.**
- **On a snow-covered or slippery road, there may be a difference between the predicted course lines and the actual course line.**
- **The vehicle width and predicted course lines are wider than the actual width and course.**
- **The displayed lines will appear slightly off to the right, because the rearview camera is not installed in the rear center of the vehicle.**

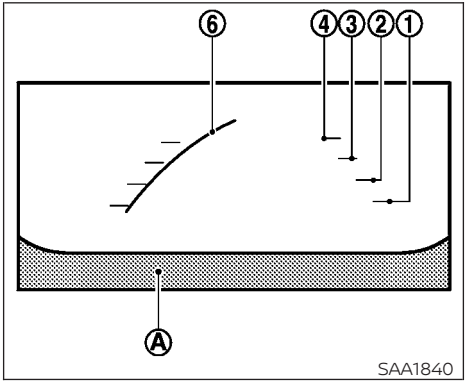

Front view

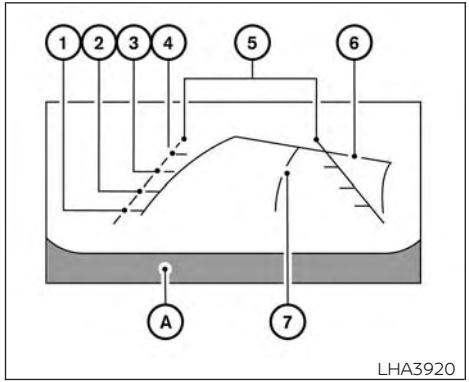

Rear view

Front and rear view

Guiding lines that indicate the approximate vehicle width and distance to objects with reference to the vehicle body line Ⓐ are displayed on the monitor.

Distance guide lines:

Indicate distances from the vehicle body:

- Red line ①: approximately 1.5 ft (0.5 m)
- Yellow line ②: approximately 3 ft (1 m)
- Green line ③: approximately 7 ft (2 m)
- Green line ④: approximately 10 ft (3 m)

Vehicle width guide lines ⑤

Indicate the approximate vehicle width when backing up.

Predicted course lines ⑥

Indicate the predicted course when operating the vehicle. The predicted course lines will be displayed on the monitor when the steering wheel is turned. The predicted course lines will move depending on how much the steering wheel is turned and will not be displayed while the steering wheel is in the straight-ahead position.

Center guide lines ⑦

Indicates the vehicle's center to improve trailer hitching guidance.

The front view will not be displayed when the vehicle speed is above 6 mph (10 km/h).

NOTE:

When the monitor displays the front view and the steering wheel turns about 90 degrees or less from the straight-ahead position, both the right and left predicted course lines ⑥ are displayed. When the steering wheel turns about 90 degrees or more, a line is displayed only on the opposite side of the turn.

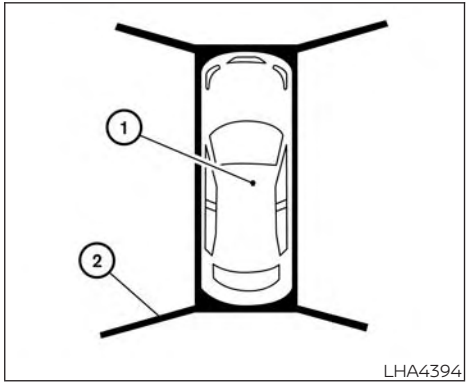

Bird's-eye view

The bird's-eye view shows the overhead view of the vehicle, which helps confirm the vehicle position and the predicted course to a parking space.

The vehicle icon ① shows the position of the vehicle. Note that the apparent distance between objects viewed in the bird's-eye view may differ somewhat from the actual distance to the vehicle.

The areas that the cameras cannot cover ② are indicated in black.

The non-viewable area ② is highlighted in yellow for several seconds after the bird's-eye view is displayed. It will be shown only the first time after the ignition switch is placed in the ON position.

⚠ WARNING

- **Objects in the bird's-eye view will appear further than the actual distance.**
- **Tall objects, such as a curb or vehicle, may be misaligned or not displayed at the seam of the views.**
- **Objects that are above the camera cannot be displayed.**
- **The view of the bird's-eye view may be misaligned when the camera position alters.**
- **A line on the ground may be misaligned and is not seen as being straight at the seam of the views. The misalignment will increase as the line proceeds away from the vehicle.**

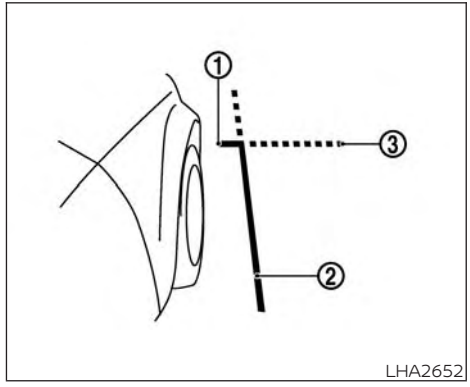

Front-side view

Guiding lines

Guiding lines that indicate the approximate width and the front end of the vehicle are displayed on the monitor.

The front-of-vehicle line ① shows the front part of the vehicle.

The side-of-vehicle line ② shows the approximate vehicle width including the outside mirrors.

The extensions ③ of both the front ① and side ② lines are shown with a green dotted line.

DIFFERENCE BETWEEN PREDICTED AND ACTUAL DISTANCES

The displayed guidelines and their locations on the ground are for approximate reference only. Objects on uphill or downhill surfaces or projecting objects will be actually located at distances different from those displayed in the monitor relative to the guidelines (refer to illustrations). When in doubt, turn around and view the objects as you are backing up, or park and exit the vehicle to view the positioning of objects behind the vehicle.

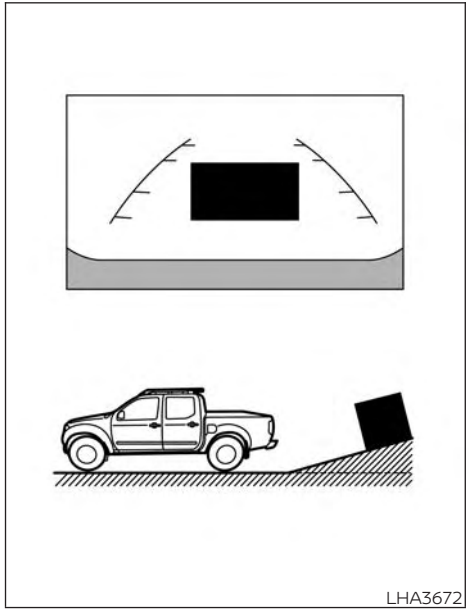

Backing up on a steep uphill

When backing up the vehicle up a hill, the distance guide lines and the vehicle width guide lines are shown closer than the actual distance. Note that any object on the hill is further than it appears on the monitor.

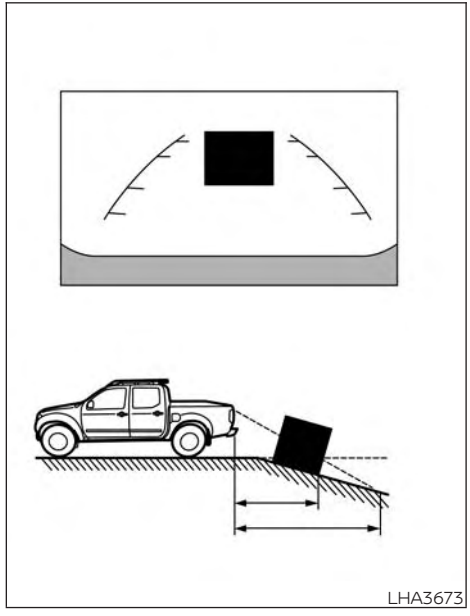

Backing up on a steep downhill

When backing up the vehicle down a hill, the distance guide lines and the vehicle width guide lines are shown farther than the actual distance. Note that any object on the hill is closer than it appears on the monitor.

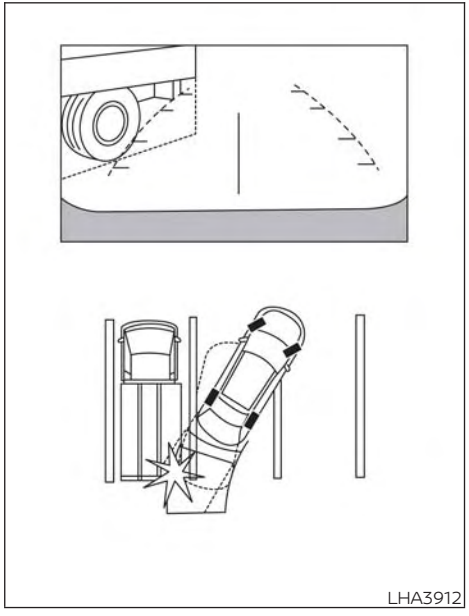

Backing up near a projecting object

The vehicle may seem to nearly clear the object in the display. However, the vehicle may hit the object if it projects over the actual backing up course.

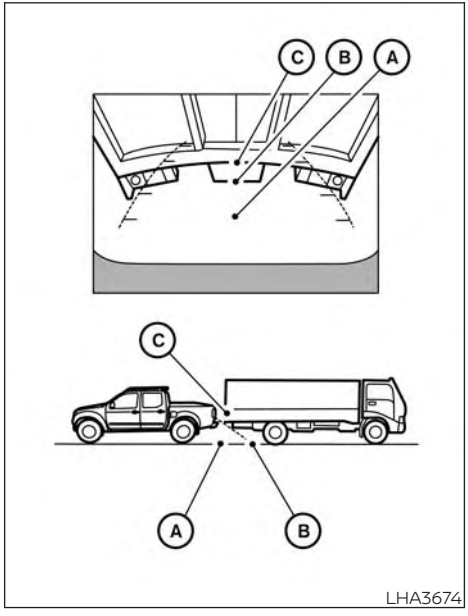

Backing up behind a projecting object

The position Ⓒ is shown farther than the position Ⓑ in the display. However, the position Ⓒ is actually at the same distance as the position Ⓐ. The vehicle may hit the object when backing up to the position Ⓐ if the object projects over the actual backing up course.

HOW TO PARK WITH PREDICTED COURSE LINES

⚠ WARNING

- **If the tires are replaced with different sized tires, the predicted course lines may be displayed incorrectly.**
- **On a snow-covered or slippery road, there may be a difference between the predicted course line and the actual course line.**
- **If the battery is disconnected or becomes discharged, the predicted course lines may be displayed incorrectly. If this occurs, please perform the following procedures:**
  - **Turn the steering wheel from lock to lock while the engine is running.**
  - **Drive the vehicle on a straight road for more than 5 minutes.**
- **When the steering wheel is turned with the ignition switch in the ACC position, the predicted course lines may be displayed incorrectly.**

- **There is the possibility that when the vehicle mirrors are extended for towing, the mirrors may be shown in the bird's-eye view and front side view.**

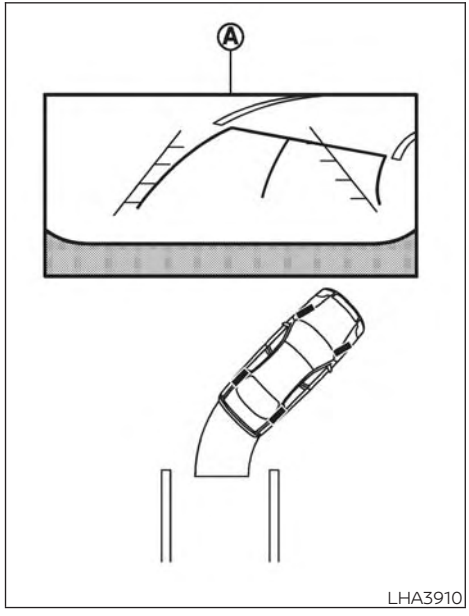

1. Visually check that the parking space is safe before parking your vehicle.
2. The rear view of the vehicle is displayed on the screen Ⓐ when the shift lever is moved to the R (Reverse) position.

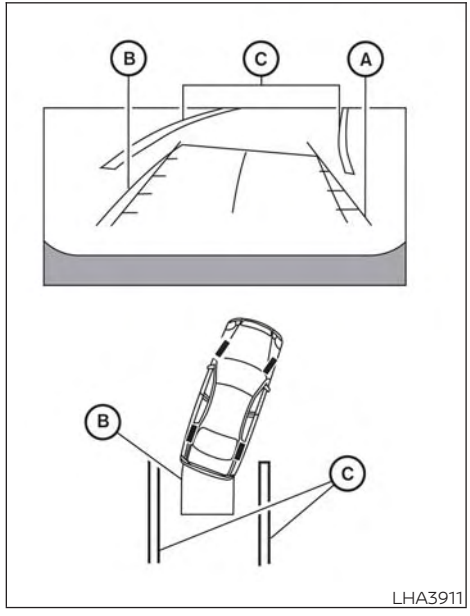

3. Slowly back up the vehicle adjusting the steering wheel so that the predicted course lines Ⓑ enter the parking space Ⓒ.

4. Maneuver the steering wheel to make the vehicle width guide lines Ⓓ parallel to the parking space Ⓒ while referring to the predicted course lines.
5. When the vehicle is parked in the space completely, move the shift lever to the P (Park) position and apply the parking brake.

HOW TO SWITCH THE DISPLAY

With the ignition switch in the ON position, press the CAMERA button or move the shift lever to the R (Reverse) position to operate the Intelligent Around View Monitor.

The Intelligent Around View Monitor displays different split screen views depending on the position of the shift lever. Press the CAMERA button to switch between the available views.

If the shift lever is in the R (Reverse) position, the available views are:

- Rear view/bird's-eye view split screen
- Rear view/front-side view split screen

If the shift lever is in the P (Park) position, the available views are:

- Front view/bird's-eye view split screen
- Front view/front-side view split screen

If the shift lever is in the D (Drive) position, the only available view is front view/front-side view split screen.

The display will switch from the Intelligent Around View Monitor screen when:

- The shift lever is in the D (Drive) position and the vehicle speed increases above approximately 6 mph (10 km/h)
- A different screen is selected.

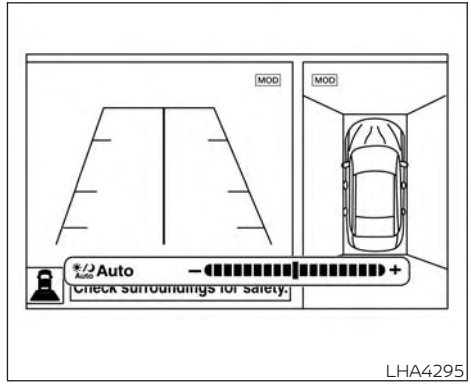

LHA4295

ADJUSTING THE SCREEN

1. Firmly apply brake and place the shift lever in R (Reverse).
2. Press the ☼/☽ button on the control panel.
3. The screen will display the Night settings.
4. Turn the TUNE/SCROLL knob to adjust the setting up or down.
5. Press the ☼/☽ button again to access the Auto settings.

6. Turn the TUNE/SCROLL knob to adjust the setting up or down.

NOTE:

Do not adjust any of the display settings of the Intelligent Around View Monitor while the vehicle is moving. Make sure the parking brake is firmly applied.

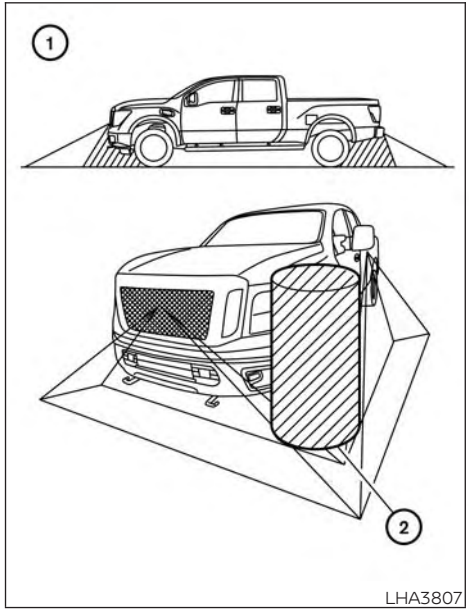

INTELLIGENT AROUND VIEW MONITOR SYSTEM LIMITATIONS

⚠ WARNING

Listed below are the system limitations for Intelligent Around View Monitor. Failure to operate the vehicle in accordance with these system limitations could result in serious injury or death.

- **Do not use the Intelligent Around View Monitor with the outside mirrors in the stored position, and make sure that the tailgate is securely closed when operating the vehicle using the Intelligent Around View Monitor.**
- **The apparent distance between objects viewed on the Intelligent Around View Monitor differs from the actual distance.**
- **The cameras are installed on the front grille, the outside mirrors and above the rear license plate. Do not put anything on the vehicle that covers the cameras.**
- **When washing the vehicle with high pressure water, be sure not to spray it around the cameras. Otherwise, water may enter the camera unit causing water condensation on the lens, a malfunction, fire or an electric shock.**

- **Do not strike the cameras. They are precision instruments. Doing so could cause a malfunction or cause damage resulting in a fire or an electric shock.**

There are some areas where the system will not show objects and the system does not warn of moving objects. When in the front or rear view display, an object below the bumper or on the ground may not be viewed ①. When in the bird's-eye view, a tall object near the seam ② of the camera viewing areas will not appear in the monitor.

The following are operating limitations and do not represent a system malfunction:

- There may be a delay when switching between views.
- When the temperature is extremely high or low, the screen may not display objects clearly.
- When strong light directly shines on the camera, objects may not be displayed clearly.
- The screen may flicker under fluorescent light.
- The colors of objects on the Intelligent Around View Monitor may differ somewhat from the actual color of objects.
- Objects on the Intelligent Around View Monitor may not be clear and the color of the object may differ in a dark environment.
- There may be differences in sharpness between each camera view of the bird's-eye view.
- Do not use wax on the camera lens. Wipe off any wax with a clean cloth that has been dampened with a diluted mild cleaning agent, then wipe with a dry cloth.

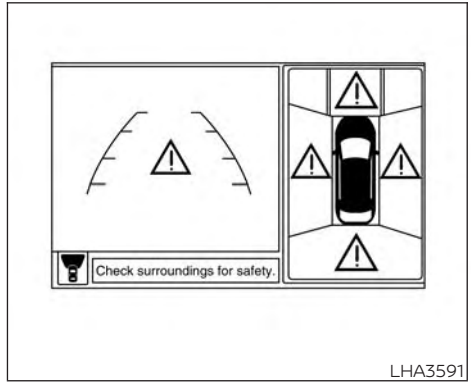

LHA3591

System temporarily unavailable

When the "!" icon is displayed on the screen, there are abnormal conditions in the Intelligent Around View Monitor. This will not hinder normal driving operation but it is recommended that the system be inspected. It is recommended that you visit a NISSAN dealer for this service.

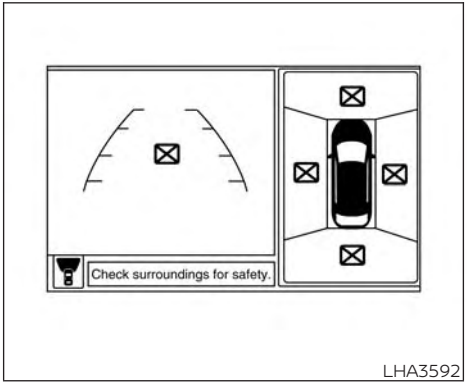

LHA3592

When the "[X]" icon is displayed on the screen, the camera image may be receiving temporary electronic disturbances from surrounding devices. This will not hinder normal driving operation but it is recommended that the system be inspected if it occurs frequently. It is recommended that you visit a NISSAN dealer for this service.

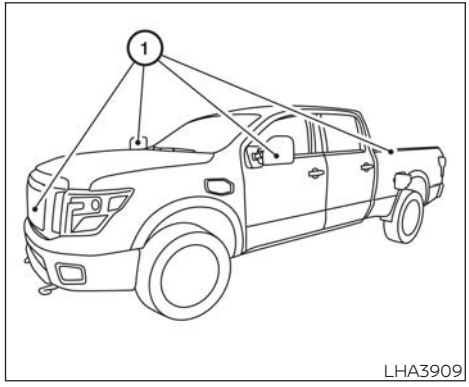

LHA3909

SYSTEM MAINTENANCE

⚠ CAUTION

- **Do not use alcohol, benzine or thinner to clean the camera. This will cause discoloration.**
- **Do not damage the cameras as the monitor screen may be adversely affected.**

If dirt, rain or snow accumulates on any of the cameras ①, the Intelligent Around View Monitor may not display objects clearly. Clean the camera by wiping with a cloth dampened with a diluted mild cleaning agent and then wiping with a dry cloth.

MOVING OBJECT DETECTION (MOD)
(if so equipped)

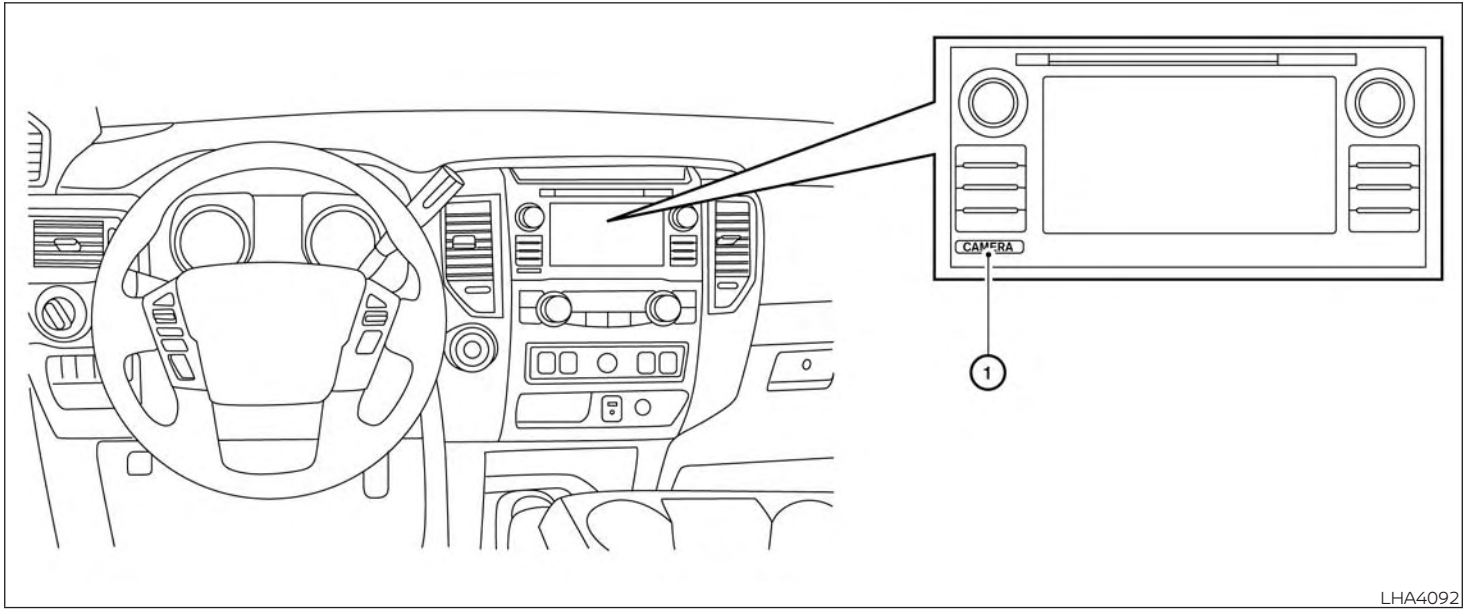

1. CAMERA button

⚠ WARNING

- **Failure to follow the warnings and instructions for proper use of the Moving Object Detection system could result in serious injury or death.**
- **The MOD system is not a substitute for proper vehicle operation and is not designed to prevent contact with objects surrounding the vehicle. When maneuvering, always use the outside mirrors and rearview mirror and turn and check the surroundings to ensure it is safe to maneuver.**
- **The system is deactivated at speeds above 6 mph (10 km/h). It is reactivated at lower speeds.**
- **The MOD system is not designed to detect surrounding stationary objects.**

The MOD system can inform the driver of moving objects near the vehicle when backing out of garages, maneuvering in parking lots and in other such instances.

The MOD system detects moving objects by using image processing technology on the image shown in the display.

MOD SYSTEM OPERATION

The MOD system will turn on automatically under the following conditions:

- When the shift lever is in the R (Reverse) position.
- When vehicle speed decreases below approximately 6 mph (10 km/h) and the camera screen is displayed.

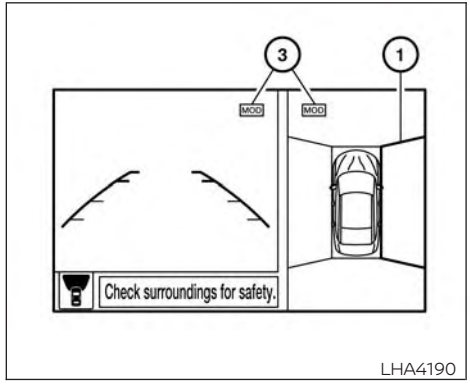

Front and bird's-eye views

The MOD system operates in the following conditions when the camera view is displayed:

- When the shift lever is in the P (Park) or N (Neutral) position and the vehicle is stopped, the MOD system detects moving objects in the bird's-eye view. The MOD system will not operate if the outside mirrors are moving in or out, in the stowed position, or if either front door is opened.

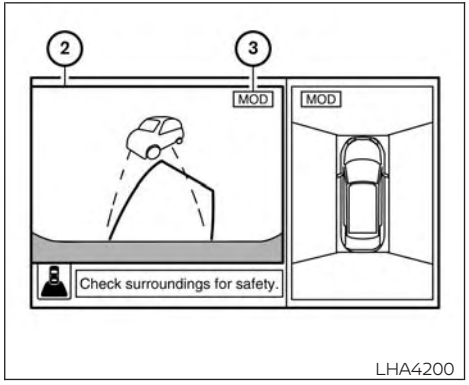

Rear and bird's-eye views

- When the shift lever is in the D (Drive) position and the vehicle speed is below approximately 6 mph (10 km/h), the MOD system detects moving objects in the front view.
- When the shift lever is in the R (Reverse) position and the vehicle speed is below approximately 6 mph (10 km/h), the MOD system detects moving objects in the rear view. The MOD system will not operate if the tailgate is open.

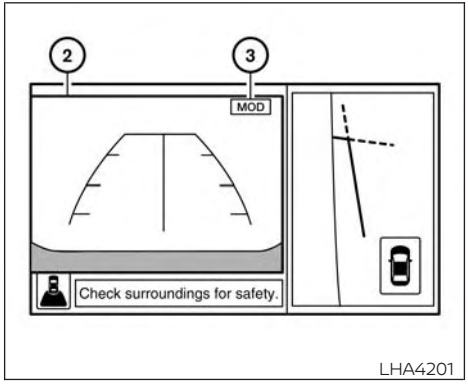

Rear and front-side views

The MOD system does not detect moving objects in the front-side view. The MOD icon is not displayed on the screen when in this view.

When the MOD system detects moving objects near the vehicle, a chime will be heard and a yellow frame will be displayed on the view where the objects are detected. While the MOD system continues to detect moving objects, the yellow frame continues to be displayed.

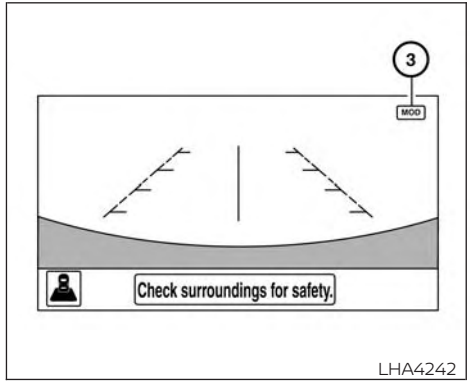

Rear-wide view

NOTE:

While the RCTA chime (if so equipped) is beeping, the MOD system will not chime.

In the bird's-eye view, the yellow frame ① is displayed on each camera image (front, rear, right, left) depending on where moving objects are detected.

The yellow frame ② is displayed on each view in the front view and rear view modes.

A blue MOD icon ③ is displayed in the view where the MOD system is operative. A gray MOD icon is displayed in the view where the MOD system is not operative.

If the MOD system is turned off, the MOD icon ③ is not displayed.

TURNING MOD ON AND OFF

Some vehicles include the option to allow the MOD system to be turned on or off in the vehicle information display.

To turn the MOD system on or off:

1. Using ◄ ► buttons on the steering wheel to select "Settings".
2. Select "Driver Assistance" and press the ENTER button.
3. Select "Parking Aids".
4. Toggle ON or OFF "Moving Object" using the ENTER button.

MOD can also be turned on or off by using the Parking Sensor (sonar) System OFF Switch. For additional information, refer to "Parking Sensor (sonar) System OFF Switch" in the "Instruments and controls" section of this manual.

MOD SYSTEM LIMITATIONS

⚠ WARNING

Listed below are the system limitations for MOD. Failure to operate the vehicle in accordance with these system limitations could result in serious injury or death.

- **Do not use the MOD system when towing a trailer. The system may not function properly.**
- **Excessive noise (for example, audio system volume or open vehicle window) will interfere with the chime sound, and it may not be heard.**
- **The MOD system performance will be limited according to environmental conditions and surrounding objects such as:**
  - **When there is low contrast between background and the moving objects.**
  - **When there is a blinking source of light.**
  - **When strong light such as another vehicle's headlight or sunlight is present.**
  - **When camera orientation is not in its usual position, such as when a mirror is folded.**
  - **When there is dirt, water drops or snow on the camera lens.**
  - **When the position of the moving objects in the display is not changed.**
- **The MOD system might detect flowing water droplets on the camera lens, white smoke from the muffler, moving shadows, etc.**
- **The MOD system may not function properly depending on the speed, direction, distance or shape of the moving objects.**
- **If your vehicle sustains damage to the parts where the camera is installed, leaving it misaligned or bent, the sensing zone may be altered and the MOD system may not detect objects properly.**
- **When the temperature is extremely high or low, the screen may not display objects clearly. This is not a malfunction.**

NOTE:

The blue MOD icon will change to orange if one of the following has occurred:

- When the system is malfunctioning.
- When the component temperature reaches a high level (icon will blink).
- When the Rear View camera has detected a blockage (icon will blink).

If the icon light continues to illuminate orange, have the MOD system checked. It is recommended that you visit an NISSAN dealer for this service.

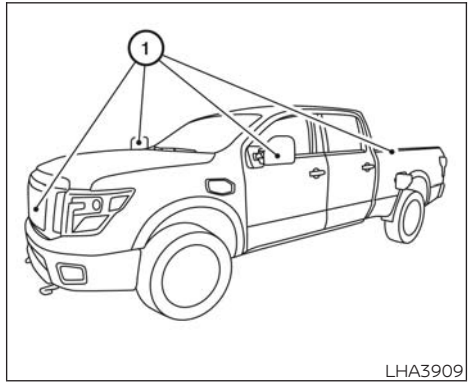

SYSTEM MAINTENANCE

⚠ CAUTION

- **Do not use alcohol, benzine or thinner to clean the camera. This will cause discoloration.**
- **Do not damage the camera as the monitor screen may be adversely affected.**

If dirt, rain or snow accumulates on any of the cameras ①, the MOD system may not operate properly. Clean the camera by wiping with a cloth dampened with a diluted mild cleaning agent and then wiping with a dry cloth.

VENTS

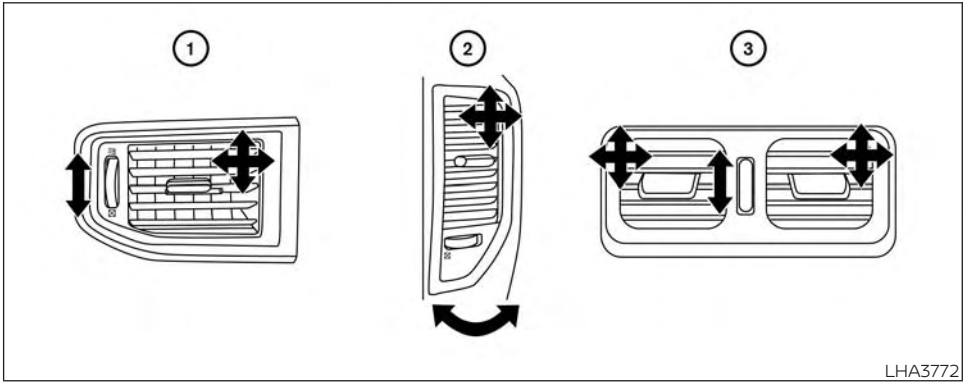

Adjust air flow direction for the driver's and passenger's side vents ①, center vents ②, and rear passengers' vents (if so equipped) ③ by moving the vent slide and/or vent assemblies.

HEATER AND AIR CONDITIONER (manual) (if so equipped)

⚠ WARNING

- **The air conditioner cooling function operates only when the engine is running.**
- **Do not leave children or adults who would normally require the assistance of others alone in your vehicle. Pets should also not be left alone. They could accidentally injure themselves or others through inadvertent operation of the vehicle. Also, on hot, sunny days, temperatures in a closed vehicle could quickly become high enough to cause severe or possibly fatal injuries to people or animals.**
- **Do not use the recirculation mode for long periods as it may cause the interior air to become stale and the windows to fog up.**

NOTE:

- Odors from inside and outside the vehicle can build up in the air conditioner unit. Odor can enter the passenger compartment through the vents.

- When parking, set the heater and air conditioner controls to turn off air recirculation to allow fresh air into the passenger compartment. This should help reduce odors inside the vehicle.

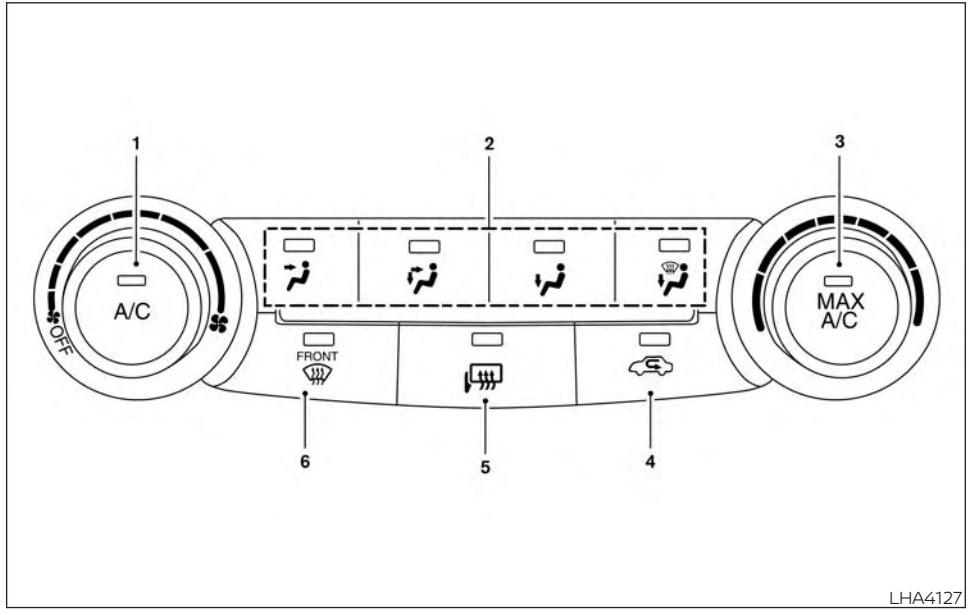

CONTROLS

1. Fan speed control / system OFF dial / air conditioning (A/C) button
2. Air flow control buttons
3. Temperature control dial / MAX A/C button
4. Air recirculation button
5. Outside mirror (if so equipped) defroster switch
6. Front windshield defrost button

Fan control dial

The fan control dial turns the fan on and off, and controls fan speed.

Fan control dial — OFF Mode

Setting the fan control dial to the off position will turn off the fan and the air recirculation indicator light will turn on. To get fresh air in fan off mode, press the air recirculation button to turn off the indicator. In fan off mode, the mode buttons can be selected to change the air vent distribution (if the air recirculation mode is off).

Air flow control buttons

The air flow control buttons allow you to select the air flow outlets.

MAX A/C — Air flows from center and side vents with maximum cooling.

— Air flows from center and side vents.

— Air flows from center and side vents and foot outlets.

— Air flows mainly from foot outlets.

— Air flows from defroster outlets and foot outlets.

FRONT — Air flows mainly from defroster outlets.

Temperature control dial

The temperature control dial allows you to adjust the temperature of the outlet air. To lower the temperature, turn the dial to the left. To increase the temperature, turn the dial to the right.

Air recirculation button

ON position (Indicator light on)
Interior air is recirculated inside the vehicle.

Press the button to the ON position when:

- driving on a dusty road.
- to prevent traffic fumes from entering passenger compartment.
- for maximum cooling when using the air conditioner.

OFF position (Indicator light off)
If outside air is desired in off mode, press the recirculation button until the indicator turns off.

If fogging occurs, press the FRONT front windshield defrost button.

A/C Air conditioner button

Start the engine, turn the fan control dial to the desired position and press the A/C button to turn on the air conditioner. To turn off the air conditioner, press the A/C button again.

The air conditioner cooling function operates only when the engine is running.

Outside mirror defroster (if so equipped)

For additional information, refer to "Rear window and / or outside mirror (if so equipped) defroster switch" in the "Instruments and controls" section of this manual.

HEATER OPERATION

Heating

This mode is used to direct heated air to the foot outlets. Some air also flows from the defrost outlets.

1. Press the button to the OFF position for normal heating. The indicator light on the button will go off.
2. Press the air flow control button.

3. Turn the fan control dial to the desired position.
4. Turn the temperature control dial to the desired position between the middle and the hot position.

Ventilation

This mode directs outside air to the side and center vents.

1. Press the button to the OFF position. The indicator light on the button will go off.
2. Press the air flow control button.
3. Turn the fan control dial to the desired position.
4. Turn the temperature control dial to the desired position.

Defrosting or defogging

This mode directs the air to the defrost outlets to defrost/defog the windows.

1. Press the FRONT defrost/defog button.
2. Turn the fan control dial to the desired position.
3. Turn the temperature control dial to the desired position between the middle and the hot position.

- To quickly remove ice or fog from the windows, turn the fan control dial to the highest setting and the temperature control to the full HOT position.
- When the FRONT position is selected, the air conditioner automatically turns on if the outside temperature is more than 36°F (2°C). This dehumidifies the air which helps defog the windshield. The mode automatically turns off, allowing outside air to be drawn into the passenger compartment to further improve the defogging performance. Under this condition, the indicator light on the A/C button indicator will not turn on if the user had selected the A/C off. Turning off the air conditioning via the A/C button is not allowed In this mode. If the A/C button indicator was on when entering this mode, and the A/C button is selected in this mode, the A/C button indicator will turn off, but the A/C compressor will still be automatically enabled. The recirculation button indicator will not illuminate if the button is pressed in this mode.

Bi-level heating

The bi-level mode directs warmed air to the side and center vents and to the front and rear floor outlets.

1. Press the button to the OFF position. The indicator light on the button will go off.
2. Press the air flow control button.
3. Turn the fan control dial to the desired position.
4. Turn the temperature control dial to the desired position.

Heating and defogging

This mode heats the interior and defogs the windshield.

1. Press the air flow control button.
2. Turn the fan control dial to the desired position.
3. Turn the temperature control dial to the desired position between the middle and the hot position.

- When the position is selected, the air conditioner automatically turns on if the outside temperature is more than 36°F (2°C). If the air flow control button is selected for more than 1 minute, the air conditioning system will continue to operate until the fan control dial is turned to OFF, the vehicle is shut off, or the A/C button is used to turn off the compressor even if the air flow control dial is turned to a position other than the position. This dehumidifies the air which helps defog the windshield. Under this condition, the indicator light on the A/C button indicator will not turn on if the user had selected A/C off. Turning off the air conditioning via the A/C button is not allowed in this mode. If the A/C button indicator was on when entering this mode, and the A/C button is selected in this mode, the A/C compressor will still be automatically enabled. It is recommended that mode be turned off for maximum defogging. The recirculation button can be selected in this mode to block outside odors. However, for maximum defogging in this mode, it is recommended to turn recirculation off when possible.

Operating tips

Clear snow and ice from the wiper blades and air inlet in front of the windshield. This improves heater operation.

AIR CONDITIONER OPERATION

Start the engine, turn the fan control dial to the desired position, and press the A/C button to activate the air conditioner. When the air conditioner is on, cooling and dehumidifying functions are added to the heater operation.

The air conditioner cooling function operates only when the engine is running.

Cooling

This mode is used to cool and dehumidify the air.

1. Press the button to the OFF position.
2. Press the air flow control button.
3. Turn the fan control dial to the desired position.
4. Press the A/C button.
5. Turn the temperature control dial to the desired position between the middle and the cold position.

- For quick cooling when the outside temperature is high, press the button to the ON position. Be sure to return the to the OFF position for normal cooling. The indicator light on the button will go off. You may also select MAX A/C for quick cooling.

Dehumidified heating

This mode is used to heat and dehumidify the air.

1. Press the button to the OFF position. The indicator light on the button will go off.
2. Press the air flow control button.
3. Turn the fan control dial to the desired position.
4. Press the A/C button on.
5. Turn the temperature control dial to the desired position.

Dehumidified defogging

This mode is used to defog the windows and dehumidify the air.

1. Press the FRONT front defroster button.
2. Turn the fan control dial to the desired position.

When the FRONT or positions are selected, the air conditioner automatically turns on if the outside temperature is more than 36°F (2°C). The air conditioning system will continue to operate until the fan control dial is turned to OFF, the air conditioner is turned OFF, or the vehicle is shut off, even if a position other than the FRONT air flow control button is selected. Under this condition, the indicator light on the A/C button indicator will not turn off if the user had selected A/C off. Turning off the air conditioning via the A/C button is not allowed in this mode. If the A/C button indicator was on when entering this mode, and the A/C button is selected in this mode, the A/C button indicator will turn off, but the A/C compressor will still be automatically enabled. This dehumidifies the air which helps defog the windshield. The mode automatically turns off, allowing outside air to be drawn into the passenger compartment to further improve the defogging performance.

3. Turn the temperature control dial to the desired position.

Operating tips

- Keep the windows closed while the air conditioner is in operation.
- After parking in the sun, drive for 2 or 3 minutes with the windows open to vent hot air from the passenger compartment. Then, close the windows. This allows the air conditioner to cool the interior more quickly.
- **The air conditioning system should be operated for approximately 10 minutes at least once a month. This helps prevent damage to the system due to lack of lubrication.**
- A visible mist may be seen coming from the ventilators in hot, humid conditions as the air is cooled rapidly. This does not indicate a malfunction.
- **If the engine coolant temperature gauge indicates engine coolant temperature over the normal range, turn the air conditioner off. For additional information, refer to "If your vehicle overheats" in the "In case of emergency" section of this manual.**

AIR FLOW CHARTS

The following charts show the button and dial positions for **MAXIMUM AND QUICK** heating, cooling or defrosting. For additional information on heating and cooling, refer to "Heater and air conditioner (manual)" in this section. **The air recirculation ( ) button should always be in the OFF position for heating and defrosting.**

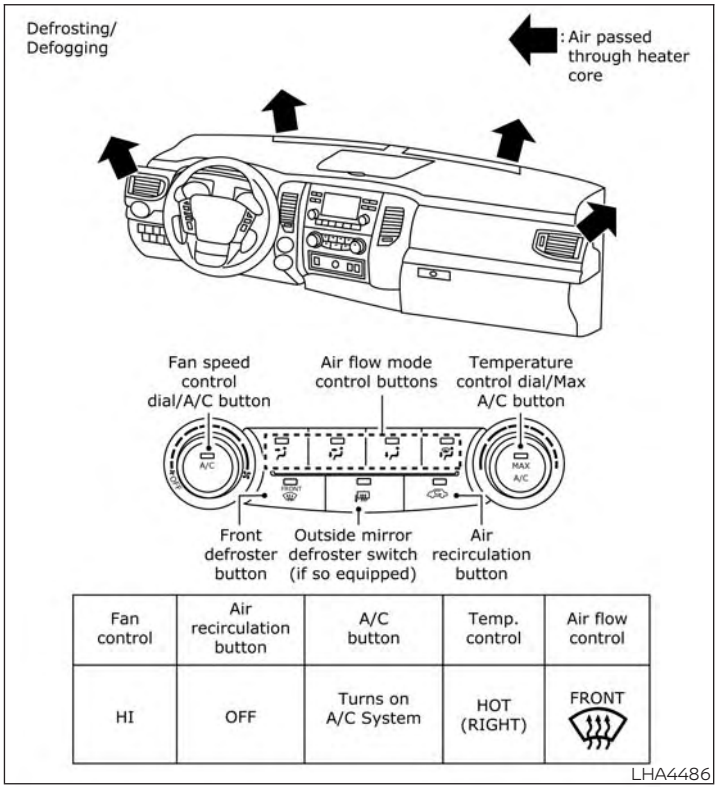

Fan control	Air recirculation button	A/C button	Temp. control	Air flow control
HI	OFF	Turns on A/C System	HOT (RIGHT)	FRONT

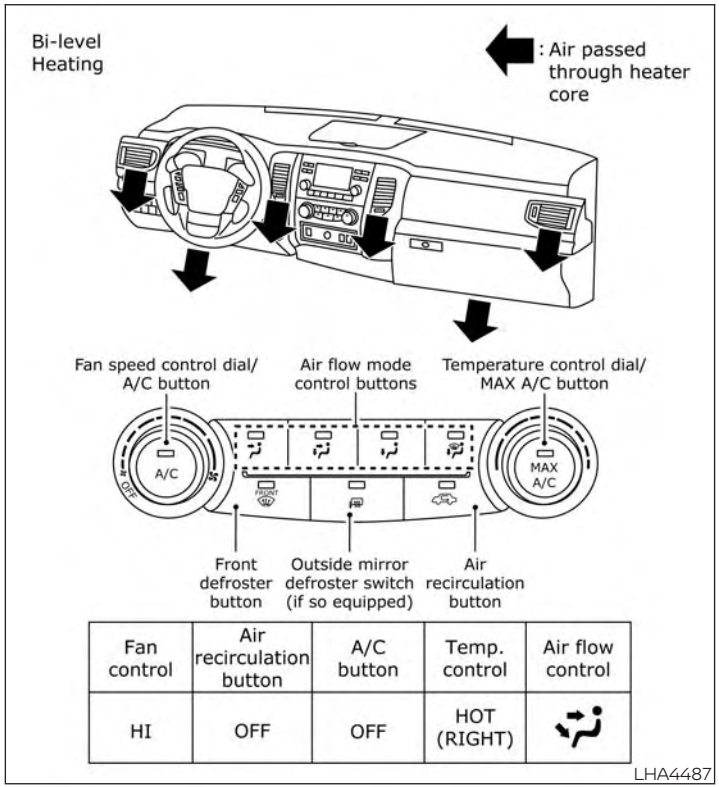

Fan control	Air recirculation button	A/C button	Temp. control	Air flow control
HI	OFF	OFF	HOT (RIGHT)	

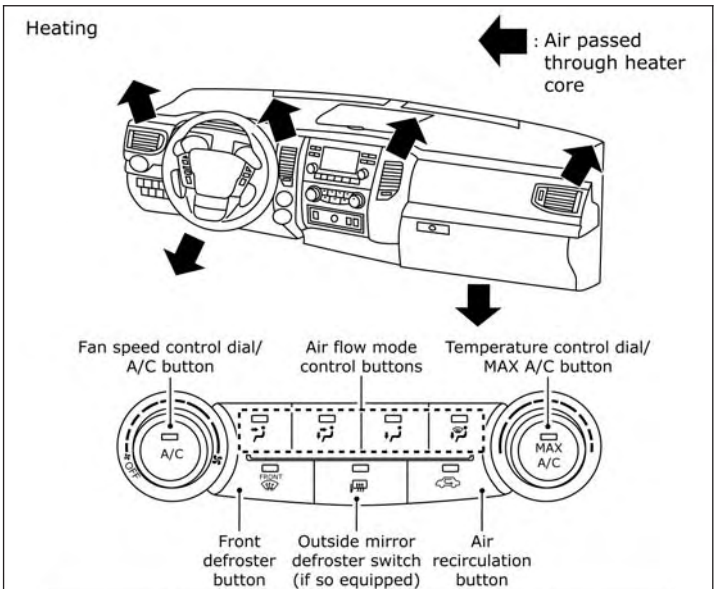

Fan control	Air recirculation button	A/C button	Temp. control	Air flow control
HI	OFF	OFF	HOT (RIGHT)	

LHA4488

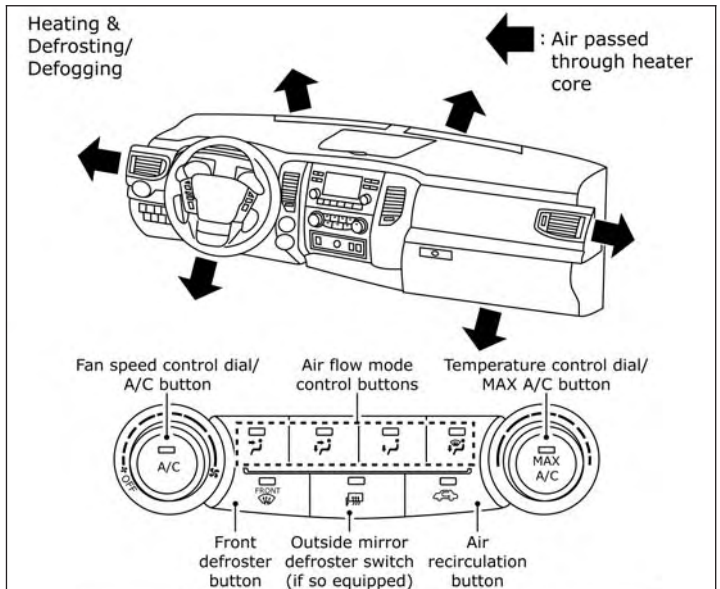

Fan control	Air recirculation button	A/C button	Temp. control	Air flow control
HI	OFF	A/C System	HOT (RIGHT)	

LHA4489

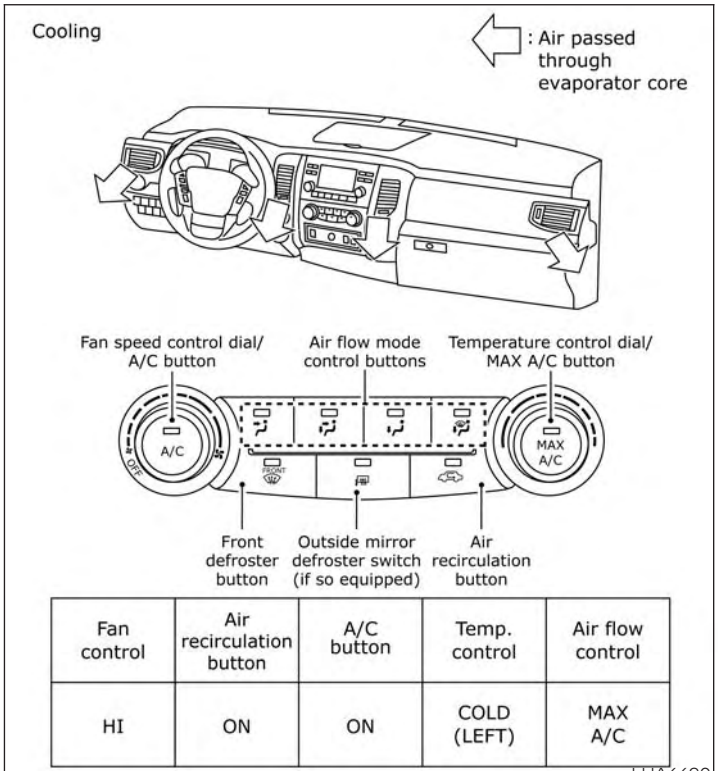

Fan control	Air recirculation button	A/C button	Temp. control	Air flow control
HI	ON	ON	COLD (LEFT)	MAX A/C

HEATER AND AIR CONDITIONER (automatic) (if so equipped)

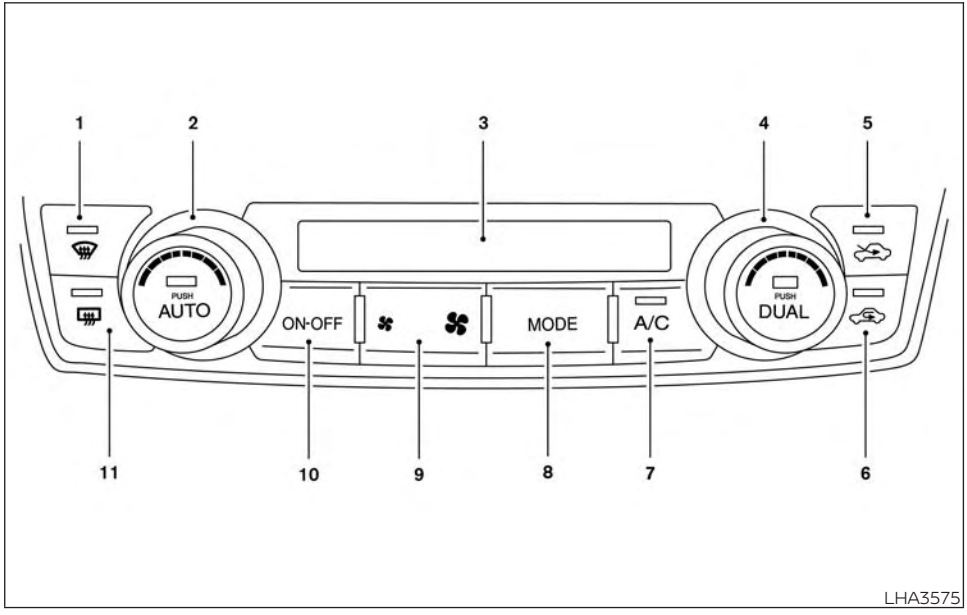

1. Front defroster button
2. Temperature control dial (driver's side)/AUTO button
3. Display screen
4. Temperature control dial (passenger's side)/DUAL button
5. Fresh air intake button
6. Air recirculation button
7. A/C air conditioner button
8. MODE (manual air flow control) button
9. Fan speed control buttons
10. ON-OFF button
11. Rear window and/or outside mirror (if so equipped) defroster switch

WARNING

- **The air conditioner cooling function operates only when the engine is running.**
- **Do not leave children or adults who would normally require the assistance of others alone in your vehicle. Pets should also not be left alone. They could accidentally injure themselves or others through inadvertent operation of the vehicle. Also, on hot, sunny days, temperatures in a closed vehicle could quickly become high enough to cause severe or possibly fatal injuries to people or animals.**
- **Do not use the recirculation mode for long periods as it may cause the interior air to become stale and the windows to fog up.**

NOTE:

- Odors from inside and outside the vehicle can build up in the air conditioner unit. Odor can enter the passenger compartment through the vents.
- When parking, set the heater and air conditioner controls to turn off air recirculation to allow fresh air into the passenger compartment. This should help reduce odors inside the vehicle.

AUTOMATIC OPERATION

Cooling or heating (auto)

This mode may be normally used all year round as the system automatically works to keep a constant temperature. Air flow distribution and fan speed are also controlled automatically.

1. Press the AUTO button on.
2. Turn the temperature dial to the left or right to set the desired temperature. Driver and passenger temperatures can be set independently. Press the DUAL button to activate dual climate control functions. Turn the passenger's side temperature control dial to the left or right to set the desired passenger's temperature.

- Adjust the temperature dial to about 75°F (24°C) for normal operation.
- The temperature of the passenger compartment will be maintained automatically. Air flow distribution, fan speed and A/C on/off are also controlled automatically. The A/C button indicator will remain in the last user setting. Under this condition, the indicator light on the A/C button indicator will not turn on if the user had not selected the A/C button off. Turning off the air conditioning via the A/C button is not allowed in this mode. If the A/C button indicator was on when entering this mode, and the A/C button is selected in this mode, the A/C button indicator will turn off, but the A/C compressor will still be automatically enabled. For additional information, refer to "Air flow control" in this section.
  To turn off the compressor, turn off auto mode, then turn the A/C on then off until the A/C button indicator is not lit.
- A visible mist may be seen coming from the vents in hot, humid conditions as the air is cooled rapidly. This does not indicate a malfunction.

Heating (A/C OFF)

The air conditioner does not activate. When you need to heat only, use this mode.

1. Press the AUTO button.
2. Turn the temperature control dial to the left or the right to set the desired temperature. Driver and passenger temperatures can be set independently. Press the DUAL button to activate dual climate control functions. Turn the passenger's side temperature control dial to the left or right to set the desired passenger's temperature.

- The temperature of the passenger compartment will be maintained automatically. Air flow distribution and fan speed are also controlled automatically.
- Do not set the temperature lower than the outside air temperature. Otherwise, the system may not work properly.
- Not recommended if windows fog up.

Dehumidified defrosting or defogging

1. Press the defroster control button to turn the system on. The indicator light in the button will illuminate.
2. Turn the temperature dial to the left or right to set the desired temperature.

- To quickly remove ice from the outside of the windows, press the fan speed control button to the maximum position.
- As soon as possible after the windshield is clean, press the AUTO button to return to the auto mode.
- When the control is activated, the air conditioner will automatically be turned on at outside temperatures above 36°F (2°C). This dehumidifies the air which helps defog the windshield. Under this condition, the indicator light on the A/C button indicator will not turn on if the user had selected A/C off. Turning off the air condition via the A/C button is not allowed in this mode. If the A/C button indicator was on when entering this mode, and the A/C button is selected in this mode, the A/C compressor will still be automatically enabled. The air recirculation mode automatically turns off, allowing outside air to be drawn into the passenger compartment to further improve the defogging performance.

Remote Engine Start with Intelligent Climate Control (if so equipped)

Vehicles equipped with automatic climate controls and Remote Engine Start function may go into automatic heating or cooling mode when Remote Engine Start is activated depending on outside and cabin temperatures. During this period, the climate control display and buttons will be inoperable until the ignition switch is turned on. In Remote Engine Start defrosting mode, the rear window defroster and heated steering wheel (if so equipped) may be activated automatically.

MANUAL OPERATION

Fan speed control

Press the fan speed control buttons to manually control the fan speed.

Press the AUTO button to return to automatic control of the fan speed.

When adjusting the manual fan from auto mode, the outlet direction (floor, floor/defrost, vent, bi-level) will still automatically change. To fix the outlet to a manual mode, select the desired air flow location using the MODE button.

Temperature control dial

The temperature control dial allows you to adjust the temperature of the outlet air. To lower the temperature, turn the dial to the left. To increase the temperature, turn the dial to the right. Temperature can be adjusted on the driver's and passenger's side.

Air recirculation

Press the air recirculation button to recirculate interior air inside the vehicle when:

- driving on a dusty road
- to prevent traffic fumes from entering passenger compartment.
- for maximum cooling when using the air conditioning system.

Press the AUTO button to return to automatic mode.

The air recirculation button will not be activated when the air conditioner is in mode.

When the outside temperature exceeds 70°F (21°C), the air conditioning system may default to air recirculation mode automatically to reduce overall power consumption. To exit air recirculation mode, select the fresh air intake button to enter fresh air mode.

In Floor/Defrost mode, the recirculation button can be selected to block outside odors. However, for maximum defogging in this mode, it is recommended to turn recirculation off when possible.

Fresh air intake

Press the fresh air intake button to draw outside air into the passenger compartment.

Automatic intake air control

In the AUTO mode, the intake air will be controlled automatically. When the outside temperature exceeds 70°F (21°C), the air conditioning system may default to air recirculation mode automatically to reduce overall power consumption. To exit air recirculation mode, select the fresh air intake button to enter fresh air mode. The air recirculation indicator will turn off, the fresh air indicator will turn on.

To manually control the intake air, press the fresh air intake button. To return to the automatic control mode if the fresh air indicator is illuminated, press and hold the fresh air intake button for about 2 seconds. The fresh air indicator and air recirculation indicator lights will flash twice, and then the intake air will be controlled automatically. To return to the automatic control mode if the air recirculation icon is illuminated, press and hold the air recirculation button for about 2 seconds. The air recirculation indicator and fresh air intake indicator lights will flash twice and the intake air will be controlled automatically.

A/C Air conditioner button

Start the engine, turn the fan speed control dial to the desired position and press the A/C button to turn on the air conditioner. To turn off the air conditioner, press the A/C button again.

The air conditioner cooling function operates only when the engine is running.

Air flow control

Press the MODE button to manually control air flow and select the air outlet.

- — Air flows from center and side vents.
- — Air flows from center and side vents and foot outlets.
- — Air flows mainly from foot outlets.
- — Air flows from defroster and foot outlets.

To turn system off

Press the ON-OFF button.

Rear window and / or outside mirror (if so equipped) defroster switch

For additional information, refer to "Rear window and / or outside mirror (if so equipped) defroster switch" in the "Instruments and controls" section of this manual.

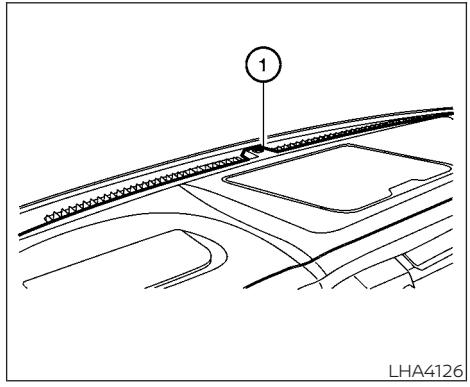

OPERATING TIPS

The sunload sensor (if so equipped) ①, located on the top center of the instrument panel, helps the system maintain a constant temperature. Do not put anything on or around this sensor.

- When the climate system is in automatic operation and the engine coolant temperature and outside air temperature are low, the air flow outlet may default to defroster mode for a maximum of 2 minutes 30 seconds. This is not a malfunction. After the engine coolant temperature warms up, the air flow outlet will return to foot mode and operation will continue normally.
- When the outside and interior cabin temperatures are moderate to high, the intake setting may default to turn off air recirculation to allow fresh air into the passenger compartment. You may notice air flow from the foot mode, bi-level mode, or side demist vent outlets for a maximum of 15 seconds. This may occur when previous climate setting was system off. This is not a malfunction. After the initial warm air is expelled, the intake will return to automatic control, air flow outlet will return to previous settings, and operation will continue normally. To exit, press any climate control button.
- Keep the windows closed while the air conditioner is in operation.

- If you feel that the air flow mode you have selected and the outlets the air is coming out do not match, select the mode.
- When you change the air flow mode, you may feel air flow from the feet vents for just a moment. This is not a malfunction.

SERVICING AIR CONDITIONER

The air conditioner system in your NISSAN vehicle is charged with a refrigerant designed with the environment in mind.
This refrigerant does not harm the earth's ozone layer.

Special charging equipment and lubricant is required when servicing your NISSAN air conditioner. Using improper refrigerants or lubricants will cause severe damage to your air conditioner system. For additional information, refer to "Air conditioner system refrigerant and oil recommendations" in the "Technical and consumer information" section of this manual.

It is recommended that you visit a NISSAN dealer to service your "environmentally friendly" air conditioner system.

WARNING

The air conditioner system contains refrigerant under high pressure. To avoid personal injury, any air conditioner service should be done only by an experienced technician with proper equipment.

AUDIO SYSTEM

RADIO

With the ignition is placed in the ACC or ON position, press the or POWER button to turn the radio on. If you listen to the radio with the engine not running, the ignition should be placed in the ACC position.
Radio reception is affected by station signal strength, distance from radio transmitter, buildings, bridges, mountains and other external influences. Intermittent changes in reception quality normally are caused by these external influences.

Using a cellular phone in or near the vehicle may influence radio reception quality.

Radio reception

Your NISSAN radio system is equipped with state-of-the-art electronic circuits to enhance radio reception. These circuits are designed to extend reception range, and to enhance the quality of that reception.

However, there are some general characteristics of both FM and AM radio signals that can affect radio reception quality in a moving vehicle, even when the finest equipment is used. These characteristics are completely normal in a given reception area and do not indicate any malfunction in your NISSAN radio system.

Reception conditions will constantly change because of vehicle movement. Buildings, terrain, signal distance and interference from other vehicles can work against ideal reception. Described below are some of the factors that can affect your radio reception.

Some cellular phones or other devices may cause interference or a buzzing noise to come from the audio system speakers. Storing the device in a different location may reduce or eliminate the noise.

FM RADIO RECEPTION

Range: FM range is normally limited to 25 – 30 mi (40 – 48 km), with monaural (single channel) FM having slightly more range than stereo FM. External influences may sometimes interfere with FM station reception even if the FM station is within 25 mi (40 km). The strength of the FM signal is directly related to the distance between the transmitter and receiver. FM signals follow a line-of-sight path, exhibiting many of the same characteristics as light. For example, they will reflect off objects.

Fade and drift: As your vehicle moves away from a station transmitter, the signals will tend to fade and/or drift.

Static and flutter: During signal interference from buildings, large hills or due to antenna position (usually in conjunction with increased distance from the station transmitter), static or flutter can be heard. This can be reduced by adjusting the treble control to reduce treble response.

Multipath reception: Because of the reflective characteristics of FM signals, direct and reflected signals reach the receiver at the same time. The signals may cancel each other, resulting in momentary flutter or loss of sound.

AM RADIO RECEPTION

AM signals, because of their low frequency, can bend around objects and skip along the ground. In addition, the signals can be bounced off the ionosphere and bent back to earth. Because of these characteristics, AM signals are also subject to interference as they travel from transmitter to receiver.

Fading: Occurs while the vehicle is passing through freeway underpasses or in areas with many tall buildings. It can also occur for several seconds during ionospheric turbulence even in areas where no obstacles exist.

Static: Caused by thunderstorms, electrical power lines, electric signs and even traffic lights.

SATELLITE RADIO RECEPTION (if so equipped)

When the satellite radio is used for the first time or the battery has been replaced, the satellite radio may not work properly. This is not a malfunction. Wait more than 10 minutes with satellite radio ON and the vehicle outside of any metal or large building for satellite radio to receive all of the necessary data.

No satellite radio reception is available and "NO SAT" is displayed when the SAT band option is selected unless optional satellite receiver and antenna are installed and a SiriusXM® Satellite Radio service subscription is active. Satellite radio is not available in Alaska, Hawaii and Guam.

Satellite radio performance may be affected if cargo carried on the roof blocks the satellite radio signal.

If possible, do not put cargo over the satellite antenna.

A build up of ice on the satellite radio antenna can affect satellite radio performance. Remove the ice to restore satellite radio reception.

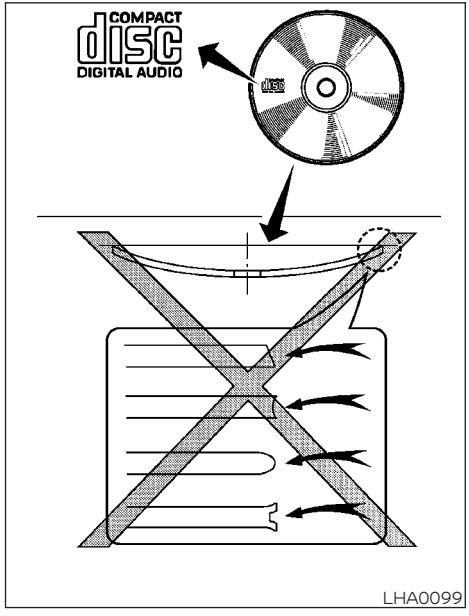

AUDIO OPERATION PRECAUTIONS

Compact disc (CD) player

⚠ CAUTION

- **Do not force a compact disc into the CD insert slot. This could damage the CD and/or CD player.**
- **Trying to load a CD with the CD door closed could damage the CD and/or CD player.**
- **Only one CD can be loaded into the CD player at a time.**

- **Only use high quality 4.7 in (12 cm) round discs that have the "COMPACT disc DIGITAL AUDIO" logo on the disc or packaging.**
- **During cold weather or rainy days, the player may malfunction due to the humidity. If this occurs, remove the CD and dehumidify or ventilate the player completely.**
- **The player may skip while driving on rough roads.**
- **The CD player sometimes cannot function when the compartment temperature is extremely high or low. Decrease/increase the temperature before use.**

- **Do not expose the CD to direct sunlight.**
- **CDs that are in poor condition or are dirty, scratched or covered with fingerprints may not work properly.**
- **The following CDs may not work properly:**
  - **Copy control compact discs (CCCD)**
  - **Recordable compact discs (CD-R)**
  - **Rewritable compact discs (CD-RW)**
- **Do not use the following CDs as they may cause the CD player to malfunction:**
  - **3.1 in (8 cm) discs with an adapter**
  - **CDs that are not round**
  - **CDs with a paper label**
  - **CDs that are warped, scratched, or have abnormal edges**
- **This audio system can only play prerecorded CDs. It has no capability to record or burn CDs.**
- **If the CD cannot be played, one of the following messages will be displayed.**

CHECK DISC

- **Confirm that the CD is inserted correctly (the label side is facing up, etc.).**
- **Confirm that the CD is not bent or warped and it is free of scratches.**

PRESS EJECT

This is an error due to excessive temperature inside the player. Remove the CD by pressing the EJECT button. After a short time, reinsert the CD. The CD can be played when the temperature of the player returns to normal.

UNPLAYABLE

The file is unplayable in this audio system (only MP3 or WMA CD).

Compact disc with MP3 or WMA

Terms

- MP3 — MP3 is short for Moving Pictures Experts Group Audio Layer 3. MP3 is the most well-known compressed digital audio file format. This format allows for near "CD quality" sound, but at a fraction of the size of normal audio files. MP3 conversion of an audio track from CD-ROM can reduce the file size by approximately a 10:1 ratio with virtually no perceptible loss in quality. MP3 compression removes the redundant and irrelevant parts of a sound signal that the human ear doesn't hear.
- WMA — Windows Media Audio (WMA)* is a compressed audio format created by Microsoft as an alternative to MP3. The WMA codec offers greater file compression than the MP3 codec, enabling storage of more digital audio tracks in the same amount of space when compared to MP3s at the same level of quality.
- Bit rate — Bit rate denotes the number of bits per second used by a digital music file. The size and quality of a compressed digital audio file is determined by the bit rate used when encoding the file.

- Sampling frequency — Sampling frequency is the rate at which the samples of a signal are converted from analog to digital (A/D conversion) per second.
- Multisession — Multisession is one of the methods for writing data to media. Writing data once to the media is called a single session, and writing more than once is called a multisession.
- ID3/WMA Tag — The ID3/WMA tag is the part of the encoded MP3 or WMA file that contains information about the digital music file such as song title, artist, encoding bit rate, track time duration, etc. ID3 tag information is displayed on the Artist/song title line on the display.

* Windows® and Windows Media® are registered trademarks and trademarks in the United States of America and other countries of Microsoft Corporation of the USA.

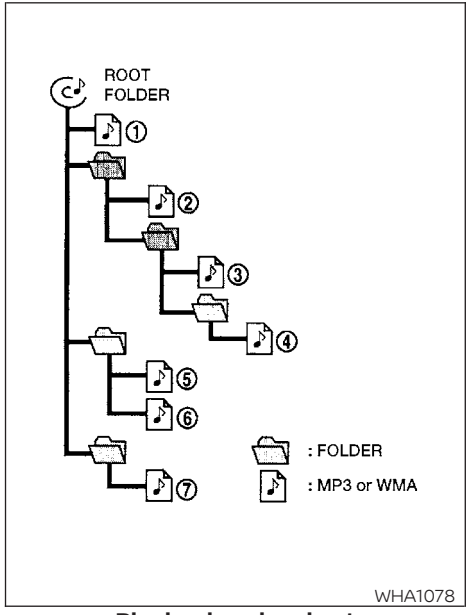

Playback order chart

Playback order

Music playback order of a CD with MP3 or WMA files is as illustrated.

- The names of folders not containing MP3 or WMA files are not shown in the display.
- If there is a file in the top level of the disc, "Root Folder" is displayed.
- The playback order is the order in which the files were written by the writing software. Therefore, the files might not play in the desired order.

Specification chart

Supported media			CD, CD-R, CD-RW
Supported file systems			ISO9660 LEVEL1, ISO9660 LEVEL2, Apple ISO, Romeo, Joliet * ISO9660 Level 3 (packet writing) is not supported.
Supported versions*1	MP3	Version	MPEG1, MPEG2, MPEG2.5
		Sampling frequency	8 kHz - 48 kHz
		Bit rate	8 kbps - 320 kbps, VBR
	WMA	Version	WMA7, WMA8, WMA9
		Sampling frequency	32 kHz - 48 kHz
		Bit rate	48 kbps - 192 kbps, VBR
Tag information			ID3 tag VER1.0, VER1.1, VER2.2, VER2.3 (MP3 only)
Folder levels			Folder levels: 8, Max folders: 255 (including root folder), Files: 512 (Max. 255 files for one folder)
Text character number limitation			128 characters
Displayable character codes*2			01: ASCII, 02: ISO-8859-1, 03: UNICODE (UTF-16 BOM Big Endian), 04: UNICODE (UTF-16 Non-BOM Big Endian), 05: UNICODE (UTF-8), 06: UNICODE (Non-UTF-16 BOM Little Endian)

*1 Files created with a combination of 48 kHz sampling frequency and 64 kbps bit rate cannot be played.

*2 Available codes depend on what kind of media, versions and information are going to be displayed.

Troubleshooting guide

Symptom	Cause and Countermeasure
Cannot play	Check if the disc was inserted correctly.
	Check if the disc is scratched or dirty.
	Check if there is condensation inside the player. If there is, wait until the condensation is gone (about 1 hour) before using the player.
	If there is a temperature increase error, the CD player will play correctly after it returns to the normal temperature.
	If there is a mixture of music CD files (CD-DA data) and MP3/WMA files on a CD, only the music CD files (CD-DA data) will be played.
	Files with extensions other than ".MP3",".WMA", ".mp3" or ".wma" cannot be played. In addition, the character codes and number of characters for folder names and file names should be in compliance with the specifications.
	Check if the finalization process, such as session close and disc close, is done for the disc.
	Check if the disc is protected by copyright.
Poor sound quality	Check if the disc is scratched or dirty.
	Bit rate may be too low.
It takes a relatively long time before the music starts playing.	If there are many folders or file levels on the MP3/WMA disc, or if it is a multisession disc, some time may be required before the music starts playing.
Music cuts off or skips	The writing software and hardware combination might not match, or the writing speed, writing depth, writing width, etc., might not match the specifications. Try using the slowest writing speed.
Skipping with high bit rate files	Skipping may occur with large quantities of data, such as for high bit rate data.
Moves immediately to the next song when playing	When a non-MP3/WMA file has been given an extension of ".MP3", ".WMA", ."mp3"or ".wma", or when play is prohibited by copyright protection, there will be approximately 5 seconds of no sound and then the player will skip to the next song.
Songs do not play back in the desired order	The playback order is the order in which the files were written by the writing software. Therefore, the files might not play in the desired order.

USB (Universal Serial Bus) Connection Port

⚠ WARNING

Do not connect, disconnect or operate the USB device while driving. Doing so can be a distraction. If distracted you could lose control of your vehicle and cause an accident or serious injury.

⚠ CAUTION

- **Do not force the USB device into the USB port. Inserting the USB device tilted or up-side-down into the port may damage the port. Make sure that the USB device is connected correctly into the USB port.**
- **Do not grab the USB port cover (if so equipped) when pulling the USB device out of the port. This could damage the port and the cover.**
- **Do not leave the USB cable in a place where it can be pulled unintentionally. Pulling the cable may damage the port.**

The vehicle is not equipped with a USB device. USB devices should be purchased separately as necessary.
This system cannot be used to format USB devices. To format a USB device, use a personal computer.

In some jurisdictions, the USB device for the front seats plays only sound without images for regulatory reasons, even when the vehicle is parked.

This system supports various USB memory devices, USB hard drives and iPod® players. Some USB devices may not be supported by this system.

- Partitioned USB devices may not play correctly.
- Some characters used in other languages (Chinese, Japanese, etc.) may not appear properly in the display. Using English language characters with a USB device is recommended.

General notes for USB use

- For additional information, refer to your device manufacturer's owner information regarding the proper use and care of the device.

Notes for iPod® use

iPod® is a trademark of Apple Inc., registered in the U.S. and other countries.

- Improperly plugging in the iPod® may cause a checkmark to be displayed on and off (flickering). Always make sure that the iPod® is connected properly.
- An iPod® nano (1st Generation) may remain in fast forward or rewind mode if it is connected during a seek operation. In this case, please manually reset the iPod®.
- An iPod® nano (2nd Generation) will continue to fast-forward or rewind if it is disconnected during a seek operation.
- An incorrect song title may appear when the Play Mode is changed while using an iPod® nano (2nd Generation).
- Audiobooks may not play in the same order as they appear on an iPod®.
- Large video files cause slow responses in an iPod®. The vehicle center display may momentarily black out, but will soon recover.
- If an iPod® automatically selects large video files while in the shuffle mode, the vehicle center display may momentarily black out, but will soon recover.

Bluetooth® streaming audio

- Some Bluetooth® audio devices may not be recognized by the in-vehicle audio system.
- It is necessary to set up the wireless connection between a compatible Bluetooth® audio device and the in-vehicle Bluetooth® module before using the Bluetooth® audio.
- Operating procedure of the Bluetooth® audio will vary depending on the devices. Make sure how to operate your audio device before using it with this system.
- The Bluetooth® audio may be stopped under the following conditions:
  - Receiving a call on the Hands-Free Phone System.
  - Checking the connection to the hands-free phone.
- Do not place the Bluetooth® audio device in an area surrounded by metal or far away from the in-vehicle Bluetooth® module to prevent tone quality degradation and wireless connection disruption.
- While an audio device is connected through the Bluetooth® wireless connection, the battery power of the device may discharge quicker than usual.
- This system supports the Bluetooth® Audio Distribution Profile (A2DP, AVRCP).

Bluetooth®

BLUETOOTH® is a trademark owned by Bluetooth SIG, Inc. and licensed to Visteon and Bosch.

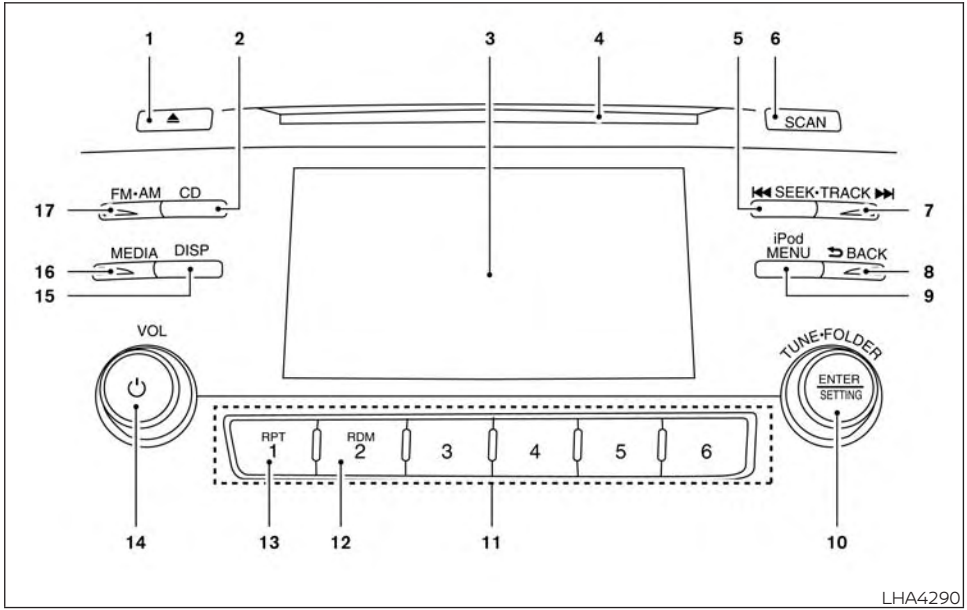

FM/AM RADIO WITH COMPACT DISC (CD) PLAYER (if so equipped)

For additional information, refer to "Audio operation precautions" in this section.

1. ⏏ CD eject button
2. CD button
3. Display screen
4. CD insert slot
5. ⏮ SEEK button
6. SCAN button
7. ⏭ TRACK button
8. ⮌ BACK button
9. iPod MENU button
10. ENTER/SETTING button / TUNE/FOLDER knob
11. Station select (1 - 6) buttons
12. RDM (random) button
13. RPT (repeat) button
14. ⏻ (power) button / VOL (volume) control knob
15. DISP (display) button
16. MEDIA button
17. FM•AM button

Audio main operation

⏻ (power) button / VOL (volume) control knob

Place the ignition switch in the ACC or ON position and press the ⏻ (power) button while the system is off to call up the mode (radio, CD, AUX, Bluetooth® audio, USB or iPod®) that was playing immediately before the system was turned off.

To turn the system off, press the ⏻ (power) button.
Turn the VOL (volume) control knob to adjust the volume.

This vehicle may be equipped with Speed Sensitive Volume. When this feature is active, the audio volume changes as the driving speed changes.

ENTER/SETTING button

Press the ENTER/SETTING button to show the Settings screen on the display. Turn the TUNE/FOLDER knob to navigate the options and then press the ENTER/SETTING button to make a selection.

Audio		
	Bluetooth	Adjusts Bluetooth® settings.
	Bass	Adjusts the bass to the desired level.
	Treble	Adjusts the treble to the desired level.
	Balance	Adjusts the balance to the desired level. Balance adjusts the sound level between the left and right speakers.
	Fade	Adjusts the fade to the desired level. Fade adjusts the sound level between the front and rear speakers.
	Brightness and Contrast	Adjust the brightness or contrast to adjust the appearance of the display screen.
	Clock adjust	Press the ENTER/SETTING button to highlight the hours or minutes and then use the TUNE/FOLDER knob to adjust the value. Press the ENTER/SETTING button again to set the value.
	On-Screen Clock	Toggles ON or OFF the clock display on the upper right corner of the display screen.
	RDS Display	Toggles ON or OFF the RDS information displayed on the screen while the radio is playing.
	Speed Sensitive Vol. (volume)	Adjusts the speed sensitive volume function, which increases the volume of the audio system as the speed of the vehicle increases. Set to "OFF" to disable the feature. The higher the setting, the more the volume increases in relation to vehicle speed.
	AUX Vol.	Choose a setting from 0 to +3 to control the boost of incoming auxiliary device volume. A setting of 0 provides no additional boost in volume. A setting of +3 provides the greatest boost in volume.
	Language select	Select the desired language for the system from the available options.
	Auto Source Change	Select ON or OFF for Auto Source Change. With Auto Source Change ON: when device is plugged into USB port, radio will automatically switch to USB source. With Auto Source Change OFF: when device is plugged into USB port, radio will stay on currently selected source.

Bass, treble, balance and fade can also be adjusted by pressing the ENTER/SETTING button and turning the TUNE/FOLDER control knob to select the item to adjust. When the desired item is shown on the display, turn the tuning to adjust and then press the ENTER/SETTING button until the display returns to the main audio screen. If the button is not pressed, the radio or CD display will automatically reappear.

iPod MENU button

This button can only be used for iPod® operations. For additional information, refer to "iPod® player operation (models without navigation system)" in this section.

DISP (display) button

The DISP (display) button turns the display screen on or off.

BACK button

Press the BACK button to return to the previous menu screen.

FM/AM radio operation

FM·AM button

Press the FM·AM button to change the band as follows:

AM → FM1 → FM2 → AM

If another audio source is playing when the FM·AM button is pressed, the audio source playing will automatically be turned off and the last radio station played will begin playing.

The FM stereo indicator (STEREO) is shown on the screen during FM stereo reception. When the stereo broadcast signal is weak, the radio automatically changes from stereo to monaural reception.

TUNE/FOLDER knob (Tuning)

Turn the TUNE/FOLDER knob to the left or right for manual tuning.

SEEK tuning

Press the ⏮ or ⏭ SEEK buttons to tune from low to high or high to low frequencies and to stop at the next broadcasting station.

SCAN tuning

Press the SCAN button to stop at each broadcasting station for 5 seconds. SCAN will appear on the screen while the radio is scan tuning.

Pressing the SCAN button again during this 5 second period will stop SCAN tuning and the radio will remain tuned to that station. If the SCAN button is not pressed within 5 seconds, SCAN tuning moves to the next station.

1 to 6 Station memory operations

Six stations can be set for the AM band. Twelve stations can be set for the FM band (six for FM1, six for FM2).

1. Choose the radio band AM, FM1 or FM2 using the FM·AM button.
2. Tune to the desired station using the ⏮ SEEK button or the ⏭ TRACK button. Press and hold any of the desired station memory buttons (1 – 6) until the preset number is updated on the display and a beep is heard.
3. Programming is now complete.
4. Other buttons can be set in the same manner.

If the battery cable is disconnected, or if the fuse opens, the radio memory will be canceled. In that case, reset the desired stations.

Compact disc (CD) player operation

If the radio is already operating, it automatically turns off and the compact disc begins to play.

MEDIA button

With a CD loaded, press the MEDIA button until the CD mode is displayed on the screen.

CD/MP3 display mode

While listening to an MP3/WMA CD, certain text may be displayed on the screen if the CD has been encoded with text informa-

tion. Depending on how the MP3/WMA CD is encoded, information such as Artist, Song and Folder will be displayed.

The track number and the total number of tracks in the current folder or on the current disc are displayed on the screen as well.

SEEK/TRACK (Reverse or Fast Forward) button

Press and hold the ⏮ or ⏭ SEEK/TRACK button for 1.5 seconds while the compact disc is playing to reverse or fast forward the track being played. The compact disc plays at an increased speed while reversing or fast forwarding. When the button is released, the compact disc returns to normal play speed.

SEEK/TRACK button

Press the ⏮ SEEK/TRACK button while a CD or MP3/WMA CD is playing to return to the beginning of the current track. Press the ⏮ SEEK/TRACK button several times to skip backward several tracks.

Press the ⏭ SEEK/TRACK button while a CD or MP3/WMA CD is playing to advance one track. Press the ⏭ SEEK/TRACK button several times to skip forward several tracks. If the last track on a CD is skipped, the first track on the disc is played. If the last track in a folder of an MP3/WMA CD is skipped, the first track of the next folder is played.

TUNE/FOLDER knob (MP3/WMA CD only)

If a MP3/WMA CD with multiple folders is playing, turn the TUNE/FOLDER knob to change folders. Turn the knob to the left to skip back a folder. Turn the knob to the right to skip ahead a folder.

RPT (repeat) button

When the RPT (repeat) button is pressed while a compact disc is playing, the play pattern can be changed as follows:

CD:

1 Track Repeat ⟷ OFF

CD with MP3 or WMA:

1 Folder Repeat → 1 Track Repeat → OFF

1 Track Repeat: the current track will be repeated.

1 Folder Repeat: the current folder will be repeated.

OFF: No repeat play pattern is applied. The indicator on the display will turn off.

The current play pattern of the CD is displayed on the screen unless no pattern is applied.

RDM (random) button

When the RDM (random) button is pressed while a compact disc is playing, the play pattern can be changed as follows:

CD:

1 Disc Random ⟷ OFF

CD with MP3 or WMA:

1 Disc Random → 1 Folder Random → OFF

1 Disc Random: all tracks on the disc will be played randomly.

1 Folder Random: all tracks in the current folder will be played randomly.

OFF: No random play pattern is applied. The indicator on the display will turn off.

The current play pattern of the CD is displayed on the screen unless no pattern is applied.

CD EJECT button

When the ⏏ CD EJECT button is pressed with a compact disc loaded, the compact disc will eject and the last source will be played.

When the ⏏ CD EJECT button is pressed twice with a compact disc loaded, the compact disc will be ejected further for easier CD removal. If the disc is not removed within 20 seconds, the disc will reload.

Additional features

For additional information, refer to "iPod® player operation without Navigation System" regarding the iPod® player available with this system in this section.

For additional information, refer to "USB (Universal Serial Bus) Connection Port (models without Navigation System)" regarding the USB connection port available with this system in this section.

For additional information, refer to "Bluetooth® streaming audio without Navigation System" about the Bluetooth® audio interface available with this system in this section.

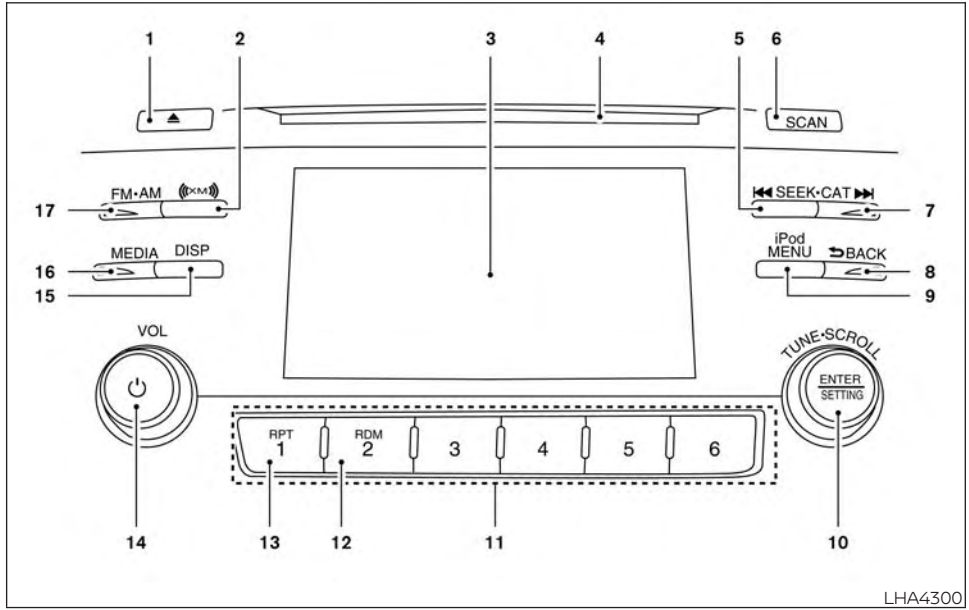

FM/AM/SAT RADIO WITH COMPACT DISC (CD) PLAYER (Type A) (if so equipped)

For all operation precautions, refer to "Audio operation precautions" in this section.

1. ⏏ CD eject button
2. XM button*
3. Display screen
4. CD insert slot

5. ⏮ SEEK button
6. SCAN button
7. ⏭ CAT button
8. ⮌ BACK button
9. iPod MENU button
10. ENTER/SETTING button / TUNE/ SCROLL knob
11. Station select (1 - 6) buttons
12. RDM (random) button
13. RPT (repeat) button
14. ⏻ (power) button / VOL (volume) control knob
15. DISP (display) button
16. MEDIA button
17. FM•AM button

*No satellite radio reception is available when the XM button is pressed to access satellite radio stations unless optional satellite receiver and antenna are installed and an SiriusXM® Satellite Radio service subscription is active. Satellite radio is not available in Alaska, Hawaii and Guam.

Audio main operation

⏻ (power) button / VOL (volume) control knob

Place the ignition switch in the ACC or ON position and press the ⏻ (power) button while the system is off to call up the mode (radio, CD, AUX, Bluetooth® audio, USB or iPod®) that was playing immediately before the system was turned off.

To turn the system off, press the ⏻ (power) button.

Turn the VOL (volume) control knob to adjust the volume.

This vehicle may be equipped with Speed Sensitive Volume. When this feature is active, the audio volume changes as the driving speed changes.

ENTER/SETTING button

Press the ENTER/SETTING button to show the Settings screen on the display. Turn the TUNE/SCROLL knob to navigate the options and then press the ENTER/SETTING button to make a selection.

Audio		
	Bluetooth	Adjusts Bluetooth® settings
	Bass	Adjusts the bass to the desired level.
	Treble	Adjusts the treble to the desired level.
	Balance	Adjusts the balance to the desired level. Balance adjusts the sound level between the left and right speakers.
	Fade	Adjusts the fade to the desired level. Fade adjusts the sound level between the front and rear speakers.
	Brightness	Adjust the brightness to adjust the appearance of the display screen.
	Contrast	Adjust the contrast to adjust the appearance of the display screen.
	Clock adjust	Press the ENTER/SETTING button to highlight the hours or minutes and then use the TUNE/SCROLL knob to adjust the value. Press the ENTER/SETTING button again to set the value.
	On-Screen Clock	Toggles ON or OFF the clock display on the upper right corner of the display screen.
	RDS Display	Toggles ON or OFF the RDS information displayed on the screen while the radio is playing.
	Speed Sens Vol. (Speed Sensitive Volume)	Adjusts the speed sensitive volume function, which increases the volume of the audio system as the speed of the vehicle increases. Set to "OFF" to disable the feature. The higher the setting, the more the volume increases in relation to vehicle speed.
	AUX Vol.	Choose a setting from 0 to +3 to control the boost of incoming auxiliary device volume. A setting of 0 provides no additional boost in volume. A setting of +3 provides the greatest boost in volume.
	Language Select	Select the desired language for the system from the available options.
	Auto Source Change	Select ON or OFF for Auto Source Change. With Auto Source Change ON: when device is plugged into USB port, radio will automatically switch to USB source. With Auto Source Change OFF: when device is plugged into USB port, radio will stay on currently selected source.

Bass, treble, balance and fade can also be adjusted by pressing the ENTER/SETTING button and turning the TUNE/SCROLL control knob to select the item to adjust. When the desired item is shown on the display, turn the tuning to adjust and then press the ENTER/SETTING button until the display returns to the main audio screen. If the button is not pressed for approximately 10 seconds, the radio or CD display will automatically reappear.

iPod MENU button

This button can only be used for iPod® operations. For additional information, refer to "iPod® player operation (models without navigation system)" in this section.

DISP (display) button

The DISP (display) button turns the display screen on or off.

BACK button

Press the BACK button to return to the previous menu screen.

FM/AM/SAT radio operation

FM·AM button

Press the FM·AM button to change the band as follows:

AM → FM1 → FM2 → AM

If another audio source is playing when the FM·AM button is pressed, the audio source playing will automatically be turned off and the last radio station played will begin playing.

The FM stereo indicator (STEREO) is shown on the screen during FM stereo reception. When the stereo broadcast signal is weak, the radio automatically changes from stereo to monaural reception.

XM band select

Press the XM button to change the band as follows:

XM1* → XM2* → XM3* → XM1 (satellite, if so equipped)

When the XM button is pressed while the ignition switch is in the ACC or ON position, the radio will come on at the station last played.

The last station played will also come on when the VOL (volume)/ (power) control knob/button is pressed on.

*When the XM button is pressed, the satellite radio reception will not be available unless an optional satellite receiver and antenna are installed and a SiriusXM® Satellite Radio service subscription is active. Satellite radio is not available in Alaska, Hawaii and Guam.

If a compact disc is playing when the XM button is pressed, the compact disc will automatically be turned off and the last radio station played will come on.

TUNE/SCROLL knob (Tuning)

Turn the TUNE/SCROLL knob to the left or right for manual tuning.

SEEK tuning

Press the SEEK button or CAT button to tune from low to high or high to low frequencies and to stop at the next broadcasting station.

SCAN tuning

Press the SCAN button to stop at each broadcasting station for 5 seconds. SCAN will appear on the screen while the radio is scan tuning.

Pressing the SCAN button again during this 5 second period will stop SCAN tuning and the radio will remain tuned to that station. If the SCAN button is not pressed within 5 seconds, SCAN tuning moves to the next station.

1 to 6 Station memory operations

Six stations can be set for the AM band. Twelve stations can be set for the FM band (six for FM1, six for FM2).

1. Choose the radio band AM, FM1 or FM2 using the FM·AM button.

2. Tune to the desired station using the ⏮ or ⏭ SEEK/CAT button. Press and hold any of the desired station memory buttons (1 – 6) until the preset number is updated on the display and a beep is heard.
3. Programming is now complete.
4. Other buttons can be set in the same manner.

If the battery cable is disconnected, or if the fuse opens, the radio memory will be canceled. In that case, reset the desired stations.

Compact disc (CD) player operation

If the radio is already operating, it automatically turns off and the compact disc begins to play.

MEDIA button

With a CD loaded, press the MEDIA button until the CD mode is displayed on the screen.

CD/MP3 display mode

While listening to an MP3/WMA CD, certain text may be displayed on the screen if the CD has been encoded with text information. Depending on how the MP3/WMA CD is encoded, information such as Artist, Song and Folder will be displayed.

The track number and the total number of tracks in the current folder or on the current disc are displayed on the screen as well.

SEEK/CAT (Reverse or Fast Forward) button

Press and hold the ⏮ or ⏭ SEEK/CAT button for 1.5 seconds while the compact disc is playing to reverse or fast forward the track being played. The compact disc plays at an increased speed while reversing or fast forwarding. When the button is released, the compact disc returns to normal play speed.

SEEK/CAT button

Press the ⏮ SEEK/CAT button while a CD or MP3/WMA CD is playing to return to the beginning of the current track. Press the ⏮ SEEK/CAT button several times to skip backward several tracks.

Press the ⏭ SEEK/CAT button while a CD or MP3/WMA CD is playing to advance one track. Press the ⏭ SEEK/CAT button several times to skip forward several tracks. If the last track on a CD is skipped, the first track on the disc is played. If the last track in a folder of an MP3/WMA CD is skipped, the first track of the next folder is played.

TUNE/SCROLL knob (MP3/WMA CD only)

If a MP3/WMA CD with multiple folders is playing, turn the TUNE/SCROLL knob to change folders. Turn the knob to the left to skip back a folder. Turn the knob to the right to skip ahead a folder.

RPT (repeat) button

When the RPT (repeat) button is pressed while a compact disc is playing, the play pattern can be changed as follows:

CD:

1 Track Repeat ⟷ OFF

CD with MP3 or WMA:

1 Folder Repeat → 1 Track Repeat → OFF

1 Track Repeat: the current track will be repeated.

1 Folder Repeat: the current folder will be repeated.

OFF: No repeat play pattern is applied. The indicator on the display will turn off.

The current play pattern of the CD is displayed on the screen unless no pattern is applied.

RDM (random) button

When the RDM (random) button is pressed while a compact disc is playing, the play pattern can be changed as follows:

CD:

1 Disc Random ⟷ OFF

CD with MP3 or WMA:

1 Disc Random → 1 Folder Random → OFF

1 Disc Random: all tracks on the disc will be played randomly.

1 Folder Random: all tracks in the current folder will be played randomly.

OFF: No random play pattern is applied. The indicator on the display will turn off.

The current play pattern of the CD is displayed on the screen unless no pattern is applied.

CD EJECT button

When the ⏏ CD EJECT button is pressed with a compact disc loaded, the compact disc will eject and the last source will be played.

When the ⏏ CD EJECT button is pressed twice with a compact disc loaded, the compact disc will be ejected further for easier CD removal. If the disc is not removed within 20 seconds, the disc will reload.

Additional features

For additional information, refer to "iPod® player operation without Navigation System" regarding the iPod® player available with this system in this section.

For additional information, refer to "USB (Universal Serial Bus) Connection Port (models without Navigation System)" regarding the USB connection port available with this system in this section.

For additional information, refer to "Bluetooth® streaming audio without Navigation System" about the Bluetooth® audio interface available with this system in this section.

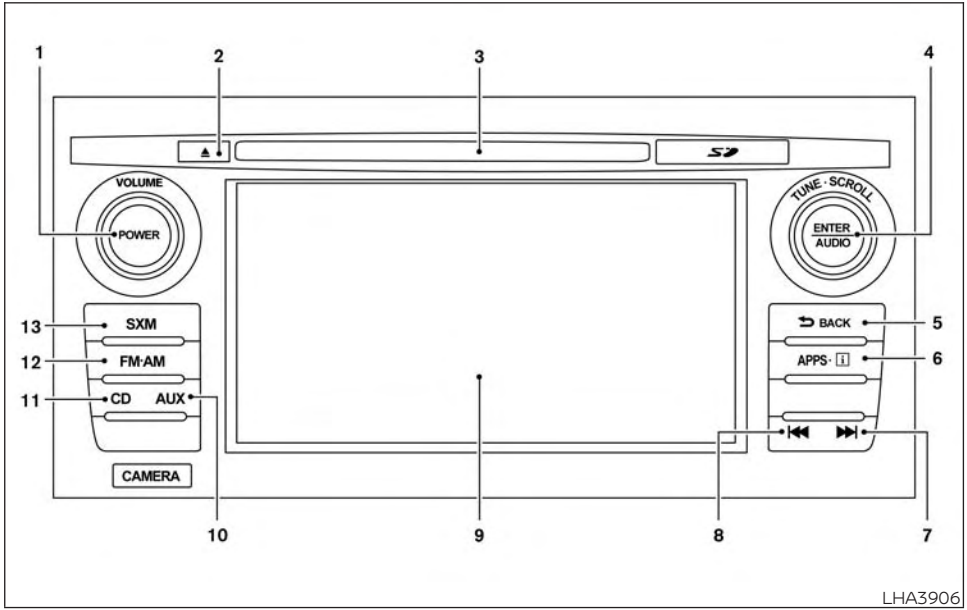

FM/AM/SAT RADIO WITH COMPACT DISC (CD) PLAYER (Type B) (if so equipped)

1. POWER button / VOLUME control knob
2. ⏏ CD eject button
3. CD insert slot
4. ENTER/AUDIO button/TUNE/SCROLL knob
5. ⮌ BACK button
6. APPS button
7. ⏭ TRACK button
8. ⏮ SEEK button
9. Display screen
10. AUX button
11. CD button
12. FM-AM button
13. SXM button*

The [APPS] button launches the Smartphone Integration Mode. For additional information, refer to "NissanConnect® Mobile Apps" in this section.

*No satellite radio reception is available when the SXM button is pressed to access satellite radio stations unless optional satellite receiver and antenna are installed and an SiriusXM® Satellite Radio service subscription is active. Satellite radio is not available in Alaska, Hawaii and Guam.

For additional information, refer to "Audio operation precautions" in this section.

Audio main operation

POWER button/VOLUME control knob

Place the ignition switch in the ACC or ON position, and then press the POWER button while the system is off to call up the mode (radio or CD) which was playing immediately before the system was turned off.

To turn the system off, press the POWER button.

Turn the VOLUME control knob to adjust the volume.

This vehicle may be equipped with Speed Sensitive Volume for audio. The audio volume changes as the driving speed changes.

Audio settings

1. Press the [APPS] button.
2. Touch the "Settings" key.
3. Touch the "Audio" key.

Use the touch-screen to adjust the following items to the desired setting:

Audio		
	Bass	Adjusts the bass to the desired level.
	Treble	Adjusts the treble to the desired level.
	Balance	Adjusts the balance to the desired level. Balance adjusts the sound level between the left and right speakers.
	Fade	Adjusts the fade to the desired level. Fade adjusts the sound level between the front and rear speakers.
	Speed Sensitive Vol.	Adjusts the Speed Sensitive Volume function, which increases the volume of the audio system as the speed of the vehicle increases. Set to "OFF" to disable the feature. The higher the setting, the more the volume increases in relation to vehicle speed.
	AUX Volume Level	Controls the volume level of incoming sound when an auxiliary device is connected to the system. Available options are Low (Quiet), Medium, and High (Loud).

Bass, treble, balance and fade can also be adjusted by pressing the ENTER/AUDIO button and turning the TUNE/SCROLL knob to select the item to adjust. When the desired item is shown on the display, turn the tuning to adjust and then press the ENTER/AUDIO button until the display returns to the main audio screen. If the button is not pressed for approximately 10 seconds, the radio or CD display will automatically reappear.

SXM settings

To view the SXM settings:

1. Press the [APPS] button.
2. Touch the "Settings" key.
3. Touch the "SXM" key.

The signal strength, activation status and other information are displayed on the screen.

AUX button

The AUX IN audio input jack accepts any standard analog audio input such as from a portable cassette tape/CD player, MP3 player or a laptop computer. Press the AUX button to play a compatible device plugged into the AUX IN jack.

FM/AM/SAT radio operation

FM·AM button

Press the FM·AM button to change the band as follows:

AM → FM1 → FM2 → AM

If another audio source is playing when the FM·AM button is pressed, the audio source playing will automatically be turned off and the last radio station played will begin playing.

SXM band select

Pressing the SXM button will change the band as follows:

SXM1* → SXM2*→ SXM3* → SXM1* (satellite, if so equipped)

When the SXM button is pressed while the ignition switch is in the ACC or ON position, the radio will come on at the last station played.

The last station played will also come on when the VOL (volume) control knob is pressed to turn the radio on.

*When the SXM button is pressed, the satellite radio mode will be skipped unless an optional satellite receiver and antenna are installed and a SiriusXM® Satellite Radio service subscription is active. Satellite radio is not available in Alaska, Hawaii and Guam.

If a compact disc is playing when the SXM button is pressed, the compact disc will automatically be turned off and the last radio station played will come on.

While the radio is in SXM mode, the operation can be controlled through the touch-screen. Touch the "Channels" key to display a list of channels. Touch a channel displayed on the list to change to that channel. Touch the "Categories" key to display a list of categories. Touch a category displayed on the list to display options within that category.

Tuning with the touch-screen

When in AM or FM mode, the radio can be tuned using the touch-screen. To bring up the visual tuner, touch the "Tune" key on the lower right corner of the screen. A screen appears with a bar running from low frequencies on the left to high frequencies on the right. Touch the screen at the location of the frequency you wish to tune and the station will change to that frequency. To return to the regular radio display screen, touch the "OK" key.

Tuning with the TUNE knob

The radio can also be manually tuned using the TUNE knob. When in FM or AM mode, turn the TUNE knob to the left for lower frequencies or to the right for higher frequencies. When in SXM mode, turn the TUNE knob to change the channel.

SEEK/TRACK tuning

When in FM or AM mode, press the SEEK button or TRACK button to tune from low to high or high to low frequencies and to stop at the next broadcasting station.

When in SXM mode, press the SEEK button or TRACK button to change the category.

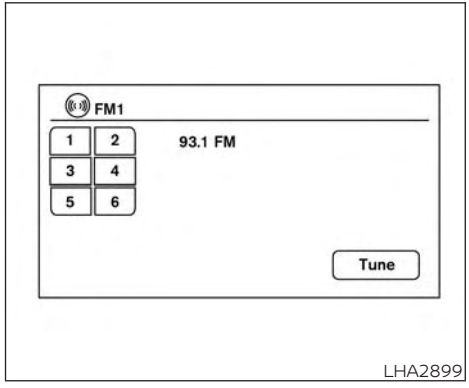

1 to 6 Station memory operations

Twelve stations can be set for the FM band (6 for FM1, 6 for FM2) and six stations can be set for the AM band. Eighteen stations can be set for the SXM band (6 for SXM1, 6 for SXM2 and 6 for SXM3).

1. Choose the radio band AM, FM1 or FM2 using the FM·AM select button or choose the radio band SXM1, SXM2 and SXM3 using the SXM button.
2. Tune to the desired station using manual or seek tuning. Press and hold any of the desired station memory buttons (1 – 6) until a beep sound is heard.
3. The channel indicator will then come on and the sound will resume. Programming is now complete.
4. Other buttons can be set in the same manner.

If the battery cable is disconnected or if the fuse opens, the radio memory will be canceled. In that case, reset the desired stations.

Presets can also be selected by touching the desired preset number on the screen.

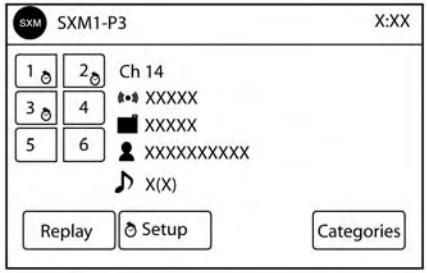

LHA3085

Smart Favorites Preset Setup (if so equipped)

The Smart Favorites feature allows the user to designate presets, within the SXM1, SXM2 and SXM3 bands, as their Smart Favorites. When any of the Smart Favorite presets are selected, the current track on that station will play from the beginning of the song.

To program a Smart Favorite preset:

1. Press the SXM button.
2. Touch the "Setup" key.
3. Touch the "Tune Start" key to activate (ON) or deactivate (OFF) Smart Favorites.
4. Touch the "Add Preset" key to select an available preset.

For additional information, refer to "1 to 6 Station memory operations" in this section.

NOTE:

▪ Smart Favorites will start functioning only after the audio unit is turned on for a few minutes.
▪ Tune Start is supported for music channels only.

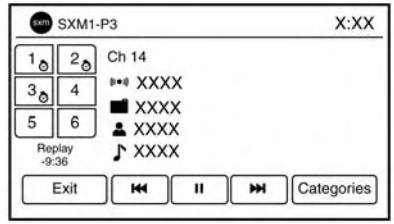

LHA3087

Replay Screen

The Replay Screen gives the user the ability to replay, skip, pause or rewind the currently aired track.

When the "Replay" key is touched, the Replay Screen is prompted.

REPLAY

To replay a track from the beginning, press the ⏮ seek button. The user can continue to press the ⏮ seek button to replay previous songs, but can only go back as far as the system permits. The system will warn the user when they cannot skip any further back by displaying "At the End" in the bottom left corner of the screen.

SKIP

To skip a track, press the ⏭ track button. "Live" will appear in the bottom left corner of the screen indicating the difference from play time to live audio.

PAUSE

To pause a track, press the ⏸ pause button.

REWIND/ FAST FORWARD

To rewind/ fast forward a track, hold the ⏮ or ⏭ seek/track button.

Compact disc (CD) player operation

If the radio is already operating, it automatically turns off and the compact disc begins to play.

CD button

When the CD button is pressed with the system off and the compact disc loaded, the system will turn on and the compact disc will start to play.

When the CD button is pressed with a compact disc loaded and the radio playing, the radio will automatically be turned off and the compact disc will start to play.

CD/MP3 display mode

Menu item		
CD/MP3 display mode		While listening to a CD or an MP3/WMA CD, certain text may be displayed (when a CD encoded with text is being used). Depending on how the CD or MP3/WMA CD is encoded, the text is displayed listing the artist, album and song title. There are other keys displayed on the screen when a CD is playing:
	Random	Touch the "Random" key to apply a random play pattern to the CD. If an MP3 CD is playing, touching "Random" key alternates between the Random Folder and Random All. This text will appear on the display. To cancel random mode, touch the "Random" key until the key is no longer highlighted.
	Repeat	Touch the "Repeat" key to apply a repeat play pattern to the CD. If an MP3 CD is playing, touching "Repeat" alternates between repeating the current song and repeating the current folder. This text will appear on the display. To cancel repeat mode, touch the "Repeat" key until the key is no longer highlighted
	Browse	Touch the "Browse" key to display the titles on the CD in list format. Touch the title of a song in the list to begin playing that song. If an MP3 CD is playing, touching the "Browse" key will also list the folders on the disc. Follow the procedure for selecting a song with the touch-screen to choose a folder.

SEEK/TRACK (Reverse or Fast Forward) buttons

Press and hold the ⏮ SEEK button or ⏭ TRACK button for 1.5 seconds while the compact disc is playing to reverse or fast forward the track being played. The compact disc plays at an increased speed while reversing or fast forwarding. When the button is released, the compact disc returns to normal play speed.

SEEK/TRACK buttons

Press the ⏮ SEEK button while a CD or MP3/WMA CD is playing to return to the beginning of the current track. Press the ⏮ SEEK button several times to skip backward several tracks.

Press the ⏭ TRACK button while a CD or MP3/WMA CD is playing to advance one track. Press the ⏭ TRACK button several times to skip forward several tracks. If the last track on a CD is skipped, the first track on the disc is played. If the last track in a folder of an MP3/WMA CD is skipped, the first track of the next folder is played.

CD EJECT button

When the ⏏ CD eject button is pressed with a compact disc loaded, the compact disc will eject and the last source will be played.
If the disc is not removed within 10 seconds, the disc will reload.

Additional features

For additional information, refer to "iPod® player operation with Navigation System" in this section.

For additional information, refer to "USB (Universal Serial Bus) connection port (models with Navigation System)" in this section.

For additional information, refer to "Bluetooth® streaming audio with Navigation System" in this section.

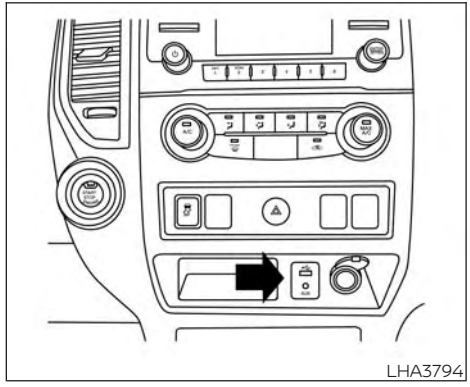

USB (Universal Serial Bus) CONNECTION PORT (models without Navigation System) (if so equipped)

Connecting a device to the USB Connection Port

⚠ WARNING

Do not connect, disconnect, or operate the USB device while driving. Doing so can be a distraction. If distracted you could lose control of your vehicle and cause an accident or serious injury.

⚠ CAUTION

- **To avoid damage and loss of function when using a USB device, note the following precautions.**
- **Do not force the USB device into the USB port. Inserting the USB device tilted or up-side-down into the port may damage the port. Make sure that the USB device is connected correctly into the USB port.**
- **Do not grab the USB port cover (if so equipped) when pulling the USB device out of the port. This could damage the port and the cover.**
- **Do not leave the USB cable in a place where it can be pulled unintentionally. Pulling the cable may damage the port.**

For additional information, refer to your device manufacturer's owner information regarding the proper use and care of the device.

The USB port is located on the instrument panel beneath the heater and air conditioner controls. Insert the USB device into the connection port.

When a compatible storage device is plugged into the connection port, compatible audio files on the storage device can be played through the vehicle's audio system.

Audio file operation

MEDIA button

Place the ignition switch in the ON or ACC position and press the MEDIA button to switch to the USB input mode. If a CD is playing or another audio source is plugged in through the AUX IN jack located on the instrument panel, the MEDIA button toggles between the three sources.

Play information

Information about the audio files being played can be displayed on the display screen of the vehicle's audio system. Depending on how the audio files are encoded, information such as Folder, Song and Artist will be displayed.

The track number and number of total tracks in the folder are displayed on the screen as well.

⏮ ⏭ SEEK/CAT and TRACK (Reverse or Fast Forward) button

Press and hold the ⏮ or ⏭ SEEK/CAT and TRACK buttons for 1.5 seconds while an audio file on the USB device is playing to reverse or fast forward the track being played. The track plays at an increased speed while reversing or fast forwarding. When the button is released, the audio file returns to normal play speed.

⏮ ⏭ SEEK/CAT and TRACK buttons

Press the SEEK/CAT or TRACK button ⏮ while an audio file on the USB device is playing to return to the beginning of the current track. Press the SEEK/CAT or TRACK button ⏮ several times to skip backward several tracks.

Press the SEEK/CAT or TRACK button ⏭ while an audio file on the USB device is playing to advance one track. Press the SEEK/CAT or TRACK button ⏭ several times to skip forward several tracks. If the last track in a folder on the USB device is skipped, the first track of the next folder is played.

RDM (random) button

When the RDM (random) button is pressed while an audio file on the USB device is playing, the play pattern can be changed as follows:

All Random → 1 Folder Random → OFF

All Random: all tracks on the USB device will be played randomly.

1 Folder Random: all tracks in the current folder will be played randomly.

OFF: No random play pattern is applied. The indicator on the display will turn off.

The current play pattern of the USB device is displayed on the screen unless no pattern is applied.

RPT (repeat) button

When the RPT (repeat) button is pressed while an audio file on the USB device is playing, the play pattern can be changed as follows:

1 Folder Repeat → 1 Track Repeat → OFF

1 Track Repeat: the current track will be repeated.

1 Folder Repeat: the current folder will be repeated.

OFF: No repeat play pattern is applied. The indicator on the display will turn off.

The current play pattern of the USB device is displayed on the screen unless no pattern is applied.

TUNE/SCROLL knob (If so equipped)

If there are multiple folders with audio files on the USB device, turn the TUNE/SCROLL knob to change folders. Turn the knob to the left to skip back a folder. Turn the knob to the right to skip ahead a folder. If there is only one folder of audio files on the USB device, turning the TUNE/SCROLL knob in either direction will return to the first track on the USB device.

TUNE/FOLDER knob (if so equipped)

If there are multiple folders with audio files on the USB device, turn the TUNE/FOLDER knob to change folders. Turn the knob to the left to skip back a folder. Turn the knob to the right to skip ahead a folder. If there is only one folder of audio files on the USB device, turning the TUNE/FOLDER knob in either direction will return to the first track on the USB device.

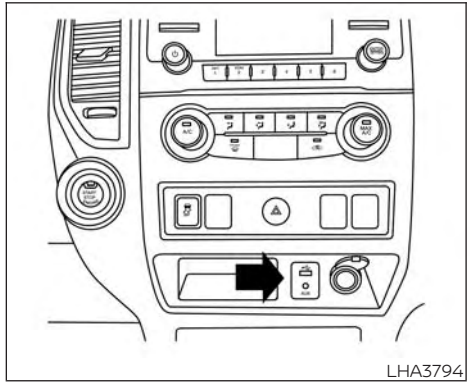

USB (Universal Serial Bus) CONNECTION PORT (models with Navigation System) (if so equipped)

Connecting a device to the USB Connection Port

⚠ WARNING

Do not connect, disconnect, or operate the USB device while driving. Doing so can be a distraction. If distracted you could lose control of your vehicle and cause an accident or serious injury.

⚠ CAUTION

- **To avoid damage and loss of function when using a USB device, note the following precautions.**
- **Do not force the USB device into the USB port. Inserting the USB device tilted or up-side-down into the port may damage the port. Make sure that the USB device is connected correctly into the USB port.**
- **Do not grab the USB port cover (if so equipped) when pulling the USB device out of the port. This could damage the port and the cover.**
- **Do not leave the USB cable in a place where it can be pulled unintentionally. Pulling the cable may damage the port.**

For additional information, refer to your device manufacturer's owner information regarding the proper use and care of the device.

The USB port is located on the instrument panel beneath the heater and air conditioner controls. Insert the USB device into the connection port.

When a compatible storage device is plugged into the connection port, compatible audio files on the storage device can be played through the vehicle's audio system.

Audio file operation

AUX button

Place the ignition switch in the ON or ACC position and press the AUX button to switch to the USB input mode. If another audio source is playing and a USB memory device is inserted, press the AUX button until the center display changes to the USB memory mode.

If the system has been turned off while the USB memory was playing, press the POWER button to restart the USB memory.

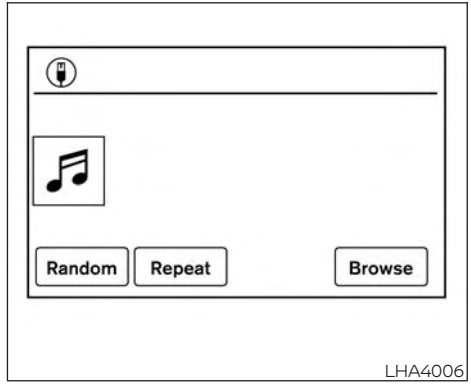

Play information

Information about the audio files being played is shown on the display screen of the vehicle's audio system. Touch "Browse" to display the list of folders and files on the USB device. Touch the name of a song on the screen to begin playing that song.

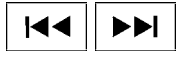

SEEK/TRACK buttons

Press the ⏮ SEEK/TRACK button while an audio file on the USB device is playing to return to the beginning of the current track. Press the ⏮ SEEK/TRACK button several times to skip backward several tracks.

Press the ▶▶| SEEK/TRACK while an audio file on the USB device is playing to advance one track. Press the ▶▶| SEEK/TRACK several times to skip forward several tracks. If the last track in a folder on the USB device is skipped, the first track of the next folder is played.

Random and repeat play mode

While files on a USB device are playing, the play pattern can be altered so that songs are repeated or played randomly.

Random

Touch the "Random" key to apply a random play pattern to the USB device. When the Random mode is active, the icon will illuminate. By touching the "Random" key again, the "Random Folder" key appears. By touching the "Random" key once more, the "Random All" key appears. To cancel Random mode, touch the "Random" key until no icons are illuminated.

Repeat

Touch the "Repeat" key to apply a repeat play pattern to the USB device. When the Repeat mode is active, the icon will illuminate. By touching the "Repeat" key again, the "Repeat Track" key appears. By touching the "Repeat" key once more, the "Repeat Folder" key appears. . To cancel Repeat mode, touch the "Repeat" key until no icons are illuminated.

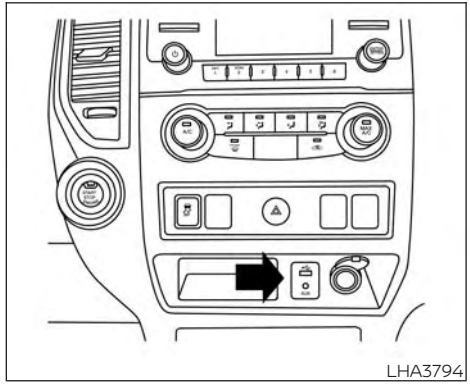

iPod®* PLAYER OPERATION WITHOUT NAVIGATION SYSTEM (if so equipped)

Connecting iPod®

⚠ WARNING

Do not connect, disconnect, or operate the USB device while driving. Doing so can be a distraction. If distracted you could lose control of your vehicle and cause an accident or serious injury.

⚠ CAUTION

- **Do not force the USB device into the USB port. Inserting the USB device tilted or up-side-down into the port may damage the port. Make sure that the USB device is connected correctly into the USB port.**
- **Do not grab the USB port cover (if so equipped) when pulling the USB device out of the port. This could damage the port and the cover.**
- **Do not leave the USB cable in a place where it can be pulled unintentionally. Pulling the cable may damage the port.**

For additional information, refer to your device manufacturer's owner information regarding the proper use and care of the device.

To connect an iPod® to the vehicle so that the iPod® can be controlled with the audio system controls and display screen, use the USB connection port located on the instrument panel below the heater and air conditioner controls. Connect the iPod®-specific end of the cable to the iPod® and the USB end of the cable to the USB connection port on the vehicle. If your iPod® supports charging via a USB connection, its battery will be charged while connected to the vehicle with the ignition switch in the ACC or ON position.

While connected to the vehicle, the iPod® can only be operated by the vehicle audio controls.

To disconnect the iPod® from the vehicle, remove the USB end of the cable from the USB connection port on the vehicle, then remove the cable from the iPod®.

* iPod® is a trademark of Apple Inc., registered in the U.S. and other countries.

Compatibility

The following models are compatible:

- iPod® Classic - 5th Generation (firmware version 1.3.0 or later)
- iPod® Classic - 6th Generation (firmware version 2.0.1 or later)
- iPod® Classic - 7th Generation (firmware version 2.0.4 or later)
- iPod® nano - 1st generation (firmware version 1.3.1 or later)
- iPod® nano - 2nd generation (firmware version 1.1.3 or later)
- iPod® nano - 3rd generation (firmware version 1.1.3 or later)
- iPod® nano - 4th generation (firmware version 1.0.4 or later)
- iPod® nano - 5th generation (firmware version 1.0.2 or later)
- iPod® nano - 6th generation (firmware version 1.1 or later)
- iPod® Touch - 2nd generation (firmware version 4.2.1 or later)
- iPod® Touch - 3rd generation (firmware version 5.1 or later) (minimum iOS 5.0 required for smartphone integration)
- iPod® Touch - 4th generation (firmware version 5.1 or later) (minimum iOS 5.0 required for smartphone integration)
- iPhone® 3G (firmware version 4.2.1 or later)
- iPhone® 3GS (firmware version 5.1 or later) (minimum iOS 5.0 required for smartphone integration)
- iPhone® 4 (firmware version 5.1 or later) (minimum iOS 5.0 required for smartphone integration)

- iPhone® 4S (firmware version 5.1 or later) (minimum iOS 5.0 required for smartphone integration)

Make sure that your iPod® firmware is updated to the version indicated above.

Audio main operation

Place the ignition switch in the ACC or ON position. Press the MEDIA button repeatedly to switch to the iPod® mode.

If the system has been turned off while the iPod® was playing, pressing the ⏻ button will start the iPod®.

SEEK/CAT and TRACK buttons

When the ⏮ SEEK/CAT button or ⏭ TRACK button is pressed for less than 1.5 seconds while the iPod® is playing, the next track or the beginning of the current track on the iPod® will be played.

When the ⏮ SEEK/CAT button or ⏭ TRACK button is pressed for more than 1.5 seconds while the iPod® is playing, the iPod® will play while fast forwarding or rewinding. When the button is released, the iPod® will return to the normal play speed.

REPEAT (RPT)

When the RPT button is pressed while a track is being played, the play pattern can be changed as follows:

Repeat Off → 1 Track Repeat → All Repeat → Repeat Off

1 Track Repeat: the current track will be repeated.

All Repeat: all songs in the current list are repeated.

Repeat Off: no repeat play pattern is applied.

RANDOM (RDM)

When the RDM button is pressed while a track is being played, the play pattern can be changed as follows:

Shuffle Off → Track Shuffle → Shuffle Off

Track Shuffle: the tracks in the current list will be played randomly.

Album Shuffle: the albums in the current list will be played randomly.

Shuffle Off: no random play pattern is applied.

↩ BACK button

When the ↩ BACK button is pressed, it returns to the previous menu.

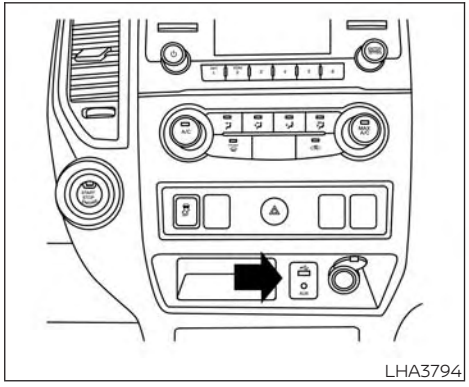

iPod®* PLAYER OPERATION WITH NAVIGATION SYSTEM (if so equipped)

Connecting iPod®

⚠ WARNING

Do not connect, disconnect, or operate the USB device while driving. Doing so can be a distraction. If distracted you could lose control of your vehicle and cause an accident or serious injury.

⚠ CAUTION

- **Do not force the USB device into the USB port. Inserting the USB device tilted or up-side-down into the port may damage the port. Make sure that the USB device is connected correctly into the USB port.**
- **Do not grab the USB port cover (if so equipped) when pulling the USB device out of the port. This could damage the port and the cover.**
- **Do not leave the USB cable in a place where it can be pulled unintentionally. Pulling the cable may damage the port.**

For additional information, refer to your device manufacturer's owner information regarding the proper use and care of the device.

To connect an iPod® to the vehicle so that the iPod® can be controlled with the audio system controls and display screen, use the USB connection port located on the instrument panel below the heater and air conditioner controls. Connect the iPod®-specific end of the cable to the iPod® and the USB end of the cable to the USB connection port on the vehicle. If your iPod® supports charging via a USB connection, its battery will be charged while connected to the vehicle with the ignition switch in the ACC or ON position.

While connected to the vehicle, the iPod® can only be operated by the vehicle audio controls.

To disconnect the iPod® from the vehicle, remove the USB end of the cable from the USB connection port on the vehicle, then remove the cable from the iPod®.

* iPod® is a trademark of Apple Inc., registered in the U.S. and other countries.

Compatibility

The following models are compatible:

- iPod® Classic 5th generation (firmware version 1.3.0 or later)
- iPod® Classic 6th generation (firmware version 2.0.1 or later)
- iPod® Classic 7th generation (firmware version 2.0.4 or later)
- iPod® Touch 2nd generation (firmware version 4.2.1 or later)*
- iPod® Touch 3rd generation (firmware version 5.1 or later)

- iPod® Touch 4th generation (firmware version 5.1 or later)
- iPod® nano - 1st generation (firmware version 1.3.1 or later)
- iPod® nano - 2nd generation (firmware version 1.1.3 or later)
- iPod® nano - 3rd generation (firmware version 1.1.3 or later)
- iPod® nano - 4th generation (firmware version 1.0.4 or later)
- iPod® nano - 5th generation (firmware version 1.0.2 or later)
- iPod® nano - 6th generation (firmware version 1.1 or later)
- iPhone® 3G (firmware version 4.2.1 or later)
- iPhone® 3GS (firmware version 5.1 or later)
- iPhone® 4 (firmware version 5.1 or later)
- iPhone® 4S (firmware version 5.1 or later)

* Some features of this iPod® may not be fully functional.

Make sure that your iPod® firmware is updated to the version indicated above.

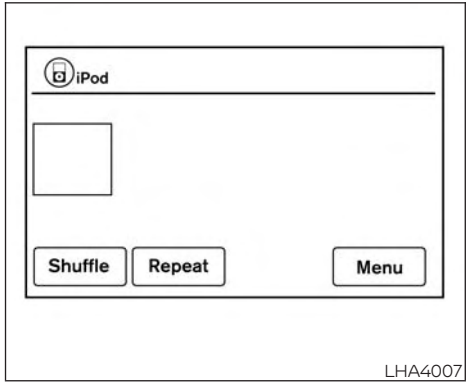

LHA4007

Audio main operation

AUX button

When the AUX button is pressed with the system off and the iPod® connected, the system will turn on. If another audio source is playing and the iPod® is connected, press the AUX button repeatedly until the center display changes to the iPod® mode.

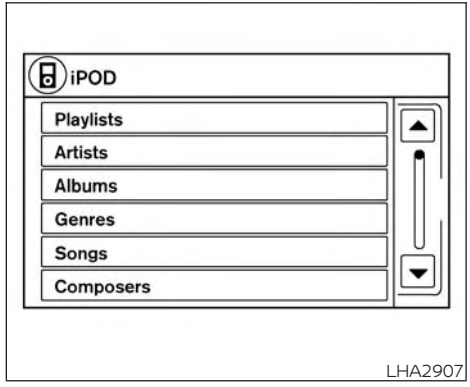

LHA2907

Interface

The interface for iPod® operation shown on the vehicle's audio system display screen is similar to the iPod® interface. Use the touch-screen, ⮌ BACK button or the scrolling knob to navigate the menus on the screen.

When the iPod® is playing, touch the "Menu" key to bring up the iPod® interface.

Depending on the iPod® model, the following items may be available on the menu list screen. For additional information, refer to the iPod® Owner's Manual regarding each menu item.

- Playlists
- Artists
- Albums
- Genres
- Songs
- Composers
- Audiobooks
- Podcasts
- Update Music Library (if so equipped)

Shuffle and repeat play mode

While the iPod® is playing, the play pattern can be altered so that songs are repeated or played randomly.

Shuffle

Touch the "Shuffle" key to apply a random play pattern to the iPod®. When the Shuffle mode is active, the text is illuminated. Touching the "Shuffle" key once more will display the "Shuffle songs" key. To cancel Shuffle mode, touch the "Shuffle" key again until the text is no longer illuminated.

Repeat

Touch the "Repeat" key to apply a repeat play pattern to the iPod®. When the repeat mode is active, the text is illuminated. Touching the "Repeat" key once more will display the "Repeat song" key. To cancel Repeat mode, touch the "Repeat" key again until the text is no longer illuminated.

SEEK/TRACK buttons

When the ⏮ SEEK or ⏭ TRACK button is pressed for less than 1.5 seconds while the iPod® is playing, the next track or the beginning of the current track on the iPod® will be played.

When the ⏮ SEEK or ⏭ TRACK button is pressed for more than 1.5 seconds while the iPod® is playing, the iPod® will play while fast forwarding or rewinding. When the button is released, the iPod® will return to the normal play speed.

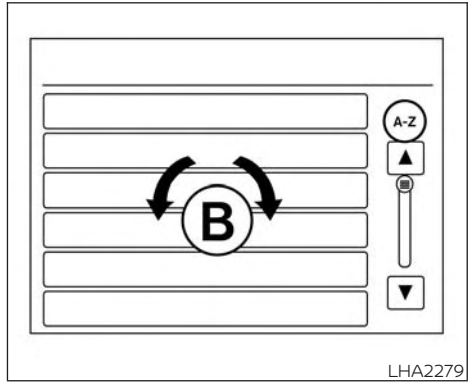

LHA2279

Scrolling menus

While navigating long lists of artists, albums or songs in the music menu, it is possible to scroll the list by the first character in the name. To activate character indexing, touch and hold the "A-Z" key in the upper right corner of the screen. Turn the TUNE/SCROLL knob to choose the number or letter to jump to in the list and then press the ENTER/AUDIO button.

If no character is selected after a few seconds, the display returns to normal.

BLUETOOTH® STREAMING AUDIO WITHOUT NAVIGATION SYSTEM (if so equipped)

If you have a compatible Bluetooth® audio device that is capable of playing audio files, the device can be connected to the vehicle's audio system so that the audio files on the device play through the vehicle's speakers.

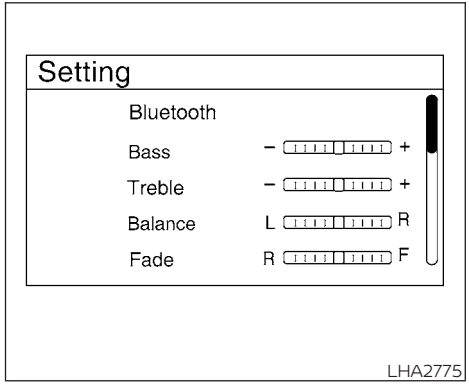

Connecting Bluetooth® audio

To connect your Bluetooth® audio device to the vehicle, follow the procedure below:

1. Press the ENTER/SETTING button.
2. Select "Bluetooth".
3. Select "Add Phone or Device". This same screen can be accessed to remove, replace or select a different Bluetooth® device.
4. The system acknowledges the command and asks you to initiate connecting from the phone handset.
5. The system will display a PIN on the screen and request confirmation that it matches the one on the handset.

NOTE:

The connecting procedure of the cellular phone varies according to each cellular phone model. For additional information, refer to the cellular phone Owner's Manual. You can also visit www.nissanusa.com/bluetooth or www.nissan.ca/bluetooth for instructions on connecting NISSAN recommended cellular phones.

Audio main operation

To switch to the Bluetooth® audio mode, press the MEDIA button repeatedly until the Bluetooth® audio mode is displayed on the screen.

The controls for the Bluetooth® audio are displayed on the screen. Use the Preset 3 button for play and the Preset 4 button for pause.

BLUETOOTH® STREAMING AUDIO WITH NAVIGATION SYSTEM (if so equipped)

If you have a compatible Bluetooth® audio device that is capable of playing audio files, the device can be connected to the vehicle's audio system so that the audio files on the device play through the vehicle's speakers.

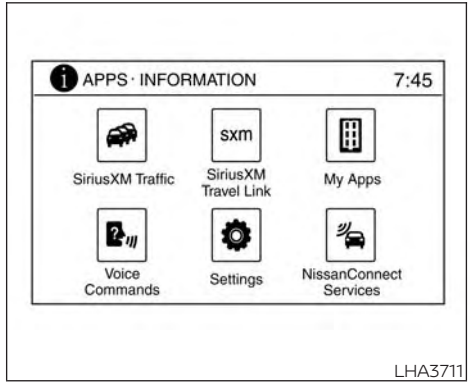

LHA3711

Connecting Bluetooth® audio

To connect your Bluetooth® audio device to the vehicle, follow the procedure below:

1. Press the [APPS] button.
2. Touch the "Settings" key.
3. Touch the "Phone & Bluetooth" key.

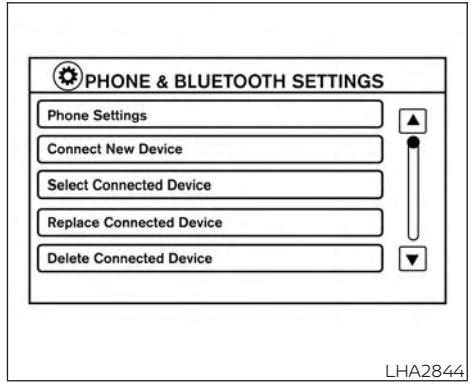

LHA2844

4. Touch the "Connect New Device" key.
5. The system acknowledges the command and asks you to initiate connecting from the phone handset.

NOTE:

The connecting procedure of the cellular phone varies according to each cellular phone model. For additional information, refer to the cellular phone Owner's Manual. You can also visit www.nissanusa.com/bluetooth or www.nissan.ca/bluetooth for instructions on connecting NISSAN recommended cellular phones.

Audio main operation

To switch to the Bluetooth® audio mode, press the AUX button repeatedly until the Bluetooth® audio mode is displayed on the screen.

The controls for the Bluetooth® audio are displayed on the screen.

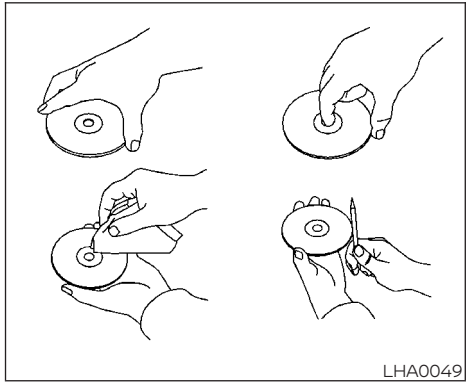

CD CARE AND CLEANING

- Handle a CD by its edges. Do not bend the disc. Never touch the surface of the disc.
- Always place the discs in the storage case when they are not being used.
- To clean a disc, wipe the surface from the center to the outer edge using a clean, soft cloth. Do not wipe the disc using a circular motion.
- Do not use a conventional record cleaner or alcohol intended for industrial use.
- A new disc may be rough on the inner and outer edges. Remove the rough edges by rubbing the inner and outer edges with the side of a pen or pencil as illustrated.

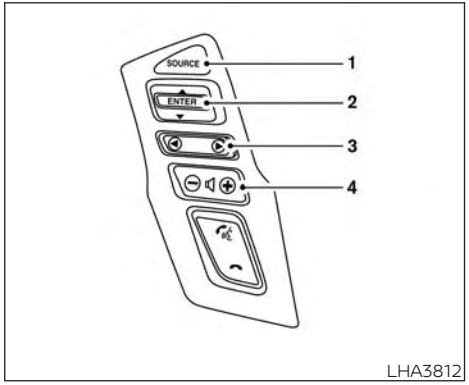

STEERING WHEEL SWITCH FOR AUDIO CONTROL

The audio system can be operated using the controls on the steering wheel.

1. SOURCE switch
2. Menu control switch/ENTER button
3. ◀ ▶ switches
4. Volume control switch

SOURCE switch

With the ignition switch in the ACC or ON position, push the SOURCE switch to turn the audio system on.

Push the SOURCE switch to change the mode in the following sequence:

AM → FM1 → FM2 →(XM1→XM2→XM3 (satellite, if so equipped))→(SXM1→SXM→ (satellite radio, if so equipped) →SXM2 (satellite radio, if so equipped)→SXM3 (satellite radio, if so equipped) → CD* → USB/iPod®*→ Bluetooth® Audio* →Audio App*→ AUX* → AM.

* These modes are only available when compatible media storage is inserted into the device or connected to the system.

◀ ▶ switches

Use the ◀ ▶ switches on the steering wheel to navigate to the "Audio" display menu in the vehicle information display.

Volume control switch

Push the volume control switch to increase or decrease the volume.

▼ ▲ Menu control switch/ENTER button

While the display is showing a map or audio screen, tilt the Menu Control switch upward or downward to select a station, track, CD or folder. For most audio sources, tilting the switch up/down for more than 1.5 seconds provides a different function than a tilting up/down for less than 1.5 seconds.

AM and FM

- Tilt up/down for less than 1.5 seconds to increase or decrease the preset station.
- Tilt up/down for more than 1.5 seconds to seek up or down to the next station.

XM/SXM (if so equipped)

- Tilt up/down for less than 1.5 seconds to increase or decrease the preset station.
- Tilt up/down for more than 1.5 seconds to go to the next or previous channel.

iPod®

- Tilt up/down for less than 1.5 seconds to increase or decrease the track number.

CD

- Tilt up/down for less than 1.5 seconds to increase or decrease the track number.
- Tilt up/down for more than 1.5 seconds to increase or decrease the folder number (if playing compressed audio files).

USB

- Tilt up/down for less than 1.5 seconds to increase or decrease the track number.
- Tilt up/down for more than 1.5 seconds to increase or decrease the folder number.

Bluetooth® Audio

- Tilt up/down for less than 1.5 seconds to skip ahead or back to the next song.
- Tilt up/down for more than 1.5 seconds to reverse or fast forward the current song.

ANTENNA

The antenna cannot be shortened, but can be removed. When you need to remove the antenna, turn the antenna rod counter-clockwise.

To install the antenna rod, turn the antenna rod clockwise and hand tighten.

⚠ CAUTION

- **Always properly tighten the antenna rod during installation or the antenna rod may break during vehicle operation.**
- **Be sure that the antenna is removed before the vehicle enters an automatic car wash.**

NISSANCONNECT® MOBILE APPS (if so equipped)

This vehicle is equipped with Smartphone Integration technology. This allows many compatible Smartphone applications to be displayed and easily controlled through the vehicle's touch-screen. This feature is an option on navigation system equipped vehicles. For additional information, refer to the separate NissanConnect® Owner's Manual.

NISSANCONNECT® SERVICES (if so equipped)

NissanConnect® Services is a suite of telematics tools that provide emergency preparedness, remote access, customizable alerts and convenience services. This feature is an option on navigation system equipped vehicles. For additional information, refer to the separate NissanConnect® Owner's Manual.

SIRI® EYES FREE

Apple Siri® Eyes Free personal assistant can be accessed from the vehicle. Siri Eyes Free can be accessed in Siri Eyes Free mode to reduce user distraction. In this mode, Siri Eyes Free is available for interaction by voice control. After connecting a compatible Apple device by using Bluetooth®, Siri Eyes Free can be activated from the TALK switch on the steering wheel.

Siri® is a trademark of Apple Inc., registered in the U.S. and other countries.

- Some Siri Eyes Free functions, such as displaying pictures or opening apps, may not be available while driving.
- For best results, always update your device to the latest software version.
- Keep the interior of the vehicle as quiet as possible. Close the windows to eliminate the surrounding noises (traffic noises, vibration sounds, etc.), which may prevent the system from recognizing the voice commands correctly.
- For functions that can be used in Siri Eyes Free, please refer to the Apple website.

REQUIREMENTS

Siri is only available on the iPhone® 4S or later. Devices released before iPhone® 4S are not supported by the Siri Eyes Free system. Visit www.apple.com/ios/siri for details about device compatibility.

Siri must be enabled on the phone. Please check phone settings.

If the device has a lock screen, Siri must be accessible from the lock screen. Please check phone settings.

For best results, always update your device to the latest software version.

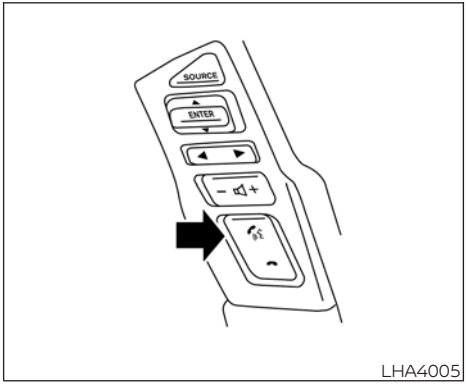

SIRI® ACTIVATION

Siri® Eyes Free function can be activated by pushing TALK switch on the steering wheel.

Models with navigation system

1. Connect an Siri Eyes Free enabled iPhone® to the vehicle. For additional information, refer to "Connecting procedure" in this section.
2. After the Bluetooth® connection is established, push and hold the TALK switch to activate the Siri Eyes Free function.

Models without navigation system

1. Connect a Siri Eyes Free enabled iPhone® to the vehicle. For additional information, refer to "Initialization" in this section.
2. After the Bluetooth® connection is established, the switch operation select screen is displayed.
3. Select "Short Press" or "Long Press" for Siri Eyes Free activation Switch action can also be changed from the Bluetooth® settings menu. For additional information, refer to "Changing Siri Eyes Free Settings (models without navigation system)" in this section.

OPERATING SIRI® EYES FREE

1. Push or push and hold the TALK switch.
2. Speak your command and then listen to the Siri Eyes Free reply.

After starting Siri Eyes Free, push the TALK switch again within 5 seconds of the end of the Siri Eyes Free announcement to extend the session.

Example 1 – Playing music

1. Push or push and hold the TALK switch.
2. Say "Play (artist name, song name, etc.)".
3. Your vehicle will automatically change to Bluetooth® Audio or iPod® mode* when the music starts playing. Mode selection is determined by the phone.

* If the iPhone® is also connected with the USB cable.

If the audio track does not start playing automatically after Siri Eyes Free ends, try changing the track or audio source to resume playback.

NOTE:

For best results, use the native music app. Performance of music control function while using Podcasts, Audiobook or other 3rd party music apps may vary and is controlled by the iPhone®.

Example 2 – Replying to text messages

1. If a compatible iPhone® is connected and "Show Notifications" of the iPhone® settings is enabled, the vehicle will display a notification for new incoming text messages.

2. After reading the message, push or push and hold the TALK switch to reply using Siri Eyes Free.
3. After a beep sounds, say "Text message" or a similar command to reply using Siri Eyes Free.

CHANGING SIRI® EYES FREE SETTINGS (models without navigation system)

Settings for Siri® Eyes Free can be found in the Bluetooth® settings menu. For additional information, refer to "Bluetooth® settings" in this section.

1. Press the ENTER/SETTING button.
2. Use the TUNE/FOLDER or TUNE/SCROLL knob to select "Bluetooth" and then press the ENTER/SETTING button.
3. Use the TUNE/FOLDER or TUNE/SCROLL knob to select "Siri" and then press the ENTER/SETTING button.
4. Select "Short Press" or "Long Press" using the TUNE/FOLDER or TUNE/SCROLL knob and then press the ENTER/SETTING button.

CHANGING SIRI® EYES FREE SETTINGS (models with navigation system)

Settings for Siri® Eyes Free can be found in the Bluetooth® settings menu. For additional information, refer to "Bluetooth® settings" in this section.

1. Press the [APPS] button.
2. Touch the "Settings" key.
3. Touch the "Phone & Bluetooth" key.
4. Touch the "Phone settings" key.
5. Select "Short Press" or "Long Press" to set the activation.

TROUBLESHOOTING GUIDE

Symptom	Cause and Countermeasure
Cannot access Siri Eyes Free from switch on the steering wheel	Check if a Bluetooth® connection is established between the iPhone® and the system.
	Check if Siri is enabled on the device. On your phone, go to Siri setting.
	Check that Siri can be accessed from the device lock screen. This can be set in the settings menu of your phone.
	Models without navigation system: Check the settings for Siri Eyes Free activation on the vehicle audio system. If the setting is "Long Press", you must push and hold the TALK switch on the steering wheel for more than 1.5 seconds to start Siri Eyes Free. If the setting is "Short Press", a short push and release of the switch should start Siri Eyes Free.
Audio Source does not change automatically to iPod® or Bluetooth® Audio mode	For best results, use the native Music app. Performance of music control function while using Podcasts, Audiobook or other 3rd party music apps may vary.
	For best results, play media already stored on your device. Streaming music or playback from cloud storage may degrade performance.
	Switch the source manually by pressing the AUX or MEDIA button on the vehicle audio system or the SOURCE select switch on the steering wheel.
Play, pause, next track, previous track or play timer does not work	For best results, use the native Music app. Performance of music control function while using Podcasts, Audiobook or other 3rd party music apps may vary and is controlled by the device.
Cannot hear any music/ audio being played back from a connected iPhone®	Check that the audio source is set to Bluetooth® Audio or iPod® mode. A USB connection is required for iPod® mode.
Cannot hear map turn-by-turn direction guidance from a connected iPhone®	Check that the audio source is set to Bluetooth® Audio or iPod® mode. A USB connection is required for iPod® mode.
Cannot receive text message notifications on the vehicle audio system	Check if "Send Notifications" is enabled on your phone. On the phone, go to Bluetooth® settings. Find the device name, like "My Car". Press the info button. Turn on "Show Notifications".
Cannot reply to text message notifications by Siri Eyes Free	After receiving an incoming text message, follow on-screen guidance. Push or push and hold the TALK switch on the steering wheel for Siri Eyes Free. After Siri Eyes Free starts, say "Text Message".

⚠ WARNING

- **The Mobile Entertainment System is designed for rear seat passenger viewing only.**
- **It is unlawful in most jurisdictions for a person to drive a motor vehicle which is equipped with a television viewer or screen that is located in the motor vehicle at any point forward of the back of the driver's seat, or that is visible, directly or indirectly, to the driver while operating the vehicle.**
- **In the interest of safety, the monitors should never be installed where they will be visible, directly or indirectly, by the operator of the motor vehicle.**
- **If your vehicle is equipped with a wireless rear seat audio system or any other wireless infrared device, make sure it is powered off when operating the Rear Seat Entertainment System. If both systems are powered on at the same time, the two systems may obstruct each other, possibly creating undesirable audio interference through the wireless headphones.**
- **For safety reasons, when changing video discs it is recommended that the vehicle is not in motion, and that you do not allow children to unfasten safety belts to change discs or make any adjustments to the system. System adjustments can be accomplished using the remote control unit, while safety belts remain fastened.**

⚠ CAUTION

- **Be sure to run the vehicle engine while using the system. Using this system without running the engine can result in a battery drain. To avoid the risk of battery drain, please remember to turn off the system when the vehicle is not in use. Do not touch the inner pins of the jacks on the front panel. Electrostatic discharge may cause permanent damage to the system.**

NOTE:

Depending on the USB device, it may or may not charge when connected to the USB connection port. Not all devices are able to charge when connected to the USB connection port.

Each monitor includes a built-in dual channel infrared transmitter for use with wireless headphones. The wireless headphones must be used within a line of sight from the transmitter as infrared transmission, like visible light, travels only in a straight line.

When placing the headphones on your head, make sure to observe the Left and Right orientation. The headphones must be oriented correctly (facing forward) in order to receive the audio signal. Press the power button on the headphones, then select channel "A" to listen to monitor A, or channel "B" to listen to monitor B. Adjust the audio level using the volume control on each headphone.

There is a 3.5mm stereo headphone output jack on each monitor which can be used with any standard stereo headphone with an in-line volume control (wired headphones sold separately).

The system includes a built-in infrared receiver for use with the included wireless remote control. For additional information, refer to "Remote control operation" in this section.

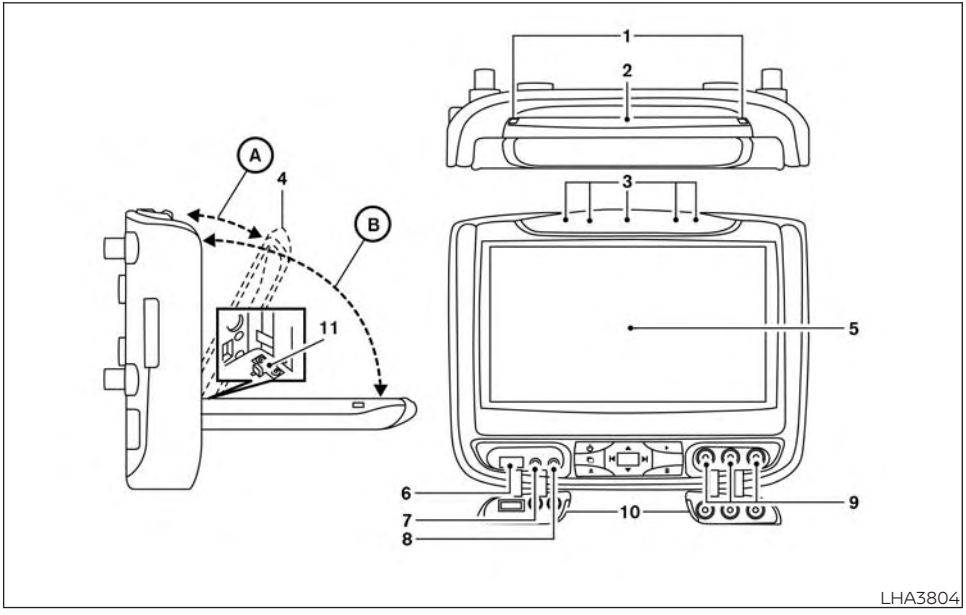

1. Status lights
2. Disc Compartment Slot
3. IR Sensor/Transmitter
4. Monitor Adjustment
5. TFT LCD Panel
6. USB Port
7. Audio Video Output Jack
8. Headphone Output Jack
9. Audio Video Input Jacks
10. I/O Port Covers
11. Lever Lock and Release Latch

FRONT PANEL BUTTONS

⚠ CAUTION

- **Do not use any harsh solvents or chemicals when cleaning the unit.**
- **Do not use any abrasive cleaners that may scratch the screen. Use only a lightly dampened lint free cloth to wipe the screen if it is dirty.**
- **Position LCD monitor in the fully closed position when not in use.**
- **Before using the monitor, ensure lever lock and release latch is engaged in the normal viewing position Ⓐ.**
- **Do not put pressure on the screen.**
- **Caution children to avoid touching the screen, as it may become dirty or damaged.**

Status lights

The status lights illuminate if there is no disc present in the unit.

Disc Compartment Slot

Insert a disc to play.

IR Sensor/Transmitter

The IR sensor allows the remote control to operate the monitor. The IR transmitter provides audio to IR wireless headphones.

Monitor Adjustment

The monitor is hinged to allow the user to manually adjust the viewing angle of the LCD panel Ⓐ.

TFT LCD Panel

7–inch TFT LCD Panel.

USB Port

Play videos, music, and images stored on most USB devices. It also allows for charging some USB devices.

Audio Video Output Jack

Connect to an external audio/video monitor using a 3.5mm A/V connector (sold separately).

Headphone Output Jack

Connect wired headphones using a 3.5mm stereo connector. Headphones must include in-line volume control in order to adjust the volume level.

Audio Video Input Jacks

Connect to an external audio/video source using RCA type connectors (sold separately).

I/O Port Covers

Gently pull down on the I/O covers to expose the ports. Keep the ports covered when not in use.

Lever Lock & Release Latch

The lever lock and release latch located behind the monitor limits the monitor angle (normal viewing Ⓐ). Sliding the latch to the left will allow the monitor to open to the service position Ⓑ.

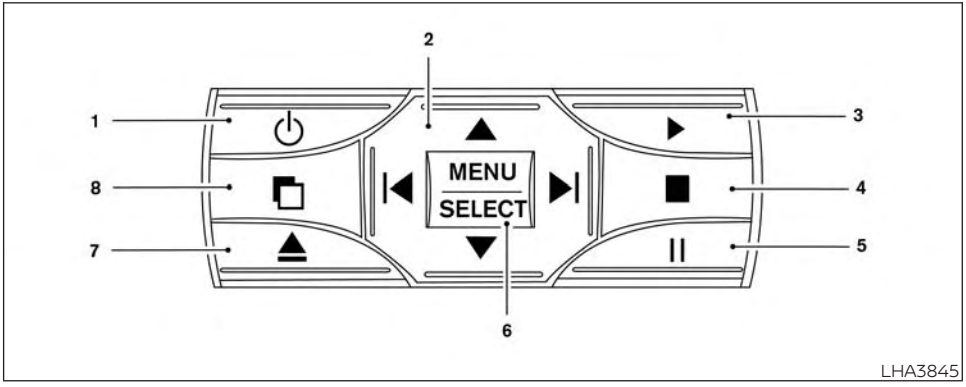

1. POWER button
2. UP/DOWN/LEFT/RIGHT buttons
3. PLAY button
4. STOP button
5. PAUSE button PLAY button
6. MENU/SELECT button
7. EJECT button
8. SOURCE button

FRONT PANEL BUTTONS OPERATION

UP/DOWN/LEFT/RIGHT buttons

These buttons are used to navigate the contents of the display menus.

POWER buttons

Press this button to turn the monitor on or off.

SOURCE button

Press this button to cycle between monitor A audio/video sources and monitor B audio/video sources.

EJECT buttons

Press this button to eject the disc.

PLAY button

Press this button to play the media.

STOP button

Press this button to stop media playback.

PAUSE button

Press this button to pause media playback.

MENU/SELECT button

Press this button to access the DVD OSD menu. Press the SETUP button on the remote control to exit the DVD OSD menu. For additional information, refer to "How to use the DVD OSD Menu" in this section.

LHA3846

WIRELESS HEADPHONE OPERATION

Installing the batteries

Before attempting to operate the headphones, install the batteries as described below.

1. Remove headphone battery cover Ⓐ.
2. Install two "AAA" batteries into the headphones. Make sure the proper polarity (+ or –) is observed.
3. Reinstall headphone battery cover.

LHA3847

Headphone operation

Press the power button Ⓐ on the headphones to turn on and off the headphones. The red LED will illuminate when the headphone is turned on. Set the select switch Ⓑ to "A" or "B" for use with the "A" monitor or "B" monitor respectively. Use the volume thumb wheelⒸ to adjust the volume level for the headphone audio.

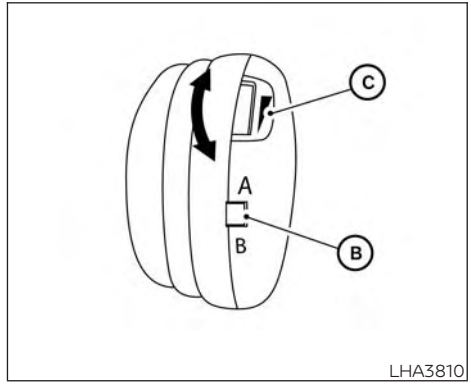

LHA3810

NOTE:

If the headphones are accidentally left on and system is powered off, a battery saver feature will automatically turn off the headphones after approximately 3 minutes.

⚠ CAUTION

- **Always ensure that the batteries are inserted with the positive and negative terminals in the correct direction as shown in the battery compartment.**

- **Different types of batteries have different characteristics. Do not mix different types.**
- **Remove the batteries if the headphones are not used for a month or longer.**

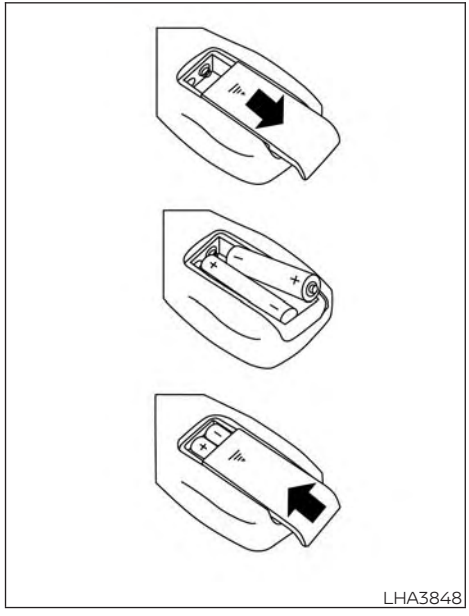

REMOTE CONTROL OPERATION

Before attempting to operate your remote control, install the batteries described below.

1. Turn the remote control face down. Press down on the ridged area of the battery cover and slide it off.
2. Install two "AAA" batteries. Make sure that proper polarity (+ or —) is observed.
3. Slide the cover back into place until it clicks.

NOTE:

The remote control will only operate this device. It is not a universal remote control and will not control other equipment.

⚠ WARNING

- **Keep the batteries out of the reach of children. Should the batteries be swallowed, immediately consult a doctor. Also, when disposing of used batteries, please comply with governmental regulations or environmental public institution rules that apply in your country/area.**

⚠ CAUTION

- **Always ensure that the batteries are inserted with the positive and negative terminals in the correct direction as shown in the battery compartment.**
- **Different types of batteries have different characteristics. Do not mix different types.**
- **Do not mix old and new batteries. Mixing old and new batteries will shorten battery life and/or cause chemical leaks from the old batteries.**
- **When batteries fail to function, replace them immediately.**
- **Remove the batteries if the remote control is not used for a month or longer.**

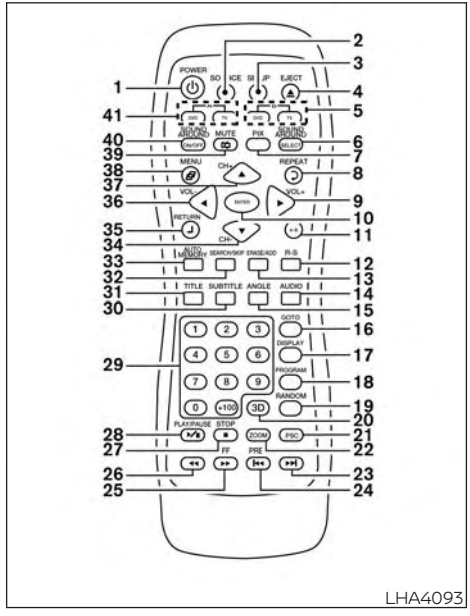

REMOTE CONTROL BUTTONS

1. POWER button
2. SOURCE button
3. SETUP button
4. EJECT button
5. DVD-B button
6. SOUND AROUND SELECT button
7. PIX button
8. REPEAT button
9. RIGHT button
10. ENTER button
11. A-B button
12. R-S button
13. ERASE/ADD button
14. AUDIO button
15. ANGLE button
16. GO TO button
17. DISPLAY button
18. PROGRAM button
19. RANDOM button
20. 3D button
21. PBC (Video CD only) button
22. ZOOM button
23. NEXT button
24. PREV button

25. FF (Fast forward) button
26. FR (Fast rewind) button
27. STOP button
28. PLAY/PAUSE button
29. Number Keys
30. SUBTITLE button
31. TITLE button
32. CH-SEARCH/SKIP button
33. AUTO MEMORY button
34. DOWN button
35. RETURN button
36. LEFT button
37. UP button
38. MENU button
39. MUTE button
40. SOUND AROUND ON/OFF button
41. DVD-A button

NOTE:

The following remote control functions do not apply to this model: A-B and Program.

POWER button

Press this button to turn the monitor on. Press this button again to turn the monitor off.

Source button

Press this button to cycle between monitor A audio/video sources and monitor B audio/video sources.

Setup button

Press this button to navigate the DVD OSD menu. For additional information, refer to "How to use the DVD OSD menu" in this section.

Eject button

Press this button to eject the disc.

DVD–B button

Press this button to transmit the remote control codes and functions to operate monitor B.

SOUND AROUND SELECT button

Selects a FM transmitter channel.

PIX button

Press this button to access the picture adjustment menu and select between BRIGHTNESS, CONTRAST, SATURATION, HUE, SHARPNESS, IR HEADPHONE, LANGUAGE, and RESET. Press the ▲ or ▼ buttons to adjust the screen.

REPEAT button

Press this button to select between different repeat modes.

ENTER button

Press this button to make a selection or begin playback of the media.

RIGHT button

Press this button to navigate right when displaying a menu or file list.

A-B button

Press the A-B button once to set point A and then press again to set point B. Playback will now repeat between point A and point B.

R-S button

Non-functioning.

ERASE / ADD button

Non-functioning.

AUDIO button

Press this button to select and listen to different audio streams (this function only applies to DVD titles that support multiple audio streams).

ANGLE button

Press this button to select different viewing angles (this function only applies to DVD titles that support multiple angles).

GO TO button

Non-functioning.

DISPLAY button

Press this button to display various information including title, chapter/track, elapsed time, time remaining, or turn off the display.

PROGRAM button

Edit a playback program containing desired titles in the DVD or tracks in the CD-DA.

RANDOM button

Press this button to play content in a random order.

3D button

Press this button to select between several audio effects. DVD mode: Concert, Living Room, Hall, Bathroom, Cave, Arena, Church, and Off.

PBC (Video CD only) button

Press this button to run the playback control on or off.

ZOOM button

Press this button to zoom in or out when displaying images or playing DVDs. The zoom range for images is from 50% to 200%. The zoom range for DVDs is from 1/4 size to 4x the original size.

NEXT button

Press this button to select the next chapter, track, or file.

PREV button

Press this button to select the previous chapter, track, or file.

FF (Fast forward) button

Press this button to search media forwards.

FR (Fast rewind) button

Press this button to search media backwards.

STOP button

Press this button once to stop playback (press play to resume playback). Press this button twice to perform a full stop (press play to start playback from the beginning).

PLAY/PAUSE button

Press this button to begin media playback. Press this button again to pause media playback.

Number Keys

0 — 9

SUBTITLE button

Press this button to select and display subtitles (this function only applies to DVD titles that support subtitles).

TITLE button

Press this button to navigate the title menu if included on the disc.

CH- SEARCH/SKIP button

Non-functioning.

AUTO MEMORY button

Non-functioning.

DOWN button

Press this button to navigate down when displaying a menu or file list.

RETURN button

Press this button to return to a previous menu screen.

LEFT button

Press this button to navigate left when displaying a menu or file list.

UP button

Press this button to navigate up when displaying a menu or file list.

MENU button

Press this button to go to the root menu if included on the disc.

MUTE button

Press this button to mute the audio when playing discs or playing files from a USB device. Press this button again to resume audio.

SOUND AROUND ON/OFF

Turns the FM transmitter ON/OFF.

DVD–A button

Press this button to transmit the remote control codes and functions to operate monitor A.

GENERAL OPERATING INSTRUCTIONS

Turning the monitor ON or OFF

1. Press the POWER button on the front panel or the remote control to turn the monitor on or off. When powered on, the front panel controls will illuminate.
2. After the monitor has been turned on and is displaying a picture, adjust the viewing angle by pivoting the screen to optimize the picture quality.
3. Remember to turn the monitor off and return the LCD monitor to the fully closed (upright) position when not in use.

Listening through vehicle speakers

Press the AUX button on the factory radio and toggle through AUX screens to select VTRF — Jack to listen to the audio from monitor A.

Sharing sources between Monitor A and Monitor B

The source button on your monitor unit or remote control allows viewing monitor A video on monitor B and vice versa. Press the source button to cycle through available video sources.

Disc/DVD Basic Operation

To get the most use out of each disc, make sure you read this section completely.

For additional information, refer to "CD care and cleaning" in this section.

Regional coding

Both the DVD player and discs are coded by region. These regional codes must match in order for the disc to play. The system is preset to the region code designated for your area by the DVD Copy Control Association. Other regions may not be played in this system.

Supported Disc Types

- DVD-Video: DVD contains video
- DVD +/- R: DVD contains video
- CD-DA: CD contains audio
- CD-Video: CD contains video
- CD-R/+RW: CD contains audio

Unsupported Disc Types

Before you load a disc, make sure that it is compatible with the player. Note that the following disc CANNOT be used with this system: Optical disc- CD-1, CD-ROM, and DVD-ROM Mini disc- CDG (audio only, not graphics), and Blu-ray (list is not all inclusive).

Loading and Playing Discs

Press the POWER button to turn the monitor on. Insert the disc about halfway into the disc compartment slot, with the disc's label facing the rear of the vehicle. Do NOT insert the disc at an angle. The Disc must be inserted straight into the player.

The disc will load automatically and begin to play. Some discs may start at the root menu, where playback must be selected to start a movie. Depending on the disc and playback location on the disc, a "⊘" icon may be displayed in the upper left-hand corner of the screen indicating that playback is not possible during certain times.

Additional information on Media Compatibility

This system is compatible with the following media formats:

	Format	Extension
Audio	MP3	.mp3
	WMA	.wma
Video	AVI	.avi
	MPEG-1	.mpg
	MPEG-2	.mpg
Image	JPEG	.jpg

Due to ongoing technological advancements, some USB flash drives may be incompatible with this system.

- The text information of some audio and video files may not be correctly displayed.
- There may be a slight delay before playback of files using a USB flash drive with complex folder hierarchies.
- Some audio, video, and image files may be incompatible with this system due to file characteristics, file format, recording software used, directory structure, and/or the type of audio/video encoding used.

HOW TO USE THE DVD OSD MENU

This section describes how to set and adjust settings using On-Screen Display (OSD) Menu. You can use the OSD menu to adjust all the settings. Follow the steps outlined below to select the desired function.

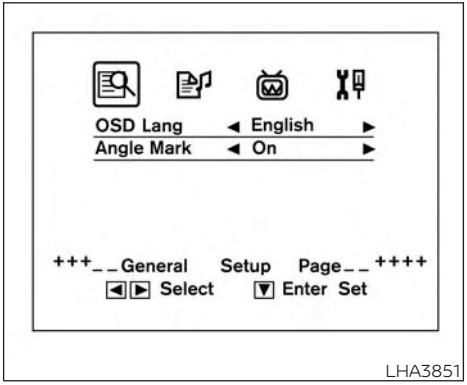

General Setup Page

Press the SETUP button on the remote control. Use the ▲ or ▼ and the ◄ or ► buttons to navigate the Setup Page. Press ENTER to select and then ◄ to return to the sub-menu. To cancel the Setup Display, press the SETUP button on the remote.

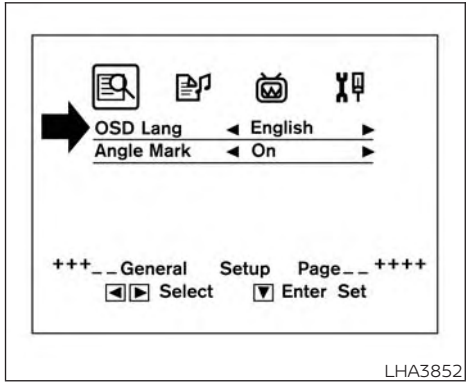

OSD Language

The OSD Lang sub-menu allows the user to select the language for the on-screen display. When the OSD Lang option is highlighted, press the ► button once and then use the ◄ or ► buttons on the remote control to select the desired language. The user can select English, Simplified/Traditional Chinese, French, German, Italian, Spanish, Portuguese, or Korean for the OSD language. Press ENTER to select and then the ◄ button to return to the sub-menu.

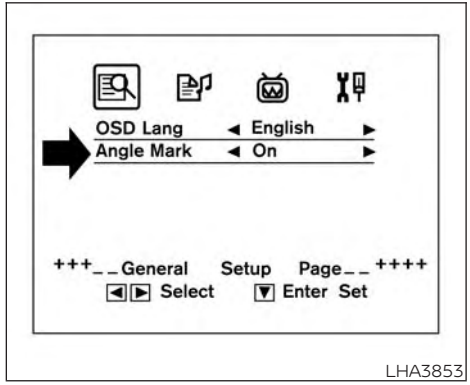

Angle Mark

The angle mark is an option for different viewing angles on the DVD. When the Angle Mark option is highlighted, press the ► button once and then use the ◄ or ► buttons on the remote control to turn the angle mark setting on or off. Press ENTER to select and then the ◄ button to return to the sub-menu.

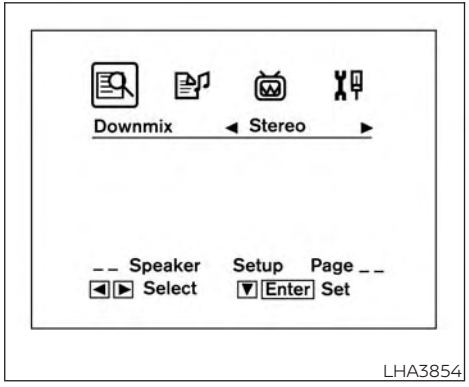

Speaker Setup Page

Downmix— When the Downmix option is highlighted, press the ▶ button once and then use the ◀ or ▶ buttons on the remote control to select between Stereo or LT/RT. Press ENTER to select and then the ◀ button to return to the sub-menu.

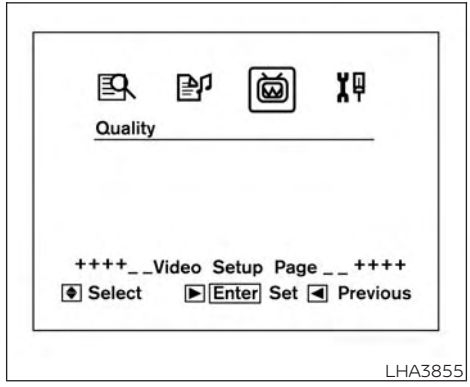

Video Setup Page

Video Quality — When the Quality option is highlighted, press ENTER and then use the ▲ or ▼ and the ◀ or ▶ buttons on the remote control to select between the various video quality settings. Press ENTER to select and then the ◀ button to return to the sub-menu.

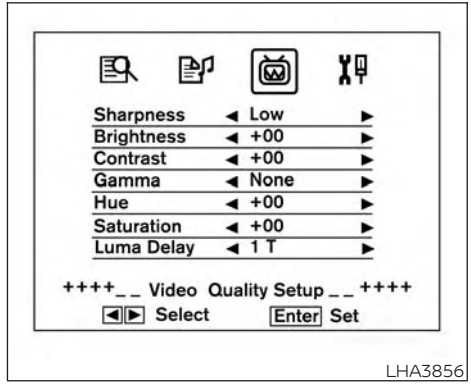

Video Quality Setup

Option	Description	Range	Default
Sharpness	Adjust to soften or sharpen the picture.	Low/ Med/ High	Low
Brightness	Adjust to brighten or darken the picture.	-20 — +20	00

Option	Description	Range	Default
Contrast	Adjust to increase or decrease picture contrast.	-16 — +16	00
Gamma	Adjust to increase or decrease the picture gamma.	Low/ Med/ High/ None	None
Hue	Adjust to increase or decrease the color hue.	-09 — +09	00
Saturation	Adjust to increase or decrease color intensity.	-09 — +09	00
Luma Delay	Adjust to change the Luma delay.	0T or 1T	1T

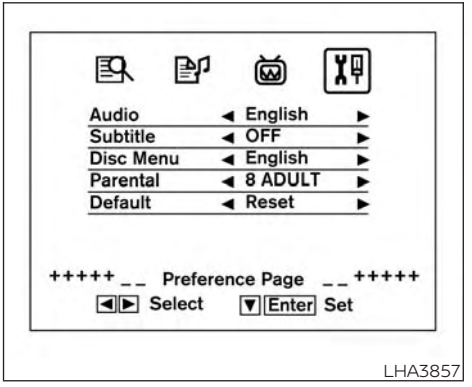

LHA3857

Preference Page

If a disc or USB device is playing, press STOP twice (full stop). Press the SETUP button on the remote control. Use the ▲ or ▼ and the ◄ or ► buttons on the remote control to navigate the Setup Page. Press ENTER to select and then the ◄ to return to the sub-menu.

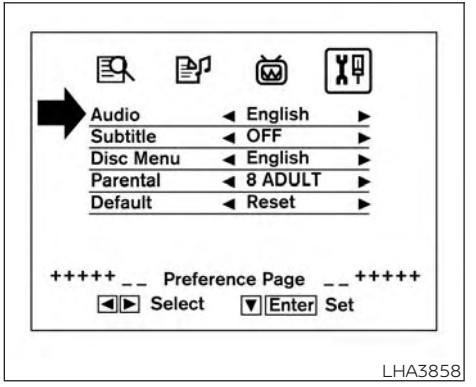

LHA3858

Audio

The Audio sub-menu allows the user to select the audio stream in the desired language for playback. When the Audio option is highlighted, press the ► button once and then use the ◄ or ► buttons on the remote control to select the desired language. The user can select English, French, Spanish, Chinese, Japanese, German, Portuguese, Italian, Korean, Russian or Thai for the audio stream language. Press ENTER to select and then the ◄ button to return to the sub-menu. The DVD title must include

the desired audio stream in order for it to be heard during playback.

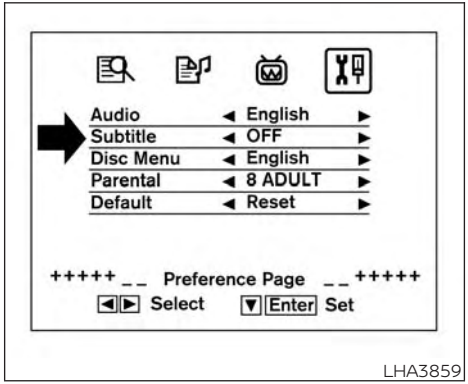

Subtitle

The Subtitle sub-menu allows the user to select the subtitle in the desired language for playback. When the Subtitle option is highlighted, press the ▶ button once and then use the ◀ or ▶ buttons on the remote control to select the desired language. The user can select English, French, Spanish, Chinese, Japanese, German, Portuguese, Italian, Korean, Russian, Thai or OFF for the subtitle language. Press ENTER to select and then the ◀ button to return to the sub-menu. The DVD title must include

the desired audio stream in order for it to be heard during playback.

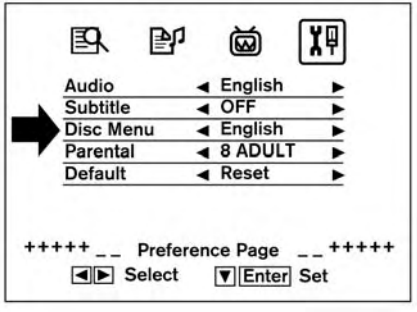

LHA3860

Disc Menu

The Disc Menu sub-menu allows the user to select the desired language of the DVD disc menu. When the Disc Menu option is highlighted, press the ▶ button once and then use the ◀ or ▶ buttons on the remote control to select the desired language. The user can select English, French, Spanish, Chinese, Japanese, German, Portuguese, Italian, Korean, Russian or Thai for the Disc Menu language. Press ENTER to select and then the ◀ button to return to the sub-menu. The DVD title must include the desired menu language in order for it to be displayed during playback.

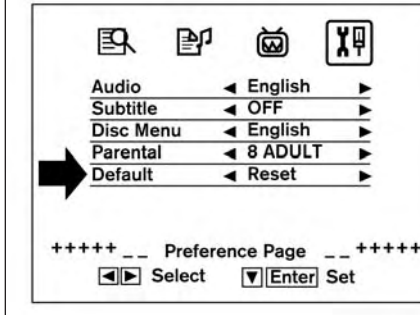

LHA3861

Default

This section of the Setup Menu allows the user to restore all controls and values to the default levels. When the Default option is highlighted, press the ▶ button once and then press ENTER to perform the reset. This will not affect parental control setting.

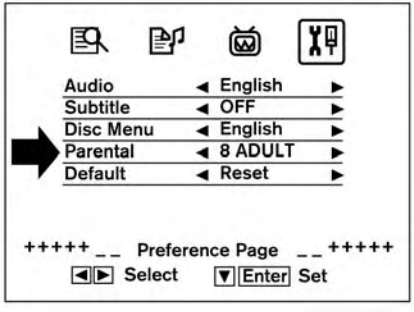

LHA3862

Parental

This section of the Setup Menu allows the user to select the level of movie content playback from KID SAFE to ADULT. The parental control function allows you to limit viewing to your preference. The rating levels range from 1 to 8 and are country dependent. The lower rating number, the stricter the playback limitation is. When the Parental option is highlighted, press the ▶ button once and then use the ◀ or ▶ buttons on the remote control to select the desired parental control setting and press ENTER. A password is required to change the Parental settings. Using the remote control, enter the password (0000) and press ENTER to confirm the setting and return to the submenu.

LHA3863

HOW TO USE THE MONITOR OSD MENU

This section describes how to set and adjust the following monitor settings using the monitor on-screen display (OSD) Menu:

- Press the PIX button on the remote control to select between the options in the table below.
- After selecting the desired option, use the ▲ or ▼ buttons on the remote control to adjust the setting.

Option	Description	Range	Default
Brightness	Adjust to brighten or darken the picture.	0 — 100	50
Contrast	Adjust to increase or decrease picture contrast.	0 — 100	50
Saturation	Adjust to increase or decrease color intensity.	0 — 100	50
Hue	Adjust to increase or decrease the color hue.	0 — 100	50

Option	Description	Range	Default
Sharpness	Adjust to soften or sharpen the picture.	0 — 100	50
IR Headphone	Select on or off to turn the IR headphone audio output on or off.	ON or OFF	ON
Language	Set language of the monitor OSD menu.	English, French, Spanish, Portuguese	English

Option	Description	Range	Default
Reset	Resets the monitor OSD menu settings to default values.	Press Up or Down; "OK" will be displayed.	

PLAYING A CD

Insert a disc into the unit with label facing the rear of vehicle and select monitor A mode (if using monitor A) or monitor B mode (if using monitor B) using the front controls or the remote control.

When playing an audio CD, the information screen appears automatically. It can display the current track number along with the amount of time the track has been playing, the amount of time remaining for the track playing, the total amount of time elapsed so far, or the total amount of time remaining.

Display

Press the DISPLAY button on the remote control to select the desired type of display setting. The single elapsed time of the current track is displayed by default.

Press DISPLAY (1x)

"Single Remain" is displayed along with the current track playing and the amount of time remaining for the current track.

Press DISPLAY (2x)

"Total Elapsed" is displayed along with the current track playing and the total amount of elapsed time.

Press DISPLAY (3x)

"Total Remain" is displayed along with the current track playing and the total amount of time remaining.

Press the DISPLAY button again to display the elapsed time of the current track.

Skipping Tracks

Press the NEXT button on the remote control to select to the next track. Press the PREV button one time to select the beginning of the current track. Press the PREV button two times to select the previous track.

Repeat Modes

To access the repeat mode options, press the REPEAT button on the remote control. The repeat mode options are as follows:

- REPEAT ALL: Repeat the entire disc (default).
- REPEAT ONE: Repeat the current track.
- REPEAT OFF: Playback stops after the disc in its entirety.

Random Mode

You can choose what order the tracks will be played. To access the random play mode, press the RANDOM button on the remote control. All tracks on the disc will playback in random order. Press RANDOM again to cancel random mode.

Direct Track Access

Press the number keys on the remote control (0–9) to access a track directly. For example, to go to track 14, press "1","4", then ENTER on the remote control.

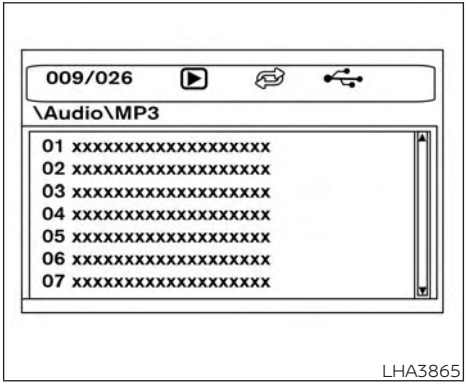

PLAYING AUDIO FILES

MP3 and WMA are formats for storing digital audio. A CD quality song can be compressed into the MP3 or WMA format with very little loss of quality, while talking up much less storage space. Encoded discs and USB devices that include MP3 or WMA audio files can be played on this system.

Insert a disc or USB device into the unit and select monitor A mode (if using monitor A) or monitor B (if using monitor B) using the front panel controls or the remote control.

Using a USB Device

Insert a USB device into the USB connection port. When inserting a USB device, the top side of the devices should face upwards.

When an MP3/WMA encoded disc or USB device is inserted, the information screen appears automatically and playback will begin.

Display

During audio file playback, press the DISPLAY button on the remote control to select between the file list and currently playing file.

Selecting Files

1. To change files when a file is playing, press the ▲ or ▼ buttons on the remote control to display the file list, and then press the ▲ or ▼ buttons to select the desired file.
2. Once the desired file is highlighted, press the ENTER button on the remote control to select it.

Selecting Folders

1. To select folders when a file is playing, press the ◀ button on the remote control to display the list. Press the ◀ or ▶ buttons to select the desired folder.
2. Press the ◀ button to access the previous level (go up one level) or, press the ▶ button to access the next level (go down one level).
3. Once the desired folder is highlighted, press the ENTER button on the remote control to select it.

Skipping Files

Press the NEXT button on the remote control to select to the next file. Press the PREV button one time to select the beginning of the current file. Press the PREV button two times to select the previous file.

Repeat Modes

To access the repeat mode options, press the REPEAT button on the remote control. The repeat mode options are as follows:

- REPEAT ALL: Repeat the entire disc or USB device (default).

- REPEAT FOLDER: Repeat the current folder
- REPEAT ONE: Repeat the current file.
- REPEAT OFF: Playback stops after the disc or USB device is played in its entirety.

Random Mode

You can choose what order the files will be played. To access the random play mode, press the RANDOM button on the remote control. The files in the current folder will playback in random order. Press RANDOM again to cancel random mode.

Direct File Access

Press the number keys on the remote control (0–9) to access a file directly. For example, to go to track 14, press "1","4", then ENTER on the remote control.

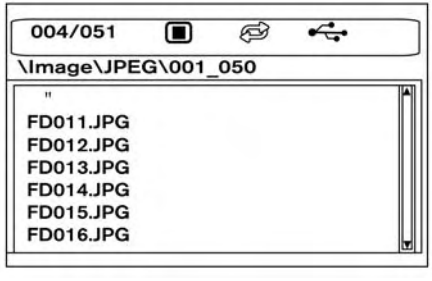

LHA3866

PLAYING IMAGE FILES

Insert a disc or USB device into the unit and select monitor A mode (if using monitor A) or monitor B (if using monitor B) using the front panel controls or the remote control.

Using a USB Device

Insert a USB device into the USB connection port. When inserting a USB device, the top side of the devices should face upwards.

When a disc or USB device with JPG files is inserted, the slideshow will begin automatically. When a disc or USB device with mixed audio/video/image files is inserted, the file list screen may appear first.

Selecting Files

1. To select files during the slideshow, press the MENU button remote control to access the file list. Press the ▲ or ▼ buttons on the remote control to select the desired file.
2. Once the desired file is highlighted, press the ENTER button on the remote control to select it.

Selecting Folders

1. To select folders during the slideshow, press the MENU button on the remote control to access the list.
2. Press the ◀ button to access the previous level (go up one level) or, press the ▶ button to access the next level (go down one level).
3. Once the desired folder is highlighted, press the ENTER button on the remote control to select it.

Repeat Modes

To access the repeat mode options, press the REPEAT button on the remote control. The repeat mode options are as follows:

- REPEAT ALL: Repeat the entire disc or USB device (default).
- REPEAT FOLDER: Repeat the current folder
- REPEAT ONE: Repeat the current file.
- REPEAT OFF: Playback stops after the disc or USB device is played in its entirety.

Thumbnail Views

1. Press the STOP button on the remote control during the slideshow to display images in thumbnail mode. Press the ▲ or ▼ and the ◀ or ▶ buttons on the remote control to select the desired language.
2. Once the desired image is highlighted, press the ENTER button on the remote control to select it.

Rotating Images

During the slideshow, press the ▶ button on the remote control to rotate the image 90° clockwise. Press the ◀ button to rotate the image 90° counter-clockwise.

Inverting Images

During the slideshow, press the ▲ button on the remote control to invert the image (Up-Down).

Mirroring Images

During the slideshow, press the ▼ button on the remote control to mirror the image (Left-Right).

Direct File Access

Press the number keys on the remote control (0–9) to access a file directly. For example, to go to track 14, press "1","4", then ENTER on the remote control.

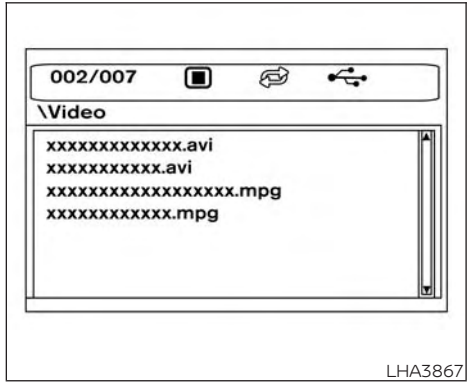

PLAYING VIDEO FILES

Insert a disc or USB device into the unit and select monitor A mode (if using monitor A) or monitor B (if using monitor B) using the front panel controls or the remote control.

Using a USB Device

Insert a USB device into the USB connection port. When inserting a USB device, the top side of the device should face upwards.

When a disc or USB device with video files is inserted, playback will begin automatically. When a disc or USB device with mixed

audio/video/image files is inserted, the file list screen may appear first.

Selecting Files

1. To select files during the video playback, press the MENU button on the remote control to access the file list. Press the ▲ or ▼ buttons on the remote control to select the desired file.
2. Once the desired file is highlighted, press the ENTER button on the remote control to select it.

Selecting Folders

1. To select folders during video playback, press the MENU button on the remote control to access the list.
2. Press the ◀ button to access the previous level (go up one level) or, press the ▶ button to access the next level (go down one level).
3. Once the desired folder is highlighted, press the ENTER button on the remote control to select it.

Skipping Files

Press the NEXT button on the remote control to select to the next file. Press the PREV button one time to select the beginning of the current file. Press the PREV button two times to select the previous file.

Repeat Modes

To access the repeat mode options, press the REPEAT button on the remote control. The repeat mode options are as follows:

- REPEAT ALL: Repeat the entire disc or USB device (default).
- REPEAT FOLDER: Repeat the current folder
- REPEAT ONE: Repeat the current file.
- REPEAT OFF: Playback stops after the disc or USB device is played in its entirety.

Direct File Access

Press the number keys on the remote control (0–9) to access a file directly. For example, to go to track 14, press "1","4", then ENTER on the remote control.

CHARGING A USB DEVICE

Plug the USB cable (not supplied) into the USB connection port and then connect the other end to the USB device.

NOTE:

Depending on the device, it may or may not charge when connected to the USB port. Not all devices are able to charge when connected to the USB port.

CONNECTING AN EXTERNAL AUXILIARY A/V SOURCE — INPUT

An external A/V source such as a media player, video game, or other audio/video device may be connected to the RCA type jacks on the front of the monitor. Connect the external audio/video source to the RCA type input jacks on the front of the monitor using RCA type connectors (sold separately).

Yellow: Video input
Red: Audio-right channel input
White: Audio-left channel input

The system will automatically select the auxiliary input mode when the RCA type connectors are inserted into the input

jacks. The auxiliary input connection overrides disc and USB playback.

The system provides priority for each of the following device inputs:

1. External RCA A/V input
2. USB port
3. Disc playback

For example if a disc is playing and a USB device is plugged in, the USB device will take priority over disc playback. The external RCA A/V input connections have priority over both USB port and disc playback.

CONNECTING AN EXTERNAL A/V MONITOR — OUTPUT

An external audio/video monitor may be connected to the 3.5mm A/V connector (sold separately).

NOTE:

Use the 3.5mm A/V cable made specifically for the device. An optional adapter (sold separately) may be used to convert the 3.5mm A/V output to the standard RCA jacks.

SELECTING MONITOR A OR B AS THE SOURCE

It is possible to select monitor B as the source from monitor A and vice versa. This will allow content that is playing on monitor B to be displayed on monitor A.

Monitor A:
To select monitor B as the source for monitor A, press the source button on the front panel or the remote control until "MONITOR B" is displayed.

Monitor B:
To select monitor A as the source for monitor B, press the source button on the front panel or the remote control until "MONITOR A" is displayed.

TROUBLESHOOTING GUIDE

Symptom	Remedy
Monitor does not power on.	Is ignition switch turned to the ON or ACC position? Are batteries installed in the remote control? Check the remote control to make sure "DVD-A" button is pressed for controlling monitor A and "DVD-B" button is pressed for controlling monitor B.
Remote control does not function.	Verify that the batteries in the remote control are good. Verify that the remote sensor lens is not obstructed.
Disc will not play.	Insert the disc with label side facing the rear of the vehicle. Check if the disc is defective by trying another disc. Check the type of disc being played. This unit only plays DVD (Single, Dual Layer), DVD-R/+R, DVD+R Dual layer, DVD-RW/+RW, CD, CD-R, and CD-RW. Both the unit and DVD discs are coded by region. If the region codes don't match, the DVD can't be played.
Disc plays, but stops intermittently.	The disc is dirty and needs cleaning. Condensation has formed inside the unit. Remove the disc and allow unit to dry out.
No picture.	Check the signal source is connected. Check the menu source setting. Match your monitor mode with the source correctly.
Distorted picture.	Check the disc for fingerprints and clean with a soft cloths, wiping from center to edge.

Symptom	Remedy
Cannot advance through a DVD movie.	You cannot advance through the opening credits and warning information that appears at the beginning of DVDs because the disc is programmed to prohibit these actions.
No sound or distorted sound.	Make sure that the external media device is connected properly, and all cables are securely inserted into the appropriate jacks. Verify that the batteries in the headphones are good. If you are using the wireless headphones, make sure you turn on the power and select the correct monitor (A or B). Is volume turned on the headphones? Is anything blocking the path between the monitor IR sensor and headphones? When placing the headphones on your head, make sure to observe the Left and Right orientation. The headphones must be oriented correctly (facing forward) in order to receive the audio signal.

Symptom	Remedy
Monitor feels warm.	When the monitor is in use for a long period of time, the surface will be warm. This is normal.
Player does not respond to all commands during playback.	Some operations are not permitted by the DVD. For additional information, refer to the specific instructions included with the DVD.
When a DVD is inserted, a Parental Setting message is displayed, prohibiting DVD movie playback.	Using the remote control, enter the 4-digit Parental Password (0000) and then press Enter.
After the Parental Password is entered, a Password Incorrect message is displayed and DVD movie will not play.	If the incorrect Parental Password is entered more than two times, the until will stop playback and return to the splashscreen. Using the remote control, press Play to initiate playback and display the Parental Setting message. Using the remote control, enter the 4-digit Parental Password (0000) and then press Enter.

SPECIFICATIONS

LCD Backlight	LED
Resolution	480x3(RGB) x234
Display	7"TFT LCD Panel
DVD Mechanism	Slot-In Loader
Supported Disc	DVD (Single, Dual Layer), DVD-R/+R, DVD-R/+R Dual layer, DVD-RW/+RW, CD, CD-R, CD-RW
Sources	Internal CD/DVD, USB Flash Memory, External A/V Input
I/O Ports	USB 2.0 port, 3.5mm A/V Output Jack, 3.5mm Headphone Jack, RCA Type A/V Input Jacks
Frequency Response	20Hz — 20kHz
Headphone (Audio Out)	Output Level: 2Vpp (input 0dB 1kHz) Load Impedance: 10kΩ
Video Display System	NTSC/PAL
Video Out	Output Level: 1Vpp (±20%) Load Impedance: 75Ω
Wireless Audio	Dual channel infrared audio transmitter, supports stereo headphone operation
IR Channels	Channels A :2.3/2.8 MHz B: 3.2/3.8 MHz

FCC NOTICE

This device has been tested and found to comply with the limits for a Class B digital device, pursuant to part 15 of the FCC Rules. These limits are designed to provide reasonable protection against harmful interference in a residential installation. This device generates, uses, and can radiate radio frequency energy, and if not installed and used in accordance with the instructions, may cause harmful interference to radio communications. However, there is no guarantee that interference will not occur in a particular installation. If this device does cause unacceptable interference to radio or television reception, which can be determined by turning the device off and on, the user is encouraged to try to correct the interference by one or more of the following measures:

- Reorient or relocate the receiving antenna.
- Increase the separation between the device and receiver.
- Connect the device into an outlet on a circuit different from that to which the receiver is connected.
- Consult your dealer or an experienced radio/TV technician for help.

FCC WARNING

⚠ WARNING

- **To assure continued FCC compliance, the user must use the provided grounded power supply cord and the shielded video interface cable with bonded ferrite cores.**
- **Any unauthorized change or modifications to this device would void the user's authority to operate this device.**

ITE NOTICE

This Class B digital apparatus complies with Canadian ICES-003.

This device complies with Industry Canada license-exempt RSS standard(s). Operation is subject to the following two conditions: (1) this device may not cause interference, and (2) this device must accept any interference, including interference that may cause undesired operation of the device.

This device and its antenna(s) must not be co-located or operation in conjunction with any other antenna or transmitter.

Under Industry Canada regulations, this radio transmitter may only operate using an antenna or a type and maximum (or lesser) gain approved for the transmitter by Industry Canada. To reduce potential radio interference to other users, the antenna type and its gain should be so chosen that the equivalent isotropically radiated power (e.i.r.p) is not more than that necessary for successful communication.

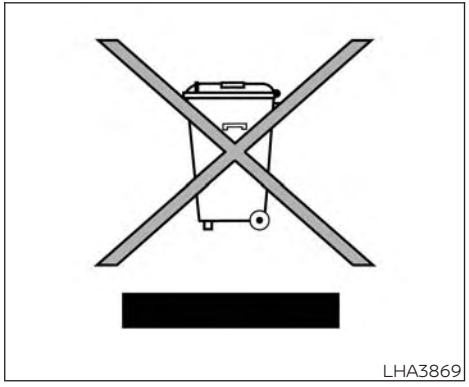

WEEE NOTICE

Disposal of Old Electrical & Electronic Equipment (Applicable in the European Union and other European countries with separate collection systems).

This symbol on the product or on its packaging indicates that the device shall not be treated as household waste. Instead, it shall be handed over to the applicable collection point for the recycling of electrical and electronic equipment By ensuring this device is disposed of correctly, you will help prevent potential negative consequences for the environment and human health, which could otherwise be caused by inappropriate waste handling of this device. The recycling of material will help to conserve natural resources. For additional information about recycling of this device, please contact your local city office, your household waste disposal service or the shop where you purchased the device. Applicable accessory: remote control.

MACROVISION NOTICE

This product incorporates copyright protection technology that is protected by method claims of certain U.S. patents and other intellectual property rights owned by Macrovision Corporation and other rights owners. Use of this copyright protection technology must be authorized by Macrovision Corporation, and is intended for home and other limited viewing used only unless otherwise authorized by Macrovision Corporation. Reverse engineering or disassembly is prohibited.

DOLBY DIGITAL

Manufactured under license from Dolby Laboratories.

Dolby and the double-D symbol are registered trademarks of Dolby Laboratories.

CAR PHONE OR CB RADIO

When installing a CB, ham radio or car phone in your vehicle, be sure to observe the following precautions; otherwise, the new equipment may adversely affect the engine control system and other electronic parts.

⚠ WARNING

- **A cellular phone should not be used for any purpose while driving so full attention may be given to vehicle operation. Some jurisdictions prohibit the use of cellular phones while driving.**
- **If you must make a call while your vehicle is in motion, the hands free cellular phone operational mode (if so equipped) is highly recommended. Exercise extreme caution at all times so full attention may be given to vehicle operation.**
- **If you are unable to devote full attention to vehicle operation while talking on the phone, pull off the road to a safe location and stop your vehicle.**

⚠ CAUTION

- **Keep the antenna as far away as possible from the electronic control modules.**
- **Keep the antenna wire more than 8 in (20 cm) away from the electronic control system harnesses. Do not route the antenna wire next to any harness.**
- **Adjust the antenna standing-wave ratio as recommended by the manufacturer.**
- **Connect the ground wire from the CB radio chassis to the body.**
- **For additional information, it is recommended that you visit a NISSAN dealer for this service.**

BLUETOOTH® HANDS-FREE PHONE SYSTEM WITHOUT NAVIGATION SYSTEM (if so equipped)

⚠ WARNING

- **Use a phone after stopping your vehicle in a safe location. If you have to use a phone while driving, exercise extreme caution at all times so full attention may be given to vehicle operation.**
- **If you are unable to devote full attention to vehicle operation while talking on the phone, pull off the road to a safe location and stop your vehicle.**

⚠ CAUTION

To avoid discharging the vehicle battery, use a phone after starting the engine.

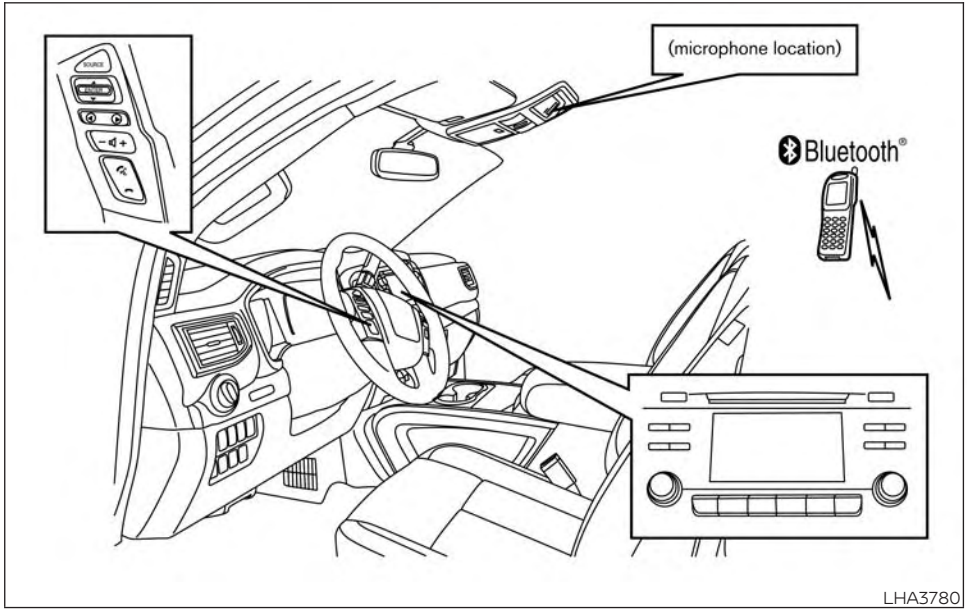

Your NISSAN is equipped with the Bluetooth® Hands-Free Phone System. If you have a compatible Bluetooth® enabled cellular phone, you can set up the wireless connection between your cellular phone and the in-vehicle phone module. With Bluetooth® wireless technology, you can make or receive a hands-free telephone call with your cellular phone in the vehicle.

Once your cellular phone is connected to the in-vehicle phone module, no other phone connecting procedure is required. Your phone is automatically connected with the in-vehicle phone module when the ignition switch is placed in the ON position with the previously connected cellular phone turned on and carried in the vehicle.

NOTE:

Some devices require the user to accept connections to other Bluetooth® devices. If your phone does not connect automatic ally to the system, consult the phone's Owner's Manual for details on device operation.

You can connect up to five different Bluetooth® cellular phones to the in-vehicle phone module. However, you can talk on only one cellular phone at a time.

Before using the Bluetooth® Hands-Free Phone System, refer to the following notes.

- Set up the wireless connection between a compatible cellular phone and the in-vehicle phone module before using the hands-free phone system.

- Some Bluetooth® enabled cellular phones may not be recognized or work properly. Please visit www.nissanusa.com/bluetooth or www.nissan.ca/bluetooth for a recommended phone list and connecting instructions.
- You will not be able to use a hands-free phone under the following conditions:
  - Your vehicle is outside of the cellular service area.
  - Your vehicle is in an area where it is difficult to receive a cellular signal; such as in a tunnel, in an underground parking garage, near a tall building or in a mountainous area.
  - Your cellular phone is locked to prevent it from being dialed.
- When the radio wave condition is not ideal or ambient sound is too loud, it may be difficult to hear the other person's voice during a call.
- Do not place the cellular phone in an area surrounded by metal or far away from the in-vehicle phone module to prevent tone quality degradation and wireless connection disruption.
- While a cellular phone is connected through the Bluetooth® wireless connection, the battery power of the cellular phone may discharge quicker than usual. The Bluetooth® Hands-Free Phone System cannot charge cellular phones.
- Some cellular phones or other devices may cause interference or a buzzing noise to come from the audio system speakers. Storing the device in a different location may reduce or eliminate the noise.
- For additional information, refer to the cellular phone Owner's Manual regarding the telephone charges, cellular phone antenna and body, etc.
- For additional information, refer to "Troubleshooting guide" in this section. You can also visit www.nissanusa.com/bluetooth or www.nissan.ca/bluetooth for troubleshooting help if the hands-free phone system seems to be malfunctioning.

REGULATORY INFORMATION

FCC Regulatory information

- CAUTION: To maintain compliance with FCC's RF exposure guidelines, use only the supplied antenna. Unauthorized antenna, modification, or attachments could damage the transmitter and may violate FCC regulations.
- Operation is subject to the following two conditions:
  1. This device may not cause interference and
  2. this device must accept any interference, including interference that may cause undesired operation of the device.

IC Regulatory information

- Operation is subject to the following two conditions: (1) this device may not cause interference, and (2) this device must accept any interference, including interference that may cause undesired operation of the device.
- This Class B digital apparatus meets all requirements of the Canadian Interference-Causing Equipment Regulations.

BLUETOOTH® is a trademark owned by Bluetooth SIG, Inc. and licensed to Visteon.

USING THE SYSTEM

The system allows hands-free operation of the Bluetooth® Hands-Free Phone System.

If the vehicle is in motion, some commands may not be available so full attention may be given to vehicle operation.

Initialization

When the ignition switch is placed in the ON position, NISSAN Voice Recognition is initialized, which takes a few seconds. If the button is pressed before the initialization completes, the system will announce "Hands-free phone system not ready" and will not react to voice commands.

Operating tips

To get the best performance out of the NISSAN Voice Recognition System, observe the following:

- Keep the interior of the vehicle as quiet as possible. Keep all vents pointed away from the microphone and close the windows to eliminate surrounding noises (traffic noises, vibration sounds, etc.), which may prevent the system from recognizing voice commands correctly.
- Wait until the tone sounds before speaking a command. Otherwise, the command will not be received properly.
- Start speaking a command within 5 seconds after the tone sounds.
- Speak in a natural voice without pausing between words.
- For calling contacts by name, please say both the first and last name of the contact for better recognition.

Giving voice commands

To operate NISSAN Voice Recognition, press and release the button located on the steering wheel. After the tone sounds, speak a command.

The command given is picked up by the microphone, and voice feedback is given when the command is accepted.

- If you need to hear the available commands for the current menu again, say "Help" and the system will repeat them.
- If a command is not recognized, the system announces, "Command not recognized. Please try again." Make sure the command is said exactly as prompted by the system and repeat the command in a clear voice.
- If you want to go back to the previous command, you can say "Go back" or "Correction" any time the system is waiting for a response.
- You can cancel a command when the system is waiting for a response by saying, "Cancel" or "Quit." The system announces "Cancel" and ends the Voice Recognition session. You can also press and hold the button on the steering wheel for 5 seconds at any time to end the Voice Recognition session. Whenever the Voice Recognition session is canceled, a double beep is played to indicate you have exited the system.

- If you want to adjust the volume of the voice feedback, push the volume control switches (+ or -) on the steering wheel while being provided with feedback. You can also use the radio volume control knob.

Voice Prompt Interrupt

In most cases you can interrupt the voice feedback to speak the next command by pressing the button on the steering wheel. After interrupting the system, wait for a beep before speaking your command.

One Shot Call

To use the system faster, you may speak the second level commands with the main menu command on the main menu. For example, press the button and after the tone say, "Call Redial".

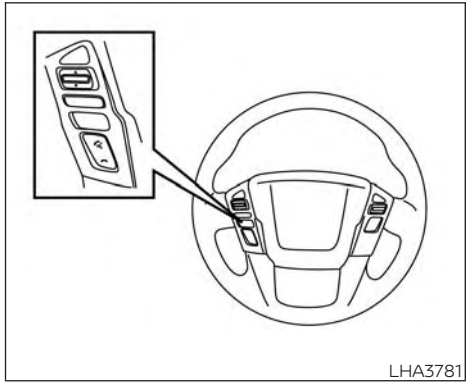

CONTROL BUTTONS

The control buttons for the Bluetooth® Hands-Free Phone System are located on the steering wheel.

PHONE/SEND

Press the button to initiate a Voice Recognition session or answer an incoming call.

You can also use the button to interrupt the system feedback and give a command at once. For additional information, refer to "Voice Commands" and "During a call" in this section.

PHONE/END

While the voice recognition system is active, press and hold the button for 5 seconds to quit the voice recognition system at any time.

Tuning switch

While using the voice recognition system, tilt the tuning switch up or down to manually control the phone system.

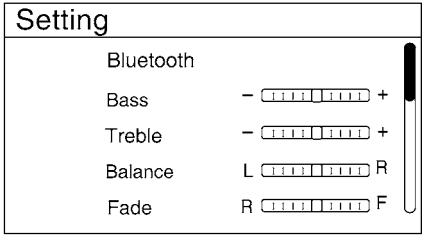

LHA2775

CONNECTING PROCEDURE

NOTE:

The connecting procedure must be performed when the vehicle is stationary. If the vehicle starts moving during the procedure, the procedure will be canceled.

To connect a phone to the Bluetooth® Hands-Free Phone System:

1. Press the ENTER/SETTING button.
2. Use the TUNE/SCROLL or TUNE/FOLDER knob to select "Bluetooth" and then press the ENTER/SETTING button.

Menu Item		Result
Bluetooth		Allows user to switch Bluetooth® on and off. Bluetooth® must be turned on in order to connect device.
	On	Turns Bluetooth® functionality on
	Off	Turns Bluetooth® functionality off
Add Phone or Device		Upon pressing this button, a message with a PIN appears on the screen. operate the Bluetooth® phone to enter the PIN and complete the connection process.
Replace Phone		Replace the phone currently connected to the system. This option allows the user to keep any voicetags that were recorded using the previous phone if vehicle is equipped with voice recognition.

The connecting procedure varies according to each phone. For additional information, refer to the phone's Owner's Manual. You can also visit www.nissanusa.com/bluetooth or www.nissan.ca/bluetooth or call the NISSAN Consumer Affairs Department for instructions on connecting recommended cellular phones.

VOICE COMMANDS

Voice commands can be used to operate the Bluetooth® Hands-Free Phone System. Press the button to bring up the phone command menu. The available options are:

- Call
- Phonebook
- Recent Calls
- Messaging
- Select Phone or Device

NOTE:

For Apple iPhones, text messages can only be sent through Siri®

"Call"

For additional information, refer to "Making a call" in this section.

"Phonebook"

The following commands are available under "Phonebook":

- (a name)
  Say a name in the phonebook to bring up a list of options for that phonebook entry. The system will say the name it interpreted based on the voice command provided. If the name is incorrect, say "Correction" to hear another name. Once the correct phonebook entry is identified, say "Dial" to dial the number or "Send Text" to send a text message to that number. Say "Record Name" to record a name for the phonebook entry. Say "Delete Recording" to delete a recorded name for the phonebook entry.
- List Names
  Speak this command to have the system list the names in the phonebook one by one alphabetically. Say "Dial" to dial the number of the current name or "Send Text" to send a text message to that number. Say "Next Entry" or "Previous Entry" to move through the list alphabetically. Say "Record Name" to record a name for the current phonebook entry. Say "Delete Recording" to delete a recorded name for the current phonebook entry.
- Transfer Entry (if so equipped)
  This command can be used to transfer multiple contacts at a time. To enable manual contact transfer capability, set "Phonebook Download" to "Off" in the Setting menu. The ability to transfer contacts via the OPP Bluetooth® profile depends on your mobile phone. For additional information, refer to your phone's Owner's Manual.
- Delete Entry (if so equipped)
  Speak this command to delete an entry in the phonebook. Choose an entry to delete by speaking the desired name or say "List Names".

"Recent Calls"

The following commands are available under "Recent Calls":

- Incoming Calls
  Speak this command to list the last five incoming calls to the vehicle. If the call is from an entry in the phonebook, the name will be displayed. Otherwise, the phone number of the incoming call will be displayed.
  Say "Dial" to call the number. Say "Next Entry" or "Previous Entry" to move through the list of incoming calls.

- Missed Calls
  Speak this command to list the last five missed calls to the vehicle. If the call is from an entry in the phonebook, the name will be displayed. Otherwise, the phone number of the missed call will be displayed.
  Say "Dial" to call the number. Say "Next Entry" or "Previous Entry" to move through the list of missed calls.

- Outgoing Calls
  Speak this command to list the last five outgoing calls from the vehicle. If the call was to an entry in the phonebook, the name will be displayed. Otherwise, the phone number of the outgoing call will be displayed.
  Say "Dial" to call the number. Say "Next Entry" or "Previous Entry" to move through the list of outgoing calls.

- Redial
  Speak this command to call the last number dialed.

- Call Back
  Speak this command to call the number of the last incoming call to the vehicle.

"Messaging"

Speak this command to access text messaging functions. For additional information, refer to "Text messaging" in this section.

"Select Phone or Device"

Speak this command to select a phone to use from a list of those phones connected to the vehicle.

MAKING A CALL

To make a call from a phone connected to the vehicle's Bluetooth® Hands-Free Phone System:

1. Press the button.
2. The system will prompt you for a command. Say "Call".
3. Select one of the available voice commands to continue:

- "(a name)" – Speak the name of a phonebook entry to place a call to that entry. The system will respond with the name it interpreted from your command and will prompt you to confirm that the name is correct. Say "Dial" to initiate the call or "Correction" to hear another name from the phonebook.

- "Number" – Speak this command to place a call by inputting numbers.
  For 7- and 10-digit phone numbers, speak the numbers. When finished, say "Dial" to initiate the call. Say "Correction" at any time in the process to correct a misspoken or misinterpreted number.
  For phone numbers with more digits or special characters, say "Special Number", then speak the digits. Up to 24 digits can be entered. Available special characters are "star", "pound", "plus" and "pause". When finished, say "Dial" to initiate the call. Say "Correction" at any time in the process to correct a misspoken or misinterpreted number or character.

- "Redial" – Speak this command to dial the number of the last outgoing call. The system will display "Redialing <name/number>". The name of the phonebook entry will be displayed if it available, otherwise the number being redialed will be displayed.

- "Call Back" – Speak this command to dial the number of the last incoming call. The system will display "Calling back <name/number>". The name of the phonebook entry will be displayed if it available, otherwise the number being called back will be displayed.

RECEIVING A CALL

When a call is received by the phone connected to the vehicle's Bluetooth® Hands-Free Phone System, the call information is displayed on either the vehicle information display (if so equipped) or both the vehicle information display (if so equipped) and the control panel display.

Press the button to accept the call. Press the button to reject the call.

DURING A CALL

While a call is active, press the button to access additional options. Speak one of the following commands:

- "Send" – Speak this command followed by the digits to enter digits during the phone call.
- "Mute On" or "Mute Off" – Speak the command to mute or unmute the system.
- "Transfer Call" – Speak this command to transfer the call to the handset. To transfer the call back from the handset to the Bluetooth® Hands-Free Phone System, press the button and confirm when prompted.

If supported by the phone, the Bluetooth® Hands-Free Phone System allows for call waiting functionality. If a call is received while another call is already active, a message will be displayed on the screen. Press the button to hold the active call and switch to the second call. Press the button to reject the second call.

While the second call is active, pressing the button will allow the same commands that are available during any call as well as two additional commands:

- "Switch Call" – Speak this command to hold the second call and switch back to the original call.
- "End Other Call" – Speak this command to stay with the second call and end the original call.

Press the button to accept the call. Press the button to reject the call.

ENDING A CALL

To end an active call, press the button.

TEXT MESSAGING

WARNING

- **Laws in some jurisdictions may restrict the use of "Text-to-Speech." Check local regulations before using the feature.**
- **Laws in some jurisdictions may restrict the use of some of the applications and features, such as social networking and texting. Check local regulations for any requirements.**
- **Use the text messaging feature after stopping your vehicle in a safe location. If you have to use the feature while driving, exercise extreme caution at all times so full attention may be given to vehicle operation.**
- **If you are unable to devote full attention to vehicle operation while using the text messaging feature, pull off the road to a safe location and stop your vehicle.**

NOTE:

Many phones may require special permission to enable text messaging. Check the phone's screen during Bluetooth® pairing. For some phones, you may need to enable 'Notifications' in the phone's Bluetooth® menu for text messages to appear on the headunit. Please consult you phone's Owner's manual. Text message integration requires that the phone support MAP (Message Access Profile) for both receiving and sending text messages. Some phones may not support all text messaging features. For additional information, refer to www.nissanusa.com/bluetooth or www.nissan.ca/bluetooth for compatibility information, as well as your device's Owner's manual.

The system allows for the sending and receiving of text messages through the vehicle interface.

Sending a text message:

1. Press the button.
2. Say "Messaging".
3. Say "Send Text".
4. The system will provide a list of available commands in order to determine the recipient of the text message. Choose from the following:
   - (A name)
   - Number
   - Incoming Calls
   - Outgoing Calls
   - Missed Calls

   If "Incoming Calls", "Outgoing Calls", or "Missed Calls" is selected, the following additional commands will be displayed:
   - Send Text
   - Next Entry
   - Previous Entry

   For additional information about these options, refer to "Voice commands" in this section.
5. Once a recipient is chosen, the system prompts for which message to send. Five predefined messages are available as well as three custom messages. To choose one of the predefined messages, speak one of the following:
   - "Driving, can't text"
   - "Call me"
   - "On my way"
   - "Running late"
   - "Okay"

To send one of the custom messages, say "Custom Message". If more than one custom message is stored, the system will prompt for the number of the desired custom message. For additional information on setting and managing custom text messages, refer to "Bluetooth® settings" in this section.

Reading a received text message:

1. Press the button.
2. Say "Messaging".
3. Say "Read Text".

The text message, sender and delivery time are shown on the screen. Use the tuning switch on the steering wheel to scroll through all text messages if more than one are available. Press the button to exit the text message screen. Press the button to access the following options for replying to the text message:

- Call Back
  Speak this command to call the sender of the text message using the Bluetooth® Hands-Free Phone System.
- Send Text
  Speak this command to send a text message response to the sender of the text message.
- Read Text
  Speak this command to read the text message again.
- Previous Text
  Speak this command to move to the previous text message (if available).
- Next Text
  Speak this command to move to the next text message (if available).

Siri® Eyes Free

If a connected phone is equipped with Siri®, it can also be used to create custom messages that are sent through the phone. For additional information, refer to Siri® Eyes Free in this section.

NOTE:

Text messages are only displayed if the vehicle speed is less than 5 mph (8 km/h).

NOTE:

For Apple iPhones, text messages can only be sent through Siri.

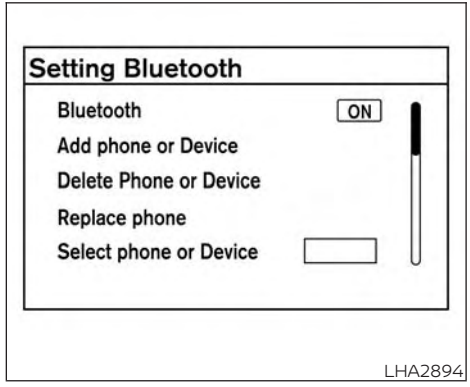

LHA2894

BLUETOOTH® SETTINGS

To access and adjust the settings for the Bluetooth® Hands-Free Phone System:

1. Press the ENTER/SETTING button.
2. Use the TUNE/SCROLL or TUNE/FOLDER knob to select "Bluetooth" and then press the ENTER/SETTING button:

- Bluetooth
  Select "On" or "Off" to turn the vehicle's Bluetooth® system on or off.

- Add Phone or Device
  For additional information, refer to "Connecting procedure" in this section.
- Delete Phone or Device
  Select to delete a phone from the displayed list. The system will ask to confirm before deleting the phone.
- Replace Phone
  Select to replace a phone from the displayed list. When a selection is made, the system will ask to confirm before proceeding. The recorded phonebook for the phone being deleted will be saved as long as the new phone's phonebook is the same as the old phone's phonebook.
- Select Phone or Device
  Select to connect to a previously connected phone from the displayed list.
- Phonebook Download
  Select to turn on or off the automatic download of a connected phone's phonebook.
- Show Incoming Calls
  Select "Driver Only" to have incoming call information displayed only in the vehicle information display (if so equipped). Select "Both" to have incoming call information displayed in both the vehicle information display (if so equipped) and the center display screen.
- Siri®
  Press the button operation for Siri® Eyes Free function from "Short Press" and "Long Press" For additional information, refer to "Siri® Eyes Free" in this section. "Siri" is displayed only when a Siri Eyes Free enabled iPhone® is connected to the vehicle.
- Text Message
  Select to turn on or off the vehicle's text messaging feature.
- New Text Sound
  Select to adjust the volume of the sound that plays when a new text is received by a phone connected to the Bluetooth® Hands-Free Phone System. The setting all the way to the left indicates that the new text sound will be muted.
- Show Incoming Text
  Select "Driver Only" to have incoming text messages displayed only in the vehicle information display (if so equipped). Select "Both" to have incoming text messages displayed in both the vehicle information display (if so equipped) and the center display screen. Select "None" to have no display of incoming text messages.
- Edit Custom Messages
  Select to set a custom message that will be available with the standard options when sending a text message. To set a custom message, send a text message to your own phone number while the phone is connected to the system. Three custom messages can be set. Custom messages can only be set while the vehicle is stationary.
- Auto Reply
  Select to turn on or off the Auto Reply function. When enabled, the vehicle will automatically send a predefined text message to the sender when a text message is received while driving.

- Auto Reply Message
  Select to choose the message that is sent when the Auto Reply function is enabled. Choose from "I'm Driving" or one of the three custom messages stored in the system.
- Vehicle Signature On/Off
  Select to choose whether or not the vehicle signature is added to outgoing text messages from the vehicle. This message cannot be changed or customized.

MANUAL CONTROL

While using the Voice Recognition system, it is possible to select menu options by using the steering wheel controls instead of speaking voice commands. To activate manual control mode, press the button on the steering wheel to access the phone menu and then push either up or down on the tuning switch .

The manual control mode does not allow dialing a phone number by digits. The user may select an entry from the Phonebook or Recent Calls lists. To reactivate Voice Recognition, exit the manual control mode by pressing and holding the button. At that time, pressing the button will start the Hands Free Phone System.

TROUBLESHOOTING GUIDE

The system should respond correctly to all voice commands without difficulty. If problems are encountered, try the following solutions.

Where the solutions are listed by number, try each solution in turn, starting with number 1, until the problem is resolved.

Symptom	Solution
System fails to interpret the command correctly.	1. Ensure that the command is valid. For additional information, refer to "Voice commands" in this section.
	2. Ensure that the command is spoken after the tone.
	3. Speak clearly without pausing between words and at a level appropriate to the ambient noise level in the vehicle.
	4. Ensure that the ambient noise level is not excessive (for example, windows open or defroster on). NOTE: If it is too noisy to use the phone, it is likely that the voice commands will not be recognized.
	5. If more than one command was said at a time, try saying the commands separately.
The system consistently selects the wrong entry from the phone book.	1. Ensure that the phone book entry name requested matches what was originally stored. This can be confirmed by using the "List Names" command. For additional information, refer to "Voice Commands" in this section.
	2. Replace one of the names being confused with a new name.
	3. Please speak both first and last name of contact to improve recognition accuracy.

BLUETOOTH® HANDS-FREE PHONE SYSTEM WITH NAVIGATION SYSTEM (if so equipped)

⚠ WARNING

- **Use a phone after stopping your vehicle in a safe location. If you have to use a phone while driving, exercise extreme caution at all times so full attention may be given to vehicle operation.**
- **If you are unable to devote full attention to vehicle operation while talking on the phone, pull off the road to a safe location and stop your vehicle.**

⚠ CAUTION

To avoid discharging the vehicle battery, use a phone after starting the engine.

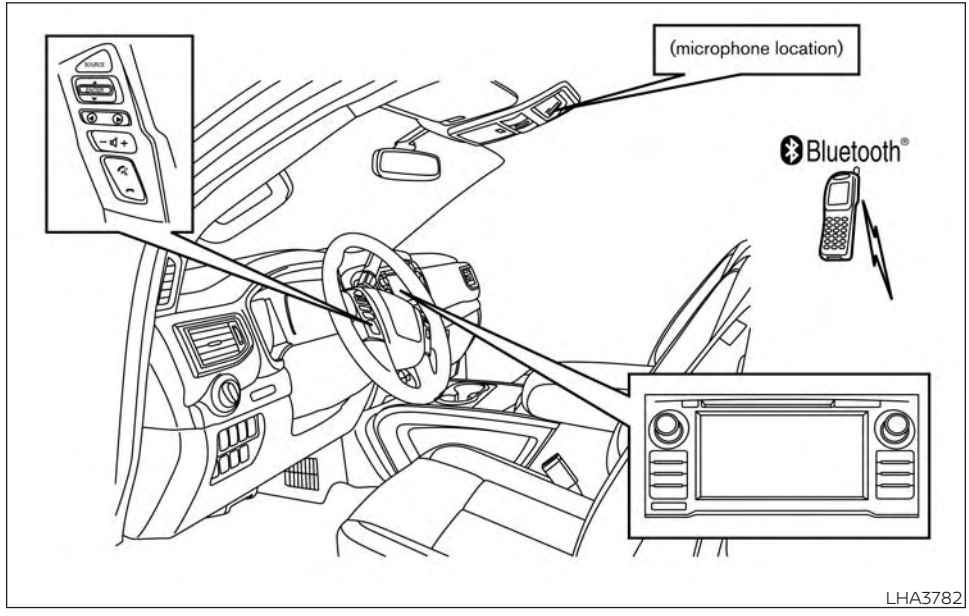

Your NISSAN is equipped with the Bluetooth® Hands-Free Phone System. If you have a compatible Bluetooth® enabled cellular phone, you can set up the wireless connection between your cellular phone and the in-vehicle phone module. With Bluetooth® wireless technology, you can make or receive a hands-free telephone call with your cellular phone in the vehicle.

Once your cellular phone is connected to the in-vehicle phone module, no other phone connecting procedure is required. Your phone is automatically reconnected

with the in-vehicle phone module when the ignition switch is placed in the ON position with the connected cellular phone turned on and carried in the vehicle.

You can register up to five different Bluetooth® cellular phones to the in-vehicle phone module. However, you can talk on only one cellular phone at a time.

NISSAN Voice Recognition system supports the phone commands, so dialing a phone number using your voice is possible. For additional information, refer to "NISSAN Voice Recognition System" in this section.

Before using the Bluetooth® Hands-Free Phone System, refer to the following notes.

- Set up the wireless connection between a cellular phone and the in-vehicle phone module before using the hands-free phone system.
- Some Bluetooth® enabled cellular phones may not be recognized by the in-vehicle phone module. Please visit www.nissanusa.com/bluetooth or www.nissan.ca/bluetooth for a recommended phone list and connecting.
- You will not be able to use a hands-free phone under the following conditions:
  - Your vehicle is outside of the cellular service area.
  - Your vehicle is in an area where it is difficult to receive cellular signal; such as in a tunnel, in an underground parking garage, near a tall building or in a mountainous area.
  - Your cellular phone is locked to prevent it from being dialed.
- When the radio wave condition is not ideal or ambient sound is too loud, it may be difficult to hear the other person's voice during a call.
- Immediately after the ignition switch is placed in the ON position, it may be impossible to receive a call for a short period of time.
- Do not place the cellular phone in an area surrounded by metal or far away from the in-vehicle phone module to prevent tone quality degradation and wireless connection disruption.
- While a cellular phone is connected through the Bluetooth® wireless connection, the battery power of the cellular phone may discharge quicker than usual. The Bluetooth® Hands-Free Phone System cannot charge cellular phones.
- Some cellular phones or other devices may cause interference or a buzzing noise to come from the audio system speakers. Storing the device in a different location may reduce or eliminate the noise.
- For additional information, refer to the cellular phone owner's manual regarding the battery, battery charging and cellular phone operations.
- The signal strength display on the monitor will not coincide with the signal strength display of some cellular phones.
- For additional information, refer to "Troubleshooting guide" in this section. You can also visit www.nissanusa.com/bluetooth or www.nissan.ca/bluetooth for troubleshooting help if the hands-free phone system seems to be malfunctioning.

REGULATORY INFORMATION

FCC Regulatory information

- CAUTION: To maintain compliance with FCC's RF exposure guidelines, use only the supplied antenna. Unauthorized antenna, modification, or attachments could damage the transmitter and may violate FCC regulations.
- Operation is subject to the following two conditions:

1. This device may not cause interference and
2. this device must accept any interference, including interference that may cause undesired operation of the device.

IC Regulatory information

- Operation is subject to the following two conditions: (1) this device may not cause interference, and (2) this device must accept any interference, including interference that may cause undesired operation of the device.
- This Class B digital apparatus meets all requirements of the Canadian Interference-Causing Equipment Regulations.

Bluetooth®

BLUETOOTH® is a trademark owned by Bluetooth SIG, Inc. and licensed to Bosch.

VOICE COMMANDS

You can use voice commands to operate various Bluetooth® Hands-Free Phone System features using the NISSAN Voice Recognition System. For additional information, refer to "NISSAN Voice Recognition System" in this section.

Voice Prompt Interrupt

While using the Voice Recognition system, the system voice can be interrupted to allow the user to speak commands. While the system is speaking, press the button on the steering wheel. The system voice will stop and a tone will be heard. After the tone, speak desired command (displayed on the touch-screen).

One Shot Call

To use the system faster, you may speak the second level commands with the main menu command on the main menu. For example, press the button and after the tone say, "Call Redial".

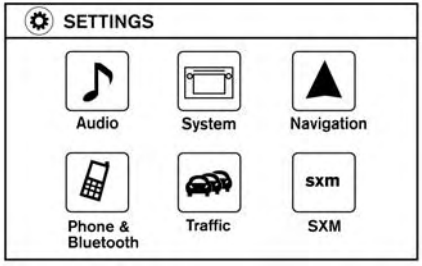

LHA3712

CONNECTING PROCEDURE

NOTE:

The connecting procedure must be performed when the vehicle is stationary. If the vehicle starts moving during the procedure, the procedure will be canceled.

1. Press the [APPS] button on the control panel.
2. Touch the "Settings" key.
3. Touch the "Phone & Bluetooth" key.
4. Touch the "Connect New Device" key.
5. Initiate the connecting process from the handset. The system will display the message: "Confirm on your Bluetooth device that the pin XXXXXX is displayed". If the PIN is displayed on your Bluetooth® device, select "Yes/Pair" to complete the pairing process.

For additional information, refer to the Bluetooth® device's Owner's Manual.

VEHICLE PHONEBOOK

To access the vehicle phonebook:

1. Press the button on the control panel.
2. Touch the "Phonebook" key.
3. Choose the desired entry from the displayed list.
4. The number of the entry will be displayed on the screen. Touch the number to initiate dialing.

NOTE:

To scroll quickly through the list, touch the "A-Z" key in the upper right corner of the screen. Turn the TUNE/SCROLL knob to choose a letter or number and then press ENTER/AUDIO. The list will move to the first entry that begins with that number or letter.

MAKING A CALL

To make a call, follow the procedure below:

1. Press the button on the control panel. The "Phone" screen will appear on the display.
2. Select one of the following options to make a call:

- "Phonebook": Select the name from an entry stored in the vehicle phonebook.
- "Call Lists": Select the name from the incoming, outgoing or missed.
- "Redial": Dial the last outgoing call from the vehicle.
- " ": Input the phone number manually using a keypad displayed on the screen. For additional information, refer to "How to use the touch-screen" in this section.

RECEIVING A CALL

When a call is placed to the connected phone, the display will change to phone mode.

To accept the incoming call, either:

- Press the button on the steering wheel, or
- Touch the icon on the screen.

To reject the incoming call, either:

- Press the button on the steering wheel, or
- Touch the icon on the screen.

DURING A CALL

While a call is active, the following options are available on the screen:

- "Handset"
  Select this option to switch control of the phone call over to the handset.
- "Mute Mic."
  Select this option to mute the microphone. Select again to unmute the microphone.
- Phone icon
  Select to end the phone call.

ENDING A CALL

To end a phone call, select the phone icon on the screen or press the button on the steering wheel.

TEXT MESSAGING

WARNING

- **Laws in some jurisdictions may restrict the use of "Text-to-Speech". Check local regulations before using this feature.**
- **Laws in some jurisdictions may restrict the use of some of the applications and features, such as social networking and texting. Check local regulations for any requirements.**
- **Use the text messaging feature after stopping your vehicle in a safe location. If you have to use the feature while driving, exercise extreme caution at all times so full attention may be given to vehicle operation.**
- **If you are unable to devote full attention to vehicle operation while using the text messaging feature, pull off the road to a safe location and stop your vehicle.**

NOTE:

This feature is automatically disabled if the connected device does not support the Message Access Profile (MAP). For additional information, refer to the phone's Owner's Manual for details and instructions.

NOTE:

Many phones may require special permission to enable text messaging. Check the phone's screen during Bluetooth® pairing. For some phones, you may need to enable 'Notifications' in the phone's Bluetooth® menu for text messages to appear on the headunit. For additional information, refer to your phone's Owner's manual. Text message integration requires that the phone support MAP (Message Access Profile) for both receiving and sending text messages. Some phones may not support all text messaging features. For additional information, refer to www.nissanusa.com/bluetooth or www.nissan.ca/bluetooth for compatibility information, as well as your device's Owner's manual.

The system allows for the sending and receiving of text messages through the vehicle interface.

Sending a text message:

1. Press the button on the steering wheel.
2. Say "Phone" after the tone.
3. Say "Send Text" after the tone.
4. The system will provide a list of available commands in order to determine the recipient of the text message. Choose from the following:
   - To (a name)
   - Enter Number
   - Missed Calls
   - Incoming Calls
   - Outgoing Calls

   For additional information, refer to "Voice commands" in this section.
5. Once a recipient is chosen, the system prompts for which message to send. Nine predefined messages are available as well as three custom messages. To choose one of the predefined messages, speak one of the following after the tone:
   - "Driving, can't text"
   - "Call me"
   - "On my way"
   - "Running late"
   - "Okay"
   - "Yes"
   - "No"
   - "Where are you?"
   - "When?"
   - "Custom Messages"

   To send one of the custom messages, say "Custom Messages". If more than one custom message is stored, the system will prompt for the number of the desired custom message. For additional information, refer to "Bluetooth® settings" in this section.

Reading a received text message:

1. Press the button on the steering wheel.
2. Say "Phone" after the tone.
3. Say "Read Text" after the tone.

The text message, sender and delivery time are shown on the screen. Use the tuning switch to scroll through all text messages if more than one are available. Press the button to exit the text message screen. Press the button to access the following options for replying to the text message:

- Call Back
  Speak this command to call the sender of the text message using the Bluetooth® Hands-Free Phone System.
- Send Text
  Speak this command to send a text message response to the sender of the text message.
- Read Text
  Speak this command to read the text message again.
- Previous Text
  Speak this command to move to the previous text message (if available).

- Next Text
  Speak this command to move to the next text message (if available).

NOTE:

Text messages are only displayed if the vehicle speed is less than 5 mph (8 km/h).

NOTE:

iPhones® can only send text messages via Siri® Eyes Free.

Making custom messages with Siri® Eyes Free

If a connected phone is equipped with Siri®, it can also be used to create custom messages. For additional information, refer to "Siri® Eyes Free" in this section.

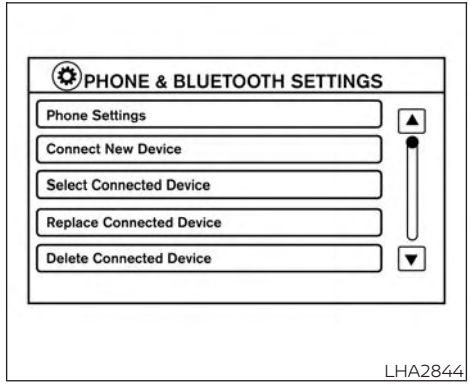

BLUETOOTH® SETTINGS

To access the phone settings:

1. Press the [APPS] button.
2. Touch the "Settings" key.
3. Touch the "Phone & Bluetooth" key.

Menu Item	Result
Phone Settings	For additional information, refer to "Phone settings" in this section.
Connect New Device	Select to connect a new Bluetooth® device to the Bluetooth® Hands-Free Phone System.
Select Connected Device	Select to choose a Bluetooth® device from a list of those devices connected to the Bluetooth® Hands-Free Phone System.
Replace Connected Device	Select to replace a Bluetooth® device from a list of those devices connected to the Bluetooth® Hands-Free Phone System.
Delete Connected Device	Select to delete a Bluetooth® device from a list of those devices connected to the Bluetooth® Hands-Free Phone System.
Bluetooth	Select to toggle Bluetooth® on and off.

PHONE SETTINGS

To access the phone settings:

1. Press the [APPS] button.
2. Touch the "Settings" key.
3. Touch the "Phone & Bluetooth" key.
4. Touch the "Phone Settings" key and adjust the following settings as desired:

- Start Siri® by:
  Touch "Short Press" or "Long Press" to set how Siri® is operated on the steering wheel.
- Sort Phonebook By:
  Touch "First Name" or "Last Name" to choose how phonebook entries are alphabetically displayed on the screen.
- Use Phonebook From:
  Touch "Handset" to use the phone's phonebook. Touch "SIM" to use the phonebook on the SIM card. Select "Both" to use both sources.
- Download Phonebook Now:
  Touch to download the phonebook to the vehicle from the chosen source.
- Record Name for Phonebook Entry:
  Touch to record a name for a phonebook entry for use with the NISSAN Voice Recognition System.
- Phone Notifications for:
  Touch "Driver" to have phone notifications shown in the vehicle information display (if so equipped). Select "Both" to have phone notifications shown in both the vehicle information display (if so equipped) and the center display screen.
- Text Messaging:
  Touch to toggle the text message functionality on or off.
- Show Incoming Text for:
  Touch "Driver" to have incoming text notifications shown in the vehicle information display (if so equipped). Touch "Both" to have text notifications shown in both the vehicle information display (if so equipped) and the center display screen. Touch "Off" to turn off all text notifications.
- Auto Reply:
  Touch to toggle the auto reply functionality on or off.
- Auto Reply Message:
  Touch to indicate preferred message to be sent when "Auto Reply" function is activated.
- Use Vehicle's Signature:
  Touch to toggle on or off the addition of the vehicle signature to outgoing messages.
- Custom Text Messages:
  Touch this option to select a custom message to edit. There are 4 customer message slots available.

TROUBLESHOOTING GUIDE

The system should respond correctly to all voice commands without difficulty. If problems are encountered, try the following solutions.

Where the solutions are listed by number, try each solution in turn, starting with number 1, until the problem is resolved.

Symptom	Solution
System fails to interpret the command correctly.	1. Ensure that the command is valid. For additional information, refer to "NISSAN Voice Recognition" in this section.
	2. Ensure that the command is spoken after the tone.
	3. Speak clearly without pausing between words and at a level appropriate to the ambient noise level in the vehicle.
	4. Ensure that the ambient noise level is not excessive (for example, windows open or defroster on). NOTE: If it is too noisy to use the phone, it is likely that the voice commands will not be recognized.
	5. If more than one command was said at a time, try saying the commands separately.
The system consistently selects the wrong entry from the phone book.	1. Ensure that the phone book entry name requested matches what was originally stored. For additional information, refer to "Vehicle phonebook" in this section.
	2. Replace one of the names being confused with a new name.
	3. Please speak both first and last name of contact to improve recognition accuracy.

NISSAN VOICE RECOGNITION SYSTEM (if so equipped)

The NISSAN Voice Recognition system allows hands-free operation of the systems equipped on this vehicle, such as the phone and navigation systems.

To operate NISSAN Voice Recognition, press the button located on the steering wheel. When prompted, speak the command for the system you wish to activate. The command given is picked up by the microphone and performed when it is properly recognized. NISSAN Voice Recognition will provide a voice response as well as a message in the center display to inform you of the command results.

USING THE SYSTEM

Initialization

When the ignition switch is in the ON position, NISSAN Voice Recognition is initialized, which takes a few seconds. When completed, the system is ready to accept voice commands. If the button is pressed before the initialization completes, the system will announce: "Voice Recognition System not ready. Please wait."

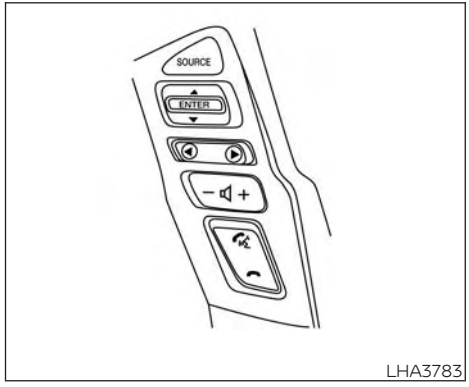

Giving voice commands

1. Press the button.
2. The system announces: "Please say a category like phone or a command like points of interest followed by a brand name". A list of available commands is then spoken by the system.
3. After the tone sounds and the face icon on the display changes, speak a command. Available commands are discussed in this section.
4. Voice and display feedback are provided when the command is accepted.

- If the command is not recognized, the system announces: "Command not recognized". Repeat the command in a clear voice.
- If you want to cancel the command or go back to the previous menu of commands, press the button. The system will announce: "Canceling Voice Recognition" or "Go back" depending on the current menu level.
- Press the button to move back through the menus displayed on the screen.
- If you want to adjust the volume of the voice feedback, use the volume control switches on the steering wheel or the volume knob on the control panel.
- The voice command screen can also be accessed using the control panel display:

1. Press the [APPS] button.
2. Touch the "Voice Commands" key.

Operating tips

To get the best performance out of NISSAN Voice Recognition, observe the following:

- Keep the interior of the vehicle as quiet as possible. Close the windows to eliminate the surrounding noises (traffic noises, vibration sounds, etc.), which may prevent the system from recognizing the voice commands correctly.
- Wait until a tone sounds before speaking a command. Otherwise, the command will not be received properly.
- Start speaking a command within 3.5 seconds after the tone sounds.
- Speak in a natural voice without pausing between words.

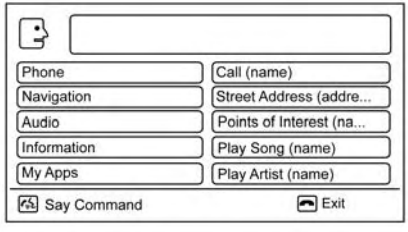

LHA4373

SYSTEM FEATURES

NISSAN Voice Recognition can activate the following systems:

- Bluetooth® Hands-Free Phone System
- Navigation
- Audio
- Information
- My Apps

For additional information, refer to the separate NissanConnect® Owner's Manual.

How to say numbers

NISSAN Voice Recognition requires a certain way to speak numbers in voice commands. Refer to the following examples.

General rule: Either "zero" or "oh" can be used for "0".

Phone numbers

Speak phone numbers according to the following example. For 1-800-662-6200, say dial number and then speak the phone number in any of the following formats:

- "one eight oh oh six six two six two oh oh"
- "one eight hundred six six two six two oh oh"
- "one eight zero zero six six two six two oh oh"

For the best voice recognition phone dialing results, say phone numbers as single digits. Also, full numbers can only be spoken for "800". For example, you cannot say 555-6000 as "five five five six thousand".

BLUETOOTH® HANDS-FREE PHONE SYSTEM VOICE COMMANDS

To access the Bluetooth® Hands-Free Phone System voice commands:

1. Press the button.
2. Say "Call" and then a name in the vehicle phonebook to call that entry. Otherwise, say "Phone" to access various phone commands.

If the Bluetooth® has been set to "Off", the system announces: "Bluetooth® is off. Would you like to turn Bluetooth® on?"

If no phone is connected to the system and the vehicle is stationary, the system announces: "There is no phone connected. Would you like to connect a phone now?" Say "Yes" to connect a phone. All further Bluetooth® Hands-Free Phone System voice commands are only available if a phone is connected.

If a phone is connected and Bluetooth® is set to "On", the following voice commands are available:

- Call (a name)

  Speak the name of the contact in which you are trying to call. System will confirm correct contact. Say "Dial" to initiate dialing.

- Dial Number

  Allows for up to 24 digits to be dialed. After the number is entered, say "Dial" to initiate dialing. Say "Correction" to correct the number entered. Say "Go Back" to return to the main menu.

- List Phonebook

  Starting with the first alphabetical entry in the vehicle phonebook, the system prompts for an additional command. Say "Dial" to call the number of the phonebook entry. Say "Send Text" to send a text message to the number of the phonebook entry. Say "Next Entry" to skip to the next alphabetical entry in the vehicle phonebook, where the same options will then be available.

- Recent Calls

  The system prompts for an additional command. Say "Missed Calls", "Incoming Calls" or "Outgoing Calls" to display a list of such calls on the screen.

  Speak the number of the entry displayed on the screen to dial that number or say "Next Page" to view entries on the next page (if available).

- Redial

  Redials the last called number.

- Read Text

  Reads an incoming text message. For additional information, refer to "Bluetooth® Hands-Free Phone System with Navigation System" in this section.

- Send Text

  Sends a text message. For additional information, refer to "Bluetooth® Hands-Free Phone System with Navigation System" in this section.

- Select Phone

  The system replies "Please use manual controls to continue". Use manual controls to change the active phone from among the listed phones connected to the vehicle.

- Siri®

  The system replies "Starting Siri". For additional information, refer to "Operating Siri Eyes Free" in this section.

For additional information, refer to "Bluetooth® Hands-Free Phone System with Navigation System" in this section.

NAVIGATION SYSTEM VOICE COMMANDS

The following voice commands are available for the Navigation System:

- Street Address (address)
- Points of Interest (name)
- POI by Category
- Home
- Address Book
- Previous Destinations
- Enter Address in Steps
- Cancel Route

For additional information about these commands, see the separate NissanConnect® Owner's Manual.

AUDIO SYSTEM VOICE COMMANDS

To access the audio system voice commands:

1. Press the button.
2. Say "Audio"
3. Speak a command from the following available commands:

- Play (AM, FM, etc.)

  Allows user to select radio band

- Tune AM (number)

  Allows user to tune directly to a desired AM frequency

- Tune FM (number)

  Allows user to tune directly to a desired FM frequency

- SXM channel (number)

  Allows user to tune directly to a desired SXM station (if so equipped)

- CD Track (number)

  Allows user to select track to be played

- Play Song (name)

  Allows user to select song name to be played

- Play Artist (name)

  Allows user to select artist to be played

- Play Album (name)

  Allows user to select album name to be played

For additional information, refer to "Audio system" in this section.

INFORMATION VOICE COMMANDS

The following voice commands are available for the information functions of the navigation system:

- Traffic
- Fuel Prices
- Stocks
- Movie Listings
- Current Weather
- Weather Map
- 5 — day Forecast
- 6 — hour Forecast
- Connect to Voice Menu
- Additional Commands

For additional information, refer to the separate NissanConnect® Owner's Manual.

MY APPS VOICE COMMANDS

Many Apps can be accessed using this voice command. For additional information, refer to the separate NissanConnect® Owners Manual.

HELP VOICE COMMANDS

The following voice commands can be spoken to have the system provide instructions and tips for using the NISSAN Voice Recognition System.

- List Commands
- What Can I Say?
- General Help
- Go Back
- Quit
- Exit

TROUBLESHOOTING GUIDE

The system should respond correctly to all voice commands without difficulty. If problems are encountered, follow the solutions given in this guide for the appropriate error. Where the solutions are listed by number, try each solution in turn, starting with number one, until the problem is resolved.

Symptom/error message	Solution
The system responds "Command Not Recognized" or the system fails to recognize the command correctly.	1. Ensure that the command format is valid. Use the "List Commands" or "What Can I Say?" command under the "Help" menu.
	2. Speak clearly without pausing between words and at a level appropriate to the ambient noise level.
	3. Ensure that the ambient noise level is not excessive (for example, with the windows open or the defroster on). **NOTE:** **If it is too noisy to use the phone, it is likely that voice commands will not be recognized.**
	4. If optional words of the command have been omitted, then the command should be tried with these in place.

5 Starting and driving

Precautions when starting and driving 5-2
Exhaust gas (carbon monoxide) 5-2
Three-way catalyst (if so equipped) 5-2
Tire Pressure Monitoring System (TPMS) 5-3
On-pavement and off-road driving precautions 5-6
Avoiding collision and rollover 5-7
Off-road recovery 5-7
Rapid air pressure loss 5-8
Drinking alcohol/drugs and driving 5-8
Driving safety precautions 5-9
Push-Button Ignition Switch 5-11
Operating range 5-12
Push-button ignition switch positions 5-12
Emergency engine shut off 5-13
NISSAN Intelligent Key® battery discharge 5-13
NISSAN Vehicle Immobilizer System 5-14
Before starting the engine 5-14
Starting the engine (gasoline engine only) 5-15
Remote Engine Start (if so equipped) 5-16
Starting the engine (diesel only) 5-16
Driving the vehicle 5-16
Engine protection mode 5-16
Automatic transmission (A/T) 5-17
Parking brake 5-22
Blind Spot Warning (BSW) (if so equipped) 5-23
BSW system operation 5-25
How to enable/disable the BSW system 5-26
BSW system limitations 5-26
BSW driving situations 5-27
System temporarily unavailable 5-31
System maintenance 5-32
Rear Cross Traffic Alert (RCTA) (if so equipped) . . 5-33
RCTA system operation 5-34
How to enable/disable the RCTA system 5-36
RCTA system limitations 5-37
System temporarily unavailable 5-39
System maintenance 5-40
Cruise control 5-41
Precautions on cruise control 5-41
Cruise control operations 5-42
Break-in schedule 5-43
Fuel efficient driving tips 5-43
Increasing fuel economy 5-45

Using 4-wheel drive (4WD) (if so equipped) 5-45
Transfer case shifting procedures 5-46
Electronic locking rear differential (E-Lock) system (if so equipped) 5-52
Eco Drive Report (if so equipped) 5-54
Parking/parking on hills 5-55
Power steering 5-56
Brake system 5-56
Brake precautions 5-56
Anti-lock Braking System (ABS) 5-57
Brake assist 5-58
Active brake limited slip (ABLS) system 5-59
Vehicle Dynamic Control (VDC) system 5-60
Brake force distribution 5-61
Hill Descent Control System (if so equipped) 5-62
Hill start assist system 5-63
Front and rear sonar system (if so equipped) . . . 5-64
System operation 5-65
How to enable/disable the Sonar system 5-67
Sonar limitations 5-68
System maintenance 5-69
Cold weather driving 5-69
Freeing a frozen door lock 5-69
Antifreeze 5-69
Battery 5-69
Draining of coolant water 5-70
Tire equipment 5-70
Special winter equipment 5-70
Driving on snow or ice 5-70
Engine block heater (if so equipped) 5-71

⚠ WARNING

- **Do not leave children or adults who would normally require the assistance of others alone in your vehicle. Pets should also not be left alone. They could accidentally injure themselves or others through inadvertent operation of the vehicle. Also, on hot, sunny days, temperatures in a closed vehicle could quickly become high enough to cause severe or possibly fatal injuries to people or animals.**
- **Properly secure all cargo with ropes or straps to help prevent it from sliding or shifting. Do not place cargo higher than the seatbacks. In a sudden stop or collision, unsecured cargo could cause personal injury.**

EXHAUST GAS (carbon monoxide)

⚠ WARNING

- **Do not breathe exhaust gases; they contain colorless and odorless carbon monoxide. Carbon monoxide is dangerous. It can cause unconsciousness or death.**
- **If you suspect that exhaust fumes are entering the vehicle, drive with all windows fully open, and have the vehicle inspected immediately.**
- **Do not run the engine in closed spaces such as a garage.**
- **Do not park the vehicle with the engine running for any extended length of time.**
- **Keep the rear vent windows, liftgates, doors and trunk lids (if so equipped) closed while driving, otherwise exhaust gases could be drawn into the passenger compartment. If you must drive with one of these open, follow these precautions:**
  1. **Open all the windows.**
  2. **Set the air recirculation button to off and the fan control dial to high to circulate the air.**
- **If electrical wiring or other cable connections must pass to a trailer through the seal on the liftgate or the body, follow the manufacturer's recommendation to prevent carbon monoxide entry into the vehicle.**
- **The exhaust system and body should be inspected by a qualified mechanic whenever:**
  a. **The vehicle is raised for service.**
  b. **You suspect that exhaust fumes are entering into the passenger compartment.**
  c. **You notice a change in the sound of the exhaust system.**
  d. **You have had an accident involving damage to the exhaust system, underbody, or rear of the vehicle.**

THREE-WAY CATALYST (if so equipped)

The three-way catalyst is an emission control device installed in the exhaust system. Exhaust gases in the three-way catalyst are burned at high temperatures to help reduce pollutants.

⚠ WARNING

- **The exhaust gas and the exhaust system are very hot. Keep people, animals or flammable materials away from the exhaust system components.**
- **Do not stop or park the vehicle over flammable materials such as dry grass, waste paper or rags. They may ignite and cause a fire.**

⚠ CAUTION

- **Do not use leaded gasoline. Deposits from leaded gasoline will seriously reduce the three-way catalyst's ability to help reduce exhaust pollutants.**
- **Keep your engine tuned up. Malfunctions in the ignition, fuel injection, or electrical systems can cause overrich fuel flow into the three-way catalyst, causing it to overheat. Do not keep driving if the engine misfires, or if noticeable loss of performance or other unusual operating conditions are detected. Have the vehicle inspected promptly. It is recommended that you visit a NISSAN dealer for this service.**
- **Avoid driving with an extremely low fuel level. Running out of fuel could cause the engine to misfire, damaging the three-way catalyst.**
- **Do not race the engine while warming it up.**
- **Do not push or tow your vehicle to start the engine.**

TIRE PRESSURE MONITORING SYSTEM (TPMS)

Each tire, including the spare (if provided), should be checked monthly when cold and inflated to the inflation pressure recommended by the vehicle manufacturer on the vehicle placard or tire inflation pressure label. (If your vehicle has tires of a different size than the size indicated on the vehicle placard or tire inflation pressure label, you should determine the proper tire inflation pressure for those tires.)

As an added safety feature, your vehicle has been equipped with a Tire Pressure Monitoring System (TPMS) that illuminates a low tire pressure telltale when one or more of your tires is significantly underinflated. Accordingly, when the low tire pressure telltale illuminates, you should stop and check your tires as soon as possible, and inflate them to the proper pressure. Driving on a significantly underinflated tire causes the tire to overheat and can lead to tire failure. Under-inflation also reduces fuel efficiency and tire tread life, and may affect the vehicle's handling and stopping ability.

Please note that the TPMS is not a substitute for proper tire maintenance, and it is the driver's responsibility to maintain correct tire pressure, even if under-inflation has not reached the level to trigger illumination of the TPMS low tire pressure telltale.

Your vehicle has also been equipped with a TPMS malfunction indicator to indicate when the system is not operating properly. The TPMS malfunction indicator is combined with the low tire pressure telltale. When the system detects a malfunction, the telltale will flash for approximately one minute and then remain continuously illuminated. This sequence will continue upon subsequent vehicle start-ups as long as the malfunction exists. When the malfunction indicator is illuminated, the system may not be able to detect or signal low tire pressure as intended. TPMS malfunctions may occur for a variety of reasons, including the installation of replacement or alternate tires or wheels on the vehicle that

prevent the TPMS from functioning properly. Always check the TPMS malfunction telltale after replacing one or more tires or wheels on your vehicle to ensure that the replacement or alternate tires and wheels allow the TPMS to continue to function properly.

Additional information:

- When replacing a wheel without the TPMS such as the spare tire, the TPMS does not monitor the tire pressure of the spare tire.
- The TPMS will activate only when the vehicle is driven at speeds above 16 mph (25 km/h). Also, this system may not detect a sudden drop in tire pressure (for example, a flat tire while driving).
- The low tire pressure warning light does not automatically turn off when the tire pressure is adjusted. After your tires are inflated to the recommended pressure, the vehicle must be driven at speeds above 16 mph (25 km/h) to activate the TPMS and turn off the low tire pressure warning light. Use a tire pressure gauge to check the tire pressure.
- The "Tire Pressure Low – Add Air" warning appears in the vehicle information display when the low tire pressure warning light is illuminated and low tire pressure is detected. The "Tire Pressure Low – Add Air" warning turns off when the low tire pressure warning light turns off.
- The "Tire Pressure Low – Add Air" warning does not appear if the low tire pressure warning light illuminates to indicate a TPMS malfunction.
- Tire pressure rises and falls depending on the heat caused by the vehicle's operation and the outside temperature. Do not reduce the tire pressure after driving because the tire pressure rises after driving. Low outside temperature can lower the temperature of the air inside the tire which can cause a lower tire inflation pressure. This may cause the low tire pressure warning light to illuminate. If the warning light illuminates, check the tire pressure for all four tires.
- The Tire and Loading Information label is located in the driver's door opening.

For additional information, refer to "Low tire pressure warning light" in the "Instruments and controls" section and "Tire Pressure Monitoring System (TPMS)" in the "In case of emergency" section of this manual.

⚠ WARNING

- **Radio waves could adversely affect electric medical equipment. Those who use a pacemaker should contact the electric medical equipment manufacturer for the possible influences before use.**
- **If the low tire pressure warning light illuminates while driving, avoid sudden steering maneuvers or abrupt braking, reduce vehicle speed, pull off the road to a safe location and stop the vehicle as soon as possible. Driving with under-inflated tires may permanently damage the tires and increase the likelihood of tire failure. Serious vehicle damage could occur and may lead to an accident and could result in serious personal injury. Check the tire pressure for all four tires. Adjust the tire pressure to the recommended COLD tire pressure**

shown on the Tire and Loading Information label to turn the low tire pressure warning light off. If you have a flat tire, replace it with a spare tire as soon as possible. (For additional information, refer to "Flat tire" in the "In case of emergency" section for changing a flat tire.)

- **When replacing a wheel without the TPMS such as the spare tire, when a spare tire is mounted or a wheel is replaced, tire pressure will not be indicated, the TPMS will not function and the low tire pressure warning light will flash for approximately 1 minute. The light will remain on after 1 minute. Have your tires replaced and/or TPMS system reset as soon as possible. It is recommended that you visit a NISSAN dealer for this service.**
- **Replacing tires with those not originally specified by NISSAN could affect the proper operation of the TPMS.**
- **Do not inject any tire liquid or aerosol tire sealant into the tires, as this may cause a malfunction of the tire pressure sensors.**

⚠ CAUTION

Do not place metalized film or any metal parts (antenna, etc.) on the windows. This may cause poor reception of the signals from the tire pressure sensors, and the TPMS will not function properly.

Some devices and transmitters may temporarily interfere with the operation of the TPMS and cause the low tire pressure warning light to illuminate.

Some examples are:

- Facilities or electric devices using similar radio frequencies are near the vehicle.
- If a transmitter set to similar frequencies is being used in or near the vehicle.
- If a computer (or similar equipment) or a DC/AC converter is being used in or near the vehicle.

The low tire pressure warning light may illuminate in the following cases:

- If the vehicle is equipped with a wheel and tire without TPMS.
- If the TPMS has been replaced and the ID has not been registered.
- If the wheel is not originally specified by NISSAN.

FCC Notice:

For USA:

This device complies with Part 15 of the FCC Rules. Operation is subject to the following two conditions: (1) This device may not cause harmful interference, and (2) this device must accept any interference received, including interference that may cause undesired operation.

NOTE:

Changes or modifications not expressly approved by the party responsible for compliance could void the user's authority to operate the equipment.

For Canada:

This device complies with Industry Canada licence-exempt RSS standard(s). Operation is subject to the following two conditions: (1) this device may not cause harmful interference, and (2) this device must accept any interference received, including interference that may cause undesired operation of the device.

TPMS with Easy-Fill Tire Alert

⚠WARNING

After rotating the tires, do not use the Easy-Fill Tire Alert to adjust the tire pressure. Instead use a gauge to adjust the tires to the correct pressure in accordance with Tire and Loading Information label.

When adding air to an under-inflated tire, the TPMS with Easy-Fill Tire Alert provides visual and audible signals outside the vehicle to help you inflate the tires to the recommended COLD tire pressure.

Vehicle set-up

1. Park the vehicle in a safe and level place.
2. Apply the parking brake and place the shift lever to the P (Park) position.
3. Place the ignition switch in the ON position. Do not start the engine.

Operation

1. Add air to the tire.
2. After a few seconds, the hazard indicators will start flashing.
3. When the designated pressure is reached, the horn beeps once and the hazard indicators stop flashing.
4. Perform the above steps for each tire.

- If the tire is over-inflated more than approximately 4 psi (30 kPa), the horn beeps and the hazard indicators flash three times. To correct the pressure, push the core of the valve stem on the tire briefly to release pressure. When the pressure reaches the designated pressure, the horn beeps once.
- If the hazard indicator does not flash within approximately 15 seconds after starting to inflate the tire, it indicates that the Easy-Fill Tire Alert is not operating.
- The TPMS will not activate the Easy-Fill Tire Alert under the following conditions:

– If there is interference from an external device or transmitter.

– The air pressure from the inflation device is not sufficient to inflate the tire.

– There is a malfunction in the TPMS system.

– There is a malfunction in the horn or hazard indicators.

– The identification code of the tires pressure sensor is not registered to the system.

– The battery of the tire pressure sensor is low.

- If the Easy-Fill Tire Alert does not operate due to TPMS interference, move the vehicle about 3 ft (1 m) backward or forward and try again.

If the Easy-Fill Tire Alert is not working, use a tire pressure gauge.

ON-PAVEMENT AND OFF-ROAD DRIVING PRECAUTIONS

Utility vehicles have a significantly higher rollover rate than other types of vehicles.

They have higher ground clearance than passenger cars to make them capable of performing in a variety of on-pavement and off-road applications. This gives them a higher center of gravity than ordinary vehicles. An advantage of higher ground clearance is a better view of the road, allowing you to anticipate problems. However, they are not designed for cornering at the same speeds as conventional 2-wheel drive vehicles any more than low-slung

sports cars are designed to perform satisfactorily under off-road conditions. If at all possible, avoid sharp turns at high speeds. As with other vehicles of this type, failure to operate this vehicle correctly may result in loss of control or vehicle rollover. In a rollover crash, an unbelted person is significantly more likely to die than a person wearing a seat belt.

For additional information, refer to "Driving safety precautions" in this section.

AVOIDING COLLISION AND ROLLOVER

⚠ WARNING

Failure to operate this vehicle in a safe and prudent manner may result in loss of control or an accident.

Be alert and drive defensively at all times. Obey all traffic regulations. Avoid excessive speed, high speed cornering, or sudden steering maneuvers, because these driving practices could cause you to lose control of your vehicle.

As with any vehicle, loss of control could result in a collision with other vehicles or objects or cause the vehicle to roll over, particularly if the loss of control causes the vehicle to slide sideways.

Be attentive at all times, and avoid driving when tired. Never drive when under the influence of alcohol or drugs (including prescription or over-the-counter drugs which may cause drowsiness). Always wear your seat belt as outlined in the "Safety – Seats, seat belts and supplemental restraint system" section of this manual, and also instruct your passengers to do so.

Seat belts help reduce the risk of injury in collisions and rollovers. **In a rollover crash, an unbelted or improperly belted person is significantly more likely to be injured or killed than a person properly wearing a seat belt.**

OFF-ROAD RECOVERY

While driving, the right side or left side wheels may unintentionally leave the road surface. If this occurs, maintain control of the vehicle by following the procedure below. Please note that this procedure is only a general guide. The vehicle must be driven as appropriate based on the conditions of the vehicle, road and traffic.

1. Remain calm and do not overreact.
2. Do not apply the brakes.
3. Maintain a firm grip on the steering wheel with both hands and try to hold a straight course.
4. When appropriate, slowly release the accelerator pedal to gradually slow the vehicle.
5. If there is nothing in the way, steer the vehicle to follow the road while vehicle speed is reduced. Do not attempt to drive the vehicle back onto the road surface until vehicle speed is reduced.
6. When it is safe to do so, gradually turn the steering wheel until both tires return to the road surface. When all tires are on the road surface, steer the vehicle to stay in the appropriate driving lane.
   - If you decide that it is not safe to return the vehicle to the road surface based on vehicle, road or traffic conditions, gradually slow the vehicle to a stop in a safe place off the road.

RAPID AIR PRESSURE LOSS

Rapid air pressure loss or a "blow-out" can occur if the tire is punctured or is damaged due to hitting a curb or pothole. Rapid air pressure loss can also be caused by driving on under-inflated tires.

Rapid air pressure loss can affect the handling and stability of the vehicle, especially at highway speeds.

Help prevent rapid air pressure loss by maintaining the correct air pressure and visually inspecting the tires for wear and damage. For additional information, refer to "Wheels and tires" in the "Do-it-yourself" section of this manual. If a tire rapidly loses air pressure or "blows-out" while driving, maintain control of the vehicle by following the procedure below. Please note that this procedure is only a general guide. The vehicle must be driven as appropriate based on the conditions of the vehicle, road and traffic.

⚠ WARNING

The following actions can increase the chance of losing control of the vehicle if there is a sudden loss of tire air pressure. Losing control of the vehicle may cause a collision and result in personal injury.

- **The vehicle generally moves or pulls in the direction of the flat tire.**
- **Do not rapidly apply the brakes.**
- **Do not rapidly release the accelerator pedal.**
- **Do not rapidly turn the steering wheel.**

1. Remain calm and do not overreact.
2. Maintain a firm grip on the steering wheel with both hands and try to hold a straight course.
3. When appropriate, slowly release the accelerator pedal to gradually slow the vehicle.
4. Gradually steer the vehicle to a safe location off the road and away from traffic if possible.
5. Lightly apply the brake pedal to gradually stop the vehicle.
6. Turn on the hazard warning flashers and contact a roadside emergency service to change the tire. For additional information, refer to "Changing a flat tire" in the "In case of emergency" section of this manual.

DRINKING ALCOHOL/DRUGS AND DRIVING

⚠ WARNING

Never drive under the influence of alcohol or drugs. Alcohol in the bloodstream reduces coordination, delays reaction time and impairs judgement. Driving after drinking alcohol increases the likelihood of being involved in an accident injuring yourself and others. Additionally, if you are injured in an accident, alcohol can increase the severity of the injury.

NISSAN is committed to safe driving. However, you must choose not to drive under the influence of alcohol. Every year thousands of people are injured or killed in alcohol-related collisions. Although the local laws vary on what is considered to be legally intoxicated, the fact is that alcohol affects all people differently and most people underestimate the effects of alcohol.

Remember, drinking and driving don't mix! That is true for drugs (over-the-counter, prescription) and illegal drugs, too. Don't drive if your ability to operate your vehicle is impaired by alcohol, drugs, or some other physical condition.

DRIVING SAFETY PRECAUTIONS

Your NISSAN is designed for both normal and off-road use. However, avoid driving in deep water or mud as your NISSAN is mainly designed for leisure use, unlike a conventional off-road vehicle.

Remember that 2-wheel drive models are less capable than 4-wheel drive models for rough road driving and extrication when stuck in deep snow or mud, or the like.

Please observe the following precautions:

⚠ WARNING

- **Drive carefully when off the road and avoid dangerous areas. Every person who drives or rides in this vehicle should be seated with their seat belt fastened. This will keep you and your passengers in position when driving over rough terrain.**
- **Do not drive across steep slopes. Instead drive either straight up or straight down the slopes. Off-road vehicles can tip over sideways much more easily than they can forward or backward.**
- **Many hills are too steep for any vehicle. If you drive up them, you may stall. If you drive down them, you may not be able to control your speed. If you drive across them, you may roll over.**
- **Do not shift gears while driving on downhill grades as this could cause loss of control of the vehicle.**
- **Stay alert when driving to the top of a hill. At the top there could be a drop-off or other hazard that could cause an accident.**
- **If your engine stalls or you cannot make it to the top of a steep hill, never attempt to turn around. Your vehicle could tip or roll over. Always back straight down in R (Reverse) gear and apply brakes to control your speed.**
- **Heavy braking going down a hill could cause your brakes to overheat and fade, resulting in loss of control and an accident. Apply brakes lightly and use a low gear to control your speed.**
- **Unsecured cargo can be thrown around when driving over rough terrain. Properly secure all cargo so it will not be thrown forward and cause injury to you or your passengers.**
- **Secure heavy loads in the cargo area as far forward and as low as possible. Do not equip the vehicle with tires larger than specified in this manual. This could cause your vehicle to roll over.**
- **Do not grip the inside or spokes of the steering wheel when driving off-road. The steering wheel could move suddenly and injure your hands. Instead drive with your fingers and thumbs on the outside of the rim.**
- **Before operating the vehicle, ensure that the driver and all passengers have their seat belts fastened.**

- **Lower your speed when encountering strong crosswinds. With a higher center of gravity, your NISSAN is more affected by strong side winds. Slower speeds ensure better vehicle control.**
- **Do not drive beyond the performance capability of the tires, even with 4WD engaged.**
- **For 4WD equipped vehicles, do not attempt to raise two wheels off the ground and shift the transmission to any drive or reverse position with the engine running. Doing so may result in drivetrain damage or unexpected vehicle movement which could result in serious vehicle damage or personal injury.**
- **Do not attempt to test a 4WD equipped vehicle on a 2-wheel dynamometer (such as the dynamometers used by some states for emissions testing), or similar equipment even if the other two wheels are raised off the ground. Make sure you inform test facility personnel that your vehicle is equipped with 4WD before it is placed on a dynamometer. Using the wrong test equipment may result in drivetrain damage or unexpected vehicle movement which could result in serious vehicle damage or personal injury.**
- **Accelerating quickly, sharp steering maneuvers or sudden braking may cause loss of control.**
- **If at all possible, avoid sharp turning maneuvers, particularly at high speeds. Your NISSAN 4-wheel drive vehicle has a higher center of gravity than a passenger car. The vehicle is not designed for cornering at the same speeds as passenger cars. Failure to operate this vehicle correctly could result in loss of control and/or a rollover accident.**
- **Always use tires of the same type, size, brand, construction (bias, bias-belted, or radial), and tread pattern on all four wheels. Install tire chains on the rear wheels when driving on slippery roads and drive carefully.**
- **Be sure to check the brakes immediately after driving in mud or water. For additional information, refer to "Wet brakes" in this section.**
- **Avoid parking your vehicle on steep hills. If you get out of the vehicle and it rolls forward, backward or sideways, you could be injured.**
- **Whenever you drive off-road through sand, mud or water as deep as the wheel hub, more frequent maintenance may be required. For additional information, refer to "Maintenance schedules" in the "Maintenance and schedules" section of this manual.**

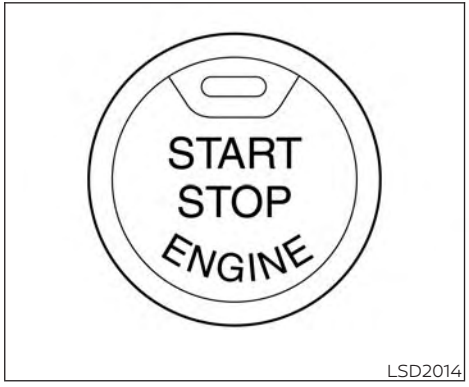

LSD2014

⚠ WARNING

Do not operate the push-button ignition switch while driving the vehicle except in an emergency. (The engine will stop when the ignition switch is pushed three consecutive times in quick succession or the ignition switch is pushed and held for more than 2 seconds.) If the engine stops while the vehicle is being driven, this could lead to a crash and serious injury.

When the ignition switch is pushed without depressing the brake pedal, the ignition switch position will illuminate as follows:

Push center:

- Once to change to ACC.
- Two times to change to ON.
- Three times to return to OFF.

The ignition switch will automatically return to the LOCK position when any door is either opened or closed with the switch in the OFF position.

The ignition lock is designed so that the ignition switch position cannot be placed in the OFF position until the shift lever is moved to the P (Park) position.

When the ignition switch cannot be pushed toward the OFF position, proceed as follows:

1. Move the shift lever into the P (Park) position.
2. Push the ignition switch. The ignition switch position will change to the ON position.
3. Push the ignition switch again to the OFF position.

The shift lever can be moved from the P (Park) position if the ignition switch is in the ON position and the brake pedal is depressed.

If the battery of the vehicle is discharged, the push-button ignition switch cannot be moved from the LOCK position.

Some indicators and warnings for operation are displayed in the meter. For additional information, refer to "Vehicle information display warnings and indicators" in the "Instruments and controls" section of this manual.

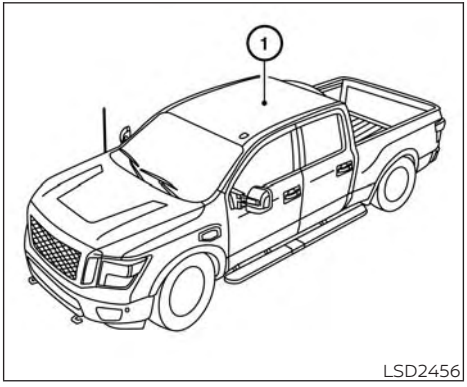

OPERATING RANGE

The Intelligent Key functions can only be used when the Intelligent Key is within the specified operating range.

When the Intelligent Key battery is almost discharged or strong radio waves are present near the operating location, the Intelligent Key system's operating range becomes narrower and may not function properly.

If the Intelligent Key is within the operating range, it is possible for anyone, even someone who does not carry the Intelligent Key, to push the ignition switch to start the engine.

The operating range of the engine start function is inside of the vehicle ①.

- The luggage area is not included in the operating range, but the Intelligent Key may function.
- If the Intelligent Key is placed on the instrument panel, inside the glove box, storage bin or door pocket, the Intelligent Key may not function.
- If the Intelligent Key is placed near the door or window outside the vehicle, the Intelligent Key may function.

PUSH-BUTTON IGNITION SWITCH POSITIONS

LOCK (Normal parking position)

The ignition switch can only be locked in this position.

The ignition switch will be unlocked when it is pushed to the ACC position while carrying the Intelligent Key.

The ignition switch will lock when any door is opened or closed with the ignition switched off.

ACC (Accessories)

This position activates electrical accessories, such as the radio, when the engine is not running.

ACC has a battery saver feature that will place the ignition switch in the OFF position after a period of time under the following conditions:

- All doors are closed.
- The shift lever is in P (Park).
- The hazard lamps are off.
- The turn signals are off.

The battery saver feature will be canceled if any of the following occur:

- Any door is opened.
- The shift lever is moved out of P (Park).
- The ignition switch changes position.
- The hazard lamps are turned on.

ON (Normal operating position)

This position turns on the ignition system and electrical accessories.

ON has a battery saver feature that will place the ignition switch in the OFF position, if the vehicle is not running, after some time under the following conditions:

- All doors are closed.
- The shift lever is in P (Park).
- The hazard lamps are off.
- The turn signals are off.

The battery saver feature will be canceled if any of the following occur:

- Any door is opened.
- The shift lever is moved out of the P (Park) position.
- The ignition switch changes position.
- The hazard lamps are turned on.
- The turn signals are turned on.

⚠ CAUTION

Do not leave the vehicle with the ignition switch in the ACC or ON position when the engine is not running for an extended period. This can discharge the battery.

OFF

The ignition switch is in the OFF position when the engine is turned off using the ignition switch. If equipped, the ignition switch heart beat function (pulsed illumination) may activate for a period of time when any door is unlocked and when the door opened/closed status changes in the OFF and ACC positions.

EMERGENCY ENGINE SHUT OFF

To shut off the engine in an emergency situation while driving, perform the following procedure:

- Rapidly push the ignition switch three consecutive times in less than 1.5 seconds, or
- Push and hold the ignition switch for more than 2 seconds.

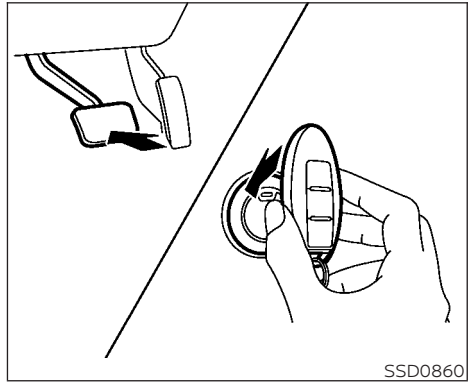

NISSAN INTELLIGENT KEY® BATTERY DISCHARGE

If the battery of the NISSAN Intelligent Key® is discharged, or environmental conditions interfere with the Intelligent Key operation, start the engine according to the following procedure:

1. Place the shift lever in the P (Park) position.
2. Firmly apply the foot brake.
3. Touch the ignition switch with the Intelligent Key as illustrated. (A chime will sound.)

After step 3 is performed, when the ignition switch is pushed without depressing the brake pedal, the ignition switch position will change to the ON position.

4. Push the ignition switch while depressing the brake pedal within 10 seconds after the chime sounds. The engine will start.

NOTE:

- **When the ignition switch is pushed to the ON position or the engine is started by the above procedure, the Intelligent Key battery discharge indicator appears in the vehicle information display even when the Intelligent Key is inside the vehicle. This is not a malfunction. To turn off the Intelligent Key battery discharge indicator, touch the ignition switch with the Intelligent Key again.**
- **If the Intelligent Key battery discharge indicator appears, replace the battery as soon as possible. For additional information, refer to "Battery replacement" in the "Do-it-yourself" section of this manual.**

NISSAN VEHICLE IMMOBILIZER SYSTEM

The NISSAN Vehicle Immobilizer System will not allow the engine to start without the use of the registered key.

If the engine fails to start using a registered key (for example, when interference is caused by another registered key, an automated toll road device or automatic payment device on the key ring), restart the engine using the following procedures:

1. Leave the ignition switch in the ON position for approximately 5 seconds.
2. Place the ignition switch in the OFF or LOCK position, and wait approximately 10 seconds.
3. Repeat steps 1 and 2.
4. Restart the engine while holding the device (which may have caused the interference) separate from the registered key.

If the no start condition re-occurs, NISSAN recommends placing the registered key on a separate key ring to avoid interference from other devices.

- Make sure the area around the vehicle is clear.
- Check fluid levels such as engine oil, coolant, brake fluid, Diesel Exhaust Fluid (Diesel only) and windshield-washer fluid as frequently as possible, or at least whenever you refuel.
- Check that all windows and lights are clean.
- Visually inspect tires for their appearance and condition. Also check tires for proper inflation.
- Check that all doors are closed.
- Position seat and adjust head restraints/headrests.
- Adjust inside and outside mirrors.
- Fasten seat belts and ask all passengers to do likewise.
- Check the operation of warning lights when the ignition switch is placed in the ON position. For additional information, refer to "Warning lights, indicator lights and audible reminders" in the "Instruments and controls" section of this manual.

STARTING THE ENGINE (gasoline engine only)

1. Apply the parking brake.
2. Move the shift lever to P (Park) or N (Neutral). P (Park) is recommended.
   The starter is designed not to operate unless the shift lever is in either P (Park) or N (Neutral).
3. Push the ignition switch to the ON position. Depress the brake pedal and push the ignition switch to start the engine.

   To start the engine immediately, push and release the ignition switch while depressing the brake pedal with the ignition switch in any position.

   - If the engine is very hard to start in extremely cold weather or when restarting, depress the accelerator pedal a little (approximately 1/3 to the floor) and while holding, crank the engine. Release the accelerator pedal when the engine starts.
   - If the engine is very hard to start because it is flooded, depress the accelerator pedal all the way to the floor and hold it. Push the ignition switch to the ON position to start cranking the engine. After 5 or 6 seconds, stop cranking by pushing the ignition switch to the LOCK position. After cranking the engine, release the accelerator pedal. Crank the engine with your foot off the accelerator pedal by depressing the brake pedal and pushing the ignition switch to start the engine. If the engine starts, but fails to run, repeat the above procedure.

⚠ CAUTION

Do not operate the starter for more than 15 seconds at a time. If the engine does not start, push the ignition switch to the OFF position and wait 10 seconds before cranking again, otherwise the starter could be damaged.

4. **Warm-up**

   Allow the engine to idle for at least 30 seconds after starting. Do not race the engine while warming it up. Drive at a moderate speed for a short distance first, especially in cold weather. In cold weather, keep the engine running for a minimum of 2 to 3 minutes before shutting it off. Starting and stopping the engine over a short period of time may make the vehicle more difficult to start.
5. To stop the engine, shift the shift lever into the P (Park) position and push the ignition switch to the OFF position.

In preparation for the next engine start, the engine may have a slightly delayed shutoff after placing the ignition switch in the OFF position, depending on the driving conditions.

NOTE:

Care should be taken to avoid situations that can lead to potential battery discharge and potential no-start conditions such as:

1. **Installation or extended use of electronic accessories that consume battery power when the engine is not running (phone chargers, GPS, DVD players, etc.).**
2. **The vehicle is not driven regularly and/or only driven short distances.**

In these cases, the battery may need to be charged to maintain battery health.

REMOTE ENGINE START (if so equipped)

Vehicles started with the Remote Engine Start require the ignition switch to be placed in the ON position before the shift lever can be moved from the P (Park) position. To place the ignition switch in the ON position, follow these steps:

1. Make sure that the Intelligent Key is on you.
2. Apply the brake.
3. Push the ignition switch once to the ON position.

For additional information, refer to "NISSAN Intelligent Key®" in the "Pre-driving checks and adjustments" section of this manual.

For additional information on starting your diesel engine, refer to your Titan Diesel Owner's Manual.

ENGINE PROTECTION MODE

The engine has an engine protection mode to reduce the chance of damage if the coolant temperature becomes too high (for example, when climbing steep grades in high temperatures with heavy loads, such as when towing a trailer). When the engine temperature reaches a certain level:

- The engine coolant temperature gauge will move toward the H position.
- Engine power may be reduced.
- The air conditioning cooling function may be automatically turned off for a short time (the blower will continue to operate).

Engine power and, under some conditions, vehicle speed will decrease. Vehicle speed can be controlled with the accelerator pedal, but the vehicle may not accelerate at the desired speed. The transmission will downshift or upshift as it reaches prescribed shift points. You can also shift manually.

As driving conditions change and engine coolant temperature is reduced, vehicle speed can be increased using the accel-

erator pedal, and the air conditioning cooling function will automatically be turned back on.

The Malfunction Indicator Light (MIL) may also come on if the engine coolant temperature is not reduced or the air conditioning cooling function does not turn back on. If **only** it remains on, you do not need to have your vehicle towed, but have it inspected soon. It is recommended that you visit a NISSAN dealer for this service. For additional information, refer to "Malfunction Indicator Light (MIL)" in the "Instruments and controls" section of this manual.

⚠ WARNING

Overheating can result in reduced engine power and vehicle speed. The reduced speed may be lower than other traffic, which could increase the chance of a collision. Be especially careful when driving. If the vehicle cannot maintain a safe driving speed, pull to the side of the road in a safe area. Allow the engine to cool and return to normal operation. For additional information, refer to "If your vehicle overheats" in the "In case of emergency" section of this manual.

⚠ CAUTION

Running the engine with the engine oil pressure warning light on could cause serious damage to the engine almost immediately. Such damage is not covered by warranty. Turn off the engine as soon as it is safe to do so.

AUTOMATIC TRANSMISSION (A/T)

⚠ WARNING

- **Do not depress the accelerator pedal while shifting from P (Park) or N (Neutral) to R (Reverse), or D (Drive). Always depress the brake pedal until shifting is completed. Failure to do so could cause you to lose control and have an accident.**
- **Cold engine idle speed is high, so use caution when shifting into a forward or reverse gear before the engine has warmed up.**
- **Never shift to either the P (Park) or R (Reverse) position while the vehicle is moving forward and P (Park) or D (Drive) position while the vehicle is reversing. This could cause an accident or damage the transmission.**
- **Except in an emergency, do not shift to the N (Neutral) position while driving. Coasting with the transmission in the N (Neutral) position may cause serious damage to the transmission.**
- **Do not downshift abruptly on slippery roads. This may cause a loss of control.**

⚠ CAUTION

To avoid possible damage to your vehicle, when stopping the vehicle on an uphill grade, do not hold the vehicle by depressing the accelerator pedal. The foot brake should be used for this purpose

The A/T in your vehicle is electronically controlled to produce maximum power and smooth operation.

The recommended operating procedures for this transmission are shown on the following pages. Follow these procedures for maximum vehicle performance and driving enjoyment.

Starting the vehicle

⚠ WARNING

- **Do not depress the accelerator pedal while shifting from P (Park) or N (Neutral) to R (Reverse), or D (Drive). Always depress the brake pedal until shifting is completed. Failure to do so could cause you to lose control and have an accident.**
- **Cold engine idle speed is high, so use caution when shifting into a forward or reverse gear before the engine has warmed up.**
- **Never shift to either the P (Park) or R (Reverse) position while the vehicle is moving forward and P (Park) or D (Drive) position while the vehicle is reversing. This could cause an accident or damage the transmission.**
- **Except in an emergency, do not shift to the N (Neutral) position while driving. Coasting with the transmission in the N (Neutral) position may cause serious damage to the transmission.**
- **Do not downshift abruptly on slippery roads. This may cause a loss of control.**

⚠ CAUTION

To avoid possible damage to your vehicle, when stopping the vehicle on an uphill grade, do not hold the vehicle by depressing the accelerator pedal. The foot brake should be used for this purpose.

1. After starting the engine, fully depress the foot brake pedal before moving the shift lever out of the P (Park) position.
2. Keep the foot brake pedal depressed and move the shift lever into a driving gear.
3. Release the foot brake, then gradually start the vehicle in motion.

The automatic transmission is designed so the foot brake pedal MUST be depressed before shifting from P (Park) to any drive position while the ignition switch is in the ON position.

The shift lever cannot be moved out of the P (Park) position and into any of the other gear positions if the ignition switch is placed in the LOCK or OFF position.

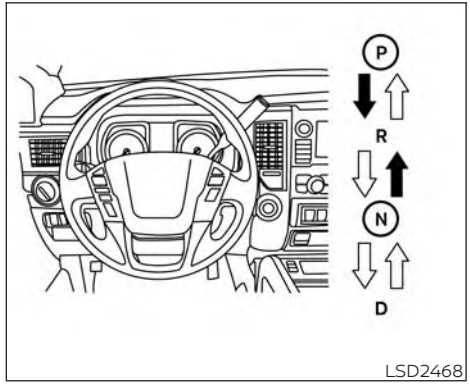

LSD2468

To move the shift lever:

➡ : Shift while depressing the brake pedal

⇨ : Shift without depressing the brake pedal

Shifting

After starting the engine, fully depress the brake pedal and move the shift lever out of the P (Park) position.

⚠ WARNING

Apply the parking brake if the shift lever is in any position while the engine is not running. Failure to do so could cause the vehicle to move unexpectedly or roll away and result in serious personal injury or property damage.

If the ignition switch is placed in the OFF or ACC position for any reason while the vehicle is in N (Neutral), or any D (Drive) position, the ignition switch cannot be placed in the LOCK position. Move the shift lever to the P (Park) position, then the ignition switch can be placed in the LOCK position.

P (Park)

⚠ CAUTION

To prevent transmission damage, use the P (Park) position only when the vehicle is completely stopped.

Use the P (Park) shift lever position when the vehicle is parked or when starting the engine. Make sure the vehicle is completely stopped.

The brake pedal should be depressed to move the shift lever from N (Neutral) or any drive position to P (Park).

Apply the parking brake. When parking on a hill, apply the parking brake first, then move the shift lever into the P (Park) position.

R (Reverse)

⚠ CAUTION

To prevent transmission damage, use the R (Reverse) position only when the vehicle is completely stopped.

Use the R (Reverse) position to back up. Make sure the vehicle is completely stopped before selecting the R (Reverse) position. **The brake pedal must be depressed to move the shift lever from P (Park), N (Neutral) or any drive position to R (Reverse).**

N (Neutral)

Neither forward nor reverse gear is engaged. The engine can be started in this position. You may shift to N (Neutral) and restart a stalled engine while the vehicle is moving.

D (Drive)

Use this position for all normal forward driving.

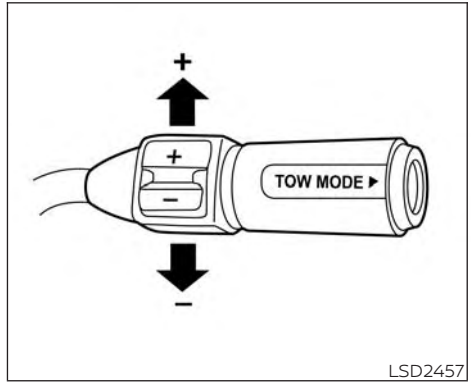

Manual shift mode

When the manual shift mode button is pressed while driving, the transmission enters the manual shift mode. Shift ranges can be selected manually.

In the manual shift mode, the shift range is displayed on the position indicator in the meter. After pressing the manual shift mode button, the position indicator varies depending on the gear position and vehicle speed.

Shift ranges up or down one by one as follows:

M1 ⟷ M2 ⟷ M3 ⟷ M4 ⟷ M5 ⟷ M6 ⟷ M7* ⟷ D

*If so equipped

M7 (Seventh) (if so equipped)

Use this position for all normal forward driving at highway speeds.

M1 ⟷ M2 ⟷ M3 ⟷ M4 ⟷ M5 ⟷ M6 ⟷ M7

M7 will be displayed on the position indicator in the meter.

M6 (Sixth)

Use this position for all normal forward driving at highway speeds.

M1 ⟷ M2 ⟷ M3 ⟷ M4 ⟷ M5 ⟷ M6

M6 will be displayed on the position indicator in the meter

M5 (Fifth)

Use this position for all normal forward driving at highway speeds.

M1 ⟷ M2 ⟷ M3 ⟷ M4 ⟷ M5

M5 will be displayed on the position indicator in the meter.

M4 (Fourth)

For driving up or down long slopes where engine braking would be advantageous.

Shift ranges up or down one by one as follows:

M1 ⟷ M2 ⟷ M3 ⟷ M4

M4 will be displayed on the position indicator in the meter.

M3 (Third)

Use for hill climbing or engine braking on downhill grades.

Shift ranges up or down one by one as follows:

M1 ⟷ M2 ⟷ M3

M3 will be displayed on the position indicator in the meter.

M2 (Second)

Use for hill climbing or engine braking on downhill grades.

Shift ranges up or down one by one as follows:

M1 ⟷ M2

M2 will be displayed on the position indicator in the meter.

M1 (First)

Use this position when climbing steep hills slowly or driving slowly through deep snow, sand or mud, or for maximum engine braking on steep downhill grades.

M1 will be displayed on the position indicator on the meter.

- Remember not to drive at high speeds for extended periods of time in lower than M4 range. This reduces fuel economy.

When shifting up

Push the shift switch to the + (up) side. (Shifts to higher range.)

When shifting down

Push the shift switch to the − (down) side. (Shifts to lower range.)

- The transmission will automatically downshift the gears. (For example, if you select the 3rd range, the transmission will shift down between the 3rd and 1st gears.)
- Pushing the shift switch rapidly will shift the ranges in succession.

When canceling the manual shift mode

Press and hold the +(UP) button to return the transmission to the normal driving mode.

- **In the manual shift mode, the transmission may not shift to the selected gear immediately because of vehicle speed. The transmission will up or down shift when vehicle speed matches the programmed transmission shift points. This helps maintain driving performance and reduces the chance of vehicle damage or loss of control.**
- **In the manual shift mode, the transmission will not up shift to a higher gear than is manually selected. When the vehicle speed decreases, the transmission automatically shifts down and shifts to 1st gear before the vehicle comes to a stop.**

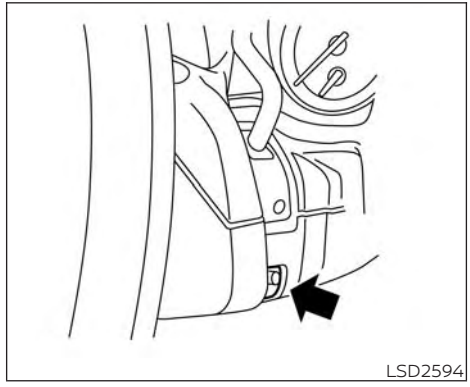

Shift lock release

If the battery is discharged, the shift lever may not be moved from the P (Park) position even with the brake pedal depressed.

To move the shift lever, release the shift lock. The shift lever can be moved to N (Neutral). However, for models without the NISSAN Vehicle Immobilizer System, the steering wheel will be locked unless the ignition switch is placed in the ON position. This allows the vehicle to be moved if the battery is discharged.

To push the shift lock release, complete the following procedure:

1. Place the ignition switch in the LOCK position.
2. Apply the parking brake.
3. Remove the shift lock release cover. If a screwdriver is used to remove the cover, it should be wrapped in a protective cloth to prevent damage to the cover and surrounding plastic.
4. Insert a small object or finger in the shift lock release slot and push.
5. Move the shift lever to the N (Neutral) position while holding the shift lock release.
6. Now the vehicle may be moved to the desired location.

If the shift lever cannot be moved out of P (Park), have the automatic transmission system checked as soon as possible. It is recommended that you visit a NISSAN dealer for this service.

⚠ WARNING

If the shift lever cannot be moved from the P (Park) position while the engine is running and the brake pedal is depressed, the stop lights may not work. Malfunctioning stop lights could cause an accident injuring yourself and others.

Accelerator downshift — in D (Drive) position —

For passing or hill climbing, depress the accelerator pedal to the floor. This shifts the transmission down into a lower gear, depending on the vehicle speed.

Fail-safe

When the fail-safe operation occurs, please note that the transmission will be locked in any of the forward gears according to the condition.

If the vehicle is driven under extreme conditions, such as excessive wheel spinning and subsequent hard braking, the fail-safe system may be activated. This will occur even if all electrical circuits are functioning properly. In this case, place the ignition switch in the OFF position and wait for 3 seconds. Then place the ignition switch back in the ON position. The vehicle should return to its normal operating condition. If it does not return to its normal operating condition, have the transmission checked and repaired, if necessary. It is recommended that you visit a NISSAN dealer for this service.

⚠ WARNING

- **Be sure the parking brake is fully released before driving. Failure to do so can cause brake failure and lead to an accident.**
- **Do not release the parking brake from outside the vehicle.**
- **Do not use the shift lever in place of the parking brake. When parking, be sure the parking brake is fully engaged.**
- **To help avoid risk of injury or death through unintended operation of the vehicle and/or its systems, do not leave children, people who require the assistance of others or pets unattended in your vehicle. Additionally, the temperature inside a closed vehicle on a warm day can quickly become high enough to cause a significant risk of injury or death to people and pets.**

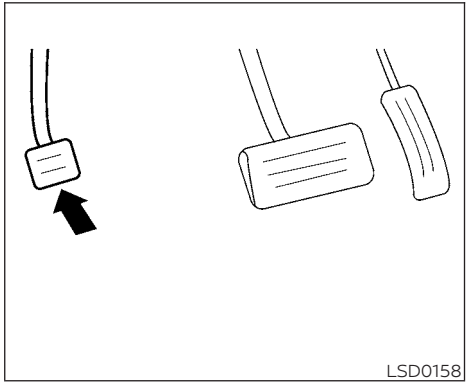

To engage: Firmly depress the parking brake.

To release:

1. Firmly apply the foot brake.
2. Move the shift lever to the P (Park) position.
3. Firmly depress the parking brake pedal and it will release.
4. Before driving, be sure the brake warning light goes out.

BLIND SPOT WARNING (BSW) (if so equipped)

⚠ WARNING

Failure to follow the warnings and instructions for proper use of the BSW system could result in serious injury or death.

- **The BSW system is not a replacement for proper driving procedures and is not designed to prevent contact with vehicles or objects. When changing lanes, always use the side and rear mirrors and turn and look in the direction your vehicle will move to ensure it is safe to change lanes. Never rely solely on the BSW system.**

The BSW system helps alert the driver of other vehicles in adjacent lanes when changing lanes.

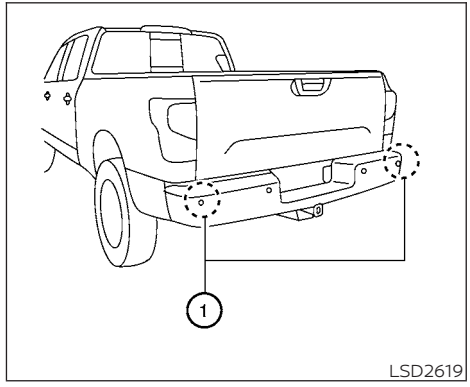

The BSW system uses radar sensors ① installed near the rear bumper to detect other vehicles in an adjacent lane.

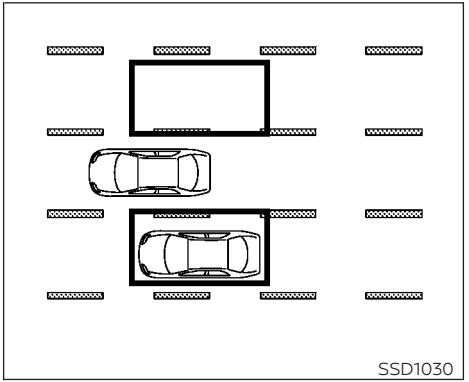

Detection zone

The radar sensors can detect vehicles on either side of your vehicle within the detection zone shown as illustrated. This detection zone starts from the outside mirror of your vehicle and extends approximately 10 ft (3.0 m) behind the rear bumper, and approximately 10 ft (3.0 m) sideways.

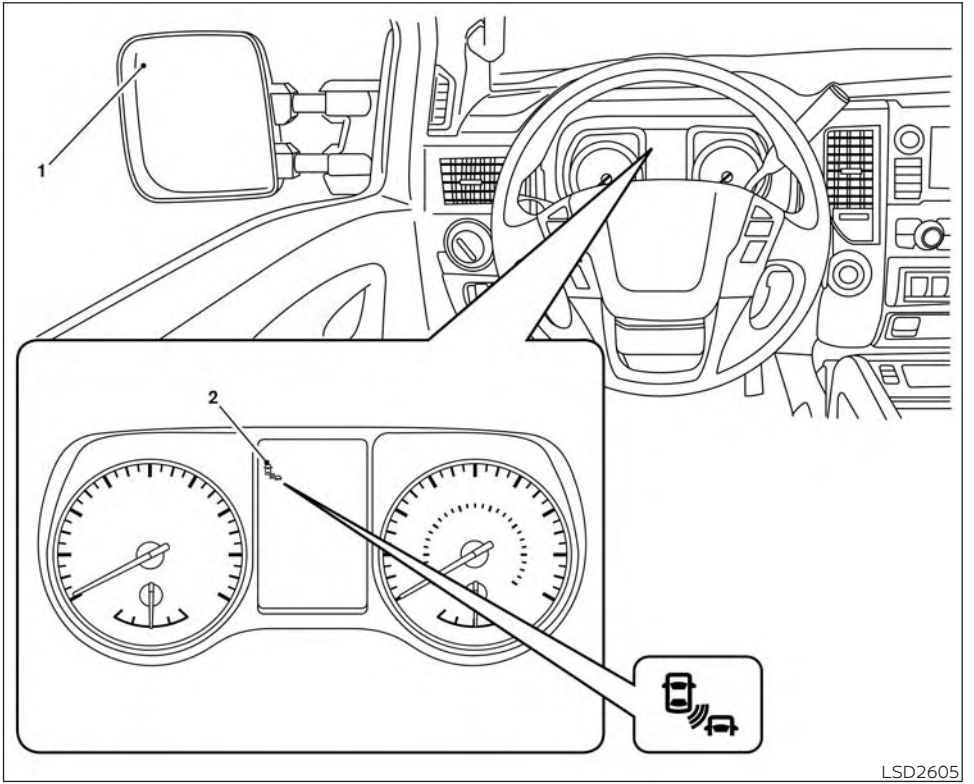

1. Side BSW/RCTA Indicator Light
2. BSW/RCTA Indicator

BSW SYSTEM OPERATION

The BSW system operates above approximately 20 mph (32 km/h).

If the radar sensors detect a vehicle in the detection zone, the side BSW/RCTA indicator light (1) illuminates. If the turn signal is then activated, the system chimes (twice) and the side BSW/RCTA indicator light flashes. The side BSW/RCTA indicator light continues to flash until the detected vehicle leaves the detection zone.

The side BSW/RCTA indicator light illuminates for a few seconds when the ignition switch is placed in the ON position.

The brightness of the side BSW/RCTA indicator light is adjusted automatically depending on the brightness of the ambient light.

If a vehicle comes into the detection zone after the driver activates the turn signal, then only the side BSW/RCTA indicator light flashes and no chime sounds. For additional information, refer to "BSW driving situations" in this section.

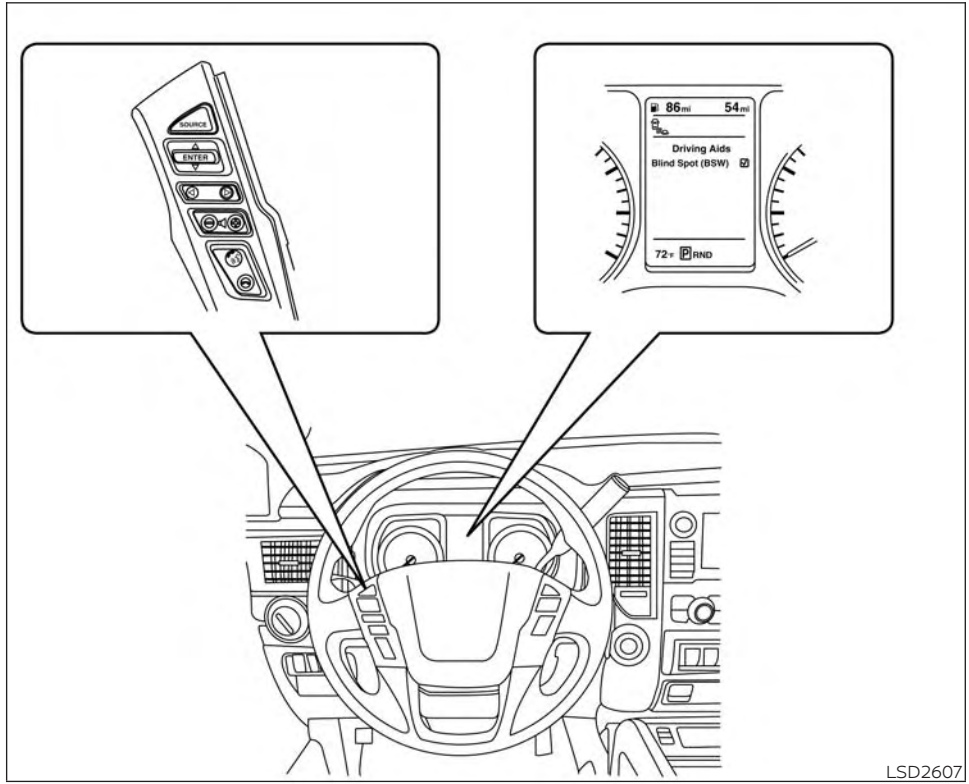

HOW TO ENABLE/DISABLE THE BSW SYSTEM

When the BSW system is enabled in the vehicle information display, the system can be turned off temporarily by pushing the warning systems switch. For additional information, refer to "Warning systems switch" in the "Instruments and controls" section of this manual.

Perform the following steps to enable or disable the BSW system:

1. Press the ◀▶ button until "Settings" displays in the vehicle information display. Use the ▲▼ button to select "Driver Assistance" and press ENTER. Select "Driving Aids" and press ENTER.
2. Select "Blind Spot (BSW)" and press the ENTER button.

NOTE:

- **When enabling/disabling the system, the system will retain current settings even if the engine is restarted.**
- **When the BSW system is turned on, the BSW/RCTA indicator (white) in the vehicle information display illuminates.**

BSW SYSTEM LIMITATIONS

⚠ WARNING

Listed below are the system limitations for the BSW system. Failure to operate the vehicle in accordance with these system limitations could result in serious injury or death.

- **The BSW system cannot detect all vehicles under all conditions.**
- **The radar sensors may not be able to detect and activate BSW when certain objects are present such as:**
  - **Pedestrian, bicycles, animals.**
  - **Vehicles such as motorcycles, low height vehicles, or high ground clearance vehicles.**
  - **Oncoming vehicles.**
  - **Vehicles remaining in the detection zone when you accelerate from a stop.**
  - **A vehicle merging into an adjacent lane at a speed approximately the same as your vehicle.**
  - **A vehicle approaching rapidly from behind.**
  - **A vehicle which your vehicle overtakes rapidly.**
  - **A vehicle that passes through the detection zone quickly.**
  - **When overtaking several vehicles in a row, the vehicles after the first vehicle may not be detected if they are traveling close together.**
- **The radar sensor's detection zone is designed based on a standard lane width. When driving in a wider lane, the radar sensors may not detect vehicles in an adjacent lane. When driving in a narrow lane, the radar sensors may detect vehicles driving two lanes away.**
- **The radar sensors are designed to ignore most stationary objects; however, objects such as guardrails, walls, foliage and parked vehicles may occasionally be detected. This is a normal operation condition.**

- **The following conditions may reduce the ability of the radar to detect other vehicles:**
  - **Severe weather**
  - **Road spray**
  - **Ice/frost/dirt build-up on the vehicle**
- **Do not attach stickers (including transparent material), install accessories or apply additional paint near the radar sensors. These conditions may reduce the ability of the radar to detect other vehicles.**
- **Excessive noise (for example, audio system volume, open vehicle window) will interfere with the chime sound, and it may not be heard.**

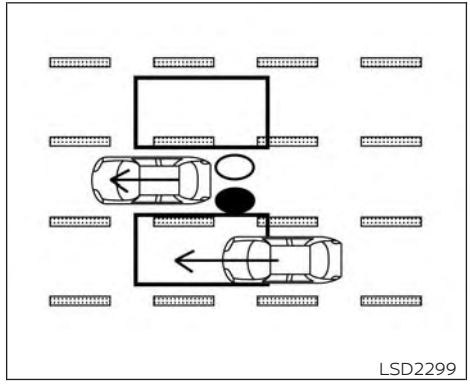

Illustration 1 – Approaching from behind

BSW DRIVING SITUATIONS

Indicator on

Indicator off

Indicator flashing

Another vehicle approaching from behind

Illustration 1: The side BSW/RCTA indicator light illuminates if a vehicle enters the detection zone from behind in an adjacent lane.

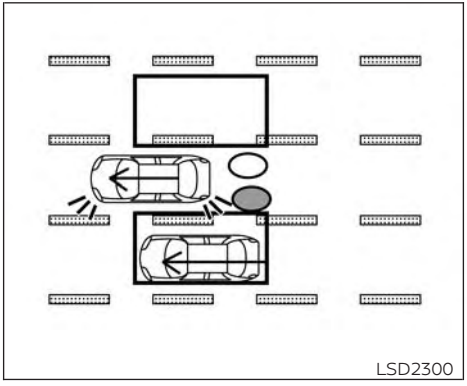

Illustration 2 – Approaching from behind

Illustration 2: If the driver activates the turn signal when another vehicle is in the detection zone, then the system chimes (twice) and the side indicator light flashes.

NOTE:

- **The radar sensors may not detect vehicles which are approaching rapidly from behind.**
- **If the driver activates the turn signal before a vehicle enters the detection zone, the side indicator light will flash but no chime will sound when the other vehicle is detected.**

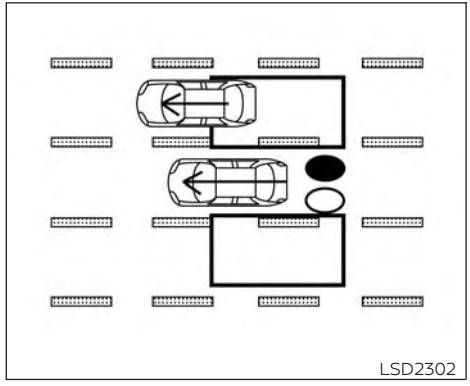

Illustration 3 – Overtaking another vehicle

Overtaking another vehicle

Illustration 3: The side indicator light illuminates if you overtake a vehicle and that vehicle stays in the detection zone for approximately 2 seconds.

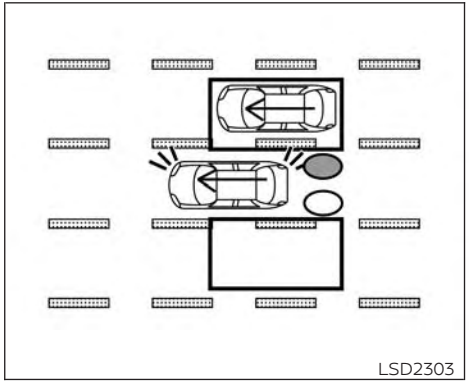

Illustration 4 – Overtaking another vehicle

Illustration 4: If the driver activates the turn signal while another vehicle is in the detection zone, then the system chimes (twice) and the side indicator light flashes.

NOTE:

- **When overtaking several vehicles in a row, the vehicles after the first vehicle may not be detected if they are traveling close together.**
- **The radar sensors may not detect slower moving vehicles if they are passed quickly.**
- **If the driver activates the turn signal before a vehicle enters the detection zone, the side indicator light will flash but no chime will sound when the other vehicle is detected.**

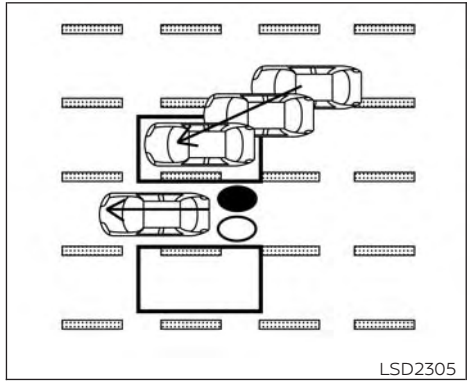

Illustration 5 – Entering from the side

Entering from the side

Illustration 5: The side indicator light illuminates if a vehicle enters the detection zone from either side.

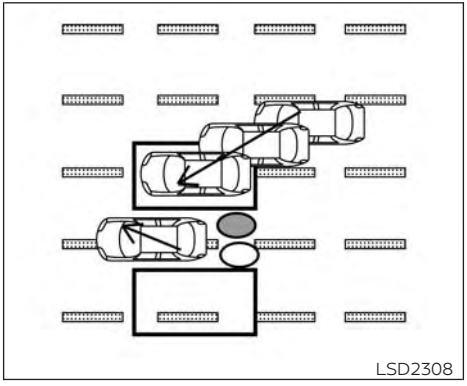

Illustration 6 – Entering from the side

Illustration 6: If the driver activates the turn signal while another vehicle is in the detection zone, then the system chimes (twice) and the side indicator light flashes.

NOTE:

- **If the driver activates the turn signal before a vehicle enters the detection zone, the side indicator light will flash but no chime will sound when the other vehicle is detected.**
- **The radar sensors may not detect a vehicle which is traveling at about the same speed as your vehicle when it enters the detection zone.**

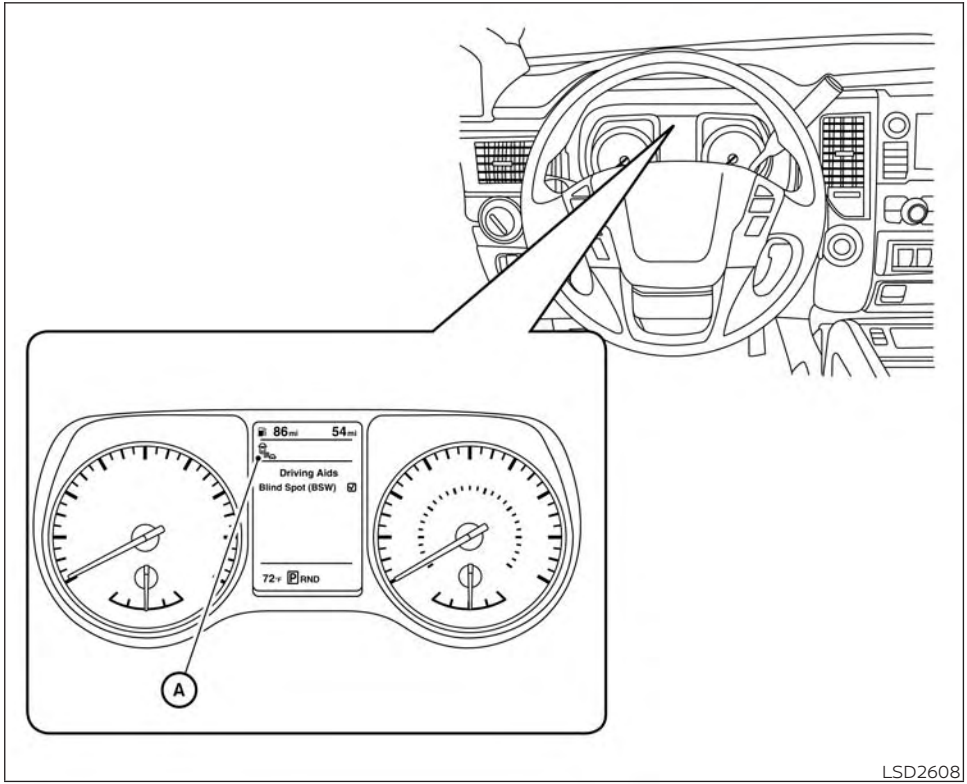

SYSTEM TEMPORARILY UNAVAILABLE

When radar blockage is detected, the system will be deactivated automatically. The "Side Radar Obstruction" warning message will appear and the blind spot indicator (white) will blink Ⓐ in the vehicle information display.

The system is not available until the conditions no longer exist.

The radar sensors may be blocked by temporary ambient conditions such as splashing water, mist or fog. The blocked condition may also be caused by objects such as ice, frost or dirt obstructing the radar sensors.

NOTE:

If the BSW system stops working, the RCTA system (if so equipped) will also stop working.

Action to take:

When the above conditions no longer exist, the system will resume automatically.

Malfunction

If the BSW system malfunctions, it will turn off automatically. The system malfunction warning message with the BSW/RCTA indicator (orange) will appear in the vehicle information display.

NOTE:

If the BSW system stops working, the RCTA system (if so equipped) will also stop working.

Action to take:

Stop the vehicle in a safe location, place the vehicle in the P (Park) position, turn the engine off and restart the engine. If the message continues to appear, have the system checked. It is recommended that you visit a NISSAN dealer for this service.

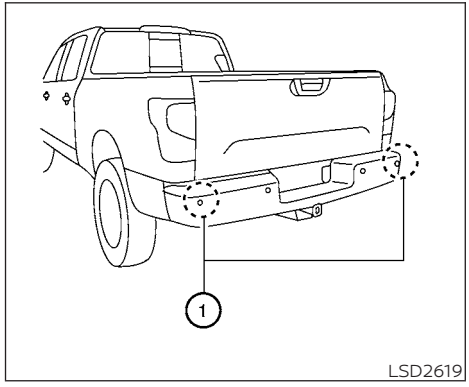

SYSTEM MAINTENANCE

The two radar sensors ① for the BSW and RCTA systems are located near the rear bumper. Always keep the area near the radar sensors clean.

The radar sensors may be blocked by temporary ambient conditions such as splashing water, mist or fog.

The blocked condition may also be caused by objects such as ice, frost or dirt obstructing the radar sensors.

Check for and remove objects obstructing the area around the radar sensors.

Do not attach stickers (including transparent material), install accessories or apply additional paint near the radar sensors.

Do not strike or damage the area around the radar sensors. It is recommended that you visit a NISSAN dealer if the area around the radar sensors is damaged due to a collision.

Radio frequency statement

For USA

FCC ID: OAYSRR2B or OAYSRR3B

This device complies with part 15 of the FCC Rules.

Operation is subject to the following two conditions:

1. This device may not cause harmful interference, and
2. This device must accept any interference received, including interference that may cause undesired operation.

FCC Warning

Changes or modifications not expressly approved by the party responsible for compliance could void the user's authority to operate the equipment.

For Canada

Applicable law: Canada 310

This device complies with Industry Canada licence-exempt RSS standard(s). Operation is subject to the following two conditions:

1. This device may not cause interference, and
2. This device must accept any interference, including interference that may cause undesired operation of the device.

Frequency bands: 24.05 – 24.25GHz

Output power: less than 20 milliwatts

Droit applicable: Canada 310

Le présent appareil est conforme aux CNR d'Industrie Canada applicables aux appareils radio exempts de licence. L'exploitation est autorisée aux deux conditions suivantes:

1. L'appareil ne doit pas produire de brouillage, et
2. L'utilisateur de l'appareil doit accepter tout brouillage radioélectrique subi, même si le brouillage est susceptible d'en compromettre le fonctionnement.

Bandes de fréquences: 24.05 - 24.25GHz

Puissance émise: Moins de 20 milliwatts

REAR CROSS TRAFFIC ALERT (RCTA) (if so equipped)

⚠ WARNING

Failure to follow the warnings and instructions for proper use of the RCTA system could result in serious injury or death.

- **The RCTA system is not a replacement for proper driving procedures and is not designed to prevent contact with vehicles or objects. When backing out of a parking space, always use the side and rear mirrors and turn and look in the direction your vehicle will move. Never rely solely on the RCTA system.**

The RCTA system will assist you when backing out from a parking space. When the vehicle is in reverse, the system is designed to detect other vehicles approaching from the right or left of the vehicle. If the system detects cross traffic, it will alert you.

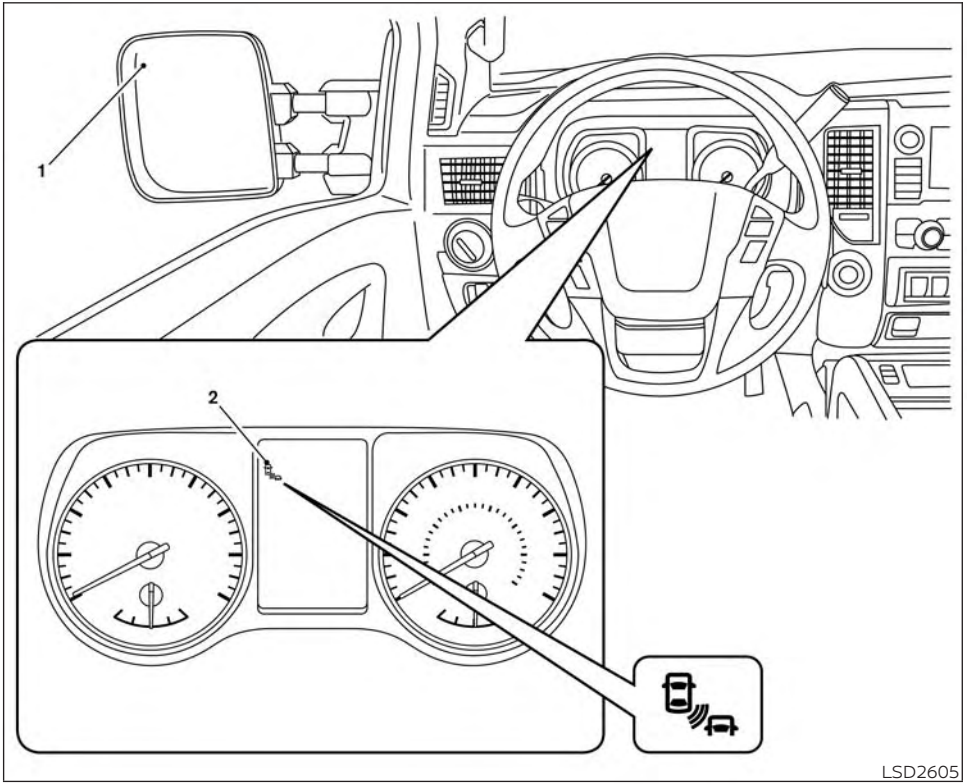

1. Side BSW/RCTA Indicator Light
2. BSW/RCTA Indicator

RCTA SYSTEM OPERATION

The RCTA system can help alert the driver of an approaching vehicle when the driver is backing out of a parking space.

When the shift position is in R (Reverse) and the vehicle speed is less than approximately 5 mph (8 km/h), the RCTA system is operational.

If the radar detects an approaching vehicle from the side, the system chimes a sound (single beep) and the side BSW/RCTA indicator light on the side of the vehicle is approaching from flashes.

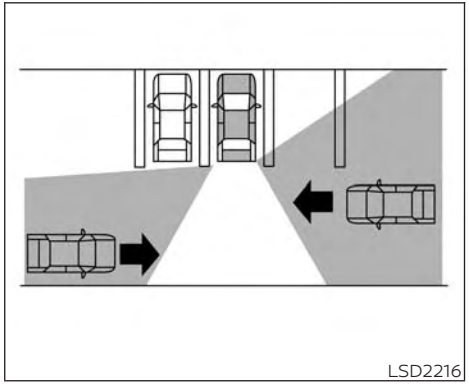

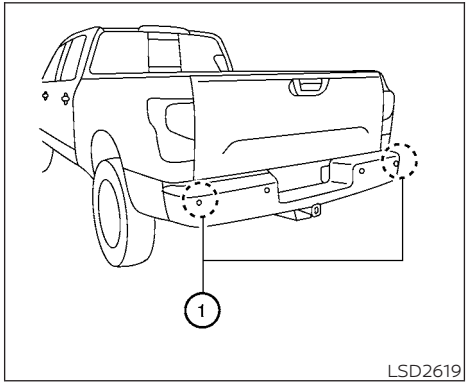

The RCTA system uses radar sensors ① installed on both sides near the rear bumper to detect an approaching vehicle.

The radar sensors ① can detect an approaching vehicle from up to approximately 66 ft (20 m) away.

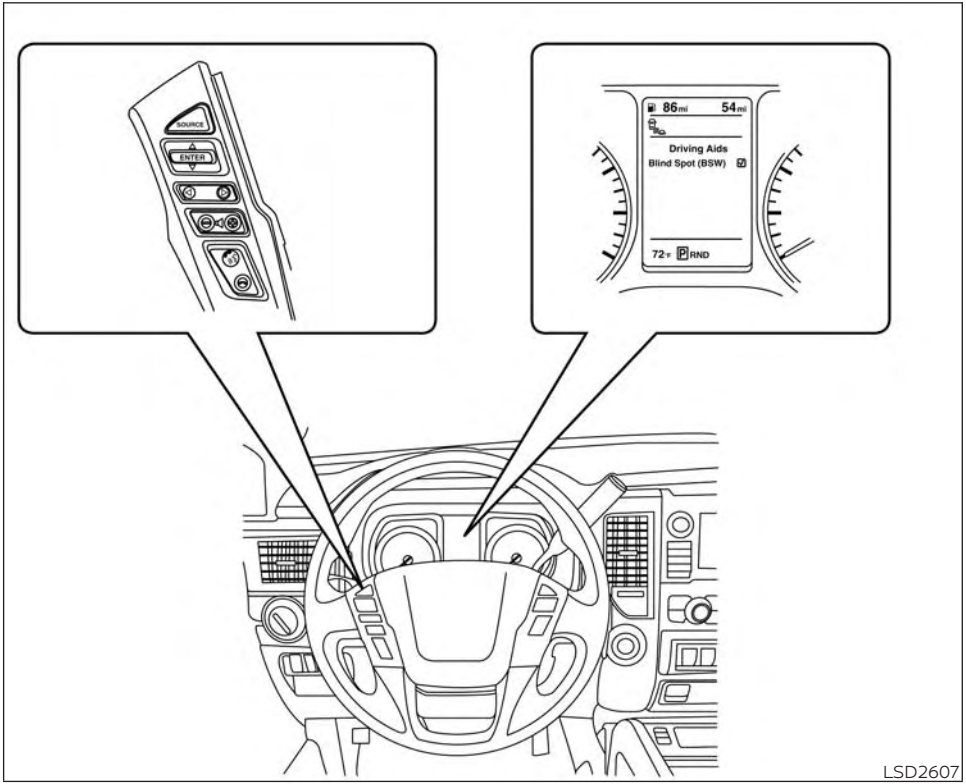

HOW TO ENABLE/DISABLE THE RCTA SYSTEM

When the RCTA system is enabled in the vehicle information display, the system can be turned off temporarily by pushing the Front and rear sonar system OFF switch. For additional information, refer to "Front and rear sonar system OFF switch" in the "Instruments and controls" section of this manual.

Perform the following steps to enable or disable the RCTA system:

1. Press the ◀▶ button until "Settings" displays in the vehicle information display. Use the ▲▼ button to select "Driver Assistance" and press ENTER. Select "Driving Aids" and press ENTER.
2. Select "Blind Spot (BSW)" and press the ENTER button.

NOTE:

When enabling/disabling the system, the system setting will be retained even if the engine is restarted.

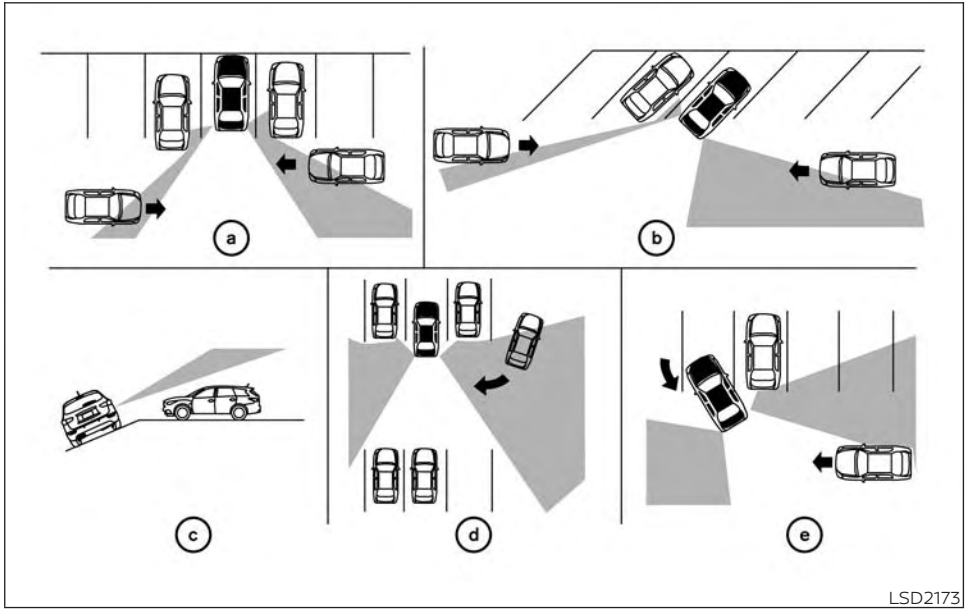

RCTA SYSTEM LIMITATIONS

⚠ WARNING

Listed below are the system limitations for the RCTA system. Failure to operate the vehicle in accordance with these system limitations could result in serious injury or death.

- **Always check surroundings and turn to check what is behind you before backing up. The radar sensors detect approaching (moving) vehicles. The radar sensors cannot detect every object such as:**
  - **Pedestrians, bicycles, motorcycles, animals or child-operated toy vehicles**
  - **A vehicle that is passing at speeds greater than approximately 19 mph (30 km/h)**
  - **A vehicle that is passing at speeds lower than approximately 5 mph (8 km/h)**
- **The radar sensors may not detect approaching vehicles in certain situations:**
  - **Illustration a: When a vehicle parked next to you obstructs the beam of the radar sensor.**

- Illustration b: When the vehicle is parked in an angled parking space.
- Illustration c: When the vehicle is parked on inclined ground.
- Illustration d: When an approaching vehicle turns into your vehicle's parking lot aisle.
- Illustration e: When the angle formed by your vehicle and approaching vehicle is small.

- The following conditions may reduce the ability of the radar to detect other vehicles:
  - Severe weather
  - Road spray
  - Ice/frost/dirt build-up on the vehicle
- Do not attach stickers (including transparent material), install accessories or apply additional paint near the radar sensors. These conditions may reduce the ability of the radar to detect other vehicles.
- Excessive noise (e.g. audio system volume, open vehicle window) will interfere with the chime sound, and it may not be heard.

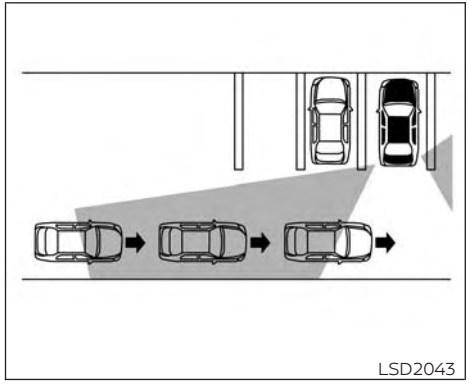

Illustration 1

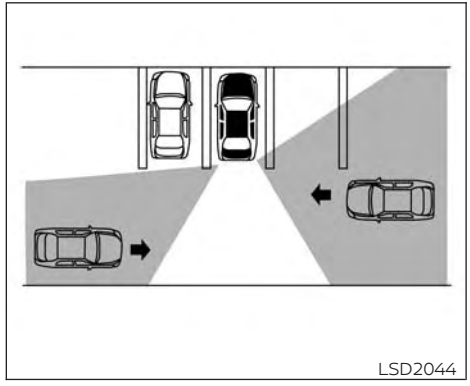

Illustration 2

NOTE:

In the case of several vehicles approaching in a row (Illustration 1) or in the opposite direction (Illustration 2), a chime may not be sounded by the RCTA system after the first vehicle passes the sensors.

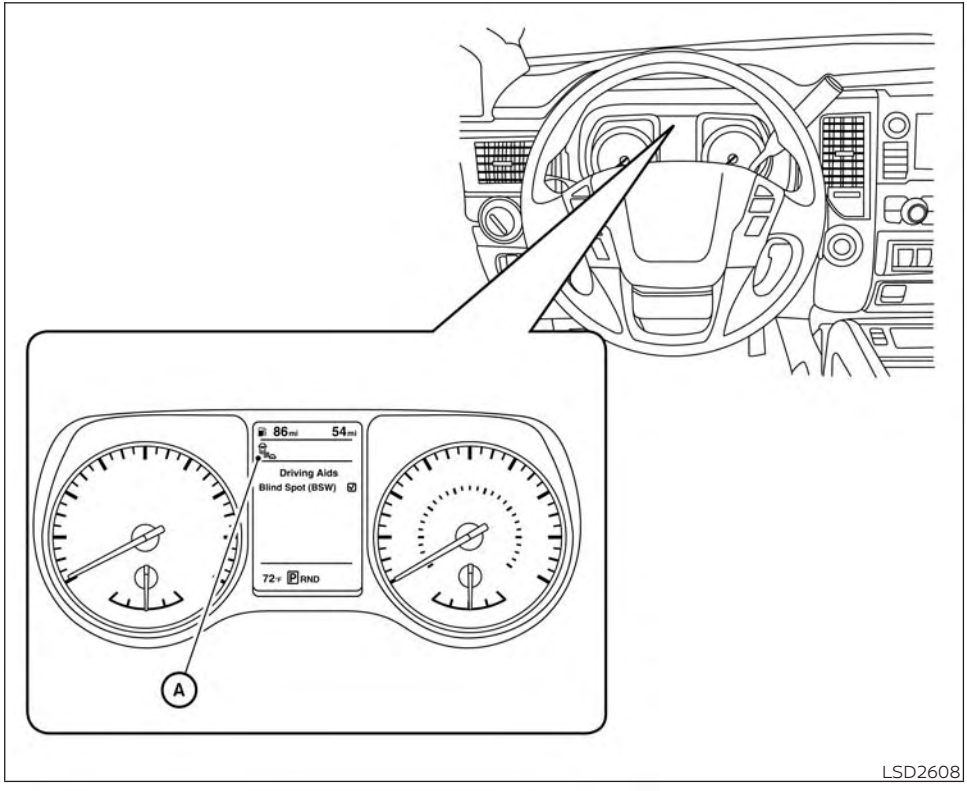

LSD2608

SYSTEM TEMPORARILY UNAVAILABLE

When radar blockage is detected, the system will be deactivated automatically. The "Side Radar Obstruction" warning message will appear and the BSW/RCTA indicator (white) will blink Ⓐ in the vehicle information display.

The systems are not available until the conditions no longer exist.

The radar sensors may be blocked by temporary ambient conditions such as splashing water, mist or fog.

The blocked condition may also be caused by objects such as ice, frost or dirt obstructing the radar sensors.

NOTE:

If the BSW system stops working, the RCTA system will also stop working.

Action to take
When the above conditions no longer exist, the system will resume automatically.

Malfunction

When the RCTA system malfunctions, it will turn off automatically. The system malfunction warning message with the BSW/RCTA indicator (orange) will appear in the vehicle information display.

NOTE:

If the BSW system stops working, the RCTA system (if so equipped) will also stop working.

Action to take
Stop the vehicle in a safe location, place the vehicle in the P (Park) position, turn the engine off and restart the engine. If the message continues to appear, have the system checked. It is recommended that you visit a NISSAN dealer for this service.

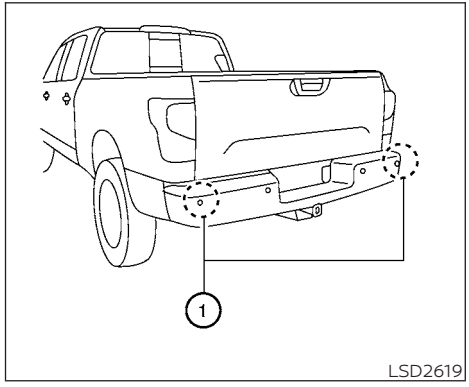

SYSTEM MAINTENANCE

The two radar sensors ① for the BSW and RCTA systems are located near the rear bumper. Always keep the area near the radar sensors clean.

The radar sensors may be blocked by temporary ambient conditions such as splashing water, mist or fog.

The blocked condition may also be caused by objects such as ice, frost or dirt obstructing the radar sensors.

Check for and remove objects obstructing the area around the radar sensors.

Do not attach stickers (including transparent material), install accessories or apply additional paint near the radar sensors.

Do not strike or damage the area around the radar sensors. It is recommended that you visit a NISSAN dealer if the area around the radar sensors is damaged due to a collision.

Radio frequency statement

For USA

FCC ID: OAYSRR2B or OAYSRR3B

This device complies with part 15 of the FCC Rules.

Operation is subject to the following two conditions:

1. This device may not cause harmful interference, and
2. This device must accept any interference received, including interference that may cause undesired operation.

FCC Warning

Changes or modifications not expressly approved by the party responsible for compliance could void the user's authority to operate the equipment.

For Canada

Applicable law: Canada 310

This device complies with Industry Canada licence-exempt RSS standard(s). Operation is subject to the following two conditions:

1. This device may not cause interference, and
2. This device must accept any interference, including interference that may cause undesired operation of the device.

Frequency bands: 24.05 – 24.25GHz

Output power: less than 20 milliwatts

Droit applicable: Canada 310

Le présent appareil est conforme aux CNR d'Industrie Canada applicables aux appareils radio exempts de licence. L'exploitation est autorisée aux deux conditions suivantes:

1. L'appareil ne doit pas produire de brouillage, et
2. L'utilisateur de l'appareil doit accepter tout brouillage radioélectrique subi, même si le brouillage est susceptible d'en compromettre le fonctionnement.

Bandes de fréquences: 24.05 - 24.25GHz

Puissance émise: Moins de 20 milliwatts

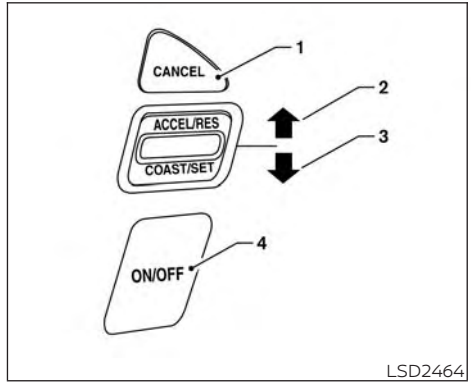

PRECAUTIONS ON CRUISE CONTROL

1. CANCEL switch
2. ACCEL/RES switch
3. COAST/SET switch
4. ON/OFF switch

- If the cruise control system malfunctions, it cancels automatically. The (green) indicator light illuminates in the vehicle information display then blinks to warn the driver.

- If the (green) indicator light blinks, push the ON/OFF switch off and have the system checked. It is recommended that you visit a NISSAN dealer for this service.
- The (green) indicator light may blink when the ON/OFF switch is pushed ON while pushing the ACCEL/RES, COAST/SET, or CANCEL switch. To properly set the cruise control system, use the following procedures.

WARNING

Do not use the cruise control when driving under the following conditions:

- **When it is not possible to keep the vehicle at a set speed.**
- **In heavy traffic or in traffic that varies in speed.**
- **On winding or hilly roads.**
- **On slippery roads (rain, snow, ice, etc.).**
- **In very windy areas.**

Doing so could cause a loss of vehicle control and result in an accident.

CRUISE CONTROL OPERATIONS

The cruise control allows driving at a speed between 25 - 89 mph (40 - 144 km/h) without keeping your foot on the accelerator pedal.

To turn on the cruise control, push the ON/OFF switch on. The (white) indicator light in the vehicle information display will illuminate.

To set cruising speed, accelerate the vehicle to the desired speed, push the COAST/SET switch and release it. The (green) indicator light in the vehicle information display will illuminate. Take your foot off the accelerator pedal. Your vehicle maintains the set speed.

- **To pass another vehicle,** depress the accelerator pedal. When you release the pedal, the vehicle returns to the previously set speed.
- The vehicle may not maintain the set speed when going up or down steep hills. If this happens, drive without the cruise control.

To cancel the preset speed, use one of the following three methods:

- Push the CANCEL switch; the indicator light in the vehicle information display goes out.
- Tap the brake pedal; the indicator light goes out.
- Push the ON/OFF switch off. The indicator light in the vehicle information display goes out.

The cruise control is automatically canceled and the indicator light in the vehicle information display goes out if:

- You depress the brake pedal while pushing the ACCEL/RES or SET/COAST switch. The preset speed is deleted from memory.
- The vehicle slows down more than 8 mph (13 km/h) below the set speed.
- You move the shift lever to N (Neutral).

To reset at a faster cruising speed, use one of the following three methods:

- Depress the accelerator pedal. When the vehicle attains the desired speed, push and release the COAST/SET switch.

- Push and hold the ACCEL/RES switch. When the vehicle attains the speed you desire, release the switch.
- Push and release the ACCEL/RES switch. Each time you do this, the set speed increases by about 1 mph (1.6 km/h).

To reset at a slower cruising speed, use one of the following three methods:

- Lightly tap the brake pedal. When the vehicle attains the desired speed, push the COAST/SET switch and release it.
- Push and hold the COAST/SET switch. Release the switch when the vehicle slows to the desired speed.
- Push and release the COAST/SET switch. Each time you do this, the set speed decreases by about 1 mph (1.6 km/h).

To resume the preset speed, push and release the ACCEL/RES switch. The vehicle returns to the last set cruising speed when the vehicle speed is over 25 mph (40 km/h).

BREAK-IN SCHEDULE

⚠ CAUTION

During the first 1,200 miles (2,000 km), follow these recommendations to obtain maximum engine performance and ensure the future reliability and economy of your new vehicle. Failure to follow these recommendations may result in shortened engine life and reduced engine performance.

- Avoid driving for long periods at constant speed, either fast or slow, and do not run the engine over 4,000 RPM.
- Do not accelerate at full throttle in any gear.
- Avoid quick starts.
- Avoid hard braking as much as possible.
- Do not tow a trailer for the first 500 miles (805 kilometers). Your engine, axle or other parts could be damaged.

FUEL EFFICIENT DRIVING TIPS

Follow these easy-to-use Fuel Efficient Driving Tips to help you achieve the most fuel economy from your vehicle.

1. **Use Smooth Accelerator and Brake Pedal Application**
   - Avoid rapid starts and stops.
   - Use smooth, gentle accelerator and brake application whenever possible.
   - Maintain constant speed while commuting and coast whenever possible.
2. **Maintain Constant Speed**
   - Look ahead to try and anticipate and minimize stops.
   - Synchronizing your speed with traffic lights allows you to reduce your number of stops.
   - Maintaining a steady speed can minimize red light stops and improve fuel efficiency.

3. **Use Air Conditioning (A/C) at Higher Vehicle Speeds**
   - Below 40 mph (64 km/h), it is more efficient to open windows to cool the vehicle due to reduced engine load.
   - Above 40 mph (64 km/h), it is more efficient to use A/C to cool the vehicle due to increased aerodynamic drag.
   - Recirculating the cool air in the cabin when the A/C is on reduces cooling load.
4. **Drive at Economical Speeds and Distances**
   - Observing the speed limit and not exceeding 60 mph (97 km/h) (where legally allowed) can improve fuel efficiency due to reduced aerodynamic drag.
   - Maintaining a safe following distance behind other vehicles reduces unnecessary braking.
   - Safely monitoring traffic to anticipate changes in speed permits reduced braking and smooth acceleration changes.
   - Select a gear range suitable to road conditions.
5. **Use Cruise Control**
   - Using cruise control during highway driving helps maintain a steady speed.
   - Cruise control is particularly effective in providing fuel savings when driving on flat terrains.
6. **Plan for the Shortest Route**
   - Utilize a map or navigation system to determine the best route to save time.
7. **Avoid Idling**
   - Shutting off your engine when safe for stops exceeding 30–60 seconds saves fuel and reduces emissions.
8. **Buy an Automated Pass for Toll Roads**
   - Automated passes permit drivers to use special lanes to maintain cruising speed through the toll and avoid stopping and starting.
9. **Winter Warm Up**
   - Limit idling time to minimize impact to fuel economy.
   - Vehicles typically need no more than 30 seconds of idling at start-up to effectively circulate the engine oil before driving.
   - Your vehicle will reach its ideal operating temperature more quickly while driving versus idling.
10. **Keeping your Vehicle Cool**
    - Park your vehicle in a covered parking area or in the shade whenever possible.
    - When entering a hot vehicle, opening the windows will help to reduce the inside temperature faster, resulting in reduced demand on your A/C system.

INCREASING FUEL ECONOMY

- Keep your engine tuned up.
- Follow the recommended scheduled maintenance.
- Keep the tires inflated to the correct pressure. Low tire pressure increases tire wear and lowers fuel economy.
- Keep the wheels in correct alignment. Improper alignment increases tire wear and lowers fuel economy.
- For vehicles equipped with 4x4 , use 4H or 4L position only when necessary. 4-wheel drive operation lowers fuel economy.
- Use the recommended viscosity engine oil. For additional information, refer to "Engine oil and oil filter recommendations" in the "Technical and consumer information" section of this manual.

USING 4–WHEEL DRIVE (4WD) (if so equipped)

WARNING

- **For 4WD equipped vehicles, do not attempt to raise two wheels off the ground and shift the transmission to any drive or reverse position with the engine running. Doing so may result in drivetrain damage or unexpected vehicle movement which could result in serious vehicle damage or personal injury.**
- **Do not attempt to test a 4WD equipped vehicle on a 2-wheel dynamometer (such as the dynamometers used by some states for emissions testing), or similar equipment even if the other two wheels are raised off the ground. Make sure you inform test facility personnel that your vehicle is equipped with 4WD before it is placed on a dynamometer. Using the wrong test equipment may result in drivetrain damage or unexpected vehicle movement which could result in serious vehicle damage or personal injury.**

CAUTION

- **Do not drive the vehicle in the 4H or 4LO position on dry hard surface roads. Driving on dry, hard surfaces in 4H or 4LO may cause unnecessary noise, tire wear and increased fuel consumption.**

  If the 4WD warning light or vehicle information display warning message turns on when you are driving on dry hard surface roads:

  - **in the 4H position, shift the 4WD shift switch to 2WD.**
  - **in the 4LO position, stop the vehicle, move the shift lever to the N (Neutral) position with the brake pedal depressed, and shift the 4WD shift switch to 2WD.**
- **If the warning light or vehicle information display warning message is still on after the above operation, have your vehicle checked as soon as possible. It is recommended that you visit a NISSAN dealer for this service.**

TRANSFER CASE SHIFTING PROCEDURES

The part time 4WD system provides 3 positions (2WD, 4H and 4LO), so you can select the desired drive mode according to the driving conditions.

2WD or 4WD shift procedure:

4WD Shift Switch Position	Wheels Driven	Indicator Light		Use Conditions	4WD Shift Procedure
		4WD shift	Transfer 4LO position		
2WD	Rear wheels			For driving on dry, paved roads (Economy drive)	Move the 4WD switch. 2WD <—> 4H The 4WD shift indicator light will indicate that the transfer shift position is engaged. IT IS NOT NECESSARY TO MOVE THE SHIFT LEVER TO THE N (NEUTRAL) POSITION IN THIS OPERATION. PERFORM THIS OPERATION WHEN DRIVING STRAIGHT.
4H	4 wheels			For driving on rocky, sandy or snow-covered roads	
4LO	N (Neutral)		*1 May blink	N (Neutral) disengages the automatic transmission (A/T) mechanical parking lock, which will allow the vehicle to roll. Do not leave the transfer shift position in N (Neutral).*2	1. Stop the vehicle. 2. With the brake pedal depressed, move the shift lever to the N (Neutral) position. 3. With the brake pedal depressed, depress and turn the 4WD shift switch to 4LO or 4H. THE TRANSFER CASE DOES NOT ENGAGE BETWEEN 4H AND 4LO (OR 4LO TO 4H) UNLESS YOU HAVE FIRST STOPPED THE VEHICLE, DEPRESSED THE BRAKE PEDAL AND MOVED THE SHIFT LEVER TO N (NEUTRAL). *3
	4 wheels		Illuminated	For use when maximum power and traction is required (for example: on steep grades or rocky, sandy, muddy roads)	

*1: Before moving the shift lever from N (Neutral), wait until the 4LO indicator light stays on steady. This indicates that the 4WD shift procedure is completed and the transfer gear is correctly set in the 4LO position. If the vehicle is shifted into gear before the indicator is on steady, the transfer gear may grind, not engage correctly or stay in the N (Neutral) position.

- If the 4WD warning light or vehicle information display warning message illuminates, perform the following procedure to return the transfer case to the correct operating condition.

1. Turn off the engine by placing the ignition switch in the OFF position.

2. Start the engine.

- Check that the 4WD warning light or vehicle information display warning message turns off. If the 4WD light illuminates, have the system checked. It is recommended that you visit a NISSAN dealer for this service.

3. Apply the parking brake, depress the brake pedal and move the shift lever to the N (Neutral) position.

4. With the brake pedal depressed, move the 4WD shift switch to the desired mode.

- Be sure to wait until the transfer gear change completes before shifting the shift lever from the N (Neutral) position.

*2: While changing in and out of 4LO, the ignition switch must be in the ON position and the vehicle's engine must be running for a shift to take place and for the indicator lights (4WD shift and 4LO position indicator) to be operable. Otherwise, the shift will not take place and no indicator lights will be on or flashing.

*3: Make sure the transfer 4LO position indicator light turns on when you shift the 4WD shift switch to 4LO. The OFF indicator light will also turn on when 4LO is selected. For additional information, refer to "Vehicle Dynamic Control (VDC) system" in this section.

The transfer case 4WD shift switch is used to select either 2WD or 4WD depending on the driving conditions. There are three types of drive modes available: 2WD, 4H and 4LO.

The 4WD shift switch electronically controls the transfer case operation. Rotate the switch to move between each mode: 2WD, 4H and 4LO.

To change into or out of 4LO, the vehicle MUST be stationary, move the shift lever to N (Neutral), and depress the brake pedal. The switch must be pushed and turned to select 4LO.

⚠ WARNING

- **When parking, apply the parking brake before stopping the engine and make sure that the 4WD shift indicator light is on and the Automatic Transmission park (ATP) warning light goes off. Otherwise, the vehicle could unexpectedly move even if the A/T is in the P position.**
- **The 4LO indicator light must stop blinking and remain illuminated or turn off before shifting the transmission into gear. If the shift lever is shifted from the N (Neutral) position to any other gear when the 4LO indicator light is blinking, the vehicle may move unexpectedly.**

⚠ CAUTION

- **Never shift the 4WD shift switch between 4LO and 4H while driving.**
- **The 4H position provides greater traction. Avoid excessive speed, as it will cause increased fuel consumption and higher oil temperatures, and could damage drivetrain components. Speeds over 62 mph (100 km/h) in 4H is not recommended.**
- **The 4LO position provides maximum power and traction. Avoid raising vehicle speed excessively, as the maximum speed is approximately 31 mph (50 km/h).**
- **When driving straight, shift the 4WD shift switch to the 2WD or 4H position. Do not move the 4WD shift switch when making a turn or reversing.**
- **Do not shift the 4WD shift switch (between 2WD and 4H) while driving on steep downhill grades. Use the engine brake and low A/T gears (M1 or M2) for engine braking.**
- **Do not operate the 4WD shift switch (between 2WD and 4H) with the rear wheels spinning.**
- **Do not drive on dry hard surface roads in the 4H or 4LO position. Driving on dry hard surfaces in 4H or 4LO may cause unnecessary noise and tire wear. NISSAN recommends driving in the 2WD position under these conditions.**
- **The 4WD transfer case may not be shifted between 4H and 4LO at low ambient temperatures and the transfer 4LO position indicator light may blink even when the 4WD shift switch is shifted. After driving for a while you can change the 4WD transfer case between 4H and 4LO.**

When driving on rough roads,

- Set the 4WD shift switch to 4H or 4LO.
- Drive carefully according to the road surface conditions.

When the vehicle is stuck,

- Set the 4WD shift switch to 4H or 4LO.
- Place stones or wooden blocks under the tires to free the vehicle.
- Use the Electronic locking rear differential (E-Lock) system (if so equipped). For additional information, refer to "Electronic locking rear differential (E-lock) system" in this section.
- If it is difficult to free the vehicle, rock the vehicle back and forth between reverse and drive gears.
- If the vehicle is stuck deep in mud, place stones or wooden blocks under the tires. Then try the recovery procedures above. Tire chains may be effective.

⚠ CAUTION

- **Do not spin the tires excessively. Tires will sink deep into the mud, making it difficult to free the vehicle.**
- **Avoid shifting gears with the engine running at high speeds as this may cause malfunction.**

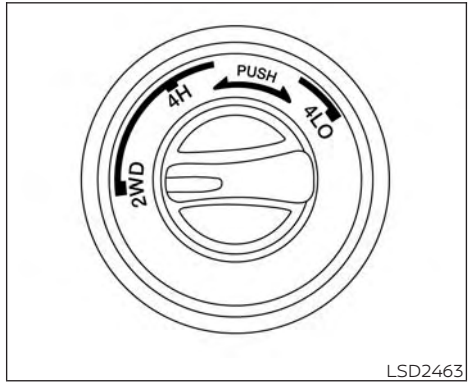

4WD shift switch operations

- Shift the 4WD shift switch to either the 2WD, 4H or 4LO position, depending on driving conditions.
- **If the 4WD shift switch is operated while making a turn, accelerating or decelerating or if the key switch is turned off while in the 4H or 4LO, you may feel a jolt. This is not abnormal.**
- **You may hear some noise as the system shifts or engages. This is not abnormal.**

⚠ CAUTION

- **When driving straight, shift the 4WD shift switch to the 2WD or 4H position. Do not move the 4WD shift switch when making a turn or reversing.**
- **Do not shift the 4WD shift switch while driving on steep downhill grades. Use the engine brake and low automatic transmission gears (M1 or M2) for engine braking.**
- **Do not operate the 4WD shift switch with the rear wheels spinning.**
- **Before placing the 4WD shift switch in the 4H position from 2WD, ensure the vehicle speed is less than 62 mph (100 km/h). Failure to do so can damage the 4WD system.**
- **Never shift the 4WD shift switch between 4LO and 4H while driving.**

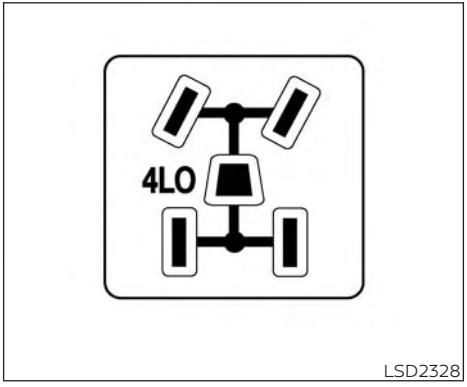

4WD shift indicator light

The 4WD shift indicator light is located in the vehicle information display.

While the engine is running, the 4WD shift indicator light will illuminate the position selected by the 4WD shift switch.

- **The 4WD shift indicator light may come on while shifting from one drive mode to the other. When the shifting is completed, the 4WD shift indicator light will stay on.**
- If the 4WD warning light or the vehicle information display warning message comes on, the 4WD indicator light goes out.

⚠ CAUTION

- **If the 4WD shift indicator light indication changes to 2WD when the 4WD shift switch is shifted to the 4H position at low ambient temperatures, the 2WD mode may be being engaged due to malfunctioning drive system. If the indicator does not return to normal and the 4WD warning light or the vehicle information display warning message comes on, have the system checked. It is recommended that you visit a NISSAN dealer for this service.**

Warning light or warning message

Warning light (if so equipped)	Warning message		Warning light or warning message comes on when:
	Trip computer (if so equipped)	Vehicle information display (if so equipped)	
4WD Illuminates	4WD ERROR	4WD 4WD Error: See Owner's Manual	There is a malfunction in the 4-wheel drive system
—	4WD TIRES	FRT & RR tire size difference: See Owner's Manual	The difference in wheel rotation is large

The 4WD warning light comes on when the ignition switch is placed in the ON position. It turns off soon after the engine is started.

If any malfunction occurs in the 4WD system when the igntion switch is in the ON position, the warning light will either remain illuminated or blink.

If the 4WD warning light comes on, the 4WD shift indicator light goes out.

If the "4WD TIRES" warning message comes on, change the 4WD shift switch into 2WD and do not drive fast.

⚠ CAUTION

- **If the warning light or warning message comes on during operation or rapidly after stopping the vehicle for a while, have your vehicle checked as soon as possible. It is recommended that you visit a NISSAN dealer for this service.**
- **Shifting between 4H and 4LO is not recommended when the 4WD warning light or warning message turns on.**

- **When the warning light or warning message comes on, the 2WD mode may be engaged even if the 4WD shift switch is in 4H. Be especially careful when driving. If corresponding parts are malfunctioning, the 4WD mode will not be engaged even if the 4WD shift switch is shifted.**
- **Do not drive the vehicle in the 4H or 4LO position on dry hard surface roads. Driving on dry, hard surfaces in 4H or 4LO may cause unnecessary noise, tire wear and increased fuel consumption.**

  If the 4WD warning light or warning message turns on when you are driving on dry hard surface roads:

  - **In the 4H position, shift the 4WD shift switch to 2WD.**
  - **In the 4LO position, stop the vehicle, move the automatic transmission shift lever to the N (Neutral) position with the brake pedal depressed, and shift the 4WD shift switch to 2WD.**
- **If the warning light or warning message is still on after the above operation, have your vehicle checked as soon as possible. It is recommended that you visit a NISSAN dealer for this service.**
- **The transfer case may be damaged if you continue driving with the warning light or warning message on.**

ELECTRONIC LOCKING REAR DIFFERENTIAL (E-Lock) SYSTEM (if so equipped)

The E-Lock system can provide additional traction and should only be used when a vehicle has become or is becoming stuck. This system operates by electronically "locking" the two rear drive wheels together, allowing them to turn at the same speed. The system is used when it is not possible to free a stuck vehicle even when using the 4LO position (4-wheel drive vehicles).

When added traction is required, activate the E-Lock system by pushing the switch on. For additional information, refer to "Electronic locking rear differential (E-Lock) system switch" in the "Instruments and controls" section of this manual. Once the system fully engages, the indicator light in the instrument panel will remain on. When the system is activated, both rear wheels will engage, providing added traction.

The rear wheels may momentarily slip or move to engage the system, and the system will only engage up to approximately 4 mph (7 km/h). Once the vehicle is free, the system should be turned off and driving resumed.

The Anti-lock Braking System (ABS) is disabled and the ABS light illuminates when the E-Lock system is on.

⚠ WARNING

- **Never leave the E-Lock system on when driving on paved or hard-surfaced roads. Turning the vehicle may result in the rear wheels slipping and result in an accident and personal injury. After using the E-Lock system to free the vehicle, turn the system off.**
- **Use the E-Lock system only in an emergency when it is not possible to free a stuck vehicle even when using 4LO. Never use the E-Lock system on a slippery road surface such as snow or ice surface. Using the E-Lock system when driving in these road conditions may cause unexpected movement of the vehicle during engine braking, accelerating or turning, which may result in an accident and serious personal injury.**
- **Observe the above warnings. Otherwise, loss of normal steering control may result. This may result in an accident and serious personal injury.**

⚠ CAUTION

- **After using the E-Lock system, or during normal driving, turn the switch off to prevent possible damage to the drivetrain components from extended use.**
- **Avoid quick starts while the E-Lock system is in operation. Otherwise, the drivetrain components could be damaged.**
- **When the E-Lock system is in operation, turning the vehicle becomes difficult. This can be dangerous, especially at high speeds. Doing so could damage the drivetrain components.**
- **Do not operate the E-Lock system when the vehicle is turning or when one side wheel is rotating. Otherwise, the drivetrain components could be damaged.**
- **The E-Lock system operates only when the engine is running.**
- **In 4H mode, the E-Lock system does not operate when the E-Lock system switch is turned to the ON position. (The E-Lock system indicator light will flash.)**
- **Observe the above cautions. Otherwise, loss of normal steering control may result.**

ECO DRIVE REPORT (if so equipped)

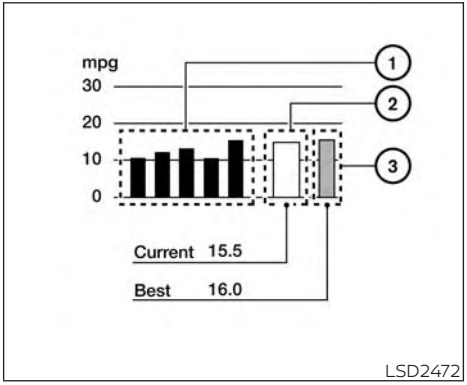

When the ignition switch is in the OFF position, ECO management display appears.

① Previous 5 times (History)

② Current fuel economy

③ Best fuel economy

The result of ECO evaluation is displayed 30 seconds after the ignition switch is placed in the ON position and the vehicle is driven at least 1/3 miles (500 meters).

① The average fuel economy for the previous 5 times will be displayed.

② The average fuel economy since the last reset will be displayed.

③ The best fuel economy of the past history will be displayed.

The ECO drive report can be set to be ON or OFF.

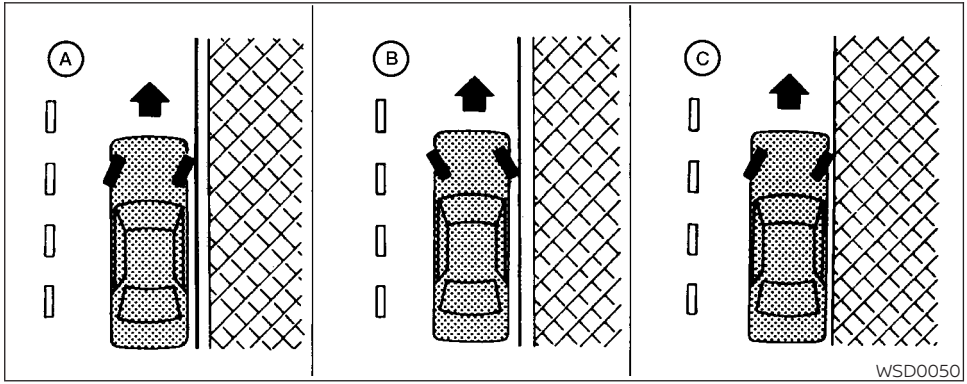

⚠ WARNING

- **Do not stop or park the vehicle over flammable materials such as dry grass, waste paper or rags. They may ignite and cause a fire.**

- **Safe parking procedures require that both the parking brake be set and the transmission placed into P (Park). Failure to do so could cause the vehicle to move unexpectedly or roll away and result in an accident. Make sure the shift lever has been pushed as far forward as it can go and cannot be moved without depressing the foot brake pedal.**
- **Never leave the engine running while the vehicle is unattended.**

- **To help avoid risk of injury or death through unintended operation of the vehicle and/or its systems, do not leave children, people who require the assistance of others or pets unattended in your vehicle. Additionally, the temperature inside a closed vehicle on a warm day can quickly become high enough to cause a significant risk of injury or death to people and pets.**

1. Firmly apply the parking brake.
2. Move the shift lever to the P (Park) position.
3. To help prevent the vehicle from rolling into traffic when parked on an incline, it is a good practice to turn the wheels as illustrated.

   - HEADED DOWNHILL WITH CURB Ⓐ:

   Turn the wheels into the curb and move the vehicle forward until the curb side wheel gently touches the curb.

   - HEADED UPHILL WITH CURB Ⓑ:

   Turn the wheels away from the curb and move the vehicle back until the curb side wheel gently touches the curb.

- HEADED UPHILL OR DOWNHILL, NO CURB Ⓒ:

Turn the wheels toward the side of the road so the vehicle will move away from the center of the road if it moves.

4. Place the ignition switch in the LOCK position.

POWER STEERING

The power assisted steering uses a hydraulic pump, driven by the engine, to assist steering.

If the engine stops or the drive belt breaks, you will still have control of the vehicle. However, much greater steering effort is needed, especially in sharp turns and at low speeds.

⚠ WARNING

If the engine is not running or is turned off while driving, the power assist for the steering will not work. Steering will be harder to operate.

BRAKE SYSTEM

The brake system has two separate hydraulic circuits. If one circuit malfunctions, you will still have braking at two wheels.

BRAKE PRECAUTIONS

Using the brakes

Avoid resting your foot on the brake pedal while driving. This will overheat the brakes, wear out the brake pads faster, and reduce gas mileage.

To help reduce brake wear and to prevent the brakes from overheating, reduce speed and downshift to a lower gear before going down a slope or long grade. Overheated brakes may reduce braking performance and could result in loss of vehicle control.

⚠ WARNING

- **While driving on a slippery surface, be careful when braking, accelerating or downshifting. Abrupt braking or accelerating could cause the wheels to skid and result in an accident.**
- **If the engine is not running or is turned off while driving, the power assist for the brakes will not work. Braking will be harder.**

Wet brakes

When the vehicle is washed or driven through water, the brakes may get wet. As a result, your braking distance will be longer and the vehicle may pull to one side during braking.

To dry the brakes, drive the vehicle at a safe speed while lightly pressing the brake pedal to heat up the brakes. Do this until the brakes return to normal. Avoid driving the vehicle at high speeds until the brakes function correctly.

Parking brake break-in

Break in the parking brake shoes whenever the stopping effect of the parking brake is weakened or whenever the parking brake shoes and/or drums/rotors are replaced, in order to assure the best braking performance.

This procedure is described in the vehicle service manual. It is recommended that you visit a NISSAN dealer for this service.

ANTI-LOCK BRAKING SYSTEM (ABS)

⚠ WARNING

- **The ABS is a sophisticated device, but it cannot prevent accidents resulting from careless or dangerous driving techniques. It can help maintain vehicle control during braking on slippery surfaces. Remember that stopping distances on slippery surfaces will be longer than on normal surfaces even with ABS. Stopping distances may also be longer on rough, gravel or snow covered roads, or if you are using tire chains. Always maintain a safe distance from the vehicle in front of you. Ultimately, the driver is responsible for safety.**
- **Tire type and condition may also affect braking effectiveness.**
  - **When replacing tires, install the specified size of tires on all four wheels.**
  - **When installing a spare tire, make sure that it is the proper size and type as specified on the Tire and Loading Information label. For additional information, refer to "Tire and Loading Information label" in the "Technical and consumer information" section of this manual.**
  - **For additional information, refer to "Wheels and tires" in the "Do-it-yourself" section of this manual.**

The ABS controls the brakes so the wheels do not lock during hard braking or when braking on slippery surfaces. The system detects the rotation speed at each wheel and varies the brake fluid pressure to prevent each wheel from locking and sliding. By preventing each wheel from locking, the system helps the driver maintain steering control and helps to minimize swerving and spinning on slippery surfaces.

Using the system

Depress the brake pedal and hold it down. Depress the brake pedal with firm steady pressure, but do not pump the brakes. The Anti-lock Braking System will operate to prevent the wheels from locking up. Steer the vehicle to avoid obstacles.

⚠ WARNING

Do not pump the brake pedal. Doing so may result in increased stopping distances.

Self-test feature

The Anti-lock Braking System (ABS) includes electronic sensors, electric pumps, hydraulic solenoids and a computer. The computer has a built-in diagnostic feature that tests the system each time you start the engine and move the vehicle at a low speed in forward or reverse. When the self-test occurs, you may hear a "clunk" noise and/or feel a pulsation in the brake pedal. This is normal and does not indicate a malfunction. If the computer senses a malfunction, it switches the ABS off and illuminates the ABS warning light on the instrument panel. The brake system then operates normally, but without anti-lock assistance.

If the ABS warning light illuminates during the self-test or while driving, have the vehicle checked. It is recommended that you visit a NISSAN dealer for this service.

Normal operation

The Anti-lock Braking System (ABS) operates at speeds above 3 - 6 mph (5 - 10 km/h). The speed varies according to road conditions.

When the ABS senses that one or more wheels are close to locking up, the actuator rapidly applies and releases hydraulic pressure. This action is similar to pumping the brakes very quickly. You may feel a pulsation in the brake pedal and hear a noise from under the hood or feel a vibration from the actuator when it is operating. This is normal and indicates that the ABS is operating properly. However, the pulsation may indicate that road conditions are hazardous and extra care is required while driving.

BRAKE ASSIST

When the force applied to the brake pedal exceeds a certain level, the brake assist is activated generating greater braking force than a conventional brake booster even with light pedal force.

⚠ WARNING

The brake assist is only an aid to assist braking operation and is not a collision warning or avoidance device. It is the driver's responsibility to stay alert, drive safely and be in control of the vehicle at all times.

ACTIVE BRAKE LIMITED SLIP (ABLS) SYSTEM

- The ABLS system uses automatic braking to transfer power from a slipping drive wheel to the wheel on the same axle with more traction. The ABLS system applies braking to the slipping wheel, which helps redirect power to the other wheel.
- On 4WD models the ABLS system operates in both 4H and 4LO modes. If 4WD mode is engaged, the ABLS system operates for both drive axles. On 2WD vehicles, the ABLS system operates on the drive axle only.
- The ABLS system is always on. In some conditions, the system may automatically turn the ABLS system off. If the system is automatically turned off, normal brake function will continue. ABLS will function even when the VDC system is turned off.
- The ABLS system does not operate if both wheels on a drive axle are slipping.

⚠ WARNING

- **The ABLS system helps provide increased traction, but will not prevent accidents due to abrupt steering operation or by careless driving or dangerous driving practices. Reduce vehicle speed and be especially careful when driving and cornering on slippery surfaces. Always drive carefully.**
- **Do not modify the vehicle's suspension. If suspension parts such as shock absorbers, struts, springs, stabilizer bars, bushings and wheels are not NISSAN approved for your vehicle or are extremely deteriorated, the ABLS system may not operate properly. This could adversely affect vehicle handling performance, and the slip indicator light may illuminate.**
- **If brake related parts such as brake pads, rotors and calipers are not NISSAN recommended or are extremely deteriorated, the ABLS system may not operate properly and the slip indicator light may illuminate.**
- **If wheels or tires other than the NISSAN recommended ones are used, the ABLS system may not operate properly and the slip indicator light may illuminate.**

VEHICLE DYNAMIC CONTROL (VDC) SYSTEM

The VDC system uses various sensors to monitor driver inputs and vehicle motion. Under certain driving conditions, the VDC system helps to perform the following functions:

- Controls brake pressure to reduce wheel slip on one slipping drive wheel so power is transferred to a non-slipping drive wheel on the same axle.
- Controls brake pressure and engine output to reduce drive wheel slip based on vehicle speed (traction control function).
- If the 4WD transfer case is shifted into 4LO the OFF indicator light will come on and the VDC system will be turned off. For additional information, refer to "Using 4-wheel drive (4WD)" in this section.
- Controls brake pressure at individual wheels and engine output to help the driver maintain control of the vehicle in the following conditions:
  - Understeer (vehicle tends to not follow the steered path despite increased steering input)
  - Oversteer (vehicle tends to spin due to certain road or driving conditions)

The VDC system can help the driver to maintain control of the vehicle, but it cannot prevent loss of vehicle control in all driving situations.

When the VDC system operates, the indicator in the instrument panel flashes so note the following:

- The road may be slippery or the system may determine some action is required to help keep the vehicle on the steered path.
- You may feel a pulsation in the brake pedal and hear a noise or vibration from under the hood. This is normal and indicates that the VDC system is working properly.
- Adjust your speed and driving to the road conditions.

For additional information, refer to "Slip indicator light" and "Vehicle Dynamic Control (VDC) OFF indicator light" in the "Instruments and controls" section of this manual.

If a malfunction occurs in the system, the indicator light will come on in the instrument panel. The VDC system automatically turns off when these indicator lights are off.

The VDC OFF switch is used to turn off the VDC system. The OFF indicator illuminates to indicate the VDC system is off.

When the VDC switch is used to turn off the system, the VDC system still operates to prevent one drive wheel from slipping by transferring power to a non-slipping drive wheel. The indicator flashes if this occurs. All other VDC functions are off and the indicator will not flash.

The VDC system is automatically reset to ON when the ignition switch is placed in the OFF position then back to the ON position.

The computer has a built-in diagnostic feature that tests the system each time you start the engine and move the vehicle forward or in reverse at a slow speed. When the self-test occurs, you may hear a clunk noise and/or feel a pulsation in the brake pedal. This is normal and is not an indication of a malfunction.

⚠ WARNING

- **The VDC system is designed to help the driver maintain stability but does not prevent accidents due to abrupt steering operation at high speeds or by careless or dangerous driving techniques. Reduce vehicle speed and be especially careful when driving and cornering on slippery surfaces and always drive carefully.**
- **Do not modify the vehicle's suspension. If suspension parts such as shock absorbers, struts, springs, stabilizer bars, bushings and wheels are not NISSAN recommended for your vehicle or are extremely deteriorated, the VDC system may not operate properly. This could adversely affect vehicle handling performance, and the indicator may flash or the indicator light may illuminate.**
- **If brake related parts such as brake pads, rotors and calipers are not NISSAN recommended or are extremely deteriorated, the VDC system may not operate properly and the indicator light may illuminate.**
- **If engine control related parts are not NISSAN recommended or are extremely deteriorated, the indicator light may illuminate.**
- **When driving on extremely inclined surfaces such as higher banked corners, the VDC system may not operate properly and the indicator may flash or the indicator light may illuminate. Do not drive on these types of roads.**
- **When driving on an unstable surface such as a turntable, ferry, elevator or ramp, the indicator may flash or the indicator light may illuminate. This is not a malfunction. Restart the engine after driving onto a stable surface.**
- **If wheels or tires other than the NISSAN recommended ones are used, the VDC system may not operate properly and the indicator may flash or the indicator light may illuminate.**
- **The VDC system is not a substitute for winter tires or tire chains on a snow covered road.**

BRAKE FORCE DISTRIBUTION

During braking while driving through turns, the system optimizes the distribution of force to each of the front and rear wheels depending on the radius of the turn.

⚠ WARNING

- **The VDC system is designed to help the driver maintain stability but does not prevent accidents due to abrupt steering operation at high speeds or by careless or dangerous driving techniques. Reduce vehicle speed and be especially careful when driving and cornering on slippery surfaces and always drive carefully.**

- **Do not modify the vehicle's suspension. If suspension parts such as shock absorbers, struts, springs, stabilizer bars, bushings and wheels are not NISSAN recommended for your vehicle or are extremely deteriorated, the VDC system may not operate properly. This could adversely affect vehicle handling performance, and the indicator may flash or the OFF indicator light may illuminate.**
- **If brake related parts such as brake pads, rotors and calipers are not NISSAN recommended or are extremely deteriorated, the VDC system may not operate properly and the indicator light may illuminate.**
- **If engine control related parts are not NISSAN recommended or are extremely deteriorated, the indicator light may illuminate.**
- **When driving on extremely inclined surfaces such as higher banked corners, the VDC system may not operate properly and the indicator may flash or the OFF indicator light may illuminate. Do not drive on these types of roads.**
- **When driving on an unstable surface such as a turntable, ferry, elevator or ramp, the indicator may flash or the OFF indicator light may illuminate. This is not a malfunction. Restart the engine after driving onto a stable surface.**
- **If wheels or tires other than the NISSAN recommended ones are used, the VDC system may not operate properly and the indicator may flash or the OFF indicator light may illuminate.**
- **The VDC system is not a substitute for winter tires or tire chains on a snow covered road.**

WARNING

- **Never rely solely on the hill descent control system to control vehicle speed when driving on steep downhill grades. Always drive carefully and attentively when using the hill descent control system and decelerate the vehicle speed by depressing the brake pedal if necessary. Be especially careful when driving on frozen, muddy or extremely steep downhill roads. Failure to control vehicle speed may result in a loss of control of the vehicle and possible serious injury or death.**
- **The hill descent control may not control the vehicle speed on a hill under all load or road conditions. Always be prepared to depress the brake pedal to control vehicle speed. Failure to do so may result in a collision or serious personal injury.**

The hill descent control system can only be activated when the 4H or 4LO position is engaged.

The hill descent control system helps maintain vehicle speed when driving under 15 mph (25 km/h) on steeper downhill grades. Hill descent control is useful when engine braking alone cannot control vehicle speed. Hill descent control applies the vehicle brakes to control vehicle speed allowing the driver to concentrate on steering while reducing the burden of brake and accelerator operation.

If the hill descent control system ON indicator light is blinking, the hill descent control is engaged; however, the hill descent control will not control the vehicle speed.

- Once the system is activated, the indicator light will remain on in the instrument panel. For additional information, refer to "Hill descent control system ON indicator light" in the "Instruments and controls" section of this manual.
- You may hear a noise from under the hood or feel a vibration from the actuator when it is operating. This indicates that the hill descent control system is working properly.

If the accelerator or brake pedal is depressed while the hill descent control system is on, the system will stop operating temporarily. As soon as the accelerator or brake pedal is released, the hill descent control system begins to function again if the hill descent control operating conditions are fulfilled.

For the best results, when descending steep downhill grades, the hill descent control switch should be ON and the shift lever in M1 (First) for engine braking. For additional information, refer to "Hill descent control switch" in the "Instruments and controls" section of this manual.

⚠ WARNING

- **Never rely solely on the hill start assist system to prevent the vehicle from moving backward on a hill. Always drive carefully and attentively. Depress the brake pedal when the vehicle is stopped on a steep hill. Be especially careful when stopped on a hill on frozen or muddy roads. Failure to prevent the vehicle from rolling backwards may result in a loss of control of the vehicle and possible serious injury or death.**
- **The hill start assist system is not designed to hold the vehicle at a standstill on a hill. Depress the brake pedal when the vehicle is stopped on a steep hill. Failure to do so may cause the vehicle to roll backwards and may result in a collision or serious personal injury.**
- **The hill start assist may not prevent the vehicle from rolling backwards on a hill under all load or road conditions. Always be prepared to depress the brake pedal to prevent the vehicle from rolling backwards. Failure to do so may result in a collision or serious personal injury.**

When the vehicle is stopped on a hill, the hill start assist system automatically keeps the brakes applied. This helps prevents the vehicle from rolling backward in the time it takes the driver to release the brake pedal and apply the accelerator when the vehicle is stopped on a hill.

Hill start assist will operate automatically under the following conditions:

- The shift lever is shifted to a forward or reverse gear.
- The vehicle is stopped completely on a hill by applying the brake.

The maximum holding time is 2 seconds. After 2 seconds the vehicle will begin to roll back and hill start assist will stop operating completely.

Hill start assist will not operate when the shift lever is shifted into N (Neutral) or P (Park) or on a flat and level road. When the VDC warning light illuminates in the meter, the hill start assist system will not operate.

FRONT AND REAR SONAR SYSTEM (if so equipped)

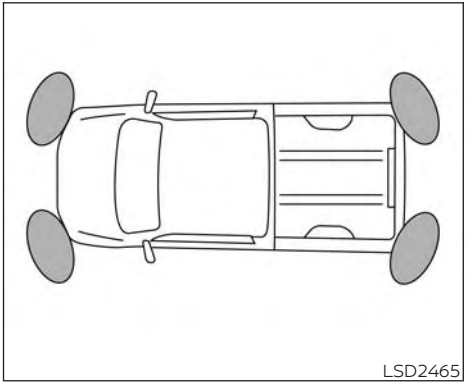

The Front and rear sonar system sounds a tone to inform the driver of obstacles near the bumper.

When the "DISPLAY" key is ON, the sonar view will automatically appear in the meter.

⚠ WARNING

- **The Front and rear sonar system is a convenience but it is not a substitute for proper parking.**
- **The driver is always responsible for safety during parking and other maneuvers. Always look around and check that it is safe to do so before parking.**
- **Read and understand the limitations of the Front and rear sonar system as contained in this section. The colors of the corner sonar indicator and the distance guide lines in the front/rear view indicate different distances to the object.**
- **Inclement weather or ultrasonic sources such as an automatic car wash, a truck's compressed-air brakes or a pneumatic drill may affect the function of the system; this may include reduced performance or a false activation.**
- **This function is designed as an aid to the driver in detecting large stationary objects to help avoid damaging the vehicle.**

- **The system is not designed to prevent contact with small or moving objects. Always move slowly. The system will not detect small objects below the bumper, and may not detect objects close to the bumper or on the ground.**
- **The system may not detect the following objects: fluffy objects such as snow, cloth, cotton, glass, wool, etc., and thin objects such as rope, wire and chain, etc., or wedge-shaped objects.**

If your vehicle sustains damage to the bumper fascia, leaving it misaligned or bent, the sensing zone may be altered causing inaccurate measurement of obstacles or false alarms.

⚠ CAUTION

- **Excessive noise (such as audio system volume or an open vehicle window) will interfere with the tone and it may not be heard.**
- **Keep the sonar sensors (located on the bumper fascia) free from snow, ice and large accumulations of dirt. Do not clean the sensors with sharp objects. If the sensors are covered, the accuracy of the sonar function will be diminished.**

SYSTEM OPERATION

The system informs with a visual and audible alert of front obstacles when the shift lever is in the D (Drive) position and both front and rear obstacles when the shift lever is in the R (Reverse) position.

Sonar Operation Table

	FR Sensor		RR Sensor	
Range	Sound	Display	Sound	Display
P	x	†	x	†
R	o	o	o	o
N	x	†	x	†
D	o	o	x	†
o – Display/Beep when detect				
† – Display on camera view				
x – No Display and Beep				

The system is deactivated at speeds above 6 mph (10 km/h). It is reactivated at lower speeds.

The intermittent tone will stop after 3 seconds when an obstacle is detected by only the corner sensor and the distance does not change. The tone will stop when the obstacle gets away from the vehicle.

When the object is detected, the indicator (green) appears and blinks and the tone sounds intermittently. When the vehicle moves closer to the object, the color of the indicator turns yellow and the rate of the blinking increases. When the vehicle is very close to the object, the indicator stops blinking and turns red, and the tone sounds continuously.

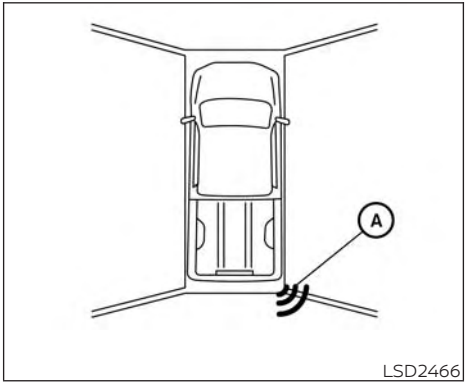

When the corner of the vehicle moves closer to an object, the corner sonar indicator Ⓐ appears.

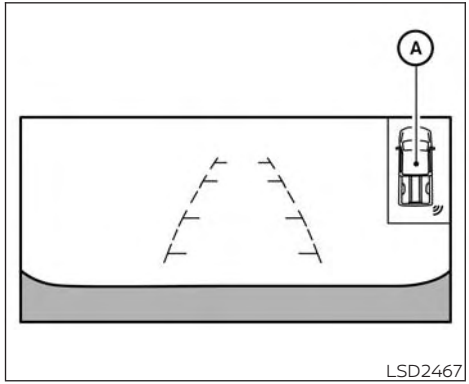

The system indicators Ⓐ will appear when the vehicle moves closer to an object.

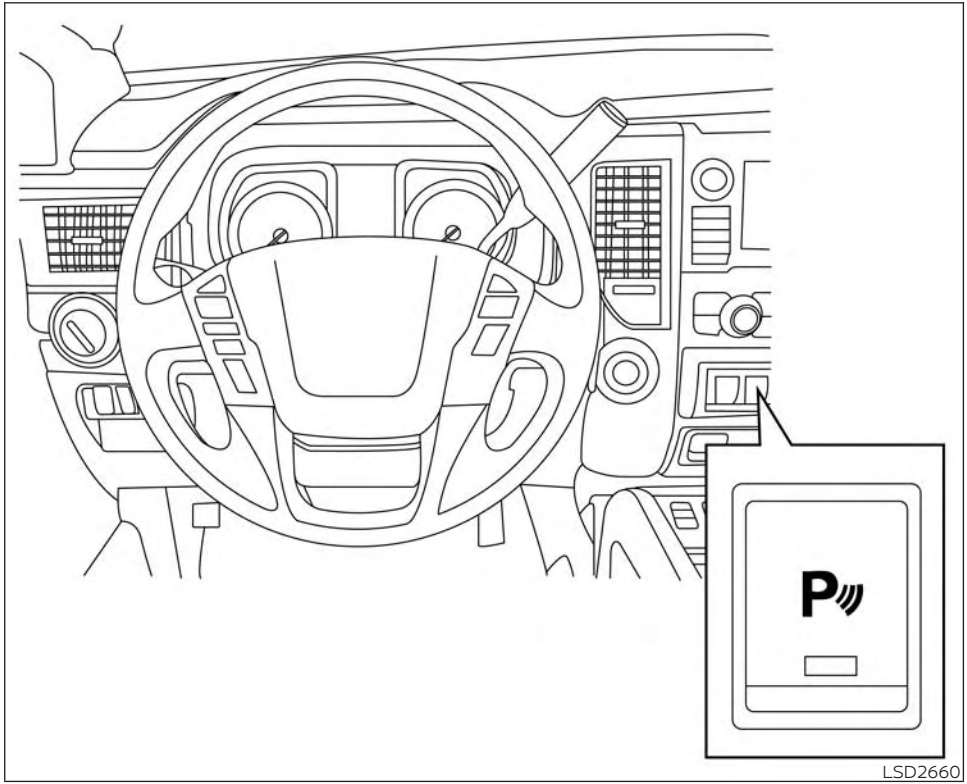

HOW TO ENABLE/DISABLE THE SONAR SYSTEM

The system is automatically activated when the ignition is in the ON position and the shift lever is in the R (Reverse) position.

Perform the following steps to enable or disable the sonar system:

1. Push the Front and rear sonar system OFF switch (the orange light will go out) to turn the system off.
2. To turn the system back on, push the switch (the orange light will illuminate) and the system will be enabled. For additional information, refer to "Front and rear sonar system OFF switch" in the "Instruments and controls" section of this manual.

NOTE:

The system will automatically be turned on when the engine is restarted.

SONAR LIMITATIONS

⚠ WARNING

Listed below are the system limitations for the sonar system. Failure to operate the vehicle in accordance with these system limitations could result in serious injury or death.

- **The driver is always responsible for safety during parking and other maneuvers. Always turn and look back before backing up. The sonar system is not a substitute for proper procedures.**
- **Read and understand the limitations of the sonar system as contained in this section. Inclement weather may affect the function of the sonar system; this may include reduced performance or a false activation.**
- **This system is not designed to prevent contact with small or moving objects.**
- **The system is designed as an aid to the driver in detecting large stationary objects to help avoid damaging the vehicle. The system will not detect small objects below the bumper, and may not detect objects close to the bumper or on the ground.**
- **The system is deactivated at speeds above 6 mph (10 km/h). It is reactivated at lower speeds.**
- **Inclement weather or ultrasonic sources such as an automatic car wash, a truck's compressed-air brakes or a pneumatic drill may affect the function of the system; this may include reduced performance or a false activation.**
- **The system is not designed to prevent contact with small or moving objects. Always move slowly. The system will not detect small objects below the bumper or on the ground.**
- **The system may not detect the following objects: fluffy objects such as snow, cloth, cotton, glass-wool, etc., and thin objects such as rope, wire and chain, etc., or wedge-shaped objects.**
- **The system may not detect objects at speeds above 3 mph (5 km/h) and may not detect certain angular or moving objects.**
- **The system is deactivated at speeds above 6 mph (10 km/h) and is reactivated at lower speeds.**

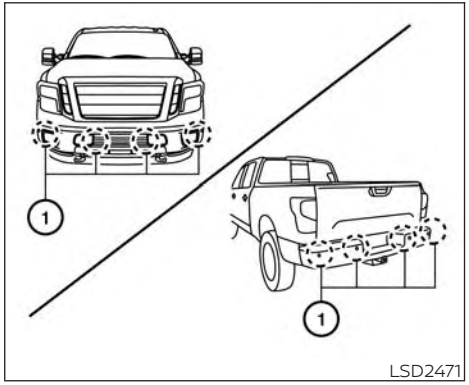

SYSTEM MAINTENANCE

The sonar sensors ① are located on the front and rear bumpers. Always keep the area near the sonar sensors clean.

The sonar sensors may be blocked by temporary ambient conditions such as splashing water, mist or fog.

The blocked condition may also be caused by objects such as ice, frost or dirt obstructing the sonar sensors.

Check for and remove objects obstructing the area around the sonar sensors.

Do not attach stickers (including transparent material), install accessories or apply additional paint near the sonar sensors.

Do not strike or damage the area around the sonar sensors. It is recommended that you consult a NISSAN dealer if the area around the sonar sensors is damaged due to a collision.

FREEING A FROZEN DOOR LOCK

To prevent a door lock from freezing, apply de-icer through the key hole. If the lock becomes frozen, heat the key before inserting it into the key hole or use the remote keyless entry key fob (if so equipped).

ANTIFREEZE

In the winter when it is anticipated that the temperature will drop below 32°F (0°C), check the antifreeze to assure proper winter protection. For additional information, refer to "Engine cooling system" in the "Do-it-yourself" section of this manual.

BATTERY

If the battery is not fully charged during extremely cold weather conditions, the battery fluid may freeze and damage the battery. To maintain maximum efficiency, the battery should be checked regularly. For additional information, refer to "Battery" in the "Do-it-yourself" section of this manual.

DRAINING OF COOLANT WATER

If the vehicle is to be left outside without anti-freeze, drain the cooling system, including the engine block. Refill before operating the vehicle. For additional information, refer to "Changing engine coolant" in the "Do-it-yourself" section of this manual.

TIRE EQUIPMENT

1. SUMMER tires have a tread designed to provide superior performance on dry pavement. However, the performance of these tires will be substantially reduced in snowy and icy conditions. If you operate your vehicle on snowy or icy roads, NISSAN recommends the use of MUD & SNOW or ALL SEASON TIRES on all four wheels. It is recommended that you visit a NISSAN dealer for the tire type, size, speed rating and availability information.
2. For additional traction on icy roads, studded tires may be used. However, some U.S. states and Canadian provinces prohibit their use. Check local, state and provincial laws before installing studded tires.

Skid and traction capabilities of studded snow tires on wet or dry surfaces may be poorer than that of non-studded snow tires.

3. Tire chains may be used. For additional information, refer to "Tire chains" in the "Do-it-yourself" section of this manual.

SPECIAL WINTER EQUIPMENT

It is recommended that the following items be carried in the vehicle during winter:

- A scraper and stiff-bristled brush to remove ice and snow from the windows and wiper blades.
- A sturdy, flat board to be placed under the jack to give it firm support.
- A shovel to dig the vehicle out of snowdrifts.
- Extra washer fluid to refill the windshield-washer fluid reservoir.

DRIVING ON SNOW OR ICE

⚠ WARNING

- **Wet ice (32°F, 0°C and freezing rain), very cold snow or ice can be slick and very hard to drive on. The vehicle will have much less traction or "grip" under these conditions. Try to avoid driving on wet ice until the road is salted or sanded.**
- **Whatever the condition, drive with caution. Accelerate and slow down with care. If accelerating or downshifting too fast, the drive wheels will lose even more traction.**
- **Allow more stopping distance under these conditions. Braking should be started sooner than on dry pavement.**
- **Allow greater following distances on slippery roads.**
- **Watch for slippery spots (glare ice). These may appear on an otherwise clear road in shaded areas. If a patch of ice is seen ahead, brake before reaching it. Try not to brake while on the ice, and avoid any sudden steering maneuvers.**

- **Do not use the cruise control (if so equipped) on slippery roads.**
- **Snow can trap dangerous exhaust gases under your vehicle. Keep snow clear of the exhaust pipe and from around your vehicle.**

ENGINE BLOCK HEATER (if so equipped)

Engine block heaters are used to assist with cold temperature starting.

- Engine block heaters should be used when the outside temperature is **0ºF** (-17ºC) or lower.
- Engine block heaters run continuously while plugged into the correct voltage electrical outlet.

⚠ WARNING

- **Do not use your engine block heater with an ungrounded electrical system or a 2-pronged adapter. You can be seriously injured by an electrical shock if you use an ungrounded connection.**
- **Disconnect and properly store the engine block heater cord before starting the engine. Damage to the cord could result in an electrical shock and can cause serious injury.**
- **Use a heavy-duty 3-wire, 3-pronged extension cord rated for at least 10 A. Plug the extension cord into a Ground Fault Interrupt (GFI) protected, grounded 110-VAC outlet. Failure to use the proper extension cord or a grounded outlet can result in a fire or electrical shock and cause serious personal injury.**

To use the engine block heater:

1. Turn the engine off.
2. Open the hood and unwrap the engine block heater cord.
3. Plug the engine block heater cord into a grounded 3-wire, 3-pronged extension cord.
4. Plug the extension cord into a Ground Fault Interrupt (GFI) protected, grounded 110-volt AC (VAC) outlet.
5. The engine block heater must be plugged in for at least 2–4 hours, depending on outside temperatures, to properly warm the engine coolant. Use an appropriate timer to turn the engine block heater on.
6. Before starting the engine, unplug and properly store the cord to keep it away from moving parts.

NOTE:

When using the engine block heater (if so equipped) on an Applied Vehicle (engine block heater is plugged in):

- **Vehicle should be parked on a level surface.**
  Or
- **If a level surface is not available, the vehicle should be parked with the front of the truck lower than the rear (nose down).**

⚠ CAUTION

Use of the engine block heater when parked with the front of the vehicle higher than the rear (5 degrees or more) may cause the engine block heater to become damaged and/or inoperative.

MEMO

6 In case of emergency

Hazard warning flasher switch 6-2
Emergency engine shut off 6-2
Flat tire 6-3
Tire Pressure Monitoring System (TPMS) 6-3
Changing a flat tire 6-3
Jump starting 6-13
Push starting 6-15
If your vehicle overheats 6-15
Towing your vehicle 6-16
Towing recommended by NISSAN 6-16
Vehicle recovery (freeing a stuck vehicle) 6-18

HAZARD WARNING FLASHER SWITCH

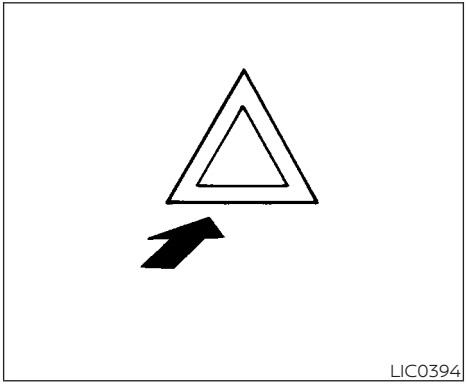

Push the switch on to warn other drivers when you must stop or park under emergency conditions. All turn signal lights flash.

⚠ WARNING

- **If stopping for an emergency, be sure to move the vehicle well off the road.**
- **Do not use the hazard warning flashers while moving on the highway unless unusual circumstances force you to drive so slowly that your vehicle might become a hazard to other traffic.**
- **Turn signals do not work when the hazard warning flasher lights are on.**

The flashers will operate with the ignition switch placed in any position.

Some jurisdictions may prohibit the use of the hazard warning flasher switch while driving.

EMERGENCY ENGINE SHUT OFF

To shut off the engine in an emergency situation while driving, perform the following procedure:

- Rapidly push the push-button ignition switch three consecutive times in less than 1.5 seconds, or
- Push and hold the push-button ignition switch for more than 2 seconds.

TIRE PRESSURE MONITORING SYSTEM (TPMS)

This vehicle is equipped with TPMS. It monitors tire pressure of all tires except the spare. When the low tire pressure warning light is lit on vehicles equipped with a trip computer (if so equipped), and the Tire Pressure Low — Add Air warning appears in the vehicle information display (if so equipped), one or more of your tires is significantly under-inflated. If equipped, the system also displays pressure of all tires (except the spare tire) on the display screen by sending a signal from a sensor that is installed in each wheel. If the vehicle is being driven with low tire pressure, the TPMS will activate and warn you of it by the low tire pressure warning light. This system will activate only when the vehicle is driven at speeds above 16 mph (25 km/h). For additional information, refer to "Warning lights, indicator lights and audible reminders" in the "Instruments and controls" section and "Tire Pressure Monitoring System (TPMS)" in the "Starting and driving" section of this manual.

⚠ WARNING

- **Radio waves could adversely affect electric medical equipment. Those who use a pacemaker should contact the electric medical equipment manufacturer for the possible influences before use.**
- **If the low tire pressure warning light illuminates while driving, avoid sudden steering maneuvers or abrupt braking, reduce vehicle speed, pull off the road to a safe location and stop the vehicle as soon as possible. Driving with under-inflated tires may permanently damage the tires and increase the likelihood of tire failure. Serious vehicle damage could occur and may lead to an accident and could result in serious personal injury. Check the tire pressure for all four tires. Adjust the tire pressure to the recommended COLD tire pressure shown on the Tire and Loading Information label to turn the low tire pressure warning light OFF. If you have a flat tire, replace it with a spare tire as soon as possible.**
- **When replacing a wheel without the TPMS such as the spare tire, TPMS will not function and the low tire pressure warning light will flash for approximately one minute. The light will remain on after one minute. Have your tires replaced and/or TPMS system reset as soon as possible. It is recommended that you visit a NISSAN dealer for these services.**
- **Replacing tires with those not originally specified by NISSAN could affect the proper operation of the TPMS.**
- **Do not inject any tire liquid or aerosol tire sealant into the tires, as this may cause a malfunction of the tire pressure sensors.**

CHANGING A FLAT TIRE

If you have a flat tire, follow the instructions below:

Stopping the vehicle

1. Safely move the vehicle off the road and away from traffic.
2. Turn on the hazard warning flashers.

3. Park on a level surface and apply the parking brake. Move the shift lever to P (Park).
4. Turn off the engine.
5. Raise the hood to warn other traffic and to signal professional road assistance personnel that you need assistance.
6. Have all passengers get out of the vehicle and stand in a safe place, away from traffic and clear of the vehicle.

⚠ WARNING

- **Make sure the parking brake is securely applied and the shift lever is shifted into P (Park).**
- **Never change tires when the vehicle is on a slope, ice or slippery areas. This is hazardous.**
- **Never change tires if oncoming traffic is close to your vehicle. Wait for professional road assistance.**

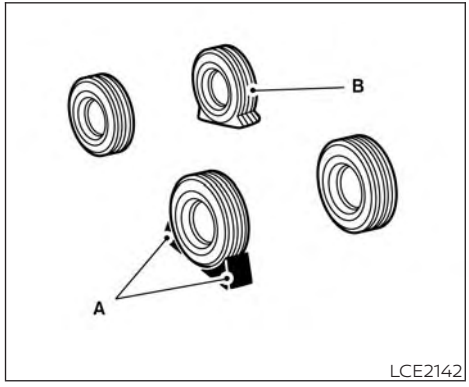

A. Tire stoppers
B. Flat Tire

Blocking wheels

Place tire stoppers, supplied with jack, at both the front and back of the wheel diagonally opposite the flat tire to prevent the vehicle from moving when it is jacked up.

⚠ WARNING

Be sure to block the wheel as the vehicle may move and result in personal injury.

Getting the spare tire and tools (Crew and King Cab® models)

1. Fold up the right rear bench seat. For additional information, refer to "Folding the rear bench seat up" in the "Safety—Seats, seat belts and supplemental restraint system" section of this manual.

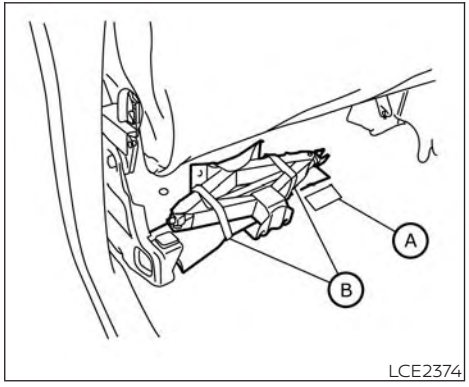

LCE2374

2. Remove the tire stopper bag Ⓐ.
3. Release the straps Ⓑ.
4. Collapse the jack to remove it from the storage location. Loosen the jack with your fingers until the jack is free.
5. Remove the jack and tool kit.

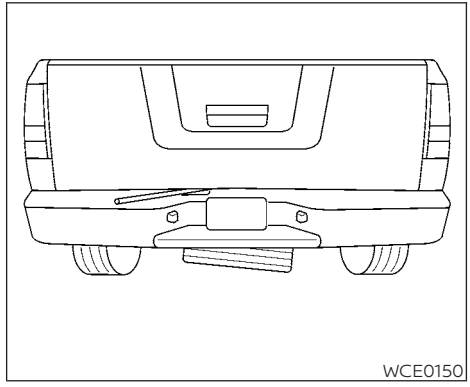
WCE0150

6. Assemble the pieces of the jack rod. Find the oval-shaped opening above the license plate, slightly to the left of the middle (driver's side). Pass the T-shaped end of the jack rod through the opening and direct it toward the spare tire winch, located directly above the spare tire.

⚠ CAUTION

Do not insert the jack rod straight as it is designed to be inserted at an angle as shown.

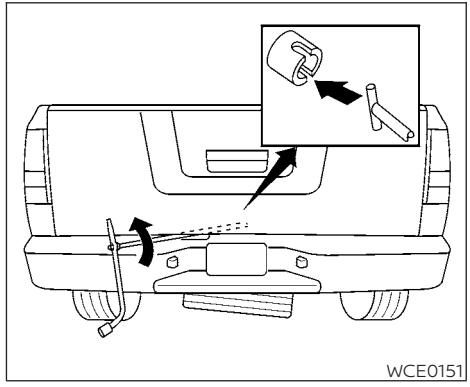
WCE0151

7. Fit the square end of the jack rod into the square hole of the wheel nut wrench to form a handle.
8. Seat the T-shaped end of the jack rod into the T-shaped opening of the tire winch. Apply pressure to keep the jack rod engaged in the spare tire winch and turn the jack rod counterclockwise to lower the spare tire.
9. Once the spare tire is completely lowered, reach under the vehicle, remove the retainer chain and carefully slide the tire from under the rear of the vehicle.

10. Securely store the flat tire beneath the vehicle, from where the full size spare was removed.

11. To reinstall the jack and tool kit, reverse steps 1 through 5.

⚠ CAUTION

Be sure to center the spare tire suspending plate on the wheel and then lift the spare tire.

Getting the spare tire and tools (Single Cab models)

1. Move the front passenger seat to access the tools. For additional information about seat functions, refer to " Seats" in the "Safety–Seats, seat belts and supplemental restraint system" section of this manual.

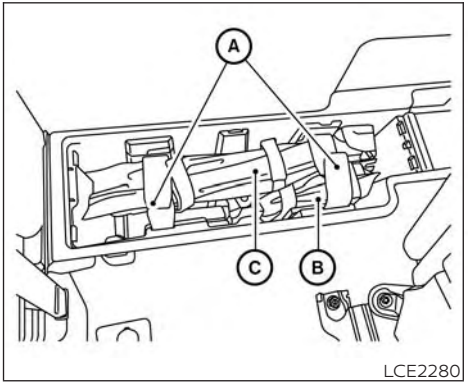

LCE2280

2. Remove the lid from the tool storage compartment.

3. Release the straps Ⓐ.

4. Remove the tire stopper bag Ⓑ.

5. Remove the tool kit and jack Ⓒ.

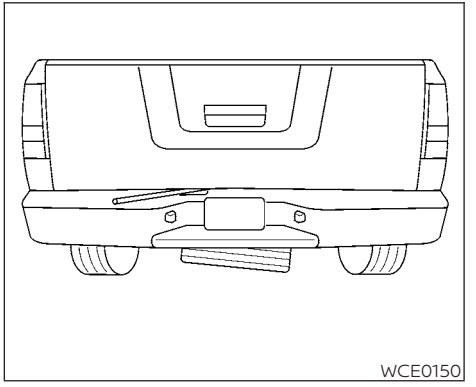
WCE0150

6. Assemble the pieces of the jack rod. Find the oval-shaped opening above the license plate, slightly to the left of the middle (driver's side). Pass the T-shaped end of the jack rod through the opening and direct it toward the spare tire winch, located directly above the spare tire.

⚠ CAUTION

Do not insert the jack rod straight as it is designed to be inserted at an angle as shown.

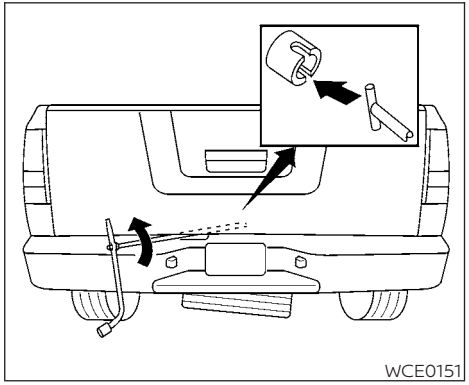

7. Fit the square end of the jack rod into the square hole of the wheel nut wrench to form a handle.
8. Seat the T-shaped end of the jack rod into the T-shaped opening of the tire winch. Apply pressure to keep the jack rod engaged in the spare tire winch and turn the jack rod counterclockwise to lower the spare tire.
9. Once the spare tire is completely lowered, reach under the vehicle, remove the retainer chain and carefully slide the tire from under the rear of the vehicle.
10. Securely store the flat tire beneath the vehicle, from where the full size spare was removed.
11. To reinstall the jack and tool kit, reverse steps 1 through 5.

⚠ CAUTION

Be sure to center the spare tire suspending plate on the wheel and then lift the spare tire.

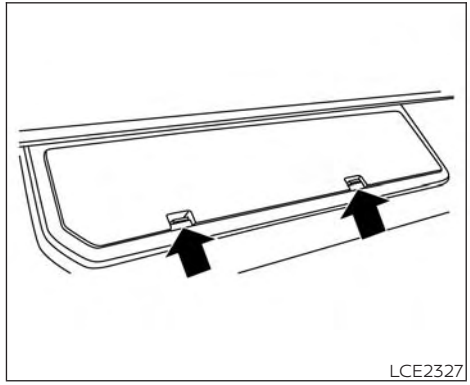

Getting the spare tire and tools (King Cab® models not equipped with rear seat)

1. Open the passenger side rear door and remove the lid from the tool storage compartment.

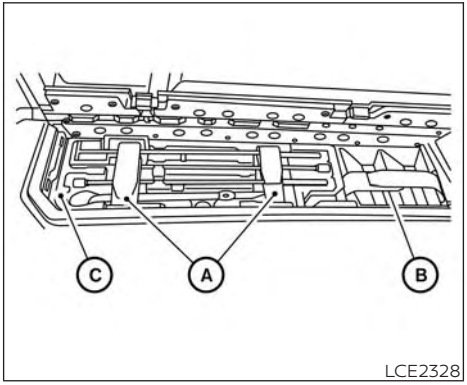

LCE2328

2. Release the straps Ⓐ.
3. Remove the tire stopper bag Ⓑ.
4. Lift the storage cover Ⓒ to access the jack.
5. Remove the tool kit and jack.

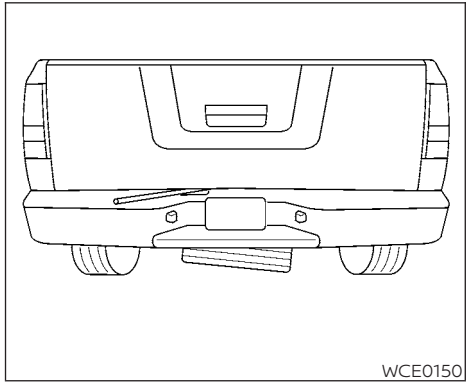
WCE0150

6. Assemble the pieces of the jack rod. Find the oval-shaped opening above the license plate, slightly to the left of the middle (driver's side). Pass the T-shaped end of the jack rod through the opening and direct it toward the spare tire winch, located directly above the spare tire.

⚠ CAUTION

Do not insert the jack rod straight as it is designed to be inserted at an angle as shown.

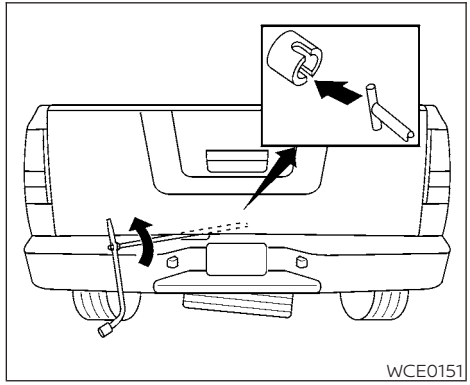
WCE0151

7. Fit the square end of the jack rod into the square hole of the wheel nut wrench to form a handle.
8. Seat the T-shaped end of the jack rod into the T-shaped opening of the tire winch. Apply pressure to keep the jack rod engaged in the spare tire winch and turn the jack rod counterclockwise to lower the spare tire.
9. Once the spare tire is completely lowered, reach under the vehicle, remove the retainer chain and carefully slide the tire from under the rear of the vehicle.

10. Securely store the flat tire beneath the vehicle, from where the full size spare was removed.
11. To reinstall the jack and tool kit, reverse steps 1 through 5.

⚠ CAUTION

Be sure to center the spare tire suspending plate on the wheel and then lift the spare tire.

Jacking up vehicle and removing the damaged tire (all models)

⚠ WARNING

- **Never get under the vehicle while it is supported only by the jack. If it is necessary to work under the vehicle, support it with safety stands.**
- **Use only the jack provided with your vehicle to lift the vehicle. Do not use the jack provided with your vehicle on other vehicles. The jack is designed for lifting only your vehicle during a tire change.**
- **Use the correct jack-up points. Never use any other part of the vehicle for jack support.**
- **Never jack up the vehicle more than necessary.**
- **Never use blocks on or under the jack.**
- **Do not start or run the engine while vehicle is on the jack. It may cause the vehicle to move. This is especially true for vehicles with limited slip differentials.**
- **Do not allow passengers to stay in the vehicle while it is on the jack.**
- **Never run the engine with a wheel(s) off the ground. It may cause the vehicle to move.**

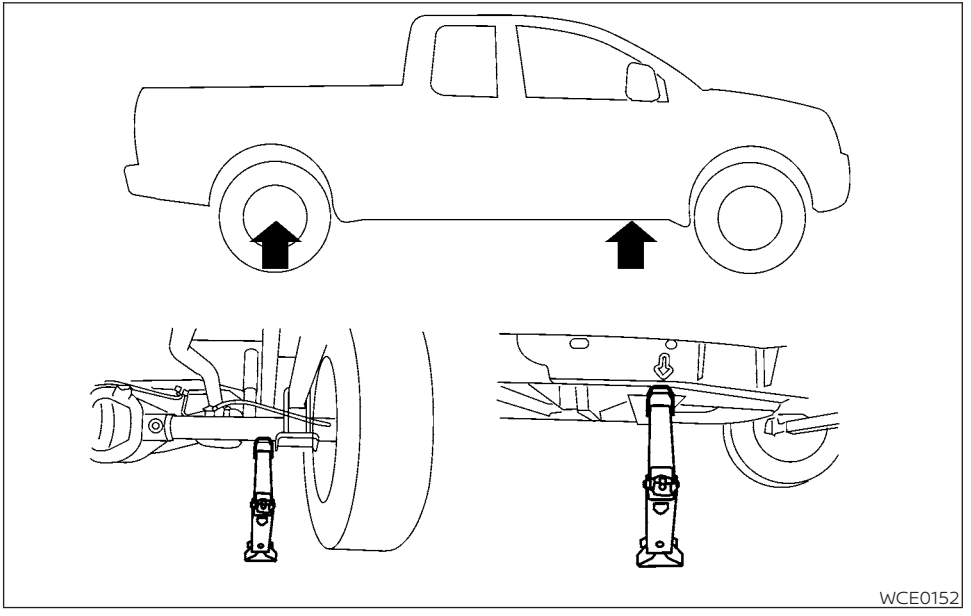

Always refer to the illustration for the correct placement and jack-up points for your specific vehicle model and jack type.

Carefully read the caution label attached to the jack body and the following instructions.

1. Loosen each wheel nut one or two turns by turning counterclockwise with the wheel nut wrench. **Do not remove the wheel nuts until the tire is off the ground.**
2. Place the jack directly under the jack-up point as illustrated so the top of the jack contacts the vehicle at the jack-up point. Align the jack head under the arrow stamped on the side of the frame or rear as shown.

   The jack should be used on firm and level ground.

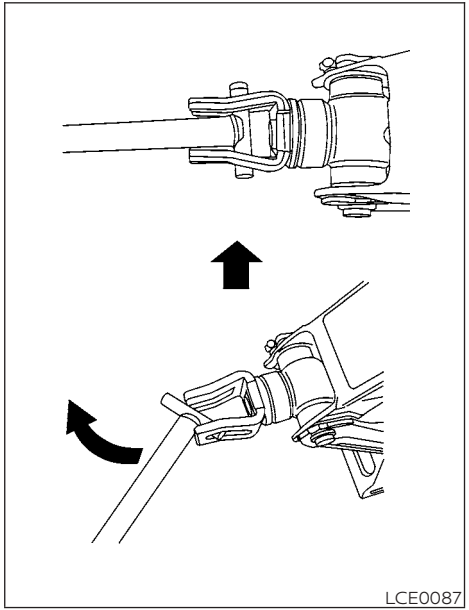

3. Install the assembled jack rod into the jack as shown.
4. To lift the vehicle, securely hold the jack lever and rod. Carefully raise the vehicle until the tire clears the ground.
5. Remove the wheel nuts and then remove the tire.

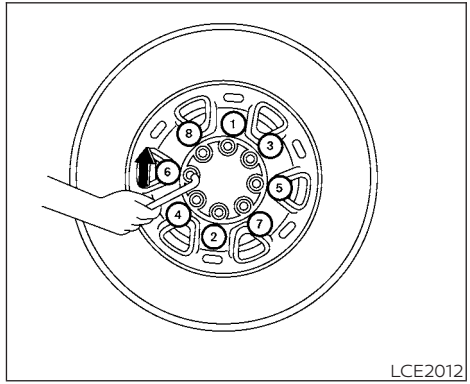

Installing the spare tire

The spare tire is designed for emergency use. For additional information, refer to "Wheels and tires" in the "Do-it-yourself" section of this manual.

1. Clean any mud or dirt from the surface between the wheel and hub.
2. Carefully put the spare tire on and tighten the wheel nuts finger tight.
3. With the wheel nut wrench, tighten wheel nuts alternately and evenly in the sequence illustrated (①,②,③,④,⑤,⑥) until they are tight.

4. Lower the vehicle slowly until the tire touches the ground. Then, with the wheel nut wrench, tighten the wheel nuts securely in the sequence illustrated (①,②,③,④,⑤,⑥). Lower the vehicle completely.

⚠WARNING

- **Incorrect wheel nuts or improperly tightened wheel nuts can cause the wheel to become loose or come off. This could cause an accident.**
- **Do not use oil or grease on the wheel studs or nuts. This could cause the nuts to become loose.**
- **Retighten the wheel nuts when the vehicle has been driven for 600 miles (1,000 km) (also in cases of a flat tire, etc.).**

As soon as possible, tighten the wheel nuts to the specified torque with a torque wrench.

Wheel nut tightening torque:

Non-XD models:

98 ft-lb (133 N·m)

XD models:

131 ft-lb (177 N·m)

The wheel nuts must be kept tightened to specification at all times. It is recommended that wheel nuts be tightened to specifications at each lubrication interval.

Adjust tire pressure to the COLD pressure.

COLD pressure: After vehicle has been parked for 3 hours or more or driven less than 1 mi. (1.6 km).

COLD tire pressures are shown on the Tire and Loading Information label affixed to the driver side center pillar.

After adjusting tire pressure to the COLD tire pressure, the display(if so equipped) of the tire pressure information may show higher pressure than the COLD tire pressure after the vehicle has been driven more than 1 mi. (1.6 km). This is because the tire pressure increases as the tire temperature rises. This does not indicate a system malfunction.

5. Securely store the tools and jacking equipment in the vehicle. For additional information, refer to the "Getting the spare tire and tools (Crew and King Cab® models)," "Getting the spare tire and tools (Single Cab models)" or "Getting the spare tire and tools (King Cab® models not equipped with rear seat)" in this section.

⚠WARNING

- **Always make sure that the spare tire and jacking equipment are properly secured after use. Such items can become dangerous projectiles in an accident or sudden stop.**
- **The spare tire is designed for emergency use. For additional information, refer to "Wheels and tires" in the "Do-it-yourself" section of this manual.**

JUMP STARTING

To start your engine with a booster battery, the instructions and precautions below must be followed.

⚠ WARNING

- **If done incorrectly, jump starting can lead to a battery explosion, resulting in severe injury or death. It could also damage your vehicle.**
- **Explosive hydrogen gas is always present in the vicinity of the battery. Keep all sparks and flames away from the battery.**
- **Do not allow battery fluid to come into contact with eyes, skin, clothing or painted surfaces. Battery fluid is a corrosive sulfuric acid solution which can cause severe burns. If the fluid should come into contact with anything, immediately flush the contacted area with water.**
- **Keep battery out of the reach of children.**
- **The booster battery must be rated at 12 volts. Use of an improperly rated battery can damage your vehicle.**
- **Whenever working on or near a battery, always wear suitable eye protectors (for example, goggles or industrial safety spectacles) and remove rings, metal bands, or any other jewelry. Do not lean over the battery when jump starting.**
- **Do not attempt to jump start a frozen battery. It could explode and cause serious injury.**
- **Your vehicle has an automatic engine cooling fan. It could come on at any time. Keep hands and other objects away from it.**

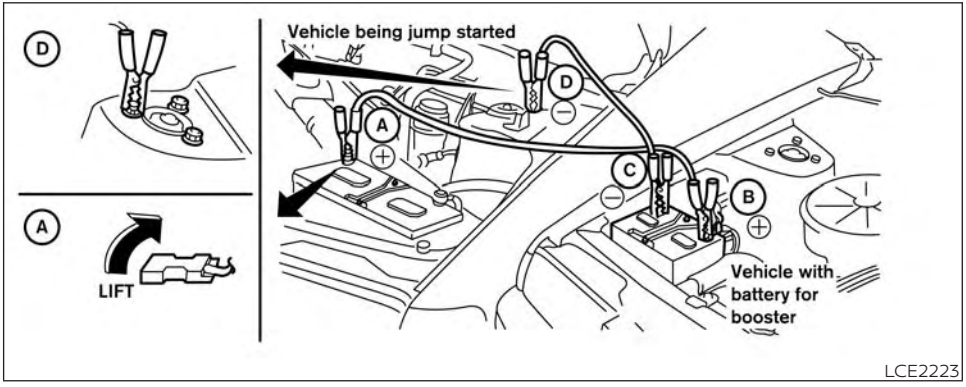

⚠ WARNING

Always follow the instructions below. Failure to do so could result in damage to the charging system and cause personal injury.

1. If the booster battery is in another vehicle, position the two vehicles to bring their batteries near each other.

   Do not allow the two vehicles to touch.

2. Apply the parking brake. Move the shift lever to P (Park). Switch off all unnecessary electrical systems (lights, heater, air conditioner, etc.).
3. Place the ignition switch in the LOCK position.
4. Ensure the vent caps are level and tight.
5. Connect the jumper cables in the sequence illustrated (Ⓐ, Ⓑ, Ⓒ, Ⓓ).

⚠ CAUTION

- **Always connect positive (+) to positive (+) and negative (−) to body ground (for example, strut mounting bolt, engine lift bracket, etc.) — not to the battery.**
- **Make sure the jumper cables do not touch moving parts in the engine compartment and that the cable clamps do not contact any other metal.**

6. Start the engine of the booster vehicle and let it run for a few minutes.
7. Keep the engine speed of the booster vehicle at about 2,000 rpm and start the engine of the vehicle being jump started.

⚠ CAUTION

Do not keep the starter motor engaged for more than 10 seconds. If the engine does not start right away, place the ignition switch in the OFF position and wait 3 to 4 seconds before trying again.

8. After starting the engine, carefully disconnect the negative cable and then the positive cable.

PUSH STARTING

Do not attempt to start the engine by pushing.

⚠ CAUTION

- **Automatic transmission models cannot be push-started or tow-started. Attempting to do so may cause transmission damage.**
- **Three way catalyst equipped models should not be started by pushing since the three way catalyst may be damaged.**
- **Never try to start the vehicle by towing it; when the engine starts, the forward surge could cause the vehicle to collide with the tow vehicle.**

IF YOUR VEHICLE OVERHEATS

⚠ WARNING

- **Do not continue to drive if your vehicle overheats. Doing so could cause engine damage or a vehicle fire.**
- **To avoid the danger of being scalded, never remove the radiator or coolant reservoir cap while the engine is still hot. When the radiator or coolant reservoir cap is removed, pressurized hot water will spurt out, possibly causing serious injury.**
- **Do not open the hood if steam is coming out.**

If your vehicle is overheating (indicated by an extremely high temperature gauge reading), or if you feel a lack of engine power, detect abnormal noise, etc. take the following steps:

1. Move the vehicle safely off the road, apply the parking brake and move the shift lever to P (Park).

   Do not stop the engine.

2. Turn off the air conditioner. Open all the windows, move the heater or air conditioner temperature control to maximum hot and fan control to high speed.
3. If engine overheating is caused by climbing a long hill on a hot day, run the engine at a fast idle (approximately 1,500 rpm) until the temperature gauge indication returns to normal.
4. Get out of the vehicle. Look and listen for steam or coolant escaping from the radiator before opening the hood. If steam or coolant is escaping, turn off the engine. Do not open the hood further until no steam or coolant can be seen.
5. Open the engine hood.

⚠ WARNING

If steam or water is coming from the engine, stand clear to prevent getting burned.

6. Visually check drive belts for damage or looseness. Also check if the cooling fan is running. The radiator hoses and radiator should not leak water. If coolant is leaking, the water pump belt is missing or loose, or the cooling fan does not run, stop the engine.

⚠ WARNING

Be careful not to allow your hands, hair, jewelry or clothing to come into contact with, or get caught in, engine belts or the engine cooling fan. The engine cooling fan can start at any time.

7. After the engine cools down, check the coolant level in the engine coolant reservoir tank with the engine running. Add coolant to the engine coolant reservoir tank if necessary. It is recommended that you visit a NISSAN dealer for this service.

When towing your vehicle, all jurisdictional and local regulations for towing must be followed. Incorrect towing equipment could damage your vehicle. Towing instructions are available from a NISSAN dealer. Local service operators are generally familiar with the applicable laws and procedures for towing. To assure proper towing and to prevent accidental damage to your vehicle, NISSAN recommends having a service operator tow your vehicle. It is advisable to have the service operator carefully read the following precautions:

⚠ WARNING

- **Never ride in a vehicle that is being towed.**
- **Never get under your vehicle after it has been lifted by a tow truck.**
- **If your vehicle has front recovery hooks as original factory equipment, do not remove or modify them. If it was not equipped with front recovery hooks, do not install them. Either action could affect proper operation of the front air bag system resulting in injury or death.**

⚠ CAUTION

- **When towing, make sure that the transmission, axles, steering system and powertrain are in working condition. If any of these conditions apply, dollies or a flatbed tow truck must be used.**
- **Always attach safety chains before towing.**

For additional information, refer to "Flat towing for 2-Wheel Drive (2WD) vehicle" or "Flat towing for 4-Wheel Drive (4WD) vehicle" in the "Technical and consumer information" section of this manual.

TOWING RECOMMENDED BY NISSAN

NISSAN recommends towing your vehicle based upon the type of drivetrain. For additional information, refer to the diagrams in this section to ensure that your vehicle is properly towed.

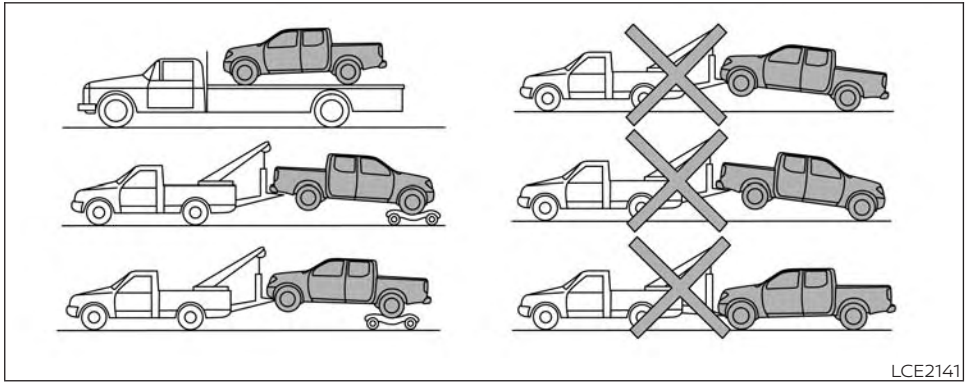

4WD models with automatic transmission

NISSAN recommends that towing dollies be used when towing your vehicle or place the vehicle on a flatbed truck as illustrated.

⚠ CAUTION

Never tow 4WD models equipped with an automatic transmission with any of the wheels on the ground as this may cause serious and expensive damage to the transfer case and transmission.

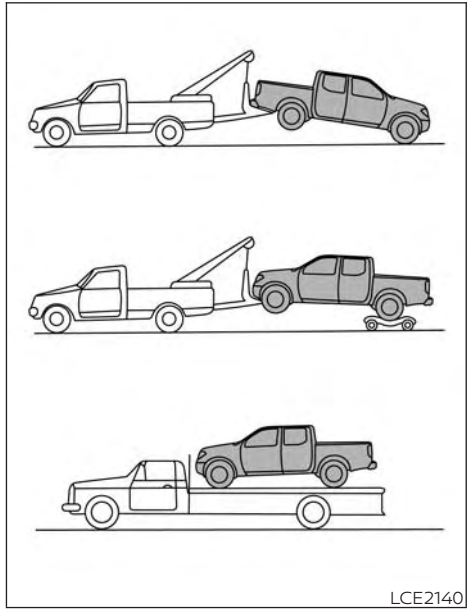

2WD models with automatic transmission

NISSAN recommends that your vehicle be towed with the driving (rear) wheels off the ground or place the vehicle on a flatbed truck as illustrated.

⚠ CAUTION

- **Never tow automatic transmission models with the rear wheels on the ground or four wheels on the ground (forward or backward), as this may cause serious and expensive damage to the transmission. If it is necessary to tow the vehicle with the front wheels raised always use towing dollies under the rear wheels.**
- **When towing automatic transmission models with the front wheels on the ground or on towing dollies:**
  - **Place the ignition switch in the OFF position and secure the steering wheel in a straight-ahead position with a rope or similar device. Never secure the steering wheel by placing the ignition switch in the LOCK position. This may cause damage to the lock mechanism (if so equipped).**

When towing long distances or speeds in excess of 60 mph (97 km/h), remove the propeller shaft before towing to prevent damage to the transmission. It is recommended that you visit a NISSAN dealer for additional information.

VEHICLE RECOVERY (freeing a stuck vehicle)

There are two options to recover a stuck vehicle: pulling and rocking. For additional information regarding these options, please refer to the following sections.

Pulling a stuck vehicle

⚠ WARNING

To avoid vehicle damage, serious personal injury or death when recovering a stuck vehicle:

- **Contact a professional towing service to recover the vehicle if you have any questions regarding the recovery procedure.**
- **Attach recovery devices only to main structural members of the vehicle or the recovery hooks.**
- **Do not use the vehicle tie-downs to tow or free a stuck vehicle.**
- **Only use devices specifically designed for vehicle recovery and follow the manufacturer's instructions.**
- **Always pull the recovery device straight out from the front of the vehicle. Never pull at an angle.**
- **Route recovery devices so they do not touch any part of the vehicle except the attachment point.**

If your vehicle is stuck in sand, snow, mud, etc., use a tow strap or other device designed specifically for vehicle recovery. Always follow the manufacturer's instructions for the recovery device.

Rocking a stuck vehicle

⚠ WARNING

- **Stand clear of a stuck vehicle.**
- **Do not spin your tires at high speed. This could cause them to explode and result in serious injury. Parts of your vehicle could also overheat and be damaged.**

If your vehicle is stuck in sand, snow, mud, etc., use the following procedure:

1. Turn off the Vehicle Dynamic Control (VDC) system.
2. Activate the Electronic Locking Rear Differential (E-Lock) system (if so equipped). For additional information, refer to "Electronic Locking Rear Differential (E-Lock) system" in the "Starting and driving" section of this manual.
3. Make sure the area in front and behind the vehicle is clear of obstructions.
4. Turn the steering wheel right and left to clear an area around the front tires.
5. Slowly rock the vehicle forward and backward.
   - Shift back and forth between R (Reverse) and D (Drive).
   - Apply the accelerator as little as possible to maintain the rocking motion.
   - Release the accelerator pedal before shifting between R (Reverse) and D (Drive).
   - Do not spin the tires above 34 mph (55 km/h) or above 12 mph (20 km/h) if the E-Lock system (if so equipped) is engaged.
6. If the vehicle cannot be freed after a few tries, contact a professional towing service to remove the vehicle.

MEMO

7 Appearance and care

Cleaning exterior 7-2
Washing 7-2
Waxing 7-2
Removing spots 7-3
Underbody 7-3
Glass 7-3
Aluminum alloy wheels (if so equipped) 7-3
Chrome parts 7-3
Tire dressings 7-4
Cleaning interior 7-4
Air fresheners 7-4
Floor mats (if so equipped) 7-5
Seat belts 7-6
Corrosion protection 7-7
Most common factors contributing to vehicle corrosion 7-7
Environmental factors influence the rate of corrosion 7-7
Protect your vehicle from corrosion 7-7

In order to maintain the appearance of your vehicle, it is important to take proper care of it.

To protect the paint surfaces, wash your vehicle as soon as you can:

- After a rainfall to prevent possible damage from acid rain.
- After driving on coastal roads.
- When contaminants such as soot, bird droppings, tree sap, metal particles or bugs get on the paint surface.
- When dust or mud builds up on the surface.

Whenever possible, store or park your vehicle inside a garage or in a covered area.

When it is necessary to park outside, park in a shady area or protect the vehicle with a body cover.

Be careful not to scratch the paint surface when putting on or removing the body cover.

WASHING

Wash dirt off with a wet sponge and plenty of water. Clean the vehicle thoroughly using a mild soap, a special vehicle soap or general purpose dishwashing liquid mixed with clean, lukewarm (never hot) water.

⚠ CAUTION

- **Do not use car washes that use acid in the detergent. Some car washes, especially brushless ones, use some acid for cleaning. The acid may react with some plastic vehicle components, causing them to crack. This could affect their appearance, and also could cause them not to function properly. Always check with your car wash to confirm that acid is not used.**
- **Do not wash the vehicle with strong household soap, strong chemical detergents, gasoline or solvents.**
- **Do not wash the vehicle in direct sunlight or while the vehicle body is hot, as the surface may become water-spotted.**
- **Avoid using tight-napped or rough cloths, such as washing mitts. Care must be taken when removing caked-on dirt or other foreign substances so the paint surface is not scratched or damaged.**

Rinse the vehicle thoroughly with plenty of clean water.

Inside edges, seams and folds on the doors, hatches and hood are particularly vulnerable to the effects of road salt. Therefore, these areas must be cleaned regularly. Take care that the drain holes in the lower edge of the door are open. Spray water under the body and in the wheel wells to loosen the dirt and wash away road salt.

A damp chamois can be used to dry the vehicle to avoid water spots.

WAXING

Regular waxing protects the paint surface and helps retain new vehicle appearance. Polishing is recommended to remove built-up wax residue and to avoid a weathered appearance before re-applying wax.

A NISSAN dealer can assist you in choosing the proper product.

- Wax your vehicle only after a thorough washing. Follow the instructions supplied with the wax.
- Do not use a wax containing any abrasives, cutting compounds or cleaners that may damage the vehicle finish.

Machine compounding or aggressive polishing on a base coat/clear coat paint finish may dull the finish or leave swirl marks.

REMOVING SPOTS

Remove tar and oil spots, industrial dust, insects, and tree sap as quickly as possible from the surface of the paint to avoid lasting damage or staining. Special cleaning products are available at a NISSAN dealer or any automotive accessory store. It is recommended that you visit a NISSAN dealer for these products.

UNDERBODY

In areas where road salt is used in winter, it is necessary to clean the underbody regularly in order to prevent dirt and salt from building up and causing the acceleration of corrosion on the underbody and suspension. Before the winter period and again in the spring, the underseal must be checked and, if necessary, re-treated.

GLASS

Use glass cleaner to remove smoke and dust film from the glass surfaces. It is normal for glass to become coated with a film after the vehicle is parked in the hot sun. Glass cleaner and a soft cloth will easily remove this film.

⚠ CAUTION

When cleaning the inside of the windows, do not use sharp-edged tools, abrasive cleaners or chlorine-based disinfectant cleaners. They could damage the electrical conductors, radio antenna elements or rear window defroster elements.

ALUMINUM ALLOY WHEELS (if so equipped)

Wash the wheels regularly with a sponge dampened in a mild soap solution, especially during winter months in areas where road salt is used. If not removed, road salt can discolor the wheels.

⚠ CAUTION

Follow the directions below to avoid staining or discoloring the wheels:

- **Do not use a cleaner that uses strong acid or alkali contents to clean the wheels.**
- **Do not apply wheel cleaners to the wheels when they are hot. The wheel temperature should be the same as ambient temperature.**
- **Do not use chrome cleaner on any wheel. Doing so can damage the chrome-like coating on the wheel.**
- **Rinse the wheel to completely remove the cleaner within 15 minutes after the cleaner is applied.**

CHROME PARTS

Clean all chrome parts regularly with a non-abrasive chrome polish to maintain the finish.

⚠ CAUTION

Do not use chrome cleaner on any wheel. Doing so can damage the chrome-like coating on the wheel.

TIRE DRESSINGS

NISSAN does not recommend the use of tire dressings. Tire manufacturers apply a coating to the tires to help reduce discoloration of the rubber. If a tire dressing is applied to the tires, it may react with the coating and form a compound. This compound may come off the tire while driving and stain the vehicle paint.

If you choose to use a tire dressing, take the following precautions:

- Use a water-based tire dressing. The coating on the tire dissolves more easily than with an oil-based tire dressing.
- Apply a light coat of tire dressing to help prevent it from entering the tire tread/grooves (where it would be difficult to remove).
- Wipe off excess tire dressing using a dry towel. Make sure the tire dressing is completely removed from the tire tread/grooves.
- Allow the tire dressing to dry as recommended by the tire dressing manufacturer.

Occasionally remove loose dust from the interior trim, plastic parts and seats using a vacuum cleaner or soft bristled brush. Wipe the vinyl and leather surfaces (if so equipped) with a clean, soft cloth dampened in mild soap solution, then wipe clean with a dry, soft cloth.

Regular care and cleaning is required in order to maintain the appearance of the leather (if so equipped).

Before using any fabric protector, read the manufacturer's recommendations. Some fabric protectors contain chemicals that may stain or bleach the seat material.

Use a cloth dampened only with water to clean the meter and gauge lens.

⚠ WARNING

Do not use water or acidic cleaners (hot steam cleaners) on the seat. This can damage the seat or occupant classification sensor (if so equipped). This can also affect the operation of the air bag system and result in serious personal injury.

⚠ CAUTION

- **Never use benzine, thinner or any similar material.**
- **Small dirt particles can be abrasive and damaging to leather surfaces and should be removed promptly. Do not use saddle soap, car waxes, polishes, oils, cleaning fluids, solvents, detergents or ammonia-based cleaners as they may damage the leather's natural finish.**
- **Never use fabric protectors unless recommended by the manufacturer.**
- **Do not use glass or plastic cleaner on meter or gauge lens covers. It may damage the lens cover.**

AIR FRESHENERS

Most air fresheners use a solvent that could affect the vehicle interior. If you use an air freshener, take the following precautions:

- Hanging-type air fresheners can cause permanent discoloration when they contact vehicle interior surfaces. Place the air freshener in a location that allows it to hang free and not contact an interior surface.

- Liquid-type air fresheners typically clip on the vents. These products can cause immediate damage and discoloration when spilled on interior surfaces.

Carefully read and follow the manufacturer's instructions before using the air fresheners.

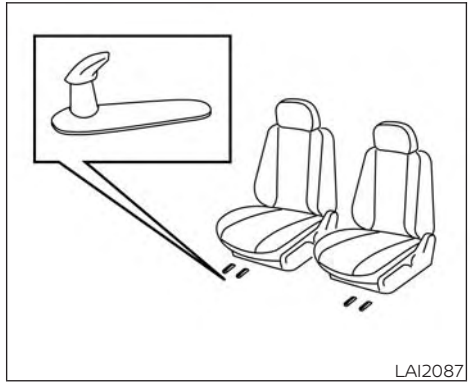

FLOOR MATS (if so equipped)

⚠ WARNING

To avoid potential pedal interference that may result in a collision, injury or death:

- **NEVER place a floor mat on top of another floor mat in the driver front position or install them upside down or backwards.**
- **Use only Genuine NISSAN floor mats, or equivalent floor mats, that are specifically designed for use in your vehicle model and model year.**
- **Properly position the mats in the floorwell using the floor mat positioning hook. For additional information, refer to "Floor mat installation" in this section.**
- **Make sure the floor mat does not interfere with pedal operation.**
- **Periodically check the floor mats to make sure they are properly installed.**
- **After cleaning the vehicle interior, check the floor mats to make sure they are properly installed.**

The use of Genuine NISSAN floor mats can extend the life of your vehicle carpet and make it easier to clean the interior. Mats should be maintained with regular cleaning and replaced if they become excessively worn.

Floor mat installation

Your vehicle is equipped with floor mat positioning hook(s). The number and shape of the floor mat positioning hooks for each seating position varies depending on the vehicle.

When installing Genuine NISSAN floor mats, follow the installation instructions provided with the mat and the following:

1. With the ignition in the OFF position, the shift lever in P (Park) position and with the parking brake fully applied, position the floor mat in the floorwell so that the floor mat grommet holes are aligned with the hook(s).
2. Secure the grommet holes into the hook(s) and ensure that the floor mat is properly positioned.
3. Make sure the floor mat does not interfere with pedal operation. With the ignition still in the OFF position, the shift lever in the P (Park) position and with the parking brake applied, fully apply and release all pedals. The floor mat must not interfere with pedal operation or prevent the pedal from returning to its normal position.

It is recommended that you visit a NISSAN dealer for details about installing the floor mats in your vehicle.

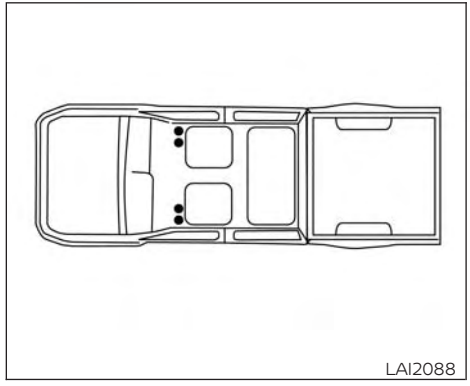

Positioning hooks

The illustration shows the location of the floor mat positioning hooks.

SEAT BELTS

The seat belts can be cleaned by wiping them with a sponge dampened in a mild soap solution. Allow the belts to dry completely in the shade before using them. For additional information, refer to "Seat belt maintenance" in the "Safety—Seats, seat belts and supplemental restraint system" section of this manual.

⚠ WARNING

Do not allow wet seat belts to roll up in the retractor. NEVER use bleach, dye or chemical solvents to clean the seat belts, since these materials may severely weaken the seat belt webbing.

MOST COMMON FACTORS CONTRIBUTING TO VEHICLE CORROSION

Most vehicle corrosion is caused by:

- The accumulation of moisture-retaining dirt and debris in body panel sections, cavities, and other areas.
- Damage to paint and other protective coatings caused by gravel and stone chips or minor traffic collisions.

ENVIRONMENTAL FACTORS INFLUENCE THE RATE OF CORROSION

Moisture

Accumulation of sand, dirt and water on the vehicle body underside can accelerate corrosion. Wet floor coverings will not dry completely inside the vehicle and should be removed for drying to avoid floor panel corrosion.

Relative humidity

Corrosion will be accelerated in areas of high relative humidity, especially those areas where the temperatures stay above freezing and where atmospheric pollution exists and road salt is used.

Temperature

High temperatures accelerate the rate of corrosion to those parts which are not well ventilated.

Air pollution

Industrial pollution, the presence of salt in the air in coastal areas, or heavy road salt use accelerates the corrosion process. Road salt also accelerates the disintegration of paint surfaces.

PROTECT YOUR VEHICLE FROM CORROSION

- Wash and wax your vehicle often to keep the vehicle clean.
- Always check for minor damage to the paint and repair it as soon as possible.
- Keep drain holes at the bottom of the doors open to avoid water accumulation.
- Check the underbody for accumulation of sand, dirt or salt. If present, wash with water as soon as possible.

⚠ CAUTION

- **NEVER remove dirt, sand or other debris from the passenger compartment by washing it out with a hose. Remove dirt with a vacuum cleaner or broom.**
- **Never allow water or other liquids to come in contact with electronic components inside the vehicle as this may damage them.**

Chemicals used for road surface de-icing are extremely corrosive. They accelerate corrosion and deterioration of underbody components such as the exhaust system, fuel and brake lines, brake cables, floor pan and fenders.

In winter, the underbody must be cleaned periodically.

For additional protection against rust and corrosion, which may be required in some areas, it is recommended that you visit a NISSAN dealer.

MEMO

8 Do-it-yourself

Maintenance precautions 8-2
Engine compartment check locations 8-3
Engine cooling system 8-5
Checking engine coolant level 8-6
Changing engine coolant 8-6
Engine oil 8-7
Checking engine oil level 8-7
Changing engine oil 8-8
Changing engine oil filter 8-9
Fuel filter (CUMMINS 5.0L) 8-11
Fuel filter replacement (stage 1) 8-11
Fuel filter replacement (stage 2) 8-11
Draining water 8-11
Fuel system priming 8-11
Diesel Particulate Filter (DPF) 8-11
Automatic regeneration 8-11
6-speed Automatic Transmission Fluid (ATF) (diesel engine only) 8-12
7-speed Automatic Transmission Fluid (ATF) (gasoline engine only) 8-12
Power steering fluid 8-12
Brake fluid 8-13
Windshield-washer fluid 8-14
Windshield-washer fluid reservoir 8-14
Battery 8-15
Jump starting 8-16
Variable voltage control (if so equipped) 8-17
Drive belt 8-17
Spark plugs (gasoline engine only) 8-18
Replacing spark plugs 8-18
Air cleaner 8-19
In-cabin microfilter 8-19
Windshield wiper blades 8-20
Cleaning 8-20
Replacing 8-20
Brakes 8-21
Fuses 8-22
Engine compartment 8-22
Passenger compartment 8-24
Battery replacement 8-26
NISSAN Intelligent Key® 8-26
Lights 8-28
Headlights 8-28
Fog lights (if so equipped) 8-28
Daytime Running Light (DRL) (if so equipped) 8-29
Exterior and interior lights 8-31

Wheels and tires 8-34
Tire pressure 8-34
Tire labeling 8-38
Types of tires 8-41
Tire chains 8-42
Changing wheels and tires 8-42

MAINTENANCE PRECAUTIONS

When performing any inspection or maintenance work on your vehicle, always take care to prevent serious accidental injury to yourself or damage to the vehicle. The following are general precautions which should be closely observed.

⚠ WARNING

- **Park the vehicle on a level surface, apply the parking brake securely and block the wheels to prevent the vehicle from moving. Move the shift lever to P (Park)**
- **Be sure the ignition switch is in the OFF or LOCK position when performing any parts replacement or repairs.**
- **If you must work with the engine running, keep your hands, clothing, hair and tools away from moving fans, belts and any other moving parts.**
- **It is advisable to secure or remove any loose clothing and remove any jewelry, such as rings, watches, etc. before working on your vehicle.**
- **Always wear eye protection whenever you work on your vehicle.**
- **The automatic engine cooling fan (if so equipped) may come on at any time without warning, even if the ignition switch is in the OFF position and the engine is not running. To avoid injury, always disconnect the negative battery cable before working near the fan.**
- **If you must run the engine in an enclosed space such as a garage, be sure there is proper ventilation for exhaust gases to escape.**
- **Never get under the vehicle while it is supported only by a jack. If it is necessary to work under the vehicle, support it with safety stands.**
- **Keep smoking materials, flame and sparks away from the fuel tank and battery.**
- **Because the fuel lines on gasoline engine models are under high pressure even when the engine is off, it is recommended that you visit a NISSAN dealer for service of the fuel filter or fuel lines.**

⚠ CAUTION

- **Do not work under the hood while the engine is hot. Turn the engine off and wait until it cools down.**
- **Avoid contact with used engine oil and coolant. Improperly disposed engine oil, engine coolant and/or other vehicle fluids can damage the environment. Always conform to local regulations for disposal of vehicle fluid.**
- **Never leave the engine or automatic transmission related component harnesses disconnected while the ignition switch is in the ON position.**
- **Never connect or disconnect the battery or any transistorized component while the ignition switch is in the ON position.**

This "Do-it-yourself" section gives instructions regarding only those items which are relatively easy for an owner to perform.

A Genuine NISSAN service manual is also available. For additional information, refer to "Owner's Manual/Service Manual order information" in the "Technical and consumer information" section of this manual.

You should be aware that incomplete or improper servicing may result in operating difficulties or excessive emissions, and could affect warranty coverage. **If in doubt about any servicing, it is recommended that you have it done by a NISSAN dealer.**

ENGINE COMPARTMENT CHECK LOCATIONS

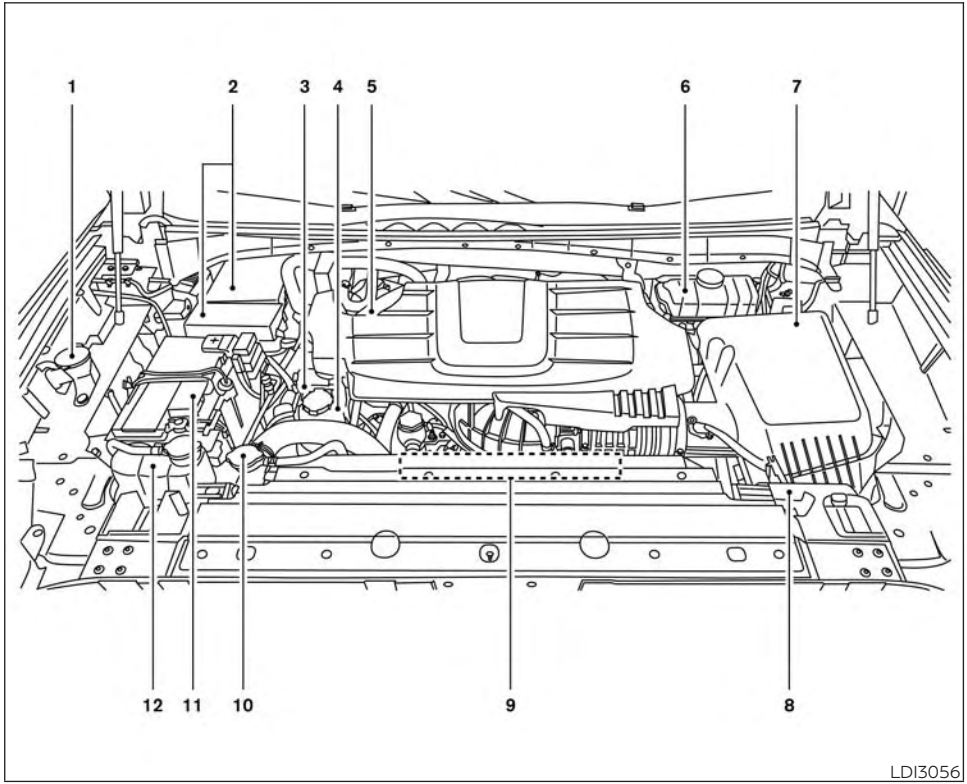

VK56VD engine (non-XD model)

1. Windshield-washer fluid reservoir
2. Fuse box
3. Engine oil dipstick
4. Power steering fluid reservoir
5. Engine oil filler cap
6. Brake fluid reservoir
7. Air cleaner
8. Fuse/Fusible link box
9. Drive belt location
10. Radiator cap
11. Battery
12. Engine coolant reservoir

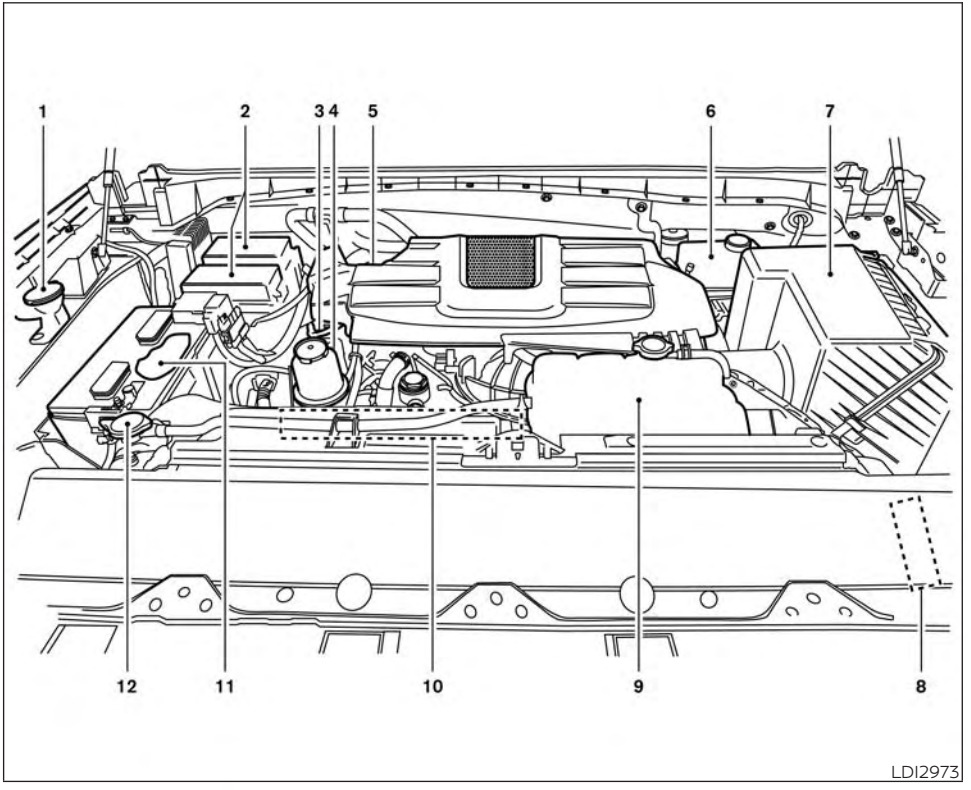

VK56VD engine (XD model)

1. Windshield-washer fluid reservoir
2. Fuse box
3. Engine oil dipstick
4. Power steering fluid reservoir
5. Engine oil filler cap
6. Brake fluid reservoir
7. Air cleaner
8. Fuse/Fusible link box
9. Engine coolant reservoir
10. Drive belt location
11. Battery
12. Radiator cap

For additional information on the Cummins 5.0L engine, refer to the "Titan Diesel Owner's Manual".

ENGINE COOLING SYSTEM

The engine cooling system is filled at the factory with a pre-diluted mixture of 50% Genuine NISSAN Long Life Antifreeze/Coolant (blue) and 50% water to provide year-round antifreeze and coolant protection. The antifreeze solution contains rust and corrosion inhibitors. Additional engine cooling system additives are not necessary.

⚠ WARNING

- **Never remove the radiator or coolant reservoir cap when the engine is hot. Wait until the engine and radiator cool down. Serious burns could be caused by high pressure fluid escaping from the radiator. For additional information on precautions, refer to "If your vehicle overheats" found in the "In case of emergency" section of this manual.**
- **The radiator is equipped with a pressure type radiator cap. To prevent engine damage, it is recommended that you use only a Genuine NISSAN radiator cap.**

⚠ CAUTION

- **Never use any cooling system additives such as radiator sealer. Additives may clog the cooling system and cause damage to the engine, transmission and/or cooling system.**
- **When adding or replacing coolant, it is recommended that you use only Genuine NISSAN Long Life Antifreeze/Coolant (blue) or equivalent. Genuine NISSAN Long Life Antifreeze/Coolant (blue) is pre-diluted to provide antifreeze protection to -34° F (-37° C). If additional freeze protection is needed due to weather where you operate your vehicle, add Genuine NISSAN Long Life Antifreeze/Coolant (blue) concentrate following the directions on the container. If an equivalent coolant other than Genuine NISSAN Long Life Antifreeze/Coolant (blue) is used, follow the coolant manufacturer's instructions to maintain minimum antifreeze protection to -34° F (-37° C). The use of other types of coolant solutions other than Genuine NISSAN Long Life Antifreeze/Coolant (blue) or equivalent may damage the engine cooling system.**
- **The life expectancy of the factory-fill coolant is 105,000 miles (168,000 km) or 7 years. Mixing any other type of coolant other than Genuine NISSAN Long Life Antifreeze/Coolant (blue), including Genuine NISSAN Long Life Antifreeze/Coolant (green), or the use of non-distilled water may reduce the life expectancy of the factory-fill coolant. For additional information, refer to the "Maintenance and schedules" section of this manual.**

For additional information on the Cummins 5.0L engine cooling system, refer to the "Titan Diesel Owner's Manual".

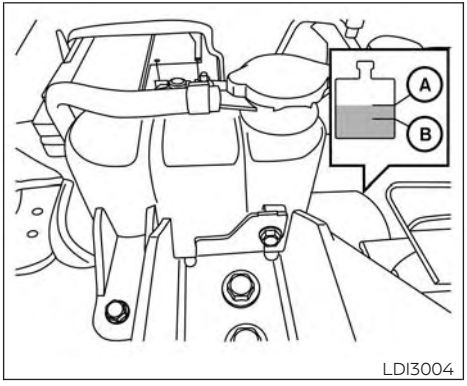

VK56VD engine (non-XD model)

CHECKING ENGINE COOLANT LEVEL

Check the coolant level **in the reservoir when the engine is cold.** If the coolant level is below the MIN level Ⓑ, add coolant to the MAX level Ⓐ. If the reservoir is empty, check the coolant level in the radiator **when the engine is cold.** If there is insufficient coolant in the radiator, fill the radiator with coolant up to the filler opening and also add it to the reservoir up to the MAX level Ⓐ.

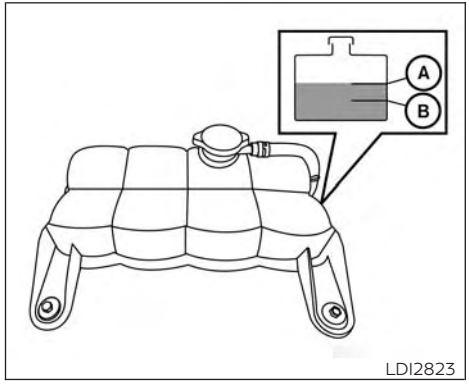

VK56VD engine (XD model)

This vehicle contains Genuine NISSAN Long Life Antifreeze/Coolant (blue). The life expectancy of the factory-fill coolant is 105,000 miles (168,000 km) or 7 years. Mixing any other type of coolant or the use of non-distilled water may reduce the life expectancy of the factory-fill coolant. For additional information, refer to "Maintenance and schedules" section of this manual.

If the cooling system frequently requires coolant, have it checked. It is recommended that you visit a NISSAN dealer for this service.

For additional information on the location of the engine coolant reservoir, refer to "Engine compartment check locations" in this section.

CHANGING ENGINE COOLANT

A NISSAN dealer can change the engine coolant. The service procedure can be found in the NISSAN Service Manual.

Improper servicing can result in reduced heater performance and engine overheating.

⚠ WARNING

- **To avoid the danger of being scalded, never change the coolant when the engine is hot.**
- **Never remove the radiator or engine coolant reservoir cap when the engine is hot. Serious burns could be caused by high pressure fluid escaping from the radiator.**
- **Avoid direct skin contact with used coolant. If skin contact is made, wash thoroughly with soap or hand cleaner as soon as possible.**
- **Keep coolant out of the reach of children and pets.**

Engine coolant must be disposed of properly. Check your local regulations.

For additional information on changing the Cummins 5.0L engine coolant, refer to the "Titan Diesel Owner's Manual".

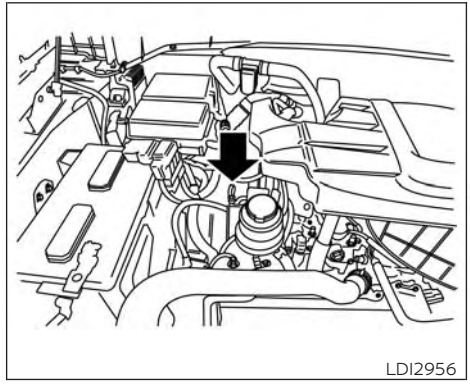

VK56VD engine

CHECKING ENGINE OIL LEVEL

1. Park the vehicle on a level surface and apply the parking brake.
2. Start the engine and let it idle until it reaches operating temperature.
3. Turn off the engine. **Wait more than 15 minutes for the oil to drain back into the oil pan.**
4. Remove the dipstick and wipe it clean. Reinsert it all the way.

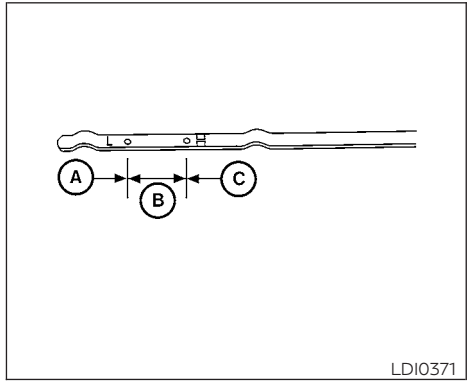

VK56VD engine

5. Remove the dipstick again and check the oil level. It should be between the H (High) and L (Low) marks Ⓑ. This is the normal operating oil level range. If the oil level is below the L (Low) mark Ⓐ, remove the oil filler cap and pour recommended oil through the opening. **Do not overfill Ⓒ.**
6. Recheck oil level with the dipstick.

It is normal to add some oil between oil maintenance intervals or during the break-in period, depending on the severity of operating conditions.

⚠ CAUTION

Oil level should be checked regularly. Operating the engine with an insufficient amount of oil can damage the engine, and such damage is not covered by warranty.

For additional information on checking the Cummins 5.0L engine oil level, refer to the "Titan Diesel Owner's Manual".

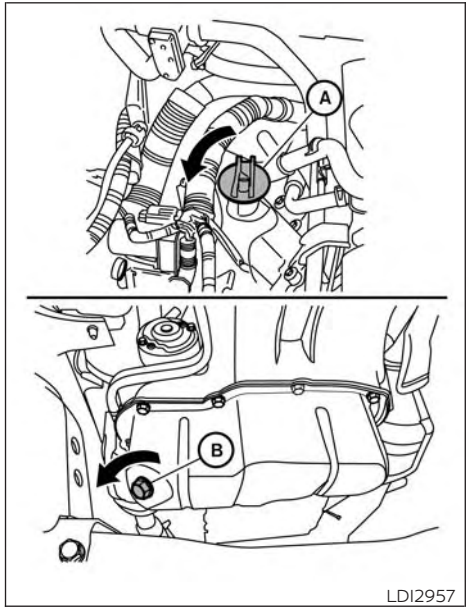

VK56VD engine

CHANGING ENGINE OIL

1. Park the vehicle on a level surface and apply the parking brake.
2. Start the engine and let it idle until it reaches operating temperature.
3. Turn the engine off and wait more than 15 minutes.
4. Remove the oil filler cap Ⓐ by turning it counterclockwise.
5. Place a large drain pan under the drain plug Ⓑ.
6. Remove the drain plug Ⓑ with a wrench by turning it counterclockwise and completely drain the oil.

   If the oil filter is to be changed, remove and replace it at this time. For additional information, refer to "Changing engine oil filter" in this section.

- **Waste oil must be disposed of properly.**
- **Check your local regulations.**

⚠ WARNING

- **Prolonged and repeated contact with used engine oil may cause skin cancer.**
- **Try to avoid direct skin contact with used oil. If skin contact is made, wash thoroughly with soap or hand cleaner as soon as possible.**
- **Keep used engine oil out of reach of children.**

⚠ CAUTION

Be careful not to burn yourself. The engine oil may be hot.

7. Clean and reinstall the drain plug and a new washer. Securely tighten the drain plug with a wrench. Do not use excessive force.

   Drain plug tightening torque:
   25 ft-lb (34 N·m)

8. Refill engine with recommended oil through the oil filler opening, then install the oil filler cap securely.

   For additional information on drain and refill capacity, refer to "Recommended fluids/lubricants and capacities" in the "Technical and consumer information" section of this manual.

   The drain and refill capacity depends on the oil temperature and drain time. Use these specifications for reference only. Always use the dipstick to determine when the proper amount of oil is in the engine.

9. Start the engine. Check for leakage around the drain plug and oil filter. Correct as required.
10. Turn the engine off and wait more than 15 minutes. Check the oil level with the dipstick. Add engine oil if necessary.

For additional information on changing the Cummins 5.0L engine oil, refer to the "Titan Diesel Owner's Manual".

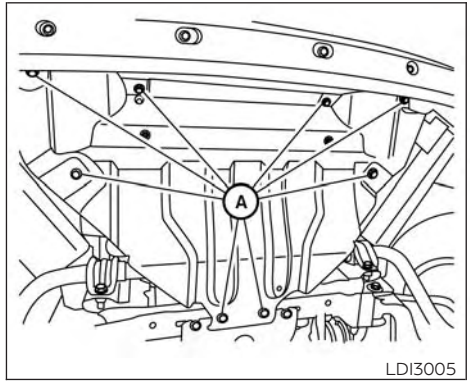

Skid plate (Type A) (if so equipped)

CHANGING ENGINE OIL FILTER

1. Park the vehicle on a level surface and apply the parking brake.
2. Turn the engine off.
3. Remove bolts Ⓐ and skid plate.

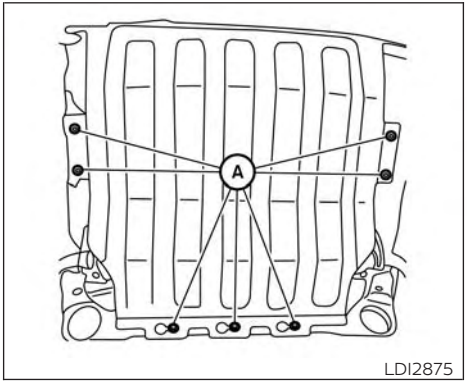

Skid plate (Type B) (if so equipped)

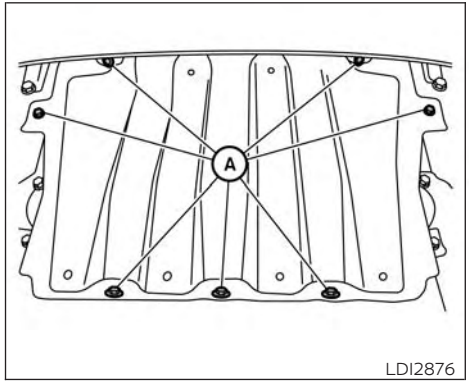

Skid plate (Type C) (if so equipped)

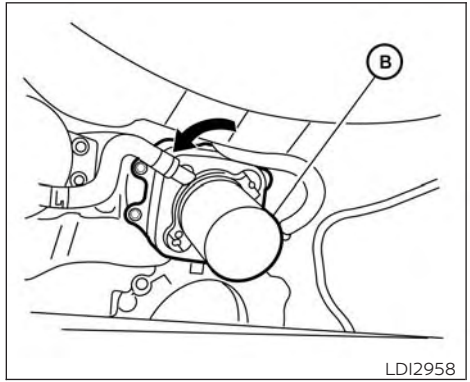

VK56VD engine

4. Place a large drain pan under the oil filter Ⓑ.
5. Loosen the oil filter with an oil filter wrench by turning it counterclockwise. Then remove the oil filter by turning it by hand.

⚠ CAUTION

Be careful not to burn yourself. The engine oil may be hot.

6. Wipe the engine oil filter sealing surface with a clean rag.

⚠ CAUTION

Be sure to remove any old gasket material remaining on the sealing surface of the engine. Failure to do so could lead to an oil leak and engine damage.

7. Coat the gasket on the new filter with clean engine oil.
8. Screw on the oil filter until a slight resistance is felt, then tighten an additional 2/3 turn.

   Oil filter tightening torque:
   13 ft-lb (18 N·m)

9. Start the engine and check for leakage around the oil filter. Correct as required.
10. Install skid plate in reverse order of removal.
11. Turn the engine off and wait more than 15 minutes. Check the oil level. Add engine oil if necessary.

FUEL FILTER (CUMMINS 5.0L)

FUEL FILTER REPLACEMENT (stage 1)

For additional information, refer to the "Titan Diesel Owner's Manual".

FUEL FILTER REPLACEMENT (stage 2)

For additional information, refer to the "Titan Diesel Owner's Manual".

DRAINING WATER

For additional information, refer to the "Titan Diesel Owner's Manual".

FUEL SYSTEM PRIMING

For additional information, refer to the "Titan Diesel Owner's Manual".

DIESEL PARTICULATE FILTER (DPF)

For additional information, refer to the "Titan Diesel Owner's Manual".

AUTOMATIC REGENERATION

For additional information, refer to the "Titan Diesel Owner's Manual".

6-SPEED AUTOMATIC TRANSMISSION FLUID (ATF) (diesel engine only)

When checking or replacement is required, it is recommended that you visit a NISSAN dealer for this service.

⚠ CAUTION

- **NISSAN recommends using Genuine NISSAN Matic K ATF. Do not mix with other fluids.**
- **Do not use CVT fluid or manual transmission fluid in this transmission. Damage caused by the use of fluids other than as recommended is not covered under NISSAN's New Vehicle Limited Warranty.**
- **Using fluids that are not equivalent to Genuine NISSAN Matic K ATF may also damage the transmission. Damage caused by the use of fluids other than as recommended is not covered under NISSAN's New Vehicle Limited Warranty.**

The specified automatic transmission fluid is also described on caution labels located in the engine compartment.

7-SPEED AUTOMATIC TRANSMISSION FLUID (ATF) (gasoline engine only)

When checking or replacement is required, it is recommended that you visit a NISSAN dealer for this service.

⚠ CAUTION

- **NISSAN recommends using Genuine NISSAN Matic S ATF. Do not mix with other fluids.**
- **Do not use CVT fluid or manual transmission fluid in this transmission. Damage caused by the use of fluids other than as recommended is not covered under NISSAN's New Vehicle Limited Warranty.**
- **Using fluids that are not equivalent to Genuine NISSAN Matic S ATF may also damage the transmission. Damage caused by the use of fluids other than as recommended is not covered under NISSAN's New Vehicle Limited Warranty.**

The specified automatic transmission fluid is also described on caution labels located in the engine compartment.

POWER STEERING FLUID

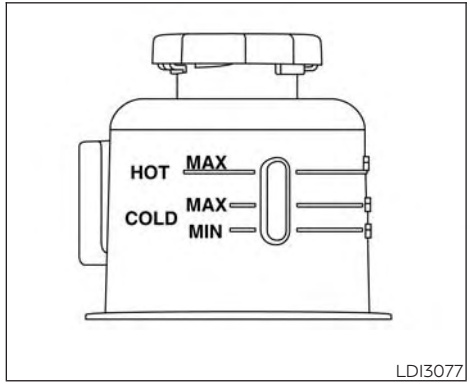

Check the power steering fluid level when the engine is stopped.

The fluid level should be between the COLD MAX line and the COLD MIN line on the power steering fluid reservoir at cold fluid temperatures of 32° - 86°F (0° - 30°C) or at the HOT MAX line on the power steering fluid reservoir at hot fluid temperatures of 122° - 176°F (50° - 80°C).

If the fluid is cold and is at or below the COLD MIN line, add Genuine NISSAN PSF II or equivalent to the COLD MAX line. If the fluid is hot and below the HOT MAX line, add Genuine NISSAN PSF II or equivalent to the HOT MAX line. Remove the cap and fill through the opening.

⚠ CAUTION

- **DO NOT OVERFILL.**
- **Do not reuse power steering fluid.**
- **Recommended fluid is Genuine NISSAN PSF II or equivalent**

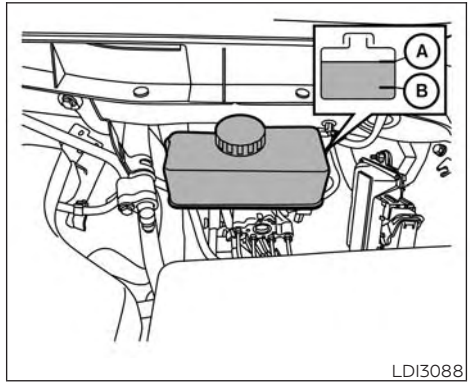

⚠ WARNING

- **Use only new fluid from a sealed container. Old, inferior or contaminated fluid may damage the brake system. The use of improper fluids can damage the brake system and affect the vehicle's stopping ability.**
- **Clean the filler cap before removing.**
- **Brake fluid is poisonous and should be stored carefully in marked containers out of reach of children.**

⚠ CAUTION

Do not spill the fluid on any painted surfaces. This will damage the paint. If fluid is spilled, immediately wash the surface with water.

Check the fluid level in the reservoir. If the brake fluid is below the MIN line Ⓑ, the brake warning light will illuminate. Add brake fluid up to the MAX line Ⓐ. For additional information on recommended type of brake fluid, refer to "Recommended fluids/lubricants and capacities" in the "Technical and consumer information" section of this manual.

If the brake fluid must be added frequently, the brake system should be thoroughly checked. It is recommended that you visit a NISSAN dealer for this service.

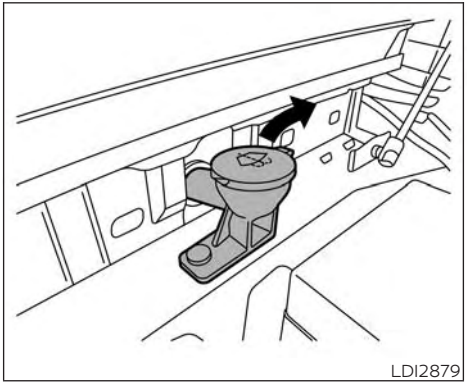
LDI2879

WINDSHIELD-WASHER FLUID RESERVOIR

Fill the windshield-washer fluid reservoir periodically. Add windshield-washer fluid when the low windshield-washer fluid warning light (if so equipped) comes on or the "Low Washer Fluid" warning message (if so equipped) shows on the vehicle information display.

To fill the windshield-washer fluid reservoir, lift the cap off the reservoir and pour the windshield-washer fluid into the reservoir opening.

Add a washer solvent to the washer for better cleaning. In the winter season, add a windshield washer antifreeze. Follow the manufacturer's instructions for the mixture ratio.

Refill the reservoir more frequently when driving conditions require an increased amount of windshield-washer fluid.

Recommended fluid is Genuine NISSAN Windshield Washer Concentrate Cleaner & Anti-freeze or equivalent.

⚠ CAUTION

- **Do not substitute engine antifreeze coolant for windshield-washer fluid. This may result in damage to the paint.**
- **Do not fill the windshield-washer fluid reservoir with washer fluid concentrates at full strength. Some methyl alcohol based washer fluid concentrates may permanently stain the grille if spilled while filling the windshield-washer fluid reservoir.**
- **Pre-mix washer fluid concentrates with water to the manufacturer's recommended levels before pouring the fluid into the windshield-washer fluid reservoir. Do not use the windshield-washer fluid reservoir to mix the washer fluid concentrate and water.**

- If the battery is labeled "do not open" it is maintenance free and battery fluid should not be checked. It is recommended that you visit a NISSAN dealer or a qualified specialist workshop to confirm the battery's performance.
- Keep the battery surface clean and dry. Clean the battery with a solution of baking soda and water.
- Make certain the terminal connections are clean and securely tightened.
- Push the ignition switch to the OFF position and wait 2 minutes before disconnecting the battery.
- If the vehicle is not to be used for 30 days or longer, disconnect the negative (-) battery terminal cable to prevent discharge.

NOTE:

Care should be taken to avoid situations that can lead to potential battery discharge and potential no-start conditions such as:

1. **Installation or extended use of electronic accessories that consume battery power when the engine is not running (Phone chargers, GPS, DVD players, etc.).**
2. **Vehicle is not driven regularly and/or only driven short distances.**

In these cases, the battery may need to be charged to maintain battery health.

⚠ WARNING

- **Do not expose the battery to flames, an electrical spark or a cigarette. Hydrogen gas generated by the battery is explosive. Explosive gases can cause blindness or injury. Do not allow battery fluid to contact your skin, eyes, fabrics or painted surfaces. Sulfuric acid can cause blindness or injury. After touching a battery or battery cap, do not touch or rub your eyes. Thoroughly wash your hands. If the acid contacts your eyes, skin or clothing, immediately flush with water for at least 15 minutes and seek medical attention.**
- **Do not operate the vehicle if the fluid in the battery is low. Low battery fluid can cause a higher load on the battery which can generate heat, reduce battery life, and in some cases lead to an explosion.**
- **When working on or near a battery, always wear suitable eye protection and remove all jewelry.**
- **Battery posts, terminals and related accessories contain lead and lead compounds. Wash hands after handling.**
- **This vehicle uses a special battery. If the 12-volt battery needs to be replaced, use a 12-volt battery of the same design.**
- **Keep battery out of the reach of children.**
- **Do not tip the battery. Keep the vent caps tight and the battery level.**

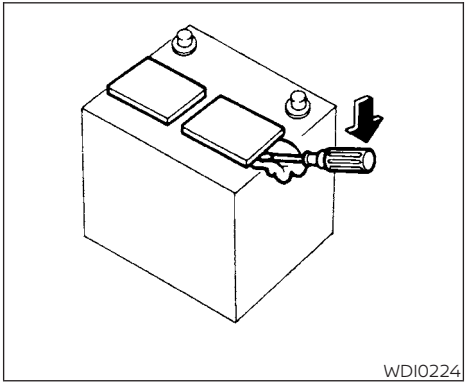

1. Remove the vent caps with a screwdriver as shown. Use a cloth to protect the battery case.

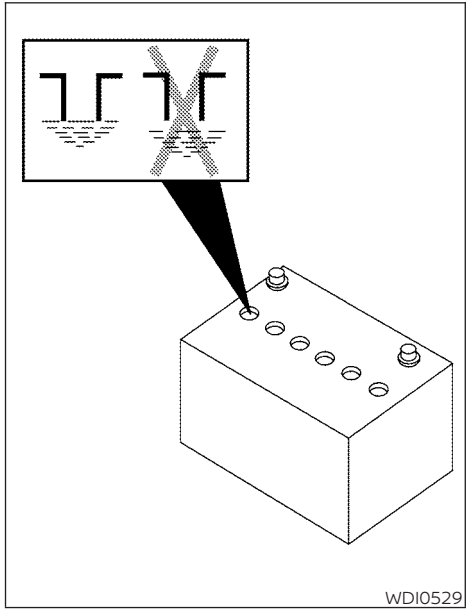

2. Check the fluid level in each cell. If it is necessary to add fluid, add only distilled water to bring the level up to the bottom of the filler opening. **Do not overfill.** Reinstall the vent caps.

Vehicles operated in high temperatures or under severe conditions require frequent checks of the battery fluid level.

JUMP STARTING

If jump starting is necessary, refer to "Jump starting" in the "In case of emergency" section of this manual. If the engine does not start by jump starting, the battery may have to be replaced. It is recommended that you visit a NISSAN dealer for this service.

VARIABLE VOLTAGE CONTROL (if so equipped)

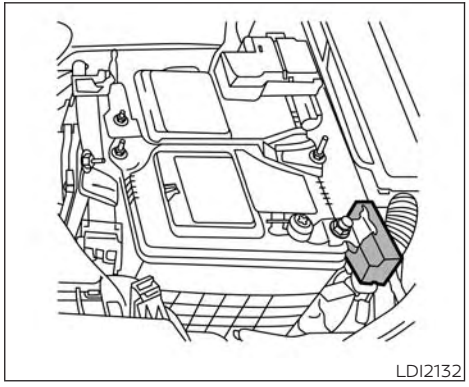

⚠ CAUTION

- **Do not ground accessories directly to the battery terminal. Doing so will bypass the variable voltage control system and the vehicle battery may not charge completely.**
- **Use electrical accessories with the engine running to avoid discharging the vehicle battery.**

Your vehicle is equipped with a variable voltage control system. This system measures the amount of electrical discharge from the battery and controls voltage generated by the generator.

The current sensor is located near the battery along the negative battery cable. If you add electrical accessories to your vehicle, be sure to ground them to a suitable body ground such as the frame or engine block area.

DRIVE BELT

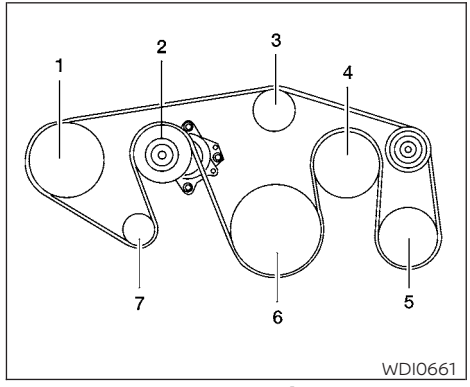

VK56VD engine

1. Power steering fluid pump pulley
2. Automatic belt tensioner pulley
3. Water pump pulley
4. Cooling fan pulley
5. Air conditioner compressor pulley
6. Crankshaft pulley
7. Generator pulley

⚠ WARNING

Be sure the ignition switch is in the OFF or LOCK position before servicing drive belt. The engine could rotate unexpectedly.

1. Visually inspect the belt for signs of unusual wear, cuts, fraying or looseness. If the belt is in poor condition or is loose, have it replaced or adjusted. It is recommended that you visit a NISSAN dealer for this service.
2. Have the belt checked regularly for condition and tension in accordance with the maintenance schedule. For additional information, refer to the "Maintenance and schedules" section of this manual.

For additional information on the Cummins 5.0L engine drive belt, refer to the "Titan Diesel Owner's Manual".

SPARK PLUGS (gasoline engine only)

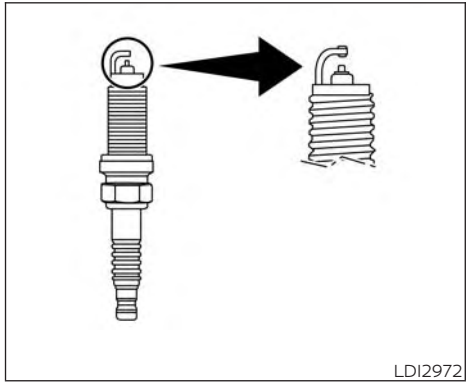

REPLACING SPARK PLUGS

Iridium-tipped spark plugs

It is not necessary to replace iridium-tipped spark plugs as frequently as conventional type spark plugs because they last much longer. Follow the maintenance log shown in the "Maintenance and schedules" section of this manual. Do not service iridium-tipped spark plugs by cleaning or regapping.

- **Always replace spark plugs with recommended or equivalent ones.**

WARNING

Be sure the engine and ignition switch are off and that the parking brake is engaged securely.

CAUTION

Be sure to use the correct socket to remove the spark plugs. An incorrect socket can damage the spark plugs.

If replacement is required, it is recommended that you visit a NISSAN dealer for this service.

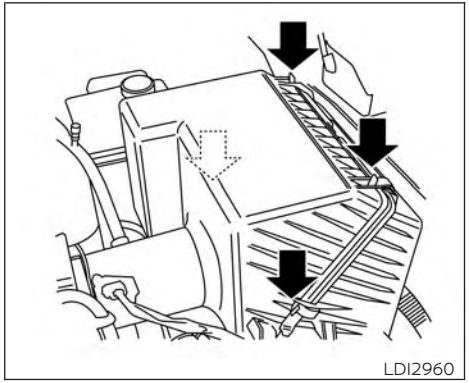

VK56VD engine

⚠ WARNING

- **Operating the engine with the air cleaner removed can cause you or others to be burned. The air cleaner not only cleans the air, it stops the flame if the engine backfires. If it isn't there, and the engine backfires, you could be burned. Do not drive with the air cleaner removed, and be careful when working on the engine with the air cleaner removed.**
- **Never pour fuel into the throttle body or attempt to start the engine with the air cleaner removed. Doing so could result in serious injury.**

To remove the filter from the air cleaner, push the tabs and pull the cover upward.

The viscous paper type filter element should not be cleaned and reused. Replace the air filter according to the maintenance log shown in the "Maintenance and schedules" section of this manual.

When replacing the air filter, wipe the inside of the air cleaner housing and the cover with a damp cloth.

NOTE:

After installing a new air cleaner, make sure the air cleaner cover is seated in the housing and latch the tabs.

IN-CABIN MICROFILTER

The in-cabin microfilter restricts the entry of airborne dust and pollen particles and reduces some objectionable outside odors. The filter is located behind the glove box. For additional information on change intervals, refer to "Gasoline standard maintenance" or "Diesel standard maintenance" in the "Maintenance and schedules" section of this manual.

If replacement is required, it is recommended that you visit a NISSAN dealer for this service.

CLEANING

If your windshield is not clear after using the windshield-washer or if a wiper blade chatters when running, wax or other material may be on the blade or windshield.

Clean the outside of the windshield with a washer solution or a mild detergent. Your windshield is clean if beads do not form when rinsing with clear water.

Clean each blade by wiping it with a cloth soaked in a washer solution or a mild detergent. Then rinse the blades with clear water. If your windshield is still not clear after cleaning the blades and using the wiper, replace the blades.

⚠ CAUTION

Worn windshield wiper blades can damage the windshield and impair driver vision.

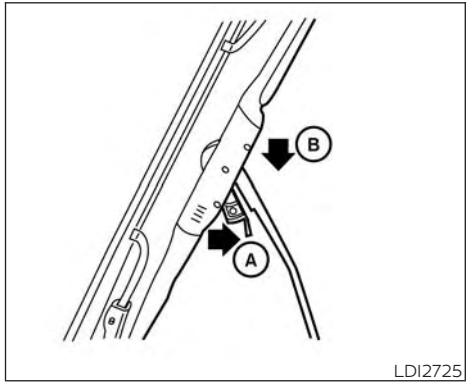

LDI2725

REPLACING

Replace the wiper blades if they are worn.

1. Lift the wiper arm away from the windshield.
2. Push and hold the release tab Ⓐ, and then move the wiper blade down Ⓑ the wiper arm to remove.
3. Remove the wiper blade.
4. Insert the new wiper blade onto the wiper arm until it clicks into place.

⚠ CAUTION

- **After wiper blade replacement, return the wiper arm to its original position; otherwise it may be damaged when the hood is opened.**
- **Make sure the wiper blades contact the glass; otherwise the arms may be damaged from wind pressure.**

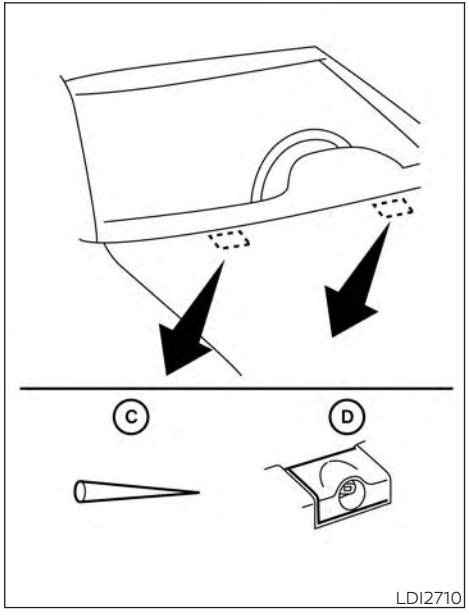

Be careful not to let anything get into the washer nozzle Ⓓ. This may cause clogging or improper windshield-washer operation. If something gets into the nozzle, remove it with a needle or small pin Ⓒ.

If the brakes do not operate properly, have the brakes checked. It is recommended that you visit a NISSAN dealer for this service.

Self-adjusting brakes

Your vehicle is equipped with self-adjusting brakes.

The front and rear disc-type brakes self-adjust every time the brake pedal is applied.

⚠ WARNING

Have your brake system checked if the brake pedal height does not return to normal. It is recommended that you visit a NISSAN dealer for this service.

Brake pad wear indicators

The disc brake pads on your vehicle have audible wear indicators. When a brake pad requires replacement, a high pitched scraping or screeching sound will be heard when the vehicle is in motion. The noise will be heard whether or not the brake pedal is depressed. Have the brakes checked as soon as possible if the wear indicator sound is heard.

Under some driving or climate conditions, occasional brake squeak, squeal or other noise may be heard. Occasional brake noise during light to moderate stops is normal and does not affect the function or performance of the brake system.

Proper brake inspection intervals should be followed. For additional information on the appropriate maintenance schedule regarding brake inspections, refer to "Gasoline standard maintenance" or "Diesel standard maintenance" in the "Maintenance and schedules" section of this manual.

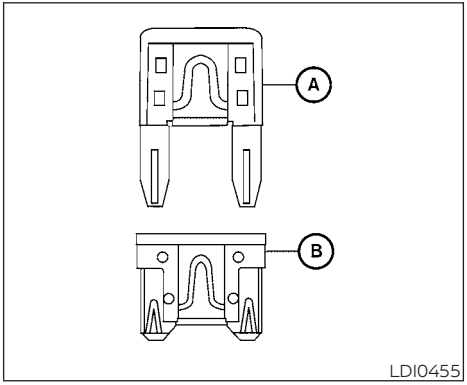

Two types of fuses are used. Type Ⓐ and Ⓑ are used in the fuse boxes in the engine compartment. Type Ⓑ is used in the passenger compartment fuse box.

Type Ⓑ fuses are provided as spare fuses. They are stored in the passenger compartment fuse box.

Type Ⓐ fuses can be installed in the engine compartment and passenger compartment fuse boxes.

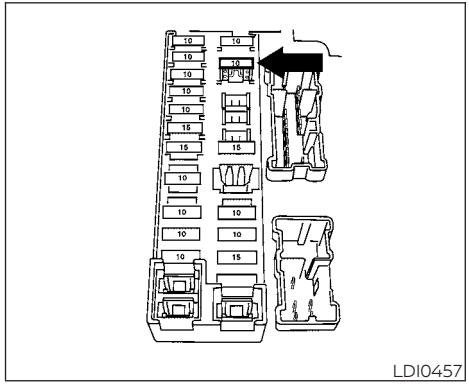

If a type Ⓐ fuse is used to replace a type Ⓑ fuse, the type Ⓐ fuse will not be level with the fuse pocket as shown in the illustration. This will not affect the performance of the fuse. Make sure the fuse is installed in the fuse box securely.

Type Ⓑ fuses cannot be used to replace type Ⓐ fuses.

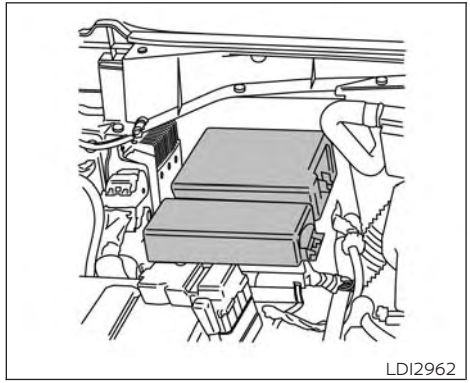

VK56VD engine

ENGINE COMPARTMENT

⚠ WARNING

Never use a fuse of higher or lower amperage rating than that specified on the fuse box cover. This could damage the electrical system or electronic control units or cause a fire.

If any electrical equipment does not come on, check for an open fuse.

1. Be sure the ignition switch and the headlight switch are OFF.

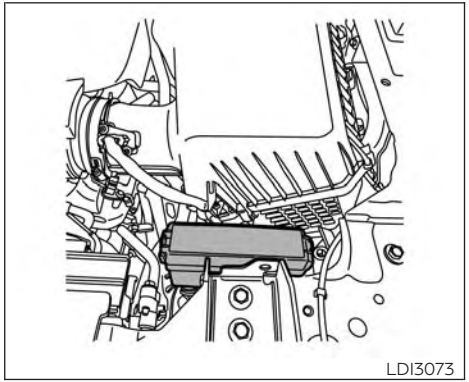

VK56VD engine (non-XD model)

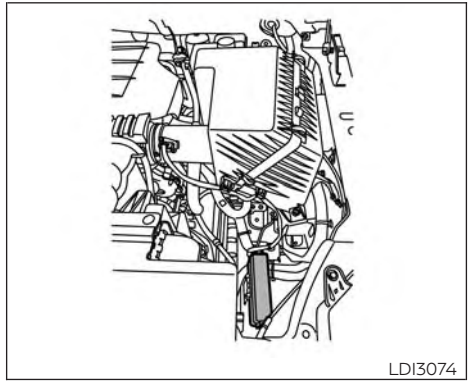

VK56VD engine (XD model)

2. Open the engine hood.
3. Remove the fuse box cover by pushing the tab and lifting the cover up.
4. Remove the fuse with the fuse puller. The fuse puller is located in the center of the fuse block in the passenger compartment.

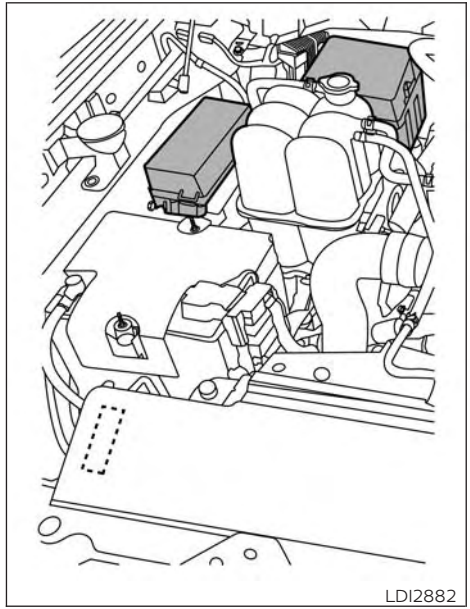

Cummins 5.0L engine

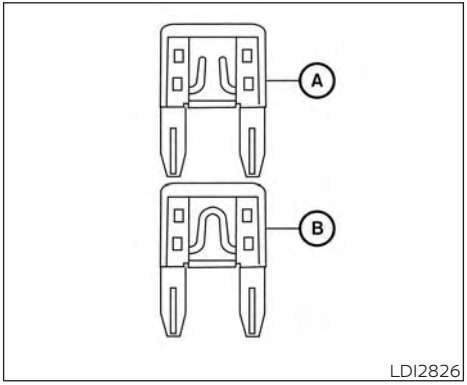

5. If the fuse is open Ⓐ, replace it with a new fuse Ⓑ.
6. If a new fuse also opens, have the electrical system checked and repaired. It is recommended that you visit a NISSAN dealer for this service.

Fusible links

If the electrical equipment does not operate and fuses are in good condition, check the fusible links. If any of these fusible links are melted, replace with only Genuine NISSAN parts.

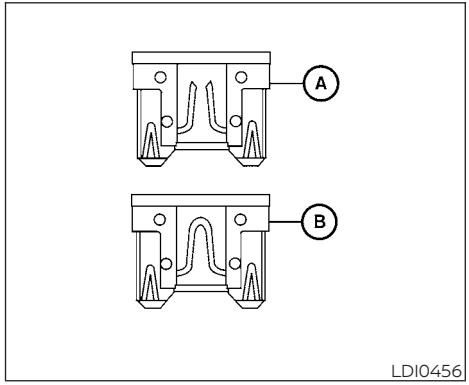

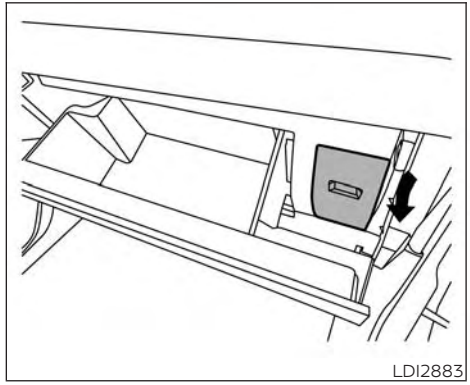

PASSENGER COMPARTMENT

⚠ WARNING

Never use a fuse of higher or lower amperage rating than that specified on the fuse box cover. This could damage the electrical system or electronic control units or cause a fire.

If any electrical equipment does not operate, check for an open fuse.

1. Be sure the ignition switch and the headlight switch are OFF.
2. Open the glove box.
3. Remove the fuse box cover.
4. Locate the fuse that needs to be replaced.

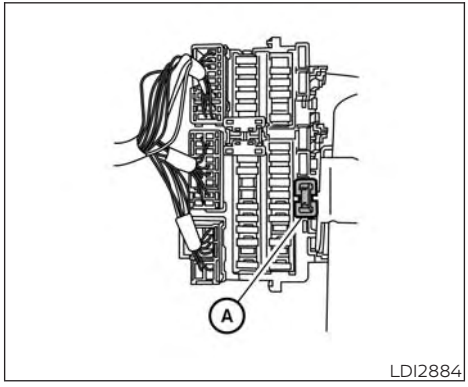

5. Remove the fuse with the fuse puller Ⓐ.

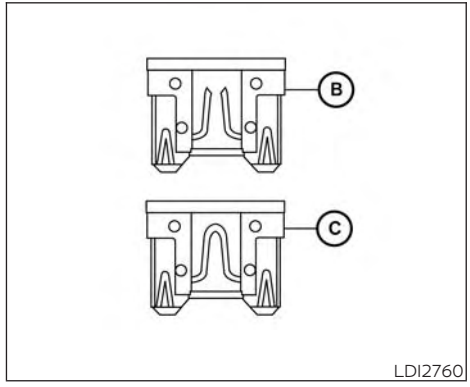

6. If the fuse is open Ⓑ, replace it with an equivalent good fuse Ⓒ.
7. Push the fuse box cover to install.

If a new fuse also opens, have the electrical system checked and repaired. It is recommended that you visit a NISSAN dealer for this service.

⚠ CAUTION

Be careful not to allow children to swallow the battery or removed parts.

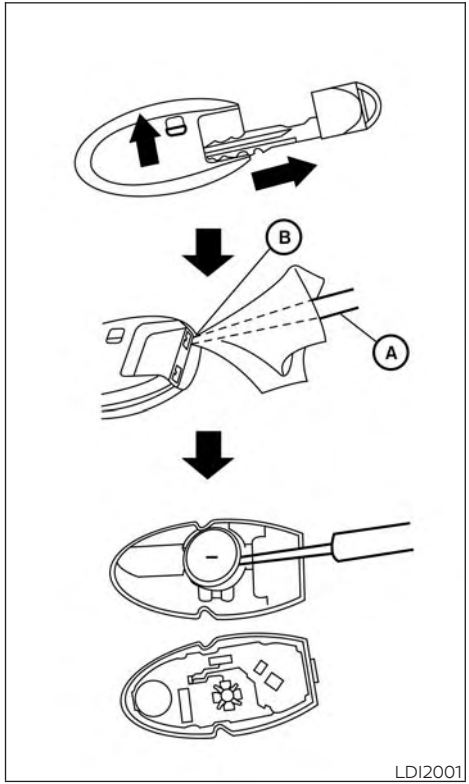

NISSAN INTELLIGENT KEY®

Replace the battery in the Intelligent Key as follows:

1. Remove the mechanical key from the Intelligent Key.
2. Insert a small flathead screwdriver Ⓐ into the slit Ⓑ of the corner and twist it to separate the upper part from the lower part. Place a cloth over the screwdriver to protect the casing.

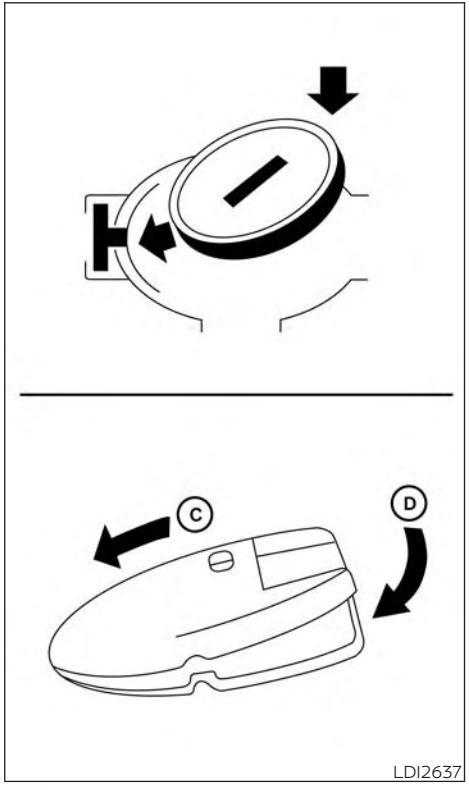

3. Replace the battery with a new one.

   Recommended battery: CR2032 or equivalent.

   - Do not touch the internal circuit and electric terminals as doing so could cause a malfunction.
   - Hold the battery by the edges. Holding the battery across the contact points will seriously deplete the storage capacity.
   - Make sure that the + side faces the bottom of the lower part.

4. Close the lid securely as illustrated with Ⓒ and Ⓓ.
5. Operate the buttons to check the operation.

If you need assistance with replacement, it is recommended that you visit a NISSAN dealer for this service.

FCC Notice:

For USA:
This device complies with Part 15 of the FCC Rules. Operation is subject to the following two conditions: (1) This device may not cause harmful interference, and (2) this device must accept any interference received, including interference that may cause undesired operation.

Note:

Changes or modifications not expressly approved by the party responsible for compliance could void the user's authority to operate the equipment.

For Canada:
This device complies with Industry Canada licence-exempt RSS standard(s). Operation is subject to the following two conditions: (1) this device may not cause interference, and (2) this device must accept any interference, including interference that may cause undesired operation of the device.

HEADLIGHTS

For additional information on headlight bulb replacement, refer to the instructions outlined in this section.

Replacing the halogen headlight bulb (if so equipped)

The headlight is a semi-sealed beam type which uses a replaceable headlight (halogen) bulb. Because the headlight assembly must be removed from the vehicle for bulb replacement, it is recommended that you visit a NISSAN dealer for this service.

⚠ CAUTION

- **Aiming is not necessary after replacing the bulb. When aiming adjustment is necessary, it is recommended that you visit a NISSAN dealer for this service.**
- **Do not leave the headlight assembly open without a bulb installed for a long period of time. Dust, moisture, smoke, etc. entering the headlight body may affect bulb performance. Remove the bulb from the headlight assembly just before a replacement bulb is installed.**
- **Only touch the base when handling the bulb. Never touch the glass envelope. Touching the glass could significantly affect bulb life and/or headlight performance.**
- **High pressure halogen gas is sealed inside the halogen bulb. The bulb may break if the glass envelope is scratched or the bulb is dropped.**
- **Use the same number and wattage as shown in the chart.**

Fog may temporarily form inside the lens of the exterior lights in the rain or in a car wash. A temperature difference between the inside and the outside of the lens causes the fog. This is not a malfunction. If large drops of water collect inside the lens, it is recommended that you visit a NISSAN dealer for servicing.

Replacing the LED headlight bulb (if so equipped)

If LED headlight bulb replacement is required, it is recommended that you visit a NISSAN dealer for this service.

FOG LIGHTS (if so equipped)

For additional information on fog light bulb replacement, refer to the instructions outlined in this section.

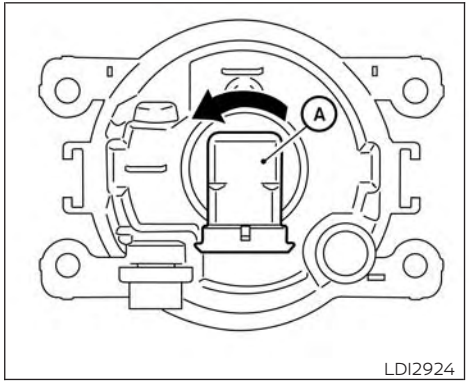

Fog light (Type B) (if so equipped)

Replacing the fog light bulb

⚠ CAUTION

- **High pressure halogen gas is sealed inside the halogen bulb. The bulb may break if the glass envelope is scratched or the bulb is dropped.**
- **When handling the bulb, do not touch the glass envelope.**
- **Use the same number and wattage as originally installed as shown in the chart.**
- **Do not leave the bulb out of the fog light for a long period of time as dust, moisture and smoke may enter the fog light body and affect the performance of the fog light.**

NOTE:

The fog light is accessible in front of the front tire and behind the bumper.

1. Push the ignition switch to the OFF position and wait 2 minutes.
2. Disconnect the negative (-) battery cable.
3. Disconnect the bulb connector.
4. Rotate the bulb Ⓐ counterclockwise and remove.
5. Remove by pulling it straight out of the fog light assembly. Do not shake or rotate the bulb when removing it. Do not touch the glass envelope.
6. Install in the reverse order of removal.

DAYTIME RUNNING LIGHT (DRL) (if so equipped)

For additional information on the DRL bulb replacement, refer to the instructions outlined in this section.

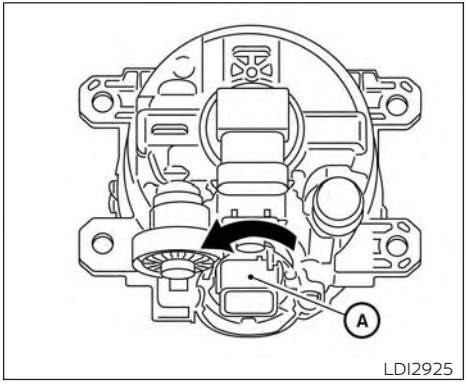

Fog light assembly (Type A) (if so equipped) (Canada only)

Replacing the daytime running light bulb (Canada only)

NOTE:

The daytime running light is accessible in front of the front tire and behind the bumper.

1. Push the ignition switch to the OFF position and wait 2 minutes.
2. Disconnect the negative (-) battery cable.

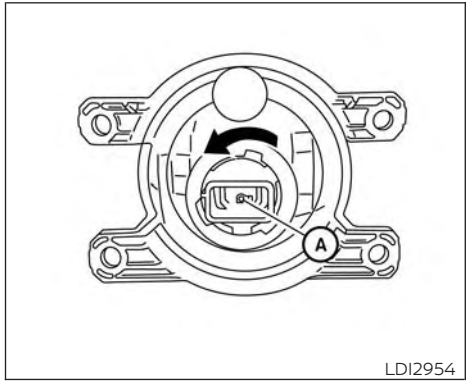

Daytime running light (if so equipped) (Canada only)

3. Disconnect the daytime running light bulb connector.
4. Rotate the daytime running light bulb Ⓐ counterclockwise and remove.
5. Remove by pulling it straight out of the fog light assembly. Do not shake or rotate the bulb when removing it. Do not touch the glass envelope.
6. Install in the reverse order of removal.

EXTERIOR AND INTERIOR LIGHTS

Item	Wattage (W)	Bulb No.*
Headlight assembly (Type A) (if so equipped)*		
Low (Halogen)	55	H11
High (Halogen)	60	HB3
Turn/Park	28/8	7444NA
Side marker	5	W5W
Headlight assembly (Type B) (if so equipped)*		
Low	—	—
High (Halogen)	60	HB3
Daytime running/Park	—	—
Turn	28/8	7444NA
Side marker	5	W5W
Fog light assembly (Type A) (if so equipped) (Canada only)		
Fog	35	H8
Daytime running	13	P13W
Fog light (Type B) (if so equipped)	55	H11
Door mirror turn signal light (if so equipped)*	—	—
Puddle light (if so equipped)*	—	—
Rear combination light (Type A) (if so equipped)*		
Stop	16	PW16W
Backup (reversing)	18	921
Turn/Tail	27/7	3057K
Rear combination light (Type B) (if so equipped)*		
Stop	—	—
Backup (reversing)	18	921
Turn/Tail	27/7	3057K
Cargo (tailgate) (if so equipped)	18	921
High-mounted stop light*		
Stop	—	—
Cargo (roof)	—	—
Under rail bed light (if so equipped)*	—	—
License plate light*	—	—
Map light (if so equipped)*	8	—
Room light (if so equipped)*	8	—
Footwell light (if so equipped)*	3.4	158
Vanity mirror light (if so equipped)*	—	—
Glove box light (if so equipped)*	1.4	—

* Always check with the Parts Department at a NISSAN dealer for the latest parts information.
* It is recommended that you visit a NISSAN dealer for assistance.

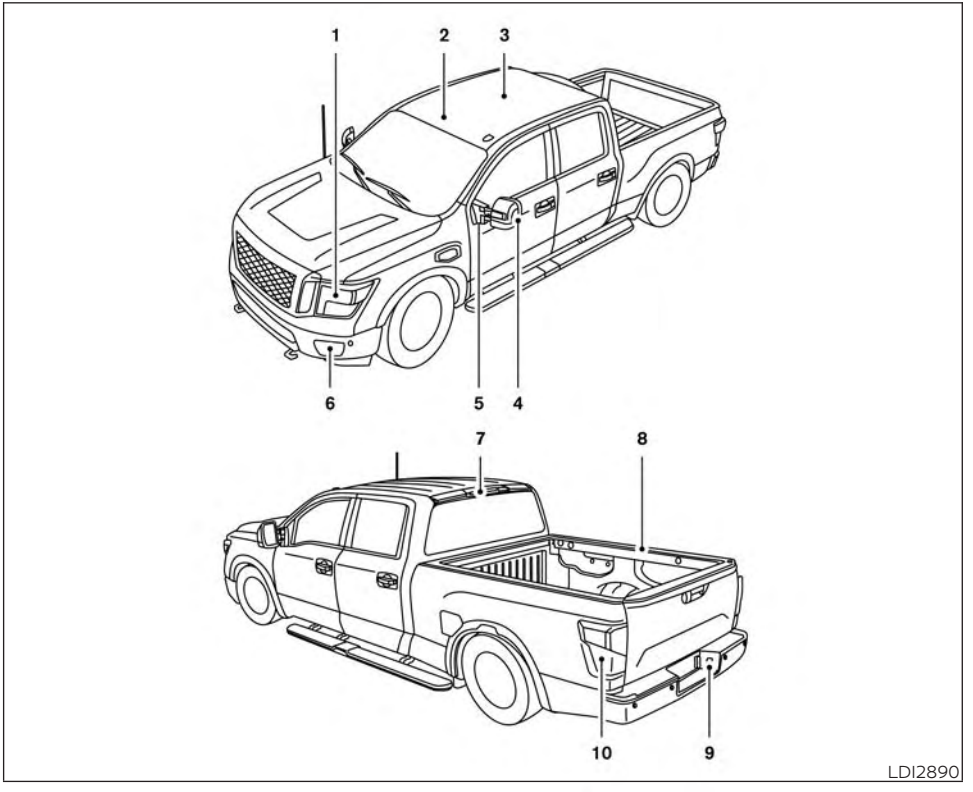

1. Headlight assembly
2. Map light (if so equipped)
3. Room light (if so equipped)
4. Door mirror turn signal light (if so equipped)
5. Puddle light (if so equipped)
6. Fog light (if so equipped)
7. High-mount stop light
8. Under rail bed light (if so equipped)
9. License plate light
10. Rear combination light

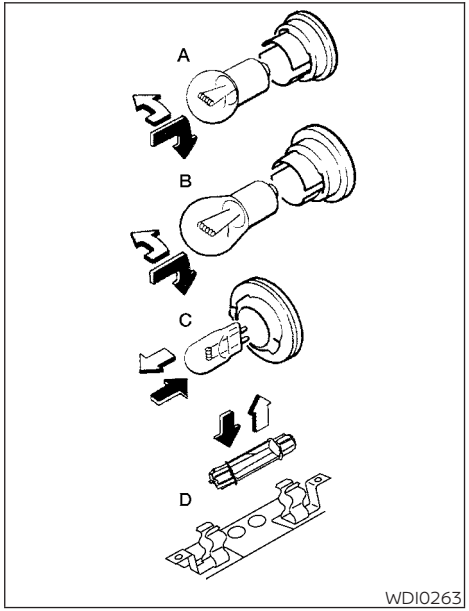

Replacement procedures

All other lights are either type A, B, C or D. When replacing a bulb, first remove the lens, lamp and/or cover.

⇧ Indicates bulb removal

⬆ Indicates bulb installation

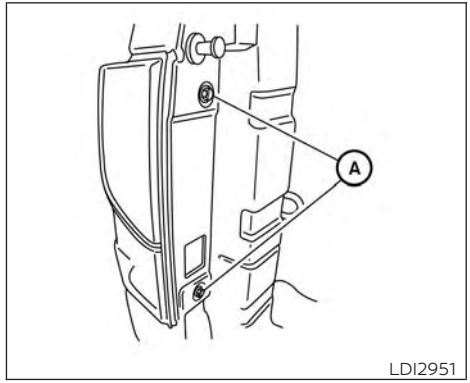

Rear combination light

NOTE:

Rear combination light (Type B) (if so equipped) bulb replacement procedure is shown. Rear combination light (Type A) (if so equipped) bulb replacement procedure is similar.

To replace the rear combination light bulbs perform the following procedure:

1. Remove the two fasteners Ⓐ and pull the rear combination light away from the vehicle.

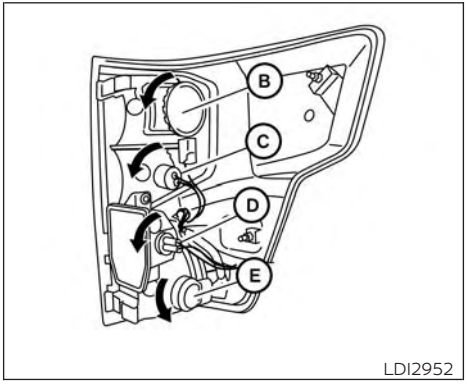

Rear combination light

2. Remove harness connector and rotate stop light bulb Ⓑ counterclockwise to remove. Replace bulb if necessary.
3. Rotate reverse light bulb socket Ⓒ counterclockwise to remove. Replace bulb if necessary.
4. Rotate cargo (tailgate) light bulb socket Ⓓ (if so equipped) counterclockwise to remove. Replace bulb if necessary.
5. Rotate turn/tail light bulb socket Ⓔ counterclockwise to remove. Replace bulb if necessary.

Reverse steps to install bulbs and rear combination light.

If you have a flat tire, refer to "Flat tire" in the "In case of emergency" section of this manual.

TIRE PRESSURE

Tire Pressure Monitoring System (TPMS)

⚠WARNING

Radio waves could adversely affect electric medical equipment. Those who use a pacemaker should contact the electric medical equipment manufacturer for the possible influences before use.

This vehicle is equipped with the Tire Pressure Monitoring System (TPMS). It monitors tire pressure of all four tires except the spare. When the low tire pressure warning light is lit and the "Tire Pressure Low - Add Air" warning appears in the vehicle information display, one or more of your tires is significantly under-inflated. If equipped, the system also displays pressure of all tires (except the spare

tire) on the display screen by sending a signal from a sensor that is installed in each wheel.

The TPMS will activate only when the vehicle is driven at speeds above 16 mph (25 km/h). Also, this system may not detect a sudden drop in tire pressure (for example a flat tire while driving).

For additional information, refer to "Warning lights, indicator lights and audible reminders" in the "Instruments and controls" section, "Tire Pressure Monitoring System (TPMS)" in the "Starting and driving" section, and "Flat tire" in the "In case of emergency" section of this manual.

Tire inflation pressure

Check the tire pressures (including the spare) often and always prior to long distance trips. The recommended tire pressure specifications are shown on the F.M.V.S.S./C.M.V.S.S. certification label or the Tire and Loading Information label under the "Cold Tire Pressure" heading. The Tire and Loading Information label is affixed to the driver side center pillar. Tire pressures should be checked regularly because:

- Most tires naturally lose air over time.
- Tires can lose air suddenly when driven over potholes or other objects or if the vehicle strikes a curb while parking.

The tire pressures should be checked when the tires are cold. The tires are considered COLD after the vehicle has been parked for 3 or more hours, or driven less than 1 mile (1.6 km) at moderate speeds.

The TPMS with Easy-Fill Tire Alert provides visual and audible signals outside the vehicle for inflating tires to the recommended COLD tire pressure. For additional information, refer to "TPMS with Easy-Fill Tire Alert" in the "Starting and driving" section of this manual.

Incorrect tire pressure, including under inflation, may adversely affect tire life and vehicle handling.

⚠ WARNING

- **Improperly inflated tires can fail suddenly and cause an accident.**
- **The Gross Vehicle Weight Rating (GVWR) is located on the F.M.V.S.S./C.M.V.S.S. certification label. The vehicle weight capacity is indicated on the Tire and Loading Information label. Do not load your vehicle beyond this capacity. Overloading your vehicle may result in reduced tire life, unsafe operating conditions due to premature tire failure, or unfavorable handling characteristics and could also lead to a serious accident. Loading beyond the specified capacity may also result in failure of other vehicle components.**

- **Before taking a long trip, or whenever you heavily load your vehicle, use a tire pressure gauge to ensure that the tire pressures are at the specified level.**
- **For additional information regarding tires, refer to "Important Tire Safety Information" (US) or "Tire Safety Information" (Canada) in the Warranty Information Booklet.**

Tire and Loading Information label

① Seating capacity: The maximum number of occupants that can be seated in the vehicle.

② Vehicle load limit: For additional information, refer to "Vehicle loading information" in the "Technical and consumer information" section of this manual.

③ Original tire size: The size of the tires originally installed on the vehicle at the factory.

④ Cold tire pressure: Inflate the tires to this pressure when the tires are cold. Tires are considered COLD after the vehicle has been parked for 3 or more hours, or driven less than 1 mile (1.6 km) at moderate speeds. The recommended cold tire inflation is set by the manufacturer to provide the best balance of tire wear, vehicle handling, driveability, tire noise, etc., up to the vehicle's GVWR.

⑤ Tire size - refer to "Tire labeling" in this section.

⑥ Spare tire size.

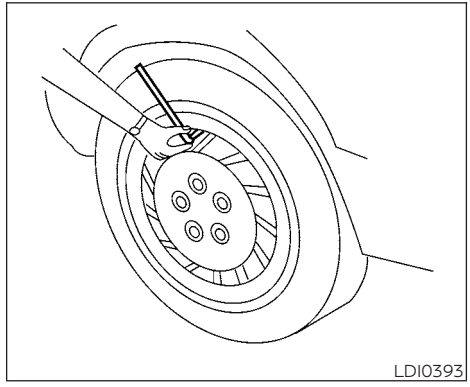

Checking tire pressure

1. Remove the valve stem cap from the tire.
2. Press the pressure gauge squarely onto the valve stem. Do not press too hard or force the valve stem sideways, or air will escape. If the hissing sound of air escaping from the tire is heard while checking the pressure, reposition the gauge to eliminate this leakage.
3. Remove the gauge.
4. Read the tire pressure on the gauge stem and compare to the specification shown on the Tire and Loading Information label.
5. Add air to the tire as needed. If too much air is added, press the core of the valve stem briefly with the tip of the gauge stem to release pressure. Recheck the pressure and add or release air as needed.
6. Install the valve stem cap.
7. Check the pressure of all other tires, including the spare.

Size	Cold Tire Inflation Pressure
Front Original Tire:	
265/70R18	270 kPa, 39 psi
P265/70R18	250 kPa, 36 psi
P275/60R20	250 kPa, 36 psi
P275/70R18	240 kPa, 35 psi
LT245/75R17	450 kPa, 65 psi
LT275/65R18	450 kPa, 65 psi
LT265/60R20	450 kPa, 65 psi

Size	Cold Tire Inflation Pressure
Rear Original Tire:	
265/70R18	270 kPa, 39 psi
P265/70R18	250 kPa, 36 psi
P275/60R20	250 kPa, 36 psi
P275/70R18	240 kPa, 35 psi
LT245/75R17	500 kPa, 73 psi
LT275/65R18	450 kPa, 65 psi
LT265/60R20	480 kPa, 70 psi

Spare Tire:	Full size

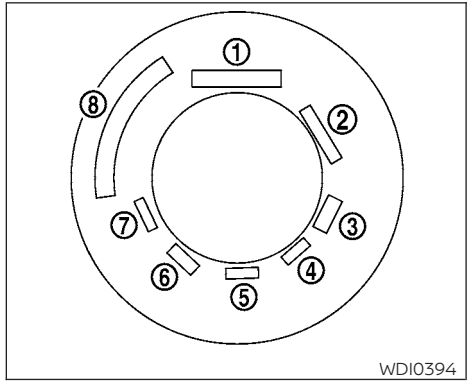

Example

TIRE LABELING

Federal law requires tire manufacturers to place standardized information on the sidewall of all tires. This information identifies and describes the fundamental characteristics of the tire and also provides the tire identification number (TIN) for safety standard certification. The TIN can be used to identify the tire in case of a recall.

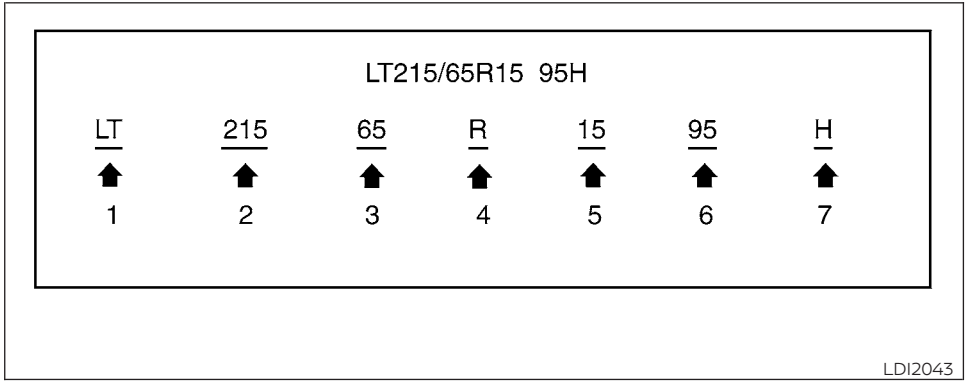

Example

① Tire size (example: LT215/65R15 95H)

1. LT: The "LT" indicates the tire is designed for light truck vehicles (not all tires have this information).
2. Three-digit number (215): This number gives the width in millimeters of the tire from sidewall edge to sidewall edge.
3. Two-digit number (65): This number, known as the aspect ratio, gives the tire's ratio of height to width.
4. R: The "R" stands for radial.
5. Two-digit number (15): This number is the wheel or rim diameter in inches.
6. Two- or three-digit number (95): This number is the tire's load index. It is a measurement of how much weight each tire can support. You may not find this information on all tires because it is not required by law.
7. H: Tire speed rating. You should not drive the vehicle faster than the tire speed rating.

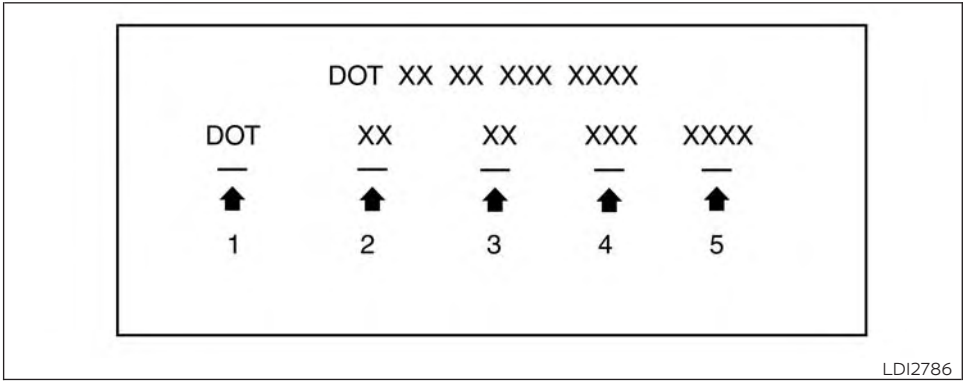

Example

② TIN (Tire Identification Number) for a new tire (example: DOT XX XX XXX XXXX)

1. DOT: Abbreviation for the "Department Of Transportation". The symbol can be placed above, below or to the left or right of the Tire Identification Number.
2. Two-digit code: Manufacturer's identification mark.
3. Two-digit code: Tire size.
4. Three-digit code: Tire type code (Optional).
5. Four numbers represent the week and year the tire was built. For example, the numbers 3103 means the 31st week of 2003. If these numbers are missing then look on the other sidewall of the tire.

③ Tire ply composition and material

The number of layers or plies of rubber-coated fabric in the tire. Tire manufacturers also must indicate the materials in the tire, which include steel, nylon, polyester and others.

④ Maximum permissible inflation pressure

This number is the greatest amount of air pressure that should be put in the tire. Do not exceed the maximum permissible inflation pressure.

⑤ Maximum load rating

This number indicates the maximum load in kilograms and pounds that can be carried by the tire. When replacing the tires on the vehicle, always use a tire that has the same load rating as the factory installed tire.

⑥ Term of "tubeless" or "tube type"

Indicates whether the tire requires an inner tube ("tube type") or not ("tubeless").

⑦ The word "radial"

The word "radial" is shown if the tire has radial structure.

⑧ Manufacturer or brand name

Manufacturer or brand name is shown.

Other Tire-related Terminology

In addition to the many terms that are defined throughout this section, Intended Outboard Sidewall is (1) the sidewall that contains a whitewall, bears white lettering or bears manufacturer, brand, and/or model name molding that is higher or deeper than the same molding on the other sidewall of the tire, or (2) the outward facing sidewall of an asymmetrical tire that has a particular side that must always face outward when mounted on a vehicle.

TYPES OF TIRES

⚠ WARNING

- **When changing or replacing tires, be sure all four tires are of the same type (i.e., Summer, All Season or Snow) and construction. A NISSAN dealer may be able to help you with information about tire type, size, speed rating and availability.**
- **Replacement tires may have a lower speed rating than the factory equipped tires, and may not match the potential maximum vehicle speed. Never exceed the maximum speed rating of the tire.**
- **Replacing tires with those not originally specified by NISSAN could affect the proper operation of the low tire pressure warning system.**
- **For additional information regarding tires, refer to "Important Tire Safety Information" (US) or "Tire Safety Information" (Canada) in the Warranty Information Booklet.**

All season tires

NISSAN specifies All Season tires on some models to provide good performance all year, including snowy and icy road conditions. All Season tires are identified by ALL SEASON and/or M&S on the tire sidewall. Snow tires have better snow traction than All Season tires and may be more appropriate in some areas.

Summer tires

NISSAN specifies summer tires on some models to provide superior performance on dry roads. Summer tire performance is substantially reduced in snow and ice. Summer tires do not have the tire traction rating "M&S" on the tire sidewall.

If you plan to operate your vehicle in snowy or icy conditions, NISSAN recommends the use of SNOW tires or ALL SEASON tires on all four wheels.

Snow tires

If snow tires are needed, it is necessary to select tires equivalent in size and load rating to the original equipment tires. If you do not, it can adversely affect the safety and handling of your vehicle.

Generally, snow tires have lower speed ratings than factory equipped tires and may not match the potential maximum vehicle speed. Never exceed the maximum speed rating of the tire.

If you install snow tires, they must be the same size, brand, construction and tread pattern on all four wheels.

For additional traction on icy roads, studded tires may be used. However, some U.S. states and Canadian provinces prohibit their use. Check local, state and provincial laws before installing studded tires. Skid and traction capabilities of studded snow tires on wet or dry surfaces may be poorer than that of non-studded snow tires.

TIRE CHAINS

Use of tire chains may be prohibited according to location. Check the local laws before installing tire chains. When installing tire chains, make sure they are the proper size for the tires on your vehicle and are installed according to the chain manufacturer's suggestions. **Use only SAE class "S" chains.** Class "S" chains are used on vehicles with restricted tire to vehicle clearance. Vehicles that can use Class "S" chains are designed to meet the minimum clearances between the tire and the closest vehicle suspension or body component required to accommodate the use of a winter traction device (tire chains or cables). The minimum clearances are determined using the factory equipped tire size. Other types may damage your vehicle. Use chain tensioners when recommended by the tire chain manufacturer to ensure a tight fit. Loose end links of the tire chain must be secured or removed to prevent the possibility of whipping action damage to the fenders or underbody. If possible, avoid fully loading your vehicle when using tire chains. In addition, drive at a reduced speed. Otherwise, your vehicle may be damaged and/or vehicle handling and performance may be adversely affected.

Tire chains must be installed only on the rear wheels and not on the front wheels.

Do not use tire chains on dry roads. Driving with chains in such conditions can cause damage to the various mechanisms of the vehicle due to some overstress.

Use only the 2WD range when driving on clear paved roads.

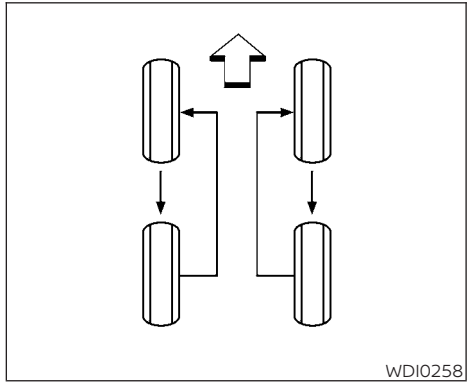

CHANGING WHEELS AND TIRES

Tire rotation

NISSAN recommends rotating the tires every 5,000 miles (8,000 km).

For additional information on tire replacing procedures, refer to "Flat tire" in the "In case of emergency" section of this manual.

As soon as possible, tighten the wheel nuts to the specified torque with a torque wrench.

Wheel nut tightening torque:

Non-XD models:

98 ft-lb (133 N·m)

XD models:

131 ft-lb (177 N·m)

The wheel nuts must be kept tightened to specifications at all times. It is recommended that wheel nuts be tightened to specification at each tire rotation interval.

⚠ WARNING

- **Retighten the wheel nuts when the vehicle has been driven for 600 miles (1,000 km) (also in cases of a flat tire, etc.).**
- **Do not include the spare tire in the tire rotation.**
- **For additional information regarding tires, refer to "Important Tire Safety Information" (US) or "Tire Safety Information" (Canada) in the Warranty Information Booklet.**
- **After rotating the tires, do not use the Easy-Fill Tire Alert to adjust the tire pressure. Instead use a gauge to adjust the tires to the correct pressure in accordance with Tire and Loading Information label.**

⚠ CAUTION

To ensure proper operation of the Easy-Fill Tire Alert system after a tire rotation, re-set and register the sensor to their new installed locations. It is recommended that you visit a NISSAN dealer for this service.

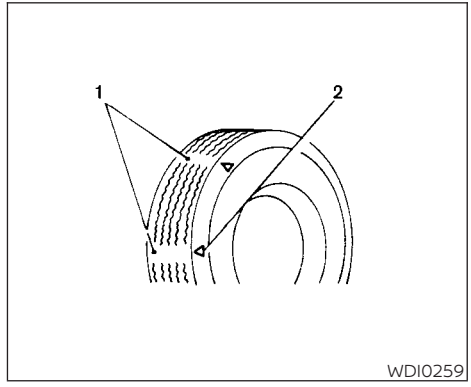

Tire wear and damage

1. Wear indicator
2. Location mark

⚠ WARNING

- **Tires should be periodically inspected for wear, cracking, bulging or objects caught in the tread. If excessive wear, cracks, bulging or deep cuts are found, the tire(s) should be replaced.**

- **The original tires have built-in tread wear indicators. When the wear indicators are visible, the tire(s) should be replaced.**
- **Tires degrade with age and use. Have tires, including the spare, over 6 years old checked by a qualified technician because some tire damage may not be obvious. Replace the tires as necessary to prevent tire failure and possible personal injury.**
- **Improper service of the spare tire may result in serious personal injury. If it is necessary to repair the spare tire, it is recommended that you visit a NISSAN dealer for this service.**
- **For additional information regarding tires, refer to "Important Tire Safety Information" (US) or "Tire Safety Information" (Canada) in the Warranty Information Booklet.**

Replacing wheels and tires

When replacing a tire, use the same size, tread design, speed rating and load carrying capacity as originally equipped. Recommended types and sizes are shown in "Wheels and tires" in the "Technical and consumer information" section of this manual.

⚠ WARNING

- **The use of tires other than those recommended or the mixed use of tires of different brands, construction (bias, bias-belted or radial), or tread patterns can adversely affect the ride, braking, handling, VDC system, ground clearance, body-to-tire clearance, tire chain clearance, speedometer calibration, headlight aim and bumper height. Some of these effects may lead to accidents and could result in serious personal injury.**
- **If your vehicle was originally equipped with four tires that were the same size and you are only replacing two of the four tires, install the new tires on the rear axle. Placing new tires on the front axle may cause loss of vehicle control in some driving conditions and cause an accident and personal injury.**
- **If the wheels are changed for any reason, always replace with wheels which have the same off-set dimension. Wheels of a different off-set could cause premature tire wear, degrade vehicle handling characteristics, affect the VDC system and/or interference with the brake discs. Such interference can lead to decreased braking efficiency and/or early brake pad/shoe wear. For additional information on wheel-off set dimensions, refer to "Wheels and tires" in the "Technical and consumer information" section of this manual.**
- **When replacing a wheel without the TPMS such as the spare tire, the TPMS will not function and the low tire pressure warning light will flash for approximately one minute. The light will remain on after one minute. Have your tires replaced and/or TPMS system reset as soon as possible. It is recommended that you visit a NISSAN dealer for this service.**
- **Replacing tires with those not originally specified by NISSAN could affect the proper operation of the TPMS.**

- **The TPMS sensor may be damaged if it is not handled correctly. Be careful when handling the TPMS sensor.**
- **When replacing the TPMS sensor, the ID registration may be required. Contact a NISSAN dealer for ID registration.**
- **Do not use a valve stem cap that is not specified by NISSAN. The valve stem cap may become stuck.**
- **Be sure that the valve stem caps are correctly fitted. Otherwise the valve may be clogged up with dirt and cause a malfunction or loss of pressure.**
- **Do not install a damaged or deformed wheel or tire even if it has been repaired. Such wheels or tires could have structural damage and could fail without warning.**
- **The use of retread tires is not recommended.**
- **For additional information regarding tires, refer to "Important Tire Safety Information" (US) or "Tire Safety Information" (Canada) in the Warranty Information Booklet.**

4x4 Four-wheel drive models

⚠ CAUTION

Always use tires of the same type, size, brand, construction (bias, bias-belted or radial), and tread pattern on all four wheels. Failure to do so may result in a circumference difference between tires on the front and rear axles which will cause excessive tire wear and may damage the transmission, transfer case and differential gears.

If excessive tire wear is found, it is recommended that all four tires be replaced with tires of the same size, brand, construction and tread pattern. The tire pressure and wheel alignment should also be checked and corrected as necessary. It is recommended that you visit a NISSAN dealer for this service.

Wheel balance

Unbalanced wheels may affect vehicle handling and tire life. Even with regular use, wheels can get out of balance. Therefore, they should be balanced as required.

Wheel balance service should be performed with the wheels off the vehicle. Spin balancing the wheels on the vehicle could lead to mechanical damage.

- **For additional information regarding tires, refer to "Important Tire Safety Information" (US) or "Tire Safety Information" (Canada) in the Warranty Information Booklet.**

Care of wheels

- Wash the wheels when washing the vehicle to maintain their appearance.
- Clean the inner side of the wheels when the wheel is changed or the underside of the vehicle is washed.
- Do not use abrasive cleaners when washing the wheels.
- Inspect wheel rims regularly for dents or corrosion. Such damage may cause loss of pressure or poor seal at the tire bead.
- NISSAN recommends waxing the road wheels to protect against road salt in areas where it is used during winter.

Spare tire (FULL SIZE TEMPORARY USE ONLY spare tire)

When replacing a wheel without the TPMS such as the spare tire, the TPMS will not function.

Your vehicle may be equipped with a full size spare that is a different size or brand than the tires originally installed on the vehicle. This full size spare tire is intended for temporary use only and should be replaced at the first opportunity.

Observe the following precautions if the FULL SIZE TEMPORARY USE ONLY spare tire must be used. Otherwise, your vehicle could be damaged or involved in an accident:

⚠ WARNING

- **The TEMPORARY FULL SIZE spare tire should be used for emergency use only. It should be replaced with the standard tire at the first opportunity to avoid possible tire or differential damage.**
- **Drive carefully while the TEMPORARY FULL SIZE spare tire is installed. Avoid sharp turns and abrupt braking while driving. The vehicle driving performance may be affected when driving on wet or snow covered roads.**
- **When the TEMPORARY FULL SIZE spare is installed, the following systems may not work correctly:**
  - **Tire Pressure Monitoring System (TPMS)**
  - **Vehicle Dynamic Control (VDC) System**
- **Periodically check the TEMPORARY FULL SIZE spare tire inflation pressure. Always keep the TEMPORARY FULL SIZE inflated to the pressure specification shown on the Tire and Loading Information label.**
- **With the TEMPORARY FULL SIZE spare tire installed do not drive the vehicle at speeds faster than 50 mph (80 km/h).**
- **When driving on roads covered with snow or ice, the TEMPORARY FULL SIZE spare tire should be used on the front wheels and the original tire used on the rear wheels. Use tire chains only on the drive wheels.**
- **Do not use the TEMPORARY FULL SIZE spare tire on other vehicles.**
- **Do not use 4WD when the TEMPORARY FULL SIZE spare tire is installed**
- **Do not use more than one TEMPORARY FULL SIZE spare tire at the same time.**

⚠ CAUTION

- **Do not use tire chains on a TEMPORARY FULL SIZE spare tire. Tire chains will not fit properly and may cause damage to the vehicle.**

9 Maintenance and schedules

Maintenance requirements 9-2
General maintenance 9-2
Scheduled maintenance 9-2
Where to go for service 9-2
General maintenance 9-2
Explanation of general maintenance items 9-2
Explanation of scheduled maintenance items . . . 9-5
Emission control system maintenance: 9-5
Chassis and body maintenance: 9-6
Maintenance schedules 9-7
Additional maintenance items for severe operating conditions 9-7
Oil change monitor (diesel engine only) 9-7
Gasoline standard maintenance 9-8
Emission control system maintenance 9-8
Chassis & body maintenance 9-10
Gasoline maintenance under severe operating conditions 9-12
Severe driving conditions 9-12
Diesel standard maintenance 9-13
Emission control system maintenance 9-13
Chassis & body maintenance 9-15
Diesel maintenance under severe operating conditions 9-17
Severe driving conditions 9-17
Oil change monitor 9-17
Maintenance log 9-18

Your NISSAN has been designed to have minimum maintenance requirements with long service intervals to save you both time and money; however, some day-to-day and regular maintenance is essential to maintain your NISSAN's good mechanical condition as well as its emissions and engine performance.

It is the owner's responsibility to make sure that the scheduled maintenance, as well as general maintenance, is performed.

As the vehicle owner, you are the only one who can ensure that your vehicle receives proper maintenance. You are a vital link in the maintenance chain.

GENERAL MAINTENANCE

General maintenance includes those items which should be checked during normal day-to-day operation. They are essential for proper vehicle operation. It is your responsibility to perform these maintenance procedures regularly as prescribed.

Performing general maintenance checks requires minimal mechanical skill and only a few general automotive tools.

These checks or inspections can be done by you, a qualified technician or, if you prefer, a NISSAN dealer.

SCHEDULED MAINTENANCE

The maintenance items listed in this section are required to be serviced at regular intervals. However under severe driving conditions, additional or more frequent maintenance will be required.

WHERE TO GO FOR SERVICE

If maintenance service is required or your vehicle appears to malfunction, have the systems checked and corrected. It is recommended that you visit a NISSAN dealer for this service.

NISSAN technicians are well-trained specialists who are kept up-to-date with the latest service information through technical bulletins, service tips and in-dealership training programs. They are completely qualified to work on NISSAN vehicles **before** they work on your vehicle rather than after they have worked on it.

You can be confident that a NISSAN dealer's service department performs excellent service to meet the maintenance requirements on your vehicle — in a reliable and economical way.

During the normal day-to-day operation of the vehicle, general maintenance should be performed regularly as prescribed in this section. If you detect any unusual sounds, vibrations or smells, be sure to check for the cause or have it checked promptly. In addition, it is recommended that you visit a NISSAN dealer if you think that repairs are required.

When performing any checks or maintenance work, closely observe the "Maintenance precautions" in the "Do-it-yourself" section of this manual.

EXPLANATION OF GENERAL MAINTENANCE ITEMS

Additional information on the following items with " * " is found in the "Do-it-yourself" section of this manual.

Outside the vehicle

The maintenance items listed here should be performed from time to time, unless otherwise specified.

Doors and engine hood: Check that the doors and engine hood operate properly. Also ensure that all latches lock securely. Lubricate hinges, latches, latch pins, rollers and links if necessary. Make sure that the

secondary latch keeps the hood from opening when the primary latch is released.

When driving in areas using road salt or other corrosive materials, check lubrication frequently.

Lights*: Clean the headlights on a regular basis. Make sure that the headlights, stop lights, tail lights, turn signal lights, and other lights are all operating properly and installed securely. Also check headlight aim.

Road wheel nuts (lug nuts)*: When checking the tires, make sure no wheel nuts are missing, and check for any loose wheel nuts. Tighten if necessary.

Tire rotation*: Tires should be rotated every 5,000 miles (8,000 km).

Tires*: Check the pressure with a gauge often and always prior to long distance trips. If necessary, adjust the pressure in all tires, including the spare, to the pressure specified. Check carefully for damage, cuts or excessive wear.

Tire Pressure Monitoring System (TPMS) transmitter components: Replace the TPMS transmitter grommet seal, valve core and cap when the tires are replaced due to wear or age.

Wheel alignment and balance: If the vehicle should pull to either side while driving on a straight and level road, or if you detect uneven or abnormal tire wear, there may be a need for wheel alignment. If the steering wheel or seat vibrates at normal highway speeds, wheel balancing may be needed.

For additional information regarding tires, refer to "Important Tire Safety Information" (US) or "Tire Safety Information" (Canada) in the Warranty Information Booklet.

Windshield: Clean the windshield on a regular basis. Check the windshield at least every six months for cracks or other damage. Have a damaged windshield repaired by a qualified repair facility.

Windshield wiper blades*: Check for cracks or wear if they do not wipe properly.

Inside the vehicle

The maintenance items listed here should be checked on a regular basis, such as when performing scheduled maintenance, cleaning the vehicle, etc.

Accelerator pedal: Check the pedal for smooth operation and make sure the pedal does not bind or require uneven effort. Keep the floor mat away from the pedal.

Automatic transmission P (Park) position mechanism: On a fairly steep hill check that your vehicle is held securely with the shift lever in the P (Park) position without applying any brakes.

Brake pedal: Check the pedal for smooth operation. If the brake pedal suddenly goes down further than normal, the pedal feels spongy or the vehicle seems to take longer to stop, have your vehicle checked immediately. It is recommended that you visit a NISSAN dealer for this service.

Brakes: Check that the brakes do not pull the vehicle to one side when applied.

Parking brake: Check the parking brake operation regularly. The vehicle should be securely held on a fairly steep hill with only the parking brake applied. If the parking brake needs adjustment, it is recommended that you visit a NISSAN dealer for this service.

Seats: Check seat position controls such as seat adjusters, seatback recliner, etc., to ensure they operate smoothly and all latches lock securely in every position.

Check that the head restraints/headrests move up and down smoothly and the locks (if so equipped) hold securely in all latched positions.

Seat belts: Check that all parts of the seat belt system (for example, buckles, anchors, adjusters and retractors) operate properly and smoothly, and are installed securely. Check the belt webbing for cuts, fraying, wear or damage.

Steering wheel: Check for changes in the steering system, such as excessive free-play, hard steering or strange noises.

Warning lights and chimes: Make sure all warning lights and chimes are operating properly.

Windshield wiper and washer*: Check that the wipers and washer operate properly and that the wipers do not streak.

Windshield defroster: Check that the air comes out of the defroster outlets properly and in sufficient quantity when operating the heater or air conditioner.

Under the hood and vehicle

The maintenance items listed here should be checked periodically (for example, each time you check the engine oil or refuel).

Battery* (for serviceable batteries): Check the fluid level in each cell. The fluid should be at the bottom of the filler opening. Vehicles operated in high temperatures or under severe conditions require frequent checks of the battery fluid level.

NOTE:

Care should be taken to avoid situations that can lead to potential battery discharge and potential no-start conditions such as:

1. **Installation or extended use of electronic accessories that consume battery power when the engine is not running (Phone chargers, GPS, DVD players, etc.).**
2. **Vehicle is not driven regularly and/or only driven short distances.**

In these cases, the battery may need to be charged to maintain battery health.

Brake fluid level*: Make sure that the brake fluid level is between the MIN and MAX lines on the reservoir.

Engine coolant level*: Check the coolant level when the engine is cold.

Engine drive belts*: Make sure the drive belts are not frayed, worn, cracked or oily.

Engine oil level*: Check the level after parking the vehicle on a level surface with the engine off. Wait more than 10 minutes for the oil to drain back into the oil pan.

Exhaust system: Visually inspect the exhaust pipes, muffler and hangers for leaks, cracks, deterioration and damage. Tighten connections or replace parts as necessary. For additional information, refer to "Exhaust gas (carbon monoxide)" in the "Starting and driving" section of this manual.

Fluid leaks: Check under the vehicle for fuel, oil, water or other fluid leaks after the vehicle has been parked for a while. Water dripping from the air conditioner after use is normal. If you should notice any leaks or if fuel fumes are evident, check for the cause and have it corrected immediately.

Power steering fluid level* and lines: Check the level when the fluid is cold, with the engine off. Check the lines for proper attachment, leaks, cracks, etc.

EXPLANATION OF SCHEDULED MAINTENANCE ITEMS

Radiator and hoses Check the front of the radiator and clean off any dirt, insects, leaves, etc., that may have accumulated. Make sure the hoses have no cracks, deformation, rot or loose connections.

Underbody: The underbody is frequently exposed to corrosive substances such as those used on icy roads or to control dust. It is very important to remove these substances from the underbody, otherwise rust may form on the floor pan, frame, fuel lines and exhaust system. At the end of winter, the underbody should be thoroughly flushed with plain water, in those areas where mud and dirt may have accumulated. For additional information, refer to the "Appearance and care" section of this manual.

Windshield-washer fluid*: Check that there is adequate fluid in the reservoir.

The following descriptions are provided to give you a better understanding of the scheduled maintenance items that should be regularly checked or replaced. The maintenance schedule indicates at which mileage/time intervals each item requires service.

Items marked with **"*"** are recommended by NISSAN for reliable vehicle operation. You are not required to perform maintenance on these items in order to maintain the warranties which come with your NISSAN. Other maintenance items and intervals are required.

When applicable, additional information can be found in the "Do-it-yourself" section of this manual.

NOTE: NISSAN does not advocate the use of non-OEM approved aftermarket flushing systems and strongly advises against performing these services on a NISSAN product. Many of the aftermarket flushing systems use non-OEM approved chemicals or solvents, the use of which has not been validated by NISSAN.

For recommended fuel, lubricants, fluids, grease, and refrigerant, refer to "Recommended fluids/lubricants and capacities" in the "Technical and consumer information" section of this manual.

EMISSION CONTROL SYSTEM MAINTENANCE:

Drive Belts*: Check engine drive belts for wear, fraying or cracking and for proper tension. Replace any damaged drive belts.

Engine Air Filter: Replace at specified intervals. When driving for prolonged periods in dusty conditions, check/replace the filter more frequently.

Engine Coolant*: Replace coolant at the specified interval. When adding or replacing coolant, be sure to use only Genuine NISSAN Long Life Antifreeze/Coolant (blue) or equivalent with the proper mixture. (For additional information on the proper mixture for your area, refer to Engine cooling system" in the "Do-it-yourself" section of this manual or the "Titan Diesel Owner's Manual".)

NOTE: Mixing any other type of coolant or the use of non-distilled water may reduce the recommended service interval of the coolant.

Engine Oil and Oil Filter: Replace engine oil and oil filter at the specified intervals. For recommended oil grade and viscosity refer to "Recommended fluids/lubricants and capacities" in the "Technical and consumer information" section of this manual.

Engine Valve Clearance* (gasoline engine only): Inspect only if valve noise increases. Adjust valve clearance if necessary.

Evaporative Emissions Control Vapor Lines* (gasoline engine only): Check vapor lines for leaks or looseness. Tighten connections or replace parts as necessary.

Fuel Filter (diesel engine only): Replace the fuel filter and drain the water at the specified intervals.

Fuel Lines*: Check the fuel hoses, piping and connections for leaks, looseness, or deterioration. Tighten connections or replace parts as necessary.

CHASSIS AND BODY MAINTENANCE:

Brake Lines and Cables: Visually inspect for proper installation. Check for chafing, cracks, deterioration, and signs of leaking. Replace any deteriorated or damaged parts immediately.

Brake Pads and Rotors: Check for wear, deterioration and fluid leaks. Replace any deteriorated or damaged parts immediately.

Exhaust System: Visually inspect the exhaust pipes, muffler and hangers for leaks, cracks, deterioration, and damage. Tighten connections or replace parts as necessary.

In-Cabin Microfilter: Replace at specified intervals. When driving for prolonged periods in dusty conditions, replace the filter more frequently.

Propeller Shaft(s): Check for damage, looseness, and grease leakage. (4WD/AWD/RWD).

Steering Gear and Linkage, Axle and Suspension Parts, Drive Shaft Boots: Check for damage, looseness, and leakage of oil or grease. Under severe driving conditions, inspect more frequently.

Tire Rotation: Tires should be rotated every 5,000 miles (8,000 km) according to the instructions under "General maintenance" in this section. When rotating tires, check for damage and uneven wear. Replace if necessary.

Transmission Fluid/Oil, Differential Oil, Transfer Case Oil: Visually inspect for signs of leakage at specified intervals.

Replace automatic transmission fluid at specified intervals. (For diesel engine models)

If towing a trailer, using a camper or car-top carrier, or driving on rough or muddy roads:

- Replace the differential oil every 20,000 miles (32,000 km) or 24 months.
- Replace the automatic transmission fluid ever 30,000 miles (48,000 km) or 24 months. (For gasoline engine models)

Off-Road Maintenance: Check the following items frequently whenever you drive off-road through deep sand, mud or water:

- Brake pads and rotors
- Brake lines and hoses
- Differential, transmission and transfer case oil
- Steering linkage
- Propeller shaft(s) and front drive shafts
- Engine air filter
- Clutch housing drain (4WD only)

To help ensure smooth, safe and economical driving, NISSAN provides two maintenance schedules that may be used, depending upon the conditions in which you usually drive. These schedules contain both distance and time intervals, up to 120,000 miles (192,000 km)/144 months. For most people, the odometer reading will indicate when service is needed. However, if you drive very little, your vehicle should be serviced at the regular time intervals shown in the schedule.

After 120,000 miles (192,000 km)/ 144 months, continue maintenance at the same mileage/time intervals.

ADDITIONAL MAINTENANCE ITEMS FOR SEVERE OPERATING CONDITIONS

Additional maintenance items for severe operating conditions should be performed on vehicles that are driven under especially demanding conditions. Additional maintenance items should be performed if you primarily operate your vehicle under the following conditions:

- Repeated short trips of less than 5 miles in normal temperatures or less than 10 miles in freezing temperatures.
- Stop-and-go traffic in hot weather or low speed driving for long distances.
- Driving in dusty conditions or on rough, muddy or salt-spread roads.
- Towing a trailer, or using a camper or car-top carrier.

OIL CHANGE MONITOR (diesel engine only)

This vehicle is equipped with oil change monitor. It calculates engine oil and filter change interval base on driving conditions. Driving in severe conditions will shorten the engine oil and filter change interval. When the Engine Oil – Service Due Now warning appears in the vehicle information display, the engine oil and filter need to be replaced.

NOTE:

For vehicles operated in Canada, both standard and severe maintenance items should be performed at every interval.

GASOLINE STANDARD MAINTENANCE

The following tables show the standard maintenance schedule. Depending upon weather and atmospheric conditions, varying road surfaces, individual driving habits and vehicle usage, additional or more frequent maintenance may be required. **Maintenance beyond the last period on the tables requires similar maintenance.**

EMISSION CONTROL SYSTEM MAINTENANCE

Abbreviations: I = Inspect and correct or replace as necessary, R = Replace

MAINTENANCE OPERATION Perform at number of miles, kilometers or months, whichever comes first.	miles x 1,000 (km x 1,000) Months	MAINTENANCE INTERVAL											
		5 (8) 6	10 (16) 12	15 (24) 18	20 (32) 24	25 (40) 30	30 (48) 36	35 (56) 42	40 (64) 48	45 (72) 54	50 (80) 60	55 (88) 66	60 (96) 72
Drive belts	See NOTE (1)								I*		I*		I*
Air cleaner filter	See NOTE (2)						R						R
Engine oil		R	R	R	R	R	R	R	R	R	R	R	R
Engine oil filter		R	R	R	R	R	R	R	R	R	R	R	R
Engine coolant	See NOTE (4)(5)												
EVAP vapor lines					I*				I*				I*
Fuel lines					I*				I*				I*
Fuel filter	See NOTE (3)												
Spark plugs (Iridium - tipped type)		Replace every 105,000 miles (168,000)											
Intake and exhaust valve clearances	See NOTE (6)												

MAINTENANCE OPERATION Perform at number of miles, kilometers or months, whichever comes first.	miles x 1,000 (km x 1,000) Months	MAINTENANCE INTERVAL											
		65 (104) 78	70 (112) 84	75 (120) 90	80 (128) 96	85 (136) 102	90 (144) 108	95 (152) 114	100 (160) 120	105 (168) 126	110 (176) 132	115 (184) 138	120 (192) 144
Drive belts	See NOTE (1)		I*		I*		I*		I*		I*		I*
Air cleaner filter	See NOTE (2)						R						R
Engine oil		R	R	R	R	R	R	R	R	R	R	R	R
Engine oil filter		R	R	R	R	R	R	R	R	R	R	R	R
Engine coolant	See NOTE (4)(5)												
EVAP vapor lines					I*				I*				I*
Fuel lines					I*				I*				I*
Fuel filter	See NOTE (3)												
Spark plugs (Iridium - tipped type)		Replace every 105,000 miles (168,000)											
Intake and exhaust valve clearances	See NOTE (6)												

NOTE:

(1) After 40,000 miles (64,000 km) or 48 months, inspect every 10,000 miles (16,000 km) or 12 months. Replace the drive belts if found damaged.
(2) If operating mainly in dusty conditions, more frequent maintenance may be required.
(3) Periodic maintenance is not required.
(4) First replacement interval is 105,000 miles (168,000 km) or 84 months. After first replacement, replace every 75,000 miles (120,000 km) or 60 months.
(5) It is recommended that you use only Genuine NISSAN Long Life Antifreeze/Coolant (blue) or equivalent with proper mixture ratio of 50% antifreeze and 50% demineralized or distilled water. Mixing any other type of coolant or the use of non-distilled water may reduce the life expectancy of the factory fill coolant.
(6) Periodic maintenance is not required. However, if valve noise increased, inspect valve clearance.

*** Maintenance items and intervals with "*" are recommended by NISSAN for reliable vehicle operation. The owner need not perform such maintenance in order to maintain the emission warranty or manufacturer recall liability. Other maintenance items and intervals are required.**

CHASSIS & BODY MAINTENANCE

Abbreviations: I = Inspect and correct or replace as necessary, R = Replace,

MAINTENANCE OPERATION Perform at number of miles, kilometers or months, whichever comes first.	miles x 1,000 (km x 1,000) Months	MAINTENANCE INTERVAL											
		5 (8) 6	10 (16) 12	15 (24) 18	20 (32) 24	25 (40) 30	30 (48) 36	35 (56) 42	40 (64) 48	45 (72) 54	50 (80) 60	55 (88) 66	60 (96) 72
Brake lines and cables			I		I		I		I		I		I
Brake pads and rotors ★			I		I		I		I		I		I
Brake fluid ★					R				R				R
Automatic transmission fluid	See NOTE (1)												
Transfer fluid & differential gear oil	See NOTE (2)		I		I		I		I		I		I
Steering gear and linkage, axle and suspension parts ★					I				I				I
Tire rotation	See NOTE (3)												
Propeller shaft & drive shaft boots (4WD models) ★			I		I		I		I		I		I
Exhaust system ★					I				I				I
In-cabin microfilter				R			R			R			R
NISSAN Intelligent key® battery				R			R			R			R

MAINTENANCE OPERATION Perform at number of miles, kilometers or months, whichever comes first.	miles x 1,000 (km x 1,000) Months	MAINTENANCE INTERVAL											
		65 (104) 78	70 (112) 84	75 (120) 90	80 (128) 96	85 (136) 102	90 (144) 108	95 (152) 114	100 (160) 120	105 (168) 126	110 (176) 132	115 (184) 138	120 (192) 144
Brake lines and cables			I		I		I		I		I		I
Brake pads and rotors ★			I		I		I		I		I		I
Brake fluid ★					R				R				R
Automatic transmission fluid	See NOTE (1)												
Transfer fluid & differential gear oil	See NOTE (2)		I		I		I		I		I		I
Steering gear and linkage, axle and suspension parts ★					I				I				I
Tire rotation	See NOTE (3)												
Propeller shaft & drive shaft boots (4WD models) ★			I		I		I		I		I		I
Exhaust system ★					I				I				I
In-cabin microfilter				R			R			R			R
NISSAN Intelligent Key® battery				R			R			R			R

NOTE:

Maintenance items with "★" should be performed more frequently according to "Maintenance Under Severe Driving Conditions".
(1) Periodic maintenance is not required under normal driving condition. If using under the severe condition such as towing a trailer, using a car-top carrier, or driving on rough or muddy roads, change (not just inspect) oil at every 30,000 miles (48,000 km) or 24 months. NISSAN recommends using Genuine NISSAN Matic S automatic transmission fluid. Using automatic transmission fluid that is not equivalent to Genuine NISSAN Matic S may damage the transmission or impact transmission durability. Damage caused by the use of fluid other than as recommended is not covered under the NISSAN New Vehicle Limited Warranty.
(2) If towing a trailer, using a camper or car-top carrier, or driving on rough or muddy roads, change (not just inspect) oil at every 20,000 miles (32,000 km) or 24 months.
(3) For additional information, refer to "General maintenance" in this section.

GASOLINE MAINTENANCE UNDER SEVERE OPERATING CONDITIONS

The maintenance intervals shown on the preceding pages are for normal operating conditions. If the vehicle is mainly operated under severe driving conditions as shown below, more frequent maintenance must be performed on the following items as shown in the table.

SEVERE DRIVING CONDITIONS

- Repeated short trips of less than 5 miles (8 km).
- Repeated short trips of less than 10 miles (16 km) with outside temperatures remaining below freezing.
- Operating in hot weather in stop-and-go "rush hour" traffic.
- Extensive idling and/or low speed driving for long distance, such as police, taxi or door-to-door delivery use.
- Driving in dusty conditions.
- Driving on rough, muddy or salt spread roads.
- Towing a trailer, using a camper or a car-top carrier.

Maintenance operation: Inspect = Inspect and correct or replace as necessary.

Maintenance item	Maintenance operation	Maintenance interval
Brake fluid	Replace	Every 10,000 miles (16,000 km) or 12 months
Brake pads and rotors	Inspect	Every 5,000 miles (8,000 km) or 6 months
Steering gear and linkage, axle and suspension parts	Inspect	Every 5,000 miles (8,000 km) or 6 months
Propeller shaft & drive shaft boots (4WD models)	Inspect	Every 5,000 miles (8,000 km) or 6 months
Exhaust system	Inspect	Every 5,000 miles (8,000 km) or 6 months

DIESEL STANDARD MAINTENANCE

The following tables show the standard maintenance schedule. Depending upon weather and atmospheric conditions, varying road surfaces, individual driving habits and vehicle usage, additional or more frequent maintenance may be required. **Maintenance beyond the last period on the tables requires similar maintenance.**

EMISSION CONTROL SYSTEM MAINTENANCE

Abbreviations: I = Inspect and correct or replace as necessary, R = Replace, D = Drain water

MAINTENANCE OPERATION Perform at number of miles, kilometers or months, whichever comes first.	miles x 1,000 (km x 1,000) Months	MAINTENANCE INTERVAL											
		5 (8) 6	10 (16) 12	15 (24) 18	20 (32) 24	25 (40) 30	30 (48) 36	35 (56) 42	40 (64) 48	45 (72) 54	50 (80) 60	55 (88) 66	60 (96) 72
Drive belts	See NOTE (1)		I*		I*		I*		I*		I*		I*
Air cleaner filter	See NOTE (2)						R						R
Engine oil	See NOTE (3)		R		R		R		R		R		R
Engine oil filter	See NOTE (4)		R		R		R		R		R		R
Engine coolant		Replace every 45,000 miles or 36 months											
Fuel lines					I*				I*				I*
Fuel filter	See NOTES (5)		R/D		R/D		R/D		R/D		R/D		R/D

MAINTENANCE OPERATION Perform at number of miles, kilometers or months, whichever comes first.	miles x 1,000 (km x 1,000) Months	MAINTENANCE INTERVAL											
		65 (104) 78	70 (112) 84	75 (120) 90	80 (128) 96	85 (136) 102	90 (144) 108	95 (152) 114	100 (160) 120	105 (168) 126	110 (176) 132	115 (184) 138	120 (192) 144
Drive belts	See NOTE (1)		I*		I*		I*		I*		I*		I*
Air cleaner filter	See NOTE (2)						R						R
Engine oil	See NOTE (3)		R		R		R		R		R		R
Engine oil filter	See NOTE (4)		R		R		R		R		R		R
Engine coolant		Replace every 45,000 miles or 36 months											
Fuel lines					I*				I*				I*
Fuel filter	See NOTE (5)		R/D		R/D		R/D		R/D		R/D		R/D

NOTE:

(1) Replace the drive belts if found damaged.
(2) If operating mainly in dusty conditions, more frequent maintenance may be required.
(3) If operating on biodiesel blends between 6% and 10% (B6 and B10), the oil should be changed at least every 8,000 miles (12,875 km) or 6 months, whichever comes first.
(4) If operating on biodiesel blends between 6% and 10% (B6 and B10), the oil filter should be changed at least every 8,000 miles (12,875 km) or 6 months, whichever comes first.
(5) Both Stage I and Stage II fuel filters.

CHASSIS & BODY MAINTENANCE

Abbreviations: I = Inspect and correct or replace as necessary, R = Replace,

MAINTENANCE OPERATION Perform at number of miles, kilometers or months, whichever comes first.	miles x 1,000 (km x 1,000) Months	MAINTENANCE INTERVAL											
		5 (8) 6	10 (16) 12	15 (24) 18	20 (32) 24	25 (40) 30	30 (48) 36	35 (56) 42	40 (64) 48	45 (72) 54	50 (80) 60	55 (88) 66	60 (96) 72
Brake lines and cables			I		I		I		I		I		I
Brake pads and rotors ★			I		I		I		I		I		I
Brake fluid ★					R				R				R
Automatic transmission fluid			I		R		I		R		I		R
Differential gear oil	See NOTE (1)		I		I		I		I		I		I
Transfer fluid			I		I		I		I		I		I
Steering gear and linkage, axle and suspension parts ★					I				I				I
Tire rotation	See NOTE (2)												
Propeller shaft & drive shaft boots (4WD models) ★			I		I		I		I		I		I
Exhaust system ★			I		I		I		I		I		I
In-cabin microfilter				R			R			R			R
NISSAN Intelligent key® battery				R			R			R			R

MAINTENANCE OPERATION Perform at number of miles, kilometers or months, whichever comes first.	miles x 1,000 (km x 1,000) Months	MAINTENANCE INTERVAL											
		65 (104) 78	70 (112) 84	75 (120) 90	80 (128) 96	85 (136) 102	90 (144) 108	95 (152) 114	100 (160) 120	105 (168) 126	110 (176) 132	115 (184) 138	120 (192) 144
Brake lines and cables			I		I		I		I		I		I
Brake pads and rotors ★			I		I		I		I		I		I
Brake fluid ★					R				R				R
Automatic transmission fluid			I		R		I		R		I		R
Differential gear oil	See NOTE (1)		I		I		I		I		I		I
Transfer fluid			I		I		I		I		I		I
Steering gear and linkage, axle and suspension parts ★					I				I				I
Tire rotation	See NOTE (2)												
Propeller shaft & drive shaft boots (4WD models) ★			I		I		I		I		I		I
Exhaust system ★			I		I		I		I		I		I
In-cabin microfilter				R			R			R			R
NISSAN Intelligent Key® battery				R			R			R			R

NOTE:

Maintenance items with "★" should be performed more frequently according to "Maintenance Under Severe Driving Conditions".
(1) If towing a trailer, using a camper or car-top carrier, or driving on rough or muddy roads, change (not just inspect) oil at every 20,000 miles (32,000 km) or 24 months.
(2) For additional information, refer to "General maintenance" in this section.

DIESEL MAINTENANCE UNDER SEVERE OPERATING CONDITIONS

The maintenance intervals shown on the preceding pages are for normal operating conditions. If the vehicle is mainly operated under severe driving conditions as shown below, more frequent maintenance must be performed on the following items as shown in the table.

SEVERE DRIVING CONDITIONS

- Repeated short trips of less than 5 miles (8 km).
- Repeated short trips of less than 10 miles (16 km) with outside temperatures remaining below freezing.
- Operating in hot weather in stop-and-go "rush hour" traffic.
- Extensive idling and/or low speed driving for long distance, such as police, taxi or door-to-door delivery use.
- Driving in dusty conditions.
- Driving on rough, muddy or salt spread roads.
- Towing a trailer, using a camper or a car-top carrier.

OIL CHANGE MONITOR

This vehicle is equipped with oil change monitor. It calculates engine oil and filter change interval base on driving conditions. Driving in severe conditions will shorten the engine oil and filter change interval. When the Engine Oil – Service Due Now warning appears in the vehicle information display, the engine oil and filter need to be replaced.

Maintenance operation: Inspect = Inspect and correct or replace as necessary.

Maintenance item	Maintenance operation	Maintenance interval
Brake fluid	Replace	Every 10,000 miles (16,000 km) or 12 months
Brake pads and rotors	Inspect	Every 5,000 miles (8,000 km) or 6 months
Steering gear and linkage, axle and suspension parts	Inspect	Every 5,000 miles (8,000 km) or 6 months
Propeller shaft & drive shaft boots (4WD models)	Inspect	Every 5,000 miles (8,000 km) or 6 months
Exhaust system	Inspect	Every 5,000 miles (8,000 km) or 6 months
Engine oil and filter	Replace	Every 5,000 miles (8,000 km) or when the Engine Oil – Service Due Now warning appears in the vehicle information display

5,000 Miles (8,000 km) or 6 Months Dealer Name: Date: Mileage: Dealer Stamp:	**10,000 Miles (16,000 km) or 12 Months** Dealer Name: Date: Mileage: Dealer Stamp:	**15,000 Miles (24,000 km) or 18 Months** Dealer Name: Date: Mileage: Dealer Stamp:
20,000 Miles (32,000 km) or 24 Months Dealer Name: Date: Mileage: Dealer Stamp:	**25,000 Miles (40,000 km) or 30 Months** Dealer Name: Date: Mileage: Dealer Stamp:	**30,000 Miles (48,000 km) or 36 Months** Dealer Name: Date: Mileage: Dealer Stamp:
35,000 Miles (56,000 km) or 42 Months Dealer Name: Date: Mileage: Dealer Stamp:	**40,000 Miles (64,000 km) or 48 Months** Dealer Name: Date: Mileage: Dealer Stamp:	**45,000 Miles (72,000 km) or 54 Months** Dealer Name: Date: Mileage: Dealer Stamp:

50,000 Miles (80,000 km) or 60 Months Dealer Name: Date: Mileage: Dealer Stamp:	**55,000 Miles (88,000 km) or 66 Months** Dealer Name: Date: Mileage: Dealer Stamp:	**60,000 Miles (96,000 km) or 72 Months** Dealer Name: Date: Mileage: Dealer Stamp:
65,000 Miles (104,000 km) or 78 Months Dealer Name: Date: Mileage: Dealer Stamp:	**70,000 Miles (112,000 km) or 84 Months** Dealer Name: Date: Mileage: Dealer Stamp:	**75,000 Miles (120,000 km) or 90 Months** Dealer Name: Date: Mileage: Dealer Stamp:
80,000 Miles (128,000 km) or 96 Months Dealer Name: Date: Mileage: Dealer Stamp:	**85,000 Miles (136,000 km) or 102 Months** Dealer Name: Date: Mileage: Dealer Stamp:	**90,000 Miles (144,000 km) or 108 Months** Dealer Name: Date: Mileage: Dealer Stamp:

95,000 Miles (152,000 km) or 114 Months Dealer Name: Date: Mileage: Dealer Stamp:	**100,000 Miles (160,000 km) or 120 Months** Dealer Name: Date: Mileage: Dealer Stamp:	**105,000 Miles (168,000 km) or 126 Months** Dealer Name: Date: Mileage: Dealer Stamp:
110,000 Miles (176,000 km) or 132 Months Dealer Name: Date: Mileage: Dealer Stamp:	**115,000 Miles (184,000 km) or 138 Months** Dealer Name: Date: Mileage: Dealer Stamp:	**120,000 Miles (192,000 km) or 144 Months** Dealer Name: Date: Mileage: Dealer Stamp:

MEMO

10 Technical and consumer information

Recommended fluids/lubricants and capacities 10-2
Fuel recommendation 10-4
Engine oil and oil filter recommendations (for gas engine only) 10-7
Air conditioner system refrigerant and oil recommendations 10-8
Specifications 10-9
Engine 10-9
Wheels and tires 10-10
Dimensions and weights 10-11
When traveling or registering in another country 10-17
Vehicle identification 10-17
Vehicle Identification Number (VIN) plate 10-17
Vehicle identification number (chassis number) 10-17
Engine serial number 10-18
F.M.V.S.S./C.M.V.S.S. certification label 10-18
Emission control information label 10-19
Tire and Loading Information label 10-20
Air conditioner specification label 10-20
Installing front license plate 10-21
Vehicle loading information 10-22
Terms 10-22
Vehicle load capacity 10-23
Securing the load 10-24
Utili-track® channel system (if so equipped) 10-25
Loading tips 10-33
Truck-camper loading information 10-34
Crew cab models 10-34
King Cab® models 10-34
Special Body vehicles 10-34
Location for center of gravity 10-34
Vehicle load weight capacity 10-35
Measurement of weights 10-35
Towing a trailer 10-36
Maximum load limits 10-36
Towing load/specification 10-40
Towing safety 10-45
Flat towing for 2-Wheel Drive (2WD) vehicle (if so equipped) 10-61
Flat towing for 4-Wheel Drive (4WD) vehicle (if so equipped) 10-61
Snow plow 10-61
Uniform tire quality grading 10-62

Emission control system warranty. 10-63
Reporting safety defects 10-64
Readiness for inspection/maintenance (I/M) test (gas engine only). 10-65
Event Data Recorders (EDR). 10-65
Owner's Manual/Service Manual order information 10-66

RECOMMENDED FLUIDS/ LUBRICANTS AND CAPACITIES

The following are approximate capacities. The actual refill capacities may be slightly different. When refilling, follow the procedure described in the "Do-it-yourself" section to determine the proper refill capacity.

Fluid type			Capacity (approximate)			Recommended Fluids/Lubricants
			Metric Measure	US Measure	Imperial Measure	
Fuel	VK56VD		98.4 L	26 gal	21-5/8 gal	• For additional information, refer to "Fuel Recommendation" in this section.
	Cummins 5.0 L		—	—	—	• For additional information, refer to "Recommended fluids/ lubricants and capacities" chart of the "Titan Diesel Owner's Manual".
Engine oil *1 Drain and refill *1 For additional information, refer to "Changing engine oil" in the "Do-it-yourself" section of this manual.	VK56VD	With oil filter change	6.5 L	6-7/8 qt	5-3/4 qt	Gasoline engine models: • Genuine "Nissan Motor Oil 0W-20 SN" is recommended. • If the above motor oil is not available, use an equivalent motor oil that matches the above grade and viscosity. For additional information, refer to "Engine oil and oil filter recommendations" in this section.
		Without oil filter change	6.2 L	6-1/2 qt	5-1/2 qt	
	Cummins 5.0 L		—	—	—	Diesel engine models: • For additional information, refer to "Recommended fluids/ lubricants and capacities" chart of the "Titan Diesel Owner's Manual".
Engine coolant with reservoir	VK56VD	Non-XD model	15.23 L	4 gal	3-3/8 gal	• Pre-diluted Genuine NISSAN Long Life Antifreeze/Coolant (blue) or equivalent
		XD model	14.8 L	3-7/8 gal	3-1/4 gal	
	Cummins 5.0 L		—	—	—	• For additional information, refer to "Recommended fluids/ lubricants and capacities" chart of the "Titan Diesel Owner's Manual".

Fluid type			Capacity (approximate)			Recommended Fluids/Lubricants
			Metric Measure	US Measure	Imperial Measure	
Automatic Transmission Fluid (ATF)	6-speed (Diesel engine only)		—	—	—	• Genuine NISSAN Matic K ATF • Using automatic transmission fluid that is not equivalent to Genuine NISSAN Matic K ATF may damage the transmission or impact transmission durability. Damage caused by the use of fluid other than as recommended is not covered under the NISSAN New Vehicle Limited Warranty.
	7-speed (Gasoline engine only)					• Genuine NISSAN Matic S ATF • NISSAN recommends using Genuine NISSAN Matic S ATF ONLY in NISSAN automatic transmissions. Do not mix with other fluids. Using fluids that are not equivalent to Genuine NISSAN Matic S ATF may damage the automatic transmission. Damage caused by the use of fluid other than as recommended is not covered under the NISSAN New Vehicle Limited Warranty.
Differential gear oil	Front	Non-XD model	1.25 L	2-5/8 pt	2-1/4 pt	• Genuine NISSAN Differential Oil Hypoid Super-CT Synthetic GL-5 75W-90 • NISSAN recommends using Genuine NISSAN Differential Oil Hypoid Super-CT Synthetic GL-5 75W-90 ONLY in final drive. Do not mix with other fluids. Using fluids that are not equivalent to Genuine NISSAN Differential Oil Hypoid Super-CT Synthetic GL-5 75W-90 may damage the differential gear. Damage caused by the use of fluids other than as recommended is not covered under the NISSAN's New Vehicle Limited Warranty.
		XD model	1.51 L	3-1/4 pt	2-5/8 pt	
	Rear	Non-XD model	2.3 L	4-7/8 pt	4 pt	
		XD model	2.6 L	5-1/2 pt	4-5/8 pt	
Transfer fluid	Non-XD model		1.5 L	1-5/8 qt	1-3/8 qt	• Genuine NISSAN ATF D3M • Using fluid other than Genuine NISSAN ATF D3M may cause deterioration in driveability and transfer durability, and may damage the transfer case. Damage caused by fluids other than as recommended is not covered by the NISSAN New Vehicle Limited Warranty.
	XD model		1.8 L	1-7/8 qt	1-5/8 qt	
Power Steering Fluid (PSF)			—	—	—	• Genuine NISSAN PSF II or equivalent.

Fluid type	Capacity (approximate)			Recommended Fluids/Lubricants
	Metric Measure	US Measure	Imperial Measure	
Brake fluid	—	—	—	• Genuine NISSAN Super Heavy Duty Brake Fluid *2 or equivalent DOT 3. *2 Available in mainland USA through a NISSAN dealer.
Multi-purpose grease	—	—	—	• NLGI No. 2 (Lithium Soap base)
Air conditioning system refrigerant	—	—	—	• HFC-134a (R-134a) • For additional information, refer to "Air conditioner system refrigerant and oil recommendations" in this section.
Air conditioning system oil	—	—	—	• Genuine NISSAN A/C System Oil Type S (DH-PS) or equivalent • For additional information, refer to "Air conditioner system refrigerant and oil recommendations" in this section.
Windshield-washer fluid	4.5 L	1-1/4 gal	1 gal	• Genuine NISSAN Windshield Washer Concentrate Cleaner & Anti-freeze fluid or equivalent.

FUEL RECOMMENDATION

Gas engine only

Use unleaded regular gasoline with an octane rating of at least 87 AKI (Anti-Knock Index) number (Research octane number 91).

⚠ CAUTION

- **Using a fuel other than that specified could adversely affect the emission control system, and may also affect the warranty coverage.**

- **Under no circumstances should a leaded gasoline be used, because this will damage the three-way catalyst.**
- **Do not use E-15 or E-85 fuel in your vehicle. Your vehicle is not designed to run on E-15 or E-85 fuel. Using E-15 or E-85 fuel in a vehicle not specifically designed for E-15 or E-85 fuel can adversely affect the emission control devices and systems of the vehicle. Damage caused by such fuel is not covered by the NISSAN New Vehicle Limited Warranty.**

- **Do not use fuel that contains the octane booster methylcyclopentadienyl manganese tricarbonyl (MMT). Using fuel containing MMT may adversely affect vehicle performance and vehicle emissions. Not all fuel dispensers are labeled to indicate MMT content, so you may have to consult your gasoline retailer for more details. Note that Federal and California laws prohibit the use of MMT in reformulated gasoline.**

- **U.S. government regulations require ethanol dispensing pumps to be identified by a small, square, orange and black label with the common abbreviation or the appropriate percentage for that region.**

Diesel engine only

For additional information, refer to "Fuel recommendation" in the "Titan Diesel Owner's Manual".

Gasoline specifications

NISSAN recommends using gasoline that meets the World-Wide Fuel Charter (WWFC) specifications where it is available. Many of the automobile manufacturers developed this specification to improve emission control system and vehicle performance. Ask your service station manager if the gasoline meets the WWFC specifications.

Reformulated gasoline

Some fuel suppliers are now producing reformulated gasolines. These gasolines are specially designed to reduce vehicle emissions. NISSAN supports efforts towards cleaner air and suggests that you use reformulated gasoline when available.

Gasoline containing oxygenates

Some fuel suppliers sell gasoline containing oxygenates such as ethanol, Methyl Tert-butyl Ether (MTBE) and methanol with or without advertising their presence. NISSAN does not recommend the use of fuels of which the oxygenate content and the fuel compatibility for your NISSAN cannot be readily determined. If in doubt, ask your service station manager.

If you use oxygenate-blend gasoline, please take the following precautions as the usage of such fuels may cause vehicle performance problems and/or fuel system damage.

- **The fuel should be unleaded and have an octane rating no lower than that recommended for unleaded gasoline.**
- **If an oxygenate-blend other than methanol blend is used, it should contain no more than 10% oxygenate. (MTBE may, however, be added up to 15%.)**
- **E-15 fuel contains more than 10% oxygenate. E-15 fuel will adversely affect the emission control devices and systems of the vehicle and should not be used. Damage caused by such fuel is not covered by the NISSAN New Vehicle Limited Warranty.**
- **If a methanol blend is used, it should contain no more than 5% methanol (methyl alcohol, wood alcohol). It should also contain a suitable amount of appropriate cosolvents and corrosion inhibitors. If not properly formulated with appropriate cosolvents and corrosion inhibitors, such methanol blends may cause fuel system damage and/or vehicle performance problems. At this time, sufficient data is not available to ensure that all methanol blends are suitable for use in NISSAN vehicles.**

If any driveability problems such as engine stalling and difficult hot-starting are experienced after using oxygenate-blend fuels, immediately change to a non-oxygenate fuel or a fuel with a low blend of MTBE.

Take care not to spill gasoline during refueling. Gasoline containing oxygenates can cause paint damage.

E-15 fuel

E-15 fuel is a mixture of approximately 15% fuel ethanol and 85% unleaded gasoline. E-15 can only be used in vehicles designed to run on E-15 fuel. Do not use E-15 in your vehicle. U.S. government regulations require fuel ethanol dispensing pumps to be identified with small, square, orange and black label with the common abbreviation or the appropriate percentage for that region.

E-85 fuel

E-85 fuel is a mixture of approximately 85% fuel ethanol and 15% unleaded gasoline. E-85 can only be used in a Flexible Fuel Vehicle (FFV). Do not use E-85 in your vehicle. U.S. government regulations require fuel ethanol dispensing pumps to be identified by a small, square, orange and black label with the common abbreviation or the appropriate percentage for that region.

Fuel containing MMT

MMT, or methylcyclopentadienyl manganese tricarbonyl, is an octane boosting additive. NISSAN does not recommend the use of fuel containing MMT. Such fuel may adversely affect vehicle performance, including the emissions control system. Note that while some fuel pumps label MMT content, not all do, so you may have to consult your gasoline retailer for more details.

Aftermarket fuel additives

NISSAN does not recommend the use of any aftermarket fuel additives (for example, fuel injector cleaner, octane booster, intake valve deposit removers, etc.) which are sold commercially. Many of these additives intended for gum, varnish or deposit removal may contain active solvents or similar ingredients that can be harmful to the fuel system and engine.

Octane rating tips

Using unleaded gasoline with an octane rating lower than recommended can cause persistent, heavy "spark knock." ("Spark knock" is a metallic rapping noise.) If severe, this can lead to engine damage. If you detect a persistent heavy spark knock even when using gasoline of the stated octane rating, or if you hear steady spark knock while holding a steady speed on level roads, it is recommended that you have a NISSAN dealer correct the condition. Failure to correct the condition is misuse of the vehicle, for which NISSAN is not responsible.

Incorrect ignition timing may result in spark knock, after-run and/or overheating, which may cause excessive fuel consumption or engine damage. If any of the above symptoms are encountered, have your vehicle checked. It is recommended that you visit a NISSAN dealer for servicing.

However, now and then you may notice light spark knock for a short time while accelerating or driving up hills. This is not a cause for concern, because you get the greatest fuel benefit when there is light spark knock for a short time under heavy engine load.

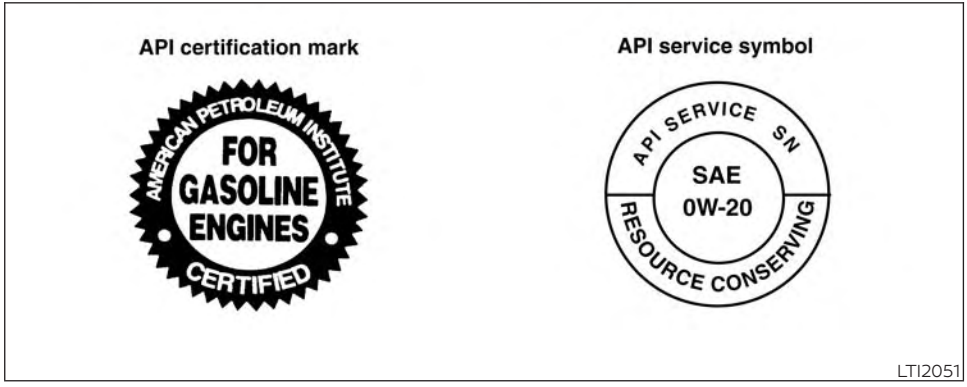

ENGINE OIL AND OIL FILTER RECOMMENDATIONS (for gas engine only)

For diesel engine oil and oil filter recommendations, refer to "Engine oil and oil filter recommendations" section of the "Titan Diesel Owner's Manual".

Selecting the correct oil

It is essential to choose the correct grade, quality and viscosity engine oil to ensure satisfactory engine life and performance. For additional information, refer to "Recommended fluids/lubricants and capacities" in this section. NISSAN recommends the use of an energy conserving oil in order to improve fuel economy.

Select only engine oils that meet the American Petroleum Institute (API) certification or International Lubricant Standardization and Approval Committee (ILSAC) certification and SAE viscosity standard. These oils have the API certification mark on the front of the container. Oils which do not have the specified quality label should not be used as they could cause engine damage.

Oil additives

NISSAN does not recommend the use of oil additives. The use of an oil additive is not necessary when the proper oil type is used and maintenance intervals are followed.

Oil which may contain foreign matter or has been previously used should not be used.

Oil viscosity

The engine oil viscosity or thickness changes with temperature. Because of this, it is important to select the engine oil viscosity based on the temperatures at which the vehicle will be operated before the next oil change. Choosing an oil viscosity other than that recommended could cause serious engine damage.

Selecting the correct oil filter

Your new NISSAN vehicle is equipped with a high-quality Genuine NISSAN oil filter. When replacing, use a Genuine NISSAN oil filter or its equivalent for the reason described in "Change intervals."

Change intervals

The oil and oil filter change intervals for your engine are based on the use of the specified quality oils and filters. Using engine oil and filters that are not of the specified quality, or exceeding recommended oil and filter change intervals could reduce engine life. Damage to the engine caused by improper maintenance or use of incorrect oil and filter quality and/or viscosity is not covered by the NISSAN New Vehicle Limited Warranty.

Your engine was filled with a high-quality engine oil when it was built. You do not have to change the oil before the first recommended change interval. Oil and filter change intervals depend upon how you use your vehicle.

Operation under the following conditions may require more frequent oil and filter changes:

- repeated short distance driving at cold outside temperatures
- driving in dusty conditions
- extensive idling
- towing a trailer
- stop and go commuting

For additional information, refer to the "Maintenance and schedules" section of this manual.

AIR CONDITIONER SYSTEM REFRIGERANT AND OIL RECOMMENDATIONS

The air conditioner system in your NISSAN vehicle must be charged with the refrigerant HFC-134a (R-134a) and NISSAN A/C system oil Type S (DH-PS) or the exact equivalents.

⚠ CAUTION

The use of any other refrigerant or oil may cause severe damage to the air conditioning system and may require the replacement of all air conditioner system components.

The refrigerant HFC-134a (R-134a) in your NISSAN vehicle does not harm the earth's ozone layer. Although this refrigerant does not affect the earth's atmosphere, certain government regulations require the recovery and recycling of any refrigerant during automotive air conditioner system service. A NISSAN dealer has the trained technicians and equipment needed to recover and recycle your air conditioner system refrigerant.

It is recommended that you visit a NISSAN dealer when servicing your air conditioner system.

ENGINE

Gas engine only

Model	VK56VD
Type Cylinder arrangement Bore x Stroke Displacement Firing order	Gasoline, 4-cycle, DOHC 8-cylinder, V-block, Slanted at 90° in (mm) 3.858 x 3.622 (98 x 92) cu in (cm^3) 338.78 (5,552) 1–8–7–3–6–5–4–2
Idle speed A/T (in "N" position) Ignition timing (degree B.T.D.C. at idle speed) CO % at idle	No adjustment is necessary.
Spark plug	DIKAR7B11
Spark plug gap (Nominal)	in (mm) 0.043 (1.1)
Camshaft operation	Timing chain

This spark ignition system complies with the Canadian standard ICES-002.

Diesel engine only

For additional information, refer to "Engine" in the "Titan Diesel Owner's Manual".

WHEELS AND TIRES

Wheel Type	Offset in (mm)	Size
Steel	1.73 (44)	17 x 7.5 J
	0.98 (25)	18 x 8.0 J
Alloy	0.98 (25)	18 x 8.0 J
	0.91 (23)	18 x 8.0 J
	1.63 (41.5)	18 x 7.5 J
	0.91 (23)	20 x 8.0 J
	1.63 (41.5)	20 x 7.5 J

Tire type	Performance type	Size
Passenger	All season	265/70R18
	All season	P265/70R18
	All season	P275/60R20
	All terrain	P275/70/R18
Light truck	All season	LT245/75R17
	All terrain	LT275/65R18
	All season	LT265/60R20

Spare wheel type	Performance type	Size
Full size (Non Matching) Steel	-	265/70R18
	-	P265/70R18
	-	LT245/75R17
Full size (Non Matching) Alloy	-	P275/60R20
Full size (Matching) Alloy	-	P275/70R18
	-	P275/60R20
	-	LT275/60R20
	-	LT275/65R18

DIMENSIONS AND WEIGHTS

Non-XD single cab models

	Models	Units: in (mm)
Overall Length:		228.1 (5,794.2)
Overall width:		79.5 (2,020)
Overall height:		
	2WD S	74.5 (1,893)
	2WD SV	74.6 (1,894)
	4WD S	75.1 (1,907.9)
	4WD SV	75.2 (1,908.9)
Front Track:		
	S and SV	67.9 (1,725)
	SL, Pro-4X and Platinum	68.1 (1,729)
Rear Track:		
	S and SV	67.9 (1,725)
	SL, Pro-4X and Platinum	68.1 (1,729)
Wheelbase:		139.8 (3,550)
Gross vehicle weight rating:		Refer to the "F.M.V.S.S./C.M.V.S.S. certification label" on the center pillar between the driver's side front and rear doors.
Gross axle weight rating:		
Front:		
Rear:		

XD single cab models

	Models	Units: in (mm)
Overall Length:		231 (5,866.5)
Overall width:		79.5 (2,020)
Overall height:		
	2WD with diesel engine	77.2 (1,960.5)
	4WD with diesel engine	77.1 (1959.5)
	2WD with gasoline engine	77.3 (1,962.5)
	4WD with gasoline engine	77.2 (1,960.5)
Front Track:		
	S and SV	68.4 (1,738)
	SL, Pro-4X and Platinum	68.6 (1,743)
Rear Track:		
	S and SV	68.3 (1,737)
	SL, Pro-4X and Platinum	68.6 (1,742)
Wheelbase:		139.8 (3,550)
Gross vehicle weight rating:		Refer to the "F.M.V.S.S./C.M.V.S.S. certification label" on the center pillar between the driver's side front and rear doors.
Gross axle weight rating:		
Front:		
Rear:		

Non-XD crew cab models

	Models	Units: in (mm)
Overall Length:		
	S, SV, SL and Platinum	228.1 (5,794.2)
	Pro-4X	228.5 (5,804.1)
Overall width:		
Tow mirrors extended		102.6 (2607.19)
Without overfenders	S, SV and SL	79.5 (2,020)
With overfenders	Pro-4X and Platinum	80.7 (2,049.6)
Overall height:		
	2WD S/SV	75.4 (1,915.1)
	4WD S/SV	76.0 (1,929.7)
	2WD SL/Platinum	75.6 (1,920.4)
	4WD Pro-4X	77.2 (1,960.3)
	4WD SL/Platinum	77.2 (1,959.7)
Front Track:		
	S and SV	67.9 (1,725)
	SL, Pro-4X and Platinum	68.1 (1,729)
Rear Track:		
	S and SV	67.9 (1,725)
	SL, Pro-4X and Platinum	68.1 (1,729)
Wheelbase:		139.8 (3,550)
Gross vehicle weight rating: Gross axle weight rating: Front: Rear:		Refer to the "F.M.V.S.S./C.M.V.S.S. certification label" on the center pillar between the driver's side front and rear doors.

XD crew cab models

	Models	Units: in (mm)
Overall Length:		
Without front license plate bracket	S, SV, SL and Platinum	242.7 (6,165.7)
Without front license plate bracket	Pro-4X	243.6 (6,187.1)
With front license plate bracket	S, SV, SL and Platinum	243.0 (6,172.6)
With front license plate bracket	Pro-4X	243.9 (6,194.6)
Overall width:		
Tow mirrors non-extended		98.2 (2,494)
Tow mirrors extended		103.9 (2,640)
Without overfenders	S, SV and SL	79.5 (2,019.9)
With overfenders	Pro-4X and Platinum	80.7 (2,048.9)
Overall height:		
	2WD/4WD S/SV	78.0 (1980)
	4WD Pro-4X	78.3 (1,990)
	2WD/4WD SL/Platinum	78.7 (2,000)
Front Track:		
	S and SV	68.4 (1,738)
	SL, Pro-4X and Platinum	68.6 (1,743)
Rear Track:		
	S and SV	68.3 (1,737)
	SL, Pro-4X and Platinum	68.6 (1,742)
Wheelbase:		151.6 (3,850)
Gross vehicle weight rating: Gross axle weight rating: Front: Rear:		Refer to the "F.M.V.S.S./C.M.V.S.S. certification label" on the center pillar between the driver's side front and rear doors.

Non-XD King Cab® models

	Models	Units: in (mm)
Overall Length:		
	S and SV	228.1 (5,794.2)
	Pro-4X	228.5 (5,804.1)
Overall width:		
	S and SV	79.5 (2,020)
	Pro-4X	80.7 (2,049.6)
Overall height:		
	2WD S	75.1 (1,906.6)
	4WD S	75.7 (1,921.8)
	2WD SV	75.1 (1,908)
	4WD SV	75.7 (1,923.2)
	Pro-4X	76.9 (1,953.2)
Front Track:		
	S and SV	67.9 (1,725)
	Pro-4X	68.1 (1,729)
Rear Track:		
	S and SV	67.9 (1,725)
	Pro-4X	68.1 (1,729)
Wheelbase:		139.8 (3,550)
Gross vehicle weight rating: Gross axle weight rating: Front: Rear:		Refer to the "F.M.V.S.S./C.M.V.S.S. certification label" on the center pillar between the driver's side front and rear doors.

XD King Cab® models

	Models	Units: in (mm)
Overall Length:		
	S and SV	231.0 (5,866.5)
	Pro-4X	231.8 (5887.9)
Overall width:		
	S and SV	79.5 (2,020)
	Pro-4X	80.7 (2,049.6)
Overall height:		
	2WD S and SV	77.7 (1,974.3)
	4WD S and SV	77.7 (1,973.4)
	4WD Pro-4X	78.1 (1,983.5)
Front Track:		
	S and SV	68.4 (1,738)
	Pro-4X	68.6 (1,743)
Rear Track:		
	S and SV	68.4 (1,737)
	Pro-4X	68.6 (1,742)
Wheelbase:		139.8 (3,550)
Gross vehicle weight rating: Gross axle weight rating: Front: Rear:		Refer to the "F.M.V.S.S./C.M.V.S.S. certification label" on the center pillar between the driver's side front and rear doors.

WHEN TRAVELING OR REGISTERING IN ANOTHER COUNTRY

When planning to drive your NISSAN vehicle in another country, you should first find out if the fuel available is suitable for your vehicle's engine.

Using fuel with an octane rating that is too low may cause engine damage. All gasoline vehicles must be operated with unleaded gasoline. Therefore, avoid taking your vehicle to areas where appropriate fuel is not available.

When transferring the registration of your vehicle to another country, state, province or district, it may be necessary to modify the vehicle to meet local laws and regulations.

The laws and regulations for motor vehicle emission control and safety standards vary according to the country, state, province or district; therefore, vehicle specifications may differ.

When any vehicle is to be taken into another country, state, province or district and registered, its modifications, transportation and registration are the responsibility of the user. NISSAN is not responsible for any inconvenience that may result.

VEHICLE IDENTIFICATION

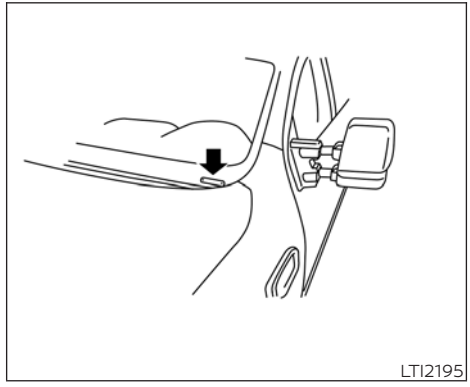

VEHICLE IDENTIFICATION NUMBER (VIN) PLATE

The vehicle identification number (VIN) plate is attached as shown. This number is the identification for your vehicle and is used in the vehicle registration.

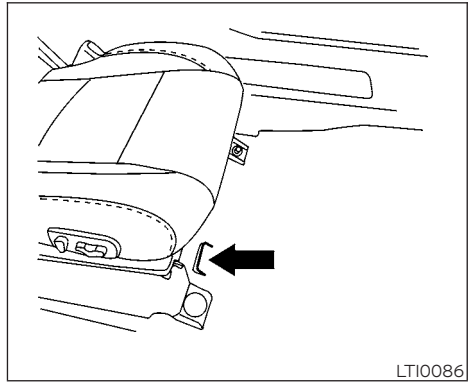

VEHICLE IDENTIFICATION NUMBER (chassis number)

The vehicle identification number is located as shown.

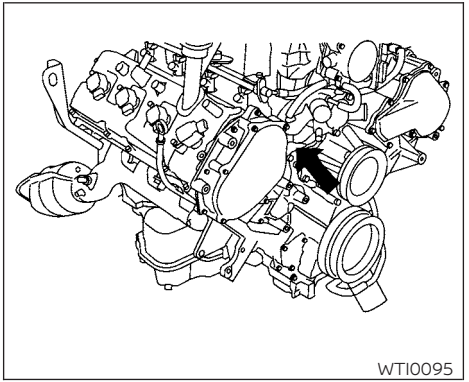

VK56VD

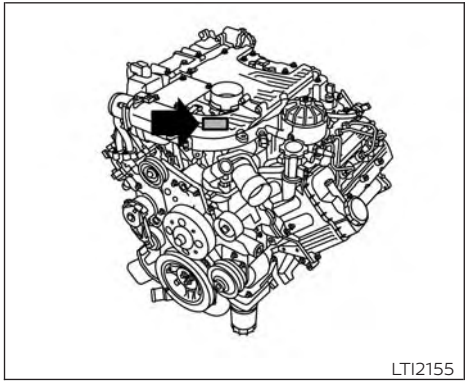

Cummins 5.0L

ENGINE SERIAL NUMBER

The engine serial number is stamped on the engine as shown.

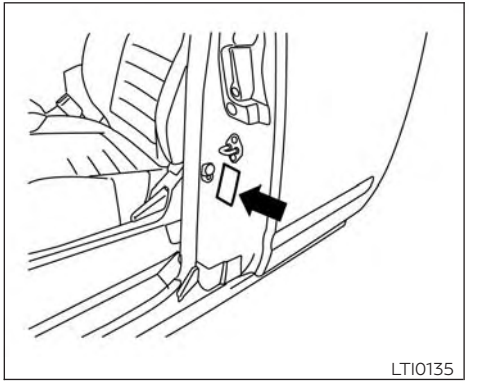

Type A (if so equipped)

F.M.V.S.S./C.M.V.S.S. CERTIFICATION LABEL

The Federal/Canadian Motor Vehicle Safety Standard (F.M.V.S.S./C.M.V.S.S.) certification label is affixed as shown. This label contains valuable vehicle information, such as: (GVWR), (GAWR), month and year of manufacture, (VIN), etc. Review it carefully.

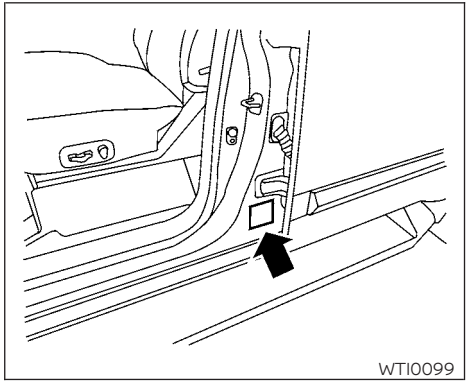

Type B (if so equipped)

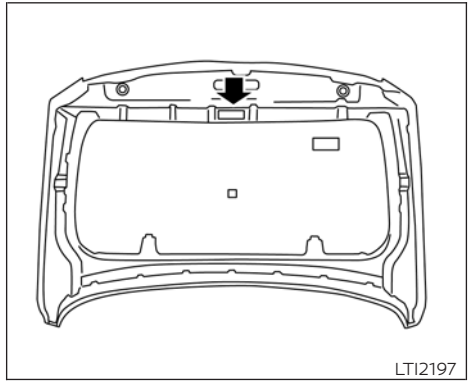

XD models

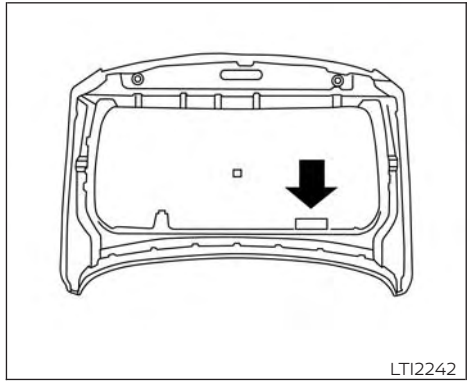

Except XD models

EMISSION CONTROL INFORMATION LABEL

The emission control information label is attached to the underside of the hood as shown.

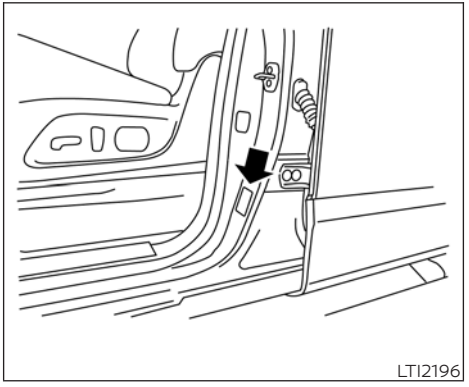

TIRE AND LOADING INFORMATION LABEL

The cold tire pressure is shown on the Tire and Loading Information Label. The label is located as shown.

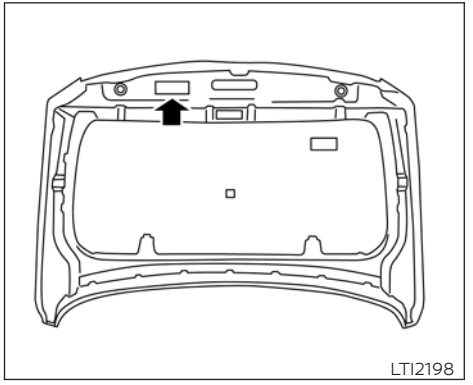

XD models

AIR CONDITIONER SPECIFICATION LABEL

The air conditioner specification label is affixed to the underside of the hood as shown.

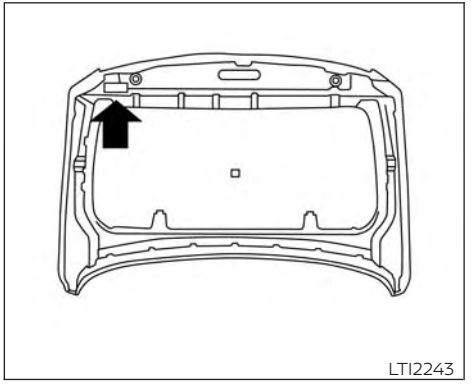

Except XD models

INSTALLING FRONT LICENSE PLATE

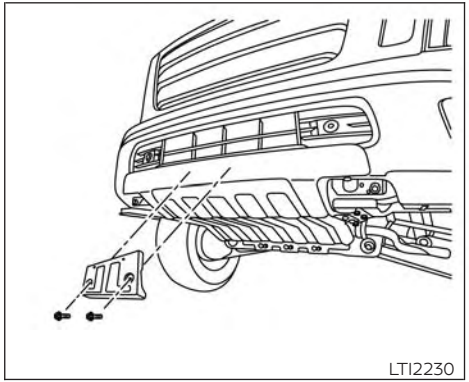

Pro-4X

Use the following steps to mount the front license plate:

1. Attach the license plate bracket on the skid plate at the location marked (small dimple) using self-tapping screws.

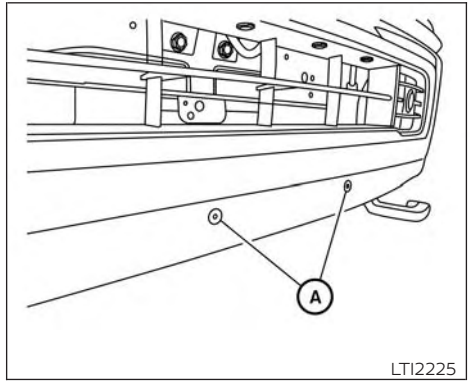

Except Pro-4x

Use the following steps to mount the front license plate:

1. Install two grommets Ⓐ into the square holes in the front bumper.

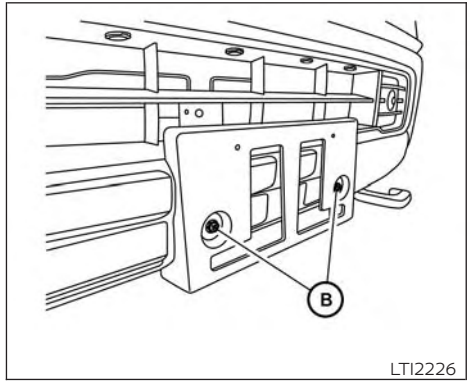

Except Pro-4x

2. Install the license plate bracket to the front bumper with two tapping screws Ⓑ.

⚠WARNING

- **It is extremely dangerous to ride in a cargo area inside a vehicle. In a collision, people riding in these areas are more likely to be seriously injured or killed.**
- **Do not allow people to ride in any area of your vehicle that is not equipped with seats and seat belts.**
- **Be sure everyone in your vehicle is in a seat and using a seat belt properly.**

TERMS

It is important to familiarize yourself with the following terms before loading your vehicle:

- Curb Weight (actual weight of your vehicle) - vehicle weight including: standard and optional equipment, fluids, emergency tools, and spare tire assembly. This weight **does not** include passengers and cargo.
- GVW (Gross Vehicle Weight) - curb weight plus the combined weight of passengers and cargo.
- GVWR (Gross Vehicle Weight Rating) - maximum total combined weight of the unloaded vehicle, passengers, luggage, hitch, trailer tongue load and any other optional equipment. This information is located on the F.M.V.S.S./C.M.V.S.S. certification label.
- GAWR (Gross Axle Weight Rating) - maximum weight (load) limit specified for the front or rear axle. This information is located on the F.M.V.S.S./C.M.V.S.S. certification label.
- GCWR (Gross Combined Weight rating) - The maximum total weight rating of the vehicle, passengers, cargo, and trailer.
- Vehicle Capacity Weight, Load limit, Total load capacity - maximum total weight limit specified of the load (passengers and cargo) for the vehicle. This is the maximum combined weight of occupants and cargo that can be loaded into the vehicle. If the vehicle is used to tow a trailer, the trailer tongue weight must be included as part of the cargo load. This information is located on the Tire and Loading Information label.
- Cargo capacity - permissible weight of cargo, the subtracted weight of occupants from the load limit.

VEHICLE LOAD CAPACITY

Before driving a loaded vehicle, confirm that you do not exceed the Gross Vehicle Weight Rating (GVWR) or the Gross Axle Weight Rating (GAWR) for your vehicle. Both the GVWR and GAWR are located on the F.M.V.S.S./C.M.V.S.S. certification label. For additional information, refer to "Measurement of weights" in this section.

Do not exceed the load limit of your vehicle shown as "The combined weight of occupants and cargo" on the Tire and Loading Information label. Do not exceed the number of occupants shown as "Seating Capacity" on the Tire and Loading Information label.

To get "the combined weight of occupants and cargo", add the weight of all occupants, then add the total luggage weight. Examples are shown in the following illustration.

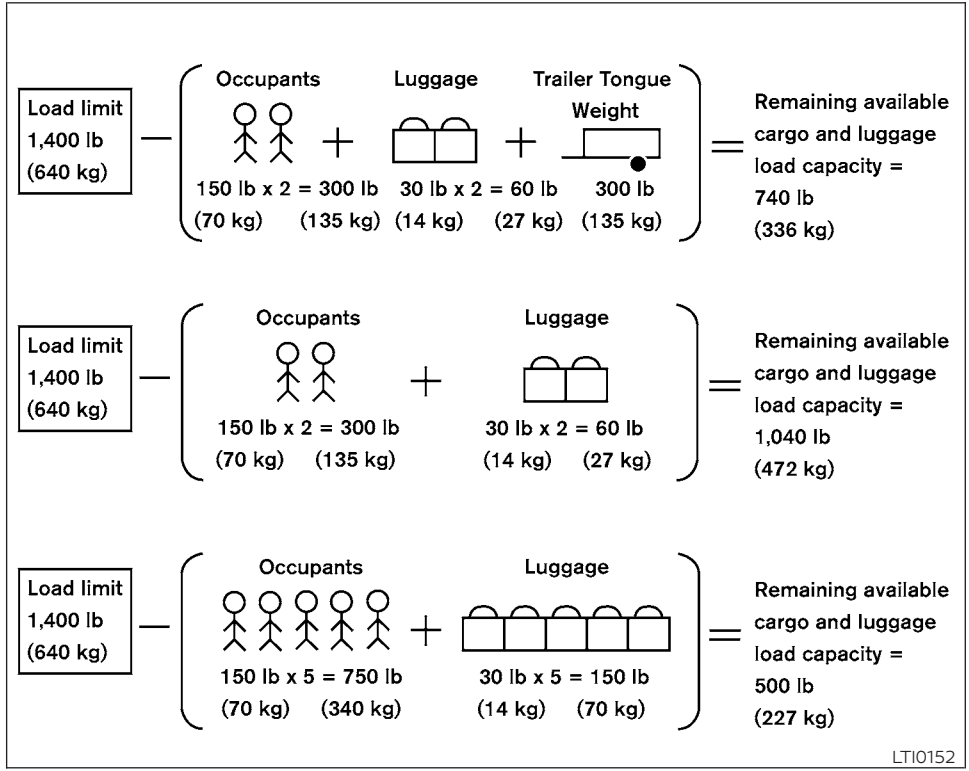

Example

Steps for determining correct load limit

1. Locate the statement "The combined weight of occupants and cargo should never exceed XXX lbs. or XXX kg" on your vehicle's Tire and Loading Information label.
2. Determine the combined weight of the driver and passengers that will be riding in your vehicle.
3. Subtract the combined weight of the driver and passengers from XXX lbs. or XXX kg.
4. The resulting figure equals the available amount of cargo and luggage load capacity. For example, if the XXX amount equals 1,400 lbs. and there will be five 150 lbs. passengers in your vehicle, the amount of available cargo and luggage load capacity is 650 lbs. (1,400-750 (5 X 150) = 650 lbs.) or (640-340 (5 X 70) = 300 kg.)
5. Determine the combined weight of luggage and cargo being loaded on the vehicle. That weight may not safely exceed the available cargo and luggage load capacity calculated in step 4.
6. If your vehicle will be towing a trailer, load from your trailer will be transferred to your vehicle. Consult this manual to determine how this reduces the available cargo and luggage load capacity of your vehicle.

Before driving a loaded vehicle, confirm that you do not exceed the GVWR or the GAWR for your vehicle. For additional information, refer to "Measurement of weights" in this section.

Also check tires for proper inflation pressures. For additional information, refer to "Tire and Loading Information label" in the "Do-it-yourself" section of this manual.

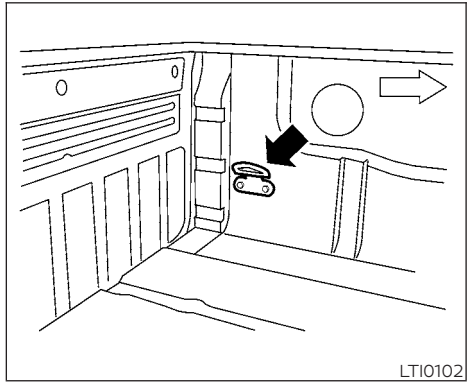

SECURING THE LOAD

For your convenience, tie down hooks are placed at each corner of the truck box. These may be used to help secure cargo loaded into the truck box.

⚠ WARNING

- **Properly secure all cargo with ropes or straps to help prevent it from sliding or shifting. Do not place cargo higher than the seatbacks. In a sudden stop or collision, unsecured cargo could cause personal injury.**

- **Do not load your vehicle any heavier than the GVWR or the maximum front and rear GAWRs. If you do, parts of your vehicle can break, tire damage could occur, or it can change the way your vehicle handles. This could result in loss of control and cause personal injury.**

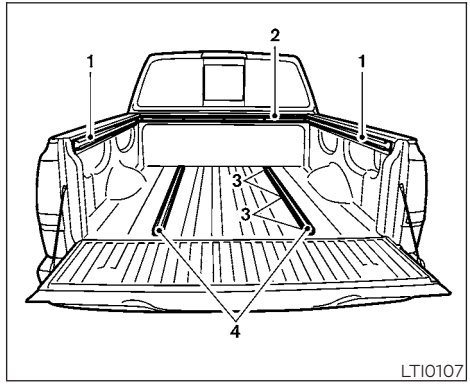

UTILI-TRACK® CHANNEL SYSTEM (if so equipped)

1. Side channels
2. Header channel
3. Channel sections
4. Floor channels

WARNING

- **Properly install and tighten the tie-down cleats into the Utili-track® channel system. Also, do not attach any rope or straps directly to the channel. Failure to properly install the tie-down cleats or attaching ropes or straps directly to the channel can cause the cargo to become unsecured. In a sudden stop or collision, unsecured cargo could cause personal injury.**
- **Properly secure all cargo with ropes or straps to help prevent it from sliding or shifting. In a sudden stop or collision, unsecured cargo could cause personal injury.**

NOTE:

If the bed liner storage bins (if so equipped) are installed on the vehicle, use type B cleats (if so equipped) in the side channel locations. The use of type A cleats (if so equipped) in the side channel locations with the bed liner storage bins installed will interfere with bed liner storage bin lid operation. For additional information on bed liner storage bins, refer to "Storage" in the "Instruments and controls" section of this manual.

The Utili-track® channel system allows you to move tie-down clamps in the bed to the best location to secure a load.

The tie-down cleats must be installed so the clamp is properly seated in the notches in the rail. If the tie-down cleat is not seated in the notches, it will not be flush with the rail and cannot be properly tightened. The bolt in the center of the cleat must be tightened hand tight (20 – 40 in-lbs.)

Check the tightness of the tie-down cleat periodically during a trip to make sure the center bolt has not become loose.

Install the tie-down cleat as follows:

1. Remove the channel protectors by sliding them out the back of the truck bed. Properly store the channel protectors.
2. Loosen the center bolt completely.

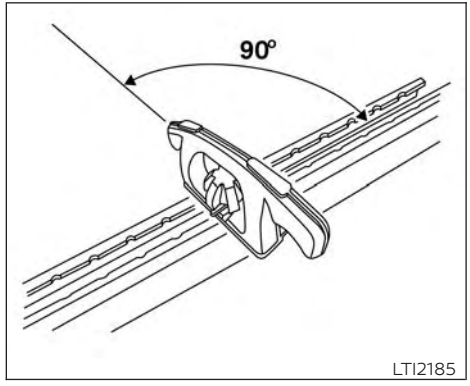

Type A cleat (if so equipped)

3. Insert the cleat into the channel perpendicular to the channel as shown. Then rotate the cleat clockwise 90° and slide it to the desired location.

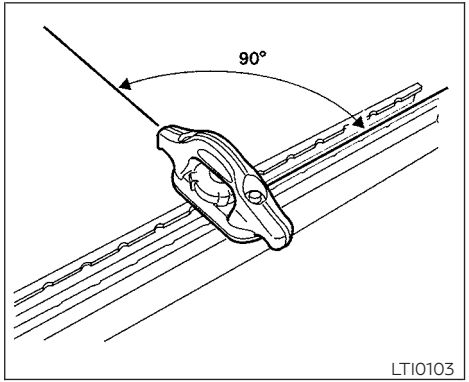

Type B cleat (if so equipped)

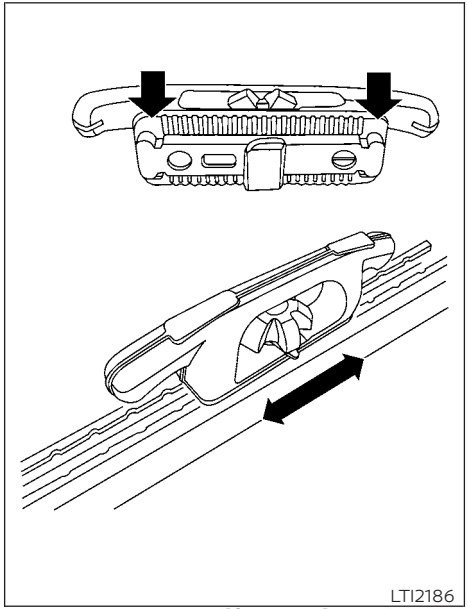

Type A cleat (if so equipped)

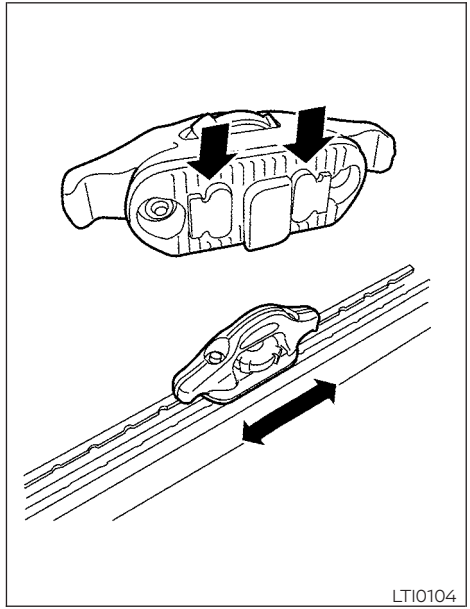

Type B cleat (if so equipped)

4. Position the cleat so the nubs on the bottom fully seat into the channel detents.

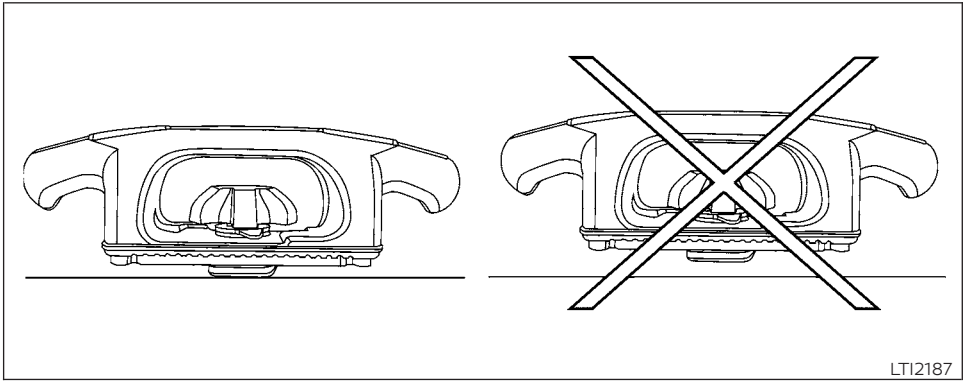

Type A cleat (if so equipped)

5. There should be no gap between the bottom of the cleat and the top of the channel. Tighten the center bolt hand tight (20-40 in-lbs.).

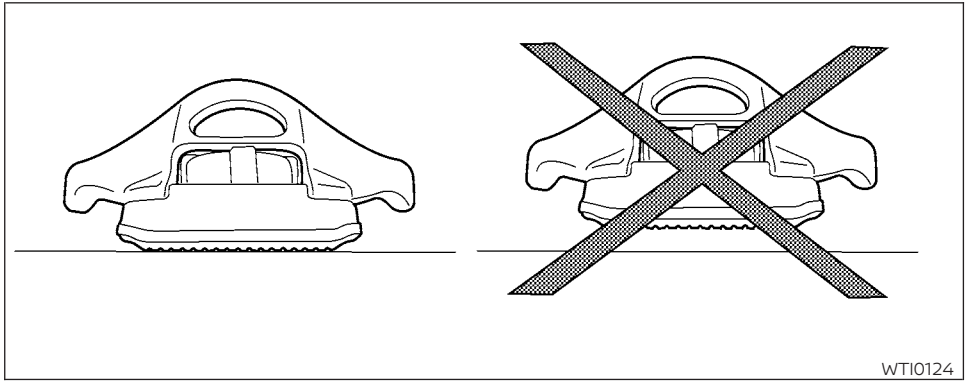

Type B cleat (if so equipped)

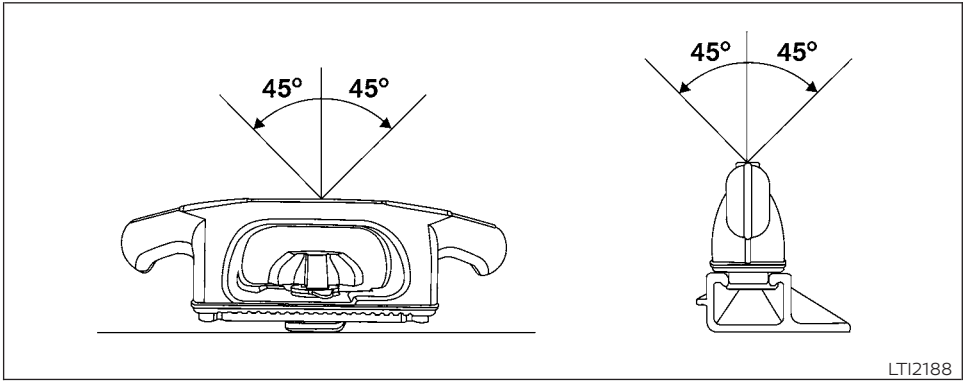

Type A cleat (if so equipped)

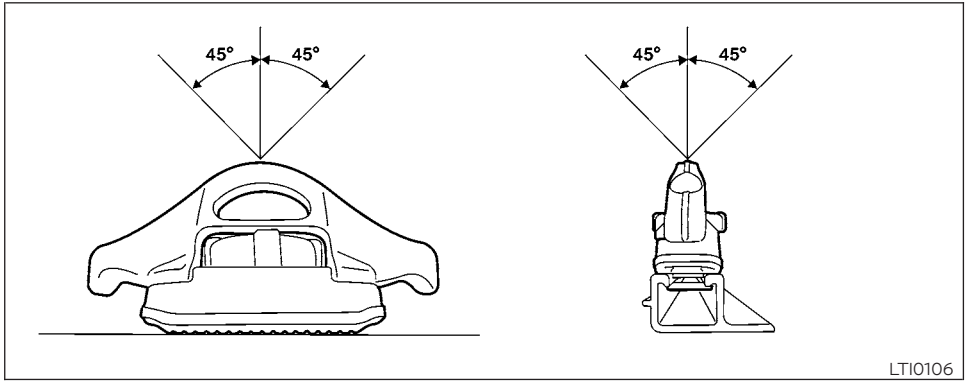

Type B cleat (if so equipped)

⚠ CAUTION

- **Install only one cleat per section of channel.**
- **Applying loads at angles to the cleats greater then 45° or loads greater than 150 lbs. (header and floor channels) or 200 lbs. (side channels) may cause damage to the channel or bed.**

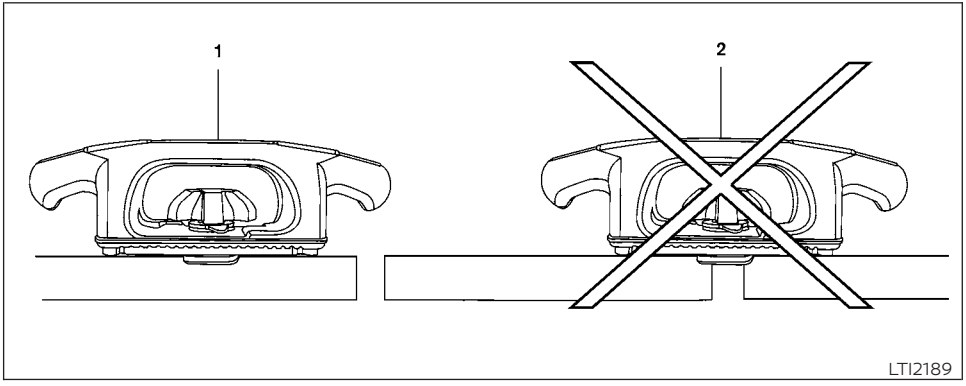

Type A cleat (if so equipped) 1 correct installation, 2 incorrect installation

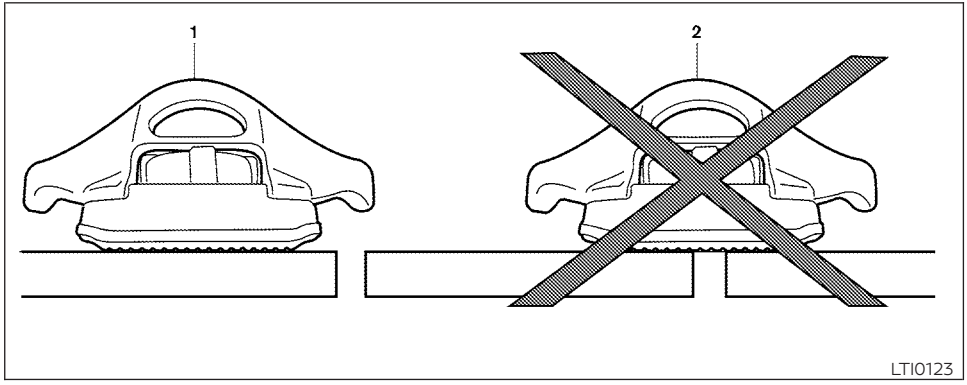

Type B cleat (if so equipped) 1 correct installation, 2 incorrect installation

⚠WARNING

Do not install accessories over the gap between the front and rear side channels. Doing this could affect the rear structure in certain rear impacts, which could result in serious injury.

LOADING TIPS

- The GVW must not exceed GVWR or GAWR as specified on the F.M.V.S.S./C.M.V.S.S. certification label.
- Do not load the front and rear axle to the GAWR. Doing so will exceed the GVWR.

⚠WARNING

- **Properly secure all cargo with ropes or straps to help prevent it from sliding or shifting. Do not place cargo higher than the seatbacks. In a sudden stop or collision, unsecured cargo could cause personal injury.**
- **Do not load your vehicle any heavier than the GVWR or the maximum front and rear GAWRs. If you do, parts of your vehicle can break, tire damage could occur, or it can change the way your vehicle handles. This could result in loss of control and cause personal injury.**
- **Overloading not only can shorten the life of your vehicle and the tire, but can also cause unsafe vehicle handling and longer braking distances. This may cause a premature tire failure which could result in a serious accident and personal injury. Failures caused by overloading are not covered by the vehicle's warranty.**

CREW CAB MODELS

Crew Cab short wheel base models should not be used to carry a slide-in camper.

KING CAB® MODELS

This information is provided for you to properly install a slide-in camper and is based on the National Highway Traffic Safety Administration regulations. It is recommended that, before installing the camper, you carefully read the following information and ensure that the camper meets the specifications.

This information may not apply to some Canada model vehicles.

SPECIAL BODY VEHICLES

Some vehicles are equipped with commercial or camper bodies. However, this Owner's Manual does not cover these options. For additional information, refer to the body manufacturer's instruction manual.

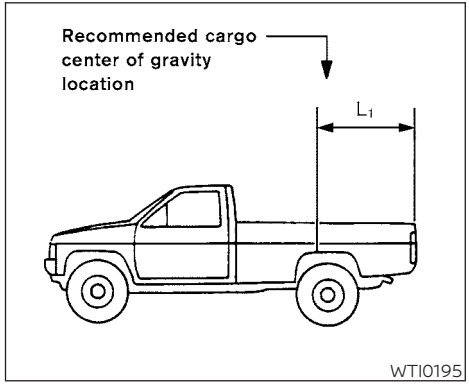

LOCATION FOR CENTER OF GRAVITY

The illustration indicates the recommended cargo center of gravity location.

Single Cab models:

L1 = 49.0 in (1,245 mm)

Crew Cab Non-XD models:

L1 = 33.8 in (858 mm)

Crew Cab XD models:

L1 = 47.2 in (1,200 mm)

King Cab® Non-XD models:

L1 = 39.6 in (1,005 mm)

King Cab® XD models:

L1 = 47.4 in (1,205 mm)

⚠ WARNING

Improper loading may be dangerous. If a load is too far back, it can affect handling characteristics. If a load is too far forward, the front axle may be overloaded.

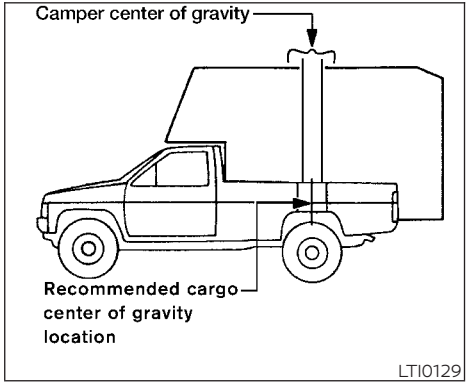

When the truck is used to carry a slide-in camper, the total cargo load of the truck consists of the camper manufacturer's weight figure, plus:

- the weight of installed additional camper equipment not included in the camper manufacturer's weight figure,
- the weight of camper cargo,
- and the weight of occupants in the camper.

The total cargo load should not exceed the truck's pay load weight rating and the camper's center of gravity should fall within the truck's recommended center of gravity location when installed.

⚠ WARNING

Overloading or improper loading can adversely affect vehicle handling, braking and performance and may lead to accidents.

VEHICLE LOAD WEIGHT CAPACITY

The vehicle payload weight capacity shown on the Tire and Loading Information label indicates the maximum total weight of passengers, optional equipment (air conditioning, trailer hitch, etc.) and cargo that your vehicle is designed to carry.

For additional information, refer to "Tire and Loading Information label" in this section.

Before driving a loaded vehicle, confirm that you do not exceed the GVWR or the GAWR for your vehicle. For additional information, refer to "Vehicle loading information" in this section.

Also check tires for proper inflation pressures. For additional information, refer to the "Tire and Loading Information label" in this section.

MEASUREMENT OF WEIGHTS

Secure loose items to prevent weight shifts that could affect the balance of your vehicle. When the vehicle is loaded, drive to a scale and weigh the front and the rear wheels separately to determine axle loads. Individual axle loads should not exceed either of the gross axle weight ratings (GAWR). The total of the axle loads should not exceed the gross vehicle weight rating (GVWR). These ratings are given on the vehicle certification label. If weight ratings are exceeded, move or remove items to bring all weights below the ratings.

⚠ WARNING

Overloading or improper loading of a trailer and its cargo can adversely affect vehicle handling, braking and performance and may lead to accidents.

⚠ CAUTION

- **Do not tow a trailer or haul a heavy load for the first 500 miles (805 km). Your engine, axle or other parts could be damaged.**
- **For the first 500 miles (805 km) that you tow a trailer, do not drive over 50 mph (80 km/h) and do not make starts at full throttle. This helps the engine and other parts of your vehicle wear in at the heavier load.**

Your new vehicle was designed to be used primarily to carry passengers and cargo. Remember that towing a trailer places additional loads on your vehicle's engine, drive train, steering, braking and other systems.

A NISSAN Towing Guide (U.S. only) is available on the website at www.nissanusa.com. This guide includes information on trailer towing capability and the special equipment required for proper towing.

MAXIMUM LOAD LIMITS

Maximum trailer loads

Never allow the total trailer load to exceed the value specified in the "Towing Load/Specification" chart found in this section. The total trailer load equals trailer weight plus its cargo weight.

- **When towing a trailer load of 3,500 lbs. (1,587 kg) or more, trailers with a brake system MUST be used.**

The maximum GCWR should not exceed the value specified in the following "Towing Load/Specification" chart.

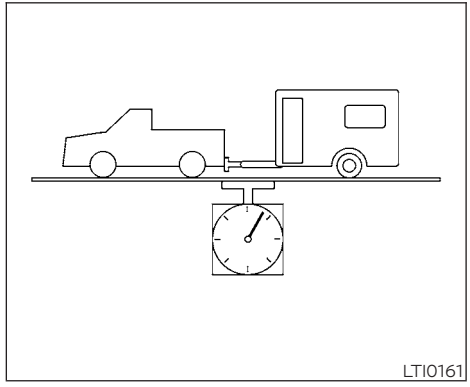

The GCWR equals the combined weight of the towing vehicle (including passengers and cargo) plus the total trailer load. Towing loads greater than these or using improper towing equipment could adversely affect vehicle handling, braking and performance.

The ability of your vehicle to tow a trailer is not only related to the maximum trailer loads, but also the places you plan to tow. Tow weights appropriate for level highway driving may have to be reduced for low traction situations (for example, on slippery boat ramps).

Temperature conditions can also affect towing. For example, towing a heavy trailer in high outside temperatures on graded roads can affect engine performance and cause overheating. The engine protection mode, which helps reduce the chance of engine damage, could activate and automatically decrease engine power. Vehicle speed may decrease under high load. Plan your trip carefully to account for trailer and vehicle load, weather and road conditions.

⚠ WARNING

Overheating can result in reduced engine power and vehicle speed. The reduced speed may be lower than other traffic, which could increase the chance of a collision. Be especially careful when driving. If the vehicle cannot maintain a safe driving speed, pull to the side of the road in a safe area. Allow the engine to cool and return to normal operation. For additional information, refer to "If your vehicle overheats" in the "In case of emergency" section of this manual.

⚠ CAUTION

Vehicle damage resulting from improper towing procedures is not covered by NISSAN warranties.

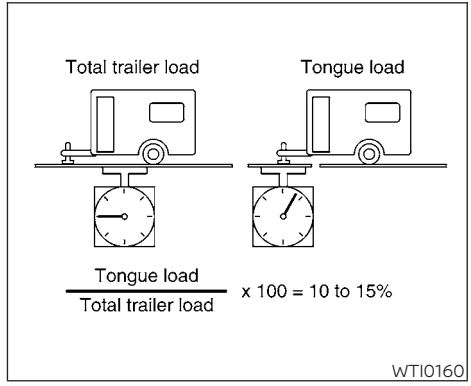

Tongue load

When using a weight carrying or a weight distributing hitch, keep the tongue load between 10 - 15% of the total trailer load or use the trailer tongue load specified by the trailer manufacturer. The tongue load must be within the maximum tongue load limits shown in the following "Towing Load/Specification" chart. If the tongue load becomes excessive, rearrange cargo to allow for proper tongue load.

King pin load

When using a 5th wheel hitch, keep the tongue load between 15 - 25% of the total trailer load within the maximum king pin load limits shown in the following "Towing Load/Specification" chart. If the king pin load becomes excessive, rearrange cargo to allow for proper king pin load.

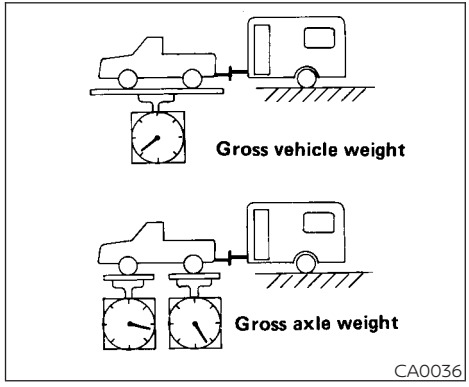

Maximum Gross Vehicle Weight (GVW)/maximum Gross Axle Weight (GAW)

The GVW of the towing vehicle must not exceed the Gross Vehicle Weight Rating (GVWR) shown on the F.M.V.S.S./C.M.V.S.S. certification label. The GVW equals the combined weight of the unloaded vehicle, passengers, luggage, hitch, trailer tongue load and any other optional equipment. In addition, front or rear GAW must not exceed the Gross Axle Weight Rating (GAWR) shown on the F.M.V.S.S./C.M.V.S.S. certification label.

Towing with Weight Distributing Class 4 Hitch

The Class 4 towing capacities shown in the towing load specification charts are calculated per the SAE J2807 standards. Additional passengers, cargo and/or optional equipment, such as the trailer hitch, will add weight to the vehicle and reduce your vehicle's maximum towing capacity and trailer tongue load.

The vehicle and trailer need to be weighed to confirm the vehicle is within the GVWR, Front GAWR, Rear GAWR, Gross Combined Weight Rating (GCWR) and Towing capacity.

All vehicle and trailer weights can be measured using platform type scales commonly found at truck stops, highway weigh stations, building supply centers or salvage yards.

Towing with Gooseneck Hitch

The gooseneck towing capacities are calculated assuming a base vehicle with driver and any options required to achieve the rating. Additional passengers, cargo and/or optional equipment, such as the trailer hitch, will add weight to the vehicle and reduce your vehicle's maximum towing capacity and trailer tongue load.

The vehicle and trailer need to be weighed to confirm the vehicle is within the GVWR, Front GAWR, Rear GAWR, Gross Combined Weight Rating (GCWR) and Towing capacity.

All vehicle and trailer weights can be measured using platform type scales commonly found at truck stops, highway weigh stations, building supply centers or salvage yards.

To determine the available payload capacity for tongue/king pin load, use the following procedure.

1. Locate the GVWR on the F.M.V.S.S./C.M.V.S.S. certification label.
2. Weigh your vehicle on the scale with all of the passengers and cargo that are normally in the vehicle when towing a trailer.
3. Subtract the actual vehicle weight from the GVWR. The remaining amount is the available maximum tongue/king pin load.

To determine the available towing capacity, use the following procedure.

1. Find the GCWR for your vehicle on the "Towing Load/Specification" chart found in this section.
2. Subtract the actual vehicle weight from the GCWR. The remaining amount is the available maximum towing capacity.

To determine the Gross Trailer Weight, weigh your trailer on a scale with all equipment and cargo, that are normally in the trailer when it is towed. Make sure the Gross trailer weight is not more than the Gross Trailer Weight Rating shown on the trailer and is not more than the calculated available maximum towing capacity.

Also weigh the front and rear axles on the scale to make sure the Front Gross Axle Weight and Rear Gross Axle Weight are not more than Front Gross Axle Weight and Rear Gross Axle Weight on the F.M.V.S.S./C.M.V.S.S. certification label. The cargo in the trailer and vehicle may need to be moved or removed to meet the specified ratings.

Example:

- Gross Vehicle Weight (GVW) as weighed on a scale - including passengers, cargo and hitch - 7,804 lbs. (3,540 kg).
- Gross Vehicle Weight Rating (GVWR) from F.M.V.S.S./C.M.V.S.S. certification label - 8,990 lbs. (4,078 kg).
- Gross Combined Weight Rating (GCWR) from "Towing Load/Specification" chart - 19,450 lbs. (8,822 kg).
- Maximum Trailer towing capacity from "Towing Load/Specification" chart - 9,200 lbs. (4,173 kg).

8,990 lbs. (4,078 kg)	GVWR
– 7,804 lbs. (3,540 kg)	GVW
= 1,186 lbs. (538 kg)	Available for tongue/ king pin weight

19,450 lbs. (8,822 kg)	GCWR
– 7,804 lbs. (3,540 kg)	GVW
= 11,644 lbs. (5,282 kg)	Capacity available for towing

1,186 lbs. (538 kg)	Available tongue weight
/ 11,644 lbs. (5,282 kg)	Available capacity
=	10 % tongue weight

The available towing capacity may be less than the maximum towing capacity due to the passenger and cargo load in the vehicle.

Remember to keep trailer tongue weight between 10 - 15% of the trailer weight or within the trailer tongue weight specification recommended by the trailer manufacturer. If the tongue weight becomes excessive, rearrange the cargo to obtain the proper tongue weight. Do not exceed the maximum tongue weight specification shown in the "Towing load/specification" chart even if the calculated available tongue weight is greater than 15%. If the calculated tongue weight is less than 10%, shift the trailer load forward until the trailer tongue weight reaches 10% of the trailer weight.

Always verify that available capacities are within the required ratings.

TOWING LOAD/SPECIFICATION

⚠ WARNING

The towing capacities provided in this manual are for general reference only. The safe towing capacity of your vehicle is affected by dealer and factory installed options and passenger and cargo loads. You must weigh the vehicle and trailer as described in this manual to determine the actual vehicle towing capacity. Do not exceed the published maximum towing capacity or the GCWR or the GVWR shown on the FMVSS/CMVSS label. Doing so can result in an accident causing serious personal injury or property damage.

NOTE:

The SAE J2807 Weight Distributing Class 4 Hitch specifications are based on S and SV grade models . The Gooseneck Hitch specifications are based on SV grade models.

Non-XD models — Single cab — Gasoline engine towing load specification chart — SAE J2807 Weight Distributing Class 4 Hitch

Axle type	2WD	4WD
Maximum Payload	1,940 lbs. (880.0 kg)	1,940 lbs. (880.0 kg)
Maximum Towing Capacity *1, *2, *3	9,740 lbs. (4,418.0 kg)	9,550 lbs. (4,331.8 kg)
Maximum Tongue load *2, *3	974 lbs. (441.8 kg)	955 lbs. (433.2 kg)
Maximum Gross Combined Weight Rating	15,300 lbs. (6,940 kg)	15,300 lbs. (6,940 kg)

Non-XD models — Crew cab — Gasoline engine towing load specification chart — SAE J2807 Weight Distributing Class 4 Hitch

Axle type	2WD	4WD
Maximum Payload	1,590 lbs. (721.2 kg)	1,610 lbs. (730.3 kg)
Maximum Towing Capacity *1, *2, *3	9,400 lbs. (4,263.8 kg)	9,230 lbs. (4,186.7 kg)
Maximum Tongue load *2, *3	940 lbs. (426.4 kg)	923 lbs. (418.7 kg)
Maximum Gross Combined Weight Rating	15,300 lbs. (6,940 kg)	15,300 lbs. (6,940 kg)

Non-XD models — King Cab® — Gasoline engine towing load specification chart — SAE J2807 Weight Distributing Class 4 Hitch

Axle type	2WD	4WD
Maximum Payload	1,600 lbs. (725.7 kg)	1,630 lbs. (739.4 kg)
Maximum Towing Capacity *1, *2, *3	9,400 lbs. (4,263.8 kg)	9,240 lbs. (4,191.2 kg)
Maximum Tongue load *2, *3	940 lbs. (426.4 kg)	924 lbs. (419.1 kg)
Maximum Gross Combined Weight Rating	15,300 lbs. (6,940 kg)	15,300 lbs. (6,940 kg)

XD models — Single cab — Diesel engine towing load specification chart — SAE J2807 Weight Distributing Class 4 Hitch

Axle type	2WD	4WD
Maximum Payload	2,420 lbs. (1,097.7 kg)	2,330 lbs. (1,056.9 kg)
Maximum Towing Capacity *1, *2, *3	12,310 lbs. (5,583.7 kg)	12,030 lbs. (5,456.7kg)
Maximum Tongue load *2, *3	1,231 lbs. (558.4 kg)	1,203 lbs. (545.7 kg)
Maximum Gross Combined Weight Rating	19,450 lbs. (8,822 kg)	19,450 lbs. (8,822 kg)

XD models — Crew cab — Diesel engine towing load specification chart — SAE J2807 Weight Distributing Class 4 Hitch

Axle type	2WD	4WD
Maximum Payload	2,080 lbs. (943.5 kg)	2000 lbs. (907.2 kg)
Maximum Towing Capacity *1, *2, *3	12,310 lbs. (5,583.7 kg)	12,030 lbs. (5,456.7 kg)
Maximum Tongue load *2, *3	1,231 lbs. (558.4 kg)	1,203 lbs. (545.7 kg)
Maximum Gross Combined Weight Rating	19,450 lbs. (8,822 kg)	19,450 lbs. (8,822 kg)

XD models — King Cab® — Diesel engine towing load specification chart — SAE J2807 Weight Distributing Class 4 Hitch

Axle type	2WD	4WD
Maximum Payload	2,290 lbs. (1,038.7 kg)	2,120 lbs. (961.6 kg)
Maximum Towing Capacity *1, *2, *3	12,510 lbs. (5,674.4 kg)	12,150 lbs. (5,511.1 kg)
Maximum Tongue load *2, *3	1,251 lbs. (567.4 kg)	1,215 lbs. (551.1 kg)
Maximum Gross Combined Weight Rating	19,450 lbs. (8,822 kg)	19,450 lbs. (8,822 kg)

XD models — Single Cab — Diesel engine towing load specification chart — Gooseneck Hitch

Axle type	2WD	4WD
Maximum Payload	2,260 lbs. (1,028.5 kg)	2,170 lbs. (988.7 kg)
Maximum Towing Capacity *1, *2, *3	12,760 lbs. (5,790.9 kg)	12,480 lbs. (5,664.9 kg)
Maximum King pin load *2, *3	1,915 lbs. (868.6 kg)	1,873 lbs. (849.7 kg)
Maximum Gross Combined Weight Rating	19,450 lbs. (8,822 kg)	19,450 lbs. (8,822 kg)

XD models — Crew Cab — Diesel engine towing load specification chart — Gooseneck Hitch

Axle type	2WD	4WD
Maximum Payload	1,930 lbs. (878.2 kg)	1,840 lbs. (839.0 kg)
Maximum Towing Capacity *1, *2, *3	11,900 lbs. (5,401.3 kg)	11,330 lbs. (5,140.1 kg)
Maximum King pin load *2, *3	1,786 lbs. (810.2 kg)	1,700 lbs. (771.0 kg)
Maximum Gross Combined Weight Rating	19,450 lbs. (8,822 kg)	19,450 lbs. (8,822 kg)

XD models — King Cab® — Diesel engine towing load specification chart — Gooseneck Hitch

Axle type	2WD	4WD
Maximum Payload	2,130 lbs. (968.5 kg)	1,970 lbs. (895.9 kg)
Maximum Towing Capacity *1, *2, *3	12,630 lbs. (5,730.9 kg)	12,160 lbs. (5,519.3 kg)
Maximum King pin load *2, *3	1,895 lbs. (859.6 kg)	1,825 lbs. (827.9 kg)
Maximum Gross Combined Weight Rating	19,450 lbs. (8,822 kg)	19,450 lbs. (8,822 kg)

XD models — Single cab — Gasoline engine towing load specification chart — SAE J2807 Weight Distributing Class 4 Hitch

Axle type	2WD	4WD
Maximum Payload	2,910 lbs. (1,319.9 kg)	2,850 lbs. (1,292.7 kg)
Maximum Towing Capacity *1, *2, *3	11,590 lbs. (5,257.1 kg)	11,330 lbs. (5,139.2 kg)
Maximum Tongue load *2, *3	1,159 lbs. (525.7 kg)	1,133 lbs. (513.9 kg)
Maximum Gross Combined Weight Rating*4	17,700 lbs. (8,029 kg)	17,700 lbs. (8,029 kg)

XD models — Crew cab — Gasoline engine towing load specification chart — SAE J2807 Weight Distributing Class 4 Hitch

Axle type	2WD	4WD
Maximum Payload	2,590 lbs. (1,174.8 kg)	2,520 lbs. (1,143.0 kg)
Maximum Towing Capacity *1, *2, *3	11,270 lbs. (5,111.9 kg)	10,990 lbs. (4,985.0 kg)
Maximum Tongue load *2, *3	1,127 lbs. (511.2 kg)	1,099 lbs. (498.5 kg)
Maximum Gross Combined Weight Rating*4	17,700 lbs. (8,029 kg)	17,700 lbs. (8,029 kg)

XD models — King Cab® — Gasoline engine towing load specification chart — SAE J2807 Weight Distributing Class 4 Hitch

Axle type	2WD	4WD
Maximum Payload	2,710 lbs. (1,229.2 kg)	2,560 lbs. (1,161.2 kg)
Maximum Towing Capacity *1, *2, *3	11,380 lbs. (5,161.9 kg)	11,040 lbs. (5,007.7 kg)
Maximum Tongue load *2, *3	1,138 lbs. (516.2 kg)	1,104 lbs. (500.8 kg)
Maximum Gross Combined Weight Rating*4	17,700 lbs. (8,029 kg)	17,700 lbs. (8,029 kg)

XD models — Single cab — Gasoline engine towing load specification chart — Gooseneck Hitch

Axle type	2WD	4WD
Maximum Payload	2,690 lbs. (1,221.6 kg)	2,700 lbs. (1,225.0 kg)
Maximum Towing Capacity *1, *2, *3	11,710 lbs. (5,313.5 kg)	11,450 lbs. (5,194.4 kg)
Maximum King pin load *2, *3	1,757 lbs. (797.0 kg)	1,718 lbs. (779.2 kg)
Maximum Gross Combined Weight Rating*4	17,700 lbs. (8,029 kg)	17,700 lbs. (8,029 kg)

XD models — Crew cab — Gasoline engine towing load specification chart — Gooseneck Hitch

Axle type	2WD	4WD
Maximum Payload	2,440 lbs. (1,107.2 kg)	2,310 lbs. (1,052.3 kg)
Maximum Towing Capacity *1, *2, *3	11,390 lbs. (5,167.3 kg)	11,120 lbs. (5,044.4 kg)
Maximum King pin load *2, *3	1,709 lbs. (775.1 kg)	1,668 lbs. (756.7 kg)
Maximum Gross Combined Weight Rating*4	17,700 lbs. (8,029 kg)	17,700 lbs. (8,029 kg)

XD models — King Cab® — Gasoline engine towing load specification chart — Gooseneck Hitch

Axle type	2WD	4WD
Maximum Payload	2,550 lbs. (1,161.0 kg)	2,430 lbs. (1,106.1 kg)
Maximum Towing Capacity *1, *2, *3	11,510 lbs. (5,221.1 kg)	11,180 lbs. (5,075.5 kg)
Maximum King pin load *2, *3	1,727 lbs. (783.2 kg)	1,678 lbs. (761.3 kg)
Maximum Gross Combined Weight Rating*4	17,700 lbs. (8,029 kg)	17,700 lbs. (8,029 kg)

*1: The towing capacity values are calculated assuming a base vehicle with driver and any options required to achieve the rating. Additional passengers, cargo and/or optional equipment will add weight to the vehicle and reduce your vehicle's maximum towing capacity.

*2: Use of a weight-distributing hitch system is recommended when towing over 5,000 lbs. (2,268 kg).

*3: The maximum towing capacity when using the Genuine NISSAN step bumper as a ball mount is 5,000 lbs. (2,268 kg) and 500 lbs. (227 kg) tongue load.

*4: The maximum gross combined weight rating for XD gasoline engine vehicles equipped with 20 inch wheels is 16,900 lbs. (7,666 kg).

TOWING SAFETY

Trailer hitch

Your vehicle may be equipped with an optional trailer tow package. The trailer tow package includes a receiver-type frame mounted hitch. This hitch is rated for the maximum towing capacity of this vehicle when the proper towing equipment is used. Choose a proper ball mount and hitch ball that is rated for the trailer to be towed. Genuine NISSAN ball mounts and hitch balls are available at a NISSAN dealer.

If your vehicle is not equipped with the optional trailer tow package, check the towing capacity of your bumper hitch or receiver-type frame mounted hitch. Choose a proper hitch for your vehicle and trailer. A Genuine NISSAN trailer hitch is available at a NISSAN dealer. Make sure the trailer hitch is securely attached to the vehicle to help avoid personal injury or property damage due to sway caused by crosswinds, rough road surfaces or passing trucks.

A hitch used for towing 5th wheel and gooseneck trailers can also be installed on your vehicle. Contact a professional supplier of towing equipment to purchase and have a 5th wheel or gooseneck hitch installed.

⚠ WARNING

Trailer hitch components have specific weight ratings. Your vehicle may be capable of towing a trailer heavier than the weight rating of the hitch components. Never exceed the weight rating of the hitch components. Doing so can cause serious personal injury or property damage.

Hitch ball

Choose a hitch ball of the proper size and weight rating for your trailer:

- The required hitch ball size is stamped on most trailer couplers. Most hitch balls also have the size printed on the top of the ball.
- Choose the proper class hitch ball based on the trailer weight.
- The diameter of the threaded shank of the hitch ball must be matched to the ball mount hole diameter. The hitch ball shank should be no more than 1/16” smaller than the hole in the ball mount.
- The threaded shank of the hitch ball must be long enough to be properly secured to the ball mount. There should be at least 2 threads showing beyond the lock washer and nut.

Ball mount

The hitch ball is attached to the ball mount and the ball mount is inserted into the hitch receiver. Choose a proper class ball mount based on the trailer weight. Additionally, the ball mount should be chosen to keep the trailer tongue level with the ground.

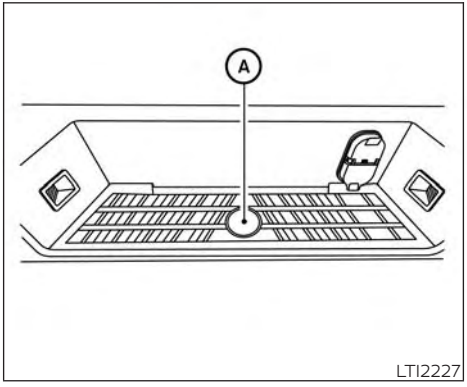

Bumper towing

The Genuine NISSAN step bumper has provisions to install a trailer hitch ball and is designed to tow trailers of a maximum weight of 5,000 lbs. (2,268 kg).

NOTE:

The trailer hitch ball cannot be installed on the step bumper if the receiver-type frame mounted hitch is installed on the vehicle.

To install a trailer hitch ball cut out the circle in the center of the step bumper Ⓐ, then remove it to install the trailer hitch ball.

Weight carrying hitches

A weight carrying or "dead weight" ball mount is one that is designed to carry the whole amount of tongue weight and gross weight directly on the ball mount and on the receiver.

Weight distribution hitch

This type of hitch is also called a "load-leveling" or "equalizing" hitch. A set of bars attach to the ball mount and to the trailer to distribute the tongue weight (hitch weight) of your trailer. Many vehicles can't carry the full tongue weight of a given trailer, and need some of the tongue weight transferred through the frame and pushing down on the front wheels. This gives stability to the tow vehicle.

A weight-distributing hitch system (Class IV) is recommended if you plan to tow trailers with a maximum weight over 5,000 lbs. (2,268 kg). Check with the trailer and towing equipment manufacturers to determine if they recommend the use of a weight-distributing hitch system.

NOTE:

A weight-distributing hitch system may affect the operation of trailer surge brakes. If you are considering use of a weight-distributing hitch system with a surge brake-equipped trailer, check with the surge brake, hitch or trailer manufacturer to determine if and how this can be done.

Follow the instructions provided by the manufacturer for installing and using the weight-distributing hitch system.

General set-up instructions are as follows:

1. Park unloaded vehicle on a level surface. With the ignition on and the doors closed, allow the vehicle to stand for several minutes so that it can level.
2. Measure the height of a reference point on the front and rear bumpers at the center of the vehicle.
3. Attach the trailer to the vehicle and adjust the hitch equalizers so that the front bumper height is within 0 - .5 inches (0 – 13 mm) of the reference height measured in step 2. The rear bumper should be no higher than the reference height measured in step 2.

⚠ WARNING

Properly adjust the weight distributing hitch so the rear of the bumper is no higher than the measured reference height when the trailer is attached. If the rear bumper is higher than the measured reference height when loaded, the vehicle may handle unpredictably which could cause a loss of vehicle control and cause serious personal injury or property damage.

Sway control device

Sudden maneuvers, wind gusts, and buffeting caused by other vehicles can affect trailer handling. Sway control devices may be used to help control these affects. If you choose to use one, contact a reputable trailer hitch supplier to make sure the sway control device will work with the vehicle, hitch, trailer and the trailer's brake system. Follow the instructions provided by the manufacturer for installing and using the sway control device.

Class I hitch

Class I trailer hitch equipment (receiver, ball mount and hitch ball) can be used to tow trailers of a maximum weight of 2,000 lbs. (907 kg).

Class II hitch

Class II trailer hitch equipment (receiver, ball mount and hitch ball) can be used to tow trailers of a maximum weight of 3,500 lbs. (1,587 kg).

Class III hitch

Class III trailer hitch equipment (receiver, ball mount and hitch ball) can be used to tow trailers of a maximum weight of 5,000 lbs. (2,268 kg).

Class IV hitch

Class IV hitches are weight carrying (WC) and weight distributing (WD) hitches depending on the vehicle and hitch specifications. Not all Class IV hitches are rated to be both. See the specific hitch for that information. Class IV trailer hitch equipment (receiver, ball mount and hitch ball) used as weight carrying are rated up to 10,000 lbs. (4,535 kg) gross trailer weight (GTW) with a maximum trailer tongue weight (TW) of 1,000 lbs. (453 kg). Class IV hitches used for weight distributing are rated up to 14,000 lbs. (6,350 kg) gross trailer weight (GTW) with a maximum trailer tongue weight (TW) of 1,400 lbs. (635 kg). A Class IV hitch usually has a 2" square receiver opening. A higher class drawbar does not increase the towing capacity of the hitch. To use this class of hitch for weight distribution requires a weight distribution system. Class IV hitches attach to the vehicle frame only. A weight distributing hitch should be used to tow trailers that weigh over 5,000 lbs. (2,268 kg).

Your vehicle may be equipped with Class IV weigh distributing trailer hitch that has a 14,000 lbs. (6,350 kg) maximum weight rating, but your vehicle is only capable of towing the maximum trailer weights shown in the "Towing Load/Specification" chart in this section.

5th wheel/gooseneck

A 5th wheel or gooseneck trailer can be towed by installing a 5th wheel or gooseneck trailer hitch. These types of hitches are mounted in the bed of the pick-up. A professional trailer equipment supplier should install these hitches as it is very important to mount the hitch correctly to distribute the king pin weight for the proper load carrying and sway control performance.

The king pin weight should be 15% of the fully loaded trailer. Make sure the king pin weight does not cause the gross vehicle weight to exceed the Gross Maximum

Weight Rating or the rear axle weight to exceed the Rear Gross Axle Weight rating. For additional information, refer to "Maximum load limits" in this section.

The weight of the trailer should not exceed the maximum towing capacity for the vehicle. For additional information, refer to "Towing Load/Specification" chart in this section.

Make sure the trailer design allows for the correct vehicle to trailer clearances before purchasing a 5th wheel trailer.

⚠ WARNING

- **The hitch should not be attached to or affect the operation of the impact-absorbing bumper.**
- **Do not use axle-mounted hitches.**
- **Do not modify the vehicle exhaust system, brake system, etc. to install a trailer hitch.**
- **To reduce the possibility of additional damage if your vehicle is struck from the rear, where practical, remove the receiver when not in use.**
- **Regularly check that all trailer hitch mounting bolts are securely mounted.**
- **When towing with the hitch ball mounted to the rear bumper, do not make sharp turns. The trailer may contact the bumper and cause damage to the bumper or trailer.**
- **When towing a 5th wheel trailer, do not make sharp turns while driving or backing. The trailer may contact the vehicle and cause damage to both the trailer and vehicle.**

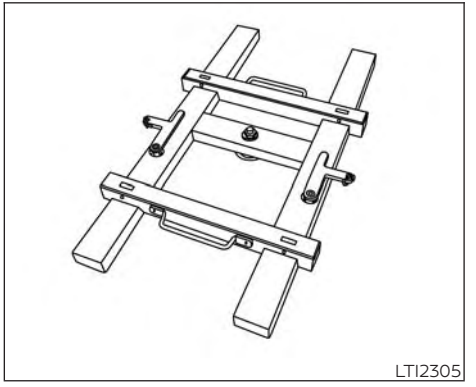

⚠ CAUTION

- **A 5th wheel hitch adapter is necessary to use an aftermarket 5th wheel hitch. A Genuine NISSAN 5th wheel hitch adapter (as shown) may be available at a NISSAN dealer.**
- **Ensure kit components are properly stored when not in use. Improperly stowed components could result in serious personal injury during a collision or sudden stop.**

Gooseneck hitch ball and safety chain anchor attachment installation

1. Park the vehicle on a level surface and apply the parking brake.
2. Remove the gooseneck hitch ball and safety chain anchor attachments from the storage pouch.

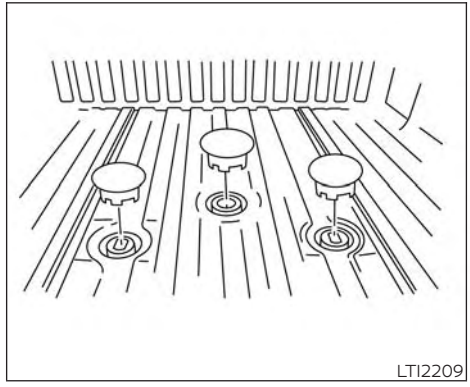

3. Remove the center and both of the rear caps from the puck plugs.
   - Once removed, place the pucks in the storage pouch for future use.

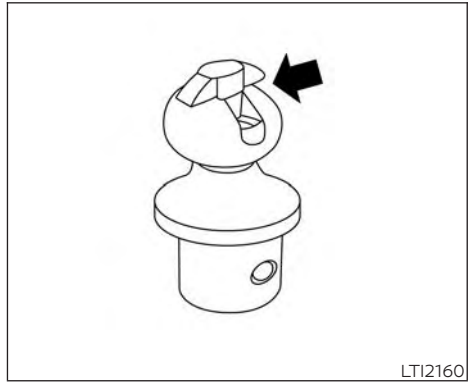

4. Lift the handle from the center of the hitch ball and rotate 90° from the resting position.

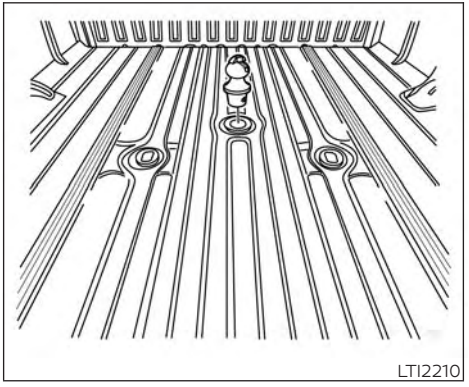

5. Position the ball bearings to the sides of the truck bed and Insert the goose-neck hitch ball into the center receiver tube of the truck bed.

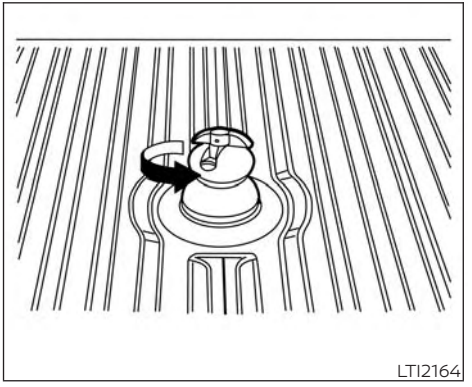

6. Rotate the handle 90° seat the handle back to the original resting position. If the handle does not seat fully, rotate the hitch ball until the handle drops into the original resting position.

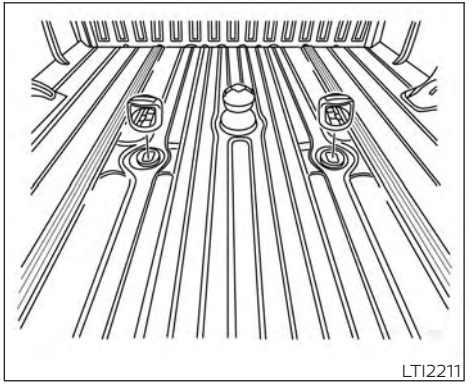

7. Place the safety chain anchor attachments into the q-turn pucks.

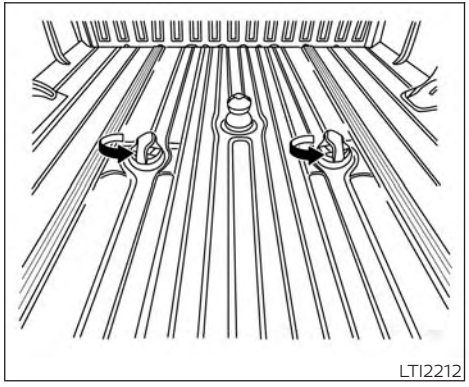

8. Rotate the safety chain anchor attachments 90° until the center of the anchor seats into place.

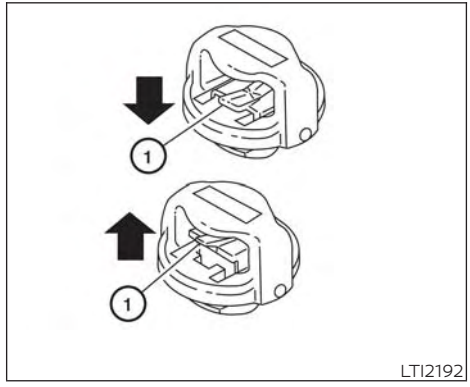

NOTE:

Removal of the gooseneck hitch ball and safety chain anchor attachments are in the reverse order of installation. To remove safety chain anchor attachment, lift the center①, rotate 90°, and lift safety chain anchor attachment away.

Tire pressures

- When towing a trailer, inflate the vehicle tires to the recommended cold tire pressure indicated on the Tire and Loading Information label.
- Trailer tire condition, size, load rating and proper inflation pressure should be in accordance with the trailer and tire manufacturer's specifications.

Safety chains

Always use suitable safety chains between your vehicle and the trailer. The safety chains should be crossed and should be attached to the hitch, not to the vehicle bumper or axle. The safety chains can be attached to the bumper if the hitch ball is mounted to the bumper. Be sure to leave enough slack in the chains to permit turning corners.

Trailer lights

⚠ CAUTION

When splicing into the vehicle electrical system, a commercially available power-type module/converter must be used to provide power for all trailer lighting. This unit uses the vehicle battery as a direct power source for all trailer lights while using the vehicle tail light, stoplight and turn signal circuits as a signal source. The module/converter must draw no more than 15 milliamps from the stop and tail lamp circuits. Using a module/converter that exceeds these power requirements may damage the vehicle's electrical system. See a reputable trailer retailer to obtain the proper equipment and to have it installed.

Trailer lights should comply with federal and/or local regulations. For assistance in hooking up trailer lights, it is recommended that you contact a NISSAN dealer or reputable trailer retailer. Vehicles equipped with the optional trailer tow package are equipped with a 7-pin trailer harness connector. If your trailer is equipped with a flat 4-pin connector, an adapter will be needed to connect the trailer lights to the vehicle. Adapters are available at auto parts stores and hitch retailers.

Trailer brakes (if so equipped)

If your trailer is equipped with a braking system, make sure it conforms to federal and/or local regulations and that it is properly installed.

Vehicles equipped with a 7-pin trailer harness connector are pre-wired for a trailer brake controller. It is recommended that you visit a NISSAN dealer for a trailer brake adapter harness.

When towing a trailer load of 3,500 lbs. (1587 kg) or more, trailers with a brake system MUST be used. However, most states require a separate braking system on trailers with a loaded weight above a specific amount. Make sure the trailer meets the local regulations and the regulations where you plan to tow.

⚠ WARNING

The Gross Combined Weight Rating (GCWR) must never exceed the vehicle manufacturers recommendation.

Several types of braking systems are available.

Surge Brakes - The surge brake actuator is mounted on the trailer tongue with a hydraulic line running to each trailer wheel. Surge brakes are activated by the trailer pushing against the hitch ball when the tow vehicle is braking. Hydraulic surge brakes are common on rental trailers and some boat trailers. In this type of system, there is no hydraulic or electric connection for brake operation between the tow vehicle and the trailer.

⚠ CAUTION

Your factory trailer brake control unit will not activate surge-style trailer brakes

Electric Trailer Brakes - Electric braking systems are activated by an electronic signal sent from a trailer brake controller (special brake-sensing module). If electric trailer brakes are used, refer to "Electric trailer brake controller" in this section.

Have a professional supplier of towing equipment make sure the trailer brakes are properly installed and demonstrate proper brake function testing.

⚠ WARNING

The NISSAN trailer brake controller has been verified to be compatible with trailers having electric actuated drum brakes (one to four axles) and electric-over-hydraulic brakes. It will not activate hydraulic surge-style trailer brakes

⚠ WARNING

Never connect a trailer brake system directly to the vehicle brake system.

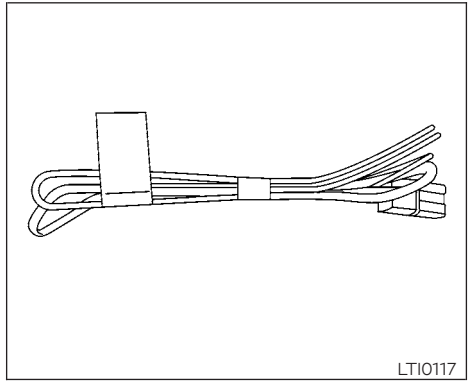

example

Electric trailer brake controller

Trailers equipped with electric brakes may require the installation of an aftermarket trailer brake controller.

Your vehicle is equipped with a connector and jumper harness that is specifically designed to be used when installing an aftermarket brake controller.

To install the electric trailer brake controller jumper harness, perform the following procedure:

1. Open the driver door. Move the seat to the rearmost position.

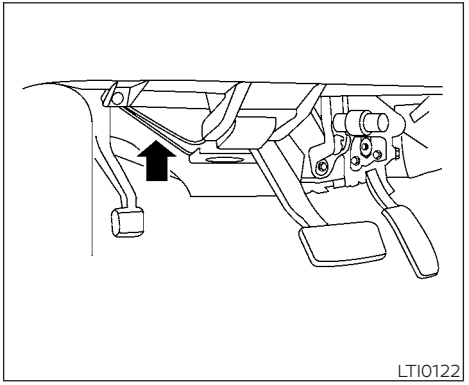

2. Apply the parking brake to access the jumper harness connector.

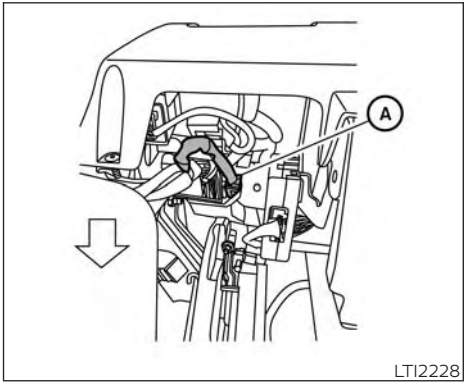

3. Locate the jumper harness connector under the lower portion of the instrument panel. The connector is taped to the wiring harness Ⓐ as indicated.

Wire color designation for electric trailer brake controller jumper harness.

WIRE COLOR	NOTE
RED/GREEN	Vehicle stop lamp switch to trailer brake controller.
BLACK	Brake controller ground (-).
BROWN/WHITE	Trailer brake controller switched output.
RED/BLUE	Trailer brake controller illumination.
RED	Fused trailer brake controller battery feed (B+).

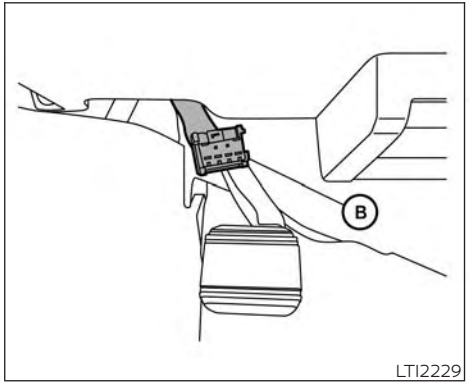

4. Peel off the tape and connect the jumper harness to the connector Ⓑ.
5. Release the parking brake.
6. Install the aftermarket electric trailer brake controller according to the manufacturer's instructions.

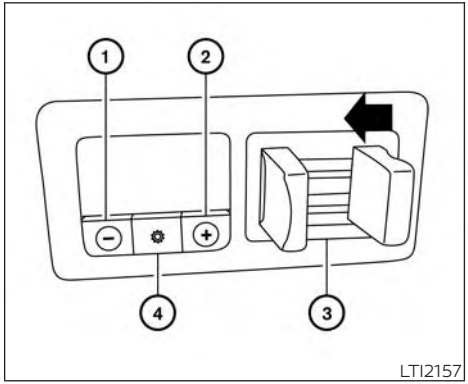

1. Gain –
2. Gain +
3. Manual control lever
4. Boost

Trailer brake controller unit (if so equipped)

The Trailer Brake Controller Unit (TBCU), located on the lower instrument panel, is a device that assists the vehicle in having effective and smooth braking while towing a trailer.

Operating modes:

- **Automatic mode:** This is the normal operation of the TBCU depending on the gain and boost settings adjusted by the customer. This mode will activate when vehicle brake pedal is pressed.
- **Manual mode:** This mode is initiated by adjusting the manual control lever from resting position. This mode will provide output power to trailer brakes without applying the vehicle brake pedal.

To determine the output operation of the system:

- **Gain + and Gain – :** Used to increase or decrease the braking force supplied to the trailer brakes. To adjust the gain, press Gain + or Gain - to the desired point (0-10). For example: gain setting 6.0 is a typical starting point for heavy loads.
- **Boost:** Used to adjust the feel of the automatic brake event that occurs when the vehicle brake pedal is applied. To set up boost, press Boost button once to display for current boost setting (display for 3 seconds). Keep pressing to increase boost level until the desired level (0-3) is achieved.

- **Manual Control Lever:** Provides brake output power to trailer brakes without applying the vehicle brake pedal. The amount of brake output supplied corresponds to the amount of pinch pressure applied to the manual control lever.

n.c.	Prodigy® P2 initial screen at start up (15 seconds*)	b.	Boost off
.c	Power to Prodigy® P2 with trailer connected and boost feature not engaged	b.1.	Boost level 1
.c.	Power to Prodigy® P2 with trailer connected and boost feature not engaged	b.2.	Boost level 2
. .	Power to Prodigy® P2, trailer not connected	b.3.	Boost level 3

Gain feature is adjustable from 0.0 to 10. by increments of 0.5

***if sustained for longer, check trailer connections or visit a dealer for service**

Typical Boost Settings For Optimal Performance
(with properly adjusted trailer brakes*)

TRAILER WEIGHT compared to VEHICLE WEIGHT	b. BOOST 'OFF'	b.1.	b.2.	b.3.
	◀ INCREASING BOOST LEVEL ▶			
Trailer weighs LESS than vehicle	X	X		
Trailer weighs APPROXIMATELY THE SAME as vehicle	X	X	X	
Trailer weighs UP TO 25% MORE than vehicle		X	X	X
Trailer weighs UP TO 40% MORE than vehicle			X	X
Trailer weighs OVER 40% MORE than vehicle	⚠ WARNING Do not exceed Gross Combined Weight Rating (GCWR)			X

* You may need to increase the boost setting if the trailer brakes are worn. See a dealer for adjustment and or repair.

LTI2156

This graphic shows the suggested boost levels for different trailer sizes relative to the vehicle size.

⚠ WARNING

Do not exceed Gross Combined Weight Rating (GVWR). For additional information about GVWR, refer to "Towing Load/Specification" in this section of the manual.

Pre-towing tips

- Be certain your vehicle maintains a level position when a loaded and/or unloaded trailer is hitched. Do not drive the vehicle if it has an abnormal nose-up or nose-down condition; check for improper tongue load, overload, worn suspension or other possible causes of either condition.
- Always secure items in the trailer to prevent load shift while driving.
- Keep the cargo load as low as possible in the trailer to keep the trailer center of gravity low.
- Load the trailer so approximately 60% of the trailer load is in the front half and 40% is in the back half. Also make sure the load is balanced side to side.

- Check your hitch, trailer tire pressure, vehicle tire pressure, trailer light operation, and trailer wheel lug nuts every time you attach a trailer to the vehicle.
- Be certain your rearview mirrors conform to all federal, state or local regulations. If not, install any mirrors required for towing before driving the vehicle.
- Determine the overall height of the vehicle and trailer so the required clearance is known.

Trailer towing tips

In order to gain skill and an understanding of the vehicle's behavior, you should practice turning, stopping and backing up in an area which is free from traffic. Steering stability and braking performance will be somewhat different than under normal driving conditions.

- Always secure items in the trailer to prevent load shift while driving.
- Lock the trailer hitch coupler with a pin or lock to prevent the coupler from inadvertently becoming unlatched.
- Avoid abrupt starts, acceleration or stops.
- Avoid sharp turns or lane changes.
- Always drive your vehicle at a moderate speed.
- When backing up, hold the bottom of the steering wheel with one hand. Move your hand in the direction in which you want the trailer to go. Make small corrections and back up slowly. If possible, have someone guide you when you are backing up.

Always block the wheels on both vehicle and trailer when parking. Parking on a slope is not recommended; however, if you must do so:

⚠ CAUTION

If you move the shift selector to the P (Park) position before blocking the wheels and applying the parking brake, transmission damage could occur.

1. Apply and hold the brake pedal.
2. Have someone place blocks on the downhill side of the vehicle and trailer wheels.
3. After the wheel blocks are in place, slowly release the brake pedal until the blocks absorb the vehicle load.
4. Apply the parking brake.
5. Shift the transmission into P (Park).
6. Make sure the indicator light (if so equipped) indicates the transfer case is in 4H, 4LO, or 2H and that the ATP light is off. If the indicator light is flashing, or the ATP light is ON, make sure the transmission is in P (Park) (A/T) and turn the 4WD switch to 2WD or 4H. For additional information, refer to "Automatic transmission park warning light" in the "Instruments and controls" section and "Using 4-wheel drive (4WD)" in the "Starting and driving" section of this manual.
7. Turn off the engine.

To drive away:

1. Start the vehicle.
2. Apply and hold the brake pedal.
3. Shift the transmission into gear.
4. Release the parking brake.
5. Drive slowly until the vehicle and trailer are clear from the blocks.
6. Apply and hold the brake pedal.
7. Have someone retrieve and store the blocks.

- While going downhill, the weight of the trailer pushing on the tow vehicle may decrease overall stability. Therefore, to maintain adequate control, reduce your speed and shift to a lower gear. Avoid long or repeated use of the brakes when descending a hill, as this reduces their effectiveness and could cause overheating. Shifting to a lower gear instead provides "engine braking" and reduces the need to brake as frequently.
- If the engine coolant temperature rises to a high temperature, refer to "If your vehicle overheats" in the "In case of emergency" section of this owner's manual.
- Trailer towing requires more fuel than normal circumstances.
- Avoid towing a trailer for your vehicle's first 500 miles (805 km).
- For the first 500 miles (805 km) that you do tow, do not drive over 50 mph (80 km/h).
- Have your vehicle serviced more often than at intervals specified. For additional information, refer to "Maintenance schedules" in the "Maintenance and schedule" section of this manual.
- When making a turn, your trailer wheels will be closer to the inside of the turn than your vehicle wheels. To compensate for this, make a larger than normal turning radius during the turn.
- Crosswinds and rough roads will adversely affect vehicle/trailer handling, possibly causing vehicle sway. When being passed by larger vehicles, be prepared for possible changes in crosswinds that could affect vehicle handling.

Trailer Sway Assist:

To minimize trailer sway, your vehicle may apply braking to individual wheels based on input from your vehicle sensors and vehicle speed. Trailer sway control is a function of the Vehicle Dynamic Control (VDC) system and is active when the VDC function is enabled.

⚠ CAUTION

If the VDC-OFF switch is on (meaning VDC system OFF), the Trailer Sway Assist is also disabled

When Trailer Sway Assist is in operation, the VDC warning light blinks. When vehicle control is regained, VDC warning light will turn OFF.

For additional information about the VDC system, refer to "Vehicle Dynamic Control (VDC) OFF switch" in the "Instruments and controls" section and "Vehicle Dynamic Control (VDC) system" in the "Starting and driving" section of this manual.

If Trailer Sway Assist activates, do the following:

1. Take your foot off the accelerator pedal to allow the vehicle to coast and steer as straight ahead as the road conditions allow. This combination will help stabilize the vehicle

⚠ CAUTION

Do not try to correct trailer sway by steering or applying the brakes.

2. When the trailer sway stops, gently apply the brakes and pull to the side of the road in a safe area.
3. Try to rearrange the trailer load so it is balanced. For additional information, refer to "Pre-towing tips" in this section.

NOTE:

Trailer Sway Assist cannot reduce trailer sway in all situations.

- Be careful when passing other vehicles. Passing while towing a trailer requires considerably more distance than normal passing. Remember, the length of the trailer must also pass the other vehicle before you can safely change lanes.
- Use the Tow Mode or downshift the transmission to a lower gear for engine braking when driving down steep or long hills. This will help slow the vehicle without applying the brakes.
- Avoid holding the brake pedal down too long or too frequently. This could cause the brakes to overheat, resulting in reduced braking efficiency.
- Increase your following distance to allow for greater stopping distances while towing a trailer. Anticipate stops and brake gradually.
- NISSAN recommends that the cruise control (if so equipped) not be used while towing a trailer.
- Some states or provinces have specific regulations and speed limits for vehicles that are towing trailers. Obey the local speed limits.
- Check your hitch, trailer wiring harness connections, and trailer wheel lug nuts after 50 miles (80 km) of travel and at every break.
- When launching a boat, don't allow the water level to go over the exhaust tail pipe or rear bumper.
- Make sure you disconnect the trailer lights before backing the trailer into the water or the trailer lights may burn out.

When towing a trailer, final drive gear oil should be replaced and transmission oil/fluid should be changed more frequently. For additional information, refer to the "Do-it-yourself" section in this manual.

Tow mode

Using tow mode is recommended when pulling a heavy trailer or hauling a heavy load. Press the TOW MODE switch to activate tow mode. The indicator light on the TOW MODE switch illuminates when tow mode is selected. Press the TOW MODE switch again to turn tow mode off. Tow mode is automatically canceled when the ignition switch is turned off.

Tow mode includes the following features:

- Grade logic — Adjusts transmission shifts when pulling a trailer or hauling a load up a grade.
- Downhill Speed Control (DSC) — automatically downshifts when driving down a grade with a trailer or heavy load to help control vehicle speed.

Driving the vehicle in the tow mode with no trailer/load or light trailer/light load will not cause any damage. However, fuel economy may be reduced and the transmission/engine driving characteristics may feel unusual.

When towing a trailer, final drive gear oil should be replaced and transmission oil/fluid should be changed more frequently. For additional information, refer to the "Do-it-yourself" section of this manual.

FLAT TOWING FOR 2-WHEEL DRIVE (2WD) VEHICLE (if so equipped)

Towing your vehicle with all four wheels on the ground is sometimes called flat towing. This method is sometimes used when towing a vehicle behind a recreational vehicle, such as a motor home.

⚠ CAUTION

- **Failure to follow these guidelines can result in severe transmission damage.**
- **Never flat tow your 2WD vehicle.**
- **Never tow your 2WD vehicle with the rear wheels on the ground. Doing so may cause serious and expensive damage to the powertrain.**
- **DO NOT tow your 2WD vehicle with all four wheels on the ground (flat towing). Doing so WILL DAMAGE internal transmission parts due to lack of transmission lubrication.**
- **For emergency towing procedures refer to "Towing recommended by NISSAN" in the "In case of emergency" section of this manual.**

FLAT TOWING FOR 4-WHEEL DRIVE (4WD) VEHICLE (if so equipped)

Towing your vehicle with all four wheels on the ground is sometimes called flat towing. This method is sometimes used when towing a vehicle behind a recreational vehicle, such as a motor home.

⚠ CAUTION

- **Failure to follow these guidelines can result in severe transmission damage.**
- **Never flat tow your 4WD vehicle.**
- **DO NOT tow your 4WD vehicle with any wheels on the ground. Doing so may cause serious and expensive damage to the powertrain.**
- **For emergency towing procedures refer to "Towing recommended by NISSAN" in the "In case of emergency" section of this manual.**

Automatic Transmission

To tow a vehicle equipped with an automatic transmission, an appropriate vehicle dolly **MUST** be placed under the towed vehicle's drive wheels. **Always** follow the dolly manufacturer's recommendations when using their product.

SNOW PLOW

NISSAN does not make a snowplow for TITAN and has not evaluated the suitability of its trucks for use as snowplow platforms. Instead, the snowplow manufacturers establish minimum vehicle requirements for their various plow products and they make the determination as to which vehicle platforms are suitable, based on their individual product specifications. Consult the snowplow manufacturers and sellers concerning the fitness of the TITAN for use with their products. NISSAN advises caution whenever installing aftermarket parts and accessories because these products have not been tested or certified by NISSAN. Please reference the NISSAN Body Builder's guide for the appropriate upfit capacities and requirements of the TITAN XD 'Snowplow Prep' package.

⚠ WARNING

- **Installing a snowplow may affect vehicle handling. This may cause the driver to lose control of the vehicle and could result in vehicle damage, serious injury, or death.**
- **A snowplow attached may affect the operation of the air bags. Use extreme caution while driving and plowing to avoid vehicle damage, serious injury, or death.**

DOT (Department of Transportation) Quality Grades: All passenger car tires must conform to federal safety requirements in addition to these grades.

Quality grades can be found where applicable on the tire sidewall between tread shoulder and maximum section width. For example:

Treadwear 200 Traction AA Temperature A

Treadwear

The treadwear grade is a comparative rating based on the wear rate of the tire when tested under controlled conditions on a specified government test course. For example, a tire graded 150 would wear one and one-half (1 1/2) times as well on the government course as a tire graded 100. The relative performance of tires depends upon the actual conditions of their use, however, and may depart significantly from the norm due to variations in driving habits, service practices and differences in road characteristics and climate.

Traction AA, A, B and C

The traction grades, from highest to lowest, are AA, A, B, and C. Those grades represent the tire's ability to stop on wet pavement as measured under controlled conditions on specified government test surfaces of asphalt and concrete. A tire marked C may have poor traction performance.

⚠ WARNING

The traction grade assigned to this tire is based on straight-ahead braking traction tests, and does not include acceleration, cornering, hydroplaning, or peak traction characteristics.

Temperature A, B and C

The temperature grades are A (the highest), B, and C, representing the tire's resistance to the generation of heat, and its ability to dissipate heat when tested under controlled conditions on a specified indoor laboratory test wheel. Sustained high temperature can cause the material of the tire to degenerate and reduce tire life, and excessive temperature can lead to sudden tire failure. The grade C corresponds to a level of performance which all passenger car tires must meet under the Federal Motor Safety Standard No. 109. Grades B and A represent higher levels of performance on the laboratory test wheel than the minimum required by law.

⚠ WARNING

The temperature grade for this tire is established for a tire that is properly inflated and not overloaded. Excessive speed, under-inflation, or excessive loading, either separately or in combination, can cause heat build-up and possible tire failure.

EMISSION CONTROL SYSTEM WARRANTY

Your NISSAN vehicle is covered by the following emission warranties:

For USA

1. Emission Defects Warranty
2. Emissions Performance Warranty

Details of this warranty may be found with other vehicle warranties in your Warranty Information Booklet which comes with your NISSAN vehicle. If you did not receive a Warranty Information Booklet, or it is lost, you may obtain a replacement by writing to:

- Nissan North America, Inc.
  Consumer Affairs Department
  P.O. Box 685003
  Franklin, TN 37068-5003

For Canada

Emission Control System Warranty

Details of this warranty may be found with other vehicle warranties in your Warranty Information Booklet which comes with your NISSAN vehicle. If you did not receive a Warranty Information Booklet, or it is lost, you may obtain a replacement by writing to:

- Nissan Canada Inc.
  5290 Orbitor Drive
  Mississauga, Ontario, L4W 4Z5

For USA

If you believe that your vehicle has a defect which could cause a crash or could cause injury or death, you should immediately inform the National Highway Traffic Safety Administration (NHTSA) in addition to notifying NISSAN.

If NHTSA receives similar complaints, it may open an investigation, and if it finds that a safety defect exists in a group of vehicles, it may order a recall and remedy campaign. However, NHTSA cannot become involved in individual problems between you, your dealer, or NISSAN.

To contact NHTSA, you may call the Vehicle Safety Hotline toll-free at 1-888-327-4236 (TTY: 1-800-424-9153); go to http://www.safercar.gov; or write to: Administrator, NHTSA, 400 Seventh Street, SW., Washington, D.C. 20590. You can also obtain other information about motor vehicle safety from http://www.safercar.gov.

You may notify NISSAN by contacting our Consumer Affairs Department, toll-free, at 1-800-NISSAN-1.

For Canada

If you believe that your vehicle has a defect which could cause a crash or could cause injury or death, you should immediately inform Transport Canada in addition to notifying NISSAN.

If Transport Canada receives complaints, it may open an investigation, and if it finds that a safety defect exists in a group of vehicles, it may request that NISSAN conduct a recall campaign. However, Transport Canada cannot become involved in individual problems between you, your dealer, or NISSAN.

You may contact Transport Canada's Defect Investigations and Recalls Division toll free at 1-800-333-0510. You may also report safety defects online at: https://wwwapps.tc.gc.ca/Saf-Sec-Sur/7/PCDB-BDPP/fc-cp.aspx?lang=eng (English speakers) or https://wwwapps.tc.gc.ca/Saf-Sec-Sur/7/PCDB-BDPP/fc-cp.aspx?lang=fra (French speakers)

Additional information concerning motor vehicle safety may be obtained from Transport Canada's Road Safety Information Centre at 1-800-333-0371 or online at www.tc.gc.ca/roadsafety (English speakers) or www.tc.gc.ca/securiteroutiere (French speakers).

To notify NISSAN of any safety concerns please contact our Consumer Information Centre toll free at 1-800-387-0122.

READINESS FOR INSPECTION/ MAINTENANCE (I/M) TEST (gas engine only)

⚠ WARNING

A vehicle equipped with 4-Wheel Drive (4WD) should never be tested using a two wheel dynamometer (such as the dynamometers used by some states for emissions testing), or similar equipment. Make sure you inform the test facility personnel that your vehicle is equipped with 4WD before it is placed on a dynamometer. Using the wrong test equipment may result in transmission damage or unexpected vehicle movement which could result in serious vehicle damage or personal injury.

Due to legal requirements in some states and Canadian Provinces, your vehicle may be required to be in what is called the "ready condition" for an Inspection/Maintenance (I/M) test of the emission control system.

The vehicle is set to the "ready condition" when it is driven through certain driving patterns. Usually, the ready condition can be obtained by ordinary usage of the vehicle.

If a powertrain system component is repaired or the battery is disconnected, the vehicle may be reset to a "not ready" condition. Before taking the I/M test, check the vehicle's inspection/maintenance test readiness condition. Place the ignition switch in the ON position without starting the engine. If the Malfunction Indicator Light (MIL) comes on steady for 20 seconds and then blinks for 10 seconds, the I/M test condition is "not ready". If the MIL does not blink after 20 seconds, the I/M test condition is "ready". It is recommended that you visit a NISSAN dealer to set the "ready condition" or to prepare the vehicle for testing.

diesel engine only

For additional information, refer to the "Titan Diesel Owner's Manual".

EVENT DATA RECORDERS (EDR)

This vehicle is equipped with an Event Data Recorder (EDR). The main purpose of an EDR is to record, in certain crash or near crash-like situations, such as an air bag deployment or hitting a road obstacle, data that will assist in understanding how a vehicle's systems performed. The EDR is designed to record data related to vehicle dynamics and safety systems for a short period of time, typically 30 seconds or less. The EDR in this vehicle is designed to record such data as:

- How various systems in your vehicle were operating;
- Whether or not the driver and passenger safety belts were buckled/fastened;
- How far (if at all) the driver was depressing the accelerator and/or brake pedal; and,
- How fast the vehicle was traveling.
- Sounds are not recorded.

These data can help provide a better understanding of the circumstances in which crashes and injuries occur. NOTE: EDR data are recorded by your vehicle only if a non-trivial crash situation occurs; no data are recorded by the EDR under normal driving conditions and no personal data (e.g.

name, gender, age and crash location) are recorded. However, other parties, such as law enforcement, could combine the EDR data with the type of personally identifying data routinely acquired during a crash investigation.

To read data recorded by an EDR, special equipment is required and access to the vehicle or the EDR is needed. In addition to the vehicle manufacturer and NISSAN dealer, other parties, such as law enforcement, that have the special equipment, can read the information if they have access to the vehicle or the EDR. EDR data will only be accessed with the consent of the vehicle owner or lessee or as otherwise required or permitted by law.

OWNER'S MANUAL/SERVICE MANUAL ORDER INFORMATION

Genuine NISSAN Service Manuals for this model year and prior can be purchased. A Genuine NISSAN Service Manual is the best source of service and repair information for your vehicle. This manual is the same one used by the factory-trained technicians working at NISSAN dealerships. Genuine NISSAN Owner's Manuals can also be purchased.

For USA

For current pricing and availability of Genuine **NISSAN Service Manuals,** contact:

www.nissan-techinfo.com

For current pricing and availability of Genuine **NISSAN Owner's Manuals,** contact:

1-800-247-5321

For Canada

To purchase a copy of a Genuine NISSAN Service Manual or Owner's Manual, for this model year and prior, please contact your nearest NISSAN dealer. For the phone number and location of a NISSAN dealer in your area, call the NISSAN Information Center at 1-800-387-0122 and a bilingual NISSAN representative will assist you.

11 Index

4WD 5-45
4WD warning light 2-22
4-Wheel Drive 5-45

A

Active Brake Limited Slip (ABLS) system 5-59
Aiming control, headlights 2-57
Air bag (See supplemental restraint system) 1-53
Air bag system
  Front (See supplemental front impact air bag system) 1-60, 1-75
Air bag warning labels 1-80
Air bag warning light. 1-81, 2-29
Air bag warning light, supplemental 1-81, 2-29
Air cleaner 8-19
Air cleaner housing filter 8-19
Air conditioner
  Air conditioner operation 4-38, 4-44
  Air conditioner specification label . .10-20
  Air conditioner system refrigerant and oil recommendations 10-8
  Air conditioner system refrigerant recommendations 10-8
  Heater and air conditioner (automatic) (if so equipped) 4-43
  Heater and air conditioner controls 4-44
  Servicing air conditioner 4-48
Air flow charts. 4-39
Alarm system
(See vehicle security system) 2-48
Anchor point locations 1-31
Antenna 4-88
Antifreeze 5-69
Anti-lock brake warning light 2-22
Anti-lock Braking System (ABS) 5-57
Apps 4-88
Audible reminders 2-32
Audio system 4-48
  AM radio reception. 4-49
  Bluetooth® audio 4-84, 4-85
  Bluetooth® streaming audio . .4-84, 4-85
  Compact disc (CD) player 4-59, 4-65, 4-72
  FM-AM radio with compact disc (CD) player 4-57
  FM/AM/SAT radio with compact disc (CD) player. 4-61, 4-67
  FM radio reception 4-49
  iPod® Player 4-78, 4-81
  iPod® player operation 4-78, 4-81
  Radio 4-48
  Steering wheel audio control switch. 4-87
  USB interface 4-74, 4-76
  USB (Universal Serial Bus) Connection Port 4-76
Autolight switch 2-55
Automatic
  Automatic drive positioner . . .3-42, 3-44
  Automatic power window switch. . .2-89
  Driving with automatic transmission. 5-17
Automatic anti-glare inside mirror 3-32
Automatic door locks 3-8
Automatic drive positioner 3-42, 3-44
Automatic transmission fluid temperature gauge 2-11
AUX jack 4-69

B

Back button 4-7
Battery 5-69, 8-15
  Charge warning light 2-25
Battery replacement 8-26
  Key fob 8-26
  NISSAN Intelligent Key® 8-26
Before starting the engine 5-14
Belt (See drive belt) 8-17
Blind Spot Warning (BSW) 5-23
Block heater
  Engine. 5-71
Bluetooth® audio 4-84, 4-85
Bluetooth® hands-free phone system. 4-120, 4-133
Booster seats 1-49
Brake
  Anti-lock Braking System (ABS) 5-57
  Brake fluid 8-13
  Brake light (See stop light) 8-31
  Brake system 5-56
  Brake warning light 2-24

Brake wear indicators 2-32, 8-21
Parking brake operation 5-22
Self-adjusting brakes 8-21
Brake assist 5-58
Brake fluid 8-13
Brakes 8-21
Brake system. 5-56
Break-in schedule 5-43
Brightness/contrast button 4-9
Brightness control
Instrument panel 2-58
Bulb check/instrument panel. 2-22
Bulb replacement 8-31

C

Capacities and recommended fuel/ lubricants 10-2
Cargo light switch 2-60
Cargo
(See vehicle loading information) 10-22
Car phone or CB radio 4-120
CD care and cleaning. 4-86
CD player
(See audio system) 4-59, 4-65, 4-72
Check tire pressure 2-42
Child restraints. 1-24, 1-25, 1-26, 1-29
LATCH (Lower Anchors and Tethers for CHildren) System. 1-29
Precautions on child restraints 1-26, 1-34, 1-40, 1-44, 1-50
Top tether strap anchor point locations 1-31
Child safety rear door lock 3-9
Chimes, audible reminders 2-32
Cleaning exterior and interior 7-2, 7-4
Climate control seat switch 2-60
Clock setting (models with Navigation System) 4-7
Clock setting (models without Navigation System). 4-58, 4-63
C.M.V.S.S. certification label 10-18
Cold weather driving 5-69
Compact disc (CD) player . . .4-59, 4-65, 4-72
Compass 2-18
Console light 2-92
Control panel buttons 4-4
Back button 4-7
Brightness/contrast button 4-9
Enter button 4-4
With navigation system 4-4
Controls
Audio controls (steering wheel). 4-87
Heater and air conditioner controls . .4-44
Heater and air conditioner controls (manual). 4-34
Coolant
Capacities and recommended fuel/lubricants 10-2
Changing engine coolant 8-6
Checking engine coolant level 8-6
Engine coolant temperature gauge . .2-9
Corrosion protection 7-7
Cruise control 5-41, 5-41, 5-42
Cup holders 2-82
Curtain side-impact and rollover air bag 1-78

D

Daytime Running Light System . . .2-57, 8-29
Diesel Particulate Filter (DPF). 8-11
Digital video disc DVD 4-93
Dimensions and weights 10-11
Dimmer switch for instrument panel . . .2-58
Display 2-32
Display controls
(see control panel buttons) 4-4
Door locks 3-5, 3-6
Door open warning light 2-25
Drive belt. 8-17
Drive positioner, Automatic 3-42, 3-44
Driving
Cold weather driving 5-69
Driving with automatic transmission 5-17
Precautions when starting and driving 5-2, 5-9
Driving the vehicle 5-16

E

Eco Drive Report. 5-54
Economy - fuel. 5-45
Electronic locking rear differential (E-Lock) system. 5-52
Electronic locking rear differential (E-Lock) system switch 2-67
Emergency engine shutoff 5-13, 6-2
Emission control information label 10-19
Emission control system warranty 10-63

Engine
Before starting the engine 5-14
Block heater 5-71
Capacities and recommended fuel/lubricants 10-2
Changing engine coolant 8-6
Changing engine oil 8-8
Changing engine oil filter 8-9
Checking engine coolant level 8-6
Checking engine oil level 8-7
Engine compartment check locations 8-3
Engine coolant temperature gauge . .2-9
Engine cooling system 8-5
Engine oil 8-7
Engine oil and oil filter recommendation 10-7
Engine oil pressure gauge 2-11, 2-12
Engine oil pressure warning light . . .2-25
Engine oil viscosity 10-7
Engine serial number 10-18
Engine specifications 10-9
Engine coolant temperature gauge 2-9
Engine oil pressure gauge 2-11, 2-12
Enter button 4-4
Event Data recorders 10-65
Exhaust gas (Carbon monoxide) 5-2
Explanation of maintenance items 9-2
Explanation of scheduled maintenance items 9-5
Extended storage switch 2-74
Eyeglass case 2-81

F

Flashers
(See hazard warning flasher switch) 6-2
Flat tire 6-3
Floor mat positioning aid 7-6
Fluid
Brake fluid 8-13
Capacities and recommended fuel/lubricants 10-2
Engine coolant 8-5
Engine oil 8-7
Power steering fluid 8-12
Windshield-washer fluid 8-14
F.M.V.S.S. certification label 10-18
Fog light switch 2-59
Four-Wheel Drive 5-45
Front air bag system (See supplemental restraint system) 1-60, 1-75
Front and rear sonar system 5-64
Front-door pocket 2-75
Front power seat adjustment 1-5
Front seats 1-2
Fuel
Capacities and recommended fuel/lubricants 10-2
Fuel economy 5-45
Fuel gauge 2-10
Fuel octane rating 10-6
Fuel recommendation 10-4
Loose fuel cap warning 2-45
Fuel Cell Vehicle (FCV) System
Tire pressure 8-34
Fuel efficient driving tips 5-43
Fuel-filler door 3-25
Fuel gauge 2-10
Fuses 8-22
Fusible links 8-24

G

Garage door opener, HomeLink® Universal Transceiver . .2-93, 2-94, 2-95, 2-96, 2-96, 2-97
Gauge
Automatic transmission fluid temperature gauge 2-11
Engine coolant temperature gauge . .2-9
Engine oil pressure gauge 2-11, 2-12
Fuel gauge 2-10
Odometer 2-8
Speedometer 2-8
Tachometer 2-9
Trip computer 2-13
Trip odometer 2-8
Voltmeter 2-12
General maintenance 9-2
Glove box 2-78
Grocery hooks 2-85

H

Hands-free phone system, Bluetooth® 4-120, 4-133
Hazard warning flasher switch 6-2
Headlight aiming control 2-57
Headlight and turn signal switch 2-54
Headlight control switch 2-54
Headlights 8-28
Headlights, aiming control 2-57

Head restraints 1-10
Heated rear seats 2-62
Heated seats 2-61
Heated steering wheel switch 2-64
Heater
Heater and air conditioner (automatic) (if so equipped). 4-43
Heater and air conditioner controls . .4-44
Heater operation 4-36, 4-45
Heater and air conditioner (automatic). .4-43
Hill descent control switch 2-66
Hill descent control system 5-62
Hill start assist system 5-63
HomeLink® Universal Transceiver . .2-93, 2-94, 2-95, 2-96, 2-96, 2-97
Hood 3-25
Hook
Luggage hook 2-86
Horn 2-59

I

Ignition switch
Push-button ignition switch 5-11
Immobilizer system. 2-49, 5-14
Important vehicle information label . . .10-18
In-cabin microfilter 8-19
Increasing fuel economy 5-45
Indicator lights and audible reminders (See warning/indicator lights and audible reminders) 2-22, 2-29
Information display 2-32
Inside automatic anti-glare mirror. 3-32
Instrument brightness control 2-58
Instrument panel 0-6, 2-4
Instrument panel dimmer switch 2-58
Intelligent Around View Monitor. 4-17
Intelligent Key system
Key operating range 3-11
Key operation 3-12
Mechanical key 3-4
Remote keyless entry operation 3-15
Troubleshooting guide 3-20
Warning signals 3-20
Interior light 2-91
iPod® Player 4-78, 4-81
ISOFIX child restraints. 1-29

J

Jump starting 6-13, 8-16

K

Key 3-2
Key fob battery replacement 8-26
Keyless entry
With Intelligent Key system (See Intelligent Key system) 3-15
Keys
NISSAN Intelligent Key® 3-2, 3-10
NISSAN Vehicle Immobilizer System keys 3-4

L

Labels
Air conditioner specification label . .10-20
C.M.V.S.S. certification label 10-18
Emission control information label . .10-19
Engine serial number 10-18
F.M.V.S.S. certification label 10-18
Tire and Loading Information label. .10-20
Vehicle identification number (VIN) . .10-17
Vehicle identification number (VIN) plate 10-17
Warning labels (for SRS) 1-80
LATCH (Lower Anchors and Tethers for CHildren) System. 1-29
License plate
Installing the license plate 10-21
Light
Air bag warning light 1-81, 2-29
Brake light (See stop light) 8-31
Bulb check/instrument panel. 2-22
Bulb replacement 8-31
Charge warning light 2-25
Console light 2-92
Exterior and Interior lights 8-31
Fog lights 8-28
Fog light switch 2-59
Headlight and turn signal switch. . . .2-54
Headlight control switch. 2-54
Headlights 8-28
Interior light 2-91
Light bulbs 8-28
Low tire pressure warning light. 2-26
Low windshield-washer fluid warning light 2-27, 2-43

Passenger air bag and status light . . .1-63
Personal lights 2-93
Security indicator light 2-31
Warning/indicator lights and audible reminders 2-22, 2-29
Lights 8-28
Map lights 2-92
Lock
Child safety rear door lock 3-9
Door locks 3-5, 3-6
Power door locks 3-6
Loose fuel cap warning 2-45
Low fuel warning light . .2-25, 2-28, 2-41, 2-42
Low tire pressure warning light. 2-26
Low windshield-washer fluid warning light 2-27, 2-43
Luggage hook 2-86
Luggage
(See vehicle loading information) 10-22

M

Maintenance
General maintenance 9-2
Inside the vehicle 9-3
Maintenance precautions. 8-2
Outside the vehicle 9-2
Seat belt maintenance 1-23
Under the hood and vehicle 9-4
Maintenance log 9-18
Maintenance requirements. 9-2
Maintenance schedules 9-7
Malfunction indicator light. 2-27, 2-30
Manual front seat adjustment 1-4
Map lights 2-92
Map pocket 2-76
Memory Seat 3-42, 3-44
Meters and gauges 2-6, 2-11
Instrument brightness control 2-58
Mirror
Automatic anti-glare inside mirror. . .3-32
Outside mirrors 3-33
Rearview. 3-32
Vanity mirror 3-31
Mirrors 3-32
Mobile apps 4-88
Moving Object Detection (MOD) 4-29

N

NissanConnect®. 4-88
NissanConnect® Services 4-89
NISSAN Intelligent Key® 3-2, 3-10
NISSAN mobile entertainment system (MES) 4-93
NISSAN Vehicle Immobilizer System 2-49, 5-14
NISSAN voice recognition system. 4-142

O

Octane rating (See fuel octane rating) . .10-6
Odometer 2-8
Oil
Capacities and recommended fuel/lubricants 10-2
Changing engine oil 8-8
Changing engine oil filter 8-9
Checking engine oil level 8-7
Engine oil 8-7
Engine oil and oil filter recommendation 10-7
Engine oil viscosity. 10-7
One shot call. 4-123, 4-124, 4-135
Outside mirrors 3-33
Overhead sunglasses holder 2-81
Overheat
If your vehicle overheats 6-15
Owner's manual order form 10-66
Owner's manual/service manual order information 10-66

P

Parking
Parking brake operation 5-22
Parking/parking on hills 5-56
Parking brake. 5-22
Personal lights 2-93
Phone, Bluetooth® hands-free system 4-120, 4-133
Power
Front seat adjustment 1-5
Power door locks 3-6
Power outlet 2-71, 2-71, 2-73
Power rear windows 2-88
Power steering fluid 8-12
Power steering system 5-56
Power windows 2-87
Rear power windows 2-88
Power inverter switch 2-68
Power outlet 2-71, 2-71, 2-73
Power steering. 5-56
Power steering fluid 8-12

Precautions
Maintenance precautions 8-2
On-pavement and off-road driving precautions 5-6
Precautions on booster seats 1-26, 1-34, 1-40, 1-44, 1-50
Precautions on child restraints 1-26, 1-34, 1-40, 1-44, 1-50
Precautions on seat belt usage 1-15
Precautions on supplemental restraint system. 1-53, 1-68
Precautions when starting and driving 5-2, 5-9
Push starting 6-15

R

Radio
Car phone or CB radio 4-120
FM-AM radio with compact disc (CD) player 4-57
FM/AM/SAT radio with compact disc (CD) player 4-61, 4-67
Steering wheel audio control switch . .4-87
Rain sensor 2-52
Readiness for inspection maintenance (I/M) test 10-65
Rear Cross Traffic Alert (RCTA). 5-33
Rear power windows 2-88
Rear seat 1-4
Rear sliding window 2-90
Rear sonar system off switch. 2-69
Rearview mirror 3-32
RearView Monitor 4-10
Rear window and/or outside mirror defroster switch 2-53
Recommended Fluids 10-2
Recorders
Event Data 10-65
Refrigerant recommendation. 10-8
Registering a vehicle in another country 10-17
Remote Engine Start 3-22, 5-16
Reporting safety defects (US only) 10-64

S

Safety
Child safety rear door lock 3-9
Child seat belts . .1-26, 1-34, 1-40, 1-44, 1-50
Reporting safety defects (US only) . .10-64
Seat adjustment
Front manual seat adjustment. 1-4
Front power seat adjustment 1-5
Seatback pockets 2-76
Seat belt
Child safety 1-24
Infants and small children 1-25
Injured Person 1-18
Larger children 1-25
Precautions on seat belt usage 1-15
Pregnant women 1-18
Seat belt extenders 1-23
Seat belt maintenance 1-23
Seat belts 1-15, 7-6
Shoulder belt height adjustment 1-22
Three-point type with retractor 1-18
Seat belt extenders 1-23
Seat belt warning light 1-18, 2-25
Seats
Adjustment 1-2
Automatic drive positioner 3-42, 3-44
Front seats 1-2
Heated seats 2-61
Manual front seat adjustment 1-4
Rear seat 1-4
Security indicator light 2-31
Security system (NISSAN Vehicle Immobilizer System), engine start. 2-49, 5-14
Security systems
Vehicle security system 2-48
Self-adjusting brakes 8-21
Service manual order form 10-66
Servicing air conditioner. 4-48
Shifting
Automatic transmission 5-18
Shoulder belt height adjustment. 1-22
Side air bag system (See supplemental side air bag, curtain and rollover air bag systems) 1-78
Siri® Eyes-Free 4-89
Smartphone connectivity 4-88
Snow plow 10-61
Spark plug replacement 8-18
Spark plugs 8-18
Specifications. 10-9
Speedometer 2-8
Speedometer and odometer. 2-7
SRS warning label 1-80
Stability control 5-60
Standard maintenance 9-8
Starting
Before starting the engine 5-14
Jump starting 6-13, 8-16

Precautions when starting and driving . . . 5-2, 5-9
Push starting . . . 6-15
Starting the engine (diesel only) . . . 5-16
Starting the engine (gasoline engine only) . . . 5-15
Steering
Power steering fluid . . . 8-12
Power steering system . . . 5-56
Steering wheel . . . 3-29
Steering wheel audio control switch . . . 4-87
Stop light . . . 8-31
Storage . . . 2-75
Storage tray . . . 2-79
Sunglasses case . . . 2-81
Sunglasses holder . . . 2-81
Sun visors . . . 3-30
Supplemental air bag warning labels . . . 1-80
Supplemental air bag warning light . . . 1-81, 2-29
Supplemental front impact air bag system . . . 1-60, 1-75
Supplemental restraint system
Information and warning labels . . . 1-80
Precautions on supplemental restraint system . . . 1-53, 1-68
Supplemental restraint system (Supplemental air bag system) . . . 1-53
Switch
Autolight switch . . . 2-55
Automatic power window switch . . . 2-89
Electronic locking rear differential (E-Lock) system switch . . . 2-67
Fog light switch . . . 2-59
Hazard warning flasher switch . . . 6-2
Headlight aiming control . . . 2-57
Headlight and turn signal switch . . . 2-54
Headlight control switch . . . 2-54
Hill descent control switch . . . 2-66
Instrument brightness control . . . 2-58
Power door lock switch . . . 3-6
Power inverter switch . . . 2-68
Rear sonar system off switch . . . 2-69
Tow mode switch . . . 2-70
Turn signal switch . . . 2-58
Vehicle dynamic control (VDC) off switch . . . 2-65

T

Tachometer . . . 2-9
Tailgate . . . 3-37, 3-37
Temperature gauge
Engine coolant temperature gauge . . . 2-9
Theft (NISSAN Vehicle Immobilizer System), engine start . . . 2-49, 5-14
Three-way catalyst . . . 5-2
Tie down hooks . . . 3-41
Tire
Flat tire . . . 6-3
Spare tire . . . 6-4, 6-6, 6-7, 8-46
Tire and Loading Information label . . . 10-20
Tire chains . . . 8-42
Tire pressure . . . 8-34
Tire rotation . . . 8-42
Tires of 4-wheel drive . . . 8-45
Types of tires . . . 8-41
Uniform tire quality grading . . . 10-62
Wheels and tires . . . 8-34, 10-10
Wheel/tire size . . . 10-10
Tire pressure . . . 8-34
Low tire pressure warning light . . . 2-26
Tire Pressure Monitoring System (TPMS) . . . 5-3, 6-3
Towing
2-wheel drive models . . . 6-17
Flat towing . . . 10-61
Towing load/specification . . . 10-40
Trailer towing . . . 10-36
Towing a trailer . . . 10-36
Towing your vehicle . . . 6-16
Tow mode switch . . . 2-70
Trailer Brake Controller Unit (TBCU) . . . 2-71
Transceiver
HomeLink® Universal Transceiver . . . 2-93, 2-94, 2-95, 2-96, 2-96, 2-97
Transfer case . . . 5-46
Transmission
Driving with automatic transmission . . . 5-17
Travel (See registering a vehicle in another country) . . . 10-17
Trip computer . . . 2-13
Trip odometer . . . 2-8
Troubleshooting guide (NISSAN voice recognition system) . . . 4-147
Truck box . . . 3-37, 3-37
Truck - camper loading . . . 10-34
Turn signal switch . . . 2-58

U

Under seat storage bin . . . 2-77, 2-81
Uniform tire quality grading . . . 10-62

USB interface 4-76
Audio file operation 4-75, 4-77
Using four wheel drive (4WD) 5-45

V

Vanity mirror 3-31
Variable voltage control system 8-17
Vehicle dimensions and weights 10-11
Vehicle dynamic control (VDC) off switch 2-65
Vehicle dynamic control (VDC) system . .5-60
Vehicle Dynamic Control (VDC) system. .5-60
Vehicle identification 10-17
Vehicle identification number (VIN) 10-17
Vehicle identification number (VIN) (Chassis number) 10-17
Vehicle identification number (VIN) plate 10-17
Vehicle immobilizer system. 2-49, 5-14
Vehicle Information Display 2-32
Vehicle loading information 10-22
Vehicle recovery 6-18
Vehicle security system 2-48
Vehicle security system (NISSAN Vehicle Immobilizer System), engine start . .2-49, 5-14
Vents. 4-34
Visors 3-30
Voice Prompt Interrupt . . .4-123, 4-124, 4-135
Voice recognition system. 4-142
Voltmeter 2-12

W

Warning
4WD warning light 2-22
Air bag warning light 1-81, 2-29
Anti-lock brake warning light 2-22
Battery charge warning light 2-25
Brake warning light 2-24
Door open warning light 2-25
Engine oil pressure warning light . . .2-25
Hazard warning flasher switch. 6-2
Loose fuel cap warning 2-45
Low fuel warning light 2-25, 2-28, 2-41, 2-42
Low tire pressure warning light. 2-26
Low windshield-washer fluid warning light 2-27, 2-43
Passenger air bag and status light. . .1-63
Passenger's seat belt warning light and chime 2-28
Seat belt warning light 1-18, 2-25
Supplemental air bag warning light. 1-81, 2-29
Vehicle security system 2-48
Warning/indicator lights and audible reminders 2-22, 2-29
Warning labels (for SRS) 1-80
Warning/indicator lights and audible reminders 2-22, 2-29
Audible reminders 2-22, 2-29
Indicator lights 2-22, 2-29
Warning lights 2-22, 2-29
Warning lights 2-22, 2-29
Warning lights, indicator lights and audible reminders 2-21
Warning systems switch. 2-64
Weights
(See dimensions and weights) 10-11
Wheels and tires 8-34, 10-10
Wheel/tire size. 10-10
When traveling or registering in another country 10-17
Windows. 2-87
Locking passengers' windows 2-88
Power rear windows 2-88
Power windows 2-87
Rear power windows 2-88
Rear sliding window 2-90
Windshield-washer fluid 8-14
Windshield wiper blades 8-20
Wiper
Wiper blades 8-20
Wiper and washer switch 2-51

MEMO

MEMO

MEMO

MEMO

MEMO

MEMO

FUEL RECOMMENDATION:

Gas engine only

Use unleaded regular gasoline with an octane rating of at least 87 AKI (Anti-Knock Index) number (Research octane number 91).

⚠ CAUTION

- **Using a fuel other than that specified could adversely affect the emission control system, and may also affect the warranty coverage.**
- **Under no circumstances should a leaded gasoline be used, because this will damage the three-way catalyst.**
- **Do not use E-15 or E-85 fuel in your vehicle. Your vehicle is not designed to run on E-15 or E-85 fuel. Using E-15 or E-85 fuel in a vehicle not specifically designed for E-15 or E-85 fuel can adversely affect the emission control devices and systems of the vehicle. Damage caused by such fuel is not covered by the NISSAN New Vehicle Limited Warranty.**
- **Do not use fuel that contains the octane booster methylcyclopentadienyl manganese tricarbonyl (MMT). Using fuel containing MMT may adversely affect vehicle performance and vehicle emissions. Not all fuel dispensers are labeled to indicate MMT content, so you may have to consult your gasoline retailer for more details. Note that Federal and California laws prohibit the use of MMT in reformulated gasoline.**
- **U.S. government regulations require ethanol dispensing pumps to be identified by a small, square, orange and black label with the common abbreviation or the appropriate percentage for that region.**

For additional information, refer to "Recommended fluids/lubricants and capacities" in the "Technical and consumer information" section of this manual.

Diesel engine only

For additional information, refer to "Fuel recommendation" in the "Titan Diesel Owner's Manual".

ENGINE OIL RECOMMENDATION:

Gas engine only

- Genuine "Nissan Motor Oil 0W-20 SN"

For additional information, refer to "Engine oil and oil filter recommendations" in the "Technical and consumer information" section of this manual.

Diesel engine only

For additional information, refer to "Engine oil recommendation" in the "Titan Diesel Owner's Manual".

COLD TIRE PRESSURE:

Refer to the Tire and Loading Information label.

The label is typically located on the driver side center pillar or on the driver's door. For additional information, refer to "Wheels and tires" in the "Do-it-yourself" section of this manual.

RECOMMENDED NEW VEHICLE BREAK-IN PROCEDURE:

Gas engine only

During the first 1,200 miles (2,000 km) of vehicle use, follow the break-in procedure recommendations for the future reliability and economy of your new vehicle. For additional information, refer to "Break-in schedule" in the "Starting and driving" section of this manual. Failure to follow these recommendations may result in vehicle damage or shortened engine life.

Diesel engine only

For additional information, refer to "Engine break-in recommendations" in the "Titan Diesel Owner's Manual".

Printing : August 2017
Publication No.: OM18EA 0A61U0
Printed in U.S.A.

A61-D