Hilux

High over bar

Installation instructions

TOYOTA

ALWAYS A
BETTER WAY

Model year:	2015/05
Vehicle code:	GUN125*-D**MHW GUN125*-D**HHW GUN125*-C**MHW GUN125*-C**HHW
Part number:	PW3B0-0K000

Manual reference number: AIM 003 407 - 0

Revision Record

Rev. No.	Date	Page	Picture	Update	New	Deleted steps

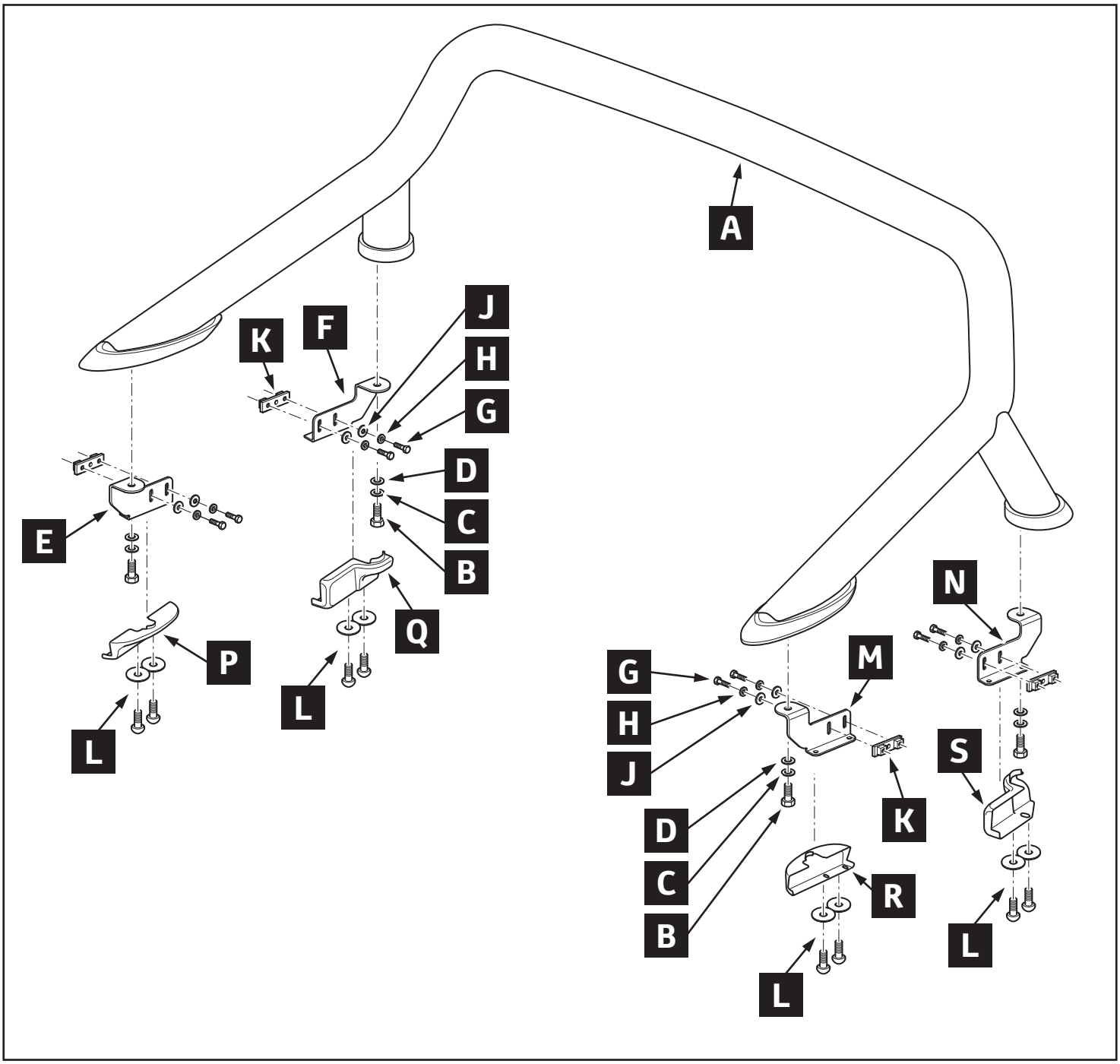

PW3B0-0K000

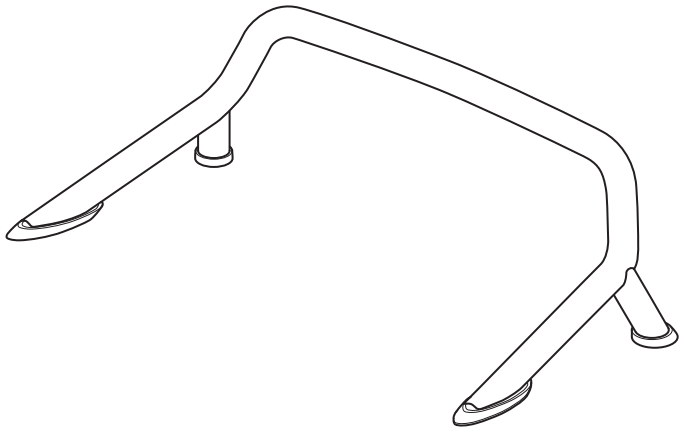

A 1x

D 4x

C 4x

B 4x

E 1x

M 1x

F 1x

N 1x

G 8x

H 8x

J 8x

K 4x

L 8x

P 1x

Q 1x

R 1x

S 1x

SPARE PARTS

PW3B0-0K007

1x

1x

2x

PW3B0-0K008

1x

1x

4x

PW3B0-0K009

F	B	C	D	G	H	J	K
1x	1x	1x	1x	2x	2x	2x	1x

PW3B0-0K010

N	B	C	D	G	H	J	K
1x	1x	1x	1x	2x	2x	2x	1x

PW3B0-0K011

E	B	C	D	G	H	J	K
1x	1x	1x	1x	2x	2x	2x	1x

PW3B0-0K012

M	B	C	D	G	H	J	K
1x	1x	1x	1x	2x	2x	2x	1x

PW3B0-0K013

Q	R	L
1x	1x	4x

PW3B0-0K014

P	S	L
1x	1x	4x

5 mm

8 mm
17 mm

Ø 3 mm
Ø 8 mm

VHB
SURFACE
CLEANER
DEGREASER

CLEANER DEGREASER

A B

A:PRIMER
B:ACTIVATOR

A:Standox® Etching Adhesion Primer 020 16167
B:Standox® Etching Adhesion Activator 020 16168

or

A:Sikkens® primer surfacer EP II
B:Sikkens® primer surfacer EP II Hardener

WURTH
CAVITY WAX

TOYOTA

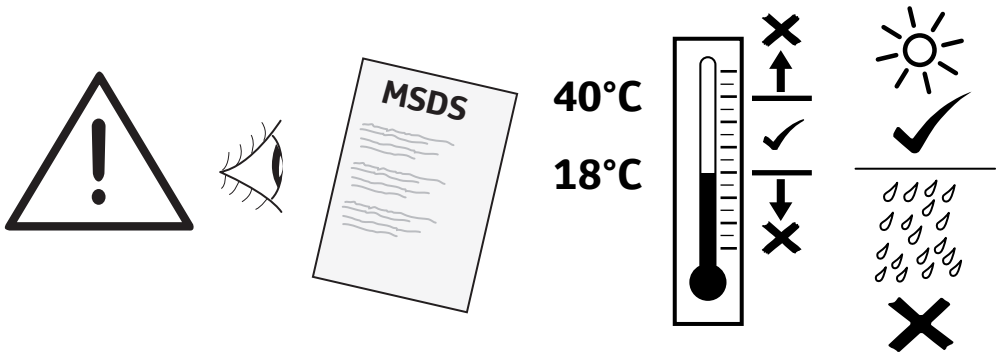

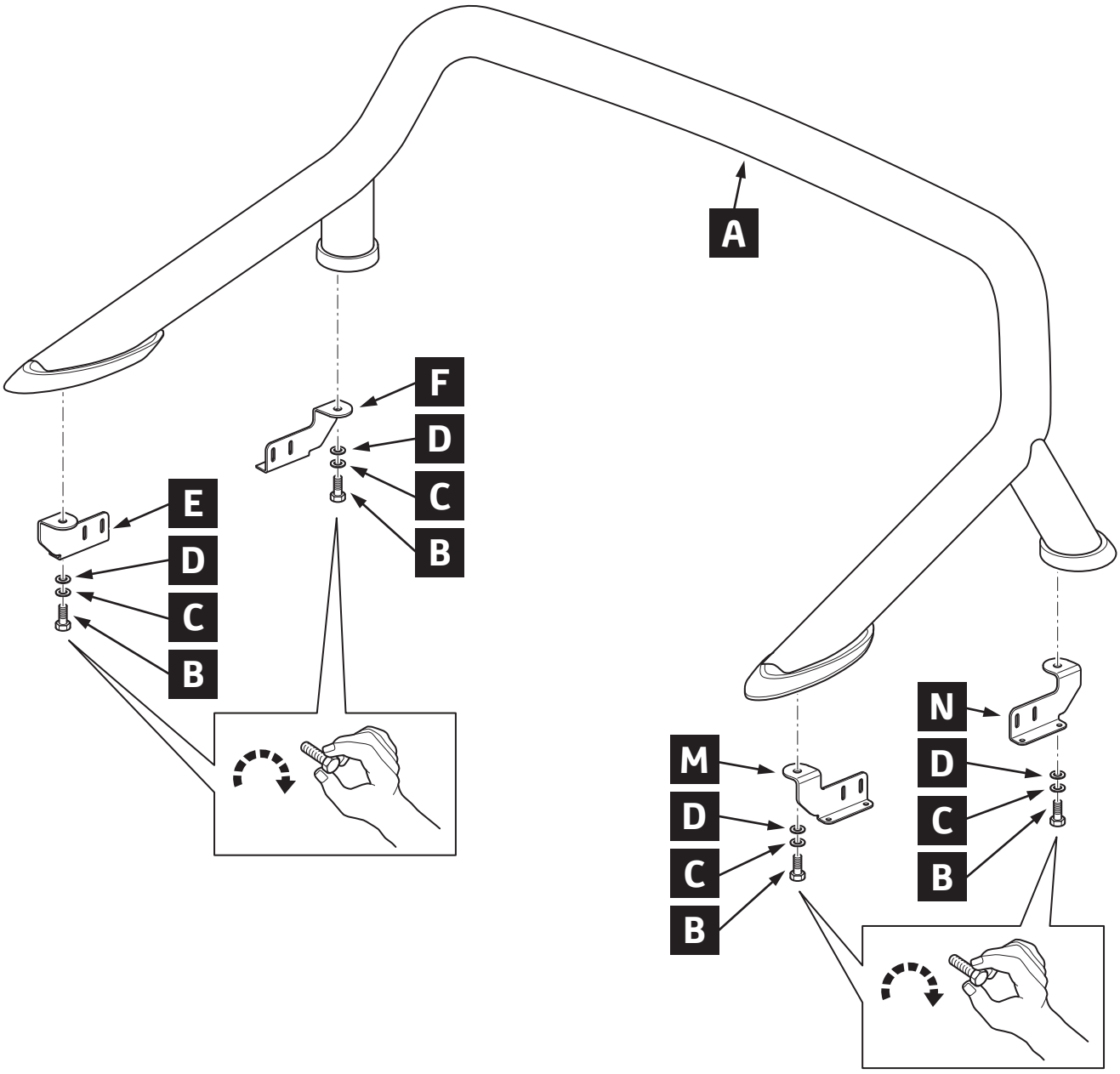

1

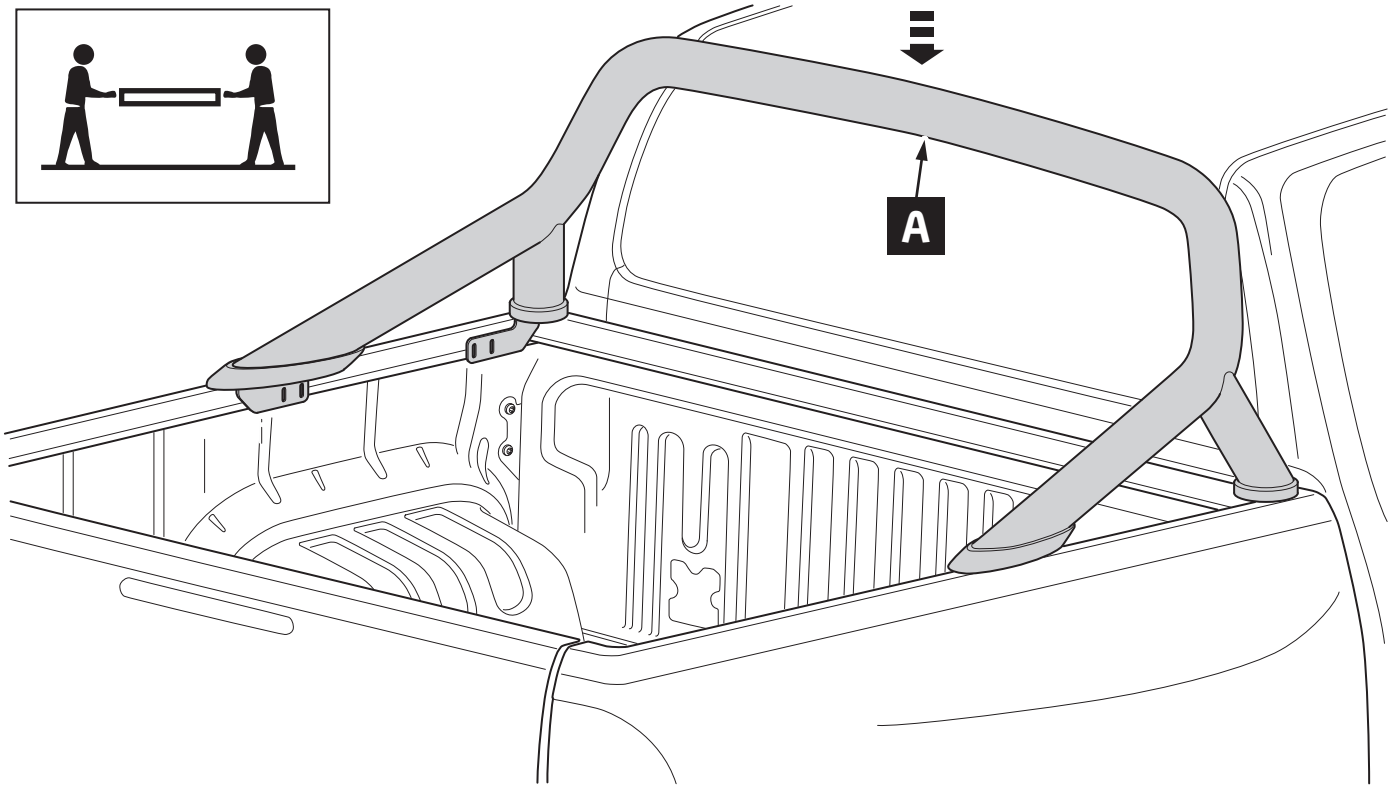

2

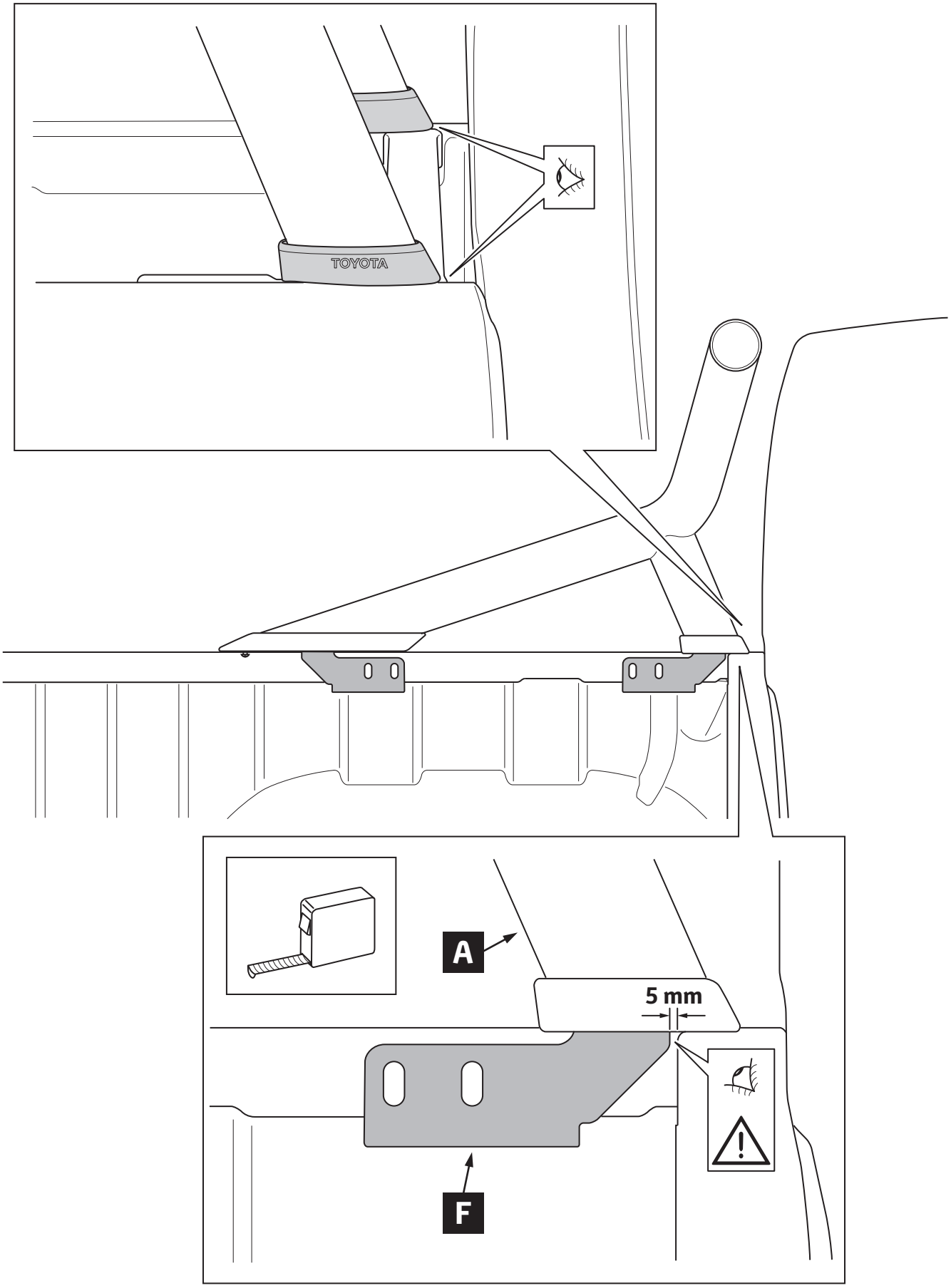

3

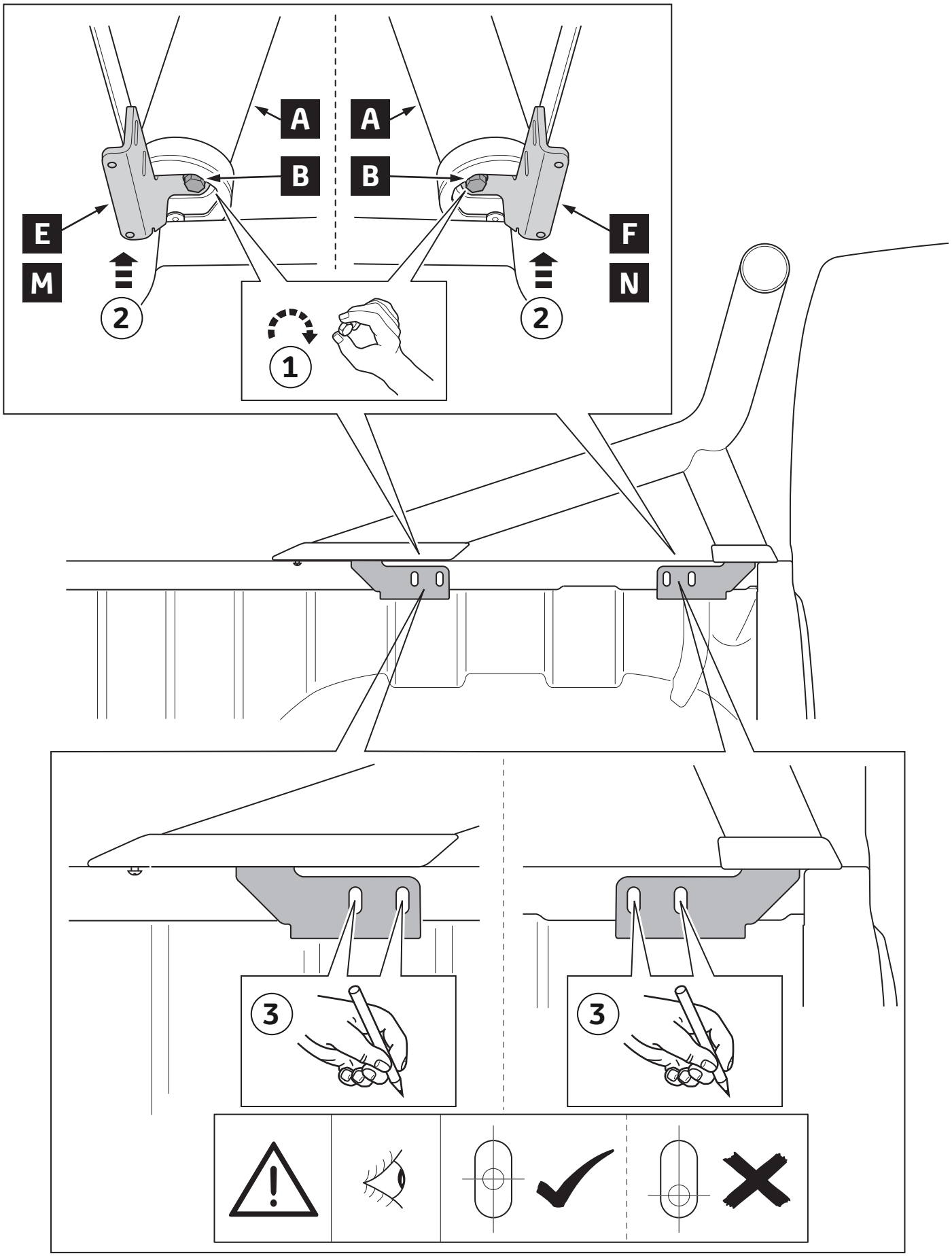

4

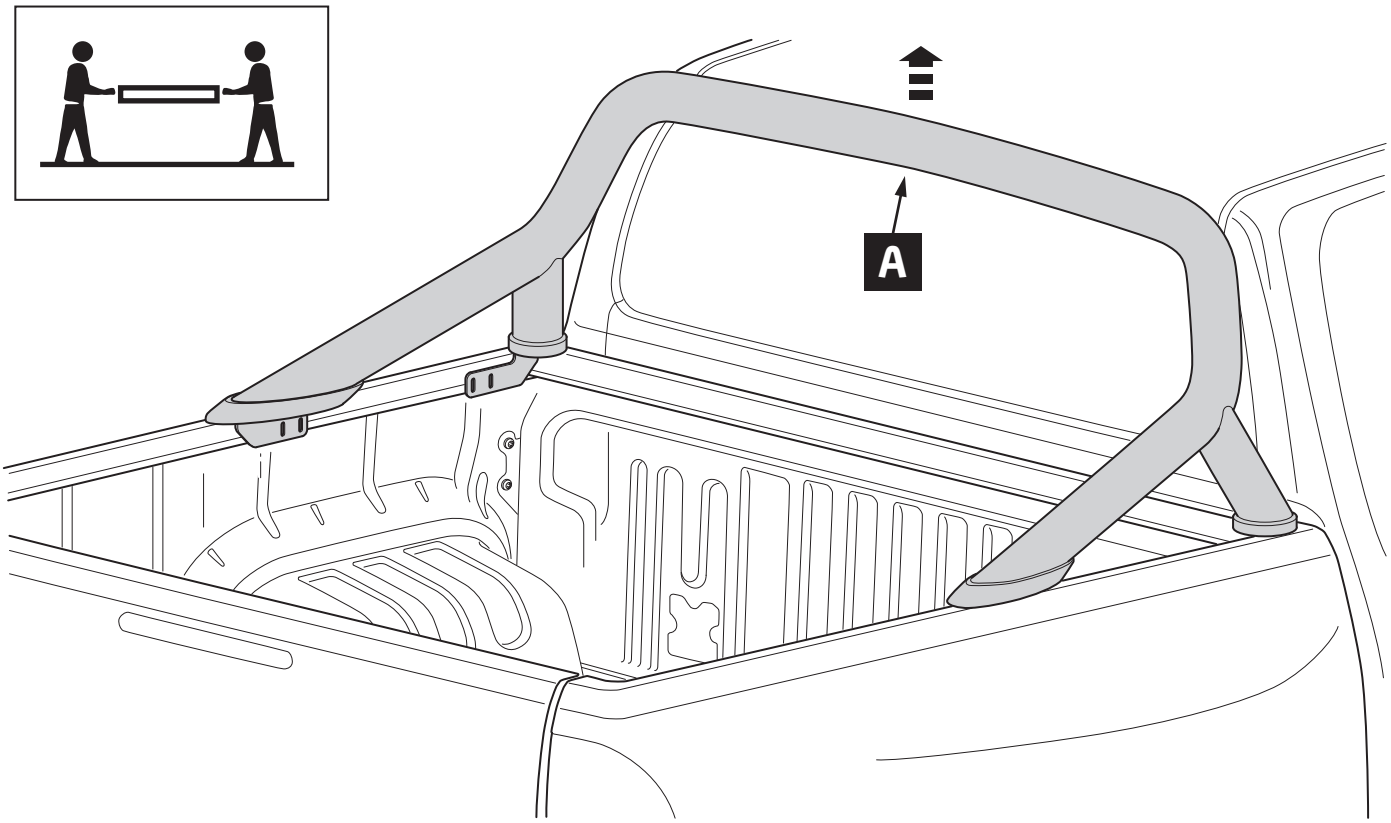

5

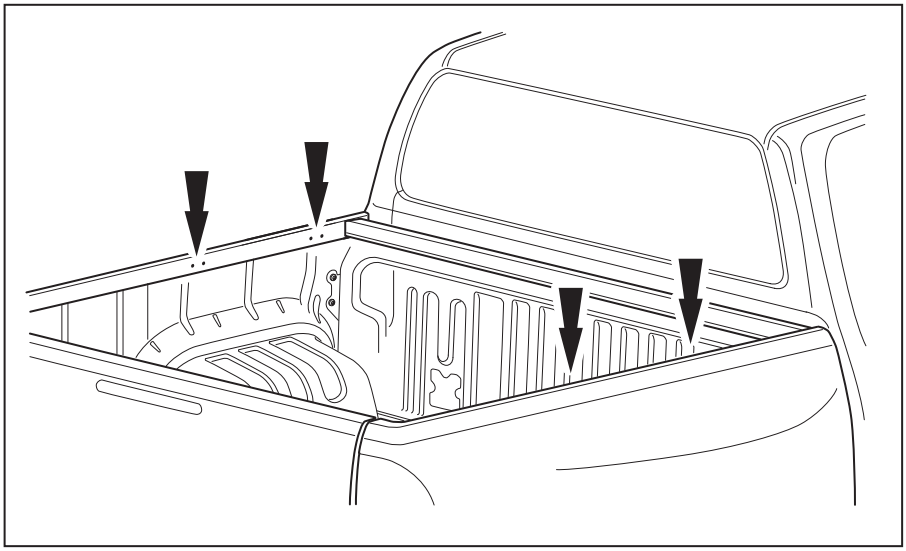

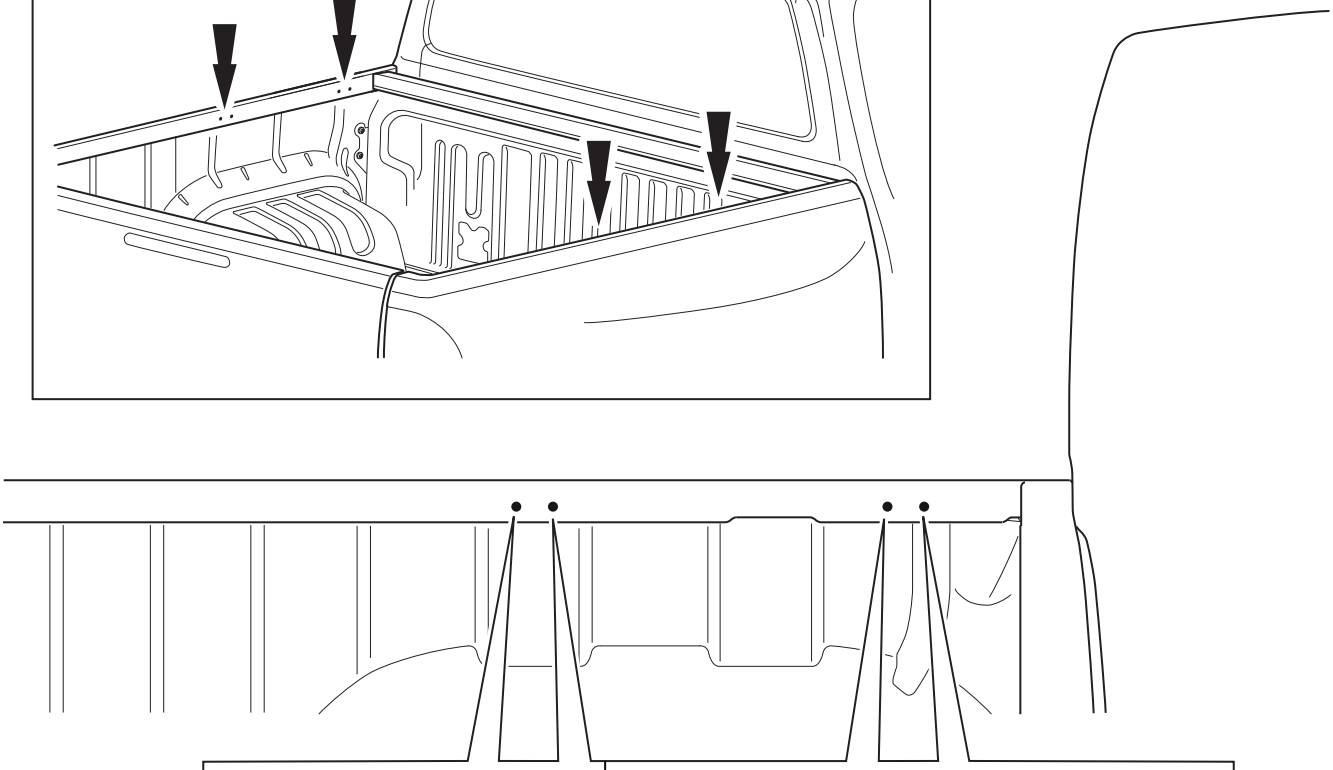

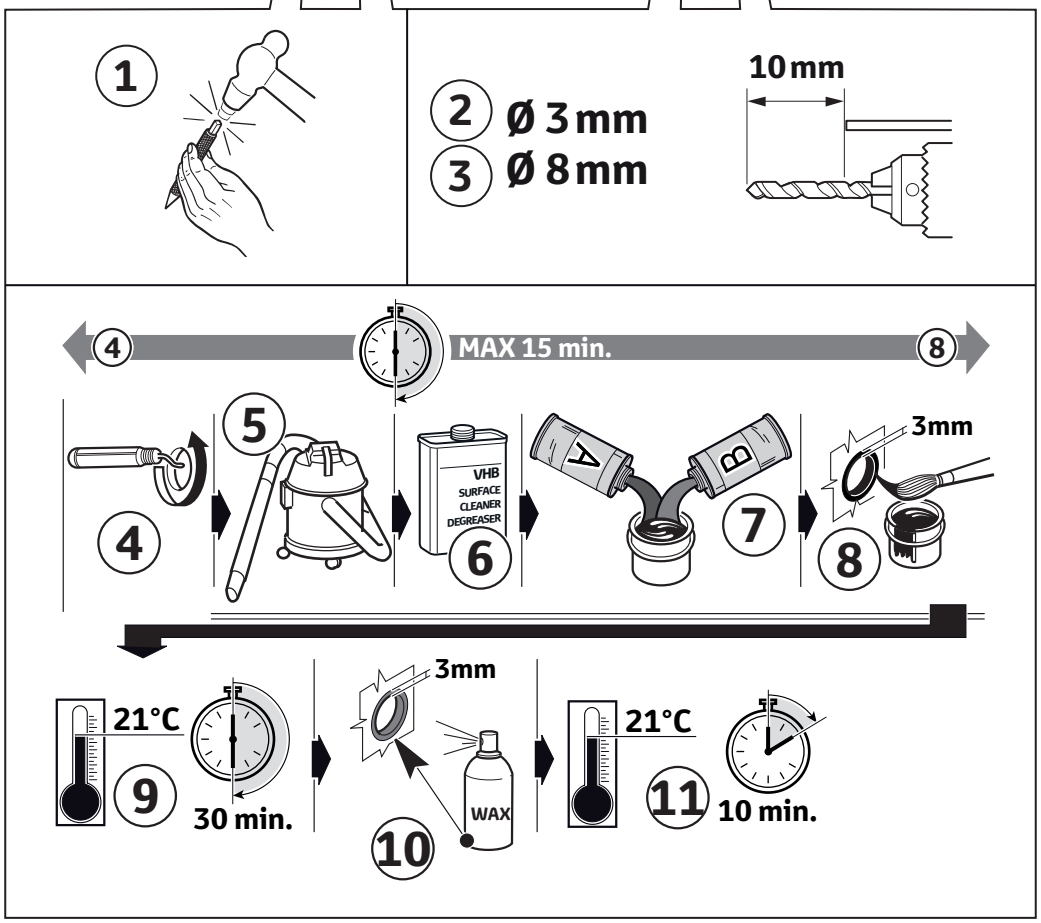
1
2 Ø 3 mm
3 Ø 8 mm
10 mm
4
MAX 15 min.
8
5
4
VHB
SURFACE
CLEANER
DEGREASER
6
A
B
7
3mm
8
21°C
9
30 min.
3mm
WAX
10
21°C
11
10 min.

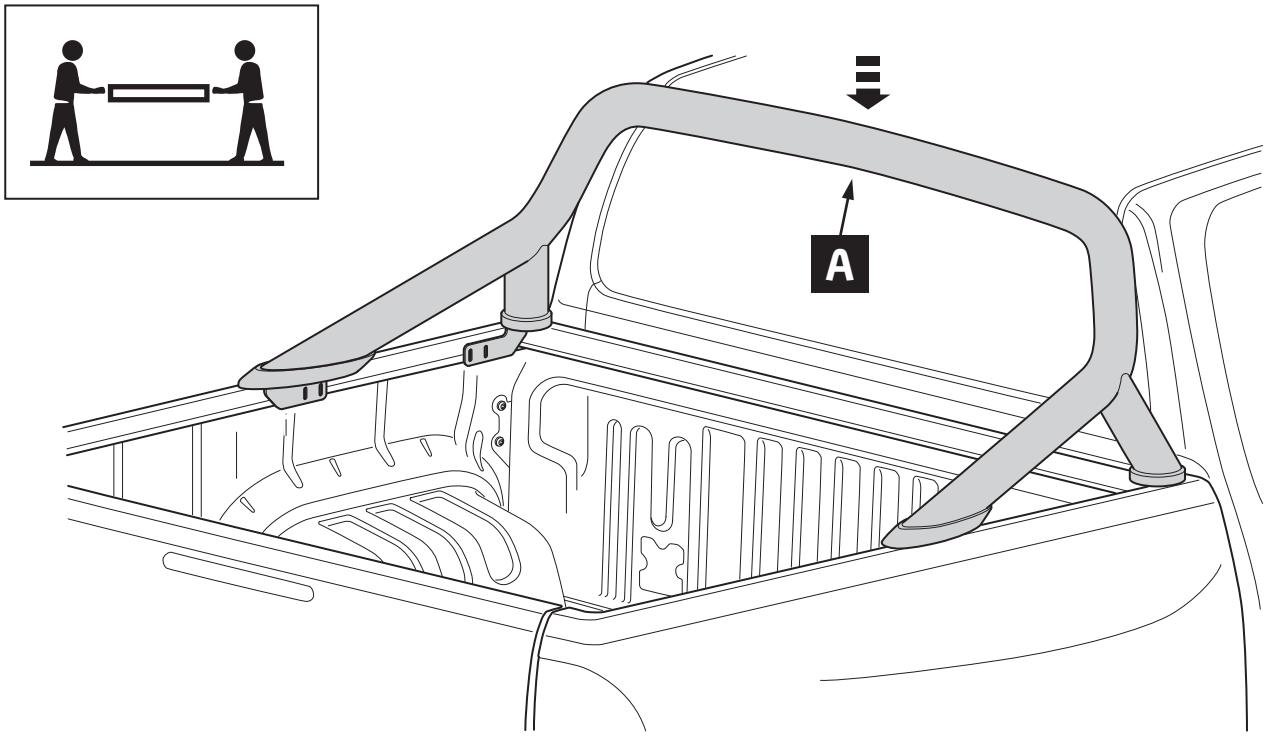

7

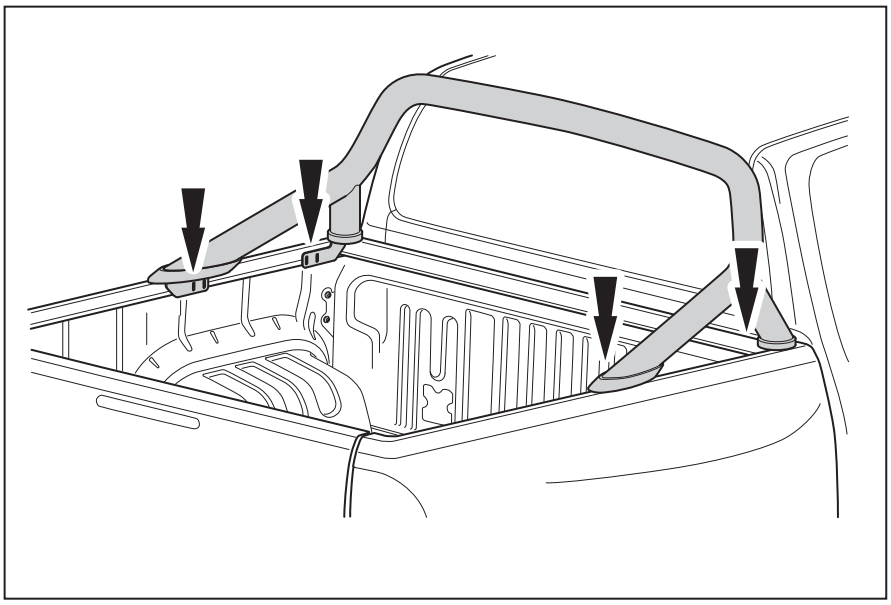

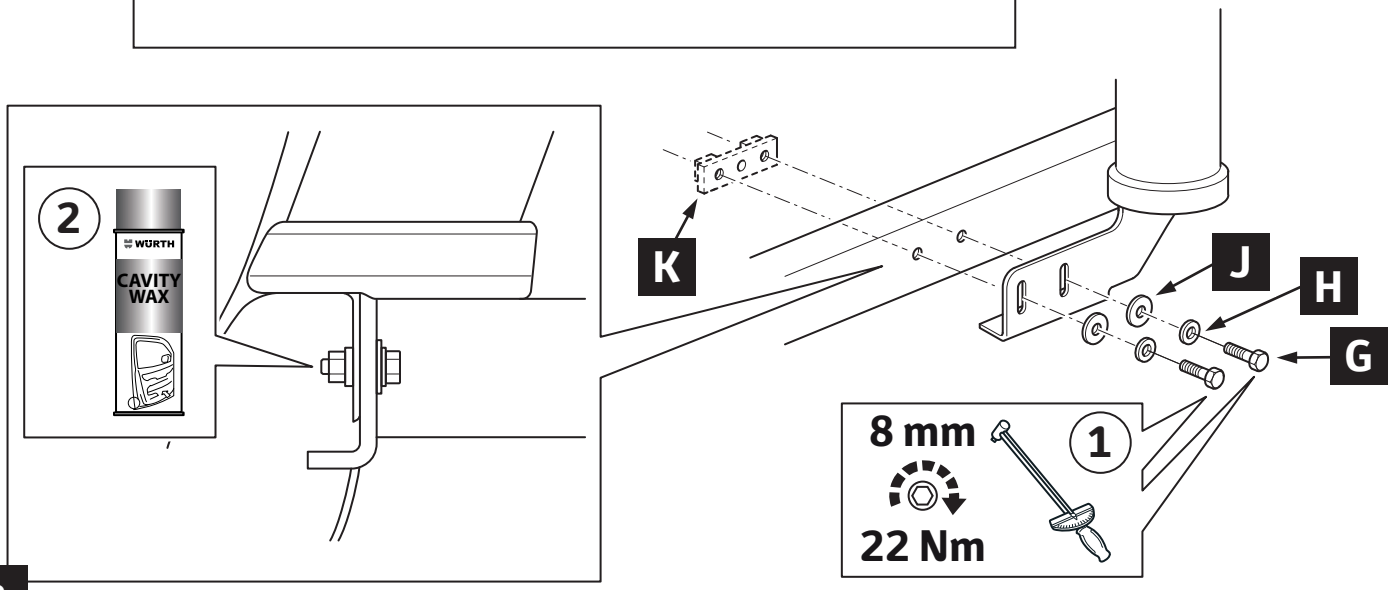

8

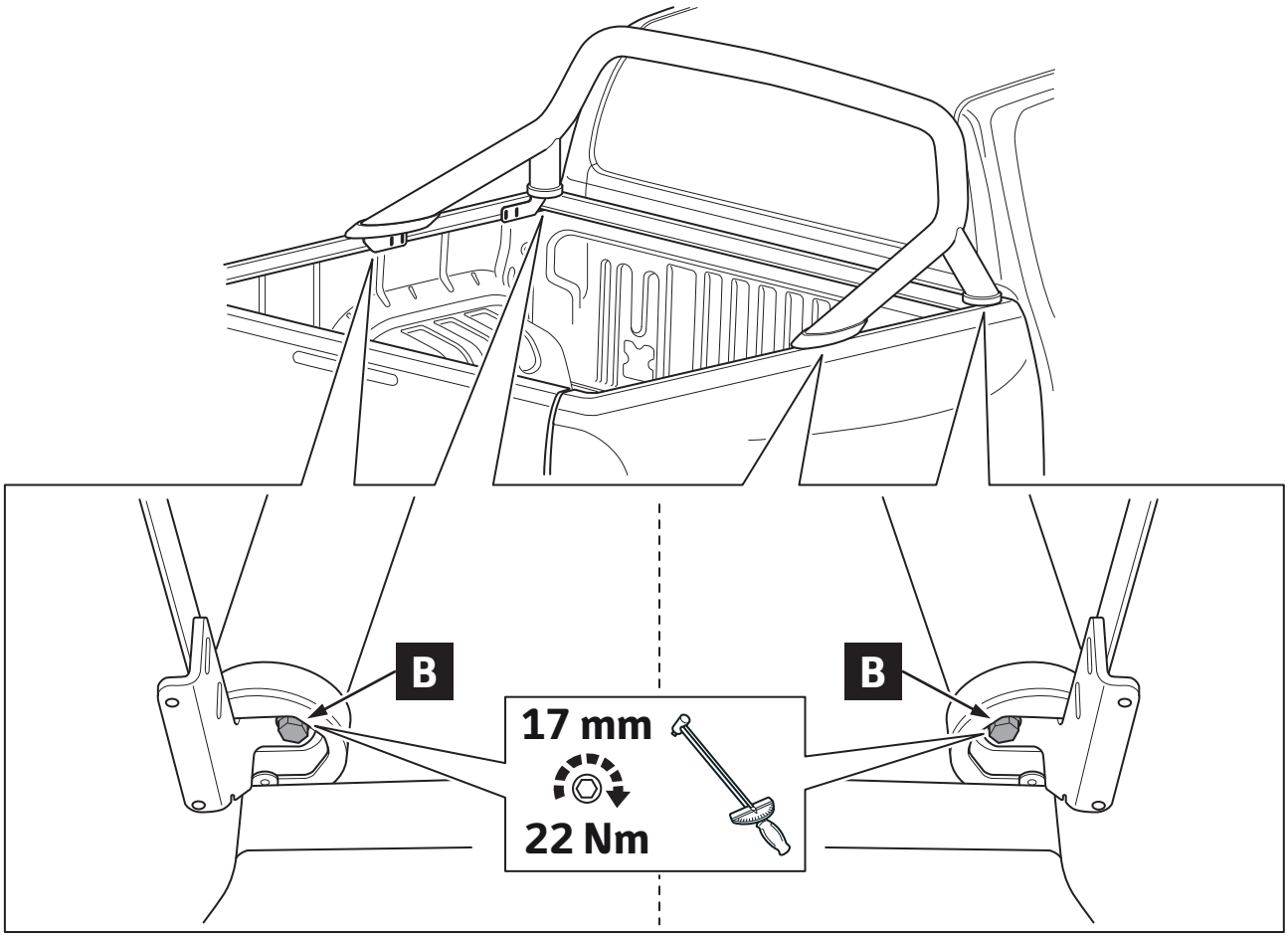

9

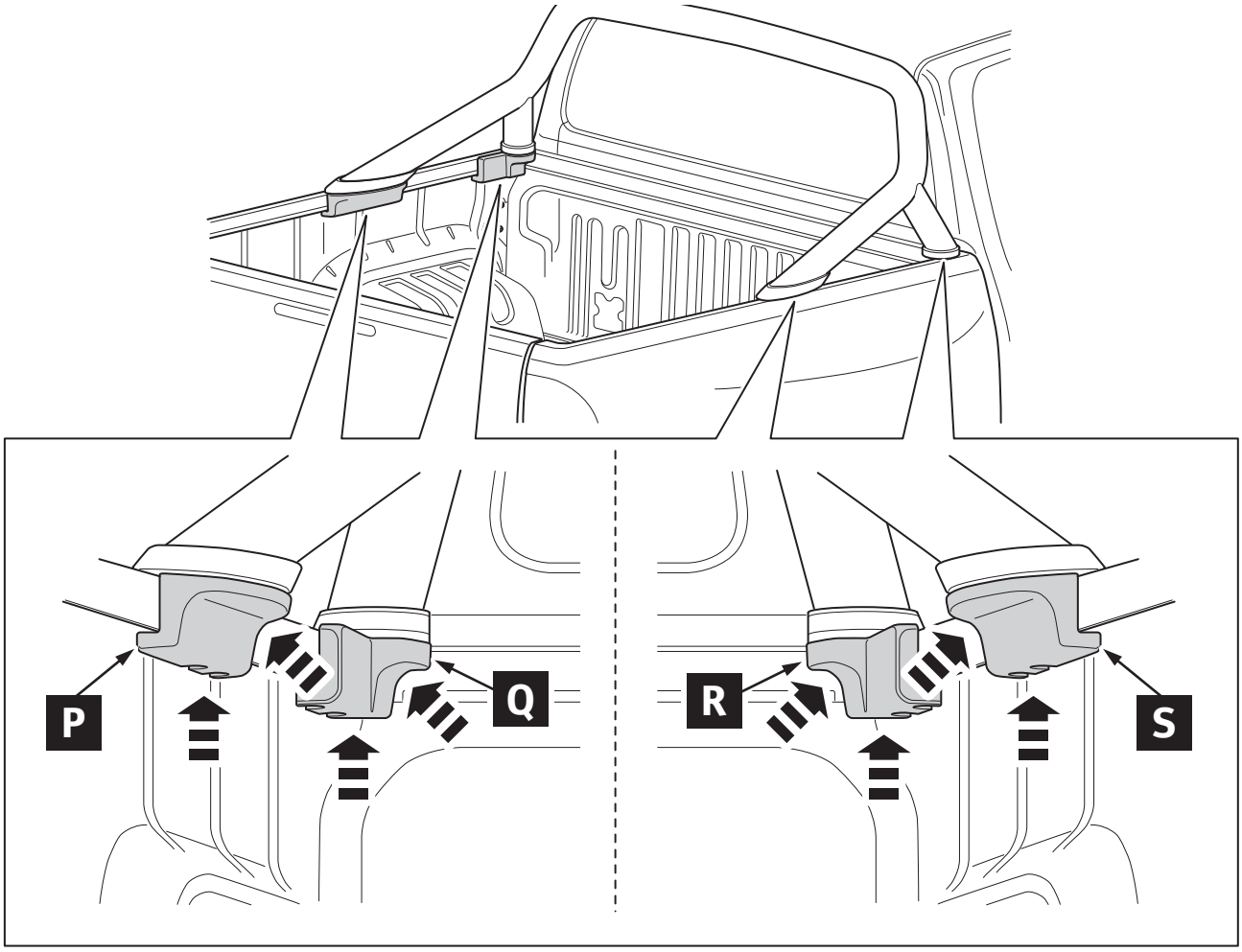

10

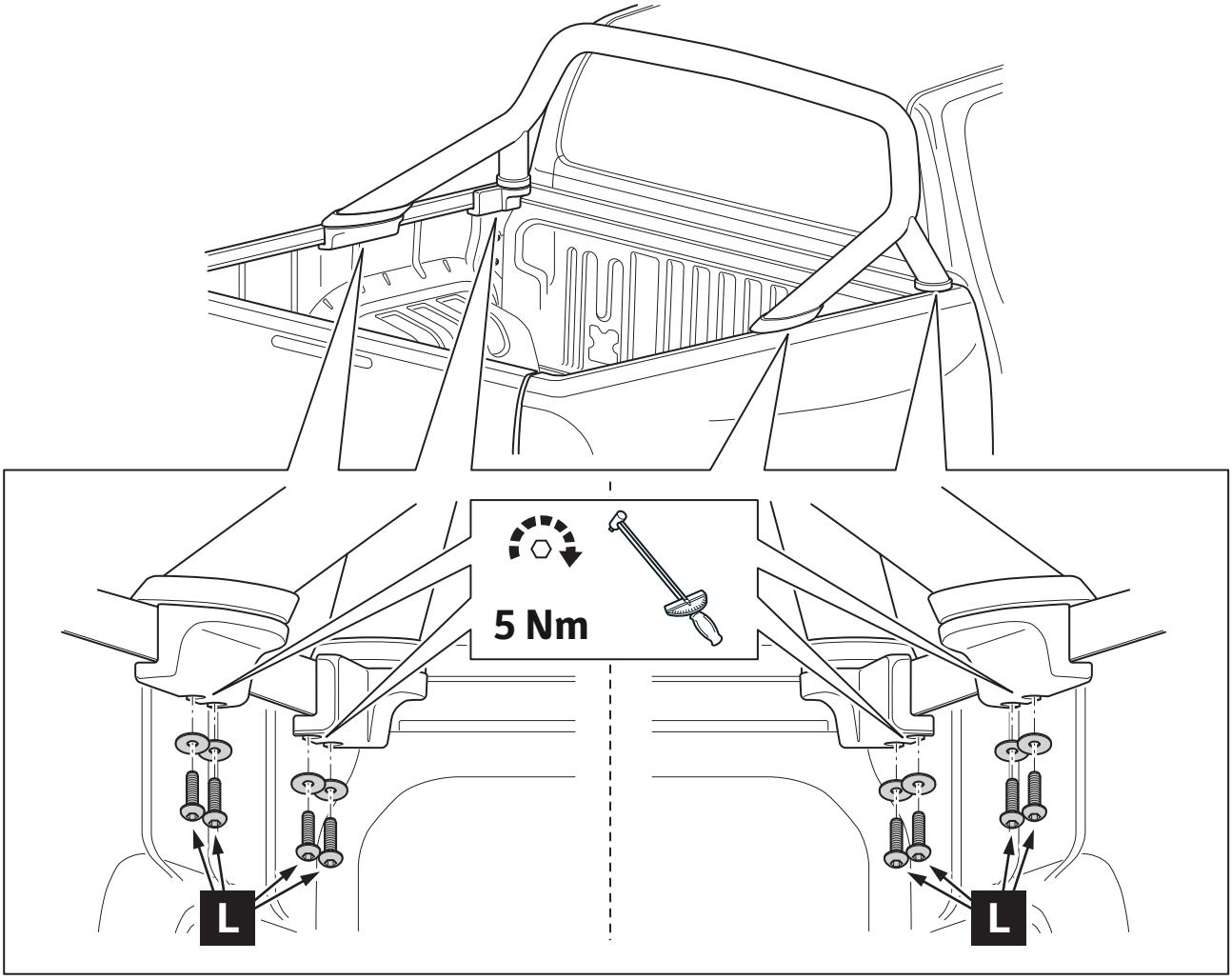

11

CHECK SHEET

TOYOTA

ALWAYS A BETTER WAY

Model / Year **Hilux 2015/05** **High over bar**

VIN n° ☐☐☐☐☐☐☐☐☐☐☐☐☐☐☐☐☐

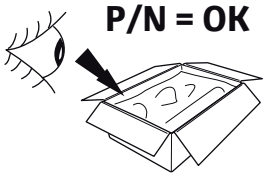

P/N = OK ☐

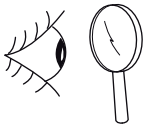

= OK

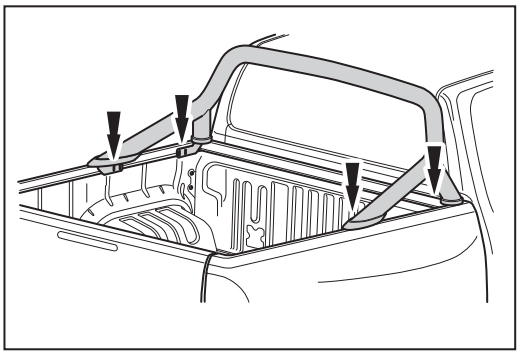

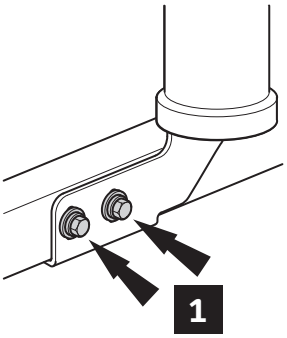

Serial Number

1		22 Nm 8x	☐
2		22 Nm 4x	☐
3		5 Nm 8x	☐

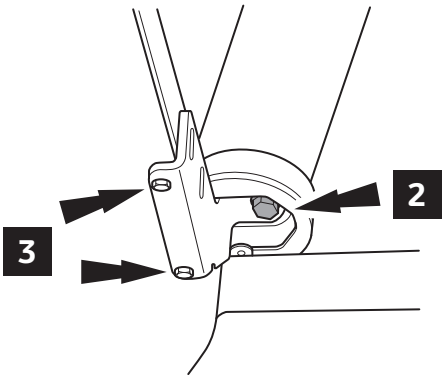

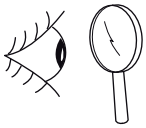

= OK

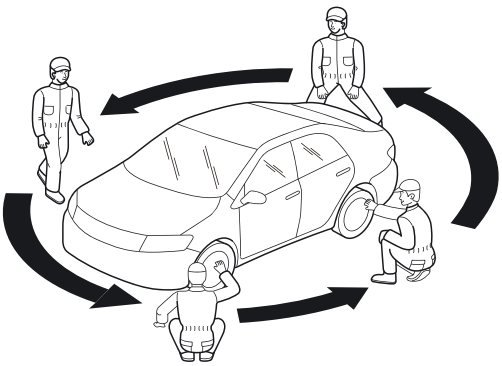

☐

Installation Date:	Technician Name & Signature:	Stamp:
. . / . . /		