2021

Blazer
Owner's Manual

chevrolet.com (U.S.)
chevrolet.ca (Canada)

Contents

Introduction 1
Keys, Doors, and Windows 6
Seats and Restraints 33
Storage 76
Instruments and Controls 82
Lighting 121
Infotainment System 128
Climate Controls 182
Driving and Operating 187
Vehicle Care 253
Service and Maintenance 331
Technical Data 344
Customer Information 349
Reporting Safety Defects 357
OnStar 360
Connected Services 365
Index. 368

Litho in U.S.A.
Part No. 84580873 C Third Printing

Introduction

The names, logos, emblems, slogans, vehicle model names, and vehicle body designs appearing in this manual including, but not limited to, GM, the GM logo, CHEVROLET, the CHEVROLET Emblem, and BLAZER are trademarks and/or service marks of General Motors LLC, its subsidiaries, affiliates, or licensors.

For vehicles first sold in Canada, substitute the name “General Motors of Canada Company” for Chevrolet Motor Division wherever it appears in this manual.

This manual describes features that may or may not be on the vehicle because of optional equipment that was not purchased on the vehicle, model variants, country specifications, features/applications that may not be available in your region, or changes subsequent to the printing of this owner’s manual.

Refer to the purchase documentation relating to your specific vehicle to confirm the features.

Keep this manual in the vehicle for quick reference.

Canadian Vehicle Owners

A French language manual can be obtained from your dealer, at www.helminc.com, or from:

Propriétaires Canadiens

On peut obtenir un exemplaire de ce guide en français auprès du concessionnaire ou à l'adresse suivante:

Helm, Incorporated
Attention: Customer Service
47911 Halyard Drive
Plymouth, MI 48170
USA

©2021 General Motors LLC. All Rights Reserved.

Using this Manual

To quickly locate information about the vehicle, use the Index in the back of the manual. It is an alphabetical list of what is in the manual and the page number where it can be found.

Danger, Warning, and Caution

Warning messages found on vehicle labels and in this manual describe hazards and what to do to avoid or reduce them.

⚠ Danger

Danger indicates a hazard with a high level of risk which will result in serious injury or death.

⚠ Warning

Warning indicates a hazard that could result in injury or death.

Caution

Caution indicates a hazard that could result in property or vehicle damage.

A circle with a slash through it is a safety symbol which means “Do not,” “Do not do this,” or “Do not let this happen.”

Symbols

The vehicle has components and labels that use symbols instead of text. Symbols are shown along with the text describing the operation or information relating to a specific component, control, message, gauge, or indicator.

: Shown when the owner’s manual has additional instructions or information.

: Shown when the service manual has additional instructions or information.

⇨ : Shown when there is more information on another page — “see page.”

Vehicle Symbol Chart

Here are some additional symbols that may be found on the vehicle and what they mean. See the features in this manual for information.

: Air Conditioning System

: Air Conditioning Refrigerant Oil

: Airbag Readiness Light

: Antilock Brake System (ABS)

: Brake System Warning Light

: Dispose of Used Components Properly

: Do Not Apply High Pressure Water

: Engine Coolant Temperature

: Flame/Fire Prohibited

: Flammable

: Forward Collision Alert

: Fuse Block Cover Lock Location

: Fuses

: ISOFIX/LATCH System Child Restraints

: Keep Fuse Block Covers Properly Installed

: Lane Change Alert

: Lane Departure Warning

: Lane Keep Assist

: Malfunction Indicator Lamp

: Oil Pressure

: Park Assist

: Pedestrian Ahead Indicator

: Power

: Rear Cross Traffic Alert

: Registered Technician

: Remote Vehicle Start

: Risk of Electrical Fire

: Seat Belt Reminders

: Side Blind Zone Alert

: Stop/Start

: Tire Pressure Monitor

: Traction Control/StabiliTrak/Electronic Stability Control (ESC)

: Under Pressure

: Vehicle Ahead Indicator

Instrument Panel Overview

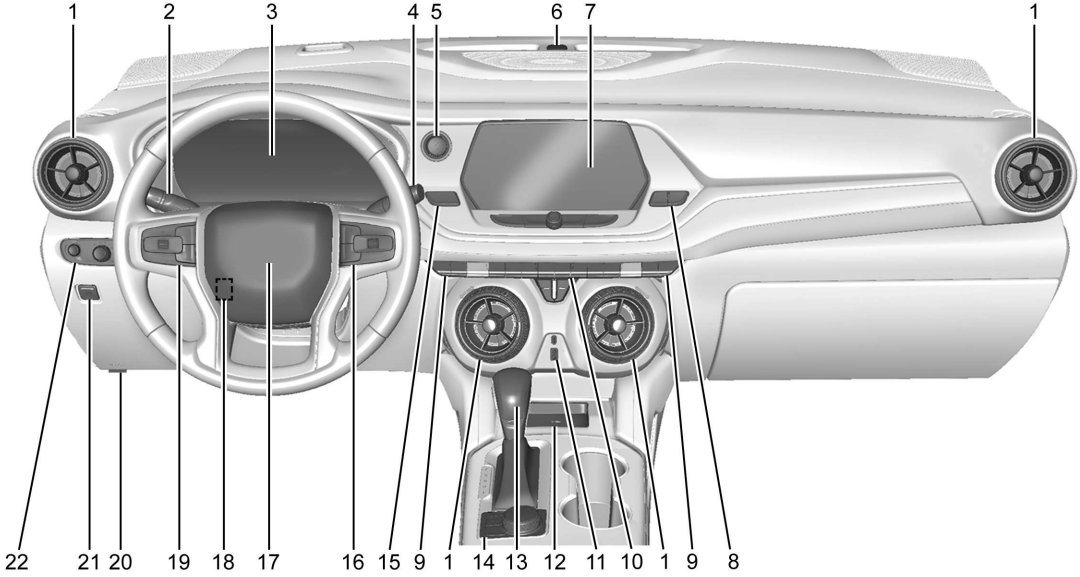

1. *Air Vents* ⇨ *186*.
2. Turn Signal Lever. See *Turn and Lane-Change Signals* ⇨ *124*.
3. *Instrument Cluster (Base and Midlevel)* ⇨ *90* or *Instrument Cluster (Uplevel)* ⇨ *93*.
4. *Windshield Wiper/Washer* ⇨ *84*.

   Rear Window Wiper/Washer ⇨ *85*.
5. ENGINE START/STOP Button. See *Ignition Positions* ⇨ *200*.
6. Light Sensor. See *Automatic Headlamp System* ⇨ *123*.
7. Infotainment. See *Overview* ⇨ *129*.
8. Glove Box Button. See *Glove Box* ⇨ *76*.

   Traction Control/Electronic Stability Control ⇨ *213*.
9. *Heated and Ventilated Front Seats* ⇨ *40* (If Equipped).
10. *Dual Automatic Climate Control System* ⇨ *182*.
11. *USB Port* ⇨ *137* (If Equipped).
12. *Wireless Charging* ⇨ *87* (If Equipped).
13. Shift Lever. See *Automatic Transmission* ⇨ *207* (If Equipped).
14. *All-Wheel Drive* ⇨ *210* (If Equipped).

    Driver Mode Control ⇨ *214* (If Equipped).

    Park Assist Button. See *Assistance Systems for Parking or Backing* ⇨ *227* (If Equipped).

    Lane Keep Assist (LKA) ⇨ *237* (If Equipped).
15. *Hazard Warning Flashers* ⇨ *124*.

    Stop/Start Disable Switch. See *Stop/Start System* ⇨ *203*.
16. *Steering Wheel Controls* ⇨ *83* (If Equipped).

    Driver Information Center (DIC) Buttons. See *Driver Information Center (DIC) (Base and Midlevel)* ⇨ *107* or *Driver Information Center (DIC) (Uplevel)* ⇨ *110*.
17. *Horn* ⇨ *84*.
18. *Steering Wheel Adjustment* ⇨ *83* (Out of View).
19. *Cruise Control* ⇨ *215*.

    Adaptive Cruise Control (Advanced) ⇨ *217* (If Equipped).

    Forward Collision Alert (FCA) System ⇨ *230* (If Equipped).

    Heated Steering Wheel ⇨ *83* (If Equipped).
20. Hood Release. See *Hood* ⇨ *255*.
21. *Electric Parking Brake* ⇨ *211*.
22. *Exterior Lamp Controls* ⇨ *121*.

    Instrument Panel Illumination Control ⇨ *124*.

Keys, Doors, and Windows

Keys and Locks
Keys 6
Remote Keyless Entry (RKE) System 7
Remote Keyless Entry (RKE) System Operation 7
Remote Vehicle Start 13
Door Locks 14
Power Door Locks 16
Delayed Locking 16
Automatic Door Locks 17
Lockout Protection 17
Safety Locks 17

Doors
Liftgate 18

Vehicle Security
Vehicle Security 23
Vehicle Alarm System 23
Immobilizer 24
Immobilizer Operation 24

Exterior Mirrors
Convex Mirrors 25
Power Mirrors 25
Folding Mirrors 26
Heated Mirrors 26
Automatic Dimming Mirror 26
Reverse Tilt Mirrors 26

Interior Mirrors
Interior Rearview Mirrors 26
Manual Rearview Mirror 26
Automatic Dimming Rearview Mirror ... 26
Rear Camera Mirror 26

Windows
Windows 29
Power Windows 29
Sun Visors 31

Roof
Sunroof 31

Keys and Locks

Keys

⚠ Warning

Leaving children in a vehicle with a Remote Keyless Entry (RKE) transmitter is dangerous and children or others could be seriously injured or killed. They could operate the power windows or other controls or make the vehicle move. The windows will function with the RKE transmitter in the vehicle, and children or others could be caught in the path of a closing window. Do not leave children in a vehicle with an RKE transmitter.

The key that is part of the Remote Keyless Entry (RKE) transmitter can be used for all locks.

Remove the key by pressing the button on the side of the RKE transmitter near the bottom and pull the key out. Never pull the key out without pressing the button.

If it becomes difficult to turn the key, inspect the key blade for debris. Periodically, clean with a brush or a pick.

See your dealer if a new transmitter is needed.

If locked out of the vehicle, see *Roadside Assistance Program* ⇨ *352*.

With an active OnStar or connected service plan, an OnStar Advisor may remotely unlock the vehicle. See *OnStar Overview* ⇨ *360*.

Remote Keyless Entry (RKE) System

See *Radio Frequency Statement* ⇨ *357*.

If there is a decrease in the Remote Keyless Entry (RKE) operating range:

- Check the distance. The transmitter may be too far from the vehicle.
- Check the location. Other vehicles or objects may be blocking the signal.
- Check the transmitter's battery. See "Battery Replacement" later in this section.
- If the transmitter is still not working correctly, see your dealer or a qualified technician for service.

Remote Keyless Entry (RKE) System Operation

The Keyless Access system allows for vehicle entry when the Remote Keyless Entry (RKE) transmitter is within 1 m (3 ft). See "Keyless Access Operation" later in this section.

The RKE transmitter may work up to 60 m (197 ft) away from the vehicle.

Other conditions can affect the performance of the transmitter. See *Remote Keyless Entry (RKE) System* ⇨ *7*.

With Remote Start and Power Liftgate

: Press to lock all doors. The turn signal indicators may flash and/or the horn may sound on the second press to indicate locking. See *Vehicle Personalization* ⇨ *113*. If the driver door is open when is pressed, and Open Door Anti-Lockout is enabled, all doors will lock and then the driver door will immediately unlock. See *Vehicle Personalization* ⇨ *113*. If a passenger door is open when is pressed, all doors lock.

Pressing may also arm the theft-deterrent system. See *Vehicle Alarm System* ⇨ *23*.

: Press to unlock the driver door. Press unlock again within five seconds to unlock all doors. The RKE transmitter can be programmed to unlock all doors on the first button press. See *Vehicle Personalization* ⇨ *113*. The turn signal indicators may flash to indicate unlocking has occurred. See *Vehicle Personalization* ⇨ *113*. Pressing may also disarm the theft-deterrent system. See *Vehicle Alarm System* ⇨ *23*.

If equipped with remote windows, press and hold to remotely open the windows, if enabled. See *Vehicle Personalization* ⇨ *113*.

: If equipped, press twice quickly to open or close the liftgate. Press again to stop the power liftgate.

: Press and release one time to initiate vehicle locator. The exterior lamps flash and the horn chirps three times. Press and hold for at least three seconds to sound the panic alarm. The horn sounds and the turn signals flash for 30 seconds, or until is pressed again or the vehicle is started.

: If equipped, first press and release then immediately press and hold for at least four seconds to start the engine from outside the vehicle using the RKE transmitter. See *Remote Vehicle Start* ⇨ *13*.

Keyless Access Operation

The Keyless Access system allows the doors to be locked and unlocked and the liftgate to be accessed without removing the RKE transmitter from a pocket, purse, briefcase, etc. The RKE transmitter should be within 1 m (3 ft) of the liftgate or door being opened. There will be buttons on the outside door handles.

Keyless Access can be programmed to unlock all doors on the first lock/unlock press from the driver door. Keyless Access can also be turned off. See *Vehicle Personalization* ⇨ *113*.

If equipped with memory seats, RKE transmitters 1 and 2 are linked to seating positions of memory 1 or 2. See *Memory Seats* ⇨ *38*.

Keyless Unlocking/Locking from the Driver Door

When the doors are locked and the RKE transmitter is within 1 m (3 ft) of the driver door handle, pressing the lock/unlock button on the driver door handle will unlock the driver door. If the lock/unlock button is pressed again within five seconds, all passenger doors will unlock.

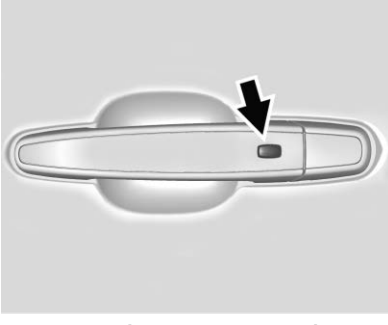

Driver Shown, Passenger Similar

Pressing the lock/unlock button will cause all doors to lock if any of the following occur:

- It has been no more than five seconds since the first lock/unlock button press.
- Two lock/unlock button presses were used to unlock all doors.
- Any vehicle door has opened and all doors are now closed.

Keyless Unlocking/Locking from Passenger Doors

When the doors are locked and the RKE transmitter is within 1 m (3 ft) of the door handle, pressing the lock/unlock button on that door handle will unlock all doors. Pressing the lock/unlock button will cause all doors to lock if any of the following occur:

- The lock/unlock button was used to unlock all doors.
- Any vehicle door has opened and all doors are now closed.

Disable/Enable Keyless Unlocking of Exterior Door Handles and Liftgate

If equipped, keyless unlocking of the exterior door handles and liftgate can be disabled and enabled.

Disabling Keyless Unlocking:

With the vehicle off, press and hold 🔒 and 🔓 on the RKE transmitter at the same time for approximately three seconds. The turn signal lamps will flash four times quickly to indicate access is disabled. Using any exterior handle to unlock the doors or open the liftgate will cause the turn signal lamps to flash four times quickly, indicating access is disabled. If disabled, disarm the alarm system before starting the vehicle.

Disabling Keyless Unlocking may also be configured under *Vehicle Personalization* ⇨ *113*.

Enabling Keyless Unlocking:

With the vehicle off, press and hold 🔒 and 🔓 on the RKE transmitter at the same time for approximately three seconds. The turn signal lamps will flash twice quickly to indicate access is enabled.

Enabling Keyless Unlocking may also be configured under *Vehicle Personalization* ⇨ *113*.

Passive Locking

This vehicle will lock several seconds after all doors are closed if the vehicle is off and at least one RKE transmitter has been removed or none remain in the interior.

If other electronic devices interfere with the RKE transmitter signal, the vehicle may not detect the RKE transmitter inside the vehicle. If passive locking is enabled, the doors may

lock with the RKE transmitter inside the vehicle. Do not leave the RKE transmitter in an unattended vehicle.

To customize the doors to automatically lock when exiting the vehicle, see “Remote Lock, Unlock, Start” under *Vehicle Personalization* ⇨ *113*.

Temporary Disable of Passive Locking

Temporarily disable passive locking by pressing and holding 🔒 on the interior door switch with a door open for at least four seconds, or until three chimes are heard. Passive locking will then remain disabled until 🔒 on the interior door is pressed, or until the vehicle is turned on.

Remote Left in Vehicle Alert

When the vehicle is turned off and an RKE transmitter is left in the vehicle, the horn will chirp three times after all doors are closed. To turn on or off, see *Vehicle Personalization* ⇨ *113*.

Remote No Longer in Vehicle Alert

If the vehicle is on with a door open, and then all doors are closed, the vehicle will check for RKE transmitters inside. If an RKE transmitter is not detected, the Driver Information Center (DIC) will display NO REMOTE DETECTED and the horn will chirp three times. This occurs only once each time the vehicle is driven. See *Vehicle Personalization* ⇨ *113*.

Keyless Liftgate Opening

Press the touch pad in the liftgate handle to open the liftgate if the RKE transmitter is within 1 m (3 ft).

Key Access

To access a vehicle with a weak transmitter battery, see *Door Locks* ⇨ *14*.

Programming Transmitters to the Vehicle

Only RKE transmitters programmed to the vehicle will work. If a transmitter is lost or stolen, a replacement can be purchased and programmed through your dealer. The vehicle can be reprogrammed so that lost or stolen transmitters no longer work. Each vehicle can have up to eight transmitters matched to it.

Programming with Recognized Transmitters

A new transmitter can be programmed to the vehicle when there are two recognized transmitters.

To program, the vehicle must be off and all of the transmitters, both currently recognized and new, must be with you.

1. Remove the key lock cylinder cap on the driver door handle. See *Door Locks* ⇨ *14*. Place the two recognized transmitters in the cupholder.
2. Insert the vehicle key of the transmitter into the key lock cylinder on the driver door handle and turn the key, counterclockwise, to the unlock position five times within 10 seconds.

   The DIC displays READY FOR REMOTE #3, 4, 5, ETC.

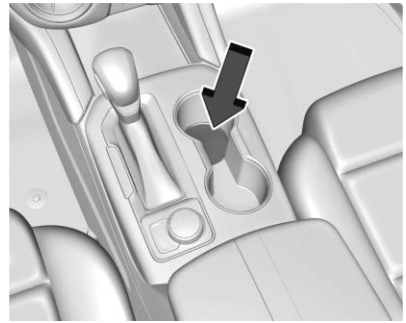

3. Place the new transmitter into the front cupholder.

4. Press ENGINE START/STOP. When the transmitter is learned, the DIC display will show that it is ready to program the next transmitter.
5. Remove the transmitter from the front cupholder and press the transmitter 🔓 or 🔒 button.

   To program additional transmitters, repeat Steps 3–5.

   When all additional transmitters are programmed, press and hold ENGINE START/STOP for 12 seconds to exit programming mode.
6. Put the key back into the transmitter.
7. Replace the key lock cylinder cap. See *Door Locks* ⇨ *14*.

Programming without Recognized Transmitters

If two currently recognized transmitters are not available, follow this procedure to program up to eight transmitters. This feature is not available in Canada. This procedure will take approximately 30 minutes to complete. The vehicle must be off and all of the transmitters you wish to program must be with you.

1. Remove the key lock cylinder cap on the driver door handle. See *Door Locks* ⇨ *14*. Insert the vehicle key of the transmitter into the key lock cylinder on the driver door handle and turn the key, counterclockwise, to the unlock position five times within 10 seconds.

   The DIC displays REMOTE LEARN PENDING, PLEASE WAIT.
2. Wait for 10 minutes until the DIC displays PRESS ENGINE START BUTTON TO LEARN and then press ENGINE START/STOP.

   The DIC will again display REMOTE LEARN PENDING, PLEASE WAIT.
3. Repeat Step 2 two additional times. After the third time all previously known transmitters will no longer work with the vehicle. Remaining transmitters can be relearned during the next steps.

   The DIC should now display READY FOR REMOTE # 1.

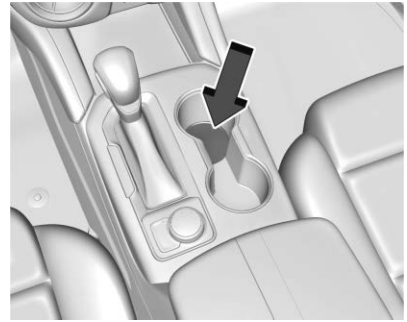

4. Place the new transmitter into the front cupholder.
5. Press ENGINE START/STOP. When the transmitter is learned, the DIC display will show that it is ready to program the next transmitter.
6. Remove the transmitter from the front cupholder and press the transmitter 🔓 or 🔒 button.

   To program additional transmitters, repeat Steps 4–6.

   When all additional transmitters are programmed, press and hold ENGINE START/STOP for 12 seconds to exit programming mode.
7. Put the key back into the transmitter.

8. Replace the key lock cylinder cap. See *Door Locks* ⇨ *14*.

Starting the Vehicle with a Low Transmitter Battery

When the vehicle is started, if the transmitter battery is weak, the DIC may display NO REMOTE DETECTED or NO REMOTE KEY WAS DETECTED PLACE KEY IN TRANSMITTER POCKET THEN START YOUR VEHICLE. The DIC may then display REPLACE BATTERY IN REMOTE KEY.

To start the vehicle:

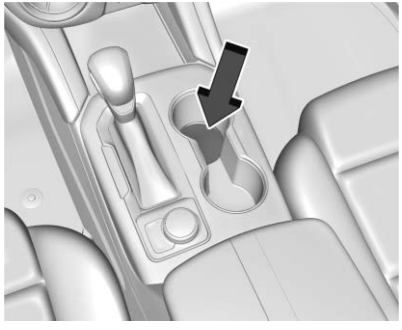

1. Place the transmitter in the front cupholder.
2. With the vehicle in P (Park) or N (Neutral), press the brake pedal and ENGINE START/STOP.

   Replace the transmitter battery as soon as possible.

Battery Replacement

⚠ Warning

Never allow children to play with the RKE transmitter. The transmitter contains a small battery, which can be a choking hazard. If swallowed, internal burns can occur, resulting in severe injury or death. Seek medical attention immediately if a battery is swallowed.

⚠ Warning

To avoid personal injury, do not touch metal surfaces on the RKE transmitter when it has been exposed to extreme heat. These surfaces can be hot to the touch at temperatures above 59 °C (138 °F).

Caution

When replacing the battery, do not touch any of the circuitry on the transmitter. Static from your body could damage the transmitter.

Caution

Always replace the battery with the correct type. Replacing the battery with an incorrect type could potentially create a risk of battery explosion. Dispose of used batteries according to instructions and local laws. Do not attempt to burn, crush, or cut the used battery, and avoid exposing the battery to environments with extremely low air pressures or high temperatures.

Replace the battery if the DIC displays REPLACE BATTERY IN REMOTE KEY.

The battery is not rechargeable. To replace the battery:

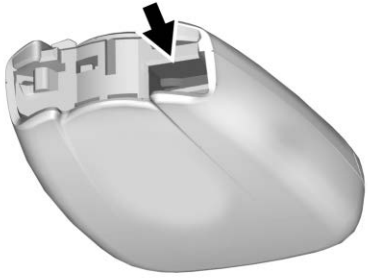

1. Press the button on the side of the RKE transmitter and pull the key out. Never pull the key out without pressing the button.
2. Separate the two halves of the transmitter using a flat tool inserted into the area near the key slot.

3. Remove the battery by pushing on the battery and sliding it toward the bottom of the transmitter. Do not use a metal object.
4. Insert the new battery, positive side facing the back cover. Push the battery down until it is held in place. Replace with a CR2032 or equivalent battery.
5. Snap the battery cover back on to the transmitter.
6. Reinsert the key.

Remote Vehicle Start

If equipped, this feature allows the engine to be started from outside of the vehicle.

: This button will be on the RKE transmitter if the vehicle has remote start.

The climate control system will use the previous settings during a remote start. The rear defog may come on during a remote start based on cold ambient conditions. The rear fog indicator light does not come on during a remote start.

If the vehicle has auto heated or ventilated seats, they may come on during a remote start. See *Heated and Ventilated Front Seats* ⇨ *40*.

If equipped with a remote start heated steering wheel, it may come on during a remote start when it is cold outside, if enabled. See *Heated Steering Wheel* ⇨ *83* and *Vehicle Personalization* ⇨ *113*.

Laws in some local communities may restrict the use of remote starters. For example, some laws may require a person using remote start to have the vehicle in view. Check local regulations for any requirements.

Do not use the remote start feature if the vehicle is low on fuel. The vehicle could run out of fuel.

Other conditions can affect the performance of the transmitter. See *Remote Keyless Entry (RKE) System* ⇨ 7.

Starting the Engine Using Remote Start

1. Press and release 🔒 on the RKE transmitter.
2. Immediately press and hold ⟲ for at least four seconds or until the turn signal lamps flash. The turn signal lamps flashing confirms the request to remote start the vehicle has been received.

   During the remote start the doors will be locked and the parking lamps will remain on as long as the engine is running.

   The engine will shut off after 15 minutes unless a time extension is done or the vehicle is started.
3. With the RKE transmitter in the vehicle, press the brake pedal and start the vehicle to drive.

Extending Engine Run Time

The engine run time can also be extended by another 15 minutes, if during the first 15 minutes Steps 1 and 2 are repeated while the engine is still running. An extension can be requested 30 seconds after starting. This provides a total of 30 minutes.

The remote start can only be extended once.

When the remote start is extended, the second 15-minute period is added on to the first 15 minutes for a total of 30 minutes.

A maximum of two remote starts, or a remote start with an extension, are allowed between ignition cycles.

The vehicle must be started normally before the remote start procedure can be used again.

Canceling a Remote Start

To cancel a remote start, do any of the following:

- Press and hold ⟲ until the parking lamps turn off.
- Turn on the hazard warning flashers.
- Turn the vehicle on and then off.

Conditions in Which Remote Start Will Not Work

The remote start will not operate if any of the following occur:

- An RKE transmitter is in the vehicle.
- The hood is not closed.
- The ignition is in any mode other than off.
- The hazard warning flashers are on.
- There is an emission control system malfunction.
- The engine coolant temperature is too high.
- The oil pressure is low.
- Two remote vehicle starts or a start with an extension have already been used.
- The vehicle is not in P (Park).

Door Locks

⚠ Warning

Unlocked doors can be dangerous.

- Passengers, especially children, can easily open the doors and fall out of a moving vehicle. The doors can be unlocked and opened while the vehicle is moving. The chance of being thrown out of the vehicle in a crash is increased if the doors are not locked. So, all passengers should wear seat belts properly and the doors should be locked whenever the vehicle is driven.
- Young children who get into unlocked vehicles may be unable to get out. A child can be overcome by extreme heat and can suffer permanent injuries

(Continued)

Warning (Continued)

or even death from heat stroke. Always lock the vehicle whenever leaving it.

- Outsiders can easily enter through an unlocked door when you slow down or stop the vehicle. Locking the doors can help prevent this from happening.

To lock or unlock the doors from the outside:

- Press 🔒 or 🔓 on the Remote Keyless Entry (RKE) transmitter. See *Remote Keyless Entry (RKE) System Operation* ⇨ 7.
- In the case of a dead battery, use the key in the driver door. The key lock cylinder is covered with a cap.

To lock or unlock the doors from the inside:

- Press 🔒 or 🔓 on the power door lock switch.
- Push down on a door lock knob to lock a door.
- Pull the door handle once to unlock the door. Pull the handle again to unlatch it.

Keyless Access

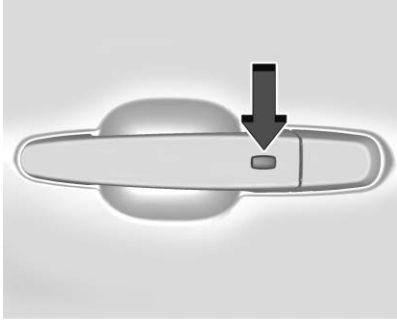

The RKE transmitter must be within 1 m (3 ft) of the liftgate or door being opened. Press the button on the door handle to unlock. See "Keyless Access Operation" in *Remote Keyless Entry (RKE) System Operation* ⇨ 7.

Driver Door Key Lock Cylinder Access (In Case of Dead Battery)

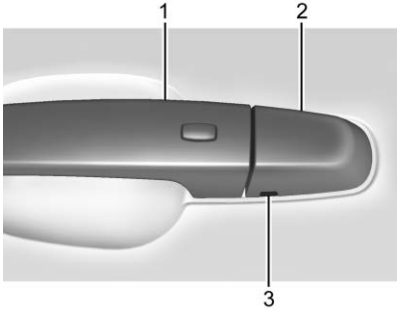

To access the driver door key lock cylinder:

1. Pull the door handle (1) to the open position and hold it open until cap removal is complete.
2. Insert the key into the slot (3) on the bottom of the cap (2) and lift the key upward.
3. Move the cap (2) rearward and remove.
4. Use the key in the cylinder.

To replace the cap:

1. Pull the door handle (1) to the open position and hold it open until cap installation is complete.

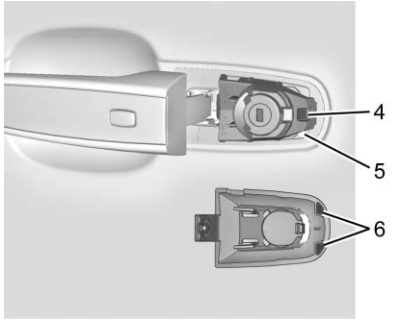

2. Insert the two tabs (6) at the back of the cap between the seal (5) and the metal base (4).

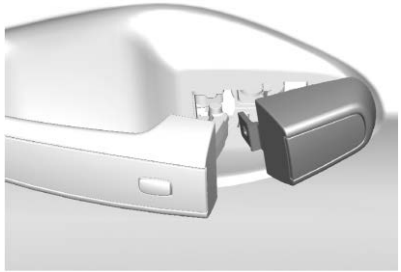

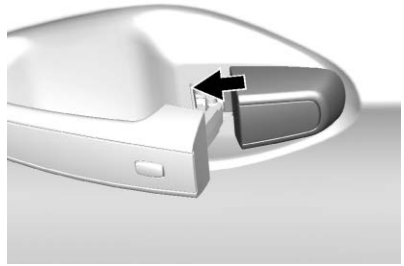

3. Slide the cap forward and press the forward edge to install the cap in place.
4. Release the door handle.
5. Check that the cap is secure.

Free-Turning Locks

The door key lock cylinder turns freely when either the wrong key is used, or the correct key is not fully inserted. The free-turning door lock feature prevents the lock from being forced open. To reset the lock, turn it to the vertical position with the correct key fully inserted. Remove the key and insert it again. If this does not reset the lock, turn the key halfway around in the cylinder and repeat the reset procedure.

Power Door Locks

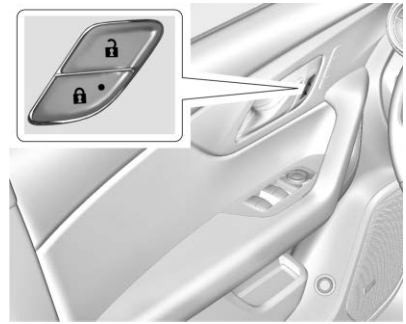

: Press to lock the doors. The indicator light in the switch will illuminate when locked.

: Press to unlock the doors.

Delayed Locking

This feature delays the locking of the doors until five seconds after all doors are closed.

Delayed locking can only be turned on when the Open Door Anti-Lockout feature has been turned off.

When 🔒 is pressed on the power door lock switch while the door is open, a chime will sound three times indicating delayed locking is active.

The doors will lock automatically five seconds after all doors are closed. If a door is reopened before that time, the five-second timer will reset when all doors are closed again.

Press 🔒 on the door lock switch again or press 🔒 on the RKE transmitter to lock the doors immediately.

This feature can also be programmed. See *Vehicle Personalization* ⇨ *113*.

Automatic Door Locks

The doors will lock automatically when all doors are closed, the ignition is on, and the vehicle is shifted out of P (Park).

If a vehicle door is unlocked and then opened and closed, the doors will lock either when your foot is removed from the brake or the vehicle speed becomes faster than 13 km/h (8 mph).

To unlock the doors:

- Press 🔓 on a door.
- Shift the transmission into P (Park).

Automatic door locking cannot be disabled. Automatic door unlocking can be programmed. See *Vehicle Personalization* ⇨ *113*.

Lockout Protection

If the ignition is on or in ACC/ACCESSORY and the power door lock switch is pressed with the driver door open, all the doors will lock and only the driver door will unlock.

If the vehicle is off and locking is requested while a door is open, when all doors are closed the vehicle will check for RKE transmitters inside. If an RKE transmitter is detected and the number of RKE transmitters inside has not reduced, the driver door will unlock and the horn will chirp three times.

Lockout Protection can be manually overridden by pressing and holding 🔒 on the power door lock switch.

Open Door Anti-Lockout

If Open Door Anti-Lockout is turned on and the vehicle is off, the driver door is open, and locking is requested, all the doors will lock and the driver door will unlock. The Open Door Anti-Lockout feature can be turned on or off. See *Vehicle Personalization* ⇨ *113*.

Safety Locks

The rear door safety locks prevent passengers from opening the rear doors from inside the vehicle.

Manual Safety Locks

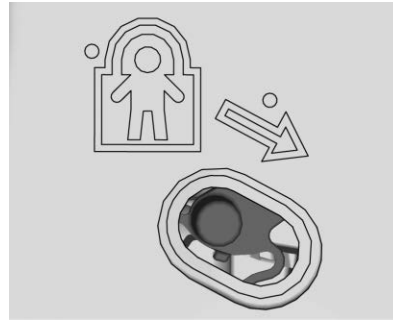

If equipped, the safety lock is on the inside edge of the rear doors. To use the safety lock:

1. Move the lever down to the lock position.
2. Close the door.

3. Do the same for the other rear door.

To open a rear door when the safety lock is on:

1. Unlock the door by activating the inside handle, by pressing the power door lock switch, or by using the Remote Keyless Entry (RKE) transmitter.
2. Open the door from the outside.

When the safety lock is enabled, adults and older children will not be able to open the rear door from the inside. Cancel the safety locks to enable the doors to open from the inside.

To cancel the safety lock:

1. Unlock the door and open it from the outside.
2. Move the lever up to unlock. Do the same for the other door.

Doors

Liftgate

⚠ Warning

Exhaust gases can enter the vehicle if it is driven with the liftgate or trunk/hatch open, or with any objects that pass through the seal between the body and the trunk/hatch or liftgate. Engine exhaust contains carbon monoxide (CO) which cannot be seen or smelled. It can cause unconsciousness and even death.

If the vehicle must be driven with the liftgate or trunk/hatch open:

- Close all of the windows.
- Fully open the air outlets on or under the instrument panel.
- Adjust the climate control system to a setting that brings in only outside air and set the fan speed to the highest setting. See "Climate Control Systems" in the Index.
- If the vehicle is equipped with a power liftgate, disable the power liftgate function.

(Continued)

Warning (Continued)

See *Engine Exhaust* ⇨ *207*.

Caution

To avoid damage to the liftgate or liftgate glass, make sure the area above and behind the liftgate is clear before opening it.

Manual Liftgate

To open the liftgate, press the touch pad in the liftgate handle and lift up. Unlocking all doors will also unlock the liftgate.

Use the pull cup to lower and close the liftgate. Do not press the touch pad while closing the liftgate. This will cause the liftgate to be unlatched.

The liftgate can be opened when locked if the RKE transmitter is within 1 m (3 ft) of the touch pad. See *Remote Keyless Entry (RKE) System Operation* ⇨ 7.

The liftgate has an electric latch. If the battery is disconnected or has low voltage, the liftgate will not open. The liftgate will resume operation when the battery is reconnected and charged.

Power Liftgate Operation

⚠ Warning

You or others could be injured if caught in the path of the power liftgate. Make sure there is no one in the way of the liftgate as it is opening and closing.

Caution

Driving with an open and unsecured liftgate may result in damage to the power liftgate components.

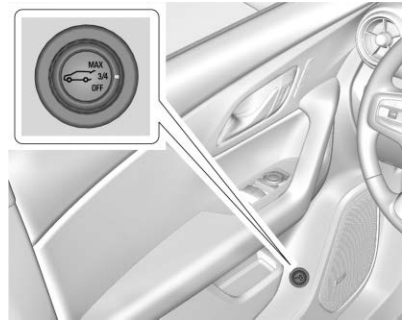

If equipped with a power liftgate, the switch is on the driver door. The vehicle must be in P (Park).

The modes are:

- MAX: Opens to maximum height.
- 3/4: Opens to a reduced height that can be set from 3/4 to fully open. Use to prevent the liftgate from opening into overhead obstructions such as a garage door or roof-mounted cargo. The liftgate can be manually opened all the way.
- OFF: Opens manually only.

To power open or close the liftgate, select MAX or 3/4 mode.

- Press twice quickly on the RKE transmitter until the liftgate moves.
- Press on the driver door. The driver door must either be unlocked or locked without the security armed.
- Press the touch pad in the liftgate handle after unlocking all doors. The RKE transmitter must be within 1 m (3 ft).

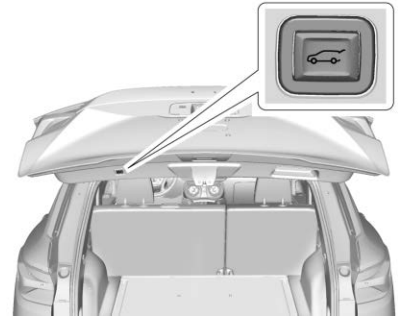

- Press on the bottom of the liftgate.

Press any liftgate button or the touch pad while the liftgate is moving to stop it. Pressing again restarts the operation in the reverse direction. The touch pad in the liftgate handle cannot be used to close the liftgate.

Caution

Manually forcing the liftgate to open or close during a power cycle can damage the vehicle. Allow the power cycle to complete.

The power liftgate may be temporarily disabled under extreme low temperatures, or after repeated power cycling over a short period of time. If this occurs, the liftgate can still be operated manually.

If the vehicle is shifted out of P (Park) while the power function is in progress, the liftgate will continue to completion. If the vehicle is accelerated before the liftgate has completed moving, the liftgate may stop or reverse direction. Check for Driver Information Center (DIC) messages and make sure the liftgate is closed and latched before driving.

Falling Liftgate Detection

If the power liftgate automatically closes after a power opening cycle, it indicates that the system is reacting to excess weight on the liftgate or a possible support strut failure. A repetitive chime will sound while the falling liftgate detection feature is operating. Remove any excess weight. If the liftgate continues to automatically close after opening, see your dealer for service before using the power liftgate.

Interfering with the power liftgate motion or manually closing the liftgate too quickly after power opening may resemble a support strut failure. This could also activate the falling liftgate detection feature. Allow the liftgate to complete its operation and wait a few seconds before manually closing the liftgate.

Obstacle Detection Features

If the liftgate encounters an obstacle during a power open or close cycle, a warning chime may sound and the liftgate will automatically reverse direction and move a short distance away from the obstacle. After removing the obstruction, the power liftgate operation can be used again. If the liftgate encounters multiple obstacles on the same power cycle, the power function will deactivate. After removing the obstructions, manually close the liftgate which will allow normal power operation functions to resume.

If the vehicle is locked while the liftgate is closing, and an obstacle is encountered that prevents the liftgate from completely closing, the horn will sound as an alert that the liftgate did not close.

Setting the 3/4 Mode

To change the position the liftgate stops at when opening:

1. Select MAX or 3/4 mode and power open the liftgate.
2. Stop the liftgate movement at the desired height by pressing any liftgate switch. Manually adjust the liftgate position if needed.
3. Press and hold at the bottom of the liftgate until the turn signals flash and a beep sounds. This indicates the setting has been recorded.

The liftgate cannot be set below a minimum programmable height. If there is no light flash or sound, then the height adjustment may be too low.

Manual Operation

Select OFF to manually operate the liftgate. See “Manual Liftgate” at the beginning of this section.

Caution

Attempting to move the liftgate too quickly and with excessive force may result in damage to the vehicle.

Operate the liftgate manually with a smooth motion and moderate speed. The system includes a feature that limits the manual closing speed to protect the components.

Hands-Free Operation

If equipped, the liftgate may be operated with a kicking motion under the left side of the rear bumper at the location of the projected logo. See "Projected Logo" later in this section. The RKE transmitter must be within 1 m (3 ft).

The hands-free feature will not work while the liftgate is moving. To stop the liftgate while in motion use one of the liftgate switches.

The hands-free feature can be customized. See *Vehicle Personalization* ⇨ *113*. Choose from the following:

On-Open and Close : The kicking motion is activated to both open and close the liftgate.

On-Open Only : The kicking motion is activated to only open the liftgate.

Off : The feature is disabled.

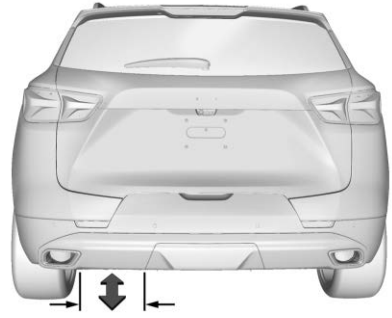

Kick Zone

To operate, move your foot in a forward kicking motion under the left side of the rear bumper, at the location of the projected logo, then pull it back. Then step back. The kick must come within 14 cm (6 in) of the rear bumper to activate.

Caution

Splashing water may cause the liftgate to open. Keep the RKE transmitter away from the rear bumper detection area or

(Continued)

Caution (Continued)

turn the liftgate mode to OFF when cleaning or working near the rear bumper to avoid accidental opening.

- Do not sweep your foot side to side.
- Do not keep your foot under the bumper; the liftgate will not activate.
- Do not touch the liftgate until it has stopped moving.

This feature may be temporarily disabled under some conditions. If the liftgate does not respond to the kick, open or close the liftgate by another method or start the vehicle. The feature will be re-enabled.

When closing the liftgate using this feature, there will be a short delay. The taillamps will flash and a chime will sound.

Step away from the liftgate before it starts moving.

Projected Logo

If equipped with this feature, a vehicle logo will be projected for one minute onto the ground near the rear bumper when an RKE transmitter is detected within approximately 2 m (6 ft). The projected logo may not be visible under brighter daytime conditions.

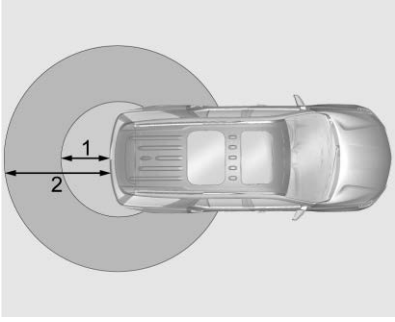

1. 1 m (3 ft) Hands-Free Operation Detection Zone
2. 2 m (6 ft) Projected Logo Detection Zone

The projected logo shows where the kicking motion is to take place.

The projected logo will only be available for this RKE transmitter after it has been out of range for at least 20 seconds.

If an RKE transmitter is again detected within approximately 2 m (6 ft) of the liftgate, or another hands-free operation has been detected, the one-minute timer will be reset.

The projected logo will not work under these conditions:

- The vehicle battery is low.
- The transmission is not in P (Park).
- Hands Free Liftgate Control is set to Off in vehicle personalization. See *Vehicle Personalization* ⇨ *113*.
- The power liftgate is turned off.
- The vehicle remains parked for 72 hours or more, with no RKE transmitter use or Keyless Access operation. To re-enable, press any button on the RKE transmitter or open and close a vehicle door.

The projected logo will not work for a single RKE transmitter when a transmitter:

- Has been left within approximately 2 m (6 ft) of the liftgate for several minutes.
- Has been left inside the vehicle and all vehicle doors are closed.
- Has approached the area outside of the liftgate five times within 10 minutes.

Lens Cleaning

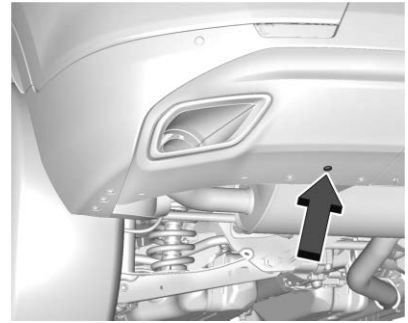

If equipped, use a cotton swab to clean the lens.

Hands-Free Liftgate and Projected Logo Availability

Action	Hands-Free Liftgate	Projected Logo
RKE transmitter entering projected logo detection zone	Operative	On for one minute
RKE transmitter left inside projected logo detection zone for minimum of 10 minutes	Operative	Off until RKE transmitter button press or a door is opened and closed
RKE transmitter brought in and out of projected logo detection zone five times or more within 10 minutes	Operative	Off for one hour or until RKE transmitter button press or a door is opened and closed
Vehicle remains parked for more than 72 hours	Operative	Off until RKE transmitter button press or a door is opened and closed
Vehicle battery is low	Non-operative	Off
Transmission is not in P (Park)	Non-operative	Off
Power liftgate is turned off	Non-operative	Off
Hands-free liftgate is disabled in vehicle personalization	Non-operative	Off

Vehicle Security

This vehicle has theft-deterrent features; however, they do not make the vehicle impossible to steal.

Vehicle Alarm System

This vehicle has an anti-theft alarm system.

Arming the Alarm System

1. Close the liftgate and the hood. Turn off the vehicle.
2. Lock the vehicle in one of three ways:
   - Use the RKE transmitter.
   - Use the Keyless Access system.
   - With a door open, press the inside 🔒.

3. After 30 seconds the alarm system will arm. Pressing on the RKE transmitter a second time will bypass the 30-second delay and immediately arm the alarm system.

The vehicle alarm system will not arm if the doors are locked with the key.

If the driver door is opened without first unlocking with the RKE transmitter, the horn will chirp and the lights will flash to indicate pre-alarm. If the vehicle is not started, or the door is not unlocked by pressing on the RKE transmitter during the 10-second pre-alarm, the alarm will be activated.

The alarm will also be activated if a passenger door, the liftgate, or the hood is opened without first disarming the system. When the alarm is activated, the turn signals flash and the horn sounds for about 30 seconds. The alarm system will then re-arm to monitor for the next unauthorized event.

Disarming the Alarm System

To disarm the alarm system or turn off the alarm if it has been activated:

- Press on the RKE transmitter.
- Unlock the vehicle using the Keyless Access system.
- Start the vehicle.

To avoid setting off the alarm by accident:

- Lock the vehicle after all occupants have left the vehicle and all doors are closed.
- Always unlock a door with the RKE transmitter or use the Keyless Access system.

Unlocking the driver door with the key will not disarm the system or turn off the alarm.

How to Detect a Tamper Condition

If is pressed and the horn chirps and the lights flash three times, the alarm was activated while the alarm system was armed.

If the alarm system has been activated, a message will appear on the Driver Information Center (DIC).

Immobilizer

See *Radio Frequency Statement* ⇨ *357*.

Immobilizer Operation

This vehicle has a passive theft-deterrent system.

The system does not have to be manually armed or disarmed.

The vehicle is automatically immobilized when the Remote Keyless Entry (RKE) transmitter leaves the vehicle.

The immobilization system is disarmed when the ignition is turned on or in ACC/ACCESSORY and a valid RKE transmitter is in the vehicle.

The security light, in the instrument cluster, comes on if there is a problem with arming or disarming the theft-deterrent system.

The system has one or more RKE transmitters matched to an immobilizer control unit in the vehicle. Only a correctly matched RKE transmitter will start the vehicle. If the transmitter is ever damaged, you may not be able to start the vehicle.

When trying to start the vehicle, the security light may come on briefly when the ignition is turned on.

If the engine does not start and the security light stays on, there is a problem with the system. Turn the ignition off and try again.

If the ignition will not change from off to on or ACC/ACCESSORY, and the RKE transmitter appears to be undamaged, try another transmitter. Or, you may try placing the transmitter in the cupholder in the center console. See *Remote Keyless Entry (RKE) System Operation* ⇨ *7*.

If the vehicle will not start with the other transmitter, or with the transmitter in the cupholder, the vehicle needs service. If the vehicle does start, the first transmitter may be faulty. See your dealer who can service the theft-deterrent system and have a new RKE transmitter programmed to the vehicle.

It is possible for the immobilizer system to learn new or replacement RKE transmitters. Up to eight transmitters can be programmed to the vehicle. To program additional transmitters, see "Programming Transmitters to the Vehicle" under *Remote Keyless Entry (RKE) System Operation* ⇨ *7*.

Do not leave the transmitter or device that disarms or deactivates the theft-deterrent system in the vehicle.

Exterior Mirrors

Convex Mirrors

⚠ Warning

A convex mirror can make things, like other vehicles, look farther away than they really are. If you cut too sharply into the right lane, you could hit a vehicle on the right. Check the inside mirror or glance over your shoulder before changing lanes.

The passenger side mirror is convex shaped. A convex mirror's surface is curved so more can be seen from the driver seat.

Power Mirrors

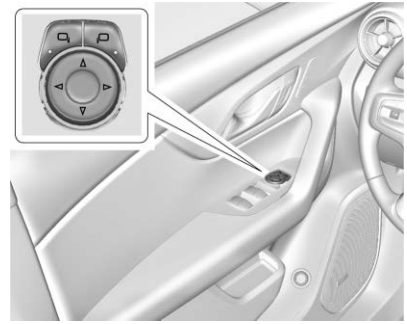

To adjust each mirror:

1. Press ⊡ or ⊡ to select the driver or passenger side mirror. The indicator light will illuminate.
2. Press the arrows on the control pad to move the mirror in the desired direction.
3. Adjust each outside mirror so that a little of the vehicle and the area behind it can be seen.
4. Press ⊡ or ⊡ again to deselect the mirror.

Memory Mirrors

The vehicle may have memory mirrors. See *Memory Seats* ⇨ *38*.

Lane Change Alert (LCA)

The vehicle may have LCA. See *Lane Change Alert (LCA)* ⇨ *236*.

Side Blind Zone Alert

The vehicle may have Side Blind Zone Alert. See *Side Blind Zone Alert (SBZA)* ⇨ *236*.

Folding Mirrors

Manual Folding Mirrors

The mirrors can be folded inward toward the vehicle to prevent damage when going through an automatic car wash. Push the mirror outward to return it to the original position.

Heated Mirrors

If equipped, the heated outside mirrors turn on when the rear window defogger is on and help to clear fog or frost from the surface of the mirrors.

: This button is on the climate control panel.

See "Rear Window Defogger" under *Dual Automatic Climate Control System* ⇨ *182*.

Automatic Dimming Mirror

The vehicle has an automatic dimming outside mirror on the driver side. The mirror will adjust for the glare of headlamps behind you.

Reverse Tilt Mirrors

If equipped with reverse tilt mirrors and memory seats, the passenger and/or driver mirror tilts to a preselected position when the vehicle is in R (Reverse). This allows the curb to be seen when parallel parking.

The mirror(s) may move from their tilted position when:

- The vehicle is shifted out of R (Reverse), or remains in R (Reverse) for about 30 seconds.
- The vehicle is turned off.
- The vehicle is driven in R (Reverse) above a set speed.

To turn this feature on or off, see *Vehicle Personalization* ⇨ *113*.

Interior Mirrors

Interior Rearview Mirrors

Adjust the rearview mirror for a clear view of the area behind your vehicle.

Do not spray glass cleaner directly on the mirror. Use a soft towel dampened with water.

Manual Rearview Mirror

If equipped, push the tab forward for daytime use and pull it rearward for nighttime use to avoid glare of the headlamps from behind.

Automatic Dimming Rearview Mirror

If equipped, automatic dimming reduces the glare of headlamps from behind. The dimming feature comes on when the vehicle is started.

Rear Camera Mirror

If equipped, this automatic dimming mirror provides a wide angle camera view of the area behind the vehicle.

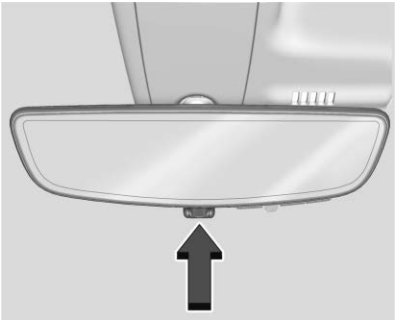

Pull the tab to turn on the display. Push the tab to turn it off. When off the mirror is automatic dimming. Adjust the mirror for a clear view of the area behind the vehicle while the display is off.

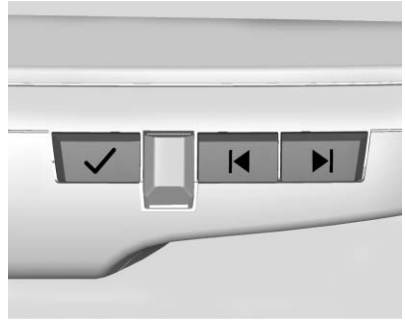

Press ✓ to scroll through the adjustment options.

Press |◀ and ▶| to adjust the settings using the indicators on the mirror. The indicators will remain visible for five seconds after the last button activation, and the settings will remain saved.

The adjustment options are:

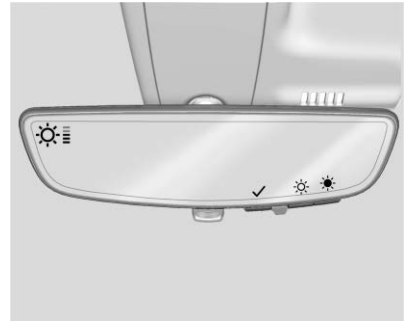

- Brightness

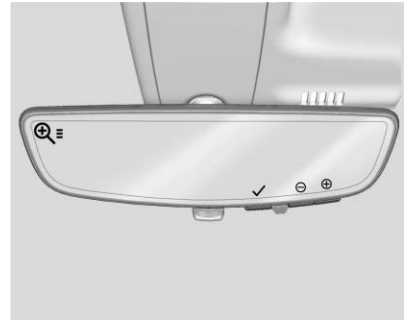

- Zoom

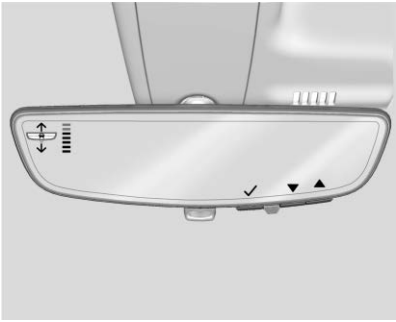

- Tilt

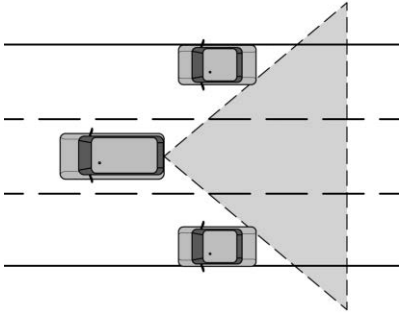

⚠ Warning

The Rear Camera Mirror (RCM) has a limited view. Portions of the road, vehicles, and other objects may not be seen. Do not drive or park the vehicle using only this camera. Objects may appear closer than they are. Check the outside mirrors or glance over your shoulder when making lane changes or merging. Failure to use proper care may result in injury, death, or vehicle damage.

Troubleshooting

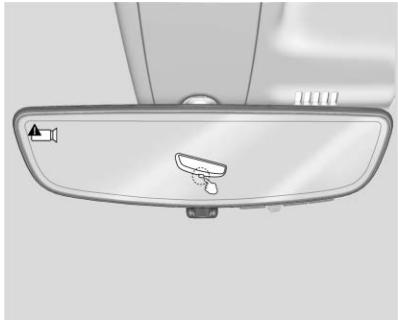

See your dealer for service if a blue screen and ⚠ are displayed in the mirror, and the display shuts off. Also, push the tab as indicated to return to the automatic dimming mode.

The Rear Camera Mirror may not work properly or display a clear image if:

- There is glare from the sun or headlamps. This may obstruct objects from view. If needed, push the tab to turn off the display.

- Dirt, snow, or other debris blocks the camera lens. Clean the lens with a soft damp cloth, or if equipped, with the Rear Camera Washer. See *Rear Window Wiper/Washer* ⇨ *85*.

- The camera's mounting on the vehicle has been damaged, and/or the position or the mounting angle of the camera has changed.

Windows

⚠ Warning

Never leave a child, a helpless adult, or a pet alone in a vehicle, especially with the windows closed in warm or hot weather. They can be overcome by the extreme heat and suffer permanent injuries or even death from heat stroke.

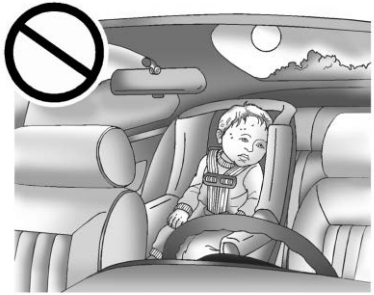

The vehicle aerodynamics are designed to improve fuel economy performance. This may result in a pulsing sound when one window is down and the other three are up. To reduce the sound, open another window or the sunroof, if equipped.

Power Windows

⚠ Warning

Leaving children in a vehicle with a Remote Keyless Entry (RKE) transmitter is dangerous and children or others could be seriously injured or killed. They could operate the power windows or other controls or make the vehicle move. The windows will function with the RKE transmitter in the vehicle, and children or others could be caught in the path of a closing window. Do not leave children in a vehicle with an RKE transmitter.

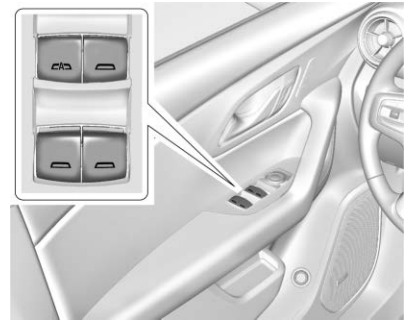

The power windows work when the ignition is on, in ACC/ACCESSORY, or when Retained Accessory Power (RAP) is active. See *Retained Accessory Power (RAP)* ⇨ *205*.

Using the window switch, press to open or pull to close the window.

The windows may be temporarily disabled if they are used repeatedly within a short time.

Window Lockout

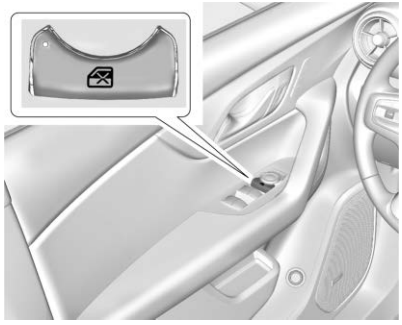

This feature stops the rear passenger window switches from working:

- Press to engage the rear window lockout feature. The indicator light is on when engaged.
- Press again to disengage.

Window Express Movement

All windows can be opened without holding the window switch. Press the switch down fully and quickly release to express open the window.

If equipped, pull the window switch up fully and quickly release to express close the window.

Briefly press or pull the window switch in the same direction to stop that window's express movement.

Window Automatic Reversal System

The express-close feature will reverse window movement if it comes in contact with an object. Extreme cold or ice could cause the window to auto-reverse. The window will operate normally after the object or condition is removed.

Automatic Reversal System Override

⚠ Warning

If automatic reversal system override is active, the window will not reverse automatically. You or others could be injured and the window could be damaged. Before using automatic reversal system override, make sure that all people and obstructions are clear of the window path.

When the engine is on, override the automatic reversal system by pulling and holding the window switch if conditions prevent it from closing.

Programming the Power Windows

Programming may be necessary if the vehicle battery has been disconnected or discharged. If the window is unable to express-up, program each express-close window:

1. Close all doors.
2. Turn the ignition on or to ACC/ACCESSORY.
3. Partially open the window to be programmed. Then close it and continue to pull the switch briefly after the window has fully closed.
4. Open the window and continue to press the switch briefly after the window has fully opened.

Remote Window Operation

If equipped, this feature allows all the windows to be opened remotely. If enabled in vehicle personalization, press and hold on the RKE transmitter. See *Vehicle Personalization* ⇨ *113*.

Sun Visors

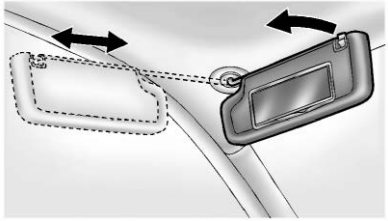

Pull the sun visor down to block glare. Detach the sun visor from the center mount to pivot to the side window and, if equipped, extend along the rod.

Roof

Sunroof

If equipped, the ignition must be on or in ACC/ACCESSORY, or Retained Accessory Power (RAP) must be active to operate the sunroof. See *Ignition Positions* ⇨ *200* and *Retained Accessory Power (RAP)* ⇨ *205*.

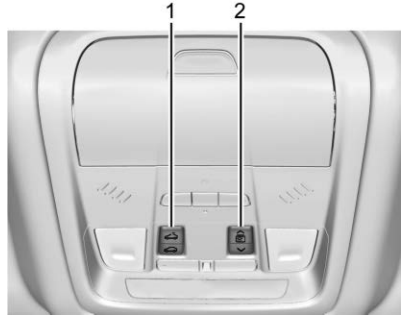

1. Sunroof Switch
2. Sunshade Switch

Sunroof Express Operation : Press and release (1) to vent. Press and release again to move to the partially opened comfort stop position. Press and release again to express-open to the fully opened position. Press and release (1) at any time to stop movement. Press and release (1) to express-close. Press and release (1) at any time to stop movement.

Sunroof Manual Operation : The sunroof can change to manual mode by holding (1) while opening. The sunroof will now open as long as (1) is held. Press and release (1) again to change back to express operation.

Power Sunshade Express Operation : Press and release (2) to express-open the sunshade. Press and release (2) at any time to stop movement. Press and release (2) to express-close the sunshade. Press and release (2) at any time to stop movement.

Power Sunshade Manual Operation : The sunshade can change to manual mode by holding (2) while opening. The sunshade will now open as long as (2) is held. Press and release (2) again to change back to express operation.

The sunroof cannot be opened or closed if the vehicle has an electrical failure.

Automatic Reversal System

The sunroof and power sunshade have an automatic reversal system that is only active when the sunroof and power sunshade, if equipped, are operated in express-close mode.

If an object is in the path while express-closing, the reversal system will detect an object, stop, and open the sunroof or power sunshade slightly.

If frost or other conditions prevent closing, override the feature by closing the sunroof or power sunshade in manual mode. To stop movement, release the switch.

Dirt and debris may collect on the sunroof seal or in the track. This could cause an issue with sunroof operation or noise. It could also plug the water drainage system. Periodically open the sunroof and remove any obstacles or loose debris. Wipe the sunroof seal and roof sealing area using a clean cloth, mild soap, and water. Do not remove grease from the sunroof.

Seats and Restraints

Head Restraints
Head Restraints 33

Front Seats
Seat Adjustment 35
Power Seat Adjustment 36
Lumbar Adjustment 36
Reclining Seatbacks 37
Memory Seats 38
Heated and Ventilated Front Seats 40

Rear Seats
Rear Seats 42
Heated Rear Seats 44

Seat Belts
Seat Belts 44
How to Wear Seat Belts Properly 45
Lap-Shoulder Belt 46
Seat Belt Use During Pregnancy 49
Seat Belt Extender 49
Safety System Check 49
Seat Belt Care 50
Replacing Seat Belt System Parts after a Crash 50

Airbag System
Airbag System 50
Where Are the Airbags? 52
When Should an Airbag Inflate? 53
What Makes an Airbag Inflate? 54
How Does an Airbag Restrain? 54
What Will You See after an Airbag Inflates? 54
Passenger Sensing System 55
Servicing the Airbag-Equipped Vehicle 58
Adding Equipment to the Airbag-Equipped Vehicle 59
Airbag System Check 59
Replacing Airbag System Parts after a Crash 60

Child Restraints
Older Children 60
Infants and Young Children 61
Child Restraint Systems 63
Where to Put the Restraint 65
Lower Anchors and Tethers for Children (LATCH System) 66
Replacing LATCH System Parts After a Crash 71
Securing Child Restraints (With the Seat Belts in the Rear Seat) 72
Securing Child Restraints (With the Seat Belts in the Front Seat) 73

Head Restraints

The vehicle's front seats have adjustable head restraints in the outboard seating positions.

⚠ Warning

With head restraints that are not installed and adjusted properly, there is a greater chance that occupants will suffer a neck/spinal injury in a crash. Do not drive until the head restraints for all occupants are installed and adjusted properly.

If your vehicle has rear head restraints that fold down, always return them to the full upright position whenever an occupant is seated in the seat.

Adjust the head restraint so that the top of the restraint is at the same height as the top of the occupant's head. This position reduces the chance of a neck injury in a crash.

Front Seats

The vehicle's front seats have adjustable head restraints in the outboard seating positions.

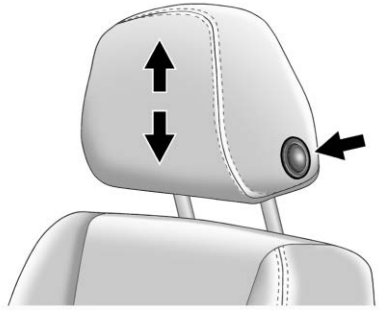

The height of the head restraint can be adjusted.

To raise or lower the head restraint, press the button located on the side of the head restraint and pull up or push the head restraint down, and release the button. Pull and push on the head restraint after the button is released to make sure that it is locked in place.

The front seat outboard head restraints are not removable.

Rear Seats

Rear Head Restraint Adjustment

The vehicle's rear seats have adjustable head restraints in the outboard seating positions.

The height of the head restraint can be adjusted. Pull the head restraint up to raise it. Try to move the head restraint to make sure that it is locked in place.

To lower the head restraint, press the button, located on the top of the seatback, and push the head restraint down. Try to move the head restraint after the button is released to make sure that it is locked in place.

Folding the Rear Head Restraint

If equipped, the head restraint can be folded rearward to allow for better visibility when the rear seat is unoccupied.

To fold the head restraint, press the button on the side of the head restraint.

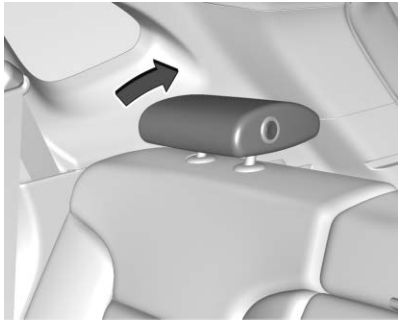

The head restraint will fold rearward automatically.

When an occupant or child restraint is in the seat, always return the head restraint to the full upright position. Pull the head restraint up and forward until it locks into place. Push and pull on the head restraint to make sure that it is locked.

Always adjust the head restraint so that the top of the restraint is at the same height as the top of the occupant's head.

Rear outboard head restraints are not removable.

Front Seats

Seat Adjustment

⚠ Warning

You can lose control of the vehicle if you try to adjust a driver seat while the vehicle is moving. Adjust the driver seat only when the vehicle is not moving.

To adjust a manual seat:

1. Lift the handle at the front of the seat cushion.
2. Move the seat forward or rearward to adjust the seat position.
3. Release the handle to stop the seat from moving.
4. Try to move the seat back and forth to be sure it is locked in place.

Seat Height Adjuster

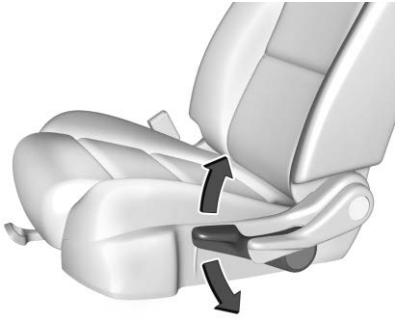

If equipped, move the lever up or down to manually raise or lower the seat.

Power Seat Adjustment

⚠ Warning

You can lose control of the vehicle if you try to adjust a driver seat while the vehicle is moving. Adjust the driver seat only when the vehicle is not moving.

⚠ Warning

The power seats will work with the ignition off. Children could operate the power seats and be injured. Never leave children alone in the vehicle.

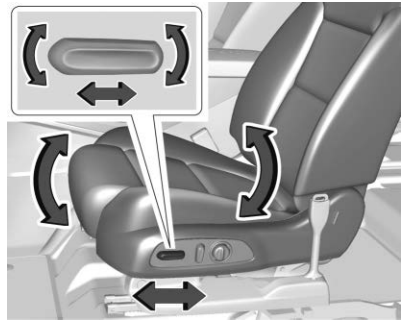

To adjust the seat:

- Move the seat forward or rearward by sliding the control forward or rearward.
- If equipped, raise or lower the front part of the seat cushion by moving the front of the control up or down.
- Raise or lower the entire seat by moving the rear of the control up or down.

To adjust the seatback, see *Reclining Seatbacks* ⇨ *37*.

To adjust the lumbar support, see *Lumbar Adjustment* ⇨ *36*.

Lumbar Adjustment

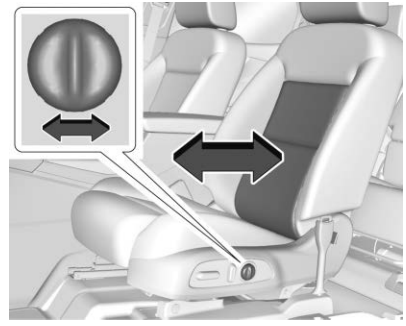

If equipped, press and hold the control forward to increase or rearward to decrease support.

Reclining Seatbacks

⚠ Warning

Sitting in a reclined position when the vehicle is in motion can be dangerous. Even when buckled up, the seat belts cannot do their job.

The shoulder belt will not be against your body. Instead, it will be in front of you. In a crash, you could go into it, receiving neck or other injuries.

The lap belt could go up over your abdomen. The belt forces would be there, not at your pelvic bones. This could cause serious internal injuries.

For proper protection when the vehicle is in motion, have the seatback upright. Then sit well back in the seat and wear the seat belt properly.

Do not have a seatback reclined if the vehicle is moving.

Manual Reclining Seatbacks

⚠ Warning

If either seatback is not locked, it could move forward in a sudden stop or crash. That could cause injury to the person sitting there. Always push and pull on the seatbacks to be sure they are locked.

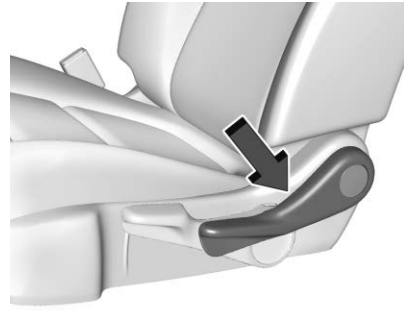

To recline the seatback:

1. Lift the lever.
2. Move the seatback to the desired position, and then release the lever to lock the seatback in place.
3. Push and pull on the seatback to make sure it is locked.

To return the seatback to the upright position:

1. Lift the lever fully without applying pressure to the seatback, and the seatback will return to the upright position.
2. Push and pull on the seatback to make sure it is locked.

Power Reclining Seatbacks

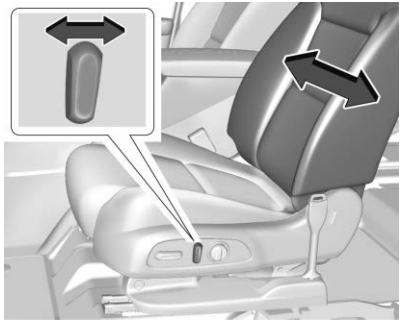

- Tilt the top of the control rearward to recline.
- Tilt the top of the control forward to raise.

Memory Seats

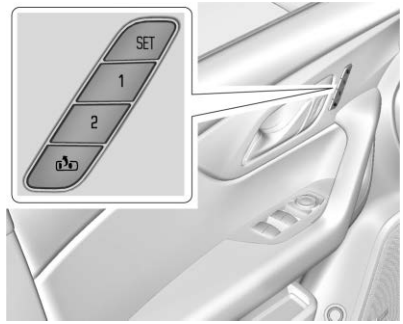

If equipped, memory seats allow two drivers to save and recall their unique seat positions for driving the vehicle, and a shared exit position for getting out of the vehicle. Other feature positions may also be saved, such as power mirrors and power steering wheel, if equipped. Memory positions are linked to RKE transmitter 1 or 2 for automatic memory recalls.

Before saving, adjust all available memory feature positions. Turn the vehicle on and then press and release SET; a beep will sound. Then immediately press and hold 1, 2, or (Exit) until two beeps sound. To manually recall these positions, press and hold 1, 2, or until the saved position is reached. Follow the instructions under "Saving Memory Positions."

The vehicle identifies the current driver's RKE transmitter number (1–8). See *Remote Keyless Entry (RKE) System Operation* ⇨ 7. Only RKE transmitters 1 and 2 can be used for automatic memory recalls. A Driver Information Center (DIC) welcome message indicating the transmitter number may display for the first few ignition cycles following a transmitter change. For Seat Entry Memory to work properly, save the positions to the memory button (1 or 2) matching the RKE transmitter number displayed in the DIC welcome message. Carry the linked RKE transmitter when entering the vehicle.

Vehicle Personalization Settings

- To have the Seat Entry Memory movement begin when the vehicle is started, select the Settings menu, then Vehicle, then Seating Position, and then Seat Entry Memory. Select On or Off. See "Seat Entry Memory" later in this section.
- To begin Seat Exit Memory movement when the vehicle is turned off and the driver door is opened, or when the vehicle is turned off with the driver door already

opened, select the Settings menu, then Vehicle, then Seating Position, and then Seat Exit Memory. Select On or Off. See "Seat Exit Memory" later in this section.

- See *Vehicle Personalization* ⇨ *113* for additional setting information.

Identifying Driver Number

To identify the driver number:

1. Move your RKE transmitter away from the vehicle.
2. Start the vehicle with another key or RKE transmitter. The DIC should display the driver number for the other RKE transmitter. Turn the vehicle off and remove the key or RKE transmitter from the vehicle.
3. Start the vehicle with the initial key or RKE transmitter. The DIC should display the driver number of your RKE transmitter.

Saving Memory Positions

Read these instructions completely before saving memory positions.

To save preferred driving positions 1 and 2:

1. Turn the vehicle on or to ACC/ ACCESSORY.

   A DIC welcome message may indicate driver number 1 or 2.
2. Adjust all available memory features to the desired driving position.
3. Press and release SET; a beep will sound.
4. Immediately press and hold the 1 or 2 memory button matching the above DIC welcome message until two beeps sound.

   If too much time passes between releasing SET and pressing 1 or 2, the memory position will not be saved and two beeps will not sound. Repeat Steps 3 and 4.

   1 or 2 corresponds to the driver number. See "Identifying Driver Number" previously in this section.
5. Repeat Steps 1–4 for a second driver using 1 or 2.

To save the position for and Seat Exit Memory features, repeat Steps 1–4 using . This saves the position for getting out of the vehicle.

Save preferred memory feature positions to both 1 and 2 if you are the only driver.

Manually Recalling Memory Positions

Press and hold 1, 2, or to recall the previously saved memory positions if you are driver 1 or 2 identified in the DIC welcome message.

To stop Manual Memory recall movement, release 1, 2, or or press any of the following controls:

- Power seat
- Memory SET
- Power mirror, with the driver or passenger side mirror selected
- Power steering wheel, if equipped

Manual Memory recall movement for 1, 2, or buttons may be initiated and may complete to the saved memory position if the vehicle is in or out of P (Park).

Seat Entry Memory

The vehicle identifies the number of the current driver's RKE transmitter (1–8). See *Remote Keyless Entry (RKE) System Operation* ⇨ *7*. If the RKE transmitter is 1 or 2, and Seat Entry Memory is enabled in vehicle personalization, the positions saved to the same memory button number 1 or 2 are automatically recalled when the vehicle

is turned on, or turned from off to ACC/ ACCESSORY. RKE transmitters 3–8 will not provide automatic memory recalls.

To turn Seat Entry Memory on or off, see “Vehicle Personalization Settings” previously in this section and *Vehicle Personalization* ⇨ *113*.

The shift lever must be in P (Park) to start Seat Entry Memory. Seat Entry Memory recall will complete if the vehicle is shifted out of P (Park) prior to reaching the saved memory position.

To stop Seat Entry Memory recall movement, turn the vehicle off or press any of the following controls:

- Power seat
- Memory SET, 1, 2, or
- Power mirror, with the driver or passenger side mirror selected
- Power steering wheel, if equipped

If the saved memory seat position does not automatically recall or recalls to the wrong positions, the driver’s RKE transmitter number (1 or 2) may not match the memory button number that positions were saved to. Try storing the position to the other memory button or try the other RKE transmitter.

Seat Exit Memory

Seat Exit Memory is not linked to an RKE transmitter. The position saved to is used for all drivers. To turn Seat Exit Memory on or off, see "Vehicle Personalization Settings" previously in this section and *Vehicle Personalization* ⇨ *113*.

If turned on, the position saved to is automatically recalled when one of the following occurs:

- The vehicle is turned off and the driver door is opened within a short time.
- The vehicle is turned off with the driver door open.

To stop Seat Exit Memory movement, press any of the following memory controls:

- Power seat
- Memory SET, 1, 2, or
- Power mirror, with the driver or passenger side mirror selected
- Power steering wheel, if equipped

Obstructions

If something has blocked the driver seat and/or power steering wheel while recalling a memory position, the recall may stop. Remove the obstruction and try the recall again. If the memory position still does not recall, see your dealer.

Heated and Ventilated Front Seats

⚠ Warning

If temperature change or pain to the skin cannot be felt, the seat heater may cause burns. To reduce the risk of burns, use care when using the seat heater, especially for long periods of time. Do not place anything on the seat that insulates against heat, such as a blanket, cushion, cover, or similar item. This may cause the seat heater to overheat. An overheated seat heater may cause a burn or may damage the seat.

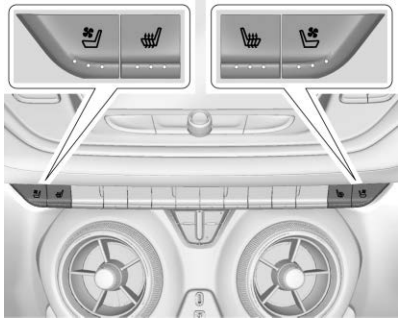

Heated and Ventilated Seat Buttons Shown, Heated Seat Buttons Similar

If equipped, the buttons are near the climate controls on the center stack. To operate, the engine must be running.

Press or to heat the driver or passenger seat.

Press or , if equipped, to ventilate the driver or passenger seat. A ventilated seat has a fan that pulls or pushes air through the seat. The air is not cooled.

When a heated seat is turned on, the symbol turns red. When a ventilated seat is turned on, the symbol turns blue.

Press the button once for the highest setting. With each press of the button, the seat will change to the next lower setting, and then to the off setting. The indicator lights below the buttons indicate three for the highest setting and one for the lowest. If the heated seats are on high, the level may automatically be lowered after approximately 30 minutes.

The passenger seat may take longer to heat up.

Auto Heated and Ventilated Seats

When the vehicle is on, this feature will automatically activate the heated or ventilated seats at the level required by the vehicle's interior temperature.

The active high, medium, low, or off heated or ventilated seat level will be indicated by the manual heated or ventilated seat buttons on the center stack. Use the manual heated or ventilated seat buttons on the center stack to turn auto heated or ventilated seats off. If the passenger seat is unoccupied, the auto heated or ventilated seats feature will not activate that seat. The auto heated or ventilated seats feature can be programmed to always be enabled when the vehicle is on.

See *Vehicle Personalization* ⇨ *113*.

Remote Start Heated and Ventilated Seats

If equipped, the heated seats will turn on automatically during a remote start if it is cold outside and the ventilated seats will turn on automatically if it is hot outside. If equipped, the heated steering wheel will turn on automatically during a remote start if it is cold outside. The heated and ventilated seat indicators and heated steering wheel indicator may not come on during this operation.

The heated and ventilated seats and heated steering wheel may cancel when the vehicle is started. These features can be manually selected after the ignition is turned on.

The temperature performance of an unoccupied seat may be reduced. This is normal.

The heated or ventilated seats will not turn on during a remote start unless they are enabled in vehicle personalization. See *Remote Vehicle Start* ⇨ *13* and *Vehicle Personalization* ⇨ *113*.

Rear Seats

Rear Seat Reminder

If equipped, the message REAR SEAT REMINDER LOOK IN REAR SEAT displays under certain conditions indicating there may be an item or passenger in the rear seat. Check before exiting the vehicle.

This feature will activate when a second row door is opened while the vehicle is on or up to 10 minutes before the vehicle is turned on. There will be an alert when the vehicle is turned off. The alert does not directly detect objects in the rear seat; instead, under certain conditions, it detects when a rear door is opened and closed, indicating that there may be something in the rear seat.

The feature is active only once each time the vehicle is turned on and off, and will require reactivation by opening and closing the second row doors. There may be an alert even when there is nothing in the rear seat; for example, if a child entered the vehicle through the rear door and left the vehicle without the vehicle being shut off.

The feature can be turned on or off. See *Vehicle Personalization* ⇨ *113*.

Rear Seat Adjustment

The second row seats slide forward for more room.

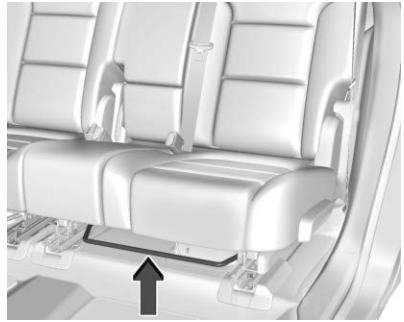

To adjust the seat position, lift the lever below the seat cushion and slide the seat forward or backward.

Reclining the Seatback

To recline the seatback:

1. Pull the reclining seatback handle.
2. Move the seatback to the desired position, and then release the handle to lock the seatback in place.
3. Push and pull on the seatback to make sure it is locked.

Folding the Seatback

Either side of the seatback can be folded for more cargo space. Fold a seatback only when the vehicle is not moving.

Caution

Folding a rear seat with the seat belts still fastened may cause damage to the seat or the seat belts. Always unbuckle the seat belts and return them to their normal stowed position before folding a rear seat.

To fold the seatback:

1. Fold the head restraint, if equipped. See *Head Restraints* ⇨ *33*.

2. Pull the handle on the side of the seat cushion to unlock it.
3. Fold the seatback forward.

Repeat the steps to fold the other seatback, if desired.

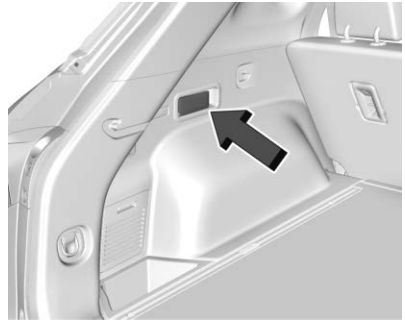

Driver Side Shown, Passenger Side Similar

The rear seatbacks can also be folded forward by pulling the levers on either side of the rear cargo area.

Raising the Seatback

⚠ Warning

If either seatback is not locked, it could move forward in a sudden stop or crash. That could cause injury to the person sitting there. Always push and pull on the seatbacks to be sure they are locked.

⚠ Warning

A seat belt that is improperly routed, not properly attached, or twisted will not provide the protection needed in a crash. The person wearing the belt could be seriously injured. After raising the rear seatback, always check to be sure that the seat belts are properly routed and attached, and are not twisted.

To raise a seatback:

1. Lift the seatback up and push it rearward to lock it in place.
2. Return the head restraint to the upright position. See *Head Restraints* ⇨ *33*.
3. Push and pull the top of the seatback to be sure it is locked into position.
4. Repeat the steps to raise the other seatback, if necessary.

If additional cargo space is not needed, the seatbacks should be kept in the upright, locked position.

Heated Rear Seats

⚠ Warning

If temperature change or pain to the skin cannot be felt, the seat heater may cause burns. See the Warning under *Heated and Ventilated Front Seats* ⇨ *40*.

If equipped, the buttons are on the rear doors.

With the engine running, press or to heat the left or right outboard seat cushion. An indicator light on the button will turn on when the heated seat is on. Press the button again to turn this feature off. The indicator will turn off.

Seat Belts

This section describes how to use seat belts properly, and some things not to do.

⚠ Warning

Do not let anyone ride where a seat belt cannot be worn properly. In a crash, if you or your passenger(s) are not wearing seat belts, injuries can be much worse than if you are wearing seat belts. You can be seriously injured or killed by hitting things inside the vehicle harder or by being ejected from the vehicle. In addition, anyone who is not buckled up can strike other passengers in the vehicle.

It is extremely dangerous to ride in a cargo area, inside or outside of a vehicle. In a collision, passengers riding in these areas are more likely to be seriously injured or killed. Do not allow passengers to ride in any area of the vehicle that is not equipped with seats and seat belts.

Always wear a seat belt, and check that all passenger(s) are restrained properly too.

This vehicle has indicators as a reminder to buckle the seat belts. See *Seat Belt Reminders* ⇨ *98*.

Why Seat Belts Work

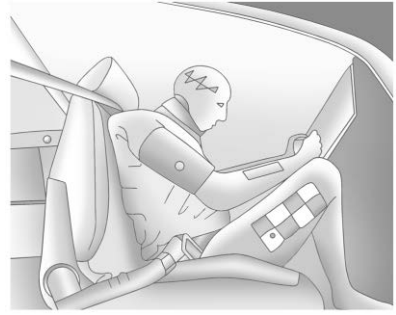

When riding in a vehicle, you travel as fast as the vehicle does. If the vehicle stops suddenly, you keep going until something stops you. It could be the windshield, the instrument panel, or the seat belts!

When you wear a seat belt, you and the vehicle slow down together. There is more time to stop because you stop over a longer distance and, when worn properly, your strongest bones take the forces from the seat belts. That is why wearing seat belts makes such good sense.

Questions and Answers About Seat Belts

Q: Will I be trapped in the vehicle after a crash if I am wearing a seat belt?

A: You *could* be — whether you are wearing a seat belt or not. Your chance of being conscious during and after a crash, so you *can* unbuckle and get out, is *much* greater if you are belted.

Q: If my vehicle has airbags, why should I have to wear seat belts?

A: Airbags are supplemental systems only. They work *with* seat belts — not instead of them. Whether or not an airbag is provided, all occupants still have to buckle up to get the most protection.

Also, in nearly all states and in all Canadian provinces, the law requires wearing seat belts.

How to Wear Seat Belts Properly

Follow these rules for everyone's protection.

There are additional things to know about seat belts and children, including smaller children and infants. If a child will be riding in the vehicle, see *Older Children* ⇨ *60* or *Infants and Young Children* ⇨ *61*. Review and follow the rules for children in addition to the following rules.

It is very important for all occupants to buckle up. Statistics show that unbelted people are hurt more often in crashes than those who are wearing seat belts.

There are important things to know about wearing a seat belt properly.

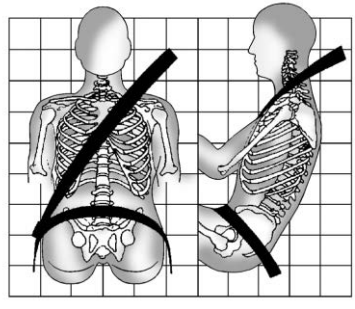

- Sit up straight and always keep your feet on the floor in front of you (if possible).
- Always use the correct buckle for your seating position.
- Wear the lap part of the belt low and snug on the hips, just touching the thighs. In a crash, this applies force to the strong pelvic bones and you would be less likely to slide under the lap belt. If you slid under it, the belt would apply force on your abdomen. This could cause serious or even fatal injuries.
- Wear the shoulder belt over the shoulder and across the chest. These parts of the body are best able to take belt restraining forces. The shoulder belt locks if there is a sudden stop or crash.

⚠ Warning

You can be seriously injured, or even killed, by not wearing your seat belt properly.

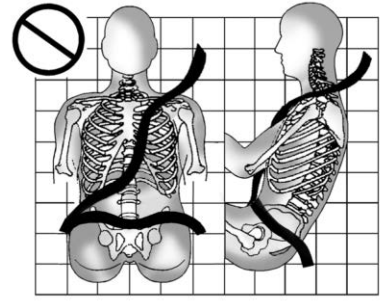

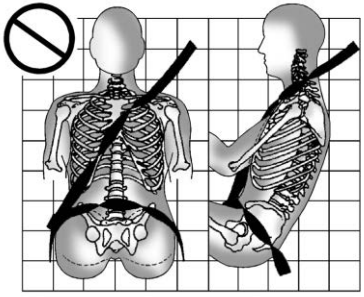

Never allow the lap or shoulder belt to become loose or twisted.

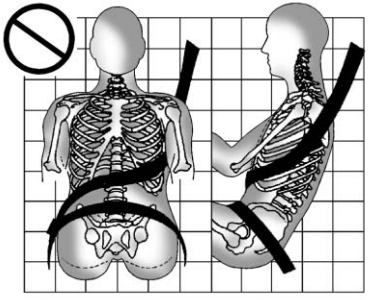

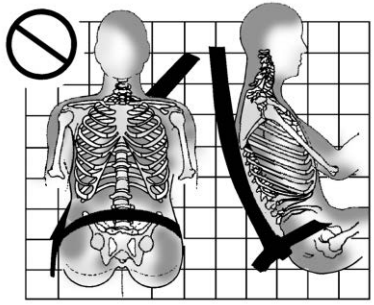

Never wear the shoulder belt under both arms or behind your back.

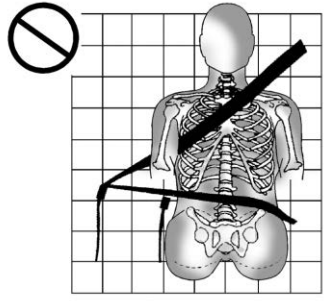

Always use the correct buckle for your seating position.

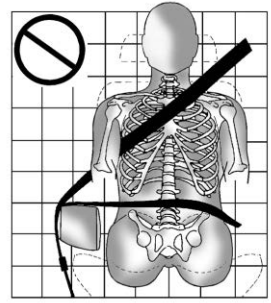

Never route the lap or shoulder belt over an armrest.

⚠ Warning

The seat belt can be pinched if it is routed under plastic trim on the seat, such as trim around the rear seatback folding handle or side airbag. In a crash, pinched seat belts might not be able to provide adequate protection. Never allow seat belts to be routed under plastic trim pieces.

Lap-Shoulder Belt

All seating positions in the vehicle have a lap-shoulder belt.

The following instructions explain how to wear a lap-shoulder belt properly.

1. Adjust the seat, if the seat is adjustable, so you can sit up straight. To see how, see “Seats” in the Index.

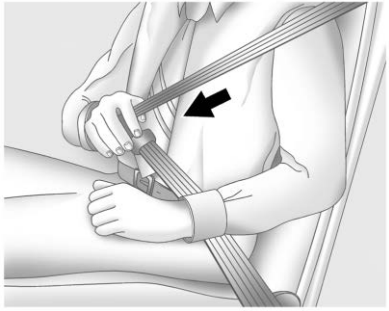

2. Pick up the latch plate and pull the belt across you. Do not let it get twisted.

   The lap-shoulder belt may lock if you pull the belt across you very quickly. If this happens, let the belt go back slightly to unlock it. Then pull the belt across you more slowly.

   If the shoulder portion of a passenger belt is pulled out all the way, the child restraint locking feature may be engaged. See *Child Restraint Systems* ⇨ *63*. If this occurs, let the belt go back all the way and start again. If the locking feature stays engaged after letting the belt go back to stowed position on the seat, move the seat rearward or recline the seat until the shoulder belt retractor lock releases.

   Engaging the child restraint locking feature in the front outboard seating position may affect the passenger sensing system. See *Passenger Sensing System* ⇨ *55*.

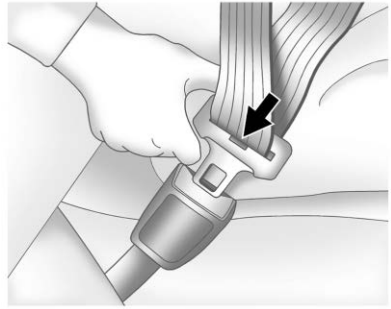

3. Push the latch plate into the buckle until it clicks.

   Pull up on the latch plate to make sure it is secure. If the belt is not long enough, see *Seat Belt Extender* ⇨ *49*.

   Position the release button on the buckle so that the seat belt could be quickly unbuckled if necessary.

4. If equipped with a shoulder belt height adjuster, move it to the height that is right for you. See “Shoulder Belt Height Adjuster” later in this section for instructions on use and important safety information.

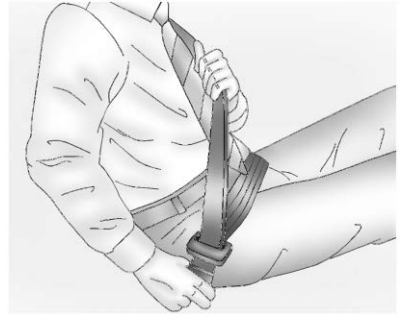

5. To make the lap part tight, pull up on the shoulder belt.

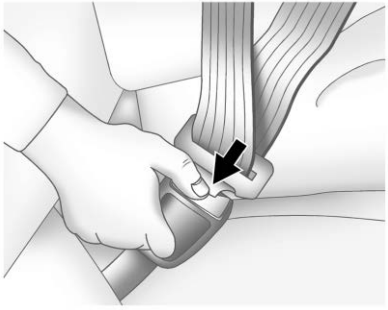

To unlatch the belt, push the button on the buckle. The belt should return to its stowed position.

Always stow the seat belt slowly. If the seat belt webbing returns quickly to the stowed position, the retractor may lock and cannot be pulled out. If this happens, pull the seat belt straight out firmly to unlock the webbing, and then release it. If the webbing is still locked in the retractor, see your dealer.

Before a door is closed, be sure the seat belt is out of the way. If a door is slammed against a seat belt, damage can occur to both the seat belt and the vehicle.

Shoulder Belt Height Adjuster

The vehicle has a shoulder belt height adjuster for the driver and front outboard passenger seating positions.

Adjust the height so that the shoulder portion of the belt is on the shoulder and not falling off of it. The belt should be close to, but not contacting, the neck. Improper shoulder belt height adjustment could reduce the effectiveness of the seat belt in a crash. See *How to Wear Seat Belts Properly* ⇨ *45*.

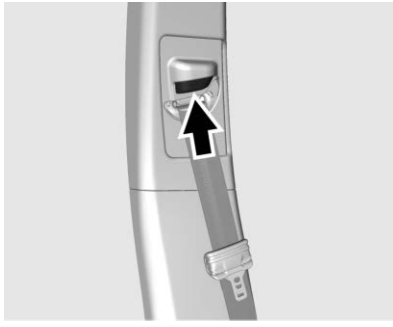

Press and hold the release button while raising or lowering the height adjuster to the desired position.

After the height adjuster is set to the desired position, try to move it down without pressing the release button to make sure it has locked into position.

Seat Belt Pretensioners

This vehicle has seat belt pretensioners for the front outboard occupants. Although the seat belt pretensioners cannot be seen, they are part of the seat belt assembly. They can help tighten the seat belts during the early stages of a moderate to severe frontal, near frontal, or rear crash if the threshold conditions for pretensioner activation are met. Seat belt pretensioners can also help tighten the seat belts in a side crash or a rollover event.

Pretensioners work only once. If the pretensioners activate in a crash, the pretensioners and probably other parts of the vehicle's seat belt system will need to be replaced. See *Replacing Seat Belt System Parts after a Crash* ⇨ *50*.

Do not sit on the outboard seat belt while entering or exiting the vehicle or at any time while sitting in the seat. Sitting on the seat belt can damage the webbing and hardware.

Rear Seat Belt Comfort Guides

Rear seat belt comfort guides may provide added seat belt comfort for older children who have outgrown booster seats and for some adults. When installed on a shoulder belt, the comfort guide positions the shoulder belt away from the neck and head.

The comfort guides for the second row outboard seating positions of this vehicle are provided in a package in the glove box or cargo area. Instructions are included with the comfort guides.

Seat Belt Use During Pregnancy

Seat belts work for everyone, including pregnant women. Like all occupants, they are more likely to be seriously injured if they do not wear seat belts.

A pregnant woman should wear a lap-shoulder belt, and the lap portion should be worn as low as possible, below the rounding, throughout the pregnancy.

The best way to protect the fetus is to protect the mother. When a seat belt is worn properly, it is more likely that the fetus will not be hurt in a crash. For pregnant women, as for anyone, the key to making seat belts effective is wearing them properly.

Seat Belt Extender

If the vehicle's seat belt will fasten around you, you should use it.

But if a seat belt is not long enough, your dealer will order you an extender. When you go in to order it, take the heaviest coat you will wear, so the extender will be long enough for you. To help avoid personal injury, do not let someone else use it, and use it only for the seat it is made to fit. The extender has been designed for adults. Never use it for securing child restraints. For more information on the proper use and fit of seat belt extenders see the instruction sheet that comes with the extender.

Safety System Check

Periodically check the seat belt reminder, seat belts, buckles, latch plates, retractors, shoulder belt height adjusters (if equipped), and seat belt anchorages to make sure they are all in working order. Look for any other loose or damaged seat belt system parts that might keep a seat belt system from performing properly. See your dealer to have it repaired. Torn, frayed, or twisted seat belts may not protect you in a crash. Torn or frayed seat belts can rip apart under impact forces. If a belt is torn or frayed, have it replaced immediately. If a belt is twisted, it may be possible to untwist by

reversing the latch plate on the webbing. If the twist cannot be corrected, ask your dealer to fix it.

Make sure the seat belt reminder light is working. See *Seat Belt Reminders* ⇨ *98*.

Keep seat belts clean and dry. See *Seat Belt Care* ⇨ *50*.

Seat Belt Care

Keep belts clean and dry.

Seat belts should be properly cared for and maintained.

Seat belt hardware should be kept dry and free of dust or debris. As necessary, exterior hard surfaces and seat belt webbing may be lightly cleaned with mild soap and water. Ensure there is not excessive dust or debris in the mechanism. If dust or debris exists in the system please see the dealer. Parts may need to be replaced to ensure proper functionality of the system.

⚠ Warning

Do not bleach or dye seat belt webbing. It may severely weaken the webbing. In a crash, they might not be able to

(Continued)

Warning (Continued)

provide adequate protection. Clean and rinse seat belt webbing only with mild soap and lukewarm water. Allow the webbing to dry.

Replacing Seat Belt System Parts after a Crash

⚠ Warning

A crash can damage the seat belt system in the vehicle. A damaged seat belt system may not properly protect the person using it, resulting in serious injury or even death in a crash. To help make sure the seat belt systems are working properly after a crash, have them inspected and any necessary replacements made as soon as possible.

After a minor crash, replacement of seat belts may not be necessary. But the seat belt assemblies that were used during any crash may have been stressed or damaged. See your dealer to have the seat belt assemblies inspected or replaced.

New parts and repairs may be necessary even if the seat belt system was not being used at the time of the crash.

Have the seat belt pretensioners checked if the vehicle has been in a crash, or if the airbag readiness light stays on after you start the vehicle or while you are driving. See *Airbag Readiness Light* ⇨ *98*.

Airbag System

The vehicle has the following airbags:

- A frontal airbag for the driver
- A frontal airbag for the front outboard passenger
- A knee airbag for the driver
- A seat-mounted side impact airbag for the driver
- A seat-mounted side impact airbag for the front outboard passenger
- A roof-rail airbag for the driver and the passenger seated directly behind the driver
- A roof-rail airbag for the front outboard passenger and the passenger seated directly behind the front outboard passenger

All vehicle airbags have the word AIRBAG on the trim or on a label near the deployment opening.

For frontal airbags, the word AIRBAG is on the center of the steering wheel for the driver and on the instrument panel for the front outboard passenger.

For knee airbags, the word AIRBAG is on the lower part of the instrument panel.

For seat-mounted side impact airbags, the word AIRBAG is on the side of the seatback or side of the seat closest to the door.

For roof-rail airbags, the word AIRBAG is on the ceiling or trim.

Airbags are designed to supplement the protection provided by seat belts. Even though today's airbags are also designed to help reduce the risk of injury from the force of an inflating bag, all airbags must inflate very quickly to do their job.

Here are the most important things to know about the airbag system:

⚠ Warning

You can be severely injured or killed in a crash if you are not wearing your seat belt, even with airbags. Airbags are designed to work with seat belts, not replace them. Also, airbags are not designed to inflate in every crash. In some crashes seat belts are the only restraint. See *When Should an Airbag Inflate?* ⇨ *53*.

Wearing your seat belt during a crash helps reduce your chance of hitting things inside the vehicle or being ejected from it. Airbags are "supplemental restraints" to the seat belts. Everyone in the vehicle should wear a seat belt properly, whether or not there is an airbag for that person.

⚠ Warning

Because airbags inflate with great force and faster than the blink of an eye, anyone who is up against, or very close to, any airbag when it inflates can be seriously injured or killed. Do not sit

(Continued)

Warning (Continued)

unnecessarily close to any airbag, as you would be if sitting on the edge of the seat or leaning forward. Seat belts help keep you in position before and during a crash. Always wear a seat belt, even with airbags. The driver should sit as far back as possible while still maintaining control of the vehicle. The seat belts and the front outboard passenger airbags are most effective when you are sitting well back and upright in the seat with both feet on the floor.

Occupants should not lean on or sleep against the door or side windows in seating positions with seat-mounted side impact airbags and/or roof-rail airbags.

⚠ Warning

Children who are up against, or very close to, any airbag when it inflates can be seriously injured or killed. Always secure children properly in the vehicle. To read how, see *Older Children* ⇨ *60* or *Infants and Young Children* ⇨ *61*.

There is an airbag readiness light on the instrument cluster, which shows the airbag symbol. The system checks the airbag electrical system for malfunctions. The light tells you if there is an electrical problem. See *Airbag Readiness Light* ⇨ *98* for more information.

Where Are the Airbags?

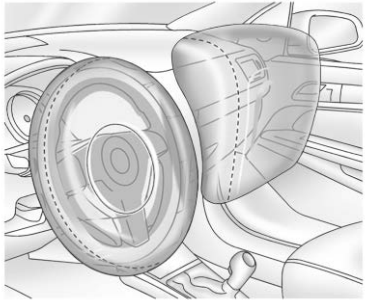

The driver frontal airbag is in the center of the steering wheel.

The front outboard passenger frontal airbag is in the passenger side instrument panel.

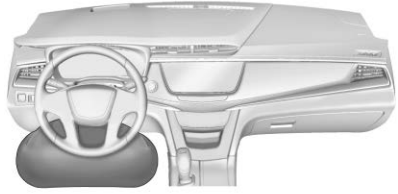

The driver knee airbag is below the steering column.

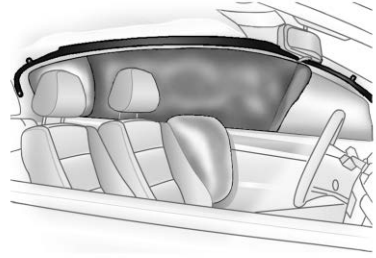

Driver Side Shown, Passenger Side Similar

The seat-mounted side impact airbags for the driver and front outboard passenger are in the sides of the seatbacks closest to the door.

The roof-rail airbags for the driver, front outboard passenger, and second row outboard passengers are in the ceiling above the side windows.

⚠ Warning

If something is between an occupant and an airbag, the airbag might not inflate properly or it might force the object into that person causing severe injury or even

(Continued)

Warning (Continued)

death. The path of an inflating airbag must be kept clear. Do not put anything between an occupant and an airbag, and do not attach or put anything on the steering wheel hub or on or near any other airbag covering.

Do not use seat accessories that block the inflation path of a seat-mounted side impact airbag.

Never secure anything to the roof of a vehicle with roof-rail airbags by routing a rope or tie-down through any door or window opening. If you do, the path of an inflating roof-rail airbag will be blocked.

When Should an Airbag Inflate?

This vehicle is equipped with airbags. See *Airbag System* ⇨ *50*. Airbags are designed to inflate if the impact exceeds the specific airbag system's deployment threshold. Deployment thresholds are used to predict how severe a crash is likely to be in time for the airbags to inflate and help restrain the occupants. The vehicle has electronic sensors that help the airbag system determine the severity of the impact. Deployment thresholds can vary with specific vehicle design.

Frontal airbags are designed to inflate in moderate to severe frontal or near frontal crashes to help reduce the potential for severe injuries, mainly to the driver's or front outboard passenger's head and chest.

Whether the frontal airbags will or should inflate is not based primarily on how fast the vehicle is traveling. It depends on what is hit, the direction of the impact, and how quickly the vehicle slows down.

Frontal airbags may inflate at different crash speeds depending on whether the vehicle hits an object straight on or at an angle, and whether the object is fixed or moving, rigid or deformable, narrow or wide.

Frontal airbags are not intended to inflate during vehicle rollovers, in rear impacts, or in many side impacts.

In addition, the vehicle has advanced technology frontal airbags. Advanced technology frontal airbags adjust the restraint according to crash severity.

Knee airbags are designed to inflate in moderate to severe frontal or near frontal impacts. Knee airbags are not designed to inflate during vehicle rollovers, in rear impacts, or in many side impacts.

Seat-mounted side impact airbags are designed to inflate in moderate to severe side crashes, depending on the location of the impact. These airbags are also designed to inflate in some moderate to severe frontal or near-frontal impacts that could result in the occupant moving toward the side of the vehicle. Seat-mounted side impact airbags are not designed to inflate in rollovers, or rear impacts. A seat-mounted side impact airbag is designed to inflate on the side of the vehicle that is struck.

Roof-rail airbags are designed to inflate in moderate to severe side crashes depending on the location of the impact. In addition, these roof-rail airbags are designed to inflate during a rollover or in a severe frontal impact. Roof-rail airbags are not designed to inflate in rear impacts. Both roof-rail airbags will inflate when either side of the vehicle is struck, if the sensing system predicts that the vehicle is about to roll over on its side, or in a severe frontal impact.

In any particular crash, no one can say whether an airbag should have inflated simply because of the vehicle damage or repair costs.

What Makes an Airbag Inflate?

In a deployment event, the sensing system sends an electrical signal triggering a release of gas from the inflator. Gas from the inflator fills the airbag causing the bag to break out of the cover. The inflator, the airbag, and related hardware are all part of the airbag module.

For airbag locations, see *Where Are the Airbags?* ⇨ *52*.

How Does an Airbag Restrain?

In moderate to severe frontal or near frontal collisions, even belted occupants can contact the steering wheel or the instrument panel. In moderate to severe side collisions, even belted occupants can contact the inside of the vehicle.

Airbags supplement the protection provided by seat belts by distributing the force of the impact more evenly over the occupant's body.

Rollover capable roof-rail airbags are designed to help contain the head and chest of occupants in the outboard seating positions in the first and second rows. The rollover capable roof-rail airbags are designed to help reduce the risk of full or partial ejection in rollover events, although no system can prevent all such ejections.

But airbags would not help in many types of collisions, primarily because the occupant's motion is not toward those airbags. See *When Should an Airbag Inflate?* ⇨ *53*.

Airbags should never be regarded as anything more than a supplement to seat belts.

What Will You See after an Airbag Inflates?

After frontal, knee, and seat-mounted side impact airbags inflate, they quickly deflate, so quickly that some people may not even realize the airbags inflated. Roof-rail airbags may still be at least partially inflated for some time after they inflate. Some components of the airbag module may be hot for several minutes. For location of the airbags, see *Where Are the Airbags?* ⇨ *52*.

The parts of the airbag that come into contact with you may be warm, but not too hot to touch. There may be some smoke and dust coming from the vents in the deflated airbags. Airbag inflation does not prevent the driver from seeing out of the windshield or being able to steer the vehicle, nor does it prevent people from leaving the vehicle.

⚠ Warning

When an airbag inflates, there may be dust in the air. This dust could cause breathing problems for people with a history of asthma or other breathing trouble. To avoid this, everyone in the vehicle should get out as soon as it is safe to do so. If you have breathing problems but cannot get out of the vehicle after an airbag inflates, then get fresh air by opening a window or a door. If you experience breathing problems following an airbag deployment, you should seek medical attention.

The vehicle has a feature that may automatically unlock the doors, turn on the interior lamps and hazard warning flashers, and shut off the fuel system after the

airbags inflate. The feature may also activate, without airbag inflation, after an event that exceeds a predetermined threshold. After turning the ignition off and then on again, the fuel system will return to normal operation; the doors can be locked, the interior lamps can be turned off, and the hazard warning flashers can be turned off using the controls for those features. If any of these systems are damaged in the crash they may not operate as normal.

⚠ Warning

A crash severe enough to inflate the airbags may have also damaged important functions in the vehicle, such as the fuel system, brake and steering systems, etc. Even if the vehicle appears to be drivable after a moderate crash, there may be concealed damage that could make it difficult to safely operate the vehicle.

Use caution if you should attempt to restart the engine after a crash has occurred.

In many crashes severe enough to inflate the airbag, windshields are broken by vehicle deformation. Additional windshield breakage may also occur from the front outboard passenger airbag.

- Airbags are designed to inflate only once. After an airbag inflates, you will need some new parts for the airbag system. If you do not get them, the airbag system will not be there to help protect you in another crash. A new system will include airbag modules and possibly other parts. The service manual for the vehicle covers the need to replace other parts.
- The vehicle has a crash sensing and diagnostic module which records information after a crash. See *Vehicle Data Recording and Privacy* ⇨ *358* and *Event Data Recorders* ⇨ *359*.
- Let only qualified technicians work on the airbag system. Improper service can mean that an airbag system will not work properly. See your dealer for service.

Passenger Sensing System

The vehicle has a passenger sensing system for the front outboard passenger position. The passenger airbag status indicator will light on the overhead console when the vehicle is started.

The words ON and OFF, and the symbols for on and off, will be visible during the system check. When the system check is complete, either the word ON or OFF, and the symbol for on or off, will be visible. See *Passenger Airbag Status Indicator* ⇨ *99*.

The passenger sensing system turns off the front outboard passenger frontal airbag under certain conditions. No other airbag is affected by the passenger sensing system.

The passenger sensing system works with sensors that are part of the front outboard passenger seat and seat belt. The sensors are designed to detect the presence of a

properly seated occupant and determine if the front outboard passenger frontal airbag should be allowed to inflate or not.

According to accident statistics, children are safer when properly secured in a rear seat in the correct child restraint for their weight and size.

Whenever possible, children aged 12 and under should be secured in a rear seating position.

Never put a rear-facing child seat in the front. This is because the risk to the rear-facing child is so great, if the airbag inflates.

⚠ Warning

A child in a rear-facing child restraint can be seriously injured or killed if the passenger frontal airbag inflates. This is because the back of the rear-facing child restraint would be very close to the inflating airbag. A child in a forward-facing child restraint can be seriously injured or killed if the passenger frontal airbag inflates and the passenger seat is in a forward position.

(Continued)

Warning (Continued)

Even if the passenger sensing system has turned off the passenger frontal airbag, no system is fail-safe. No one can guarantee that an airbag will not deploy under some unusual circumstance, even though the airbag is turned off.

Never put a rear-facing child restraint in the front seat, even if the airbag is off. If securing a forward-facing child restraint in the front outboard passenger seat, always move the seat as far back as it will go. It is better to secure child restraints in the rear seat. Consider using another vehicle to transport the child when a rear seat is not available.

The passenger sensing system is designed to turn off the front outboard passenger frontal airbag if:

- The front outboard passenger seat is unoccupied.
- The system determines an infant is present in a child restraint.
- A front outboard passenger takes his/her weight off of the seat for a period of time.
- There is a critical problem with the airbag system or the passenger sensing system.

When the passenger sensing system has turned off the front outboard passenger frontal airbag, the OFF indicator will light and stay lit as a reminder that the airbag is off. See *Passenger Airbag Status Indicator* ⇨ *99*.

The passenger sensing system is designed to turn on the front outboard passenger frontal airbag anytime the system senses that a person of adult size is sitting properly in the front outboard passenger seat.

When the passenger sensing system has allowed the airbag to be enabled, the ON indicator will light and stay lit as a reminder that the airbag is active.

For some children, including children in child restraints, and for very small adults, the passenger sensing system may or may not turn off the front outboard passenger frontal airbag, depending upon the person's seating posture and body build. Everyone in the vehicle who has outgrown child restraints should wear a seat belt properly — whether or not there is an airbag for that person.

⚠ Warning

If the airbag readiness light ever comes on and stays on, it means that something may be wrong with the airbag system. To help avoid injury to yourself or others, have the vehicle serviced right away. See *Airbag Readiness Light* ⇨ *98* for more information, including important safety information.

If the On Indicator Is Lit for a Child Restraint

The passenger sensing system is designed to turn off the front outboard passenger frontal airbag if the system determines that an infant is present in a child restraint. If a child restraint has been installed and the ON indicator is lit:

1. Turn the vehicle off.
2. Remove the child restraint from the vehicle.
3. Remove any additional items from the seat such as blankets, cushions, seat covers, seat heaters, or seat massagers.
4. Reinstall the child restraint following the directions provided by the child restraint manufacturer and refer to *Securing Child Restraints (With the Seat Belts in the Rear Seat)* ⇨ *72* or *Securing Child Restraints (With the Seat Belts in the Front Seat)* ⇨ *73*.

   Make sure the seat belt retractor is locked by pulling the shoulder belt all the way out of the retractor when installing the child restraint, even if the child restraint is equipped with a seat belt lock off. When the retractor lock is set, the belt can be tightened but not pulled out of the retractor.
5. If, after reinstalling the child restraint and restarting the vehicle, the ON indicator is still lit, turn the vehicle off. Then slightly recline the vehicle seatback and adjust the seat cushion, if adjustable, to make sure that the vehicle seatback is not pushing the child restraint into the seat cushion.

   Also make sure the child restraint is not trapped under the vehicle head restraint. If this happens, adjust the head restraint. See *Head Restraints* ⇨ *33*.
6. Restart the vehicle.

The passenger sensing system may or may not turn off the airbag for a child in a child restraint depending upon the child's size. It is better to secure the child restraint in a rear seat. Never put a rear-facing child restraint in the front seat, even if the ON indicator is not lit.

If the Off Indicator Is Lit for an Adult-Sized Occupant

If a person of adult size is sitting in the front outboard passenger seat, but the OFF indicator is lit, it could be because that person is not sitting properly in the seat or that the child restraint locking feature is

engaged. Use the following steps to allow the system to detect that person and enable the front outboard passenger frontal airbag:

1. Turn the vehicle off.
2. Remove any additional material from the seat, such as blankets, cushions, seat covers, seat heaters, or seat massagers.
3. Place the seatback in the fully upright position.
4. Have the person sit upright in the seat, centered on the seat cushion, with legs comfortably extended.
5. If the shoulder portion of the belt is pulled out all the way, the child restraint locking feature will be engaged. This may unintentionally cause the passenger sensing system to turn the airbag off for some adult-sized occupants. If this happens, unbuckle the belt, let the belt go back all the way, and then buckle the belt again without pulling the belt out all the way.
6. Restart the vehicle and have the person remain in this position for two to three minutes after the ON indicator is lit.

⚠ Warning

If the front outboard passenger airbag is turned off for an adult-sized occupant, the airbag will not be able to inflate and help protect that person in a crash, resulting in an increased risk of serious injury or even death. An adult-sized occupant should not ride in the front outboard passenger seat, if the passenger airbag OFF indicator is lit.

Additional Factors Affecting System Operation

Seat belts help keep the passenger in position on the seat during vehicle maneuvers and braking, which helps the passenger sensing system maintain the passenger airbag status. See “Seat Belts” and “Child Restraints” in the Index for additional information about the importance of proper restraint use.

A thick layer of additional material, such as a blanket or cushion, or aftermarket equipment such as seat covers, seat heaters, and seat massagers can affect how well the passenger sensing system operates. We recommend that you not use seat covers or other aftermarket equipment except when approved by GM for your specific vehicle. See *Adding Equipment to the Airbag-Equipped Vehicle* ⇨ *59* for more information about modifications that can affect how the system operates.

The ON indicator may be lit if an object, such as a briefcase, handbag, grocery bag, laptop, or other electronic device, is put on an unoccupied seat. If this is not desired, remove the object from the seat.

⚠ Warning

Stowing articles under the passenger seat or between the passenger seat cushion and seatback may interfere with the proper operation of the passenger sensing system.

Servicing the Airbag-Equipped Vehicle

Airbags affect how the vehicle should be serviced. There are parts of the airbag system in several places around the vehicle. Your dealer and the service manual have information about servicing the vehicle and the airbag system. To purchase a service manual, see *Publication Ordering Information* ⇨ *356*.

⚠ Warning

For up to 10 seconds after the vehicle is turned off and the battery is disconnected, an airbag can still inflate during improper service. You can be injured if you are close to an airbag when it inflates. Avoid yellow connectors. They are probably part of the airbag system. Be sure to follow proper service procedures, and make sure the person performing work for you is qualified to do so.

Adding Equipment to the Airbag-Equipped Vehicle

Adding accessories that change the vehicle's frame, bumper system, height, front end, or side sheet metal may keep the airbag system from working properly.

The operation of the airbag system can also be affected by changing, including improperly repairing or replacing, any parts of the following:

- Airbag system, including airbag modules, front or side impact sensors, sensing and diagnostic module, or airbag wiring
- Front seats, including stitching, seams or zippers
- Seat belts
- Steering wheel, instrument panel, overhead console, ceiling trim, or pillar garnish trim
- Inner door seals, including speakers

Your dealer and the service manual have information about the location of the airbag modules and sensors, sensing and diagnostic module, and airbag wiring along with the proper replacement procedures.

In addition, the vehicle has a passenger sensing system for the front outboard passenger position, which includes sensors that are part of the passenger seat. The passenger sensing system may not operate properly if the original seat trim is replaced with non-GM covers, upholstery, or trim; or with GM covers, upholstery, or trim designed for a different vehicle. Any object, such as an aftermarket seat heater or a comfort-enhancing pad or device, installed under or on top of the seat fabric, could also interfere with the operation of the passenger sensing system. This could either prevent proper deployment of the passenger airbag(s) or prevent the passenger sensing system from properly turning off the passenger airbag(s). See *Passenger Sensing System* ⇨ *55*.

If the vehicle has rollover roof-rail airbags, see *Different Size Tires and Wheels* ⇨ *303* for additional important information.

If the vehicle must be modified because you have a disability and have questions about whether the modifications will affect the vehicle's airbag system, or if you have questions about whether the airbag system will be affected if the vehicle is modified for any other reason, call Customer Assistance. See *Customer Assistance Offices* ⇨ *351*.

Airbag System Check

The airbag system does not need regularly scheduled maintenance or replacement. Make sure the airbag readiness light is working. See *Airbag Readiness Light* ⇨ *98*.

Caution

If an airbag covering is damaged, opened, or broken, the airbag may not work properly. Do not open or break the airbag coverings. If there are any opened or broken airbag coverings, have the airbag

(Continued)

Caution (Continued)

covering and/or airbag module replaced. For the location of the airbags, see *Where Are the Airbags?* ⇨ *52*. See your dealer for service.

Replacing Airbag System Parts after a Crash

⚠ Warning

A crash can damage the airbag systems in the vehicle. A damaged airbag system may not properly protect you and your passenger(s) in a crash, resulting in serious injury or even death. To help make sure the airbag systems are working properly after a crash, have them inspected and any necessary replacements made as soon as possible.

If an airbag inflates, you will need to replace airbag system parts. See your dealer for service.

If the airbag readiness light stays on after the vehicle is started or comes on when you are driving, the airbag system may not work properly. Have the vehicle serviced right away. See *Airbag Readiness Light* ⇨ *98*.

Child Restraints

Older Children

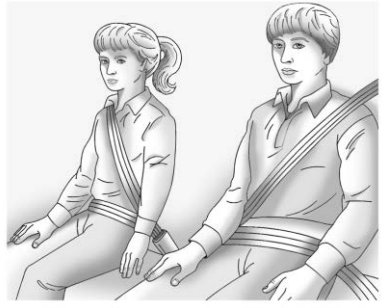

Older children who have outgrown booster seats should wear the vehicle's seat belts.

The manufacturer instructions that come with the booster seat state the weight and height limitations for that booster. Use a booster seat with a lap-shoulder belt until the child passes the fit test below:

- Sit all the way back on the seat. Do the knees bend at the seat edge? If yes, continue. If no, return to the booster seat.
- Buckle the lap-shoulder belt. Does the shoulder belt rest on the shoulder? If yes, continue. If no, try using the rear seat belt comfort guide, if available. See "Rear Seat Belt Comfort Guides" under *Lap-Shoulder Belt* ⇨ *46*. If a comfort guide is not available, or if the shoulder belt still does not rest on the shoulder, then return to the booster seat.
- Does the lap belt fit low and snug on the hips, touching the thighs? If yes, continue. If no, return to the booster seat.
- Can proper seat belt fit be maintained for the length of the trip? If yes, continue. If no, return to the booster seat.

Q: What is the proper way to wear seat belts?

A: An older child should wear a lap-shoulder belt and get the additional restraint a shoulder belt can provide. The shoulder belt should not cross the face or neck. The lap belt should fit snugly below the hips, just touching the top of the thighs. This applies belt force to the child's pelvic bones in a crash. It should never

be worn over the abdomen, which could cause severe or even fatal internal injuries in a crash.

Also see "Rear Seat Belt Comfort Guides" under *Lap-Shoulder Belt* ⇨ *46*.

According to accident statistics, children are safer when properly restrained in a rear seating position.

In a crash, children who are not buckled up can strike other people who are buckled up, or can be thrown out of the vehicle. Older children need to use seat belts properly.

⚠ Warning

Never allow more than one child to wear the same seat belt. The seat belt cannot properly spread the impact forces. In a crash, they can be crushed together and seriously injured. A seat belt must be used by only one person at a time.

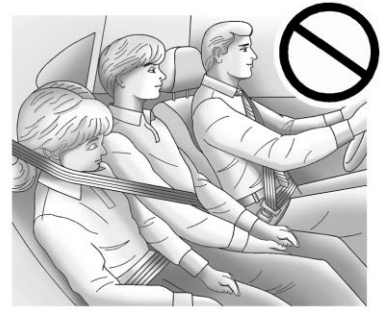

⚠ Warning

Never allow a child to wear the seat belt shoulder belt under both arms or behind their back. A child can be seriously injured by not wearing the lap-shoulder belt properly. In a crash, the child would not be restrained by the shoulder belt. The child could move too far forward increasing the chance of head and neck injury. The child might also slide under the lap belt. The belt force would then be applied right on the abdomen. That could cause serious or fatal injuries. The shoulder belt should go over the shoulder and across the chest.

Infants and Young Children

Everyone in a vehicle needs protection! This includes infants and all other children. Neither the distance traveled nor the age and size of the traveler changes the need, for everyone, to use safety restraints. In fact, the law in every state in the United States and in every Canadian province says children up to some age must be restrained while in a vehicle.

⚠ Warning

Children can be seriously injured or strangled if a shoulder belt is wrapped around their neck. The shoulder belt can

(Continued)

Warning (Continued)

tighten but cannot be loosened if it is locked. The shoulder belt locks when it is pulled all the way out of the retractor. It unlocks when the shoulder belt is allowed to go all the way back into the retractor, but it cannot do this if it is wrapped around a child's neck. If the shoulder belt is locked and tightened around a child's neck, the only way to loosen the belt is to cut it.

Never leave children unattended in a vehicle and never allow children to play with the seat belts.

Every time infants and young children ride in vehicles, they should have the protection provided by appropriate child restraints. Neither the vehicle's seat belt system nor its airbag system is designed for them.

Children who are not restrained properly can strike other people, or can be thrown out of the vehicle.

⚠ Warning

Never hold an infant or a child while riding in a vehicle. Due to crash forces, an infant or a child will become so heavy it is not possible to hold it during a crash. For example, in a crash at only 40 km/h (25 mph), a 5.5 kg (12 lb) infant will suddenly become a 110 kg (240 lb) force on a person's arms. An infant or child should be secured in an appropriate child restraint.

⚠ Warning

Children who are up against, or very close to, any airbag when it inflates can be seriously injured or killed. Never put a rear-facing child restraint in the front outboard seat. Secure a rear-facing child restraint in a rear seat. It is also better to secure a forward-facing child restraint in a rear seat. If you must secure a forward-facing child restraint in the front outboard seat, always move the front passenger seat as far back as it will go.

Child restraints are devices used to restrain, seat, or position children in the vehicle and are sometimes called child seats or car seats.

There are three basic types of child restraints:

- Forward-facing child restraints
- Rear-facing child restraints
- Belt-positioning booster seats

The proper child restraint for your child depends on their size, weight, and age, and also on whether the child restraint is compatible with the vehicle in which it will be used.

For each type of child restraint, there are many different models available. When purchasing a child restraint, be sure it is designed to be used in a motor vehicle. If it is, the child restraint will have a label saying that it meets federal motor vehicle safety standards.

The instruction manual that is provided with the child restraint states the weight and height limitations for that particular child restraint. In addition, there are many kinds of child restraints available for children with special needs.

⚠ Warning

To reduce the risk of neck and head injury in a crash, infants and toddlers should be secured in a rear-facing child restraint until age two, or until they reach the maximum height and weight limits of their child restraint.

⚠ Warning

A young child's hip bones are still so small that the vehicle seat belt may not remain low on the hip bones, as it should. Instead, it may settle up around the child's abdomen. In a crash, the belt would apply force on a body area that is unprotected by any bony structure. This alone could cause serious or fatal injuries. To reduce the risk of serious or fatal injuries during a crash, young children should always be secured in an appropriate child restraint.

Child Restraint Systems

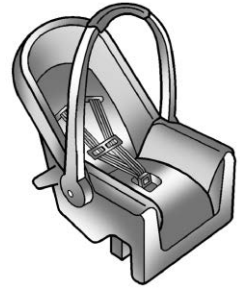

Rear-Facing Infant Restraint

A rear-facing child restraint provides restraint with the seating surface against the back of the infant.

The harness system holds the infant in place and, in a crash, acts to keep the infant positioned in the restraint.

Forward-Facing Child Restraint

A forward-facing child restraint provides restraint for the child's body with the harness.

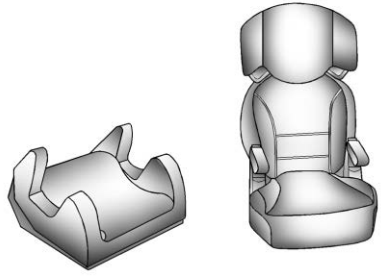

Booster Seats

A belt-positioning booster seat is used for children who have outgrown their forward-facing child restraint. Boosters are designed to improve the fit of the vehicle's seat belt system until the child is large enough for the vehicle seat belts to fit properly without a booster seat. See the seat belt fit test in *Older Children* ⇨ *60*.

Securing an Add-On Child Restraint in the Vehicle

⚠ Warning

A child can be seriously injured or killed in a crash if the child restraint is not properly secured in the vehicle. Secure the child restraint properly in the vehicle using the vehicle seat belt or LATCH system, following the instructions that came with that child restraint and the instructions in this manual.

To help reduce the chance of injury, the child restraint must be secured in the vehicle. Child restraints must be secured in vehicle seats by lap belts or the lap belt portion of a lap-shoulder belt, or by the LATCH system. See *Lower Anchors and Tethers for Children (LATCH System)* ⇨ *66* for more information. Children can be endangered in a crash if the child restraint is not properly secured in the vehicle.

When securing an add-on child restraint, refer to the following:

1. Instruction labels provided on the child restraint

2. Instruction manual provided with the child restraint
3. This vehicle owner's manual

The child restraint instructions are important, so if they are not available, obtain a replacement copy from the manufacturer.

Keep in mind that an unsecured child restraint can move around in a collision or sudden stop and injure people in the vehicle. Be sure to properly secure any child restraint in the vehicle — even when no child is in it.

In some areas Certified Child Passenger Safety Technicians (CPSTs) are available to inspect and demonstrate how to correctly use and install child restraints. In the U.S., refer to the National Highway Traffic Safety Administration (NHTSA) website to locate the nearest child safety seat inspection station. For CPST availability in Canada, check with Transport Canada or the Provincial Ministry of Transportation office.

Securing the Child Within the Child Restraint

⚠ Warning

A child can be seriously injured or killed in a crash if the child is not properly secured in the child restraint. Secure the child properly following the instructions that came with that child restraint.

Where to Put the Restraint

According to accident statistics, children and infants are safer when properly restrained in an appropriate child restraint secured in a rear seating position.

Whenever possible, children aged 12 and under should be secured in a rear seating position.

Never put a rear-facing child restraint in the front. This is because the risk to the rear-facing child is so great if the airbag deploys.

⚠ Warning

A child in a rear-facing child restraint can be seriously injured or killed if the front passenger airbag inflates. This is because the back of the rear-facing child restraint would be very close to the inflating airbag. A child in a forward-facing child restraint can be seriously injured or killed if the front passenger airbag inflates and the passenger seat is in a forward position.

Even if the passenger sensing system has turned off the front passenger frontal airbag, no system is fail-safe. No one can guarantee that an airbag will not deploy under some unusual circumstance, even though it is turned off.

Secure rear-facing child restraints in a rear seat, even if the airbag is off. If you secure a forward-facing child restraint in the front seat, always move the front passenger seat as far back as it will go. It is better to secure the child restraint in a rear seat.

See *Passenger Sensing System* ⇨ *55* for additional information.

When securing a child restraint with the seat belts in a rear seat position, study the instructions that came with the child restraint to make sure it is compatible with this vehicle.

Child restraints and booster seats vary considerably in size, and some may fit in certain seating positions better than others. Do not install a child restraint in any rear seating position where it cannot be installed securely.

Depending on where you place the child restraint and the size of the child restraint, you may not be able to access adjacent seat belts or LATCH anchors for additional passengers or child restraints. Adjacent seating positions should not be used if the child restraint prevents access to or interferes with the routing of the seat belt.

The seat in front of an installed child restraint should be adjusted to ensure proper installation according to the child restraint manual.

When installing a child restraint in an adjustable second row seating position, the seat should be adjusted fore or aft to ensure proper installation according to the child restraint manual.

Wherever a child restraint is installed, be sure to follow the instructions that came with the child restraint and secure the child restraint properly.

Keep in mind that an unsecured child restraint can move around in a collision or sudden stop and injure people in the vehicle. Be sure to properly secure any child restraint in the vehicle — even when no child is in it.

Lower Anchors and Tethers for Children (LATCH System)

The LATCH system secures a child restraint during driving or in a crash. LATCH attachments on the child restraint are used to attach the child restraint to the anchors in the vehicle. This system is designed to make installation of a child restraint easier.

In order to use the LATCH system in your vehicle, you need a child restraint that has LATCH attachments. LATCH-compatible rear-facing and forward-facing child seats can be properly installed using either the LATCH anchors or the vehicle's seat belts. Do not use both the seat belts and the LATCH anchorage system to secure a rear-facing or forward-facing child seat.

Booster seats use the vehicle's seat belts to secure the child and the booster seat. If the manufacturer recommends that the booster seat be secured with the LATCH system, this can be done as long as the booster seat can be positioned properly and there is no interference with the proper positioning of the lap-shoulder belt on the child.

Make sure to follow the instructions that came with the child restraint, and also the instructions in this manual.

When installing a child restraint with a top tether, you must also use either the lower anchors or the seat belts to properly secure the child restraint. A child restraint must never be installed using only the top tether and anchor.

For a forward-facing 5-pt harness child restraint where the combined weight of the child and restraint are up to 29.5 kg (65 lb), use either the lower LATCH anchorages with the top tether anchorage, or the seat belt with the top tether anchorage. Where the combined weight of the child and restraint are greater than 29.5 kg (65 lb), use the seat belt with the top tether anchorage only.

Recommended Methods for Attaching Child Restraints

Restraint Type	Combined Weight of the Child + Child Restraint	Use Only Approved Attachment Methods Shown with an X			
		LATCH – Lower Anchors Only	**Seat Belt Only**	**LATCH** – Lower Anchors and Top Tether Anchor	**Seat Belt and Top Tether Anchor**
Rear-Facing Child Restraint	Up to 29.5 kg (65 lb)	X	X		
Rear-Facing Child Restraint	Greater than 29.5 kg (65 lb)		X		
Forward-Facing Child Restraint	Up to 29.5 kg (65 lb)			X	X
Forward-Facing Child Restraint	Greater than 29.5 kg (65 lb)				X

See *Securing Child Restraints (With the Seat Belts in the Rear Seat)* ⇨ *72* or *Securing Child Restraints (With the Seat Belts in the Front Seat)* ⇨ *73*.

Child restraints built after March 2014 will be labeled with the specific child weight up to which the LATCH system can be used to install the restraint.

The following explains how to attach a child restraint with these attachments in the vehicle.

Not all vehicle seating positions have lower anchors. In this case, the seat belt must be used (with top tether where available) to secure the child restraint. See *Securing Child Restraints (With the Seat Belts in the Rear Seat)* ⇨ *72* or *Securing Child Restraints (With the Seat Belts in the Front Seat)* ⇨ *73*.

Lower Anchors

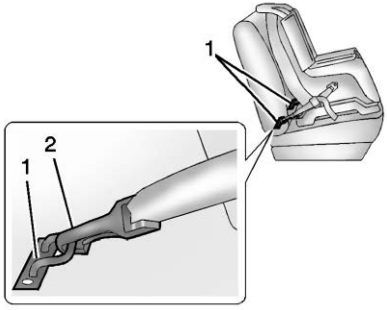

Lower anchors (1) are metal bars built into the vehicle. There are two lower anchors for each LATCH seating position that will accommodate a child restraint with lower attachments (2).

Top Tether Anchor

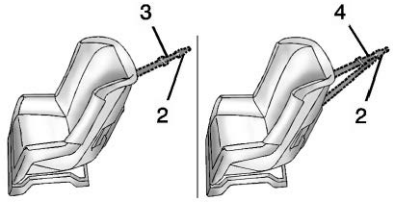

A top tether (3, 4) is used to secure the top of the child restraint to the vehicle. A top tether anchor is built into the vehicle. The top tether attachment hook (2) on the child restraint connects to the top tether anchor in the vehicle in order to reduce the forward movement and rotation of the child restraint during driving or in a crash.

The child restraint may have a single tether (3) or a dual tether (4). Either will have a single attachment hook (2) to secure the top tether to the anchor.

Some child restraints that have a top tether are designed for use with or without the top tether being attached. Others require the top tether always to be attached. In Canada, the law requires that forward-facing child restraints have a top tether, and that the tether be attached. Be sure to read and follow the instructions for your child restraint.

Lower Anchor and Top Tether Anchor Locations

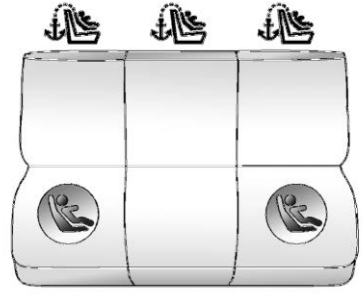

Rear Seat

: Seating positions with top tether anchors.

: Seating positions with two lower anchors.

To assist in locating the lower anchors, each seating position with lower anchors has two labels, near the crease between the seatback and the seat cushion.

To assist in locating the top tether anchors, the top tether anchor symbol is near the anchor.

Top Tether Anchors

The top tether anchors for each rear seating position are located on the back of the rear seatback. Be sure to use an anchor located directly behind the seating position where the child restraint will be placed.

Do not secure a child restraint in a position without a top tether anchor if a national or local law requires that the top tether be attached, or if the instructions that come with the child restraint say that the top tether must be attached.

According to accident statistics, children and infants are safer when properly restrained in a child restraint system or infant restraint system secured in a rear seating position. See *Where to Put the Restraint* ⇨ *65* for additional information.

Securing a Child Restraint Designed for the LATCH System

⚠ Warning

A child could be seriously injured or killed in a crash if the child restraint is not properly attached to the vehicle using either the LATCH anchors or the vehicle seat belt. Follow the instructions that came with the child restraint and the instructions in this manual.

⚠ Warning

To reduce the risk of serious or fatal injuries during a crash, do not attach more than one child restraint to a single anchor. Attaching more than one child restraint to a single anchor could cause the anchor or attachment to come loose or even break during a crash. A child or others could be injured.

⚠ Warning

Children can be seriously injured or strangled if a shoulder belt is wrapped around their neck. The shoulder belt can tighten but cannot be loosened if it is locked. The shoulder belt locks when it is pulled all the way out of the retractor. It unlocks when the shoulder belt is allowed to go all the way back into the retractor, but it cannot do this if it is wrapped around a child's neck. If the shoulder belt is locked and tightened around a child's neck, the only way to loosen the belt is to cut it.

Buckle any unused seat belts behind the child restraint so children cannot reach them. Pull the shoulder belt all the way out of the retractor to set the lock, and tighten the belt behind the child restraint after the child restraint has been installed.

Caution

Do not let the LATCH attachments rub against the vehicle's seat belts. This may damage these parts. If necessary, move buckled seat belts to avoid rubbing the LATCH attachments.

Do not fold the rear seatback when the seat is occupied. Do not fold the empty rear seat with a seat belt buckled. This could damage the seat belt or the seat. Unbuckle and return the seat belt to its stowed position, before folding the seat.

Do not attach more than one child restraint to a single anchor. Attaching more than one child restraint to a single anchor could cause the anchor or attachment to come loose or even break during a crash. A child or others could be injured. To reduce the risk of serious or fatal injuries during a crash, attach only one child restraint per anchor.

If you need to secure more than one child restraint in the rear seat, see *Where to Put the Restraint* ⇨ *65*.

1. Attach and tighten the lower attachments to the lower anchors. If the child restraint does not have lower attachments or the desired seating position does not have lower anchors, secure the child restraint with the top tether and the seat belt. Refer to the child restraint manufacturer instructions and the instructions in this manual.
   1.1. Find the lower anchors for the desired seating position.
   1.2. Put the child restraint on the seat.
   1.3. Attach and tighten the lower attachments on the child restraint to the lower anchors.
2. If the child restraint manufacturer recommends that the top tether be attached, attach and tighten the top tether to the top tether anchor, if equipped. Refer to the child restraint instructions and the following steps:
   2.1. Find the top tether anchor.
   2.2. Route, attach, and tighten the top tether according to your child restraint instructions and the following instructions:

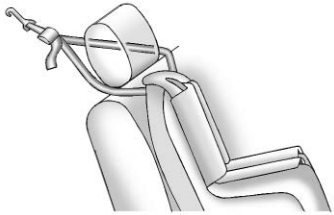

If you are using a dual tether in the rear outboard seating position with an adjustable head restraint, route the dual tether around the head restraint.

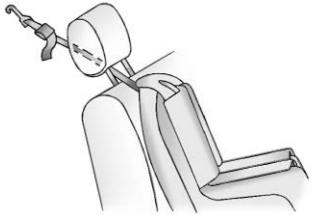

If the position you are using has an adjustable head restraint and you are using a single tether, raise the head restraint and route the tether under the head restraint and in between the head restraint posts.

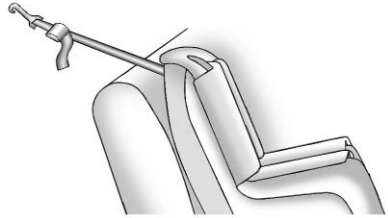

If the position you are using does not have a headrest or head restraint and you are using a single tether, route the tether over the seatback.

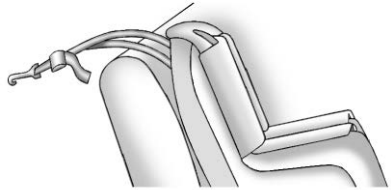

If the position you are using does not have a headrest or head restraint and you are using a dual tether, route the tether over the seatback.

3. Before placing a child in the child restraint, make sure it is securely held in place. To check, grasp the child restraint at the LATCH path and attempt to move it side to side and back and forth. There should be no more than 2.5 cm (1 in) of movement for proper installation.

Replacing LATCH System Parts After a Crash

⚠ Warning

A crash can damage the LATCH system in the vehicle. A damaged LATCH system may not properly secure the child restraint, resulting in serious injury or even death in a crash. To help make sure the LATCH system is working properly after a crash, see your dealer to have the system inspected and any necessary replacements made as soon as possible.

If the vehicle has the LATCH system and it was being used during a crash, new LATCH system parts may be needed.

New parts and repairs may be necessary even if the LATCH system was not being used at the time of the crash.

Securing Child Restraints (With the Seat Belts in the Rear Seat)

When securing a child restraint with the seat belts in a rear seat position, study the instructions that came with the child restraint to make sure it is compatible with this vehicle.

If the child restraint has the LATCH system, see *Lower Anchors and Tethers for Children (LATCH System)* ⇨ *66* for how and where to install the child restraint using LATCH. If a child restraint is secured in the vehicle using a seat belt and it uses a top tether, see *Lower Anchors and Tethers for Children (LATCH System)* ⇨ *66* for top tether anchor locations.

Do not secure a child seat in a position without a top tether anchor if a national or local law requires that the top tether be anchored, or if the instructions that come with the child restraint say that the top tether must be anchored.

In Canada, the law requires that forward-facing child restraints have a top tether, and that the tether be attached.

If the child restraint or vehicle seat position does not have the LATCH system, you will be using the seat belt to secure the child restraint. Be sure to follow the instructions that came with the child restraint.

If more than one child restraint needs to be installed in the rear seat, be sure to read *Where to Put the Restraint* ⇨ *65*.

1. Put the child restraint on the seat.
2. Pick up the latch plate, and run the lap and shoulder portions of the vehicle seat belt through or around the child restraint. The child restraint instructions will show you how.

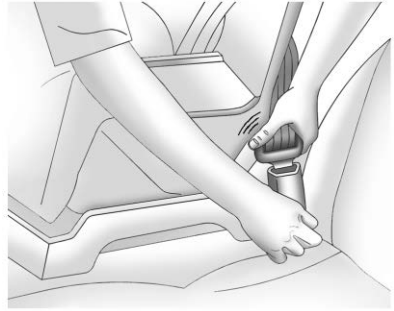

3. Push the latch plate into the buckle until it clicks.

   Position the release button on the buckle, away from the child restraint, so that the seat belt could be quickly unbuckled if necessary.

4. Pull the shoulder belt all the way out of the retractor to set the lock. When the retractor lock is set, the belt can be tightened but not pulled out of the retractor.

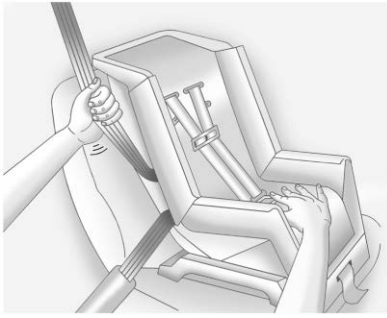

5. To tighten the belt, push down on the child restraint, pull the shoulder portion of the belt to tighten the lap portion of the belt, and feed the shoulder belt back into the retractor. When installing a forward-facing child restraint, it may be helpful to use your knee to push down on the child restraint as you tighten the belt.

   Try to pull the belt out of the retractor to make sure the retractor is locked. If the retractor is not locked, repeat Steps 4 and 5.

6. If the child restraint has a top tether, follow the child restraint manufacturer's instructions regarding the use of the top tether. See *Lower Anchors and Tethers for Children (LATCH System)* ⇨ *66*.

7. Before placing a child in the child restraint, make sure it is securely held in place. To check, grasp the child restraint at the seat belt path and attempt to move it side to side and back and forth. When the child restraint is properly installed, there should be no more than 2.5 cm (1 in) of movement.

To remove the child restraint, unbuckle the vehicle seat belt and let it return to the stowed position. If the top tether is attached to a top tether anchor, disconnect it.

Securing Child Restraints (With the Seat Belts in the Front Seat)

This vehicle has airbags. A rear seat is a safer place to secure a forward-facing child restraint. See *Where to Put the Restraint* ⇨ *65*.

In addition, the vehicle has a passenger sensing system which is designed to turn off the front outboard passenger frontal airbag under certain conditions. See *Passenger Sensing System* ⇨ *55* and *Passenger Airbag Status Indicator* ⇨ *99* for more information, including important safety information.

Never put a rear-facing child seat in the front. This is because the risk to the rear-facing child is so great, if the airbag deploys.

⚠ Warning

A child in a rear-facing child restraint can be seriously injured or killed if the front outboard passenger frontal airbag inflates. This is because the back of the rear-facing child restraint would be very close to the inflating airbag. A child in a forward-facing child restraint can be seriously injured or killed if the front outboard passenger frontal airbag inflates and the passenger seat is in a forward position.

Even if the passenger sensing system has turned off the front outboard passenger frontal airbag, no system is fail-safe. No

(Continued)

Warning (Continued)

one can guarantee that an airbag will not deploy under some unusual circumstance, even though it is turned off.

Secure rear-facing child restraints in a rear seat, even if the airbag is off. If you secure a forward-facing child restraint in the front outboard passenger seat, always move the seat as far back as it will go. It is better to secure the child restraint in a rear seat.

See *Passenger Sensing System* ⇨ *55* for additional information.

If the child restraint uses a top tether, see *Lower Anchors and Tethers for Children (LATCH System)* ⇨ *66* for top tether anchor locations.

Do not secure a child seat in a position without a top tether anchor if a national or local law requires that the top tether be anchored, or if the instructions that come with the child restraint say that the top tether must be anchored.

In Canada, the law requires that forward-facing child restraints have a top tether, and that the tether be attached.

When using the lap-shoulder belt to secure the child restraint in this position, follow the instructions that came with the child restraint and the following instructions:

1. Move the seat as far back as it will go before securing the forward-facing child restraint. Move the seat upward or the seatback to an upright position, if needed, to get a tight installation of the child restraint.

   When the passenger sensing system has turned off the front outboard passenger frontal airbag, the OFF indicator on the passenger airbag status indicator should light and stay lit when you start the vehicle. See *Passenger Airbag Status Indicator* ⇨ *99*.
2. Put the child restraint on the seat.
3. Pick up the latch plate, and run the lap and shoulder portions of the vehicle seat belt through or around the child restraint. The child restraint instructions will show you how.

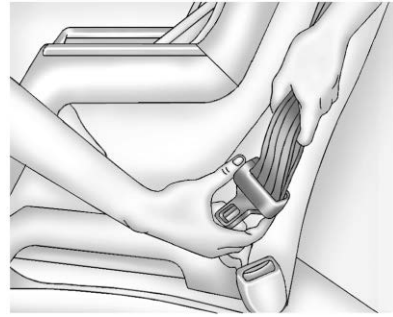

Tilt the latch plate to adjust the belt if needed.

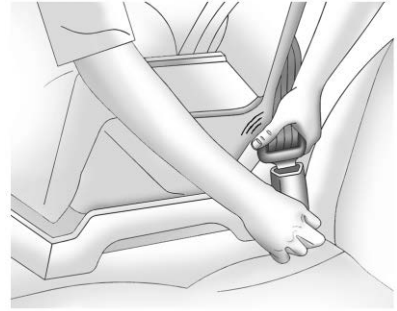

4. Push the latch plate into the buckle until it clicks.

Position the release button on the buckle, away from the child restraint, so that the seat belt could be quickly unbuckled if necessary.

5. Pull the shoulder belt all the way out of the retractor to set the lock. When the retractor lock is set, the belt can be tightened but not pulled out of the retractor.

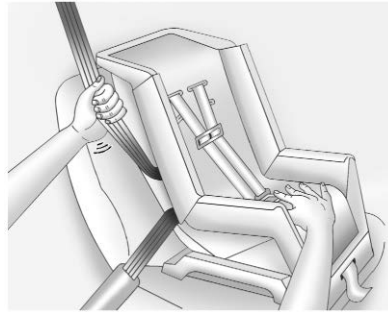

6. To tighten the belt, push down on the child restraint, pull the shoulder portion of the belt to tighten the lap portion of the belt, and feed the shoulder belt back into the retractor. When installing a forward-facing child restraint, it may be helpful to use your knee to push down on the child restraint as you tighten the belt.

   Try to pull the belt out of the retractor to make sure the retractor is locked. If the retractor is not locked, repeat Steps 5 and 6.

7. Before placing a child in the child restraint, make sure it is securely held in place. To check, grasp the child restraint at the seat belt path and attempt to move it side to side and back and forth. When the child restraint is properly installed, there should be no more than 2.5 cm (1 in) of movement.

If the airbag is off, the OFF indicator in the passenger airbag status indicator will come on and stay on when the vehicle is started.

If a child restraint has been installed and the ON indicator is lit, see “If the On Indicator Is Lit for a Child Restraint” under *Passenger Sensing System* ⇨ *55*.

To remove the child restraint, unbuckle the vehicle seat belt and let it return to the stowed position.

Storage

Storage Compartments
Storage Compartments 76
Glove Box 76
Sunglasses Storage 76
Armrest Storage 77
Rear Storage 77
Center Console Storage 77

Additional Storage Features
Shopping Bag Hooks 78
Cargo Tie-Downs 78
Cargo Management System 79

Roof Rack System
Roof Rack System 81

Storage Compartments

⚠ Warning

Do not store heavy or sharp objects in storage compartments. In a crash, these objects may cause the cover to open and could result in injury.

Glove Box

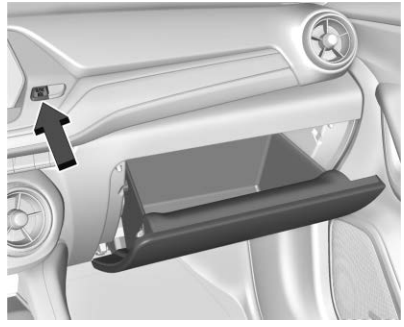

To open, press the button. Close the glove box manually.

Sunglasses Storage

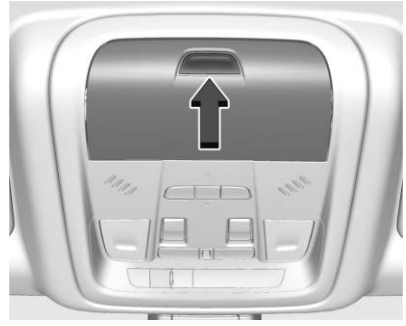

If equipped, sunglasses storage is on the overhead console. Press the fixed button on the cover and release to access.

Armrest Storage

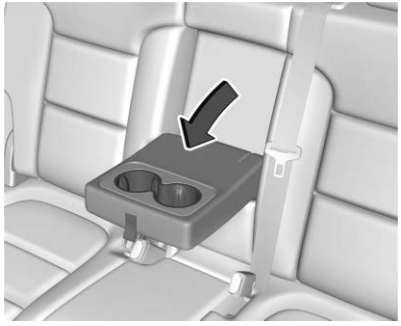

If equipped, the rear seat armrest may have cupholders. Pull the armrest down to access the cupholders.

Rear Storage

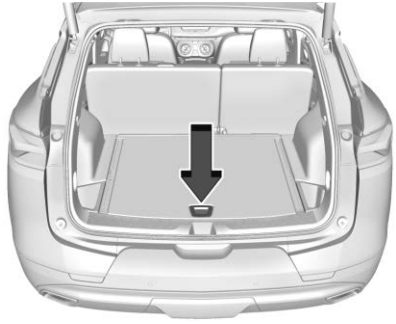

There is storage in the floor of the rear cargo area. Lift the handle to access the cargo management system.

Center Console Storage

The center console has storage under the armrest. Pull up the latch and lift to open.

The center console also has the following:

- A forward bin
- An open or covered storage bin on the back of the console

Rear Storage

If equipped with storage in the back center console, pull the handle to access.

Additional Storage Features

Shopping Bag Hooks

There is a shopping bag hook on each side of the rear cargo area. Press the hook to open. The maximum weight per hook is 5 kg (11 lb).

Cargo Tie-Downs

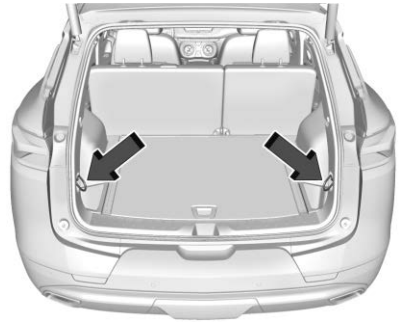

Two cargo tie-downs are located in the rear compartment of the vehicle. The tie-downs can be used to secure small loads.

Cargo Management System

The cargo management system is used to organize storage in the cargo area.

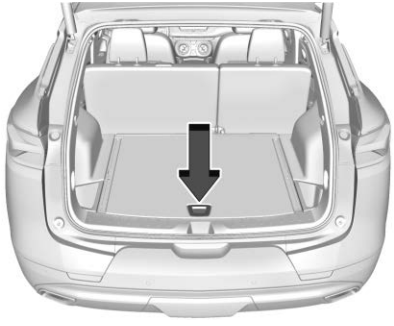

Lift the load floor to access the cargo management system.

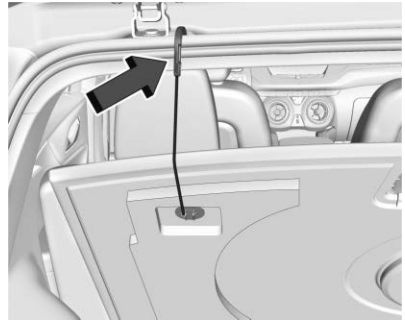

Remove the load floor hook from the holder and hook to the weatherstrip above.

When done, return the load floor hook to the holder.

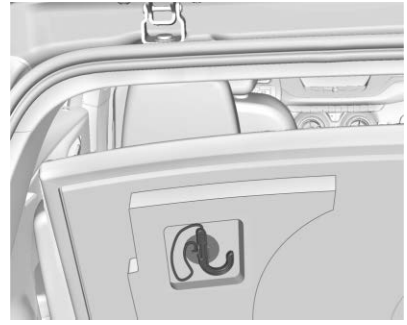

To install the load floor hook into the holder:

1. Insert one side of the load floor hook into the holder.

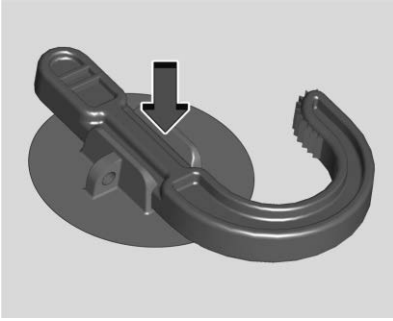

2. Push down on the other side of the load floor hook to lock into place.

Rail and Divider Option

Cargo Management System Unlock

Cargo Management System Installation

1. Turn both knobs to the unlock position.
2. Press the buttons and slide the divider along the rail to the desired position until it clicks into place.
3. Make sure the divider is locked into place in the rail grooves.

Cargo Management System Lock

4. Turn both knobs to the lock position.

Cargo Management System Removal

1. Turn both knobs to the unlock position.
2. Press one button and pull up on that side to remove.
3. Repeat step 2 to remove the other side.
4. Store the divider outside of the vehicle.

Roof Rack System

⚠ Warning

If something is carried on top of the vehicle that is longer or wider than the roof rack — like paneling, plywood, or a mattress — the wind can catch it while the vehicle is being driven. The item being carried could be violently torn off, and this could cause a collision and damage the vehicle. Never carry something longer or wider than the roof rack on top of the vehicle unless using a GM certified accessory carrier.

If equipped, the roof rack can be used to load items. For roof racks that do not have crossrails included, GM certified crossrails can be purchased as an accessory. See your dealer.

Caution

Loading cargo on the roof rack that weighs more than 100 kg (220 lb) or hangs over the rear or sides of the vehicle may damage the vehicle. Do not load cargo exceeding 100 kg (220 lbs) and

(Continued)

Caution (Continued)

always load cargo so that it rests evenly between the crossrails and does not block the vehicle lamps or windows. Fasten the cargo securely.

To prevent damage or loss of cargo when driving, check to make sure crossrails and cargo are securely fastened. Loading cargo on the roof rack will make the vehicle's center of gravity higher. Avoid high speeds, sudden starts, sharp turns, sudden braking, or abrupt maneuvers; otherwise it may result in loss of control. If driving for a long distance, on rough roads, or at high speeds, occasionally stop the vehicle to make sure the cargo remains in its place. Do not exceed the maximum vehicle capacity when loading the vehicle. For more information on vehicle capacity and loading, see *Vehicle Load Limits* ⇨ *197*.

Instruments and Controls

Controls

Steering Wheel Adjustment 83
Steering Wheel Controls 83
Heated Steering Wheel 83
Horn 84
Windshield Wiper/Washer 84
Rear Window Wiper/Washer 85
Compass 85
Clock 86
Power Outlets 86
Wireless Charging 87

Warning Lights, Gauges, and Indicators

Warning Lights, Gauges, and Indicators 89
Instrument Cluster (Base and Midlevel) 90
Instrument Cluster (Uplevel) 93
Speedometer 94
Odometer 94
Trip Odometer 95
Tachometer 95
Fuel Gauge 95
Engine Oil Temperature Gauge 96
Engine Coolant Temperature Gauge 96
Voltmeter Gauge 97
Seat Belt Reminders 98
Airbag Readiness Light 98
Passenger Airbag Status Indicator 99
Charging System Light 100
Malfunction Indicator Lamp (Check Engine Light) 100
Brake System Warning Light 101
Electric Parking Brake Light 102
Service Electric Parking Brake Light 102
Antilock Brake System (ABS) Warning Light 102
Tow/Haul Mode Light 103
Lane Keep Assist (LKA) Light 103
Vehicle Ahead Indicator 103
Pedestrian Ahead Indicator 104
Traction Off Light 104
StabiliTrak OFF Light 104
Traction Control System (TCS)/ StabiliTrak Light 104
Engine Coolant Temperature Warning Light 105
Tire Pressure Light 105
Engine Oil Pressure Light 105
Low Fuel Warning Light 106
Security Light 106
High-Beam On Light 106
Lamps On Reminder 107
Cruise Control Light 107
Door Ajar Light 107

Information Displays

Driver Information Center (DIC) (Base and Midlevel) 107
Driver Information Center (DIC) (Uplevel) 110

Vehicle Messages

Vehicle Messages 113
Engine Power Messages 113
Vehicle Speed Messages 113

Vehicle Personalization

Vehicle Personalization 113

Universal Remote System

Universal Remote System 117
Universal Remote System Programming 117
Universal Remote System Operation ... 119

Controls

Steering Wheel Adjustment

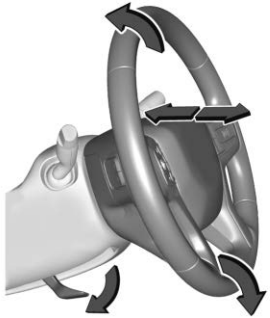

To adjust the steering wheel:

1. Pull the lever down.
2. Move the steering wheel up or down.
3. Pull or push the steering wheel closer or away from you.
4. Pull the lever up to lock the steering wheel in place.

Do not adjust the steering wheel while driving.

Power Tilt and Telescoping Steering Wheel

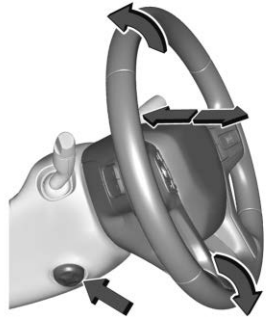

If equipped, the control is on the left side of the steering column.

- Push the control up or down to tilt the steering wheel up or down.
- Push the control forward or rearward to move the steering wheel toward the front or rear of the vehicle.

Do not adjust the steering wheel while driving.

Steering Wheel Controls

The infotainment system can be operated by using the steering wheel controls. See *Steering Wheel Controls* ⇨ *130*.

Heated Steering Wheel

: If equipped, press to turn the heated steering wheel on or off. A light next to the button displays when the feature is turned on.

The steering wheel takes about three minutes to start heating.

If equipped with a remote start heated steering wheel, the heated steering wheel may turn on automatically in remote start along with the heated seats when it is cold outside. The heated steering wheel indicator light may not come on. See *Heated and Ventilated Front Seats* ⇨ *40* and *Vehicle Personalization* ⇨ *113*.

Horn

Press on the steering wheel pad to sound the horn.

Windshield Wiper/Washer

With the ignition on or in ACC/ACCESSORY, move the windshield wiper lever to select the wiper speed.

HI : Use for fast wipes.

LO : Use for slow wipes.

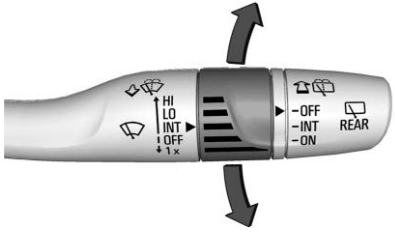

INT : Move the windshield wiper lever to INT. Turn the band up for more frequent wipes or down for less frequent wipes.

OFF : Use to turn the wipers off.

1X : For a single wipe, briefly move the wiper lever down. For several wipes, hold the wiper lever down.

: Pull the windshield wiper lever toward you to spray windshield washer fluid and activate the windshield wipers. The wipers will continue until the lever is released or the maximum wash time is reached. When the windshield wiper lever is released, additional wipes may occur depending on how long the windshield washer had been activated. See *Washer Fluid* ⇨ *272* for information on filling the windshield washer fluid reservoir.

Clear snow and ice from the wiper blades and windshield before using them. If frozen to the windshield, carefully loosen or thaw them. Damaged blades should be replaced. See *Wiper Blade Replacement* ⇨ *276*.

Heavy snow or ice can overload the wiper motor. See *Electrical System Overload* ⇨ *279*.

⚠ Warning

In freezing weather, do not use the washer until the windshield is warmed. Otherwise the washer fluid can form ice on the windshield, blocking your vision.

⚠ Warning

Before driving the vehicle, always clear snow and ice from the hood, windshield, roof, and rear of the vehicle, including all lamps and windows. Reduced visibility from snow and ice buildup could lead to a crash.

Wiper Parking

If the ignition is turned off while the wipers are on LO, HI, or INT, they will immediately stop.

If the windshield wiper lever is then moved to OFF before the driver door is opened or within 10 minutes, the wipers will restart and move to the base of the windshield.

If the ignition is turned off while the wipers are performing wipes due to windshield washing, the wipers continue to run until they reach the base of the windshield.

Rear Window Wiper/Washer

The rear window wiper/washer controls are on the end of the windshield wiper lever.

Turn the controls to adjust the setting.

OFF : Turns the wiper off.

INT : Turns on the rear wiper with a delay between wipes.

ON : Turns on the rear wiper.

: Push the windshield wiper lever forward to spray washer fluid on the rear window. The wipers will clear the rear window and either stop or return to your preset speed. For more washer cycles, press and hold the lever.

The rear window wiper/washer will not operate if the liftgate is open or ajar. If the liftgate is opened while the rear wiper is on, the wiper returns to the parked position and stops.

Rear Wiper Arm Assembly Protection

When using an automatic car wash, move the rear wiper control to OFF to disable the rear wiper. In some vehicles, if the transmission is in N (Neutral) and the vehicle speed is very slow, the rear wiper will automatically park.

The wiper operations return to normal when the transmission is no longer in N (Neutral) or the vehicle speed has increased.

Reverse Gear Wipes

If the rear wiper control is off, the rear wiper will automatically operate continuously when the vehicle is in R (Reverse) and the front windshield wiper is performing low or high speed wipes. If the rear wiper control is off, the vehicle is in R (Reverse), and the front windshield wiper is performing interval wipes, then the rear wiper automatically performs interval wipes.

This feature can be turned on or off. See *Vehicle Personalization* ⇨ *113*.

The windshield washer reservoir is used for the windshield and the rear window. Check the fluid level in the reservoir if either washer is not working. See *Washer Fluid* ⇨ *272*.

Rear Camera Washer

If equipped, push the windshield wiper lever forward to spray washer fluid on the rear camera lens. The lever returns to its starting position when released. See *Rear Camera Mirror* ⇨ *26*.

Compass

The vehicle may have a compass display on the Driver Information Center (DIC). The compass receives its heading and other information from the Global Positioning System (GPS) antenna, StabiliTrak/Electronic Stability Control (ESC), and vehicle speed information.

The compass system is designed to operate for a certain number of miles or degrees of turn before needing a signal from the GPS satellites. When the compass display shows CAL, drive the vehicle for a short distance in an open area where it can receive a GPS

signal. The compass system will automatically determine when a GPS signal is restored and provide a heading again.

Clock

Set the time and date using the infotainment system. See "Time / Date" under *Settings* ⇨ *164*.

Power Outlets

Power Outlets 12-Volt Direct Current

The vehicle is equipped with 12-volt outlets that can be used to plug in electrical equipment, such as a cell phone or MP3 player.

The power outlets are located:

- Inside the center console storage compartment.
- In the rear cargo area.

Lift the cover to access the outlet and replace when not in use.

There are also charging only USB ports on the rear of the center console.

⚠ Warning

Power is always supplied to the rear cargo power outlet. Do not leave electrical equipment plugged in when the vehicle is not in use because the vehicle could catch fire and cause injury or death.

Caution

Leaving electrical equipment plugged in for an extended period of time while the ignition is off will drain the battery. Always unplug electrical equipment when not in use and do not plug in equipment that exceeds the maximum 15 amp rating.

Certain accessory plugs may not be compatible with the accessory power outlet and could overload vehicle and adapter fuses. If a problem is experienced, see your dealer.

When adding electrical equipment, be sure to follow the proper installation instructions included with the equipment. See *Add-On Electrical Equipment* ⇨ *252*.

Caution

Hanging heavy equipment from the power outlet can cause damage not covered by the vehicle warranty. The power outlets are designed for accessory power plugs only, such as cell phone charge cords.

Power Outlet 110-V/120-V Alternating Current

If equipped, this power outlet it can be used to plug in electrical equipment that uses a maximum limit of 150 watts.

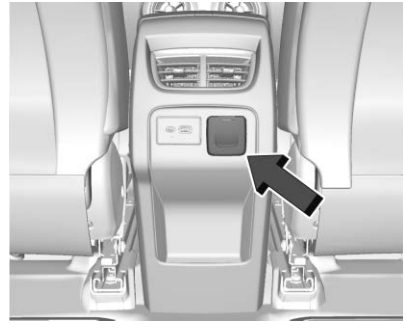

The power outlet is on the rear of the center console.

An indicator light on the outlet turns on to show it is in use. The light comes on when the ignition is on, equipment requiring less than 150 watts is plugged into the outlet, and no system fault is detected.

The indicator light does not come on when the ignition is off or if the equipment is not fully seated into the outlet.

If equipment is connected using more than 150 watts or a system fault is detected, a protection circuit shuts off the power supply and the indicator light turns off. To reset the circuit, unplug the item and plug it back in or turn the Retained Accessory Power (RAP) off and then back on. See *Retained Accessory Power (RAP)* ⇨ *205*. The power restarts when equipment using 150 watts or less is plugged into the outlet and a system fault is not detected.

The power outlet is not designed for the following and may not work properly if they are plugged in:

- Equipment with high initial peak wattage, such as compressor-driven refrigerators and electric power tools
- Other equipment requiring an extremely stable power supply, such as microcomputer-controlled electric blankets and touch sensor lamps
- Medical equipment

See *High Voltage Devices and Wiring* ⇨ *279*.

Wireless Charging

If equipped, the vehicle has wireless charging in the storage bin in front of the floor console. The system operates at 145 kHz and wirelessly charges one Qi compatible smartphone. The power output of the system is capable of charging at a rate up to 3 amp (15W), as requested by the compatible smartphone. See *Radio Frequency Statement* ⇨ *357*.

⚠ Warning

Wireless charging can affect the operation of an implanted pacemaker or other medical devices. If you have one, it is recommended to consult with your doctor before using the wireless charging system.

The vehicle must be on, in ACC/ACCESSORY, or Retained Accessory Power (RAP) must be active. The wireless charging feature may not correctly indicate charging when the vehicle is in RAP. See *Retained Accessory Power (RAP)* ⇨ *205*.

The operating temperature is −20 °C (−4 °F) to 60 °C (140 °F) for the charging system and 0 °C (32 °F) to 35 °C (95 °F) for the smartphone.

⚠ Warning

Remove all objects from the charging pad before charging your compatible smartphone. Objects, such as coins, keys, rings, paper clips, or cards, between the smartphone and charging pad will become very hot. On the rare occasion that the charging system does not detect an object, and the object gets wedged between the smartphone and charger, remove the smartphone and allow the object to cool before removing it from the charging pad, to prevent burns.

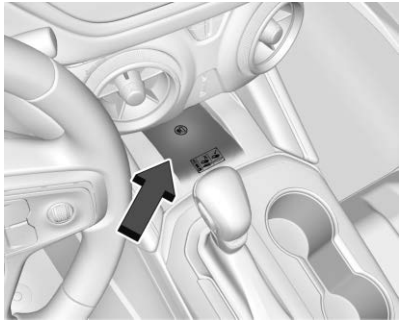

To charge a smartphone:

1. Remove all objects from the charging pad. The system may not charge if there are any objects between the smartphone and charging pad.
2. Place the smartphone face up on the charging pad.

   To maximize the charge rate, ensure the smartphone is fully seated and centered in the holder with nothing under it. A thick smartphone case may prevent the wireless charger from working, or may reduce the charging performance. See your dealer for additional information.
3. A green ϟ will appear next to ☎ on the infotainment display. This indicates that the phone is properly positioned and charging. If ϟ turns yellow, ensure that the charging pad is clear of any objects and that the smartphone is capable of wireless charging before repositioning it. If ϟ does not illuminate, the smartphone may need to be repositioned.

The smartphone may become warm during charging. This is normal. In warmer temperatures, the speed of charging may be reduced.

If ϟ does not appear on the infotainment display:

1. Remove the smartphone from the pad and wait three seconds.
2. Turn the smartphone 180 degrees before placing/aligning the smartphone on the pad again.

Software Acknowledgements

Certain Wireless Charging Module product from LG Electronics, Inc. ("LGE") contains the open source software detailed below. Refer to the indicated open source licenses (as are included following this notice) for the terms and conditions of their use.

OSS Notice Information

To obtain the source code that is contained in this product, please visit http://opensource.lge.com. In addition to the source code, all referred license terms, warranty disclaimers and copyright notices are available for download. LG Electronics will also provide open source code to you on CD-ROM for a charge covering the cost of performing such distribution (such as the cost of media, shipping, and handling) upon email request to opensource@lge.com. This offer is valid for three (3) years from the date on which you purchased the product.

Freescale-WCT library

Copyright (c) 2012-2014 Freescale Semiconductor, Inc.. All rights reserved.

1. Redistributions of source code must retain the above copyright notice, this list of conditions and the following disclaimer.
2. Redistributions in binary form must reproduce the above copyright notice, this list of conditions and the following disclaimer in the documentation and/or other materials provided with the distribution.
3. Neither the name of the copyright holder nor the names of its contributors may be used to endorse or promote products derived from this software without specific prior written permission.

THIS SOFTWARE IS PROVIDED BY THE COPYRIGHT HOLDERS AND CONTRIBUTORS "AS IS" AND ANY EXPRESS OR IMPLIED WARRANTIES, INCLUDING, BUT NOT LIMITED TO, THE IMPLIED WARRANTIES OF MERCHANTABILITY AND FITNESS FOR A PARTICULAR PURPOSE ARE DISCLAIMED. IN NO EVENT SHALL THE COPYRIGHT HOLDER OR CONTRIBUTORS BE LIABLE FOR ANY DIRECT, INDIRECT, INCIDENTAL, SPECIAL, EXEMPLARY, OR CONSEQUENTIAL DAMAGES (INCLUDING, BUT NOT LIMITED TO, PROCUREMENT OF SUBSTITUTE GOODS OR SERVICES; LOSS OF USE, DATA, OR PROFITS; OR BUSINESS INTERRUPTION) HOWEVER CAUSED AND ON ANY THEORY OF LIABILITY, WHETHER IN CONTRACT, STRICT LIABILITY, OR TORT (INCLUDING NEGLIGENCE OR OTHERWISE) ARISING IN ANY WAY OUT OF THE USE OF THIS SOFTWARE, EVEN IF ADVISED OF THE POSSIBILITY OF SUCH DAMAGE.

Warning Lights, Gauges, and Indicators

Warning lights and gauges can signal that something is wrong before it becomes serious enough to cause an expensive repair or replacement. Paying attention to the warning lights and gauges could prevent injury.

Some warning lights come on briefly when the engine is started to indicate they are working. When one of the warning lights comes on and stays on while driving, or when one of the gauges shows there may be a problem, check the section that explains what to do. Waiting to do repairs can be costly and even dangerous.

Instrument Cluster (Base and Midlevel)

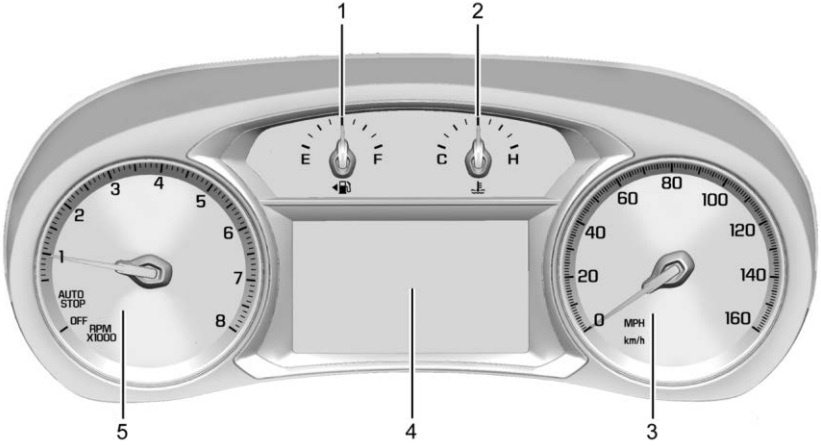

Base Level and Midlevel English Shown, Metric Similar

1. *Fuel Gauge* ⇨ *95*
2. *Engine Coolant Temperature Gauge* ⇨ *96*
3. *Speedometer* ⇨ *94*
4. *Driver Information Center (DIC) (Base and Midlevel)* ⇨ *107* or *Driver Information Center (DIC) (Uplevel)* ⇨ *110*
5. *Tachometer* ⇨ *95*

Base Cluster Menu

There is an interactive display area in the center of the instrument cluster.

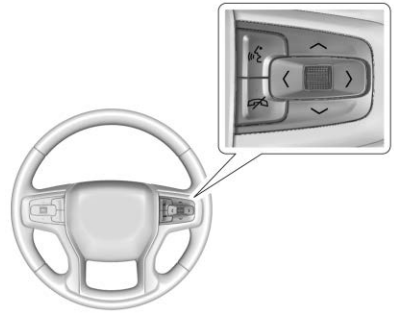

Use the right steering wheel control to open and scroll through the different items and displays.

Press < to access the cluster applications.

Use the thumbwheel to scroll ∧ or ∨ through the list of available applications. Not all applications will be available on all vehicles.

- Info App. This is where the selected Driver Information Center (DIC) displays can be viewed. See “Driver Information Center (DIC) (Base and Midlevel)” in the Index.
- Options

Options

Press the thumbwheel to select the Options app, then press > to enter the Options menu. Use ∧ or ∨ to scroll through items in the Options menu.

Units : Press > while Units is displayed to enter the Units menu. Choose English or Metric units by pressing the thumbwheel while the desired item is highlighted.

Info Pages : Press > while Info Pages is displayed to enter the Info Pages menu and select the items to be displayed in the Info app.

Speed Warning : The Speed Warning display allows you to set a speed not to be exceeded. To set, press > when Speed Warning is displayed.

Scroll ∧ or ∨ to adjust the value. Press the thumbwheel to set the speed.

Once the speed is set, this feature can be turned off by pressing the thumbwheel while viewing this page. If the selected speed limit is exceeded, a pop-up warning is displayed with a chime.

Midlevel Cluster Menu

There is an interactive display area in the center of the instrument cluster.

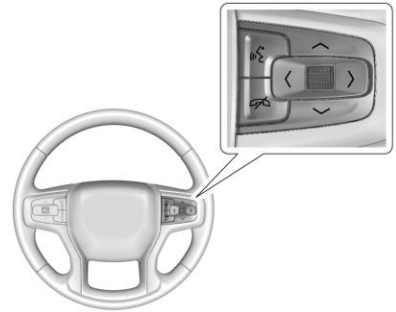

Use the right steering wheel control to open and scroll through the different items and displays.

Press < or > to change between the cluster applications. Use the thumbwheel to scroll ∧ or ∨ through the list of available features within each application. Not all applications will be available on all vehicles. Some may be temporarily restricted when the vehicle is off or in ACC/ACCESSORY.

- Home Page
- Info App. This is where the selected Driver Information Center (DIC) displays can be viewed. See “Driver Information Center (DIC) (Base and Midlevel)” in the Index.
- Audio
- Navigation
- Phone
- Options

Home

Information displayed here can be customized from the Options menu.

Speedometer : Displays how fast the vehicle is moving in either kilometers per hour (km/h) or miles per hour (mph).

Speed Sign : Shows sign information, which comes from a roadway database in the onboard navigation, if equipped.

Time : Displays the current time.

Fuel Range : Displays the approximate distance the vehicle can be driven without refueling. The fuel range estimate is based on an average of the vehicle’s fuel economy over recent driving history and the amount of fuel remaining in the fuel tank. Fuel range cannot be reset.

Audio

Use the thumbwheel to scroll ∧ or ∨ through options, browse for music, select from favorites, or change the audio source. In the main view, scroll to change the station or go to the next or previous track.

Navigation

In the Navigation menu, if there is no active route, press the thumbwheel to access Recents or Favorites. If there is an active route, press the thumbwheel to cancel or resume route guidance, mute or unmute voice guidance, or access Recents or Favorites.

Phone

In the Phone menu, if there is no active phone call, view recent calls, scroll through contacts, select from the favorites, or change the phone source. If there is an active call, mute the phone or switch to handset operation.

Options

Use the thumbwheel to scroll ∧ or ∨ through items in the Options menu. Press the thumbwheel to select the item. Press < to exit the item.

Units : Choose US or Metric units. A selected mark will be displayed next to the selected item.

Info Page Options : Select the items to be displayed in the Info app. A selected mark will be displayed next to the selected item.

Home Page Options : Select the available elements to display. Not all elements will be available on all vehicles: Speedometer, Active Safety, Speed Sign, Time, and Fuel Range.

Speed Warning : Allows you to set a speed not to be exceeded. To set, press the thumbwheel when Speed Warning is displayed. Use ∧ or ∨ to adjust the value. Press the thumbwheel to set the speed. Once the speed is set, this feature can be turned off by pressing the thumbwheel while viewing this page. If the selected speed limit is exceeded, a pop-up warning is displayed with a chime.

Software Information : Displays open source software information.

Instrument Cluster (Uplevel)

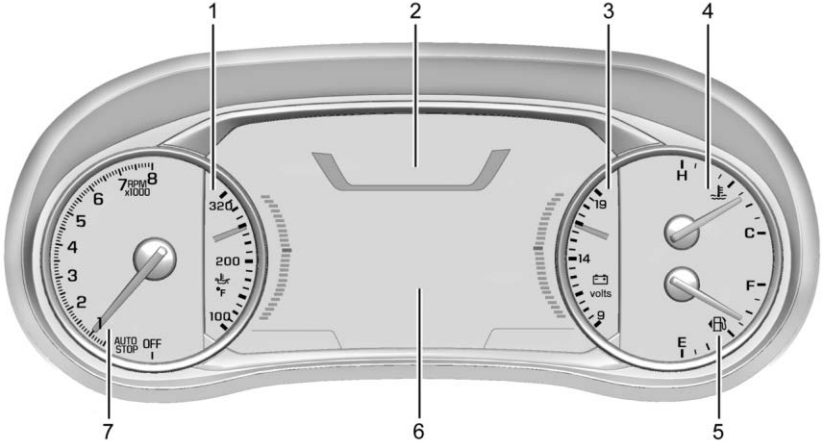

Uplevel English Standard Theme Shown, Metric Similar

1. *Engine Oil Temperature Gauge* ⇨ *96*
2. *Speedometer* ⇨ *94*
3. *Voltmeter Gauge* ⇨ *97*
4. *Engine Coolant Temperature Gauge* ⇨ *96*
5. *Fuel Gauge* ⇨ *95*
6. *Driver Information Center (DIC) (Base and Midlevel)* ⇨ *107* or *Driver Information Center (DIC) (Uplevel)* ⇨ *110*
7. *Tachometer* ⇨ *95*

Cluster Menu

There is an interactive display area in the center of the instrument cluster.

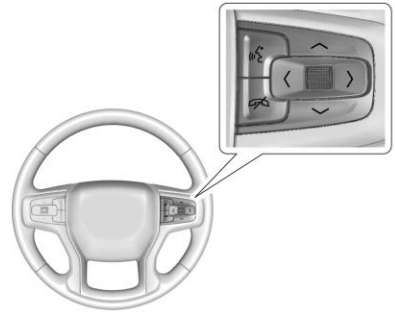

Use the right steering wheel control to open and scroll through the different items and displays.

Press < to access the cluster applications.

Use the thumbwheel to scroll ∧ or ∨ through the list of available applications. Press the thumbwheel to select. Not all applications will be available on all vehicles.

- Info App. This is where the selected Driver Information Center (DIC) displays can be

viewed. See *Driver Information Center (DIC) (Base and Midlevel)* ⇨ *107* or *Driver Information Center (DIC) (Uplevel)* ⇨ *110*.

- Audio
- Phone
- Navigation
- Options

Audio

Press the thumbwheel to select the Audio app, then press > to enter the Audio menu. In the Audio menu browse for music, select from the favorites, or change the audio source. Use ∧ or ∨ to change the station or go to the next or previous track.

Phone

Press the thumbwheel to select the Phone app, then press > to enter the Phone menu. In the Phone menu, if there is no active phone call, view recent calls, or scroll through contacts. If there is an active call, mute the phone or switch to handset operation.

Navigation

Press the thumbwheel to select the Navigation app, then press > to enter the Navigation menu. If there is no active route, you can resume the last route and turn the voice prompts on/off. If there is an active route, press the thumbwheel to cancel or resume route guidance or turn the voice prompts on or off.

Options

Press the thumbwheel to select the Options app, then press > to enter the Options menu. Use ∧ or ∨ to scroll through items in the Options menu.

Units : Press > while Units is displayed to enter the Units menu. Choose English or Metric units by pressing the thumbwheel while the desired item is highlighted.

Display Themes : There are two instrument cluster display configurations to choose from: Sport and Touring.

Info Pages : Press > while Info Pages is displayed to enter the Info Pages menu and select the items to be displayed in the Info app. See *Driver Information Center (DIC) (Base and Midlevel)* ⇨ *107* or *Driver Information Center (DIC) (Uplevel)* ⇨ *110*.

Speed Warning : The Speed Warning display allows you to set a speed not to be exceeded. To set, press > when Speed Warning is displayed.

Scroll to set speed and press >. Scroll ∧ or ∨ to adjust the value and press the thumbwheel to set the speed. Once the speed is set, this feature can be turned off by pressing the thumbwheel while viewing this page. If the selected speed limit is exceeded, a pop-up warning is displayed with a chime.

Software Information : Displays open source software information.

Speedometer

The speedometer shows the vehicle's speed in either kilometers per hour (km/h) or miles per hour (mph).

Odometer

The odometer shows how far the vehicle has been driven, in either kilometers or miles.

Trip Odometer

The trip odometer shows how far the vehicle has been driven since the trip odometer was last reset.

The trip odometer is accessed and reset through the Driver Information Center (DIC). See *Driver Information Center (DIC) (Base and Midlevel)* ⇨ *107* or *Driver Information Center (DIC) (Uplevel)* ⇨ *110*.

Tachometer

The tachometer displays the engine speed in revolutions per minute (rpm).

With the Stop/Start system, when the ignition is on, the tachometer indicates the vehicle status. When pointing to AUTO STOP, the engine is off but the vehicle is on and can move. The engine could auto start at any time. When the indicator points to OFF, the vehicle is off.

When the engine is on, the tachometer will indicate the engine's revolutions per minute (rpm). The tachometer may vary by several hundred rpm, during Auto Stop mode, when the engine is shutting off and restarting.

Fuel Gauge

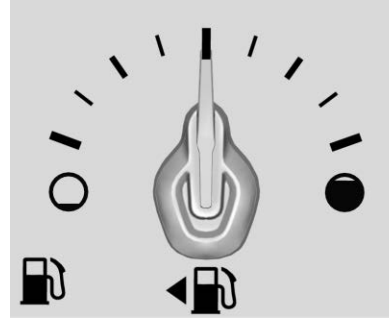

Metric Base and Midlevel

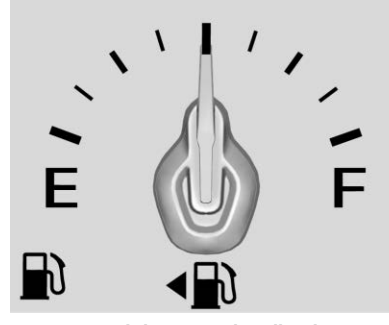

English Base and Midlevel

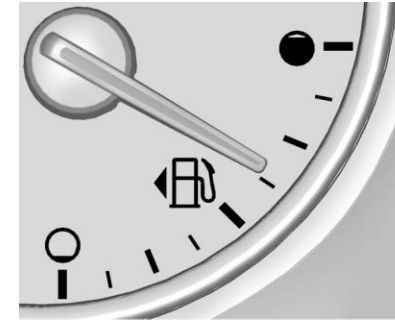

Metric Uplevel

English Uplevel

When the ignition is on, the fuel gauge indicates about how much fuel is left in the tank.

An arrow on the fuel gauge indicates the side of the vehicle the fuel door is on.

When the indicator nears empty, the low fuel light comes on. There is a small amount of fuel left, but the fuel tank should be filled soon.

Here are three things that some owners ask about. None of these show a problem with the fuel gauge:

- It takes a little more, or less fuel to fill up than the gauge indicated. For example, the gauge may have indicated the tank was half full, but it actually took a little more, or less than half the tank's capacity to fill the tank.
- The gauge moves a little while turning a corner, speeding up or braking.
- The gauge takes a few seconds to stabilize after the ignition is turned on and goes back to empty when the ignition is turned off.

Engine Oil Temperature Gauge

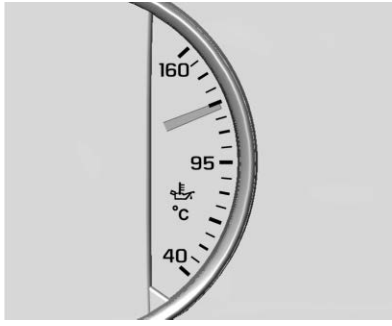

Metric

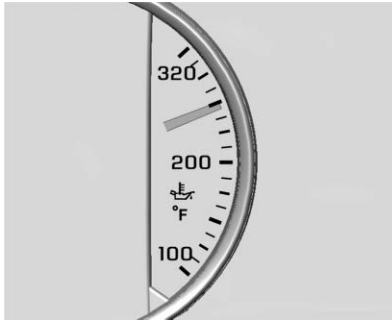

English

This gauge shows the engine oil temperature.

If the gauge pointer moves into the high end, it means that the engine oil has overheated. If the vehicle has been operated under normal driving conditions, pull off the road, stop the vehicle, and turn off the engine as soon as possible.

See *Engine Oil* ⇨ *262*.

Engine Coolant Temperature Gauge

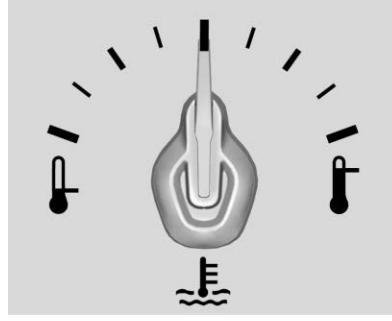

Metric Base and Midlevel

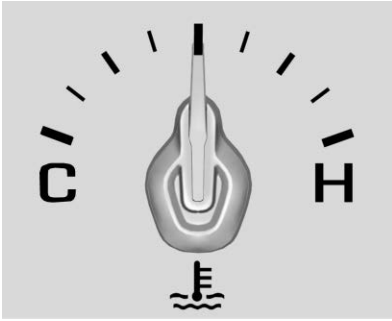

English Base and Midlevel

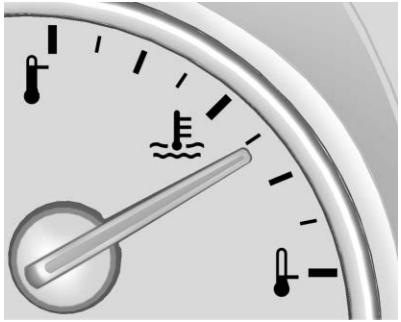

Metric Uplevel

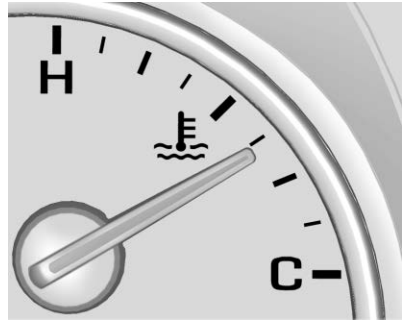

English Uplevel

This gauge shows the engine coolant temperature.

If the pointer moves toward the warning area at the high end of the gauge, the engine is too hot.

If the engine coolant has overheated and the vehicle has been operating under normal driving conditions, pull off the road, stop the vehicle, and turn off the engine as soon as possible. See *Engine Overheating* ⇨ *271*.

Voltmeter Gauge

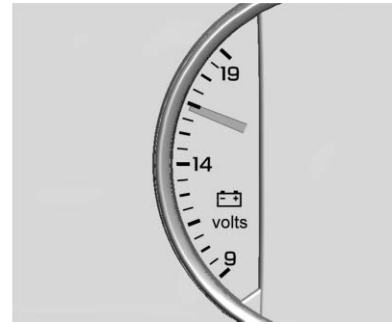

When the ignition is on, this gauge indicates the battery voltage.

When the engine is running, this gauge shows the condition of the charging system. The gauge can transition from a higher to lower or a lower to higher reading. This is normal. If the vehicle is operating outside the normal operating range, the charging system light comes on. See *Charging System Light* ⇨ *100*.

Readings outside the normal operating range can also occur when a large number of electrical accessories are operating in the vehicle and the engine is left idling for an extended period. This condition is normal

since the charging system is not able to provide full power at engine idle. As engine speeds are increased, this condition should correct itself as higher engine speeds allow the charging system to create maximum power.

The vehicle can only be driven for a short time with the readings outside the normal operating range. If the vehicle must be driven, turn off all accessories, such as the radio and air conditioner, and unplug all chargers and accessories.

Readings outside the normal operating range indicate a possible problem in the electrical system. Have the vehicle serviced as soon as possible.

Seat Belt Reminders

Driver Seat Belt Reminder Light

There is a driver seat belt reminder light on the instrument cluster.

When the vehicle is started, this light flashes and a chime may come on to remind the driver to fasten their seat belt.

Then the light stays on solid until the belt is buckled. This cycle continues several times if the driver remains or becomes unbuckled while the vehicle is moving.

If the driver seat belt is buckled, neither the light nor the chime comes on.

Front Passenger Seat Belt Reminder Light

The vehicle may have a front passenger seat belt reminder light near the passenger airbag status indicator. See *Passenger Sensing System* ⇨ *55*.

When the vehicle is started, this light flashes and a chime may come on to remind passengers to fasten their seat belt.

Then the light stays on solid until the belt is buckled. This cycle continues several times if the front passenger remains or becomes unbuckled while the vehicle is moving.

If the front passenger seat belt is buckled, neither the chime nor the light comes on.

The front passenger seat belt reminder light and chime may come on if an object is put on the seat such as a briefcase, handbag, grocery bag, laptop, or other electronic device. To turn off the reminder light and/or chime, remove the object from the seat or buckle the seat belt.

Airbag Readiness Light

This light shows if there is an electrical problem with the airbag system. The system check includes the airbag sensor(s), the passenger sensing system, the pretensioners, the airbag modules, the wiring, and the crash sensing and diagnostic module. For more information on the airbag system, see *Airbag System* ⇨ *50*.

The airbag readiness light comes on for several seconds when the vehicle is started. If the light does not come on then, have it fixed immediately.

⚠ Warning

If the airbag readiness light stays on after the vehicle is started or comes on while driving, it means the airbag system might not be working properly. The airbags in the vehicle might not inflate in a crash, or they could even inflate without a crash. To help avoid injury, have the vehicle serviced right away.

If there is a problem with the airbag system, a Driver Information Center (DIC) message may also come on.

Passenger Airbag Status Indicator

The vehicle has a passenger sensing system. See *Passenger Sensing System* ⇨ *55* for important safety information. The overhead console has a passenger airbag status indicator.

When the vehicle is started, the passenger airbag status indicator will light ON and OFF, and the symbols for on and off, for several seconds as a system check. Then, after several more seconds, the status indicator will light either ON or OFF, and either the on or off symbol, to let you know the status of the front outboard passenger frontal airbag.

If the word ON, and the on symbol, are lit on the passenger airbag status indicator, it means that the front outboard passenger frontal airbag is allowed to inflate.

If the word OFF, and the off symbol, are lit on the passenger airbag status indicator, it means that the passenger sensing system has turned off the front outboard passenger frontal airbag.

If, after several seconds, both status indicator lights remain on, or if there are no lights at all, there may be a problem with the lights or the passenger sensing system. See your dealer for service.

⚠ Warning

If the airbag readiness light ever comes on and stays on, it means that something may be wrong with the airbag system. To help avoid injury to yourself or others, have the vehicle serviced right away. See *Airbag Readiness Light* ⇨ *98* for more information, including important safety information.

Charging System Light

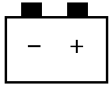

The charging system light comes on briefly when the ignition is turned on, but the engine is not running, as a check to show the light is working. It should go out when the engine is started.

If the light stays on, or comes on while driving, there may be a problem with the electrical charging system. Have it checked by your dealer. Driving while this light is on could drain the battery.

When this light comes on, or is flashing, the Driver Information Center (DIC) also displays a message.

If a short distance must be driven with the light on, be sure to turn off all accessories, such as the radio and air conditioner. Find a safe place to stop the vehicle.

Malfunction Indicator Lamp (Check Engine Light)

This light is part of the vehicle's emission control on-board diagnostic system. If this light is on while the engine is running, a malfunction has been detected and the vehicle may require service. The light should come on to show that it is working when the ignition is in Service Mode. See *Ignition Positions* ⇨ *200*.

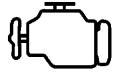

Malfunctions are often indicated by the system before any problem is noticeable. Being aware of the light and seeking service promptly when it comes on may prevent damage.

Caution

If the vehicle is driven continually with this light on, the emission control system may not work as well, the fuel economy may be lower, and the vehicle may not

(Continued)

Caution (Continued)

run smoothly. This could lead to costly repairs that might not be covered by the vehicle warranty.

Caution

Modifications to the engine, transmission, exhaust, intake, or fuel system, or the use of replacement tires that do not meet the original tire specifications, can cause this light to come on. This could lead to costly repairs not covered by the vehicle warranty. This could also affect the vehicle's ability to pass an Emissions Inspection/Maintenance test. See *Accessories and Modifications* ⇨ *254*.

If the light is flashing : A malfunction has been detected that could damage the emission control system and increase vehicle emissions. Diagnosis and service may be required.

To help prevent damage, reduce vehicle speed and avoid hard accelerations and uphill grades. If towing a trailer, reduce the amount of cargo being hauled as soon as possible.

If the light continues to flash, find a safe place to park. Turn the vehicle off and wait at least 10 seconds before restarting the engine. If the light is still flashing, follow the previous guidelines and see your dealer for service as soon as possible.

If the light is on steady : A malfunction has been detected. Diagnosis and service may be required.

Check the following:

- If fuel has been added to the vehicle using the capless fuel funnel adapter, make sure that it has been removed. See "Filling the Tank with a Portable Gas Can" under *Filling the Tank* ⇨ *240*. The diagnostic system can detect if the adapter has been left installed in the vehicle, allowing fuel to evaporate into the atmosphere. A few driving trips with the adapter removed may turn off the light.
- Poor fuel quality can cause inefficient engine operation and poor driveability, which may go away once the engine is warmed up. If this occurs, change the fuel brand. It may require at least one full tank of the proper fuel to turn the light off. See *Recommended Fuel* ⇨ *239*.

If the light remains on, see your dealer.

Emissions Inspection and Maintenance Programs

If the vehicle requires an Emissions Inspection/Maintenance test, the test equipment will likely connect to the vehicle's Data Link Connector (DLC).

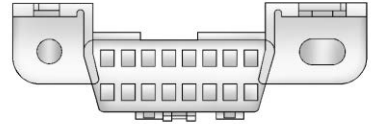

The DLC is under the instrument panel to the left of the steering wheel. Connecting devices that are not used to perform an Emissions Inspection/Maintenance test or to service the vehicle may affect vehicle operation. See *Add-On Electrical Equipment* ⇨ *252*. See your dealer if assistance is needed.

The vehicle may not pass inspection if:

- The light is on when the engine is running.
- The light does not come on when the ignition is in Service Mode.
- Critical emission control systems have not been completely diagnosed. If this happens, the vehicle would not be ready for inspection and might require several days of routine driving before the system is ready for inspection. This can happen if the 12-volt battery has recently been replaced or run down, or if the vehicle has been recently serviced.

See your dealer if the vehicle will not pass or cannot be made ready for the test.

Brake System Warning Light

BRAKE

Metric **English**

This light should come on briefly when the vehicle is turned on. If it does not come on then, have it fixed so it will be ready to warn you if there is a problem.

If the light comes on and stays on at start up, there is a brake problem. Have the brake system inspected right away.

If the light comes on while driving, pull off the road and stop carefully. The brake pedal might be harder to push, or the brake pedal may go closer to the floor. It could take longer to stop. If the light is still on, have the vehicle towed for service. See *Towing the Vehicle* ⇨ *320*.

⚠ Warning

The brake system might not be working properly if the brake system warning light is on. Driving with the brake system warning light on can lead to a crash.
If the light is still on after the vehicle has been pulled off the road and carefully stopped, have the vehicle towed for service.

Electric Parking Brake Light

Metric

English Base Level

English Uplevel

This light comes on when the parking brake is applied. If the light continues flashing after the parking brake is released, or while driving, there is a problem with the Electric Parking Brake system. A message may also display in the Driver Information Center (DIC).

If the light does not come on, or remains flashing, see your dealer.

Service Electric Parking Brake Light

On some vehicles the service electric parking brake light should come on briefly when the vehicle is started. If it does not come on, have it fixed so it will be ready to warn if there is a problem. For vehicles with the reconfigurable cluster, this light may not come on when the vehicle is started.

If this light stays on, the vehicle should be taken to a dealer as soon as possible. See *Electric Parking Brake* ⇨ *211*. A message may also display in the Driver Information Center (DIC).

Antilock Brake System (ABS) Warning Light

This warning light should come on briefly when the vehicle is turned on. If the light does not come on, have it fixed so it will be ready to warn if there is a problem.

If the light comes on while driving, safely stop as soon as it is possible and turn off the vehicle. Then turn on the vehicle again to reset the system.

If the ABS warning light stays on, or comes on again while driving, the vehicle needs service. A chime may also sound when the light stays on.

If the ABS warning light is the only light on, the vehicle has regular brakes, but ABS is not functioning.

If both the ABS warning light and the brake system warning light are on, ABS is not functioning and there is a problem with the regular brakes. See your dealer for service.

See *Brake System Warning Light* ⇨ *101*.

Tow/Haul Mode Light

For vehicles with the Tow/Haul Mode feature, this light comes on when the Tow/Haul Mode has been activated.

See *Tow/Haul Mode* ⇨ *210*.

Lane Keep Assist (LKA) Light

After the vehicle is started, this light turns off and stays off if LKA has not been turned on or is unavailable.

If equipped, this light is white if LKA is turned on, but not ready to assist. This light is green if LKA is turned on and is ready to assist.

LKA may assist by gently turning the steering wheel if the vehicle approaches a detected lane marking. The LKA light is amber when assisting.

This light flashes amber as a Lane Departure Warning (LDW) alert, to indicate that the lane marking has been crossed.

LKA will not assist or alert if the turn signal is active in the direction of lane departure, or if LKA detects that you are accelerating, braking, or actively steering.

See *Lane Keep Assist (LKA)* ⇨ *237*.

Vehicle Ahead Indicator

If equipped, this indicator will display green when a vehicle is detected ahead and amber when you are following a vehicle ahead much too closely.

See *Forward Collision Alert (FCA) System* ⇨ *230*.

FCA/ACC Following Gap Light

If equipped, this light indicates the following gap setting (near, medium, or far) for FCA, and, if equipped, Adaptive Cruise Control (ACC).

Pedestrian Ahead Indicator

If equipped, this indicator will display amber when a nearby pedestrian is detected in front of the vehicle.

See *Front Pedestrian Braking (FPB) System* ⇨ *234*.

Traction Off Light

This light comes on briefly when the vehicle is turned on. If it does not, have the vehicle serviced by your dealer. If the system is working normally, the indicator light then turns off.

The traction off light comes on when the Traction Control System (TCS) has been turned off. If StabiliTrak/Electronic Stability Control (ESC) is turned off, TCS is also turned off. To turn TCS and ESC off and on, see *Traction Control/Electronic Stability Control* ⇨ *213*.

If TCS is off, wheel spin is not limited unless necessary to help protect the driveline from damage. Adjust driving accordingly.

StabiliTrak OFF Light

This light comes on briefly when the vehicle is turned on. If the light does not come on, have the vehicle serviced by your dealer. If the system is working normally, the indicator light then turns off.

This light comes on when the StabiliTrak/Electronic Stability Control (ESC) system is turned off. If StabiliTrak/ESC is off, the Traction Control System (TCS) is also off. To turn ESC off and on, see *Traction Control/Electronic Stability Control* ⇨ *213*.

If ESC and TCS are off, the systems do not assist in controlling the vehicle. Adjust driving accordingly.

Traction Control System (TCS)/ StabiliTrak Light

This light comes on briefly when the vehicle is turned on.

If the light does not come on, have the vehicle serviced by your dealer. If the system is working normally, the indicator light turns off.

If the light is on and not flashing, the TCS and potentially the StabiliTrak/ESC system are not fully operational and may not assist in maintaining control. Adjust driving accordingly. If the condition persists, see your dealer as soon as possible. A Driver Information Center (DIC) message may display.

The light flashes when the TCS and/or the StabiliTrak/ESC system is actively working.

See *Traction Control/Electronic Stability Control* ⇨ *213*.

Engine Coolant Temperature Warning Light

This light comes on briefly while starting the vehicle.

If it does not, have the vehicle serviced by your dealer. If the system is working normally the indicator light goes off.

Caution
The engine coolant temperature warning light indicates that the vehicle has overheated. Driving with this light on can damage the engine and it may not be covered by the vehicle warranty. See *Engine Overheating* ⇨ *271*.

The engine coolant temperature warning light comes on when the engine has overheated.

If this happens, pull over and turn off the engine as soon as possible. See *Engine Overheating* ⇨ *271*.

Tire Pressure Light

For vehicles with the Tire Pressure Monitor System (TPMS), this light comes on briefly when the engine is started. It provides information about tire pressures and the TPMS.

When the Light Is On Steady

This indicates that one or more of the tires are significantly underinflated.

A Driver Information Center (DIC) tire pressure message may also display. Stop as soon as possible, and inflate the tires to the pressure value shown on the Tire and Loading Information label. See *Tire Pressure* ⇨ *294*.

When the Light Flashes First and Then Is On Steady

If the light flashes for about a minute and then stays on, there may be a problem with the TPMS. If the problem is not corrected, the light will come on at every ignition cycle. See *Tire Pressure Monitor Operation* ⇨ *297*.

Engine Oil Pressure Light

Oil pressure can vary with engine speed, outside temperature, and oil viscosity.

On some models, the oil pump will vary engine oil pressure according to engine needs. Oil pressure may change quickly as the engine speed or load varies. This is normal. If the oil pressure warning light or Driver Information Center (DIC) message indicates oil pressure outside the normal operating range, check the vehicle's oil as soon as possible.

Caution
Lack of proper engine oil maintenance can damage the engine. Driving with the engine oil low can also damage the engine. The repairs would not be covered

(Continued)

Caution (Continued)

by the vehicle warranty. Check the oil level as soon as possible. Add oil if required, but if the oil level is within the operating range and the oil pressure is still low, have the vehicle serviced. Always follow the maintenance schedule for changing engine oil.

This light should come on briefly as the engine is started. If it does not come on, have the vehicle serviced by your dealer.

If the light comes on and stays on, it means that oil is not flowing through the engine properly. The vehicle could be low on oil and might have some other system problem. See your dealer.

Low Fuel Warning Light

A Low Fuel Warning Light near the fuel gauge comes on briefly when the ignition is turned on as a check to show it is working.

It also comes on when the fuel gauge indicator nears empty. The light turns off when fuel is added. If it does not, have the vehicle serviced.

Security Light

The security light should come on briefly as the engine is started. If it does not come on, have the vehicle serviced by your dealer. If the system is working normally, the indicator light turns off.

If the light stays on and the engine does not start, there could be a problem with the theft-deterrent system. See *Immobilizer Operation* ⇨ *24*.

High-Beam On Light

This light comes on when the high-beam headlamps are in use. See *Headlamp High/ Low-Beam Changer* ⇨ *122*.

IntelliBeam Light

This light comes on when the IntelliBeam system, if equipped, is enabled. See *Exterior Lamp Controls* ⇨ *121*.

Lamps On Reminder

This light comes on when the exterior lamps are in use, except when only the Daytime Running Lamps (DRL) are active. See *Exterior Lamp Controls* ⇨ *121*.

Cruise Control Light

The cruise control light is white when the cruise control is on and ready, and turns green when the cruise control is set and active. See *Cruise Control* ⇨ *215*.

Adaptive Cruise Control Light

This light is white when the Adaptive Cruise Control (ACC, if equipped) is on and ready, and turns green when the ACC is set and active. See *Adaptive Cruise Control (Advanced)* ⇨ *217*.

Door Ajar Light

This light comes on when a door is open or not securely latched. Before driving, check that all doors are properly closed.

Information Displays

Driver Information Center (DIC) (Base and Midlevel)

The DIC displays are shown in the center of the instrument cluster in the Info App. See *Instrument Cluster (Base and Midlevel)* ⇨ *90* or *Instrument Cluster (Uplevel)* ⇨ *93*. The displays show the status of many vehicle systems.

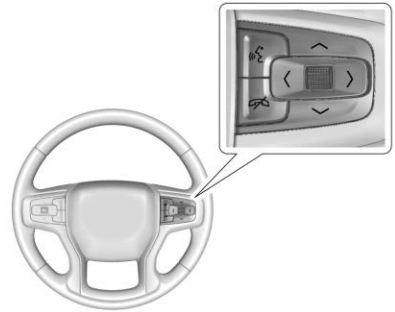

< or > : Press to move left or right between the interactive display zones in the cluster. Press the thumbwheel to select.

∧ or ∨ : Use the thumbwheel to scroll up or down in a list. Press the thumbwheel to select.

Base Level Info Page Options

The info pages on the DIC can be turned on or off through the Options menu.

1. Press < to access the cluster applications.
2. Use the thumbwheel to scroll ∧ or ∨ to the Options application.
3. Press the thumbwheel to enter the Options menu.
4. Scroll to Info Pages and press >.
5. Scroll ∧ or ∨ to move through the list of possible information displays.
6. Press the thumbwheel while an item is highlighted to select or deselect that item.

Midlevel Info Page Options

The info pages on the DIC can be turned on or off through the Options menu.

1. Press < or > to scroll to the Options application.
2. Use the thumbwheel to scroll ∧ or ∨ to the Info Page Options and press the thumbwheel.
3. Use the thumbwheel to scroll ∧ or ∨ through the list of possible information displays.
4. Press the thumbwheel while an item is highlighted to select or deselect that item.

Info Pages

The following is the list of all possible DIC info page displays. Some may not be available for your particular vehicle. Some items may not be turned on by default but can be turned on through the Options app. See “Info Page Options” earlier in this section.

Speed : Shows the vehicle speed in either kilometers per hour (km/h) or miles per hour (mph). If equipped, press the thumbwheel to open the menu and select to display speed limit signs. The sign will show “– –” when there is no detected speed limit or the system is unavailable.

Trip 1 or Trip 2 : Shows the current distance traveled, in either kilometers (km) or miles (mi), since the trip odometer was last reset.

If equipped, shows the average fuel economy since the last reset. This number reflects only the approximate average fuel economy that the vehicle has right now, and will change as driving conditions change. The average fuel economy can be displayed as mpg, km/L, or L/100km where applicable.

If equipped, shows the average speed since the last reset. This number reflects only the approximate average speed that the vehicle has, and will change as driving conditions change. Average speed can be displayed as mph or km/h where applicable.

Press the thumbwheel while this display is active to show a confirmation window to reset all values to zero. Use < or > to select yes or no and press the thumbwheel.

Fuel Information or Fuel Range : Shows the approximate distance the vehicle can be driven without refueling. LOW will be displayed when the vehicle is low on fuel. The fuel range estimate is based on an average of the vehicle's fuel economy over

recent driving history and the amount of fuel remaining in the fuel tank. If equipped, also shows the instantaneous fuel economy.

Oil Life : Shows an estimate of the oil's remaining useful life. If REMAINING OIL LIFE 99% is displayed, that means 99% of the current oil life remains.

When the remaining oil life is low, the CHANGE ENGINE OIL SOON message will appear on the display. The oil should be changed as soon as possible. See *Engine Oil* ⇨ *262*. In addition to the engine oil life system monitoring the oil life, additional maintenance is recommended. See *Maintenance Schedule* ⇨ *332*.

The Oil Life display must be reset after each oil change. It will not reset itself. Do not reset the Oil Life display at any time other than when the oil has just been changed. It cannot be reset accurately until the next oil change. To reset, see *Engine Oil Life System* ⇨ *264*.

Air Filter Life : Shows an estimate of the engine air filter's remaining useful life and the state of the system. Engine Air Filter Life 95% means 95% of the current air filter life remains. Messages will display based on the engine air filter life and the state of the system. When the REPLACE AT NEXT OIL CHANGE message displays, the engine air filter should be replaced at the time of the next oil change. When the REPLACE SOON message displays, the engine air filter should be replaced at the earliest convenience.

The Air Filter Life display must be reset after the engine air filter replacement. To reset, see *Engine Air Filter Life System* ⇨ *265*.

Tire Pressure : Shows the approximate pressures of all four tires. Tire pressure is displayed in either kilopascal (kPa) or in pounds per square inch (psi). If the pressure is low, the value for that tire is shown in amber. See *Tire Pressure Monitor System* ⇨ *296* and *Tire Pressure Monitor Operation* ⇨ *297*.

Average Speed : Displays the average vehicle speed of the vehicle in kilometers per hour (km/h) or miles per hour (mph). This average is based on the various vehicle speeds recorded since the last reset. Reset the average speed by pressing the thumbwheel while this display is active to show a confirmation window to select yes or no and press the thumbwheel.

Fuel Economy : The center displays the approximate instantaneous fuel economy as a number and bar graph. Displayed above the bar graph is a running average of fuel economy for the most recently traveled selected distance. Displayed below the bar graph is the best average fuel economy that has been achieved for the selected distance. The selected distance is displayed at the top of the page as "last xxx mi/km."

Press the thumbwheel to select the distance or reset best value. Use ∧ or ∨ to choose the distance and press the thumbwheel. Scroll ∧ or ∨ to select Reset Best Score. Press the thumbwheel to reset the best average fuel economy. After reset, the best value displays "-,-" until the selected distance has been traveled.

The display provides information on how current driving behavior affects the running average and how well recent driving compares to the best that has been achieved for the selected distance.

Follow Distance/Gap Setting : If equipped, the current follow time to the vehicle ahead is displayed as a time value on this page. When Adaptive Cruise Control (ACC) has been engaged, the display switches to the gap setting page. This page shows the current gap setting along with the vehicle ahead indicator.

Driver Assistance : If equipped, shows information for Lane Keep Assist (LKA), Lane Departure Warning (LDW), and Forward Collision Alert (FCA).

Economy Trend : Shows history of the Average Fuel Economy from the last 50 km (30 mi). Each bar represents about 5 km (3 mi) of driving. During driving the bars will shift to always reflect the most recent distance on the right side. Press the thumbwheel to open the menu while this display is active to clear the graph. Select yes or no and press the thumbwheel.

Timer : This display can be used as a timer. To start the timer, press the thumbwheel to open the menu while this display is active. Use ∧ or ∨ to select Start Timer or Reset. Press the thumbwheel. To stop the timer, press the thumbwheel while this display is active. The display will show the amount of time that has passed since the timer was last reset.

Speed Limit : Shows sign information, which comes from a roadway database in the onboard navigation, if equipped. The sign will show "– –" when there is no detected speed limit or the system is unavailable. Press the thumbwheel while this display is active to toggle Speed Limit sign on or off.

Speed limit signs in your vehicle display may vary from actual road speed depending on the version of your current navigation map.

Battery Voltage : Displays the current battery voltage, if equipped. Battery voltage changes are normal while driving. See *Charging System Light* ⇨ *100*. If there is a problem with the battery charging system, a DIC will display a message.

Oil Pressure : Oil pressure is displayed in either kilopascal (kPa) or in pounds per square inch (psi). Oil pressure can vary with engine speed, outside temperature, and oil viscosity. On some models, the oil pump will vary engine oil pressure according to engine needs. Oil pressure may change quickly as the engine speed or load varies. This is normal. If the oil pressure warning light or DIC message indicates oil pressure outside the normal operating range, check the vehicle's oil as soon as possible.

Coolant Temperature : Displays the coolant temperature in degrees Celsius (°C) or degrees Fahrenheit (°F).

Driver Information Center (DIC) (Uplevel)

The DIC displays are shown in the center of the instrument cluster in the Info app. See *Instrument Cluster (Base and Midlevel)* ⇨ *90* or *Instrument Cluster (Uplevel)* ⇨ *93*. The displays show the status of many vehicle systems.

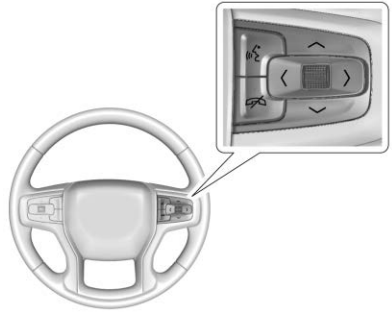

< or > : Press to move left or right between the interactive display zones in the cluster. Press the thumbwheel to select.

∧ or ∨ : Use the thumbwheel to scroll up or down in a list. Press the thumbwheel to select.

Info Page Options

The info pages on the DIC can be turned on or off through the Options menu.

1. Press > to scroll to the Options application.
2. Scroll ∧ or ∨ to choose Info pages and press the thumbwheel.
3. Scroll ∧ or ∨ to move through the list of possible information displays.
4. Press the thumbwheel while an item is highlighted to select or deselect that item.

Info Pages

The following is the list of all possible DIC info page displays. Some may not be available for your particular vehicle. Some items may not be turned on by default but can be turned on through the Options app. See “Info Page Options” earlier in this section.

Speed : Shows the vehicle speed in either kilometers per hour (km/h) or miles per hour (mph). The vehicle odometer is also shown on this page.

Trip A or Trip B, Average Fuel Economy, and Average Speed : Shows the current distance traveled, in either kilometers (km) or miles (mi), since the trip odometer was last reset.

The Average Fuel Economy display shows the approximate average liters per 100 kilometers (L/100 km) or miles per gallon (mpg). This number is calculated based on the number of L/100 km (mpg) recorded since the last time this menu item was reset. This number reflects only the approximate average fuel economy that the vehicle has right now, and will change as driving conditions change.

The Average Speed display shows the average speed of the vehicle in kilometers per hour (km/h) or miles per hour (mph). This average is calculated based on the various vehicle speeds recorded since the last reset of this value.

Press and hold the thumbwheel while this display is active to reset the trip odometer, the average fuel economy, and the average speed. Or press > and select reset in the menu.

Fuel Range and Instantaneous Fuel Economy : Shows the approximate distance the vehicle can be driven without refueling. LOW will be displayed when the vehicle is low on fuel. The fuel range estimate is based on an average of the vehicle's fuel economy over recent driving history and the amount of fuel remaining in the fuel tank.

The Instantaneous Fuel Economy display shows the current fuel economy in either liters per 100 kilometers (L/100 km) or miles per gallon (mpg). This number reflects only the approximate fuel economy that the vehicle has right now and changes frequently as driving conditions change.

Timer and Fuel Used : Can be used as a timer. To start the timer, press the thumbwheel while this display is active. The display will show the amount of time that has passed since the timer was last reset. To stop the timer, press the thumbwheel briefly while this display is active and the timer is running. To reset the timer to zero, press and hold the thumbwheel while this display is active.

This also shows the number of liters (L) or gallons (gal) of fuel used since the last reset of this menu item.

Oil Life : Shows an estimate of the oil's remaining useful life. If REMAINING OIL LIFE 99% is displayed, that means 99% of the current oil life remains.

When the remaining oil life is low, the CHANGE ENGINE OIL SOON message will appear on the display. The oil should be changed as soon as possible. See *Engine Oil* ⇨ *262*. In addition to the engine oil life system monitoring the oil life, additional maintenance is recommended. See *Maintenance Schedule* ⇨ *332*.

The Oil Life display must be reset after each oil change. It will not reset itself. Do not to reset the Oil Life display at any time other than when the oil has just been changed. It cannot be reset accurately until the next oil change. To reset, see *Engine Oil Life System* ⇨ *264*.

Air Filter Life : Shows an estimate of the engine air filter's remaining useful life and the state of the system. Engine Air Filter Life 95% means 95% of the current air filter life remains. Messages will display based on the engine air filter life and the state of the system. When the REPLACE AT NEXT OIL CHANGE message displays, the engine air filter should be replaced at the time of the next oil change. When the REPLACE SOON message displays, the engine air filter should be replaced at the earliest convenience.

The Air Filter Life display must be reset after the engine air filter replacement. To reset, see *Engine Air Filter Life System* ⇨ *265*.

Tire Pressure : Shows the approximate pressures of all four tires. Tire pressure is displayed in either kilopascal (kPa) or in pounds per square inch (psi). If the pressure is low, the value for that tire is shown in amber. See *Tire Pressure Monitor System* ⇨ *296* and *Tire Pressure Monitor Operation* ⇨ *297*.

Best Fuel Economy : Displays average fuel economy, the best fuel economy over the selected distance, and a bar graph showing instantaneous fuel economy.

Press > to change the selected distance. Press and hold the thumbwheel while this display is active to reset the best fuel economy and average fuel economy. This display can also be reset by selecting reset in the menu.

Top Consumers : Shows a list of the features that are currently impacting the fuel economy, in order from highest to lowest. If a feature is turned off, it will be removed from the list.

Economy Trend : Shows history of the Average Fuel Economy from the last 50 km (30 mi). Each bar represents about 5 km (3 mi) of driving. During driving the bars will shift to always reflect the most recent distance on the right side. Press and hold the thumbwheel to clear the graph or press > to reset through the menu.

Speed Signs : Shows sign information, which comes from a roadway database in the onboard navigation.

Off Road : Displays vehicle pitch and roll information, road wheel angle, and four-wheel drive (4WD) status.

Following Distance : The following distance to a moving vehicle ahead in your path is indicated in following time in seconds. See *Forward Collision Alert (FCA) System* ⇨ *230*.

Transmission Fluid Temperature Gauge : Shows the temperature of the automatic transmission fluid in either degrees Celsius (°C) or degrees Fahrenheit (°F).

Blank Page : Shows no information.

Vehicle Messages

Messages displayed on the Driver Information Center (DIC) indicate the status of the vehicle or some action that may be needed to correct a condition. Multiple messages may appear one after another.

The messages that do not require immediate action can be acknowledged and cleared by pressing the thumbwheel. The messages that require immediate action cannot be cleared until that action is performed.

All messages should be taken seriously; clearing the message does not correct the problem.

If a SERVICE message appears, see your dealer.

Follow the instructions given in the messages. The system displays messages regarding the following topics:

- Service Messages
- Fluid Levels
- Vehicle Security
- Brakes
- Steering
- Ride Control Systems
- Driver Assistance Systems
- Cruise Control
- Lighting and Bulb Replacement
- Wiper/Washer Systems
- Doors and Windows
- Seat Belts
- Airbag Systems
- Engine and Transmission
- Tire Pressure
- Battery

Engine Power Messages

ENGINE POWER IS REDUCED

This message displays when the vehicle's propulsion power is reduced. A reduction in propulsion power can affect the vehicle's ability to accelerate. If this message is on, but there is no observed reduction in performance, proceed to your destination. Under certain conditions the performance may be reduced the next time the vehicle is driven. The vehicle may be driven while this message is on, but maximum acceleration and speed may be reduced. Anytime this message stays on, or displays repeatedly, the vehicle should be taken to your dealer for service as soon as possible.

Under certain operating conditions, propulsion will be disabled. Try restarting after the ignition has been off for 30 seconds.

Vehicle Speed Messages

SPEED LIMITED TO XXX KM/H (MPH)

This message shows that the vehicle speed has been limited to the speed displayed. The limited speed is a protection for various propulsion and vehicle systems, such as lubrication, thermal, brakes, suspension, Teen Driver if equipped, or tires.

Vehicle Personalization

The following are all possible vehicle personalization features. Depending on the vehicle, some may not be available.

For System, Apps, and Personal features and functions, see *Settings* ⇨ *164*.

To access the vehicle personalization menu:

1. Touch the Settings icon on the Home Page of the infotainment display.
2. Touch Vehicle to display a list of available options.
3. Touch to select the desired feature setting.

4. Touch ◯ or | to turn a feature off or on.
5. Touch ✕ to go to the top level of the Settings menu.

The menu may contain the following:

Rear Seat Reminder

This allows for a chime and a message when the rear door has been opened before or during operation of the vehicle.

Touch Off or On.

Climate and Air Quality

Touch and the following may display:

- Auto Fan Speed
- Auto Cooled Seats
- Auto Heated Seats
- Auto Defog
- Auto Rear Defog

Auto Fan Speed

This setting specifies the amount of airflow when the climate control fan setting is Auto Fan.

Touch Low, Medium, or High.

Auto Cooled Seats

When enabled, this feature will automatically activate ventilated seats at the level required by the interior temperature. See *Heated and Ventilated Front Seats* ⇨ *40*.

Touch Off or On.

Auto Heated Seats

When enabled, this feature will automatically activate the heated seats at the level required by the interior temperature. The auto heated seats can be turned off by using the heated seat buttons on the center console. See *Heated and Ventilated Front Seats* ⇨ *40*.

Touch Off or On.

Auto Defog

This setting automatically turns the front defogger on when the engine is started.

Touch Off or On.

Auto Rear Defog

This setting automatically turns the rear defogger on when the engine is started.

Touch Off or On.

Collision/Detection Systems

Touch and the following may display:

- Alert Type
- Forward Collision System
- Front Pedestrian Detection
- Adaptive Cruise Go Notifier
- Lane Change Alert
- Rear Camera Park Assist Symbols
- Rear Cross Traffic Alert

Alert Type

This feature will set the type of alert received from the driver assistance systems to help avoid crashes, either Beeps or Safety Alert Seat vibration pulses.

Touch Beeps or Safety Alert Seat.

Forward Collision System

This setting can alert of a potential crash with a detected vehicle ahead and can apply brakes to help reduce a collision's severity.

Touch Off, Alert, or Alert and Brake.

Front Pedestrian Detection

This feature may help avoid or reduce the harm caused by front-end crashes with nearby pedestrians.

See *Front Pedestrian Braking (FPB) System* ⇨ *234*.

Touch Off, Alert, or Alert and Brake.

Adaptive Cruise Go Notifier

This setting determines if an alert will appear when Adaptive Cruise Control brings the vehicle to a complete stop and the vehicle ahead of you starts moving again. See *Adaptive Cruise Control (Advanced)* ⇨ *217*.

Touch Off or On.

Lane Change Alert

The LCA system is a lane-changing aid that assists drivers with avoiding lane change crashes. See *Lane Change Alert (LCA)* ⇨ *236*.

When Lane Change Alert is disabled, Side Blind Zone Alert is also disabled.

Touch Off or On.

Rear Camera Park Assist Symbols

This setting enables the Rear Camera Park Assist Symbols. See *Assistance Systems for Parking or Backing* ⇨ *227*.

Touch Off or On.

Rear Cross Traffic Alert

This allows the Rear Cross Traffic Alert feature to be turned on or off. See *Assistance Systems for Parking or Backing* ⇨ *227*.

Touch Off or On.

Comfort and Convenience

Touch and the following may display:

- Chime Volume
- Hands Free Liftgate/Trunk Control
- Reverse Tilt Mirror
- Auto Wipe in Reverse Gear

Chime Volume

This determines the chime volume level.

Touch the controls on the infotainment display to adjust the volume.

Hands Free Liftgate/Trunk Control

The liftgate may be operated with a kicking motion under the rear bumper between the left exhaust pipe and the license plate. See *Liftgate* ⇨ *18*.

Touch Off, On-Open and Close, or On-Open Only.

Reverse Tilt Mirror

When on, the driver, passenger, or both driver and passenger outside mirrors will tilt downward when the vehicle is shifted into R (Reverse) to improve visibility of the ground near the rear wheels. They may move from their tilted position when the vehicle is shifted out of R (Reverse) or turned off. See *Reverse Tilt Mirrors* ⇨ *26*.

Touch Off, On - Driver and Passenger, On - Driver, or On - Passenger.

Auto Wipe in Reverse Gear

When on and the front wiper is on, the rear wiper will automatically activate when the vehicle is shifted to R (Reverse).

Touch Off or On.

Lighting

Touch and the following may display:

- Vehicle Locator Lights
- Exit Lighting

Vehicle Locator Lights

This feature will flash the exterior lamps and allows some of the exterior lamps and most of the interior lamps to turn on briefly when 🔓 on the Remote Keyless Entry (RKE) transmitter is pressed to locate the vehicle.

Touch Off or On.

Exit Lighting

This allows the selection of how long the exterior lamps stay on when leaving the vehicle when it is dark outside.

Touch Off, 30 Seconds, 60 Seconds, or 120 Seconds.

Power Door Locks

Touch and the following may display:

- Open Door Anti Lockout
- Auto Door Unlock
- Delayed Door Lock

Open Door Anti Lock Out

When on, this feature will keep the driver door from locking when the door is open. If Off is selected, the Delayed Door Lock menu will be available.

Touch Off or On.

Auto Door Unlock

This allows selection of which of the doors will automatically unlock when the vehicle is shifted into P (Park).

Touch Off, All Doors, or Driver Door.

Delayed Door Lock

When on, this feature will delay the locking of the doors. To override the delay, press the power door lock switch on the door.

Touch Off or On.

Remote Lock, Unlock, and Start

Touch and the following may display:

- Remote Unlock Light Feedback
- Remote Lock Feedback
- Remote Door Unlock
- Remote Start Auto Cool Seats
- Remote Start Auto Heat Seats
- Remote Window Operation
- Passive Door Unlock
- Passive Door Lock
- Remote Left in Vehicle Alert

Remote Unlock Light Feedback

When on, the exterior lamps will flash when unlocking the vehicle with the RKE transmitter.

Touch Off or Flash Lights.

Remote Lock Feedback

This allows selection of what type of feedback is given when locking the vehicle with the RKE transmitter.

Touch Off, Lights and Horn, Lights Only, or Horn Only.

Remote Door Unlock

This allows selection of which doors will unlock when pressing 🔓 on the RKE transmitter.

Touch All Doors or Driver Door.

Remote Start Auto Cool Seats

If equipped and turned on, this feature will turn on the ventilated seats when using remote start on warm days. See *Heated and Ventilated Front Seats* ⇨ *40* and *Remote Vehicle Start* ⇨ *13*.

Touch Off or On.

Remote Start Auto Heat Seats

If equipped and turned on, this feature will turn on the heated seats when using remote start on cold days. See *Heated and Ventilated Front Seats* ⇨ *40* and *Remote Vehicle Start* ⇨ *13*.

Touch Off or On.

Remote Window Operation

This allows the windows to be opened when pressing and holding 🔓 on the RKE transmitter. See *Remote Keyless Entry (RKE) System Operation* ⇨ *7*.

Touch Off or On.

Passive Door Unlock

This allows the selection of what doors will unlock when using the button on the driver door to unlock the vehicle.

Touch All Doors or Driver Door Only.

Passive Door Lock

This allows passive locking to be turned on or off and selects feedback. See *Remote Keyless Entry (RKE) System Operation* ⇨ *7*.

Touch Off, On with Horn Chirp, or On.

Remote Left in Vehicle Alert

This feature sounds an alert when the RKE transmitter is left in the vehicle. This menu also enables the Remote No Longer In Vehicle Alert.

Touch Off or On.

Seating Position

Touch and the following may display:

- Seat Entry Memory
- Seat Exit Memory

Seat Entry Memory

This feature automatically recalls the current driver's previously stored 1 or 2 button positions when the ignition is changed from off to on or ACC/ACCESSORY. See *Memory Seats* ⇨ *38*.

Touch On or Off.

Seat Exit Memory

This feature automatically recalls the previously stored exit button positions when the ignition is changed from on or ACC/ACCESSORY to off if the driver door is open or opened. See *Memory Seats* ⇨ *38*.

Touch Off or On.

Teen Driver

See *Teen Driver* ⇨ *171*.

Valet Mode

This will lock the infotainment system and steering wheel controls. It may also limit access to vehicle storage locations, if equipped.

To enable valet mode:

1. Enter a four-digit code on the keypad.
2. Select Enter to go to the confirmation screen.
3. Re-enter the four-digit code.

Touch Lock or Unlock to lock or unlock the system. Touch Back to go back to the previous menu.

Universal Remote System

See *Radio Frequency Statement* ⇨ *357*.

Universal Remote System Programming

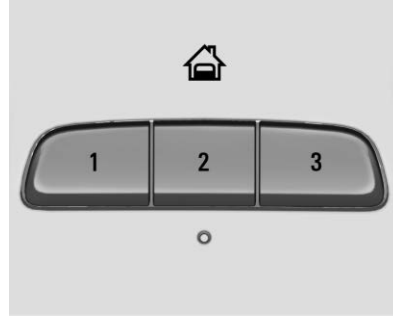

If equipped, these buttons are in the overhead console.

This system can replace up to three remote control transmitters used to activate devices such as garage door openers, security systems, and home automation devices. These instructions refer to a garage door opener, but can be used for other devices.

Do not use the Universal Remote system with any garage door opener that does not have the stop and reverse feature. This includes any garage door opener model manufactured before April 1, 1982.

Read these instructions completely before programming the Universal Remote system. It may help to have another person assist with the programming process.

Keep the original hand-held transmitter for use in other vehicles as well as for future programming. Erase the programming when vehicle ownership is terminated. See "Erasing Universal Remote System Buttons" later in this section.

To program a garage door opener, park outside directly in line with and facing the garage door opener receiver. Clear all people and objects near the garage door.

Make sure the hand-held transmitter has a new battery for quicker and more accurate transmission of the radio-frequency signal.

Programming the Universal Remote System

For questions or programming help, see www.homelink.com/gm or call 1-800-355-3515. For calls placed outside the U.S., Canada, or Puerto Rico, international rates will apply and may differ based on landline or mobile phone.

Programming involves time-sensitive actions, and may time out causing the procedure to be repeated.

To program up to three devices:

1. Hold the end of the hand-held transmitter about 3 to 8 cm (1 to 3 in) away from the Universal Remote system buttons with the indicator light in view. The hand-held transmitter was supplied by the manufacturer of the garage door opener receiver.
2. Press and release one of the three Universal Remote system buttons to be programmed. Press and hold the hand-held transmitter button. Do not release the hand-held transmitter button until the indicator light changes from a slow to a rapid flash or continuous light. Then release the hand-held transmitter button.

   Some garage door openers may require substitution of Step 2 with the procedure under "Radio Signals for Some Gate Operators" later in this section.
3. Press and hold the newly programmed Universal Remote system button for five seconds while watching the indicator light and garage door activation.
   - If the indicator light stays on continuously or the garage door moves when the button is pressed, then programming is complete. There is no need to complete Steps 4–6.
   - If the indicator light does not come on or the garage door does not move, a second button press may be required. For a second time, press and hold the newly programmed button for five seconds. If the indicator light is continuously lit, or the garage door moves, programming is complete.
   - If the indicator light flashes rapidly and the garage door does not move, continue with programming Steps 4–6.

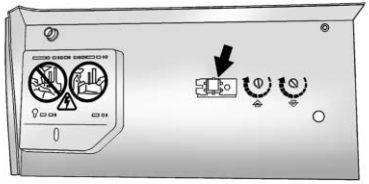

Learn or Smart Button

4. After completing Steps 1–3, locate the Learn or Smart button inside the garage on the garage door opener receiver. The name and color of the button may vary by manufacturer.
5. Press and release the Learn or Smart button. Step 6 must be completed within 30 seconds of pressing this button.
6. Return to the vehicle and firmly press and hold the trained Universal Remote system button for two seconds and release. Repeat the “press/hold/release” sequence up to three times to complete the training process.

The Universal Remote system should now activate the garage door.

Repeat the process for programming the two remaining buttons.

Radio Signals for Some Gate Operators

For questions or programming help, see www.homelink.com/gm or call 1-800-355-3515. For calls placed outside the U.S., Canada, or Puerto Rico, international rates will apply and may differ based on landline or mobile phone.

Some radio-frequency laws and gate operators require transmitter signals to time out or quit after several seconds of transmission. This may not be long enough for the Universal Remote system to pick up the signal during programming.

If the programming did not work, replace Step 2 under “Programming the Universal Remote System” with the following:

Press and hold the Universal Remote system button while pressing and releasing the hand-held transmitter button every two seconds until the signal has been successfully accepted by the Universal Remote system. The Universal Remote system indicator light will flash slowly at first and then change to a rapid flash or continuous solid-light. Proceed with Step 3 under “Programming the Universal Remote System” to complete.

Universal Remote System Operation

Using the Universal Remote System

Press and hold the appropriate Universal Remote system button for at least one-half second. The indicator light will come on while the signal is being transmitted.

Erasing Universal Remote System Buttons

Erase all programmed buttons when vehicle ownership is terminated.

To erase:

1. Press and hold the two outside buttons until the indicator light begins to flash. This should take about 10 seconds.
2. Release both buttons.

Reprogramming a Single Universal Remote System Button

To reprogram any of the system buttons:

1. Press and hold any one of the buttons. Do not release the button.

2. The indicator light will begin to flash after 20 seconds. Without releasing the button, proceed with Step 1 under “Programming the Universal Remote System.”

Lighting

Exterior Lighting
Exterior Lamp Controls 121
Exterior Lamps Off Reminder 122
Headlamp High/Low-Beam Changer 122
Flash-to-Pass 123
Daytime Running Lamps (DRL) 123
Automatic Headlamp System 123
Hazard Warning Flashers 124
Turn and Lane-Change Signals 124

Interior Lighting
Instrument Panel Illumination Control 124
Courtesy Lamps 125
Dome Lamps 125
Reading Lamps 125

Lighting Features
Entry Lighting 126
Exit Lighting 126
Battery Load Management 126
Battery Power Protection 127
Exterior Lighting Battery Saver 127

Exterior Lighting

Exterior Lamp Controls

The exterior lamp control is on the instrument panel to the left of the steering column.

There are four positions.

⏻ **:** Turns the exterior lamps off and deactivates the AUTO mode. Turn ⏻ again to reactivate the AUTO mode.

In Canada, the headlamps will automatically reactivate when the vehicle is shifted out of P (Park).

AUTO : Turns the exterior lamps on and off automatically depending on outside lighting.

: Turns on the parking lamps including all lamps, except the headlamps.

: Turns on the headlamps together with the parking lamps and instrument panel lights.

IntelliBeam System

If equipped, this system turns the vehicle's high-beam headlamps on and off according to surrounding traffic conditions.

The system turns the high-beam headlamps on when it is dark enough and there is no other traffic present.

This light comes on in the instrument cluster when the IntelliBeam system is enabled.

Turning On and Enabling IntelliBeam

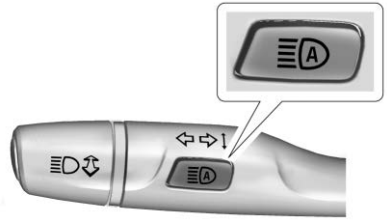

To enable the IntelliBeam system, press ⊜Ⓐ on the turn signal lever when it is dark outside and the exterior lamp control is in AUTO or ≣D.

Driving with IntelliBeam

The system only activates the high beams when driving over 40 km/h (25 mph).

The blue high-beam on light appears on the instrument cluster when the high beams are on.

There is a sensor near the top center of the windshield that automatically controls the system. Keep this area of the windshield clear of debris to allow for best system performance.

The high-beam headlamps remain on, under the automatic control, until one of the following situations occurs:

- The system detects an approaching vehicle's headlamps.
- The system detects a preceding vehicle's taillamps.
- The outside light is bright enough that high-beam headlamps are not required.
- The vehicle's speed drops below 20 km/h (12 mph).
- The IntelliBeam system is disabled by the button on the turn signal lever. If this happens, press ⊜Ⓐ on the turn signal lever when the exterior lamp control is in the AUTO or ≣D position to reactivate the IntelliBeam system. The instrument cluster light will come on to indicate the IntelliBeam system is reactivated.

The high beams may not turn off automatically if the system cannot detect another vehicle's lamps because of any of the following:

- The other vehicle's lamps are missing, damaged, obstructed from view, or otherwise undetected.
- The other vehicle's lamps are covered with dirt, snow, and/or road spray.
- The other vehicle's lamps cannot be detected due to dense exhaust, smoke, fog, snow, road spray, mist, or other airborne obstructions.
- The vehicle's windshield is dirty, cracked, or obstructed by something that blocks the view of the light sensor.
- The vehicle is loaded such that the front end points upward, causing the light sensor to aim high and not detect headlamps and taillamps.
- The vehicle is being driven on winding or hilly roads.

The IntelliBeam system may need to be disabled if any of the above conditions exist.

Exterior Lamps Off Reminder

A warning chime sounds if the driver door is opened while the ignition is off and the exterior lamps are on.

Headlamp High/Low-Beam Changer

Push the turn signal lever away from you and release, to turn the high beams on. To return to low beams, push the lever again or pull it toward you and release.

This indicator light turns on in the instrument cluster when the high-beam headlamps are on.

Flash-to-Pass

To flash the high beams, pull the turn signal lever toward you, and release.

Daytime Running Lamps (DRL)

DRL can make it easier for others to see the front of your vehicle during the day. Fully functional DRL are required on all vehicles first sold in Canada.

The dedicated DRL will come on when all of the following conditions are met:

- The ignition is on.
- The exterior lamp control is in AUTO.
- The light sensor determines it is daytime.
- The parking brake is released or the vehicle is not in P (Park).

The taillamps, instrument panel lights, and other lamps will not be on.

The DRL turn off when the headlamps are turned to ⏻ or the ignition is off. For vehicles sold in Canada, this control only works when the vehicle is parked.

Automatic Headlamp System

When the exterior lamp control is set to AUTO and it is dark enough outside, the headlamps come on automatically.

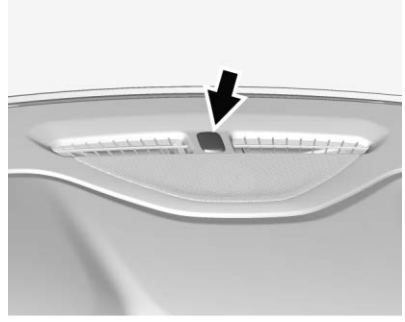

There is a light sensor on top of the instrument panel. Do not cover the sensor.

The system may also turn on the headlamps when driving through a parking garage or tunnel.

If the vehicle is started in a dark garage, the automatic headlamp system comes on immediately. If it is light outside when the vehicle leaves the garage, there is a slight delay before the automatic headlamp system changes to the Daytime Running Lamps (DRL). During that delay, the instrument cluster may not be as bright as usual. Make sure the instrument panel brightness control is in the full bright position. See *Instrument Panel Illumination Control* ⇨ *124*.

When it is bright enough outside, the headlamps will turn off or may change to DRL.

The automatic headlamp system turns off when the exterior lamp control is turned to ⏻ or the ignition is off.

Lights On with Wipers

If the windshield wipers are activated in daylight with the engine on, and the exterior lamp control is in AUTO, the headlamps, parking lamps, and other exterior lamps come on. The transition time for the lamps coming on varies based on wiper speed. When the wipers are not

operating, these lamps turn off. Move the exterior lamp control to ⏻ or ≡DO≡ to disable this feature.

Hazard Warning Flashers

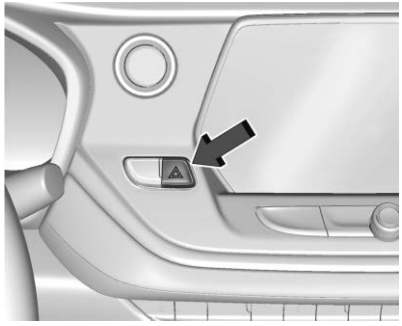

⚠ : Press this button to make the front and rear turn signal lamps flash on and off. This warns others that you are having trouble. Press again to turn the flashers off.

The turn signals do not work while the hazard warning flashers are on.

The hazard warning flashers turn on automatically if the airbags deploy.

Turn and Lane-Change Signals

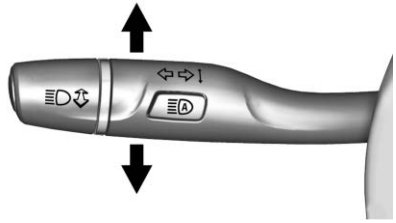

Move the lever all the way up or down to signal a turn.

An arrow on the instrument cluster will flash in the direction of the turn or lane change.

Raise or lower the lever until the arrow starts to flash to signal a lane change. Hold it there until the lane change is complete. If the lever is moved momentarily to the lane change position, the arrow will flash three times. It will flash six times if Tow/Haul Mode is active.

The lever returns to its starting position when it is released.

If after signaling a turn or lane change, the arrow flashes rapidly or does not come on, a signal bulb may be burned out.

Have any burned out bulbs replaced. If a bulb is not burned out, check the fuse. See *Instrument Panel Fuse Block* ⇨ *284*.

Interior Lighting

Instrument Panel Illumination Control

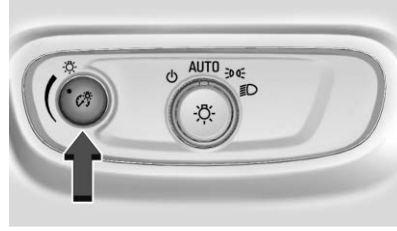

This feature adjusts the brightness of the steering wheel controls and instrument panel lights. The instrument panel illumination control is next to the exterior lamp control.

Push the knob in all the way until it extends out and then turn the knob clockwise or counterclockwise to brighten or dim the lights. Push the knob back in when finished.

Courtesy Lamps

The courtesy lamps come on when any door is opened, 🔒 on the RKE transmitter is pressed, or when the ignition is switched off. See *Dome Lamps* ⇨ *125*.

Dome Lamps

The dome lamp controls are in the overhead console.

To operate, press the following buttons:

OFF : Press to turn off the dome lamps when any door is opened, 🔒 on the RKE transmitter is pressed, or when the ignition is switched off. An indicator light on the button will turn on when the dome lamp override is activated. Press OFF again to deactivate this feature and the indicator light will turn off. The dome lamps will come on when any door is opened, 🔒 on the RKE transmitter is pressed, or when the ignition is switched off.

ON/OFF : Press to turn the dome lamps on manually. Press again to turn the dome lamps off.

Reading Lamps

There are reading lamps on the overhead console and over the rear seats. These lamps come on when any door is opened, 🔒 on the RKE transmitter is pressed, or when the ignition is switched off.

To operate, the ignition must be on, or in ACC/ACCESSORY, or using Retained Accessory Power (RAP).

Front Reading Lamps

The front reading lamps are in the overhead console.

Press the lamp lenses to turn the front reading lamps on or off.

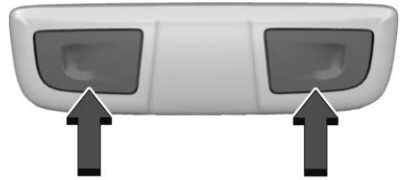

Rear Reading Lamps

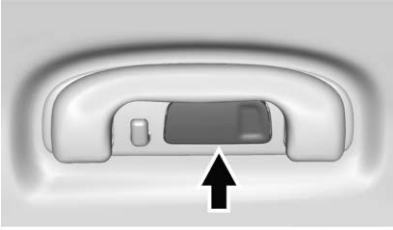

Rear Reading Lamps

The rear reading lamps are over the rear seats or over the rear passenger doors.

Press the lamp lens to turn the rear passenger reading lamps on or off.

Lighting Features

Entry Lighting

Some exterior lamps turn on briefly at night, or in areas with limited lighting, when 🔓 is pressed on the RKE transmitter. After about 30 seconds the exterior lamps turn off. Entry lighting can be disabled manually by turning the ignition on or to ACC/ACCESSORY, or by pressing 🔒 on the RKE transmitter. When any door is opened, the remote unlock is pressed, or when the ignition is switched off, all interior lights turn on and then interior lamps dim to off within 20 seconds after all doors are closed.

The entry lighting feature for exterior lighting can be changed. See "Vehicle Locator Lights" under *Vehicle Personalization* ⇨ *113*.

Exit Lighting

Some exterior lamps come on at night, or in areas with limited lighting, when the driver door is opened after the ignition is turned off. The dome lamp comes on when any door is opened or after the ignition is turned off. The exterior lamps and dome lamp remain on after the door is closed for a set amount of time, then automatically turn off.

The exterior lamps turn off immediately by turning the exterior lamp control off.

The exit lighting for exterior lights can be changed. See *Vehicle Personalization* ⇨ *113*.

Battery Load Management

The vehicle has Electric Power Management (EPM) that estimates the battery's temperature and state of charge. It then adjusts the voltage for best performance and extended life of the battery.

When the battery's state of charge is low, the voltage is raised slightly to quickly bring the charge back up. When the state of charge is high, the voltage is lowered slightly to prevent overcharging. If the vehicle has a voltmeter gauge or a voltage display on the Driver Information Center (DIC), you may see the voltage move up or down. This is normal. If there is a problem, an alert will be displayed.

The battery can be discharged at idle if the electrical loads are very high. This is true for all vehicles. This is because the generator (alternator) may not be spinning fast enough at idle to produce all of the power needed for very high electrical loads.

A high electrical load occurs when several of the following are on, such as: headlamps, high beams, rear window defogger, climate control fan at high speed, heated seats, engine cooling fans, trailer loads, and loads plugged into accessory power outlets.

EPM works to prevent excessive discharge of the battery. It does this by balancing the generator's output and the vehicle's electrical needs. It can increase engine idle speed to generate more power whenever needed. It can temporarily reduce the power demands of some accessories.

Normally, these actions occur in steps or levels, without being noticeable. In rare cases at the highest levels of corrective action, this action may be noticeable to the driver. If so, a DIC battery voltage and charging message displays. It is recommended that the driver reduce the electrical loads as much as possible. See *Driver Information Center (DIC) (Base and Midlevel)* ⇨ *107* or *Driver Information Center (DIC) (Uplevel)* ⇨ *110*.

Battery Power Protection

This feature shuts off the interior lamps if they are left on for more than 10 minutes when the ignition is off. This will keep the battery from draining.

Exterior Lighting Battery Saver

The exterior lamps turn off about 10 minutes after the ignition is turned off, if the parking lamps or headlamps have been manually left on. This protects against draining the battery. To restart the 10-minute timer, turn the exterior lamp control to the off position and then back to the parking lamp or headlamp position.

To keep the lamps on for more than 10 minutes, the ignition must be on or in ACC/ACCESSORY.

Infotainment System

Introduction
Introduction 128
Overview 129
Steering Wheel Controls 130
Using the System 131
Software Updates 134

Radio
AM-FM Radio 134
HD Radio Technology 135
Radio Data System (RDS) 136
Satellite Radio 136
Radio Reception 137
Multi-Band Antenna 137

Audio Players
Avoiding Untrusted Media Devices 137
USB Port 137
Bluetooth Audio 140

OnStar System
OnStar System 141

Navigation
Using the Navigation System 142
Maps 145
Navigation Symbols 145
Destination 146
OnStar System 151
Global Positioning System (GPS) 152
Vehicle Positioning 152
Problems with Route Guidance 153
If the System Needs Service 153
Map Data Updates 153
Database Coverage Explanations 153

Voice Recognition
Voice Recognition 154

Phone
Bluetooth (Overview) 159
Bluetooth (Pairing and Using a Phone) 159
Apple CarPlay and Android Auto 163

Settings
Settings 164
Teen Driver 171

Trademarks and License Agreements
Trademarks and License Agreements ... 173

Introduction

Read the following pages to become familiar with the features.

⚠ Warning

Taking your eyes off the road for too long or too often while using any infotainment feature can cause a crash. You or others could be injured or killed. Do not give extended attention to infotainment tasks while driving. Limit your glances at the vehicle displays and focus your attention on driving. Use voice commands whenever possible.

The infotainment system has built-in features intended to help avoid distraction by disabling some features when driving. These features may gray out when they are unavailable. Many infotainment features are also available through the instrument cluster and steering wheel controls.

Before driving:

- Become familiar with the operation, center stack controls, steering wheel controls, and infotainment display.

- Set up the audio by presetting favorite stations, setting the tone, and adjusting the speakers.
- Set up phone numbers in advance so they can be called easily by pressing a single control or by using a single voice command.

See *Distracted Driving* ⇨ *188*.

Active Noise Cancellation (ANC)

If equipped, ANC reduces engine noise in the vehicle's interior. ANC requires the factory-installed audio system, radio, speakers, amplifier (if equipped), induction system, and exhaust system to work properly. Deactivation is required by your dealer if related aftermarket equipment is installed.

Overview

Infotainment System

The infotainment system is controlled by using the infotainment display, controls on the center stack, steering wheel controls, and voice recognition.

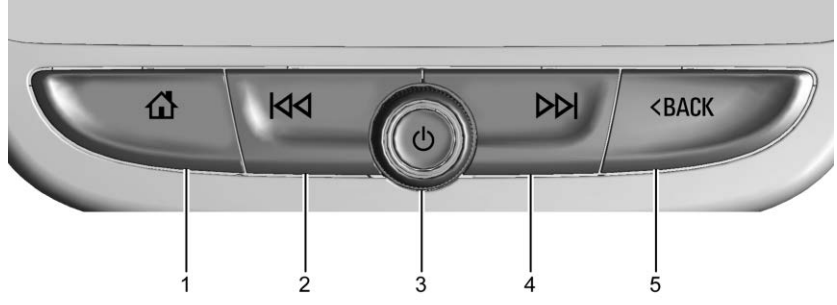

Uplevel Radio Shown. Base Radio Similar.

1. ⌂ (Home Page)
   - Press to go to the Home Page. See "Home Page" later in this section.
   - Press to exit Android Auto or Apple CarPlay. To enter back into Android Auto or Apple CarPlay, press and hold. See *Apple CarPlay and Android Auto* ⇨ *163*.
2. ⏮
   - Radio: Press and release to go to the previous station or channel. Press and hold to fast seek the next strongest previous station or channel. See *AM-FM Radio* ⇨ *134*.
   - USB/Bluetooth: Press to seek to the beginning of the current or previous track. Press and hold to quickly reverse through a track. Release to return to playing speed. See *USB Port* ⇨ *137* or *Bluetooth Audio* ⇨ *140*.
3. ⏻ (Power)
   - Press to turn the power on.
   - Press and hold to turn the power off.
   - Press to mute/unmute the system when on.

- When the power is on and the system is not muted, a quick status pane will display when ⏻ is pressed. Pressing ⏻ will mute the system and trigger this pane to show a long press is required to actually power down the system.
- Turn to decrease or increase the volume.

4. ⏭
   - Radio: Press and release to go to the next station or channel. Press and hold to fast seek the next strongest station or channel.
   - USB/Bluetooth: Press to seek the next track. Press and hold to fast forward through a track. Release to return to playing speed. See *USB Port* ⇨ *137* or *Bluetooth Audio* ⇨ *140*.
5. < BACK or 📞
   - Press < BACK to return to the previous display in a menu.
   - Press 📞 and release to access the phone display or answer an incoming call.

Home Page

The Home Page is where vehicle application icons are accessed. Some applications are disabled when the vehicle is moving.

The Home Page can be set up to have up to four pages with eight icons per page.

Swipe left or right across the display to access the pages of icons.

Managing Home Page Icons

1. Touch and hold any of the Home Page icons to enter edit mode.
2. Continue holding the icon and drag it to the desired position.
3. Release your finger to drop the icon in the desired position.
4. To move an application to another page, drag the icon to the edge of the display toward the desired page.
5. Continue dragging and dropping application icons as desired.

Steering Wheel Controls

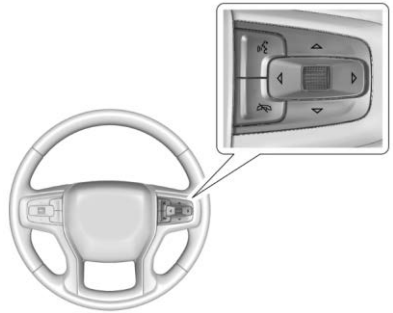

If equipped, some audio controls can be adjusted at the steering wheel.

: Press to answer an incoming call or start voice recognition. See *Bluetooth (Overview)* ⇨ *159* or *Bluetooth (Pairing and Using a Phone)* ⇨ *159*.

: Press to decline an incoming call or end a current call. Press to mute or unmute the infotainment system when not on a call.

◁ **or** ▷ **:** Press to move left or right between the interactive display zones in the cluster. Press the thumbwheel to select.

△ **or** ▽ **:** Use the thumbwheel to scroll up or down in a list. Press the thumbwheel to select.

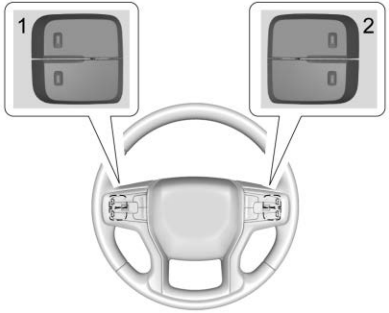

The favorites and volume switches are on the back of the steering wheel.

1. Favorite: When on a radio source, press to select the next or previous audio broadcast favorite. When listening to a media device, press to select the next or previous track.
2. Volume: Press to increase or decrease the volume.

Using the System

Audio

Touch the Audio icon to display the active audio source page. Examples of available sources may include AM, FM, SXM (if equipped), USB, and Bluetooth.

Phone

Touch the Phone icon to display the Phone main page. See *Bluetooth (Overview)* ⇨ *159* or *Bluetooth (Pairing and Using a Phone)* ⇨ *159*.

Nav

Touch the Nav icon (if equipped) to display the navigation map. See *Using the Navigation System* ⇨ *142*.

Climate

Touch the Climate icon to display the Climate main page. See *Dual Automatic Climate Control System* ⇨ *182*.

Wi-Fi Hotspot

Touch the Wi-Fi Hotspot icon to display the Wi-Fi Hotspot information. See *Settings* ⇨ *164*.

Users

If equipped, touch the Users icon to sign in or create a new user profile, and follow the on-screen instructions.

Only four user profiles can be active at one time in the vehicle. It may be necessary to remove a profile from the menu before creating or signing into an existing profile. The removed profile can be logged into at a later time.

Settings

Touch the Settings icon to display the Settings menu. See *Settings* ⇨ *164*.

Apple CarPlay

Touch the Apple CarPlay icon to activate Apple CarPlay (if equipped) after a supported device is connected. See *Apple CarPlay and Android Auto* ⇨ *163*.

Android Auto

Touch the Android Auto icon to activate Android Auto (if equipped) after a supported device is connected. See *Apple CarPlay and Android Auto* ⇨ *163*.

Apps

If equipped, in-vehicle apps are available for download. Touch the Apps icon on the Home Page to begin.

Downloading and using in-vehicle apps requires Internet connectivity which can be accessed with a data plan through the vehicle's built-in 4G LTE Wi-Fi hotspot, if equipped, or a compatible mobile device hotspot. On most mobile devices, activation of the Wi-Fi hotspot is in the device's Settings menu under Mobile Network Sharing, Personal Hotspot, Mobile Hotspot, or similar.

Availability of apps and connectivity varies by vehicle, conditions, and location. Data plan rates apply. Features are subject to change. For more information, see www.my.chevrolet.com/learn.

OnStar Services

If equipped, touch the OnStar Services icon to display the OnStar Services and Account pages. See *OnStar Overview* ⇨ *360* and *OnStar System* ⇨ *141*.

Camera

If equipped, touch the Camera icon to access the camera application. See *Assistance Systems for Parking or Backing* ⇨ *227*.

Shortcut Tray

The shortcut tray is near the bottom of the display. It shows up to four applications.

Infotainment Display Features

Infotainment display features show on the display when available. When a feature is unavailable, it may gray out. When a feature is touched, it may highlight.

Haptic Feedback

If equipped, haptic feedback is a pulse that occurs when an icon or option is touched on the display or when controls on the center stack are pressed.

Infotainment Gestures

Use the following finger gestures to control the infotainment system.

Touch/Tap

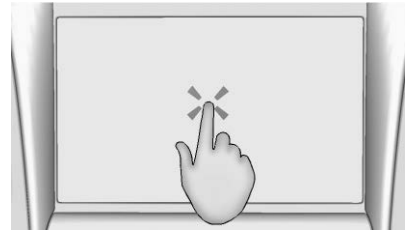

Touch/tap is used to select an icon or option, activate an application, or change the location inside a map.

Touch and Hold

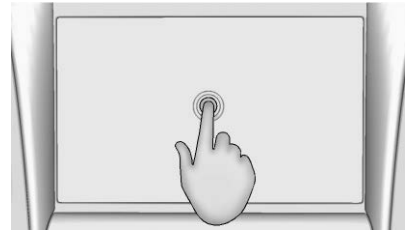

Touch and hold can be used to start another gesture, or to move or delete an application.

Drag

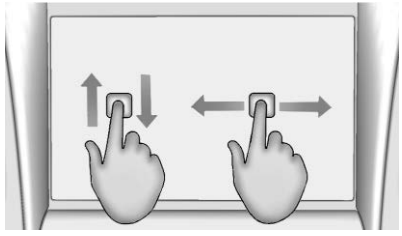

Drag is used to move applications on the Home Page, or to pan the map. To drag the item, it must be held and moved along the display to the new location. This can be done up, down, right, or left. This feature is only available when vehicle is parked and not in motion.

Nudge

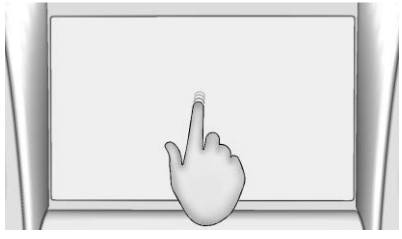

Nudge is used to move items a short distance on a list or a map. To nudge, hold and move the selected item up or down to a new location.

Fling or Swipe

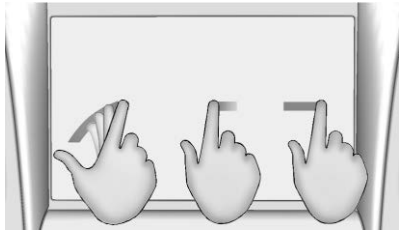

Fling or swipe is used to scroll through a list, pan the map, or change page views. Do this by placing a finger on the display then moving it rapidly up and down or right and left.

Spread

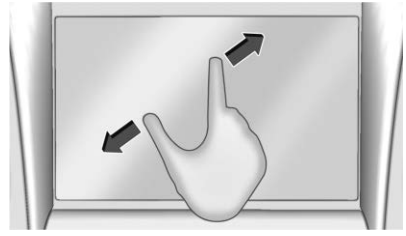

Spread is used to zoom in on a map, certain images, or a web page. Place finger and thumb together on the display, then move them apart.

Pinch

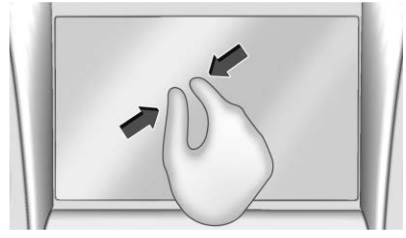

Pinch is used to zoom out on a map, certain images, or a web page. Place finger and thumb apart on the display, then move them together.

Cleaning High Gloss Surfaces and Vehicle Information and Radio Displays

For vehicles with high gloss surfaces or vehicle displays, use a microfiber cloth to wipe surfaces. Before wiping the surface with the microfiber cloth, use a soft bristle brush to remove dirt that could scratch the surface. Then use the microfiber cloth by gently rubbing to clean. Never use window cleaners or solvents. Periodically hand wash the microfiber cloth separately, using mild soap. Do not use bleach or fabric softener. Rinse thoroughly and air dry before next use.

Software Updates

Over-the-Air Software Updates

If equipped, see “Updates” under *Settings* ⇨ *164* for details on software updates.

Radio

AM-FM Radio

Playing the Radio

From the Home Page, touch the Audio icon to display the active audio source page. Choose from the three most recently used sources listed at the left side of the display or touch the More option to display a list of available sources. Examples of available sources may include AM, FM, SXM (if equipped), MyMedia, USB, and Bluetooth.

Infotainment System Sound Menu

From any of the audio source main pages, touch Sound to display the following:

Equalizer : Touch to adjust Bass, Midrange, Treble, and Surround (if equipped) using the options on the infotainment display.

Fade/Balance : Touch to adjust by using the controls on the infotainment display or by tapping/dragging the crosshair.

Finding a Station

Seeking a Station

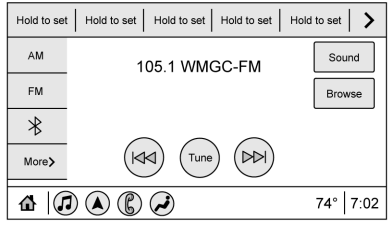

From the AM, FM, or SXM (if equipped) option, press ⏭ or ⏮ on the center stack to search for the previous or next strong station or channel.

Browsing Stations

Touch the Browse option to list all available stations or channels. Navigate up and down through all stations by scrolling the list. Touch the station or channel you want to listen to. Touch ☆ to save the station or channel as a favorite.

If equipped, touch Update Station List to update the active stations in your area.

Direct Tune

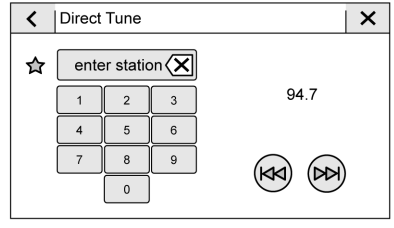

Access Direct Tune by touching the Tune icon on the infotainment display to bring up the keypad. Navigate through all frequencies using the arrows on the right side of the

Direct Tune display. Directly enter a station or channel using the keypad. When a new station or channel is entered, the information about that station or channel displays on the right side. This information will update with each new valid frequency. Touch ☆ to save the station or channel as a favorite.

The keypad will gray out entries that do not contribute to a valid frequency and will automatically place a decimal point within the frequency number.

Touch (X) to delete one number at a time. Touch and hold (X) to delete all numbers.

A valid AM or FM station will automatically tune to the new frequency but not close the Direct Tune display. When listening to SXM (if equipped), touch Go after entering the channel. Touch the Back icon on the infotainment display or touch ✕ to exit out of Direct Tune.

The tune arrows on the right side of the Direct Tune display will tune through the complete station or channel list one station step at a time per touch. A touch and hold advances through stations or channels quickly.

If equipped, HD Radio multicast stations cannot be tuned directly through the Direct Tune feature. Only the analog or HD1 station can use that feature. Use the display arrows to adjust to the multicast stations.

AM, FM, and SXM Categories

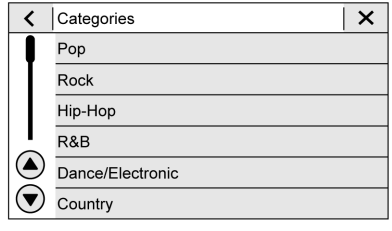

From the AM stations, if equipped with HD Radio, FM, or SXM (if equipped) display, touch Categories at the top of the Browse menu to access the categories list. The list contains names associated with the AM or FM stations, or SXM channels. Touch a category name to display a list of stations or channels for that category. Touching a station or channel from the list will tune the radio to that station or channel.

Storing Radio Station Presets

Favorites show in the area at the top of the display.

AM, FM, SXM (if equipped), and HD Radio Stations (if equipped) : Press and hold a preset to store the current station or channel as a favorite. Touch a saved favorite to recall a favorite station or channel.

Favorites can also be stored by touching ☆ in a station or channel list. This will highlight indicating that it is now saved as a favorite.

The number of favorites displayed is automatically adjusted by default, but can be manually adjusted in Settings in the System tab under Favorites and then Set Number of Audio Favorites. It can also be adjusted in Settings in the Apps tab under Audio and then Set Number of Audio Favorites.

HD Radio Technology

If equipped, HD Radio is a free service with features such as digital quality sound, more stations available on a single frequency such as HD2 and HD3, and display information such as artist and song title.

From the Now Playing display, touch the HD Radio icon to turn HD on or off.

Station Access

To access HD Radio stations:

1. Tune the radio to the station. If HD Radio is turned on and the station is broadcasting in HD Radio, the radio will automatically tune to the HD version of the current channel (HD1) after several seconds. The radio will also display icons representing additional channels (HD2, ...HD8), that may be available. When the radio successfully tunes to a HD station, the HD logo will display and digital audio will play.
2. Touch the display arrows to tune to the previous or next HD Radio station.

There may be a delay before the station starts playing.

The HD Radio station number is indicated next to the HD logo.

HD Radio stations can be saved as favorites.

For a list of all stations, see www.hdradio.com.

HD Radio Troubleshooting

Digital Audio Delay : Wait for the signal to process. This can take several seconds.

Volume Change, Audio Skip, Echo, Digital Audio Lost : Station signal strength may be weak, the station is out of range, or the station may be out of alignment. Verify proper reception on another station.

If the HD Radio signal weakens while listening to HD1, the radio will automatically switch to the analog version of the radio station.

If the HD Radio signal loses reception while listening to stations HD2 to HD8, the radio mutes until the signal can be recovered or until the station is changed.

HD Radio can be disabled if driving in a weak signal area. Touch HD Radio On/Off to toggle HD Radio reception on and off.

Radio Data System (RDS)

If equipped, RDS features are available for use only on FM stations that broadcast RDS information. With RDS, the radio can:

- Group stations by Category (i.e., Program Type) such as Rock, Jazz, Classical, etc.
- Display messages from radio stations.

This system relies on receiving specific information from these stations and only works when the information is available. It is possible that a radio station could broadcast incorrect information that causes the radio features to work improperly. If this happens, contact the radio station.

When information is broadcast from a RDS station, the station name or call letters display on the audio screen. Radio text supporting the currently playing broadcast may also appear.

Satellite Radio

SiriusXM Radio Service

If equipped, vehicles with a valid SiriusXM radio subscription can receive SiriusXM programming.

SiriusXM radio has a wide variety of programming and commercial-free music, coast to coast, in digital-quality sound. In the U.S., see www.siriusxm.com or call 1-888-601-6296. In Canada, see www.siriusxm.ca or call 1-877-438-9677.

When SiriusXM is active, the channel name, number, song title, and artist appear on the display.

SiriusXM with 360L

SiriusXM with 360L interface has enhanced in-vehicle listening experience for subscribers. The experience now offers more categories and system learned recommendations toward discovering more personalized content.

To use the full SiriusXM 360L program, including streaming content and listening recommendations, OnStar Connected Access is required. Connected vehicle services vary by model and require a complete working electrical system, cell reception, and GPS signal. An active connected plan is required.

Reference the SiriusXM user guide for use and subscription information.

Radio Reception

Unplug electronic devices from the accessory power outlets if there is interference or static in the radio.

FM

FM signals only reach about 16 to 65 km (10 to 40 mi). Although the radio has a built-in electronic circuit that automatically works to reduce interference, some static can occur, especially around tall buildings or hills, causing the sound to fade in and out.

AM

The range for most AM stations is greater than for FM, especially at night. The longer range can cause station frequencies to interfere with each other. Static can also occur when things like storms and power lines interfere with radio reception. When this happens, try reducing the treble on the radio.

SiriusXM Satellite Radio Service

If equipped, SiriusXM Satellite Radio Service provides digital radio reception. Tall buildings or hills can interfere with satellite radio signals, causing the sound to fade in and out. In addition, traveling or standing under heavy foliage, bridges, garages, or tunnels may cause loss of the SiriusXM signal for a period of time. Some cellular services may interfere with SXM reception causing loss of signal.

Mobile Device Usage

Mobile device usage, such as making or receiving calls, charging, or just having the mobile device on may cause static interference in the radio. Unplug the mobile device or turn it off if this happens.

Multi-Band Antenna

The roof antenna may be used for radio, navigation, and OnStar, depending on the equipped options. Keep clear of obstructions for clear reception. If the vehicle has a sunroof, and it is open, reception can also be affected.

Audio Players

Avoiding Untrusted Media Devices

When using media devices such as SD cards, USB devices, and mobile devices, consider the source. Untrusted media devices could contain files that affect system operation or performance. Avoid use if the content or origin cannot be trusted.

USB Port

Audio stored on a USB device may be listened to.

The vehicle may be equipped with two USB ports in the center console under the armrest and another two on the center stack. These ports are for data and charging. There may also be two USB ports for charging only at the rear of the center console.

Caution

To avoid vehicle damage, unplug all accessories and disconnect all accessory cables from the vehicle when not in use. Accessory cables left plugged into the vehicle, unconnected to a device, could be damaged or cause an electrical short if the unconnected end comes in contact with liquids or another power source such as the accessory power outlet.

Playing from a USB

A USB mass storage device can be connected to the USB port.

Audio extensions supported by the USB may include:

- MP3
- AAC
- OGG
- 3GP

Gracenote

When plugging in a USB device, Gracenote service builds voice tags for music. Voice tags allow artists, albums with hard to pronounce names, and nicknames to be used to play music through voice recognition, if equipped.

While indexing, infotainment features may be available.

My Media Library

MyMedia is only available when more than one indexed device is connected. It allows access to content from all indexed media sources. MyMedia will show as an available source in the Source page.

USB MP3 Player and USB Devices

The USB MP3 players and USB devices connected must comply with the USB Mass Storage Class specification (USB MSC).

To play a USB device:

1. Connect the USB.
2. Touch Audio from the Home Page.
3. Touch the More option and then touch the USB device.

Use the following when playing an active USB source:

▷ **:** Touch to play the current media source.

II : Touch to pause playback of the current media source.

⏮ **:**

- Touch to seek the beginning of the current or previous track.
- Touch and hold to reverse quickly through playback. Release to return to playing speed. Elapsed time displays.

⏭ **:**

- Touch to seek the next track.
- Touch and hold to advance quickly through playback. Release to return to playing speed. Elapsed time displays.

Shuffle : Touch the shuffle icon to play music in random order.

USB Sound Menu

See “Infotainment System Sound Menu” under *AM-FM Radio* ⇨ *134*.

USB Browse Menu

When a list of songs, albums, artists, or other types of media displays, the up and down arrows and A-Z appear on the left

side. Select A-Z to view a display that will show all letters of the alphabet and select the letter to go to.

Touch the up and down arrows to move the list up and down.

Touch Browse and the following may display:

Playlists:

1. Touch to view the playlists stored on the USB.
2. Touch a playlist to view the list of all songs in that playlist.
3. Touch a song from the list to begin playback.

Supported playlist extensions are m3u and pls.

Artists:

1. Touch to view the list of artists stored on the USB.
2. Touch an artist name to view a list of all albums by the artist.
3. To select a song, touch All Songs or touch an album and then touch a song from the list.

Songs:

1. Touch to display a list of all songs on the USB.
2. To begin playback, touch a song from the list.

Albums:

1. Touch to view the albums on the USB.
2. Touch the album to view a list of all songs on the album.
3. Touch a song from the list to begin playback.

Genres:

1. Touch to view the genres on the USB.
2. Touch a genre to view a list of artists.
3. Touch an artist to view albums by that artist.
4. Touch an album to view songs on the album.
5. Touch a song to start playback.

Composers:

1. Touch to view the composers on the USB.
2. Touch a Composer to view a list of albums by that composer.
3. Touch an album or All Songs to view a list of songs.
4. Touch a song from the list to begin playback.

Folders:

1. Touch to view the directories on the USB.
2. Touch a folder to view a list of all files.
3. Touch a file from the list to begin playback.

Podcasts : Touch to view the podcasts on the connected Apple device and get a list of podcast episodes.

Audiobooks:

1. Touch to view the audiobooks stored on the Apple device.
2. Touch an audiobook to get a list of chapters.
3. Touch the chapter from the list to begin playback.

File System and Naming

File systems supported by the USB may include:

- FAT32
- NTFS
- HFS+

The songs, artists, albums, and genres are taken from the file's song information and are only displayed if present. The radio displays the file name as the track name if the song information is not available.

Supported Apple Devices

To view supported devices, see my.chevrolet.com/learn.

Storing and Recalling Media Favorites

To store media favorites, touch Browse to display a list of media types.

Touch one of the following Browse options to save a favorite:

Playlists : Touch ☆ next to any playlist to store the playlist as a favorite. Touch a saved favorite to recall a favorite playlist. The first song in the playlist begins to play.

Artists : Touch ☆ next to any artist to store the artist as a favorite. Touch a saved favorite to recall a favorite artist. The first song in the artist list begins to play.

Songs : Touch ☆ next to any song to store the song as a favorite. Touch a saved favorite to recall a favorite song.

Albums : Touch ☆ next to any album to store the album as a favorite. Touch a saved favorite to recall a favorite album. The first song in the album list begins to play.

Genres : Touch ☆ next to any genre to store the genre as a favorite. Touch a saved favorite to recall a favorite genre. The first song of the genre begins to play.

Podcasts : Touch ☆ next to any podcast to store the podcast as a favorite. Touch a saved favorite to recall a favorite podcast. The podcast begins to play.

Audiobooks : Touch ☆ next to any audiobook to store the audiobook as a favorite. Touch a saved favorite to recall a favorite audiobook. The first chapter in the audiobook begins to play.

Media Playback and Mute

USB playback will be paused if the system is muted. If the steering wheel mute control is pressed again, playback will resume.

If the source is changed while in mute, playback resumes and audio will unmute.

Bluetooth Audio

Music may be played from a paired Bluetooth device. See *Bluetooth (Overview)* ⇨ *159* or *Bluetooth (Pairing and Using a Phone)* ⇨ *159* for help pairing a device.

Volume and song selection may be controlled by using the infotainment controls or the mobile device. If Bluetooth is selected and no volume is present, check the volume setting on the infotainment system.

Music can be launched by touching Bluetooth from the recent sources list on the left of the display or by touching the More option and then touching the Bluetooth device.

To play music via Bluetooth:

1. Power on the device, and pair to connect the device.
2. Once paired, touch Audio from the Home Page, then touch Bluetooth from the recent sources list on the left of the display.

Bluetooth Sound Menu

See "Infotainment System Sound Menu" under *AM-FM Radio* ⇨ *134*.

Manage Bluetooth Devices

From the Home Page:

1. Touch Audio.
2. Touch More.
3. Touch Bluetooth.
4. Touch Devices to add or delete devices.

When touching Bluetooth, the radio may not be able to launch the audio player on the connected device to start playing. When the vehicle is not moving, use the mobile device to begin playback.

All devices launch audio differently. When selecting Bluetooth as a source, the radio may show as paused on the display. Press play on the device or touch ▷ on the display to begin playback.

Browse functionality will be provided where supported by the Bluetooth device. This media content will not be part of the MyMedia source mode.

Some smartphones support sending Bluetooth music information to display on the radio. When the radio receives this information, it will check to see if any is available and display it. For more information about supported Bluetooth features, see my.chevrolet.com/learn.

OnStar System

4G LTE

If equipped with 4G LTE, up to seven devices, such as smartphones, tablets, and laptops, can be connected to high-speed Internet through the vehicle's built-in Wi-Fi hotspot.

Call 1-888-4ONSTAR (1-888-466-7827) to connect to an OnStar Advisor for assistance. See www.onstar.com for vehicle availability, details, and system limitations. Service and connectivity may vary by make, model, year, carrier, availability, and conditions. 4G LTE service is available in select markets. 4G LTE performance is based on industry averages and vehicle systems design. Some services require a data plan.

The OnStar App

If equipped, the infotainment system has OnStar controls in the embedded OnStar app on the Home Page. Most OnStar functions that can be performed with the buttons can be done using the app. To open the app, touch the OnStar icon on the Home Page. App updates require a corresponding service plan. Features vary by region and model. Features are subject to change. For more information, see my.chevrolet.com/learn or press ⊙.

Services

The Services tab displays the default view for the app. Use this page to launch the available OnStar services. Touch a service to open its display. Touch Wi-Fi to launch the connections manager. Turn-by-Turn and Advisor Call are the other tiled options.

Account

The Account tab displays a snapshot of the account linked with the vehicle. If there is no such account, this tab will show all values as ——. The advisor call icon will be active even if there is no active account.

Advisor Call

Selecting Advisor Call is the same as pressing ⊙ or calling 1-888-4ONSTAR (1-888-466-7827). The X option in the upper right corner of the screen does not end the call, but returns to the previous screen.

Turn-by-Turn Directions

With a connected plan, an OnStar Advisor can download a destination to the vehicle or its embedded navigation system,

if equipped. Select Turn-by-Turn Directions from the Services tab of the OnStar app to call an Advisor or select a recent or favorite destination. Touch the navigation icons to select home, address or place. A destination transfer from OnStar will show the detail view of the destination when it is transferred from OnStar to the Navigation application. See www.onstar.com for a coverage map. Services vary by model. Map coverage is available in the United States, Puerto Rico, and Canada.

Wi-Fi Hotspot

Touch to display the Settings page, which shows the configurations for the vehicle hotspot and allows them to be changed.

For more information, see www.onstar.com.

Navigation

Using the Navigation System

If equipped, launch the Nav application by touching the Nav icon on the Home Page or on the shortcut tray near the bottom of the infotainment display.

When the Nav application is launched for the first time, a product walkthrough is available. Use of the feature requires the Terms and Conditions and the Privacy statement to be confirmed. If available and signed into a profile, it is also suggested to enable and confirm Predictive Navigation.

Predictive Navigation (If Equipped)

If Predictive Navigation is available and confirmed, this feature learns preferences by remembering where the vehicle has been. It uses the locations and navigation history to personalize routes and results.

Predictive Navigation may learn elements such as:

- Personalized routes based on preferred streets.
- Search results that provide best matches at the top of the list.
- Predictive traffic.
- Local map content updating.

Predictive Navigation can also be enabled or disabled at a later time by touching ··· (Options). While in Options, touch Settings, then Map and Navigation Settings, and then Predictive Navigation. See *Settings* ⇨ *164*.

Navigation Map View

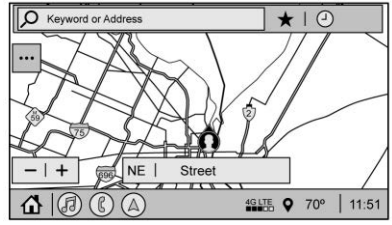

After opening the Nav application for the first time, the application will always open in full map view displaying the vehicle's current location. When the vehicle is stopped, the search bar will appear along the top of the navigation map view. Manually close the search bar by touching ✕. When the vehicle is moving, the (Search) icon will replace the search bar to maximize the full map view.

Destination Card Preferences

From the Nav application, set up Home and Work addresses to enable one-touch navigation. To set up Home and Work addresses, touch ··· and select Settings, then Map and Navigation Settings, and then Destination Card Preferences. Show My

Places on Map should be on by default. Select and enter Home and/or Work address and save.

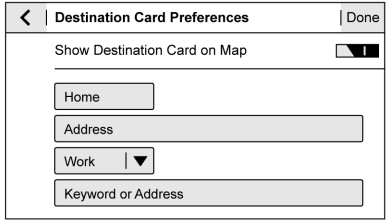

If the vehicle's system is not signed into a customized profile, the current location icon uses a generic symbol. Once signed into a customized profile, the current location symbol will show a customized icon. See *Navigation Symbols* ⇨ *145*.

Map and Navigation Settings

Touch ··· while in the map view to display options. The following may display:

- 3D Heading Up, 2D Heading Up, 2D North
- Show on Map
- Traffic Events (available with OnStar Connected Navigation)
- Settings
- Edit Destination (if a route has been set)
- Avoid on Route (if a route has been set)

Touch Settings to view Map and Navigation Settings. The following may display:

- Destination Card Preferences
- Map Preferences
- Route Preferences
- Navigation Voice Control
- Traffic Preferences
- Alert Preferences
- Fuel Grade Preferences
- Manage History
- Predictive Navigation: See "Predictive Navigation (If Equipped)" previously in this section.
- About

To exit a list, touch ✕ in the top right corner to return to the main map view.

Make sure to set up preferences before setting a destination and starting active guidance.

Map Preferences

Touch to choose between basic map feature configurations:

Map Colors

- Auto – Touch to automatically change modes based on lighting conditions.
- Day (Light)
- Night (Dark)

3D Landmark (Default is On) : Touch On or Off. When turned on, the system will display all 3D Landmarks on the map depending on the zoom level.

3D Building (Default is Off) : Touch On or Off. When turned on, the system will display all of the possible 3D building shapes on the map depending on the zoom level.

Show Terrain in 3D (Default is Off) : If equipped, touch On or Off. When turned on, the system will display terrain information on the map in 3D view.

Auto-Zoom (Default is On) : Touch On or Off. When turned on, the system will automatically adjust the zoom level when the vehicle is approaching a turn. After the turn is completed, the system automatically brings the zoom back to the originally set level. If the vehicle is approaching a turn with the next turn occurring shortly after, the Auto-Zoom will remain on until both turns are completed.

Route Preferences

Touch to access the Route Preferences. The choices are:

- Preferred Route – Choose from two different route options: Fastest or Eco-Friendly.
  - Fastest would be the route with the shortest drive time.
  - Eco-Friendly would be the most fuel-efficient route.
- Avoid on Current Route – Choose any of the road features to avoid while on route:
  - Highways
  - Unpaved Roads
  - Ferries
  - Carpool Lanes
  - Toll Roads
  - Tunnels
  - Country Borders

Navigation Voice Control

Touch to access the voice control setting display.

- Navigation Volume – To adjust the volume level, touch the up and down arrows. If the voice guidance prompt is being heard, volume can also be adjusted using the knob on the center stack or the volume switch on the steering wheel.
- Navigation Voice Prompt Level during a Call. Options available are:
  - Full Prompt (Selected by default)
  - Tone Only
  - None

Traffic Events (If Equipped)

This feature provides a list of events that are on the route or nearby. Touch ··· and then select Traffic Events. An OnStar connected Navigation service plan is required.

Traffic Preferences (If Equipped)

While in Map View, touch ···, then Settings and then Map and Navigation Settings to access Traffic Preferences. When Show Traffic on Map is turned on, the feature provides an overview of the traffic flow using different coded colors. The following options are available for rerouting:

- Auto Reroute to Better Route – The system will automatically reroute if the system detects there is a traffic issue ahead.
- Ask Before Rerouting (Default) – If the system detects there is a traffic issue ahead, it will display a pop-up with details about the issue. Choose to reroute or cancel the alert.
- Never Search for Better Route – The system will not check for a better route until one of the above options is selected.

Alert Preferences

Set alerts on or off during both inactive and active guidance views. The following alerts may be available:

- Road Safety Alerts – Touch to display upcoming School Zones.
- Traffic Camera Alerts

Manage History

Touch Manage History to access the History options:

- Clear Recent Destinations – Touch ⊗ to clear the recent destinations.
- Clear Search History – Touch ⊗ to clear the search history.

About

Touch to display software information, such as:

- Telenav Terms and Conditions

- Telenav Privacy Statement
- Navigation Version

Maps

The Nav application requires a map database to run. It is stored on an SD card that is connected to the infotainment system. If the map database is not available, a missing SD card error message will be displayed.

SD Card Error Messages

The SD card only works for one unique vehicle. The SD card must pass authentication verification to be used for that specific vehicle. Potential error scenarios and messages include:

- The SD card has initialized for the first time: “Once initialized, this SD card can only be used for navigation in this vehicle.”
- The SD card is not working properly: “SD card is not functioning properly. (Error Code).”
- The SD card is not paired with the existing system: “This SD card is not valid in this vehicle for navigation. See Owner’s Manual for more detail or visit your dealer. (Error Code).”
- The SD card has been removed from the slot: “SD card has been removed. (Error Code).”

Touch Continue to resume after the initialization error message. For the other messages, touch OK to return to the Home Page.

Navigation Symbols

Following are the most common symbols that may appear in the Nav application.

This indicates the vehicle’s current location and direction on the map.

This is the vehicle’s current location icon during inactive guidance mode. Once a user profile is created, the current location icon can be customized.

This icon indicates the vehicle’s current location and direction on the map.

The destination pin marks the location of the final destination. Touch the pin to view the destination address or to add it or remove it from the Favorites list. Hide the information by touching the pin one more time. It will automatically time out if no action is taken.

If equipped, smart Points of Interest (POIs) are places of interest for parking and gas stations.

The progress bar provides an overview of the route progress and may show traffic and incidents along the way. As the route proceeds, the vehicle icon moves up the bar.

Touch the icon to zoom out on the map and view the entire route. Touch it again to return to the previous view.

View the drive time by touching the estimated time of arrival (ETA).

Current Location

When the vehicle is parked and not in a Navigation session, the user icon is centered on the map view, highlighting the current location.

Destination

Receiving Destination Directions from Different Sources

Destinations can be received or transferred from different sources to the Nav application for route guidance. If equipped, some of these sources may include:

- Navigation from search results.
- OnStar Advisor destination download.
- An address from the Contacts list.
- An application on the smartphone that can send destinations to the vehicle.
- An application downloaded to the vehicle such as OnStar Services that can send destinations to the navigation system.

Waypoints

Add up to five waypoints, which are additional destinations, along the route. To add an additional stop or waypoint:

1. From active guidance, touch 🔍.
2. Search for the destination using One-Box, Voice search, or the Quick Category icons.
3. Choose search results Along Route, Nearby, or Near Destination.
4. Choose the desired waypoint and touch Add to Trip or replace the current destination by touching New Destination.

Route options are not available for waypoints.

Arriving at a Waypoint

When approaching a waypoint, the system will display a Destination Arrival view. To continue on to the next destination touch the Drive to message on the infotainment display.

If the vehicle passes the waypoint or gets out of the current route, the system will automatically reroute back to this waypoint. At the same time, it will show a Drive to icon along with the next waypoint address so the current waypoint can be skipped and guidance can resume to the next waypoint or destination.

Editing a Waypoint

When waypoints are added during active guidance, the system allows a stop to be deleted or the order to be changed. To edit a waypoint:

1. Touch ⋯.

2. Touch Edit Destinations.
   - Modify destination order by touching and holding the arrow until it is highlighted. Drag to move the waypoint up or down the list.
   - Delete a waypoint by touching 🗑. A pop-up will appear to confirm waypoint removal. Once the request is confirmed, the system will remove the address from the destinations list.

     Touch ✕ on the top right corner so the system can recalculate the route.

     If there is only one address in the destinations list, the system will disable the move and delete functions. The system will not allow the final destination to be deleted.

Map Information

Road network attributes are contained in the map database for map information. Attributes include information such as street names, street addresses, and turn restrictions. A detailed area includes all major highways, service roads, and residential roads. The detailed areas include Places of Interest (POIs) such as restaurants, airports, banks, hospitals, police stations, gas stations, tourist attractions, and historical monuments.

If the vehicle does not have an applicable service plan, the map database may not include data for newly constructed areas or map database corrections that are completed after production. The navigation system provides full route guidance in the detailed map areas.

Zoom Control

The zoom control display is shown on the map view. A few ways to zoom in or out are:

- Touch + or – to zoom in or out on the map.
- Double tap with one finger to zoom in or single tap with two fingers to zoom out on the map.
- Use the index finger and thumb to zoom out by pinching and then zoom in by spreading those two fingers on the map.

Map Gestures and Map Scale

Use the following gestures on the infotainment display to adjust the map scale and display options.

- Pinch to zoom in or out.
- Pan the map.
- Use two fingers to tilt down and change from 2D to 3D. Tilt up to change back to 2D.
- Rotate the map.

See *Using the System* ⇨ *131*.

Mute

When in active guidance, the audio prompts while using navigation can be muted. Touch the speaker icon on the right side of the upper bar. A slash will appear on the speaker to indicate voice guidance is muted.

Active Guidance View

When a destination is chosen and a navigation session is active, the navigation system enters into an Active Guidance View (AGV).

Map Orientation

Touch ••• on the map to access map orientation settings. Map orientation is 3D Heading Up by default.

Available settings are:

- 3D Heading Up (Default): 3D map with the vehicle pointing up. In this mode, the current location icon will always head up and the map will rotate around it.

- 2D Heading Up: 2D map with the vehicle pointing up. In this mode, the current location icon will always head up and the map will rotate around it.
- 2D North Up: 2D map with North pointing up. In this mode, the current location icon will shift as the vehicle turns left and right.

Touch the icon to change the map type. The icon and label will also update accordingly.

Depending on the zoom level of the 2D Heading Up and 3D Heading Up maps, the system may automatically switch to the 2D North Up map.

When in AGV, the entire route can be viewed in 2D North Up by touching the traffic bar. The map will zoom out and readjust to display the full route. When in 2D North Up Route View, the Recenter icon will appear in the middle of the display. Touch either the Recenter icon or the traffic bar again to return to the previous view, either 2D or 3D.

Lane Guidance

The map will display the lane information for the upcoming maneuver if it is available.

Junction View

When a vehicle is on the highway and approaching the exit, an image displays the lane that the vehicle must stay in to complete the next maneuver.

Quick-Turn View

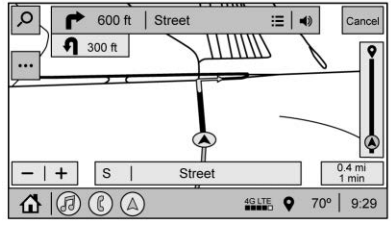

When the vehicle is approaching a turn with the next turn following in quick succession, a quick-turn list appears below the primary turn indicator. An audio prompt will announce the quick turn.

Auto-Zoom

When approaching a maneuver, the map will automatically zoom in to show both the vehicle icon and the upcoming maneuver to give a better view of the maneuver. Once the maneuver is complete, the system will zoom back to the previous zoom level.

Touch ··· on the map to access Settings, then touch Map Preferences to access Auto-Zoom. This feature can be enabled or disabled.

Directions

Touch the menu option next to the next turn street name to display Directions.

Directions displays the turns and directions from the current location to the final destination.

Editing Directions

Directions can be edited by choosing ✎, which expands the list to fill the display and enters the Edit Mode. While in Edit Mode, an unwanted route segment can be removed from the route by touching 🗑 next to the segment. A pop-up appears to confirm segment removal.

When the route segment has been removed, all segments are replaced by an activity indicator while the new route is recalculated. When the recalculation is complete, the activity indicator is replaced with the new route segments.

Highway Exits List

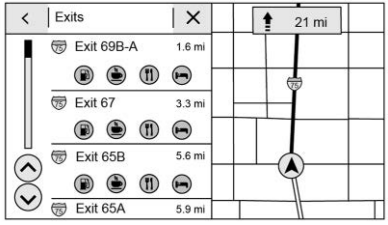

Touch to open the Exit list. This icon displays next to the current street name near the bottom of the display. The icon only appears when on a highway with defined exits.

While traveling on roads with designated exits, an Exit list may be available. The Exit list displays the exit number, distance to the exit from the current vehicle position, and convenience stops that may be available, such as gas, coffee, food, and lodging.

Next Maneuver Menu

When in Active Guidance, the Next Maneuver Turn Arrow, Street Name, and Maneuver Distance are shown in the Next Maneuver at the top of the display overlaying the map. ETA, Distance to Destination, and Traffic Indicator are displayed in a panel pinned on the right of the display.

Navigation Next Turn Maneuver Alert

If the Navigation application is not open when a near maneuver prompt is given, it is shown as an alert. Touch the alert to go to the main navigation view or touch X to dismiss the alert.

Repeat Voice Guidance

This symbol indicates the next guidance maneuver. Touch it to repeat the last spoken guidance instruction.

Incident Alert (If Equipped)

During active guidance, if the system determines that there is an incident ahead but there is not a better route, the system will play a tone and show a Quick Notice. This will only show once per incident.

Incident Reports (If Equipped)

Incident report icons, along with traffic flow data, display on the map during both active and inactive guidance.

End Route

Touch Cancel at the top right corner to end active guidance and return to inactive guidance. If active guidance is canceled before the destination has been reached, a pop-up option to Resume Trip will appear.

Resume Trip

The trip can be resumed if it was canceled by touching the Resume Trip pop-up option.

If the system has determined that the destination has been reached, either because the arrival view displayed or the destination has been passed, the Resume Trip option will not appear.

Favorites

The navigation favorites can have contacts, addresses, or POIs that have been saved through the favorite icon on the details view.

Accessing Favorites

In the Nav application, view the Favorites list by touching ☆ in the search bar along the top of the Nav map view. If the search bar is closed, touch 🔍 and select ☆.

Saving Favorites

Favorites can be added from a number of the system's applications. Touch the favorites icon to save content as a favorite.

Renaming Navigation Favorites

1. Touch the Settings icon on the Home Page and touch the System tab.
2. Touch Favorites to access the Manage Favorites option.
3. Touch a saved Navigation favorite to access the edit icon. Touch the edit icon to rename the favorite.
4. Touch Save to store the renamed favorite.

Recents

Touch 🕘 to access a list of recent destinations.

Recenter Position Icon

Touch the Recenter Position arrow in the middle of the map view to reset the map to the current location.

Last Parked Location

The Last Parked Location is the last location the vehicle engine was turned off. That location is displayed in the first row of the Recents list. Touching the last Parked Location shows the Address Details view to either save the address or drive to it. The Last Parked Location can be deleted by entering the Edit display. Once the Last Parked Location is deleted, it no longer appears in the Recents list, unless the vehicle is started at that location again.

Show POI Icons

To see the POI categories, touch Options, then touch Show on Map. Up to eight categories of icons can be selected.

Smart POI Icons on Map (If Equipped)

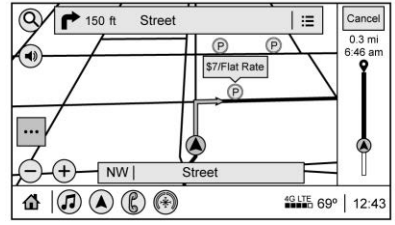

The smart POI icons such as fuel stations and parking may appear based on time, location, driver search behavior, driving conditions, and vehicle conditions.

Touch a smart POI icon to open the corresponding details:

- Left side: Name and address of the POI.
- Right side: 🚗 + ETE (Estimated Time Enroute.)

Smart Fuel Station Icons

Fuel station prices are shown if available for nearby stations when the vehicle is low on fuel.

Smart Parking Icons

When reaching a densely populated destination and the system determines that parking may be limited, the system will

attempt to display nearby parking destinations with pricing information, if available.

Report an Issue Using POI Details (If Equipped)

In the POI details page, a POI issue can be reported if the data is not accurate or the address is incorrect. Touch Report an Issue near the bottom of the display to access the issue selection page. Touch one of the predefined issues on the selection page, then touch Send. The system will send the information for analysis.

Search

Touch Search on the infotainment display to open the search display. It has a search field entry box, quick category icon shortcuts, recents icon, favorites icon, and keyboard.

Auto Complete

Enter a partial location in the field entry box on the search display. Auto complete will attempt to complete the destination based on what is being entered. Touch the suggested item to search.

Search While in Motion with No Front Seat Passenger Present

The search display will not allow changes or text input with the keyboard when the vehicle is in motion. As a result, a display showing three rows of the most commonly used categories appears. Touching the search box will activate speech recognition.

Search While in Motion with Front Seat Passenger Present

If the system detects that the front seat passenger is present with both driver and passenger seat belts buckled, touching the search icon will display an alert message that allows the passenger to search for a destination as if the vehicle were stopped.

Connected Navigation

Connected Navigation is a subscription service that enables certain capabilities within the navigation system, such as Traffic, Smart Search/Routing, and Predictive Navigation capabilities. The system will show an alert when the subscription is expiring and will ask to renew the plan.

OnStar System

With a connected plan, an OnStar Advisor can download a destination to the vehicle or into the built-in navigation system.

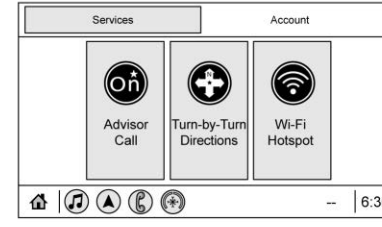

Touch OnStar Services on the Home Page to access the OnStar menu. Touch Turn-by-Turn Directions icon while on the Services tab of the OnStar menu.

Turn-by-Turn Navigation

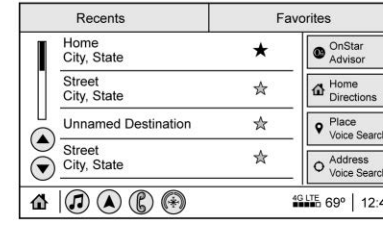

If equipped, after touching the Turn-by-Turn Directions icon, select destinations from Recents or Favorites. Recents or Favorites will be empty if this is the first use. To find new locations, touch OnStar Advisor, Home Directions, Place Voice Search, or Address Voice Search.

Lane Guidance

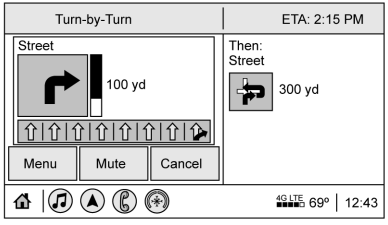

When available, the system will show the best lane(s) to be in for the next maneuver.

Cancel a Route

If a route is in progress using either the vehicle navigation system or the Turn-by-Turn route, and a new route is requested, the current route in progress will be canceled.

Global Positioning System (GPS)

If equipped, the position of the vehicle is determined by using satellite signals, various vehicle signals, and map data.

At times, other interference such as the satellite condition, road configuration, condition of the vehicle, and/or other circumstances can affect the navigation system's ability to determine the accurate position of the vehicle.

The GPS shows the current position of the vehicle using signals sent by GPS satellites. When the vehicle is not receiving signals from the satellites, a symbol appears in the status bar.

This system might not be available or interference can occur if any of the following are true:

- Signals are obstructed by tall buildings, trees, large trucks, or a tunnel.
- Satellites are being repaired or improved.

For more information if the GPS is not functioning properly, see *Problems with Route Guidance* ⇨ *153* and *If the System Needs Service* ⇨ *153*.

Vehicle Positioning

At times, the position of the vehicle on the map could be inaccurate due to one or more of the following reasons:

- The road system has changed.
- The vehicle is driving on slippery road surfaces such as sand, gravel, or snow.
- The vehicle is traveling on winding roads or long, straight roads.
- The vehicle is approaching a tall building or a large vehicle.
- The surface streets run parallel to a freeway.
- The vehicle has been transferred by a vehicle carrier or a ferry.
- The current position calibration is set incorrectly.
- The vehicle is traveling at high speed.
- The vehicle changes directions more than once, or the vehicle is turning on a turn table in a parking lot.
- The vehicle is entering and/or exiting a parking lot, garage, or a lot with a roof.
- The GPS signal is not received.
- A roof carrier is installed on the vehicle.
- Tire chains are installed on the vehicle.
- The tires are replaced or worn.

- The tire pressure for the tires is incorrect.
- This is the first navigation use after the map data is updated.
- The 12-volt battery has been disconnected for several days.
- The vehicle is driving in heavy traffic where driving is at low speeds, and the vehicle is stopped and started repeatedly.

Problems with Route Guidance

Inappropriate route guidance can occur under one or more of the following conditions:

- The turn was not made on the road indicated.
- Route guidance might not be available when using automatic rerouting for the next right or left turn.
- The route might not be changed when using automatic rerouting.
- There is no route guidance when turning at an intersection.
- Plural names of places might be announced occasionally.
- It could take a long time to operate automatic rerouting during high-speed driving.
- Automatic rerouting might display a route returning to the set waypoint if heading for a destination without passing through a set waypoint.
- The route prohibits the entry of a vehicle due to a regulation by time or season or any other regulation which may be given.
- Some routes might not be searched.
- The route to the destination might not be shown if there are new roads, if roads have recently changed, or if certain roads are not listed in the map data. See *Maps* ⇨ *145*.

To recalibrate the vehicle's position on the map, park with the vehicle running for two to five minutes, until the vehicle position updates. Make sure the vehicle is parked in a location that is safe and has a clear view of the sky and away from large obstructions.

If the System Needs Service

If the navigation system needs service, see your dealer.

Map Data Updates

The map data in the vehicle is the most up-to-date information available when the vehicle was produced. The map data is updated periodically, provided that the map information has changed and the vehicle has a relevant service plan.

See www.gmnavdisc.com for details on ordering, purchasing, and installing a new or replacement SD card. Features are subject to change. For more information on this feature, see my.chevrolet.com/learn.

If the vehicle is equipped with Connected Navigation, which is a subscription service that enables certain features of the navigation system, such as Traffic, Smart Search/Routing, and Predictive Navigation, then the system will download the latest map data from the cloud.

Database Coverage Explanations

Coverage areas vary with respect to the level of map detail available for any given area. Some areas feature greater levels of detail than others. If this happens, it does not mean there is a problem with the system. As the map data is updated, more detail can become available for areas that previously had limited detail. See *Map Data Updates* ⇨ *153*.

Voice Recognition

If equipped, voice recognition allows for hands-free operation within the navigation, audio, phone, and weather applications. This feature can be started by pressing on the steering wheel or touching on the infotainment display.

However, not all features within these areas are supported by voice commands. Generally, only complex tasks that require multiple manual interactions to complete are supported by voice commands.

For example, tasks that take more than one or two touches, such as a song or artist to play from a media device, would be supported by voice commands. Other tasks, like adjusting the volume or seeking up or down, are audio features that are easily performed by touching one or two options, and are not supported by voice commands.

In general there are flexible ways to speak commands for completing the tasks.

If your language supports it, try stating a one-shot command, such as "Directions to address <number, street, city, state/province>." Do not include the ZIP code while stating the address during the command. Another example of a one-shot Destination Entry command is, "Directions to Place of Interest at <hotel>." If these commands do not work, try saying, "Take me to Place of Interest" or "Find address" and the system will walk you through by asking additional questions.

Hybrid Speech Recognition

If equipped, this feature helps distinguish words by using Internet-based information along with the system's voice recognition database. This allows you to speak more naturally when using voice recognition.

Using Voice Recognition

Voice recognition becomes available once the system has been initialized. This begins when the ignition is turned on. Initialization may take a few moments.

1. Press on the steering wheel controls to activate voice recognition.
2. The audio system mutes and the system plays a prompt.
3. Clearly speak one of the commands described in this section.

   A voice recognition system prompt can be interrupted while it is playing by pressing again.

Once voice recognition is started, both the infotainment display and instrument cluster show the selections and visual dialog content. These displays can be turned on or off in the Tutorial Mode under *Settings* ⇨ *164*.

There are three voice prompt modes supported:

- Informative verbal prompts: This type of prompt will provide more information regarding the supported actions.
- Short prompts: This type of prompt will provide simple instructions about what can be stated.
- Auto informative prompts: This type of prompt plays during the first few speech sessions, then automatically switches to the short prompt after some experience has been gained through using the system.

If a command is not spoken, the voice recognition system says a help prompt.

Prompts and Infotainment Displays

While a voice recognition session is active, there may be corresponding options showing on the displays. A selection can be made by manually touching the option, or by speaking the number for the option to

select. Manual interaction in the voice recognition session is permitted. Interaction during a voice session may be completed entirely using voice commands while some manual commands may expedite a task. If a selection is made using a manual control, the voice recognition dialog will progress in the same way as if the selection were made using a voice command. Once the system completes the task, or the session is terminated, the voice recognition dialog stops.

An example of this type of manual intervention is touching an entry of a displayed number list instead of speaking the number associated with the entry desired.

Canceling Voice Recognition

- Touch or say “Cancel” or “Exit” to terminate the voice recognition session and show the display where voice recognition was initiated.
- Press ⌓ on the steering wheel controls to terminate the voice recognition session and show the display where voice recognition was initiated.

Natural Language Commands

Most languages do not support natural language commands in sentence form. For those languages, use direct commands like the examples shown on the display.

Helpful Hints for Speaking Commands

Voice recognition can understand commands that are naturally stated in sentence form or direct commands that state the application and the task.

For best results:

- Listen for the prompt before saying a command or reply.
- Speak the command naturally, not too fast, not too slow.
- Use direct commands without a lot of extra words. For example, “Call <name> at work,” “Play” followed by the artist or song name, or “Tune” followed by the radio station number.
- Navigation destinations can be made in a single command using keywords. A few examples are: “I want directions to an address,” “I need to find a place of interest or (POI),” or “Find contact.”

  The system responds by requesting more details. For other POIs, say the name of a category like “Restaurants,” “Shopping Malls,” or “Hospitals.”
- Navigating to a destination outside of the current country takes more than one command. The first command is to tell the system where the navigation will take place, such as an Address, Intersection, POI, or Contact. If Address or Intersection is selected, the second command is to say, “Change Country.” Once the system responds, say the country before saying the rest of the address and/or intersection.

  If POI is asked for, say “Change Location,” then “Change Country.”

Direct commands might be more clearly understood by the system. An example of a direct command would be “Call <number>.” Examples of these direct commands are displayed on most of the screens while a voice session is active. If “Phone” or “Phone Commands,” is spoken, the system understands that a phone call is requested and will respond with questions until enough details are gathered to make a call.

If a cell phone number has been saved with a name and a place, the direct command should include both, for example “Call <name> at work.”

Using Voice Recognition for List Options

When a list is displayed, a voice prompt will ask to confirm or select an option from that list.

When a display contains a list, there may be options that are available but not displayed. The list on a voice recognition screen functions the same as a list on other displays. Scrolling or flinging can be used to help display other entries from the list.

Manually scrolling or paging the list on a display during a voice recognition session suspends the current voice recognition event and plays the prompt “Please select manually or touch the Back icon on the infotainment display to try again.”

If manual selection takes more than 15 seconds, the session terminates and prompts that it has timed out. The display returns to the display where voice recognition was initiated.

The Back Command

Say “Back” or touch the Back icon on the infotainment display to go to the previous menu.

If in voice recognition, and “Back” is spoken all the way back to the starting display, and then “Back” is spoken one more time, the voice recognition session will cancel.

Help

Say “Help” on any voice recognition display and the help prompt for the display is played.

Voice Recognition for the Radio

If browsing the audio sources when voice is touched, the voice recognition commands for AM, FM, and SiriusXM (if equipped) are available.

“Switch to AM” : Switch bands to AM and tune to the last AM radio station.

“Switch to FM” : Switch bands to FM and tune to the last FM radio station.

“Switch to SXM” : Switch bands to SiriusXM and tune to the last SiriusXM channel.

“Tune to <AM frequency> AM” : Tune to the radio station whose frequency is identified in the command (like “nine fifty”).

“Tune to <FM frequency> FM” : Tune to the radio station whose frequency is identified in the command (like “one oh one point one”).

“Tune to <AM frequency> AM HD” : Tune to the HD Radio station (if equipped) whose frequency is identified in the command.

“Tune to <FM frequency> FM HD” : Tune to the HD Radio station (if equipped) whose frequency is identified in the command.

“Tune to <FM frequency> FM HD <HD channel number>” : Tune to the HD Radio station (if equipped) whose frequency and HD channel are identified in the command.

“Tune to SXM <SXM channel number>” : Tune to the SiriusXM radio station whose channel number is identified in the command.

“Tune to SXM <SXM channel name>” : Tune to the SiriusXM radio station whose channel name is identified in the command.

Voice Recognition for Audio MyMedia

The available voice recognition commands for [browsing] MyMedia are:

“Play Artist” : Begin a dialog to enter a specific artist name.

"Play Artist <artist name>" : Begin playback of a specific artist.

"Play Album" : Begin a dialog to enter a specific album name.

"Play Album <album name>" : Begin playback of a specific album.

"Play Song" : Begin a dialog to enter a specific song name.

"Play Song <song name>" : Begin playback of a specific song, if available.

"Play Genre" : Begin a dialog to enter a specific genre.

"Play Genre <genre name>" : Begin playback of a specific genre.

"Play Playlist" : Begin a dialog to enter a specific playlist name.

"Play Playlist <playlist name>" : Begin playback of a specific playlist.

"Play <device name>" : Play music from a specific device identified by name. The device name is the name displayed on the display when the device is first selected as an audio source.

"Play Chapter" : Begin a dialog to enter a specific name.

"Play Chapter <chapter name>" : Begin playback of a specific chapter.

"Play Audiobook" : Begin a dialog to enter a specific audiobook.

"Play Audiobook <audiobook name>" : Begin playback of a specific audiobook.

"Play Episode" : Begin a dialog to enter a specific name.

"Play Episode <episode name>" : Begin playback of a specific episode.

"Play Podcast" : Begin a dialog to enter a specific podcast.

"Play Podcast <podcast name>" : Begin playback of a specific podcast.

"My Media" : Begin a dialog to enter the desired media content.

Handling Large Amounts of Media Content

It is expected that large amounts of media content will be brought into the vehicle. It may be necessary to handle large amounts of media content in a different way than smaller amounts of media. The system may limit the options of voice recognition by not allowing selection of files by voice at the highest level if the number of files exceeds the maximum limit.

Changes to voice commands due to media content limits are:

- Files including other individual files of all media types such as songs, audiobook chapters, podcast episodes, and videos.
- Album type folders including types such as albums and audiobooks.

There are no restrictions if the number of files and albums is fewer than 12,000. When the number of files connected to the system is between 12,000 and 24,000, the content cannot be accessed directly with one command like "Play <song name>."

The restriction is that the command "Play Song" must be spoken first; the system will then ask for the song name. The reply command would be to say the name of the song to play.

Similar limits exist for album content. If there are more than 12,000 albums, but fewer than 24,000, the content cannot be accessed directly with one command like, "Play <album name>." The command "Play Album" must first be spoken; the system will then ask for the album name. The reply would be to say the name of the album to play.

Once the number of files has exceeded approximately 24,000, there is no support for accessing the songs directly through voice commands. There will still be access to the media content by using commands for playlists, artists, and genres.

The access commands for playlists, artists, and genres are prohibited after the number of this type of media exceeds 12,000.

The system will provide feedback the first time voice recognition is initiated if it has become apparent that any of these limits are reached during a device initializing process.

Voice recognition performance will degrade to some extent based on many factors when adding large amounts of data to recognize. If this is the case, perhaps accessing songs through playlists or artist name would work better.

Voice Recognition for Navigation (If Equipped)

"Navigation" : Begin a dialog to enter specific destination information.

"Navigation Commands" : Begin a dialog to enter specific destination information.

"Address" : Begin a dialog to enter a specific destination address, which includes the entire address consisting of the house number, street name, city, state/province, and country. Do not include the ZIP code.

"Place of Interest" : Begin a dialog to enter a destination Place of Interest category or major brand name.

The name must be precisely spoken. Nicknames or short names for the businesses will not likely be found. Lesser known businesses might have to be located by category, such as fast food, hotels, or banks.

"Navigate to Contact" : Begin a dialog to enter a specific destination contact name.

"Cancel Route" : End route guidance.

"Take Me Home" : Create a route to a stored home location.

Voice Recognition for the Phone

"Call <contact name>" : Initiate a call to a stored contact. The command may include location if the contact has location numbers stored.

"Call <contact> At Home," "At Work," "On Mobile," or "On Other" : Initiate a call to a stored contact and location at home, at work, on mobile device, or on another phone.

"Call <cell phone number>" : Initiate a call to a cell phone number of seven digits, 10 digits, or three digit emergency numbers.

"Pair Phone" : Begin the Bluetooth pairing process. Follow the instructions on the infotainment display.

"Redial" : Initiate a call to the last dialed number.

"Switch Phone" : Select a different connected cell phone for outgoing calls.

"Voice Keypad" : Begin a dialog to enter special numbers like international numbers. The numbers can be entered in groups of digits with each group of digits being repeated back by the system. If the group of digits is not correct, the command "Delete" will remove the last group of digits and allow them to be re-entered. Once the entire number has been entered, the command "Call" will start dialing the number.

Phone Assistant Voice Recognition

Press and hold on the steering wheel controls to pass through and launch Google phone assistant or Siri.

For the low radio, whether connected by Bluetooth or phone projection, the only available voice recognition is either Siri (iPhone) or the Google Assistant (Android).

Phone

Bluetooth (Overview)

The Bluetooth-capable system can interact with many mobile devices, allowing:

- Placement and receipt of calls in a hands-free mode.
- Sharing of the device's address book or contact list with the vehicle.

To minimize driver distraction, before driving, and with the vehicle parked:

- Become familiar with the features of the mobile device. Organize the phone book and contact lists clearly and delete duplicate or rarely used entries.
  If possible, program speed dial or other shortcuts.
- Review the controls and operation of the infotainment system.
- Pair mobile device(s) to the vehicle. The system may not work with all mobile devices. See "Pairing" later in this section.

Vehicles with a Bluetooth system can use a Bluetooth-capable mobile device with a Hands-Free Profile to make and receive phone calls. The infotainment system and voice recognition are used to control the system. The system can be used while the ignition is on or in ACC/ACCESSORY. The range of the Bluetooth system can be up to 9.1 m (30 ft). Not all mobile devices support all functions and not all mobile devices work with the Bluetooth system. See my.chevrolet.com for more information about compatible mobile devices.

Controls

Use the controls on the center stack and the steering wheel to operate the Bluetooth system.

Steering Wheel Controls

: Press to answer incoming calls and start voice recognition on your connected Bluetooth mobile device.

: Press to end a call, decline a call, or cancel an operation. Press to mute or unmute the infotainment system when not on a call.

Infotainment System Controls

For information about how to navigate the menu system using the infotainment controls, see *Using the System* ⇨ *131*.

Audio System

When using the Bluetooth mobile device system, sound comes through the vehicle's front audio system speakers and overrides the audio system. The volume level while on a mobile device call can be adjusted by pressing the steering wheel controls or the volume control on the center stack. The adjusted volume level remains in memory for later calls. The volume cannot be lowered beyond a certain level.

Bluetooth (Pairing and Using a Phone)

Pairing

A Bluetooth-enabled mobile device must be paired to the Bluetooth system and then connected to the vehicle before it can be

used. See the mobile device manufacturer's user guide for Bluetooth functions before pairing the device.

Pairing Information

- If no mobile device has been connected, the Phone main page on the infotainment display will show the Connect Phone option. Touch this option to connect. Another way to connect is to touch the Phones tab at the top right of the display and then touch Add Phone.
- A Bluetooth smartphone with music capability can be paired to the vehicle as a smartphone and a music player at the same time.
- Up to 10 devices can be paired to the Bluetooth system.
- The pairing process is disabled when the vehicle is moving.
- Pairing only needs to be completed once, unless the pairing information on the cell phone changes or the cell phone is deleted from the system.
- If multiple paired cell phones are within range of the system, the system connects to the paired cell phone that is set to First to Connect. If there is no cell phone set to First to Connect, it will link to the cell phone which was used last. To link to a different paired cell phone, see “Linking to a Different Phone” later in this section.

Pairing a Phone

1. Make sure Bluetooth has been enabled on the cell phone before the pairing process is started.
2. Touch the Phone icon on the Home Page or the phone icon on the shortcut tray near the bottom of the display.
3. Touch Phones at the top of the infotainment display. There is also a Connect Phones option in the middle of the Phone display which will shortcut to the Phone List menu.
4. Touch Add Phone.
5. Select the vehicle name shown on the infotainment display from your cell phone’s Bluetooth Settings list.
6. Follow the instructions on the cell phone to confirm the six-digit code showing on the infotainment display and touch Pair. The code on the cell phone and infotainment display will need to be acknowledged for a successful pair.
7. Start the pairing process on the cell phone to be paired to the vehicle. See the cell phone manufacturer's user guide for information on this process. Once the cell phone is paired, it will show under Connected.
8. If the vehicle name does not appear on your cell phone, there are a few ways to start the pairing process over:
   - Turn the cell phone off and then back on.
   - Go back to the beginning of the Phone menus on the infotainment display and restart the pairing process.
   - Reset the cell phone, but this step should be done as a last effort.
9. If the cell phone prompts to accept connection or allow phone book download, touch Always Accept and Allow. The phone book may not be available if not accepted.
10. Repeat Steps 1–8 to pair additional cell phones.

First to Connect Paired Phones

If multiple paired cell phones are within range of the system, the system connects to the paired cell phone that is set as First to Connect. To enable a paired cell phone as the First to Connect phone:

1. Make sure the cell phone is turned on.

2. Touch Settings, then touch System.
3. Touch Phones to access all paired and all connected cell phones and mobile devices.
4. Touch the information icon to the right of the cell phone to open the cell phone's settings menu.
5. Touch the First to Connect option, to enable the setting for that device.

Cell phones and mobile devices can be added, removed, connected, and disconnected. A sub-menu will display whenever a request is made to add or manage cell phones and mobile devices.

Secondary Phone

A cell phone can be enabled as a Secondary Phone by touching the information icon to the right of the paired cell phone name to open the phone settings menu. If a cell phone is enabled as a Secondary Phone, it can connect simultaneously alongside another Bluetooth mobile device. In doing so, the Secondary Phone will be labeled as Incoming Calls. This means the mobile device can only receive calls. The Address Book of a Secondary Phone will not be available and hands-free outgoing calls cannot be placed using this cell phone.

If needed, touch the Secondary Phone while in the Phones list to swap it into the Outgoing and Incoming role. This role makes it possible to place outgoing calls from the Contacts and Recents list.

Listing All Paired and Connected Phones

1. Touch the Phone icon on the Home Page or the phone icon on the shortcut tray near the bottom of the display.
2. Touch Phones.

Disconnecting a Connected Phone

1. Touch the Phone icon on the Home Page.
2. Touch Phones.
3. Touch the information icon next to the connected cell phone or mobile device to show the cell phone's or mobile device's information display.
4. Touch Disconnect.

Deleting a Paired Phone

1. Touch the Phone icon on the Home Page or the phone icon on the shortcut tray near the bottom of the display.
2. Touch Phones.
3. Touch the information icon next to the connected cell phone to display the cell phone's or mobile device's information display.
4. Touch Forget Device.

Linking to a Different Phone

To link to a different cell phone, the new cell phone must be in the vehicle and paired to the Bluetooth system.

1. Touch the Phone icon on the Home Page or the phone icon on the shortcut tray near the bottom of the display.
2. Touch Phones.
3. Touch the new cell phone to link to from the not connected phone list. See "First to Connect Paired Phones" and "Secondary Phone" previously in this section.

Switching to Handset or Handsfree Mode

To switch between handset or handsfree mode:

- While the active call is hands-free, touch the Handset option to switch to the handset mode.

  The mute icon will not be available or functional while Handset mode is active.

- While the active call is on the handset, touch the Handset option to switch to the hands-free mode.

Making a Call Using Contacts and Recent Calls

Calls can be made through the Bluetooth system using personal cell phone contact information for all cell phones that support the Phone Book feature. Become familiar with the cell phone settings and operation. Verify the cell phone supports this feature.

The Contacts menu accesses the phone book stored in the cell phone.

The Recents menu accesses the recents call list from your cell phone.

To make a call using the Contacts menu:

1. Touch the Phone icon on the Home Page.
2. Touch Contacts.
3. The Contacts list can be searched by using the first character. Touch A-Z on the infotainment display to scroll through the list of names.

   Touch the name to call.
4. Touch the desired contact number to call.

To make a call using the Recents menu:

1. Touch Phone on the Home Page.
2. Touch Recents.
3. Touch the name or number to call.

Making a Call Using the Keypad

To make a call by dialing the numbers:

1. Touch the Phone icon on the Home Page.
2. Touch Keypad and enter a phone number.
3. Touch on the infotainment display to start dialing the number.

Searching Contacts Using the Keypad

To search for contacts using the keypad:

1. Touch the Phone icon on the Home Page.
2. Touch Keypad and enter partial phone numbers or contact names using the digits on the keypad to search.

   Results will show on the right side of the display. Touch one to place a call.

Accepting or Declining a Call

When an incoming call is received, the infotainment system mutes and a ring tone is heard in the vehicle.

Accepting a Call

There are two ways to accept a call:

- Press on the steering wheel controls.
- Touch Answer on the infotainment display.

Declining a Call

There are two ways to decline a call:

- Press on the steering wheel controls.
- Touch Ignore on the infotainment display.

Call Waiting

Call waiting must be supported on the Bluetooth cell phone and enabled by the wireless service carrier to work.

Accepting a Call

Press to answer, then touch Switch on the infotainment display.

Declining a Call

Press to decline, then touch Ignore on the infotainment display

Switching Between Calls (Call Waiting Calls Only)

To switch between calls, touch Phone on the Home Page to display Call View. While in Call View, touch the call information of the call on hold to change calls.

Three-Way Calling

Three-way calling must be supported on the Bluetooth cell phone and enabled by the wireless service carrier to work.

To start a three-way call while in a current call:

1. In the Call View, touch Add Call to add another call.
2. Initiate the second call by selecting from Recents, Contacts, or Keypad.
3. When the second call is active, touch the merge icon to conference the three-way call together.

Ending a Call

- Press on the steering wheel controls.
- Touch on the infotainment display, next to a call, to end only that call.

Dual Tone Multi-Frequency (DTMF) Tones

The in-vehicle Bluetooth system can send numbers during a call. This is used when calling a menu-driven phone system. Use the Keypad to enter the number.

Apple CarPlay and Android Auto

If equipped, Android Auto and/or Apple CarPlay capability may be available through a compatible smartphone. If available, the Android Auto and Apple CarPlay icons will change from gray to color on the Home Page of the infotainment display.

To use Android Auto and/or Apple CarPlay:

For Wired Phone Projection

1. Download the Android Auto app to your smartphone from the Google Play store. There is no app required for Apple CarPlay.
2. Connect your Android phone or Apple iPhone by using the factory-provided phone USB cable and plugging into a USB data port. For best performance, it is highly recommended to use the device's factory-provided USB cable, which should be replaced after significant wear to maintain connection quality. Aftermarket or third-party cables may not work.
3. When the phone is first connected to activate Apple CarPlay or Android Auto, accept the terms and conditions on both the infotainment system and the phone.
4. Follow the instructions on the phone.

The Android Auto and Apple CarPlay icons on the Home Page will illuminate depending on the smartphone. Android Auto and/or Apple CarPlay may automatically launch upon USB connection. If not, touch the Android Auto or Apple CarPlay icon on the Home Page to launch.

Press on the center stack to return to the Home Page.

For Wireless Phone Projection

Verify your phone is wireless compatible by visiting the Google Android Auto or Apple CarPlay support page.

1. Download the Android Auto app to your smartphone from the Google Play store. There is no app required for Apple CarPlay.
2. For first time connection, there are two ways to set up wireless projection:
   - Connect your Android phone or Apple iPhone by using the factory-provided phone USB cable and plugging into a USB data port. For best performance, it is highly recommended to use the device's factory-provided USB cable, which should be replaced after

significant wear to maintain connection quality. Aftermarket or third-party cables may not work.

- Connecting the phone over Bluetooth. See *Bluetooth (Overview)* ⇨ *159* or *Bluetooth (Pairing and Using a Phone)* ⇨ *159*.

3. Make sure wireless is turned on the phone for wireless projection to work.
4. When the phone is first connected to activate Apple CarPlay or Android Auto, agree to the terms and conditions on both the infotainment system and the phone.
5. Follow the instructions on the phone.

The Android Auto and Apple CarPlay icons on the Home Page will illuminate depending on the smartphone. Android Auto and/or Apple CarPlay may automatically launch upon wireless connection. If not, touch the Android Auto or Apple CarPlay icon on the Home Page to launch.

Wireless Carplay and/or Wireless Android Auto may experience occasional service disruption due to outside Wi-Fi interference.

To disconnect the phones wireless projection:

1. Select Settings from the Home Page.
2. Select Phones
3. Touch ℹ next to the phone to be disconnected.
4. Turn off Apple CarPlay or Android Auto.

Press ⌂ on the center stack to return to the Home Page.

Features are subject to change. For further information on how to set up Android Auto and Apple CarPlay in the vehicle, see my.chevrolet.com.

Android Auto is provided by Google and is subject to Google's terms and privacy policy. Apple CarPlay is provided by Apple and is subject to Apple's terms and privacy policy. Data plan rates apply. For Android Auto support and to see if your phone is compatible, see https://support.google.com/androidauto. For Apple CarPlay support and to see if your phone is compatible, see www.apple.com/ios/carplay/. Apple or Google may change or suspend availability at any time. Android Auto, Android, Google, Google Play, and other marks are trademarks of Google Inc.; Apple CarPlay is a trademark of Apple Inc.

Press ⌂ on the center stack to exit Android Auto or Apple CarPlay. To enter back into Android Auto or Apple CarPlay, press and hold ⌂ on the center stack.

Apple CarPlay and Android Auto can be disabled from the infotainment system. To do this, touch Home, Settings, and then touch the Apps tab along the top of the display. Use the On/Off toggled to turn off Apple CarPlay or Android Auto.

Settings

Certain settings can be managed in the Owner Center sites when an account is established, and may be modified if other users have accessed the vehicle or created accounts. This may result in changes to the security or functionality of the infotainment system. Some settings may also be transferred to a new vehicle, if equipped. For instructions, in the U.S. see my.chevrolet.com or in Canada see mychevrolet.ca or monchevrolet.ca.

Refer to the User Terms and Privacy Statement for important details. To view, touch the Settings icon on the Home Page of the infotainment display.

The settings menu may be organized into four categories. Select the desired category by touching System, Apps, Vehicle, or Personal.

To access the personalization menus:

1. Touch Settings on the Home Page on the infotainment display.
2. Touch the desired category to display a list of available options.
3. Touch to select the desired feature setting.
4. Touch the options on the infotainment display to disable or enable a feature.
5. Touch ✕ to go to the top level of the Settings menu.

System

The menu may contain the following:

Time / Date

Use the following features to set the clock:

- Automatic Time and Date: Touch Off or On to enable or disable automatic update of the time and date. When this feature is on, the time and date cannot be manually set.
- Set Time: Touch to manually set the time using the controls on the infotainment display.
- Set Date: Touch to manually set the date using the controls on the infotainment display.
- Automatic Time Zone (If Equipped): Touch Off or On to disable or enable automatic update of the time zone based on vehicle location. When this feature is on, the time zone cannot be manually set.
- Select Time Zone: Touch to manually set the time zone. Touch a time zone from the list.
- Use 24-hour Format: Touch to specify the clock format shown.

  Touch Off or On to disable or enable.

Language

This will set the display language used on the infotainment display. It may also use the selected language for voice recognition and audio feedback. Touch Language and touch the appropriate language.

Phones

Touch to connect to a different cell phone or mobile device source, disconnect a cell phone or media device, or delete a cell phone or media device.

Wi-Fi Networks

This will show connected and available Wi-Fi networks.

If a 4G LTE data package is not active on the vehicle, the infotainment system can be connected to an external protected Wi-Fi network, such as a mobile device or home hotspot, to utilize connected services.

Wi-Fi Hotspot

Touch and the following may display:

- Wi-Fi Services: This allows devices to use the vehicle hotspot.

  Touch the controls on the infotainment display to disable or enable.
- Wi-Fi Name: Touch to change the vehicle Wi-Fi name.
- Wi-Fi Password: Touch to change the vehicle Wi-Fi password.
- Connected Devices: Touch to show connected devices.

- Share Hotspot Data: Touch On to allow devices to use the vehicle hotspot and its data, or touch Off to allow devices to only use the vehicle hotspot but not its data.

Privacy

Touch and the following may display:

- Location Services: This setting enables or disables sharing of vehicle location outside the vehicle. Emergency services will not be affected when Off is selected.
- Data Services: If equipped, this setting determines if data sharing can be used by features including Wi-Fi, Hotspot, and applications. Touch Off to disable data services. Emergency services and phone calls, such as calls with OnStar Advisors or others, will not be affected when Off is selected.
- Voice Recognition Sharing: This setting determines if voice commands can be shared with a cloud-based voice recognition system. Touch Off to prevent the sharing and possible recording of your voice commands with this system. This may limit the system's ability to understand your voice commands and may disable some features.
- Types: This setting lists all Android-defined as dangerous permissions currently used by the infotainment system, the number of applications that have requested this permission, and the number of applications that are allowed to use this permission.
- Used By Applications: This setting lists all applications that are requested or are using Android-defined as dangerous permissions. Only requested and active permissions are shown.

Display

Touch and the following may display:

- Mode: This adjusts the appearance of the navigation map view and any downloaded apps optimized for day or night time conditions. Set to Auto for the display to automatically adjust based on bright/dark conditions.

  Touch Auto, Day, or Night to adjust the display.
- Calibrate Touchscreen: Touch to calibrate the infotainment display and follow the prompts.
- Turn Display Off: Touch to turn the display off. Touch anywhere on the infotainment display or press any infotainment control on the center stack again to turn the display on.

Sounds

Touch and the following may display:

- Maximum Startup Volume: This feature adjusts the maximum volume of the infotainment system when you start your vehicle. To set the maximum startup volume, touch the controls on the infotainment display to increase or decrease.
- Audio Cues: This feature determines if sounds play when the infotainment system starts up and shuts down. This feature can be turned off or on.
- Set Audio Cue Volume: This setting controls the volume of Audio Cues played on startup and shut down. Touch the controls on the infotainment display to increase or decrease.
- Audible Touch Feedback: This setting determines if a sound plays when touching the infotainment display or radio controls. This feature can be turned off or on.

Voice

Touch and the following may display:

- Confirm More/Less: This setting specifies how often the voice recognition system confirms commands. Touch Confirm More to have the system check with you more often before acting on your commands.
- Prompt Length: This setting specifies the amount of detail the voice recognition system provides when giving you feedback. Touch Auto to have the system automatically adjust to your speech habits. Touch Informative, Short, or Auto.
- Audio Feedback Speed: Touch Slow, Medium, or Fast to adjust how quickly the voice recognition system speaks.
- Friendly Prompts: This setting adjusts the formality of voice prompts. Touch Off for shorter prompts. Touch On to hear prompts with more personality. Touch Auto to have the prompt match your command style.
- Tutorial Mode: Touch Off or On to provide tutorial feedback on the display.
- Allow Prompt Interruptions: This setting controls whether voice commands can be spoken before voice prompts finish. Turn this on to speak commands without hearing the full prompt. Speaking while the prompt is still playing will immediately stop playing the current prompt and recognize your command. Background noise may cause accidental interruptions. Touch Off or On.

Favorites

Touch and the following may display:

- Manage Favorites: Touch to display a list of Audio, Phone, and Navigation favorites.

  Favorites can be moved, renamed, or deleted.

  To move, touch and hold the favorite, and then drag up or down to rearrange the position.
- Set Number of Audio Favorites: Touch to select how many favorites pages can be viewed from the audio application. The Auto setting will automatically adjust this number based on the number of favorites you have saved. Touch Auto, 5, 10, 15, 20, 25, 30, 35, or 40.

Updates

If equipped, the vehicle can download and install select software updates over a wireless connection. The system will prompt for certain updates to be downloaded and installed. There is also an option to check for updates manually.

To manually check for updates, touch Settings on the Home Page and select the System tab. Go to the Vehicle Software section and touch Updates. Follow the on-screen prompts. The steps to check for, download, and install updates may vary by vehicle.

The vehicle can be used normally during the software download. Once the download is complete, there may be a prompt to accept the installation of the update upon the next ignition cycle or the next time the vehicle is shifted into P (Park). For most updates, the vehicle will be disabled and cannot be driven during the installation. The system will deliver messages indicating success or error during and after the download and installation processes.

Downloading Over-the-Air vehicle software updates requires Internet connectivity, which can be accessed through the vehicle's built-in 4G LTE connection, if equipped and active. If required, data plans are provided by a third party. Optionally, a secure Wi-Fi hotspot such as a compatible mobile device hotspot, home hotspot, or public hotspot can be used. Applicable data rates may apply.

To connect the infotainment system to a secured mobile device hotspot, home hotspot, or public hotspot, touch Settings on the Home Page, select the System tab, followed by Wi-Fi Networks. Select the appropriate Wi-Fi network, and follow the on-screen prompts. Download speeds may vary.

On most compatible mobile devices, activation of the Wi-Fi hotspot is in the Settings menu under Mobile Network Sharing, Personal Hotspot, Mobile Hotspot, or similar.

Availability of Over-the-Air software updates varies by vehicle and country. Features are subject to change. For more information on this feature, see my.chevrolet.com/learn.

Preferences

Touch the controls on the infotainment display to disable or enable the download of new updates in the background.

About

Touch to view the infotainment system software information.

Running Applications

Touch to see a complete list of applications that are currently running on the infotainment system.

Return to Factory Settings

Touch and the following may display:

- Reset Vehicle Settings: Resets all vehicle settings for the current user.

  Touch Reset or Cancel.
- Erase Settings and Personal Data: Erases app data settings, user profiles, and personal data including navigation and mobile device data.

  Touch Erase or Cancel.
- Clear Default Applications: Resets preferred applications that have been set to open when selecting a function. No application data will be lost.

  Touch Clear or Cancel.

Apps

The menu may contain the following:

Android Auto

This feature allows you to interact directly with your mobile device on the infotainment display. See *Apple CarPlay and Android Auto* ⇨ *163*.

Touch the controls on the infotainment display to disable or enable.

Apple CarPlay

This feature allows you to interact directly with your mobile device on the infotainment display. See *Apple CarPlay and Android Auto* ⇨ *163*.

Touch the controls on the infotainment display to disable or enable.

Apps

Touch and the following may display:

- Update Apps Automatically: This allows downloaded applications to be updated automatically.

  Touch the controls on the infotainment display to disable or enable.
- About Apps: Touch to view the versions of the shop software.

Audio

Depending on the current audio source, different options will be available.

Touch and the following may display:

- Tone Settings: Touch to adjust Equalizer, Fade/Balance, or Sound Mode. See “Infotainment System Sound Menu” in *AM-FM Radio* ⇨ *134*.

- Adaptive Volume: This feature adjusts the volume based on the vehicle speed.

  Touch Off, Low, Medium-Low, Medium, Medium-High, or High.
- Bose AudioPilot Noise Compensation Technology: If equipped, this feature adjusts the volume based on the noise in the vehicle and the speed.

  Touch Off or On.
- Manage Favorites: Touch to display a list of Audio, Mobile Devices, and Navigation favorites.

  Favorites can be moved, renamed, or deleted.

  To move, touch and hold the favorite, and then drag up or down to rearrange the position.
- Set Number of Audio Favorites: Touch to select how many favorites pages can be viewed from the audio application. The Auto setting will automatically adjust this number based on the number of favorites you have saved. Touch Auto, 5, 10, 15, 20, 25, 30, 35, or 40.
- RDS: If equipped, this allows the Radio Data System (RDS) to be turned on or off.

  Touch the controls on the infotainment display to disable or enable.
- HD Radio: This allows HD Radio reception to be turned on or off.

  Touch the controls on the infotainment display to disable or enable.
- Explicit Content Filter: This setting allows access to explicit content SiriusXM channels.

  Touch Off or On.
- Manage Phones: Select to connect to a different phone source, disconnect a phone, or delete a phone.
- Reset Music Index: This allows the music index to be reset if you are having difficulty accessing all of the media content on your device.

  Touch Yes or No.

Climate

Touch and the following may display:

- Auto Fan Speed: This setting specifies the amount of airflow when the climate control fan setting is Auto Fan.

  Touch Low, Medium, or High.
- Air Quality Sensor: This setting switches the system into Recirculation Mode based on the quality of the outside air.

  Touch Off, Low Sensitivity, or High Sensitivity.
- Auto Cooled Seats: This setting automatically turns on and regulates the ventilated seats when the cabin temperature is warm.

  Touch the controls on the infotainment display to disable or enable.
- Auto Heated Seats: This setting automatically turns on and regulates the heated seats when the cabin temperature is cool. The auto heated seats can be turned off by using the heated seat controls on the center stack.

  Touch the controls on the infotainment display to disable or enable.
- Auto Defog: This setting automatically turns the front defogger on when the vehicle engine is started.

  Touch the controls on the infotainment display to disable or enable.
- Auto Rear Defog: This setting automatically turns the rear window defogger on when the vehicle engine is started.

  Touch the controls on the infotainment display to disable or enable.

Navigation

Touch and the following may display:

- Destination Card Preferences
- Map Preferences
- Route Preferences
- Navigation Voice Control
- Traffic Preferences
- Alert Preferences
- Fuel Grade Preferences
- Manage History
- Predictive Navigation
- About

See *Using the Navigation System* ⇨ *142*.

Phone

Touch and the following may display:

- My Number: Displays the cell phone number of the Bluetooth connected device.
- Active Call View: Shows active call display when answering a call.

  Touch the controls on the infotainment display to disable or enable.
- Privacy: Only show call alerts in the instrument cluster.

  Touch Off or On.
- Sort Contacts: Touch to sort by first or last name.
- Re-sync Device Contacts:

  This allows the device contacts to re-sync if you are having difficulty accessing all of the contacts on your cell phone.
- Delete All Vehicle Contacts: Touch to delete all vehicle stored contacts.
- OnStar Phone TTY Mode: This enables OnStar cell phone TTY mode.

  Touch Disable or Enable.

Vehicle

This menu allows adjustment of different vehicle features. See *Vehicle Personalization* ⇨ *113*.

Personal

If equipped, this menu allows adjustment of different user profile settings. See "Users" in *Using the System* ⇨ *131* for information on setting up user profiles.

The menu may contain the following:

Name

Touch to edit your user name that will be displayed in the vehicle.

Vehicle Account Information

Touch to view the vehicle account information and to change the account password.

An "unverified user account" pop-up will display until the account information verification process has been completed on the Internet. Check your registered e-mail account for an activation e-mail to complete the verification process.

Profile Picture

Touch to choose or change your profile picture.

Profile Identifiers

Touch to have the vehicle recognize the identifier you choose.

Touch Vehicle Key 1 and/or Vehicle Key 2.

If the Remote Key is lost or stolen, see your dealer.

Security

Touch to have your profile secured with a Personal Identification Number (PIN).

Touch No or Yes.

Vehicle Name

Touch to edit your vehicle name.

Vehicle Account

Touch to view the vehicle account information and to change the account password.

Delete Profile

Touch to remove the profile from the vehicle.

Touch Remove or Cancel.

Teen Driver

If equipped, this allows multiple keys to be registered for beginner drivers to encourage safe driving habits. When the vehicle is started with a Teen Driver key, it will automatically activate certain safety systems, allow setting of some features, and limit the use of others. The Report Card will record vehicle data about driving behavior that can be viewed later. When the vehicle is started with a registered key, the Driver Information Center (DIC) displays a message that Teen Driver is active.

To access:

1. Touch Settings on the Home Page, then touch Vehicle, and then Teen Driver.
2. Create a Personal Identification Number (PIN) by choosing a four-digit PIN. Re-enter the PIN to confirm. To change the PIN, touch Change PIN.

The PIN is required to:

- Register or unregister keys.
- Change Teen Driver settings.
- Change or clear the Teen Driver PIN.
- Access or delete Report Card data.

Register keys to activate Teen Driver and assign restrictions to the key:

Any vehicle key can be registered, up to a maximum of eight keys. Label the key to tell it apart from the other keys.

For a pushbutton start system:

1. Start the engine.
2. For automatic transmissions, the vehicle must be in P (Park). For manual transmissions, the vehicle must be stopped with the parking brake set.
3. From the Settings menu, touch Vehicle and then Teen Driver.
4. Enter the PIN.
5. Place the Remote Keyless Entry (RKE) transmitter key you wish to register in the transmitter pocket. The key does not need to be the one that started the vehicle. See *Remote Keyless Entry (RKE) System Operation* ⇨ 7 for transmitter pocket location.
6. From the Teen Driver menu, touch Setup Keys.
   - If the transmitter key has not previously been registered, the option to add the key displays. Touch Setup and a confirmation message displays. Teen Driver restrictions will be applied whenever this key is used to operate the vehicle.
   - If the transmitter key has already been registered, the option to remove the key displays. If Remove is touched, the transmitter key is no longer registered. A confirmation message displays, and Teen Driver restrictions will not be applied if this transmitter key is used to operate the vehicle.

In vehicles with a pushbutton start system, if a Teen Driver and a non-Teen Driver key are both present at start up, the vehicle will recognize the non-Teen Driver key to start the vehicle. The Teen Driver settings will not be active.

For a keyed ignition system:

1. Start the engine.

2. For automatic transmissions, the vehicle must be in P (Park). For manual transmissions, the vehicle must be stopped with the parking brake set.
3. From the Settings menu, touch Vehicle and then Teen Driver.
4. Enter the PIN.
5. Touch Setup Keys. The system displays instructions for registering or unregistering a key. A confirmation message displays.

Manage Settings

Audio Volume Limit : Allows the audio volume limit to be turned on or off. Touch Set Audio Volume Limit to choose the maximum allowable audio volume level.

Set Audio Volume Limit : Allows a maximum radio volume to be set. Use the arrows to choose the maximum allowable level for the audio volume.

Teen Driver Speed Limiter : Limits the maximum speed of the vehicle. When the speed limiter is turned on and the vehicle is started with a Teen Driver key, the DIC displays a message that the top speed is limited.

On certain vehicles, when the Speed Limiter is turned ON, the vehicle's maximum acceleration will be limited. The DIC will display a message that the acceleration is limited.

Teen Driver Speed Warning : Allows the speed warning to be turned on or off. Touch Set Teen Driver Speed Warning to set the warning speed.

Set Teen Driver Speed Warning : Displays a warning in the DIC when exceeding a selectable speed. Choose the desired speed warning level. The speed warning does not limit the speed of the vehicle.

SiriusXM Explicit Content Filter (if equipped) : Allows the SiriusXM Explicit Content Filter to be turned ON or OFF. When ON, the teen driver will not be able to listen to SiriusXM stations that contain explicit content, and the Explicit Content Filter selection in the Audio Settings will be unavailable for change.

When Teen Driver is Active:

- The radio will mute when the driver seat belt, and in some vehicles the front passenger seat belt, is not buckled. The audio from any device paired to the vehicle will also be muted.
- An object placed on the front passenger seat, such as a briefcase, handbag, grocery bag, laptop, or other electronic device, could cause the passenger sensing system to falsely sense an unbuckled front passenger and mute the radio. If this happens, remove the object from the seat. See *Passenger Sensing System* ⇨ *55*.
- Some safety systems, such as Forward Collision Alert, if equipped, cannot be turned off. They may include: Park Assist, Side Blind Zone Alert, Lane Change Alert, Rear Cross Traffic Alert, Forward Collision Alert, Automatic Emergency Braking, Pedestrian Braking, Lane Departure Warning, Lane Keep Assist, Daytime Running Lamps/Automatic Light Control, Traction Control, Stability Control, and Antilock Brakes.
- The gap setting for the Forward Collision Alert and Adaptive Cruise Control, if equipped, cannot be changed.
- When trying to change a safety feature that is not configurable in Teen Driver, the feature may be grayed out or removed from the infotainment menu, or the DIC will display a message indicating that Teen Driver is active and the action is not available.

- Super Cruise, if equipped, is not available.
- Enhanced Low Fuel Warning (if equipped) – When the vehicle is low on fuel, the low fuel light on the instrument cluster flashes and the DIC low fuel warning cannot be dismissed.
- Do not tow a trailer.

Report Card

The vehicle owner must secure the driver's consent to record certain vehicle data when the vehicle is driven with a registered Teen Driver key. There is one Report Card per vehicle. Data is only recorded when a registered Teen Driver key is used to operate the vehicle.

The Report Card data is collected from the time Teen Driver is activated or the last time the Report Card was reset. The following items may be recorded:

- Distance Driven – the total distance driven.
- Maximum Speed – the maximum vehicle speed detected.
- Overspeed Warnings – the number of times the speed warning setting was exceeded.
- Wide Open Throttle – the number of times the accelerator pedal was pressed nearly all the way down.
- Forward Collision Alerts (if equipped) – the number of times the driver was notified when approaching a vehicle ahead too quickly and at potential risk for a crash.
- Forward Automatic Braking, also called Automatic Emergency Braking (if equipped) – the number of times the vehicle detected that a forward collision was imminent and applied the brakes.
- Reverse Automatic Braking (if equipped) – the number of times the vehicle detected that a rearward collision was imminent and applied the brakes.
- Traction Control – the number of times the Traction Control System activated to reduce wheel spin or loss of traction.
- Stability Control – the number of events which required the use of electronic stability control.
- Antilock Braking System Active – The number of Antilock Brake System activations.
- Tailgating Alerts (if equipped) – the number of times the driver was alerted for following a vehicle ahead too closely.

Report Card Data

Cumulative Data is saved for all trips until the Report Card is reset or until the maximum count is exceeded. If the maximum count is exceeded for a Report Card line item, that item will no longer be updated in the Report Card until it is reset. Each item will report a maximum of 1,000 counts. The distance driven will report a maximum of 64,374 km (40,000 mi).

To delete Report Card data, do one of the following:

- From the Report Card display, touch Reset.
- Touch Clear All Teen Keys and PIN from the Teen Driver menu. This will also unregister any Teen Driver keys and delete the PIN.

Forgotten PIN

See your dealer to reset the PIN.

Trademarks and License Agreements

FCC Information

See *Radio Frequency Statement* ⇨ *357*.

Made for iPod iPhone

"Made for iPod," and "Made for iPhone," mean that an electronic accessory has been designed to connect specifically to iPod or iPhone, respectively, and has been certified by the developer to meet Apple performance standards. Apple is not responsible for the operation of this device or its compliance with safety and regulatory standards. Please note that the use of this accessory with iPod or iPhone may affect wireless performance. iPhone, iPod, iPod classic, iPod nano, iPod shuffle, and iPod touch are trademarks of Apple Inc., registered in the U.S. and other countries.

SiriusXM

If you decide to continue service after your trial, your selected subscription plan will automatically renew thereafter. You will be charged at then-current rates. Fees and taxes apply. Please see the SiriusXM Customer Agreement at siriusxm.com for complete terms and how to cancel, which includes calling SiriusXM at 1-866-635-2349. All fees and programming are subject to change.

Fees and Taxes: Subscription fee, taxes, one time activation fee, and other fees may apply. Subscription fee is consumer only. All fees and programming subject to change. Subscriptions subject to Customer Agreement available at www.siriusxm.com. SiriusXM service is only available in the 48 contiguous United States and Canada.

In Canada: Some deterioration of service may occur in extreme northern latitudes. This is beyond the control of SiriusXM Satellite Radio.

Explicit Language Notice: Channels with frequent explicit language are indicated with an “XL” preceding the channel name. Channel blocking is available for SiriusXM Satellite Radio receivers by notifying SiriusXM:

- USA Customers — See www.siriusxm.com or call 1-888-601–6296.
- Canada Customers — See www.siriusxm.ca or call 1-877-438-9677.

It is prohibited to copy, decompile, disassemble, reverse engineer, hack, manipulate, or otherwise make available any technology or software incorporated in receivers compatible with the SiriusXM Satellite Radio System or that support the SiriusXM website, the Online Service or any of its content. Furthermore, the AMBER voice compression software included in this product is protected by intellectual property rights including patent rights, copyrights, and trade secrets of Digital Voice Systems, Inc.

General Requirements:

1. A License Agreement from SiriusXM is required for any product that incorporates SiriusXM Technology and/or for use of any of the SiriusXM marks to be manufactured, distributed, or marketed in the SiriusXM Service Area.
2. For products to be distributed, marketed, and/or sold in Canada, a separate agreement is required with Canadian Satellite Radio Inc. (operating as SiriusXM Canada).

TouchSense Technology and TouchSense System 1000 Series Licensed from Immersion Corporation. TouchSense System 1000 protected under one or more of the U.S. Patents at the following address www.immersion.com/patent-marking.html and other patents pending.

Bose

Bose AudioPilot and Bose Centerpoint surround are registered trademarks of Bose Corporation in the U.S. and other countries.

HD Radio Technology

HD Radio Technology manufactured under license from iBiquity Digital Corporation. U.S. and Foreign Patents. For patents see http://dts.com/patents. HD Radio and the HD, HD Radio, and “ARC” logos are registered trademarks or trademarks of iBiquity Digital Corporation in the United States and/or other countries.

Bluetooth

The Bluetooth word mark and logos are owned by the Bluetooth SIG, Inc. and any use of such marks by General Motors is under license. Other trademarks and trade names are those of their respective owners.

Java

Java is a registered trademark of Oracle and/or its affiliates.

Schedule I: Gracenote EULA

Music recognition technology and related data are provided by Gracenote. Gracenote is the industry standard in music recognition technology and related content delivery. For more information see www.gracenote.com.

Music-related data from Gracenote, Inc., copyright © 2000 to present Gracenote. Gracenote Software, copyright © 2000 to present Gracenote. One or more patents owned by Gracenote may apply to this product and service. See the Gracenote website for a non-exhaustive list of applicable Gracenote patents. Gracenote, CDDB, MusicID, MediaVOCS, the Gracenote logo and logotype, and the "Powered by Gracenote" logo are either registered trademarks or trademarks of Gracenote in the United States and/or other countries.

Gracenote Terms of Use

This application or device contains software from Gracenote, Inc. of Emeryville, California ("Gracenote"). The software from Gracenote (the "Gracenote Software") enables this application to do disc or file identification and obtain music-related information, including name, artist, track, and title information ("Gracenote Data") from online servers or embedded databases (collectively, "Gracenote Servers") and to perform other functions. You may use Gracenote Data only by means of the intended End-User functions of this application or device.

This application or device may contain content belonging to Gracenote's providers. If so, all of the restrictions set forth herein with respect to Gracenote Data shall also apply to such content and such content providers shall be entitled to all of the benefits and protections set forth herein that are available to Gracenote.

You agree that you will use Gracenote Data, the Gracenote Software, and Gracenote Servers for your own personal non-commercial use only. You agree not to assign, copy, transfer or transmit the Gracenote Software or any Gracenote Data to any third party. YOU AGREE NOT TO USE OR EXPLOIT GRACENOTE DATA, THE GRACENOTE SOFTWARE, OR GRACENOTE SERVERS, EXCEPT AS EXPRESSLY PERMITTED HEREIN.

You agree that your non-exclusive license to use the Gracenote Data, the Gracenote Software, and Gracenote Servers will terminate if you violate these restrictions. If your license terminates, you agree to cease any and all use of the Gracenote Data, the Gracenote Software, and Gracenote Servers. Gracenote reserves all rights in Gracenote Data, the Gracenote Software, and the Gracenote Servers, including all ownership rights. Under no circumstances will Gracenote become liable for any payment to you for any information that you provide. You agree that Gracenote may enforce its rights under this Agreement against you directly in its own name.

The Gracenote service uses a unique identifier to track queries for statistical purposes. The purpose of a randomly assigned numeric identifier is to allow the Gracenote service to count queries without knowing anything about who you are. For more information, see the web page for the Gracenote Privacy Policy for the Gracenote service.

The Gracenote Software and each item of Gracenote Data are licensed to you "AS IS." Gracenote makes no representations or warranties, express or implied, regarding the accuracy of any Gracenote Data. Gracenote reserves the right to delete data from the Gracenote Servers or to change data categories for any cause that Gracenote deems sufficient. No warranty is made that the Gracenote Software or Gracenote Servers are error-free or that functioning of Gracenote Software or Gracenote Servers will be uninterrupted. Gracenote is not obligated to provide you with new enhanced or additional data types or categories that Gracenote may provide in the future and is free to discontinue its services at any time.

GRACENOTE DISCLAIMS ALL WARRANTIES EXPRESS OR IMPLIED, INCLUDING, BUT NOT LIMITED TO, IMPLIED WARRANTIES OF MERCHANTABILITY, FITNESS FOR A PARTICULAR PURPOSE, TITLE, AND NON-INFRINGEMENT. GRACENOTE DOES NOT WARRANT THE RESULTS THAT WILL BE OBTAINED BY YOUR USE OF THE GRACENOTE SOFTWARE OR ANY GRACENOTE SERVER. IN NO CASE WILL GRACENOTE BE LIABLE FOR ANY CONSEQUENTIAL OR INCIDENTAL DAMAGES OR FOR ANY LOST PROFITS OR LOST REVENUES.

© 2014. Gracenote, Inc. All Rights Reserved.

MPEG4–AVC (H.264)

THIS PRODUCT IS LICENSED UNDER THE AVC PATENT PORTFOLIO LICENSE FOR THE PERSONAL AND NON-COMMERCIAL USE OF A CONSUMER TO (i) ENCODE VIDEO IN COMPLIANCE WITH THE AVC STANDARD ("AVC VIDEO") AND/OR (ii) DECODE AVC VIDEO THAT WAS ENCODED BY A CONSUMER ENGAGED IN A PERSONAL AND NON-COMMERCIAL ACTIVITY AND/OR WAS OBTAINED FROM A VIDEO PROVIDER LICENSED TO PROVIDE AVC VIDEO. NO

LICENSE IS GRANTED OR SHALL BE IMPLIED FOR ANY OTHER USE. ADDITIONAL INFORMATION MAY BE OBTAINED FROM MPEG LA, LLC. SEE HTTP://WWW.MPEGLA.COM.

VC-1

THIS PRODUCT IS LICENSED UNDER THE VC-1 PATENT PORTFOLIO LICENSE FOR THE PERSONAL AND NON-COMMERCIAL USE OF A CONSUMER TO (i) ENCODE VIDEO IN COMPLIANCE WITH THE VC-1 STANDARD ("VC-1 VIDEO") AND/OR (ii) DECODE VC-1 VIDEO THAT WAS ENCODED BY A CONSUMER ENGAGED IN A PERSONAL AND NON-COMMERCIAL ACTIVITY AND/OR WAS OBTAINED FROM A VIDEO PROVIDER LICENSED TO PROVIDE VC-1 VIDEO. NO LICENSE IS GRANTED OR SHALL BE IMPLIED FOR ANY OTHER USE. ADDITIONAL INFORMATION MAY BE OBTAINED FROM MPEG LA, LLC. SEE HTTP://WWW.MPEGLA.COM.

MPEG4–Visual

USE OF THIS PRODUCT IN ANY MANNER THAT COMPLIES WITH THE MPEG-4 VISUAL STANDARD IS PROHIBITED, EXCEPT FOR USE BY A CONSUMER ENGAGING IN PERSONAL AND NON-COMMERCIAL ACTIVITIES.

MP3

MPEG Layer-3 audio coding technology licensed from Fraunhofer IIS and Thomson.

WMV/WMA

This product includes technology owned by Microsoft Corporation and under a license from Microsoft Licensing, GP. Use or distribution of such technology outside of this product is prohibited without a license from Microsoft Corporation and/or Microsoft Licensing, GP as applicable.

Map End User License Agreement

END USER TERMS

The Map Data SD card ("Data") is provided for your personal, internal use only and not for resale. It is protected by copyright, and is subject to the following terms (this "End User License Agreement") and conditions which are agreed to by you, on the one hand, and HERE North America, LLC ("HERE") and its licensors (including their licensors and suppliers) on the other hand.

The Data for areas of Canada includes information taken with permission from Canadian authorities, including: © Her Majesty the Queen in Right of Canada, © Queen's Printer for Ontario, © Canada Post Corporation, GeoBase®.

HERE holds a nonexclusive license from the United States Postal Service® to publish and sell ZIP+4® information.

© United States Postal Service 2013. Prices are not established, controlled, or approved by the United States Postal Service. The following trademarks and registrations are owned by the USPS: United States Postal Service, USPS, and ZIP+4.

TERMS AND CONDITIONS

Personal Use Only: You agree to use this Data for the solely personal, noncommercial purposes for which you were licensed, and not for service bureau, timesharing or other similar purposes. Except as otherwise set forth herein, you agree not to otherwise reproduce, copy, modify, decompile, disassemble or reverse engineer any portion of this Data, and may not transfer or distribute it in any form, for any purpose, except to the extent permitted by mandatory laws. You may transfer the Data and all accompanying materials on a permanent basis if you retain no copies and the recipient agrees to the terms of this End User License Agreement. Multi-disc sets may

only be transferred or sold as a complete set as provided to you and not as a subset thereof.

Restrictions

Except where you have been specifically licensed to do so by HERE and without limiting the preceding paragraph, you may not (a) use this Data with any products, systems, or applications installed or otherwise connected to or in communication with vehicles capable of vehicle navigation, positioning, dispatch, real time route guidance, fleet management or similar applications; or (b) with, or in communication with, including without limitation, cellular phones, palmtop and handheld computers, pagers, and personal digital assistants or PDAs.

Warning

This Data may contain inaccurate or incomplete information due to the passage of time, changing circumstances, sources used, and the nature of collecting comprehensive geographic data, any of which may lead to incorrect results.

No Warranty

This Data is provided to you "as is," and you agree to use it at your own risk. HERE and its licensors (and their licensors and suppliers) make no guarantees, representations, or warranties of any kind, express or implied, arising by law or otherwise, including but not limited to, content, quality, accuracy, completeness, effectiveness, reliability, fitness for a particular purpose, usefulness, use or results to be obtained from this Data, or that the Data or server will be uninterrupted or error free.

Disclaimer of Warranty

THE DATABASE IS PROVIDED ON AN "AS IS" AND "WITH ALL FAULTS BASIS" AND HARMAN (AND THEIR LICENSORS AND SUPPLIERS) EXPRESSLY DISCLAIM ALL OTHER WARRANTIES, EXPRESS OR IMPLIED, INCLUDING BUT NOT LIMITED TO, THE IMPLIED WARRANTIES OF NON-INFRINGEMENT, MERCHANTABILITY, SATISFACTORY QUALITY, ACCURACY, TITLE AND FITNESS FOR A PARTICULAR PURPOSE. NO ORAL OR WRITTEN ADVICE OR INFORMATION PROVIDED BY HARMAN (OR ANY OF THEIR LICENSORS, AGENTS, EMPLOYEES, OR THIRD PARTY PROVIDERS) SHALL CREATE A WARRANTY, AND YOU ARE NOT ENTITLED TO RELY ON ANY SUCH ADVICE OR INFORMATION. THIS DISCLAIMER OF WARRANTIES IS AN ESSENTIAL CONDITION OF THIS AGREEMENT.

Disclaimer of Liability

HERE AND ITS LICENSORS (INCLUDING THEIR LICENSORS AND SUPPLIERS) SHALL NOT BE LIABLE TO YOU IN RESPECT OF ANY CLAIM, DEMAND OR ACTION, IRRESPECTIVE OF THE NATURE OF THE CAUSE OF THE CLAIM, DEMAND OR ACTION ALLEGING ANY LOSS, INJURY OR DAMAGES, DIRECT OR INDIRECT, WHICH MAY RESULT FROM THE USE OR POSSESSION OF THIS DATA; OR FOR ANY LOSS OF PROFIT, REVENUE, CONTRACTS OR SAVINGS, OR ANY OTHER DIRECT, INDIRECT, INCIDENTAL, SPECIAL OR CONSEQUENTIAL DAMAGES ARISING OUT OF YOUR USE OF OR INABILITY TO USE THIS DATA, ANY DEFECT IN THIS DATA, OR THE BREACH OF THESE TERMS OR CONDITIONS, WHETHER IN AN ACTION IN CONTRACT OR TORT OR BASED ON A WARRANTY, EVEN IF HERE OR ITS LICENSORS HAVE BEEN ADVISED OF THE POSSIBILITY OF SUCH DAMAGES. Some States, Territories, and Countries do not

allow certain liability exclusions or damages limitations, so to that extent the above may not apply to you.

Export Control

You agree not to export from anywhere any part of the Data provided to you or any direct product thereof except in compliance with, and with all licenses and approvals required under, applicable export laws, rules and regulations. Entire Agreement: These terms and conditions constitute the entire agreement between HERE (and its licensors, including their licensors and suppliers) and you pertaining to the subject matter hereof, and supersedes in their entirety any and all written or oral agreements previously existing between us with respect to such subject matter.

Governing Law

The above terms and conditions shall be governed by the laws of the State of Illinois, without giving effect to (i) its conflict of laws provisions, or (ii) the United Nations Convention for Contracts for the International Sale of Goods, which is explicitly excluded. You agree to submit to the jurisdiction of the State of Illinois for any and all disputes, claims, and actions arising from or in connection with the Data provided to you hereunder.

Government End Users

If the Data is being acquired by or on behalf of the United States government or any other entity seeking or applying rights similar to those customarily claimed by the United States government, this Data is a "commercial item" as that term is defined at 48 C.F.R. ("FAR") 2.101, is licensed in accordance with this End User License Agreement, and each copy of Data delivered or otherwise furnished shall be marked and embedded as appropriate with the following "Notice of Use," and be treated in accordance with such Notice:

here

Maps for Life

NOTICE OF USE

CONTRACTOR (MANUFACTURER/ SUPPLIER)

NAME:

HERE North America, LLC

CONTRACTOR (MANUFACTURER/SUPPLIER)

ADDRESS:

425 West Randolph Street, Chicago, IL 60606.

This Data is a commercial item as defined in FAR 2.101 and is subject to the End User License Agreement under which this Data was provided.

© 2014 HERE North America, LLC. All rights reserved.

If the Contracting Officer, federal government agency, or any federal official refuses to use the legend provided herein, the Contracting Officer, federal government agency, or any federal official must notify HERE prior to seeking additional or alternative rights in the Data.

Unicode

Copyright © 1991-2010 Unicode, Inc. All rights reserved. Distributed under the Terms of Use in http://www.unicode.org/copyright.html.

Free Type Project

Portions of this software are copyright © 2010 The FreeType Project (http://www.freetype.org). All rights reserved.

Open Source SW

Further information concerning the OSS licenses is shown in the infotainment display.

QNX

Portions of this software are copyright © 2008-2011, QNX Software Systems. All rights reserved.

Part C – EULA

Copyright © 2011, Software Systems GmbH & Co. KG. All Rights Reserved.

The product you have purchased ("Product") contains Software (Runtime Configuration No. 505962; "Software") which is distributed by or on behalf of the Product manufacturer "Manufacturer") under license from Software Systems Co. ("QSSC"). You may only use the Software in the Product and in compliance with the license terms below.

Subject to the terms and conditions of this License, QSSC hereby grants you a limited, non-exclusive, non-transferable license to use the Software in the Product for the purpose intended by the Manufacturer. If permitted by the Manufacturer, or by applicable law, you may make one backup copy of the Software as part of the Product software. QSSC and its licensors reserve all license+C31 rights not expressly granted herein, and retain all right, title and interest in and to all copies of the Software, including all intellectual property rights therein. Unless required by applicable law you may not reproduce, distribute or transfer, or de-compile, disassemble or otherwise attempt to unbundle, reverse engineer, modify or create derivative works of, the Software. You agree: (1) not to remove, cover or alter any proprietary notices, labels or marks in or on the Software, and to ensure that all copies bear any notice contained on the original; and (2) not to export the Product or the Software in contravention of applicable export control laws.

EXCEPT TO THE EXTENT OTHERWISE REQUIRED BY APPLICABLE LAW, QSSC AND ITS LICENSORS PROVIDE THE SOFTWARE ON AN "AS IS" BASIS, WITHOUT WARRANTIES OR CONDITIONS OF ANY KIND, EITHER EXPRESS OR IMPLIED INCLUDING, WITHOUT LIMITATION, ANY WARRANTIES OR CONDITIONS OF TITLE, NON-INFRINGEMENT, MERCHANTABILITY OR FITNESS FOR A PARTICULAR PURPOSE. ANY WARRANTIES OR OTHER PROVISIONS OFFERED BY THE MANUFACTURER OR ITS DISTRIBUTOR(S) THAT DIFFER FROM THIS LICENSE ARE OFFERED BY THE MANUFACTURER OR ITS DISTRIBUTOR(S) ALONE AND NOT BY QSSC, ITS AFFILIATES OR THEIR LICENSORS. YOU ASSUME ANY RISKS ASSOCIATED WITH YOUR USE OF THE SOFTWARE UNDER THIS LICENSE.

EXCEPT TO THE EXTENT OTHERWISE REQUIRED BY APPLICABLE LAW (SUCH AS IN THE CASE OF DELIBERATE OR GROSSLY NEGLIGENT ACTS), IN NO EVENT SHALL QSSC, ITS AFFILIATES OR THEIR LICENSORS BE LIABLE TO YOU UNDER ANY LEGAL THEORY, WHETHER IN TORT (INCLUDING NEGLIGENCE), CONTRACT OR OTHERWISE, FOR DAMAGES, INCLUDING ANY DIRECT, INDIRECT, SPECIAL, INCIDENTAL, OR CONSEQUENTIAL DAMAGES OF ANY CHARACTER ARISING AS A RESULT OF THIS LICENSE OR OUT OF THE USE OR INABILITY TO USE THE PRODUCT (INCLUDING BUT NOT LIMITED TO DAMAGES FOR LOSS OF GOODWILL, WORK STOPPAGE, PRODUCT FAILURE OR MALFUNCTION, OR ANY AND ALL

OTHER COMMERCIAL DAMAGES OR LOSSES), EVEN IF QSSC, ITS AFFILIATES OR THEIR LICENSORS HAVE BEEN ADVISED OF THE POSSIBILITY OF SUCH DAMAGES.

WMA

This product is protected by certain intellectual property rights of Microsoft. Use or distribution of such technology outside of this product is prohibited without a license from Microsoft.

For more information on the Software, including any open source software license terms (and available source code) as well as copyright attributions applicable to the Runtime Configuration indicated above, please contact the Manufacturer or contact QSSC at 175 Terence Matthews Crescent, Kanata, Ontario, Canada K2M 1W8 (licensing@qnx.com).

Linotype

Helvetica is a trademark of Linotype Corp. registered in the U.S. Patent and Trademark Office and may be registered in certain other jurisdictions in the name of Linotype Corp. or its licensee Linotype GmbH.

Usage in text form of each of the Licensed Trademarks is:

The trademark attribution requirements for the Licensed Trademarks may be viewed at http://www.linotype.com/2061-19414/trademarks.html.

END USER NOTICE

The marks of companies displayed by this product to indicate business locations are the marks of their respective owners. The use of such marks in this product does not imply any sponsorship, approval, or endorsement by such companies of this product.

Climate Controls

Climate Control Systems
Dual Automatic Climate Control System 182

Air Vents
Air Vents 186

Maintenance
Passenger Compartment Air Filter 186
Service 186

Climate Control Systems

Dual Automatic Climate Control System

The heating, cooling, and ventilation for the vehicle can be controlled with this system.

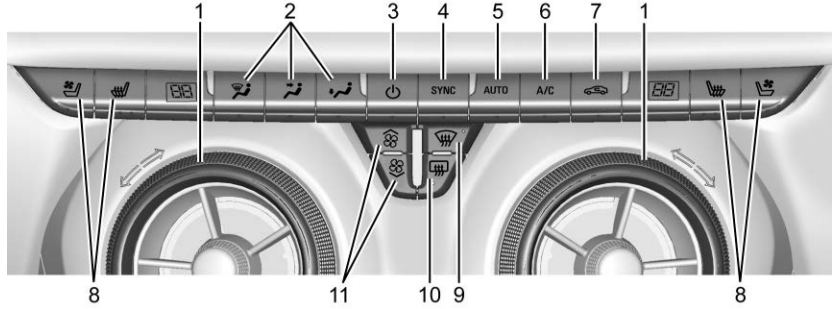

1. Driver and Passenger Temperature Controls
2. Air Delivery Mode Controls
3. ⏻ (Power)
4. SYNC (Synchronized Temperature)
5. AUTO (Automatic Operation)
6. A/C (Air Conditioning)
7. Recirculation
8. Driver and Passenger Heated and Ventilated Seats (If Equipped)
9. Defrost
10. Rear Window Defogger
11. Fan Control

Climate Control Display

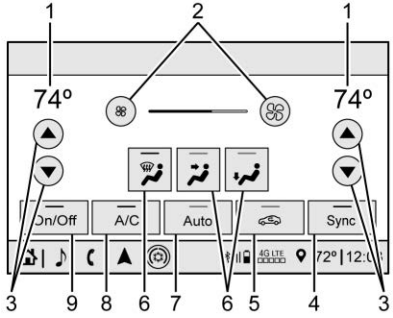

1. Driver and Passenger Temperature Settings
2. Fan Control
3. Driver and Passenger Temperature Controls
4. Sync (Synchronized Temperature)
5. Recirculation
6. Air Delivery Mode Controls
7. Auto (Automatic Operation)
8. A/C (Air Conditioning)
9. On/Off (Power)

The fan, air delivery mode, air conditioning, driver and passenger temperatures, and Sync settings can be controlled by touching CLIMATE on the infotainment Home Page or the climate button in the climate control display application tray. A selection can then be made on the front climate control page displayed.

Climate Control Status Display

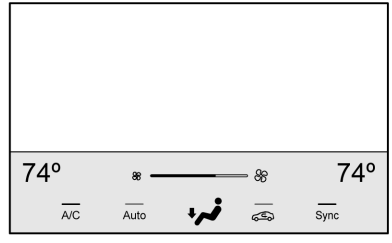

The climate control status display appears briefly when the center stack climate controls are adjusted.

Automatic Operation

The system automatically controls the fan speed, air delivery, air conditioning, and recirculation in order to heat or cool the vehicle to the desired temperature.

When AUTO is lit, all four functions operate automatically. Each function can also be manually set and the selected setting is displayed. Functions not manually set will continue to be automatically controlled, even if the AUTO indicator is not lit.

For automatic operation:

1. Press AUTO.
2. Set the temperature. Allow the system time to stabilize. Adjust the temperature as needed for best comfort.

To improve fuel efficiency and to cool the vehicle faster with A/C on, recirculation may be automatically selected in warm weather. Press to select recirculation; press it again to select outside air.

Driver and Passenger Temperature Controls : The temperature can be adjusted separately for the driver and the passenger. Turn the knob clockwise or counterclockwise to increase or decrease the driver or passenger temperature setting.

SYNC : Press to link all passenger temperature settings to the driver setting. The SYNC indicator light will turn on. When the passenger settings are adjusted, the SYNC indicator light turns off.

Manual Operation

⏻ **:** Press to turn the fan off or on. When off is selected, the system will prevent air from flowing into the cabin. If on is selected, or any other button is pressed, the climate control system will turn on and return to delivering airflow as set. The temperature control and air delivery mode can still be adjusted.

: Press to increase or decrease the fan speed. The fan speed setting appears on the main display. Pressing any airflow mode button cancels automatic fan control and the fan is controlled manually. Press AUTO to return to automatic operation.

Air Delivery Mode Controls : Press , , or to change the direction of the airflow. Any combination of the three buttons can be selected. The indicator light in the button will turn on. The current mode appears in the display. Pressing either button cancels automatic air delivery control and the direction of the airflow is controlled manually. Press AUTO to return to automatic operation.

To change the current mode, select one or more of the following modes:

: Clears the windows of fog or moisture. Air is directed to the windshield.

: Air is directed to the instrument panel outlets.

: Air is directed to the floor outlets.

MAX : Air is directed to the windshield, the fan runs at a higher speed, and the temperature of the air is increased if not already at maximum. This mode overrides the previous mode selected and clears fog or frost from the windshield more quickly. When the button is pressed again, the system returns to the previous mode setting and fan speed.

For best results, clear all snow and ice from the windshield before defrosting and do not use recirculation.

A/C : Press to turn the air conditioning system on or off. If the climate control system is turned off or the outside temperature falls below freezing, the air conditioner will not run. Pressing this button cancels automatic air conditioning and turns off the air conditioner. Press AUTO to return to automatic operation and the air conditioner runs automatically as needed. When the indicator light is on, the air conditioner runs automatically to cool the air inside the vehicle or to dry the air needed to defog the windshield faster.

: Press to turn on recirculation. An indicator light comes on. Air is recirculated to quickly cool the inside of the vehicle or to reduce the entry of outside air and odors.

If selected during cool or cold weather, the windshield and windows may fog. Turn off recirculation to help clear the windshield and windows.

Auto Defog : The climate control system may have a sensor to automatically detect high humidity inside the vehicle. When high humidity is detected, the climate control system may adjust to outside air supply and turn on the air conditioner. The fan speed may slightly increase to help prevent fogging. If the climate control system does not detect possible window fogging, it returns to normal operation.

To turn Auto Defog off or on, see “Climate and Air Quality” under *Vehicle Personalization* ⇨ *113*.

Rear Window Defogger

: Press to turn the rear window defogger on or off. An indicator light on the button comes on to show that the rear window defogger is on. The rear window defogger only works when the ignition is on. The defogger turns off when the ignition is off or in ACC/ACCESSORY.

The rear window defogger can be set to automatic operation. See “Climate and Air Quality” under *Vehicle Personalization* ⇨ *113*. When Auto Rear Defog is selected, the rear window defogger turns on automatically when the interior temperature is cold and the outside temperature is about 7 °C (44 °F) and below. The auto rear defogger turns off automatically.

If the vehicle is equipped with heated outside mirrors, they turn on when the rear window defogger button is on and help to clear fog or frost from the surface of the mirror. See *Heated Mirrors* ⇨ *26*.

Caution

Do not try to clear frost or other material from the inside of the front windshield and rear window with a razor blade or anything else that is sharp. This may damage the rear window defogger grid and affect the radio's ability to pick up stations clearly. The repairs would not be covered by the vehicle warranty.

or : If equipped, press or to heat the driver or passenger seat. See *Heated and Ventilated Front Seats* ⇨ *40*.

or : If equipped, press or to ventilate the driver or passenger seat. See *Heated and Ventilated Front Seats* ⇨ *40*.

Remote Start Climate Control Operation : If equipped with remote start, the climate control system may run when the vehicle is started remotely. The system will use the defrost setting if it is cold outside or turn on using the coldest settings if it is hot outside. The rear defog may come on during remote start based on cold ambient conditions. The rear defog indicator light does not come on during a remote start.

If equipped, the heated seats will turn on if it is cold outside or the ventilated seats will turn on if it is hot outside. The heated and ventilated seat indicator lights may not come on during a remote start. If equipped, the heated steering wheel will come on in a remote start if it is cold outside. The heated steering wheel indicator light may not come on. See *Remote Vehicle Start* ⇨ *13* and *Heated and Ventilated Front Seats* ⇨ *40*.

Sensor

The solar sensor, on top of the instrument panel near the windshield, monitors the solar heat.

The climate control system uses the sensor information to adjust the temperature, fan speed, recirculation, and air delivery mode for best comfort.

Do not cover the sensor; otherwise the automatic climate control system may not work properly.

Afterblow Feature

Under certain conditions, the fan may stay on or may turn on and off several times after you turn off and lock the vehicle. This is normal.

Air Vents

Use the air outlets in the center and on the side of the instrument panel to direct the airflow. Turn the center knobs on the air outlets counterclockwise or clockwise to open or close off the airflow.

Operation Tips

- Clear away any ice, snow, or leaves from the air inlets at the base of the windshield that can block the flow of air into the vehicle.
- Clear snow off the hood to improve visibility and help decrease moisture drawn into the vehicle.
- Use of non-GM approved hood deflectors can adversely affect the performance of the system.
- Keep the path under all seats clear of objects to help circulate the air inside the vehicle more effectively.
- If fogging reoccurs while in vent or in a combination mode with mild temperature throughout the vehicle, turn on the air conditioner to reduce windshield fogging.

Maintenance

Passenger Compartment Air Filter

The filter reduces dust, pollen, and other airborne irritants from outside air that is pulled into the vehicle. The filter should be replaced as part of routine scheduled maintenance. See *Maintenance Schedule* ⇨ *332*.

See your dealer regarding replacement of the filter.

Service

All vehicles have a label underhood that identifies the refrigerant used in the vehicle. The refrigerant system should only be serviced by trained and certified technicians. The air conditioning evaporator should never be repaired or replaced by one from a salvage vehicle. It should only be replaced by a new evaporator to ensure proper and safe operation.

During service, all refrigerants should be reclaimed with proper equipment. Venting refrigerants directly to the atmosphere is harmful to the environment and may also create unsafe conditions based on inhalation, combustion, frostbite, or other health-based concerns.

The air conditioning system requires periodic maintenance. See *Maintenance Schedule* ⇨ *332*.

Driving and Operating

Driving Information
Driving for Better Fuel Economy 188
Distracted Driving 188
Defensive Driving 188
Impaired Driving 189
Control of a Vehicle 189
Braking 189
Steering 189
Off-Road Recovery 190
Loss of Control 191
Off-Road Driving 191
Driving on Wet Roads 194
Hill and Mountain Roads 195
Winter Driving 195
If the Vehicle Is Stuck 196
Vehicle Load Limits 197

Starting and Operating
New Vehicle Break-In 200
Ignition Positions 200
Starting the Engine 202
Stop/Start System 203
Engine Heater 203
Retained Accessory Power (RAP) 205
Shifting Into Park 205
Shifting out of Park 205
Parking over Things That Burn 206
Active Fuel Management 206
Extended Parking 206

Engine Exhaust
Engine Exhaust 207
Running the Vehicle While Parked 207

Automatic Transmission
Automatic Transmission 207
Manual Mode 209
Tow/Haul Mode 210

Drive Systems
All-Wheel Drive 210

Brakes
Electric Brake Boost 210
Antilock Brake System (ABS) 210
Electric Parking Brake 211
Brake Assist 212
Hill Start Assist (HSA) 212

Ride Control Systems
Traction Control/Electronic Stability Control 213
Driver Mode Control 214

Cruise Control
Cruise Control 215
Adaptive Cruise Control (Advanced) 217

Driver Assistance Systems
Driver Assistance Systems 225
Assistance Systems for Parking or Backing 227
Assistance Systems for Driving 230
Forward Collision Alert (FCA) System 230
Automatic Emergency Braking (AEB) ... 232
Front Pedestrian Braking (FPB) System 234
Side Blind Zone Alert (SBZA) 236
Lane Change Alert (LCA) 236
Lane Keep Assist (LKA) 237

Fuel
Top Tier Fuel 239
Recommended Fuel 239
Prohibited Fuels 239
Fuels in Foreign Countries 240
Fuel Additives 240
Filling the Tank 240
Filling a Portable Fuel Container 241

Trailer Towing
General Towing Information 242
Driving Characteristics and Towing Tips 242
Trailer Towing 245
Towing Equipment 248
Trailer Sway Control (TSC) 251

Conversions and Add-Ons
Add-On Electrical Equipment 252

Driving Information

Driving for Better Fuel Economy

Driving habits can affect fuel mileage. Here are some driving tips to get the best fuel economy possible.

- Set the climate controls to the desired temperature after the engine is started, or turn them off when not required.
- On AWD vehicles, see *Driver Mode Control* ⇨ *214*.
- Avoid fast starts and accelerate smoothly.
- Brake gradually and avoid abrupt stops.
- Avoid idling the engine for long periods of time.
- When road and weather conditions are appropriate, use cruise control.
- Always follow posted speed limits or drive more slowly when conditions require.
- Keep vehicle tires properly inflated.
- Combine several trips into a single trip.
- Replace the vehicle's tires with the same TPC Spec number molded into the tire's sidewall near the size.
- Follow recommended scheduled maintenance.

Distracted Driving

Distraction comes in many forms and can take your focus from the task of driving. Exercise good judgment and do not let other activities divert your attention away from the road. Many local governments have enacted laws regarding driver distraction. Become familiar with the local laws in your area.

To avoid distracted driving, keep your eyes on the road, keep your hands on the steering wheel, and focus your attention on driving.

- Do not use a phone in demanding driving situations. Use a hands-free method to place or receive necessary phone calls.
- Watch the road. Do not read, take notes, or look up information on phones or other electronic devices.
- Designate a front seat passenger to handle potential distractions.
- Become familiar with vehicle features before driving, such as programming favorite radio stations and adjusting climate control and seat settings. Program all trip information into any navigation device prior to driving.
- Wait until the vehicle is parked to retrieve items that have fallen to the floor.
- Stop or park the vehicle to tend to children.
- Keep pets in an appropriate carrier or restraint.
- Avoid stressful conversations while driving, whether with a passenger or on a cell phone.

⚠ Warning

Taking your eyes off the road too long or too often could cause a crash resulting in injury or death. Focus your attention on driving.

Refer to the infotainment section for more information on using that system and the navigation system, if equipped, including pairing and using a cell phone.

Defensive Driving

Defensive driving means “always expect the unexpected.” The first step in driving defensively is to wear the seat belt. See *Seat Belts* ⇨ *44*.

- Assume that other road users (pedestrians, bicyclists, and other drivers) are going to be careless and make mistakes. Anticipate what they may do and be ready.
- Allow enough following distance between you and the driver in front of you.
- Focus on the task of driving.

Impaired Driving

Death and injury associated with impaired driving is a global tragedy.

⚠ Warning

Drinking alcohol or taking drugs and then driving is very dangerous. Your reflexes, perceptions, attentiveness, and judgment can be affected by even a small amount of alcohol or drugs. You can have a serious — or even fatal — collision if you drive after drinking or taking drugs.

Do not drive while under the influence of alcohol or drugs, or ride with a driver who has been drinking or is impaired by drugs. Find alternate transportation home; or if you are with a group, designate a driver who will remain sober.

Control of a Vehicle

Braking, steering, and accelerating are important factors in helping to control a vehicle while driving.

Braking

Braking action involves perception time and reaction time. Deciding to push the brake pedal is perception time. Actually doing it is reaction time.

Average driver reaction time is about three-quarters of a second. In that time, a vehicle moving at 100 km/h (60 mph) travels 20 m (66 ft), which could be a lot of distance in an emergency.

Helpful braking tips to keep in mind include:

- Keep enough distance between you and the vehicle in front of you.
- Avoid needless heavy braking.
- Keep pace with traffic.

If the engine ever stops while the vehicle is being driven, brake normally but do not pump the brakes. Doing so could make the pedal harder to push down. If the engine stops, there will be some power brake assist but it will be used when the brake is applied. Once the power assist is used up, it can take longer to stop and the brake pedal will be harder to push.

Steering

Electric Power Steering

Caution

To avoid damage to the steering system, do not drive over curbs, parking barriers, or similar objects at speeds greater than 3 km/h (1 mph). Use care when driving over other objects such as lane dividers and speed bumps. Damage caused by misuse of the vehicle is not covered by the vehicle warranty.

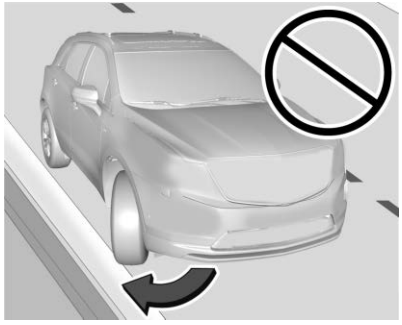

The vehicle has electric power steering. It does not have power steering fluid. Regular maintenance is not required.

If power steering assist is lost due to a system malfunction, the vehicle can be steered, but may require increased effort.

If the steering assist is used for an extended period of time while the vehicle is not moving, power assist may be reduced.

If the steering wheel is turned until it reaches the end of its travel and is held against that position for an extended period of time, power steering assist may be reduced.

Normal use of the power steering assist should return when the system cools down. See your dealer if there is a problem.

Curve Tips

- Take curves at a reasonable speed.
- Reduce speed before entering a curve.
- Maintain a reasonable steady speed through the curve.
- Wait until the vehicle is out of the curve before accelerating gently into the straightaway.

Steering in Emergencies

- There are some situations when steering around a problem may be more effective than braking.
- Holding both sides of the steering wheel allows you to turn 180 degrees without removing a hand.
- The Antilock Brake System (ABS) allows steering while braking.

Off-Road Recovery

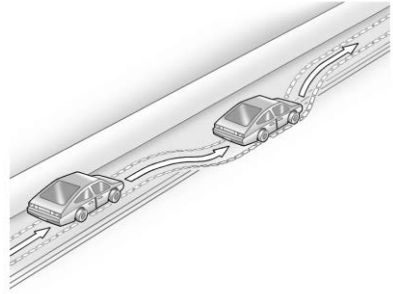

The vehicle's right wheels can drop off the edge of a road onto the shoulder while driving. Follow these tips:

1. Ease off the accelerator and then, if there is nothing in the way, steer the vehicle so that it straddles the edge of the pavement.
2. Turn the steering wheel about one-eighth of a turn, until the right front tire contacts the pavement edge.
3. Turn the steering wheel to go straight down the roadway.

Loss of Control

Skidding

There are three types of skids that correspond to the vehicle's three control systems:

- Braking Skid — wheels are not rolling.
- Steering or Cornering Skid — too much speed or steering in a curve causes tires to slip and lose cornering force.
- Acceleration Skid — too much throttle causes the driving wheels to spin.

Defensive drivers avoid most skids by taking reasonable care suited to existing conditions, and by not overdriving those conditions. But skids are always possible.

If the vehicle starts to slide, follow these suggestions:

- Ease your foot off the accelerator pedal and steer the way you want the vehicle to go. The vehicle may straighten out. Be ready for a second skid if it occurs.
- Slow down and adjust your driving according to weather conditions. Stopping distance can be longer and vehicle control can be affected when traction is reduced by water, snow, ice, gravel, or other material on the road. Learn to recognize warning clues — such as enough water, ice, or packed snow on the road to make a mirrored surface — and slow down when you have any doubt.
- Try to avoid sudden steering, acceleration, or braking, including reducing vehicle speed by shifting to a lower gear. Any sudden changes could cause the tires to slide.

Remember: Antilock brakes help avoid only the braking skid.

Off-Road Driving

All-Wheel Drive (AWD) vehicles can be used for off-road driving. Vehicles without AWD and vehicles not equipped with All Terrain (AT) or On-Off Road (OOR) tires must not be driven off-road except on a level, solid surface. To contact the tire manufacturer for more information about the original equipment tires, see the warranty manual.

Controlling the vehicle is the key to successful off-road driving. One of the best ways to control the vehicle is to control the speed.

⚠ Warning

When driving off-road, bouncing and quick changes in direction can easily throw you out of position. This could cause you to lose control and crash. You and your passengers should always wear seat belts.

Before Driving Off-Road

- Have all necessary maintenance and service work completed.
- Fuel the vehicle, fill fluid levels, and check inflation pressure in all tires, including the spare, if equipped.
- Read all the information about AWD vehicles in this manual.
- Make sure all underbody shields, if equipped, are properly attached.
- Know the local laws that apply to off-road driving.

To gain more ground clearance if needed, it may be necessary to remove the front fascia lower air dam. However, driving without the air dam reduces fuel economy.

Caution

Operating the vehicle for extended periods without the front fascia lower air dam installed can cause improper airflow to the engine. Reattach the front fascia air dam after off-road driving.

Loading the Vehicle for Off-Road Driving

⚠ Warning

- Unsecured cargo on the load floor can be tossed about when driving over rough terrain. You or your passengers can be struck by flying objects. Secure the cargo properly.
- Keep cargo in the cargo area as far forward and as low as possible. The heaviest things should be on the floor, forward of the rear axle.
- Heavy loads on the roof raise the vehicle's center of gravity, making it more likely to roll over. You can be seriously or fatally injured if the vehicle rolls over. Put heavy loads inside the cargo area, not on the roof.

For more information about loading the vehicle, see *Vehicle Load Limits* ⇨ *197*.

Environmental Concerns

- Always use established trails, roads, and areas that have been set aside for public off-road recreational driving and obey all posted regulations.
- Do not damage shrubs, flowers, trees, or grasses or disturb wildlife.
- Do not park over things that burn. See *Parking over Things That Burn* ⇨ *206*.

Driving on Hills

Driving safely on hills requires good judgment and an understanding of what the vehicle can and cannot do.

⚠ Warning

Many hills are simply too steep for any vehicle. Driving up hills can cause the vehicle to stall. Driving down hills can cause loss of control. Driving across hills can cause a rollover. You could be injured or killed. Do not drive on steep hills.

Before driving on a hill, assess the steepness, traction, and obstructions. If the terrain ahead cannot be seen, get out of the vehicle and walk the hill before driving further.

When driving on hills:

- Use a low gear and keep a firm grip on the steering wheel.
- Maintain a slow speed.
- When possible, drive straight up or down the hill.
- Slow down when approaching the top of the hill.
- Use headlamps even during the day to make the vehicle more visible.

⚠ Warning

Driving to the top of a hill at high speed can cause a crash. There could be a drop-off, embankment, cliff, or even another vehicle. You could be seriously injured or killed. As you near the top of a hill, slow down and stay alert.

- Never go downhill forward or backward with the transmission in N (Neutral). The brakes could overheat and you could lose control.
- When driving down a hill, keep the vehicle headed straight down. Use a low gear because the engine will work with the brakes to slow the vehicle and help keep the vehicle under control.

⚠ Warning

Heavy braking when going down a hill can cause your brakes to overheat and fade. This could cause loss of control and you or others could be injured or killed. Apply the brakes lightly when descending a hill and use a low gear to keep vehicle speed under control.

If the vehicle stalls on a hill:

1. Apply the brakes to stop the vehicle, and then apply the parking brake.
2. Shift into P (Park) and then restart the engine.
   - If driving uphill when the vehicle stalls, shift to R (Reverse), release the parking brake, and back straight down.
   - Never try to turn the vehicle around. If the hill is steep enough to stall the vehicle, it is steep enough to cause it to roll over.
   - If you cannot make it up the hill, back straight down the hill.
   - Never back down a hill in N (Neutral) using only the brake.
   - The vehicle can roll backward quickly and you could lose control.
   - If driving downhill when the vehicle stalls, shift to a lower gear, release the parking brake, and drive straight down the hill.
3. If the vehicle cannot be restarted after stalling, set the parking brake, shift into P (Park), and turn the vehicle off.
   3.1. Leave the vehicle and seek help.
   3.2. Stay clear of the path the vehicle would take if it rolled downhill.

- Avoid turns that take the vehicle across the incline of the hill. A hill that can be driven straight up or down might be too steep to drive across. Driving across an incline puts more weight on the downhill wheels which could cause a downhill slide or a rollover.
- Surface conditions can be a problem. Loose gravel, muddy spots, or even wet grass can cause the tires to slip sideways, downhill. If the vehicle slips sideways, it can hit something that will trip it — a rock, a rut, etc. — and roll over.
- Hidden obstacles can make the steepness of the incline more severe. If a rock is driven across with the uphill wheels, or if the downhill wheels drop into a rut or depression, the vehicle can tilt even more.
- If an incline must be driven across, and the vehicle starts to slide, turn downhill. This should help straighten out the vehicle and prevent the side slipping.

⚠ Warning

Getting out of the vehicle on the downhill side when stopped across an incline is dangerous. If the vehicle rolls over, you could be crushed or killed. Always get out on the uphill side of the vehicle and stay well clear of the rollover path.

Driving in Mud, Sand, Snow, or Ice

Use a low gear when driving in mud — the deeper the mud, the lower the gear. Keep the vehicle moving to avoid getting stuck.

Traction changes when driving on sand. On loose sand, such as on beaches or sand dunes, the tires tend to sink into the sand.

This affects steering, accelerating, and braking. Drive at a reduced speed and avoid sharp turns or abrupt maneuvers.

Traction is reduced on hard packed snow and ice and it is easy to lose control. Reduce vehicle speed when driving on hard packed snow and ice.

⚠ Warning

Driving on frozen lakes, ponds, or rivers can be dangerous. Ice conditions vary greatly and the vehicle could fall through the ice; you and your passengers could drown. Drive your vehicle on safe surfaces only.

Driving in Water

⚠ Warning

Driving through rushing water can be dangerous. Deep water can sweep your vehicle downstream and you and your passengers could drown. If it is only shallow water, it can still wash away the ground from under your tires. Traction could be lost, and the vehicle could roll over. Do not drive through rushing water.

Caution

Do not drive through standing water if it is deep enough to cover the wheel hubs, axles, or exhaust pipe. Deep water can damage the axle and other vehicle parts.

If the standing water is not too deep, drive through it slowly. At faster speeds, water can get into the engine and cause it to stall. Stalling can occur if the exhaust pipe is under water. Do not turn off the ignition when driving through water. If the exhaust pipe is under water, the engine will not start. When going through water, the brakes get wet, and it might take longer to stop. See *Driving on Wet Roads* ⇨ *194*.

After Off-Road Driving

Remove any brush or debris that has collected on the underbody or chassis, or under the hood. These accumulations can be a fire hazard.

After operation in mud or sand, have the brake linings cleaned and checked. These substances can cause glazing and uneven braking. Check the body structure, steering, suspension, wheels, tires, and exhaust system for damage and check the fuel lines and cooling system for any leakage. More frequent maintenance service is required. See *Maintenance Schedule* ⇨ *332*.

Driving on Wet Roads

Rain and wet roads can reduce vehicle traction and affect your ability to stop and accelerate. Always drive slower in these types of driving conditions and avoid driving through large puddles and deep-standing or flowing water.

⚠ Warning

Wet brakes can cause crashes. They might not work as well in a quick stop and could cause pulling to one side. You could lose control of the vehicle.

After driving through a large puddle of water or a car/vehicle wash, lightly apply the brake pedal until the brakes work normally.

Flowing or rushing water creates strong forces. Driving through flowing water could cause the vehicle to be carried away. If this happens, you and other vehicle occupants could drown. Do not

(Continued)

Warning (Continued)

ignore police warnings and be very cautious about trying to drive through flowing water.

Hydroplaning

Hydroplaning is dangerous. Water can build up under the vehicle's tires so they actually ride on the water. This can happen if the road is wet enough and you are going fast enough. When the vehicle is hydroplaning, it has little or no contact with the road.

There is no hard and fast rule about hydroplaning. The best advice is to slow down when the road is wet.

Other Rainy Weather Tips

Besides slowing down, other wet weather driving tips include:

- Allow extra following distance.
- Pass with caution.
- Keep windshield wiping equipment in good shape.
- Keep the windshield washer fluid reservoir filled.
- Have good tires with proper tread depth. See *Tires* ⇨ *287*.
- Turn off cruise control.
- Activate All-Wheel Drive (AWD) mode. See *Driver Mode Control* ⇨ *214*.

Hill and Mountain Roads

Driving on steep hills or through mountains is different than driving on flat or rolling terrain. Tips include:

- Keep the vehicle serviced and in good shape.
- Check all fluid levels and brakes, tires, cooling system, and transmission.
- Shift to a lower gear when going down steep or long hills.

⚠ Warning

Using the brakes to slow the vehicle on a long downhill slope can cause brake overheating, can reduce brake performance, and could result in a loss of braking. Shift the transmission to a lower gear to let the engine assist the brakes on a steep downhill slope.

⚠ Warning

Coasting downhill in N (Neutral) or with the ignition off is dangerous. This can cause overheating of the brakes and loss of steering assist. Always have the engine running and the vehicle in gear.

- Drive at speeds that keep the vehicle in its own lane. Do not swing wide or cross the center line.
- Be alert on top of hills; something could be in your lane (e.g., stalled car, crash).
- Pay attention to special road signs (e.g., falling rocks area, winding roads, long grades, passing or no-passing zones) and take appropriate action.

Winter Driving

Driving on Snow or Ice

Snow or ice between the tires and the road creates less traction or grip, so drive carefully. Wet ice can occur at about 0 °C (32 °F) when freezing rain begins to fall. Avoid driving on wet ice or in freezing rain until roads can be treated.

For Slippery Road Driving:

- Accelerate gently. Accelerating too quickly causes the wheels to spin and makes the surface under the tires slick.
- Turn on Traction Control. See *Traction Control/Electronic Stability Control* ⇨ *213*.
- The Antilock Brake System (ABS) improves vehicle stability during hard stops, but the brakes should be applied sooner than when on dry pavement. See *Antilock Brake System (ABS)* ⇨ *210*.
- Allow greater following distance and watch for slippery spots. Icy patches can occur on otherwise clear roads in shaded areas. The surface of a curve or an overpass can remain icy when the surrounding roads are clear. Avoid sudden steering maneuvers and braking while on ice.
- Turn off cruise control.
- Select All-Wheel Drive (AWD) Mode for vehicles equipped with AWD. Select Snow/Ice Mode for FWD only vehicles. See *Driver Mode Control* ⇨ *214* and *All-Wheel Drive* ⇨ *210*.

Blizzard Conditions

Stop the vehicle in a safe place and signal for help. Stay with the vehicle unless there is help nearby. If possible, use Roadside Assistance. See *Roadside Assistance Program* ⇨ *352*. To get help and keep everyone in the vehicle safe:

- Turn on the hazard warning flashers.
- Tie a red cloth to an outside mirror.

⚠ Warning

Snow can trap engine exhaust under the vehicle. This may cause exhaust gases to get inside. Engine exhaust contains carbon monoxide (CO), which cannot be seen or smelled. It can cause unconsciousness and even death.

If the vehicle is stuck in snow:

- Clear snow from the base of the vehicle, especially any blocking the exhaust pipe.
- Open a window about 5 cm (2 in) on the vehicle side that is away from the wind, to bring in fresh air.
- Fully open the air outlets on or under the instrument panel.

(Continued)

Warning (Continued)

- Adjust the climate control system to circulate the air inside the vehicle and set the fan speed to the highest setting. See "Climate Control Systems."

For more information about CO, see *Engine Exhaust* ⇨ *207*.

To save fuel, run the engine for short periods to warm the vehicle and then shut the engine off and partially close the window. Moving about to keep warm also helps.

If it takes time for help to arrive, when running the engine, push the accelerator pedal slightly so the engine runs faster than the idle speed. This keeps the battery charged to restart the vehicle and to signal for help with the headlamps. Do this as little as possible, to save fuel.

If the Vehicle Is Stuck

Slowly and cautiously spin the wheels to free the vehicle when stuck in sand, mud, ice, or snow.

If stuck too severely for the traction system to free the vehicle, turn the traction system off and use the rocking method. See *Traction Control/Electronic Stability Control* ⇨ *213*.

⚠ Warning

If the vehicle's tires spin at high speed, they can explode, and you or others could be injured. The vehicle can overheat, causing an engine compartment fire or other damage. Spin the wheels as little as possible and avoid going above 56 km/h (35 mph).

Select All-Wheel Drive (AWD) Mode. See *Driver Mode Control* ⇨ *214* and *All-Wheel Drive* ⇨ *210*.

Rocking the Vehicle to Get it Out

Turn the steering wheel left and right to clear the area around the front wheels. Turn off any traction system. Shift back and forth between R (Reverse) and a low forward gear, spinning the wheels as little as possible. To prevent transmission wear, wait until the wheels stop spinning before shifting gears. Release the accelerator pedal while shifting, and press lightly on the accelerator pedal when the transmission is in gear. Slowly spinning the wheels in the forward and reverse directions causes a rocking motion that could free the vehicle. If that does not get the vehicle out after a few tries, it might need to be towed out. If the vehicle does need to be towed out, see *Towing the Vehicle* ⇨ *320*.

Vehicle Load Limits

It is very important to know how much weight the vehicle can carry. This weight is called the vehicle capacity weight and includes the weight of all occupants, cargo, and all nonfactory-installed options. Two labels on the vehicle may show how much weight it may properly carry, the Tire and Loading Information label and the Certification/Tire label.

⚠ Warning

Do not load the vehicle any heavier than the Gross Vehicle Weight Rating (GVWR), or either the maximum front or rear Gross Axle Weight Rating (GAWR). This can cause

(Continued)

Warning (Continued)

systems to break and change the way the vehicle handles. This could cause loss of control and a crash. Overloading can also reduce stopping performance, damage the tires, and shorten the life of the vehicle.

Tire and Loading Information Label

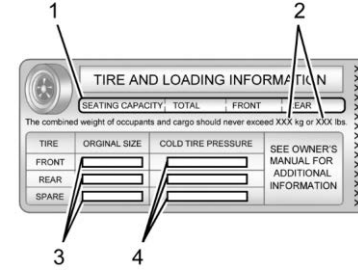

Example Label

A vehicle-specific Tire and Loading Information label is attached to the center pillar (B-pillar). The tire and loading information label shows the

number of occupant seating positions (1), and the maximum vehicle capacity weight (2) in kilograms and pounds.

The Tire and Loading Information label also shows the size of the original equipment tires (3) and the recommended cold tire inflation pressures (4). For more information on tires and inflation see *Tires* ⇨ *287* and *Tire Pressure* ⇨ *294*.

There is also important loading information on the vehicle Certification/ Tire label. It may show the Gross Vehicle Weight Rating (GVWR) and the Gross Axle Weight Rating (GAWR) for the front and rear axle. See "Certification/Tire Label" later in this section.

"Steps for Determining Correct Load Limit–

1. Locate the statement "The combined weight of occupants and cargo should never exceed XXX kg or XXX lbs." on your vehicle's placard.
2. Determine the combined weight of the driver and passengers that will be riding in your vehicle.
3. Subtract the combined weight of the driver and passengers from XXX kg or XXX lbs.
4. The resulting figure equals the available amount of cargo and luggage load capacity. For example, if the "XXX" amount equals 1400 lbs. and there will be five 150 lb passengers in your vehicle, the amount of available cargo and luggage load capacity is 650 lbs. (1400-750 (5 x 150) = 650 lbs.)
5. Determine the combined weight of luggage and cargo being loaded on the vehicle. That weight may not safely exceed the available cargo and luggage load capacity calculated in Step 4.
6. If your vehicle will be towing a trailer, load from your trailer will be transferred to your vehicle. Consult this manual to determine how this reduces the available cargo and luggage load capacity of your vehicle."

See *Trailer Towing* ⇨ *245* for important information on towing a trailer, towing safety rules and trailering tips.

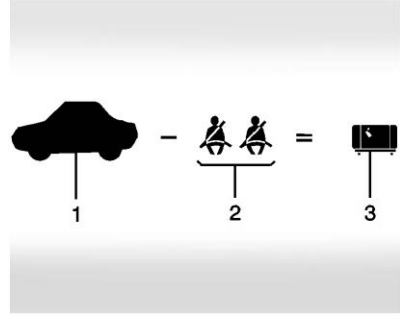

Example 1

1. Vehicle Capacity Weight for Example 1 = 453 kg (1,000 lbs).
2. Subtract Occupant Weight @ 68 kg (150 lbs) × 2 = 136 kg (300 lbs).
3. Available Occupant and Cargo Weight = 317 kg (700 lbs).

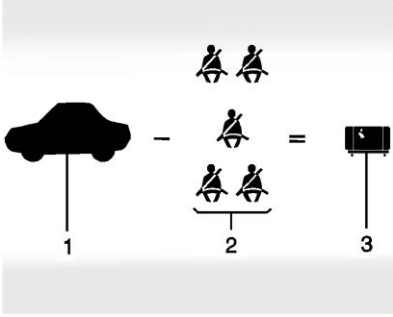

Example 2

1. Vehicle Capacity Weight for Example 2 = 453 kg (1,000 lbs).
2. Subtract Occupant Weight @ 68 kg (150 lbs) × 5 = 340 kg (750 lbs).
3. Available Cargo Weight = 113 kg (250 lbs).

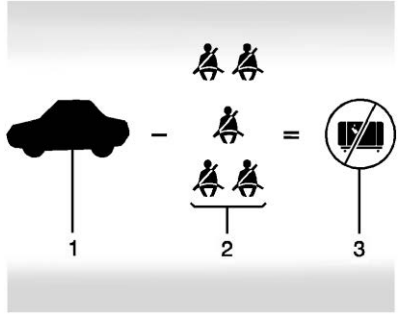

Example 3

1. Vehicle Capacity Weight for Example 3 = 453 kg (1,000 lbs).
2. Subtract Occupant Weight @ 91 kg (200 lbs) × 5 = 453 kg (1,000 lbs).
3. Available Cargo Weight = 0 kg (0 lbs).

Refer to the vehicle's tire and loading information label for specific information about the vehicle's capacity weight and seating positions. The combined weight of the driver, passengers, and cargo should never exceed the vehicle's capacity weight.

Certification/Tire Label

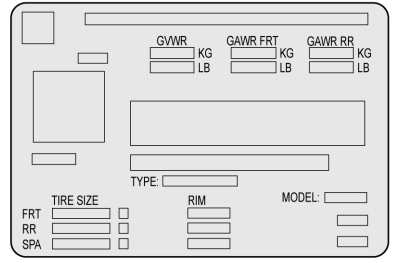

Label Example

A vehicle-specific Certification/Tire label is attached to the center pillar (B-pillar).

The label may show the size of the vehicle's original tires and the inflation pressures needed to obtain the gross weight capacity of the vehicle. The label shows the gross weight capacity of the vehicle. This is called the Gross Vehicle Weight Rating (GVWR). The GVWR includes the weight of the vehicle, all occupants, fuel, and cargo.

The Certification/Tire label may also show the maximum weights for the front and rear axles, called the Gross Axle Weight Rating (GAWR). To find out the actual loads on the front and rear axles, weigh the vehicle at a weigh station. Your dealer can help with this. Be sure to spread the load equally on both sides of the centerline.

Caution

Overloading the vehicle may cause damage. Repairs would not be covered by the vehicle warranty. Do not overload the vehicle.

⚠ Warning

Things inside the vehicle can strike and injure people in a sudden stop or turn, or in a crash.

- Put things in the cargo area of the vehicle. In the cargo area, put them as far forward as possible. Try to spread the weight evenly.

(Continued)

Warning (Continued)

- Never stack heavier things, like suitcases, inside the vehicle so that some of them are above the tops of the seats.
- Do not leave an unsecured child restraint in the vehicle.
- Secure loose items in the vehicle.
- Do not leave a seat folded down unless needed.

Starting and Operating

New Vehicle Break-In

Caution

The vehicle does not need an elaborate break-in. But it will perform better in the long run if you follow these guidelines:

- Do not drive at any one constant speed, fast or slow, for the first 800 km (500 mi). Do not make full-throttle starts. Avoid downshifting to brake or slow the vehicle.

(Continued)

Caution (Continued)

- Avoid making hard stops for the first 300 km (200 mi) or so. During this time the new brake linings are not yet broken in. Hard stops with new linings can mean premature wear and earlier replacement. Follow this breaking-in guideline every time you get new brake linings.

Following break-in, engine speed and load can be gradually increased.

Ignition Positions

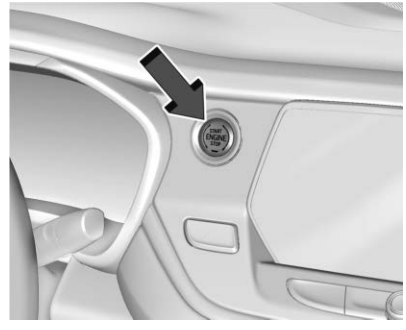

This vehicle has pushbutton starting.

The Remote Keyless Entry (RKE) transmitter must be in the vehicle for the system to operate. If the pushbutton start is not working, the vehicle may be near a strong radio antenna signal causing interference to the Keyless Access system. See *Remote Keyless Entry (RKE) System Operation* ⇨ *7*.

To shift out of P (Park), the ignition must be on or in Service Mode and the brake pedal must be applied.

Stopping the Engine/OFF (No Indicator Lights) : When the vehicle is stopped, press ENGINE START/STOP once to turn the engine off.

If the vehicle is in P (Park), the ignition will turn off, and Retained Accessory Power (RAP) will remain active. See *Retained Accessory Power (RAP)* ⇨ *205*.

If the vehicle is not in P (Park), the ignition will return to ACC/ACCESSORY and display the message SHIFT TO PARK in the Driver Information Center (DIC). When the vehicle is shifted into P (Park), the ignition will turn off.

Do not turn the engine off when the vehicle is moving. This will cause a loss of power assist in the brake and steering systems and disable the airbags.

If the vehicle must be shut off in an emergency:

1. Brake using a firm and steady pressure. Do not pump the brakes repeatedly. This may deplete power assist, requiring increased brake pedal force.
2. Shift the vehicle to N (Neutral). This can be done while the vehicle is moving. After shifting to N (Neutral), firmly apply the brakes and steer the vehicle to a safe location.
3. Come to a complete stop, shift to P (Park), and turn the ignition off. The shift lever must be in P (Park) to turn the ignition off.
4. Set the parking brake. See *Electric Parking Brake* ⇨ *211*.

⚠ Warning

Turning off the vehicle while moving may cause loss of power assist in the brake and steering systems and disable the airbags. While driving, only shut the vehicle off in an emergency.

If the vehicle cannot be pulled over, and must be shut off while driving, press and hold ENGINE START/STOP for longer than two seconds, or press twice in five seconds.

ACC/ACCESSORY (Amber Indicator Light) : This mode allows some electrical accessories to be used when the engine is off.

With the ignition off, pressing the button one time without the brake pedal applied will place the ignition system in ACC/ACCESSORY.

The ignition will switch from ACC/ACCESSORY to OFF after five minutes to prevent battery rundown.

ON/RUN/START (Green Indicator Light) : This mode is for driving and starting. With the ignition off, and the brake pedal applied, pressing the button once will place the ignition system in ON/RUN/START. Once engine cranking begins, release the button. Engine cranking will continue until the engine starts. See *Starting the Engine* ⇨ *202*. The ignition will then remain in ON/RUN.

Service Mode

This power mode is available for service and diagnostics, and to verify the proper operation of the malfunction indicator lamp as may be required for emission inspection

purposes. With the vehicle off, and the brake pedal not applied, pressing and holding ENGINE START/STOP for more than five seconds will place the vehicle in Service Mode. The instruments and audio systems will operate as they do in ON/RUN, but the vehicle will not be able to be driven. The engine will not start in Service Mode. Press the button again to turn the vehicle off.

Starting the Engine

Move the shift lever to P (Park) or N (Neutral). The engine will not start in any other position. To restart the engine when the vehicle is already moving, use N (Neutral) only.

Caution

Do not try to shift to P (Park) if the vehicle is moving. If you do, you could damage the transmission. Shift to P (Park) only when the vehicle is stopped.

Caution

If you add electrical parts or accessories, you could change the way the engine operates. Any resulting damage would not be covered by the vehicle warranty. See *Add-On Electrical Equipment* ⇨ *252*.

Starting Procedure

1. With the Keyless Access system, the RKE transmitter must be in the vehicle. Press ENGINE START/STOP with the brake pedal applied. When the engine begins cranking, let go of the button.

   The idle speed will go down as the engine gets warm. Do not race the engine immediately after starting it.

   If the RKE transmitter is not in the vehicle, if there is interference, or if the RKE battery is low, the Driver Information Center (DIC) will display a message.

Caution

Cranking the engine for long periods of time, by trying to start the engine immediately after cranking has ended, can overheat and damage the cranking

(Continued)

Caution (Continued)

motor, and drain the battery. Wait at least 15 seconds between each try, to let the cranking motor cool down.

2. If the engine does not start after five to 10 seconds, especially in very cold weather (below −18 °C or 0 °F), it could be flooded with too much gasoline. Try pushing the accelerator pedal all the way to the floor and holding it there as you press ENGINE START/STOP, for up to a maximum of 15 seconds. Wait at least 15 seconds between each try, to allow the cranking motor to cool down. When the engine starts, let go of the button and the accelerator. If the vehicle starts briefly but then stops again, do the same thing. This clears the extra gasoline from the engine. Do not race the engine immediately after starting it. Operate the engine and transmission gently until the oil warms up and lubricates all moving parts.

Stop/Start System

The Stop/Start system will shut off the engine to help conserve fuel. It has components designed for the increased number of starts.

⚠ Warning

The automatic engine Stop/Start feature causes the engine to shut off while the vehicle is still on. Do not exit the vehicle before shifting to P (Park). The vehicle may restart and move unexpectedly. Always shift to P (Park), and then turn the ignition off before exiting the vehicle.

Auto Engine Stop/Start

When the brakes are applied and the vehicle is at a complete stop, the engine may turn off. When stopped, the tachometer displays AUTO STOP. See *Tachometer* ⇨ *95*. When the brake pedal is released or the accelerator pedal is pressed, the engine will restart.

To maintain vehicle performance, other conditions may cause the engine to automatically restart before the brake pedal is released.

Auto Stops may not occur and/or auto restarts may occur because:

- The climate control settings require the engine to be running to cool or heat the vehicle interior.
- The vehicle battery charge is low.
- The vehicle battery has recently been disconnected.
- Minimum vehicle speed has not been reached since the last Auto Stop
- The accelerator pedal is pressed.
- The engine or transmission is not at the required operating temperature.
- The outside temperature is not in the required operating range.
- The transmission is shifted out of D (Drive) to any gear other than P (Park).
- Tow/Haul Mode or other driver modes have been selected.
- The vehicle is on a steep hill or grade.
- The driver door has been opened or driver seat belt has been unbuckled.
- The hood has been opened.
- The Auto Stop has reached the maximum allowed time.

Auto Stop/Start Disable Switch

The automatic engine Stop/Start feature can be disabled and enabled by pressing Ⓐ. Auto Stop/Start is enabled each time you start the vehicle.

When the Ⓐ indicator is illuminated, the system is enabled.

Engine Heater

The engine heater can provide easier starting and better fuel economy during engine warm-up in cold weather conditions at or below 0 °F (−18 °C). Vehicles with an engine heater should be plugged in at least four hours before starting. Some models

may have an internal thermostat in the cord which will prevent engine heater operation at temperatures above 0 °F (−18 °C).

⚠ Warning

Do not plug in the engine block heater while the vehicle is parked in a garage or under a carport. Property damage or personal injury may result. Always park the vehicle in a clear open area away from buildings or structures.

To Use the Engine Heater

1. Turn off the engine.

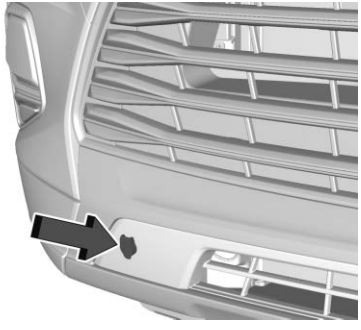

2. Check the heater cord for damage. If it is damaged, do not use it. See your dealer for a replacement. Inspect the cord for damage yearly.
3. Plug the heater cord into the connector in the front bumper.
4. Plug the cord into a grounded 110-volt AC outlet that is protected by a ground fault detection function.

⚠ Warning

Improper use of the heater cord or an extension cord can damage the cord and may result in overheating and fire.

- Plug the cord into a three-prong electrical utility receptacle that is protected by a ground fault detection function. An ungrounded outlet could cause an electric shock.
- Use a weatherproof, heavy-duty, 15 amp-rated extension cord if needed. Failure to use the recommended extension cord in good operating condition, or using a damaged heater

(Continued)

Warning (Continued)

or extension cord, could make it overheat and cause a fire, property damage, electric shock, and injury.

- Do not operate the vehicle with the heater cord permanently attached to the vehicle. Possible heater cord and thermostat damage could occur.
- While in use, do not let the heater cord touch vehicle parts or sharp edges.
- Before starting the vehicle, unplug the cord. Keep the cord away from any moving parts.

5. Before starting the engine, be sure to unplug and store the cord as it was before to keep it away from moving engine parts. If you do not, it could be damaged.

The length of time the heater should remain plugged in depends on several factors. Ask a dealer in the area where you will be parking the vehicle for the best advice on this.

Retained Accessory Power (RAP)

When the ignition is turned from on to off, the following features (if equipped) will continue to function for up to 10 minutes, or until the driver door is opened. These features will also work when the ignition is in RUN or ACC/ACCESSORY:

- Infotainment System
- Power Windows (during RAP this functionality will be lost when any door is opened)
- Sunroof (during RAP this functionality will be lost when any door is opened)
- Auxiliary Power Outlet
- Audio System
- OnStar System

Shifting Into Park

1. Hold the brake pedal down and set the parking brake. See *Electric Parking Brake* ⇨ *211*.
2. Move the shift lever into P (Park) by holding in the button on the shift lever and pushing the shift lever all the way toward the front of the vehicle.
3. Turn the ignition off.

Leaving the Vehicle with the Engine Running

⚠ Warning

It can be dangerous to leave the vehicle with the engine running. It could overheat and catch fire.

It is dangerous to get out of the vehicle if the shift lever is not fully in P (Park) with the parking brake firmly set. The vehicle can roll.

Do not leave the vehicle when the engine is running. If you have left the engine running, the vehicle can move suddenly. You or others could be injured. To be sure the vehicle will not move, even when you are on fairly level ground, always set the parking brake and move the shift lever to P (Park). See *Shifting Into Park* ⇨ *205*. If you are towing a trailer, see *Driving Characteristics and Towing Tips* ⇨ *242*.

If you have to leave the vehicle with the engine running, be sure the vehicle is in P (Park) and the parking brake is set before you leave it. After you have moved the shift lever into P (Park), hold the regular brake pedal down. Then, see if you can move the shift lever away from P (Park) without first pressing the button.

If you can, it means that the shift lever was not fully locked in P (Park).

Torque Lock

Torque lock is when the weight of the vehicle puts too much force on the parking pawl in the transmission. This happens when parking on a hill and shifting the transmission into P (Park) is not done properly and then it is difficult to shift out of P (Park). To prevent torque lock, set the parking brake and then shift into P (Park). To find out how, see “Shifting Into Park” listed previously.

If torque lock does occur, your vehicle may need to be pushed uphill by another vehicle to relieve the parking pawl pressure, so you can shift out of P (Park).

Shifting out of Park

This vehicle is equipped with an electronic shift lock release system. The shift lock release is designed to prevent movement of the shift lever out of P (Park), unless the ignition is on and the brake pedal is applied.

The shift lock release is always functional except in the case of an uncharged or low voltage (less than 9 volt) battery.

If the vehicle has an uncharged battery or a battery with low voltage, try charging or jump starting the battery. See *Jump Starting - North America* ⇨ *318* for more information.

To shift out of P (Park):

1. Apply the brake pedal.
2. Release the parking brake. See *Electric Parking Brake* ⇨ *211*.
3. Press the shift lever button.
4. Move the shift lever.

If unable to shift out of P (Park):

1. Fully release the shift lever button.
2. While holding down the brake pedal, press the shift lever button again.
3. Move the shift lever.

If the shift lever will not move from P (Park), consult your dealer or a professional towing service.

Parking over Things That Burn

⚠ Warning

Things that can burn could touch hot exhaust parts under the vehicle and ignite. Do not park over papers, leaves, dry grass, or other things that can burn.

Active Fuel Management

This vehicle's engine may be equipped with Active Fuel Management, which allows the engine to operate on either all of its cylinders, or in reduced cylinder operation mode, depending on the driving conditions. When less power is required, such as cruising at a constant vehicle speed, the system will operate in reduced cylinder operation mode, allowing the vehicle to achieve better fuel economy. When greater power demands are required, such as accelerating from a stop, passing, or merging onto a freeway, the system will maintain full-cylinder operation. If the vehicle has an Active Fuel Management indicator, see Driver Information Center (DIC) for more information on using this display.

Extended Parking

It is best not to park with the vehicle running. If the vehicle is left running, be sure it will not move and there is adequate ventilation.

See *Shifting Into Park* ⇨ *205* and *Engine Exhaust* ⇨ *207*.

If the vehicle is left parked and running with the RKE transmitter outside the vehicle, it will continue to run for up to half an hour.

If the vehicle is left parked and running with the RKE transmitter inside the vehicle, it will continue to run for up to an hour.

The vehicle could turn off sooner if it is parked on a hill, due to lack of available fuel.

The timer will reset if the vehicle is taken out of P (Park) while it is running.

Engine Exhaust

⚠ Warning

Engine exhaust contains carbon monoxide (CO), which cannot be seen or smelled. Exposure to CO can cause unconsciousness and even death.

Exhaust may enter the vehicle if:

- The vehicle idles in areas with poor ventilation (parking garages, tunnels, deep snow that may block underbody airflow or tail pipes).
- The exhaust smells or sounds strange or different.
- The exhaust system leaks due to corrosion or damage.
- The vehicle exhaust system has been modified, damaged, or improperly repaired.
- There are holes or openings in the vehicle body from damage or aftermarket modifications that are not completely sealed.

(Continued)

Warning (Continued)

If unusual fumes are detected or if it is suspected that exhaust is coming into the vehicle:

- Drive it only with the windows completely down.
- Have the vehicle repaired immediately.

Never park the vehicle with the engine running in an enclosed area such as a garage or a building that has no fresh air ventilation.

Running the Vehicle While Parked

It is better not to park with the engine running.

If the vehicle is left with the engine running, follow the proper steps to be sure the vehicle will not move. See *Shifting Into Park* ⇨ *205* and *Engine Exhaust* ⇨ *207*.

If parking on a hill and pulling a trailer, see *Driving Characteristics and Towing Tips* ⇨ *242*.

Automatic Transmission

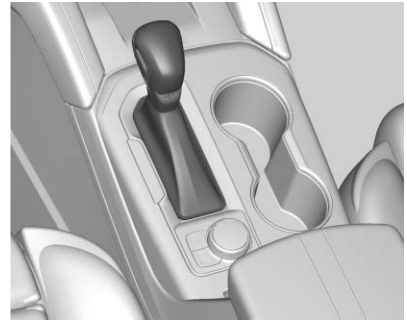

P : This position locks the drive wheels. Use P (Park) when starting the engine because the vehicle cannot move easily.

⚠ Warning

It is dangerous to get out of the vehicle if the shift lever is not fully in P (Park) with the parking brake firmly set. The vehicle can roll.

Do not leave the vehicle when the engine is running. If you have left the engine running, the vehicle can move suddenly. You or others could be injured. To be

(Continued)

Warning (Continued)

sure the vehicle will not move, even when you are on fairly level ground, always set the parking brake and move the shift lever to P (Park). See *Shifting Into Park* ⇨ *205* and *Driving Characteristics and Towing Tips* ⇨ *242*.

Make sure the shift lever is fully in P (Park) before starting the engine. The vehicle has an automatic transmission shift lock control system. With the ignition on, fully apply the regular brake, then press the button on the shift lever before shifting from P (Park).
If you cannot shift out of P (Park), ease pressure on the shift lever, then push the shift lever all the way into P (Park) as you maintain brake application. Then press the shift lever button and move the shift lever into another gear. See *Shifting out of Park* ⇨ *205*.

R : Use this gear to back up.

Caution

Shifting to R (Reverse) while the vehicle is moving forward could damage the transmission. The repairs would not be covered by the vehicle warranty. Shift to R (Reverse) only after the vehicle is stopped.

To rock the vehicle back and forth to get out of snow, ice, or sand without damaging the transmission, see *If the Vehicle Is Stuck* ⇨ *196*.

N : In this position, the engine does not connect with the wheels. To restart the engine when the vehicle is already moving, use N (Neutral) only.

⚠ Warning

Shifting into a drive gear while the engine is running at high speed is dangerous. Unless your foot is firmly on the brake pedal, the vehicle could move very rapidly. You could lose control and hit people or objects. Do not shift into a drive gear while the engine is running at high speed.

Caution

Shifting out of P (Park) or N (Neutral) with the engine running at high speed may damage the transmission. The repairs would not be covered by the vehicle warranty. Be sure the engine is not running at high speed when shifting the vehicle.

Caution

A transmission hot message may display if the automatic transmission fluid is too hot. Driving under this condition can damage the vehicle. Stop and idle the engine to cool the automatic transmission fluid. This message clears when the transmission fluid has cooled sufficiently.

D : This position is for normal driving.
If more power is needed for passing, press the accelerator pedal down.

Caution

If the vehicle does not shift gears, the transmission could be damaged. Have the vehicle serviced right away.

If the vehicle is stopped on a hill, with your foot off the brake pedal, the vehicle may roll. This is normal and is due to the torque converter designed to improve fuel economy and performance. Use the brake to hold the vehicle on a hill. Do not use the accelerator pedal.

If equipped with the 2.0L L4 engine, engine speeds may be increased while driving at highway speeds while the engine is still warming up.

L : This position gives you access to gear ranges. This provides more engine braking but lower fuel economy than D (Drive). You can use it on very steep hills, or in deep snow or mud. See *Manual Mode* ⇨ *209*.

Operating Modes : The transmission may operate in a lower gear than normal to improve vehicle performance. The engine speed may be higher and there may be an increase in noise during the following conditions:

- When climbing a grade
- When driving downhill
- When driving in hot temperatures, or at high altitude

Manual Mode

Electronic Range Select (ERS) Mode

ERS mode allows you to choose the top-gear limit of the transmission and the vehicle's speed while driving downhill or towing a trailer. The vehicle has an electronic shift position indicator within the instrument cluster. When using the ERS mode a number will display next to the L, indicating the highest gear available for the range selected.

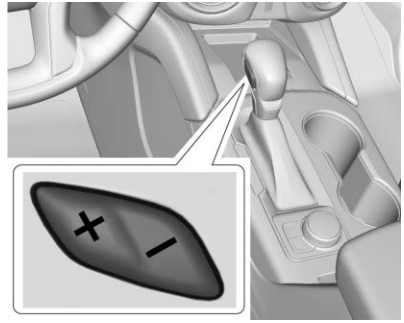

To use this feature:

1. Press the shift lever button and move the shift lever to L (Low).
2. Press + (Plus) or – (Minus) on the shift lever to increase or decrease the gear range available.

When you shift from D (Drive) to L (Low), the transmission will shift to a pre-determined lower gear range. The highest gear available for this pre-determined range is displayed next to the L in the DIC. See *Driver Information Center (DIC) (Base and Midlevel)* ⇨ *107* or *Driver Information Center (DIC) (Uplevel)* ⇨ *110*. The number displayed in the DIC is the highest gear that the transmission will be allowed to operate in. This means that all gears below that number are available. For example, when 4 (Fourth) is shown next to the L, 1 (First) through 4 (Fourth) gears are automatically shifted by the vehicle. The transmission will not shift into 5 (Fifth) until the + (Plus) button is used or you shift back into D (Drive).

If the transmission is in 9 (ninth) gear when L (low) is selected, a downshift to 7 (seventh) will be commanded. If in 8 (eighth) through 2 (second), a single downshift will occur.

While in L (Low), the transmission will prevent shifting to a lower gear range if the engine speed is too high. You have a brief period of time to slow the vehicle. If vehicle

speed is not reduced within the time allowed, the lower gear range shift will not be completed. You must further slow the vehicle, then press – (Minus) to the desired lower gear range.

Automatic Engine Grade Braking is not available when the ERS is active. It is available in D (Drive) for both normal driving and Tow/Haul Mode. While using the ERS, cruise control and the Tow/Haul Mode can be used. See “Tow/Haul Mode” following.

Tow/Haul Mode

This feature can assist when towing or hauling a heavy load. See *Driver Mode Control* ⇨ *214* to activate Tow/Haul Mode.

Drive Systems

All-Wheel Drive

Vehicles with this feature can operate in All-Wheel Drive (AWD) Mode.

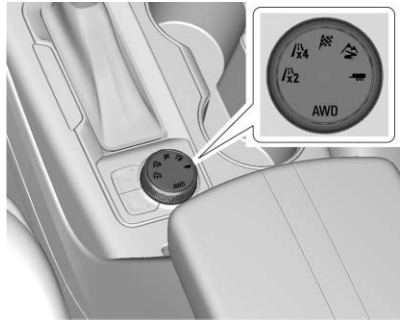

Turn the knob to /x4 to select AWD.

See *Driver Mode Control* ⇨ *214*.

When operated in two-wheel drive, the vehicle will deliver power to the front wheels only and may provide better fuel economy.

When using a compact spare tire on an AWD vehicle, the system automatically detects the compact spare and reduces AWD performance to protect the system. To restore full AWD operation and prevent excessive wear on the system, replace the compact spare with a full-size tire as soon as possible. See *Compact Spare Tire* ⇨ *317*.

Brakes

Electric Brake Boost

Vehicles equipped with electric brake boost have hydraulic brake circuits that are electronically controlled when the brake pedal is applied during normal operation. The system performs routine tests and turns off within a few minutes after the vehicle is turned off. Noise may be heard during this time. If the brake pedal is pressed during the tests or when the electric brake boost system is off, a noticeable change in pedal force and travel may be felt. This is normal.

Antilock Brake System (ABS)

The Antilock Brake System (ABS) helps prevent a braking skid and maintain steering while braking hard.

ABS performs a system check when the vehicle is first driven. A momentary motor or clicking noise may be heard while this test is going on, and the brake pedal may move slightly. This is normal.

If there is a problem with ABS, this warning light stays on. See *Antilock Brake System (ABS) Warning Light* ⇨ *102*.

ABS does not change the time needed to get a foot on the brake pedal and does not always decrease stopping distance. If you get too close to the vehicle ahead, there will not be enough time to apply the brakes if that vehicle suddenly slows or stops. Always leave enough room ahead to stop, even with ABS.

Using ABS

Do not pump the brakes. Just hold the brake pedal down firmly. Hearing or feeling ABS operate is normal.

Braking in Emergencies

ABS allows steering and braking at the same time. In many emergencies, steering can help even more than braking.

Electric Parking Brake

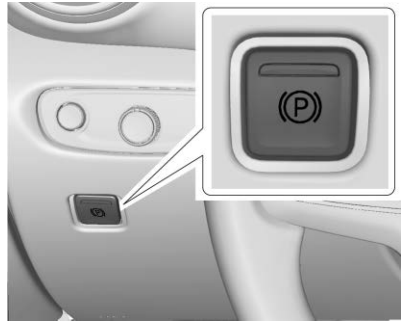

The Electric Parking Brake (EPB) can always be applied, even if the vehicle is off. In case of insufficient electrical power, the EPB cannot be applied or released. To prevent draining the battery, avoid unnecessary repeated cycles of the EPB.

The system has a red parking brake status light and an amber service parking brake warning light. See *Electric Parking Brake Light* ⇨ *102* and *Service Electric Parking Brake Light* ⇨ *102*. There are also parking brake-related Driver Information Center (DIC) messages.

Before leaving the vehicle, check the red parking brake status light to ensure that the parking brake is applied.

EPB Apply

To apply the EPB:

1. Be sure the vehicle is at a complete stop.
2. Press the EPB switch momentarily.

The red parking brake status light will flash and then stay on once the EPB is fully applied. If the red parking brake status light flashes continuously, then the EPB is only partially applied or there is a problem with the EPB. A DIC message will display. Release the EPB and try to apply it again. If the light does not come on, or keeps flashing, have the vehicle serviced. Do not drive the vehicle if the red parking brake status light is flashing. See your dealer.

If the amber service parking brake warning light is on, press the EPB switch. Continue to hold the switch until the red parking brake status light remains on. If the amber service parking brake warning light is on, see your dealer.

If the EPB is applied while the vehicle is moving, the vehicle will decelerate as long as the switch is pressed. If the switch is pressed until the vehicle comes to a stop, the EPB will remain applied.

The vehicle may automatically apply the EPB in some situations when the vehicle is not moving. This is normal, and is done to periodically check the correct operation of the EPB system, or at the request of other safety functions that utilize the EPB.

If the EPB fails to apply, block the rear wheels to prevent vehicle movement.

EPB Release

To release the EPB:

1. Turn the ignition on or to ACC/ ACCESSORY.
2. Apply and hold the brake pedal.
3. Press the EPB switch momentarily.

The EPB is released when the red parking brake status light is off.

If the amber service parking brake warning light is on, release the EPB by pressing and holding the EPB switch. Continue to hold the switch until the red parking brake status light is off. If either light stays on after release is attempted, see your dealer.

Caution

Driving with the parking brake on can overheat the brake system and cause premature wear or damage to brake system parts. Make sure that the parking brake is fully released and the brake warning light is off before driving.

If you are towing a trailer and parking on a hill, see *Driving Characteristics and Towing Tips* ⇨ *242*.

Automatic EPB Release

The EPB will automatically release if the vehicle is running, placed into gear, and an attempt is made to drive away. Avoid rapid acceleration when the EPB is applied, to preserve parking brake lining life.

Brake Assist

Brake Assist detects rapid brake pedal applications due to emergency braking situations and provides additional braking to activate the Antilock Brake System (ABS) if the brake pedal is not pushed hard enough to activate ABS normally. Minor noise, brake pedal pulsation, and/or pedal movement during this time may occur. Continue to apply the brake pedal as the driving situation dictates. Brake Assist disengages when the brake pedal is released.

Hill Start Assist (HSA)

⚠ Warning

Do not rely on the HSA feature. HSA does not replace the need to pay attention and drive safely. You may not hear or feel alerts or warnings provided by this system. Failure to use proper care when driving may result in injury, death, or vehicle damage. See *Defensive Driving* ⇨ *188*.

When the vehicle is stopped on a grade, Hill Start Assist (HSA) prevents the vehicle from rolling in an unintended direction during the transition from brake pedal release to accelerator pedal apply. The brakes release when the accelerator pedal is applied. If the accelerator pedal is not applied within a few minutes, the Electric Parking Brake will apply. The brakes may also release under other conditions. Do not rely on HSA to hold the vehicle.

HSA is available when the vehicle is facing uphill in a forward gear, or when facing downhill in R (Reverse). The vehicle must come to a complete stop on a grade for HSA to activate.

Ride Control Systems

Traction Control/Electronic Stability Control

System Operation

The vehicle has a Traction Control System (TCS) and StabiliTrak/Electronic Stability Control (ESC). These systems help limit wheel spin and assist the driver in maintaining control, especially on slippery road conditions.

TCS activates if it senses that any of the drive wheels are spinning or beginning to lose traction. When this happens, TCS applies the brakes to the spinning wheels and reduces engine power to limit wheel spin. TCS also applies torque to the non-spinning wheel to increase traction and acceleration.

StabiliTrak/ESC activates when the vehicle senses a difference between the intended path and the direction the vehicle is actually traveling. StabiliTrak/ESC selectively applies braking pressure to any one of the vehicle wheel brakes to assist the driver in keeping the vehicle on the intended path.

If cruise control is being used and TCS or StabiliTrak/ESC begins to limit wheel spin, cruise control will disengage. Cruise control may be turned back on when road conditions allow. TCS and StabiliTrak/ESC will automatically turn on when cruise control is set.

Both systems come on automatically when the vehicle is started and begins to move. The systems may be heard or felt while they are operating or while performing diagnostic checks. This is normal and does not mean there is a problem with the vehicle.

It is recommended to leave both systems on for normal driving conditions, but it may be necessary to turn TCS off if the vehicle gets stuck in sand, mud, ice, or snow. See *If the Vehicle Is Stuck* ⇨ *196* and “Turning the Systems Off and On” later in this section.

The indicator light for both systems is in the instrument cluster. This light will:

- Flash when TCS is limiting wheel spin
- Flash when StabiliTrak/ESC is activated
- Turn on and stay on when either system is not working

If either system fails to turn on or to activate, a message may display in the Driver Information Center (DIC), and comes on and stays on to indicate that the system is inactive and is not assisting the driver in maintaining control. The vehicle is safe to drive, but driving should be adjusted accordingly.

If comes on and stays on:

1. Stop the vehicle.
2. Turn the engine off and wait 15 seconds.
3. Start the engine.
4. Drive the vehicle.

If comes on and stays on, the vehicle may need more time to diagnose the problem. If the condition persists, see your dealer.

Turning the Systems Off and On

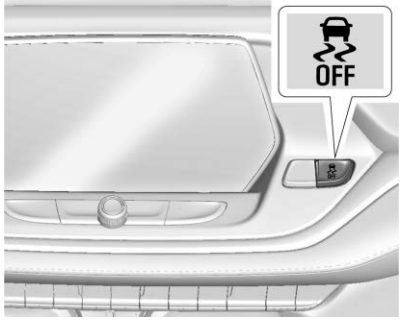

Caution
Do not repeatedly brake or accelerate heavily when TCS is off. The vehicle driveline could be damaged.

To turn off only TCS, press and release . The Traction Off light displays in the instrument cluster and a DIC message may display.

To turn TCS on again, press and release . The Traction Off light displayed in the instrument cluster will turn off.

If TCS is limiting wheel spin when is pressed, the system will not turn off until the wheels stop spinning.

To turn off both TCS and StabiliTrak/ESC, press and hold until the Traction Off light and StabiliTrak/ESC OFF light come on and stay on in the instrument cluster. A DIC message may display.

To turn TCS and StabiliTrak/ESC on again, press and release . The Traction Off light and StabiliTrak/ESC OFF light in the instrument cluster turn off.

StabiliTrak/ESC will automatically turn on if the vehicle exceeds 56 km/h (35 mph). Traction control will remain off.

Adding accessories can affect the vehicle performance. See *Accessories and Modifications* ⇨ *254*.

Driver Mode Control

If equipped, the Driver Mode Control has the following Modes: Tour (FWD), Sport, All-Wheel Drive (AWD), Snow/Ice, Tow/Haul, and Off-Road. Rotate the Driver Mode Control knob on the center console to make a mode selection. Continue turning the knob through the available modes. The selected mode's icon will light up on the knob.

If the vehicle is in Tour (FWD) or AWD, it will stay in that mode through future ignition cycles. If the vehicle is in any other mode, it will revert back to Tour (FWD) when the vehicle is restarted.

Driver Mode Control Knob

x2 or Tour : Vehicle is in Tour (FWD) Mode. Use this mode during normal driving

conditions. See *Driving for Better Fuel Economy* ⇨ *188*. Tour (FWD) Mode operates in Front-Wheel Drive to improve fuel economy.

Sport : Sport Mode improves vehicle handling and acceleration on dry pavement. When active, Sport Mode modifies steering efforts, transmission shifting, AWD torque, suspension tuning (when properly equipped), and StabiliTrak/Electronic Stability Control (ESC) settings. For vehicles equipped with AWD, choosing Sport Mode also engages AWD.

4 AWD (AWD Only) : AWD Mode provides drive torque to all four wheels. Select AWD to improve traction and control on slippery road surfaces, such as gravel, sand, wet pavement, snow, and ice. When in AWD Mode, the AWD Mode indicator will be on.

AWD is active in AWD, Sport, Tow/Haul, and Off-Road Modes.

When using a compact spare tire on an AWD vehicle, the system automatically detects the compact spare and reduces AWD performance to protect the system. To restore full AWD operation and prevent excessive wear on the system, replace the compact spare with a full-size tire as soon as possible. See *Compact Spare Tire* ⇨ *317*.

Snow/Ice (FWD Only) : Snow/Ice Mode improves vehicle acceleration on snow and ice covered roads by changing accelerator pedal response.

Tow/Haul : This feature can assist when towing or hauling a heavy load. Use this mode to assist in maintaining desired vehicle speeds when driving on downhill grades by using the engine and transmission. When active, Tow/Haul Mode modifies transmission shifting, steering effort, and Trailer Sway Control. For AWD vehicles, choosing Tow/Haul Mode also engages AWD. See *Driving Characteristics and Towing Tips* ⇨ *242*.

Automatic Engine Grade Braking

Automatic Engine Grade Braking assists when driving downhill. It maintains vehicle speed by automatically implementing a shift pattern that uses the engine and the transmission to slow the vehicle. The system will automatically command downshifts to reduce vehicle speed. The normal shift pattern will return once the vehicle is on a low grade or when the accelerator pedal is pressed.

While in the Electronic Range Select (ERS) mode, grade braking is deactivated, allowing the driver to select a range and limiting the highest gear available. Grade braking is available for normal driving and in Tow/Haul Mode.

See *Automatic Transmission* ⇨ *207*.

Off-Road (AWD Only) : Use this mode for off-road recreational driving. When active, Off-Road Mode modifies accelerator pedal response, ABS, TCS, and the StabiliTrak/ESC system. Choosing Off-Road Mode also engages AWD. For more information on Off-Road Mode, see *Off-Road Driving* ⇨ *191*.

Cruise Control

⚠ Warning

Cruise control can be dangerous where you cannot drive safely at a steady speed. Do not use cruise control on winding roads or in heavy traffic.

(Continued)

Warning (Continued)

Cruise control can be dangerous on slippery roads. On such roads, fast changes in tire traction can cause excessive wheel slip, and you could lose control. Do not use cruise control on slippery roads.

With cruise control, a speed of about 40 km/h (25 mph) or more can be maintained without keeping your foot on the accelerator. Cruise control does not work at speeds below about 40 km/h (25 mph).

If the Traction Control System (TCS) or StabiliTrak/Electronic Stability Control (ESC) system begins to limit wheel spin while using cruise control, the cruise control automatically disengages. See *Traction Control/Electronic Stability Control* ⇨ *213*. If a collision alert occurs when cruise control is activated, cruise control is disengaged. See *Forward Collision Alert (FCA) System* ⇨ *230*. When road conditions allow the cruise control to be safely used, cruise control can be turned back on.

Turning off the TCS or StabiliTrak/ESC system will disengage the cruise control.

If the brakes are applied, cruise control disengages.

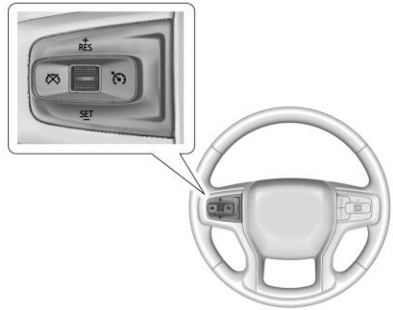

: Press to turn the system on and off. A white indicator appears in the instrument cluster when cruise is turned on.

RES+ : If there is a set speed in memory, move the thumbwheel up briefly to resume to that speed or press and hold to accelerate. If the cruise control is already active, use to increase vehicle speed.

SET– : Move the thumbwheel down briefly to set the speed and activate cruise control. If the cruise control is already active, use to decrease vehicle speed.

: Press to disengage cruise control without erasing the set speed from memory.

Setting Cruise Control

If is on when not in use, SET– or RES+ could get pressed and go into cruise when not desired. Keep off when cruise is not being used.

1. Press .
2. Get up to the desired speed.
3. Move the thumbwheel down to SET–. The desired set speed briefly appears in the instrument cluster.
4. Remove your foot from the accelerator.

When the cruise control has been set to the desired speed, a green cruise control indicator appears on the instrument cluster.

Resuming a Set Speed

If the cruise control is set at a desired speed and then the brakes are applied or is pressed, the cruise control is disengaged without erasing the set speed from memory.

Once the vehicle speed reaches about 40 km/h (25 mph) or more, move the thumbwheel up toward RES+ briefly. The vehicle returns to the previous set speed.

Increasing Speed While Using Cruise Control

If the cruise control system is already activated:

- Move the thumbwheel up toward RES+ until the desired speed is reached, then release it.
- To increase vehicle speed in small increments, move the thumbwheel up toward RES+ briefly. For each press, the vehicle goes about 1 km/h (1 mph) faster.

The speedometer reading can be displayed in either English or metric units. See *Instrument Cluster (Base and Midlevel)* ⇨ *90* or *Instrument Cluster (Uplevel)* ⇨ *93*. The increment value used depends on the units displayed.

Reducing Speed While Using Cruise Control

If the cruise control system is already activated:

- Move the thumbwheel down toward SET– until the desired lower speed is reached, then release it.
- To decrease the vehicle speed in small increments, move the thumbwheel down toward SET– briefly. For each press, the vehicle goes about 1 km/h (1 mph) slower.

The speedometer reading can be displayed in either English or metric units. See *Instrument Cluster (Base and Midlevel)* ⇨ *90* or *Instrument Cluster (Uplevel)* ⇨ *93*. The increment value used depends on the units displayed.

Passing Another Vehicle While Using Cruise Control

Use the accelerator pedal to increase the vehicle speed. When you take your foot off the pedal, the vehicle will slow down to the previous set cruise speed.

While pressing the accelerator pedal or shortly following the release to override cruise, briefly moving the thumbwheel down toward SET– will result in cruise set to the current vehicle speed.

Using Cruise Control on Hills

How well the cruise control will work on hills depends upon the vehicle speed, load, and the steepness of the hills. When going up steep hills, you might have to step on the accelerator pedal to maintain your speed. When going downhill, you might have to brake or shift to a lower gear to keep your speed down. If the brake pedal is applied, cruise control disengages.

Ending Cruise Control

There are four ways to end cruise control:

- Step lightly on the brake pedal.
- Press .
- Shift the transmission to N (Neutral).
- Press .

Erasing Speed Memory

The cruise control set speed is erased from memory if is pressed or if the ignition is turned off.

Adaptive Cruise Control (Advanced)

If equipped, Adaptive Cruise Control (ACC) allows the cruise control set speed and following gap to be selected. Read this entire section before using this system. The following gap is the following time between your vehicle and a vehicle detected directly ahead in your path, moving in the same direction. If no vehicle is detected in your path, ACC works like regular cruise control. ACC uses camera and radar sensors. See *Radio Frequency Statement* ⇨ *357*.

If a vehicle is detected in your path, ACC can apply acceleration or limited, moderate braking to maintain the selected following

gap. To disengage ACC, apply the brake pedal. If ACC is controlling your vehicle speed when the Traction Control System (TCS) or StabiliTrak/Electronic Stability Control (ESC) system activates, the ACC may automatically disengage. See *Traction Control/Electronic Stability Control* ⇨ *213*. When road conditions allow ACC to be safely used, the ACC can be turned back on.

Turning off the TCS or StabiliTrak/ESC system will disengage the cruise control.

ACC can reduce the need for you to frequently brake and accelerate, especially when used on expressways, freeways, and interstate highways. When used on other roads, you may need to take over the control of braking or acceleration more often.

⚠ Warning

ACC has limited braking ability and may not have time to slow the vehicle down enough to avoid a collision with another vehicle you are following. This can occur when vehicles suddenly slow or stop ahead, or enter your lane. Also see "Alerting the Driver" in this section.

(Continued)

Warning (Continued)

Complete attention is always required while driving and you should be ready to take action and apply the brakes. See *Defensive Driving* ⇨ *188*.

⚠ Warning

ACC will not detect or brake for children, pedestrians, animals, or other objects.

Do not use ACC when:

- On winding and hilly roads or when the sensors are blocked by snow, ice, or dirt. The system may not detect a vehicle ahead. Keep the entire front of the vehicle clean.
- Visibility is low, such as in fog, rain, or snow conditions. ACC performance is limited under these conditions.
- On slippery roads where fast changes in tire traction can cause excessive wheel slip.

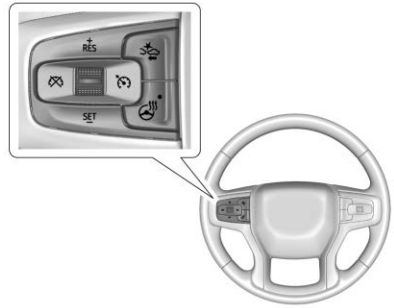

: Press to turn the system on or off. The indicator turns white on the instrument cluster when ACC is turned on.

RES+ : Press briefly to resume the previous set speed or to increase vehicle speed if ACC is already activated. To increase speed by about 1 km/h (1 mph), press RES+ briefly. To increase speed to the next 5 km/h (5 mph) mark on the speedometer, hold RES+.

SET– : Press briefly to set the speed and activate ACC or to decrease vehicle speed if ACC is already activated. To decrease speed by about 1 km/h (1 mph), press SET– briefly. To decrease speed to the next 5 km/h (5 mph) mark on the speedometer, hold SET– .

: Press to disengage ACC without erasing the selected set speed.

: Press to select a following gap time (or distance) setting for ACC of Far, Medium, or Near.

Switching Between ACC and Regular Cruise Control

To switch between ACC and regular cruise control, press and hold . A Driver Information Display (DIC) message displays. See *Vehicle Messages* ⇨ *113*.

ACC Indicator

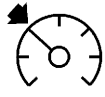

Regular Cruise Control Indicator

When ACC is engaged, a green indicator will be lit on the instrument cluster. When the regular cruise control is engaged, a green indicator will be lit on the instrument cluster; the following gap will not display.

When the vehicle is turned on, the cruise control mode will be set to the last mode used before the vehicle was turned off.

⚠ Warning

Always check the cruise control indicator on the instrument cluster to determine which mode cruise control is in before using the feature. If ACC is not active, the vehicle will not automatically brake for other vehicles, which could cause a crash if the brakes are not applied manually. You and others could be seriously injured or killed.

Setting Adaptive Cruise Control

If is on when not in use, it could get pressed and go into cruise when not desired. Keep off when cruise is not being used.

Select the set speed desired for cruise. This is the vehicle speed when no vehicle is detected in its path.

ACC will not set at a speed less than 25 km/h (15 mph), although it can be resumed when driving at lower speeds. The minimum allowable set speed is 25 km/h (15 mph).

To set ACC:

1. Press .
2. Get up to the desired speed.
3. Press and release SET–.
4. Remove your foot from the accelerator.

After ACC is set, it may immediately apply the brakes if a vehicle ahead is detected closer than the selected following gap.

ACC can also be set while the vehicle is stopped if ACC is on and the brake pedal is applied.

The ACC indicator displays on the instrument cluster. When ACC is turned on, the indicator will be lit white. When ACC is active, the indicator will be lit green.

Be mindful of speed limits, surrounding traffic speeds, and weather conditions when selecting the set speed.

Resuming a Set Speed

If ACC is set at a desired speed and then the brakes are applied, ACC is disengaged without erasing the set speed from memory.

To begin using ACC again, press RES+ up briefly.

- If the vehicle is moving more than 5 km/h (3 mph), it returns to the previous set speed.
- If the vehicle is stopped with the brake pedal applied, press RES+ and release the brake pedal. ACC will hold the vehicle until RES+ or the accelerator pedal is pressed.

A green ACC indicator and the set speed display on the instrument cluster. The vehicle ahead indicator may be flashing if a vehicle ahead was present and moved. See "Approaching and Following a Vehicle" later in this section.

Once ACC has resumed, if there is no vehicle ahead, if the vehicle ahead is beyond the selected following gap, or if the vehicle has exited a sharp curve, then the vehicle speed will increase to the set speed.

Increasing Speed While ACC is at a Set Speed

If ACC is already activated, do one of the following:

- Use the accelerator to get to the higher speed. Briefly press and release SET– and release the accelerator pedal. The vehicle will now cruise at the higher speed.

  When the accelerator pedal is pressed, ACC will not brake because it is overridden. While overridden, the ACC indicator will turn blue on the instrument cluster.
- Press and hold RES+ until the desired set is displayed, then release it.
- To increase vehicle speed in small increments, press RES+ briefly. For each press, the vehicle goes 1 km/h or (1 mph) faster.
- To increase vehicle speed in larger increments, hold RES+. While holding RES +, the vehicle speed increases to the next 5 km/h (5 mph) step, then continues to increase by 5 km/h (5 mph) at a time.

The set speed can also be increased while the vehicle is stopped.

- If stopped with the brake applied, press RES+ until the desired set speed is displayed.
- If ACC is holding the vehicle at a stop and there is another vehicle directly ahead, pressing RES+ will increase the set speed.
- Pressing RES+ when there is no longer a vehicle ahead or the vehicle ahead is pulling away and the brake is not applied will cause the ACC to resume.

When it is determined that there is no vehicle ahead or the vehicle ahead is beyond the selected following gap, then the vehicle speed will increase to the set speed.

The speedometer reading can be displayed in either English or metric units. See *Instrument Cluster (Base and Midlevel)* ⇨ *90* or *Instrument Cluster (Uplevel)* ⇨ *93*. The increment value used depends on the units displayed.

Reducing Speed While ACC Is at a Set Speed

If ACC is already activated, do one of the following:

- Use the brake to get to the desired lower speed. Press SET– down and release the accelerator pedal. The vehicle will now cruise at the lower speed.
- Press and hold SET– down until the desired lower speed is reached, then release it.

- To decrease the vehicle speed in smaller increments, press SET– down briefly. For each press, the vehicle goes about 1 km/h or (1 mph) slower.
- To decrease the vehicle speed in larger increments, hold SET–. While holding SET–, the vehicle speed decreases to the next 5 km/h (5 mph) step, then continues to decrease by 5 km/h (5 mph) at a time.
- If stopped with the brake applied, press or hold SET– until the desired set speed is displayed.

Selecting the Follow Distance Gap

When a slower moving vehicle is detected ahead within the selected following gap, ACC will adjust the vehicle's speed and attempt to maintain the follow distance gap selected.

Press on the steering wheel to adjust the following gap. Each press cycles the gap button through three settings: Far, Medium, or Near.

When pressed, the current gap setting displays briefly on the instrument cluster. The gap setting will be maintained until it is changed.

Since each gap setting corresponds to a following time (Far, Medium, or Near), the following distance will vary based on vehicle speed. The faster the vehicle speed, the further back your vehicle will follow a vehicle detected ahead. Consider traffic and weather conditions when selecting the following gap. The range of selectable gaps may not be appropriate for all drivers and driving conditions.

Changing the gap setting automatically changes the alert timing sensitivity (Far, Medium, or Near) for the Forward Collision Alert (FCA) feature. See *Forward Collision Alert (FCA) System* ⇨ *230*.

Alerting the Driver

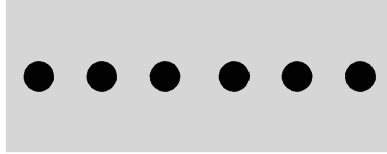

If ACC is engaged, driver action may be required when ACC cannot apply sufficient braking because of approaching a vehicle too rapidly.

When this condition occurs, the collision alert symbol will flash on the windshield. Either eight beeps will sound from the front, or both sides of the Safety Alert Seat will pulse five times. See “Collision/Detection Systems” under *Vehicle Personalization* ⇨ *113*.

See *Defensive Driving* ⇨ *188*.

Approaching and Following a Vehicle

The vehicle ahead indicator is in the instrument cluster.

The vehicle ahead indicator only displays when a vehicle is detected in your vehicle’s path moving in the same direction.

If this symbol is not displaying, ACC will not respond to or brake for vehicles ahead.

ACC automatically slows the vehicle down and adjusts vehicle speed to follow the vehicle in front at the selected following gap. The vehicle speed increases or decreases to follow the vehicle in front of

you, but will not exceed the set speed. It may apply limited braking, if necessary. When braking is active, the brake lamps will come on. The automatic braking may feel or sound different than if the brakes were applied manually. This is normal.

Passing a Vehicle While Using ACC

If the set speed is high enough, and the left turn signal is used to pass a vehicle ahead in the selected following gap, ACC may assist by gradually accelerating the vehicle prior to the lane change.

⚠ Warning

When using ACC to pass a vehicle or perform a lane change, the following distance to the vehicle being passed may be reduced. ACC may not apply sufficient acceleration or braking when passing a vehicle or performing a lane change. Always be ready to manually accelerate or brake to complete the pass or lane change.

Stationary or Very Slow-Moving Objects

⚠ Warning

ACC may not detect and react to stopped or slow-moving vehicles ahead of you. For example, the system may not brake for a vehicle it has never detected moving. This can occur in stop-and-go traffic or when a vehicle suddenly appears due to a vehicle ahead changing lanes. Your vehicle may not stop and could cause a crash. Use caution when using ACC. Your complete attention is always required while driving and you should be ready to take action and apply the brakes.

Irregular Objects Affecting ACC

ACC may have difficulty detecting the following objects:

- Vehicles with cargo extending from the back end.
- Non-standard shaped vehicles, such as vehicle transport, vehicles with a side car fitted, or horse carriages.
- Objects that are close to the front of your vehicle.

ACC Automatically Disengages

ACC may automatically disengage and the driver will need to manually apply the brakes to slow the vehicle when:

- The sensors are blocked.
- The Traction Control System (TCS) or StabiliTrak/ESC system has activated or been disabled.
- There is a fault in the system.
- The radar falsely reports a blockage when driving in a desert or remote area with no other vehicles or roadside objects.
- A DIC message may display to indicate that ACC is temporarily unavailable.

The ACC indicator will turn white when ACC is no longer active.

In some cases, when ACC is temporarily unavailable, regular cruise control may be used. See “Switching Between ACC and Regular Cruise Control” in this section. Always consider driving conditions before using either cruise control system.

Notification to Resume ACC

ACC will maintain a following gap behind a detected vehicle and slow your vehicle to a stop behind that vehicle.

If the stopped vehicle ahead has driven away and ACC has not resumed, the vehicle ahead indicator will flash as a reminder to check traffic ahead before proceeding. In addition, the left and right sides of the Safety Alert Seat will pulse three times, or three beeps will sound. See "Alert Type" and "Adaptive Cruise Go Notifier" in "Collision/Detection Systems" under *Vehicle Personalization* ⇨ *113*.

When the vehicle drives away, ACC resumes automatically if the stop was brief. If necessary, press RES+ or the accelerator pedal to resume ACC. If stopped for more than two minutes or if the driver door is opened and the driver seat belt is unbuckled, the ACC automatically applies the Electric Parking Brake (EPB) to hold the vehicle. The EPB status light will turn on. See *Electric Parking Brake* ⇨ *211*. To resume ACC and release the EPB, press the accelerator pedal.

A DIC warning message may display indicating to shift to P (Park) before exiting the vehicle. See *Vehicle Messages* ⇨ *113*.

⚠ Warning

If ACC has stopped the vehicle, and if ACC is disengaged, turned off, or canceled, the vehicle will no longer be held at a stop. The vehicle can move. When ACC is holding the vehicle at a stop, always be prepared to manually apply the brakes.

⚠ Warning

Leaving the vehicle without placing it in P (Park) can be dangerous. Do not leave the vehicle while it is being held at a stop by ACC. Always place the vehicle in P (Park) and turn off the ignition before leaving the vehicle.

ACC Override

If using the accelerator pedal while ACC is active, the ACC indicator turns blue on the instrument cluster to indicate that automatic braking will not occur. See *Vehicle Messages* ⇨ *113*. ACC will resume operation when the accelerator pedal is not being pressed.

⚠ Warning

The ACC will not automatically apply the brakes if your foot is resting on the accelerator pedal. You could crash into a vehicle ahead of you.

Curves in the Road

⚠ Warning

On curves, ACC may not detect a vehicle ahead in your lane. You could be startled if the vehicle accelerates up to the set speed, especially when following a vehicle exiting or entering exit ramps. You could lose control of the vehicle or crash. Do not use ACC while driving on an entrance or exit ramp. Always be ready to use the brakes if necessary.

⚠ Warning

On curves, ACC may respond to a vehicle in another lane, or may not have time to react to a vehicle in your lane. You could crash into a vehicle ahead of you, or lose control of your vehicle. Give extra

(Continued)

Warning (Continued)

attention in curves and be ready to use the brakes if necessary. Select an appropriate speed while driving in curves.

ACC may operate differently in a sharp curve. It may reduce the vehicle speed if the curve is too sharp. ACC automatically slows the vehicle down while navigating the curve and may increase speed out of the curve, but will not exceed the set speed

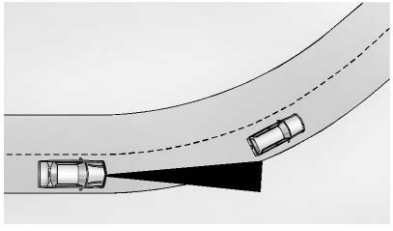

When following a vehicle and entering a curve, ACC may not detect the vehicle ahead and may accelerate to the set speed. When this happens, the vehicle ahead indicator will not appear.

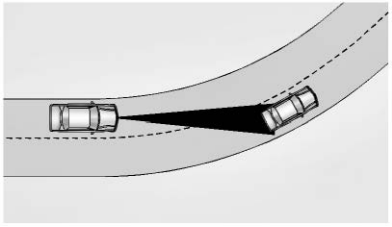

ACC may detect a vehicle that is not in your lane and apply the brakes.

ACC may occasionally provide an alert and/or braking that is considered unnecessary. It could respond to vehicles in different lanes, signs, guardrails, and other stationary objects when entering or exiting a curve. This is normal operation. The vehicle does not need service.

Other Vehicle Lane Changes

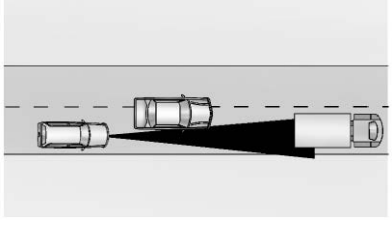

ACC will not detect a vehicle ahead until it is completely in the lane. The brakes may need to be manually applied.

Objects Not Directly in Front of Your Vehicle

The detection of objects in front of the vehicle may not be possible if:

- The vehicle or object ahead is not within your lane.
- The vehicle ahead is shifted, not centered, or is shifted to one side of the lane.

Driving in Narrow Lanes

Vehicles in adjacent traffic lanes or roadside objects may be incorrectly detected when located along the roadway.

Do Not Use ACC on Hills and When Towing a Trailer

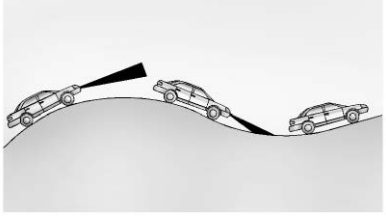

Do not use ACC when driving on steep hills or when towing a trailer. ACC will not detect a vehicle in the lane while driving on steep hills. The driver will often need to take over acceleration and braking on steep hills, especially when towing a trailer. If the brakes are applied, the ACC disengages.

Disengaging ACC

There are three ways to disengage ACC:

- Step lightly on the brake pedal.
- Press .
- Press .

Erasing Speed Memory

The ACC set speed is erased from memory if is pressed or if the ignition is turned off.

Weather Conditions Affecting ACC

System operation may be limited under snow, heavy rain, or road spray conditions.

Accessory Installations and Vehicle Modifications

Do not install or place any object around the front camera windshield area that would obstruct the front camera view.

Do not install objects on top of the vehicle that overhang and obstruct the front camera, such as a canoe, kayak, or other items that can be transported on a roof rack system. See *Roof Rack System* ⇨ *81*.

Do not modify the hood, headlamps, or fog lamps, as this may limit the camera's ability to detect an object.

Cleaning the Sensing System

The camera sensor on the windshield behind the rearview mirror and the radar sensors on the front of the vehicle can become blocked by snow, ice, dirt, or mud. These areas need to be cleaned for ACC to operate properly.

If ACC will not operate, regular cruise control may be available. See "Switching Between ACC and Regular Cruise Control" in this section. Always consider driving conditions before using either cruise control system.

For cleaning instructions, see "Washing the Vehicle" under *Exterior Care* ⇨ *323*.

Driver Assistance Systems

This vehicle may have features that work together to help avoid crashes or reduce crash damage while driving, backing, and parking. Read this entire section before using these systems.

⚠ Warning

Do not rely on the Driver Assistance Systems. These systems do not replace the need for paying attention and driving safely. You may not hear or feel alerts or warnings provided by these systems. Failure to use proper care when driving may result in injury, death, or vehicle damage. See *Defensive Driving* ⇨ *188*.

Under many conditions, these systems will not:

- Detect children, pedestrians, bicyclists, or animals.
- Detect vehicles or objects outside the area monitored by the system.
- Work at all driving speeds.
- Warn you or provide you with enough time to avoid a crash.

(Continued)

Warning (Continued)

- Work under poor visibility or bad weather conditions.
- Work if the detection sensor is not cleaned or is covered by ice, snow, mud, or dirt.
- Work if the detection sensor is covered up, such as with a sticker, magnet, or metal plate.
- Work if the area surrounding the detection sensor is damaged or not properly repaired.

Complete attention is always required while driving, and you should be ready to take action and apply the brakes and/or steer the vehicle to avoid crashes.

Audible or Safety Alert Seat

Some driver assistance features alert the driver of obstacles by beeping. To change the volume of the warning chime, see "Comfort and Convenience" under *Vehicle Personalization* ⇨ *113*.

If equipped with the Safety Alert Seat, the driver seat cushion may provide a vibrating pulse alert instead of beeping. To change this, see "Collision/Detection Systems" under *Vehicle Personalization* ⇨ *113*.

Cleaning

Depending on vehicle options, keep these areas of the vehicle clean to ensure the best driver assistance feature performance. Driver Information Center (DIC) messages may display when the systems are unavailable or blocked.

- Front and rear bumpers and the area below the bumpers
- Front grille and headlamps
- Front camera lens in the front grille or near the front emblem
- Front side and rear side panels
- Outside of the windshield in front of the rearview mirror
- Side camera lens on the bottom of the outside mirrors
- Rear side corner bumpers
- Rear Vision Camera above the license plate

Radio Frequency

This vehicle may be equipped with driver assistance systems that operate using radio frequency. See *Radio Frequency Statement* ⇨ *357*.

Assistance Systems for Parking or Backing

If equipped, the Rear Vision Camera (RVC), Rear Park Assist (RPA), Surround Vision, and Rear Cross Traffic Alert (RCTA) may help the driver park or avoid objects. Always check around the vehicle when parking or backing.

Rear Vision Camera (RVC)

When the vehicle is shifted into R (Reverse), the RVC displays an image of the area behind the vehicle in the infotainment display. The previous screen displays when the vehicle is shifted out of R (Reverse) after a short delay. To return to the previous screen sooner, press Home or Back on the infotainment system, shift into P (Park), or reach a vehicle speed of approximately 12 km/h (8 mph) while in D (Drive).

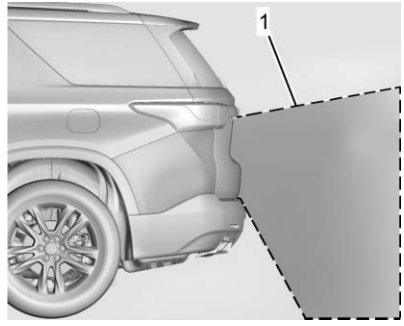

1. View Displayed by the Camera

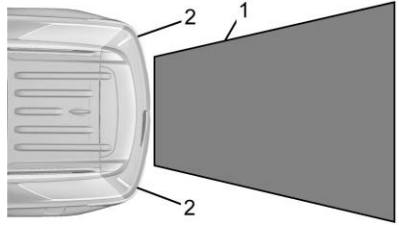

1. View Displayed by the Camera
2. Corners of the Rear Bumper

Displayed images may be farther or closer than they appear. The area displayed is limited and objects that are close to either corner of the bumper or under the bumper do not display.

A warning triangle may display to show that RPA or RCTA has detected an object. This triangle changes from amber to red and increases in size the closer the object.

⚠ Warning

The camera(s) do not display children, pedestrians, bicyclists, crossing traffic, animals, or any other object outside of the cameras' field of view, below the bumper, or under the vehicle. Shown distances may be different from actual distances. Do not drive or park the vehicle using only these camera(s). Always check behind and around the vehicle before driving. Failure to use proper care may result in injury, death, or vehicle damage.

Hitch Guidance

If equipped, this feature displays a single, centered guideline on the camera display to assist with aligning a vehicle's hitch ball

with a trailer coupler. Select the trailer guidance line button, then align the trailer guidance line over the trailer coupler. Continuously steer the vehicle to keep the guidance line centered on the coupler when backing. RVC Park Assist overlays will not display when the trailer guidance line is active. Hitch Guidance is only available in Standard View.

To check the trailer when in a forward gear above 12 km/h (8 mph), touch CAMERA on the infotainment display to view the rear camera. Touch X to exit the view or it will be removed automatically after eight seconds.

⚠ Warning

Use Hitch Guidance only to help back the vehicle to a trailer hitch or, when traveling above 12 km/h (8 mph), to briefly check the status of your trailer. Do not use for any other purpose, such as making lane change decisions. Before making a lane change, always check the mirrors and glance over your shoulder. Improper use could result in serious injury to you or others.

Surround Vision

If equipped, Surround Vision shows an image of the area surrounding the vehicle, along with the front or rear camera views on the infotainment display. The front camera is in the grille or near the front emblem, the side cameras are on the bottom of the outside mirrors, and the rear camera is above the license plate.

The Surround Vision system can be accessed by selecting CAMERA in the infotainment display or when the vehicle is shifted into R (Reverse). To return to the previous screen sooner, press any button on the infotainment system, shift into P (Park), or reach a vehicle speed of approximately 12 km/h (8 mph).

⚠ Warning

The Surround Vision cameras have blind spots and will not display all objects near the corners of the vehicle. Folding outside mirrors that are out of position may not display surround view correctly. Always check around the vehicle when parking or backing.

1. Views Displayed by the Surround Vision Cameras
2. Area Not Shown

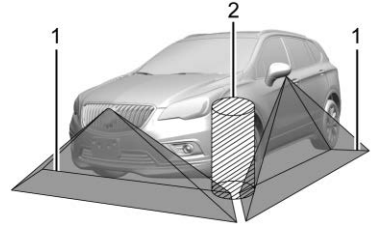

1. Views Displayed by the Surround Vision Cameras
2. Area Not Shown

Camera Views

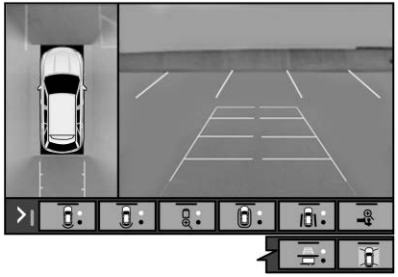

Touch the camera view buttons along the bottom of the infotainment display. Available views will differ depending on vehicle options.

Front/Rear Standard View : Displays an image of the area in front or behind the vehicle. Touch Front/Rear Standard View on the infotainment display when a camera view is active. Touching the button multiple times will toggle between front and rear camera views.

If equipped, the front view camera also displays when the Park Assist system detects an object within 30 cm (12 in).

Front/Rear Junction View : Displays a front or rear cross traffic view that shows objects directly to the left and right of the front or back of the vehicle. Touch Junction View on the infotainment display when a camera view is active. Touching the button multiple times will toggle between front and rear camera views.

Front/Rear Overhead View : Displays a front or rear overhead view of the vehicle. Touching the button will toggle between the two views.

Front/Rear Bowl View : Displays a view of the vehicle from either the front or the back of the vehicle. Touch Bowl View on the infotainment display when a camera view is active. Touching the button multiple times will toggle between forward and rearward views. Park Assist and RCTA overlays are not available when Bowl View is active.

Side Forward/Rearward View : Displays a view that shows objects next to the front or rear sides of the vehicle. Touch Side Forward/Rearward View on the infotainment display when a camera view is active. Touching the button multiple times will toggle between forward and rearward views. Park Assist and RCTA overlays are not available when Side Forward/Rearward View is active.

Hitch View : Assists while connecting to a trailer. Displays a zoomed-in view of the hitch to help align the vehicle's hitch ball with the trailer coupler. Shifting into P (Park) while in this view will automatically engage the Electric Parking Brake (EPB).

Guidance Lines : Displays available guidelines. The horizontal markings represent distance from the vehicle.

Top Down View : Displays an image of the area surrounding the vehicle, along with other views in the infotainment display. Top Down can be enabled or disabled by pressing the Top Down View button multiple times.

Park Assist

With RPA, as the vehicle backs up at speeds of less than 8 km/h (5 mph), the sensors on the rear bumper may detect objects up to 2.5m (8 ft) behind the vehicle within a zone 25 cm (10 in) high off the ground and below bumper level. These detection distances may be shorter during warmer or humid weather.

Blocked sensors will not detect objects and can also cause false detections. Keep the sensors clean of mud, dirt, snow, ice, and slush; and clean sensors after a car wash in freezing temperatures.

⚠ Warning

The Park Assist system does not detect children, pedestrians, bicyclists, animals, or objects below the bumper or that are too close or too far from the vehicle. It is not available at speeds greater than 8 km/h (5 mph). To prevent injury, death, or vehicle damage, even with Park Assist, always check the area around the vehicle and check all mirrors before backing.

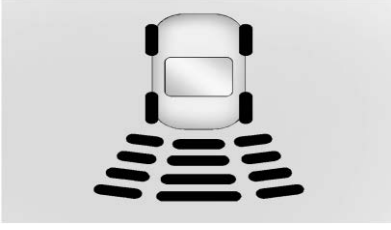

The instrument cluster may have a Park Assist display with bars that show "distance to object" and object location information for RPA. As the object gets closer, more bars light up and the bars change color from yellow to amber to red.

When an object is first detected in the rear, one beep will be heard from the rear, or both sides of the Safety Alert Seat will pulse two times. When an object is very close (<0.6m (2 ft) in the vehicle rear, five beeps will sound from the rear or both sides of the Safety Alert Seat will pulse five times.

Rear Cross Traffic Alert (RCTA)

If equipped, RCTA shows a red warning triangle with a left or right pointing arrow on the infotainment display to warn of traffic coming from the left or right. This system detects objects coming from up to 20 m (65 ft) from the left or right side of the vehicle. When an object is detected, three beeps sound from the left or right, depending on the direction of the detected vehicle.

Use caution while backing up when towing a trailer, as the RCTA detection zones that extend out from the back of the vehicle do not move further back when a trailer is towed.

Turning the Features On or Off

To turn RPA on or off, press P on the center console. The indicator light next to the button comes on when the features are on and turns off when the features have been disabled.

RCTA and Rear Park Assist symbols can be turned on or off through vehicle personalization. See "Collision/Detection Systems" under *Vehicle Personalization* ⇨ *113*.

Turn off RPA when towing a trailer.

Assistance Systems for Driving

If equipped, when driving the vehicle in a forward gear, Forward Collision Alert (FCA), Lane Departure Warning (LDW), Lane Keep Assist (LKA), Side Blind Zone Alert (SBZA), Lane Change Alert (LCA), Automatic Emergency Braking (AEB), and/or the Front Pedestrian Braking (FPB) System can help to avoid a crash or reduce crash damage.

Forward Collision Alert (FCA) System

If equipped, the FCA system may help to avoid or reduce the harm caused by front-end crashes. When approaching a

vehicle ahead too quickly, FCA provides a red flashing alert on the windshield and rapidly beeps or pulses the driver seat. FCA also lights an amber visual alert if following another vehicle much too closely.

FCA detects vehicles within a distance of approximately 60 m (197 ft) and operates at speeds above 8 km/h (5 mph). If the vehicle has Adaptive Cruise Control (ACC), it can detect vehicles to distances of approximately 110 m (360 ft) and operates at speeds above 4km/h (2.5 mph). See *Adaptive Cruise Control (Advanced)* ⇨ *217*.

⚠ Warning

FCA is a warning system and does not apply the brakes. When approaching a slower-moving or stopped vehicle ahead too rapidly, or when following a vehicle too closely, FCA may not provide a warning with enough time to help avoid a crash. It also may not provide any warning at all. FCA does not warn of pedestrians, animals, signs, guardrails, bridges, construction barrels, or other objects. Be ready to take action and apply the brakes. See *Defensive Driving* ⇨ *188*.

FCA can be disabled with either the FCA steering wheel control or, if equipped, through vehicle personalization. See "Collision/Detection Systems" under *Vehicle Personalization* ⇨ *113*.

Detecting the Vehicle Ahead

FCA warnings will not occur unless the FCA system detects a vehicle ahead. When a vehicle is detected, the vehicle ahead indicator will display green. Vehicles may not be detected on curves, highway exit ramps, or hills, due to poor visibility; or if a vehicle ahead is partially blocked by pedestrians or other objects. FCA will not detect another vehicle ahead until it is completely in the driving lane.

⚠ Warning

FCA does not provide a warning to help avoid a crash, unless it detects a vehicle. FCA may not detect a vehicle ahead if

(Continued)

Warning (Continued)

the FCA sensor is blocked by dirt, snow, or ice, or if the windshield is damaged. It may also not detect a vehicle on winding or hilly roads, or in conditions that can limit visibility such as fog, rain, or snow, or if the headlamps or windshield are not cleaned or in proper condition. Keep the windshield, headlamps, and FCA sensors clean and in good repair.

Collision Alert

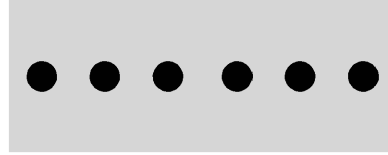

When your vehicle approaches another detected vehicle too rapidly, the red FCA display will flash on the windshield. Also, eight rapid high-pitched beeps will sound from the front, or both sides of the Safety Alert Seat will pulse five times. When this Collision Alert occurs, the brake system may prepare for driver braking to occur more

rapidly which can cause a brief, mild deceleration. Continue to apply the brake pedal as needed. Cruise control may be disengaged when the Collision Alert occurs.

Tailgating Alert

The vehicle ahead indicator will display amber when you are following a vehicle ahead much too closely.

Selecting the Alert Timing

The Collision Alert control is on the steering wheel. Press to set the FCA timing to Far, Medium, or Near, or on some vehicles, Off. The first button press shows the current setting on the Driver Information Center (DIC). Additional button presses will change this setting. The chosen setting will remain until it is changed and will affect the timing of both the Collision Alert and the Tailgating Alert features. The timing of both alerts will vary based on vehicle speed. The faster the vehicle speed, the farther away the alert will occur. Consider traffic and weather conditions when selecting the alert timing. The range of selectable alert timings may not be appropriate for all drivers and driving conditions.

If your vehicle is equipped with Adaptive Cruise Control (ACC), changing the FCA timing setting automatically changes the following gap setting (Far, Medium, or Near).

Following Distance Indicator

The following distance to a moving vehicle ahead in your path is indicated in following time in seconds on the Driver Information Center (DIC). See *Driver Information Center (DIC) (Base and Midlevel)* ⇨ *107* or *Driver Information Center (DIC) (Uplevel)* ⇨ *110*. The minimum following time is 0.5 seconds away. If there is no vehicle detected ahead, or the vehicle ahead is out of sensor range, dashes will be displayed.

Unnecessary Alerts

FCA may provide unnecessary alerts for turning vehicles, vehicles in other lanes, objects that are not vehicles, or shadows. These alerts are normal operation and the vehicle does not need service.

Cleaning the System

If the FCA system does not seem to operate properly, this may correct the issue:

- Clean the outside of the windshield in front of the rearview mirror.
- Clean the entire front of the vehicle.
- Clean the headlamps.

Automatic Emergency Braking (AEB)

If the vehicle has Forward Collision Alert (FCA), it also has AEB, which includes Intelligent Brake Assist (IBA). When the system detects a vehicle ahead in your path that is traveling in the same direction that you may be about to crash into, it can

provide a boost to braking or automatically brake the vehicle. This can help avoid or lessen the severity of crashes when driving in a forward gear. Depending on the situation, the vehicle may automatically brake moderately or hard. This automatic emergency braking can only occur if a vehicle is detected. This is shown by the FCA vehicle ahead indicator being lit. See *Forward Collision Alert (FCA) System* ⇨ *230*.

The system works when driving in a forward gear between 8 km/h (5 mph) and 80 km/h (50 mph), or on vehicles with Adaptive Cruise Control (ACC), above 4 km/h (2 mph). It can detect vehicles up to approximately 60 m (197 ft).

⚠ Warning

AEB is an emergency crash preparation feature and is not designed to avoid crashes. Do not rely on AEB to brake the vehicle. AEB will not brake outside of its operating speed range and only responds to detected vehicles.

AEB may not:

- Detect a vehicle ahead on winding or hilly roads.

(Continued)

Warning (Continued)

- Detect all vehicles, especially vehicles with a trailer, tractors, muddy vehicles, etc.
- Detect a vehicle when weather limits visibility, such as in fog, rain, or snow.
- Detect a vehicle ahead if it is partially blocked by pedestrians or other objects.

Complete attention is always required while driving, and you should be ready to take action and apply the brakes and/or steer the vehicle to avoid crashes.

AEB may slow the vehicle to a complete stop to try to avoid a potential crash. If this happens, AEB may engage the Electric Parking Brake (EPB) to hold the vehicle at a stop. Release the EPB or firmly press the accelerator pedal.

⚠ Warning

AEB may automatically brake the vehicle suddenly in situations where it is unexpected and undesired. It could respond to a turning vehicle ahead,

(Continued)

Warning (Continued)

guardrails, signs, and other non-moving objects. To override AEB, firmly press the accelerator pedal, if it is safe to do so.

Intelligent Brake Assist (IBA)

IBA may activate when the brake pedal is applied quickly by providing a boost to braking based on the speed of approach and distance to a vehicle ahead.

Minor brake pedal pulsations or pedal movement during this time is normal and the brake pedal should continue to be applied as needed. IBA will automatically disengage only when the brake pedal is released.

⚠ Warning

IBA may increase vehicle braking in situations when it may not be necessary. You could block the flow of traffic. If this occurs, take your foot off the brake pedal and then apply the brakes as needed.

AEB and IBA can be disabled through vehicle personalization. See “Collision/Detection Systems” under *Vehicle Personalization* ⇨ *113*.

⚠ Warning

Using AEB or IBA while towing a trailer could cause you to lose control of the vehicle and crash. Turn the system to Alert, or if the vehicle has ACC to Off, when towing a trailer.

A system unavailable message may display if:

- The front of the vehicle or windshield is not clean.
- Heavy rain or snow is interfering with object detection.
- There is a problem with the StabiliTrak/ Electronic Stability Control (ESC) system.

The AEB system does not need service.

Front Pedestrian Braking (FPB) System

If equipped, the FPB system may help avoid or reduce the harm caused by front-end crashes with nearby pedestrians when driving in a forward gear. FPB displays an amber indicator, 🚶, when a nearby pedestrian is detected ahead. When approaching a detected pedestrian too quickly, FPB provides a red flashing alert on the windshield and rapidly beeps or pulses the driver seat. FPB can provide a boost to braking or automatically brake the vehicle. This system includes Intelligent Brake Assist (IBA), and the Automatic Emergency Braking (AEB) system may also respond to pedestrians. See *Automatic Emergency Braking (AEB)* ⇨ *232*.

The FPB system can detect and alert to pedestrians in a forward gear at speeds between 8 km/h (5 mph) and 80 km/h (50 mph). During daytime driving, the system detects pedestrians up to a distance of approximately 40 m (131 ft). During nighttime driving, system performance is very limited.

⚠ Warning

FPB does not provide an alert or automatically brake the vehicle, unless it detects a pedestrian. FPB may not detect pedestrians, including children:

(Continued)

Warning (Continued)

- When the pedestrian is not directly ahead, fully visible, or standing upright, or when part of a group.
- Due to poor visibility, including nighttime conditions, fog, rain, or snow.
- If the FPB sensor is blocked by dirt, snow, or ice.
- If the headlamps or windshield are not cleaned or in proper condition.

Be ready to take action and apply the brakes. For more information, see *Defensive Driving* ⇨ *188*. Keep the windshield, headlamps, and FPB sensor clean and in good repair.

FPB can be set to Off, Alert, or Alert and Brake through vehicle personalization. See “Collision/Detection Systems” under *Vehicle Personalization* ⇨ *113*.

Detecting the Pedestrian Ahead

FPB alerts and automatic braking will not occur unless the FPB system detects a pedestrian. When a nearby pedestrian is detected in front of the vehicle, the pedestrian ahead indicator will display amber.

Front Pedestrian Alert

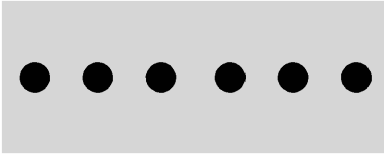

When the vehicle approaches a pedestrian ahead too rapidly, the red FPB alert display will flash on the windshield. Eight rapid high-pitched beeps will sound from the front, or both sides of the Safety Alert Seat will pulse five times. When this Pedestrian Alert occurs, the brake system may prepare for driver braking to occur more rapidly which can cause a brief, mild deceleration. Continue to apply the brake pedal as needed. Cruise control may be disengaged when the Front Pedestrian Alert occurs.

Automatic Braking

If FPB detects it is about to crash into a pedestrian directly ahead, and the brakes have not been applied, FPB may automatically brake moderately or brake hard. This can help to avoid some very low speed pedestrian crashes or reduce pedestrian injury. FPB can automatically brake to detected pedestrians between 8 km/h (5 mph) and 80 km/h (50 mph). Automatic braking levels may be reduced under certain conditions, such as higher speeds.

If this happens, Automatic Braking may engage the Electric Parking Brake (EPB) to hold the vehicle at a stop. Release the EPB. A firm press of the accelerator pedal will also release Automatic Braking and the EPB.

⚠ Warning

FPB may alert or automatically brake the vehicle suddenly in situations where it is unexpected and undesired. It could falsely alert or brake for objects similar in shape or size to pedestrians, including shadows. This is normal operation and the vehicle does not need service. To override Automatic Braking, firmly press the accelerator pedal, if it is safe to do so.

Automatic Braking can be disabled through vehicle personalization. See “Front Pedestrian Detection” in “Collision/Detection Systems” under *Vehicle Personalization* ⇨ *113*.

⚠ Warning

Using the Front Pedestrian Braking system while towing a trailer could cause you to lose control of the vehicle and crash. Turn the system to Alert or Off when towing a trailer.

Cleaning the System

If FPB does not seem to operate properly, cleaning the outside of the windshield in front of the rearview mirror may correct the issue.

Side Blind Zone Alert (SBZA)

If equipped, the SBZA system is a lane-changing aid that assists drivers with avoiding crashes that occur with moving vehicles in the side blind zone, or blind spot areas. When the vehicle is in a forward gear, the left or right side mirror display will light up if a moving vehicle is detected in that blind zone. If the turn signal is activated and a vehicle is also detected on the same side, the display will flash as an extra warning not to change lanes. Since this system is part of the Lane Change Alert (LCA) system, read the entire LCA section before using this feature.

Lane Change Alert (LCA)

If equipped, the LCA system is a lane-changing aid that assists drivers with avoiding lane change crashes that occur with moving vehicles in the side blind zone (or spot) areas or with vehicles rapidly approaching these areas from behind. The LCA warning display will light up in the corresponding outside mirror and will flash if the turn signal is on.

⚠ Warning

LCA does not alert the driver to vehicles outside of the system detection zones, pedestrians, bicyclists, or animals. It may not provide alerts when changing lanes under all driving conditions. Failure to use proper care when changing lanes may result in injury, death, or vehicle damage. Before making a lane change, always check mirrors, glance over your shoulder, and use the turn signals.

LCA Detection Zones

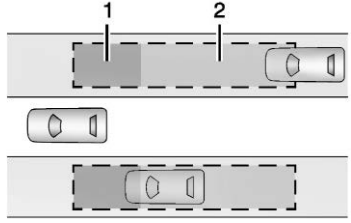

1. SBZA Detection Zone
2. LCA Detection Zone

The LCA sensor covers a zone of approximately one lane over from both sides of the vehicle, or 3.5 m (11 ft). The height of the zone is approximately between 0.5 m (1.5 ft) and 2 m (6 ft) off the ground. The Side Blind Zone Alert (SBZA) warning area starts at approximately the middle of the vehicle and goes back 5 m (16 ft). Drivers are also warned of vehicles rapidly approaching from up to 70 m (230 ft) behind the vehicle.

How the System Works

The LCA symbol lights up in the outside mirrors when the system detects a moving vehicle in the next lane over that is in the side blind zone or rapidly approaching that zone from behind. A lit LCA symbol indicates it may be unsafe to change lanes. Before making a lane change, check the LCA display, check mirrors, glance over your shoulder, and use the turn signals.

Left Outside Mirror Display

Right Outside Mirror Display

When the vehicle is started, both outside mirror LCA displays will briefly come on to indicate the system is operating. When the vehicle is in a forward gear, the left or right outside mirror display will light up if a moving vehicle is detected in the next lane over in that blind zone or rapidly approaching that zone. If the turn signal is activated in the same direction as a detected vehicle, this display will flash as an extra warning not to change lanes.

LCA can be disabled through vehicle personalization. When you disable LCA, Side Blind Zone Alert is also disabled. See "Collision/Detection Systems" under *Vehicle Personalization* ⇨ *113*. If LCA is disabled by the driver, the LCA mirror displays will not light up.

When the System Does Not Seem to Work Properly

The LCA system requires some driving for the system to calibrate to maximum performance. This calibration may occur more quickly if the vehicle is driving on a straight highway road with traffic and roadside objects (e.g., guardrails, barriers).

LCA displays may not come on when passing a vehicle quickly, for a stopped vehicle, or when towing a trailer. The LCA detection zones that extend back from the side of the vehicle do not move further back when a trailer is towed. Use caution while changing lanes when towing a trailer. LCA may alert to objects attached to the vehicle, such as a trailer, bicycle, or object extending out to either side of the vehicle. Attached objects may also interfere with the detection of vehicles. This is normal system operation; the vehicle does not need service.

LCA may not always alert the driver to vehicles in the next lane over, especially in wet conditions or when driving on sharp curves. The system does not need to be serviced. The system may light up due to guardrails, signs, trees, shrubs, and other non-moving objects. This is normal system operation; the vehicle does not need service.

LCA may not operate when the LCA sensors in the left or right corners of the rear bumper are covered with mud, dirt, snow, ice, or slush, or in heavy rainstorms. For cleaning instructions, see "Washing the Vehicle" under *Exterior Care* ⇨ *323*. If the DIC still displays the system unavailable message after cleaning both sides of the vehicle toward the rear corners of the vehicle, see your dealer.

If the LCA displays do not light up when moving vehicles are in the side blind zone or are rapidly approaching this zone and the system is clean, the system may need service. Take the vehicle to your dealer.

Radio Frequency Information

See *Radio Frequency Statement* ⇨ *357*.

Lane Keep Assist (LKA)

If equipped, LKA may help avoid crashes due to unintentional lane departures. This system uses a camera to detect lane markings between 60 km/h (37 mph) and 180 km/h (112 mph). It may assist by gently turning the steering wheel if the vehicle approaches a detected lane marking. It may also provide a Lane Departure Warning (LDW) alert if the vehicle crosses a detected lane marking. LKA can be overridden by turning the steering wheel. This system is not intended to keep the vehicle centered in the lane. LKA will not assist and alert if the turn signal is active in the direction of lane departure, or if it detects that you are accelerating, braking or actively steering.

⚠ Warning

The LKA system does not continuously steer the vehicle. It may not keep the vehicle in the lane or give a Lane Departure Warning (LDW) alert, even if a lane marking is detected.

The LKA and LDW systems may not:

- Provide an alert or enough steering assist to avoid a lane departure or crash.
- Detect lane markings under poor weather or visibility conditions. This can occur if the windshield or headlamps are blocked by dirt, snow, or ice; if they are not in proper condition; or if the sun shines directly into the camera.
- Detect road edges.
- Detect lanes on winding or hilly roads.

If LKA only detects lane markings on one side of the road, it will only assist or provide an LDW alert when approaching the lane on the side where it has detected a lane marking. Even with LKA and LDW, you must steer the vehicle.

(Continued)

Warning (Continued)

Always keep your attention on the road and maintain proper vehicle position within the lane, or vehicle damage, injury, or death could occur. Always keep the windshield, headlamps, and camera sensors clean and in good repair. Do not use LKA in bad weather conditions or on roads with unclear lane markings, such as construction zones.

⚠ Warning

Using LKA while towing a trailer or on slippery roads could cause loss of control of the vehicle and a crash. Turn the system off.

How the System Works

LKA uses a camera sensor installed on the windshield ahead of the rearview mirror to detect lane markings. It may provide brief steering assist if it detects an unintended lane departure. It may further provide an audible alert or the driver seat may pulse indicating that a lane marking has been crossed.

To turn LKA on and off, press on the center console. If equipped, the indicator light on the button comes on when LKA is on and turns off when LKA is disabled.

When on, is white, if equipped, indicating that the system is not ready to assist. is green if LKA is ready to assist. LKA may assist by gently turning the steering wheel if the vehicle approaches a detected lane marking. is amber when assisting. It may also provide a Lane Departure Warning (LDW) alert by flashing amber if the vehicle crosses a detected lane marking. Additionally, there may be three beeps, or the driver seat may pulse three times, on the right or left, depending on the lane departure direction.

Take Steering

The LKA system does not continuously steer the vehicle. If LKA does not detect active driver steering, an alert and chime may be provided. Steer the vehicle to dismiss. LKA may become temporarily unavailable after repeated take steering alerts.

When the System Does Not Seem to Work Properly

The system performance may be affected by:

- Close vehicles ahead.
- Sudden lighting changes, such as when driving through tunnels.
- Banked roads.
- Roads with poor lane markings, such as two-lane roads.

If the LKA system is not functioning properly when lane markings are clearly visible, cleaning the windshield may help.

A camera blocked message may display if the camera is blocked. Some driver assistance systems may have reduced performance or not work at all. An LKA or LDW unavailable message may display if the systems are temporarily unavailable. This message could be due to a blocked camera. The LKA system does not need service. Clean the outside of the windshield behind the rear view mirror.

LKA assistance and/or LDW alerts may occur due to tar marks, shadows, cracks in the road, temporary or construction lane markings, or other road imperfections. This is normal system operation; the vehicle does not need service. Turn LKA off if these conditions continue.

Fuel

Top Tier Fuel

GM recommends the use of TOP TIER Detergent Gasoline to keep the engine clean, reduce engine deposits, and maintain optimal vehicle performance. Look for the TOP TIER Logo or see www.toptiergas.com for a list of TOP TIER Detergent Gasoline marketers and applicable countries.

Recommended Fuel

Use regular unleaded gasoline meeting ASTM specification D4814 with a posted octane rating of 87 — (R+M)/2 — or higher. Do not use gasoline with a posted octane rating of less than 87, as this may cause engine knock and will lower fuel economy.

Do not use any fuel labeled E85 or FlexFuel. Do not use gasoline with ethanol levels greater than 15% by volume.

Prohibited Fuels

Caution

Do not use fuels with any of the following conditions; doing so may damage the vehicle and void its warranty:

(Continued)

Caution (Continued)

- For vehicles that are not FlexFuel, fuel labeled greater than 15% ethanol by volume, such as mid-level ethanol blends (16–50% ethanol), E85, or FlexFuel.
- Fuel with any amount of methanol, methylal, ferrocene, and aniline. These fuels can corrode metal fuel system parts or damage plastic and rubber parts.
- Fuel containing metals such as methylcyclopentadienyl manganese tricarbonyl (MMT), which can damage the emissions control system and spark plugs.
- Fuel with a posted octane rating of less than the recommended fuel. Using this fuel will lower fuel economy and performance, and may decrease the life of the emissions catalyst.

Fuels in Foreign Countries

The U.S., Canada, and Mexico post fuel octane ratings in anti-knock index (AKI). For fuel not to use in a foreign country, see *Prohibited Fuels* ⇨ *239*.

Fuel Additives

TOP TIER Detergent Gasoline is highly recommended for use with your vehicle. If your country does not have TOP TIER Detergent Gasoline, add ACDelco Fuel System Treatment Plus–Gasoline to the vehicle's gasoline fuel tank at every oil change or 15 000 km (9,000 mi), whichever occurs first. TOP TIER Detergent Gasoline and ACDelco Fuel System Treatment Plus –Gasoline will help keep your vehicle's engine fuel deposit free and performing optimally.

Filling the Tank

An arrow on the fuel gauge indicates which side of the vehicle the fuel door is on. See *Fuel Gauge* ⇨ *95*.

⚠ Warning

Fuel vapors and fuel fires burn violently and can cause injury or death.

Follow these guidelines to help avoid injuries to you and others:

- Read and follow all the instructions on the fuel pump island.

(Continued)

Warning (Continued)

- Turn off the engine when refueling.
- Keep sparks, flames, and smoking materials away from fuel.
- Do not leave the fuel pump unattended.
- Avoid using electronic devices while refueling.
- Do not re-enter the vehicle while pumping fuel.
- Keep children away from the fuel pump and never let children pump fuel.
- Before touching the fill nozzle, touch a metallic object to discharge static electricity from your body.
- Fuel can spray out if the fill nozzle is inserted too quickly. This spray can happen if the tank is nearly full, and is more likely in hot weather. Insert the fill nozzle slowly and wait for any hiss noise to stop before beginning to flow fuel.

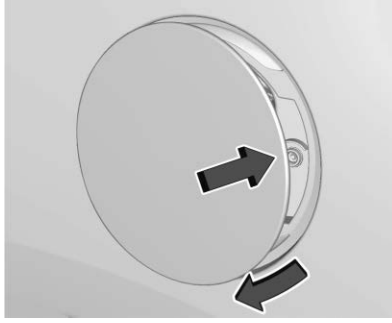

To open the fuel door, push and release the rearward center edge of the door.

The capless refueling system does not have a fuel cap. Fully insert and latch the fill nozzle, then begin fueling.

⚠ Warning

Overfilling the fuel tank by more than three clicks of a standard fill nozzle may cause:

- Vehicle performance issues, including engine stalling and damage to the fuel system.
- Fuel spills.
- Under certain conditions, fuel fires.

Be careful not to spill fuel. Wait five seconds after you have finished pumping before removing the fill nozzle. Clean fuel from painted surfaces as soon as possible. See *Exterior Care* ⇨ *323*. Push the fuel door closed until it latches.

⚠ Warning

If a fire starts while you are refueling, do not remove the fill nozzle. Shut off the flow of fuel by shutting off the pump or by notifying the station attendant. Leave the area immediately.

Filling the Tank with a Portable Fuel Container

If the vehicle runs out of fuel and must be filled from a portable fuel container:

1. Locate the capless funnel adapter from the rear cargo area under the load floor.
2. Insert and latch the funnel into the capless fuel system.

⚠ Warning

Attempting to refuel from a portable fuel container without using the funnel adapter may cause fuel spillage and damage the capless fuel system. This could cause a fire. You or others could be badly burned and the vehicle could be damaged.

3. Remove and clean the funnel adapter and return it to the storage location.

Filling a Portable Fuel Container

⚠ Warning

Never fill a portable fuel container while it is in the vehicle. Static electricity discharge from the container can ignite the fuel vapor. You or others could be badly burned and the vehicle could be damaged. To help avoid injury to you and others:

- Dispense fuel only into approved containers.

(Continued)

Warning (Continued)

- Do not fill a container while it is inside a vehicle, in a vehicle's trunk, in a pickup bed, or on any surface other than the ground.
- Bring the fill nozzle in contact with the inside of the fill opening before operating the nozzle. Maintain contact until filling is complete.
- Keep sparks, flames, and smoking materials away from fuel.
- Avoid using electronic devices while pumping fuel.

Trailer Towing

General Towing Information

Only use towing equipment that has been designed for the vehicle. Contact your dealer or trailering dealer for assistance with preparing the vehicle to tow a trailer. Read the entire section before towing a trailer.

To tow a disabled vehicle, see *Towing the Vehicle* ⇨ *320*. To tow the vehicle behind another vehicle such as a motor home, see *Recreational Vehicle Towing* ⇨ *321*.

Driving Characteristics and Towing Tips

⚠ Warning

The driver can lose control when pulling a trailer if the correct equipment is not used or the vehicle is not driven properly. For example, if the trailer is too heavy or the trailer brakes are inadequate for the load, the vehicle may not stop as expected. The driver and passengers could be seriously injured. The vehicle may also be damaged; the resulting repairs would not be covered by the vehicle warranty. Pull a trailer only if all the steps in this section have been followed. Ask your dealer for advice and information about towing a trailer with the vehicle.

Driving with a Trailer

Trailering is different than just driving the vehicle by itself. Trailering means changes in handling, acceleration, braking, durability, and fuel economy. Successful, safe trailering takes correct equipment, and it has to be used properly.

The following information has many time-tested, important trailering tips and safety rules. Many of these are important for your safety and that of your passengers. Read this section carefully before pulling a trailer.

When towing a trailer:

- Become familiar with and follow all state and local laws that apply to trailer towing. These requirements vary from state to state.
- State laws may require the use of extended side view mirrors. Even if not required, you should install extended side view mirrors if your visibility is limited or restricted while towing.
- Do not tow a trailer during the first 800 km (500 mi) of vehicle use to prevent damage to the engine, axle, or other parts.
- It is recommended to perform the first oil change before heavy towing.
- During the first 800 km (500 mi) of trailer towing, do not drive over 80 km/h (50 mph) and do not make starts at full throttle.
- Vehicles can tow in D (Drive). Tow/Haul Mode is recommended for heavier trailers. See *Tow/Haul Mode* ⇨ *210*.

If the transmission downshifts too often, a lower gear may be selected using Manual Mode. See *Manual Mode* ⇨ *209*.

If equipped, Driver Assistance Systems must be turned off when towing a trailer:

- Adaptive Cruise Control (ACC)
- Lane Keep Assist (LKA)
- Park Assist
- Reverse Automatic Braking (RAB)

If equipped, the following driver assistance features should be turned to alert or off when towing a trailer:

- Automatic Emergency Braking (AEB)
- Intelligent Brake Assist (IBA)
- Front Pedestrian Braking (FPB)

If equipped with Lane Change Alert (LCA), the LCA detection zones that extend back from the side of the vehicle do not move further back when a trailer is towed. Use caution while changing lanes when towing a trailer.

If equipped with Rear Cross Traffic Alert (RCTA), use caution while backing up when towing a trailer, as the RCTA detection zones that extend out from the back of the vehicle do not move further back when a trailer is towed.

⚠ Warning

To prevent serious injury or death from carbon monoxide (CO), when towing a trailer:

- Do not drive with the liftgate, trunk/hatch, or rear-most window open.
- Fully open the air outlets on or under the instrument panel.
- Adjust the climate control system to a setting that brings in only outside air. See “Climate Control Systems” in the Index.

For more information about carbon monoxide, see *Engine Exhaust* ⇨ *207*.

Towing a trailer requires experience. The combination of the vehicle and trailer is longer and not as responsive as the vehicle itself. Get used to the handling and braking of the combination by driving on a level road surface before driving on public roads.

The trailer structure, the tires, and the brakes must all be rated to carry the intended cargo. Inadequate trailer equipment can cause the combination to operate in an unexpected or unsafe manner.

Before driving, inspect all trailer hitch parts and attachments, safety chains, electrical connectors, lamps, tires, and mirrors. See *Towing Equipment* ⇨ *248*. If the trailer has electric brakes, start the combination moving and then manually apply the trailer brake controller to check that the trailer brakes work.

During the trip, occasionally check that the cargo and trailer are secure and that the lamps and any trailer brakes are working.

Towing with a Stability Control System

When towing, the stability control system might be heard. The system reacts to vehicle movement caused by the trailer, which mainly occurs during cornering. This is normal when towing heavier trailers.

Following Distance

Stay at least twice as far behind the vehicle ahead as you would when driving without a trailer. This can help to avoid heavy braking and sudden turns.

Passing

More passing distance is needed when towing a trailer. The combination of the vehicle and trailer will not accelerate as quickly and is much longer than the vehicle

alone. It is necessary to go much farther beyond the passed vehicle before returning to the lane. Pass on level roadways. Avoid passing on hills if possible.

Backing Up

Hold the bottom of the steering wheel with one hand. To move the trailer to the left, move that hand to the left. To move the trailer to the right, move that hand to the right. Always back up slowly and, if possible, have someone guide you.

Making Turns

Caution

Turn more slowly and make wider arcs when towing a trailer to prevent damage to your vehicle. Making very sharp turns could cause the trailer to contact the vehicle.

Make wider turns than normal when towing, so the trailer will not go over soft shoulders, over curbs, or strike road signs, trees, or other objects. Always signal turns well in advance. Do not steer or brake suddenly.

Driving on Grades

Reduce speed and shift to a lower gear before starting down a long or steep downhill grade. If the transmission is not shifted down, the brakes may overheat and result in reduced braking efficiency.

The vehicle can tow in D (Drive). Shift the transmission to a lower gear if the transmission shifts too often under heavy loads and/or hilly conditions.

When towing at higher altitudes, engine coolant will boil at a lower temperature than at lower altitudes. If the engine is turned off immediately after towing at high altitude on steep uphill grades, the vehicle could show signs similar to engine overheating. To avoid this, let the engine run, preferably on level ground, with the transmission in P (Park) for a few minutes before turning the engine off. If the overheat warning comes on, see *Engine Overheating* ⇨ 271.

Parking on Hills

⚠ Warning

To prevent serious injury or death, always park your vehicle and trailer on a level surface when possible.

When parking the vehicle and trailer on a hill:

1. Press the brake pedal, but do not shift into P (Park) yet. Turn the wheels into the curb if facing downhill or into traffic if facing uphill.
2. Have someone place chocks under the trailer wheels.
3. When the wheel chocks are in place, gradually release the brake pedal to allow the chocks to absorb the load of the trailer.
4. Reapply the brake pedal. Then apply the parking brake and shift into P (Park).
5. Release the brake pedal.

Leaving After Parking on a Hill

1. Apply and hold the brake pedal.
   - Start the engine.
   - Shift into a gear.
   - Release the parking brake.
2. Let up on the brake pedal.
3. Drive slowly until the trailer is clear of the chocks.
4. Stop and have someone pick up and store the chocks.

Maintenance When Trailer Towing

The vehicle needs service more often when used to tow trailers. See the *Maintenance Schedule* ⇨ *332*. It is especially important to check the engine oil, axle lubricant, belts, cooling system, and brake system before and during each trip.

Check periodically that all nuts and bolts on the trailer hitch are tight.

Engine Cooling When Trailer Towing

The cooling system may temporarily overheat during severe operating conditions. See *Engine Overheating* ⇨ *271*.

Trailer Towing

Caution

Towing a trailer improperly can damage the vehicle and result in costly repairs not covered by the vehicle warranty. To tow a trailer correctly, follow the directions in this section and see your dealer for important information about towing a trailer with the vehicle.

Trailer Weight

⚠ Warning

Never exceed the towing capacity for your vehicle.

Safe trailering requires monitoring the weight, speed, altitude, road grades, outside temperature, dimensions of the front of the trailer, and how frequently the vehicle is used to tow a trailer.

Trailer Weight Ratings

When towing a trailer, the combined weight of the vehicle, vehicle contents, trailer, and trailer contents must be below all of the maximum weight ratings for the vehicle, including:

- GCWR: Gross Combined Weight Rating
- GVWR: Gross Vehicle Weight Rating
- Maximum Trailer Weight Rating
- Maximum Trailer Tongue Weight Rating

See “Weight-Distributing Hitch Adjustment” under *Towing Equipment* ⇨ *248* to determine if equalizer bars are required to obtain the maximum trailer weight rating.

See “Trailer Brakes” under *Towing Equipment* ⇨ *248* to determine if brakes are required based on your trailer's weight.

The only way to be sure the weight is not exceeding any of these ratings is to weigh the tow vehicle and trailer combination, fully loaded for the trip, getting individual weights for each of these items.

⚠ Warning

You and others could be seriously injured or killed if the trailer is too heavy or the trailer brakes are inadequate for the load. The vehicle may be damaged, and the repairs would not be covered by the vehicle warranty.

Only tow a trailer if all the steps in this section have been followed. Ask your dealer for advice and information about towing a trailer.

Gross Combined Weight Rating (GCWR)

GCWR is the total allowable weight of the completely loaded vehicle and trailer including any fuel, passengers, cargo, equipment, and accessories. Do not exceed the GCWR for your vehicle. The GCWR for the vehicle is on the tow rating chart later in this section.

Gross Vehicle Weight Rating (GVWR)

For information about the vehicle's maximum load capacity, see *Vehicle Load Limits* ⇨ *197*. When calculating the GVWR with a trailer attached, the trailer tongue weight must be included as part of the weight the vehicle is carrying.

Maximum Trailer Weight

The maximum trailer weight rating is calculated assuming the tow vehicle has a driver, a front seat passenger, and all required trailering equipment. This value represents the heaviest trailer the vehicle can tow, but it may be necessary to reduce the trailer weight to stay within the GCW, GVWR, maximum trailer tongue load, or GAWR-RR for the vehicle.

Use the tow rating chart to determine how much the trailer can weigh, based on the vehicle model, powertrain, and trailering options.

Vehicle	Maximum Trailer Weight	*GCWR
2.0L L4 Engine FWD	680 kg (1,500 lb)	2 812 kg (6,200 lb)
2.0L L4 Engine AWD	680 kg (1,500 lb)	2 812 kg (6,200 lb)
2.5L L4 Engine FWD	680 kg (1,500 lb)	2 625 kg (5,787 lb)
3.6L V6 Engine FWD	680 kg (1,500 lb)	2 722 kg (6,001 lb)
3.6L V6 Engine AWD	680 kg (1,500 lb)	2 722 kg (6,001 lb)
3.6L V6 Engine FWD w/VR2 Option (Heavy Duty Towing, US and Canada vehicles only)	2 041 kg (4,500 lb)	4 155 kg (9,160 lb)
3.6L V6 Engine AWD w/V92 Option (Heavy Duty Towing)	2 041 kg (4,500 lb)	4 155 kg (9,160 lb)
*The Gross Combination Weight Rating (GCWR) is the total allowable weight of the completely loaded vehicle and trailer including any passengers, cargo, equipment, and conversions. The GCWR for the vehicle should not be exceeded.		

Maximum Trailer Tongue Weight Rating

The Maximum Trailer Tongue Weight Rating is the allowable trailer tongue weight that the vehicle can support using a conventional trailer hitch. It may be necessary to reduce the overall trailer weight to stay within the maximum trailer tongue weight rating while still maintaining the correct trailer load balance.

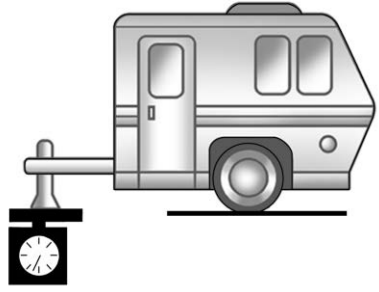

Do not exceed a maximum trailer tongue weight of 204 kg (450 lb).

The trailer tongue weight contributes to the Gross Vehicle Weight (GVW). GVW includes the CURB WEIGHT of your vehicle, any passengers, cargo, equipment, and trailer tongue weight. Vehicle options, passengers, cargo, and equipment reduce the maximum allowable tongue weight the vehicle can carry, which also reduces the maximum allowable trailer weight.

Trailer Load Balance

The correct trailer load balance must be maintained to ensure trailer stability. Incorrect load balance is a leading cause of trailer sway.

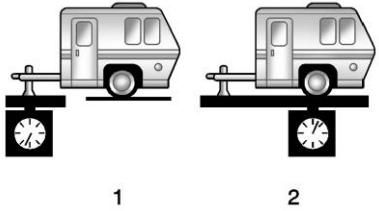

The trailer tongue weight (1) should be 10–15% of the loaded trailer weight (2). Some specific trailer types, such as boat trailers, fall outside of this range. Always refer to the trailer owner's manual for the recommended trailer tongue weight for each trailer. Never exceed the maximum loads for your vehicle, hitch, and trailer.

After loading the trailer, separately weigh the trailer and then the trailer tongue and calculate the trailer load balance percentage to see if the weights and distribution are appropriate for your vehicle. If the trailer weight is too high, it may be possible to transfer some of the cargo into your vehicle. If the trailer tongue weight is too high or too low, it may be possible to rearrange some of the cargo inside of the trailer.

Do not exceed the maximum allowable tongue weight for your vehicle. Use the shortest hitch extension available to position the hitch ball closer to your vehicle. This will help reduce the effect of the trailer tongue weight on the trailer hitch and the rear axle.

If a cargo carrier is used in the trailer hitch receiver, choose a carrier that positions the load as close to the vehicle as possible. Make sure the total weight, including the carrier, is no more than half of the maximum allowable tongue weight for the vehicle or 227 kg (500 lb), whichever is less.

Ask your dealer for trailering information or assistance.

Towing Equipment

Hitches

Always use the correct hitch equipment for your vehicle. Crosswinds, large trucks going by, and rough roads can affect the trailer and the hitch.

Never attach rental hitches or other bumper-type hitches. Only use frame-mounted hitches that do not attach to the bumper.

Hitch Cover

To remove the hitch cover, if equipped:

1. Remove the four fasteners on the lower tabs.

2. Pull the lower edge of the cover to about a 45 degree angle.
3. Pull the cover downward to disengage the upper attachments.

To reinstall the hitch cover:

1. Hold the cover at a 45 degree angle to the vehicle and push the upper tabs into the slots in the bumper.
2. Push the bottom of the cover forward until the lower tabs line up with the lower slots.
3. Snap the hitch cover into place by pushing the upper corners forward.
4. Reinstall the four fasteners on the lower tabs.

Consider using mechanical sway controls with any trailer. Ask a trailering professional about sway controls or refer to the trailer manufacturer's recommendations and instructions.

Weight-Distributing Hitch Adjustment

A weight-distributing hitch may be useful with some trailers.

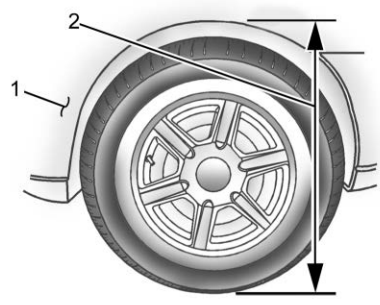

1. Front of the Vehicle
2. Body-to-Ground Distance

When using a weight-distributing hitch, measure the front fender height above the front axle distance (2) before and after connecting the trailer. Adjust the spring bars until the front fender height distance (2) is approximately halfway between the first and second measurements.

Tires

- Do not tow a trailer while using a compact spare tire on the vehicle.
- Tires must be properly inflated to support loads while towing a trailer. See *Tires* ⇨ *287* for instructions on proper tire inflation.

Safety Chains

Always attach chains between the vehicle and the trailer, and attach the chains to the holes on the trailer hitch platform. Instructions for safety chains may be provided by the hitch manufacturer or by the trailer manufacturer.

Cross the safety chains under the tongue of the trailer to help prevent the tongue from contacting the road if it becomes separated from the hitch. Always leave just enough slack so the combination can turn. Never allow safety chains to drag on the ground.

Trailer Brakes

Loaded trailers over 450 kg (1,000 lb) must be equipped with brake systems and with brakes for each axle. Trailer braking equipment conforming to Canadian Standards Association (CSA) requirement CAN3-D313, or its equivalent, is recommended.

State or local regulations may require trailers to have their own braking system if the loaded weight of the trailer exceeds certain minimums that can vary from state to state. Read and follow the instructions for the trailer brakes so they are installed, adjusted, and maintained properly. Never

attempt to tap into your vehicle's hydraulic brake system. If you do, both the vehicle antilock brakes and the trailer brakes may not function, which could result in a crash.

Trailer Wiring Harness

Basic Trailer Wiring

The trailer wiring harness, with a seven-pin connector, is at the rear of the vehicle and is tied to the vehicle's frame. The harness requires the installation of a trailer connector, which is available through your dealer.

Use only a round, seven-wire connector with flat blade terminals meeting SAE J2863 specifications for proper electrical connectivity.

The seven-wire harness contains the following trailer circuits:

- Yellow: Left Stop/Turn Signal
- Green: Right Stop/Turn Signal
- Brown: Tail/Parking Lamps
- White: Trailer Ground
- Red: Stop Lamp Supply Voltage
- Black: Back Up Lamp Supply Voltage
- Blue: Service Brakes

The fuse for the electric trailer brake circuit is in the engine compartment fuse block, but the wires may not be connected. They should be connected by your dealer or a qualified service center. To control electric trailer brakes, a trailer brake controller needs to be installed on the vehicle by your dealer or a qualified service center. See electric brake control wiring provisions.

If a battery outside the vehicle is being charged, place the vehicle in Tow/Haul Mode. This will boost the vehicle system voltage and properly charge the battery. If the trailer is too light for Tow/Haul Mode, turn on the non-HID only headlamps as a second way to boost the vehicle system voltage and charge the battery.

Electric Trailer Brake Control Wiring Provisions

Wiring provisions for an aftermarket electric trailer brake controller are included with the vehicle as part of the trailer wiring package. The harness contains the following circuits:

These wiring provisions for an electric trailer brake controller are included with the vehicle as part of the trailer wiring package. The body harness, inside the front driver side instrument panel, contains blunt cut wires below the headlamp switch for the electric trailer brake controller. The harness contains the following wires:

- Blue: Electric Trailer Brakes
- Blue: Battery Feed
- White/Blue: Brake Apply Signal
- Black: Ground

Refer to the aftermarket electric trailer brake controller owner's manual to determine wire color coding of the electric trailer brake controller. The wire colors on the brake controller may be different from the vehicle. The electric trailer brake controller should be installed by your dealer or a qualified service center.

Trailer Lamps

Always check all trailer lamps are working at the beginning of each trip, and periodically on longer trips.

Turn Signals When Towing a Trailer

When properly connected, the trailer turn signals will illuminate to indicate the vehicle is turning, changing lanes, or stopping. When towing a trailer, the arrows on the instrument cluster will illuminate even if the trailer is not properly connected or the bulbs are burned out.

Tow/Haul Mode

For instructions on how to enter Tow/Haul Mode, see *Driver Mode Control* ⇨ *214*.

Tow/Haul assists when pulling a heavy trailer or a large or heavy load. See *Tow/Haul Mode* ⇨ *210*.

Tow/Haul Mode is designed to be most effective when the vehicle and trailer combined weight is at least 75% of the vehicle's Gross Combined Weight Rating (GCWR). See "Weight of the Trailer" under *Trailer Towing* ⇨ *245*. Tow/Haul Mode is most useful when towing a heavy trailer or carrying a large or heavy load:

- Through rolling terrain.
- In stop-and-go traffic.
- In busy parking lots.

Operating the vehicle in Tow/Haul Mode when lightly loaded or not towing will not cause damage; however, it is not recommended and may result in unpleasant engine and transmission driving characteristics and reduced fuel economy.

Trailer Sway Control (TSC)

Vehicles with StabiliTrak/Electronic Stability Control (ESC) have a Trailer Sway Control (TSC) feature. Trailer sway is unintended side-to-side motion of a trailer while towing. If the vehicle is towing a trailer and the TSC detects that sway is increasing, the vehicle brakes are selectively applied at each wheel, to help reduce excessive trailer sway.
If equipped with the Integrated Trailer Brake Control (ITBC) system, and the trailer has an electric brake system, StabiliTrak/ESC may also apply the trailer brakes.

If TSC is enabled, the Traction Control System (TCS)/StabiliTrak light will flash on the instrument cluster. Reduce vehicle speed by gradually removing your foot from the accelerator. If trailer sway continues, StabiliTrak/ESC can reduce engine torque to help slow the vehicle. TSC will not function if StabiliTrak/ESC is turned off. See *Traction Control/Electronic Stability Control* ⇨ *213*.

⚠ Warning

Trailer sway can result in a crash and in serious injury or death, even if the vehicle is equipped with TSC.

If the trailer begins to sway, reduce vehicle speed by gradually removing your foot from the accelerator. Then pull over to check the trailer and vehicle to help correct possible causes, including an improperly or overloaded trailer, unrestrained cargo, improper trailer hitch configuration, or improperly inflated or incorrect vehicle or trailer tires. See *Towing Equipment* ⇨ *248* for trailer ratings and hitch setup recommendations.

Trailer Tires

Special Trailer (ST) tires differ from vehicle tires. Trailer tires are designed with stiff sidewalls to help prevent sway and to support heavy loads. These features can make it difficult to determine if the trailer tire pressures are low only based on a visual inspection.

Always check all trailer tire pressures before each trip when the tires are cool. Low trailer tire pressure is a leading cause of trailer tire blowouts.

Trailer tires deteriorate over time. The trailer tire sidewall will show the week and year the tire was manufactured. Many trailer tire manufacturers recommend replacing tires more than six years old.

Overloading is another leading cause of trailer tire blowouts. Never load your trailer with more weight than the tires are designed to support. The load rating is on the trailer tire sidewall.

Always know the maximum speed rating for the trailer tires before driving. This may be significantly lower than the vehicle tire speed rating. The speed rating may be on the trailer tire sidewall. If the speed rating is not shown, the default trailer tire speed rating is 105 km/h (65 mph).

Conversions and Add-Ons

Add-On Electrical Equipment

⚠ Warning

The Data Link Connector (DLC) is used for vehicle service and Emission Inspection/ Maintenance testing. See *Malfunction Indicator Lamp (Check Engine Light)* ⇨ *100* . A device connected to the DLC — such as an aftermarket fleet or driver-behavior tracking device — may interfere with vehicle systems. This could affect vehicle operation and cause a crash. Such devices may also access information stored in the vehicle's systems.

Caution

Some electrical equipment can damage the vehicle or cause components to not work and would not be covered by the vehicle warranty. Always check with your dealer before adding electrical equipment.

Add-on equipment can drain the vehicle's 12-volt battery, even if the vehicle is not operating.

The vehicle has an airbag system. Before attempting to add anything electrical to the vehicle, see *Servicing the Airbag-Equipped Vehicle* ⇨ *58* and *Adding Equipment to the Airbag-Equipped Vehicle* ⇨ *59*.

Vehicle Care

General Information
General Information 254
California Proposition 65 Warning 254
California Perchlorate Materials Requirements 254
Accessories and Modifications 254

Vehicle Checks
Doing Your Own Service Work 255
Hood 255
Engine Compartment Overview 257
Engine Oil 262
Engine Oil Life System 264
Automatic Transmission Fluid 265
Engine Air Filter Life System 265
Engine Air Cleaner/Filter 265
Cooling System 267
Engine Overheating 271
Washer Fluid 272
Brakes 273
Brake Fluid 273
Battery - North America 274
All-Wheel Drive 275
Automatic Transmission Shift Lock Control Function Check 275
Park Brake and P (Park) Mechanism Check 275
Wiper Blade Replacement 276
Windshield Replacement 277
Gas Strut(s) 277

Headlamp Aiming
Front Headlamp Aiming 278

Bulb Replacement
Bulb Replacement 278
High Intensity Discharge (HID) Lighting 278
LED Lighting 278
Back-Up Lamps 278

Electrical System
High Voltage Devices and Wiring 279
Electrical System Overload 279
Fuses and Circuit Breakers 280
Engine Compartment Fuse Block 280
Instrument Panel Fuse Block 284
Rear Compartment Fuse Block 285

Wheels and Tires
Tires 287
All-Season Tires 288
Winter Tires 288
Summer Tires 289
Tire Sidewall Labeling 289
Tire Designations 291
Tire Terminology and Definitions 292
Tire Pressure 294
Tire Pressure for High-Speed Operation 295
Tire Pressure Monitor System 296
Tire Pressure Monitor Operation 297
Tire Inspection 300
Tire Rotation 300
When It Is Time for New Tires 301
Buying New Tires 302
Different Size Tires and Wheels 303
Uniform Tire Quality Grading 303
Wheel Alignment and Tire Balance 305
Wheel Replacement 305
Tire Chains 305
If a Tire Goes Flat 306
Tire Sealant and Compressor Kit 307
Storing the Tire Sealant and Compressor Kit 313
Tire Changing 313
Compact Spare Tire 317

Jump Starting
Jump Starting - North America 318

Towing the Vehicle
Towing the Vehicle 320
Recreational Vehicle Towing 321

Appearance Care
Exterior Care 323
Interior Care 327
Floor Mats 329

General Information

For service and parts needs, visit your dealer. You will receive genuine GM parts and GM-trained and supported service people.

Genuine GM parts have one of these marks:

California Proposition 65 Warning

⚠ Warning

Most motor vehicles, including this one, as well as many of its service parts and fluids, contain and/or emit chemicals known to the State of California to cause

(Continued)

Warning (Continued)

cancer and birth defects or other reproductive harm. Engine exhaust, many parts and systems, many fluids, and some component wear by-products contain and/or emit these chemicals. For more information go to www.P65Warnings.ca.gov/passenger-vehicle.

See *Battery - North America* ⇨ *274* and *Jump Starting - North America* ⇨ *318* and the back cover.

California Perchlorate Materials Requirements

Certain types of automotive applications, such as airbag initiators, seat belt pretensioners, and lithium batteries contained in electronic keys, may contain perchlorate materials. Perchlorate Material – special handling may apply. See www.dtsc.ca.gov/hazardouswaste/perchlorate.

Accessories and Modifications

Adding non-dealer accessories or making modifications to the vehicle can affect vehicle performance and safety, including such things as airbags, braking, stability, ride and handling, emissions systems, aerodynamics, durability, and electronic systems like antilock brakes, traction control, and stability control. These accessories or modifications could even cause malfunction or damage not covered by the vehicle warranty.

Damage to suspension components caused by modifying vehicle height outside of factory settings will not be covered by the vehicle warranty.

Damage to vehicle components resulting from modifications or the installation or use of non-GM certified parts, including control module or software modifications, is not covered under the terms of the vehicle warranty and may affect remaining warranty coverage for affected parts.

GM Accessories are designed to complement and function with other systems on the vehicle. See your dealer to accessorize the vehicle using genuine GM Accessories installed by a dealer technician.

Also, see *Adding Equipment to the Airbag-Equipped Vehicle* ⇨ *59*.

Vehicle Checks

Doing Your Own Service Work

⚠ Warning

It can be dangerous to work on your vehicle if you do not have the proper knowledge, service manual, tools, or parts. Always follow owner's manual procedures and consult the service manual for your vehicle before doing any service work.

If doing some of your own service work, use the proper service manual. It tells you much more about how to service the vehicle than this manual can. To order the proper service manual, see *Publication Ordering Information* ⇨ *356*.

This vehicle has an airbag system. Before attempting to do your own service work, see *Servicing the Airbag-Equipped Vehicle* ⇨ *58*.

If equipped with remote vehicle start, open the hood before performing any service work to prevent remote starting the vehicle accidentally. See *Remote Vehicle Start* ⇨ *13*.

Keep a record with all parts receipts and list the mileage and the date of any service work performed. See *Maintenance Records* ⇨ *343*.

Caution

Even small amounts of contamination can cause damage to vehicle systems. Do not allow contaminants to contact the fluids, reservoir caps, or dipsticks.

Hood

⚠ Warning

For vehicles with auto engine stop/start, turn the vehicle off before opening the hood. If the vehicle is on, the engine will start when the hood is opened. You or others could be injured.

⚠ Warning

Components under the hood can get hot from running the engine. To help avoid the risk of burning unprotected skin, never touch these components until they have cooled, and always use a glove or towel to avoid direct skin contact.

Clear any snow from the hood before driving.

To open the hood:

1. Pull the hood release lever with the . It is on the lower left side of the instrument panel.

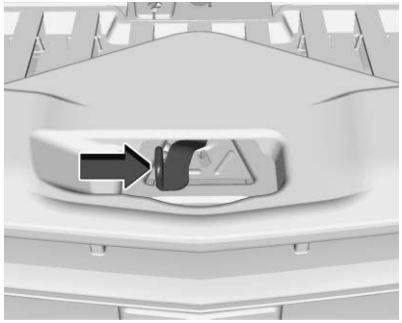

2. Go to the front of the vehicle and locate the secondary release lever under the front center of the hood. Push the secondary hood release lever to the right to release.

3. After you have partially lifted the hood, the gas strut system will automatically lift the hood and hold it in the fully open position.

To close the hood:

1. Before closing the hood, be sure all filler caps are on properly, and all tools are removed.
2. Pull the hood down until the strut system is no longer holding up the hood.
3. Allow the hood to fall. Check to make sure the hood is latched completely. Repeat this process with additional force if necessary.

⚠ Warning

Do not drive the vehicle if the hood is not latched completely. The hood could open fully, block your vision, and cause a crash. You or others could be injured. Always close the hood completely before driving.

Engine Compartment Overview

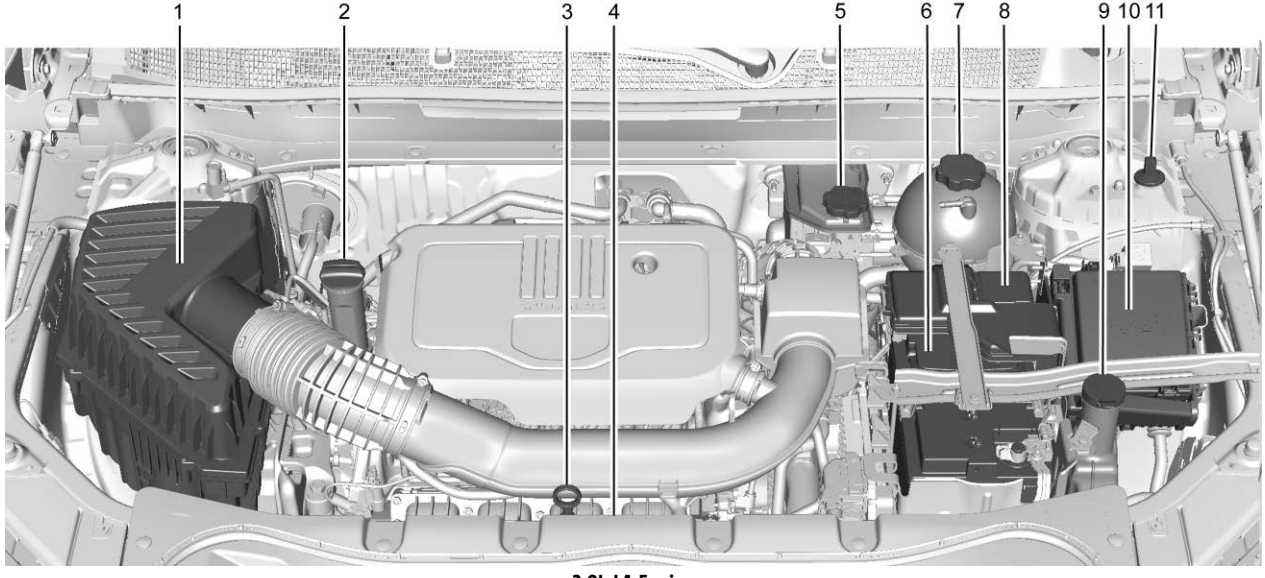

2.0L L4 Engine

1. *Engine Air Cleaner/Filter* ⇨ *265*.
2. Engine Oil Fill Cap. See *Engine Oil* ⇨ *262*.
3. Engine Oil Dipstick. See *Engine Oil* ⇨ *262*.
4. Engine Cooling Fan (Out of View). See *Cooling System* ⇨ *267*.
5. Brake Fluid Reservoir. See *Brake Fluid* ⇨ *273*.
6. *Battery - North America* ⇨ *274*.
7. Engine Coolant Surge Tank and Pressure Cap. See *Cooling System* ⇨ *267*.
8. Positive (+) Battery Terminal (Under Cover). See *Jump Starting - North America* ⇨ *318*.
9. Windshield Washer Fluid Reservoir. See *Washer Fluid* ⇨ *272*.
10. *Engine Compartment Fuse Block* ⇨ *280*.
11. Remote Negative (-) Battery Terminal. See *Jump Starting - North America* ⇨ *318*.

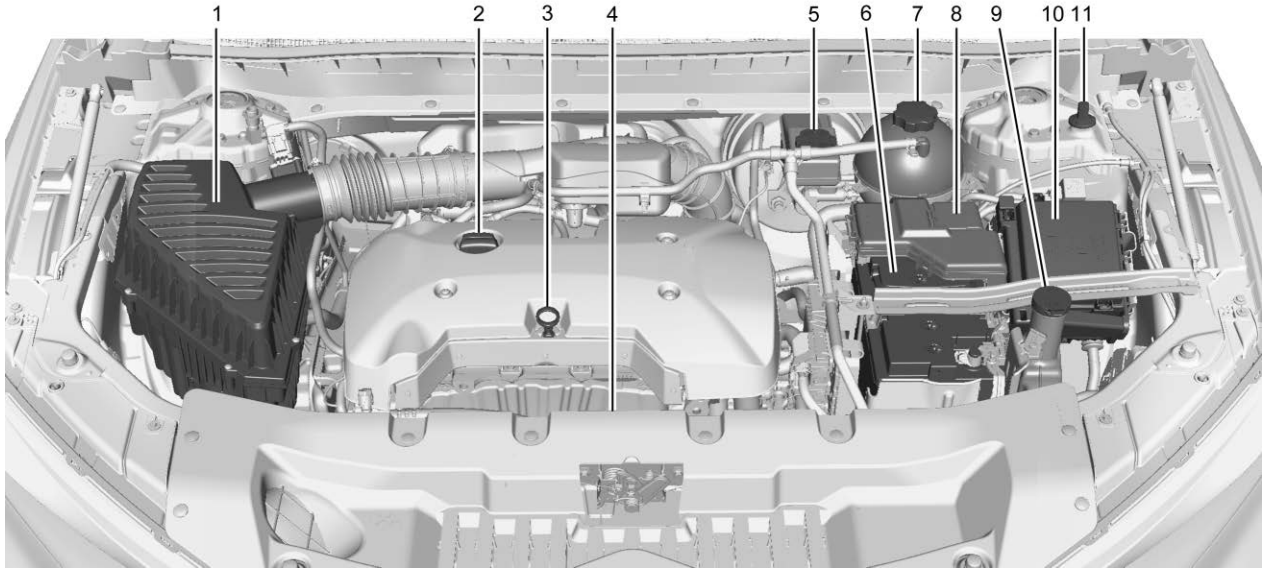

2.5L L4 Engine

1. *Engine Air Cleaner/Filter* ⇨ *265*.
2. Engine Oil Fill Cap. See *Engine Oil* ⇨ *262*.
3. Engine Oil Dipstick. See *Engine Oil* ⇨ *262*.
4. Engine Cooling Fan (Out of View). See *Cooling System* ⇨ *267*.
5. Brake Fluid Reservoir. See *Brake Fluid* ⇨ *273*.
6. *Battery - North America* ⇨ *274*.
7. Engine Coolant Surge Tank and Pressure Cap. See *Cooling System* ⇨ *267*.
8. Positive (+) Battery Terminal (Under Cover). See *Jump Starting - North America* ⇨ *318*.
9. Windshield Washer Fluid Reservoir. See *Washer Fluid* ⇨ *272*.
10. *Engine Compartment Fuse Block* ⇨ *280*.
11. Remote Negative (-) Battery Terminal. See *Jump Starting - North America* ⇨ *318*.

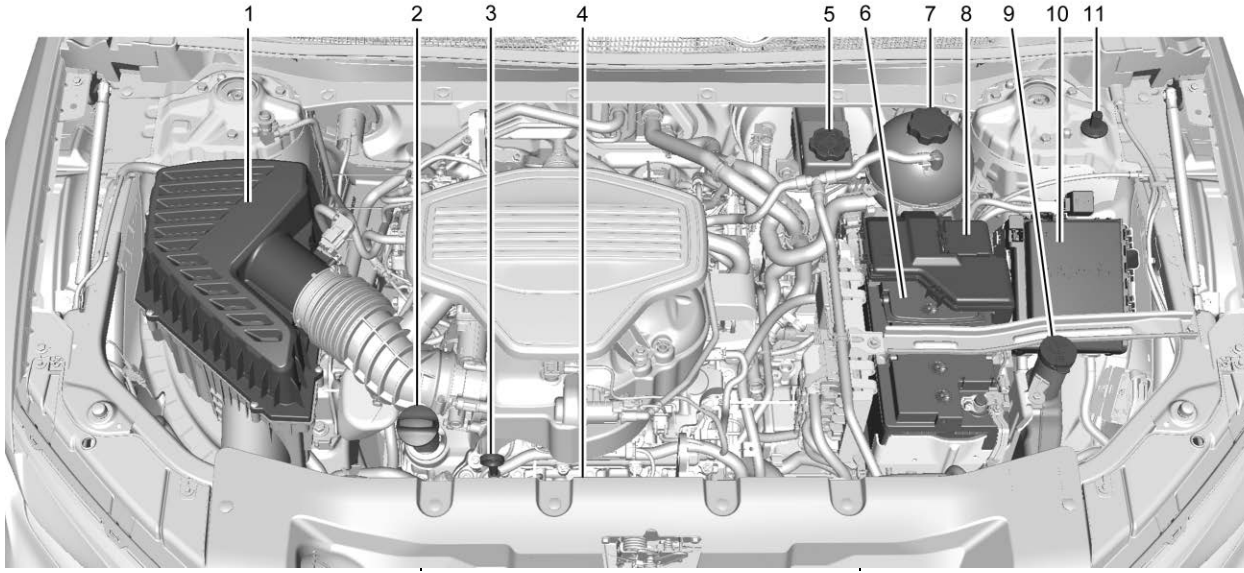

3.6L V6 Engine

1. *Engine Air Cleaner/Filter* ⇨ *265*.
2. Engine Oil Fill Cap. See *Engine Oil* ⇨ *262*.
3. Engine Oil Dipstick. See *Engine Oil* ⇨ *262*.
4. Engine Cooling Fan (Out of View). See *Cooling System* ⇨ *267*.
5. Brake Fluid Reservoir. See *Brake Fluid* ⇨ *273*.
6. *Battery - North America* ⇨ *274*.
7. Engine Coolant Surge Tank and Pressure Cap. See *Cooling System* ⇨ *267*.
8. Positive (+) Battery Terminal. See *Jump Starting - North America* ⇨ *318*.
9. Windshield Washer Fluid Reservoir. See *Washer Fluid* ⇨ *272*.
10. *Engine Compartment Fuse Block* ⇨ *280*.

11. Remote Negative (-) Battery Terminal. See *Jump Starting - North America* ⇨ *318*.

Engine Oil

To ensure proper engine performance and long life, careful attention must be paid to engine oil. Following these simple, but important steps will help protect your investment:

- Use engine oil approved to the proper specification and of the proper viscosity grade. See "Selecting the Right Engine Oil" in this section.
- Check the engine oil level regularly and maintain the proper oil level. See "Checking Engine Oil" and "When to Add Engine Oil" in this section.
- Change the engine oil at the appropriate time. See *Engine Oil Life System* ⇨ *264*.
- Always dispose of engine oil properly. See "What to Do with Used Oil" in this section.

Checking Engine Oil

Check the engine oil level regularly, every 650 km (400 mi), especially prior to a long trip. The engine oil dipstick handle is a loop. See *Engine Compartment Overview* ⇨ *257* for the location.

⚠ Warning

The engine oil dipstick handle may be hot; it could burn you. Use a towel or glove to touch the dipstick handle.

If a low oil Driver Information Center (DIC) message displays, check the oil level.

Follow these guidelines:

- To get an accurate reading, park the vehicle on level ground. Check the engine oil level after the engine has been off for at least two hours. Checking the engine oil level on steep grades or too soon after engine shutoff can result in incorrect readings. Accuracy improves when checking a cold engine prior to starting. Remove the dipstick and check the level.
- If unable to wait two hours, the engine must be off for at least 15 minutes if the engine is warm, or at least 30 minutes if the engine is not warm. Pull out the dipstick, wipe it with a clean paper towel or cloth, then push it back in all the way. Remove it again, keeping the tip down, and check the level.

When to Add Engine Oil

2.0L L4 Engine

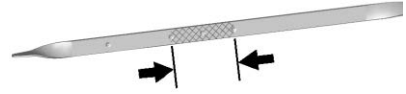

2.5L L4 Engine

3.6L V6 Engine

If the oil is below the cross-hatched area at the tip of the dipstick and the engine has been off for at least 15 minutes, add 1 L (1 qt) of the recommended oil and then

recheck the level. See “Selecting the Right Engine Oil” later in this section for an explanation of what kind of oil to use. For engine oil crankcase capacity, see *Capacities and Specifications* ⇨ *345*.

Caution

Do not add too much oil. Oil levels above or below the acceptable operating range shown on the dipstick are harmful to the engine. If the oil level is above the operating range (i.e., the engine has so much oil that the oil level gets above the cross-hatched area that shows the proper operating range), the engine could be damaged. Drain the excess oil or limit driving of the vehicle, and seek a service professional to remove the excess oil.

See *Engine Compartment Overview* ⇨ *257* for the location of the engine oil fill cap.

Add enough oil to put the level somewhere in the proper operating range. Push the dipstick all the way back in when through.

Selecting the Right Engine Oil

Selecting the right engine oil depends on both the proper oil specification and viscosity grade. See *Recommended Fluids and Lubricants* ⇨ *340*.

Specification

Use full synthetic engine oils that meet the dexos1 specification. Engine oils that have been approved by GM as meeting the dexos1 specification are marked with the dexos1 approved logo. See www.gmdexos.com.

Caution

Failure to use the recommended engine oil or equivalent can result in engine damage not covered by the vehicle warranty.

Viscosity Grade

Use SAE 0W-20 viscosity grade engine oil for the 2.0L L4 and 2.5L L4 engines.

Use SAE 5W-30 viscosity grade engine oil for the 3.6L V6 engine. Cold Temperature Operation: In an area of extreme cold, where the temperature falls below −29 °C (−20 °F), an SAE 0W-30 oil may be used. An oil of this viscosity grade will provide easier cold starting for the engine at extremely low temperatures.

When selecting an oil of the appropriate viscosity grade, it is recommended to select an oil of the correct specification. See “Specification” earlier in this section.

Engine Oil Additives/Engine Oil Flushes

Do not add anything to the oil. The recommended oils meeting the dexos1 specification are all that is needed for good performance and engine protection.

Engine oil system flushes are not recommended and could cause engine damage not covered by the vehicle warranty.

What to Do with Used Oil

Used engine oil contains certain elements that can be unhealthy for your skin and could even cause cancer. Do not let used oil stay on your skin for very long. Clean your skin and nails with soap and water, or a good hand cleaner. Wash or properly dispose of clothing or rags containing used engine oil. See the manufacturer's warnings about the use and disposal of oil products.

Used oil can be a threat to the environment. If you change your own oil, be sure to drain all the oil from the filter before disposal. Never dispose of oil by putting it in the trash or pouring it on the ground, into sewers, or into streams or bodies of water. Recycle it by taking it to a place that collects used oil.

Engine Oil Life System

When to Change Engine Oil

This vehicle has a computer system that indicates when to change the engine oil and filter. This is based on a combination of factors which include engine revolutions, engine temperature, and miles driven. Based on driving conditions, the mileage at which an oil change is indicated can vary considerably. For the oil life system to work properly, the system must be reset every time the oil is changed.

When the system has calculated that oil life has been diminished, it indicates that an oil change is necessary. A CHANGE ENGINE OIL SOON message comes on. Change the oil as soon as possible within the next 1 000 km (600 mi). It is possible that, if driving under the best conditions, the oil life system might indicate that an oil change is not necessary for up to a year. The engine oil and filter must be changed at least once a year and, at this time, the system must be reset. Your dealer has trained service people who will perform this work and reset the system. It is also important to check the oil regularly over the course of an oil drain interval and keep it at the proper level.

If the system is ever reset accidentally, the oil must be changed at 5 000 km (3,000 mi) since the last oil change. Remember to reset the oil life system whenever the oil is changed.

How to Reset the Engine Oil Life System

Reset the system whenever the engine oil is changed so that the system can calculate the next engine oil change. To reset the system:

1. Display the REMAINING OIL LIFE on the DIC. See *Driver Information Center (DIC) (Base and Midlevel)* ⇨ *107* or *Driver Information Center (DIC) (Uplevel)* ⇨ *110*.
2. Press and hold the thumbwheel on the DIC while the Oil Life display is active.
3. Confirm yes, and the oil life will change to 100%.

The oil life system can also be reset as follows:

1. Place the ignition in Service Mode. See *Ignition Positions* ⇨ *200*.
2. Display REMAINING OIL LIFE on the DIC menu. See *Driver Information Center (DIC) (Base and Midlevel)* ⇨ *107* or *Driver Information Center (DIC) (Uplevel)* ⇨ *110*.
3. Fully press and release the accelerator pedal three times within five seconds.
4. If the display changes to 100%, the system is reset.

If the CHANGE ENGINE OIL SOON message comes back on when the vehicle is started, the engine oil life system has not been reset. Repeat the procedure.

Automatic Transmission Fluid

It is not necessary to check the transmission fluid level. A transmission fluid leak is the only reason for fluid loss. If a leak occurs, take the vehicle to the dealer and have it repaired as soon as possible.

Change the fluid at the intervals listed in *Maintenance Schedule* ⇨ *332*, and be sure to use the transmission fluid listed in *Recommended Fluids and Lubricants* ⇨ *340*.

Caution
Use of the incorrect automatic transmission fluid may damage the vehicle, and the damage may not be covered by the vehicle warranty. Always use the correct automatic transmission fluid. See *Recommended Fluids and Lubricants* ⇨ *340*.

If you need to check the transmission fluid level, take the vehicle to your dealer.

Engine Air Filter Life System

If equipped, this feature provides the engine air filter's remaining life and best timing for a change. The timing to change an engine air filter depends on driving and environmental conditions.

When to Change the Engine Air Filter

When the Driver Information Center (DIC) displays a message to replace the engine air filter at the next oil change, follow this timing.

When the DIC displays a message to replace the engine air filter soon, replace the engine air filter at the earliest convenience.

The system must be reset after the engine air filter is changed.

If the DIC displays a message to check the engine air filter system, see your dealer.

How to Reset the Engine Air Filter Life System

To reset:

1. Place the vehicle in P (Park).
2. Display the Air Filter Life on the DIC. See *Driver Information Center (DIC) (Base and Midlevel)* ⇨ *107* or *Driver Information Center (DIC) (Uplevel)* ⇨ *110*.
3. Press > to move to the Reset/Disable display area. Select Reset then press the thumbwheel.
4. Press the thumbwheel to confirm the reset.

Engine Air Cleaner/Filter

The engine air cleaner/filter is in the engine compartment. See *Engine Compartment Overview* ⇨ *257*.

When to Inspect the Engine Air Cleaner/Filter

If the vehicle is not equipped with the engine air filter life system, see *Maintenance Schedule* ⇨ *332* for intervals on inspecting and replacing the engine air cleaner/filter.

How to Inspect/Replace the Engine Air Cleaner/Filter

Do not start the engine or have the engine running with the engine air cleaner/filter housing open. Before removing the engine

air cleaner/filter, make sure that the engine air cleaner/filter housing and nearby components are free of dirt and debris. Do not clean the engine air cleaner/filter or components with water or compressed air.

To inspect or replace the air cleaner/filter:

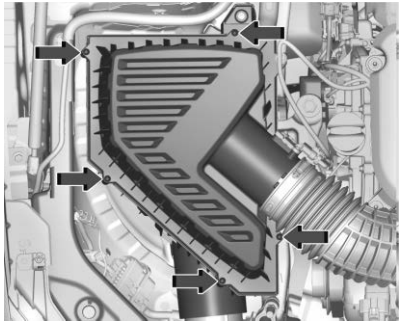

2.0L L4 Engine

1. Remove the five screws on top of the engine air cleaner/filter cover.
2. Lift and remove the engine air cleaner/filter cover.
3. Pull out the air cleaner/filter.

⚠ Warning

If part replacement is necessary, the part must be replaced with one of the same part number or with an equivalent part. Use of a replacement part without the same fit, form, and function may result in personal injury or damage to the vehicle.

4. Inspect or replace the engine air cleaner/filter.
5. Reverse Steps 1–3 to reinstall the engine air cleaner/filter cover.
6. If equipped, reset the engine air filter life system after replacing the engine air filter. See *Engine Air Filter Life System* ⇨ *265*.

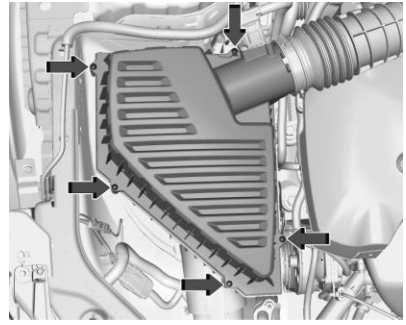

2.5L L4 Engine

1. Remove the five screws on top of the engine air cleaner/filter cover.
2. Lift and remove the engine air cleaner/filter cover.
3. Pull out the air cleaner/filter.
4. Inspect or replace the engine air cleaner/filter.
5. Reverse Steps 1–3 to reinstall the engine air cleaner/filter cover.
6. If equipped, reset the engine air filter life system after replacing the engine air filter. See *Engine Air Filter Life System* ⇨ *265*.

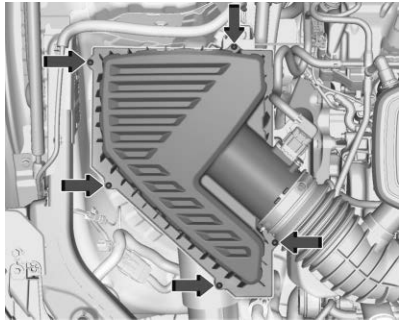

3.6L V6 Engine

1. Remove the five screws on top of the engine air cleaner/filter cover.
2. Lift and remove the engine air cleaner/filter cover.
3. Pull out the air cleaner/filter.
4. Inspect or replace the engine air cleaner/filter.
5. Reverse Steps 1–3 to reinstall the engine air cleaner/filter cover.
6. If equipped, reset the engine air filter life system after replacing the engine air filter. See *Engine Air Filter Life System* ⇨ *265*.

⚠ Warning

Operating the engine with the air cleaner/filter off can cause you or others to be burned. Use caution when working on the engine. Do not start the engine or drive the vehicle with the air cleaner/filter off, as flames may be present if the engine backfires.

Caution

If the air cleaner/filter is off, dirt can easily get into the engine, which could damage it. Always have the air cleaner/filter in place when driving.

Cooling System

The cooling system allows the engine to maintain the correct working temperature.

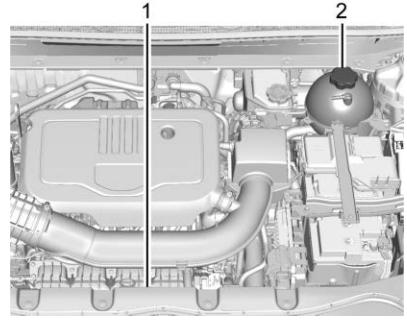

2.0L L4 Engine

1. Engine Cooling Fan (Out of View)
2. Engine Coolant Surge Tank and Pressure Cap

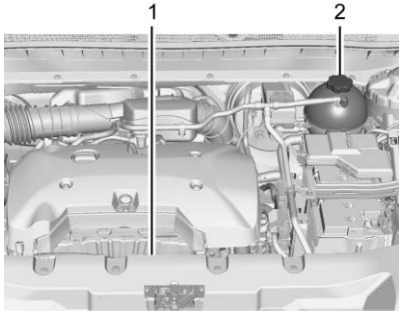

2.5L L4 Engine

1. Engine Cooling Fan (Out of View)
2. Engine Coolant Surge Tank and Pressure Cap

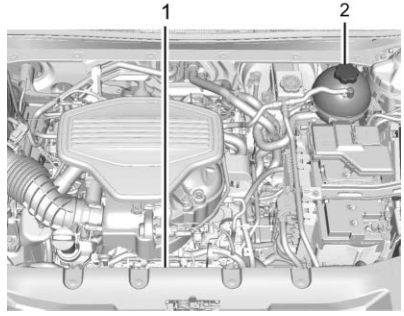

3.6L V6 Engine

1. Engine Cooling Fan (Out of View)
2. Engine Coolant Surge Tank and Pressure Cap

⚠ Warning

An underhood electric fan can start up even when the engine is not running and can cause injury. Keep hands, clothing, and tools away from any underhood electric fan.

⚠ Warning

Do not touch heater or radiator hoses, or other engine parts. They can be very hot and can burn you. Do not run the engine if there is a leak; all coolant could leak out. That could cause an engine fire and can burn you. Fix any leak before driving the vehicle.

Engine Coolant

The cooling system in the vehicle is filled with DEX-COOL engine coolant. This coolant needs to be checked and replaced at appropriate intervals. See *Maintenance Schedule* ⇨ *332*.

The following explains the cooling system and how to check and add coolant when it is low. If there is a problem with engine overheating, see *Engine Overheating* ⇨ *271*.

What to Use

⚠ Warning

Do not touch heater or radiator hoses, or other engine parts. They can be very hot and can burn you. Do not run the

(Continued)

Warning (Continued)

engine if there is a leak; all coolant could leak out. That could cause an engine fire and can burn you. Fix any leak before driving the vehicle.

Use a 50/50 mixture of clean, drinkable water and DEX-COOL coolant. This mixture:

- Gives freezing protection down to −37 °C (−34 °F), outside temperature.
- Gives boiling protection up to 129 °C (265 °F), engine temperature.
- Protects against rust and corrosion.
- Will not damage aluminum parts.
- Helps keep the proper engine temperature.

Caution

Do not use anything other than a mix of DEX-COOL coolant that meets GM Standard GMW3420 and clean, drinkable water. Anything else can cause damage to the engine cooling system and the vehicle, which would not be covered by the vehicle warranty.

Never dispose of engine coolant by putting it in the trash, or by pouring it on the ground or into sewers, streams, or bodies of water. Have the coolant changed by an authorized service center, familiar with legal requirements regarding used coolant disposal. This will help protect the environment and your health.

Checking Coolant

The vehicle must be on a level surface when checking the coolant level.

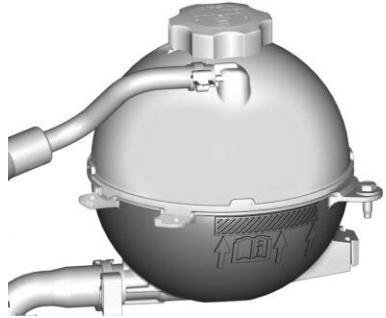

Check to see if coolant is visible in the coolant surge tank. If the coolant inside the coolant surge tank is boiling, do not do anything else until it cools down. See *Engine Overheating* ⇨ *271*.

The coolant surge tank is in the engine compartment on the driver side of the vehicle. See *Engine Compartment Overview* ⇨ *257*.

How to Add Coolant to the Coolant Surge Tank

⚠ Warning

Spilling coolant on hot engine parts can burn you. Coolant contains ethylene glycol and it will burn if the engine parts are hot enough.

⚠ Warning

Steam and scalding liquids from a hot cooling system are under pressure. Turning the pressure cap, even a little, can cause them to come out at high speed and you could be burned. Never turn the cap when the cooling system, including the pressure cap, is hot. Wait for the cooling system and pressure cap to cool.

⚠ Warning

Plain water, or other liquids such as alcohol, can boil before the proper coolant mixture will. With plain water or the wrong mixture, the engine could get too hot but there would not be an overheat warning. The engine could catch fire and you or others could be burned.

Caution

Failure to follow the specific coolant fill procedure could cause the engine to overheat and could cause system damage. If coolant is not visible in the surge tank, contact your dealer.

If no problem is found, check to see if coolant is visible in the coolant surge tank. If coolant is visible but the coolant level is not at or above the indicated mark, add a 50/50 mixture of clean, drinkable water and DEX-COOL coolant. Be sure the cooling system, including the coolant surge tank pressure cap, is cool before you do it.

2.5L L4 and 3.6L V6 Engines

1. Remove the coolant surge tank pressure cap when the cooling system, including the coolant surge tank pressure cap and upper radiator hose, is no longer hot.

   Turn the pressure cap slowly counterclockwise about one-quarter of a turn. If you hear a hiss, wait for that to stop. This will allow any pressure still left to be vented out the discharge hose.
2. Keep turning the pressure cap slowly and remove it.

3. Fill the coolant surge tank with the proper mixture to the indicated level mark.
4. With the coolant surge tank pressure cap off, start the engine and let it run until you can feel the upper radiator hose getting hot. Watch out for the engine cooling fan.

   By this time, the coolant level inside the coolant surge tank may be lower. If the level is lower, add more of the proper mixture to the coolant surge tank until the level reaches the indicated level mark.
5. Replace the pressure cap tightly.

6. Verify coolant level after the engine is shut off and the coolant is cold.
   If necessary, repeat coolant fill procedure Steps 1–6.

   If the coolant still is not at the proper level when the system cools down again, see your dealer.

Caution

If the pressure cap is not tightly installed, coolant loss and engine damage may occur. Be sure the cap is properly and tightly secured.

2.0L L4 Engine Only - Automatic Coolant Service Fill Instructions

If equipped, this feature assists in filling and removing air from the cooling system after service of components or when coolant is added after being too low.

To activate the fill and air removal process:

1. With a cold system, add coolant to the indicated mark on the surge tank.
2. Replace the cap on the surge tank.
3. Connect the vehicle to a battery charger.
4. Turn the ignition to Service Mode. See *Ignition Positions* ⇨ *200*.
5. Turn off the air conditioning.
6. Set the parking brake.
7. At the same time, press the accelerator and the brake for two seconds, then release.

At the end of the cycle, check the coolant level in the surge tank and add coolant if it is low. Turn off the vehicle, allow the Electronic Control Module (ECM) to go to sleep, about two minutes, and repeat Steps 4–7.

Listen for pump activation and movement of the control valves while watching the level of the coolant in the surge tank. If the tank empties, turn the ignition off, carefully remove the surge tank cap, refill to the indicated mark, and repeat Steps 4–7. The fill and air removal process will run for approximately 10 minutes.

Engine Overheating

The vehicle has several indicators to warn of the engine overheating.

There is an engine coolant temperature gauge on the instrument cluster. See *Engine Coolant Temperature Gauge* ⇨ *96*. The vehicle may also display a message on the Driver Information Center (DIC).

If the decision is made not to lift the hood when this warning appears, get service help right away. See *Roadside Assistance Program* ⇨ *352*.

If the decision is made to lift the hood, make sure the vehicle is parked on a level surface. Then check to see if the engine cooling fan is running. If the engine is overheating, the fan should be running. If it is not, do not continue to run the engine. Have the vehicle serviced.

Caution

Do not run the engine if there is a leak in the engine cooling system. This can cause a loss of all coolant and can damage the system and vehicle. Have any leaks fixed right away.

If Steam Is Coming from the Engine Compartment

⚠ Warning

Steam and scalding liquids from a hot cooling system are under pressure. Turning the pressure cap, even a little, can cause them to come out at high

(Continued)

Warning (Continued)

speed and you could be burned. Never turn the cap when the cooling system, including the pressure cap, is hot. Wait for the cooling system and pressure cap to cool.

If No Steam Is Coming from the Engine Compartment

If an engine overheat warning is displayed but no steam can be seen or heard, the problem may not be too serious. Sometimes the engine can get a little too hot when the vehicle:

- Climbs a long hill on a hot day.
- Stops after high-speed driving.
- Idles for long periods in traffic.

If the overheat warning is displayed with no sign of steam:

1. Turn the air conditioning off.
2. Turn the heater on to the highest temperature and to the highest fan speed. Open the windows as necessary.
3. When it is safe to do so, pull off the road, shift to P (Park) or N (Neutral), and let the engine idle.

If the engine coolant temperature gauge is no longer in the overheated area, the vehicle can be driven. Continue to drive the vehicle slowly for about 10 minutes. Keep a safe distance from the vehicle in front. If the warning does not come back on, continue to drive normally and have the cooling system checked for proper fill and function.

If the warning continues, pull over, stop, and park the vehicle right away.

If there is no sign of steam, idle the engine for three minutes while parked. If the warning is still displayed, turn off the engine until it cools down.

Washer Fluid

What to Use

When windshield washer fluid is needed, be sure to read the manufacturer's instructions before use. If operating the vehicle in an area where the temperature may fall below freezing, use a fluid that has sufficient protection against freezing.

Adding Washer Fluid

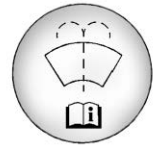

Open the cap with the washer symbol on it. Add washer fluid until the tank is full. See *Engine Compartment Overview* ⇨ *257* for reservoir location.

Caution

- Do not use washer fluid that contains any type of water repellent coating. This can cause the wiper blades to chatter or skip.
- Do not use engine coolant (antifreeze) in the windshield washer. It can damage the windshield washer system and paint.
- Do not mix water with ready-to-use washer fluid. Water can cause the solution to freeze and damage the washer fluid tank and other parts of the washer system.

(Continued)

Caution (Continued)

- When using concentrated washer fluid, follow the manufacturer instructions for adding water.
- Fill the washer fluid tank only three-quarters full when it is very cold. This allows for fluid expansion if freezing occurs, which could damage the tank if it is completely full.

Brakes

Disc brake linings have built-in wear indicators that make a high-pitched warning sound when the brake linings are worn and new linings are needed. The sound can come and go or can be heard all the time when the vehicle is moving, except when applying the brake pedal firmly.

⚠ Warning

The brake wear warning sound means that soon the brakes will not work well. That could lead to a crash. When the brake wear warning sound is heard, have the vehicle serviced.

Caution

Continuing to drive with worn-out brake linings could result in costly brake repairs.

Some driving conditions or climates can cause a brake squeal when the brakes are first applied, clearing up following several applications. This does not mean something is wrong with the brakes.

Properly torqued wheel nuts are necessary to help prevent brake pulsation. When tires are rotated, inspect brake linings for wear and evenly tighten wheel nuts in the proper sequence to torque specifications. See *Capacities and Specifications* ⇨ *345*.

Brake pads should be replaced as complete axle sets.

Brake Pedal Travel

See your dealer if the brake pedal does not return to normal height, or if there is a rapid increase in pedal travel. This could be a sign that brake service may be required.

Replacing Brake System Parts

Always replace brake system parts with new, approved replacement parts. If this is not done, the brakes may not work properly. The braking performance can change in many ways if the wrong brake parts are installed or if parts are improperly installed.

Brake Fluid

The brake master cylinder reservoir is filled with GM approved DOT 3 brake fluid as indicated on the reservoir cap. See *Engine Compartment Overview* ⇨ *257* for the location of the reservoir.

Checking Brake Fluid

With the vehicle in P (Park) on a level surface, the brake fluid level should be between the minimum and maximum marks on the brake fluid reservoir.

There are only two reasons why the brake fluid level in the reservoir may go down:

- Normal brake lining wear. When new linings are installed, the fluid level goes back up.
- A fluid leak in the brake hydraulic system. Have the brake hydraulic system fixed. With a leak, the brakes will not work well.

Always clean the brake fluid reservoir cap and the area around the cap before removing it.

Do not top off the brake fluid. Adding fluid does not correct a leak. If fluid is added when the linings are worn, there will be too much fluid when new brake linings are installed. Add or remove fluid, as necessary, only when work is done on the brake hydraulic system.

⚠ Warning

If too much brake fluid is added, it can spill on the engine and burn, if the engine is hot enough. You or others could be burned, and the vehicle could be damaged. Add brake fluid only when work is done on the brake hydraulic system.

When the brake fluid falls to a low level, the brake warning light comes on. See *Brake System Warning Light* ⇨ *101*.

Brake fluid absorbs water over time which degrades the effectiveness of the brake fluid. Replace brake fluid at the specified intervals to prevent increased stopping distance. See *Maintenance Schedule* ⇨ *332*.

What to Add

Use only GM approved DOT 3 brake fluid from a clean, sealed container. See *Recommended Fluids and Lubricants* ⇨ *340*.

⚠ Warning

The wrong or contaminated brake fluid could result in damage to the brake system. This could result in the loss of braking leading to a possible injury. Always use the proper GM approved brake fluid.

Caution

If brake fluid is spilled on the vehicle's painted surfaces, the paint finish can be damaged. Immediately wash off any painted surface.

Battery - North America

The original equipment battery is maintenance free. Do not remove the cap and do not add fluid.

Refer to the replacement number on the original battery label when a new battery is needed. For replacement of the battery, see your dealer.

Stop/Start System

The vehicle has a Stop/Start system to shut off the engine to help conserve fuel. See *Stop/Start System* ⇨ *203*.

It has an Absorbed Glass Mat (AGM) 12-volt battery. Installation of a standard 12-volt battery will result in reduced 12-volt battery life.

When using a 12-volt battery charger on the 12-volt AGM battery, some chargers have an AGM battery setting on the charger.
If available, use the AGM setting on the charger, to limit charge voltage to 14.8 volts.

⚠ Warning

WARNING: Battery posts, terminals, and related accessories contain lead and lead compounds, chemicals known to the

(Continued)

Warning (Continued)

State of California to cause cancer and birth defects or other reproductive harm. Batteries also contain other chemicals known to the State of California to cause cancer. **WASH HANDS AFTER HANDLING.** For more information go to www.P65Warnings.ca.gov/passenger-vehicle.

See *California Proposition 65 Warning* ⇨ *254* and the back cover.

Vehicle Storage

⚠ Warning

Batteries have acid that can burn you and gas that can explode. You can be badly hurt if you are not careful. See *Jump Starting - North America* ⇨ *318* for tips on working around a battery without getting hurt.

Infrequent Usage: Remove the black, negative (–) cable from the battery to keep the battery from running down.

Extended Storage: Remove the black, negative (–) cable from the battery or use a battery trickle charger.

All-Wheel Drive

Transfer Case

Under normal driving conditions, transfer case fluid does not require maintenance unless there is a fluid leak or unusual noise. If required, have the transfer case serviced by your dealer.

Automatic Transmission Shift Lock Control Function Check

⚠ Warning

When you are doing this inspection, the vehicle could move suddenly. If the vehicle moves, you or others could be injured.

1. Before starting this check, be sure there is enough room around the vehicle. It should be parked on a level surface.
2. Apply the parking brake. Be ready to apply the regular brake immediately if the vehicle begins to move.
3. With the engine off, turn the ignition on, but do not start the engine. Without applying the regular brake, try to move the shift lever out of P (Park) with normal effort. If the shift lever moves out of P (Park), contact your dealer for service.

Park Brake and P (Park) Mechanism Check

⚠ Warning

When you are doing this check, the vehicle could begin to move. You or others could be injured and property could be damaged. Make sure there is room in front of the vehicle in case it begins to roll. Be ready to apply the regular brake at once should the vehicle begin to move.

Park on a fairly steep hill, with the vehicle facing downhill. Keeping your foot on the regular brake, set the parking brake.

- To check the parking brake's holding ability: With the engine running and the transmission in N (Neutral), slowly remove

foot pressure from the regular brake pedal. Do this until the vehicle is held by the parking brake only.

- To check the P (Park) mechanism's holding ability: With the engine running, shift to P (Park). Then release the parking brake followed by the regular brake.

Contact your dealer if service is required.

Wiper Blade Replacement

Windshield wiper blades should be replaced periodically. See *Maintenance Schedule* ⇨ *332*.

Replacement blades come in different types and are removed in different ways. For proper type and length, see *Maintenance Replacement Parts* ⇨ *341*.

Caution
Allowing the wiper arm to touch the windshield when no wiper blade is installed could damage the windshield. Any damage that occurs would not be covered by the vehicle warranty. Do not allow the wiper arm to touch the windshield.

Front Wiper Blade Replacement

To replace the wiper blade:

1. Pull the wiper assembly away from the windshield.

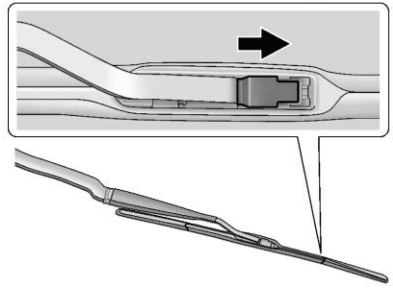

2. Lift up on the latch in the middle of the wiper blade where the wiper arm attaches.
3. With the latch open, pull the wiper blade down toward the windshield far enough to release it from the J-hooked end of the wiper arm.
4. Remove the wiper blade.
5. Reverse Steps 1–3 for wiper blade replacement.

Rear Wiper Blade Replacement

The rear wiper blade and wiper arm have a cover for protection.

To remove the cover:

1. Slide a plastic tool under the cover and push upward to unsnap.
2. Slide the cover toward the wiper blade tip to unhook it from the blade assembly.
3. Remove the cover.
4. After wiper blade replacement, ensure that the cover hook slides into the slot in the blade assembly.
5. Snap the cover down to secure.

To replace the wiper blade:

1. Lift the wiper arm away from the windshield.

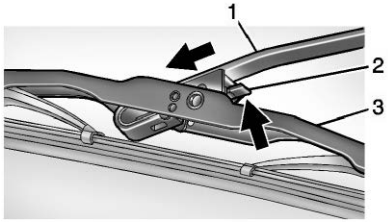

2. Push the release lever (2) to disengage the hook and push the wiper arm (1) out of the blade assembly (3).
3. Push the new blade assembly securely on the wiper arm until the release lever clicks into place.

Windshield Replacement

Driver Assistance Systems

If the windshield needs to be replaced and the vehicle is equipped with a front camera sensor for the Driver Assistance Systems, a GM replacement windshield is recommended. The replacement windshield must be installed according to GM specifications for proper alignment. If it is not, these systems may not work properly, they may display messages, or they may not work at all. See your dealer for proper windshield replacement.

Gas Strut(s)

This vehicle is equipped with gas strut(s) to provide assistance in lifting and holding open the hood/trunk/liftgate system in full open position.

⚠ Warning

If the gas struts that hold open the hood, trunk, and/or liftgate fail, you or others could be seriously injured. Take the vehicle to your dealer for service immediately. Visually inspect the gas struts for signs of wear, cracks, or other damage periodically. Check to make sure the hood/trunk/liftgate is held open with enough force. If struts are failing to hold the hood/trunk/liftgate, do not operate. Have the vehicle serviced.

Caution

Do not apply tape or hang any objects from gas struts. Also do not push down or pull on gas struts. This may cause damage to the vehicle.

See *Maintenance Schedule* ⇨ *332*.

Hood

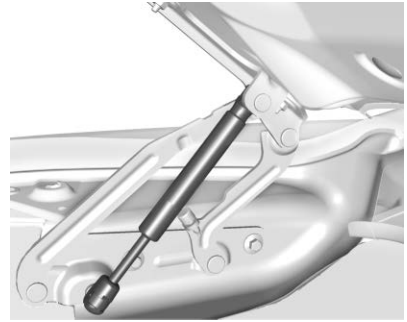

Trunk

Liftgate

Headlamp Aiming

Front Headlamp Aiming

Headlamp aim has been preset and should need no further adjustment.

If the vehicle is damaged in a crash, the headlamp aim may be affected.
If adjustment to the headlamps is necessary, see your dealer.

Bulb Replacement

For the proper type of replacement bulbs, or any bulb changing procedure not listed in this section, contact your dealer.

Caution

Do not replace incandescent bulbs with aftermarket LED replacement bulbs. This can cause damage to the vehicle electrical system.

High Intensity Discharge (HID) Lighting

⚠ Warning

The High Intensity Discharge (HID) lighting system operates at a very high voltage. If you try to service any of the system components, you could be seriously injured. Have your dealer or a qualified technician service them.

After an HID headlamp bulb has been replaced, the beam might be a slightly different shade than it was originally. This is normal.

LED Lighting

This vehicle has several LED lamps. For replacement of any LED lighting assembly, contact your dealer.

Back-Up Lamps

To replace one of these bulbs:

1. Open the liftgate.

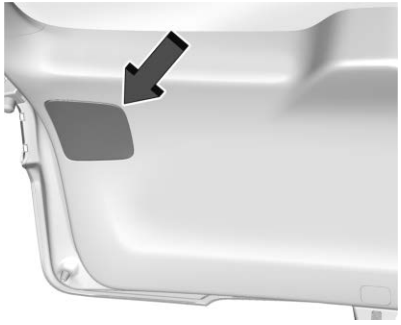

2. Remove the access cover.

3. Turn the bulb socket counterclockwise and pull the bulb straight out of the socket.
4. Replace the bulb and reverse Steps 1–3 to reinstall.

Electrical System

High Voltage Devices and Wiring

⚠ Warning

Exposure to high voltage can cause shock, burns, and even death. The high voltage components in the vehicle can only be serviced by technicians with special training.

High voltage components are identified by labels. Do not remove, open, take apart, or modify these components. High voltage cable or wiring has orange covering or labels. Do not probe, tamper with, cut, or modify high voltage cable or wiring.

Electrical System Overload

The vehicle has fuses and circuit breakers to protect against an electrical system overload.

When the current electrical load is too heavy, the circuit breaker opens and closes, protecting the circuit until the current load returns to normal or the problem is fixed. This greatly reduces the chance of circuit overload and fire caused by electrical problems.

Fuses and circuit breakers protect power devices in the vehicle.

Replace a bad fuse with a new one of the identical size and rating.

If there is a problem on the road and a fuse needs to be replaced, the same amperage fuse can be borrowed. Choose some feature of the vehicle that is not needed to use and replace it as soon as possible.

Headlamp Wiring

An electrical overload may cause the lamps to go on and off, or in some cases to remain off. Have the headlamp wiring checked right away if the lamps go on and off or remain off.

Windshield Wipers

If the wiper motor overheats due to heavy snow or ice, the windshield wipers will stop until the motor cools and will then restart.

Although the circuit is protected from electrical overload, overload due to heavy snow or ice may cause wiper linkage damage. Always clear ice and heavy snow from the windshield before using the windshield wipers.

If the overload is caused by an electrical problem and not snow or ice, be sure to get it fixed.

Fuses and Circuit Breakers

The wiring circuits in the vehicle are protected from short circuits by a combination of fuses and circuit breakers. This greatly reduces the chance of damage caused by electrical problems.

⚠ Danger

Fuses and circuit breakers are marked with their ampere rating. Do not exceed the specified amperage rating when replacing fuses and circuit breakers. Use of an oversized fuse or circuit breaker can result in a vehicle fire. You and others could be seriously injured or killed.

⚠ Warning

Installation or use of fuses that do not meet GM's original fuse specifications is dangerous. The fuses could fail, and result in a fire. You or others could be injured or killed, and the vehicle could be damaged.

See *Accessories and Modifications* ⇨ *254* and *General Information* ⇨ *254*.

To check a fuse, look at the silver-colored band inside the fuse. If the band is broken or melted, replace the fuse. Be sure to replace a bad fuse with a new one of the identical size and rating.

Fuses of the same amperage can be temporarily borrowed from another fuse location, if a fuse goes out. Replace the fuse as soon as possible.

Engine Compartment Fuse Block

The underhood fuse block is in the engine compartment, on the driver side of the vehicle.

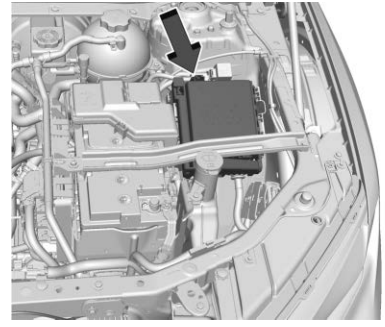

Caution

Do not pull the engine compartment fuse block lever, since it is intended only for service purposes. If pulled, vehicle malfunction may occur.

To remove the fuse block cover, press the clips on the cover and lift it straight up.

Caution

Spilling liquid on any electrical component on the vehicle may damage it. Always keep the covers on any electrical component.

To remove fuses, use the fuse puller and pull straight out.

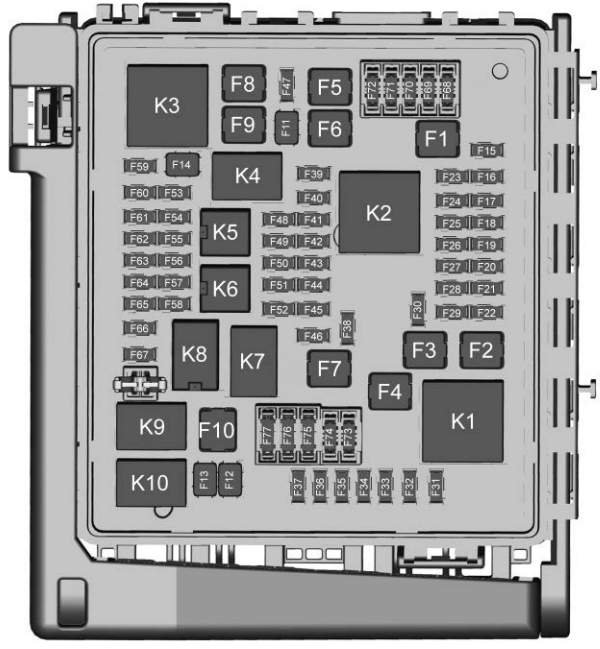

The vehicle may not be equipped with all of the fuses, relays, and features shown.

Fuses	Usage
F1	Antilock brake system pump

Fuses	Usage
F2	Starter 1
F3	DC DC transformer 1
F4	–
F5	DC DC transformer 2
F6	–
F7	Front blower
F8	Starter 3
F9	–
F10	–
F11	–
F12	Front wiper
F13	Starter 2
F14	–
F15	Rear wiper
F16	–
F17	–
F18	–
F19	–
F20	–
F21	–
F22	Electronic brake control module
F23	Parking/Trailer lamps
F24	Right trailer stoplamp/ Turnlamp
F25	Steering column lock
F26	–
F27	Left trailer stoplamp/ Turnlamp
F28	–
F29	–
F30	Washer pump
F31	Spare/Right low-beam headlamp
F32	Left low-beam headlamp
F33	High-beam headlamp shutter/ Fog lamps
F34	Horn
F35	–
F36	Right low-beam/Left high-beam headlamp
F37	Spare/Right high-beam headlamp
F38	Automatic headlamp leveling motor
F39	Transmission control module
F40	Left rear bus electrical center/DC DC ignition
F41	Instrument cluster
F42	Heating, ventilation, and air conditioning/ Central gateway module run/crank
F43	Reflective light alert display
F44	Electronic brake control module/Electric brake booster/Run/crank
F45	–
F46	–
F47	–
F48	–
F49	Interior rearview mirror

Fuses	Usage
F50	Fuel system control module/Fuel tank zone module run/crank
F51	Heated steering wheel
F52	Air conditioning clutch
F53	Coolant pump
F54	–
F55	–
F56	–
F57	Engine control module/ Ignition
F58	Transmission control module/Ignition
F59	Engine control module battery
F60	–
F61	O2 sensor 1/ Aeroshutter/Mass air flow sensor
F62	Engine control module – odd
F63	O2 sensor 2

Fuses	Usage
F64	Engine control module – even
F65	Engine control module powertrain 1
F66	Engine control module powertrain 2
F67	Engine control module powertrain 3
F68	–
F69	–
F70	–
F71	–
F72	–
F73	–
F74	–
F75	–
F76	–
F77	–

Relays	Usage
K1	Starter 1
K2	Run/Crank
K3	Starter 3
K4	–
K5	–
K6	–
K7	Engine control module
K8	Air conditioning
K9	–
K10	Starter 2

Instrument Panel Fuse Block

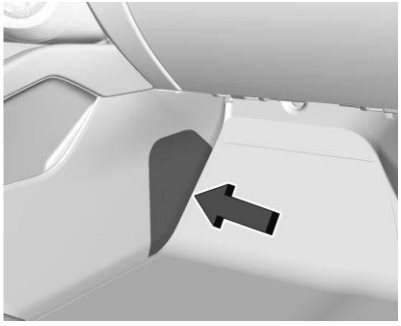

The instrument panel fuse block is inside the center console on the passenger side of the vehicle.

Remove the fuse access door by inserting a coin or tool into the slot of the access door.

To remove a fuse, use the fuse puller located in the Engine Compartment Fuse block.

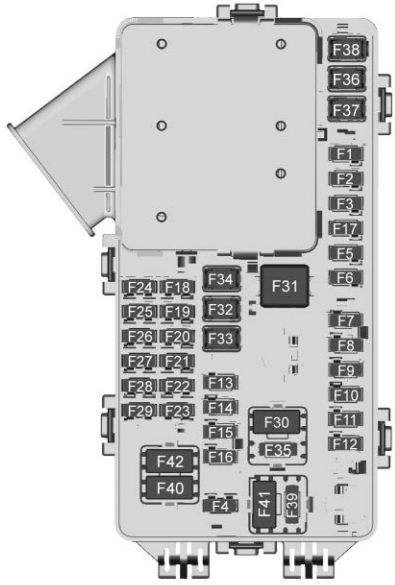

The vehicle may not be equipped with all of the fuses, relays, and features shown.

Fuses	Usage
F1	Body control module 6
F2	Diagnostic link/Central gateway module
F3	Electric steering column lock
F4	–
F5	–
F6	Heating, ventilation, and air conditioning
F7	Body control module 3
F8	–
F9	Right front heated seat
F10	Airbag/Seatbelt
F11	–
F12	Amplifier/Noise control module
F13	Body control module 7
F14	Left front heated seat
F15	–
F16	Sunroof
F17	–
F18	Instrument cluster

Fuses	Usage
F19	Body control module 1
F20	Rear seat entertainment
F21	Body control module 4
F22	Infotainment USB data/ Aux jack
F23	Body control module 2
F24	USB charger/Wireless charging
F25	Park assist
F26	Communications integration module
F27	–
F28	Heating, ventilation, and air conditioning/ Information communication system display
F29	Radio
F30	Steering wheel adjustment controls
F31	Electric brake control module electric brake booster
F32	DC AC inverter
F33	Driver power seat
F34	Passenger power seat
F35	Battery IEC 1 feed
F36	Electric power steering
F37	Rear seat entertainment/USB charge/Wireless charging module/ Auxiliary power outlet/ Lighter
F38	Body control module 8
F39	–

Circuit Breakers/ Minifuse	Usage
F40	–
F41	–
F42	Auxiliary power outlet (CB)/Lighter (minifuse)

Rear Compartment Fuse Block

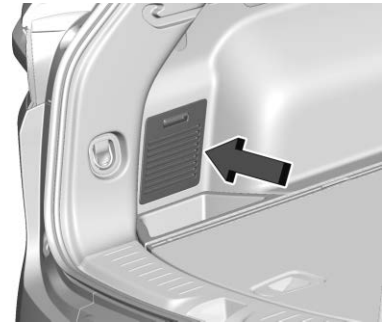

The rear compartment fuse block is behind a trim cover on the driver side of the rear storage compartment.

Remove the trim cover to access the fuse block or visit your dealer.

The fuse block label is located on the central bin.

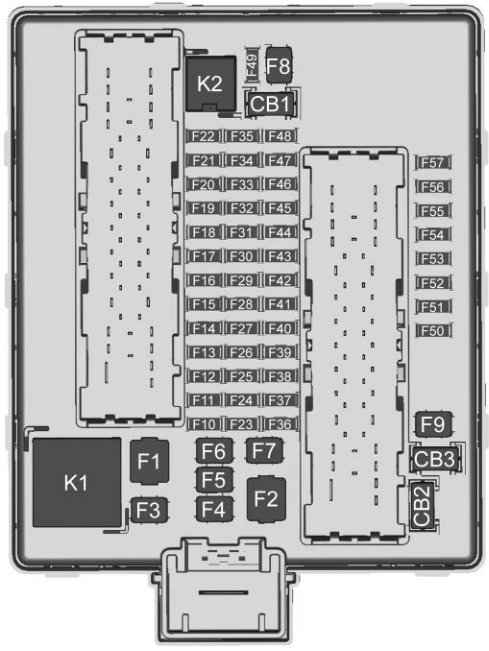

Fuses	Usage
F1	–
F2	Trailer battery
F3	–
F4	Rear blower
F5	Rear drive control 1
F6	–
F7	Right window
F8	Rear window defogger
F9	Left window
F10	–
F11	Trailer reverse
F12	–
F13	–
F14	–
F15	–
F16	–
F17	–
F18	–
F19	–
F20	Glove box door/Trailer stoplamp
F21	–
F22	–
F23	–

Fuses	Usage
F24	–
F25	–
F26	Trailer brake
F27	Driver ventilated seat/ Lumbar
F28	Passive entry/Passive start
F29	–
F30	Canister vent
F31	–
F32	Heated mirrors
F33	–
F34	Liftgate module
F35	Fuel system control module/Fuel tank zone module
F36	Passenger ventilated seat/Lumbar
F37	–
F38	Window module
F39	Rear closure

Fuses	Usage
F40	Memory seat module
F41	Automatic occupancy sensor
F42	–
F43	–
F44	–
F45	Liftgate motor
F46	Rear heated seats
F47	–
F48	–
F49	–
F50	–
F51	–
F52	Rear drive control 2/ Semi-active dampening system module
F53	Video
F54	External object calculating/Side blind zone alert
F55	–

Fuses	Usage
F56	Universal remote/Rain sensor
F57	Alarm overhead console/Theft deterrent

Circuit Breakers	Usage
CB1	–
CB2	–
CB3	Rear auxiliary power outlet

Relays	Usage
K1	–
K2	–

Wheels and Tires

Tires

Every new GM vehicle has high-quality tires made by a leading tire manufacturer. See the warranty manual for information regarding the tire

warranty and where to get service. For additional information refer to the tire manufacturer.

⚠ Warning

- Poorly maintained and improperly used tires are dangerous.
- Overloading the tires can cause overheating as a result of too much flexing. There could be a blowout and a serious crash. See *Vehicle Load Limits* ⇨ *197*.
- Underinflated tires pose the same danger as overloaded tires. The resulting crash could cause serious injury. Check all tires frequently to maintain the recommended pressure. Tire pressure should be checked when the tires are cold.
- Overinflated tires are more likely to be cut, punctured, or broken by a sudden impact — such as when hitting a pothole. Keep tires at the recommended pressure.

(Continued)

Warning (Continued)

- Worn or old tires can cause a crash. If the tread is badly worn, replace them.
- Replace any tires that have been damaged by impacts with potholes, curbs, etc.
- Improperly repaired tires can cause a crash. Only the dealer or an authorized tire service center should repair, replace, dismount, and mount the tires.
- Do not spin the tires in excess of 56 km/h (35 mph) on slippery surfaces such as snow, mud, ice, etc. Excessive spinning may cause the tires to explode.

See *Tire Pressure for High-Speed Operation* ⇨ *295* for inflation pressure adjustment for high-speed driving.

All-Season Tires

This vehicle may come with all-season tires. These tires are designed to provide good overall performance on most road surfaces and weather conditions. Original equipment tires designed to GM's specific tire performance criteria have a TPC specification code molded onto the sidewall. Original equipment all-season tires can be identified by the last two characters of this TPC code, which will be “MS.”

Consider installing winter tires on the vehicle if frequent driving on snow or ice-covered roads is expected. All-season tires provide adequate performance for most winter driving conditions, but they may not offer the same level of traction or performance as winter tires on snow or ice-covered roads. See *Winter Tires* ⇨ *288*.

Winter Tires

This vehicle was not originally equipped with winter tires. Winter tires are designed for increased traction on snow and ice-covered roads. Consider installing winter tires on the vehicle if frequent driving on ice or snow covered roads is expected. See your dealer for details regarding winter tire availability and proper tire selection. Also, see *Buying New Tires* ⇨ *302*.

With winter tires, there may be decreased dry road traction, increased road noise, and shorter tread life. After changing to winter tires, be alert for changes in vehicle handling and braking.

If using winter tires:

- Use tires of the same brand and tread type on all four wheel positions.
- Use only radial ply tires of the same size, load range, and speed rating as the original equipment tires.

Winter tires with the same speed rating as the original equipment tires may not be available for H, V, W, Y, and ZR speed rated tires. If winter tires with a lower speed rating are chosen, never exceed the tire's maximum speed capability.

Summer Tires

This vehicle may come with 235/55R20 high performance summer tires. These tires have a special tread and compound that are optimized for maximum dry and wet road performance. This special tread and compound will have decreased performance in cold climates, and on ice and snow. It is recommended that winter tires be installed on the vehicle if frequent driving at temperatures below approximately 5 °C (40 °F) or on ice or snow covered roads is expected. See *Winter Tires* ⇨ *288*.

Caution

High performance summer tires have rubber compounds that lose flexibility and may develop surface cracks in the tread area at temperatures below −7 °C (20 °F). Always store high performance summer tires indoors and at temperatures above −7 °C (20 °F) when not in use. If the tires have been subjected to −7 °C (20 °F) or less, let them warm up in a heated space to at least 5 °C (40 °F) for 24 hours or more before being installed or driving a vehicle on which they are installed. Do not apply heat or blow heated air directly on the tires. Always inspect tires before use. See *Tire Inspection* ⇨ *300*.

Tire Sidewall Labeling

Useful information about a tire is molded into its sidewall. The examples show a typical passenger vehicle tire and a compact spare tire sidewall.

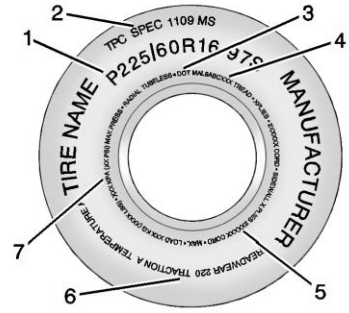

Passenger (P-Metric) Tire Example

(1) Tire Size : The tire size is a combination of letters and numbers used to define a particular tire's width, height, aspect ratio, construction type, and service description. See the “Tire Size” illustration in this section.

(2) TPC Spec (Tire Performance Criteria Specification) : Original equipment tires designed to GM's specific tire performance criteria have a TPC specification code molded onto the sidewall. GM's TPC specifications meet or exceed all federal safety guidelines.

(3) DOT (Department of Transportation) : The Department of Transportation (DOT) code indicates that the tire is in compliance with the U.S. Department of Transportation Motor Vehicle Safety Standards.

DOT Tire Date of Manufacture : The last four digits of the TIN indicate the tire manufactured date. The first two digits represent the week and the last two digits, the year. For example, the third week of the year 2020 would have a 4-digit DOT date of 0320. Week 01 is the first full week (Sunday through Saturday) of each year.

(4) Tire Identification Number (TIN) : The letters and numbers following the DOT (Department of Transportation) code are the Tire Identification Number (TIN). The TIN shows the manufacturer and plant code, tire size, and date the tire was manufactured. The TIN is molded onto both sides of the tire, although only one side may have the date of manufacture.

(5) Tire Ply Material : The type of cord and number of plies in the sidewall and under the tread.

(6) Uniform Tire Quality Grading (UTQG) : Tire manufacturers are required to grade tires based on three performance factors: tread wear, traction, and temperature resistance. For more information see *Uniform Tire Quality Grading* ⇨ *303*.

(7) Maximum Cold Inflation Load Limit : Maximum load that can be carried and the maximum pressure needed to support that load.

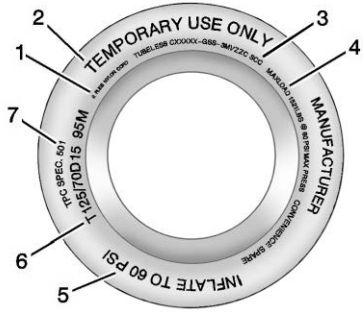

Compact Spare Tire Example

(1) Tire Ply Material : The type of cord and number of plies in the sidewall and under the tread.

(2) Temporary Use Only : The compact spare tire or temporary use tire should not be driven at speeds over 80 km/h (50 mph). The compact spare tire is for emergency use when a regular road tire has lost air and gone flat. If the vehicle has a compact spare tire, see *Compact Spare Tire* ⇨ *317* and *If a Tire Goes Flat* ⇨ *306*.

(3) Tire Identification Number (TIN) : The letters and numbers following the DOT (Department of Transportation) code are the Tire Identification Number (TIN). The TIN shows the manufacturer and plant code, tire size, and date the tire was manufactured. The TIN is molded onto both sides of the tire, although only one side may have the date of manufacture.

(4) Maximum Cold Inflation Load Limit : Maximum load that can be carried and the maximum pressure needed to support that load.

(5) Tire Inflation : The temporary use tire or compact spare tire should be inflated to 420 kPa (60 psi). For more information on tire pressure and inflation see *Tire Pressure* ⇨ *294*.

(6) Tire Size : A combination of letters and numbers define a tire's width, height, aspect ratio, construction type, and service description. The letter “T” as the first character in the tire size means the tire is for temporary use only.

(7) TPC Spec (Tire Performance Criteria Specification) : Original equipment tires designed to GM's specific tire performance criteria have a TPC specification code molded onto the sidewall. GM's TPC specifications meet or exceed all federal safety guidelines.

Tire Designations

Tire Size

The example shows a typical passenger vehicle tire size.

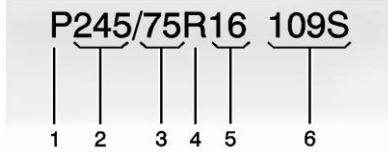

Passenger (P-Metric) Tire

(1) Passenger (P-Metric) Tire : The United States version of a metric tire sizing system. The letter "P" as the first character in the tire size means a passenger vehicle tire engineered to standards set by the U.S. Tire and Rim Association.

(2) Tire Width : The 3-digit number indicates the tire section width in millimeters from sidewall to sidewall.

(3) Aspect Ratio : A 2-digit number that indicates the tire height-to-width measurements. For example, if the tire size aspect ratio is 75, as shown in item (3) of the illustration, it would mean that the tire's sidewall is 75 percent as high as it is wide.

(4) Construction Code : A letter code is used to indicate the type of ply construction in the tire. The letter "R" means radial ply construction; the letter "D" means diagonal or bias ply construction.

(5) Rim Diameter : Diameter of the wheel in inches.

(6) Service Description : These characters represent the load index and speed rating of the tire. The load index represents the load carrying capacity a tire is certified to carry. The speed rating is the maximum speed a tire is certified to carry a load.

Tire Terminology and Definitions

Air Pressure : The amount of air inside the tire pressing outward on each square inch of the tire. Air pressure is expressed in kPa (kilopascal) or psi (pounds per square inch).

Accessory Weight : The combined weight of optional accessories. Some examples of optional accessories are automatic transmission, power windows, power seats, and air conditioning.

Aspect Ratio : The relationship of a tire's height to its width.

Belt : A rubber coated layer of cords between the plies and the tread. Cords may be made from steel or other reinforcing materials.

Bead : The tire bead contains steel wires wrapped by steel cords that hold the tire onto the rim.

Bias Ply Tire : A pneumatic tire in which the plies are laid at alternate angles less than 90 degrees to the centerline of the tread.

Cold Tire Pressure : The amount of air pressure in a tire, measured in kPa (kilopascal) or psi (pounds per square inch) before a tire has built up heat from driving. See *Tire Pressure* ⇨ *294*.

Curb Weight : The weight of a motor vehicle with standard and optional equipment including the maximum capacity of fuel, oil, and coolant, but without passengers and cargo.

DOT Markings : A code molded into the sidewall of a tire signifying that the tire is in compliance with the U.S. Department of Transportation (DOT) Motor Vehicle Safety Standards. The DOT code includes the Tire Identification Number (TIN), an alphanumeric designator which can also identify the tire manufacturer, production plant, brand, and date of production.

GVWR : Gross Vehicle Weight Rating. See *Vehicle Load Limits* ⇨ *197*.

GAWR FRT : Gross Axle Weight Rating for the front axle. See *Vehicle Load Limits* ⇨ *197*.

GAWR RR : Gross Axle Weight Rating for the rear axle. See *Vehicle Load Limits* ⇨ *197*.

Intended Outboard Sidewall : The side of an asymmetrical tire that must always face outward when mounted on a vehicle.

Kilopascal (kPa) : The metric unit for air pressure.

Light Truck (LT-Metric) Tire : A tire used on light duty trucks and some multipurpose passenger vehicles.

Load Index : An assigned number ranging from 1 to 279 that corresponds to the load carrying capacity of a tire.

Maximum Inflation Pressure : The maximum air pressure to which a cold tire can be inflated. The maximum air pressure is molded onto the sidewall.

Maximum Load Rating : The load rating for a tire at the maximum permissible inflation pressure for that tire.

Maximum Loaded Vehicle Weight : The sum of curb weight, accessory weight, vehicle capacity weight, and production options weight.

Normal Occupant Weight : The number of occupants a vehicle is designed to seat multiplied by 68 kg (150 lb). See *Vehicle Load Limits* ⇨ *197*.

Occupant Distribution : Designated seating positions.

Outward Facing Sidewall : The side of an asymmetrical tire that has a particular side that faces outward when mounted on a vehicle. The side of the tire that contains a whitewall, bears white lettering, or bears manufacturer, brand, and/or model name molding that is higher or deeper than the same moldings on the other sidewall of the tire.

Passenger (P-Metric) Tire : A tire used on passenger cars and some light duty trucks and multipurpose vehicles.

Recommended Inflation Pressure : Vehicle manufacturer's recommended tire inflation pressure as shown on the tire placard. See *Tire Pressure* ⇨ *294* and *Vehicle Load Limits* ⇨ *197*.

Radial Ply Tire : A pneumatic tire in which the ply cords that extend to the beads are laid at 90 degrees to the centerline of the tread.

Rim : A metal support for a tire and upon which the tire beads are seated.

Sidewall : The portion of a tire between the tread and the bead.

Speed Rating : An alphanumeric code assigned to a tire indicating the maximum speed at which a tire can operate.

Traction : The friction between the tire and the road surface. The amount of grip provided.

Tread : The portion of a tire that comes into contact with the road.

Treadwear Indicators : Narrow bands, sometimes called wear bars, that show across the tread of a tire when only 1.6 mm (1/16 in) of tread remains. See *When It Is Time for New Tires* ⇨ *301*.

UTQGS (Uniform Tire Quality Grading Standards) : A tire information system that provides consumers with ratings for a tire's traction, temperature, and treadwear. Ratings are determined by tire manufacturers using government testing procedures. The ratings are molded into the sidewall of the tire. See *Uniform Tire Quality Grading* ⇨ *303*.

Vehicle Capacity Weight : The number of designated seating positions multiplied by 68 kg (150 lb) plus the rated cargo load. See *Vehicle Load Limits* ⇨ *197*.

Vehicle Maximum Load on the Tire : Load on an individual tire due to curb weight, accessory weight, occupant weight, and cargo weight.

Vehicle Placard : A label permanently attached to a vehicle showing the vehicle capacity weight and the original equipment tire size and recommended inflation pressure. See “Tire and Loading Information Label” under *Vehicle Load Limits* ⇨ *197*.

Tire Pressure

Tires need the correct amount of air pressure to operate effectively.

⚠ Warning

Neither tire underinflation nor overinflation is good. Underinflated tires, or tires that do not have enough air, can result in:

- Tire overloading and overheating, which could lead to a blowout.
- Premature or irregular wear.
- Poor handling.
- Reduced fuel economy.

Overinflated tires, or tires that have too much air, can result in:

- Unusual wear.
- Poor handling.
- Rough ride.
- Needless damage from road hazards.

The Tire and Loading Information label on the vehicle indicates the original equipment tires and the correct cold tire inflation pressures. The recommended pressure is the minimum air pressure needed to support the vehicle's maximum load carrying capacity. See *Vehicle Load Limits* ⇨ *197*.

How the vehicle is loaded affects vehicle handling and ride comfort. Never load the vehicle with more weight than it was designed to carry.

When to Check

Check the pressure of the tires once a month or more. Do not forget the compact spare, if the vehicle has one. The compact spare cold tire pressure should be at 420 kPa (60 psi). See *Compact Spare Tire* ⇨ *317*.

How to Check

Use a good quality pocket-type gauge to check tire pressure. Proper tire inflation cannot be determined by looking at the tire. Check the tire inflation pressure when the tires are cold, meaning the vehicle has not been driven for at least three hours or no more than 1.6 km (1 mi).

Remove the valve cap from the tire valve stem. Press the tire gauge firmly onto the valve to get a pressure measurement. If the cold tire inflation pressure matches the recommended pressure on the Tire and Loading Information label, no further adjustment is necessary. If the inflation pressure is low, add air until the recommended pressure is reached. If the inflation pressure is high, press on the metal stem in the center of the tire valve to release air.

Recheck the tire pressure with the tire gauge.

Put the valve caps back on the valve stems to keep out dirt and moisture. Use only valve caps designed for the vehicle by GM. TPMS sensors could be damaged and would not be covered by the vehicle warranty.

Tire Pressure for High-Speed Operation

⚠ Warning

Driving at high speeds, 160 km/h (100 mph) or higher, puts additional strain on tires. Sustained high-speed driving causes excessive heat buildup and can cause sudden tire failure. This could cause a crash, and you or others could be killed. Some high-speed rated tires require inflation pressure adjustment for high-speed operation. When speed limits and road conditions allow the vehicle to be driven at high speeds, make sure the tires are rated for high-speed operation, are in excellent condition, and are set to the correct cold tire inflation pressure for the vehicle load.

Vehicles with tire sizes listed in the High Speed Operation Inflation Pressures table require inflation pressure adjustment when driving the vehicle at speeds of 160 km/h (100 mph) or higher. Set the cold tire inflation pressure to the corresponding value in the table for the tire size on the vehicle.

High Speed Operation Inflation Pressures	
Tire Size	Cold Inflation Pressure kPa (psi)
235/65R18	280 kPa (41 psi)
235/55R20	280 kPa (41 psi)
265/45R21	280 kPa (41 psi)

Return the tires to the recommended cold tire inflation pressure when high-speed driving has ended. See *Vehicle Load Limits* ⇨ *197* and *Tire Pressure* ⇨ *294*.

Tire Pressure Monitor System

The Tire Pressure Monitor System (TPMS) uses radio and sensor technology to check tire pressure levels. The TPMS sensors monitor the air pressure in your tires and transmit tire pressure readings to a receiver located in the vehicle.

Each tire, including the spare (if provided), should be checked monthly when cold and inflated to the inflation pressure recommended by the vehicle manufacturer on the vehicle placard or tire inflation pressure label. (If your vehicle has tires of a different size than the size indicated on the vehicle placard or tire inflation pressure label, you should determine the proper tire inflation pressure for those tires.)

As an added safety feature, your vehicle has been equipped with a tire pressure monitoring system (TPMS) that illuminates a low tire pressure telltale when one or more of your tires is significantly under-inflated.

Accordingly, when the low tire pressure telltale illuminates, you should stop and check your tires as soon as possible, and inflate them to the proper pressure. Driving on a significantly under-inflated tire causes the tire to overheat and can lead to tire failure. Under-inflation also reduces fuel efficiency and tire tread life, and may affect the vehicle's handling and stopping ability.

Please note that the TPMS is not a substitute for proper tire maintenance, and it is the driver's responsibility to maintain correct tire pressure, even if under-inflation has not reached the level to trigger illumination of the TPMS low tire pressure telltale.

Your vehicle has also been equipped with a TPMS malfunction indicator to indicate when the system is not operating properly. The TPMS malfunction indicator is combined with the low tire pressure telltale. When the system detects a malfunction, the telltale will flash for approximately one minute and then remain continuously illuminated. This sequence will continue upon subsequent vehicle start-ups as long as the malfunction exists.

When the malfunction indicator is illuminated, the system may not be able to detect or signal low tire pressure as intended. TPMS malfunctions may occur for a variety of reasons, including the installation of replacement or alternate tires or wheels on the vehicle that prevent the TPMS from functioning properly. Always check the TPMS malfunction telltale after replacing one or more tires or wheels on your vehicle to ensure that the replacement or alternate tires and wheels allow the TPMS to continue to function properly.

See *Tire Pressure Monitor Operation* ⇨ *297*.

See *Radio Frequency Statement* ⇨ *357*.

Tire Pressure Monitor Operation

This vehicle may have a Tire Pressure Monitor System (TPMS). The TPMS is designed to warn the driver when a low tire pressure condition exists. TPMS sensors are mounted onto each tire and wheel assembly, excluding the spare tire and wheel assembly. The TPMS sensors monitor the air pressure in the tires and transmit the tire pressure readings to a receiver located in the vehicle.

When a low tire pressure condition is detected, the TPMS illuminates the low tire pressure warning light located on the instrument cluster. If the warning light comes on, stop as soon as possible and inflate the tires to the recommended pressure shown on the Tire and Loading Information label. See *Vehicle Load Limits* ⇨ *197*.

A message to check the pressure in a specific tire displays in the Driver Information Center (DIC). The low tire pressure warning light and the DIC warning message come on at each ignition cycle until the tires are inflated to the correct inflation pressure. Using the DIC, tire pressure levels can be viewed. For additional information and details about the DIC operation and displays see *Driver Information Center (DIC) (Base and Midlevel)* ⇨ *107* or *Driver Information Center (DIC) (Uplevel)* ⇨ *110*.

The low tire pressure warning light may come on in cool weather when the vehicle is first started, and then turn off as the vehicle is driven. This could be an early indicator that the air pressure is getting low and needs to be inflated to the proper pressure.

A Tire and Loading Information label, attached to your vehicle, shows the size of the original equipment tires and the correct inflation pressure for the tires when they are cold. See *Vehicle Load Limits* ⇨ *197*, for an example of the Tire and Loading Information label and its location. Also see *Tire Pressure* ⇨ *294*.

The TPMS can warn about a low tire pressure condition but it does not replace normal tire maintenance. See *Tire Inspection* ⇨ *300*, *Tire Rotation* ⇨ *300* and *Tires* ⇨ *287*.

Caution

Tire sealant materials are not all the same. A non-approved tire sealant could damage the TPMS sensors. TPMS sensor damage caused by using an incorrect tire sealant is not covered by the vehicle

(Continued)

Caution (Continued)

warranty. Always use only the GM approved tire sealant available through your dealer or included in the vehicle.

Factory-installed Tire Inflator Kits use a GM-approved liquid tire sealant. Using non-approved tire sealants could damage the TPMS sensors. See *Tire Sealant and Compressor Kit* ⇨ *307* for information regarding the inflator kit materials and instructions.

TPMS Malfunction Light and Message

The TPMS will not function properly if one or more of the TPMS sensors are missing or inoperable. When the system detects a malfunction, the low tire pressure warning light flashes for about one minute and then stays on for the remainder of the ignition cycle. A DIC warning message also displays. The malfunction light and DIC warning message come on at each ignition cycle until the problem is corrected. Some of the conditions that can cause these to come on are:

- One of the road tires has been replaced with the spare tire. The spare tire does not have a TPMS sensor. The malfunction light and DIC message should go off after the road tire is replaced and the sensor matching process is performed successfully. See “TPMS Sensor Matching Process” later in this section.
- The TPMS sensor matching process was not done or not completed successfully after rotating the tires. The malfunction light and the DIC message should go off after successfully completing the sensor matching process. See "TPMS Sensor Matching Process" later in this section.
- One or more TPMS sensors are missing or damaged. The malfunction light and the DIC message should go off when the TPMS sensors are installed and the sensor matching process is performed successfully. See your dealer for service.
- Replacement tires or wheels do not match the original equipment tires or wheels. Tires and wheels other than those recommended could prevent the TPMS from functioning properly. See *Buying New Tires* ⇨ *302*.
- Operating electronic devices or being near facilities using radio wave frequencies similar to the TPMS could cause the TPMS sensors to malfunction.

If the TPMS is not functioning properly it cannot detect or signal a low tire pressure condition. See your dealer for service if the TPMS malfunction light and DIC message come on and stay on.

Tire Fill Alert (If Equipped)

This feature provides visual and audible alerts outside the vehicle to help when inflating an underinflated tire to the recommended cold tire pressure.

When the low tire pressure warning light comes on:

1. Park the vehicle in a safe, level place.
2. Set the parking brake firmly.
3. Place the vehicle in P (Park).
4. Add air to the tire that is underinflated. The turn signal lamp will flash.

   When the recommended pressure is reached, the horn sounds once and the turn signal lamp will stop flashing and briefly turn solid.

Repeat these steps for all underinflated tires that have illuminated the low tire pressure warning light.

⚠ Warning

Overinflating a tire could cause the tire to rupture and you or others could be injured. Do not exceed the maximum pressure listed on the tire sidewall. See *Tire Sidewall Labeling* ⇨ *289* and *Vehicle Load Limits* ⇨ *197*.

If the tire is overinflated by more than 35 kPa (5 psi), the horn will sound multiple times and the turn signal lamp will continue to flash for several seconds after filling stops. To release and correct the pressure, while the turn signal lamp is still flashing, briefly press the center of the valve stem. When the recommended pressure is reached, the horn sounds once.

If the turn signal lamp does not flash within 15 seconds after starting to inflate the tire, the tire fill alert has not been activated or is not working.

If the hazard warning flashers are on, the tire fill alert visual feedback will not work properly.

The TPMS will not activate the tire fill alert properly under the following conditions:

- There is interference from an external device or transmitter.
- The air pressure from the inflation device is not sufficient to inflate the tire.
- There is a malfunction in the TPMS.
- There is a malfunction in the horn or turn signal lamps.
- The identification code of the TPMS sensor is not registered to the system.
- The battery of the TPMS sensor is low.

If the tire fill alert does not operate due to TPMS interference, move the vehicle about 1 m (3 ft) back or forward and try again. If the tire fill alert feature is not working, use a tire pressure gauge.

TPMS Sensor Matching Process

Each TPMS sensor has a unique identification code. The identification code needs to be matched to a new tire/wheel position after rotating the vehicle's tires or replacing one or more of the TPMS sensors. The TPMS sensor matching process should also be performed after replacing a spare tire with a road tire containing the TPMS sensor. The malfunction light and the DIC message should go off at the next ignition cycle. The sensors are matched to the tire/wheel positions, using a TPMS relearn tool, in the following order: driver side front tire, passenger side front tire, passenger side rear tire, and driver side rear tire. See your dealer for service or to purchase a relearn tool. A TPMS relearn tool can also be purchased. See Tire Pressure Monitor Sensor Activation Tool at www.gmtoolsandequipment.com or call 1-800-GM TOOLS (1-800-468-6657).

There are two minutes to match the first tire/wheel position, and five minutes overall to match all four tire/wheel positions. If it takes longer, the matching process stops and must be restarted.

The TPMS sensor matching process is:

1. Set the parking brake.
2. Place the vehicle in Service Mode. See *Ignition Positions* ⇨ *200*.
3. Make sure the Tire Pressure info page option is turned on. The info pages on the DIC can be turned on and off through the Options menu. See *Driver Information Center (DIC) (Base and Midlevel)* ⇨ *107* or *Driver Information Center (DIC) (Uplevel)* ⇨ *110*.

4. Use the DIC controls on the right side of the steering wheel to scroll to the Tire Pressure screen under the DIC info page.
5. Press and hold ✓ in the center of the DIC controls.

   The horn sounds twice to signal the receiver is in relearn mode and the TIRE LEARNING ACTIVE message displays on the DIC display.
6. Start with the driver side front tire.
7. Place the relearn tool against the tire sidewall, near the valve stem. Then press the button to activate the TPMS sensor. A horn chirp confirms that the sensor identification code has been matched to this tire and wheel position.
8. Proceed to the passenger side front tire, and repeat the procedure in Step 7.
9. Proceed to the passenger side rear tire, and repeat the procedure in Step 7.
10. Proceed to the driver side rear tire, and repeat the procedure in Step 7. The horn sounds two times to indicate the sensor identification code has been matched to the driver side rear tire, and the TPMS sensor matching process is no longer active. The TIRE LEARNING ACTIVE message on the DIC display goes off.
11. Turn the vehicle off.
12. Set all four tires to the recommended air pressure level as indicated on the Tire and Loading Information label.

Tire Inspection

We recommend that the tires, including the spare tire, if the vehicle has one, be inspected for signs of wear or damage at least once a month.

Replace the tire if:

- The indicators at three or more places around the tire can be seen.
- There is cord or fabric showing through the tire's rubber.
- The tread or sidewall is cracked, cut, or snagged deep enough to show cord or fabric.
- The tire has a bump, bulge, or split.
- The tire has a puncture, cut, or other damage that cannot be repaired well because of the size or location of the damage.

Tire Rotation

Tires should be rotated every 12 000 km (7,500 mi). See *Maintenance Schedule* ⇨ *332*.

Tires are rotated to achieve a more uniform wear for all tires. The first rotation is the most important.

Anytime unusual wear is noticed, rotate the tires as soon as possible, check for proper tire inflation pressure, and check for damaged tires or wheels. If the unusual wear continues after the rotation, check the wheel alignment. See *When It Is Time for New Tires* ⇨ *301* and *Wheel Replacement* ⇨ *305*.

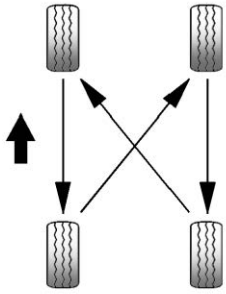

Use this rotation pattern when rotating the tires.

Do not include the compact spare tire in the tire rotation.

Adjust the front and rear tires to the recommended inflation pressure on the Tire and Loading Information label after the tires have been rotated. See *Tire Pressure* ⇨ *294* and *Vehicle Load Limits* ⇨ *197*.

Reset the Tire Pressure Monitor System. See *Tire Pressure Monitor Operation* ⇨ *297*.

Check that all wheel nuts are properly tightened. See "Wheel Nut Torque" under *Capacities and Specifications* ⇨ *345*, and "Removing the Flat Tire and Installing the Spare Tire" under *Tire Changing* ⇨ *313*.

⚠ Warning

Rust or dirt on a wheel, or on the parts to which it is fastened, can cause wheel nuts to become loose over time. The wheel could come off and cause a crash. When changing a wheel, remove any rust or dirt from places where the wheel attaches to the vehicle. In an emergency, a cloth or paper towel can be used; however, use a scraper or wire brush later to remove all rust or dirt.

Lightly coat the inner diameter of the wheel hub opening with wheel bearing grease after a wheel change or tire rotation to prevent corrosion or rust buildup.

⚠ Warning

Do not apply grease to the wheel mounting surface, wheel conical seats, or the wheel nuts or bolts. Grease applied to these areas could cause a wheel to become loose or come off, resulting in a crash.

When It Is Time for New Tires

Factors, such as maintenance, temperatures, driving speeds, vehicle loading, and road conditions affect the wear rate of the tires.

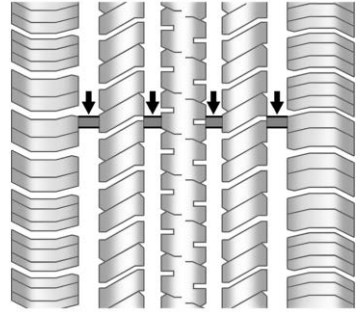

Treadwear indicators are one way to tell when it is time for new tires. Treadwear indicators appear when the tires have only

1.6 mm (1/16 in) or less of tread remaining. See *Tire Inspection* ⇨ *300* and *Tire Rotation* ⇨ *300* for additional information.

The rubber in tires ages over time. This also applies to the spare tire, if the vehicle has one, even if it is never used. Multiple factors including temperatures, loading conditions, and inflation pressure maintenance affect how fast aging takes place. GM recommends that tires, including the spare if equipped, be replaced after six years, regardless of tread wear. To identify the age of a tire, use the tire manufacture date, which is the last four digits of the DOT Tire Identification Number (TIN) molded into one side of the tire sidewall. The last four digits of the TIN indicate the tire manufactured date. The first two digits represent the week and the last two digits, the year. For example, the third week of the year 2020 would have a 4-digit DOT date of 0320. Week 01 is the first full week (Sunday through Saturday) of each year.

Vehicle Storage

Tires age when stored normally mounted on a parked vehicle. Park a vehicle that will be stored for at least a month in a cool, dry, clean area away from direct sunlight to slow aging. This area should be free of grease, gasoline, or other substances that can deteriorate rubber.

Parking for an extended period can cause flat spots on the tires that may result in vibrations while driving. When storing a vehicle for at least a month, remove the tires or raise the vehicle to reduce the weight from the tires.

Buying New Tires

GM has developed and matched specific tires for the vehicle. The original equipment tires installed were designed to meet General Motors Tire Performance Criteria Specification (TPC Spec) system rating. When replacement tires are needed, GM strongly recommends buying tires with the same TPC Spec rating.

GM's exclusive TPC Spec system considers over a dozen critical specifications that impact the overall performance of the vehicle, including brake system performance, ride and handling, traction control, and tire pressure monitoring performance. GM's TPC Spec number is molded onto the tire's sidewall near the tire size. If the tires have an all-season tread design, the TPC Spec number will be followed by MS for mud and snow. See *Tire Sidewall Labeling* ⇨ *289* for additional information.

GM recommends replacing worn tires in complete sets of four. Uniform tread depth on all tires will help to maintain the performance of the vehicle. Braking and handling performance may be adversely affected if all the tires are not replaced at the same time. If proper rotation and maintenance have been done, all four tires should wear out at about the same time. However, if it is necessary to replace only one axle set of worn tires, place the new tires on the rear axle. See *Tire Rotation* ⇨ *300*.

⚠ Warning

Tires could explode during improper service. Attempting to mount or dismount a tire could cause injury or

(Continued)

Warning (Continued)

death. Only your dealer or authorized tire service center should mount or dismount the tires.

⚠ Warning

Mixing tires of different sizes (other than those originally installed on the vehicle), brands, tread patterns, or types may cause loss of vehicle control, resulting in a crash or other vehicle damage. Use the correct size, brand, and type of tire on all wheels.

⚠ Warning

Using bias-ply tires on the vehicle may cause the wheel rim flanges to develop cracks after many miles of driving. A tire and/or wheel could fail suddenly and cause a crash. Use only radial-ply tires with the wheels on the vehicle.

Winter tires with the same speed rating as the original equipment tires may not be available for H, V, W, Y and ZR speed rated tires. Never exceed the winter tires' maximum speed capability when using winter tires with a lower speed rating.

If the vehicle tires must be replaced with a tire that does not have a TPC Spec number, make sure they are the same size, load range, speed rating, and construction (radial) as the original tires.

The Tire and Loading Information label indicates the original equipment tires on the vehicle. See *Vehicle Load Limits* ⇨ *197*.

Different Size Tires and Wheels

If wheels or tires are installed that are a different size than the original equipment wheels and tires, vehicle performance, including its braking, ride and handling characteristics, stability, and resistance to rollover may be affected. If the vehicle has electronic systems such as antilock brakes, rollover airbags, traction control, electronic stability control, or All-Wheel Drive, the performance of these systems can also be affected.

⚠ Warning

If different sized wheels are used, there may not be an acceptable level of performance and safety if tires not recommended for those wheels are selected. This increases the chance of a crash and serious injury. Only use GM specific wheel and tire systems developed for the vehicle, and have them properly installed by a GM certified technician.

See *Buying New Tires* ⇨ *302* and *Accessories and Modifications* ⇨ *254*.

Uniform Tire Quality Grading

The following information relates to the system developed by the United States National Highway Traffic Safety Administration (NHTSA), which grades tires by treadwear, traction, and temperature performance. This applies only to vehicles sold in the United States. The grades are molded on the sidewalls of most passenger car tires.

The Uniform Tire Quality Grading (UTQG) system does not apply to deep tread, winter tires, compact spare tires, tires with nominal rim diameters of 10 to 12 inches (25 to 30 cm), or to some limited-production tires.

While the tires available on General Motors passenger cars and light trucks may vary with respect to these grades, they must also conform to federal safety requirements and additional General Motors Tire Performance Criteria (TPC) standards.

Quality grades can be found where applicable on the tire sidewall between tread shoulder and maximum section width. For example:

Treadwear 200 Traction AA Temperature A

All Passenger Car Tires Must Conform to Federal Safety Requirements In Addition To These Grades.

Treadwear

The treadwear grade is a comparative rating based on the wear rate of the tire when tested under controlled conditions on a specified government test course. For example, a tire graded 150 would wear one and one-half (1½) times as well on the government course as a tire graded 100. The relative performance of tires depends upon the actual conditions of their use, however, and may depart significantly from the norm due to variations in driving habits, service practices and differences in road characteristics and climate.

Traction

The traction grades, from highest to lowest, are AA, A, B, and C. Those grades represent the tire's ability to stop on wet pavement as measured under controlled conditions on specified government test surfaces of asphalt and concrete. A tire marked C may have poor traction performance. Warning: The traction grade assigned to this tire is based on straight-ahead braking traction tests, and does not include acceleration, cornering, hydroplaning, or peak traction characteristics.

Temperature

The temperature grades are A (the highest), B, and C, representing the tire's resistance to the generation of heat and its ability to dissipate heat when tested under controlled conditions on a specified indoor laboratory test wheel. Sustained high temperature can cause the material of the tire to degenerate and reduce tire life, and excessive temperature can lead to sudden tire failure. The grade C corresponds to a level of performance which all passenger car tires must meet under the Federal Motor Safety Standard No. 109. Grades B and A represent higher levels of performance on the laboratory test wheel than the minimum required by law. Warning: The temperature grade for this tire is established for a tire that is properly inflated and not overloaded. Excessive speed, underinflation, or excessive loading, either separately or in combination, can cause heat buildup and possible tire failure.

Wheel Alignment and Tire Balance

The tires and wheels were aligned and balanced at the factory to provide the longest tire life and best overall performance. Adjustments to wheel alignment and tire balancing are not necessary on a regular basis. Consider an alignment check if there is unusual tire wear or the vehicle is significantly pulling to one side or the other. Some slight pull to the left or right, depending on the crown of the road and/or other road surface variations such as troughs or ruts, is normal. If the vehicle is vibrating when driving on a smooth road, the tires and wheels may need to be rebalanced. See your dealer for proper diagnosis.

Wheel Replacement

Replace any wheel that is bent, cracked, or badly rusted or corroded. If wheel nuts keep coming loose, the wheel, wheel bolts, and wheel nuts should be replaced. If the wheel leaks air, replace it. Some aluminum wheels can be repaired. See your dealer if any of these conditions exist.

Your dealer will know the kind of wheel that is needed.

Each new wheel should have the same load-carrying capacity, diameter, width, offset, and be mounted the same way as the one it replaces.

Replace wheels, wheel bolts, wheel nuts, or Tire Pressure Monitor System (TPMS) sensors with new GM original equipment parts.

⚠ Warning

Using the wrong replacement wheels, wheel bolts, or wheel nuts can be dangerous. It could affect the braking and handling of the vehicle. Tires can lose air, and cause loss of control, causing a crash. Always use the correct wheel, wheel bolts, and wheel nuts for replacement.

Caution

The wrong wheel can also cause problems with bearing life, brake cooling, speedometer or odometer calibration, headlamp aim, bumper height, vehicle ground clearance, and tire or tire chain clearance to the body and chassis.

Used Replacement Wheels

⚠ Warning

Replacing a wheel with a used one is dangerous. How it has been used or how far it has been driven may be unknown. It could fail suddenly and cause a crash. When replacing wheels, use a new GM original equipment wheel.

Tire Chains

⚠ Warning

If the vehicle has 235/55R20 or 265/45R21 size tires, do not use tire chains. There is not enough clearance. Tire chains used on a vehicle without the proper amount of clearance can cause damage to the brakes, suspension, or other vehicle parts. The area damaged by the tire chains could cause loss of control and a crash. Use another type of traction device only if its manufacturer recommends it for the vehicle's tire size combination and road conditions. Follow that manufacturer's instructions. To avoid vehicle damage, drive slow and readjust or remove the

(Continued)

Warning (Continued)

traction device if it contacts the vehicle. Do not spin the wheels. If traction devices are used, install them on the front tires.

Caution

If the vehicle is equipped with a tire size other than 235/55R20 or 265/45R21 use tire chains only where legal and only when necessary. Use low profile chains that add no more than 12 mm thickness to the tire tread and inner sidewall. Use chains that are the proper size for the tires. Install them on the tires of the front axle. Do not use chains on the tires of the rear axle. Tighten them as tightly as possible with the ends securely fastened. Drive slowly and follow the chain manufacturer's instructions. If the chains contact the vehicle, stop and retighten them. If the contact continues, slow down until it stops. Driving too fast or spinning the wheels with chains on will damage the vehicle.

If a Tire Goes Flat

It is unusual for a tire to blow out while driving, especially if the tires are maintained properly. See *Tires* ⇨ *287*. If air goes out of a tire, it is much more likely to leak out slowly. But if there is ever a blowout, here are a few tips about what to expect and what to do:

If a front tire fails, the flat tire creates a drag that pulls the vehicle toward that side. Take your foot off the accelerator pedal and grip the steering wheel firmly. Steer to maintain lane position, and then gently brake to a stop, well off the road, if possible.

A rear blowout, particularly on a curve, acts much like a skid and may require the same correction as used in a skid. Stop pressing the accelerator pedal and steer to straighten the vehicle. It may be very bumpy and noisy. Gently brake to a stop, well off the road, if possible.

⚠ Warning

Driving on a flat tire will cause permanent damage to the tire. Re-inflating a tire after it has been driven

(Continued)

Warning (Continued)

on while severely underinflated or flat may cause a blowout and a serious crash. Never attempt to re-inflate a tire that has been driven on while severely underinflated or flat. Have your dealer or an authorized tire service center repair or replace the flat tire as soon as possible.

⚠ Warning

Lifting a vehicle and getting under it to do maintenance or repairs is dangerous without the appropriate safety equipment and training. If a jack is provided with the vehicle, it is designed only for changing a flat tire. If it is used for anything else, you or others could be badly injured or killed if the vehicle slips off the jack. If a jack is provided with the vehicle, only use it for changing a flat tire.

If a tire goes flat, avoid further tire and wheel damage by driving slowly to a level place, well off the road, if possible. Turn on the hazard warning flashers. See *Hazard Warning Flashers* ⇨ *124*.

⚠ Warning

Changing a tire can be dangerous. The vehicle can slip off the jack and roll over or fall causing injury or death. Find a level place to change the tire. To help prevent the vehicle from moving:

1. Set the parking brake firmly.
2. Put an automatic transmission in P (Park) or a manual transmission in 1 (First) or R (Reverse).
3. Turn off the engine and do not restart while the vehicle is raised.
4. Do not allow passengers to remain in the vehicle.
5. Place wheel blocks, if equipped, on both sides of the tire at the opposite corner of the tire being changed.

This vehicle may come with a jack and spare tire or a tire sealant and compressor kit. To use the jacking equipment to change a spare tire safely, follow the instructions below. Then see *Tire Changing* ⇨ *313*. To use the tire sealant and compressor kit, see *Tire Sealant and Compressor Kit* ⇨ *307*.

When the vehicle has a flat tire (2), use the following example as a guide to assist you in the placement of wheel blocks (1), if equipped.

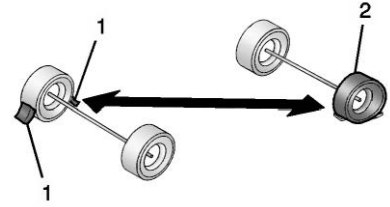

1. Wheel Block (If Equipped)
2. Flat Tire

The following information explains how to repair or change a tire.

Tire Sealant and Compressor Kit

⚠ Warning

Idling a vehicle in an enclosed area with poor ventilation is dangerous. Engine exhaust may enter the vehicle. Engine exhaust contains carbon monoxide (CO) which cannot be seen or smelled. It can cause unconsciousness and even death.

(Continued)

Warning (Continued)

Never run the engine in an enclosed area that has no fresh air ventilation. For more information, see *Engine Exhaust* ⇨ *207*.

⚠ Warning

Overinflating a tire could cause the tire to rupture and you or others could be injured. Be sure to read and follow the tire sealant and compressor kit instructions and inflate the tire to its recommended pressure. Do not exceed the recommended pressure.

⚠ Warning

Storing the tire sealant and compressor kit or other equipment in the passenger compartment of the vehicle could cause injury. In a sudden stop or collision, loose equipment could strike someone. Store the tire sealant and compressor kit in its original location.

If this vehicle has a tire sealant and compressor kit, there may not be a spare tire or tire changing equipment, and on some vehicles there may not be a place to store a tire.

The tire sealant and compressor can be used to temporarily seal punctures up to 6 mm (0.25 in) in the tread area of the tire. It can also be used to inflate an underinflated tire.

If the tire has been separated from the wheel, has damaged sidewalls, or has a large puncture, the tire is too severely damaged for the tire sealant and compressor kit to be effective. See *Roadside Assistance Program* ⇨ *352*.

Read and follow all of the tire sealant and compressor kit instructions.

The kit includes:

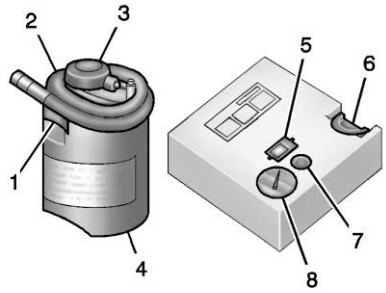

1. Sealant Canister Inlet Valve
2. Sealant/Air Hose
3. Base of Sealant Canister
4. Tire Sealant Canister
5. On/Off Button
6. Slot on Top of Compressor
7. Pressure Deflation Button
8. Pressure Gauge

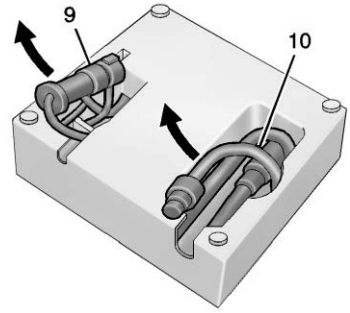

9. Power Plug
10. Air Only Hose

Tire Sealant

Read and follow the safe handling instructions on the label adhered to the tire sealant canister (4).

Check the tire sealant expiration date on the tire sealant canister. The tire sealant canister (4) should be replaced before its expiration date. Replacement tire sealant canisters are available at your local dealer.

There is only enough sealant to seal one tire. After usage, the tire sealant canister must be replaced.

Using the Tire Sealant and Compressor Kit to Temporarily Seal and Inflate a Punctured Tire

When using the tire sealant and compressor kit during cold temperatures, warm the kit in a heated environment for five minutes. This will help to inflate the tire faster.

If a tire goes flat, avoid further tire and wheel damage by driving slowly to a level place. Turn on the hazard warning flashers. See *Hazard Warning Flashers* ⇨ *124*.

See *If a Tire Goes Flat* ⇨ *306* for other important safety warnings.

Do not remove any objects that have penetrated the tire.

1. Remove the tire sealant canister (4) and compressor from its storage location. See *Storing the Tire Sealant and Compressor Kit* ⇨ *313*.
2. Remove the air only hose (10) and the power plug (9) from the bottom of the compressor.
3. Place the compressor on the ground near the flat tire.

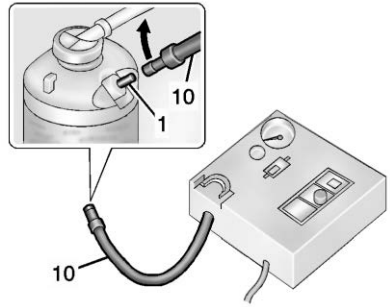

4. Attach the air only hose (10) to the sealant canister inlet valve (1) by turning it clockwise until tight.

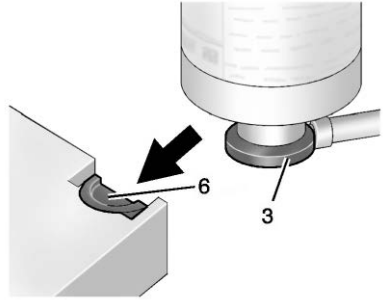

5. Slide the base of the tire sealant canister (3) into the slot on the top of the compressor (6) to hold it upright.

   Make sure the tire valve stem is positioned close to the ground so the hose will reach it.
6. Remove the valve stem cap from the flat tire by turning it counterclockwise.

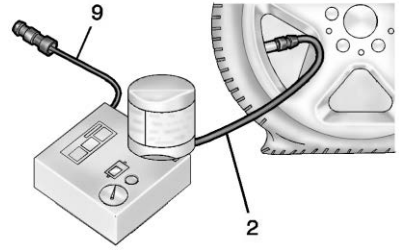

7. Attach the sealant/air hose (2) to the tire valve stem by turning it clockwise until tight.
8. Plug the power plug (9) into the accessory power outlet in the vehicle. Unplug all items from other accessory power outlets. See *Power Outlets* ⇨ *86*.

If the vehicle has an accessory power outlet, do not use the cigarette lighter.

If the vehicle only has a cigarette lighter, use the cigarette lighter.

Do not pinch the power plug cord in the door or window.

9. Start the vehicle. The vehicle must be running while using the air compressor.
10. Press the on/off button (5) to turn the tire sealant and compressor kit on.

    The compressor will inject sealant and air into the tire.

    The pressure gauge (8) will initially show a high pressure while the compressor pushes the sealant into the tire. Once the sealant is completely dispersed into the tire, the pressure will quickly drop and start to rise again as the tire inflates with air only.
11. Inflate the tire to the recommended inflation pressure using the pressure gauge (8). The recommended inflation pressure can be found on the Tire and Loading Information label. See *Tire Pressure* ⇨ *294*.

    The pressure gauge (8) may read higher than the actual tire pressure while the compressor is on. Turn the compressor off to get an accurate pressure reading. The compressor may be turned on/off until the correct pressure is reached.

Caution

If the recommended pressure cannot be reached after approximately 25 minutes, the vehicle should not be driven farther. The tire is too severely damaged and the tire sealant and compressor kit cannot inflate the tire. Remove the power plug from the accessory power outlet and unscrew the inflating hose from the tire valve. See *Roadside Assistance Program* ⇨ *352*.

12. Press the on/off button (5) to turn the tire sealant and compressor kit off.

    The tire is not sealed and will continue to leak air until the vehicle is driven and the sealant is distributed in the tire. Therefore, Steps 13–21 must be done immediately after Step 12.

    Be careful while handling the tire sealant and compressor kit as it could be warm after usage.
13. Unplug the power plug (9) from the accessory power outlet in the vehicle.
14. Turn the sealant/air hose (2) counterclockwise to remove it from the tire valve stem.
15. Replace the tire valve stem cap.
16. Remove the tire sealant canister (4) from the slot on top of the compressor (6).
17. Turn the air only hose (10) counterclockwise to remove it from the tire sealant canister inlet valve (1).
18. Turn the sealant/air hose (2) clockwise onto the sealant canister inlet valve (1) to prevent sealant leakage.
19. Return the air only hose (10) and power plug (9) back to their original storage location.

20. If the flat tire was able to inflate to the recommended inflation pressure, remove the maximum speed label from the sealant canister and place it in a highly visible location.

Do not exceed the speed on this label until the damaged tire is repaired or replaced.

21. Return the equipment to its original storage location in the vehicle.
22. Immediately drive the vehicle 8 km (5 mi) to distribute the sealant in the tire.
23. Stop at a safe location and check the tire pressure. Refer to Steps 1–10 under "Using the Tire Sealant and Compressor Kit without Sealant to Inflate a Tire (Not Punctured)."

    If the tire pressure has fallen more than 68 kPa (10 psi) below the recommended inflation pressure, stop driving the vehicle. The tire is too severely damaged and the tire sealant cannot seal the tire. See *Roadside Assistance Program* ⇨ *352*.

    If the tire pressure has not dropped more than 68 kPa (10 psi) from the recommended inflation pressure, inflate the tire to the recommended inflation pressure.
24. Wipe off any sealant from the wheel, tire, or vehicle.
25. Dispose of the used tire sealant canister (4) at a local dealer or in accordance with local state codes and practices.
26. Replace it with a new canister available from your dealer.
27. After temporarily sealing a tire using the tire sealant and compressor kit, take the vehicle to an authorized dealer within 161 km (100 mi) of driving to have the tire repaired or replaced.

Using the Tire Sealant and Compressor Kit without Sealant to Inflate a Tire (Not Punctured)

The kit includes:

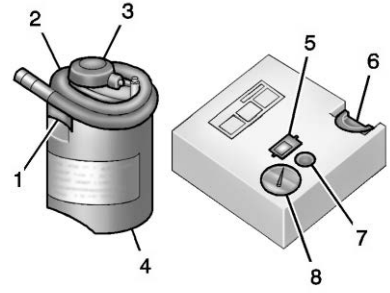

1. Sealant Canister Inlet Valve
2. Sealant/Air Hose
3. Base of Sealant Canister
4. Tire Sealant Canister
5. On/Off Button
6. Slot on Top of Compressor
7. Pressure Deflation Button
8. Pressure Gauge

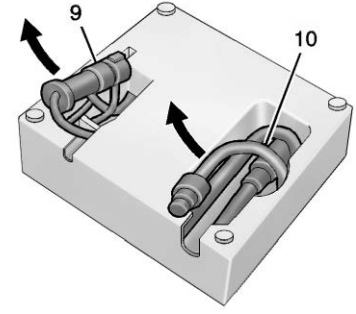

9. Power Plug
10. Air Only Hose

If a tire goes flat, avoid further tire and wheel damage by driving slowly to a level place. Turn on the hazard warning flashers. See *Hazard Warning Flashers* ⇨ *124*.

See *If a Tire Goes Flat* ⇨ *306* for other important safety warnings.

1. Remove the compressor from its storage location. See *Storing the Tire Sealant and Compressor Kit* ⇨ *313*.
2. Remove the air only hose (10) and the power plug (9) from the bottom of the compressor.
3. Place the compressor on the ground near the flat tire.

   Make sure the tire valve stem is positioned close to the ground so the hose will reach it.
4. Remove the valve stem cap from the flat tire by turning it counterclockwise.
5. Attach the air only hose (10) to the tire valve stem by turning it clockwise until tight.
6. Plug the power plug (9) into the accessory power outlet in the vehicle. Unplug all items from other accessory power outlets. See *Power Outlets* ⇨ *86*.

   If the vehicle has an accessory power outlet, do not use the cigarette lighter.

   If the vehicle only has a cigarette lighter, use the cigarette lighter.

   Do not pinch the power plug cord in the door or window.
7. Start the vehicle. The vehicle must be running while using the air compressor.
8. Press the on/off button (5) to turn the tire sealant and compressor kit on.

   The compressor will inflate the tire with air only.
9. Inflate the tire to the recommended inflation pressure using the pressure gauge (8). The recommended inflation pressure can be found on the Tire and Loading Information label. See *Tire Pressure* ⇨ *294*.

   The pressure gauge (8) may read higher than the actual tire pressure while the compressor is on. Turn the compressor off to get an accurate pressure reading. The compressor may be turned on/off until the correct pressure is reached.

Caution

If the recommended pressure cannot be reached after approximately 25 minutes, the vehicle should not be driven farther. The tire is too severely damaged and the tire sealant and compressor kit cannot inflate the tire. Remove the power plug from the accessory power outlet and

(Continued)

Caution (Continued)

unscrew the inflating hose from the tire valve. See *Roadside Assistance Program* ⇨ *352*.

10. Press the on/off button (5) to turn the tire sealant and compressor kit off.

    Be careful while handling the compressor as it could be warm after usage.
11. Unplug the power plug (9) from the accessory power outlet in the vehicle.
12. Turn the air only hose (10) counterclockwise to remove it from the tire valve stem.
13. Replace the tire valve stem cap.
14. Return the air only hose (10) and power plug (9) back to their original storage location.
15. Return the equipment to its original storage location in the vehicle.

The tire sealant and compressor kit has accessory adapters located in a compartment on the bottom of its housing that can be used to inflate air mattresses, balls, etc.

Storing the Tire Sealant and Compressor Kit

To store the tire sealant and compressor kit, reverse the steps for removing it.

Tire Changing

Removing the Spare Tire and Tools

To access the spare tire and tools:

1. Open the liftgate. See *Liftgate* ⇨ *18*.
2. Remove the cargo management system divider, if equipped. See "Rail and Divider Option" under *Cargo Management System* ⇨ *79*.
3. Lift the load floor. Use the hook to hold the load floor open. See *Cargo Management System* ⇨ *79*.

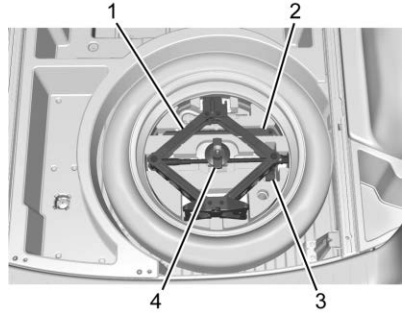

4. Turn the wing nut (4) counterclockwise to remove the jack (1), wheel wrench (2), and strap (3). Place the tool container near the tire being changed.

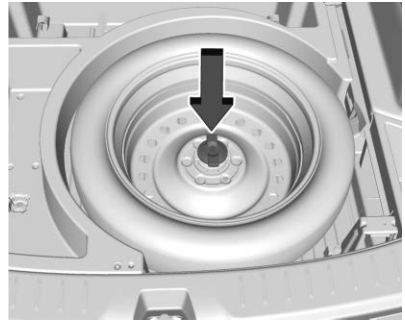

5. Remove the nut retaining the spare tire.
6. Remove the spare tire and place it next to the tire being changed.

Removing the Flat Tire and Installing the Spare Tire

1. Do a safety check before proceeding. See *If a Tire Goes Flat* ⇨ *306*.

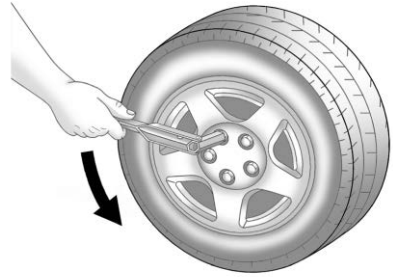

2. Turn the wheel wrench counterclockwise to loosen all the wheel nuts, but do not remove them yet.
3. Place the jack near the flat tire.

Caution

Make sure that the jack lift head is in the correct position or you may damage your vehicle. The repairs would not be covered by your warranty.

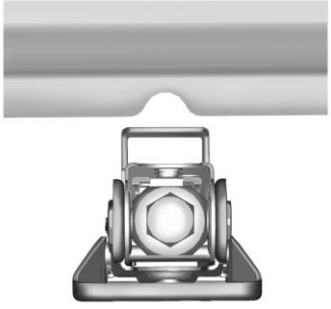

4. Position the jack lift head at the jack location nearest the flat tire.

   The jacking location is indicated by a half circle notch in the metal flange. The jack must not be used in any other position.

⚠ Warning

Getting under a vehicle when it is lifted on a jack is dangerous. If the vehicle slips off the jack, you could be badly injured or killed. Never get under a vehicle when it is supported only by a jack.

⚠ Warning

Raising the vehicle with the jack improperly positioned can damage the vehicle and even make the vehicle fall. To help avoid personal injury and vehicle damage, be sure to fit the jack lift head into the proper location before raising the vehicle.

⚠ Warning

Lifting a vehicle and getting under it to do maintenance or repairs is dangerous without the appropriate safety equipment and training. If a jack is provided with the vehicle, it is designed only for changing a flat tire. If it is used for anything else, you or others could be

(Continued)

Warning (Continued)

badly injured or killed if the vehicle slips off the jack. If a jack is provided with the vehicle, only use it for changing a flat tire.

Caution

Using a jack to raise the vehicle without positioning it correctly could damage your vehicle. When raising your vehicle on a jack, be sure to position it correctly under the frame and avoid contact with the plastic molding.

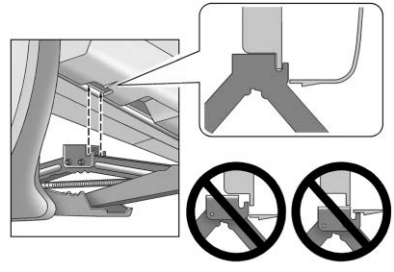

5. Turn the wheel wrench clockwise to raise the jack until the slot in the jack lift head fits into the metal flange located behind the cut out on the plastic molding.

   Do not raise the vehicle yet.
6. Put the compact spare tire near you.
7. Raise the vehicle by turning the wheel wrench clockwise in the jack. Raise the vehicle far enough off the ground so there is enough room for the spare tire to fit under the wheel well.

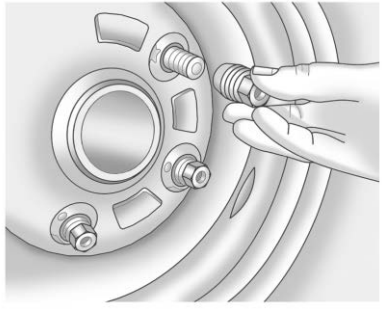

8. Remove all of the wheel nuts.
9. Remove the flat tire.

⚠ Warning

Rust or dirt on a wheel, or on the parts to which it is fastened, can cause wheel nuts to become loose over time. The wheel could come off and cause a crash. When changing a wheel, remove any rust or dirt from places where the wheel attaches to the vehicle. In an emergency, a cloth or paper towel can be used; however, use a scraper or wire brush later to remove all rust or dirt.

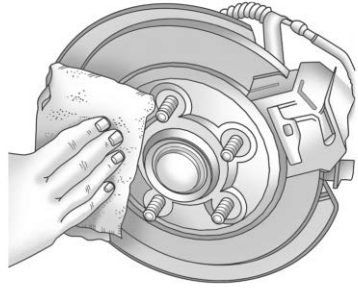

10. Remove any rust or dirt from the wheel bolts, mounting surfaces, and spare wheel.
11. Place the compact spare tire on the wheel-mounting surface.

⚠ Warning

Never use oil or grease on bolts or nuts because the nuts might come loose. The vehicle's wheel could fall off, causing a crash.

12. Reinstall the wheel nuts. Tighten each nut by hand until the wheel is held against the hub.
13. Lower the vehicle by turning the jack handle counterclockwise.

⚠ Warning

Wheel nuts that are improperly or incorrectly tightened can cause the wheels to become loose or come off. The wheel nuts should be tightened with a torque wrench to the proper torque specification after replacing. Follow the torque specification supplied by the aftermarket manufacturer when using

(Continued)

Warning (Continued)

accessory locking wheel nuts. See *Capacities and Specifications* ⇨ *345* for original equipment wheel nut torque specifications.

Caution

Improperly tightened wheel nuts can lead to brake pulsation and rotor damage. To avoid expensive brake repairs, evenly tighten the wheel nuts in the proper sequence and to the proper torque specification. See *Capacities and Specifications* ⇨ *345* for the wheel nut torque specification.

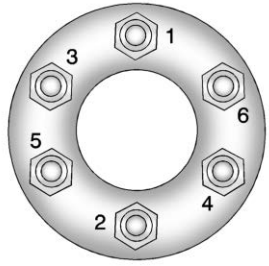

14. Tighten the wheel nuts firmly in a crisscross sequence, as shown.
15. Lower the jack all the way and remove the jack from under the vehicle.
16. Tighten the wheel nuts firmly with the wheel wrench.

If equipped, when reinstalling the wheel cover or center cap on the full-size tire, tighten all six plastic caps hand snug with the aid of the wheel wrench and tighten them with the wheel wrench an additional one-quarter of a turn.

Caution

Wheel covers will not fit on the vehicle's compact spare. If you try to put a wheel cover on the compact spare, the cover or the spare could be damaged.

Storing a Flat or Spare Tire and Tools

⚠ Warning

Storing a jack, a tire, or other equipment in the passenger compartment of the vehicle could cause injury. In a sudden stop or collision, loose equipment could strike someone. Store all these in the proper place.

To store the flat or spare tire and tools:

1. Open the liftgate. See *Liftgate* ⇨ *18*.
2. Put back all tools as they were stored in the rear storage compartment and put the compartment cover back on.
3. Place the tire, lying flat, in the rear storage compartment.

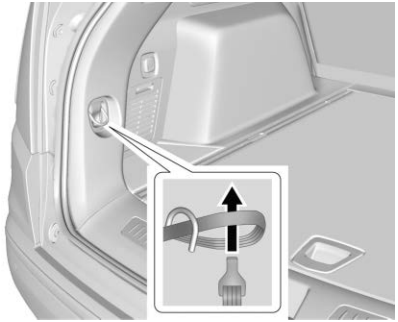

4. Place the loop end of the strap through the cargo tie-down. Place the hook end of the strap through the loop and pull it until the strap is fastened securely to the tie-down.

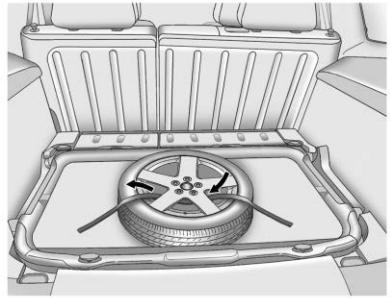

5. Route the strap hook through the wheel, as shown.
6. Attach the strap to the other cargo tie-down in the rear of the vehicle.
7. Tighten the strap and secure it using the buckle.

The compact spare is for temporary use only. Replace the compact spare tire with a full-size tire as soon as you can.

Compact Spare Tire

⚠ Warning

Driving with more than one compact spare tire at a time could result in loss of braking and handling. This could lead to a crash and you or others could be injured. Use only one compact spare tire at a time.

If this vehicle has a compact spare tire, it was fully inflated when new; however, it can lose air over time. Check the inflation pressure regularly. It should be 420 kPa (60 psi).

Stop as soon as possible and check that the spare tire is correctly inflated after being installed on the vehicle. The compact spare tire is designed for temporary use only. The vehicle will perform differently with the spare tire installed and it is recommended that the vehicle speed be limited to 80 km/h (50 mph). To conserve the tread of the spare tire, have the standard tire repaired or replaced as soon as convenient and return the spare tire to the storage area.

When using a compact spare tire, the AWD (if equipped), ABS, and Traction Control systems may engage until the spare tire is recognized by the vehicle, especially on slippery roads. Adjust driving to reduce possible wheel slip.

Caution

When the compact spare is installed, do not take the vehicle through an automatic car wash with guide rails. The compact spare can get caught on the rails which can damage the tire, wheel, and other parts of the vehicle.

Do not use the compact spare on other vehicles.

Do not mix the compact spare tire or wheel with other wheels or tires. They will not fit. Keep the spare tire and its wheel together.

Caution

Tire chains will not fit the compact spare. Using them can damage the vehicle and the chains. Do not use tire chains on the compact spare.

Jump Starting

Jump Starting - North America

For more information about the vehicle battery, see *Battery - North America* ⇨ *274*.

If the battery has run down, try to use another vehicle and some jumper cables to start your vehicle. Be sure to use the following steps to do it safely.

⚠ Warning

WARNING: Battery posts, terminals, and related accessories contain lead and lead compounds, chemicals known to the State of California to cause cancer and birth defects or other reproductive harm. Batteries also contain other chemicals known to the State of California to cause cancer. **WASH HANDS AFTER HANDLING.** For more information go to www.P65Warnings.ca.gov/passenger-vehicle.

See *California Proposition 65 Warning* ⇨ *254* and the back cover.

⚠ Warning

Batteries can hurt you. They can be dangerous because:

- They contain acid that can burn you.
- They contain gas that can explode or ignite.
- They contain enough electricity to burn you.

If you do not follow these steps exactly, some or all of these things can hurt you.

Caution

Ignoring these steps could result in costly damage to the vehicle that would not be covered by the vehicle warranty. Trying to start the vehicle by pushing or pulling it will not work, and it could damage the vehicle.

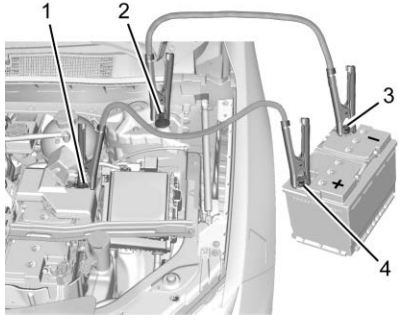

1. Discharged Battery Positive (+) Terminal
2. Discharged Battery Remote Negative (–) Terminal
3. Good Battery Negative (–) Terminal
4. Good Battery Positive (+) Terminal

The jump start positive (+) terminal (1) and the negative remote negative terminal (2) for the discharged battery are on the driver side of the vehicle.

The jump start positive (+) terminal (4) and negative (-) terminal (3) are on the battery of the vehicle providing the jump start.

1. Check the other vehicle. It must have a 12-volt battery with a negative ground system.

Caution

If the other vehicle does not have a 12-volt system with a negative ground, both vehicles can be damaged. Only use a vehicle that has a 12-volt system with a negative ground for jump starting.

2. Position the two vehicles so that they are not touching.
3. Set the parking brake firmly and put the shift lever in P (Park) with an automatic transmission, or Neutral with a manual transmission. See *Shifting Into Park* ⇨ *205*.

Caution

If any accessories are left on or plugged in during the jump starting procedure, they could be damaged. The repairs would not be covered by the vehicle warranty. Whenever possible, turn off or unplug all accessories on either vehicle when jump starting.

4. Turn the ignition off. Turn off all lights and accessories in both vehicles, except the hazard warning flashers if needed.

⚠ Warning

An electric fan can start up even when the engine is not running and can injure you. Keep hands, clothing, and tools away from any underhood electric fan.

⚠ Warning

Using a match near a battery can cause battery gas to explode. People have been hurt doing this, and some have been blinded. Use a flashlight if you need more light.

Battery fluid contains acid that can burn you. Do not get it on you. If you accidentally get it in your eyes or on your skin, flush the place with water and get medical help immediately.

⚠ Warning

Fans or other moving engine parts can injure you badly. Keep your hands away from moving parts once the engine is running.

5. Connect one end of the red positive (+) cable to the positive (+) terminal on the discharged battery.
6. Connect the other end of the red positive (+) cable to the positive (+) terminal of the good battery.
7. Connect one end of the black negative (–) cable to the negative (–) terminal of the good battery.
8. Connect the other end of the black negative (–) cable to the remote negative (–) terminal for the discharged battery.
9. Start the engine in the vehicle with the good battery and run the engine at idle speed for at least four minutes.
10. Try to start the vehicle that had the dead battery. If it will not start after a few tries, it probably needs service.

Caution

If the jumper cables are connected or removed in the wrong order, electrical shorting may occur and damage the vehicle. The repairs would not be covered by the vehicle warranty. Always connect

(Continued)

Caution (Continued)

and remove the jumper cables in the correct order, making sure that the cables do not touch each other or other metal.

Jumper Cable Removal

Reverse the sequence exactly when removing the jumper cables.

After starting the disabled vehicle and removing the jumper cables, allow it to idle for several minutes.

Towing the Vehicle

Caution

Incorrectly towing a disabled vehicle may cause damage. The damage would not be covered by the vehicle warranty. Do not lash or hook to suspension components. Use the proper straps around the tires to secure the vehicle. Do not drag a locked wheel/tire. Use tire skates or dollies under any locked wheel/tire while loading the vehicle. Do not use a sling type lift to tow the vehicle. This could damage the vehicle.

Caution

Improper use of the tow eye can damage the vehicle. If equipped, use the tow eye to load a disabled vehicle onto a flatbed tow truck from a flat road surface, or to move the vehicle a short distance. Use caution and low speeds. The transmission must be in (N) Neutral when moving the vehicle.

GM recommends a flatbed tow truck to transport a disabled vehicle. Use ramps to help reduce approach angles, if necessary. A towed vehicle should have its drive wheels off the ground. Contact Roadside Assistance or a professional towing service if the disabled vehicle must be towed.

Front Attachment Points

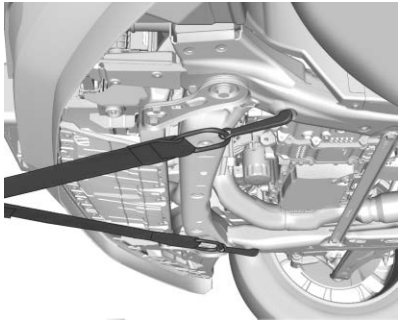

The vehicle is equipped with specific attachment points to be used by the towing provider. These holes may be used to pull the vehicle from a flat road surface onto the flatbed tow truck.

Recreational Vehicle Towing

Recreational vehicle towing means towing the vehicle behind another vehicle, such as behind a motor home. The two most common types of recreational vehicle towing are known as dinghy towing and dolly towing. Dinghy towing is towing the vehicle with all four wheels on the ground. Dolly towing is towing the vehicle with two wheels on the ground and two wheels up on a device known as a dolly.

Here are some important things to consider before recreational vehicle towing:

- Before towing the vehicle, become familiar with the local laws that apply to recreational vehicle towing. These laws may vary by region.
- The towing capacity of the towing vehicle. Be sure to read the tow vehicle manufacturer's recommendations.
- How far the vehicle will be towed. Some vehicles have restrictions on how far and how long they can be towed.
- The proper towing equipment. See your dealer or trailering professional for additional advice and equipment recommendations.
- Whether the vehicle is ready to be towed. Just as preparing the vehicle for a long trip, make sure the vehicle is prepared to be towed.

Caution

Use of a shield mounted in front of the vehicle grille could restrict airflow and cause damage to the transmission. The repairs would not be covered by the vehicle warranty. If using a shield, only use one that attaches to the towing vehicle.

Dinghy Towing

For vehicles being dinghy towed, the vehicle should be run at the beginning of each day and at each RV fuel stop for about five minutes. This will ensure proper lubrication of transmission components.

To tow the vehicle from the front with all four wheels on the ground:

1. Position the vehicle to be towed and secure it to the towing vehicle.
2. Put the vehicle in N (Neutral).
3. Shut the engine off (vehicle will remain in accessory mode).
4. Disconnect the negative (–) terminal connector from the 12-volt battery.
5. Close the hood of the vehicle.

Caution

If the vehicle is towed without performing each of the steps listed under "Dinghy Towing," the automatic transmission could be damaged. Be sure to follow all steps of the dinghy towing procedure prior to and after towing the vehicle.

Caution

If 105 km/h (65 mph) is exceeded while towing the vehicle, it could be damaged. Never exceed 105 km/h (65 mph) while towing the vehicle.

Once the destination is reached:

1. Shift the vehicle to P (Park).
2. Reconnect the negative (–) terminal connector to the 12-volt battery.
3. Start the engine and let it idle for more than three minutes before driving the vehicle.

Caution

Too much or too little fluid can damage the transmission. Be sure that the transmission fluid is at the proper level before towing with all four wheels on the ground.

Caution

Do not tow a vehicle with the front drive wheels on the ground if one of the front tires is a compact spare tire. Towing with two different tire sizes on the front of the vehicle can cause severe damage to the transmission.

Dolly Towing

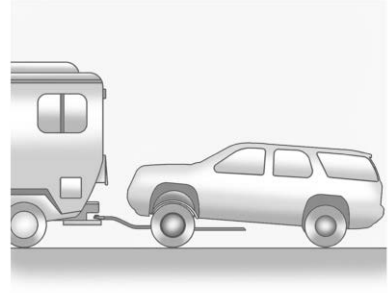

To tow a vehicle from the front with the rear wheels on the ground:

1. Put the front wheels on a dolly.
2. Move the shift lever to P (Park). See *Shifting Into Park* ⇨ *205*.
3. Set the parking brake.
4. Secure the vehicle to the dolly.
5. Follow the dolly manufacturer's instructions for preparing the vehicle and dolly for towing.
6. Release the parking brake.
7. Turn the vehicle off.
8. Disconnect the negative (–) terminal connector from the 12-volt battery.

9. Close the hood of the vehicle.

Towing the Vehicle from the Rear

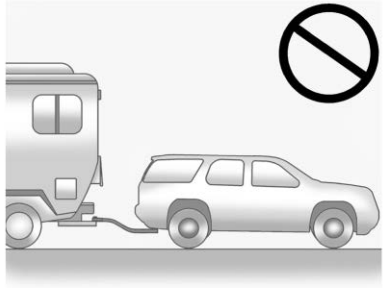

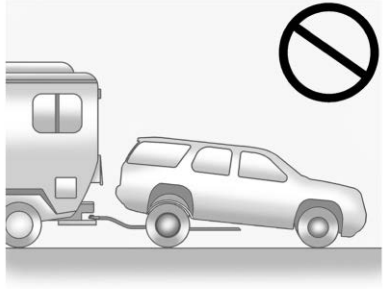

Caution

Towing the vehicle from the rear could damage it. Also, repairs would not be covered by the vehicle warranty. Never have the vehicle towed from the rear.

Do not tow the vehicle from the rear.

Appearance Care

Exterior Care

Locks

Locks are lubricated at the factory. Use a de-icing agent only when absolutely necessary, and have the locks greased after using. See *Recommended Fluids and Lubricants* ⇨ *340*.

Washing the Vehicle

To preserve the vehicle's finish, wash it often and out of direct sunlight.

Caution

Do not use petroleum-based, acidic, or abrasive cleaning agents as they can damage the vehicle's paint, metal,

(Continued)

Caution (Continued)

or plastic parts. If damage occurs, it would not be covered by the vehicle warranty. Approved cleaning products can be obtained from your dealer. Follow all manufacturer directions regarding correct product usage, necessary safety precautions, and appropriate disposal of any vehicle care product.

Caution

Avoid using high-pressure washes closer than 30 cm (12 in) to the surface of the vehicle. Use of power washers exceeding 8 274 kPa (1,200 psi) can result in damage or removal of paint and decals.

If using an automatic car wash, follow the car wash instructions. The windshield wiper and rear window wiper, if equipped, must be off. Remove any accessories that may be damaged or interfere with the car wash equipment.

Rinse the vehicle well, before washing and after, to remove all cleaning agents completely. If they are allowed to dry on the surface, they could stain.

Dry the finish with a soft, clean chamois or an all-cotton towel to avoid surface scratches and water spotting.

Cleaning Underhood Components

> **Caution**
>
> Do not power wash any component under the hood that has this symbol.
>
> This could cause damage that would not be covered by the vehicle warranty.

Solvents or aggressive cleaners may harm underhood components. The usages of these chemicals should be avoided.

Recommend water only.

A pressure washer may be used, but care must be utilized. The following criteria must be followed:

- Water pressure must be kept below 14 000 KPa (2,000 PSI).
- Water temperature must be below 80 °C (180 °F).
- Spray nozzle with a 40 degree wide angle spray pattern or wider must be used.
- Nozzle must be kept at least 30 cm (1 ft) away from all surfaces.

Finish Care

Application of aftermarket clearcoat sealant/wax materials is not recommended.
If painted surfaces are damaged, see your dealer to have the damage assessed and repaired. Foreign materials such as calcium chloride and other salts, ice melting agents, road oil and tar, tree sap, bird droppings, chemicals from industrial chimneys, etc., can damage the vehicle's finish if they remain on painted surfaces. Wash the vehicle as soon as possible. If necessary, use non-abrasive cleaners that are marked safe for painted surfaces to remove foreign matter.

Occasional hand waxing or mild polishing should be done to remove residue from the paint finish. See your dealer for approved cleaning products.

Do not apply waxes or polishes to uncoated plastic, vinyl, rubber, decals, simulated wood, or flat paint as damage can occur.

> **Caution**
>
> Machine compounding or aggressive polishing on a basecoat/clearcoat paint finish may damage it. Use only
>
> (Continued)

> **Caution (Continued)**
>
> non-abrasive waxes and polishes that are made for a basecoat/clearcoat paint finish on the vehicle.

To keep the paint finish looking new, keep the vehicle garaged or covered whenever possible.

Protecting Exterior Bright Metal Moldings

> **Caution**
>
> Failure to clean and protect the bright metal moldings can result in a hazy white finish or pitting. This damage would not be covered by the vehicle warranty.

The bright metal moldings on the vehicle are aluminum, chrome, or stainless steel. To prevent damage always follow these cleaning instructions:

- Be sure the molding is cool to the touch before applying any cleaning solution.
- Use only approved cleaning solutions for aluminum, chrome, or stainless steel. Some cleaners are highly acidic or contain alkaline substances and can damage the moldings.

- Always dilute a concentrated cleaner according to the manufacturer's instructions.
- Do not use cleaners that are not intended for automotive use.
- Use a nonabrasive wax on the vehicle after washing to protect and extend the molding finish.

Cleaning Exterior Lamps/Lenses, Emblems, Decals, and Stripes

Use only lukewarm or cold water, a soft cloth, and a car washing soap to clean exterior lamps, lenses, emblems, decals, and stripes. Follow instructions under "Washing the Vehicle" previously in this section.

Lamp covers are made of plastic, and some have a UV protective coating. Do not clean or wipe them when dry.

Do not use any of the following on lamp covers:

- Abrasive or caustic agents
- Washer fluids and other cleaning agents in higher concentrations than suggested by the manufacturer.
- Solvents, alcohols, fuels, or other harsh cleaners.
- Ice scrapers or other hard items.
- Aftermarket appearance caps or covers while the lamps are illuminated, due to excessive heat generated.

Caution

Failure to clean lamps properly can cause damage to the lamp cover that would not be covered by the vehicle warranty.

Caution

Using wax on low gloss black finish stripes can increase the gloss level and create a non-uniform finish. Clean low gloss stripes with soap and water only.

Air Intakes

Clear debris from the air intakes, between the hood and windshield, when washing the vehicle.

Shutter System

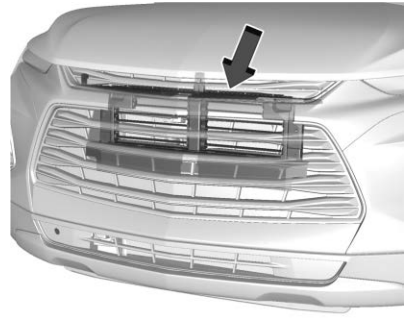

The vehicle may have a shutter system designed to help improve fuel economy. Keep the shutter system clear of debris, snow and ice. If the check engine light is activated, please check to see if the shutter system is clear of debris, snow or ice.

Windshield and Wiper Blades

Clean the outside of the windshield with glass cleaner.

Clean rubber blades using a lint-free cloth or paper towel soaked with windshield washer fluid or a mild detergent. Wash the windshield thoroughly when cleaning the

blades. Bugs, road grime, sap, and a buildup of vehicle wash/wax treatments may cause wiper streaking.

Replace the wiper blades if they are worn or damaged. Damage can be caused by extreme dusty conditions, sand, salt, heat, sun, snow, and ice.

Weatherstrips

Apply weatherstrip lubricant on weatherstrips to make them last longer, seal better, and not stick or squeak. Lubricate weatherstrips at least once a year. Hot, dry climates may require more frequent application. Black marks from rubber material on painted surfaces can be removed by rubbing with a clean cloth. See *Recommended Fluids and Lubricants* ⇨ *340*.

Tires

Use a stiff brush with tire cleaner to clean the tires.

Caution

Using petroleum-based tire dressing products on the vehicle may damage the paint finish and/or tires. When applying a

(Continued)

Caution (Continued)

tire dressing, always wipe off any overspray from all painted surfaces on the vehicle.

Wheels and Wheel Trim

Use a soft, clean cloth with mild soap and water to clean the wheels. After rinsing thoroughly with clean water, dry with a soft, clean towel. A wax may then be applied.

Caution

Chrome wheels and chrome wheel trim may be damaged if the vehicle is not washed after driving on roads that have been sprayed with magnesium chloride or calcium chloride. These are used on roads for conditions such as dust and ice. Always wash the chrome with soap and water after exposure.

Caution

To avoid surface damage on wheels and wheel trim, do not use strong soaps, chemicals, abrasive polishes, cleaners,

(Continued)

Caution (Continued)

or brushes. Use only GM approved cleaners. Do not drive the vehicle through an automatic car wash that uses silicon carbide tire/wheel cleaning brushes. Damage could occur and the repairs would not be covered by the vehicle warranty.

Brake System

Visually inspect brake lines and hoses for proper hook-up, binding, leaks, cracks, chafing, etc. Inspect disc brake pads for wear and rotors for surface condition. Inspect drum brake linings/shoes for wear or cracks. Inspect all other brake parts.

Steering, Suspension, and Chassis Components

Visually inspect steering, suspension, and chassis components for damaged, loose, or missing parts or signs of wear at least once a year.

Inspect power steering for proper electrical connections, binding, cracks, chafing, etc.

Visually check constant velocity joint boots and axle seals for leaks.

Body Component Lubrication

Lubricate all key lock cylinders, hood hinges, liftgate hinges, and the steel fuel door hinges, unless the components are plastic. Applying silicone grease on weatherstrips with a clean cloth will make them last longer, seal better, and not stick or squeak.

Underbody Maintenance

At least twice a year, spring and fall, use plain water to flush any corrosive materials from the underbody. Take care to thoroughly clean any areas where mud and other debris can collect.

Do not directly power wash the transfer case and/or front/rear axle output seals. High pressure water can overcome the seals and contaminate the fluid. Contaminated fluid will decrease the life of the transfer case and/or axles and should be replaced.

Sheet Metal Damage

If the vehicle is damaged and requires sheet metal repair or replacement, make sure the body repair shop applies anti-corrosion material to parts repaired or replaced to restore corrosion protection.

Original manufacturer replacement parts will provide the corrosion protection while maintaining the vehicle warranty.

Finish Damage

Quickly repair minor chips and scratches with touch-up materials available from your dealer to avoid corrosion. Larger areas of finish damage can be corrected in your dealer's body and paint shop.

Chemical Paint Spotting

Airborne pollutants can fall upon and attack painted vehicle surfaces causing blotchy, ring-shaped discolorations, and small, irregular dark spots etched into the paint surface. See “Finish Care” previously in this section.

Interior Care

To prevent dirt particle abrasions, regularly clean the vehicle's interior. Immediately remove any soils. Newspapers or dark garments can transfer color to the vehicle’s interior.

Use a soft bristle brush to remove dust from knobs and crevices on the instrument cluster. Using a mild soap solution, immediately remove hand lotions, sunscreen, and insect repellent from all interior surfaces or permanent damage may result.

Use cleaners specifically designed for the surfaces being cleaned to prevent permanent damage. Apply all cleaners directly to the cleaning cloth. Do not spray cleaners on any switches or controls. Remove cleaners quickly.

Before using cleaners, read and follow all safety instructions on the label. While cleaning the interior, open the doors and windows to get proper ventilation.

To prevent damage, do not clean the interior using the following cleaners or techniques:

- Never use a razor or any other sharp object to remove soil from any interior surface.
- Never use a brush with stiff bristles.
- Never rub any surface aggressively or with too much pressure.
- Do not use laundry detergents or dishwashing soaps with degreasers. For liquid cleaners, use approximately 20 drops per 3.8 L (1 gal) of water. A concentrated soap solution will create

streaks and attract dirt. Do not use solutions that contain strong or caustic soap.

- Do not heavily saturate the upholstery when cleaning.
- Do not use solvents or cleaners containing solvents.

Interior Glass

To clean, use a terry cloth fabric dampened with water. Wipe droplets left behind with a clean dry cloth. If necessary, use a commercial glass cleaner after cleaning with plain water.

Caution
To prevent scratching, never use abrasive cleaners on automotive glass. Abrasive cleaners or aggressive cleaning may damage the rear window defogger.

Cleaning the windshield with water during the first three to six months of ownership will reduce tendency to fog.

Speaker Covers

Vacuum around a speaker cover gently, so that the speaker will not be damaged. Clean spots with water and mild soap.

Coated Moldings

Coated moldings should be cleaned.

- When lightly soiled, wipe with a sponge or soft, lint-free cloth dampened with water.
- When heavily soiled, use warm soapy water.

Fabric/Carpet/Suede

Start by vacuuming the surface using a soft brush attachment. If a rotating vacuum brush attachment is being used, only use it on the floor carpet. Before cleaning, gently remove as much of the soil as possible:

- Gently blot liquids with a paper towel. Continue blotting until no more soil can be removed.
- For solid soils, remove as much as possible prior to vacuuming.

To clean:

1. Saturate a clean, lint-free colorfast cloth with water. Microfiber cloth is recommended to prevent lint transfer to the fabric or carpet.
2. Remove excess moisture by gently wringing until water does not drip from the cleaning cloth.
3. Start on the outside edge of the soil and gently rub toward the center. Fold the cleaning cloth to a clean area frequently to prevent forcing the soil in to the fabric.
4. Continue gently rubbing the soiled area until there is no longer any color transfer from the soil to the cleaning cloth.
5. If the soil is not completely removed, use a mild soap solution followed only by plain water.

If the soil is not completely removed, it may be necessary to use a commercial upholstery cleaner or spot lifter. Test a small hidden area for colorfastness before using a commercial upholstery cleaner or spot lifter. If ring formation occurs, clean the entire fabric or carpet.

After cleaning, use a paper towel to blot excess moisture.

Cleaning High Gloss Surfaces and Vehicle Information and Radio Displays

Use a microfiber cloth on high gloss surfaces or vehicle displays. First, use a soft bristle brush to remove dirt that can scratch the surface. Then gently clean by rubbing with a microfiber cloth. Never use window cleaners

or solvents. Periodically hand wash the microfiber cloth separately, using mild soap. Do not use bleach or fabric softener. Rinse thoroughly and air dry before next use.

Caution

Do not attach a device with a suction cup to the display. This may cause damage and would not be covered by the vehicle warranty.

Instrument Panel, Leather, Vinyl, Other Plastic Surfaces, Low Gloss Paint Surfaces, and Natural Open Pore Wood Surfaces

Use a soft microfiber cloth dampened with water to remove dust and loose dirt. For a more thorough cleaning, use a soft microfiber cloth dampened with a mild soap solution.

Caution

Soaking or saturating leather, especially perforated leather, as well as other interior surfaces, may cause permanent damage. Wipe excess moisture from these surfaces after cleaning and allow

(Continued)

Caution (Continued)

them to dry naturally. Never use heat, steam, or spot removers. Do not use cleaners that contain silicone or wax-based products. Cleaners containing these solvents can permanently change the appearance and feel of leather or soft trim, and are not recommended.

Do not use cleaners that increase gloss, especially on the instrument panel. Reflected glare can decrease visibility through the windshield under certain conditions.

Caution

Use of air fresheners may cause permanent damage to plastics and painted surfaces. If an air freshener comes in contact with any plastic or painted surface in the vehicle, blot immediately and clean with a soft cloth dampened with a mild soap solution. Damage caused by air fresheners would not be covered by the vehicle warranty.

Cargo Cover and Convenience Net

If equipped, wash with warm water and mild detergent. Do not use chlorine bleach. Rinse with cold water, and then dry completely.

Care of Seat Belts

Keep belts clean and dry.

⚠ Warning

Do not bleach or dye seat belt webbing. It may severely weaken the webbing. In a crash, they might not be able to provide adequate protection. Clean and rinse seat belt webbing only with mild soap and lukewarm water. Allow the webbing to dry.

Floor Mats

⚠ Warning

If a floor mat is the wrong size or is not properly installed, it can interfere with the pedals. Interference with the pedals can cause unintended acceleration and/or increased stopping distance which can

(Continued)

Warning (Continued)

cause a crash and injury. Make sure the floor mat does not interfere with the pedals.

Use the following guidelines for proper floor mat usage.

- The original equipment floor mats were designed for your vehicle. If the floor mats need replacing, it is recommended that GM certified floor mats be purchased. Non-GM floor mats may not fit properly and may interfere with the accelerator or brake pedal. Always check that the floor mats do not interfere with the pedals.
- Do not use a floor mat if the vehicle is not equipped with a floor mat retainer on the driver side floor.
- Use the floor mat with the correct side up. Do not turn it over.
- Do not place anything on top of the driver side floor mat.
- Use only a single floor mat on the driver side.
- Do not place one floor mat on top of another.

Button Retainer

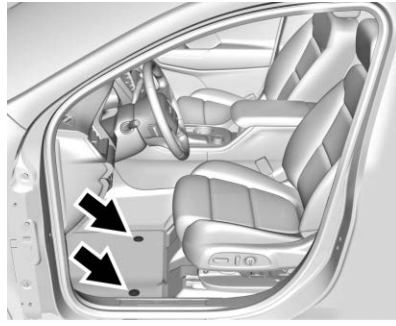

Some vehicles have floor mats with a button-type retainer.

Removing and Replacing the Floor Mat

1. Pull up on the rear of the mat to unlock and remove.
2. Reinstall the floor mat by lining up the floor mat opening over the carpet retainer and snapping into position.
3. Make sure the floor mat is properly secured. Verify the floor mat does not interfere with the pedals.

Cleaning Rubber Floor Mats (All-Weather Mats and Floor Liners)

⚠ Warning

Do not use cleaners that contain silicone, wax-based products, or cleaners that increase gloss on rubber floor mats/liners. These cleaners can permanently change the appearance and feel of the rubber and can make the floor mats/liners slippery. Your foot could slip while operating the vehicle, and you could lose control, resulting in a crash. You or others could be injured.

Use a soft cloth and/or a brush dampened with water to remove dust and loose dirt. For more thorough cleaning, use a mild soap solution.

Service and Maintenance

General Information
General Information 331

Maintenance Schedule
Maintenance Schedule 332

Special Application Services
Special Application Services 337

Additional Maintenance and Care
Additional Maintenance and Care 337

Recommended Fluids, Lubricants, and Parts
Recommended Fluids and Lubricants 340
Maintenance Replacement Parts 341

Maintenance Records
Maintenance Records 343

General Information

Your vehicle is an important investment. This section describes the required maintenance for the vehicle. Follow this schedule to help protect against major repair expenses resulting from neglect or inadequate maintenance. It may also help to maintain the value of the vehicle if it is sold. It is the responsibility of the owner to have all required maintenance performed.

Your dealer has trained technicians who can perform required maintenance using genuine replacement parts. They have up-to-date tools and equipment for fast and accurate diagnostics. Many dealers have extended evening and Saturday hours, courtesy transportation, and online scheduling to assist with service needs.

Your dealer recognizes the importance of providing competitively priced maintenance and repair services. With trained technicians, the dealer is the place for routine maintenance such as oil changes and tire rotations and additional maintenance items like tires, brakes, batteries, and wiper blades.

Caution

Damage caused by improper maintenance can lead to costly repairs and may not be covered by the vehicle warranty. Maintenance intervals, checks, inspections, recommended fluids, and lubricants are important to keep the vehicle in good working condition.

Do not have chemical flushes that are not approved by GM performed on the vehicle. The use of flushes, solvents, cleaners, or lubricants that are not approved by GM could damage the vehicle, requiring expensive repairs that are not covered by the vehicle warranty.

The Tire Rotation and Required Services are the responsibility of the vehicle owner. It is recommended to have your dealer perform these services every 12 000 km/7,500 mi. Proper vehicle maintenance helps to keep the vehicle in good working condition, improves fuel economy, and reduces vehicle emissions.

Because of the way people use vehicles, maintenance needs vary. There may need to be more frequent checks and services. The Additional Required Services - Normal are for vehicles that:

- Carry passengers and cargo within recommended limits on the Tire and Loading Information label. See *Vehicle Load Limits* ⇨ *197*.
- Are driven on reasonable road surfaces within legal driving limits.
- Use the recommended fuel. See *Recommended Fuel* ⇨ *239*.

Refer to the information in the Maintenance Schedule Additional Required Services - Normal chart.

The Additional Required Services - Severe are for vehicles that are:

- Mainly driven in heavy city traffic in hot weather.
- Mainly driven in hilly or mountainous terrain.
- Frequently towing a trailer.
- Used for high speed or competitive driving.
- Used for taxi, police, or delivery service.

Refer to the information in the Maintenance Schedule Additional Required Services - Severe chart.

⚠ Warning

Performing maintenance work can be dangerous and can cause serious injury. Perform maintenance work only if the required information, proper tools, and equipment are available. If they are not, see your dealer to have a trained technician do the work. See *Doing Your Own Service Work* ⇨ *255*.

Maintenance Schedule

Owner Checks and Services

Check the engine oil level. See *Engine Oil* ⇨ *262*.

Once a Month

- Check the tire inflation pressures. See *Tire Pressure* ⇨ *294*.
- Inspect the tires for wear. See *Tire Inspection* ⇨ *300*.
- Check the windshield washer fluid level. See *Washer Fluid* ⇨ *272*.

Engine Oil Change

When the CHANGE ENGINE OIL SOON message displays, have the engine oil and filter changed within the next 1 000 km/ 600 mi. If driven under the best conditions, the engine oil life system may not indicate the need for vehicle service for up to a year. The engine oil and filter must be changed at least once a year and the oil life system must be reset. Your trained dealer technician can perform this work. If the engine oil life system is reset accidentally, service the vehicle within 5 000 km/3,000 mi since the last service. Reset the oil life system when the oil is changed. See *Engine Oil Life System* ⇨ *264*.

Engine Air Filter Change

When the REPLACE AT NEXT OIL CHANGE message displays, the engine air filter should be replaced at the next engine oil change. When the REPLACE ENGINE AIR FILTER SOON message displays, the engine air filter should be replaced at the earliest convenience. Reset the engine air filter life system after the engine air filter is replaced. See *Engine Air Filter Life System* ⇨ *265*.

Air Conditioning Desiccant (Replace Every Seven Years)

The air conditioning system requires maintenance every seven years. This service requires replacement of the desiccant to help the longevity and efficient operation of the air conditioning system. This service can be complex. See your dealer.

Tire Rotation and Required Services Every 12 000 km/7,500 mi

Rotate the tires, if recommended for the vehicle, and perform the following services. See *Tire Rotation* ⇨ *300*.

- Check engine oil level and oil life percentage. If needed, change engine oil and filter, and reset oil life system. See *Engine Oil* ⇨ *262* and *Engine Oil Life System* ⇨ *264*.
- Check the air filter life percentage. If necessary, replace the engine air filter and reset the engine air filter life system. See *Engine Air Filter Life System* ⇨ *265*.
- Check engine coolant level. See *Cooling System* ⇨ *267*.
- Check windshield washer fluid level. See *Washer Fluid* ⇨ *272*.
- Check tire inflation pressures. See *Tire Pressure* ⇨ *294*.
- Inspect tire wear. See *Tire Inspection* ⇨ *300*.
- Visually check for fluid leaks.
- Inspect brake system. See *Exterior Care* ⇨ *323*.
- Visually inspect steering, suspension, and chassis components for damage, including cracks or tears in the rubber boots, loose or missing parts, or signs of wear at least once a year. See *Exterior Care* ⇨ *323*.
- Inspect power steering for proper electrical connections, binding, cracks, chafing, etc.
- Visually inspect halfshafts and drive shafts for excessive wear, lubricant leaks, and/or damage including: tube dents or cracks, constant velocity joint or universal joint looseness, cracked or missing boots, loose or missing boot clamps, center bearing excessive looseness, loose or missing fasteners, and axle seal leaks.
- Check restraint system components. See *Safety System Check* ⇨ *49*.
- Visually inspect the fuel system, including the evaporative (EVAP) system, for damage or leaks. Visually check all fuel pipes, vapor lines, and hoses for proper attachment, connection, routing, and condition.
- Visually inspect exhaust system and nearby heat shields for loose or damaged parts.
- Lubricate body components. See *Exterior Care* ⇨ *323*.
- Check automatic transmission shift lock control function. See *Automatic Transmission Shift Lock Control Function Check* ⇨ *275*.
- Check parking brake and automatic transmission park mechanism. See *Park Brake and P (Park) Mechanism Check* ⇨ *275*.
- Check accelerator pedal for damage, high effort, or binding. Replace if needed.
- Visually inspect gas strut for signs of wear, cracks, or other damage. Check the hold open ability of the strut. If the hold open ability is low, service the gas strut. See *Gas Strut(s)* ⇨ *277*.
- Check tire sealant expiration date, if equipped. See *Tire Sealant and Compressor Kit* ⇨ *307*.
- Inspect sunroof track and seal, if equipped. See *Sunroof* ⇨ *31*.

Maintenance Schedule Additional Required Services - Normal	12 000 km/7,500 mi	24 000 km/15,000 mi	36 000 km/22,500 mi	48 000 km/30,000 mi	60 000 km/37,500 mi	72 000 km/45,000 mi	84 000 km/52,500 mi	96 000 km/60,000 mi	108 000 km/67,500 mi	120 000 km/75,000 mi	132 000 km/82,500 mi	144 000 km/90,000 mi	156 000 km/97,500 mi	168 000 km/105,000 mi	180 000 km/112,500 mi	192 000 km/120,000 mi	204 000 km/127,500 mi	216 000 km/135,000 mi	228 000 km/142,500 mi	240 000 km/150,000 mi
Rotate tires and perform Required Services. Check engine oil level and oil life percentage. Change engine oil and filter, if needed. Check engine air filter life percentage and status. Change engine air filter, if needed. (1)	✓	✓	✓	✓	✓	✓	✓	✓	✓	✓	✓	✓	✓	✓	✓	✓	✓	✓	✓	✓
Replace passenger compartment air filter. (2)			✓			✓			✓			✓			✓			✓		
Replace spark plugs. (2.0L engine only.) Inspect spark plug wires and/or boots.								✓								✓				
Replace spark plugs. (except 2.0L engine.) Inspect spark plug wires and/or boots.													✓							
Change rear axle fluid, if equipped with AWD. (3)																				✓
Drain and fill engine cooling system. (4)																				✓
Visually inspect accessory drive belts. (5)																				✓
Replace brake fluid. (6)																				
Replace front and rear wiper blades. (7)		✓		✓		✓		✓		✓		✓		✓		✓		✓		✓
Replace hood and/or body lift support gas struts. (8)										✓										✓
Replace air conditioning desiccant. (9)																				

Footnotes — Maintenance Schedule Additional Required Services - Normal

(1) Or every four years, whichever comes first. If driving in dusty conditions, inspect the filter at each oil change or more often as needed. See *Engine Air Cleaner/Filter* ⇨ *265*.

(2) Or every two years, whichever comes first. More frequent passenger compartment air filter replacement may be needed if driving in areas with heavy traffic, poor air quality, high dust levels, or environmental allergens. Passenger compartment air filter replacement may also be needed if there is reduced airflow, window fogging, or odors. Your GM dealer can help determine when to replace the filter.

(3) Do not directly power wash the transfer case and/or front/rear axle output seals. High pressure water can overcome the seals and contaminate the transfer case fluid. Contaminated fluid will decrease the life of the transfer case and/or axles and should be replaced.

(4) Or every five years, whichever comes first. See *Cooling System* ⇨ *267*.

(5) Or every 10 years, whichever comes first. Inspect for fraying, excessive cracking, or damage; replace, if needed.

(6) Replace brake fluid every five years. See *Brake Fluid* ⇨ *273*.

(7) Or every 12 months, whichever comes first. See *Wiper Blade Replacement* ⇨ *276*.

(8) Or every 10 years, whichever comes first. See *Gas Strut(s)* ⇨ *277*.

(9) Replace air conditioning desiccant every seven years.

Maintenance Schedule Additional Required Services - Severe	12 000 km/7,500 mi	24 000 km/15,000 mi	36 000 km/22,500 mi	48 000 km/30,000 mi	60 000 km/37,500 mi	72 000 km/45,000 mi	84 000 km/52,500 mi	96 000 km/60,000 mi	108 000 km/67,500 mi	120 000 km/75,000 mi	132 000 km/82,500 mi	144 000 km/90,000 mi	156 000 km/97,500 mi	168 000 km/105,000 mi	180 000 km/112,500 mi	192 000 km/120,000 mi	204 000 km/127,500 mi	216 000 km/135,000 mi	228 000 km/142,500 mi	240 000 km/150,000 mi
Rotate tires and perform Required Services. Check engine oil level and oil life percentage. Change engine oil and filter, if needed. Check engine air filter life percentage and status. Change engine air filter, if needed. (1)	✓	✓	✓	✓	✓	✓	✓	✓	✓	✓	✓	✓	✓	✓	✓	✓	✓	✓	✓	✓
Replace passenger compartment air filter. (2)			✓			✓			✓			✓			✓			✓		
Change automatic transmission fluid.						✓						✓						✓		
Replace spark plugs. (2.0L engine only.) Inspect spark plug wires and/or boots.								✓								✓				
Replace spark plugs. (except 2.0L engine.) Inspect spark plug wires and/or boots.													✓							
Change rear axle fluid, if equipped with AWD. (3)										✓										✓
Drain and fill engine cooling system. (4)																				✓
Visually inspect accessory drive belts. (5)																				✓
Replace brake fluid. (6)																				
Replace front and rear wiper blades. (7)		✓		✓		✓		✓		✓		✓		✓		✓		✓		✓
Replace hood and/or body lift support gas struts. (8)										✓										✓
Replace air conditioning desiccant. (9)																				

Footnotes — Maintenance Schedule Additional Required Services - Severe

(1) Or every four years, whichever comes first. If driving in dusty conditions, inspect the filter at each oil change or more often as needed. See *Engine Air Cleaner/Filter* ⇨ *265*.

(2) Or every two years, whichever comes first. More frequent passenger compartment air filter replacement may be needed if driving in areas with heavy traffic, poor air quality, high dust levels, or environmental allergens. Passenger compartment air filter replacement may also be needed if there is reduced airflow, window fogging, or odors. Your GM dealer can help determine when to replace the filter.

(3) Do not directly power wash the transfer case and/or front/rear axle output seals. High pressure water can overcome the seals and contaminate the transfer case fluid. Contaminated fluid will decrease the life of the transfer case and/or axles and should be replaced.

(4) Or every five years, whichever comes first. See *Cooling System* ⇨ *267*.

(5) Or every 10 years, whichever comes first. Inspect for fraying, excessive cracking, or damage; replace, if needed.

(6) Replace brake fluid every five years. See *Brake Fluid* ⇨ *273*.

(7) Or every 12 months, whichever comes first. See *Wiper Blade Replacement* ⇨ *276*.

(8) Or every 10 years, whichever comes first. See *Gas Strut(s)* ⇨ *277*.

(9) Replace air conditioning desiccant every seven years.

Special Application Services

- Severe Commercial Use Vehicles Only: Lubricate chassis components every oil change.
- Have underbody flushing service performed. See "Underbody Maintenance" in *Exterior Care* ⇨ *323*.

Additional Maintenance and Care

Your vehicle is an important investment and caring for it properly may help to avoid future costly repairs. To maintain vehicle performance, additional maintenance services may be required.

It is recommended that your dealer perform these services — their trained dealer technicians know your vehicle best. Your dealer can also perform a thorough assessment with a multi-point inspection to recommend when your vehicle may need attention.

The following list is intended to explain the services and conditions to look for that may indicate services are required.

Battery

The 12-volt battery supplies power to start the engine and operate any additional electrical accessories.

- To avoid break-down or failure to start the vehicle, maintain a battery with full cranking power.

- Trained dealer technicians have the diagnostic equipment to test the battery and ensure that the connections and cables are corrosion-free.

Belts

- Belts may need replacing if they squeak or show signs of cracking or splitting.
- Trained dealer technicians have access to tools and equipment to inspect the belts and recommend adjustment or replacement when necessary.

Brakes

Brakes stop the vehicle and are crucial to safe driving.

- Signs of brake wear may include chirping, grinding, or squealing noises, or difficulty stopping.
- Trained dealer technicians have access to tools and equipment to inspect the brakes and recommend quality parts engineered for the vehicle.

Fluids

Proper fluid levels and approved fluids protect the vehicle's systems and components. See *Recommended Fluids and Lubricants* ⇨ *340* for GM approved fluids.

- Engine oil and windshield washer fluid levels should be checked at every fuel fill.
- Instrument cluster lights may come on to indicate that fluids may be low and need to be filled.

Hoses

Hoses transport fluids and should be regularly inspected to ensure that there are no cracks or leaks. With a multi-point inspection, your dealer can inspect the hoses and advise if replacement is needed.

Lamps

Properly working headlamps, taillamps, and brake lamps are important to see and be seen on the road.

- Signs that the headlamps need attention include dimming, failure to light, cracking, or damage. The brake lamps need to be checked periodically to ensure that they light when braking.
- With a multi-point inspection, your dealer can check the lamps and note any concerns.

Shocks and Struts

Shocks and struts help aid in control for a smoother ride.

- Signs of wear may include steering wheel vibration, bounce/sway while braking, longer stopping distance, or uneven tire wear.
- As part of the multi-point inspection, trained dealer technicians can visually inspect the shocks and struts for signs of leaking, blown seals, or damage, and can advise when service is needed.

Tires

Tires need to be properly inflated, rotated, and balanced. Maintaining the tires can save money and fuel, and can reduce the risk of tire failure.

- Signs that the tires need to be replaced include three or more visible treadwear indicators; cord or fabric showing through the rubber; cracks or cuts in the tread or sidewall; or a bulge or split in the tire.
- Trained dealer technicians can inspect and recommend the right tires. Your dealer can also provide tire/wheel balancing services to ensure smooth vehicle operation at all speeds. Your dealer sells and services name brand tires.

Vehicle Care

To help keep the vehicle looking like new, vehicle care products are available from your dealer. For information on how to clean and protect the vehicle's interior and exterior, see *Interior Care* ⇨ *327* and *Exterior Care* ⇨ *323*.

Wheel Alignment

Wheel alignment is critical for ensuring that the tires deliver optimal wear and performance.

- Signs that the alignment may need to be adjusted include pulling, improper vehicle handling, or unusual tire wear.
- Your dealer has the required equipment to ensure proper wheel alignment.

Windshield

For safety, appearance, and the best viewing, keep the windshield clean and clear.

- Signs of damage include scratches, cracks, and chips.
- Trained dealer technicians can inspect the windshield and recommend proper replacement if needed.

Wiper Blades

Wiper blades need to be cleaned and kept in good condition to provide a clear view.

- Signs of wear include streaking, skipping across the windshield, and worn or split rubber.
- Trained dealer technicians can check the wiper blades and replace them when needed.

Recommended Fluids, Lubricants, and Parts

Recommended Fluids and Lubricants

Fluids and lubricants identified below by name or specification, including fluids or lubricants not listed here, can be obtained from your dealer.

Usage	Fluid/Lubricant
Automatic Transmission	DEXRON-VI Automatic Transmission Fluid.
Engine Coolant	50/50 mixture of clean, drinkable water and use only DEX-COOL Coolant. See *Cooling System* ⇨ *267*.
Engine Oil	Engine oil meeting the dexos1 specification of the proper SAE viscosity grade. ACDelco dexos1 full synthetic is recommended. See *Engine Oil* ⇨ *262*.
Hood Latch Assembly, Secondary Latch, Pivots, Spring Anchor, and Release Pawl	Lubriplate Lubricant Aerosol or lubricant meeting requirements of NLGI #2, Category LB or GC-LB.
Hydraulic Brake System	DOT 3 Hydraulic Brake Fluid.
Key Lock Cylinders, Hood and Door Hinges	Multi-Purpose Lubricant, Superlube. See your dealer.
Windshield Washer	Automotive windshield washer fluid that meets regional freeze protection requirements.

Maintenance Replacement Parts

Replacement parts identified below by name, part number, or specification can be obtained from your dealer.

Part	GM Part Number	ACDelco Part Number
Engine Air Cleaner/Filter		
2.0L L4 Engine	23321606	A3212C
2.5L L4 Engine	23321606	A3212C
3.6L V6 Engine	23321606	A3212C
Engine Oil Filter		
2.0L L4 Engine	55495105	PF66
2.5L L4 Engine	12696048	PF64
3.6L V6 Engine	12693541	UPF63R
Passenger Compartment Air Filter	13508023	CF185

Part	GM Part Number	ACDelco Part Number
Spark Plugs		
2.0L L4 Engine	55504354	41-103-IP
2.5L L4 Engine	12627160	41-115
3.6L V6 Engine	12646780	41-130
Wiper Blades		
Front Driver – 60 cm (23.6 in)	84586337	—
Front Passenger – 45 cm (17.7 in)	84574892	—
Rear – 30 cm (11.8 in)	84215609	—

Maintenance Records

After the scheduled services are performed, record the date, odometer reading, who performed the service, and the type of services performed in the boxes provided. Retain all maintenance receipts.

Date	Odometer Reading	Serviced By	Services Performed

Technical Data

Vehicle Identification
Vehicle Identification Number (VIN) ... 344
Service Parts Identification 344

Vehicle Data
Capacities and Specifications 345
Engine Drive Belt Routing 348

Vehicle Identification

Vehicle Identification Number (VIN)

This legal identifier is in the front corner of the instrument panel, on the driver side of the vehicle. It can be seen through the windshield from outside. The Vehicle Identification Number (VIN) also appears on the Vehicle Certification label and certificates of title and registration.

Engine Identification

The eighth character in the VIN is the engine code. This code identifies the vehicle's engine, specifications, and replacement parts. See “Engine Specifications” under *Capacities and Specifications* ⇨ *345* for the vehicle's engine code.

Service Parts Identification

There may be a large barcode on the certification label on the center pillar that you can scan for the following information:

- Vehicle Identification Number (VIN)
- Model designation
- Paint information
- Production options

If there is not a large barcode on this label, then you will find this same information in the rear compartment, under the load floor, inside the cargo storage shelf unit.

Vehicle Data

Capacities and Specifications

The following approximate capacities are given in metric and English conversions. See *Recommended Fluids and Lubricants* ⇨ *340* for more information.

Application	Capacities	
	Metric	English
Air Conditioning Refrigerant	For the air conditioning system refrigerant type and charge amount, see the refrigerant label under the hood. See your dealer for more information.	
Engine Cooling System*		
2.0L L4 Engine	9.0 L	9.5 qt
2.5L L4 Engine	9.1 L	9.7 qt
3.6L V6 Engine	10.5 L	11.1 qt

Application	Capacities	
	Metric	English
Engine Oil with Filter		
2.0L L4 Engine	5.0 L	5.3 qt
2.5L L4 Engine	4.7 L	5.0 qt
3.6L V6 Engine	5.7 L	6.0 qt
Fuel Tank		
FWD	73.4 L	19.4 gal
AWD	82.1 L	21.7 gal
Transfer Case Fluid	1.0 L	1.0 qt
Wheel Nut Torque	190 N•m	140 lb ft
All capacities are approximate. When adding, be sure to fill to the approximate level, as recommended in this manual. Recheck fluid level after filling.		
*Engine cooling system capacity values are based on the entire cooling system and its components.		

Engine Specifications

Engine	VIN Code	Transmission	Spark Plug Gap
2.0L L4 Engine (LSY)	4	Automatic	0.65–0.75 mm (0.026–0.030 in)
2.5L L4 Engine (LCV)	A	Automatic	0.95–1.10 mm (0.037–0.043 in)
3.6L V6 Engine (LGX)	S	Automatic	0.80–0.90 mm (0.031–0.035 in)
Spark plug gaps are preset by the manufacturer. Re-gapping the spark plug is not recommended and can damage the spark plug.			

Engine Drive Belt Routing

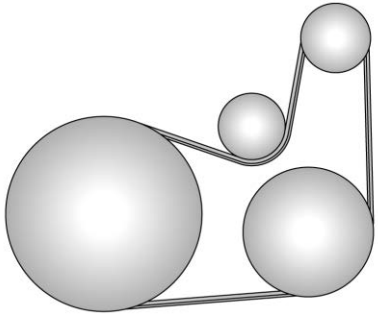

2.0L L4 Engine

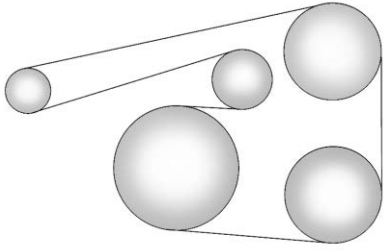

2.5L L4 Engine

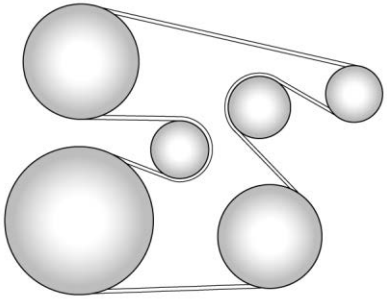

3.6L V6 Engine

Customer Information

Customer Information

Customer Satisfaction Procedure 349
Customer Assistance Offices 351
Customer Assistance for Text Telephone (TTY) Users 351
Online Owner Center 351
GM Mobility Reimbursement Program 352
Roadside Assistance Program 352
Scheduling Service Appointments 353
Courtesy Transportation Program 354
Collision Damage Repair 355
Publication Ordering Information 356
Radio Frequency Statement 357

Reporting Safety Defects

Reporting Safety Defects to the United States Government 357
Reporting Safety Defects to the Canadian Government 357
Reporting Safety Defects to General Motors 358

Vehicle Data Recording and Privacy

Vehicle Data Recording and Privacy ... 358
Cybersecurity 358
Event Data Recorders 359
OnStar 359
Infotainment System 359

Customer Information

Customer Satisfaction Procedure

Your satisfaction and goodwill are important to your dealer and to Chevrolet. Normally, any concerns with the sales transaction or the operation of the vehicle will be resolved by your dealer's sales or service departments. Sometimes, however, despite the best intentions of all concerned, misunderstandings can occur. If your concern has not been resolved to your satisfaction, the following steps should be taken:

STEP ONE : Discuss your concern with a member of dealership management. Normally, concerns can be quickly resolved at that level. If the matter has already been reviewed with the sales, service, or parts manager, contact the owner of your dealership or the general manager.

STEP TWO : If after contacting a member of dealership management, it appears your concern cannot be resolved by your dealership without further help, in the U.S., call the Chevrolet Customer Assistance Center at 1-800-222-1020. In Canada, call General Motors of Canada Customer Care Centre at 1-800-263-3777 (English), or 1-800-263-7854 (French).

We encourage you to call the toll-free number in order to give your inquiry prompt attention. Have the following information available to give the Customer Assistance representative:

- Vehicle Identification Number (VIN). This is available from the vehicle registration or title, or the plate at the top left of the instrument panel and visible through the windshield.
- Dealership name and location.
- Vehicle delivery date and present mileage.

When contacting Chevrolet, remember that your concern will likely be resolved at a dealer's facility. That is why we suggest following Step One first.

STEP THREE — U.S. Owners : Both General Motors and your dealer are committed to making sure you are completely satisfied with your new vehicle. However, if you continue to remain unsatisfied after following the procedure outlined in Steps One and Two, you can file with the Better Business Bureau (BBB) Auto Line Program to enforce your rights.

The BBB Auto Line Program is an out-of-court program administered by BBB National Programs, Inc. to settle automotive disputes regarding vehicle repairs or the interpretation of the New Vehicle Limited Warranty. Although you may be required to resort to this informal dispute resolution program prior to filing a court action, use of the program is free of charge and your case will generally be heard within 40 days. If you do not agree with the decision given in your case, you may reject it and proceed with any other venue for relief available to you.

You may contact the BBB Auto Line Program using the toll-free telephone number or write them at the following address:

BBB Auto Line Program
BBB National Programs, Inc.
3033 Wilson Boulevard
Suite 600
Arlington, VA 22201

Telephone: 1-800-955-5100
http://www.bbb.org/council/programs-services/dispute-handling-and-resolution/bbb-auto-line

This program is available in all 50 states and the District of Columbia. Eligibility is limited by vehicle age, mileage, and other factors. General Motors reserves the right to change eligibility limitations and/or discontinue its participation in this program.

STEP THREE — Canadian Owners : In the event that you do not feel your concerns have been addressed after following the procedure outlined in Steps One and Two, General Motors of Canada Company wants you to be aware of its participation in a no-charge Mediation/Arbitration Program. General Motors of Canada Company has committed to binding arbitration of owner disputes involving factory-related vehicle service claims. The program provides for the review of the facts involved by an impartial third party arbiter, and may include an informal hearing before the arbiter. The program is designed so that the entire dispute settlement process, from the time you file your complaint to the final decision, should be completed in about 70 days. We believe our impartial program offers advantages over courts in most jurisdictions because it is informal, quick, and free of charge.

For further information concerning eligibility in the Canadian Motor Vehicle Arbitration Plan (CAMVAP), call toll-free 1-800-207-0685, or call the General Motors Customer Care Centre, 1-800-263-3777 (English), 1-800-263-7854 (French), or write to:

The Mediation/Arbitration Program
c/o Customer Care Centre
General Motors of Canada Company
Mail Code: CA1-163-005
1908 Colonel Sam Drive
Oshawa, Ontario L1H 8P7

Your inquiry should be accompanied by the Vehicle Identification Number (VIN).

Customer Assistance Offices

Chevrolet encourages customers to call the toll-free number for assistance. However, if a customer wishes to write or e-mail Chevrolet, the letter should be addressed to:

United States and Puerto Rico

Chevrolet Motor Division
Chevrolet Customer Assistance Center
P.O. Box 33170
Detroit, MI 48232-5170
www.Chevrolet.com

1-800-222-1020
1-800-833-2438 (For Text Telephone Devices (TTYs))
Roadside Assistance: 1-800-243-8872

From U.S. Virgin Islands:

1-800-496-9994

Canada

General Motors of Canada Company
Customer Care Centre, Mail Code: CA1-163-005
1908 Colonel Sam Drive
Oshawa, Ontario L1H 8P7
www.gm.ca

1-800-263-3777 (English)
1-800-263-7854 (French)
1-800-263-3830 (For Text Telephone devices (TTYs))
Roadside Assistance: 1-800-268-6800

Overseas

Please contact the local General Motors Business Unit.

Customer Assistance for Text Telephone (TTY) Users

To assist customers who are deaf, hard of hearing, or speech-impaired and who use Text Telephones (TTYs), Chevrolet has TTY equipment available at its Customer Assistance Center. Any TTY user in the U.S. can communicate with Chevrolet by dialing: 1-800-833-2438. TTY users in Canada can dial 1-800-263-3830.

Online Owner Center

The Chevrolet Owner Center (U.S.) my.chevrolet.com

Learn more about your vehicle features, shop for and manage your connected services and OnStar plans, and access diagnostic information specific to your vehicle.

Membership Benefits

: Download owner's manuals and view vehicle-specific how-to videos.

: View maintenance schedules, alerts, and Vehicle Diagnostic Information. Schedule service appointments.

: View service records from your dealership and add your own.

: Select a preferred dealer and view locations, maps, phone numbers, and hours.

: Track your vehicle's warranty information.

: View active recalls by Vehicle Identification Number (VIN). See *Vehicle Identification Number (VIN)* ⇨ *344*.

: Manage your profile and payment information. View your GM Rewards Card earnings and My Chevrolet Rewards points.

: Chat with online help representatives.

Visit my.chevrolet.com and create an account today.

Chevrolet Owner Centre (Canada) mychevrolet.ca

Visit the Chevrolet Owner Centre at mychevrolet.ca (English) or my.chevrolet.ca (French) to access similar benefits to the U.S. site.

GM Mobility Reimbursement Program

GENERAL MOTORS MOBILITY

This program is available to qualified applicants for cost reimbursement, up to certain limits, of eligible aftermarket adaptive equipment required for the vehicle, such as hand controls or a wheelchair/scooter lift for the vehicle.

To learn about the GM Mobility program, see www.gmmobility.com or call the GM Mobility Assistance Center at 1-800-323-9935. Text Telephone (TTY) users, call 1-800-833-9935.

General Motors of Canada also has a Mobility program. See www.gm.ca, or call 1-800-GM-DRIVE (800-463-7483) for details. TTY users call 1-800-263-3830.

Roadside Assistance Program

For U.S.-purchased vehicles, call 1-800-243-8872. (Text Telephone (TTY): 1-888-889-2438.)

For Canadian-purchased vehicles, call 1-800-268-6800.

Service is available 24 hours a day, 365 days a year.

Calling for Assistance

When calling Roadside Assistance, have the following information ready:

- Your name, home address, and home telephone number
- Telephone number of your location
- Location of the vehicle
- Model, year, color, and license plate number of the vehicle
- Odometer reading, Vehicle Identification Number (VIN), and delivery date of the vehicle
- Description of the problem

Coverage

Services are provided for the duration of the vehicle's powertrain warranty.

In the U.S., anyone driving the vehicle is covered. In Canada, a person driving the vehicle without permission from the owner is not covered.

Roadside Assistance is not a part of the New Vehicle Limited Warranty. General Motors North America and Chevrolet reserve the right to make any changes or discontinue the Roadside Assistance program at any time without notification.

General Motors North America and Chevrolet reserve the right to limit services or payment to an owner or driver if they decide the claims are made too often, or the same type of claim is made many times.

Services Provided

- **Emergency Fuel Delivery:** Delivery of enough fuel for the vehicle to get to the nearest service station.
- **Lock-Out Service:** Service to unlock the vehicle if you are locked out. A remote unlock may be available if you have OnStar. For security reasons, the driver must present identification before this service is given.
- **Emergency Tow from a Public Road or Highway:** Tow to the nearest Chevrolet dealer for warranty service, or if the vehicle was in a crash and cannot be driven. Assistance is not given when the vehicle is stuck in the sand, mud, or snow.
- **Flat Tire Change:** Service to change a flat tire with the spare tire. The spare tire, if equipped, must be in good condition and properly inflated. It is the owner's responsibility for the repair or replacement of the tire if it is not covered by the warranty.
- **Battery Jump Start:** Service to jump start a dead battery.
- **Trip Interruption Benefits and Assistance:** If your trip is interrupted due to a warranty event, incidental expenses may be reimbursed within the Powertrain warranty period. Items considered are reasonable and customary hotel, meals, rental car, or a vehicle being delivered back to the customer, up to 500 miles.

Services Not Included in Roadside Assistance

- Impound towing caused by violation of any laws
- Legal fines
- Mounting, dismounting, or changing of snow tires, chains, or other traction devices

Service is not provided if a vehicle is in an area that is not accessible to the service vehicle or is not a regularly traveled or maintained public road, which includes ice and winter roads. Off-road use is not covered.

Services Specific to Canadian-Purchased Vehicles

- **Fuel Delivery:** Reimbursement is up to 7 liters. Propane and other fuels are not provided through this service.
- **Lock-Out Service:** Vehicle registration is required.
- **Trip Interruption Benefits and Assistance:** Must be over 150 km from where your trip was started to qualify. Pre-authorization, original detailed receipts, and a copy of the repair orders are required. Once authorization has been received, the Roadside Assistance advisor will help to make arrangements and explain how to receive payment.
- **Alternative Service:** If assistance cannot be provided right away, the Roadside Assistance advisor may give permission to get local emergency road service. You will receive payment, up to $100, after sending the original receipt to Roadside Assistance. Mechanical failures may be covered, however any cost for parts and labor for repairs not covered by the warranty are the owner responsibility.

Scheduling Service Appointments

When the vehicle requires warranty service, contact your dealer and request an appointment. By scheduling a service appointment and advising the service consultant of your transportation needs, your dealer can help minimize your inconvenience.

If the vehicle cannot be scheduled into the service department immediately, keep driving it until it can be scheduled for service, unless, of course, the problem is safety related. If it is, please call your dealership, let them know this, and ask for instructions.

If your dealer requests you to bring the vehicle for service, you are urged to do so as early in the work day as possible to allow for same-day repair.

Courtesy Transportation Program

To enhance your ownership experience, we and our participating dealers are proud to offer Courtesy Transportation, a customer support program for vehicles with the Bumper-to-Bumper (Base Warranty Coverage period in Canada), extended powertrain, and/or hybrid-specific warranties in both the U.S. and Canada.

Several Courtesy Transportation options are available to assist in reducing inconvenience when warranty repairs are required.

Courtesy Transportation is not a part of the New Vehicle Limited Warranty. A separate manual entitled “Limited Warranty and Owner Assistance Information” furnished with each new vehicle provides detailed warranty coverage information.

Transportation Options

Warranty service can generally be completed while you wait. However, if you are unable to do so, your dealer may offer the following transportation options:

Shuttle Service

This includes one-way or round-trip shuttle service within reasonable time and distance parameters of your dealer's area.

Public Transportation or Fuel Reimbursement

If overnight warranty repairs are needed, and public transportation is used, the expense must be supported by original receipts and within the maximum amount allowed by GM. If U.S. customers arrange their own transportation, limited reimbursement for reasonable fuel expenses may be available. Claim amounts should reflect actual costs and be supported by original receipts. See your dealer for information.

Courtesy Rental Vehicle

For an overnight warranty repair, the dealer may provide an available courtesy rental vehicle or provide for reimbursement of a rental vehicle. Reimbursement is limited and must be supported by original receipts as well as a signed and completed rental agreement and meet state/provincial, local, and rental vehicle provider requirements. Requirements vary and may include minimum age requirements, insurance coverage, credit card, etc. Additional fees such as fuel, rental vehicle insurance, taxes, levies, usage fees, excessive mileage, or rental usage beyond the completion of the repair are also your responsibility.

It may not be possible to provide a like vehicle as a courtesy rental.

Additional Program Information

All program options, such as shuttle service, may not be available at every dealer. Contact your dealer for specific availability.

General Motors reserves the right to unilaterally modify, change, or discontinue Courtesy Transportation at any time and to resolve all questions of claim eligibility pursuant to the terms and conditions described herein at its sole discretion.

Collision Damage Repair

If the vehicle is involved in a collision and it is damaged, have the damage repaired by a qualified technician using the proper equipment and quality replacement parts. Poorly performed collision repairs diminish the vehicle resale value, and safety performance can be compromised in subsequent collisions.

Collision Parts

Genuine GM Collision parts are new parts made with the same materials and construction methods as the parts with which the vehicle was originally built. Genuine GM Collision parts are the best choice to ensure that the vehicle's designed appearance, durability, and safety are preserved. The use of Genuine GM parts can help maintain the GM New Vehicle Limited Warranty.

Recycled original equipment parts may also be used for repair. These parts are typically removed from vehicles that were total losses in prior crashes. In most cases, the parts being recycled are from undamaged sections of the vehicle. A recycled original equipment GM part may be an acceptable choice to maintain the vehicle's originally designed appearance and safety performance; however, the history of these parts is not known. Such parts are not covered by the GM New Vehicle Limited Warranty, and any related failures are not covered by that warranty.

Aftermarket collision parts are also available. These are made by companies other than GM and may not have been tested for the vehicle. As a result, these parts may fit poorly, exhibit premature durability/corrosion problems, and may not perform properly in subsequent collisions. Aftermarket parts are not covered by the GM New Vehicle Limited Warranty, and any vehicle failure related to such parts is not covered by that warranty.

Repair Facility

GM also recommends that you choose a collision repair facility that meets your needs before you ever need collision repairs. Your dealer may have a collision repair center with GM-trained technicians and state-of-the-art equipment, or be able to recommend a collision repair center that has GM-trained technicians and comparable equipment.

Insuring the Vehicle

Protect your investment in the GM vehicle with comprehensive and collision insurance coverage. There are significant differences in the quality of coverage afforded by various insurance policy terms. Many insurance policies provide reduced protection to the GM vehicle by limiting compensation for damage repairs through the use of aftermarket collision parts. Some insurance companies will not specify aftermarket collision parts. When purchasing insurance, we recommend that you ensure that the vehicle will be repaired with GM original equipment collision parts. If such insurance coverage is not available from your current insurance carrier, consider switching to another insurance carrier.

If the vehicle is leased, the leasing company may require you to have insurance that ensures repairs with Genuine GM Original Equipment Manufacturer (OEM) parts or Genuine Manufacturer replacement parts. Read the lease carefully, as you may be charged at the end of the lease for poor quality repairs.

If a Crash Occurs

If there has been an injury, call emergency services for help. Do not leave the scene of a crash until all matters have been taken care of. Move the vehicle only if its position puts you in danger, or you are instructed to move it by a police officer.

Give only the necessary information to police and other parties involved in the crash.

For emergency towing see *Roadside Assistance Program* ⇨ *352*.

Gather the following information:

- Driver name, address, and telephone number
- Driver license number
- Owner name, address, and telephone number
- Vehicle license plate number
- Vehicle make, model, and model year
- Vehicle Identification Number (VIN)
- Insurance company and policy number
- General description of the damage to the other vehicle

Choose a reputable repair facility that uses quality replacement parts. See “Collision Parts” earlier in this section.

If the airbag has inflated, see *What Will You See after an Airbag Inflates?* ⇨ *54*.

Managing the Vehicle Damage Repair Process

In the event that the vehicle requires damage repairs, GM recommends that you take an active role in its repair. If you have a pre-determined repair facility of choice, take the vehicle there, or have it towed there. Specify to the facility that any required replacement collision parts be original equipment parts, either new Genuine GM parts or recycled original GM parts. Remember, recycled parts will not be covered by the GM vehicle warranty.

Insurance pays the bill for the repair, but you must live with the repair. Depending on your policy limits, your insurance company may initially value the repair using aftermarket parts. Discuss this with the repair professional, and insist on Genuine GM parts. Remember, if the vehicle is leased, you may be obligated to have the vehicle repaired with Genuine GM parts, even if your insurance coverage does not pay the full cost.

If another party's insurance company is paying for the repairs, you are not obligated to accept a repair valuation based on that insurance company's collision policy repair limits, as you have no contractual limits with that company. In such cases, you can have control of the repair and parts choices as long as the cost stays within reasonable limits.

Publication Ordering Information

Service Manuals

Service manuals have the diagnosis and repair information on the engine, transmission, axle, suspension, brakes, electrical system, steering system, body, etc.

Customer Literature

Owner’s manuals are written specifically for owners and are intended to provide basic operational information about the vehicle. The owner’s manual includes the Maintenance Schedule for all models.

Customer literature publications available for purchase include owner's manuals, warranty manuals, and portfolios. Portfolios include an owner's manual, warranty manual, if applicable, and zip lock bag or pouch.

Current and Past Models

Service manuals and customer literature are available for many current and past model year GM vehicles.

To order, call 1-800-551-4123 Monday–Friday, 8:00 a.m.–6:00 p.m. eastern time

For credit card orders only (VISA, MasterCard, or Discover), see Helm, Inc. at: www.helminc.com.

To order by mail, write to:

Helm, Incorporated
Attention: Customer Service
47911 Halyard Drive
Plymouth, MI 48170

Make checks payable in U.S. funds.

Radio Frequency Statement

This vehicle uses license-exempt transmitters / receivers / systems that operate on a radio frequency that complies with Part 15/ Part 18 of the Federal Communications Commission (FCC) rules and with Innovation, Science and Economic Development (ISED) Canada's license-exempt RSS(s) / RSP-100 / ICES-GEN.

Operation is subject to the following two conditions:

1. The device may not cause harmful interference.
2. The device must accept any interference received, including interference that may cause undesired operation of the device.

Changes or modifications to any of these systems by other than an authorized service facility could void authorization to use this equipment.

Reporting Safety Defects

Reporting Safety Defects to the United States Government

If you believe that your vehicle has a defect which could cause a crash or could cause injury or death, you should immediately inform the National Highway Traffic Safety Administration (NHTSA) in addition to notifying General Motors.

If NHTSA receives similar complaints, it may open an investigation, and if it finds that a safety defect exists in a group of vehicles, it may order a recall and remedy campaign. However, NHTSA cannot become involved in individual problems between you, your dealer, or General Motors.

To contact NHTSA, you may call the Vehicle Safety Hotline toll-free at 1-888-327-4236 (TTY: 1-800-424-9153); go to *http://www.safercar.gov;* or write to:

Administrator, NHTSA
1200 New Jersey Avenue, S.E.
Washington, D.C. 20590

You can also obtain other information about motor vehicle safety from *http://www.safercar.gov*.

Reporting Safety Defects to the Canadian Government

If you live in Canada, and you believe that the vehicle has a safety defect, notify Transport Canada immediately,

and notify General Motors of Canada Company. Call Transport Canada at 1-800-333-0510; go to:

www.tc.gc.ca/recalls (English)

www.tc.gc.ca/rappels (French)

or write to:

Transport Canada
Motor Vehicle Safety Directorate
Defect Investigations and Recalls Division
80 Noel Street
Gatineau, QC J8Z 0A1

Reporting Safety Defects to General Motors

In addition to notifying NHTSA (or Transport Canada) in a situation like this, notify General Motors.

In the U.S., call 1-800-222-1020, or write:

Chevrolet Motor Division
Chevrolet Customer Assistance Center
P.O. Box 33170
Detroit, MI 48232-5170

In Canada, call 1-800-263-3777 (English) or 1-800-263-7854 (French), or write:

General Motors of Canada Company
Customer Care Centre, Mail Code: CA1-163-005
1908 Colonel Sam Drive
Oshawa, Ontario L1H 8P7

In Mexico, call 800-466-0811 or 800-508-0000.

In other Central America and Caribbean Countries, call 52-555-901-2369.

Vehicle Data Recording and Privacy

The vehicle has a number of computers that record information about the vehicle's performance and how it is driven or used. For example, the vehicle uses computer modules to monitor and control engine and transmission performance, to monitor the conditions for airbag deployment and deploy them in a crash, and, if equipped, to provide antilock braking to help the driver control the vehicle. These modules may store data to help the dealer technician service the vehicle or to help GM improve safety or features. Some modules may also store data about how the vehicle is operated, such as rate of fuel consumption or average speed. These modules may retain personal preferences, such as radio presets, seat positions, and temperature settings.

Cybersecurity

GM collects information about the use of your vehicle including operational and safety related information. We collect this information to provide, evaluate, improve, and troubleshoot our products and services and to develop new products and services. The protection of vehicle electronics systems and customer data from unauthorized outside electronic access or control is important to GM. GM maintains appropriate security standards, practices, guidelines and controls aimed at defending the vehicle and the vehicle service ecosystem against unauthorized electronic access, detecting possible malicious activity in related networks, and responding to suspected cybersecurity incidents in a timely, coordinated and effective manner. Security incidents could impact your safety or compromise your private data. To minimize security risks, please do not connect your vehicle electronic systems to unauthorized devices or connect your vehicle to any unknown or untrusted networks (such as Bluetooth, WIFI or similar technology). In

the event you suspect any security incident impacting your data or the safe operation of your vehicle, please stop operating your vehicle and contact your dealer.

Event Data Recorders

This vehicle is equipped with an event data recorder (EDR). The main purpose of an EDR is to record, in certain crash or near crash-like situations, such as an air bag deployment or hitting a road obstacle, data that will assist in understanding how a vehicle's systems performed. The EDR is designed to record data related to vehicle dynamics and safety systems for a short period of time, typically 30 seconds or less. The EDR in this vehicle is designed to record such data as:

- How various systems in your vehicle were operating;
- Whether or not the driver and passenger safety belts were buckled/fastened;
- How far (if at all) the driver was depressing the accelerator and/or brake pedal; and,
- How fast the vehicle was traveling.

These data can help provide a better understanding of the circumstances in which crashes and injuries occur.

Note

EDR data are recorded by your vehicle only if a non-trivial crash situation occurs; no data are recorded by the EDR under normal driving conditions and no personal data (e.g., name, gender, age, and crash location) are recorded. However, other parties, such as law enforcement, could combine the EDR data with the type of personally identifying data routinely acquired during a crash investigation.

To read data recorded by an EDR, special equipment is required, and access to the vehicle or the EDR is needed. In addition to the vehicle manufacturer, other parties, such as law enforcement, that have the special equipment, can read the information if they have access to the vehicle or the EDR.

GM will not access these data or share it with others except: with the consent of the vehicle owner or, if the vehicle is leased, with the consent of the lessee; in response to an official request by police or similar government office; as part of GM's defense of litigation through the discovery process; or, as required by law. Data that GM collects or receives may also be used for GM research needs or may be made available to others for research purposes, where a need is shown and the data is not tied to a specific vehicle or vehicle owner.

OnStar

If the vehicle is equipped with OnStar and has an active service plan, additional data may be collected and transmitted through the OnStar system. This includes information about the vehicle's operation; collisions involving the vehicle; the use of the vehicle and its features, including infotainment; and the location and approximate GPS speed of the vehicle. Refer to the OnStar Terms and Conditions and Privacy Statement on the OnStar website.

See *OnStar Additional Information* ⇨ *361*.

Infotainment System

If the vehicle is equipped with a navigation system as part of the infotainment system, use of the system may result in the storage of destinations, addresses, telephone numbers, and other trip information. See the infotainment section for information on stored data and for deletion instructions.

OnStar

OnStar Overview
OnStar Overview 360

OnStar Services
Emergency 361
Security 361

OnStar Additional Information
OnStar Additional Information 361

OnStar Overview

Voice Command Button

Blue OnStar Button

Red Emergency Button

This vehicle may be equipped with a comprehensive, in-vehicle system that can connect to an OnStar Advisor for Emergency, Security, Navigation, Connections, and Diagnostics Services. OnStar services may require a paid service plan and data plan. OnStar requires the vehicle battery and electrical system, cellular service, and GPS satellite signals to be available and operating. OnStar acts as a link to existing emergency service providers. OnStar may collect information about you and your vehicle, including location information. See OnStar User Terms, Privacy Statement, and Software Terms for more details including system limitations at www.onstar.com (U.S.) or www.onstar.ca (Canada).

The OnStar system status light is next to the OnStar buttons. If the status light is:

- Solid Green: System is ready.
- Flashing Green: On a call.
- Red: Indicates a problem.
- Off: System is off. Press On twice to speak with an OnStar Advisor.

Press On or call 1-888-4ONSTAR (1-888-466-7827) to speak to an Advisor.

Functionality of the Voice Command button may vary by vehicle and region.

Press to:

- Open the OnStar app on the infotainment display. See *OnStar System* ⇨ *141* for information on how to use the OnStar app.

Or

- Give OnStar Turn-by-Turn Navigation voice commands.
- Obtain and customize the Wi-Fi hotspot name or SSID and password, if equipped.

Press On to connect to an Advisor to:

- Verify account information or update contact information.
- Get driving directions.

- Receive a Diagnostic check of the vehicle's key operating systems.
- Receive Roadside Assistance.
- Manage Wi-Fi Settings, if equipped.

Press SOS to get a priority connection to an OnStar Advisor available 24/7 to:

- Get help for an emergency.
- Be a Good Samaritan or respond to an AMBER Alert.
- Get assistance in severe weather or other crisis situations and find evacuation routes.

OnStar Services

Emergency

Emergency Services require an active safety and security plan. With Automatic Crash Response, built-in sensors can automatically alert a specially trained OnStar Advisor who is immediately connected in to the vehicle to help.

Press SOS for a priority connection to an OnStar Advisor who can contact emergency service providers, direct them to your exact location, and relay important information.

With OnStar Crisis Assist, specially trained Advisors are available 24 hours a day, 7 days a week, to provide a central point of contact, assistance, and information during a crisis.

With Roadside Assistance, Advisors can locate a nearby service provider to help with a flat tire, a battery jump, or an empty gas tank.

Security

If equipped, OnStar provides these services:

- With Stolen Vehicle Assistance, OnStar Advisors can use GPS to pinpoint the vehicle and help authorities quickly recover it.
- With Remote Ignition Block, if equipped, OnStar can block the engine from being restarted.
- With Stolen Vehicle Slowdown, if equipped, OnStar can work with law enforcement to gradually slow the vehicle down.

Theft Alarm Notification

If equipped, if the doors are locked and the vehicle alarm sounds, a notification by text, e-mail, or phone call will be sent. If the vehicle is stolen, an OnStar Advisor can work with authorities to recover the vehicle.

OnStar Additional Information

In-Vehicle Audio Messages

Audio messages may play important information at the following times:

- Prior to vehicle purchase. Press On to set up an account.
- After change in ownership and at 90 days.

Transferring Service

Press On to request account transfer eligibility information. The Advisor can cancel or change account information.

Selling/Transferring the Vehicle

Call 1-888-4ONSTAR (1-888-466-7827) immediately to terminate your OnStar or connected services if the vehicle is disposed of, sold, transferred, or if the lease ends.

Reactivation for Subsequent Owners

Press ⓞⓝ and follow the prompts to speak to an Advisor as soon as possible. The Advisor will update vehicle records and explain OnStar or connected service options.

How OnStar Service Works

Automatic Crash Response, Emergency Services, Crisis Assist, Stolen Vehicle Assistance, Remote Services, and Roadside Assistance are available on most vehicles. Not all OnStar services are available everywhere or on all vehicles. For more information, a full description of OnStar services, system limitations, and OnStar User Terms, Privacy Statement, and Software Terms:

- Call 1-888-4ONSTAR (1-888-466-7827).
- See www.onstar.com (U.S.).
- See www.onstar.ca (Canada).
- Call TTY 1-877-248-2080.
- Press ⓞⓝ to speak with an Advisor.

OnStar or connected services cannot work unless the vehicle is in a place where OnStar has an agreement with a wireless service provider for service in that area. The wireless service provider must also have coverage, network capacity, reception, and technology compatible with OnStar or connected services. Service involving location information about the vehicle cannot work unless GPS signals are available, unobstructed, and compatible with the OnStar hardware. OnStar or connected services may not work if the OnStar equipment is not properly installed or it has not been properly maintained. If equipment or software is added, connected, or modified, OnStar or connected services may not work. Other problems beyond the control of OnStar — such as hills, tall buildings, tunnels, weather, electrical system design and architecture of the vehicle, damage to the vehicle in a crash, or wireless phone network congestion or jamming — may prevent service.

See *Radio Frequency Statement* ⇨ *357*.

Services for People with Disabilities

Advisors provide services to help with physical disabilities and medical conditions.

Press ⓞⓝ to help:

- Locate a gas station with an attendant to pump gas.
- Find a hotel, restaurant, etc., that meets accessibility needs.
- Provide directions to the closest hospital or pharmacy in urgent situations.

TTY Users

OnStar has the ability to communicate to deaf, hard-of-hearing, or speech-impaired customers while in the vehicle. The available dealer-installed TTY system can provide in-vehicle access to all OnStar services, except Virtual Advisor and OnStar Turn-by-Turn Navigation.

If equipped, TTY mode can be turned on or off by touching Settings, then Apps, and then Phone. When TTY mode is on, phone calls can be made or received with OnStar using the infotainment display.

OnStar Personal Identification Number (PIN)

A PIN is needed to access some OnStar services. The PIN will need to be changed the first time when speaking with an Advisor. To change the OnStar PIN, contact an OnStar Advisor by pressing ⓞⓝ or calling 1-888-4ONSTAR.

Warranty

OnStar equipment may be warranted as part of the vehicle warranty.

Languages

The vehicle can be programmed to respond in multiple languages. Press and ask for an Advisor. Advisors are available in English, Spanish, and French. Available languages may vary by country.

Potential Issues

OnStar cannot perform Remote Door Unlock or Stolen Vehicle Assistance after the vehicle has been off continuously for 10 days without an ignition cycle. If the vehicle has not been started for 10 days, OnStar can contact Roadside Assistance or a locksmith to help gain access to the vehicle.

Global Positioning System (GPS)

- Obstruction of the GPS can occur in a large city with tall buildings; in parking garages; around airports; in tunnels and underpasses; or in an area with very dense trees. If GPS signals are not available, the OnStar system should still operate to call OnStar. However, OnStar could have difficulty identifying the exact location.
- In emergency situations, OnStar can use the last stored GPS location to send to emergency responders.

A temporary loss of GPS can cause loss of the ability to send a Turn-by-Turn Navigation route. The Advisor may give a verbal route or may ask for a call back after the vehicle is driven into an open area.

Cellular and GPS Antennas

Cellular reception is required for OnStar to send remote signals to the vehicle. Do not place items over or near the antenna to prevent blocking cellular and GPS signal reception.

Unable to Connect to OnStar Message

If there is limited cellular coverage or the cellular network has reached maximum capacity, this message may come on. Press to try the call again or try again after driving a few miles into another cellular area.

Vehicle and Power Issues

OnStar services require a vehicle electrical system, wireless service, and GPS satellite technologies to be available and operating for features to function properly. These systems may not operate if the battery is discharged or disconnected.

Add-on Electrical Equipment

The OnStar system is integrated into the electrical architecture of the vehicle. Do not add any electrical equipment. See *Add-On Electrical Equipment* ⇨ *252*. Added electrical equipment may interfere with the operation of the OnStar system and cause it to not operate.

Vehicle Software Updates

OnStar or GM may remotely deliver software updates or changes to the vehicle without further notice or consent. These updates or changes may enhance or maintain safety, security, or the operation of the vehicle or the vehicle systems. Software updates or changes may affect or erase data or settings that are stored in the vehicle, such as saved navigation destinations or pre-set radio stations. Neither OnStar nor GM is responsible for any affected or erased data or settings. These updates or changes may also collect personal information. Such collection is described in the OnStar privacy statement or separately disclosed at the time of installation. These updates or changes may also cause a system to automatically communicate with GM servers to collect information about vehicle system status,

identify whether updates or changes are available, or deliver updates or changes. An active OnStar agreement constitutes consent to these software updates or changes and agreement that either OnStar or GM may remotely deliver them to the vehicle.

Privacy

The complete OnStar Privacy Statement may be found at www.onstar.com (U.S.), or www.onstar.ca (Canada). We recommend that you review it. If you have any questions, call 1-888-4ONSTAR (1-888-466-7827) or press to speak with an Advisor. Users of wireless communications are cautioned that the privacy of any information sent via wireless cellular communications cannot be assured. Third parties may unlawfully intercept or access transmissions and private communications without consent.

OnStar - Software Acknowledgements

To obtain the source code under GPL, LGPL, MPL, and other open source licenses, that is contained in this product, please visit http://opensource.lge.com. In addition to the source code, all referred license terms, warranty disclaimers, and copyright notices are available for download. This offer is valid for a period of three years after our last shipment of this product. This offer is valid to anyone in receipt of this information.

*Provided through LG Electronics Inc., who is solely responsible for provisions of related OSS compliance.

Connected Services

Connected Services

Navigation 365
Connections 366
Diagnostics 367

Connected Services

Navigation

Navigation requires a specific OnStar or connected service plan.

Press to receive Turn-by-Turn directions or have them sent to the vehicle's navigation screen, if equipped.

Turn-by-Turn Navigation

1. Press to connect to an Advisor.
2. Request directions to be downloaded to the vehicle.
3. Follow the voice-guided commands.

Using Voice Commands During a Planned Route

Functionality of the Voice Command button, if equipped, may vary by vehicle and region. For some vehicles, press to open the OnStar app on the infotainment display. For other vehicles press as follows.

Cancel Route

1. Press . System responds: "OnStar ready," then a tone.
2. Say "Cancel route." System responds: "Do you want to cancel directions?"
3. Say "Yes." System responds: "OK, request completed, thank you, goodbye."

Route Preview

1. Press . System responds: "OnStar ready," then a tone.
2. Say "Route preview." System responds with the next three maneuvers.

Repeat

1. Press . System responds: "OnStar ready," then a tone.
2. Say "Repeat." System responds with the last direction given, then responds with "OnStar ready," then a tone.

Get My Destination

1. Press . System responds: "OnStar ready," then a tone.
2. Say "Get my destination." System responds with the address and distance to the destination, then responds with "OnStar ready," then a tone.

Send Destination to Vehicle

Directions can be sent to the vehicle's navigation screen, if equipped.

Press , then ask the Advisor to download directions to the vehicle's navigation system, if equipped. After the call ends, the navigation screen will provide prompts to begin driving directions. Routes that are sent to the navigation screen can only be canceled through the navigation system.

See www.onstar.com (U.S.) or www.onstar.ca (Canada).

Connections

The following services help with staying connected.

For coverage maps, see www.onstar.com (U.S.) or www.onstar.ca (Canada).

Ensuring Security

- Change the default passwords for the Wi-Fi hotspot and myChevrolet mobile application. Make these passwords different from each other and use a combination of letters and numbers to increase the security.
- Change the default name of the SSID (Service Set Identifier). This is your network's name that is visible to other wireless devices. Choose a unique name and avoid family names or vehicle descriptions.

Wi-Fi Hotspot (If Equipped)

The vehicle may have a built-in Wi-Fi hotspot that provides access to the Internet and web content at 4G LTE speed. Up to seven mobile devices can be connected. A data plan is required. Use the in-vehicle controls only when it is safe to do so.

1. To retrieve Wi-Fi hotspot information, press to open the OnStar app on the infotainment display, then select Wi-Fi Hotspot. On some vehicles, touch Wi-Fi or Wi-Fi Settings on the screen.
2. The Wi-Fi settings will display the Wi-Fi hotspot name (SSID), password, and on some vehicles, the connection type (no Internet connection, 3G, 4G, 4G LTE), and signal quality (poor, good, excellent). The LTE icon shows connection to Wi-Fi. It is possible that the icon may not illuminate even though the vehicle has an active connection.
3. To change the SSID or password, press or call 1-888-4ONSTAR to connect with an Advisor. On some vehicles, the SSID and password can be changed in the Wi-Fi Hotspot menu.

After initial set-up, your vehicle's Wi-Fi hotspot will connect automatically to your mobile devices. Manage data usage by turning Wi-Fi on or off on your mobile device, using the myChevrolet mobile app, or by contacting an OnStar Advisor. On some vehicles, Wi-Fi can also be managed from the Wi-Fi Hotspot menu.

MyChevrolet Mobile App (If Available)

Download the myChevrolet mobile app to compatible Apple and Android smartphones. Chevrolet users can access the following services from a smartphone:

- Remotely start/stop the vehicle, if factory-equipped.
- Lock/unlock doors, if equipped with automatic locks.
- Activate the horn and lamps.
- Check the vehicle's fuel level, oil life, or tire pressure, if factory-equipped with the Tire Pressure Monitor System.
- Send destinations to the vehicle.
- Locate the vehicle on a map (U.S. market only).
- Turn the vehicle's Wi-Fi hotspot on/off, manage settings, and monitor data consumption, if equipped.
- Locate a dealer and schedule service.

- Request Roadside Assistance.
- Set a parking reminder with pin drop, take a photo, make a note, and set a timer.
- Connect with Chevrolet on social media.

Features are subject to change. For myChevrolet mobile app information and compatibility, see my.chevrolet.com.

An active OnStar or connected service plan may be required. A compatible device, factory-installed remote start, and power locks are required. Data rates apply. See www.onstar.com for details and system limitations.

Remote Services

Contact an OnStar Advisor to unlock the doors or sound the horn and flash the lamps.

Marketplace

OnStar Advisors can provide offers from restaurants and retailers on your route, help locate hotels, or book a room. These services vary by market.

Diagnostics

By monitoring and reporting on the vehicle's key systems, OnStar Advanced Diagnostics, if equipped, provides a way to keep up on maintenance. Capabilities vary by model. See www.onstar.com for details and system limitations. Features are subject to change. For updates on feature capabilities, see my.chevrolet.com. Message and data rates may apply.

Index

A

Accessories and Modifications 254
Accessory Power 205
Active Fuel Management 206
Adaptive Cruise Control 217
Add-On Electrical Equipment 252
Additional Information
  OnStar 361
Additional Maintenance and Care 337
Adjustments
  Lumbar, Front Seats 36
Agreements
  Trademarks and License 173
Air Cleaner/Filter, Engine 265
Air Conditioning 182
Air Filter
  Life System 265
Air Filter, Passenger Compartment 186
Air Vents 186
Airbag System
  Check 59
  How Does an Airbag Restrain? 54
  Passenger Sensing System 55
  What Makes an Airbag Inflate? 54
  What Will You See after an Airbag Inflates? 54
  When Should an Airbag Inflate? 53
  Where Are the Airbags? 52
Airbags
  Adding Equipment to the Vehicle 59
  Passenger Status Indicator 99
  Readiness Light 98
  Servicing Airbag-Equipped Vehicles 58
  System Check 50
Alarm
  Vehicle Security 23
Alert
  Lane Change 236
  Side Blind Zone (SBZA) 236
All-Season Tires 288
All-Wheel Drive 210, 275
AM-FM Radio 134
Antenna
  Multi-band 137
Antilock Brake System (ABS) 210
  Warning Light 102
Appearance Care
  Exterior 323
  Interior 327
Apple CarPlay and Android Auto 163
Armrest Storage 77
Assistance Program, Roadside 352
Assistance Systems for Driving 230
Assistance Systems for Parking and Backing 227

Audio
Bluetooth 140
Auto Stop
Stop/Start System 203
Automatic
Dimming Mirrors 26
Door Locks 17
Emergency Braking (AEB) 232
Headlamp System 123
Transmission 207
Transmission Fluid 265
Automatic Transmission
Manual Mode 209
Shift Lock Control Function Check 275
Avoiding Untrusted Media Devices 137

B

Battery
Exterior Lighting Battery Saver 127
Load Management 126
Power Protection 127
Battery - North America 274, 318
Blade Replacement, Wiper 276
Bluetooth
Overview 159
Bluetooth Audio 140
Brake
Electric Boost 210
Brake (cont'd)
Parking, Electric 211
System Warning Light 101
Brakes 273
Antilock 210
Assist 212
Fluid 273
Braking 189
Automatic Emergency (AEB) 232
Braking System
Front Pedestrian (FPB) 234
Break-In, New Vehicle 200
Bulb Replacement
Back-up Lamps 278
Headlamp Aiming 278
Headlamps 278
High Intensity Discharge (HID)
Lighting 278
Buying New Tires 302

C

Calibration 85
California
Perchlorate Materials Requirements ... 254
California Proposition
65 Warning .....254, 274, 318, Back Cover
Canadian Vehicle Owners 1
Capacities and Specifications 345
Carbon Monoxide
Engine Exhaust 207
Liftgate 18
Winter Driving 195
Cargo
Management System 79
Tie-Downs 78
Caution, Danger, and Warning 2
Center Console Storage 77
Chains, Tire 305
Charging
Wireless 87
Charging System Light 100
Check
Engine Light (Malfunction
Indicator) 100
Child Restraints
Infants and Young Children 61
Lower Anchors and Tethers for
Children 66
Older Children 60
Securing 72, 73
Systems 63
Circuit Breakers 280
Cleaning
Exterior Care 323
Interior Care 327

Climate Control Systems
Dual Automatic 182
Clock 86
Cluster, Instrument 90, 93
Collision Damage Repair 355
Compact Spare Tire 317
Compartments
Storage 76
Compass 85
Compressor Kit, Tire Sealant 307
Connected Services
Connections 366
Diagnostics 367
Navigation 365
Connections
Connected Services 366
Control
Traction and Electronic Stability 213
Control of a Vehicle 189
Controls
Steering Wheel 130
Convex Mirrors 25
Coolant
Engine Temperature Gauge 96
Engine Temperature Warning Light 105
Cooling 182
Cooling System 267
Courtesy Lamps 125
Courtesy Transportation Program 354
Coverage Explanations 153
Cruise Control 215
Light 107
Cruise Control, Adaptive 217
Customer Assistance 351
Offices 351
Text Telephone (TTY) Users 351
Customer Information
Publications Ordering Information 356
Customer Satisfaction Procedure 349
Cybersecurity 358

D

Damage Repair, Collision 355
Danger, Warning, and Caution 2
Data Collection
Infotainment System 359
OnStar 359
Data Recorders, Event 359
Database Coverage Explanations 153
Daytime Running Lamps (DRL) 123
Defensive Driving 188
Delayed Locking 16
Destination 146
Diagnostics
Connected Services 367
Distracted Driving 188
Dome Lamps 125
Door
Ajar Light 107
Delayed Locking 16
Locks 14
Power Locks 16
Drive Belt Routing, Engine 348
Drive Systems
All-Wheel Drive 210, 275
Driver
Teen 171
Driver Assistance Systems 225
Driver Information Center (DIC) 107, 110
Driver Mode Control 214
Driving
Assistance Systems 230
Better Fuel Economy 188
Characteristics and Towing Tips 242
Defensive 188
Hill and Mountain Roads 195
If the Vehicle is Stuck 196
Impaired 189
Loss of Control 191
Off-Road 191
Off-Road Recovery 190
Vehicle Load Limits 197
Wet Roads 194
Winter 195

Dual Automatic Climate Control
System 182

E

Electric Brake Boost 210
Electric Parking Brake 211
Electric Parking Brake Light 102
Electrical Equipment, Add-On 252
Electrical System
Engine Compartment Fuse Block 280
Fuses and Circuit Breakers 280
Instrument Panel Fuse Block 284
Overload 279
Rear Compartment Fuse Block 285
Emergency
OnStar 361
Engine
Air Cleaner/Filter 265
Check Light (Malfunction Indicator) 100
Compartment Overview 257
Coolant Temperature Gauge 96
Coolant Temperature Warning
Light 105
Cooling System 267
Drive Belt Routing 348
Exhaust 207
Heater 203
Oil Life System 264
Engine (cont'd)
Oil Pressure Light 105
Overheating 271
Power Messages 113
Running While Parked 207
Starting 202
Engine Air Filter Life System 265
Engine Oil
Temperature Gauge 96
Entry Lighting 126
Equipment, Towing 248
Event Data Recorders 359
Exit Lighting 126
Extended Parking 206
Extender, Seat Belt 49
Exterior Lamp Controls 121
Exterior Lamps Off Reminder 122
Exterior Lighting Battery Saver 127

F

Filter,
Engine Air Cleaner 265
Flash-to-Pass 123
Flashers, Hazard Warning 124
Flat Tire 306
Changing 313
Floor Mats 329
Fluid
Automatic Transmission 265
Brakes 273
Washer 272
Folding Mirrors 26
Forward Collision Alert (FCA) System 230
Frequency Statement
Radio 357
Front Pedestrian Braking (FPB)
System 234
Front Seats
Adjustment 35
Heated and Ventilated 40
Fuel
Additives 240
Economy, Driving for Better 188
Filling a Portable Fuel Container 241
Filling the Tank 240
Foreign Countries 240
Gauge 95
Low Fuel Warning Light 106
Management, Active 206
Prohibited Fuels 239
Recommended 239
Top Tier 239
Fuses
Engine Compartment Fuse Block 280
Fuses and Circuit Breakers 280

Fuses (cont'd)
Instrument Panel Fuse Block 284
Rear Compartment Fuse Block 285

G

Garage Door Opener 117
Programming 117
Gas Strut(s) 277
Gauges
Engine Coolant Temperature 96
Engine Oil Temperature 96
Fuel 95
Odometer 94
Speedometer 94
Tachometer 95
Trip Odometer 95
Voltmeter 97
Warning Lights and Indicators 89
General Information
Service and Maintenance 331
Towing 242
Vehicle Care 254
Global Positioning System (GPS) 152
Glove Box 76
GM Mobility Reimbursement
Program 352
Guidance
Problems with the Route 153

H

Hazard Warning Flashers 124
HD Radio Technology 135
Head Restraints 33
Headlamps
Aiming 278
Automatic 123
Bulb Replacement 278
Daytime Running Lamps (DRL) 123
Flash-to-Pass 123
High Intensity Discharge (HID)
Lighting 278
High-Beam On Light 106
High/Low Beam Changer 122
Lamps On Reminder 107
Heated
Rear Seats 44
Steering Wheel 83
Heated and Ventilated Front Seats 40
Heated Mirrors 26
Heater
Engine 203
Heating 182
High Voltage Devices and Wiring 279
High-Beam On Light 106
High-Speed Operation 295
Hill and Mountain Roads 195
Hill Start Assist (HSA) 212
Hood 255
Hooks
Shopping Bag 78
Horn 84
How to Wear Seat Belts Properly 45
HVAC 182

I

If the System Needs Service 153
Ignition Positions 200
Immobilizer 24
Indicator
Pedestrian Ahead 104
Vehicle Ahead 103
Infants and Young Children, Restraints 61
Information
Publication Ordering 356
Infotainment System 359
Instrument Cluster 90, 93
Instrument Panel Overview 4
Interior Rearview Mirrors 26
Introduction 1, 128

J

Jump Starting - North America 318

K

Keyless Entry
Remote (RKE) System 7

Keys 6

L

Labeling, Tire Sidewall 289
Lamps
  Courtesy 125
  Daytime Running (DRL) 123
  Dome 125
  Exterior Controls 121
  Exterior Lamps Off Reminder 122
  Exterior Lighting Battery Saver 127
  Malfunction Indicator (Check Engine) 100
  On Reminder 107
  Reading 125
Lane Change Alert (LCA) 236
Lane Keep Assist (LKA) 237
Lane Keep Assist Light 103
Lap-Shoulder Belt 46
LATCH System
  Replacing Parts after a Crash 71
LATCH, Lower Anchors and Tethers for Children 66
LED Lighting 278
Liftgate 18
Lighting
  Entry 126
  Exit 126
Lighting (cont'd)
  Illumination Control 124
  LED 278
Lights
  Airbag Readiness 98
  Antilock Brake System (ABS) Warning 102
  Brake System Warning 101
  Charging System 100
  Check Engine (Malfunction Indicator) 100
  Cruise Control 107
  Door Ajar 107
  Electric Parking Brake 102
  Engine Coolant Temperature Warning 105
  Engine Oil Pressure 105
  Flash-to-Pass 123
  High-Beam On 106
  High/Low Beam Changer 122
  Lane Keep Assist 103
  Low Fuel Warning 106
  Seat Belt Reminders 98
  Security 106
  Service Electric Parking Brake 102
  StabiliTrak OFF 104
  Tire Pressure 105
  Tow/Haul Mode 103
Lights (cont'd)
  Traction Control System (TCS)/StabiliTrak 104
  Traction Off 104
Locks
  Automatic Door 17
  Delayed Locking 16
  Door 14
  Lockout Protection 17
  Power Door 16
  Safety 17
Loss of Control 191
Low Fuel Warning Light 106
Lower Anchors and Tethers for Children (LATCH System) 66
Lumbar Adjustment 36
  Front Seats 36

M

Maintenance
  Records 343
Maintenance and Care
  Additional 337
Maintenance Schedule 332
  Recommended Fluids and Lubricants 340
Malfunction Indicator Lamp 100
Manual Mode 209

Map Data Updates 153
Maps 145
Media
Avoiding Untrusted Devices 137
Memory Seats 38
Messages
Engine Power 113
Vehicle 113
Vehicle Speed 113
Mirror
Rear Camera 26
Mirrors
Automatic Dimming 26
Automatic Dimming Rearview 26
Convex 25
Folding 26
Heated 26
Manual Rearview 26
Power 25
Tilt in Reverse 26
Mirrors, Interior Rearview 26
Mode 214
Driver Control 214
Monitor System, Tire Pressure 296
Multi-band Antenna 137

N

Navigation
Connected Services 365
Destination 146
Using the System 142
Navigation Symbols 145
New Vehicle Break-In 200

O

Odometer 94
Trip 95
Off-Road 191
Driving 191
Recovery 190
Oil
Engine 262
Engine Oil Life System 264
Pressure Light 105
Older Children, Restraints 60
Online Owner Center 351
OnStar 359
OnStar Additional Information 361
OnStar Emergency 361
OnStar Overview 360
OnStar Security 361
OnStar System 141, 151
Outlets
Power 86
Overheating, Engine 271
Overview 129
Instrument Panel 4

P

Park
Shifting Into 205
Shifting Out of 205
Park Assist 227
Parking
Brake and P (Park) Mechanism
Check 275
Extended 206
Over Things That Burn 206
Parking or Backing
Assistance Systems 227
Passenger Airbag Status Indicator 99
Passenger Compartment Air Filter 186
Passenger Sensing System 55
Pedestrian Ahead Indicator 104
Perchlorate Materials Requirements,
California 254
Personalization
Vehicle 113
Phone
Apple CarPlay and Android Auto 163
Bluetooth 159

Port
USB 137
Positioning
Vehicle 152
Power
Door Locks 16
Mirrors 25
Outlets 86
Protection, Battery 127
Retained Accessory (RAP) 205
Seat Adjustment 36
Windows 29
Pregnancy, Using Seat Belts 49
Privacy
Vehicle Data Recording 358
Problems with Route Guidance 153
Program
Courtesy Transportation 354
Prohibited Fuels 239
Proposition 65 Warning,
California ..... 254, 274, 318, Back Cover
Publication Ordering Information 356

R

Radio
HD Radio Technology 135
Radio Data System (RDS) 136
Radio Frequency Statement 357
Radio Reception 137
Radios
AM-FM Radio 134
Satellite 136
Reading Lamps 125
Rear Camera Mirror 26
Rear Seats 42
Heated 44
Rear Storage 77
Rear Vision Camera (RVC) 227
Rear Window Washer/Wiper 85
Rearview Mirrors 26
Automatic Dimming 26
Reclining Seatbacks 37
Recognition
Voice 154
Recommended
Fuel 239
Recommended Fluids and Lubricants 340
Records
Maintenance 343
Recreational Vehicle Towing 321
Reimbursement Program, GM
Mobility 352
Remote Keyless Entry (RKE) System 7
Remote Vehicle Start 13
Replacement Parts
Airbags 60
Maintenance 341
Replacing Airbag System 60
Replacing LATCH System Parts after a
Crash 71
Replacing Seat Belt System Parts after
a Crash 50
Reporting Safety Defects
Canadian Government 357
General Motors 358
U.S. Government 357
Restraints
Where to Put 65
Retained Accessory Power (RAP) 205
Reverse Tilt Mirrors 26
Roads
Driving, Wet 194
Roadside Assistance Program 352
Roof
Sunroof 31
Roof Rack System 81
Rotation, Tires 300
Routing, Engine Drive Belt 348
Running the Vehicle While Parked 207

S

Safety Defects Reporting
  Canadian Government 357
  General Motors 358
  U.S. Government 357
Safety Locks 17
Safety System Check 49
Satellite Radio 136
Scheduling Appointments 353
Sealant Kit, Tire 307
Seat Belts 44
  Care 50
  Extender 49
  How to Wear Seat Belts Properly 45
  Lap-Shoulder Belt 46
  Reminders 98
  Replacing after a Crash 50
  Use During Pregnancy 49
Seats
  Adjustment, Front 35
  Head Restraints 33
  Heated and Ventilated Front 40
  Heated, Rear 44
  Lumbar Adjustment, Front 36
  Memory 38
  Power Adjustment, Front 36
  Rear 42
  Reclining Seatbacks 37
Securing Child Restraints 72, 73
Security
  Light 106
  OnStar 361
  Vehicle 23
  Vehicle Alarm 23
Service 186
  Accessories and Modifications 254
  Doing Your Own Work 255
  Maintenance Records 343
  Maintenance, General Information 331
  Parts Identification 344
  Scheduling Appointments 353
Service Electric Parking Brake Light 102
Services
  Special Application 337
Servicing System 153
Servicing the Airbag 58
Settings 164
Shift Lock Control Function Check,
  Automatic Transmission 275
Shifting
  Into Park 205
  Out of Park 205
Shopping Bag Hooks 78
Side Blind Zone Alert (SBZA) 236
Signals, Turn and Lane-Change 124
Software Updates 134
Spare Tire
  Compact 317
Special Application Services 337
Specifications and Capacities 345
Speedometer 94
StabiliTrak
  OFF Light 104
Start Assist, Hill 212
Start Vehicle, Remote 13
Starting the Engine 202
Steering 189
  Heated Wheel 83
  Wheel Adjustment 83
  Wheel Controls 83
Steering Wheel Controls 130
Stop/Start System 203
Storage
  Rear 77
Storage Areas
  Armrest 77
  Cargo Management System 79
  Center Console 77
  Glove Box 76
  Roof Rack System 81
  Sunglasses 76
Storage Compartments 76
Storing the Tire Sealant and
  Compressor Kit 313

Struts
Gas 277
Stuck Vehicle 196
Summer Tires 289
Sun Visors 31
Sunglass Storage 76
Sunroof 31
Symbols 2
Navigation 145
System
Engine Air Filter Life 265
Forward Collision Alert (FCA) 230
Global Positioning 152
Infotainment 359
OnStar 151
Roof Rack 81
Systems
Driver Assistance 225

T

Tachometer 95
Teen Driver 171
Text Telephone (TTY) Users 351
Theft-Deterrent Systems 24
Immobilizer 24
Time 86
Tires 287
All-Season 288
Tires (cont'd)
Buying New Tires 302
Chains 305
Changing 313
Compact Spare 317
Designations 291
Different Size 303
If a Tire Goes Flat 306
Inspection 300
Pressure 294, 295
Pressure Light 105
Pressure Monitor Operation 297
Pressure Monitor System 296
Rotation 300
Sealant and Compressor Kit 307
Sealant and Compressor Kit,
Storing 313
Sidewall Labeling 289
Terminology and Definitions 292
Uniform Tire Quality Grading 303
Wheel Alignment and Tire Balance 305
Wheel Replacement 305
When It Is Time for New Tires 301
Winter 288
Top Tier Fuel 239
Tow/Haul Mode 210
Tow/Haul Mode Light 103
Towing
Driving Characteristics 242
Equipment 248
General Information 242
Recreational Vehicle 321
Trailer 245
Trailer Sway Control (TSC) 251
Vehicle 320
Traction
Control System (TCS)/StabiliTrak
Light 104
Off Light 104
Traction Control/Electronic Stability
Control 213
Trademarks and License Agreements 173
Trailer
Sway Control (TSC) 251
Towing 245
Transmission
Automatic 207
Fluid, Automatic 265
Transportation Program, Courtesy 354
Trip Odometer 95
Turn and Lane-Change Signals 124

U

Uniform Tire Quality Grading 303
Universal Remote System 117

Universal Remote System (cont'd)
Operation 119
Programming 117
Updates
Map Data 153
Software 134
USB Port 137
Using the Navigation System 142
Using the System 131
Using This Manual 2

V

Vehicle
Alarm System 23
Canadian Owners 1
Control 189
Identification Number (VIN) 344
Load Limits 197
Messages 113
Personalization 113
Remote Start 13
Security 23
Speed Messages 113
Towing 320
Vehicle Ahead Indicator 103
Vehicle Care
Storing the Tire Sealant and
Compressor Kit 313
Vehicle Care (cont'd)
Tire Pressure 294
Vehicle Data Recording and Privacy 358
Vehicle Positioning 152
Ventilation, Air 186
Visors 31
Voice Recognition 154
Voltage Devices and Wiring 279
Voltmeter Gauge 97

W

Warning
Brake System Light 101
Caution and Danger 2
Warning Lights, Gauges, and
Indicators 89
Warnings
Hazard Flashers 124
Washer Fluid 272
Wheels
Alignment and Tire Balance 305
Different Size 303
Replacement 305
When It Is Time for New Tires 301
Where to Put the Restraint 65
Windows 29
Power 29
Windshield
Replacement 277
Wiper/Washer 84
Winter
Driving 195
Winter Tires 288
Wiper Blade Replacement 276
Wipers
Rear Washer 85
Wireless Charging 87
Wiring, High Voltage Devices 279

WARNING

Operating, servicing and maintaining a passenger vehicle or off-highway motor vehicle can expose you to chemicals including engine exhaust, carbon monoxide, phthalates, and lead, which are known to the State of California to cause cancer and birth defects or other reproductive harm. To minimize exposure, avoid breathing exhaust, do not idle engine except as necessary, service your vehicle in a well-ventilated area and wear gloves or wash your hands frequently when servicing your vehicle. For more information go to www.P65Warnings.ca.gov/passenger-vehicle.

United States:

Customer Assistance:
1-800-222-1020

Roadside Assistance:
1-800-243-8872

Canada:

Customer Assistance:
1-800-263-3777

Roadside Assistance:
1-800-268-6800

Connected Services and OnStar:
1-888-4-ONSTAR

US

My Chevrolet App

Download the my.Chevrolet App for full manuals and "how to" videos. The full owner's manual is located with your vehicle infotainment system, if equipped.

Canada

84580873 C

US ONLY

MyCertifiedService.com

Visit MyCertifiedService.com to easily locate your nearest dealer and schedule your next service appointment online.