WIRING DIAGRAMS
Article Text
1993 Honda Prelude
For Cadi Centre Nsk CA 95051
Copyright © 1998 Mitchell Repair Information Company, LLC
Sunday, July 08, 2001 11:42AM

ARTICLE BEGINNING

1993 WIRING DIAGRAMS
Honda Wiring Diagrams

Honda; Prelude

IDENTIFICATION

COMPONENT LOCATION MENU

COMPONENT LOCATIONS TABLE

AAAAAAAAAAAAAAAAAAAAAAAAAAAAAAAAAAAAAAAAAAAAAAAAAAAAAAAAAAAAAAAAAAAAAAAA

Component	Figure No. (Location)
ABS CONTROL UNIT (W/2WS)	9 (A-B 32)
ABS CONTROL UNIT (W/4WS)	10 (A-C 36)
ABS MOTOR	2 (A 7)
ALTERNATOR	1 (C 3)
ANTENNA MOTOR	16 (A 60)
AUTOMATIC TRANSMISSION CONTROL UNIT	8 (A-C 28)
BACK-UP LIGHT SWITCH (MANUAL TRANSMISSION)	16 (B 61)
BATTERY	1 (A 2)
BLOWER MOTOR	12 (A 47)
BRAKE FLUID LEVEL SWITCH	15 (D 58)
BRAKE SWITCH	10 (D 38)
CHIME	7 (E 24)
CIGARETTE LIGHTER & RELAY	15 (B 59)
CLUTCH INTERLOCK SWITCH (MANUAL TRANSMISSION)	1 (C 3)
COMBINATION SWITCH	13 (A-C 48)
COMPRESSOR CLUTCH RELAY	12 (E 47)
CONDENSER FAN RELAY	12 (B 47)
CRUISE CONTROL SYSTEM	10 (D-E 36-39)
DASH FUSE BLOCK (DASH F/B)	5,6 (A-E 17-22)
DASHLIGHT BRIGHTNESS CONTROLLER	13 (E 51)
DATA LINK CONN	4 (A 15)
DISTRIBUTOR ASSEMBLY	4 (D-E 15)
DOME LIGHT	13 (B 51)
DUAL PRESSURE SWITCH	12 (B 45)
EGR CONTROL SOLENOID	4 (C 15)
EGR VALVE LIFT SENSOR	3 (A 9)
ENGINE CONTROL MODULE (ECM)	3 (A-E 8)
FAIL SAFE RELAY (W/ 2WS)	9 (B 35)
FAIL SAFE RELAY (W/ 4WS)	10 (B 39)
FAN TIMER UNIT	12 (C 47)
FOG LIGHT RELAY	1 (D 3)
FOG LIGHT SWITCH	13 (D 48)

FRONT MAIN STEERING ANGLE SENSOR ..... 11 (A 43)
FUEL PUMP ..... 3 (E 11)
FUEL TANK UNIT ..... 14 (C 55)
FUNCTION CONTROL MOTOR ..... 12 (D 47)
GEAR SELECT SWITCH (AUTOMATIC TRANSMISSION) ..... 8 (A-C 31)
HAZARD SWITCH ..... 13 (C 48)
HEATER CONTROL PANEL ..... 12 (A-E 44)
HORN RELAY ..... 9 (E 35)
IGNITION COIL ..... 4 (E 15)
IGNITION KEY LIGHT ..... 7 (E 27)
IGNITION KEY SWITCH ..... 7 (E 27)
IGNITION SWITCH ..... 6 (D-E 23)
INTEGRATED CONTROL UNIT ..... 7 (A-C 24-27)
INTERMITTENT WIPER RELAY ..... 11 (E 43)
JUNCTION CONNECTOR C131 ..... 3 (D 11)
JUNCTION CONNECTOR C326 ..... 11 (D-E 40)
JUNCTION CONNECTOR C419 ..... 8 (C-E 31)
JUNCTION CONNECTOR C447 ..... 15 (C 59)
JUNCTION CONNECTOR C460 ..... 10 (E 39)
JUNCTION CONNECTOR C507 (W/ 2WS) ..... 9 (C 35)
JUNCTION CONNECTOR C507 (W/ 4WS) ..... 10 (C 39)
JUNCTION CONNECTOR C534 ..... 13 (A 51)
JUNCTION CONNECTOR C609 ..... 13 (D-E 48)
JUNCTION CONNECTOR C619 ..... 13 (C 51)
KEY INTERLOCK SWITCH ..... 8 (E 28)
LEFT BRAKE LIGHT SENSOR ..... 16 (E 63)
LEFT SEAT BELT SWITCH ..... 7 (E 27)
MAIN INSTRUMENT CLUSTER ..... 14 (A-B 52)
PGM-FI MAIN RELAY ..... 3 (E 11)
POWER DOOR LOCKS ..... 15 (D-E 56-59)
POWER MIRROR SWITCH ..... 16 (D 60)
POWER WINDOWS ..... 15 (A-C 56-59)
RADIATOR FAN MOTOR ..... 2 (E 7)
REAR MAIN STEERING ANGLE SENSOR ..... 11 (A 43)
RECIRC CONTROL MOTOR ..... 12 (E 47)
RIGHT BRAKE LIGHT SENSOR ..... 16 (A 63)
SERVICE CHECK CONNECTOR ..... 4 (A 15)
SRS CONTROL UNIT ..... 9 (D 32)
SRS FUSE BLOCK ..... 6 (D 22)
STARTER ..... 1 (A 3)
STARTER CUT RELAY (MANUAL TRANSMISSION) ..... 1 (B 3)
STEERING WHEEL ..... 9 (D-E 35)
SUB INSTRUMENT CLUSTER ..... 14 (C-E 52)
SUNROOF SWITCH ..... 13 (D 51)
TEMPERATURE SWITCHES ..... 12 (C 47)
THROTTLE ANGLE SENSOR ..... 3 (A 10)
TRUNK LATCH SWITCH ..... 13 (B 51)
UNDERHOOD FUSE BLOCK (U/H F/B) ..... 2 (B-D 4-7)

WIRING DIAGR

VEHICLE SPEED SENSOR ..... 3 (A 8)
VTEC PRESSURE SWITCH ..... 3 (D 8)
WASHER MOTOR ..... 11 (E 40)
WIPER/WASHER SWITCH ..... 11 (C-D 43)
4WS CONTROL UNIT ..... 11 (A-C 40)
AAAAAAAAAAAAAAAAAAAAAAAAAAAAAAAAAAAAAAAAAAAAAAAAAAAAAAAAAAAAAAAAAAAAAAAA

GROUND LOCATION MENU

GROUND LOCATIONS TABLE
AAAAAAAAAAAAAAAAAAAAAAAAAAAAAAAAAAAAAAAAAAAAAAAAAAAAAAAAAAAAAAAAAAAAAAAA

Component	Figure No. (Location)
GROUND A: (RIGHT FRONT OF ENGINE COMPARTMENT)	1 (A 2)
GROUND B: (ON TRANSMISSION CASE)	1 (B 2)
GROUND C: (LEFT SIDE OF ENGINE COMPARTMENT)	1 (B 2)
GROUND D: (ENGINE MOUNT BRACKET)	1 (C 2)
GROUND E: (VALVE COVER)	1 (C 2)
GROUND F: (RIGHT FRONT CORNER OF ENGINE COMPARTMENT)	1 (D 3)
GROUND G: (LEFT FRONT CORNER OF ENGINE COMPARTMENT)	1 (E 3)
GROUND H: (BELOW CENTER OF DASH)	2 (A 7)
GROUND I: (RIGHT SIDE OF ENGINE)	4 (E 13)
GROUND J: (RIGHT REAR CORNER OF CEILING)	6 (B 23)
GROUND K: (BEHIND FRONT CONSOLE)	8 (E 30)
GROUND L: (BEHIND RIGHT SIDE OF DASH)	8 (E 31)
GROUND M: (BELOW CENTER OF DASH)	9 (E 32)
GROUND N: (RIGHT KICK PANEL)	11 (C 41)
GROUND O: (BEHIND LEFT REAR SEAT)	11 (C 41)
GROUND P: (RIGHT QUARTER PANEL AREA)	11 (C 41)
GROUND Q: (BEHIND LEFT REAR SEAT)	11 (C 41)
GROUND R: (CENTER OF REAR STEERING ACTUATOR)	11 (D 41)
GROUND S: (BEHIND LEFT SIDE OF FRONT CONSOLE)	12 (A 45)
GROUND T: (LEFT FRONT OF ENGINE COMPARTMENT)	12 (B 47)
GROUND U: (LEFT SIDE OF FLOOR)	13 (A 49)
GROUND V: (LEFT QUARTER PANEL AREA)	13 (B 49)
GROUND W: (CENTER REAR OF TRUNK)	16 (C 62)

AAAAAAAAAAAAAAAAAAAAAAAAAAAAAAAAAAAAAAAAAAAAAAAAAAAAAAAAAAAAAAAAAAAAAAAA

WIRING DIAGRAMS

COMPONENT LOCATOR:

A/T CONTROL UNIT	A–C 28
ABS CONTROL UNIT (W/ 2WS)	A–B 32
ABS CONTROL UNIT (W/ 4WS)	A–C 36
ABS MOTOR	A 7
ALTERNATOR	C 3
ANTENNA MOTOR	A 60
BACK-UP LT SW (M/T)	B 61
BATTERY	A 2
BLOWER MOTOR	A 47
BRAKE FLUID LEVEL SW	D 58
BRAKE SW	D 38
CHIME	E 24
CIG LIGHTER & RELAY	B 59
CLUTCH INTERLOCK SW (M/T)	C 3
COMBINATION SW	A–C 48
COMP CLUTCH RELAY	E 47
CONDENSER FAN RELAY	B 47
CRUISE CONTROL SYSTEM	D–E 36–39
DASH FUSE BLOCK (DASH F/B)	A–E 17–22
DASHLIGHT BRIGHTNESS CONTROLLER	E 51
DATA LINK CONN	A 15
DISTRIBUTOR ASSEMBLY	D–E 15
DOME LT	B 51
DUAL PRES SW	B 45
EGR CONTROL SOLENOID	C 15
EGR VALVE LIFT SENSOR	A 9
ENGINE CONTROL MODULE (ECM)	A–E 8
FAIL SAFE RELAY (W/ 2WS)	B 35
FAIL SAFE RELAY (W/ 4WS)	B 39
FAN TIMER UNIT	C 47
FOG LT RELAY	D 3
FOG LT SW	D 48
FRONT MAIN STEERING ANGLE SENSOR	A 43
FUEL PUMP	E 11
FUEL TANK UNIT	C 55
FUNCTION CONTROL MOTOR	D 47
GEAR SELECT SW (A/T)	A–C 31
GROUND A	A 2
GROUND B	B 2
GROUND C	B 2
GROUND D	C 2
GROUND E	C 2
GROUND F	D 3
GROUND G	E 3
GROUND H	A 7
GROUND I	E 13
GROUND J	B 23
GROUND K	E 20
GROUND L	E 31
GROUND M	F 32
GROUND N	C 41
GROUND O	C 41
GROUND P	C 41
GROUND Q	C 41
GROUND R	D 41
GROUND S	A 45
GROUND T	B 47
GROUND U	A 49
GROUND V	B 49
GROUND W	C 62
HAZARD SW	C 48
HEATER CONTROL PANEL	A–E 44
HORN RELAY	E 35
IGNITION COIL	E 15
IGNITION KEY LT	E 27
IGNITION KEY SW	E 27
IGNITION SW	D–E 23
INTEGRATED CONTROL UNIT	A–C 24–27
INTERMITTENT WIPER RELAY	E 43
JUNCTION CONN C131	D 11
JUNCTION CONN C326	D–E 40
JUNCTION CONN C419	C–E 31
JUNCTION CONN C447	C 59
JUNCTION CONN C460	E 39
JUNCTION CONN C507 (W/ 2WS)	C 35
JUNCTION CONN C507 (W/ 4WS)	C 39
JUNCTION CONN C534	A 51
JUNCTION CONN C609	D–E 48
JUNCTION CONN C619	C 51
KEY INTERLOCK SW	E 28
LEFT BRAKE LT SENSOR	E 63
LEFT SEAT BELT SW	E 27
MAIN INSTRUMENT CLUSTER	A–B 52
PGM-FI MAIN RELAY	E 11
POWER DOOR LOCKS	D–E 56–59
POWER MIRROR SW	D 60
POWER WINDOWS	A–C 56–59
RADIATOR FAN MOTOR	E 7
REAR MAIN STEERING ANGLE SENSOR	A 43
RECIRC CONTROL MOTOR	E 47
RIGHT BRAKE LT SENSOR	A 63
SERVICE CHECK CONN	A 15
SRS CONTROL UNIT	D 32
SRS FUSE BLOCK	D 22
STARTER	A 3
STARTER CUT RELAY (M/T)	B 3
STEERING WHEEL	D–E 35
SUB INSTRUMENT CLUSTER	C–E 52
SUNROOF SW	D 51
TEMP SW	C 47
THROTTLE ANGLE SENSOR	A 10
TRUNK LATCH SW	B 51
UNDERHOOD FUSE BLOCK (U/H F/B)	B–D 4–7
VEHICLE SPEED SENSOR	A 8
VTEC PRES SW	D 8
WASHER MOTOR	E 40
WIPER/WASHER SW	C–D 43
4WS CONTROL UNIT	A–C 40

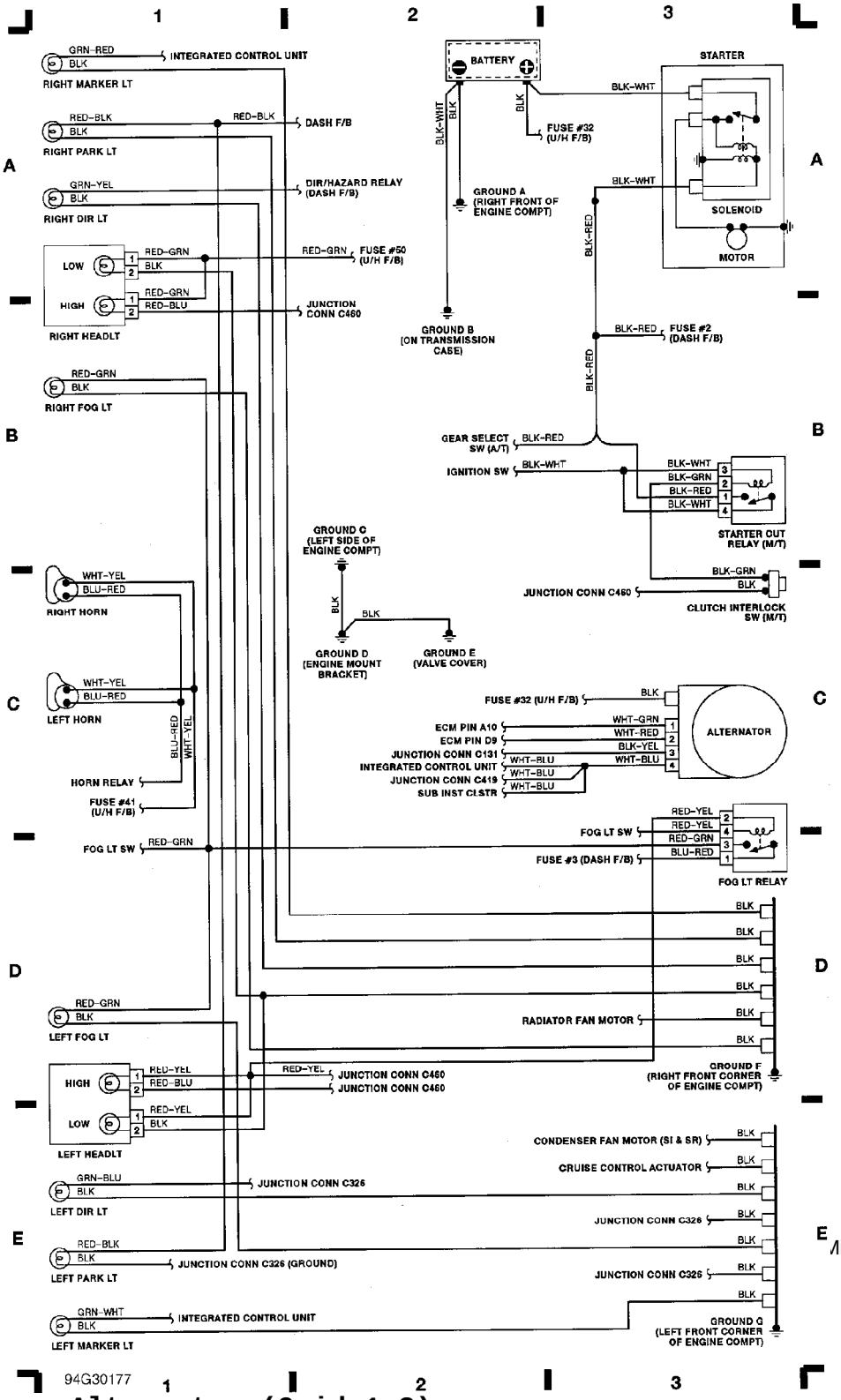

WIRING DIAG

Mitchell

Fig. 1: Battery, Starter, Alternator (Grid 1-3)

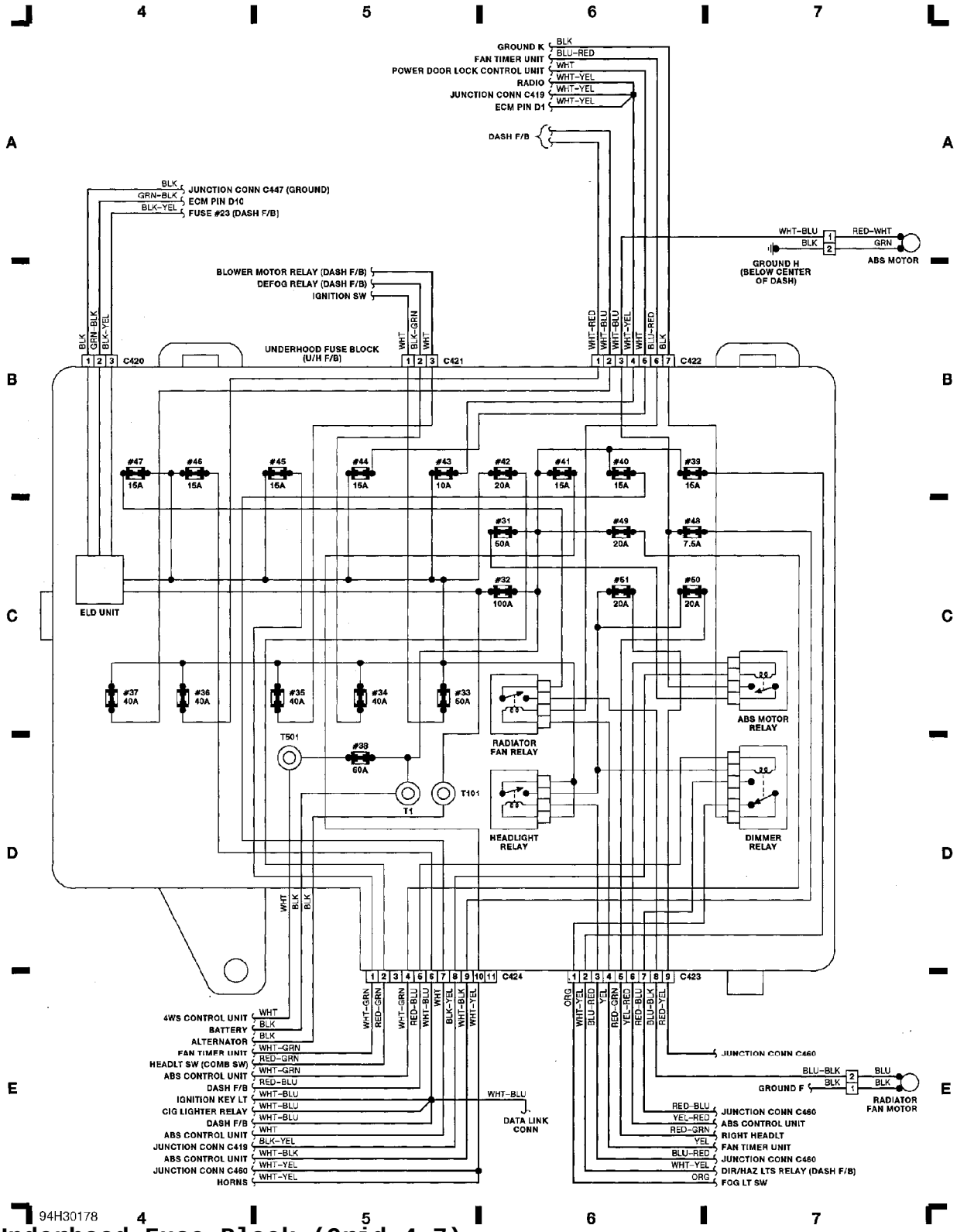

Fig. 2: Underhood Fuse Block (Grid 4-7)

 Copyright © 1998 Mitchell

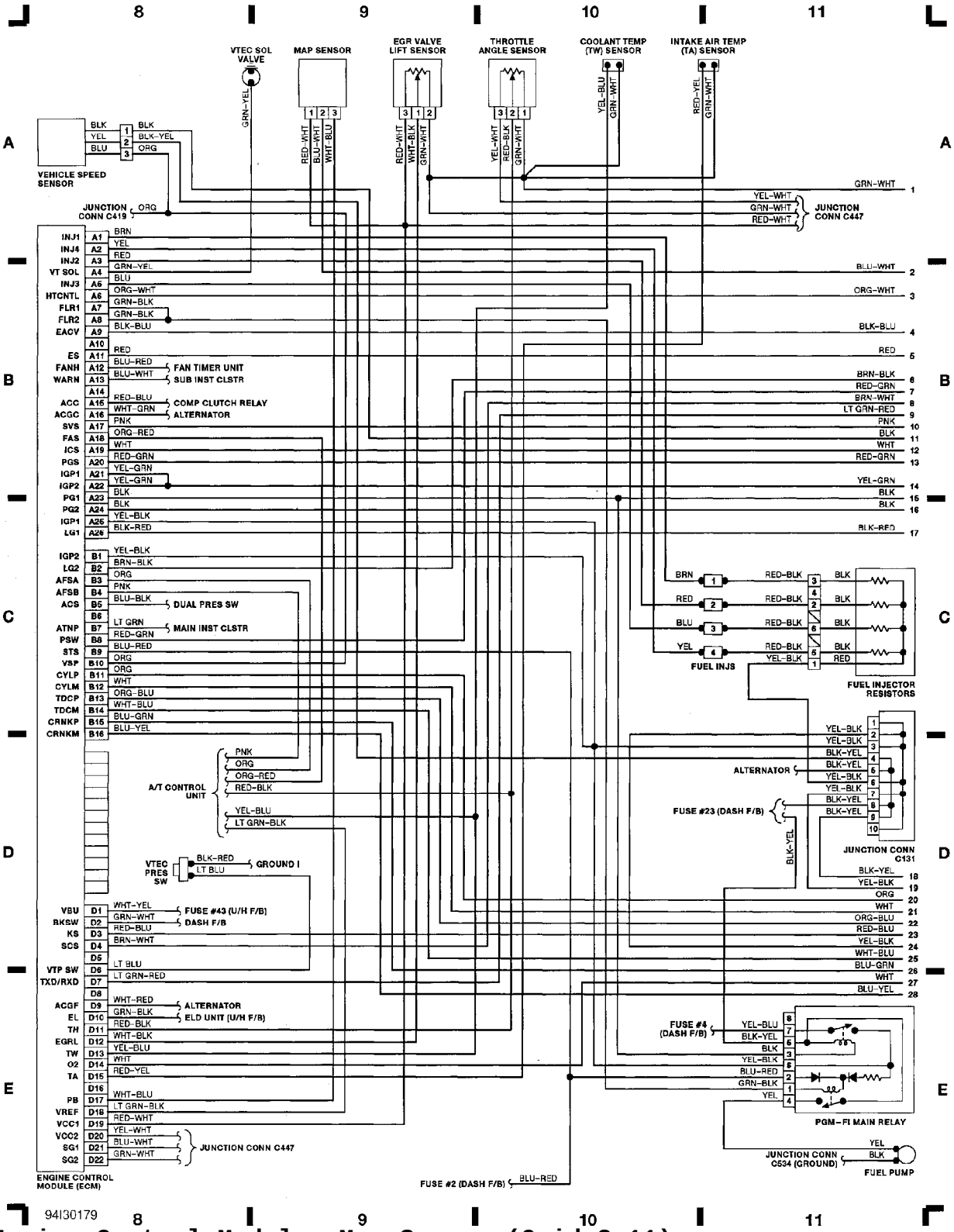

Fig. 3: Engine Control Module, Map Sensor (Grid 8-11)

Copyright © 1998 Mitchell

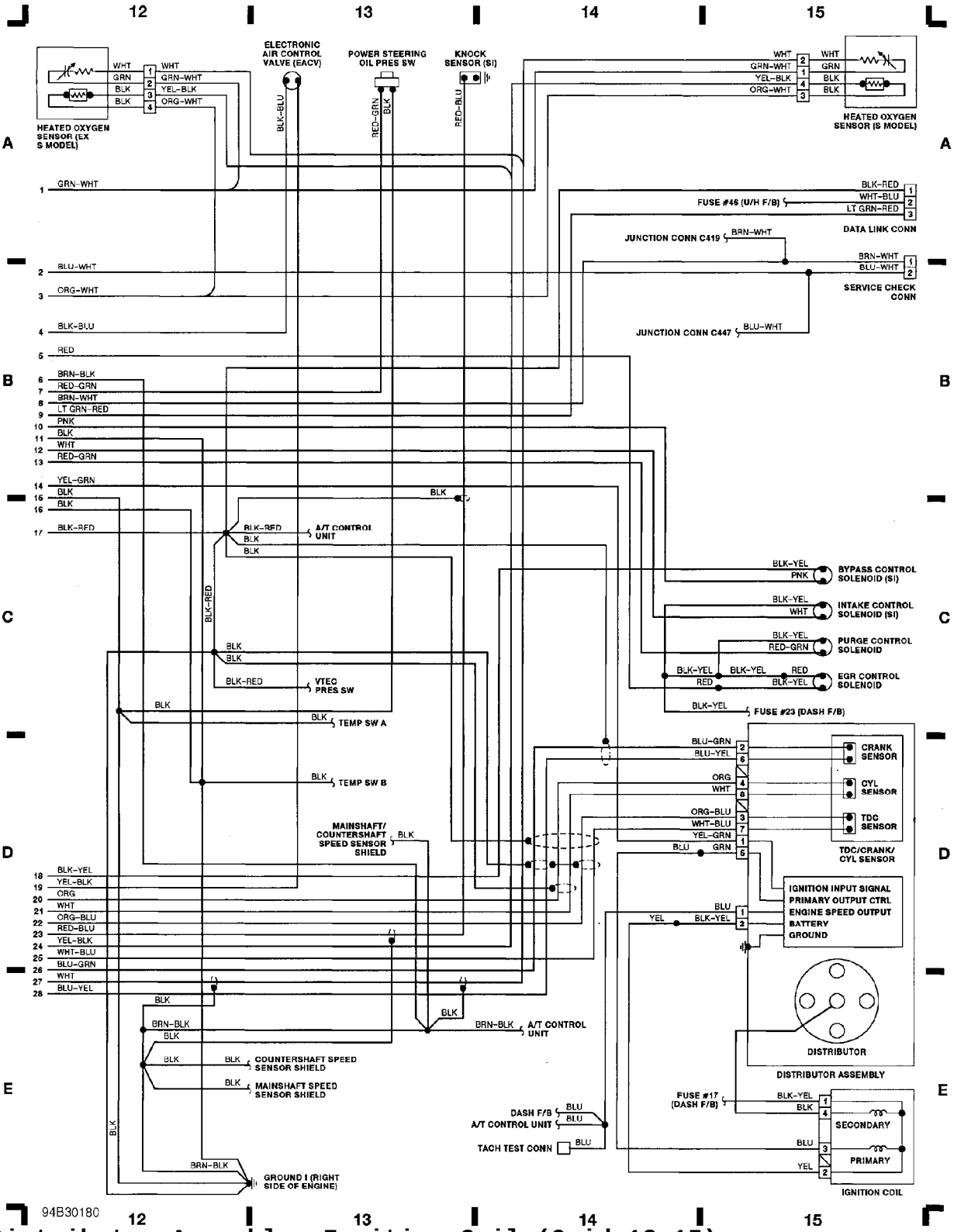

Fig. 4: Distributor Assembly, Ignition Coil (Grid 12-15)

 Copyright © 1998 Mitchell

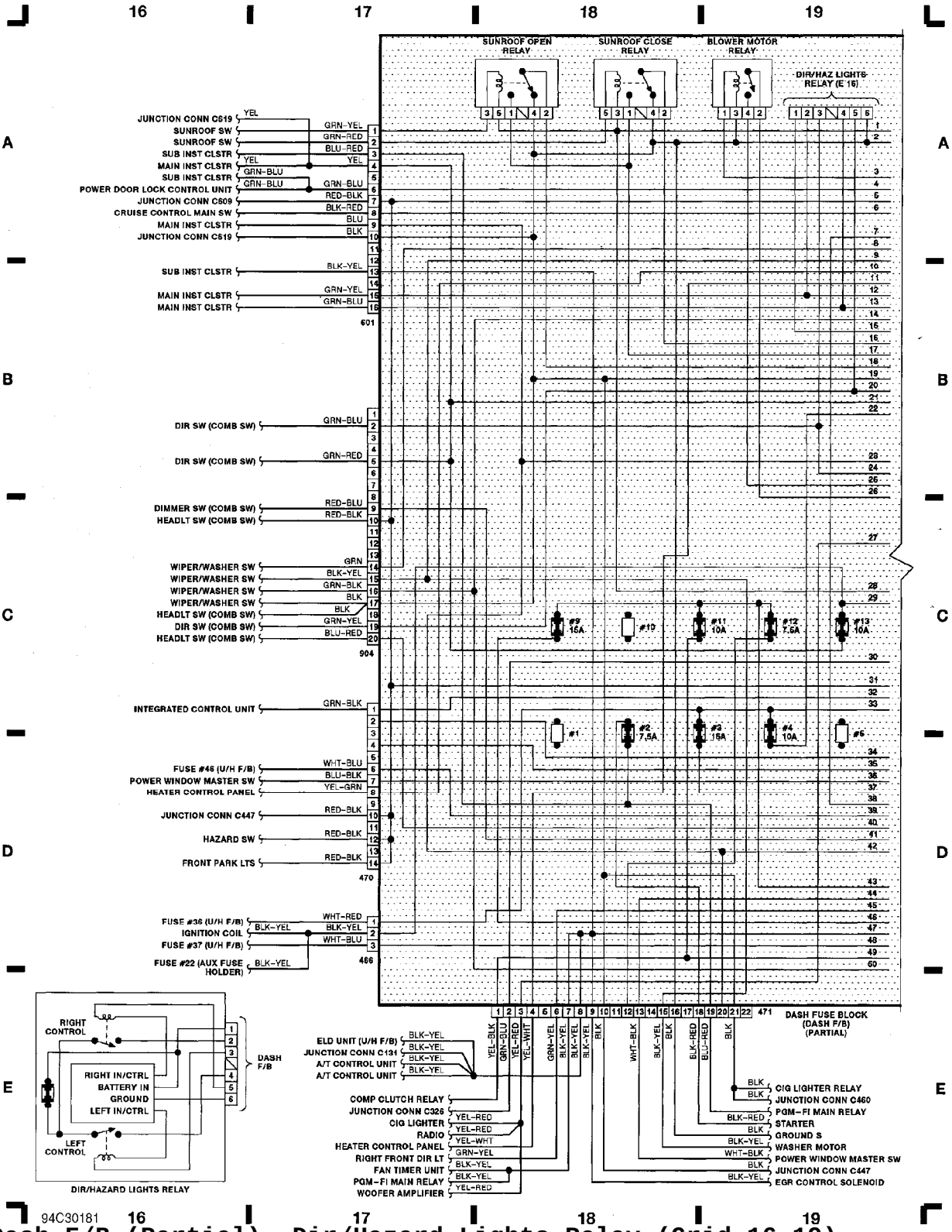

Fig. 5: Dash F/B (Partial), Dir/Hazard Lights Relay (Grid 16-19)

 Copyright © 1998 Mitchell

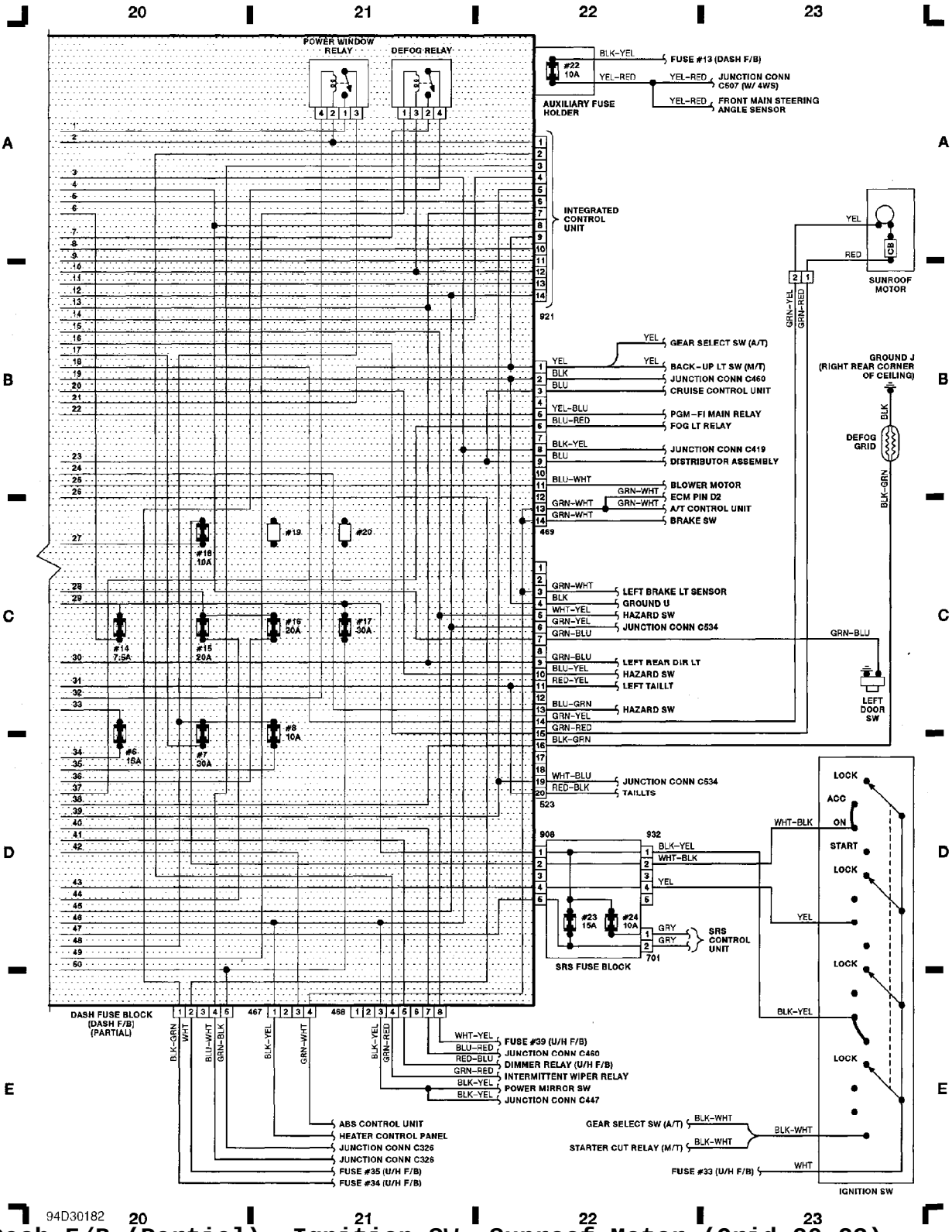

Fig. 6: Dash F/B (Partial), Ignition SW, Sunroof Motor (Grid 20-23)

 Copyright © 1998 Mitchell

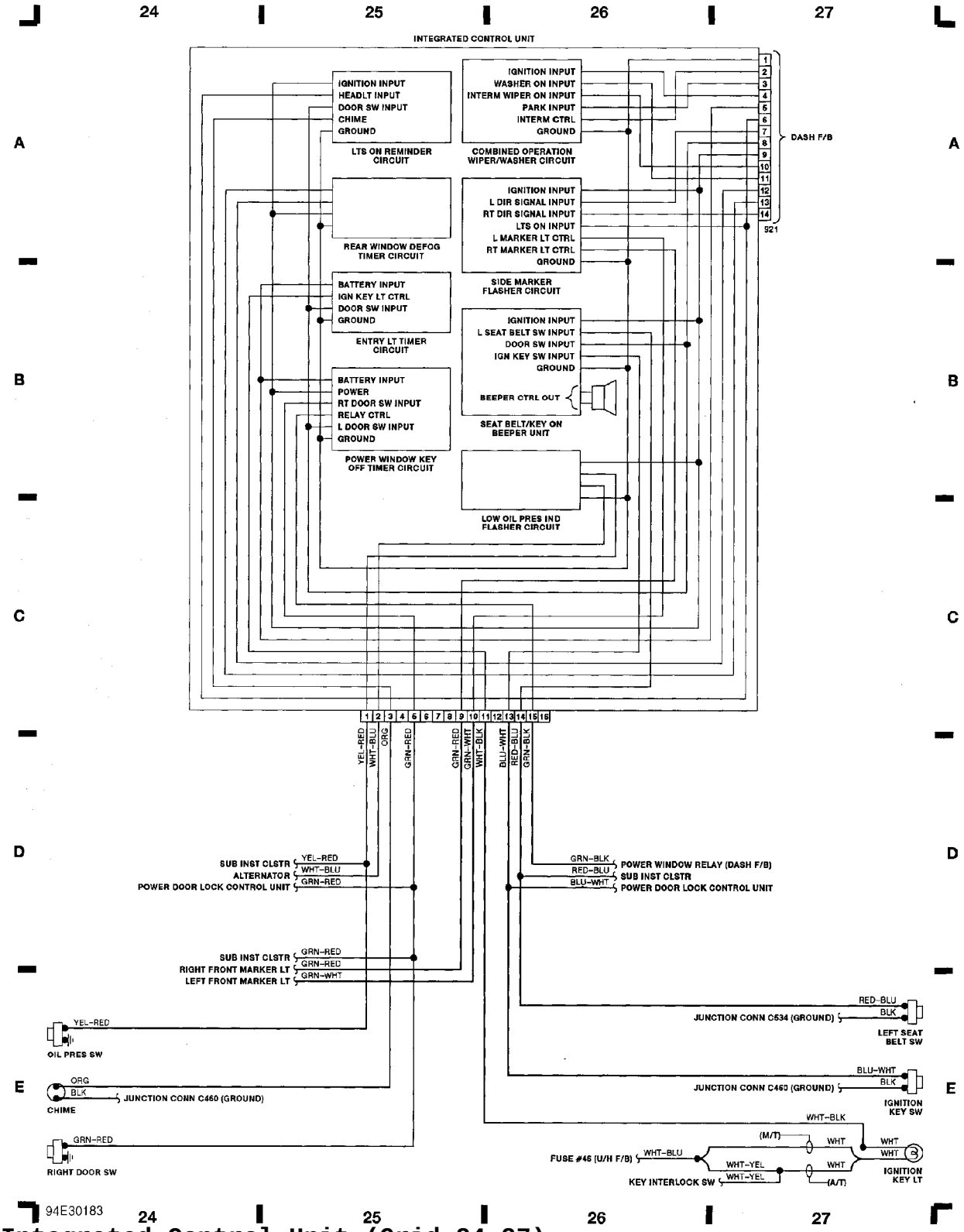

Fig. 7: Integrated Control Unit (Grid 24-27)

Copyright © 1998 Mitche

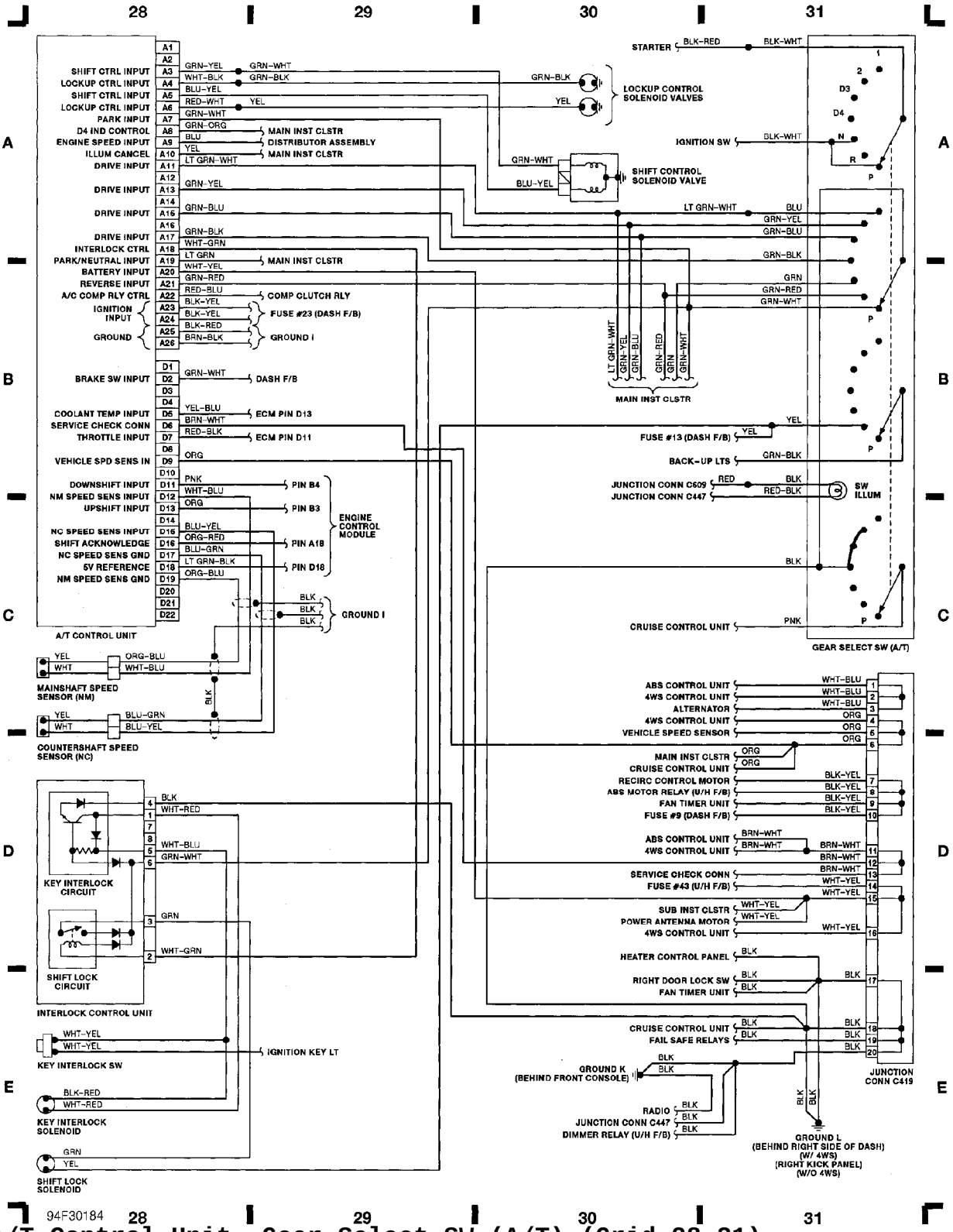

Fig. 8: A/T Control Unit, Gear Select SW (A/T) (Grid 28-31)

 Copyright © 1998 Mitche

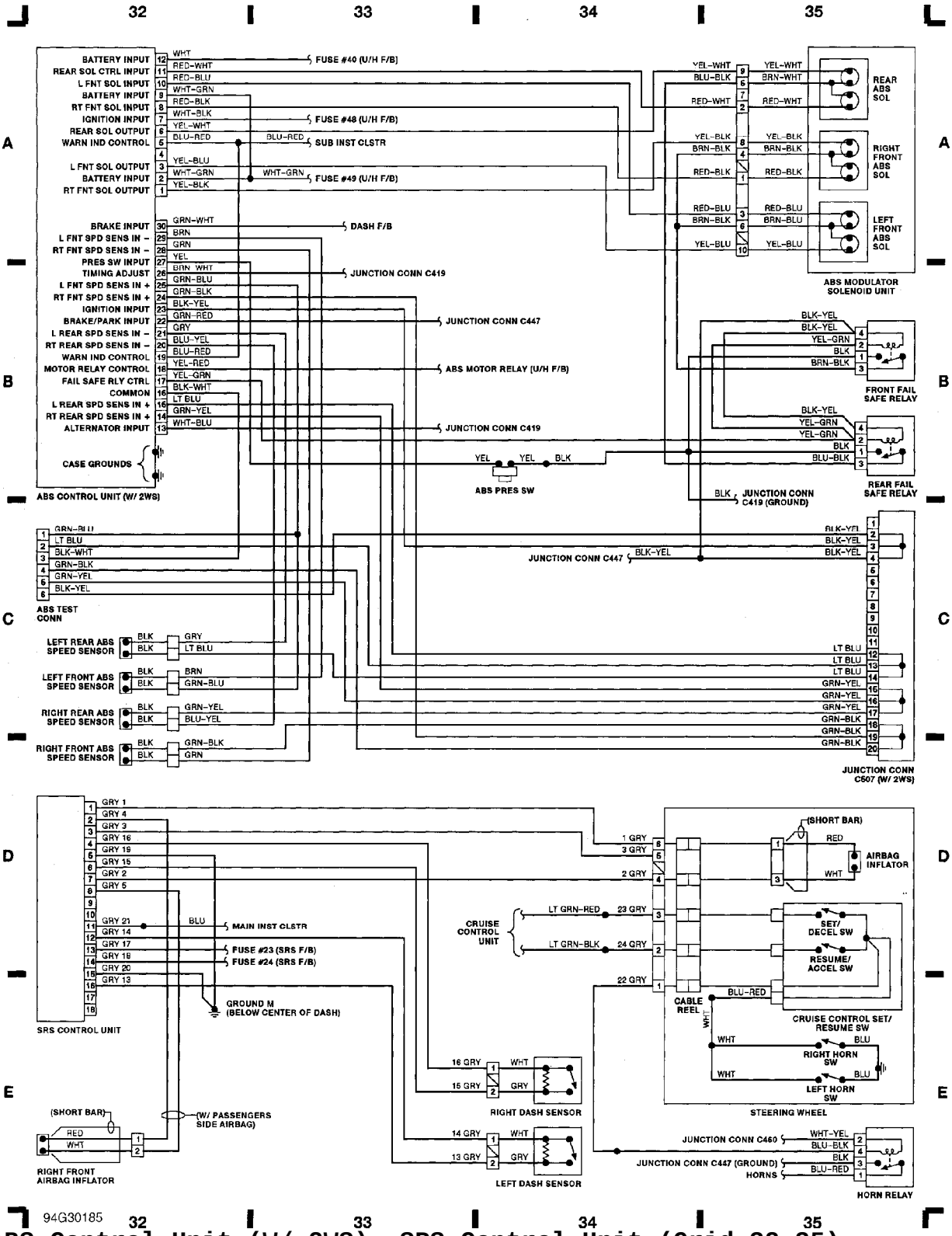

Fig. 9: ABS Control Unit (W/ 2WS), SRS Control Unit (Grid 32-35)

 Copyright © 1998 Mitche

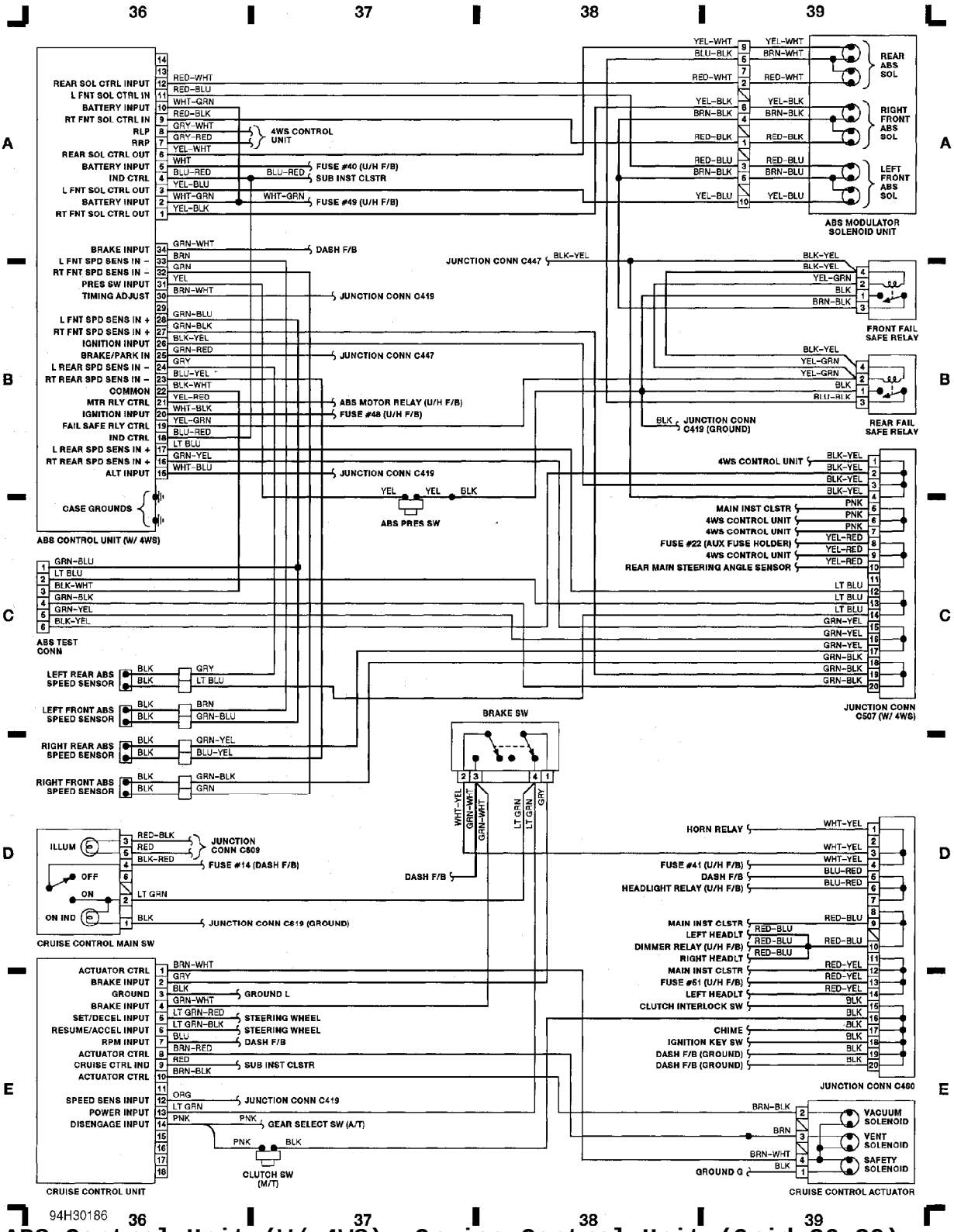

Fig. 10: ABS Control Unit (W/ 4WS), Cruise Control Unit (Grid 36-39)

 Copyright © 1998 Mitche

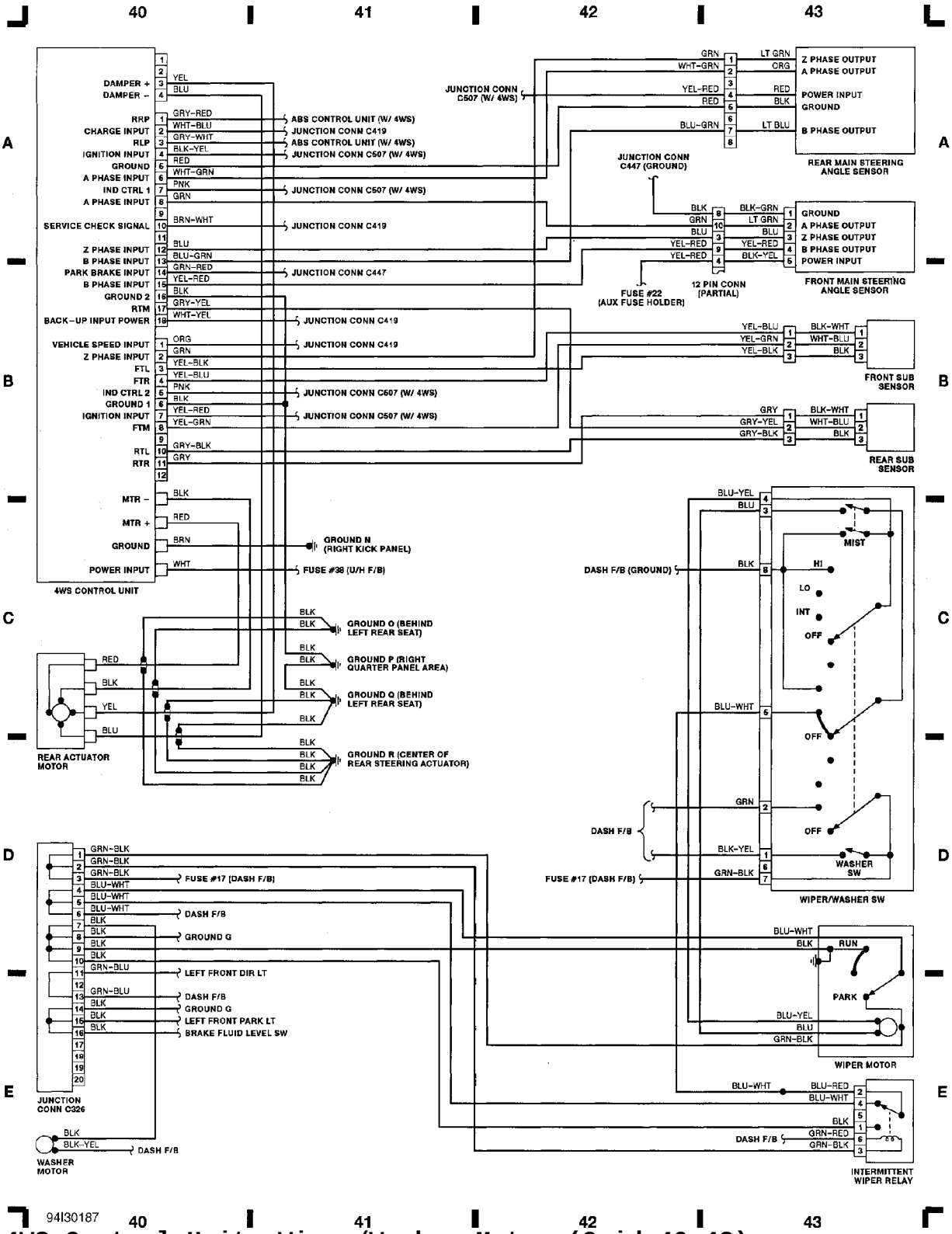

Fig. 11: 4WS Control Unit, Wiper/Washer Motor (Grid 40-43)

Copyright © 1998 Mitche

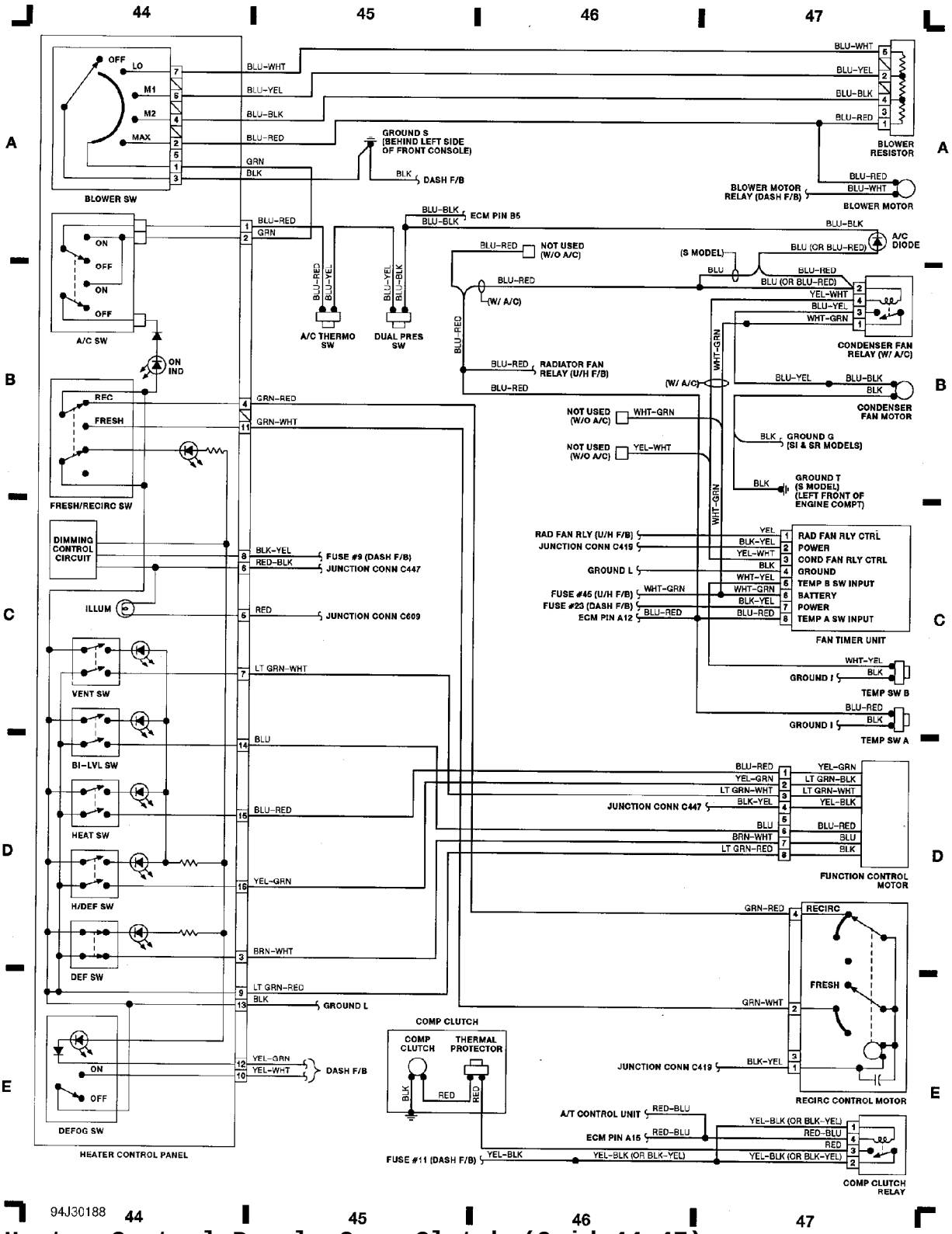

Fig. 12: Heater Control Panel, Comp Clutch (Grid 44-47)

 Copyright © 1998 Mitche

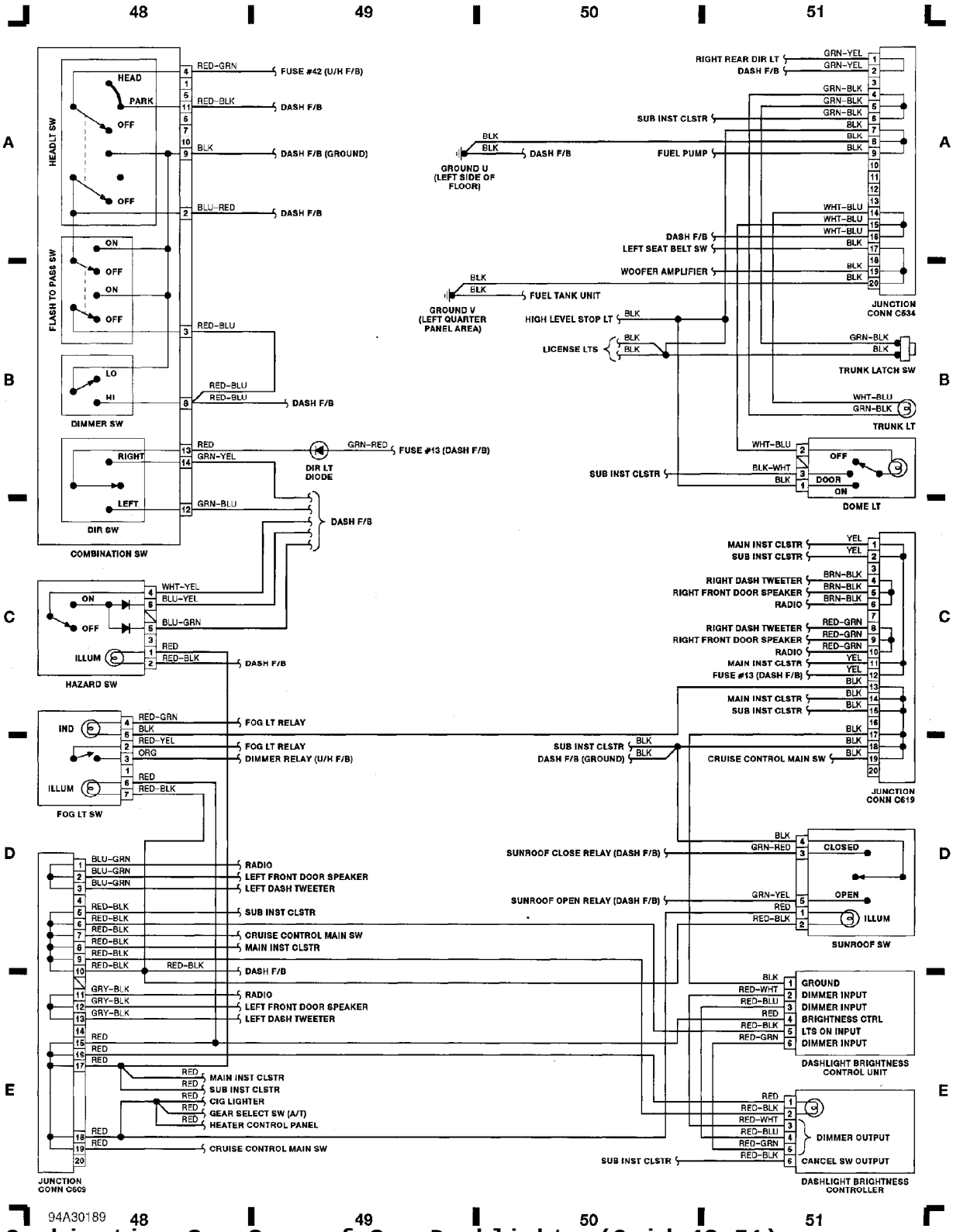

Fig. 13: Combination Sw, Sunroof Sw, Dashlights (Grid 48-51)

Copyright © 1998 Mitche

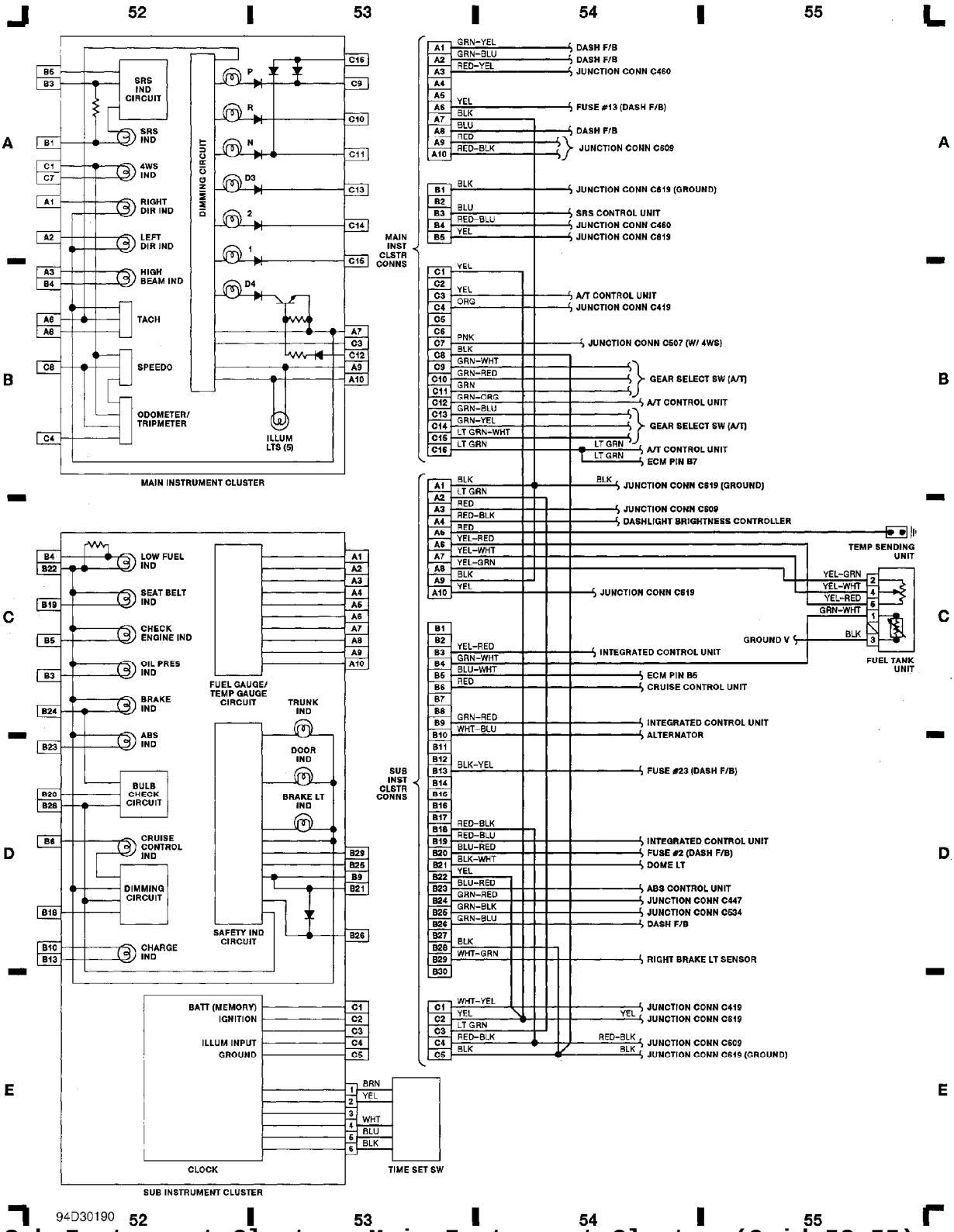

Fig. 14: Sub Instrument Cluster, Main Instrument Cluster (Grid 52-55)

Copyright © 1998 Mitche

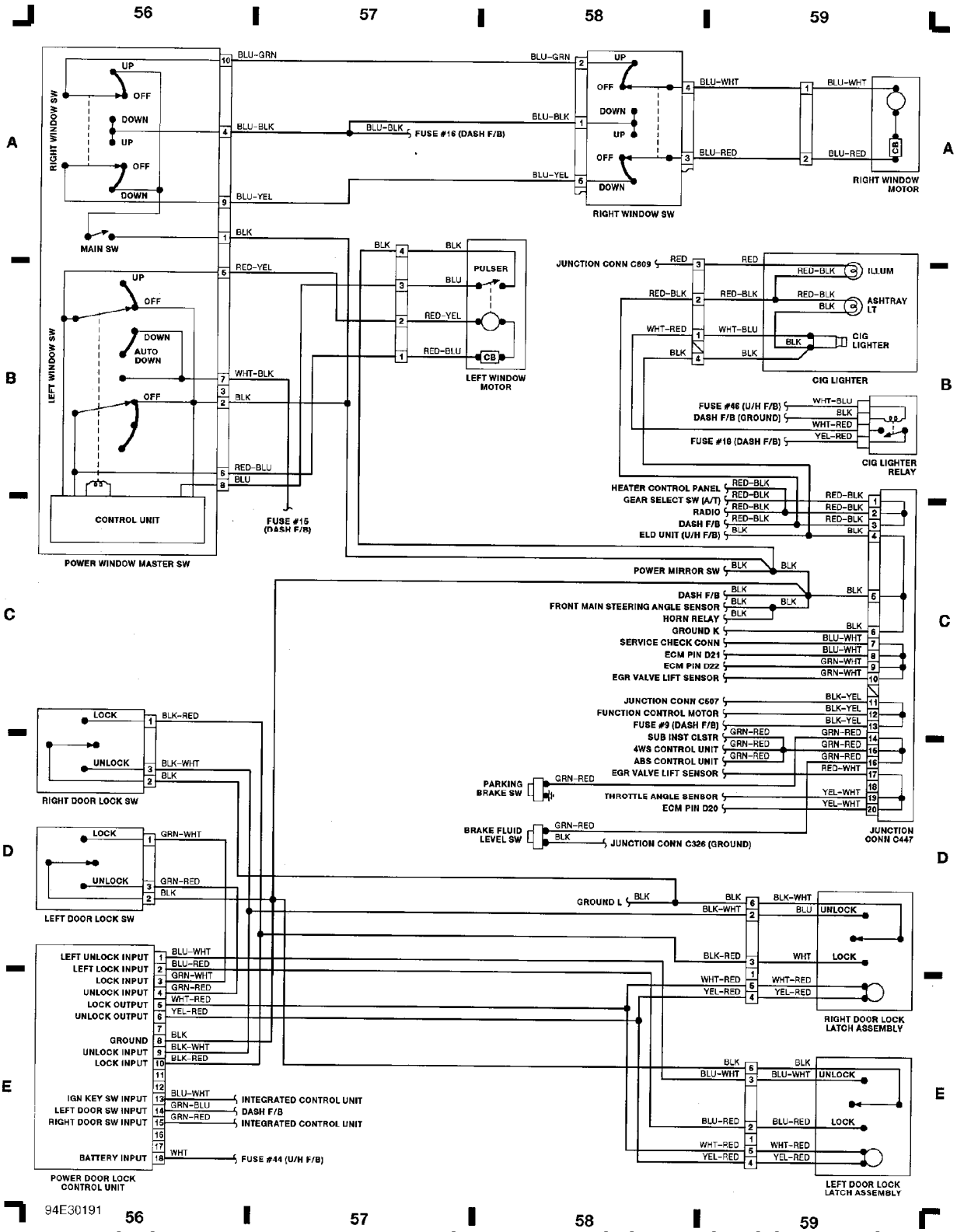

Fig. 15: Power Windows, Power Doors, Cigarette Lighter (Grid 56-59)

 Copyright © 1998 Mitche

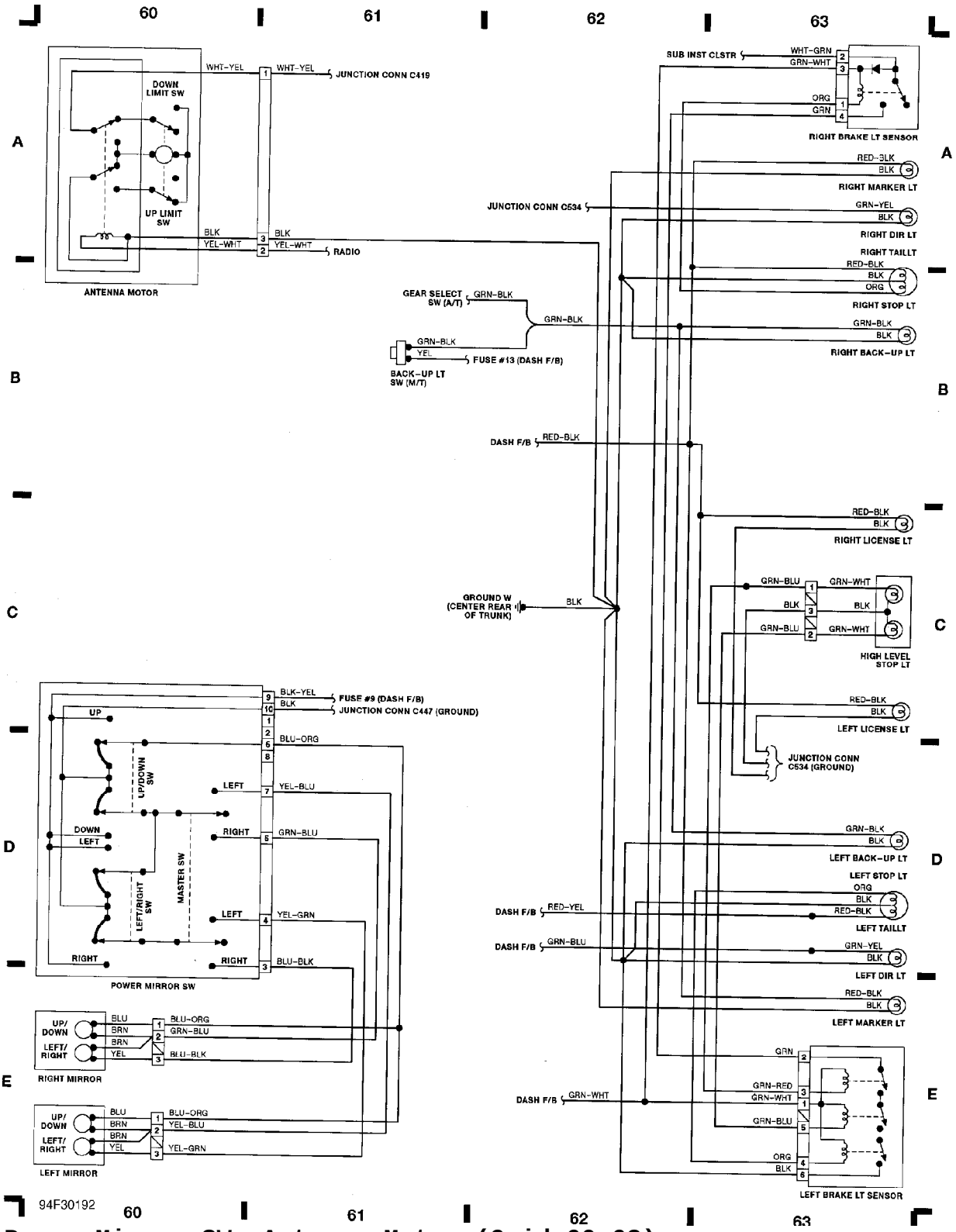

Fig. 16: Power Mirror SW, Antenna Motor (Grid 60-63)

 Copyright © 1998 Mitche

END OF ARTICLE