ENGINE 1 SECTION

This service manual has been prepared to provide SUBARU service personnel with the necessary information and data for the correct maintenance and repair of SUBARU vehicles.
This manual includes the procedures for maintenance, disassembling, reassembling, inspection and adjustment of components and diagnostics for guidance of experienced mechanics.
Please peruse and utilize this manual fully to ensure complete repair work for satisfying our customers by keeping their vehicle in optimum condition. When replacement of parts during repair work is needed, be sure to use SUBARU genuine parts.

FUEL INJECTION (FUEL SYSTEMS)	FU(H4SO)
EMISSION CONTROL (AUX. EMISSION CONTROL DEVICES)	EC(H4SO)
INTAKE (INDUCTION)	IN(H4SO)
MECHANICAL	ME(H4SO)
EXHAUST	EX(H4SO)
COOLING	CO(H4SO)
LUBRICATION	LU(H4SO)
SPEED CONTROL SYSTEMS	SP(H4SO)
IGNITION	IG(H4SO)
STARTING/CHARGING SYSTEMS	SC(H4SO)
ENGINE (DIAGNOSTICS)	EN(H4SO)(diag)
GENERAL DESCRIPTION	GD(H4SO)

All information, illustration and specifications contained in this manual are based on the latest product information available at the time of publication approval.

FUJI HEAVY INDUSTRIES LTD.

G2480BE2

GETtheMANUALS.org

FUEL INJECTION (FUEL SYSTEMS)

FU(H4SO)

		Page
1.	General Description	2
2.	Throttle Body	15
3.	Intake Manifold	17
4.	Engine Coolant Temperature Sensor	24
5.	Crankshaft Position Sensor	25
6.	Camshaft Position Sensor	27
7.	Knock Sensor	29
8.	Throttle Position Sensor	31
9.	Mass Air Flow and Intake Air Temperature Sensor	32
10.	Manifold Absolute Pressure Sensor	33
11.	EGR Valve	36
12.	Fuel Injector	37
13.	Variable Valve Lift Diagnosis Oil Pressure Switch	38
14.	Oil Temperature Sensor	40
15.	Front Oxygen (A/F) Sensor	42
16.	Rear Oxygen Sensor	44
17.	Engine Control Module (ECM)	46
18.	Main Relay	47
19.	Fuel Pump Relay	49
20.	Electronic Throttle Control Relay	51
21.	Fuel	53
22.	Fuel Tank	55
23.	Fuel Filler Pipe	62
24.	Fuel Pump	65
25.	Fuel Level Sensor	67
26.	Fuel Sub Level Sensor	69
27.	Fuel Filter	71
28.	Fuel Delivery and Evaporation Lines	73
29.	Fuel System Trouble in General	79

GETtheMANUALS.org

1. General Description

A: SPECIFICATION

Fuel tank	Capacity	70 ℓ (18.5 US gal, 15.4 Imp gal)
	Location	Under rear seat
Fuel pump	Type	Impeller
	Shutoff discharge pressure	677 kPa (6.9 kgf/cm^2, 98.2 psi) or less
	Discharge rate	105 ℓ (27.7 US gal, 23.1 Imp gal)/h or more [12 V at 300 kPa (3.06 kgf/cm^2, 43.5 psi)]
Fuel filter		In-tank type

GETtheMANUALS.org

B: COMPONENT

1. INTAKE MANIFOLD

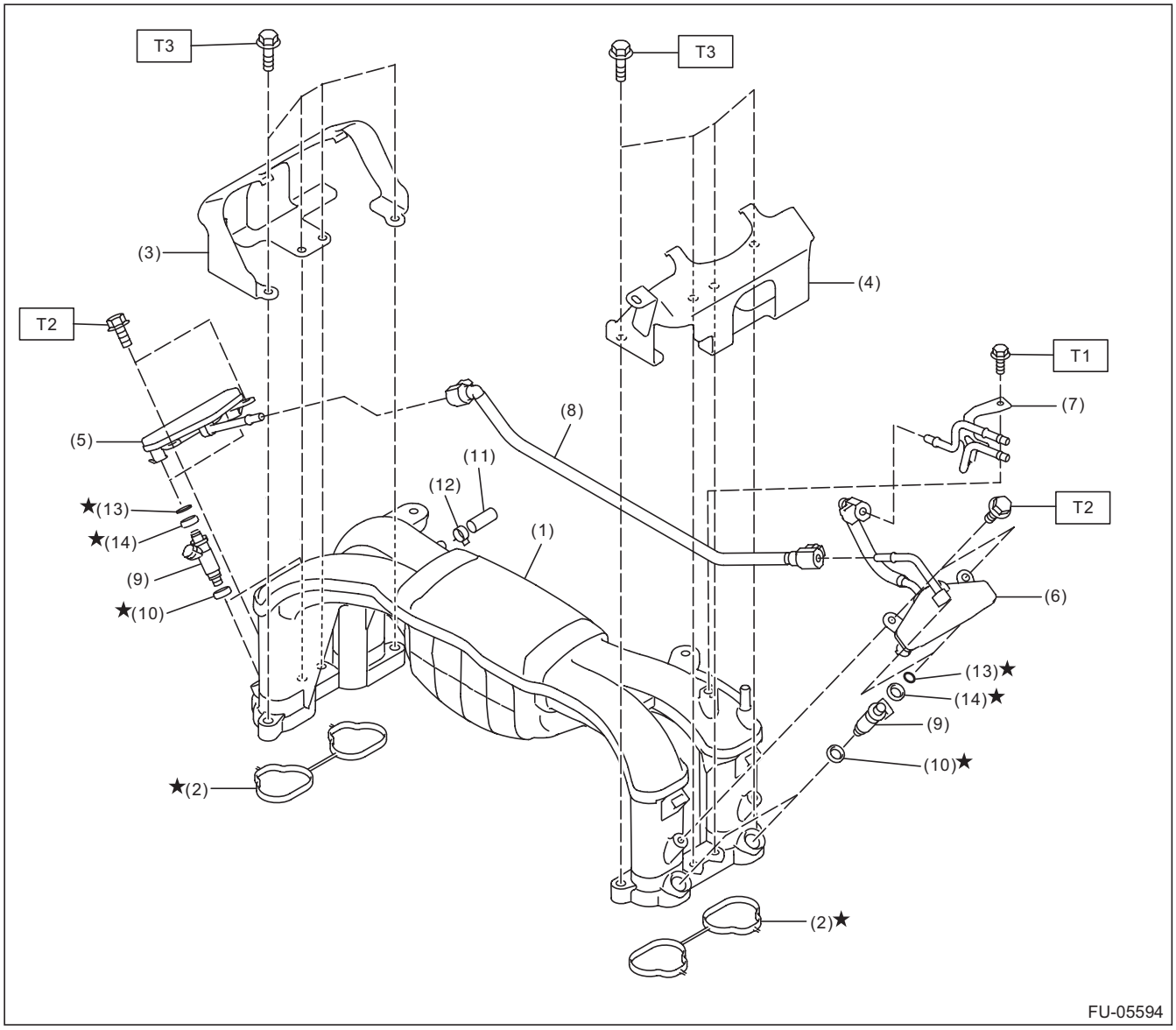

GETtheMANUALS.org

(1) Intake manifold
(2) Gasket
(3) Intake manifold protector RH
(4) Intake manifold protector LH
(5) Fuel gallery RH
(6) Fuel gallery LH
(7) Fuel pipe
(8) Fuel delivery pipe
(9) Injector
(10) Seal ring
(11) Cap
(12) Clip
(13) O-ring
(14) Rubber

Tightening torque:N·m (kgf-m, ft-lb)	
T1:	***6.4 (0.7, 4.7)***
T2:	***19 (1.9, 14.0)***
T3:	***25 (2.5, 18.4)***

GETtheMANUALS.org

2. AIR INTAKE SYSTEM

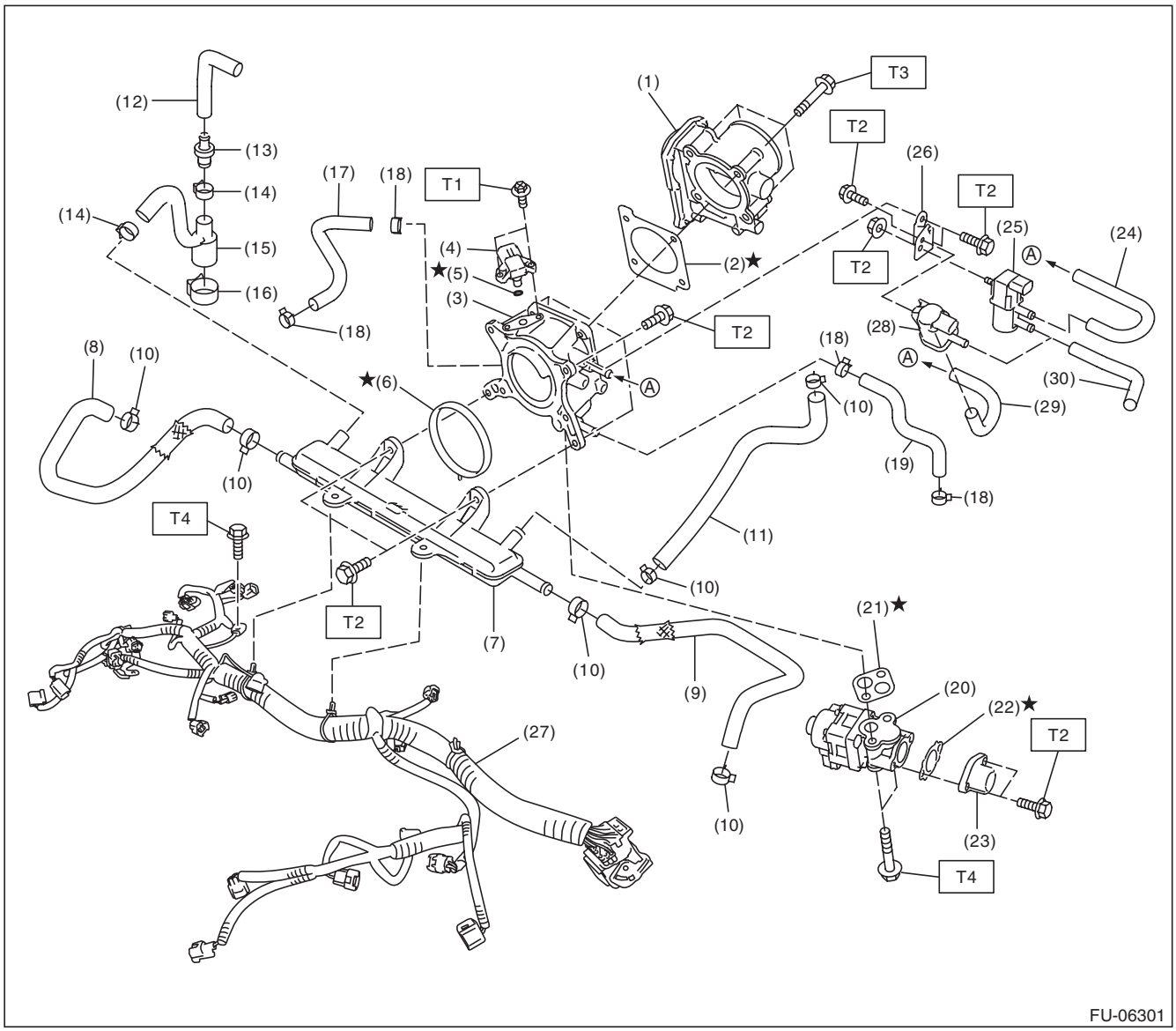

(1)	Throttle body	(14)	Clip	(26)	Bracket
(2)	Gasket	(15)	PCV hose E	(27)	Engine harness
(3)	Multi-function duct	(16)	Clip	(28)	Purge control solenoid valve (U5 model)
(4)	Manifold absolute pressure sensor	(17)	Heater hose A	(29)	Evaporation hose B
(5)	O-ring	(18)	Clip	(30)	Evaporation hose C
(6)	Gasket	(19)	Heater hose B		
(7)	PCV pipe	(20)	EGR valve		
(8)	PCV hose A	(21)	Gasket		
(9)	PCV hose B	(22)	Gasket		
(10)	Clip	(23)	EGR pipe adapter		
(11)	PCV hose C	(24)	Evaporation hose A		
(12)	PCV hose D	(25)	Purge control solenoid valve (Other than U5 model)		
(13)	PCV valve				

Tightening torque:N·m (kgf-m, ft-lb)

T1: 2 (0.2, 1.5)
T2: 6.4 (0.7, 4.7)
T3: 8 (0.8, 5.9)
T4: 19 (1.9, 14.0)

GETtheMANUALS.org

3. CRANKSHAFT POSITION, CAMSHAFT POSITION AND KNOCK SENSORS

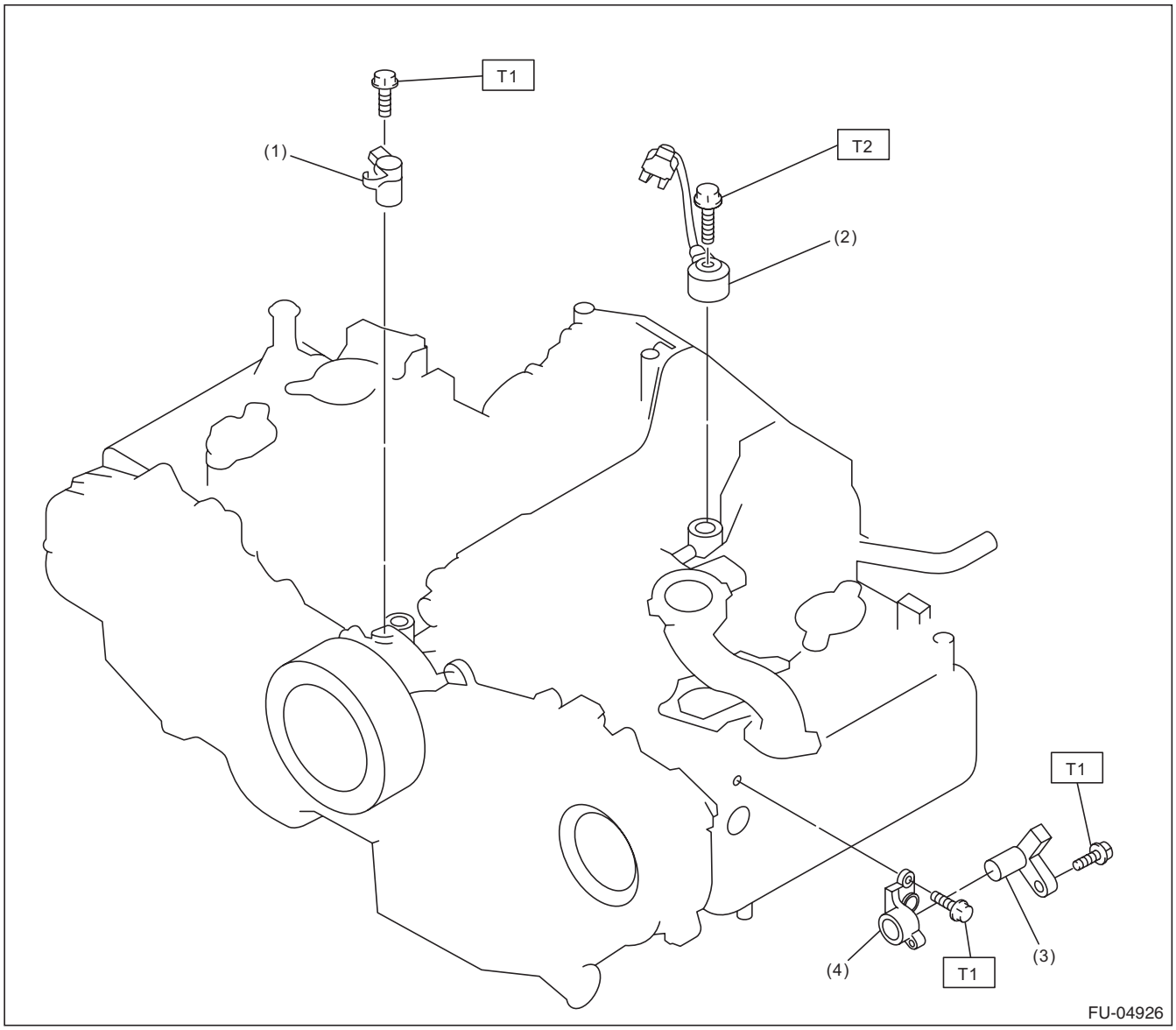

(1)	Crankshaft position sensor	(3)	Camshaft position sensor	***Tightening torque:N·m (kgf-m, ft-lb)***
(2)	Knock sensor	(4)	Camshaft position sensor support	***T1: 6.4 (0.7, 4.7)***
				T2: 24 (2.4, 17.7)

GETtheMANUALS.org

4. FUEL TANK

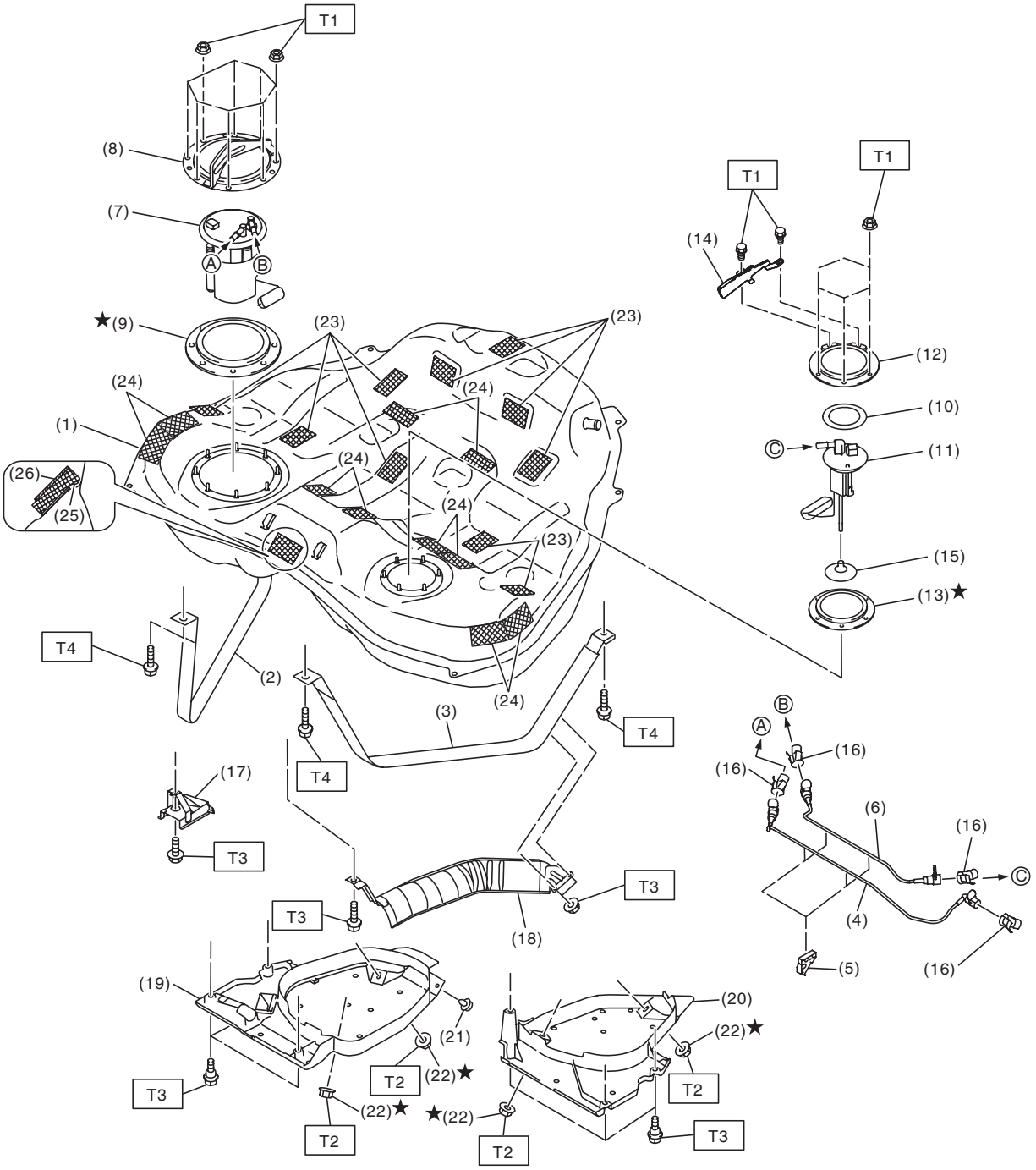

FU-06684

GETtheMANUALS.org

(1) Fuel tank
(2) Fuel tank band RH
(3) Fuel tank band LH
(4) Fuel delivery tube
(5) Tube clamp
(6) Fuel sub delivery tube
(7) Fuel pump assembly
(8) Fuel pump upper plate
(9) Fuel pump gasket
(10) Fuel sub level sensor upper plate cushion
(11) Fuel sub level sensor
(12) Fuel sub level sensor upper plate
(13) Fuel sub level sensor gasket
(14) Fuel sub level sensor protector
(15) Fuel sub level sensor filter
(16) Retainer
(17) Stopper
(18) Heat shield cover
(19) Fuel tank protector RH
(20) Fuel tank protector LH
(21) Clip
(22) Self-locking nut
(23) Cushion
(24) Cushion
(25) Cushion
(26) Cushion

Tightening torque:N·m (kgf-m, ft-lb)

T1: 4.4 (0.4, 3.2)
T2: 9 (0.9, 6.6)
T3: 18 (1.8, 13.3)
T4: 33 (3.4, 24.3)

GETtheMANUALS.org

5. FUEL LINE

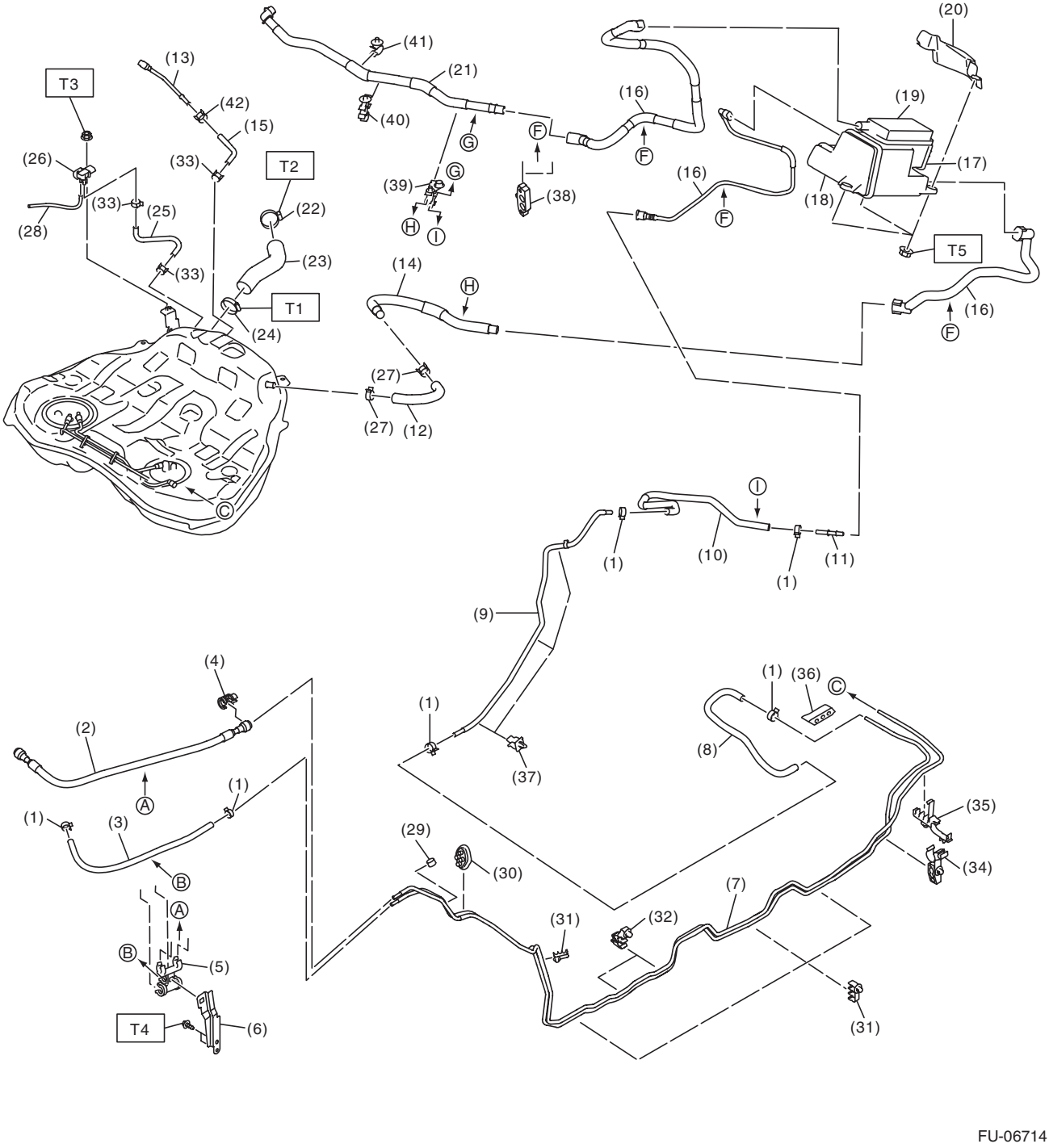

FU-06714

GETtheMANUALS.org

(1) Clip
(2) Fuel delivery hose
(3) Evaporation hose
(4) Connect check cover
(5) Hose clamp
(6) Hose clamp bracket
(7) Fuel pipe ASSY
(8) Purge hose A
(9) Purge pipe
(10) Purge hose B
(11) Connector
(12) Air vent hose A
(13) Circulate tube
(14) Air vent tube
(15) Circulate hose
(16) Canister tube ASSY
(17) Drain valve
(18) Canister
(19) Drain filter
(20) Canister protector
(21) Drain tube ASSY
(22) Clamp
(23) Fuel filler hose
(24) Clamp
(25) Pressure hose
(26) Fuel tank pressure sensor
(27) Clip
(28) Vacuum hose
(29) Bushing
(30) Fuel pipe front grommet
(31) Pipe clamp
(32) Pipe clamp
(33) Clip
(34) Pipe clamp
(35) Pipe clamp
(36) Fuel pipe rear grommet
(37) Pipe clamp
(38) Tube clamp
(39) Tube clamp
(40) Tube clamp
(41) Tube clamp
(42) Clip

Tightening torque:N·m (kgf-m, ft-lb)	
T1:	***2 (0.2, 1.5)***
T2:	***2.5 (0.3, 1.8)***
T3:	***7.35 (0.7, 5.4)***
T4:	***7.5 (0.8, 5.5)***
T5:	***8 (0.8, 5.9)***

GETtheMANUALS.org

6. FUEL FILLER PIPE

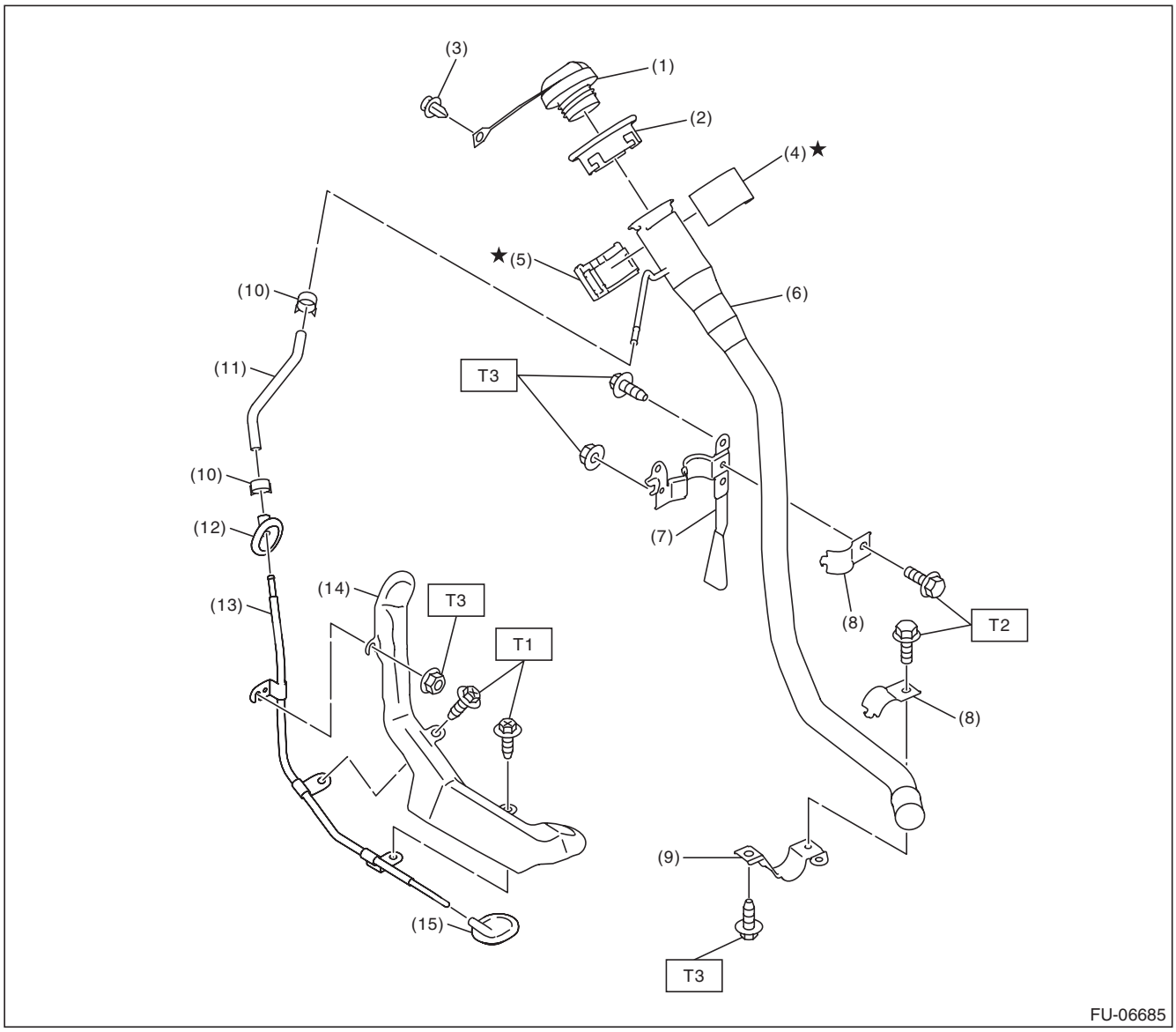

(1)	Fuel filler cap	(8)	Fuel filler pipe bracket B	(15)	Grommet
(2)	Fuel filler pipe protector	(9)	Fuel filler pipe bracket C		
(3)	Clip	(10)	Clip		
(4)	Neck holder A	(11)	Evaporation hose		
(5)	Neck holder B	(12)	Grommet		
(6)	Fuel filler pipe	(13)	Evaporation pipe		
(7)	Fuel filler pipe bracket A	(14)	Evaporation pipe protector		

Tightening torque:N·m (kgf-m, ft-lb)
T1: 1 (0.1, 0.7)
T2: 7.35 (0.7, 5.4)
T3: 7.5 (0.8, 5.5)

GETtheMANUALS.org

7. FUEL PUMP

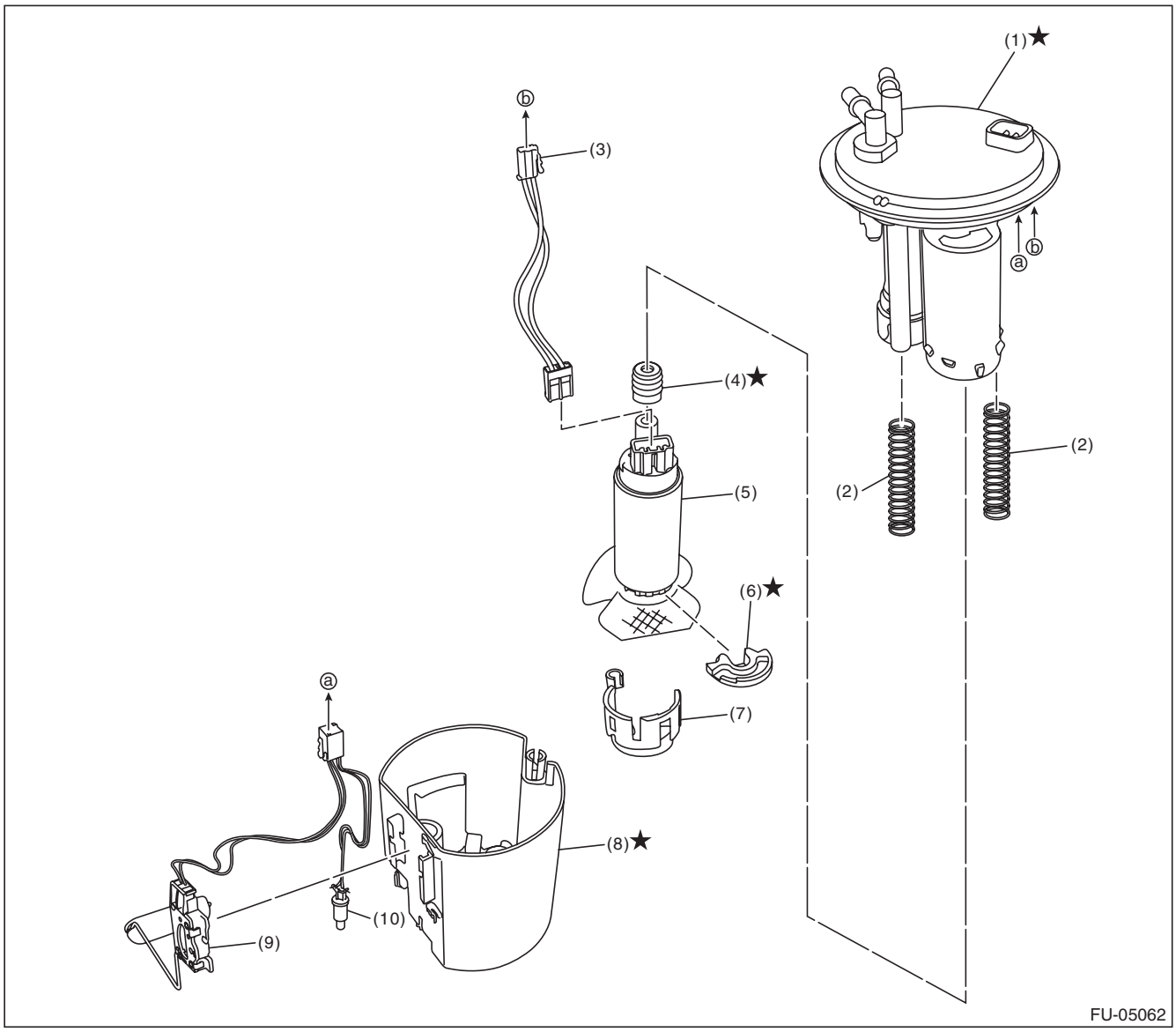

(1)	Fuel filter assembly	(5)	Fuel pump	(9)	Fuel level sensor
(2)	Pump module spring	(6)	Support rubber cushion	(10)	Fuel temperature sensor
(3)	Fuel pump harness	(7)	Fuel pump holder		
(4)	Gasket spacer	(8)	Fuel chamber ASSY		

GETtheMANUALS.org

C: CAUTION

- Wear appropriate work clothing, including a cap, protective goggles and protective shoes when performing any work.
- Remove contamination including dirt and corrosion before removal, installation or disassembly.
- Keep the disassembled parts in order and protect them from dust and dirt.
- Before removal, installation or disassembly, be sure to clarify the failure. Avoid unnecessary removal, installation, disassembly and replacement.
- Vehicle components are extremely hot after driving. Be wary of receiving burns from heated parts.
- Be sure to tighten fasteners including bolts and nuts to the specified torque.
- Place shop jacks or rigid racks at the specified points.
- Before disconnecting connectors of sensors or units, be sure to disconnect the ground cable from battery.
- Place “NO OPEN FLAMES” signs near the working area.
- Prepare a container and cloth to prevent scattering of fuels when performing work where fuels can be spilled. If the oil spills, wipe it off immediately to prevent from penetrating into floor or flowing out for environmental protection.
- Follow all government and local regulations concerning disposal of refuse when disposing fuel.

GETtheMANUALS.org

D: PREPARATION TOOL

1. SPECIAL TOOL

ILLUSTRATION	TOOL NUMBER	DESCRIPTION	REMARKS
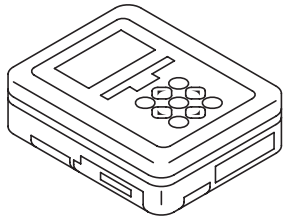 ST1B022XU0	1B022XU0	SUBARU SELECT MONITOR III KIT	Used for draining fuel and each inspection.
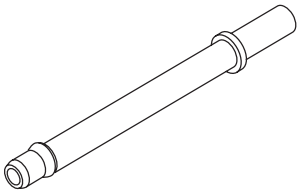 ST18471AA000	18471AA000	FUEL PIPE ADAPTER	Used for draining fuel.
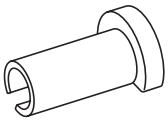 ST42099AE000	42099AE000	QUICK CONNECTOR RELEASE	Used for removing the quick connector.

2. GENERAL TOOL

TOOL NAME	REMARKS
Circuit tester	Used for measuring resistance and voltage.
Oscilloscope	Used for inspecting the waveform of each sensor.

GETtheMANUALS.org

2. Throttle Body

A: REMOVAL

1) Disconnect the ground cable from battery.

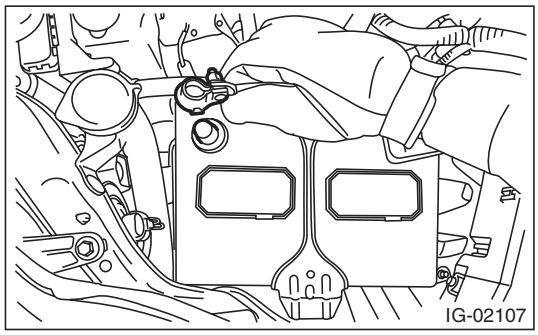

2) Remove the cover (A) and clip (B) from air intake boot assembly.

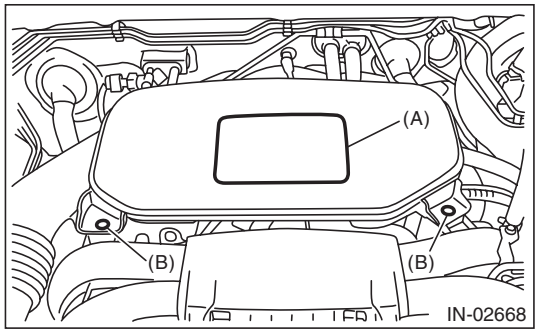

3) Loosen the clamp (A) which connects the air intake boot assembly and air cleaner case.
4) Loosen the clamp (B) which connects the air intake boot assembly and throttle body.

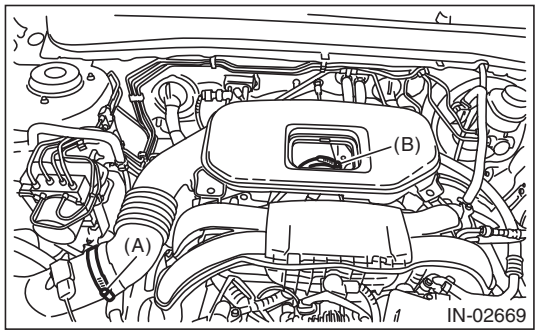

5) Remove the air intake boot from the throttle body, and move it to the left side wheel apron.

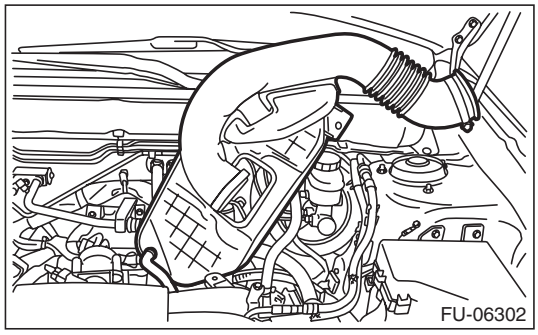

6) Disconnect the connectors (A) from the throttle position sensor.
7) Remove the bolts which secure the throttle body to the multi-function duct assembly, and remove the throttle body.

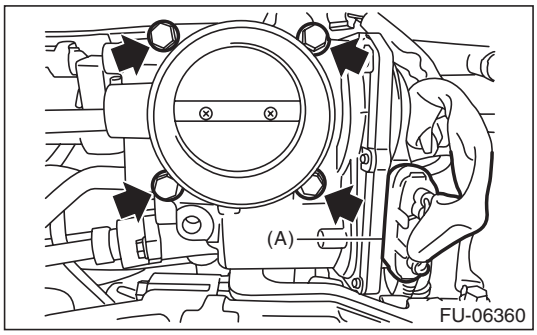

B: INSTALLATION

Install in the reverse order of removal.

NOTE:
Use a new gasket.

Tightening torque:
8 N·m (0.8 kgf-m, 5.9 ft-lb)

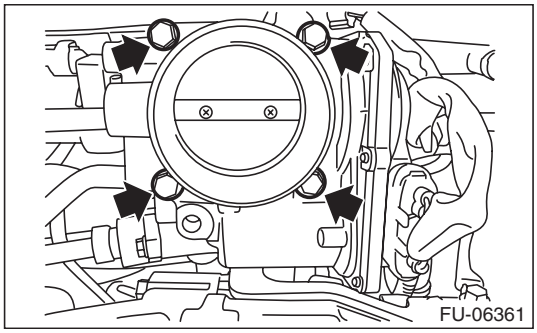

NOTE:
Align the clamp hole with the protrusion of the air intake boot assembly.

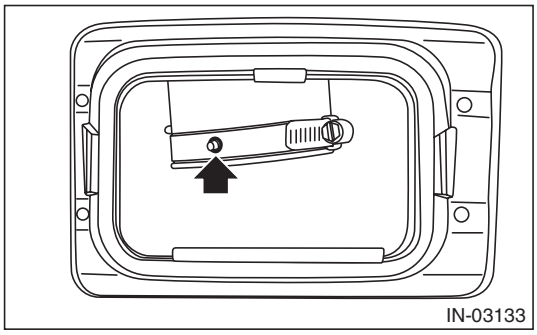

GETtheMANUALS.org

Tightening torque:
Clamp (A), (B)
3 N·m (0.3 kgf-m, 2.2 ft-lb)

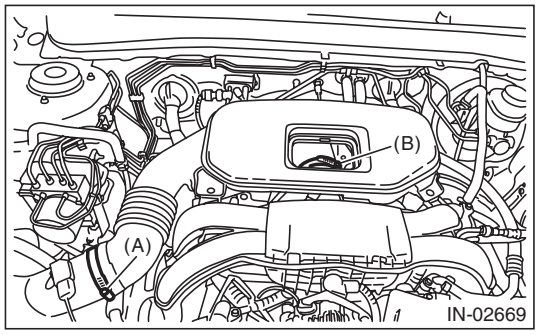

C: INSPECTION

1. THROTTLE SENSOR (METHOD WITH CIRCUIT TESTER)

1) Warm up the engine.
2) Remove the glove box lid assembly. <Ref. to EI-66, REMOVAL, Glove Box.>
3) Turn the ignition switch to ON. (engine OFF)
4) Measure the voltage between ECM connector terminals.

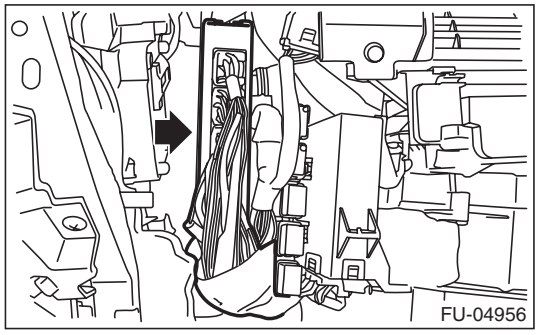

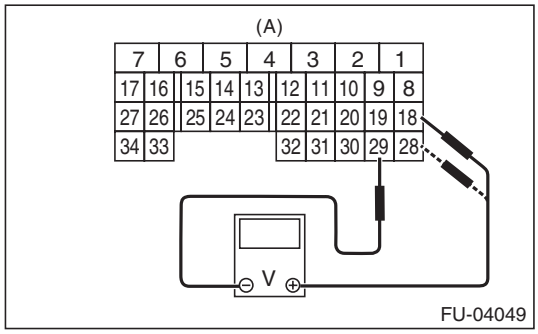

(A) To ECM connector

Throttle sensor	Accelerator pedal	Terminal No.	Standard
Main	Not depressed	18 (+) and 29 (–)	Approx. 0.9 V
Sub	Not depressed	28 (+) and 29 (–)	Approx. 1.7 V

5) After inspection, install the related parts in the reverse order of removal.

2. THROTTLE SENSOR (METHOD WITH SUBARU SELECT MONITOR)

1) Warm up the engine.
2) Turn the ignition switch to ON. (engine OFF)
3) Read the throttle opening angle signal and voltage of throttle sensor using Subaru Select Monitor. <Ref. to EN(H4SO)(diag)-33, READ CURRENT DATA FOR ENGINE (NORMAL MODE), OPERATION, Subaru Select Monitor.>

Throttle sensor	Throttle opening angle signal	Standard
Main	5%	Approx. 0.9 V
Sub	5%	Approx. 1.7 V

3. OTHER INSPECTIONS

1) Check that the throttle body has no deformation, cracks or other damages.
2) Check that the engine coolant hose has no cracks, damage or loose part.

GETtheMANUALS.org

3. Intake Manifold

A: REMOVAL

1. INTAKE MANIFOLD

1) Release the fuel pressure. <Ref. to FU(H4SO)-53, RELEASING OF FUEL PRESSURE, PROCEDURE, Fuel.>
2) Disconnect the ground cable from battery.

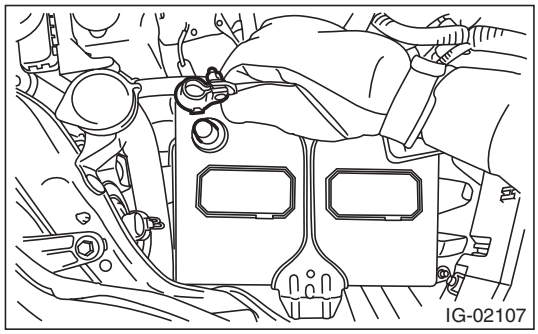

3) Open the fuel filler lid and remove the fuel filler cap.
4) Remove the cover (A) and clip (B) from air intake boot assembly.

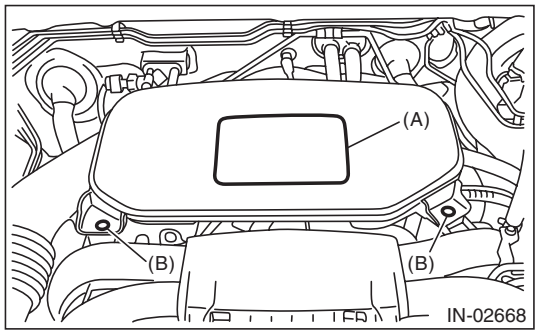

5) Loosen the clamp (A) which connects the air intake boot assembly and air cleaner case.
6) Loosen the clamp (B) which connects the air intake boot assembly and throttle body.

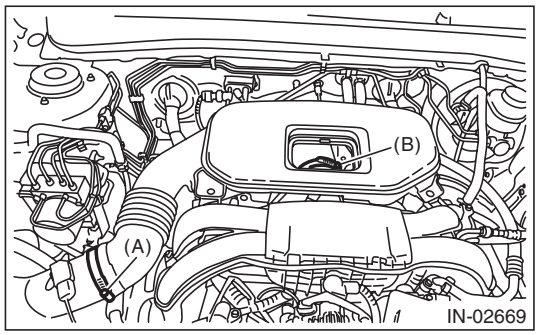

7) Remove the air intake boot from the throttle body, and move it to the left side wheel apron.

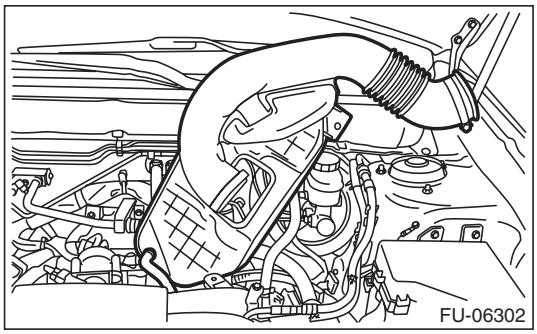

8) Disconnect the connector from the ignition coil of #3 cylinder.

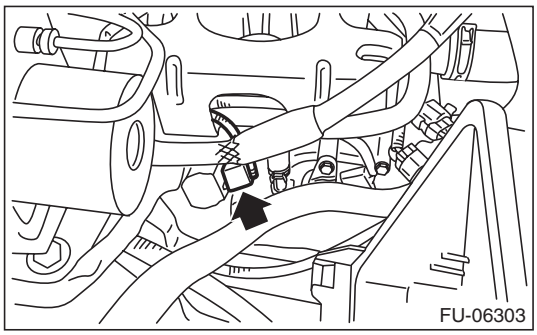

9) Remove the intake manifold protector RH.

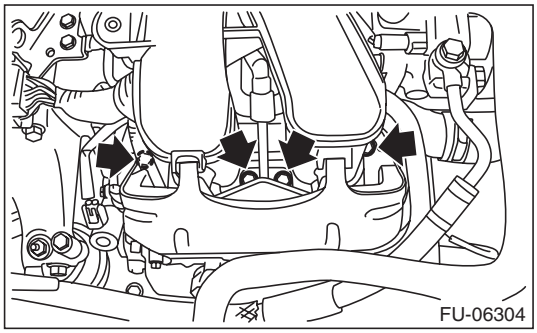

GETtheMANUALS.org

10) Remove the connector (A) from the fuel injector, and remove the fuel delivery pipe (B) from the fuel gallery RH.

NOTE:
Disconnect the quick connector as shown in the figure.

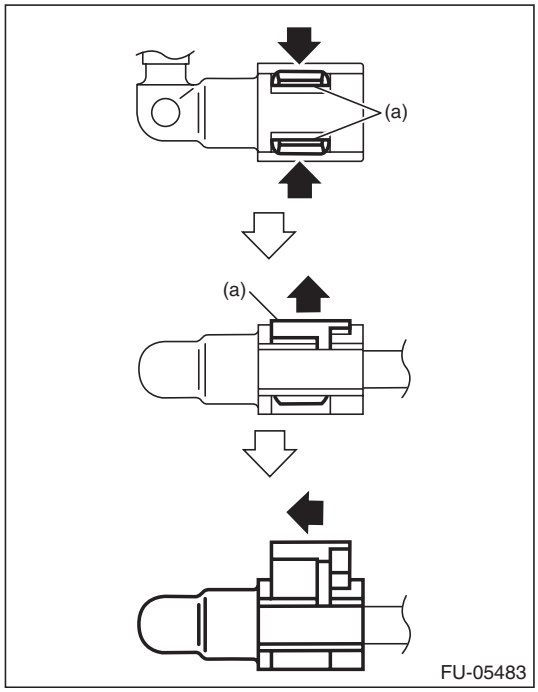

(a) Slider

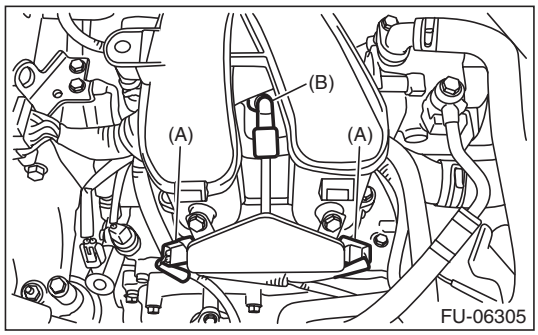

11) Disconnect the fuel delivery hose (A) and evaporation hose (B).

CAUTION:
- **Be careful not to spill fuel.**
- **Catch the fuel from hoses using a container or cloth.**

(1) Attach ST to the fuel delivery pipe and push ST in the direction of arrow mark to disconnect the quick connector of the fuel delivery hose (A).

ST 42099AE000 QUICK CONNECTOR RELEASE

(2) Remove the clip and disconnect the evaporation hose (B) from the pipe.

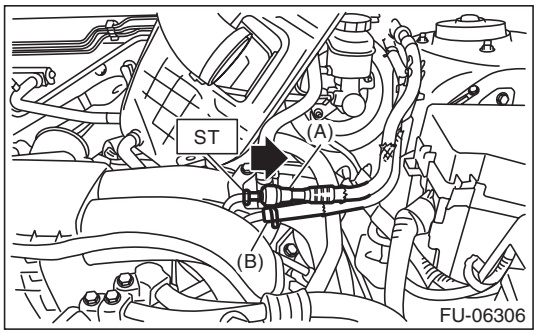

12) Remove the generator cable clip (A) from the intake manifold protector LH.
13) Remove the oil filler pipe (B) from the rocker cover LH.
14) Disconnect the brake booster vacuum hose (C).

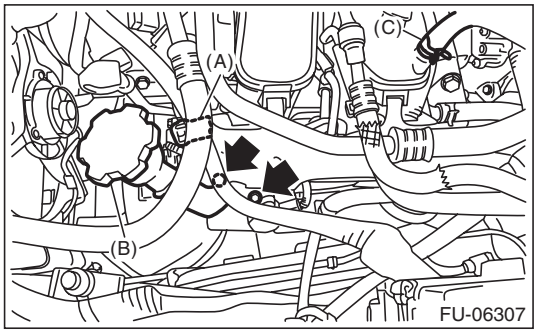

15) Disconnect the connector from the ignition coil of #2 cylinder.

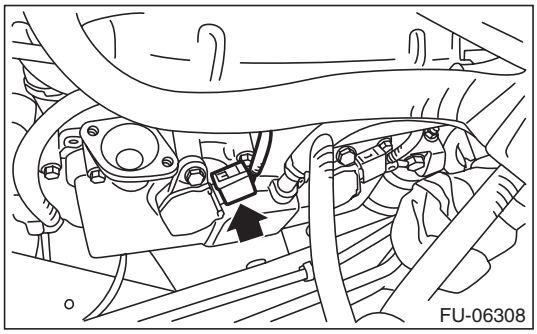

16) Remove the intake manifold protector LH.

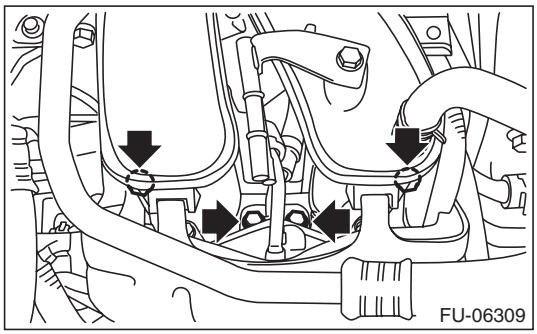

GETtheMANUALS.org

17) Remove the connector (A) from the fuel injector, and remove the fuel delivery pipe (B) from the fuel gallery LH.

NOTE:
Disconnect the quick connector as shown in the figure.

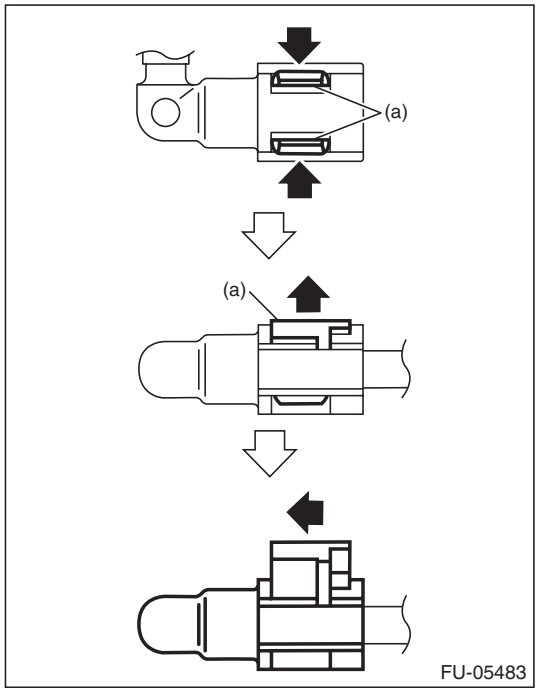

(a) Slider

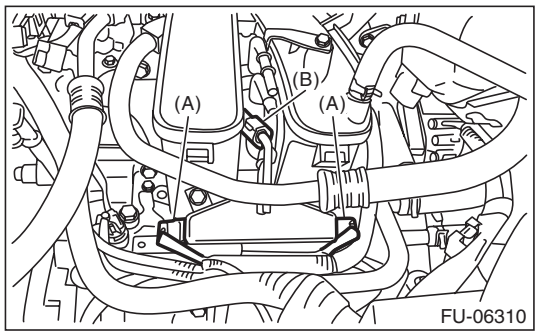

18) Remove the clip (A) securing the engine harness to the intake manifold, and remove the bolt (B) securing the LH side of the multifunction duct assembly.

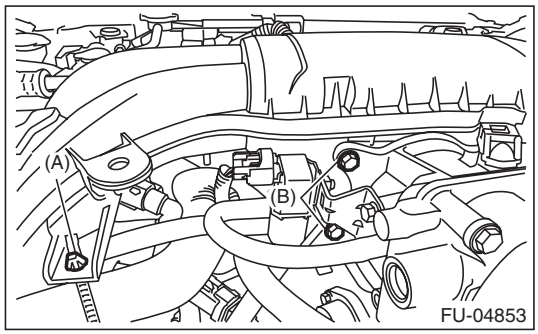

19) Remove the bolts (A) which secure the RH side of multi-function duct assembly to the intake manifold.

20) Remove the cap (B) from the intake manifold.

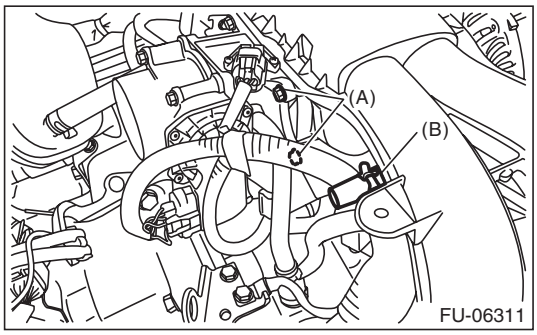

21) Remove the intake manifold from cylinder head.

22) Remove the fuel gallery RH and fuel injector from the intake manifold.

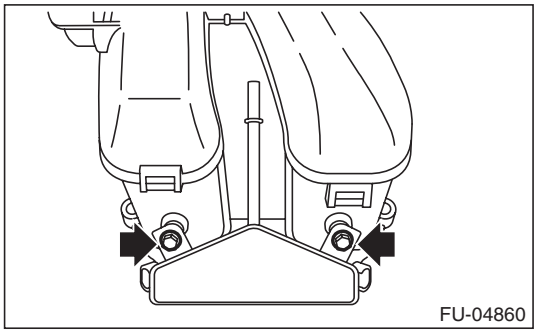

23) Remove the fuel gallery LH, fuel pipe and fuel injector from the intake manifold.

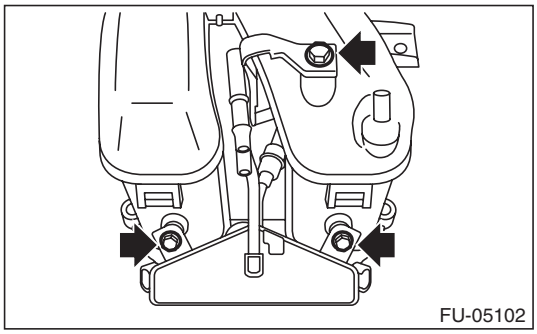

GETtheMANUALS.org

2. MULTI-FUNCTION DUCT ASSEMBLY

1) Release the fuel pressure. <Ref. to FU(H4SO)-53, RELEASING OF FUEL PRESSURE, PROCEDURE, Fuel.>
2) Disconnect the ground cable from battery.

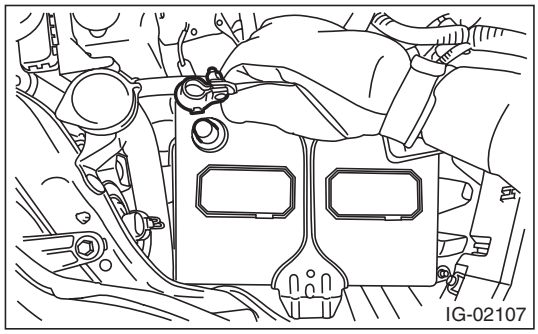

3) Open the fuel filler lid and remove the fuel filler cap.
4) Lift up the vehicle.
5) Remove the under cover. <Ref. to EI-35, REMOVAL, Front Under Cover.>
6) Drain approximately 3.0 ℓ (3.2 US qt, 2.6 Imp qt) of coolant. <Ref. to CO(H4SO)-14, DRAINING OF ENGINE COOLANT, REPLACEMENT, Engine Coolant.>
7) Lower the vehicle.
8) Remove the intake manifold. <Ref. to FU(H4SO)-17, INTAKE MANIFOLD, REMOVAL, Intake Manifold.>
9) Remove the bolt, and disconnect the bulkhead harness connector from the engine harness connector and rear engine hanger.

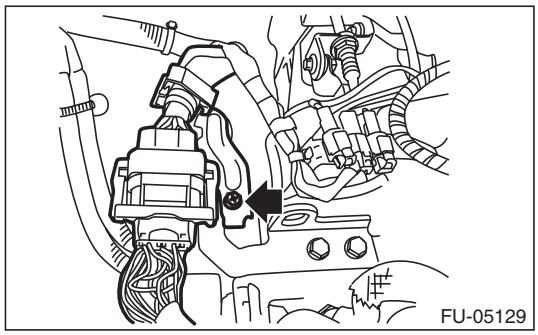

10) Slide the engine harness connector in the direction of the arrow and remove it from the rear engine hanger.

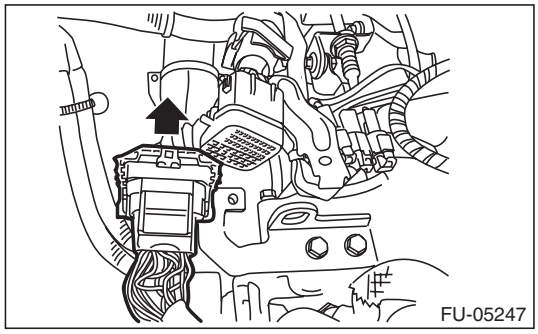

11) Disconnect the connector from the knock sensor.

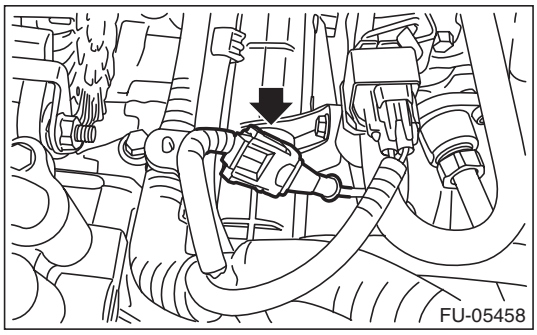

12) Disconnect the water hose (A) and EGR pipe (B) from the LH side of multi-function duct assembly.

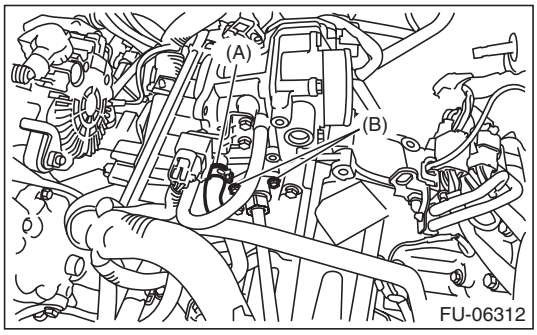

13) Disconnect the water hose from the RH side of multi-function duct assembly.

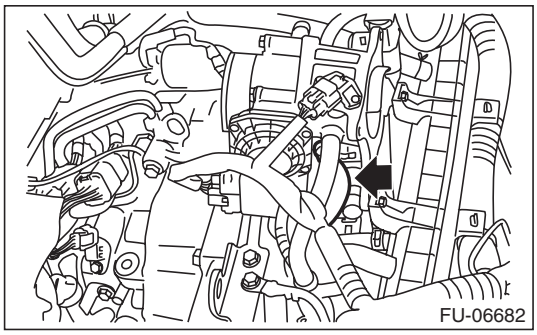

14) Disconnect the connector (A) from the engine coolant temperature sensor, and disconnect the terminal (B) from oil pressure switch and the connector (C) from the crankshaft position sensor.

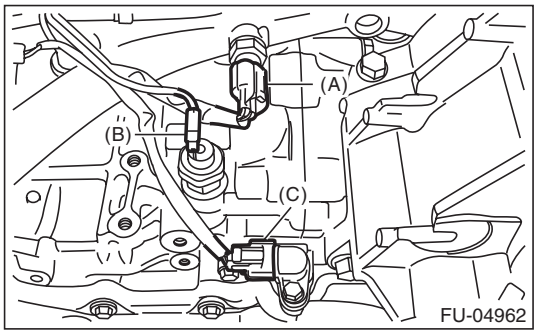

GETtheMANUALS.org

15) Disconnect the connector (A) from front oxygen (A/F) sensor and the connector (B) from the rear oxygen sensor.
16) Disconnect the connector (C) from the ignition coil of #1 cylinder.
17) Disconnect the connector (D) from the oil switching solenoid valve RH, disconnect the connector (E) from the oil temperature sensor RH, disconnect the connector (F) from the variable valve lift diagnosis switch and disconnect the ground terminal (G) from the rear engine hanger.

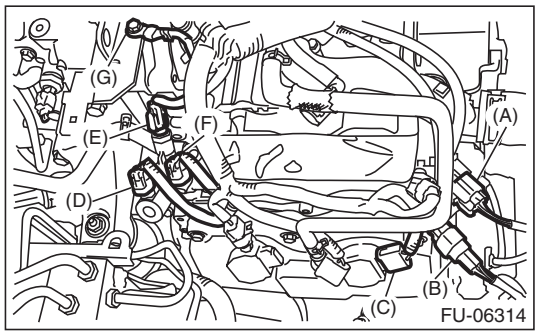

18) Slide the front oxygen (A/F) sensor connector and rear oxygen sensor connector in the direction of the arrow and remove them from the bracket.

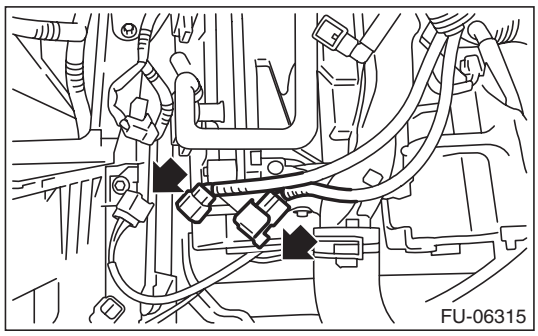

19) Disconnect the connector from the ignition coil of #4 cylinder.
20) Disconnect the connector (A) from the oil switching solenoid valve LH and the connector (B) from the camshaft position sensor LH.

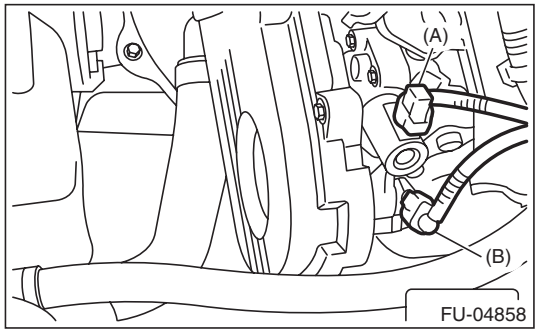

21) Remove the bolt (A) securing the multi-function duct assembly to the PCV pipe, and remove the multi-function duct assembly.
22) Remove the clip (B) securing the engine harness to the PCV pipe, and remove the engine harness.

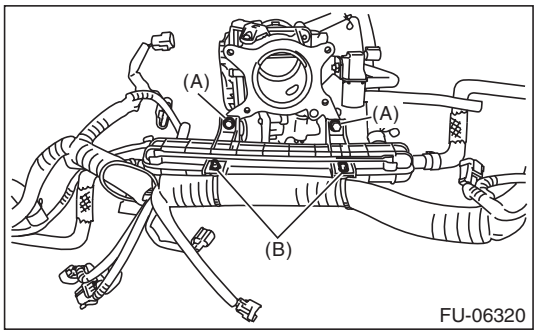

B: INSTALLATION

1. INTAKE MANIFOLD

Install in the reverse order of removal while being careful of the following.

- Connect the quick connector as shown in the figure.

CAUTION:

- **Check that there is no damage or dust on the quick connector. If necessary, clean the seal surface of the pipe.**
- **When connecting the quick connector, make sure to insert the pipe all the way in before locking the slider.**
- **When it is difficult to lock the slider, check that the pipe is fully inserted.**
- **Make sure that the quick connector is securely connected.**

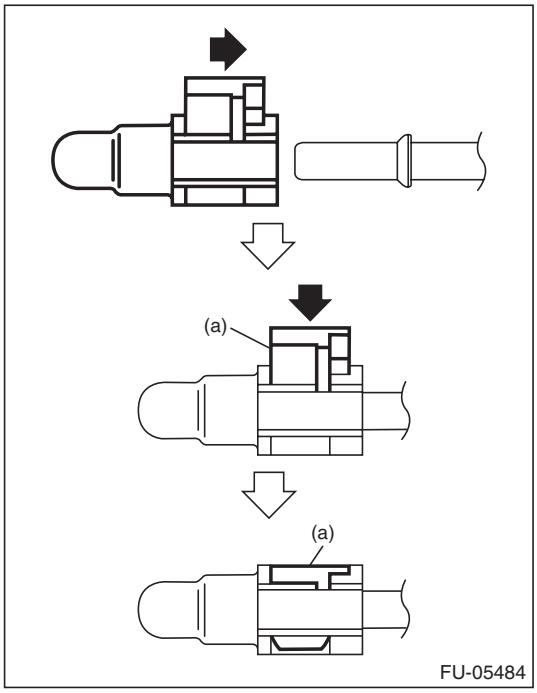

(a) Slider

GETtheMANUALS.org

NOTE:
- Use a new gasket.
- If fuel hoses or clamps are damaged, replace them with new parts.

Tightening torque:
T1: 6.4 N·m (0.7 kgf-m, 4.7 ft-lb)
T2: 19 N·m (1.9 kgf-m, 14.0 ft-lb)

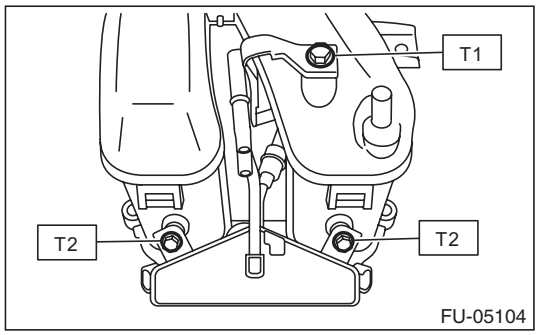

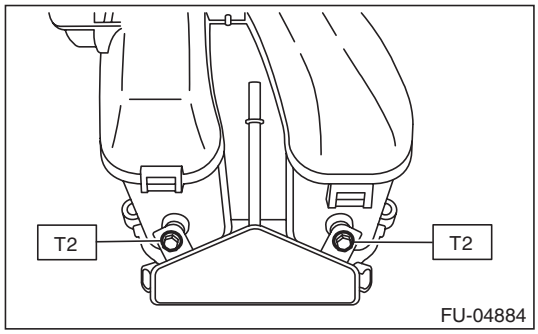

Tightening torque:
6.4 N·m (0.7 kgf-m, 4.7 ft-lb)

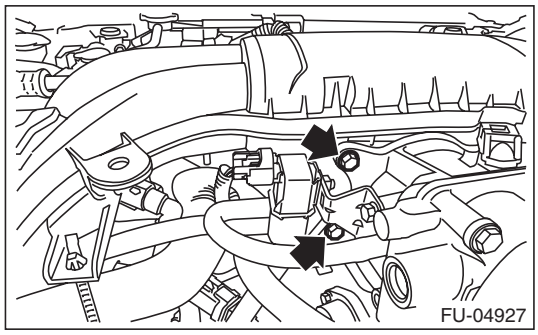

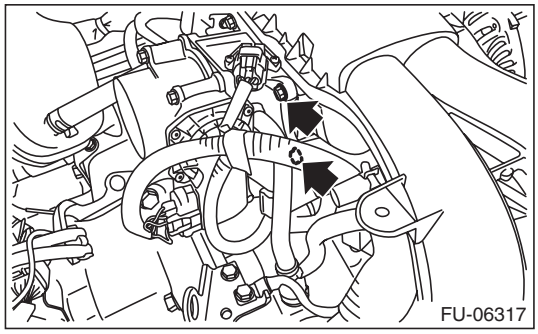

Tightening torque:
25 N·m (2.5 kgf-m, 18.4 ft-lb)

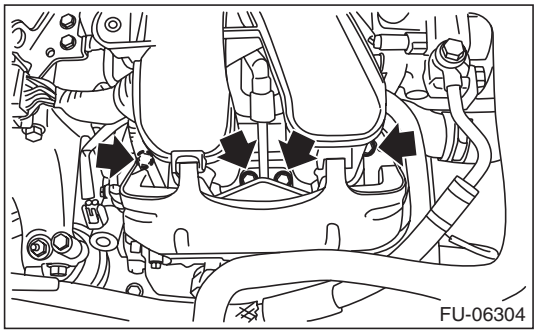

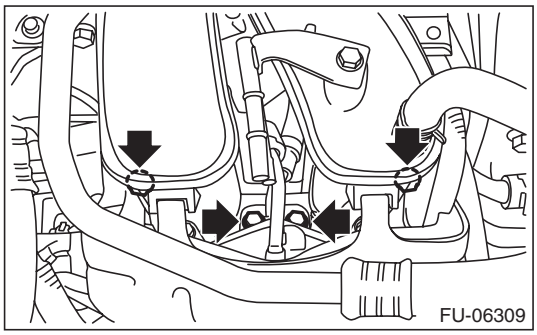

Tightening torque:
6.4 N·m (0.7 kgf-m, 4.7 ft-lb)

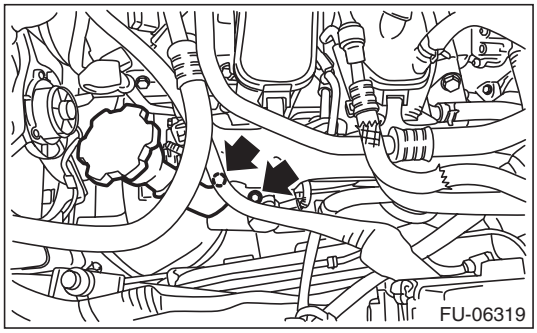

NOTE:
Align the clamp hole with the protrusion of the air intake boot assembly.

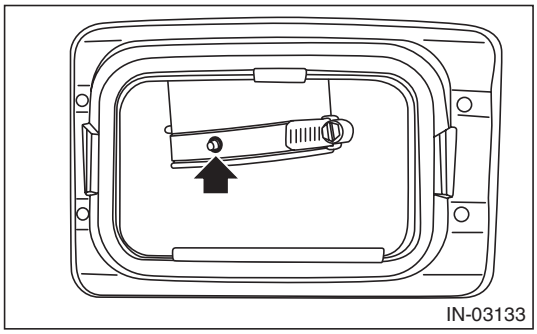

GETtheMANUALS.org

Tightening torque:
Clamp (A), (B)
3 N·m (0.3 kgf-m, 2.2 ft-lb)

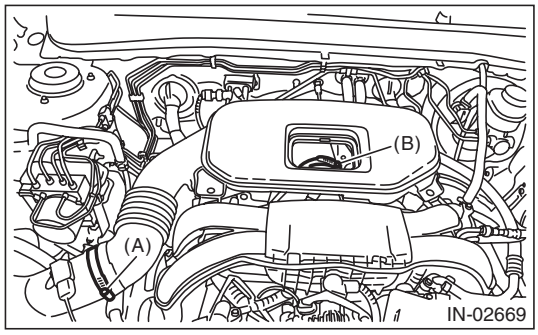

2. MULTI-FUNCTION DUCT ASSEMBLY

Install in the reverse order of removal.

NOTE:
- Use a new gasket.
- The oil pressure switch harness must be positioned to be within the range of a 45° angle on either left or right toward the rear of the vehicle.

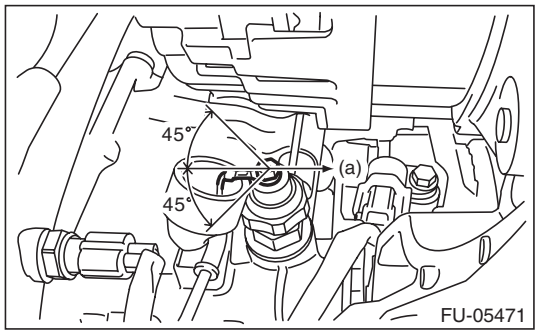

(a) Front side of vehicle

Tightening torque:
1.5 N·m (0.2 kgf-m, 1.1 ft-lb)

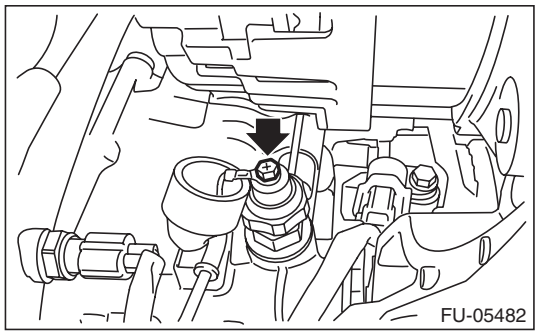

Tightening torque:
6.4 N·m (0.7 kgf-m, 4.7 ft-lb)

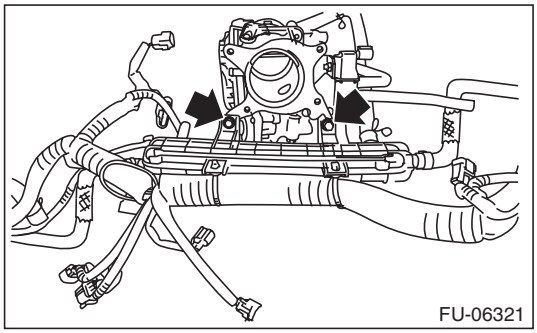

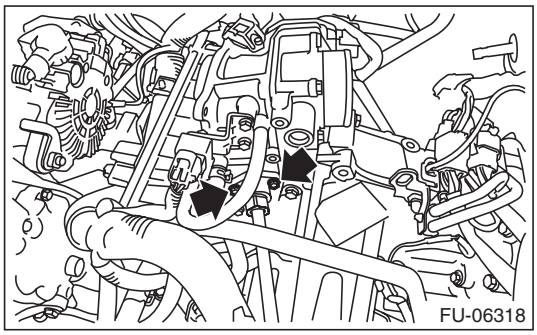

Tightening torque:
19 N·m (1.9 kgf-m, 14.0 ft-lb)

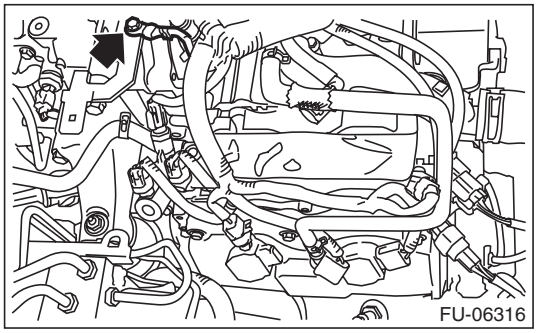

C: INSPECTION

1) Check that the intake manifold and fuel pipe have no deformation, cracks and other damages.
2) Check that the hose has no cracks, damage or loose part.

GETtheMANUALS.org

4. Engine Coolant Temperature Sensor

A: REMOVAL

1) Disconnect the ground cable from battery.

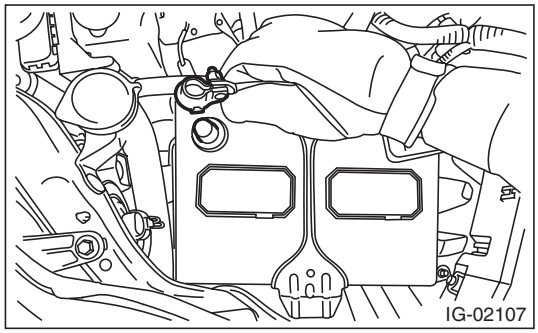

2) Remove the generator. <Ref. to SC(H4SO)-18, REMOVAL, Generator.>
3) Drain engine coolant. <Ref. to CO(H4SO)-14, DRAINING OF ENGINE COOLANT, REPLACEMENT, Engine Coolant.>
4) Disconnect the connector (A) from the engine coolant temperature sensor, and remove the engine coolant temperature sensor.

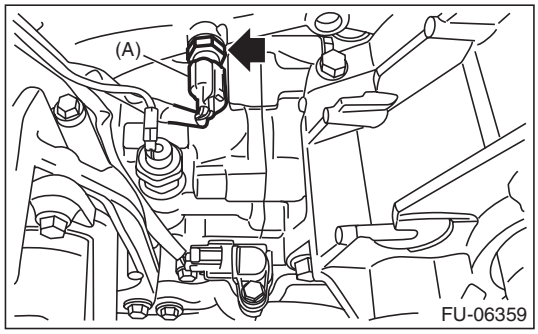

B: INSTALLATION

Install in the reverse order of removal.

NOTE:
Use a new gasket.

Tightening torque:
18 N·m (1.8 kgf-m, 13.3 ft-lb)

C: INSPECTION

1) Check that the engine coolant temperature sensor has no deformation, cracks or other damages.

2) Immerse the engine coolant temperature sensor and a thermometer in water.

CAUTION:
Take care not to allow water to get into the engine coolant temperature sensor connector. Completely remove any water inside.

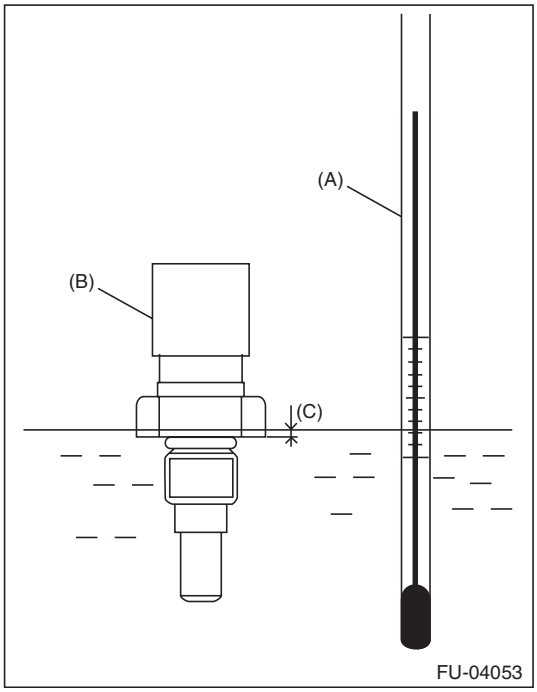

(A) Thermometer
(B) Engine coolant temperature sensor
(C) Hexagonal part height: To approx. $^{1}/_{3}$

3) Raise water temperature gradually, measure the resistance between the engine coolant temperature sensor terminals when the temperature is 20°C (68°F) and 80°C (176°F).

NOTE:
Agitate the water for even temperature distribution.

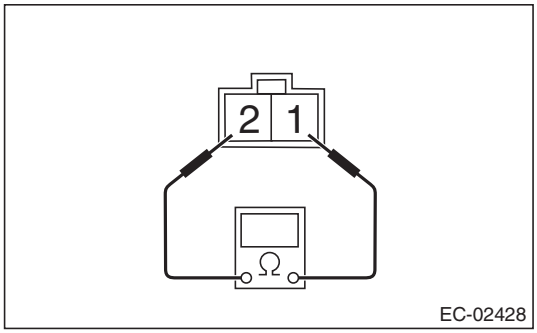

Water temperature	Terminal No.	Standard
20°C (68°F)	1 and 2	Approx. 2.45±0.2 kΩ
80°C (176°F)		Approx. 0.318±0.013 kΩ

GETtheMANUALS.org

5. Crankshaft Position Sensor

A: REMOVAL

1) Disconnect the ground cable from battery.

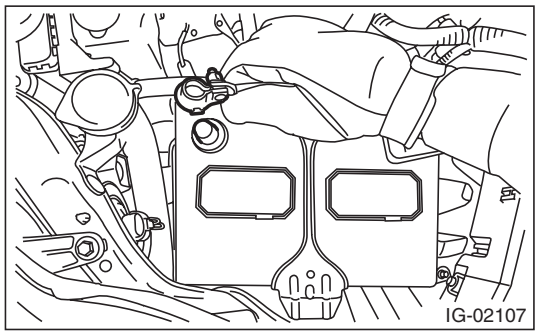

2) Remove the bolt which secures crankshaft position sensor to oil pump.

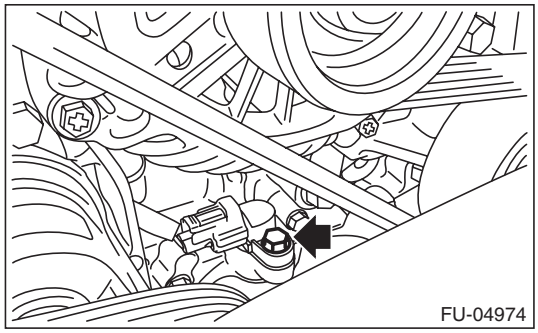

3) Remove the crankshaft position sensor, and disconnect the connector from the crankshaft position sensor.

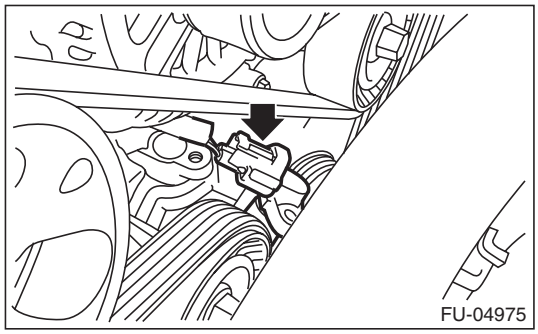

B: INSTALLATION

Install in the reverse order of removal.

Tightening torque:
6.4 N·m (0.7 kgf-m, 4.7 ft-lb)

C: INSPECTION

1. CRANKSHAFT POSITION SENSOR (METHOD WITH CIRCUIT TESTER)

Measure the resistance between crankshaft position sensor terminals.

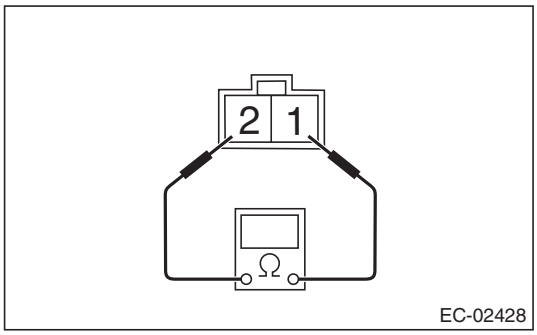

Terminal No.	Standard
1 and 2	2.04±0.204 kΩ

2. CRANKSHAFT POSITION SENSOR (METHOD WITH OSCILLOSCOPE)

1) Prepare an oscilloscope.
2) Remove the glove box lid assembly. <Ref. to EI-66, REMOVAL, Glove Box.>
3) Connect the probe to ECM connector.

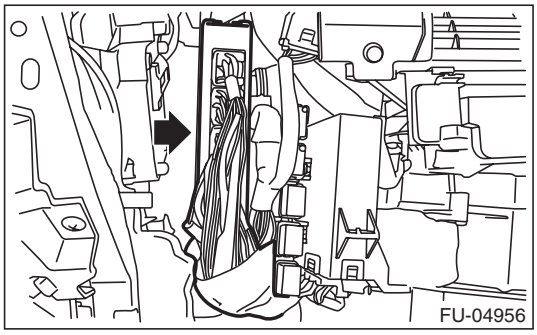

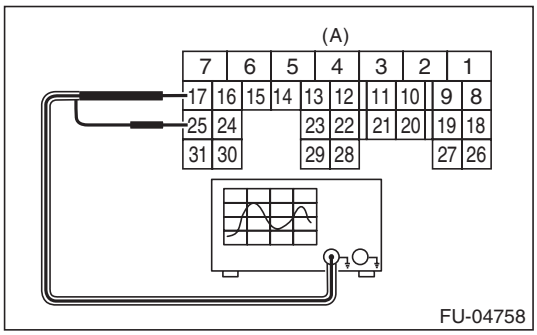

(A) To ECM connector

Terminal No.	Probe
17	+
25	–

4) Start the engine and let it idle.

GETtheMANUALS.org

5) Check the pattern is the same as the waveform and voltage shown below.

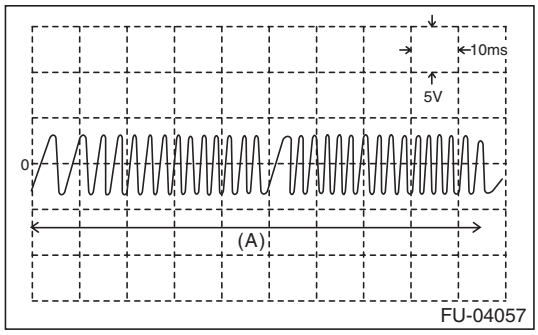

(A) One crankshaft rotation

6) After inspection, install the related parts in the reverse order of removal.

3. OTHER INSPECTIONS

Check that the crankshaft position sensor has no deformation, cracks or other damages.

GETtheMANUALS.org

6. Camshaft Position Sensor

A: REMOVAL

1) Disconnect the ground cable from battery.

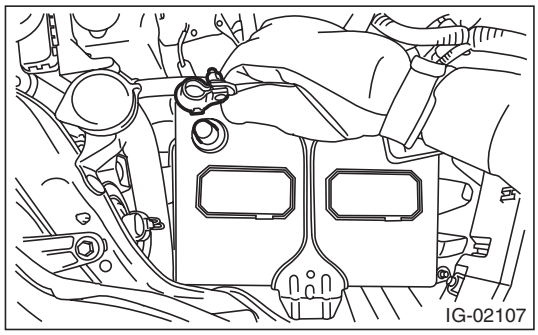

2) Disconnect the connector from camshaft position sensor.

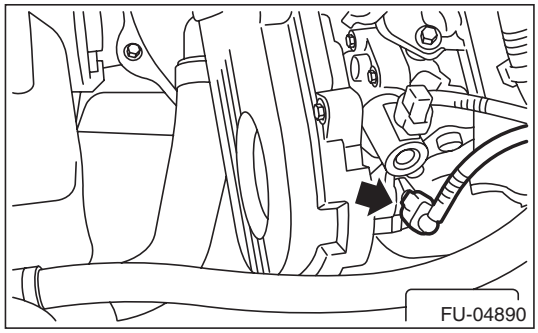

3) Remove the ignition coil. (LH side only) <Ref. to IG(H4SO)-5, REMOVAL, Ignition Coil.>

4) Remove the bolt which secures camshaft position sensor to camshaft position sensor support.

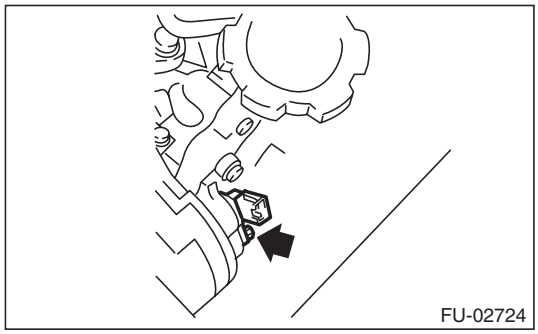

5) Remove the bolt which secures camshaft position sensor support to camshaft cap LH.

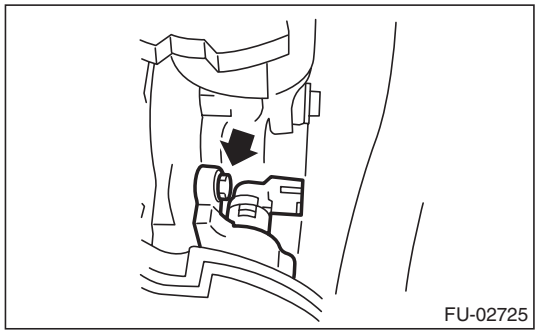

6) Remove the camshaft position sensor and the camshaft position sensor support as a unit.

NOTE:
Slide in the arrowed direction until the camshaft position sensor contacts the rocker cover LH.

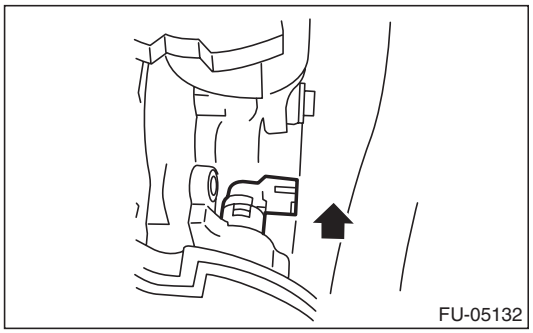

7) Remove the camshaft position sensor from the camshaft position sensor support.

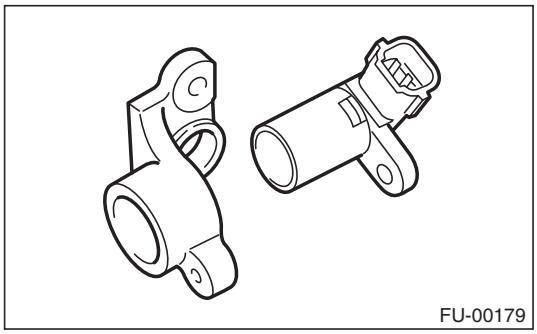

B: INSTALLATION

Install in the reverse order of removal.

Tightening torque:
Camshaft position sensor support
6.4 N·m (0.7 kgf-m, 4.7 ft-lb)
Camshaft position sensor
6.4 N·m (0.7 kgf-m, 4.7 ft-lb)

GETtheMANUALS.org

C: INSPECTION

1. CAMSHAFT POSITION SENSOR (METHOD WITH OSCILLOSCOPE)

1) Prepare an oscilloscope.
2) Remove the glove box lid assembly. <Ref. to EI-66, REMOVAL, Glove Box.>
3) Connect the probe to ECM connector.

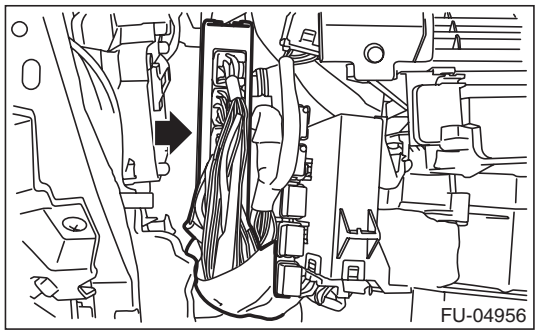

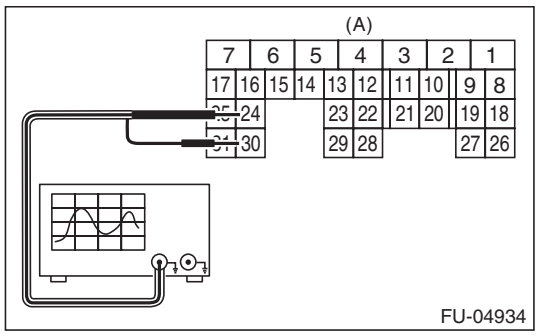

(A) To ECM connector

Terminal No.	Probe
24	+
30	–

4) Start the engine and let it idle.
5) Check the pattern is the same as the waveform and voltage shown below.

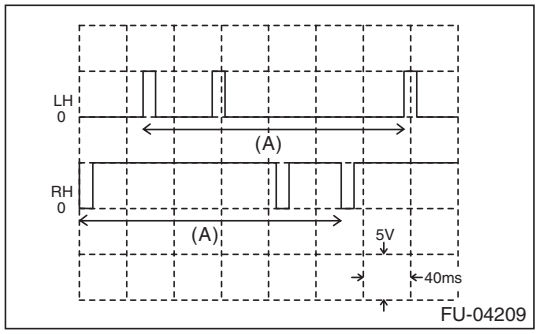

(A) One camshaft rotation

6) After inspection, install the related parts in the reverse order of removal.

2. OTHER INSPECTIONS

Check that the camshaft position sensor has no deformation, cracks or other damages.

GETtheMANUALS.org

7. Knock Sensor

A: REMOVAL

1) Disconnect the ground cable from battery.

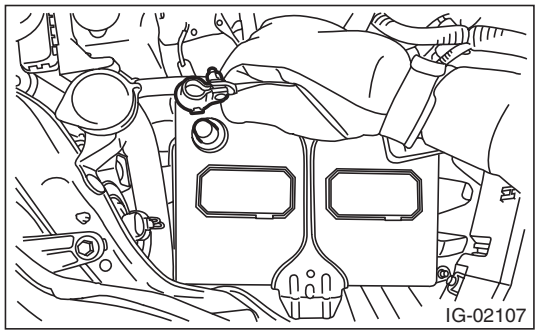

2) Remove the cover (A) and clip (B) from air intake boot assembly.

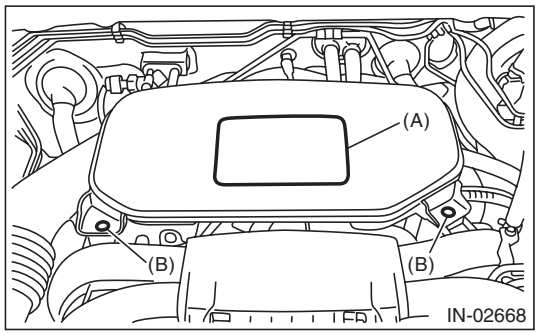

3) Loosen the clamp (A) which connects the air intake boot assembly and air cleaner case.
4) Loosen the clamp (B) which connects the air intake boot assembly and throttle body.

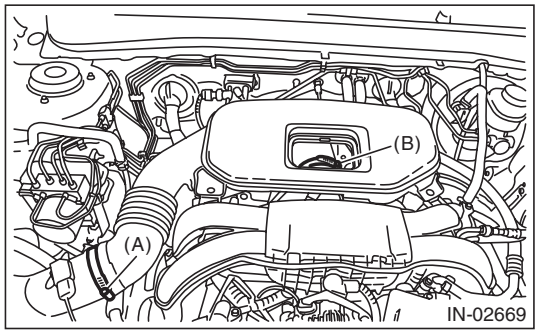

5) Remove the air intake boot from the throttle body, and move it to the left side wheel apron.

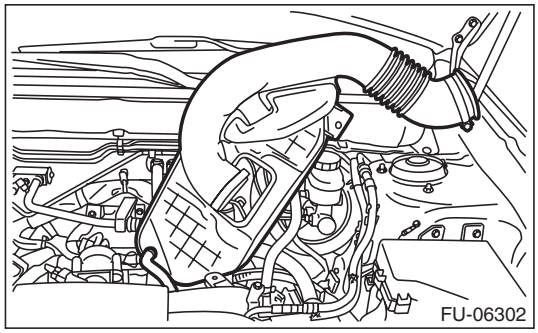

6) Disconnect the connector from the knock sensor.

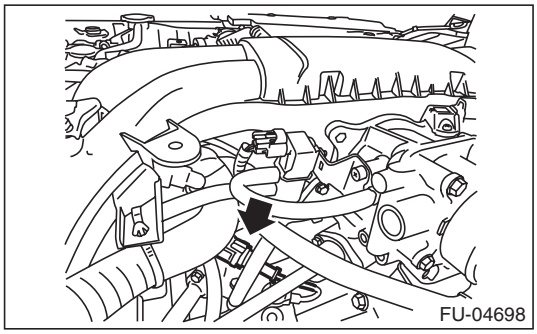

7) Remove the knock sensor from cylinder block.

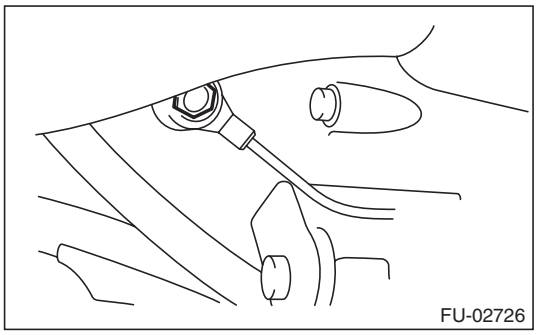

B: INSTALLATION

1) Install the knock sensor to the cylinder block.

NOTE:
The portion of the knock sensor cord that is pulled out must be positioned at a 60° angle relative to the engine rear.

Tightening torque:
24 N·m (2.4 kgf-m, 17.7 ft-lb)

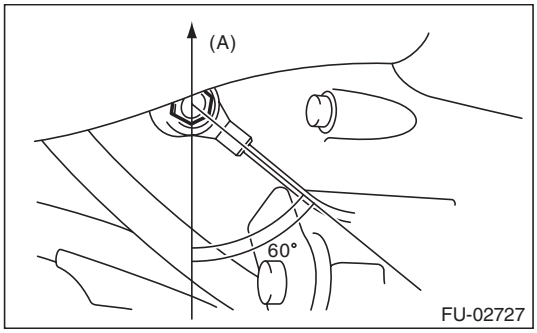

(A) Front side of vehicle

GETtheMANUALS.org

2) Connect the connector to the knock sensor.

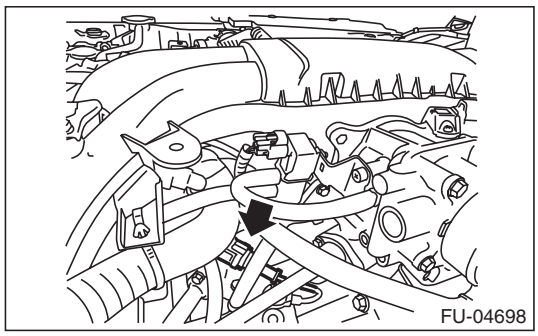

3) Install the air intake boot assembly.

NOTE:
Align the clamp hole with the protrusion of the air intake boot assembly.

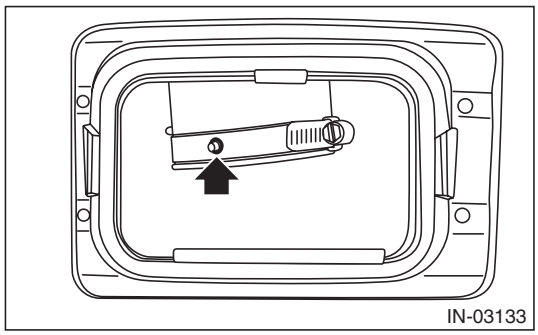

Tightening torque:
Clamp (A), (B)
3 N·m (0.3 kgf-m, 2.2 ft-lb)

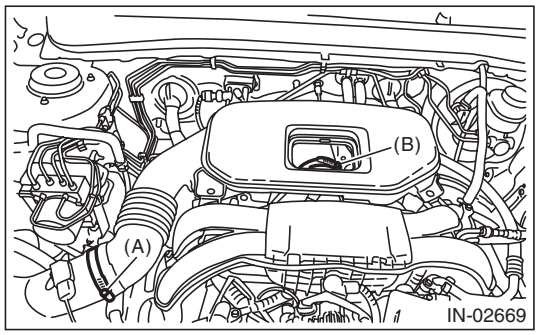

4) Connect the battery ground terminal.

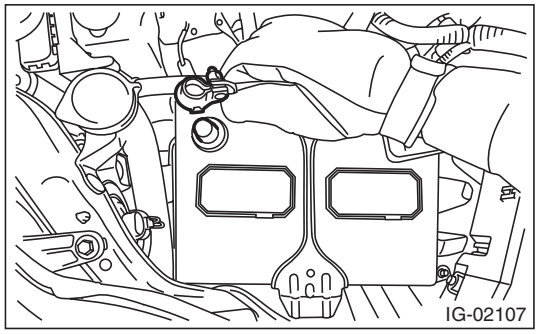

C: INSPECTION

1) Check that the knock sensor has no deformation, cracks or other damages.
2) Measure the resistance between knock sensor terminals.

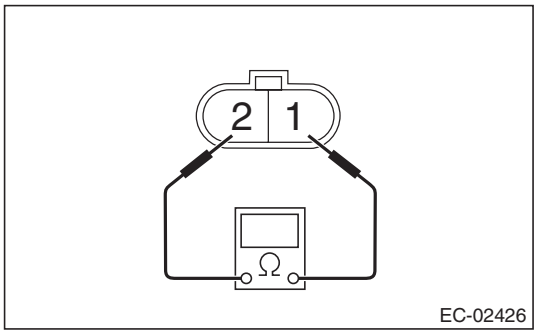

Terminal No.	Standard
1 and 2	560±28 kΩ

GETtheMANUALS.org

8. Throttle Position Sensor

A: SPECIFICATION

Throttle body is a non-disassembled part, so do not remove the throttle position sensor from throttle body.
Refer to “Throttle Body” for removal and installation procedure. <Ref. to FU(H4SO)-15, REMOVAL, Throttle Body.> <Ref. to FU(H4SO)-15, INSTALLATION, Throttle Body.>

GETtheMANUALS.org

9. Mass Air Flow and Intake Air Temperature Sensor

A: REMOVAL

1) Disconnect the ground cable from battery.

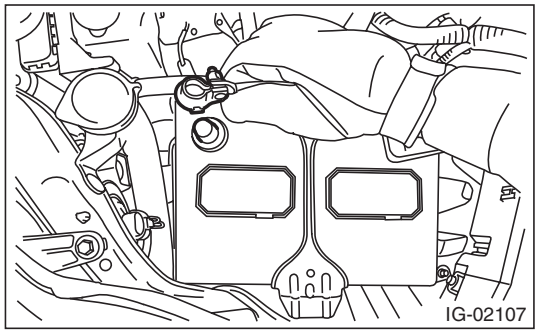

2) Disconnect the connector (A) from the mass air flow and intake air temperature sensor, and remove the mass air flow and intake air temperature sensor.

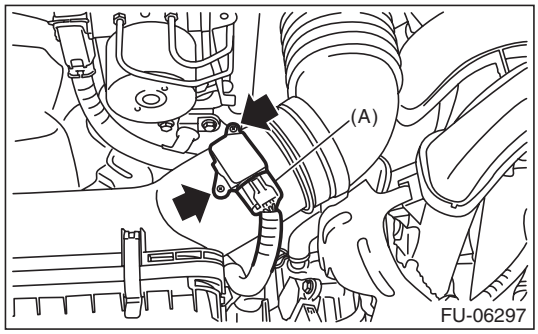

B: INSTALLATION

Install in the reverse order of removal.

Tightening torque:
1 N·m (0.1 kgf-m, 0.7 ft-lb)

C: INSPECTION

1. CHECK MASS AIR FLOW SENSOR UNIT

1) Connect the battery positive terminal to terminal No. 3 and the battery ground terminal to terminal No. 4, the circuit tester positive terminal to terminal No. 5 and the circuit tester ground terminal to terminal No. 4.

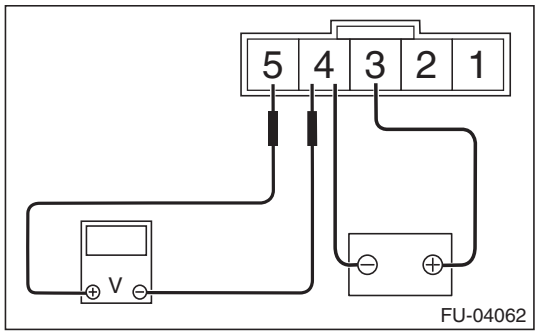

2) Check the voltage changes when air is blown to the mass air flow sensor unit in arrow direction.

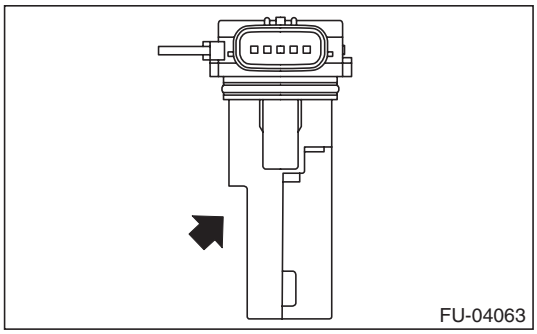

2. CHECK INTAKE AIR TEMPERATURE SENSOR UNIT

Measure the resistance between intake air temperature sensor terminals.

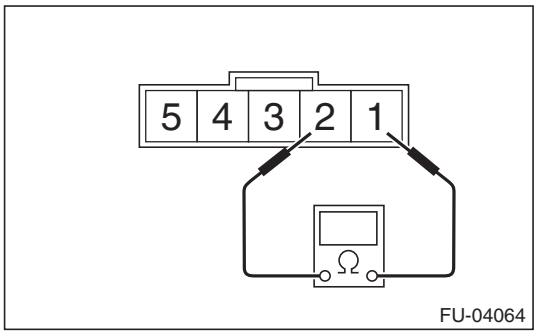

Temperature	Terminal No.	Standard
–20°C (–4°F)	1 and 2	16.0±2.4 kΩ
20°C (68°F)		2.45±0.24 kΩ
60°C (140°F)		0.58±0.087 kΩ

3. OTHER INSPECTIONS

1) Check that the mass air flow and intake air temperature sensor has no deformation, cracks or other damages.
2) Check that the mass air flow and intake air temperature sensor has no dirt.

GETtheMANUALS.org

10. Manifold Absolute Pressure Sensor

A: REMOVAL

1) Disconnect the ground cable from battery.

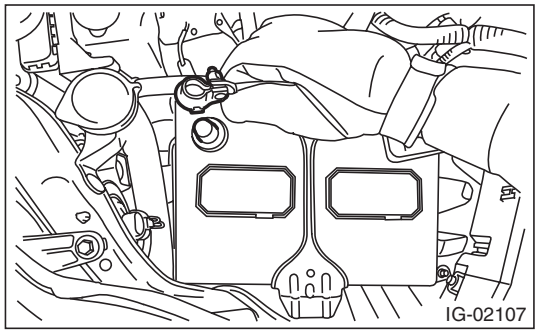

2) Remove the cover (A) and clip (B) from air intake boot assembly.

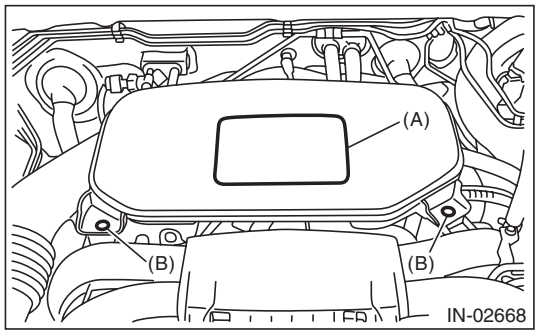

3) Loosen the clamp (A) which connects the air intake boot assembly and air cleaner case.
4) Loosen the clamp (B) which connects the air intake boot assembly and throttle body.

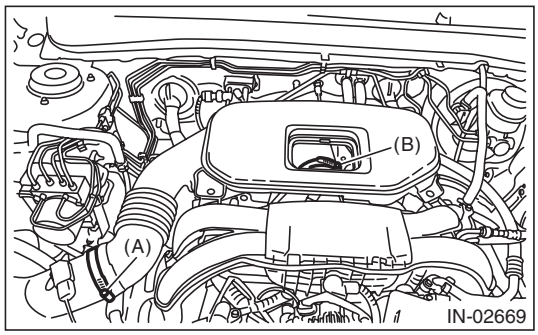

5) Remove the air intake boot from the throttle body, and move it to the left side wheel apron.

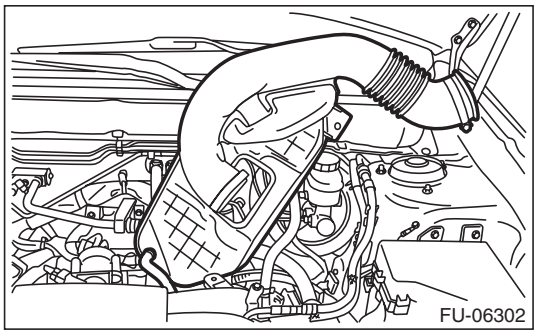

6) Disconnect the connector (A) from the manifold absolute pressure sensor, and remove the manifold absolute pressure sensor from the multi-function duct.

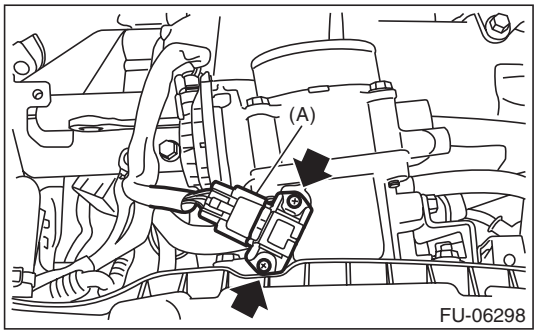

GETtheMANUALS.org

B: INSTALLATION

Install in the reverse order of removal.

NOTE:
Use new O-rings.

Tightening torque:
2 N·m (0.2 kgf-m, 1.5 ft-lb)

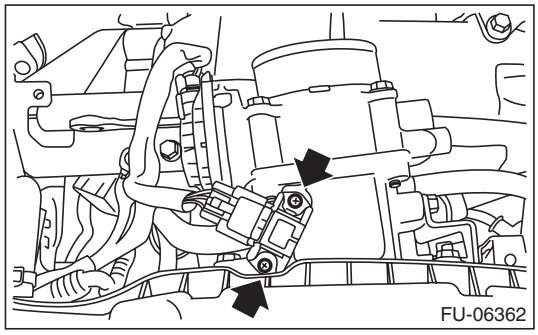

NOTE:
Align the clamp hole with the protrusion of the air intake boot assembly.

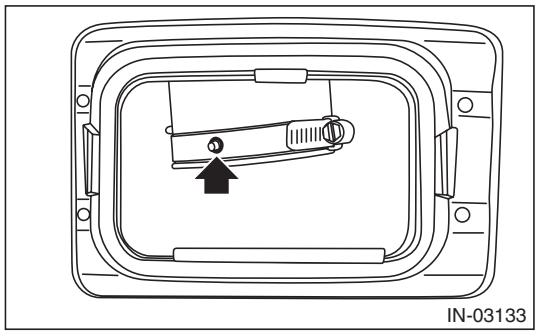

Tightening torque:
Clamp (A), (B)
3 N·m (0.3 kgf-m, 2.2 ft-lb)

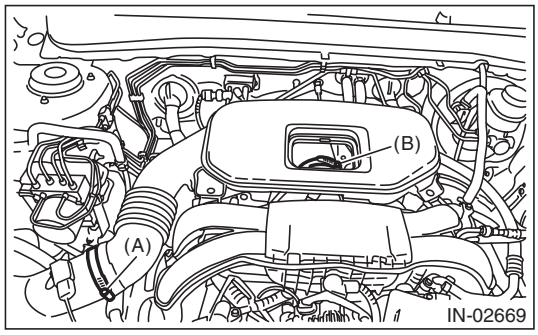

C: INSPECTION

1) Check that the manifold absolute pressure sensor has no deformation, cracks or other damages.
2) Connect dry-cell battery positive terminal to terminal No. 3 and dry-cell battery ground terminal to terminal No. 2, circuit tester ground terminal to terminal No. 2 and the circuit tester positive terminal to terminal No. 1.

NOTE:
- Use new dry-cell batteries.
- Using circuit tester, check the voltage of a single dry-cell battery is 1.6 V or more. And also check the voltage of three batteries in series is between 4.8 V and 5.2 V.

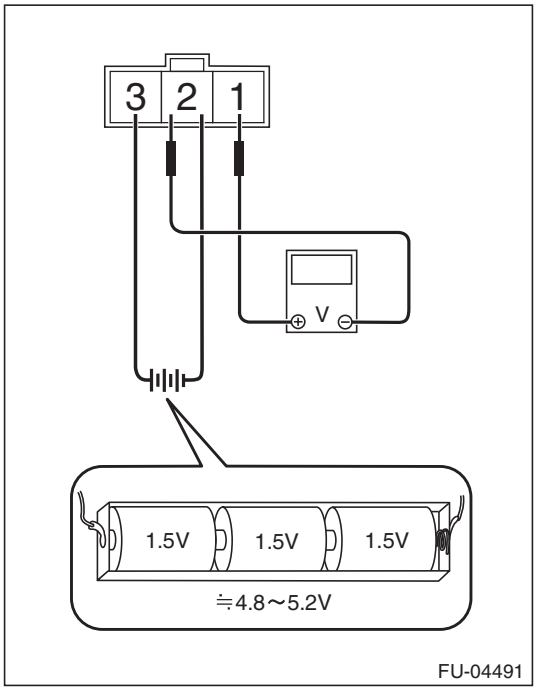

3) Connect the Mighty Vac to the pressure port (A) of manifold absolute pressure sensor.

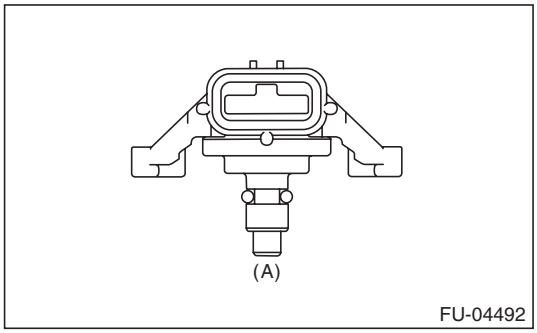

GETtheMANUALS.org

4) Check the voltage when generating vacuum and positive pressure using Mighty Vac.

CAUTION:
Do not apply vacuum of less than –88 kPa (–0.9 kgf/cm^2, –12.8 psi). Doing so may damage the manifold absolute pressure sensor.

NOTE:
When vacuum occurs at the pressure port of manifold absolute pressure sensor, the voltage will drop from the value as in step 3). When positive pressure occurs, on the other hand, the voltage will rise.

Pressure	Terminal No.	Standard
–88 kPa (–0.9 kgf/cm^2, –12.8 psi)	2 (+) and 1 (–)	Approx. 1 V (when 25°C (77°F))
–35 kPa (–0.4 kgf/cm^2, –5.1 psi)		Approx. 2.6 V (when 25°C (77°F))
19 kPa (–0.2 kgf/cm^2, 2.8 psi)		Approx. 4.2 V (when 25°C (77°F))

GETtheMANUALS.org

11.EGR Valve

A: REMOVAL

1) Disconnect the ground cable from battery.

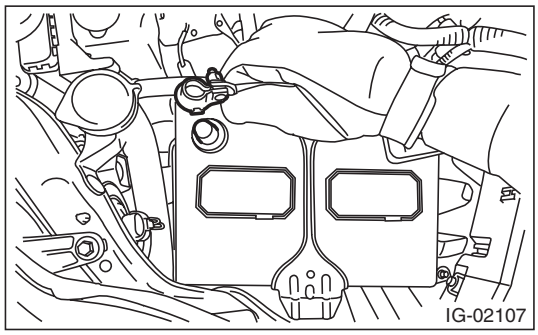

2) Remove the multi-function duct assembly. <Ref. to FU(H4SO)-20, MULTI-FUNCTION DUCT ASSEMBLY, REMOVAL, Intake Manifold.>
3) Remove the EGR valve from the multi-function duct assembly.

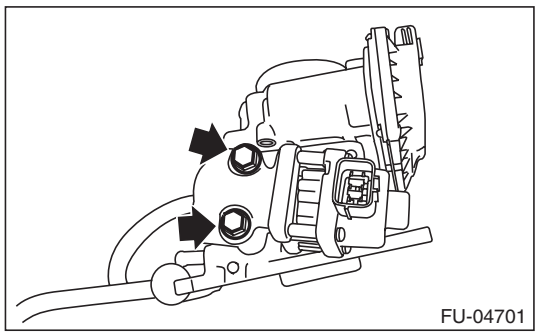

B: INSTALLATION

Install in the reverse order of removal.

NOTE:
Use a new gasket.

Tightening torque:
19 N·m (1.9 kgf-m, 14.0 ft-lb)

C: INSPECTION

1) Check that the EGR valve has no deformation, cracks or other damages.
2) Measure the resistance between EGR valve terminals.

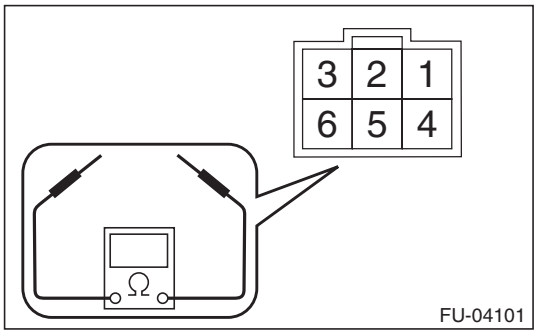

Terminal No.	Standard
2 and 1	22±2 Ω
2 and 3	22±2 Ω
5 and 4	22±2 Ω
5 and 6	22±2 Ω

GETtheMANUALS.org

12. Fuel Injector

A: REMOVAL

1) Release the fuel pressure. <Ref. to FU(H4SO)-53, RELEASING OF FUEL PRESSURE, PROCEDURE, Fuel.>
2) Disconnect the ground cable from battery.

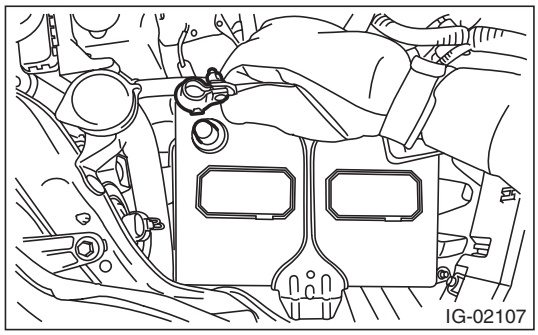

3) Open the fuel filler lid and remove the fuel filler cap.
4) Remove the intake manifold. <Ref. to FU(H4SO)-17, INTAKE MANIFOLD, REMOVAL, Intake Manifold.>
5) Remove the bolts securing the fuel gallery to intake manifold.

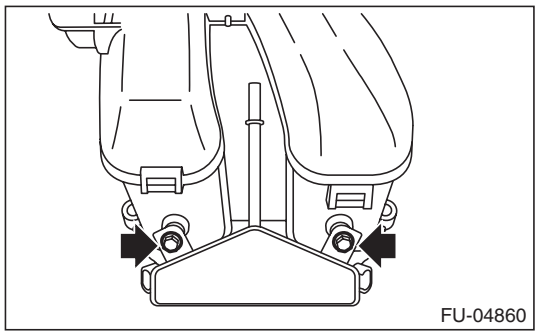

6) Remove the fuel injector while lifting up the fuel gallery.

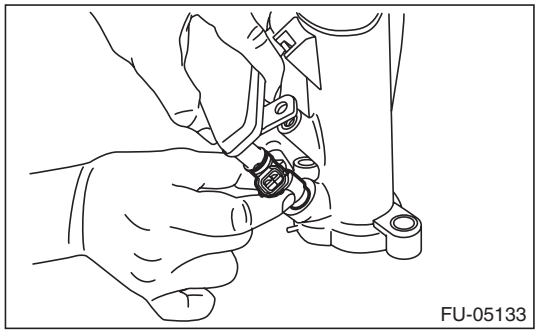

B: INSTALLATION

Install in the reverse order of removal.

NOTE:
Use new O-rings, rubbers and seal rings.

Tightening torque:
19 N·m (1.9 kgf-m, 14.0 ft-lb)

C: INSPECTION

1) Check that the fuel injector has no deformation, cracks or other damages.
2) Measure the resistance between fuel injector terminals.

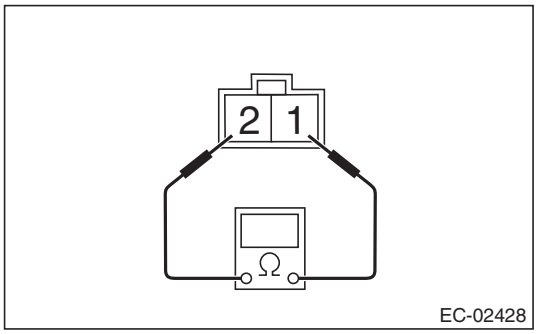

Terminal No.	Standard
1 and 2	Approx. 12.0 Ω (when 20°C (68°F))

GETtheMANUALS.org

13. Variable Valve Lift Diagnosis Oil Pressure Switch

A: REMOVAL

1) Disconnect the ground cable from battery.

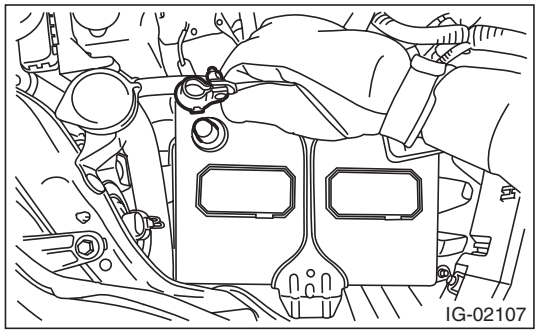

2) Remove the cover (A) and clip (B) from air intake boot assembly.

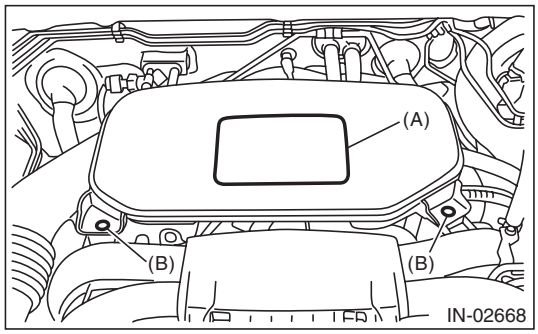

3) Loosen the clamp (A) which connects the air intake boot assembly and air cleaner case.
4) Loosen the clamp (B) which connects the air intake boot assembly and throttle body.

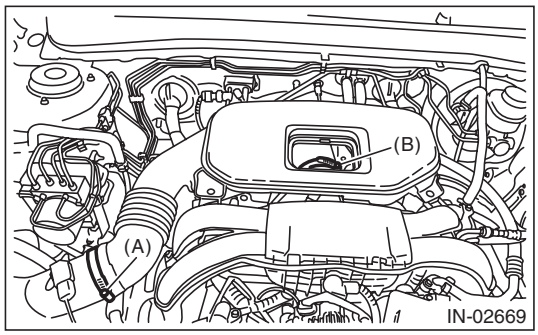

5) Remove the air intake boot from the throttle body, and move it to the left side wheel apron.

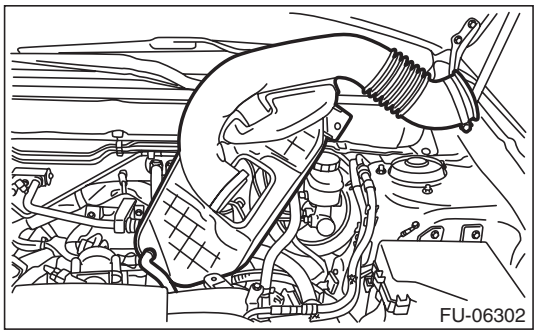

6) Disconnect the connector from the variable valve lift diagnosis oil pressure switch.
7) Remove the variable valve lift diagnosis oil pressure switch.

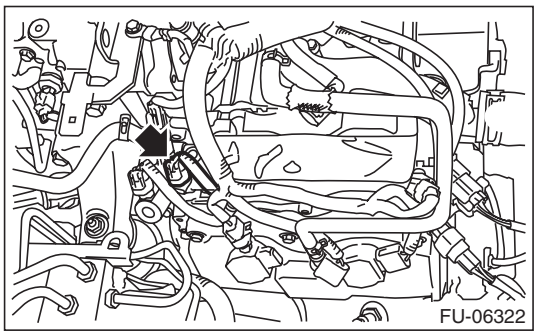

GETtheMANUALS.org

B: INSTALLATION

Install in the reverse order of removal.

NOTE:
Apply liquid gasket to the variable valve lift diagnosis oil pressure switch threads.

Liquid gasket:
THREE BOND 1324 (Part No. 004403042) or equivalent

Tightening torque:
17 N·m (1.7 kgf-m, 12.5 ft-lb)

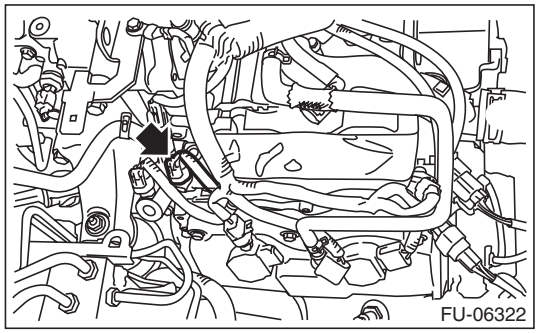

NOTE:
Align the clamp hole with the protrusion of the air intake boot assembly.

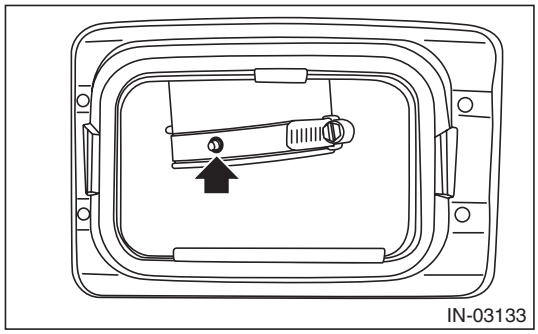

Tightening torque:
Clamp (A), (B)
3 N·m (0.3 kgf-m, 2.2 ft-lb)

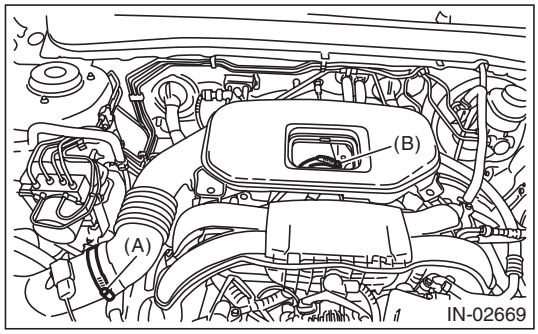

C: INSPECTION

1) Check that the variable valve lift diagnosis oil pressure switch does not have deformation, cracks or damage.
2) Check the variable valve lift diagnosis oil pressure switch installation portion for oil leakage and oil seepage.

GETtheMANUALS.org

14. Oil Temperature Sensor

A: REMOVAL

1) Disconnect the ground cable from battery.

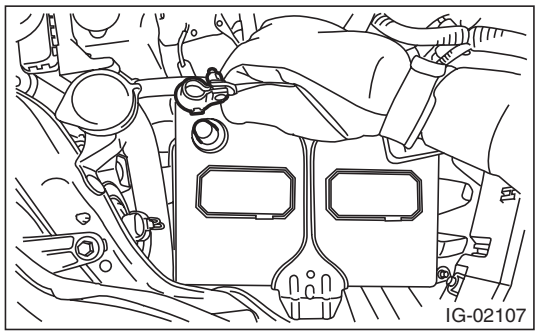

2) Remove the cover (A) and clip (B) from air intake boot assembly.

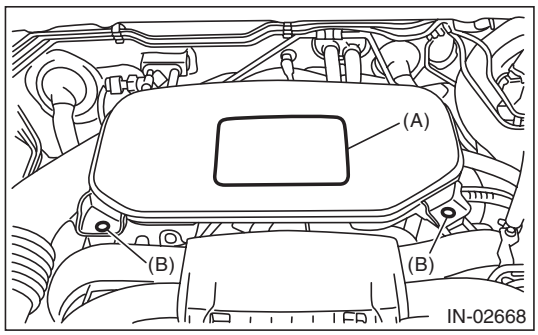

3) Loosen the clamp (A) which connects the air intake boot assembly and air cleaner case.
4) Loosen the clamp (B) which connects the air intake boot assembly and throttle body.

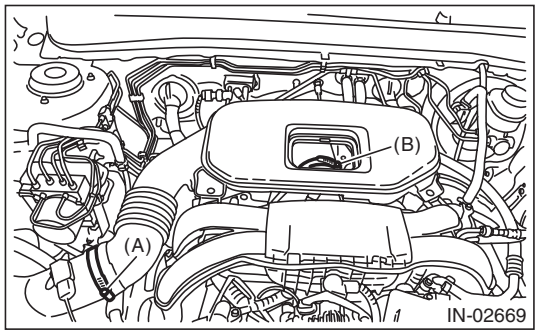

5) Remove the air intake boot from the throttle body, and move it to the left side wheel apron.

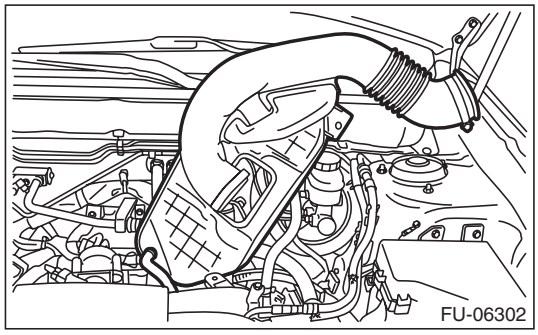

6) Disconnect the connector from oil temperature sensor.
7) Remove the oil temperature sensor.

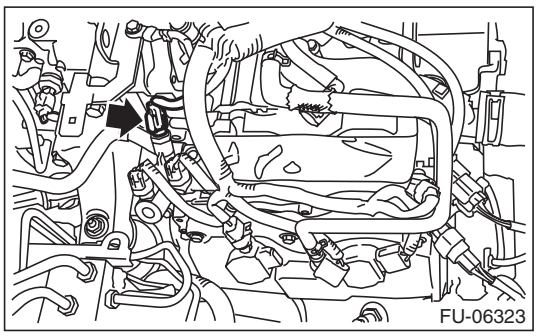

B: INSTALLATION

Install in the reverse order of removal.

NOTE:
Apply liquid gasket to the oil temperature sensor threads.

Liquid gasket:
THREE BOND 1324 (Part No. 004403042) or equivalent

Tightening torque:
18 N·m (1.8 kgf-m, 13.3 ft-lb)

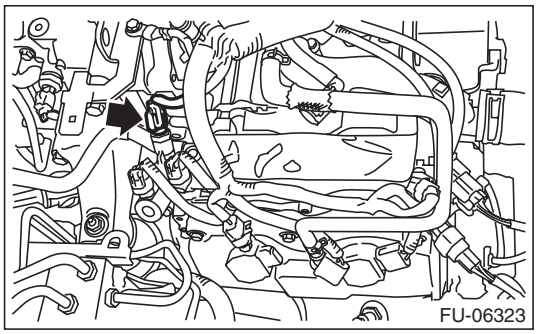

NOTE:
Align the clamp hole with the protrusion of the air intake boot assembly.

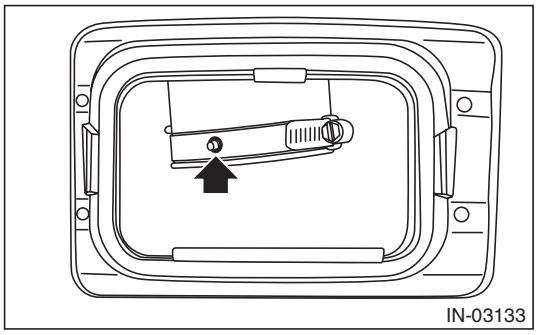

GETtheMANUALS.org

Tightening torque:
Clamp (A), (B)
3 N·m (0.3 kgf-m, 2.2 ft-lb)

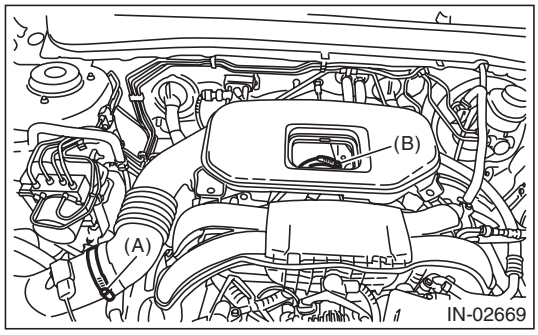

C: INSPECTION

1) Check that the oil temperature sensor has no deformation, cracks or other damages.
2) Check the resistance between the oil temperature sensor terminals.

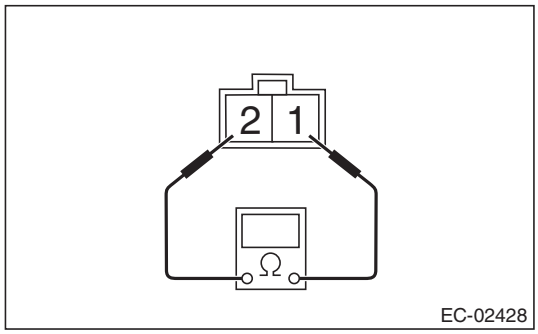

Terminal No.	Standard
1 and 2	2.45±0.2 (when 20°C (68°F))

GETtheMANUALS.org

15. Front Oxygen (A/F) Sensor

A: REMOVAL

1) Disconnect the ground cable from battery.

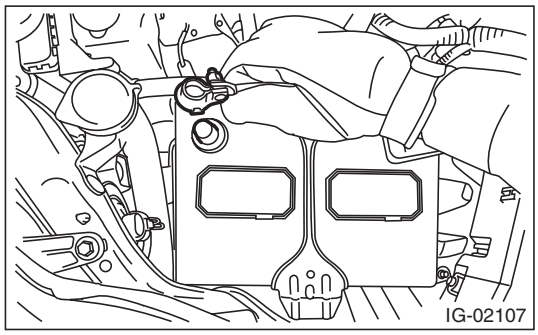

2) Remove the air intake duct. <Ref. to IN(H4SO)-9, REMOVAL, Air Intake Duct.>
3) Disconnect the front oxygen (A/F) sensor connector, and remove the clip holding the front oxygen (A/F) sensor harness.

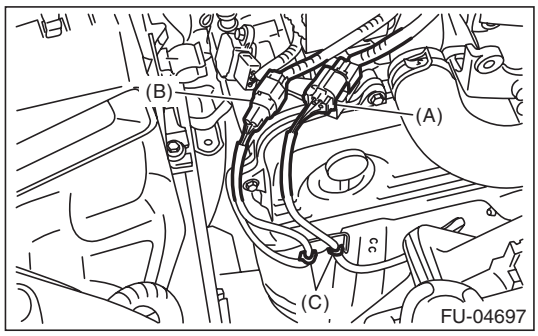

(A) Front oxygen (A/F) sensor connector
(B) Rear oxygen sensor connector
(C) Clip

4) Lift up the vehicle.
5) Remove the under cover. <Ref. to EI-35, REMOVAL, Front Under Cover.>
6) Apply spray-type lubricant to the threaded portion of front oxygen (A/F) sensor, and leave it for one minute or more.
7) Remove the front oxygen (A/F) sensor.

CAUTION:
When removing the front oxygen (A/F) sensor, wait until exhaust pipe cools, otherwise it will damage the exhaust pipe.

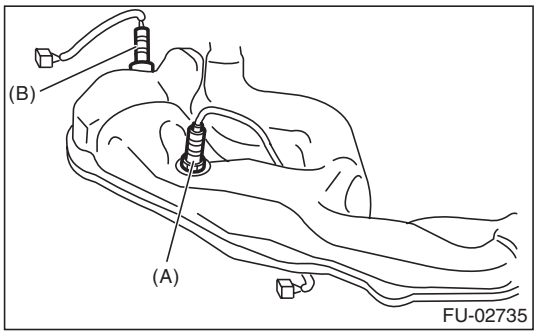

(A) Front oxygen (A/F) sensor
(B) Rear oxygen sensor

B: INSTALLATION

CAUTION:
If lubricant is spilt onto the exhaust pipe, wipe it off completely with cloth to avoid emission of smoke or causing a fire.
1) Before installing front oxygen (A/F) sensor, apply anti-seize compound only to the threaded portion of front oxygen (A/F) sensor to make the next removal easier.

CAUTION:
Never apply anti-seize compound to the protector of front oxygen (A/F) sensor.

Anti-seize compound:
NEVER-SEEZ NSN, JET LUBE SS-30 or equivalent
2) Install the front oxygen (A/F) sensor.

Tightening torque:
21 N·m (2.1 kgf-m, 15.5 ft-lb)

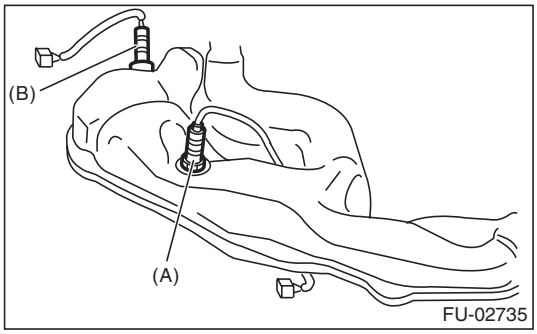

(A) Front oxygen (A/F) sensor
(B) Rear oxygen sensor

3) Install the under cover. <Ref. to EI-35, INSTALLATION, Front Under Cover.>
4) Lower the vehicle.

GETtheMANUALS.org

5) Connect the front oxygen (A/F) sensor connector, and secure the front oxygen (A/F) sensor harness by using the clip.

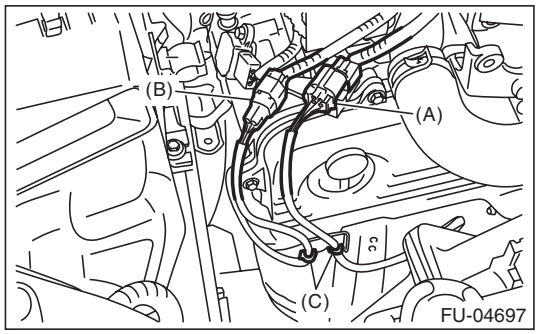

(A) Front oxygen (A/F) sensor connector
(B) Rear oxygen sensor connector
(C) Clip

6) Install the air intake duct. <Ref. to IN(H4SO)-9, INSTALLATION, Air Intake Duct.>
7) Connect the battery ground terminal.

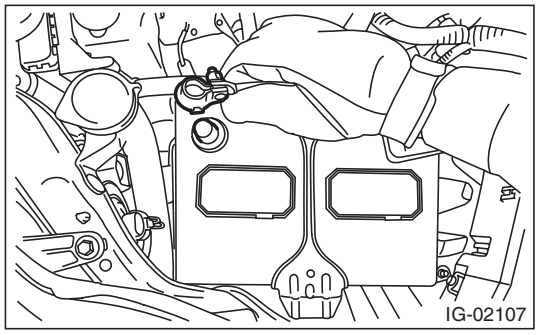

C: INSPECTION

1) Check that the front oxygen (A/F) sensor has no deformation, cracks or other damages.
2) Measure the resistance between front oxygen (A/F) sensor terminals.

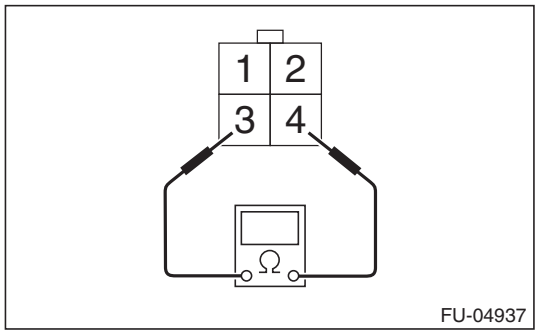

Terminal No.	Standard
3 and 4	2.4±0.24 Ω (when 20°C (68°F))

GETtheMANUALS.org

16. Rear Oxygen Sensor

A: REMOVAL

1) Disconnect the ground cable from battery.

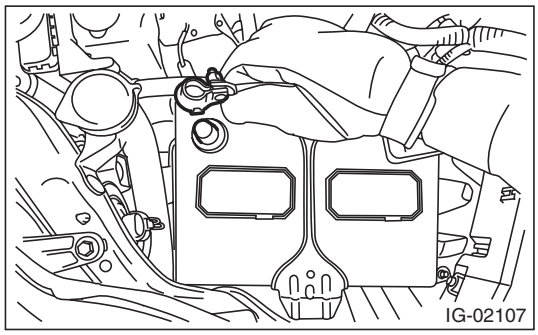

2) Remove the air intake duct. <Ref. to IN(H4SO)-9, REMOVAL, Air Intake Duct.>
3) Disconnect the rear oxygen sensor connector, and remove the clip holding the rear oxygen sensor harness.

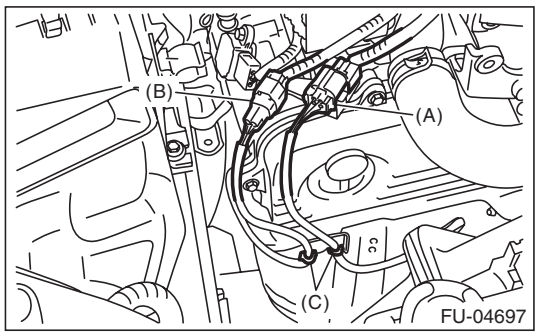

(A) Front oxygen (A/F) sensor connector
(B) Rear oxygen sensor connector
(C) Clip

4) Lift up the vehicle.
5) Remove the under cover. <Ref. to EI-35, REMOVAL, Front Under Cover.>
6) Apply spray-type lubricant to the threaded portion of rear oxygen sensor, and leave it for one minute or more.
7) Remove the rear oxygen sensor.

CAUTION:
When removing the rear oxygen sensor, wait until exhaust pipe cools, otherwise it will damage the exhaust pipe.

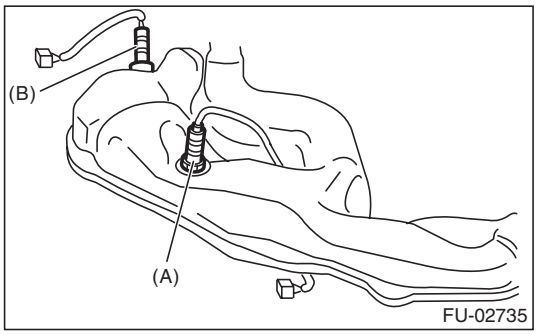

(A) Front oxygen (A/F) sensor
(B) Rear oxygen sensor

B: INSTALLATION

CAUTION:
If lubricant is spilt onto the exhaust pipe, wipe it off completely with cloth to avoid emission of smoke or causing a fire.

1) Before installing rear oxygen sensor, apply the anti-seize compound only to the threaded portion of rear oxygen sensor to make the next removal easier.

CAUTION:
Never apply anti-seize compound to the protector of rear oxygen sensor.

Anti-seize compound:
NEVER-SEEZ NSN, JET LUBE SS-30 or equivalent

2) Install the rear oxygen sensor.

Tightening torque:
21 N·m (2.1 kgf-m, 15.5 ft-lb)

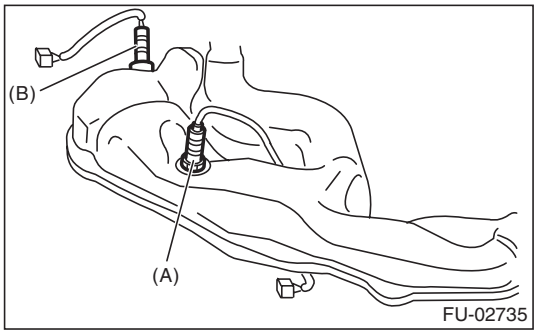

(A) Front oxygen (A/F) sensor
(B) Rear oxygen sensor

3) Install the under cover. <Ref. to EI-35, INSTALLATION, Front Under Cover.>
4) Lower the vehicle.

GETtheMANUALS.org

5) Connect the rear oxygen sensor connector, and hold the rear oxygen sensor harness with the clip.

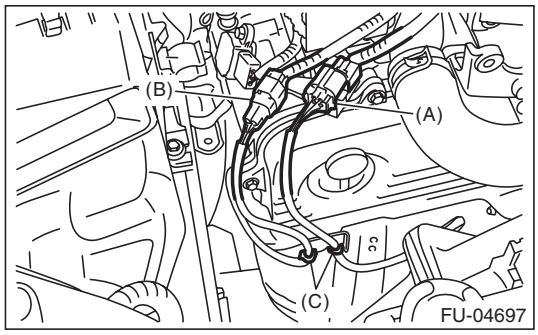

(A) Front oxygen (A/F) sensor connector
(B) Rear oxygen sensor connector
(C) Clip

6) Install the air intake duct. <Ref. to IN(H4SO)-9, INSTALLATION, Air Intake Duct.>
7) Connect the battery ground terminal.

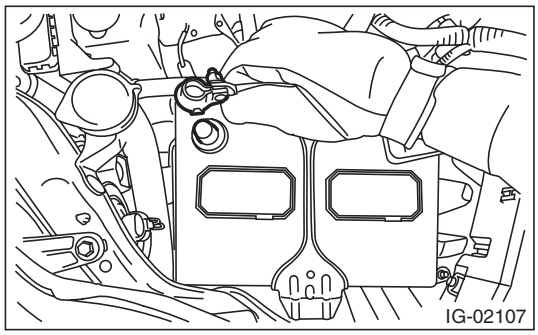

C: INSPECTION

1) Check that the rear oxygen sensor has no deformation, cracks or other damages.
2) Measure the resistance between rear oxygen sensor terminals.

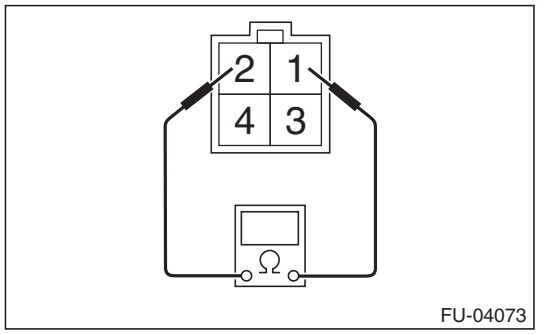

Terminal No.	Standard
1 and 2	$5.6^{+1.7}_{-0.6}$ Ω (when 20°C (68°F))

GETtheMANUALS.org

17. Engine Control Module (ECM)

A: REMOVAL

1) Disconnect the ground cable from battery.

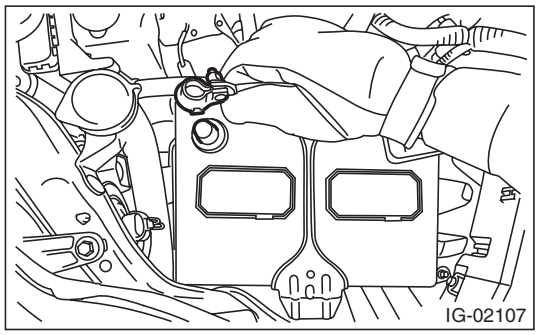

2) Remove the glove box lid assembly. <Ref. to EI-66, REMOVAL, Glove Box.>
3) Remove the connectors from ECM.

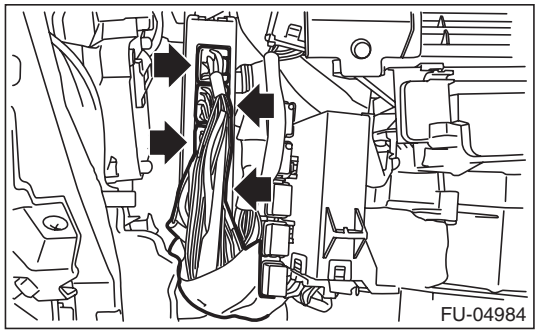

4) Remove the ECM from vehicle.

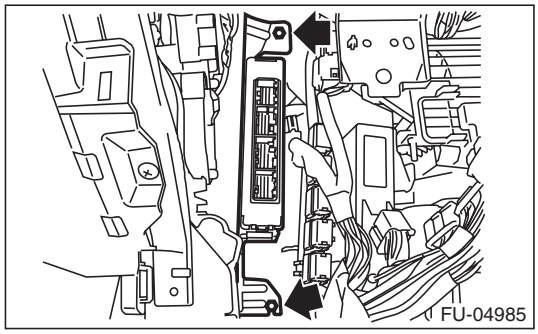

B: INSTALLATION

Install in the reverse order of removal.

CAUTION:
- **When the ECM of model with immobilizer has been replaced, be sure to perform the registration of immobilizer system. (Refer to "PC application help for Subaru Select Monitor".)**
- **If replacing ECM or the bracket, replace both parts with new parts at a time.**
- **After installing the bracket to ECM, do not separate the bracket.**
- **If the bracket has been installed to ECM in the wrong direction, replace both parts to new parts.**

NOTE:
When replacing the ECM, be careful not to use the wrong spec. ECM to avoid any damage on the fuel injection system.

Tightening torque:
7.5 N·m (0.8 kgf-m, 5.5 ft-lb)

C: INSPECTION

Check that the ECM has no deformation, cracks or other damages.

GETtheMANUALS.org

18.Main Relay

A: REMOVAL

1) Disconnect the ground cable from battery.

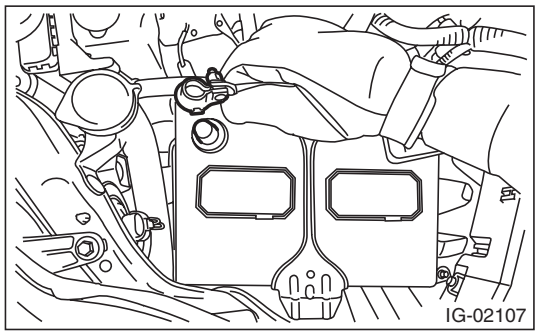

2) Remove the glove box lid assembly. <Ref. to EI-66, REMOVAL, Glove Box.>
3) Remove the main relay from the relay holder.

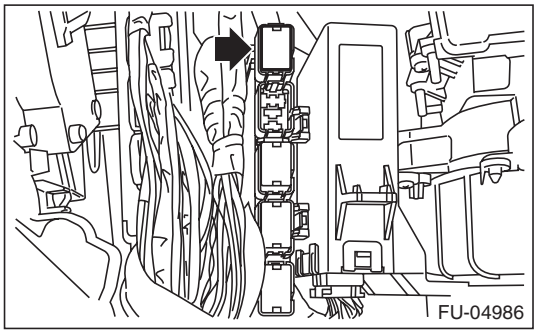

B: INSTALLATION

Install in the reverse order of removal.

C: INSPECTION

1) Check that the main relay has no deformation, cracks or other damages.
2) Measure the resistance between main relay terminals.

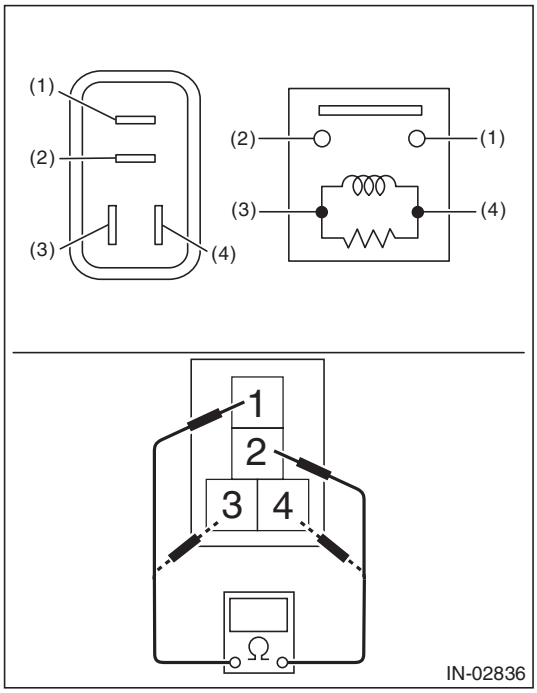

Terminal No.	Standard
1 and 2	1 MΩ or more
3 and 4	130.4 — 230.8 Ω (when 20°C (68°F))

GETtheMANUALS.org

3) Connect battery positive terminal to terminal No. 3 and battery ground terminal to terminal No. 4, and measure the resistance between the main relay terminals.

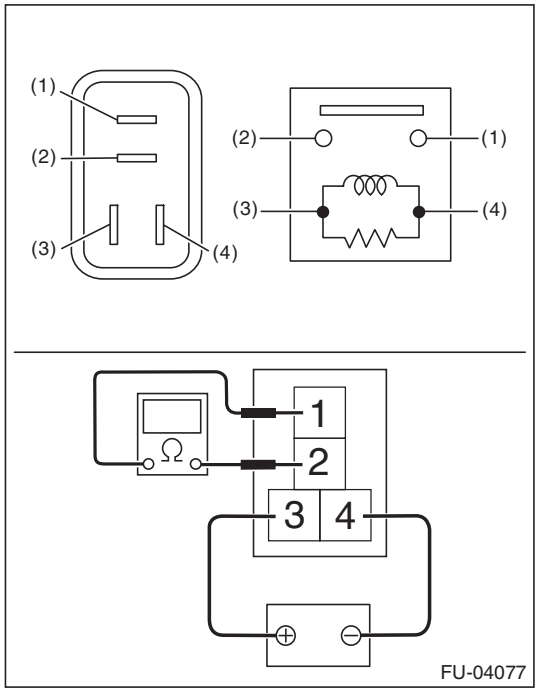

Terminal No.	Standard
1 and 2	Less than 1 Ω

GETtheMANUALS.org

19. Fuel Pump Relay

A: REMOVAL

1) Disconnect the ground cable from battery.

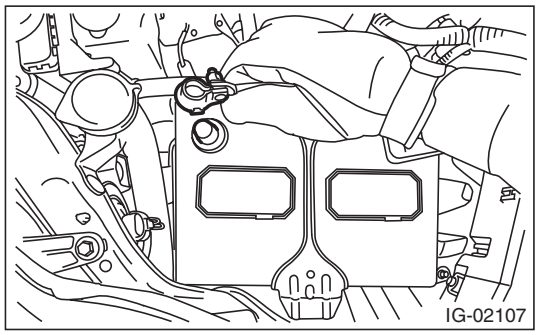

2) Remove the glove box lid assembly. <Ref. to EI-66, REMOVAL, Glove Box.>
3) Remove the fuel pump relay from the relay holder.

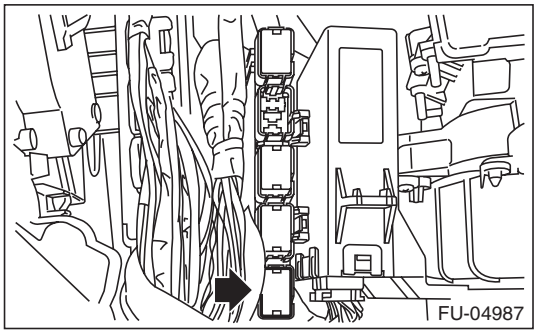

B: INSTALLATION

Install in the reverse order of removal.

C: INSPECTION

1) Check that the fuel pump relay has no deformation, cracks or other damages.
2) Measure the resistance between fuel pump relay terminals.

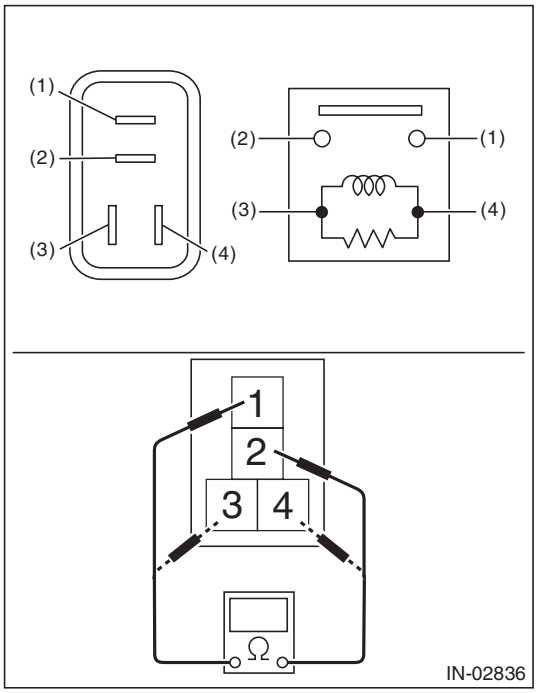

Terminal No.	Standard
1 and 2	1 MΩ or more
3 and 4	93.8 — 136.4 Ω (when 20°C (68°F))

GETtheMANUALS.org

3) Connect battery positive terminal to terminal No. 3 and battery ground terminal to terminal No. 4, and measure the resistance between the fuel pump relay terminals.

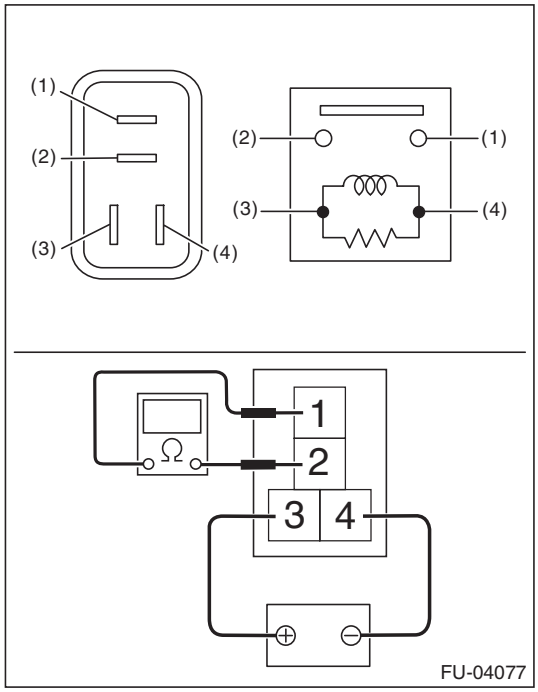

Terminal No.	Standard
1 and 2	Less than 1 Ω

GETtheMANUALS.org

20. Electronic Throttle Control Relay

A: REMOVAL

1) Disconnect the ground cable from battery.

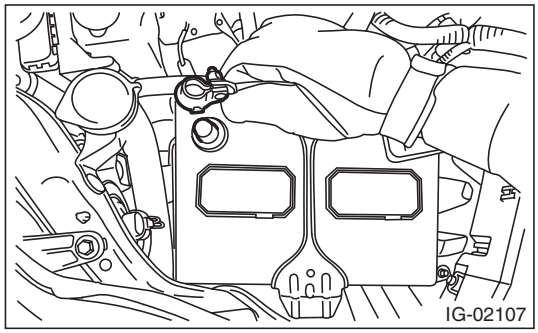

2) Remove the glove box lid assembly. <Ref. to EI-66, REMOVAL, Glove Box.>
3) Remove the electronic throttle control relay from the relay holder.

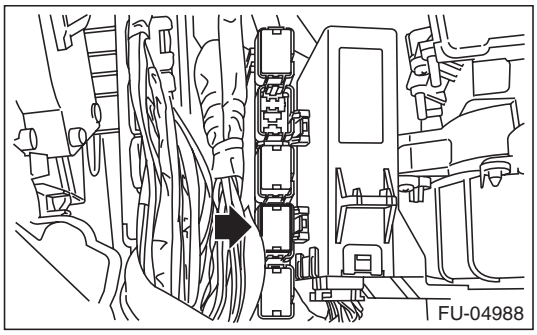

B: INSTALLATION

Install in the reverse order of removal.

C: INSPECTION

1) Check that the electronic throttle control relay has no deformation, cracks or other damages.
2) Measure the resistance between electronic throttle control relay terminals.

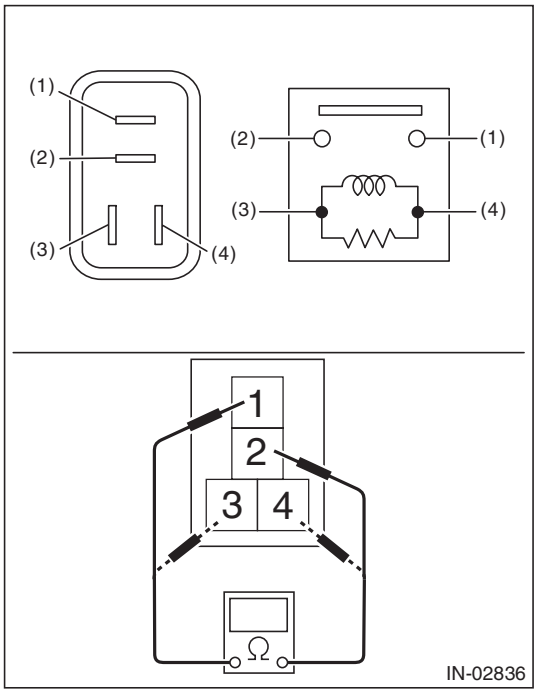

Terminal No.	Standard
1 and 2	1 MΩ or more
3 and 4	93.8 — 136.4 Ω (when 20°C (68°F))

GETtheMANUALS.org

3) Connect battery positive terminal to terminal No. 3 and battery ground terminal to terminal No. 4, and measure the resistance between the electronic throttle control relay terminals.

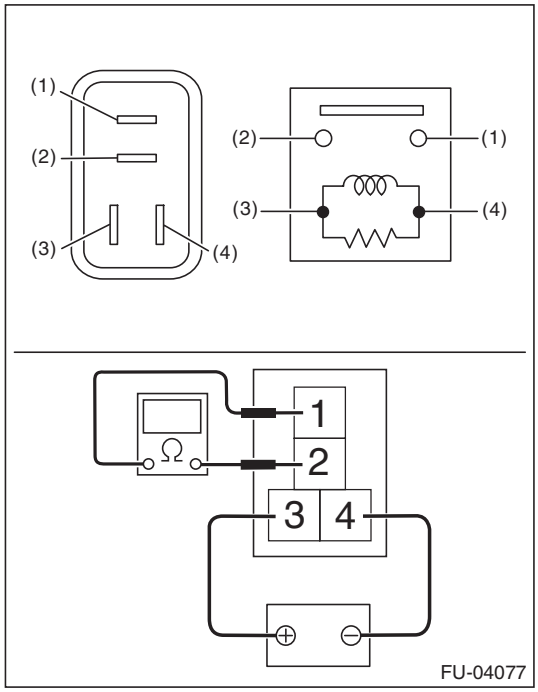

Terminal No.	Standard
1 and 2	Less than 1 Ω

GETtheMANUALS.org

21. Fuel

A: PROCEDURE

1. RELEASING OF FUEL PRESSURE

WARNING:
Place "NO OPEN FLAMES" signs near the working area.

CAUTION:
Be careful not to spill fuel.

1) Remove the fuse of fuel pump from main fuse box.

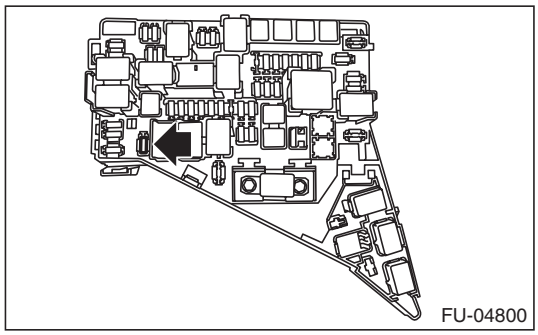

2) Start the engine and run it until it stalls.
3) After the engine stalls, crank it for five more seconds.
4) Turn the ignition switch to OFF.
5) Install the fuse of fuel pump to the main fuse box.

2. DRAINING FUEL (WITH SUBARU SELECT MONITOR)

WARNING:
Place "NO OPEN FLAMES" signs near the working area.

CAUTION:
Be careful not to spill fuel.

NOTE:
- If the fuel pump cannot be driven, refer to the procedures for draining from the fuel filler hose. <Ref. to FU(H4SO)-53, DRAINING FUEL (THROUGH THE FUEL FILLER HOSE), PROCEDURE, Fuel.>
- Be careful not to let the battery run-out.

1) Release the fuel pressure. <Ref. to FU(H4SO)-53, RELEASING OF FUEL PRESSURE, PROCEDURE, Fuel.>
2) Attach ST to the fuel delivery pipe and push ST in the direction of arrow mark to disconnect the fuel delivery hose.
ST 42099AE000 QUICK CONNECTOR RELEASE

CAUTION:
- **Be careful not to spill fuel.**
- **Catch the fuel from hoses using a container or cloth.**

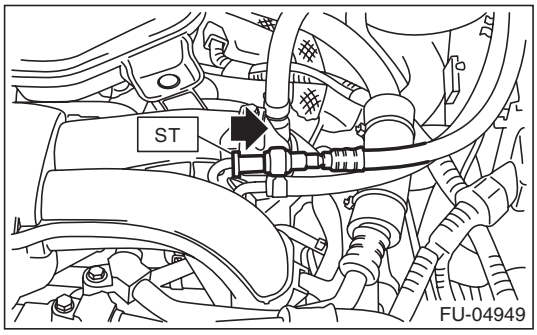

3) Connect ST to the fuel delivery hose.
ST 18471AA000 FUEL PIPE ADAPTER
4) Connect the gasoline proof hose to ST and put the end of the hose in the container.
5) Drive the fuel pump and drain the fuel using Subaru Select Monitor. (Refer to "PC application help for Subaru Select Monitor".)

CAUTION:
Be careful not to spill fuel.

6) Install the related parts in the reverse order after draining the fuel.

3. DRAINING FUEL (THROUGH THE FUEL FILLER HOSE)

WARNING:
Place "NO OPEN FLAMES" signs near the working area.

CAUTION:
- **Be careful not to spill fuel.**
- **Fuel may remain in the fuel filler pipe. Draining the fuel from the fuel filler pipe through the fill opening using the gasoline proof pump and the gasoline proof hose (ø10 or less) before the operation.**

1) Lift up the vehicle.
2) Remove the rear exhaust pipe and muffler. <Ref. to EX(H4SO)-9, REMOVAL, Rear Exhaust Pipe.> <Ref. to EX(H4SO)-11, REMOVAL, Muffler.>
3) Open the fuel filler lid and remove the fuel filler cap.
4) Drain the fuel from the fuel filler pipe through the filler opening using the gasoline proof pump and the gasoline proof hose (ø10 or less).

GETtheMANUALS.org

5) Disconnect the fuel filler hoses from the fuel filler pipe.

CAUTION:
- **Be careful not to spill fuel.**
- **Catch the fuel from hoses using a container or cloth.**

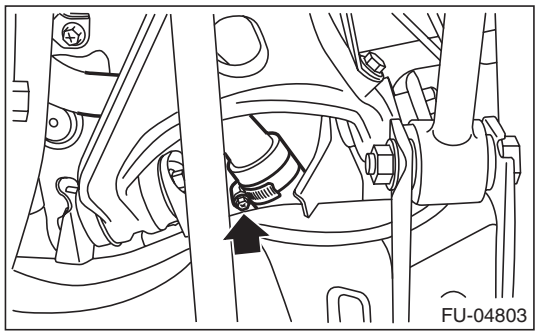

6) Set the container under the vehicle and insert the gasoline proof hose (ø10 or less) into the fuel filler hose to drain the fuel.

CAUTION:
Be careful not to spill fuel.

7) Install the related parts in the reverse order after draining the fuel.

NOTE:
Correctly insert the fuel filler hose to the spool, and then install the clamp as shown.

Tightening torque:
2.5 N·m (0.3 kgf-m, 1.8 ft-lb)

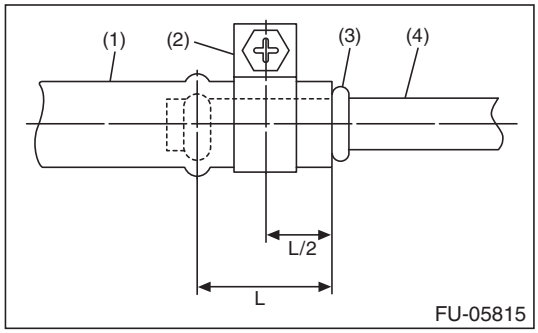

(1) Fuel filler hose
(2) Clamp
(3) Spool
(4) Fuel filler pipe

GETtheMANUALS.org

22. Fuel Tank

A: REMOVAL

WARNING:
Place "NO OPEN FLAMES" signs near the working area.

CAUTION:
Be careful not to spill fuel.

1) Release the fuel pressure. <Ref. to FU(H4SO)-53, RELEASING OF FUEL PRESSURE, PROCEDURE, Fuel.>
2) Drain fuel. <Ref. to FU(H4SO)-53, DRAINING FUEL (WITH SUBARU SELECT MONITOR), PROCEDURE, Fuel.>
3) Disconnect the ground cable from battery.

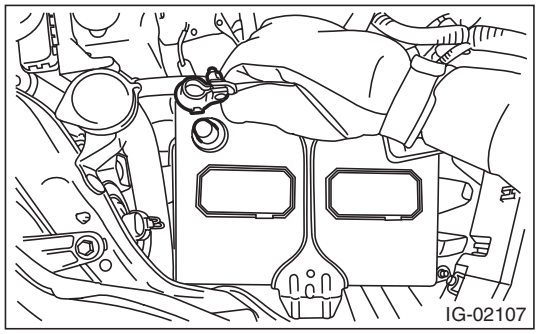

4) Remove the rear seat cushion. <Ref. to SE-34, REMOVAL, Rear Seat.>
5) Remove the clips (A) and seat cushion hooks (B), and turn over the floor mat (C).

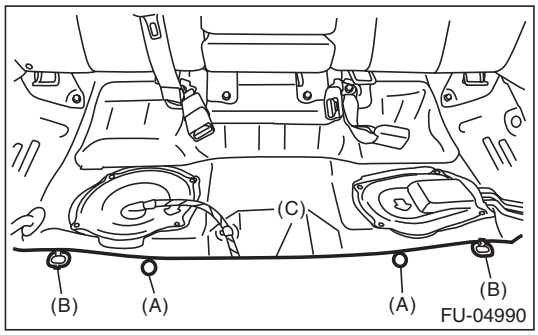

6) Remove the service hole cover of fuel pump.
   (1) Disconnect the fuel cord connector (A), and remove the clip (B).
   (2) Remove the screw (C).
   (3) Push the grommet (D) down and remove the service hole cover.

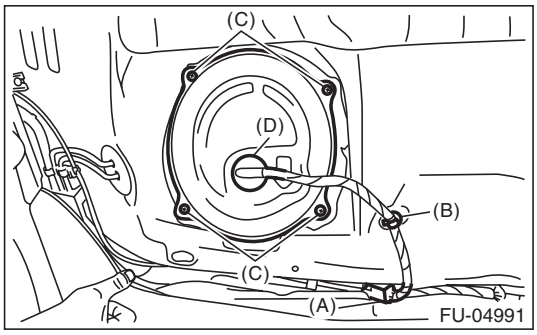

7) Remove the service hole cover of fuel sub level sensor.

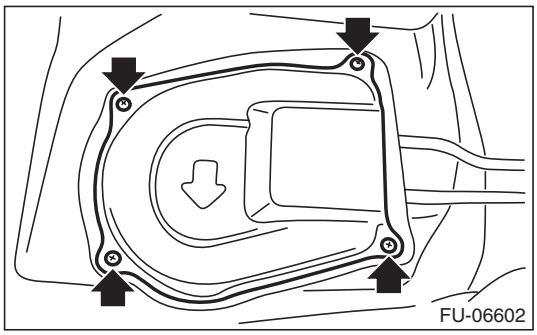

8) Disconnect the quick connector on the fuel delivery tube (A). <Ref. to FU(H4SO)-73, REMOVAL, Fuel Delivery and Evaporation Lines.>

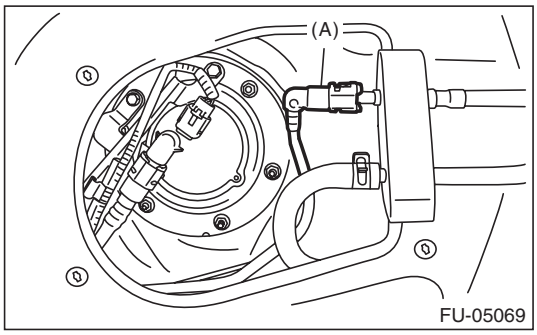

9) Remove the rear wheels.
10) Lift up the vehicle.
11) Remove the rear ABS wheel speed sensor from the rear housing.

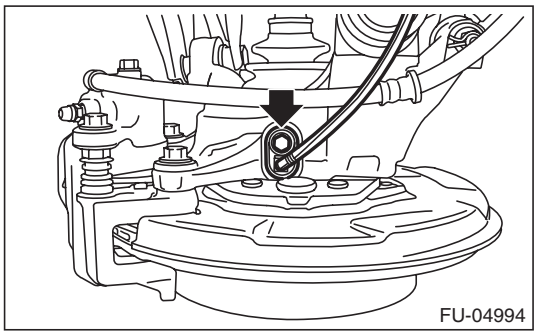

GETtheMANUALS.org

12) Remove the rear ABS wheel speed sensor harness bracket from the upper arm.

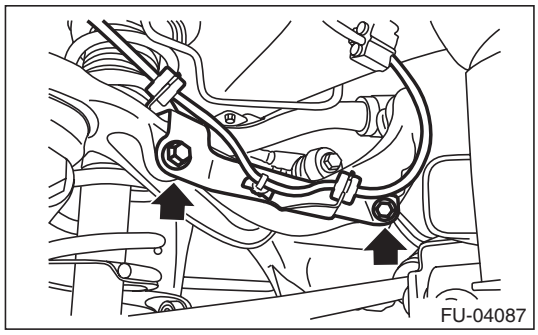

13) Remove the rear brake hose bracket from rear housing.

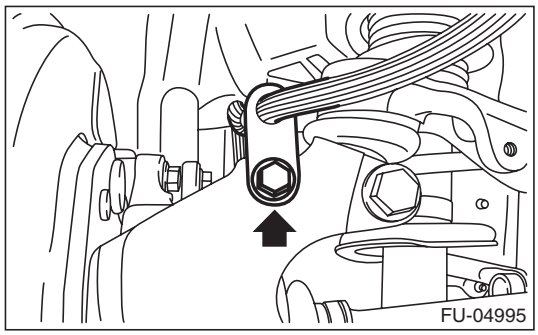

14) Remove the rear disc brake assembly and tie it to the body side of the vehicle.

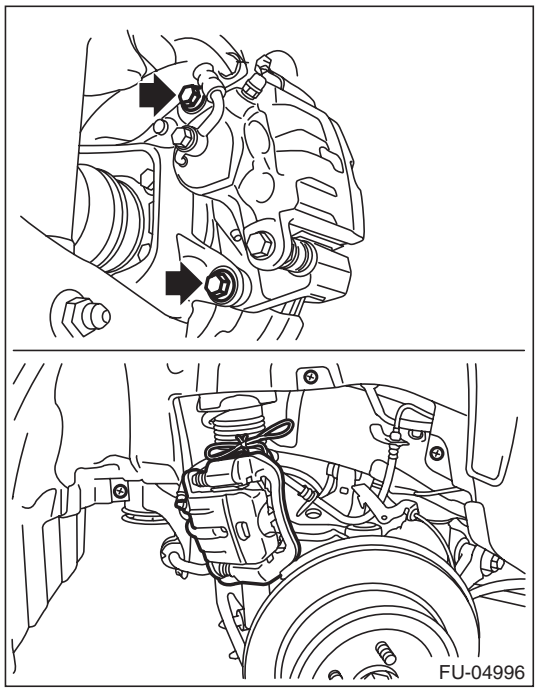

15) Remove the parking brake cable from parking brake assembly. <Ref. to PB-10, REMOVAL, Parking Brake Assembly (Rear Disc Brake).>

16) Remove the rear exhaust pipe and muffler. <Ref. to EX(H4SO)-9, REMOVAL, Rear Exhaust Pipe.> <Ref. to EX(H4SO)-11, REMOVAL, Muffler.>

17) Remove the heat shield cover (A).

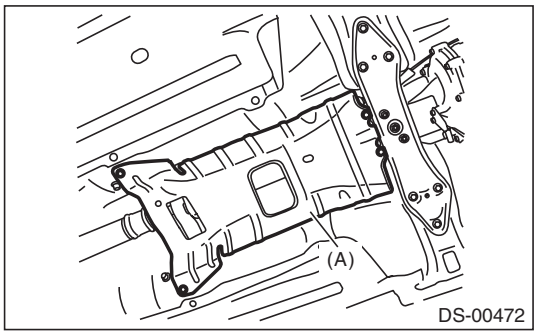

18) Remove the propeller shaft. <Ref. to DS-10, REMOVAL, Propeller Shaft.>

19) Remove the clip (A) securing the fuel tank protector and heat shield cover.

20) Remove the bolts (B) and nuts (C) securing the fuel tank protector, and remove the fuel tank protector.

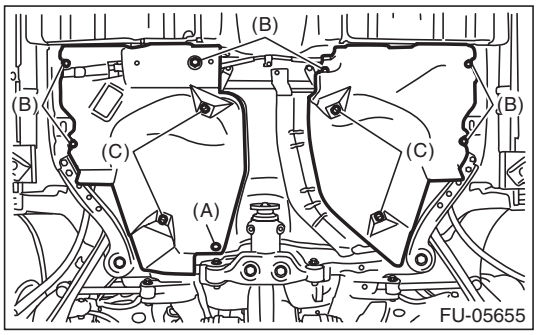

21) Remove the bolts and nuts securing the heat shield cover and remove the heat shield cover.

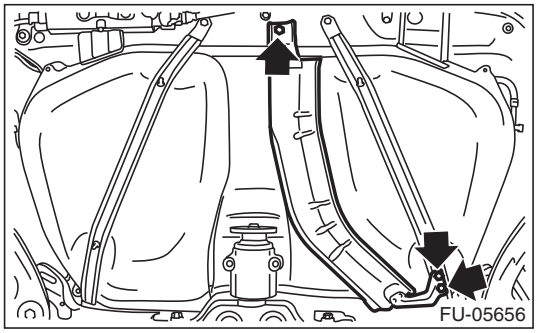

GETtheMANUALS.org

22) Remove the rear suspension assembly.

WARNING:
A helper is required to perform this work.

(1) Support the rear differential with the transmission jack.
(2) Remove the bolt and nut which secures rear shock absorber to rear suspension arm.

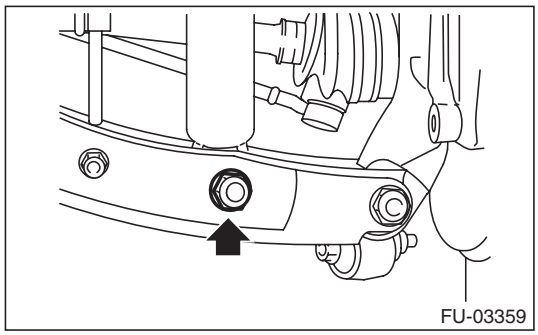

(3) Remove the bolts which secure the rear suspension assembly to the body.

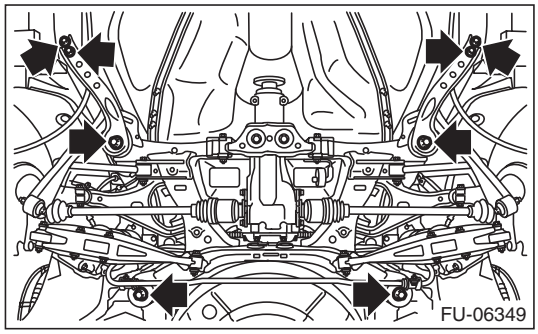

(4) Remove the rear suspension assembly.

23) Disconnect the air vent hose from the fuel tank.

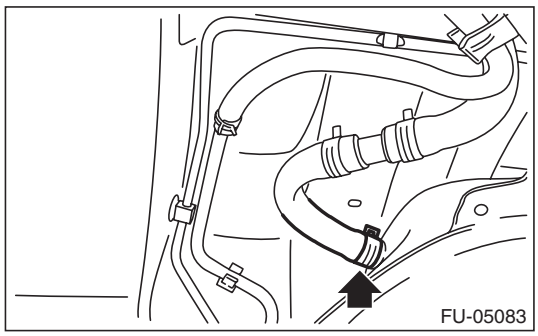

24) Disconnect the quick connector of the circulate tube from evaporation pipe.

NOTE:
Disconnect the quick connector as shown in the figure.

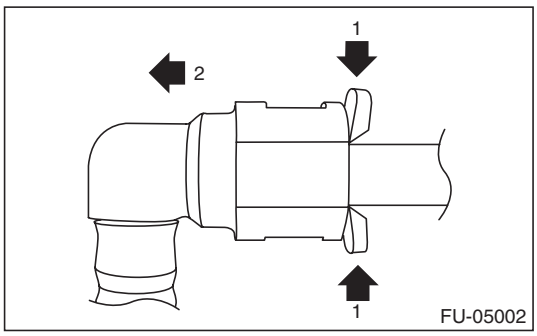

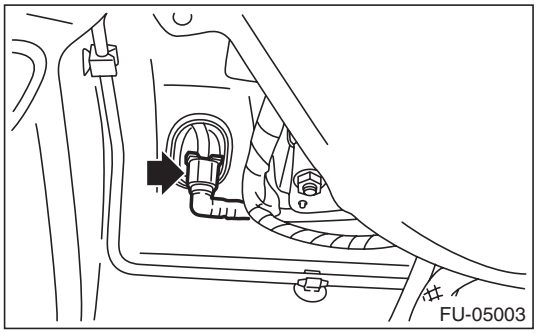

25) Disconnect the fuel filler hose from the fuel filler pipe assembly.

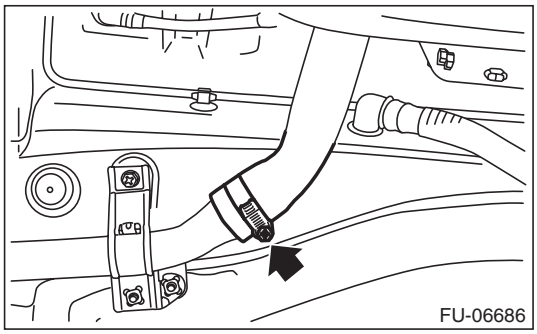

26) Support the fuel tank with a transmission jack, remove the fuel tank band, and remove the fuel tank from the vehicle.

WARNING:
- **A helper is required to perform this work.**
- **Fuel may remain in the fuel tank. This will cause the left and right sides to be unbalanced. Be careful not to drop the fuel tank.**

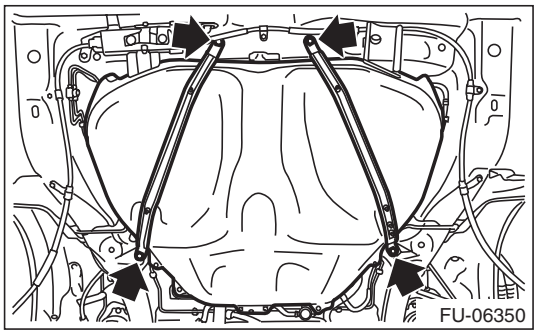

GETtheMANUALS.org

B: INSTALLATION

1) Support the fuel tank with a transmission jack, set the fuel tank and the fuel tank band in place, and temporarily tighten the bolts of the fuel tank band.

WARNING:
A helper is required to perform this work.

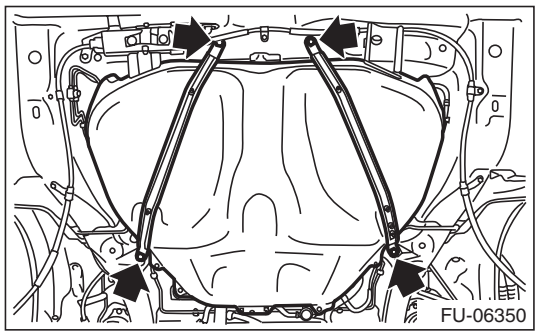

2) Correctly insert the fuel filler hose to the spool, and then install the clamp as shown.

Tightening torque:
2.5 N·m (0.3 kgf-m, 1.8 ft-lb)

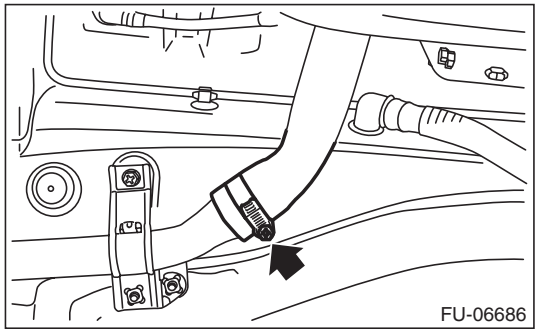

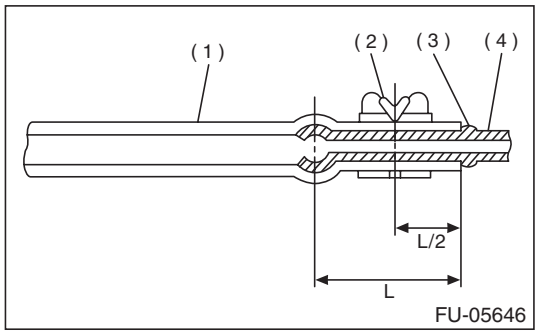

(1) Hose
(2) Clamp
(3) Spool
(4) Pipe

3) Connect the quick connector of the circulate tube to the evaporation pipe as shown in the figure.

CAUTION:
- **Check that there is no damage or dust on the quick connector. If necessary, clean the seal surface of the pipe.**
- **Make sure that the quick connector is securely connected.**

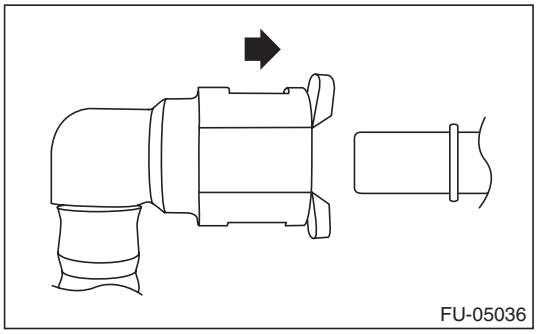

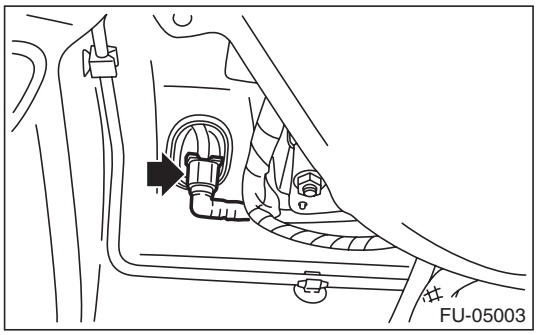

4) Connect the air vent hose to fuel tank.

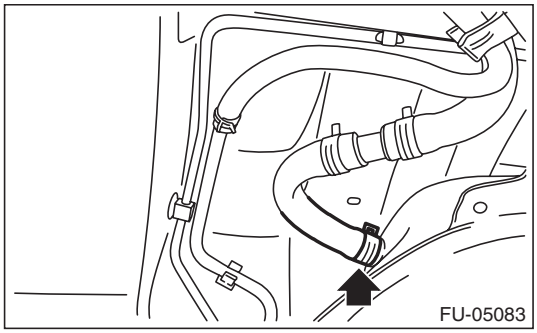

GETtheMANUALS.org

5) Move the fuel tank so that the distance between the center of the positioning hole for the body (A) and the front end of the fuel tank flange (B) becomes L, and tighten the bolts of the fuel tank bands in the sequence shown in the figure.

CAUTION:
To prevent the fuel tank from damage, after tightening the bolts of the fuel tank bands, make sure that the distance between the center of the positioning hole for the body (A) and the front end of the fuel tank flange (B) is L.

Distance L: Center of the positioning hole for the body (A) — Front end of the fuel tank flange (B)
14.5 mm (0.571 in) or less

Tightening torque:
33 N·m (3.4 kgf-m, 24.3 ft-lb)

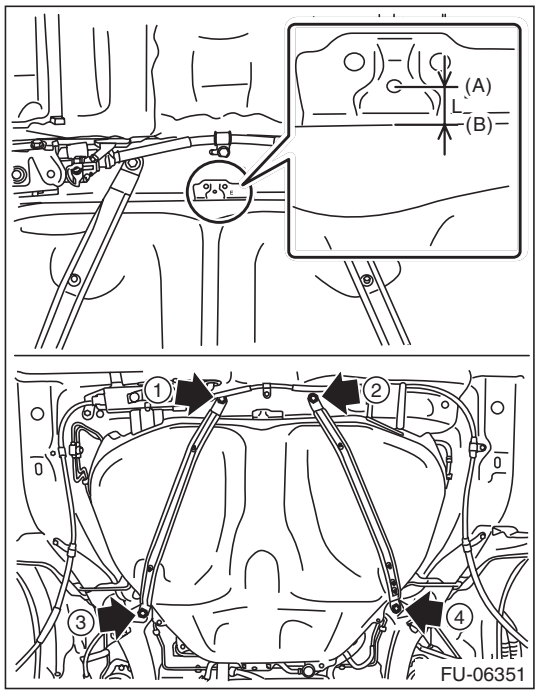

6) Install the rear suspension assembly.

WARNING:
A helper is required to perform this work.

(1) Support the rear differential with the transmission jack.

(2) Support the rear suspension assembly and install the rear suspension assembly to the body.

Tightening torque:
T1: 70 N·m (7.1 kgf-m, 51.6 ft-lb)
T2: 200 N·m (20.4 kgf-m, 147.5 ft-lb)

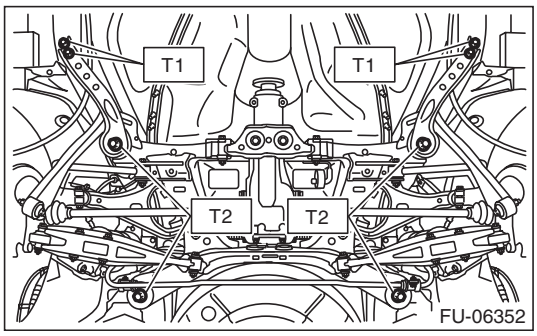

(3) Install the rear shock absorber to the rear suspension arm.

NOTE:
Use a new self-locking nut.

Tightening torque:
120 N·m (12.2 kgf-m, 88.5 ft-lb)

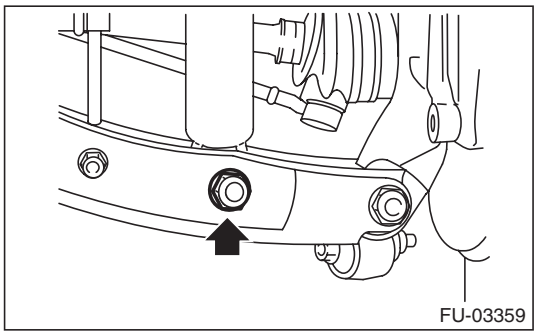

7) Install the heat shield cover.

Tightening torque:
18 N·m (1.8 kgf-m, 13.3 ft-lb)

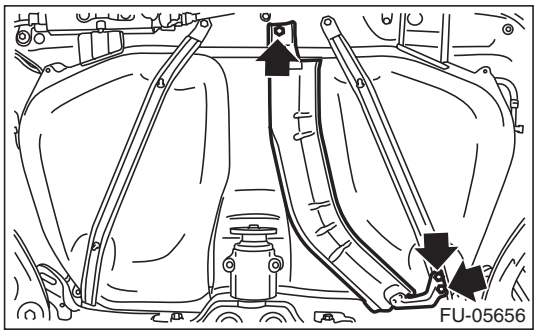

GETtheMANUALS.org

8) Install the bolts (B) and nuts (C) securing the fuel tank protector and install the clip (A) securing the fuel tank protector and heat shield cover.

NOTE:
Use a new self-locking nut.

Tightening torque:
Nut (C): 9 N·m (0.9 kgf-m, 6.6 ft-lb)
Bolt (B): 18 N·m (1.8 kgf-m, 13.3 ft-lb)

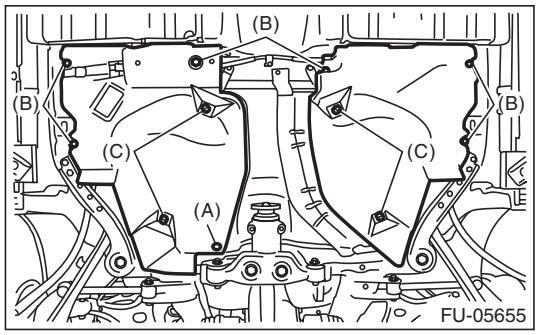

9) Install the propeller shaft. <Ref. to DS-11, INSTALLATION, Propeller Shaft.>
10) Install the heat shield cover (A).

Tightening torque:
18 N·m (1.8 kgf-m, 13.3 ft-lb)

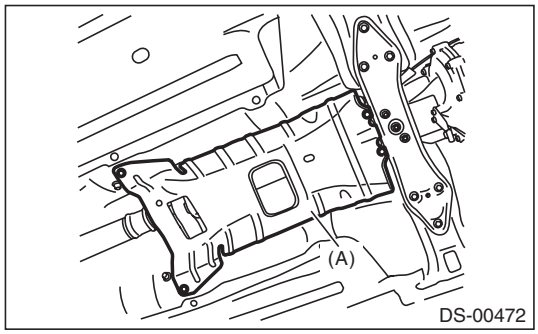

11) Install the rear exhaust pipe and muffler. <Ref. to EX(H4SO)-9, INSTALLATION, Rear Exhaust Pipe.> <Ref. to EX(H4SO)-11, INSTALLATION, Muffler.>
12) Lower the vehicle.
13) Connect the parking brake cable to the parking brake assembly. <Ref. to PB-14, INSTALLATION, Parking Brake Assembly (Rear Disc Brake).>
14) Install the rear disc brake assembly.

Tightening torque:
66 N·m (6.7 kgf-m, 48.7 ft-lb)

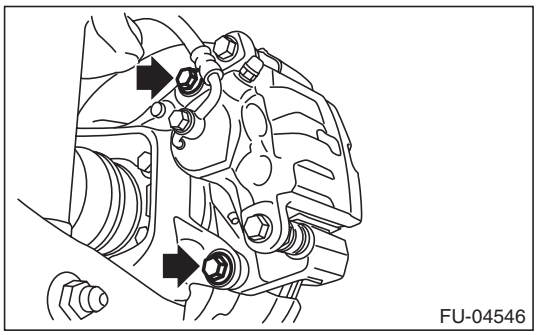

15) Install the rear brake hose bracket to the rear housing.

Tightening torque:
33 N·m (3.4 kgf-m, 24.3 ft-lb)

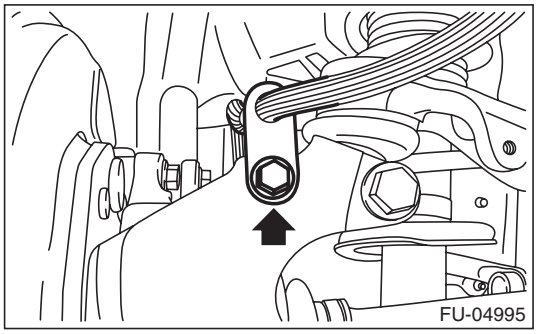

16) Install the rear ABS wheel speed sensor harness bracket to the upper arm.

NOTE:
Prevent the harness identification (line) from being twisted when installing. <Ref. to VDC-2, SPECIFICATION, General Description.>

Tightening torque:
7.5 N·m (0.8 kgf-m, 5.5 ft-lb)

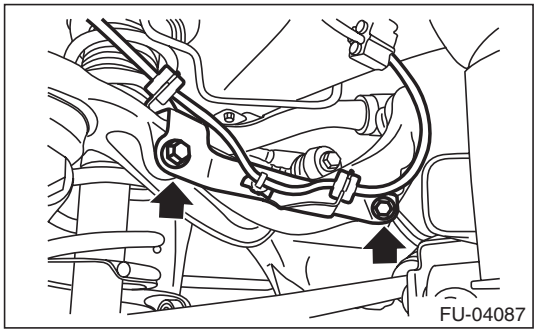

GETtheMANUALS.org

17) Attach the rear ABS wheel speed sensor to the rear housing.

NOTE:
Prevent the harness identification (line) from being twisted when installing. <Ref. to VDC-2, SPECIFICATION, General Description.>

Tightening torque:
7.5 N·m (0.8 kgf-m, 5.5 ft-lb)

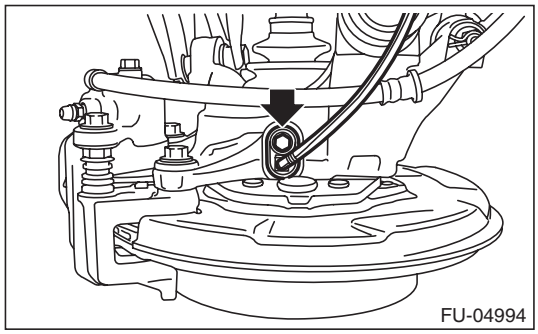

18) Install the rear wheels.

Tightening torque:
120 N·m (12.2 kgf-m, 88.5 ft-lb)

19) Connect the quick connector of the fuel delivery tube (A). <Ref. to FU(H4SO)-76, INSTALLATION, Fuel Delivery and Evaporation Lines.>

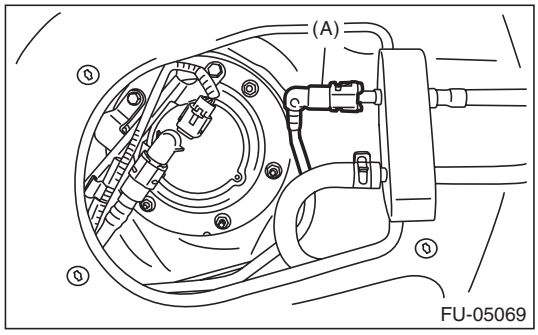

20) Install the service hole cover of fuel sub level sensor.

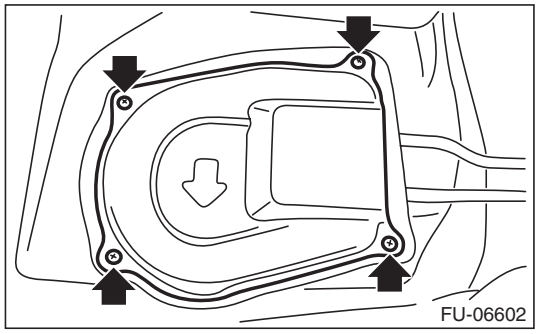

21) Attach the service hole cover of the fuel pump, and attach the connector and clip.

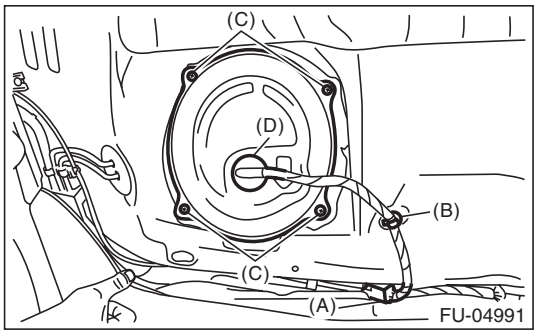

(A) Connector
(B) Clip
(C) Screw
(D) Grommet

22) Set the floor mat (C), and install clips (A) and seat cushion hooks (B).

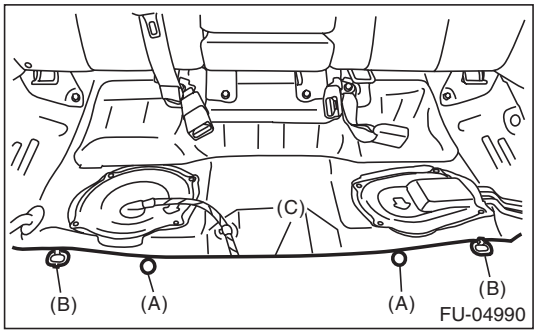

23) Install the rear seat cushion. <Ref. to SE-49, INSTALLATION, Rear Seat.>
24) Connect the battery ground terminal.

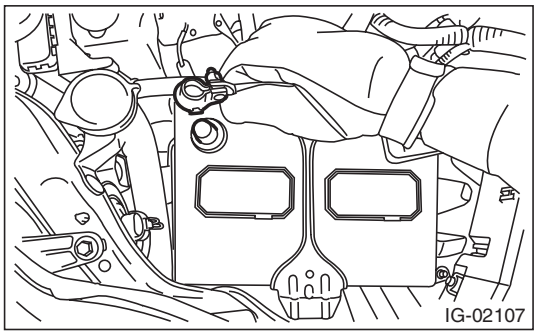

25) Inspect the wheel alignment and adjust if necessary.

C: INSPECTION

1) Check that the fuel tank and fuel pipe have no deformation, cracks and other damages.
2) Check that the fuel hose has no cracks, damage or loose part.

GETtheMANUALS.org

23. Fuel Filler Pipe

A: REMOVAL

WARNING:
Place "NO OPEN FLAMES" signs near the working area.

CAUTION:
Be careful not to spill fuel.

1) Release the fuel pressure. <Ref. to FU(H4SO)-53, RELEASING OF FUEL PRESSURE, PROCEDURE, Fuel.>
2) Drain fuel. <Ref. to FU(H4SO)-53, DRAINING FUEL (WITH SUBARU SELECT MONITOR), PROCEDURE, Fuel.>
3) Disconnect the ground cable from battery.

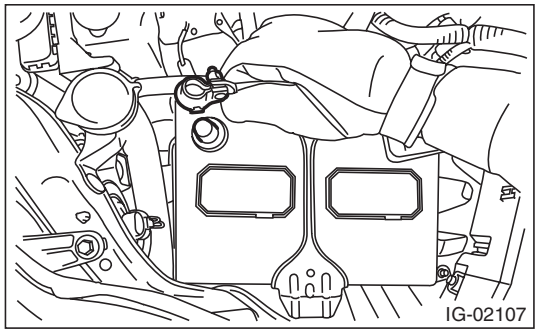

4) Open the fuel filler lid, and remove the filler cap.
5) Turn the fuel filler pipe protector in the direction of the arrow to unlock and remove it.

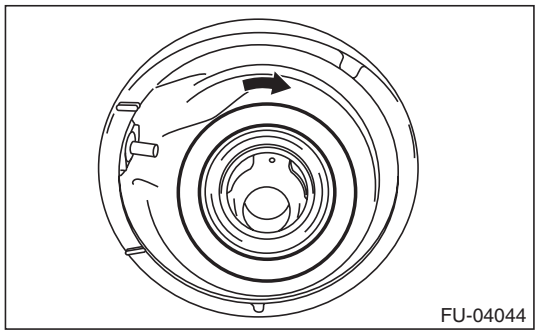

6) Remove the rear wheel RH.
7) Lift up the vehicle.
8) Remove the rear mud guard RH. <Ref. to EI-38, REMOVAL, Mud Guard.>
9) Remove the rear sub frame. <Ref. to RS-16, REMOVAL, Rear Sub Frame.>
10) Disconnect the fuel filler hose from the fuel filler pipe assembly.

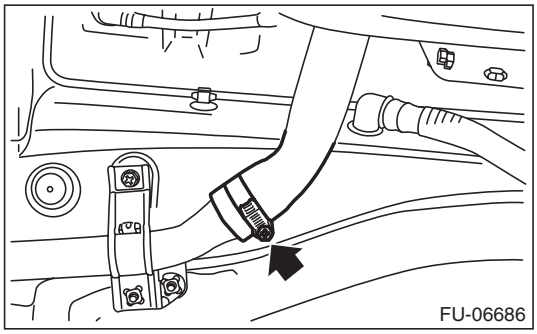

11) Disconnect the evaporation hose (A) from fuel filler pipe assembly and remove the bolts and nuts securing the fuel filler pipe assembly to the vehicle body.

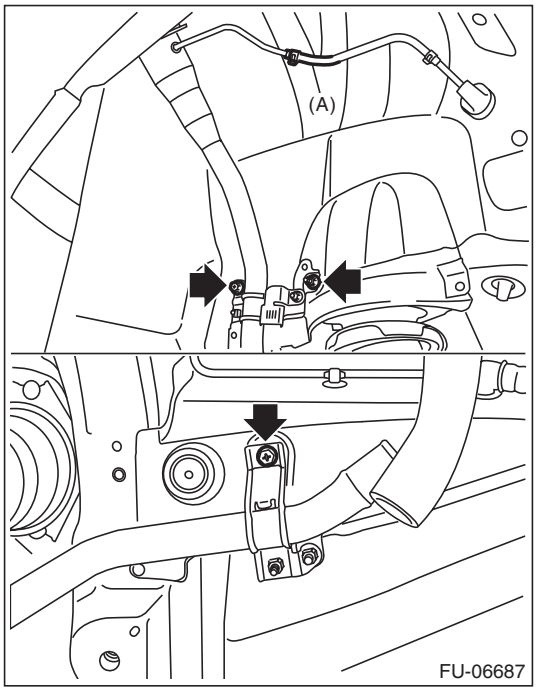

12) Remove the fuel filler pipe assembly from the underside of the vehicle.

GETtheMANUALS.org

B: INSTALLATION

1) Open the fuel filler lid.
2) Insert the fuel filler pipe assembly into the rubber saucer from inside of the rear fender.
3) Install the fuel filler pipe assembly to the vehicle body and connect the evaporation hose (A) to the fuel filler pipe assembly.

Tightening torque:
7.5 N·m (0.8 kgf-m, 5.5 ft-lb)

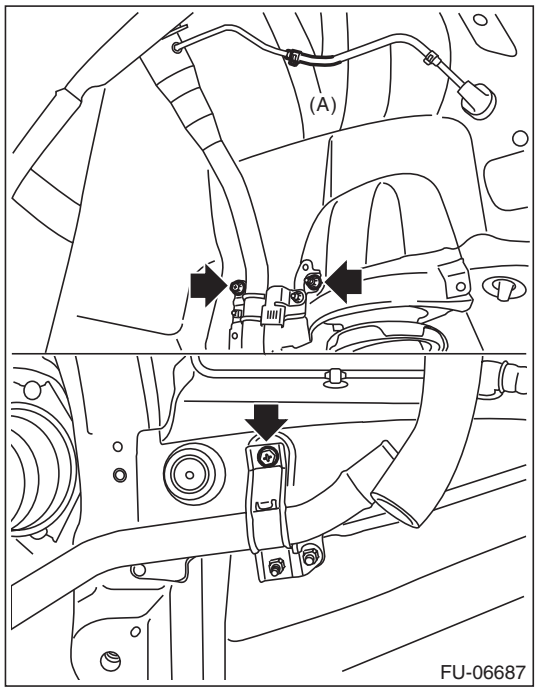

4) Align the cutout on the fuel filler pipe protector and the protrusion of the neck holder and insert them all the way, and then turn the fuel filler pipe protector in the direction of the arrow until it is locked.

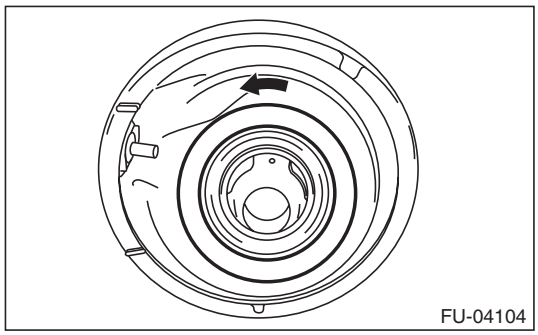

5) Correctly insert the fuel filler hose to the spool, and then install the clamp as shown.

Tightening torque:
2.5 N·m (0.3 kgf-m, 1.8 ft-lb)

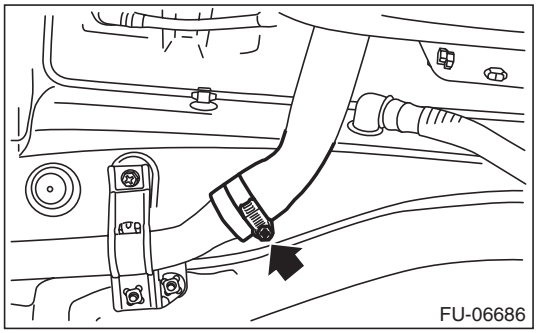

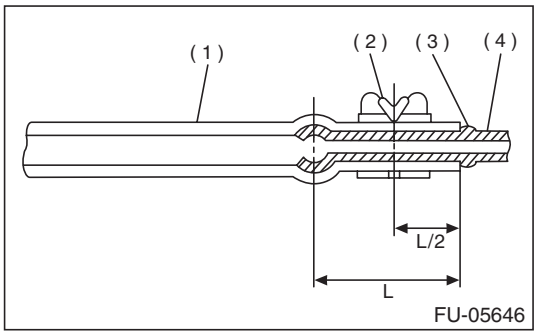

(1) Hose
(2) Clamp
(3) Spool
(4) Pipe

6) Install the rear sub frame. <Ref. to RS-18, INSTALLATION, Rear Sub Frame.>
7) Install the rear mud guard RH. <Ref. to EI-38, INSTALLATION, Mud Guard.>
8) Lower the vehicle.
9) Install the rear wheel RH.

Tightening torque:
120 N·m (12.2 kgf-m, 88.5 ft-lb)

10) Connect the battery ground terminal.

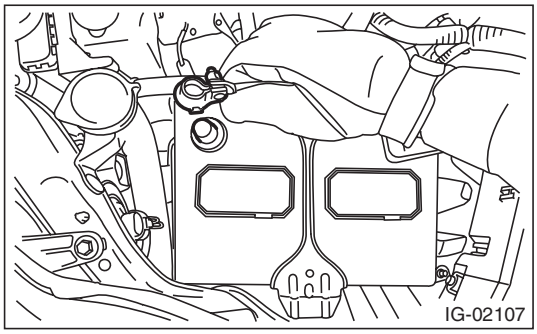

11) Inspect the wheel alignment and adjust if necessary.

GETtheMANUALS.org

C: DISASSEMBLY

Remove the fuel filler pipe bracket from the fuel filler pipe.

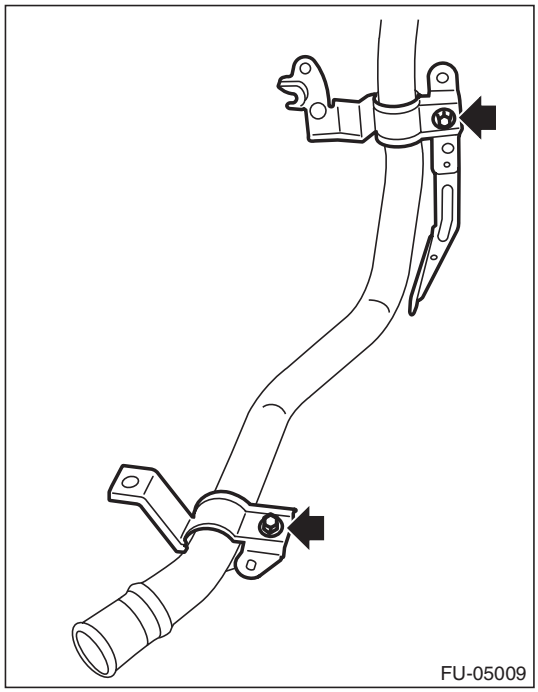

D: ASSEMBLY

Install the fuel filler pipe bracket to the fuel filler pipe.

Tightening torque:
7.35 N·m (0.7 kgf-m, 5.4 ft-lb)

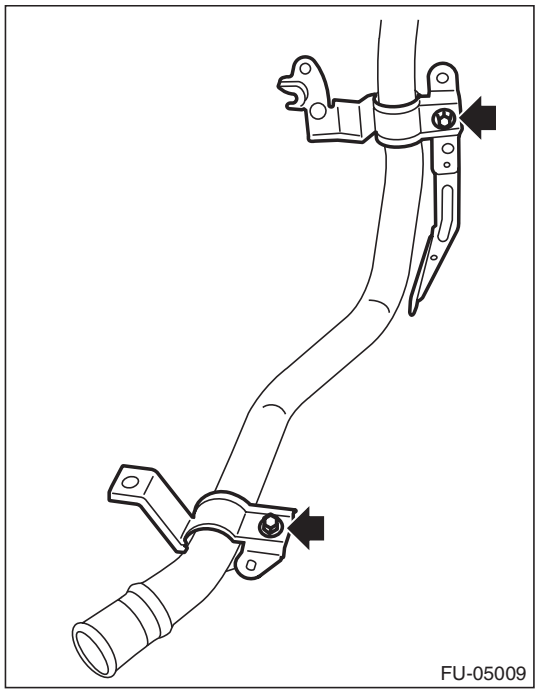

E: INSPECTION

1) Check that the fuel filler pipe does not have deformation, cracks or other damages.
2) Check that the fuel hose has no cracks, damage or loose part.

GETtheMANUALS.org

24. Fuel Pump

A: REMOVAL

WARNING:
Place "NO OPEN FLAMES" signs near the working area.

CAUTION:
- **Be careful not to spill fuel.**
- **If the fuel gauge indicates that two thirds or more of the fuel is remaining, be sure to drain fuel before starting work to avoid the fuel to spill.**

NOTE:
Fuel pump assembly consists of fuel pump, fuel filter, fuel chamber and fuel level sensor.

1) Release the fuel pressure. <Ref. to FU(H4SO)-53, RELEASING OF FUEL PRESSURE, PROCEDURE, Fuel.>
2) Drain fuel. <Ref. to FU(H4SO)-53, DRAINING FUEL (WITH SUBARU SELECT MONITOR), PROCEDURE, Fuel.>
3) Disconnect the ground cable from battery.

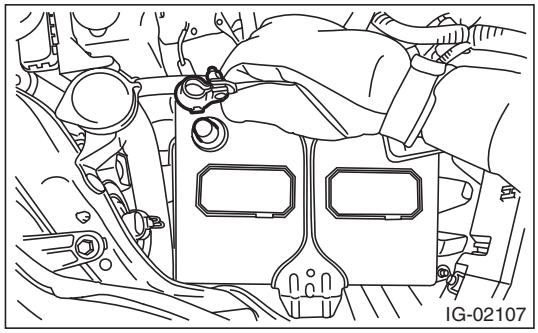

4) Remove the rear seat cushion. <Ref. to SE-34, REMOVAL, Rear Seat.>
5) Remove the clips (A) and seat cushion hooks (B), and turn over the floor mat (C).

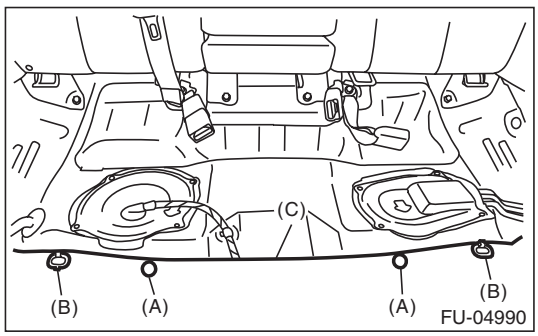

6) Remove the service hole cover.
   (1) Disconnect the fuel cord connector (A), and remove the clip (B).
   (2) Remove the screw (C).
   (3) Push the grommet (D) down and remove the service hole cover.

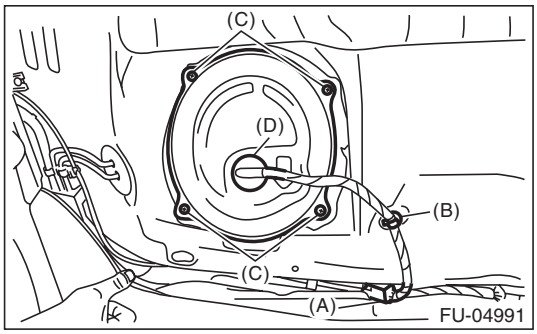

7) Disconnect the connector (A) from fuel pump, and remove the clip (B) securing the harness.
8) Disconnect the quick connector of fuel delivery tube (C) and fuel sub delivery tube (D). <Ref. to FU(H4SO)-73, REMOVAL, Fuel Delivery and Evaporation Lines.>

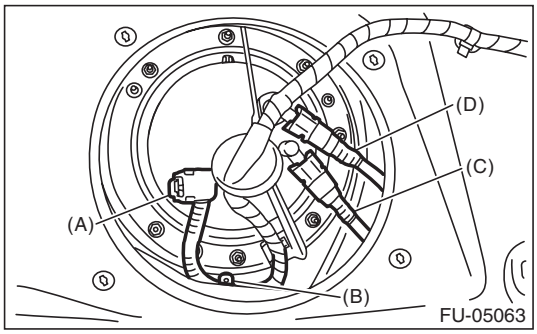

9) Remove the nuts securing the fuel pump upper plate to the fuel tank and remove the fuel pump upper plate.

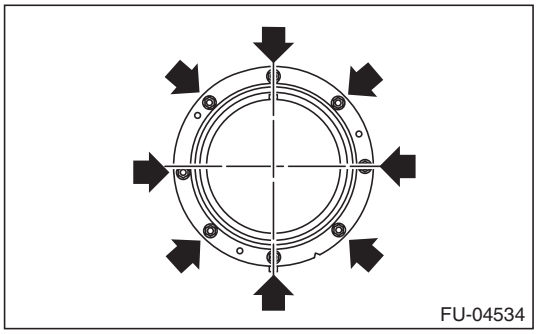

10) Remove the fuel pump assembly from the fuel tank.

GETtheMANUALS.org

B: INSTALLATION

Install in the reverse order of removal while being careful of the following.
• Make sure the sealing portion is free from fuel or foreign matter before installation.
• Align protrusion (A) of the gasket to the position shown in the figure.
• Insert the protrusion (B) of gasket to the fuel pump upper plate. (3 places)
• Align the protrusion (C) of fuel pump assembly with the cutout on the fuel pump upper plate.
• Tighten the nuts to the specified torque in the order as shown in the figure.

NOTE:
Use a new gasket.

Tightening torque:
4.4 N·m (0.4 kgf-m, 3.2 ft-lb)

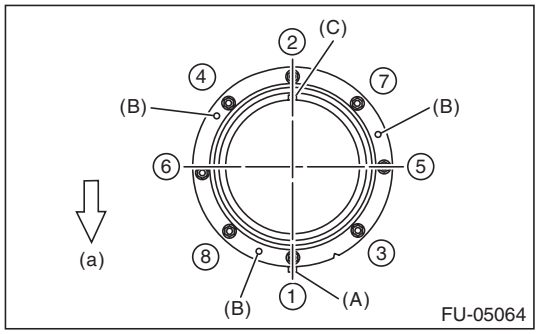

(a) Front side of vehicle

C: INSPECTION

1) Check that the fuel pump has no deformation, cracks or other damages.
2) Connect the battery positive terminal to terminal No. 5 and the battery ground terminal to terminal No. 6, and inspect the fuel pump operation.

WARNING:
• Wipe off fuel completely.
• Keep the battery as far apart from fuel pump as possible.
• Do not run the fuel pump for a long time under non-load condition.

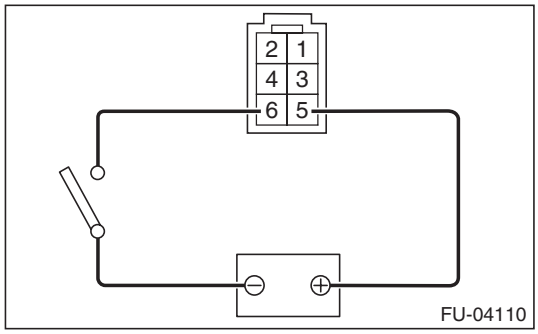

GETtheMANUALS.org

25. Fuel Level Sensor

A: REMOVAL

WARNING:
Place "NO OPEN FLAMES" signs near the working area.

CAUTION:
- **Be careful not to spill fuel.**
- **If the fuel gauge indicates that two thirds or more of the fuel is remaining, be sure to drain fuel before starting work to avoid the fuel to spill.**

NOTE:
The fuel level sensor is built in fuel pump assembly.
1) Remove the fuel pump assembly. <Ref. to FU(H4SO)-65, REMOVAL, Fuel Pump.>
2) Disconnect the fuel level sensor connector.

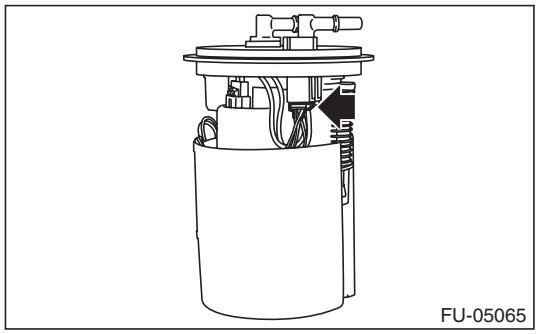

3) Remove the harness from the hooks (A) on the fuel chamber assembly and remove the fuel temperature sensor (B) from fuel chamber assembly.

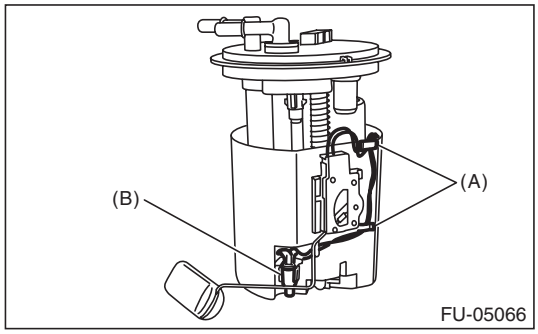

4) Press two claws (A) of the fuel level sensor, and slide the fuel level sensor in the direction of the arrow to remove the fuel level sensor.

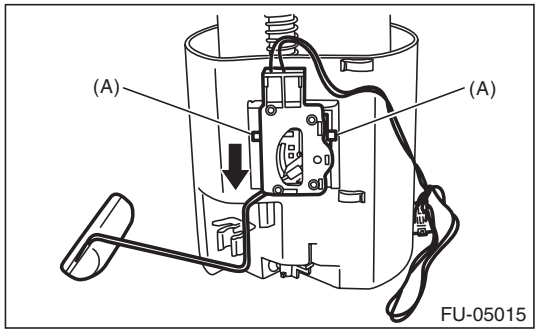

B: INSTALLATION

Install in the reverse order of removal.

C: INSPECTION

1) Check that the fuel level sensor has no damage.
2) Measure the fuel level sensor float position.

NOTE:
When inspecting the fuel level sensor, perform the work with the sensor installed to the fuel pump.

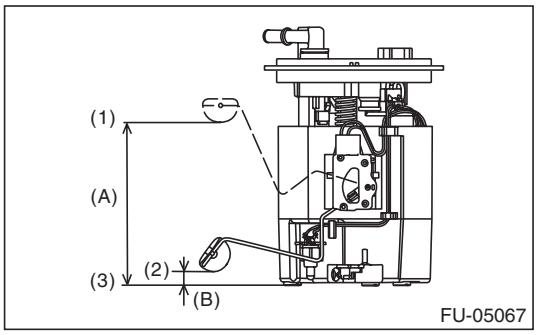

(1) FULL
(2) EMPTY
(3) Fuel tank seating surface

Float position	Standard
FULL to Fuel tank seating surface (A)	126.4±4 mm (4.976±0.157 in)
EMPTY to Fuel tank seating surface (B)	11.0±4 mm (0.433±0.157 in)

GETtheMANUALS.org

3) Measure the resistance between fuel level sensor terminals.

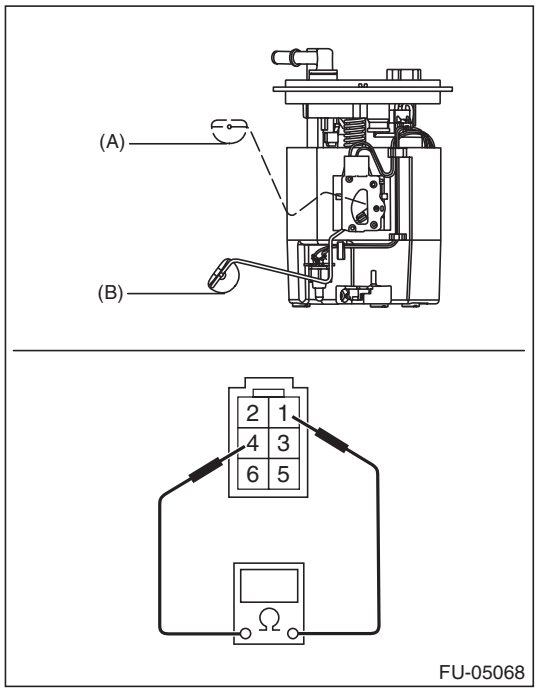

Float position	Terminal No.	Standard
FULL (A)	1 and 4	8.7±1.0 Ω
EMPTY (B)		139.1±2.0 Ω

GETtheMANUALS.org

26. Fuel Sub Level Sensor

A: REMOVAL

WARNING:
Place "NO OPEN FLAMES" signs near the working area.

CAUTION:
- **Be careful not to spill fuel.**
- **If the fuel gauge indicates that two thirds or more of the fuel is remaining, be sure to drain fuel before starting work to avoid the fuel to spill.**

1) Release the fuel pressure. <Ref. to FU(H4SO)-53, RELEASING OF FUEL PRESSURE, PROCEDURE, Fuel.>
2) Drain fuel. <Ref. to FU(H4SO)-53, DRAINING FUEL (WITH SUBARU SELECT MONITOR), PROCEDURE, Fuel.>
3) Disconnect the ground cable from battery.

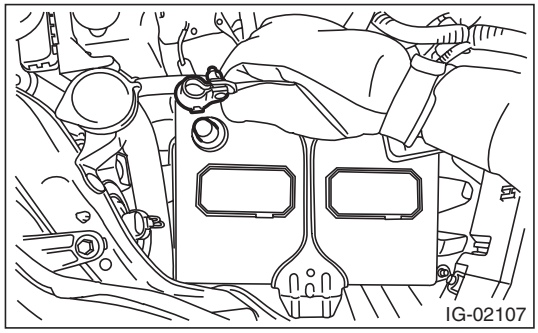

4) Remove the rear seat cushion. <Ref. to SE-34, REMOVAL, Rear Seat.>
5) Remove the service hole cover.

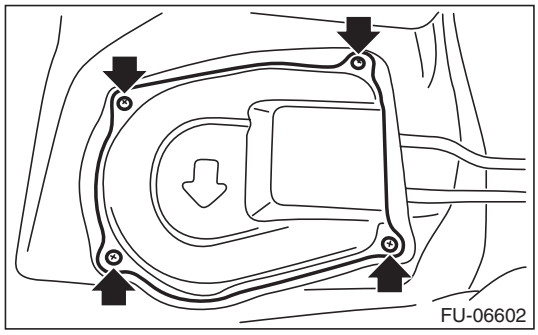

6) Disconnect the connector (A) from fuel sub level sensor, and remove the clip (B) securing the fuel cord from fuel sub level sensor protector.

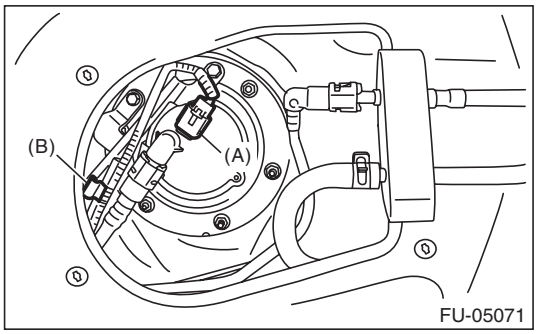

7) Remove the bolts (A) securing the fuel sub level sensor protector to the fuel sub level sensor upper plate, and remove the fuel sub level sensor protector.
8) Disconnect the quick connector on the fuel sub delivery tube (B). <Ref. to FU(H4SO)-73, REMOVAL, Fuel Delivery and Evaporation Lines.>

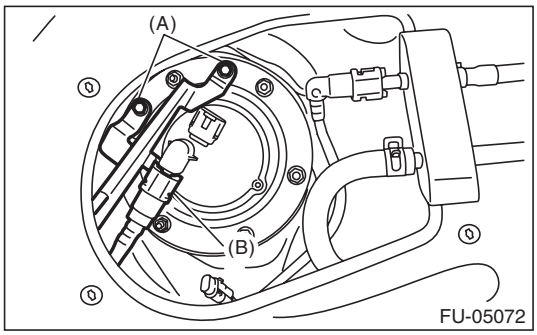

9) Remove the nuts securing the fuel sub level sensor upper plate to the fuel tank and remove the fuel sub level sensor upper plate.

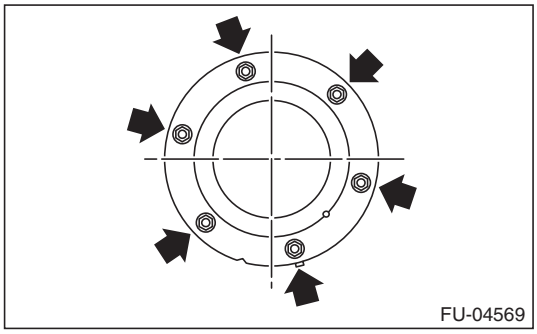

10) Remove the fuel sub level sensor from the fuel tank.

GETtheMANUALS.org

B: INSTALLATION

Install in the reverse order of removal while being careful of the following.

- Make sure the sealing portion is free from fuel or foreign matter before installation.
- Align protrusion (A) of the gasket to the position shown in the figure.
- Align protrusion (B) of the fuel sub level sensor to the cutout in the fuel sub level sensor upper plate.
- After tightening the bolts to the specified torque in the order indicated in the figure, install the fuel sub level sensor protector.

NOTE:
Use a new gasket.

Tightening torque:
4.4 N·m (0.4 kgf-m, 3.2 ft-lb)

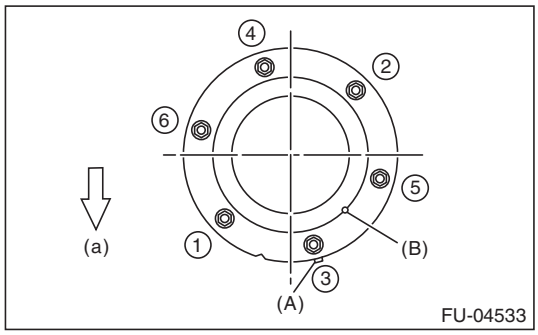

(a) Front side of vehicle

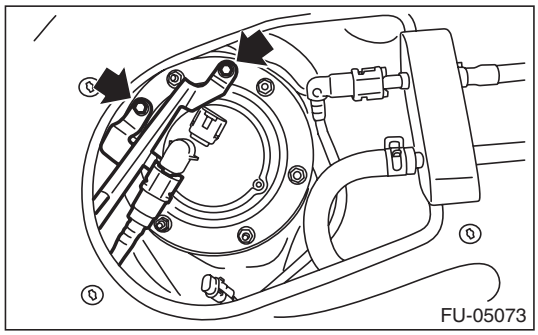

C: INSPECTION

1) Check that the fuel sub level sensor has no damage.
2) Measure the fuel sub level sensor float position.

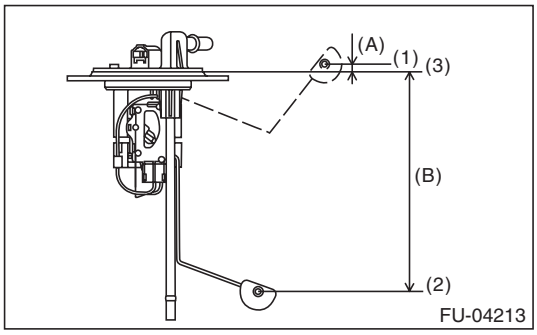

(1) FULL
(2) EMPTY
(3) Datum points

Float position	Standard
FULL to Datum point (A)	6.4±3.5 mm (0.252±0.138 in)
EMPTY to Datum point (B)	163.3±3.5 mm (6.429±0.138 in)

3) Measure the resistance between fuel sub level sensor terminals.

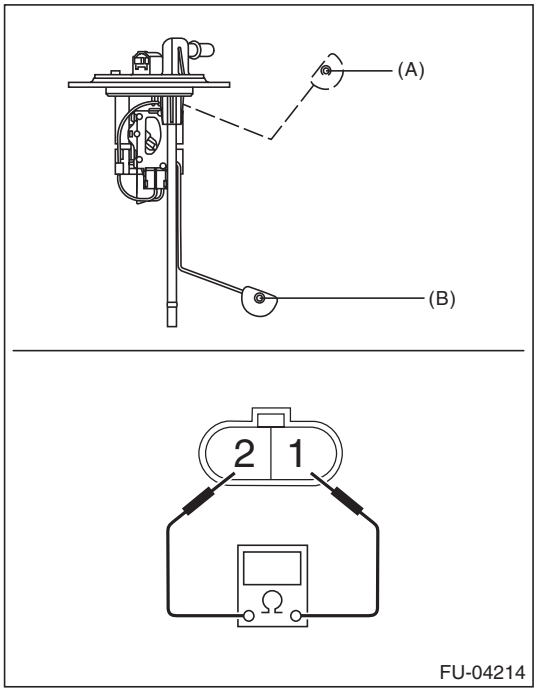

Float position	Terminal No.	Standard
FULL (A)	1 and 2	8.7±1.0 Ω
EMPTY (B)		270.9±4.0 Ω

GETtheMANUALS.org

27. Fuel Filter

A: REMOVAL

WARNING:
Place "NO OPEN FLAMES" signs near the working area.

CAUTION:
- **Be careful not to spill fuel.**
- **If the fuel gauge indicates that two thirds or more of the fuel is remaining, be sure to drain fuel before starting work to avoid the fuel to spill.**
- **Be careful not to drop or apply any impact to the fuel pump during work. This may deteriorate its performance.**

NOTE:
The fuel filter is built in fuel pump assembly.

1) Remove the fuel pump assembly. <Ref. to FU(H4SO)-65, REMOVAL, Fuel Pump.>
2) Remove the fuel level sensor and fuel temperature sensor. <Ref. to FU(H4SO)-67, REMOVAL, Fuel Level Sensor.>
3) Disconnect the connector from the fuel filter assembly.

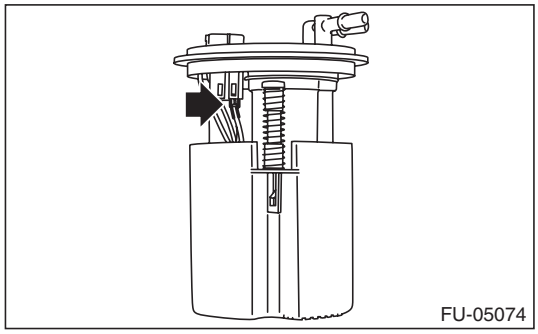
FU-05074

4) Remove the claw connecting the fuel filter assembly and fuel chamber assembly in order to separate the fuel filter assembly and fuel chamber assembly.

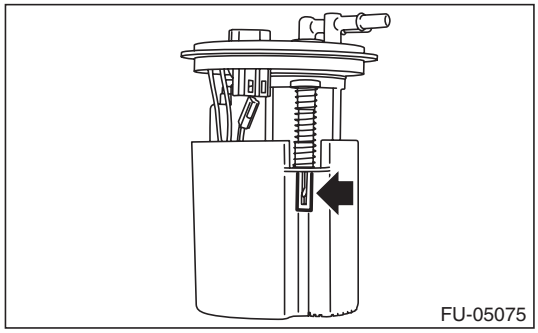
FU-05075

5) Remove the fuel pump holder from the fuel filter assembly.

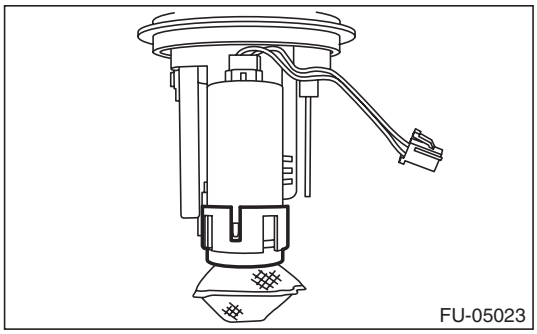
FU-05023

6) Remove the fuel pump from the fuel filter assembly.

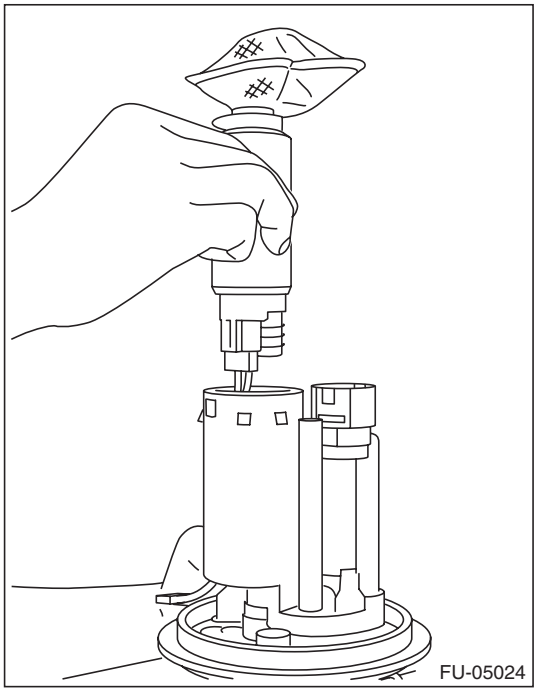
FU-05024

GETtheMANUALS.org

B: INSTALLATION

1) Assemble the gasket spacer (A) and support rubber cushion (B) to the fuel pump, and install the fuel pump to the fuel filter assembly.

NOTE:
- Use a new gasket spacer.
- Use a new support rubber cushion.
- Apply gasoline to the surface of gasket spacer and support rubber cushion.

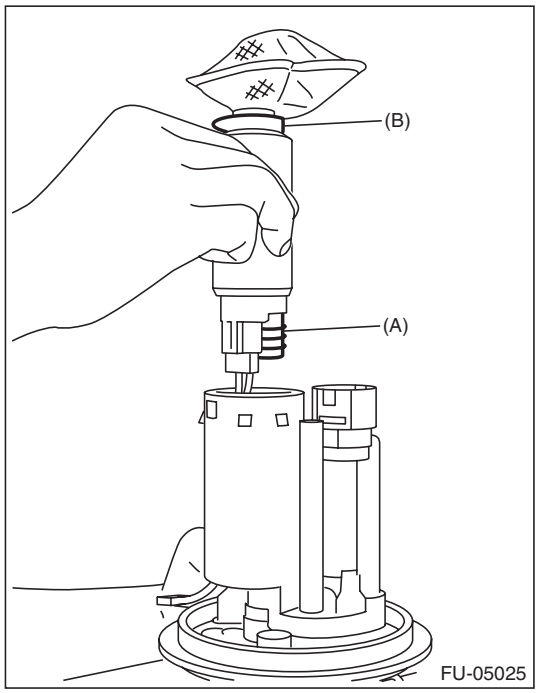

2) Install the fuel pump holder to the fuel filter assembly.

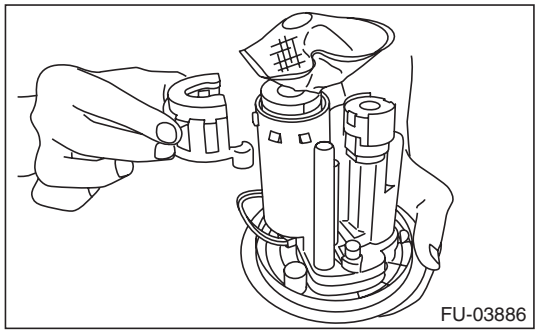

3) Install the pump module spring (A) to fuel filter assembly, and install the fuel chamber assembly (B).

NOTE:
- Use a new fuel chamber assembly.
- Check that the claw connecting the fuel filter assembly and fuel chamber assembly is securely fastened.

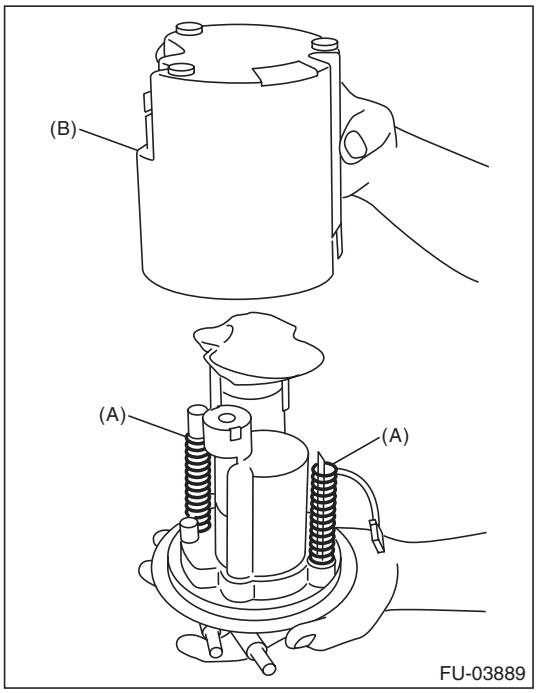

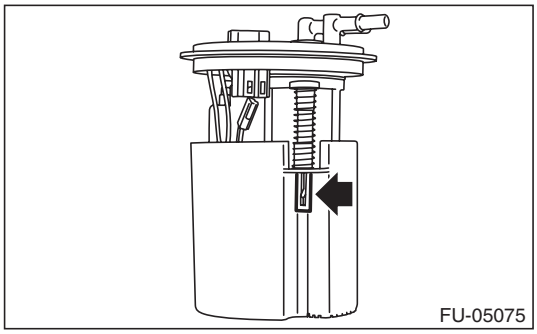

4) Connect the fuel pump connector.

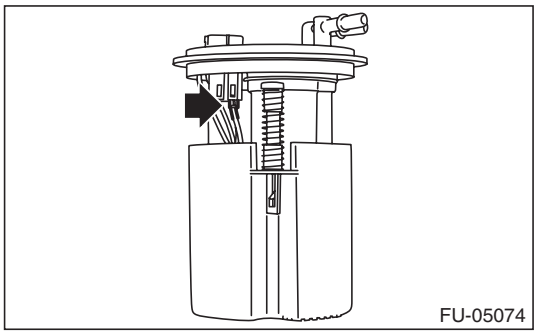

5) Install the fuel level sensor and fuel temperature sensor. <Ref. to FU(H4SO)-67, INSTALLATION, Fuel Level Sensor.>

6) Inspect the fuel level sensor. <Ref. to FU(H4SO)-67, INSPECTION, Fuel Level Sensor.>

7) Install the fuel pump assembly. <Ref. to FU(H4SO)-66, INSTALLATION, Fuel Pump.>

GETtheMANUALS.org

28. Fuel Delivery and Evaporation Lines

A: REMOVAL

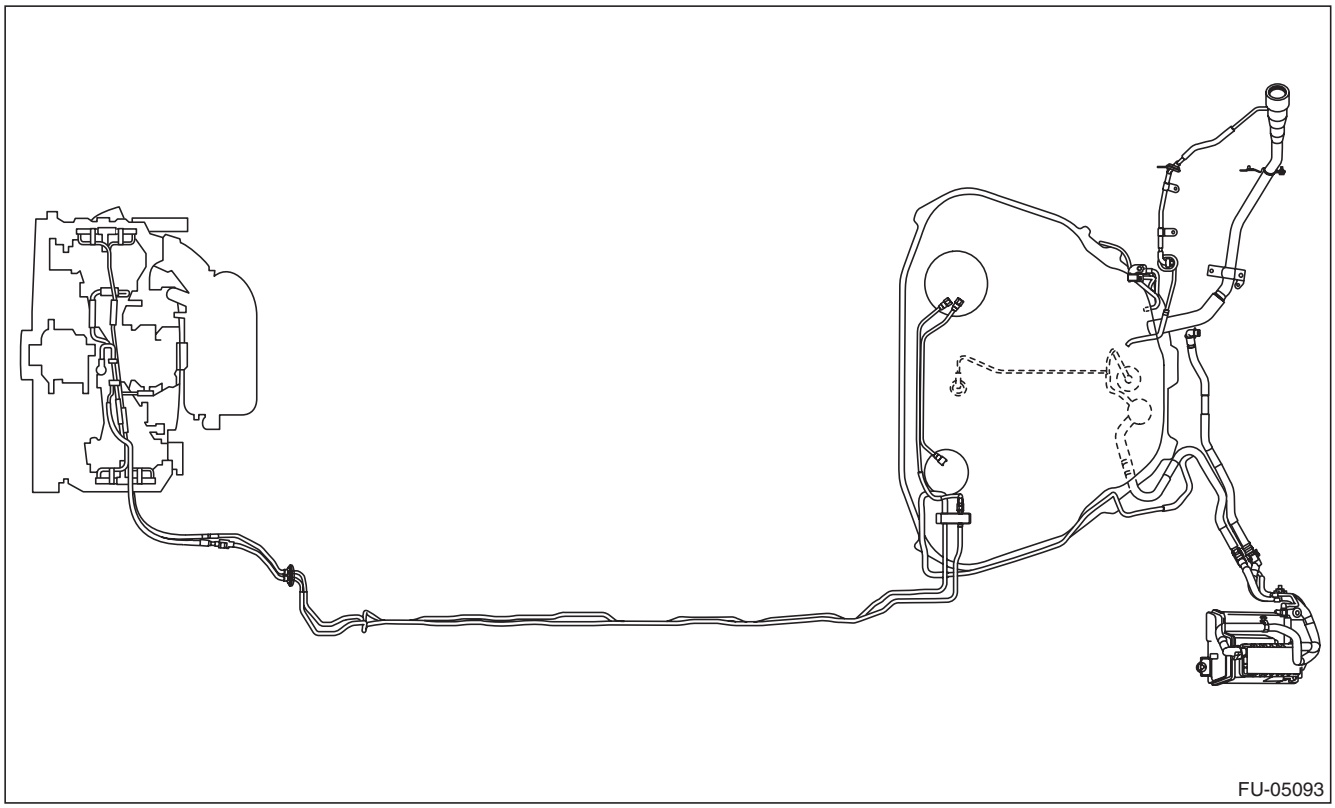

WARNING:
Place “NO OPEN FLAMES” signs near the working area.

CAUTION:
Be careful not to spill fuel.

1) Release the fuel pressure. <Ref. to FU(H4SO)-53, RELEASING OF FUEL PRESSURE, PROCEDURE, Fuel.>
2) Open the fuel filler lid and remove the fuel filler cap.
3) Remove the floor mat. <Ref. to EI-162, REMOVAL, Floor Mat.>
4) In the engine compartment, disconnect the fuel delivery hoses (A) and evaporation hose (B).

CAUTION:
- **Be careful not to spill fuel.**
- **Catch the fuel from hoses using a container or cloth.**

(1) Remove the connect check cover from the fuel delivery hose.

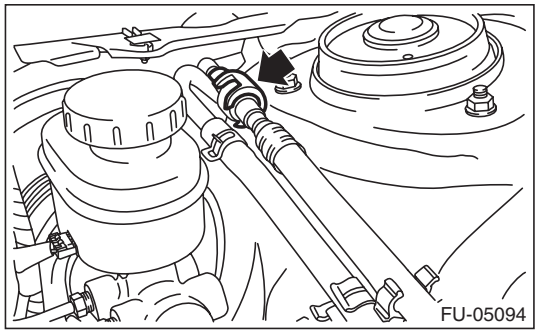

(2) Set the ST to the fuel pipe.

ST 42099AE000 QUICK CONNECTOR RELEASE

GETtheMANUALS.org

(3) Disconnect the quick connector of the fuel delivery hose by pushing the ST in the direction of the arrow.
(4) Remove the clip and disconnect the evaporation hose from the fuel pipe.

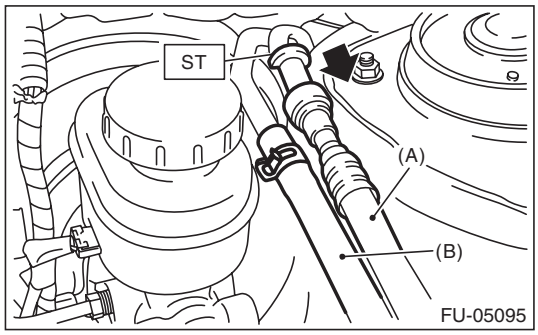

5) Remove the fuel tank. <Ref. to FU(H4SO)-55, REMOVAL, Fuel Tank.>
6) Remove the rear mud guard LH. <Ref. to EI-38, REMOVAL, Mud Guard.>
7) Remove the purge hose (A), purge pipe (B), air vent hose (C) and drain tube assembly (D).

NOTE:
Disconnect the quick connector as shown in the figure.

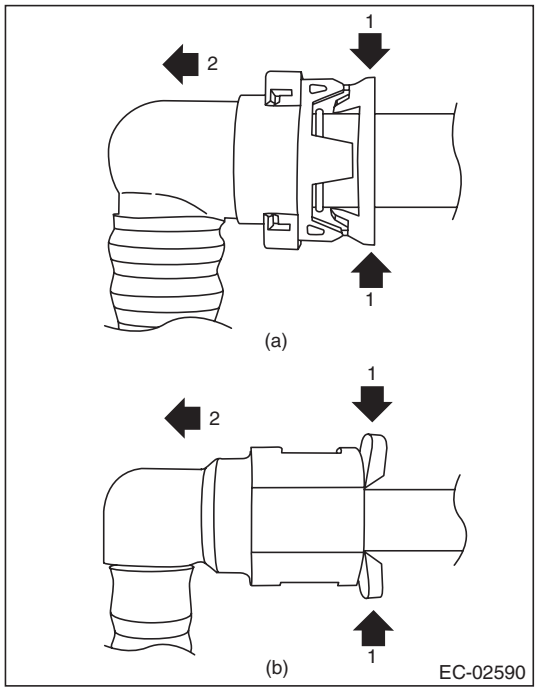

(a) Air vent hose (C), drain tube ASSY (D)
(b) Purge pipe (B)

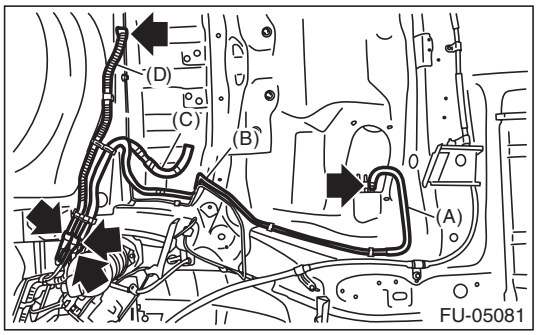

8) Remove the fuel pipe assembly from vehicle.
9) Disconnect the quick connector, and remove the fuel delivery tube and fuel sub delivery tube from the fuel tank.

- When using ST

1. Attach ST to the pipe and push ST in the direction of arrow mark to disconnect the quick connector.

ST	42099AE000	QUICK CONNECTOR RELEASE

CAUTION:
- **Be careful not to spill fuel.**
- **Catch the fuel from hoses using a container or cloth.**
- **To disconnect the connector, hold (C) shown in the figure and pull in axial direction.**
- **If the connector and pipe are sticking to each other, push and pull the connector with ST pushed, and then pull the connector after it starts moving freely.**
- **When disconnecting the connector, do not bend or twist the tube forcibly. If the tube is bent, replace with a new part.**

NOTE:
Clean the pipe and quick connector, if they are covered with dust.

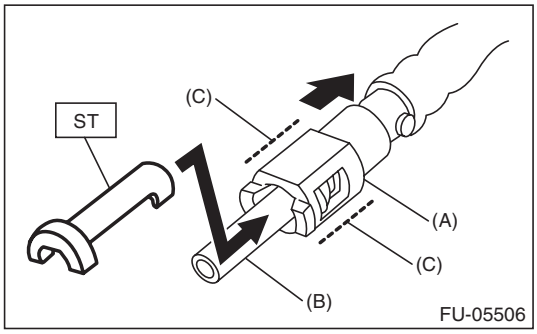

(A) Quick connector
(B) Pipe
(C) Connector holding position

GETtheMANUALS.org

2. To prevent from damaging or entering foreign matter, wrap the pipes and quick connectors with plastic bag etc.

CAUTION:
When reusing the retainer, do not disconnect the retainer from the connector.

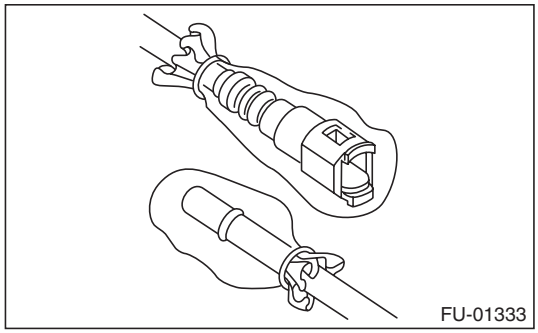

- When not using ST

1. Push the retainer in the direction of the arrow, disconnect the quick connector from pipe.

CAUTION:
- **Be careful not to spill fuel.**
- **Catch the fuel from hoses using a container or cloth.**
- **To disconnect the connector, hold (D) shown in the figure and pull in axial direction.**
- **If the connector and pipe are sticking to each other, push and pull the connector with the retainer pushed in the direction of the arrow, and then pull the connector after it starts moving freely.**
- **When disconnecting the connector, do not bend or twist the tube forcibly. If the tube is bent, replace with a new part.**

NOTE:
Clean the pipe and quick connector, if they are covered with dust.

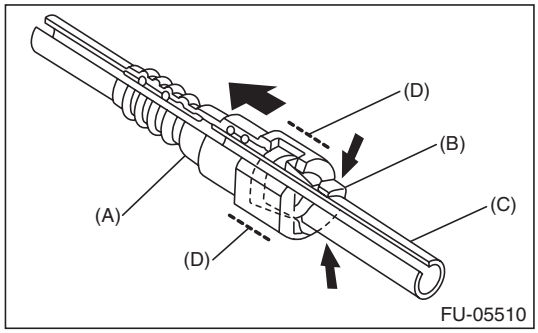

(A) Quick connector
(B) Retainer
(C) Pipe
(D) Connector holding position

2. To prevent from damaging or entering foreign matter, wrap the pipes and quick connectors with plastic bag etc.

CAUTION:
When reusing the retainer, do not disconnect the retainer from the pipe.

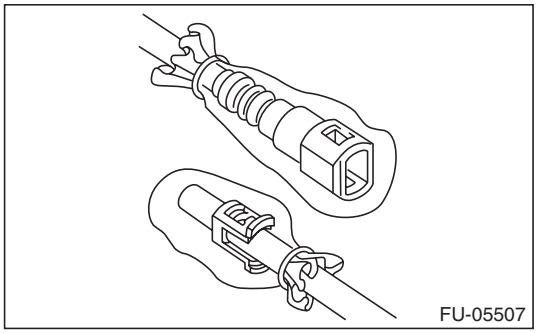

10) Remove the evaporation pipe.
(1) Remove the rear mud guard RH. <Ref. to EI-38, REMOVAL, Mud Guard.>
(2) Remove the evaporation hose.

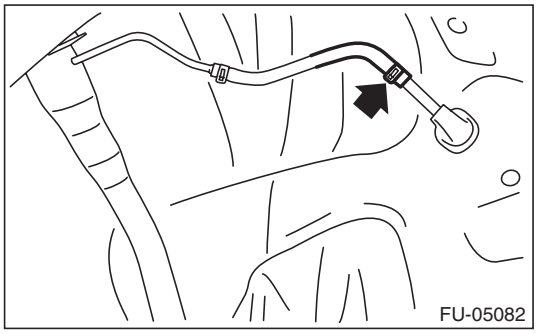

(3) Remove the trunk side trim panel assembly - side on the RH side. <Ref. to EI-110, REMOVAL, Rear Quarter Trim.>
(4) Remove the evaporation pipe protector.

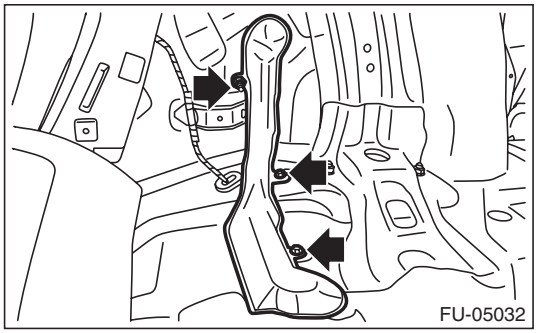

GETtheMANUALS.org

(5) Remove the evaporation pipe from vehicle.

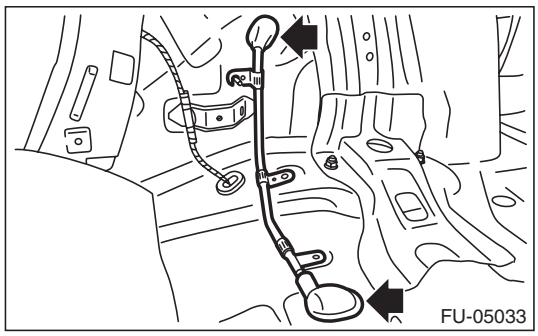

B: INSTALLATION

Install in the reverse order of removal while being careful of the following.

1. INSTALLATION OF EVAPORATION PIPE

1) Install the evaporation pipe to the vehicle.

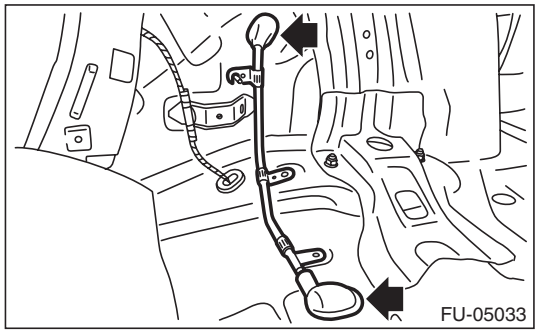

2) Install the evaporation pipe protector.

Tightening torque:
T1: 1 N·m (0.1 kgf-m, 0.7 ft-lb)
T2: 7.5 N·m (0.7 kgf-m, 5.4 ft-lb)

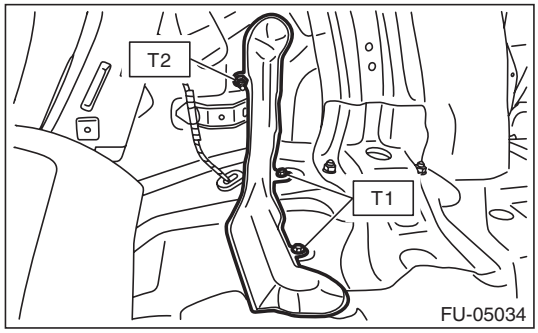

3) Install the trunk side trim panel assembly - side on RH side. <Ref. to EI-119, INSTALLATION, Rear Quarter Trim.>

4) Install the evaporation hose.

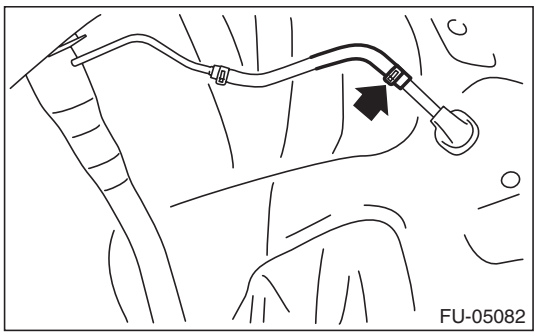

5) Install the rear mud guard RH. <Ref. to EI-38, INSTALLATION, Mud Guard.>

2. CONNECTING THE FUEL LINE QUICK CONNECTOR

CAUTION:

- **Make sure there are no damage or dust on connections. If necessary, clean seal surface of pipe.**

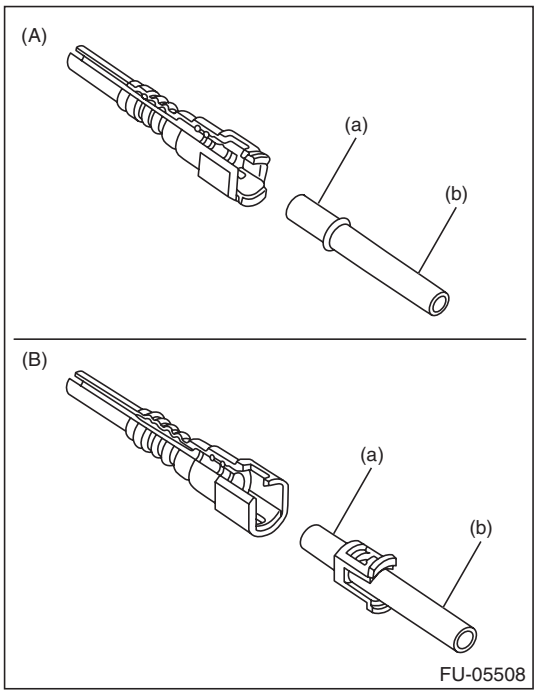

(A) When removed using ST
(B) When removed without using ST
(a) Seal surface
(b) Pipe

- **When reusing the retainer, make sure that neither scratches nor deformation exist on the retainer. If it is faulty, use a new part.**

GETtheMANUALS.org

1) Connect the quick connector to pipe.

CAUTION:
- **Make sure that the quick connector is securely connected.**

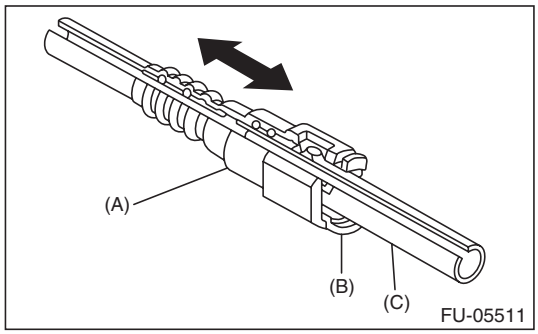

(A) Quick connector
(B) Retainer
(C) Pipe

- **Make sure the two retainer pawls are engaged in their mating positions in the quick connector.**
- **Be sure to inspect tubes and their connections for any leakage of fuel.**
- **To connect the connector, hold (d) shown in the figure and push in axial direction.**
- **When connecting the connector, do not bend or twist the tube forcibly. If the tube is bent, replace with a new part.**

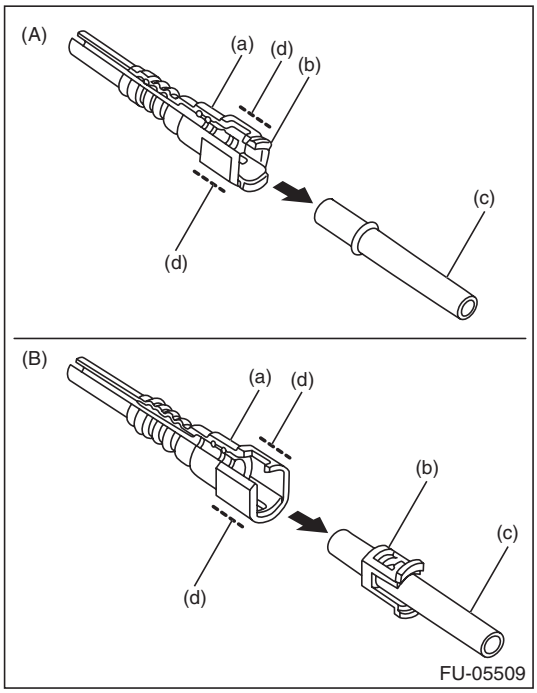

(A) When removed using ST
(B) When removed without using ST
(a) Quick connector
(b) Retainer
(c) Pipe
(d) Connector holding position

3. EVAPORATION HOSE CONNECTION

Connect the evaporation hose to the pipe with an overlap of 15 to 20 mm (0.59 to 0.79 in).

L = 17.5±2.5 mm (0.689±0.098 in)

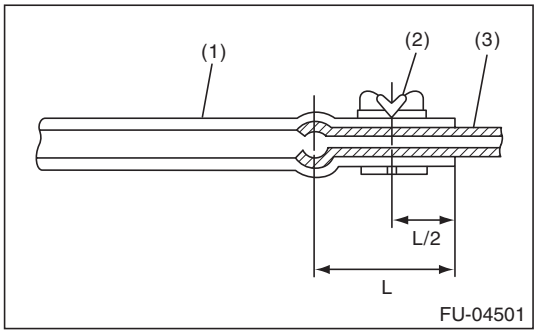

(1) Hose
(2) Clip
(3) Pipe

GETtheMANUALS.org

4. CONNECTING THE EVAPORATION LINE QUICK CONNECTOR

CAUTION:
- **Make sure there are no damage or dust on connections. If necessary, clean the seal surface of the pipe.**
- **Make sure that the quick connector is securely connected.**

Connect the quick connector as shown in the figure.

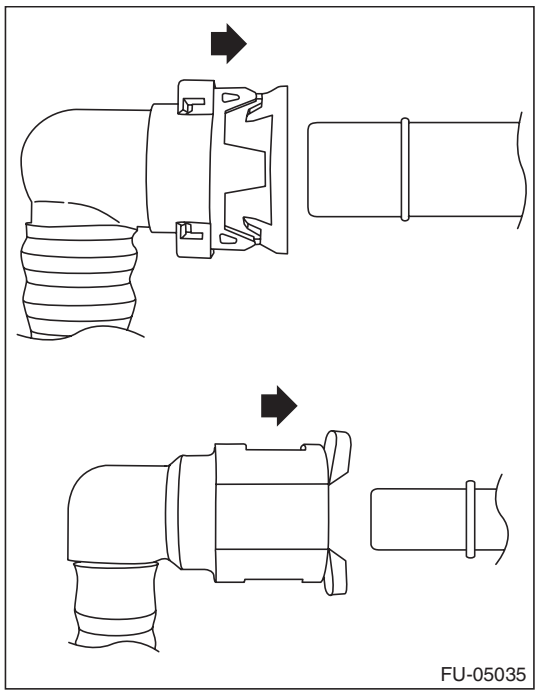

C: INSPECTION

1) Check that the fuel pipe has no deformation, cracks or other damages.
2) Check that the hose and tube have no cracks, damage or loose part.

GETtheMANUALS.org

29. Fuel System Trouble in General

A: INSPECTION

Trouble	Possible cause	Corrective action
Insufficient fuel supply to injector	a. Fuel pump does not operate.	
	❍ Defective terminal contact	Inspect contact, especially ground, and tighten it securely.
	❍ Trouble in electromagnetic or electronic circuit parts	Replace the faulty parts.
	b. Decline of fuel pump function	Replace the fuel pump.
	c. Clogged fuel filter	Replace the fuel filter. Clean or replace the fuel tank if necessary.
	d. Clogged or bent fuel line pipe, hose or tube	Clean, correct or replace the fuel line pipe, hose or tube.
	e. Air is mixed in fuel system.	Check the fuel line connections, correct or replace the defective part.
	f. Damaged diaphragm of pressure regulator	Replace the pressure regulator.
Leakage or blow out of fuel	a. Loose connections of fuel line pipe, hose or tube	Check the fuel line connections, correct or replace the defective part.
	b. Cracked fuel line pipe, hose or tube	Replace the fuel line pipe, hose or tube.
	c. Cracked fuel tank or defective welded part	Replace the fuel tank.
	d. Clogged or bent fuel line pipe, hose or tube	Clean, correct or replace the fuel line pipe, hose or tube.
Gasoline smell inside of compart-ment	a. Loose connections of fuel line pipe, hose or tube	Check the fuel line connections, correct or replace the defective part.
	b. Improper installation of rubber saucer	Correct or replace the rubber saucer.
	c. Defective canister	Replace the canister.
Defective fuel gauge	a. Defective operation of fuel level sensor	Replace the fuel level sensor.
	b. Defective operation of combination meter	Replace the combination meter.
Noise	a. Large operation noise or vibration of fuel pump	Replace the fuel pump.

NOTE:
- When the vehicle is left unattended for an extended period of time, water may accumulate in the fuel tank. Fill fuel fully to prevent the problem.
- In snow-covered areas, mountainous areas, skiing areas, etc. where ambient temperatures drop to 0°C (32°F) or less throughout the winter season, use a water removing agent in the fuel system to prevent freezing fuel system and accumulating water.
- When water is accumulated in fuel filter, fill the water removing agent in the fuel tank.
- Before using water removing agent, follow the cautions noted on the bottle.

GETtheMANUALS.org

GETtheMANUALS.org

EMISSION CONTROL (AUX. EMISSION CONTROL DEVICES)

EC(H4SO)

		Page
1.	General Description	2
2.	Front Catalytic Converter	3
3.	Rear Catalytic Converter	4
4.	Canister	5
5.	Purge Control Solenoid Valve	9
6.	EGR Valve	12
7.	Fuel Level Sensor	13
8.	Fuel Temperature Sensor	14
9.	Fuel Sub Level Sensor	15
10.	Fuel Tank Pressure Sensor	16
11.	Drain Filter	18
12.	Drain Valve	19
13.	PCV Hose Assembly	20
14.	PCV Valve	22

GETtheMANUALS.org

1. General Description

A: CAUTION

- Wear appropriate work clothing, including a cap, protective goggles and protective shoes when performing any work.
- Remove contamination including dirt and corrosion before removal, installation or disassembly.
- Keep the disassembled parts in order and protect them from dust and dirt.
- Before removal, installation or disassembly, be sure to clarify the failure. Avoid unnecessary removal, installation, disassembly and replacement.
- Vehicle components are extremely hot after driving. Be wary of receiving burns from heated parts.
- Be sure to tighten fasteners including bolts and nuts to the specified torque.
- Place shop jacks or rigid racks at the specified points.
- Before disconnecting connectors of sensors or units, be sure to disconnect the ground cable from battery.

B: PREPARATION TOOL

1. SPECIAL TOOL

ILLUSTRATION	TOOL NUMBER	DESCRIPTION	REMARKS
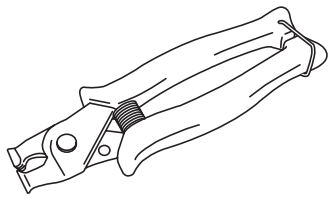 ST18353AA000	18353AA000	CLAMP PLIERS	• Used for removing and installing the PCV hose. • This is a general tool made by the French company CAILLAU. (code) 54.0.000.205 To make this easier to obtain, it has been provided with a tool number.

2. GENERAL TOOL

TOOL NAME	REMARKS
Circuit tester	Used for measuring resistance and voltage.
Mighty Vac	Used for inspecting the fuel tank pressure sensor.

GETtheMANUALS.org

2. Front Catalytic Converter

A: REMOVAL

The front catalytic converter is integrated into the front exhaust pipe; therefore, refer to “Front Exhaust Pipe” for the removal procedure. <Ref. to EX(H4SO)-5, REMOVAL, Front Exhaust Pipe.>

B: INSTALLATION

The front catalytic converter is integrated into the front exhaust pipe; therefore, refer to “Front Exhaust Pipe” for the installation procedure. <Ref. to EX(H4SO)-6, INSTALLATION, Front Exhaust Pipe.>

C: INSPECTION

1) Check the connections and welds for exhaust leaks.
2) Check for hole or rust.

GETtheMANUALS.org

3. Rear Catalytic Converter

A: REMOVAL

The rear catalytic converter is integrated into the center exhaust pipe. Refer to “Center Exhaust Pipe” for removal procedures. <Ref. to EX(H4SO)-8, REMOVAL, Center Exhaust Pipe.>

B: INSTALLATION

The rear catalytic converter is integrated into the center exhaust pipe. Refer to “Center Exhaust Pipe” for installation procedures. <Ref. to EX(H4SO)-8, INSTALLATION, Center Exhaust Pipe.>

C: INSPECTION

1) Check the connections and welds for exhaust leaks.
2) Check for hole or rust.

GETtheMANUALS.org

4. Canister

A: REMOVAL

1) Remove the rear wheel LH.
2) Lift up the vehicle.
3) Remove the rear mud guard LH. <Ref. to EI-38, REMOVAL, Mud Guard.>
4) Disconnect the quick connectors of the vent tube (A), canister drain tube (B) and charge tube (C), and remove the tubes from tube clamp (D).

NOTE:
Disconnect the quick connector as shown in the figure.

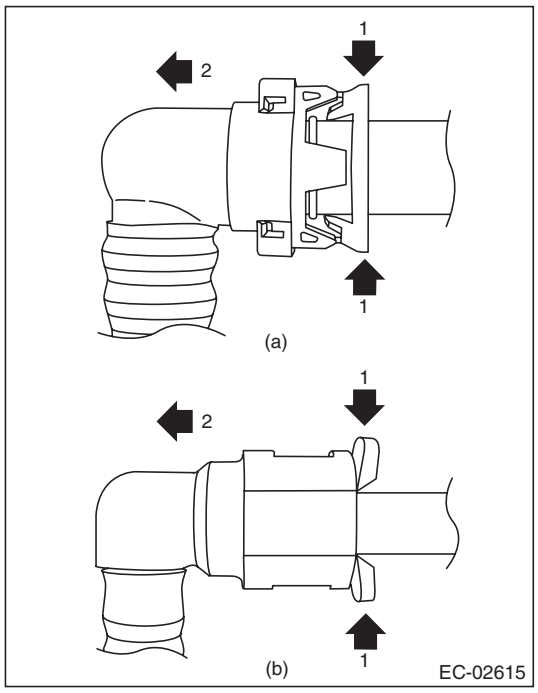

(a) Vent tube (A) and canister drain tube (B)
(b) Charge tube (C)

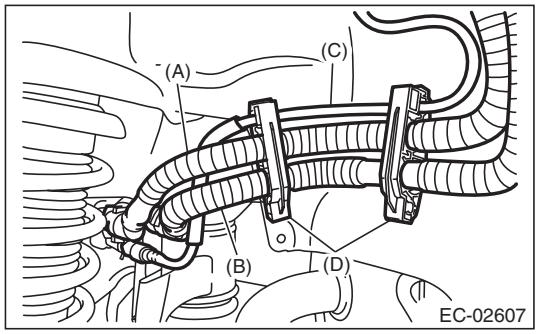

5) Remove the clip holding the rear wiring harness.

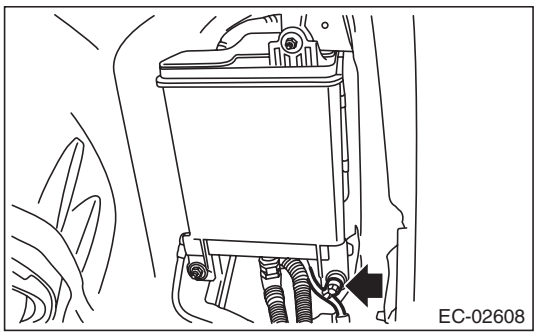

6) Remove the canister from vehicle.

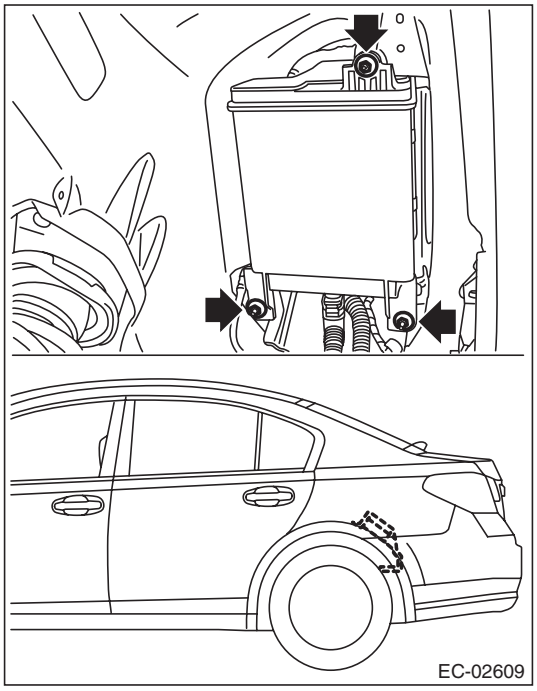

7) Disconnect the connector from drain valve.

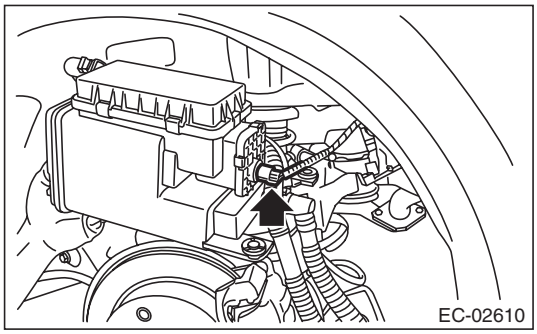

GETtheMANUALS.org

8) Disconnect the vent tube (A), canister drain tube (B) and charge tube (C) from the canister, and remove the canister drain tube (B) from canister clip (D).

NOTE:
Disconnect the quick connector as shown in the figure.

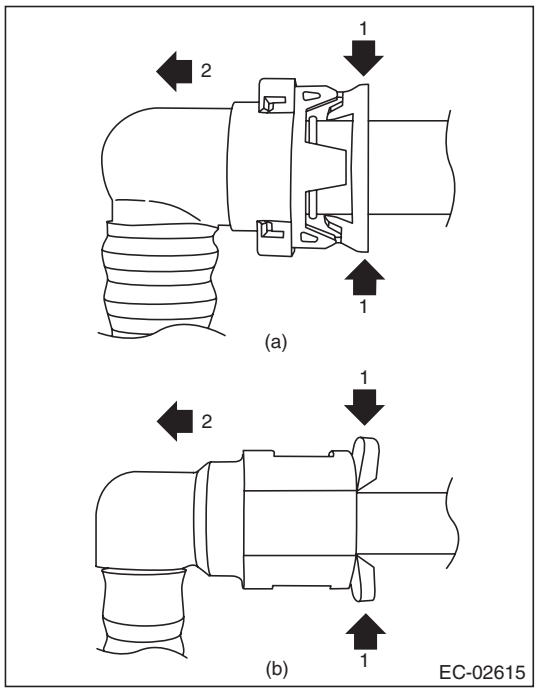

(a) Vent tube (A) and canister drain tube (B)
(b) Charge tube (C)

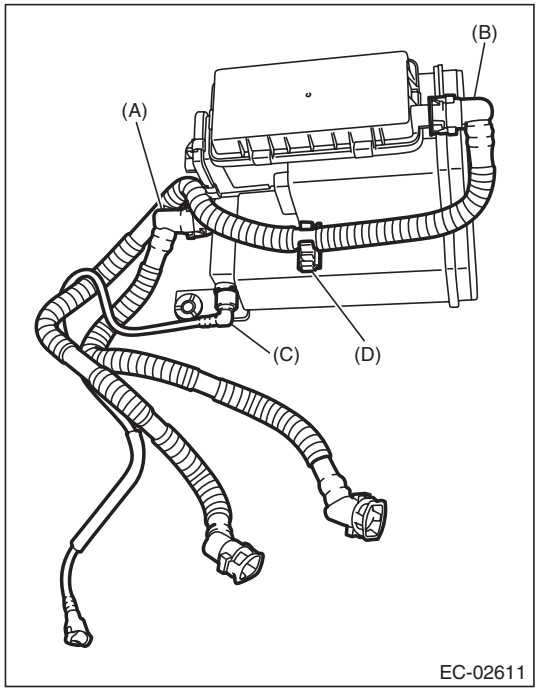

B: INSTALLATION

1) Connect the vent tube (A), canister drain tube (B) and charge tube (C), and install the canister drain tube (B) to canister clip (D).

CAUTION:
- **Make sure there are no damage or dust on connections. If necessary, clean the seal surface of the pipe.**
- **Make sure that the quick connector is securely connected.**

NOTE:
Connect the quick connector as shown in the figure.

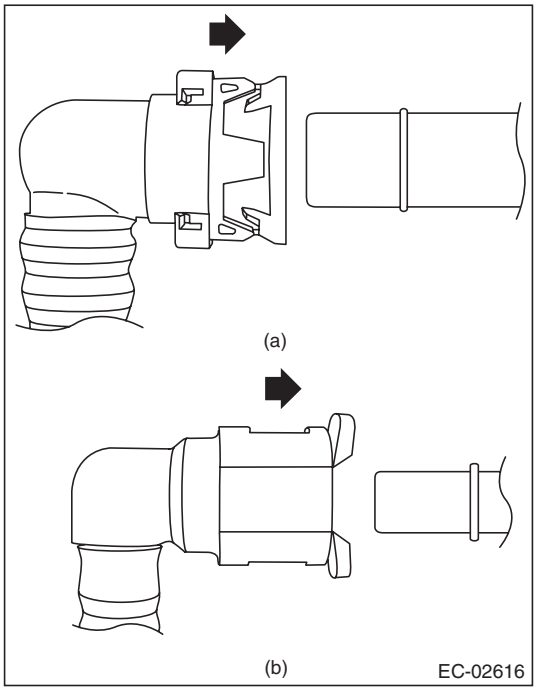

(a) Vent tube (A) and canister drain tube (B)
(b) Charge tube (C)

GETtheMANUALS.org

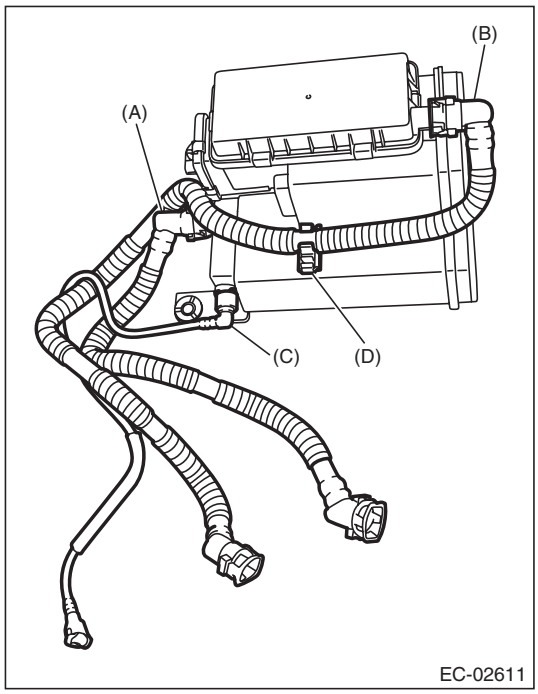

2) Connect the connector to the drain valve.

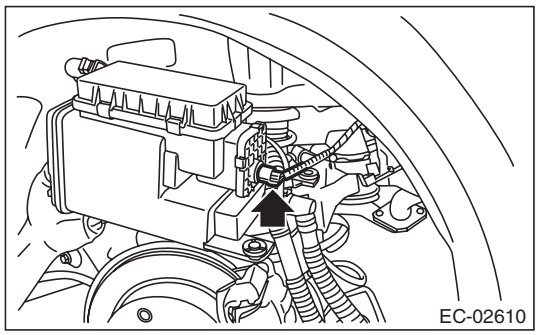

3) Install the canister to the vehicle.

Tightening torque:
8 N·m (0.8 kgf-m, 5.9 ft-lb)

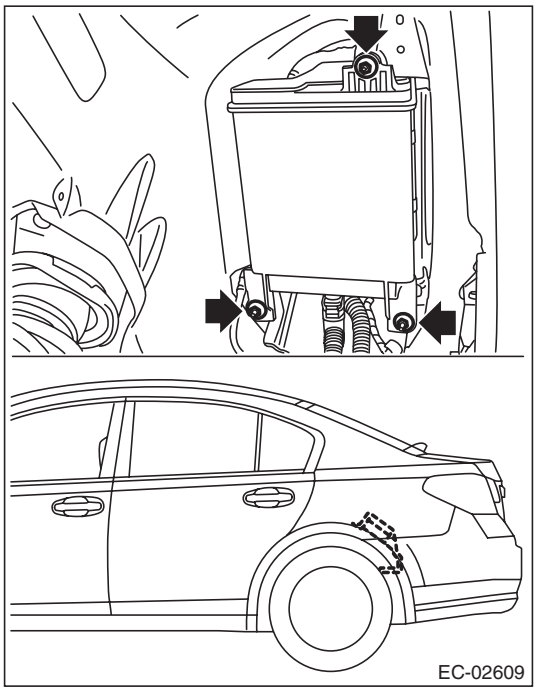

4) Secure the rear wiring harness with clip.

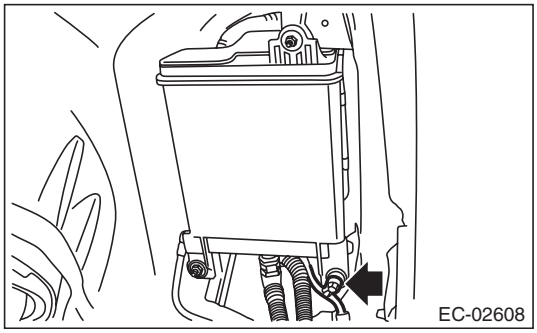

GETtheMANUALS.org

5) Attach all tubes to tube clamp (D), and connect the quick connectors of the vent tube (A), canister drain tube (B) and charge tube (C).

CAUTION:
- **Make sure there are no damage or dust on connections. If necessary, clean the seal surface of the pipe.**
- **Make sure that the quick connector is securely connected.**

NOTE:
Connect the quick connector as shown in the figure.

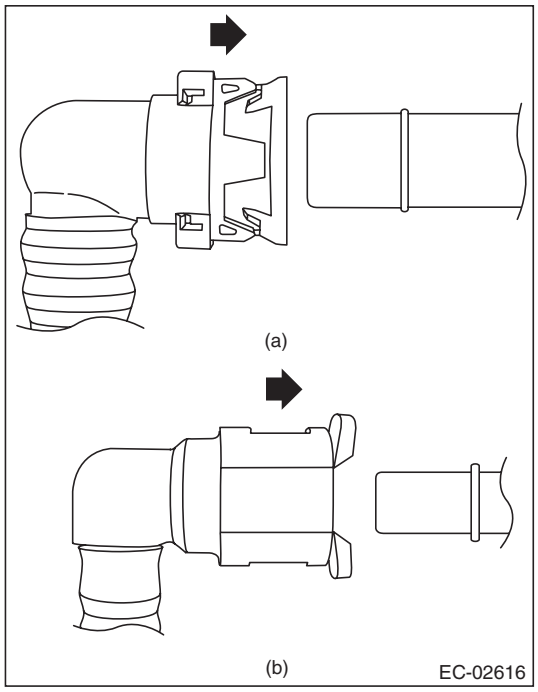

(a) Vent tube (A) and canister drain tube (B)
(b) Charge tube (C)

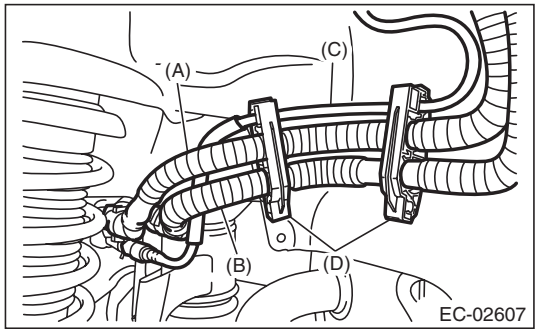

6) Install the rear mud guard LH. <Ref. to EI-38, INSTALLATION, Mud Guard.>
7) Lower the vehicle.
8) Install the rear wheel LH.

Tightening torque:
120 N·m (12.2 kgf-m, 88.5 ft-lb)

C: INSPECTION

1) Check that the canister has no deformation, cracks or other damages.
2) Check that the tube has no cracks, damage or loose part.

GETtheMANUALS.org

5. Purge Control Solenoid Valve

A: REMOVAL

1) Disconnect the ground cable from battery.

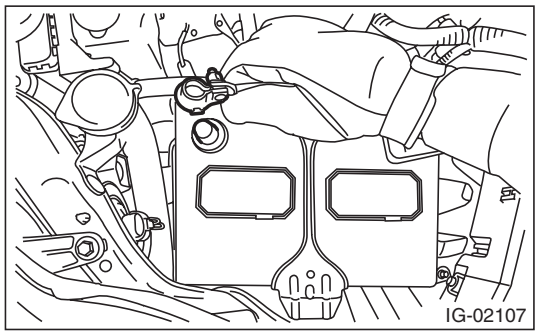

2) Remove the cover (A) and clip (B) from air intake boot assembly.

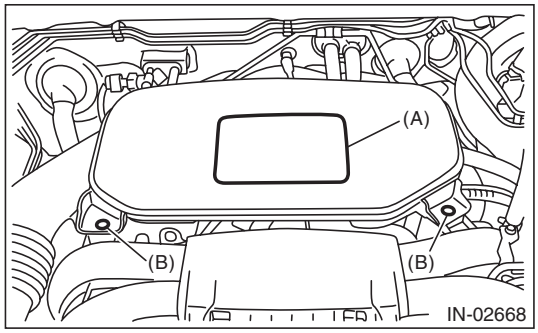

3) Loosen the clamp (A) which connects the air intake boot assembly and air cleaner case.
4) Loosen the clamp (B) which connects the air intake boot assembly and throttle body.

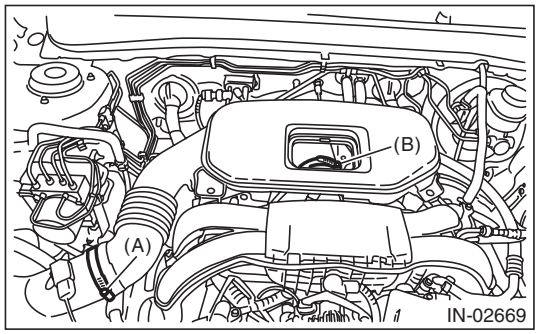

5) Remove the air intake boot from the throttle body, and move it to the left side wheel apron.

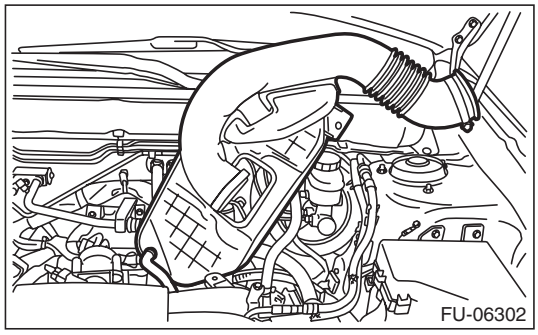

6) Disconnect the purge control solenoid valve connector (A) and evaporation hose (B), and then remove the purge control solenoid valve.

- Other than U5 model

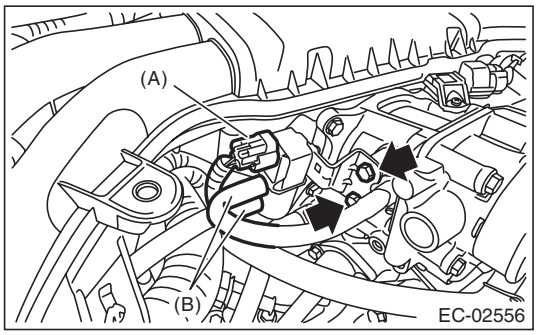

- U5 model

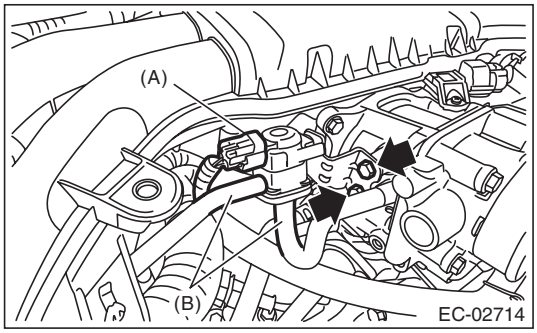

GETtheMANUALS.org

B: INSTALLATION

Install in the reverse order of removal.

NOTE:
Connect the evaporation hose as shown in the figure.

- Other than U5 model

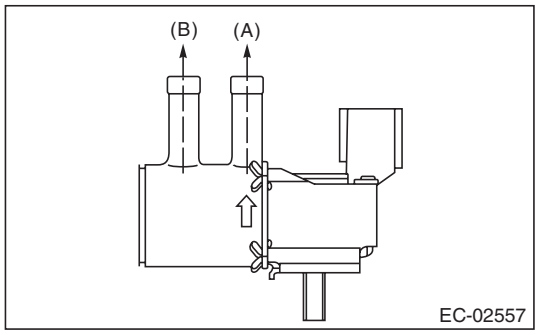

- U5 model

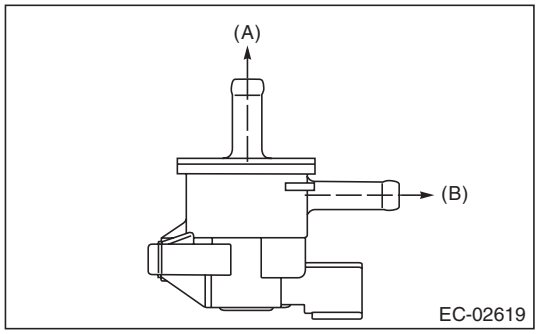

(A) To multifunction duct
(B) To evaporation line

Tightening torque:
6.4 N·m (0.7 kgf-m, 4.7 ft-lb)

- Other than U5 model

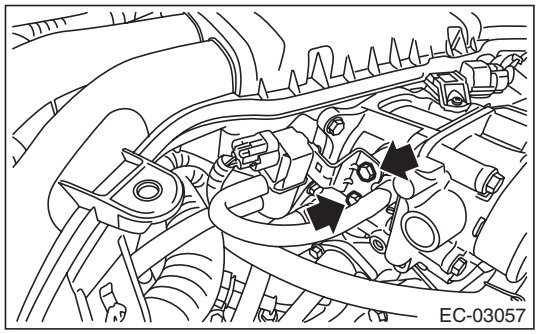

- U5 model

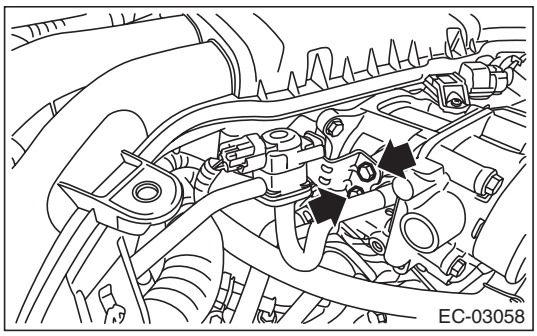

NOTE:
Align the clamp hole with the protrusion of the air intake boot assembly.

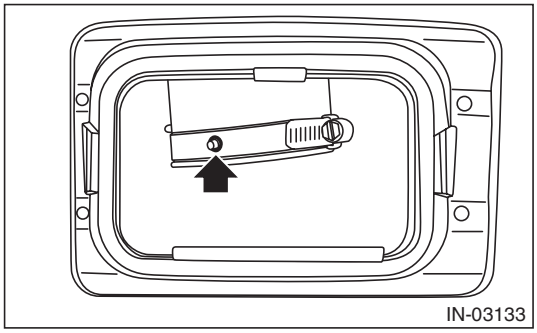

Tightening torque:
Clamp (A), (B)
3 N·m (0.3 kgf-m, 2.2 ft-lb)

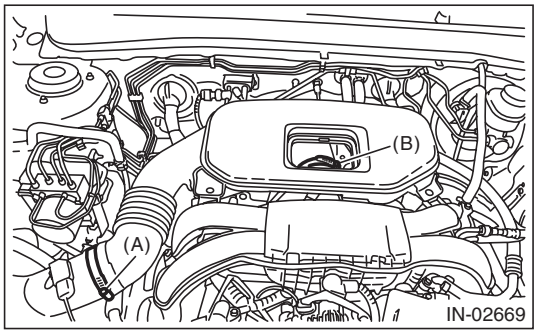

GETtheMANUALS.org

C: INSPECTION

1. PURGE CONTROL SOLENOID VALVE

1) Check that the purge control solenoid valve has no deformation, cracks or other damages.
2) Measure the resistance between the purge control solenoid valve terminals.

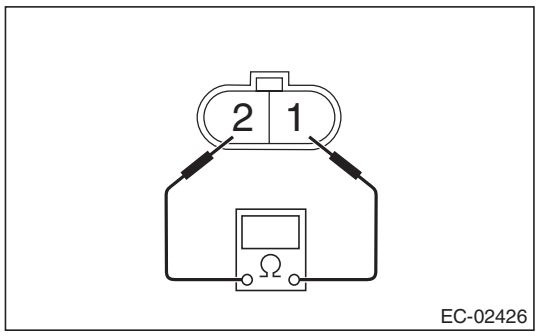

- Other than U5 model

Terminal No.	Standard
1 and 2	24±3 Ω (when 20°C (68°F))

- U5 model

Terminal No.	Standard
1 and 2	24.5±1.5 Ω (when 20°C (68°F))

3) Check that air does not come out from (B) when air is blown into (A).
- Other than U5 model

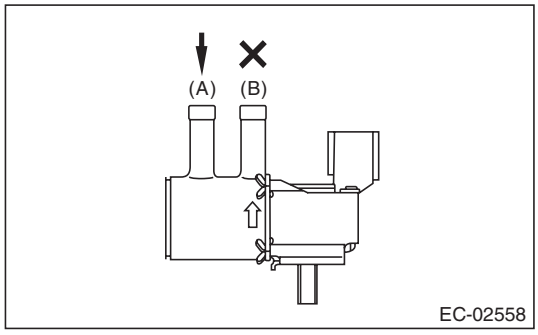

- U5 model

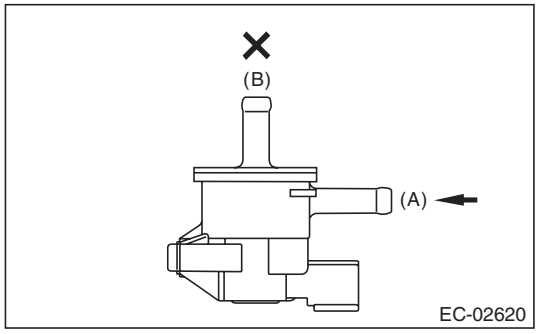

4) Connect the terminal No. 1 to the battery positive terminal and the terminal No. 2 to the battery ground terminal. Check that air is discharged from (B), when supplying air to (A).
- Other than U5 model

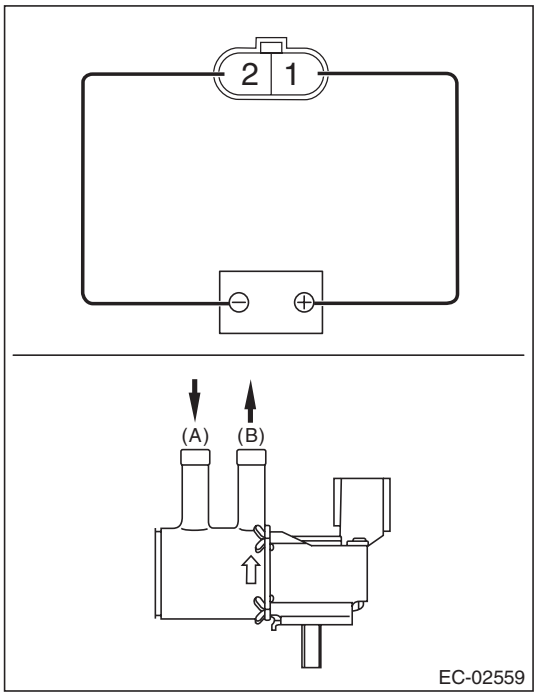

- U5 model

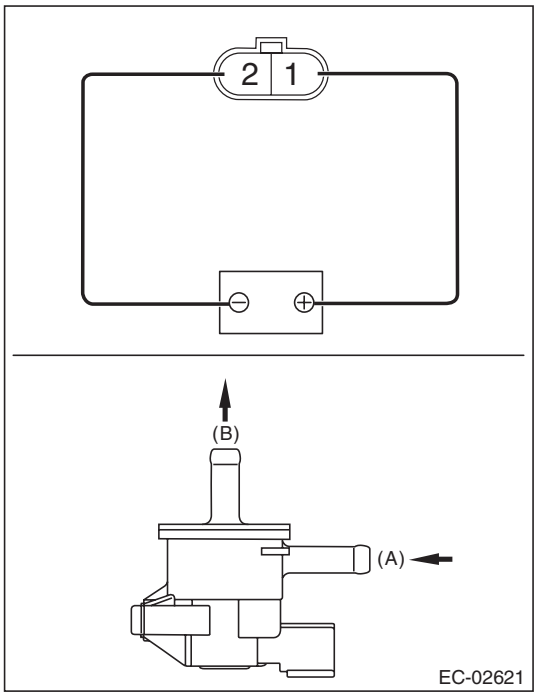

2. OTHER INSPECTIONS

Check that the evaporation hose has no cracks, damage or loose part.

GETthemanuals.org

6. EGR Valve

A: REMOVAL

For removal procedures, refer to the “FU(H4SO)” section. <Ref. to FU(H4SO)-36, REMOVAL, EGR Valve.>

B: INSTALLATION

For installation procedure, refer to “FU(H4SO)” section. <Ref. to FU(H4SO)-36, INSTALLATION, EGR Valve.>

C: INSPECTION

For inspection procedures, refer to the “FU(H4SO)” section. <Ref. to FU(H4SO)-36, INSPECTION, EGR Valve.>

GETtheMANUALS.org

7. Fuel Level Sensor

A: REMOVAL

For removal procedures, refer to the “FU(H4SO)” section. <Ref. to FU(H4SO)-67, REMOVAL, Fuel Level Sensor.>

B: INSTALLATION

For installation procedures, refer to the “FU(H4SO)” section. <Ref. to FU(H4SO)-67, INSTALLATION, Fuel Level Sensor.>

C: INSPECTION

For inspection procedures, refer to the “FU(H4SO)” section. <Ref. to FU(H4SO)-67, INSPECTION, Fuel Level Sensor.>

GETthemanuals.org

8. Fuel Temperature Sensor

A: REMOVAL

The fuel temperature sensor and fuel level sensor are integrated into one unit; therefore, refer to “Fuel Level Sensor” for removal procedure. <Ref. to FU(H4SO)-67, REMOVAL, Fuel Level Sensor.>

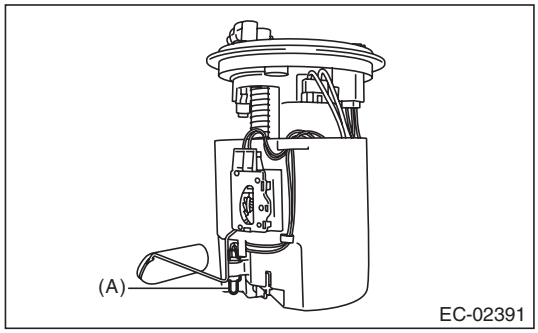

(A) Fuel temperature sensor

B: INSTALLATION

The fuel temperature sensor and fuel level sensor are integrated into one unit; therefore, refer to “Fuel Level Sensor” for installation procedure. <Ref. to FU(H4SO)-67, INSTALLATION, Fuel Level Sensor.>

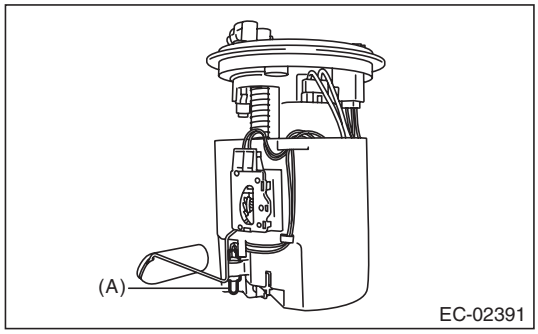

(A) Fuel temperature sensor

C: INSPECTION

1) Check that the fuel temperature sensor has no deformation, cracks or other damages.
2) Check the resistance between the fuel temperature sensor terminals.

CAUTION:
When measuring the resistance, check the circuit tester specification and be careful not to turn on electricity 3 V or more to prevent damaging the fuel temperature sensor.

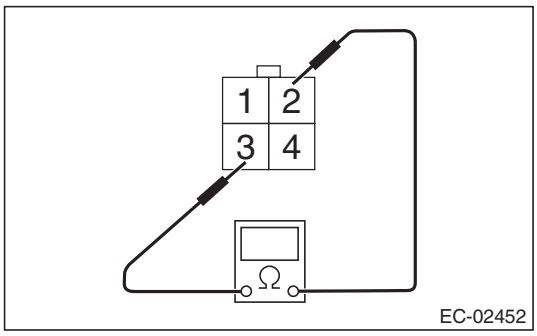

Temperature	Terminal No.	Standard
–10°C (14°F)	2 and 3	9.2±2.2 kΩ (when the measured current is 0.5 mA)
20°C (68°F)		2.5±0.2 kΩ (when the measured current is 1.0 mA)
50°C (122°F)		$0.84^{+0.06}_{-0.05}$ kΩ (when the measured current is 1.0 mA)

GETthemanuals.org

9. Fuel Sub Level Sensor

A: REMOVAL

For removal procedures, refer to the “FU(H4SO)” section. <Ref. to FU(H4SO)-69, REMOVAL, Fuel Sub Level Sensor.>

B: INSTALLATION

For installation procedures, refer to the “FU(H4SO)” section. <Ref. to FU(H4SO)-70, INSTALLATION, Fuel Sub Level Sensor.>

C: INSPECTION

For inspection procedures, refer to the “FU(H4SO)” section. <Ref. to FU(H4SO)-70, INSPECTION, Fuel Sub Level Sensor.>

GETthemanuals.org

10. Fuel Tank Pressure Sensor

A: REMOVAL

WARNING:
Place "NO OPEN FLAMES" signs near the working area.

1) Disconnect the ground cable from battery.

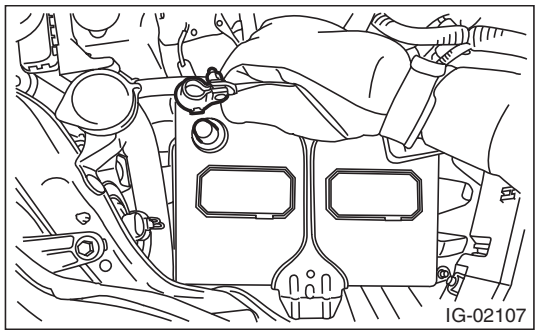

2) Open the fuel filler lid and remove the fuel filler cap.
3) Lift up the vehicle.
4) Disconnect connector (A) from fuel tank pressure sensor.
5) Pull out the vacuum hose (B) from vehicle.
6) Remove the fuel tank pressure sensor from the bracket.

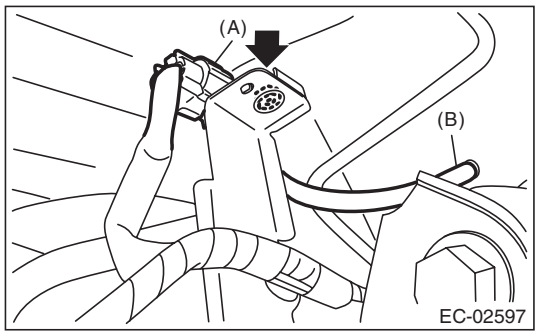

7) Disconnect the pressure hose from fuel tank pressure sensor and remove the fuel tank pressure sensor.

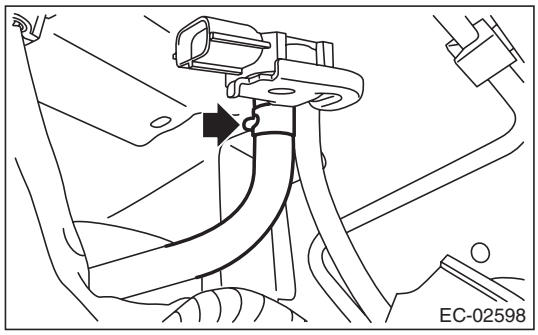

B: INSTALLATION

Install in the reverse order of removal.

Tightening torque:
7.35 N·m (0.7 kgf-m, 5.4 ft-lb)

C: INSPECTION

1. FUEL TANK PRESSURE SENSOR

1) Check that the fuel tank pressure sensor does not have deformation, cracks or other damages.
2) Connect dry-cell battery positive terminal to terminal No. 3 and dry-cell battery ground terminal to terminal No. 1, circuit tester positive terminal to terminal No. 2 and the circuit tester negative terminal to terminal No. 1.

NOTE:
- Use new dry-cell batteries.
- Using circuit tester, check the voltage of a single dry-cell battery is 1.6 V or more. And also check the voltage of three batteries in series is between 4.8 V and 5.2 V.

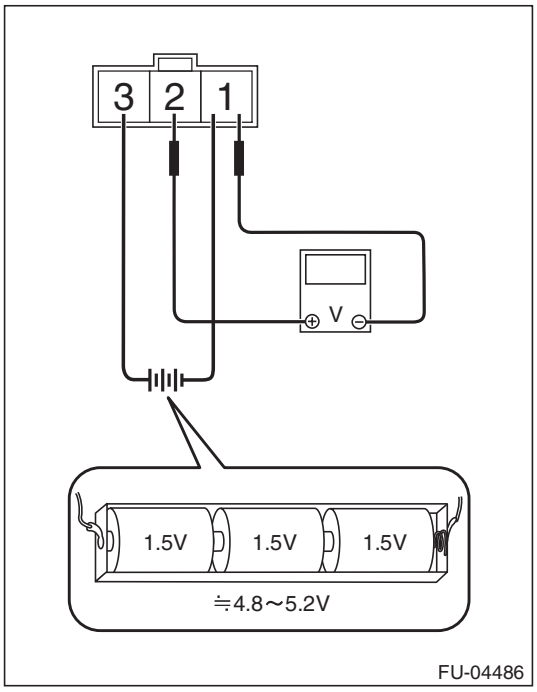

3) Check the voltage at a normal atmospheric pressure.

NOTE:
The atmospheric pressure at higher altitude is lower than normal. Therefore, the voltage is lower than the standard value.

Terminal No.	Standard
2 (+) and 1 (–)	Approx. 2.5 V (when 25°C (77°F))

GETtheMANUALS.org

4) Connect the Mighty Vac to the pressure port (A) on the fuel tank pressure sensor.

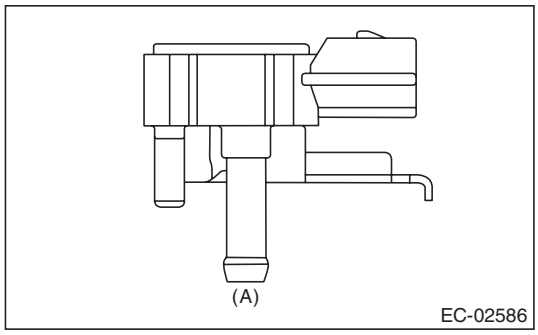

5) Check the voltage when generating vacuum and positive pressure using Mighty Vac.

CAUTION:
Be sure to apply pressure within a range of –10 — 20 kPa (–0.1 — 0.2 kgf/cm^2, –1.45 — 2.90 psi). Otherwise the fuel tank pressure sensor will be damaged.

Pressure	Terminal No.	Standard
–6.67 kPa (–0.07 kgf/cm^2, –0.97 psi)	2 (+) and 1 (–)	Approx. 0.5 V (when 25°C (77°F))
6.67 kPa (0.07 kgf/cm^2, 0.97 psi)		Approx. 4.5 V (when 25°C (77°F))

2. OTHER INSPECTIONS

Check that the hose has no cracks, damage or loose part.

GETthemanuals.org

11. Drain Filter

A: SPECIFICATION

Drain valve is a non-disassembled part, so do not remove the drain filter from drain valve. Refer to “Canister” for removal and installation procedures.
<Ref. to EC(H4SO)-5, REMOVAL, Canister.>
<Ref. to EC(H4SO)-6, INSTALLATION, Canister.>

GETthemanuals.org

12. Drain Valve

A: REMOVAL

Drain valve is integrated with canister. Refer to “Canister” for removal procedure. <Ref. to EC(H4SO)-5, REMOVAL, Canister.>

B: INSTALLATION

Refer to “Canister” for the installation procedure. <Ref. to EC(H4SO)-6, INSTALLATION, Canister.>

C: INSPECTION

Check the resistance between drain valve terminals.

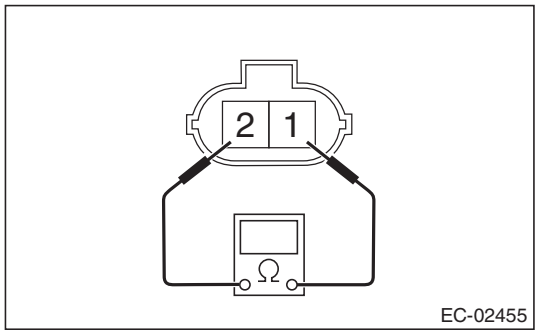

Terminal No.	Standard
1 and 2	20 — 30 Ω

GETthemanuals.org

13. PCV Hose Assembly

A: REMOVAL

CAUTION:
Do not remove except when the PCV hose is broken.

1) Remove the cover (A) and clip (B) from air intake boot assembly.

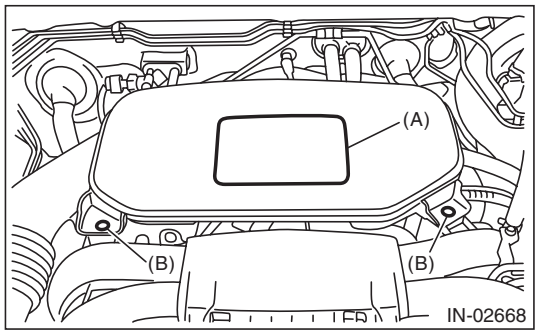

2) Loosen the clamp (A) which connects the air intake boot assembly and air cleaner case.
3) Loosen the clamp (B) which connects the air intake boot assembly and throttle body.

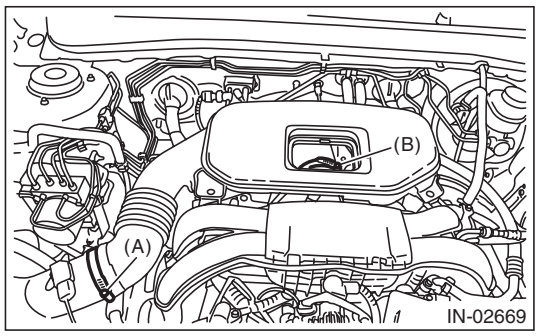

4) Remove the air intake boot from the throttle body, and move it to the left side wheel apron.

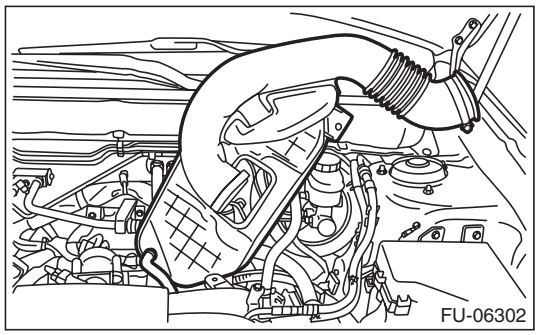

5) Disconnect the vacuum hose (A) from PCV valve, and remove the PCV hose assembly (B) from cylinder block RH and PCV pipe.

NOTE:
Pinch the clamp of the PCV hose assembly (B) by fitting the cut out in the ST with the protrusion on the clamp as shown in the figure, and unlock the clamp.
ST 18353AA000 CLAMP PLIERS

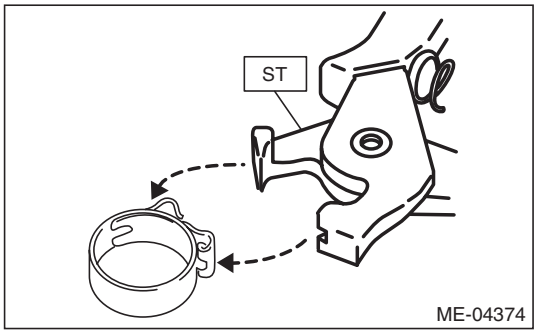

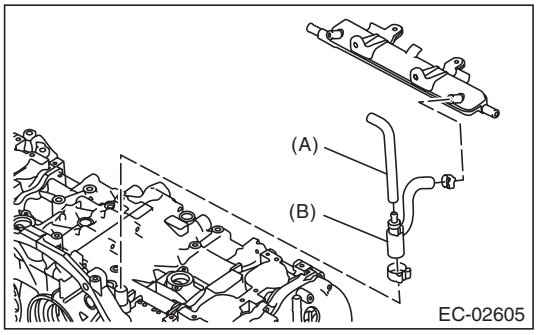

GETthemanuals.org

B: INSTALLATION

1) Install the PCV hose assembly (B) to the cylinder block RH and PCV pipe, and then connect the vacuum hose (A) to the PCV valve.

NOTE:
Use a new clamp for the PCV hose assembly (B), fit the cut out in the ST with the protrusion on the clamp as shown in the figure, and lock the clamp.
ST 18353AA000 CLAMP PLIERS

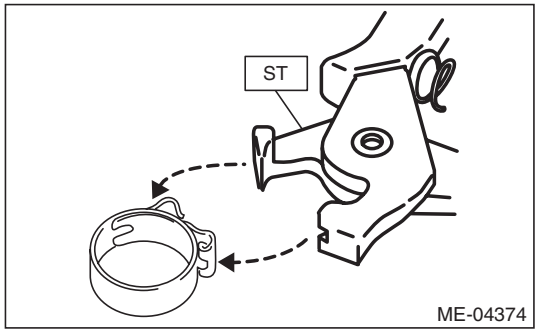

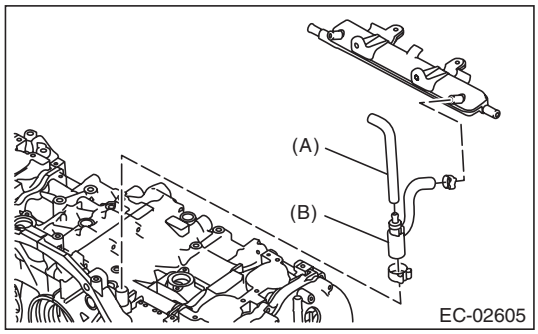

2) Install the air intake boot assembly.

NOTE:
Align the clamp hole with the protrusion of the air intake boot assembly.

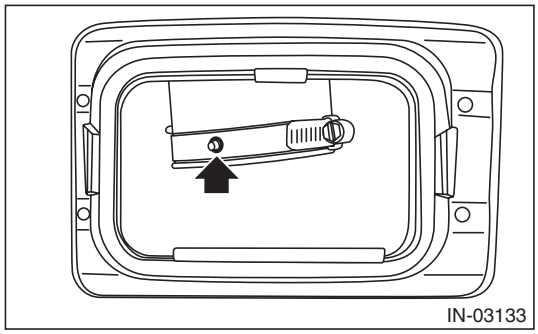

Tightening torque:
Clamp (A), (B)
3 N·m (0.3 kgf-m, 2.2 ft-lb)

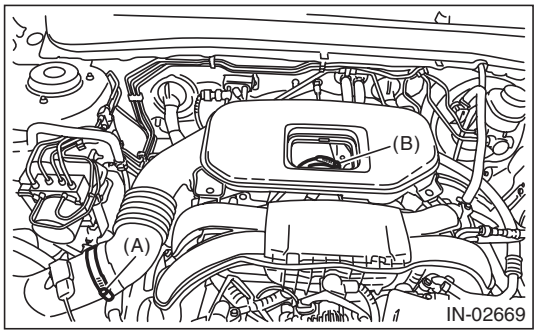

C: INSPECTION

Check the PCV hose assembly for cracks, damage or looseness.

GETthemanuals.org

14.PCV Valve

A: REMOVAL

CAUTION:
Do not remove unless the PCV valve is broken.

1) Remove the cover (A) and clip (B) from air intake boot assembly.

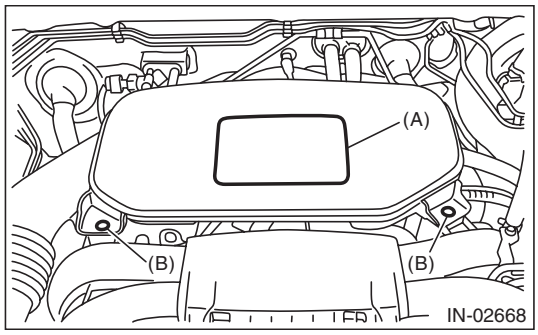

2) Loosen the clamp (A) which connects the air intake boot assembly and air cleaner case.
3) Loosen the clamp (B) which connects the air intake boot assembly and throttle body.

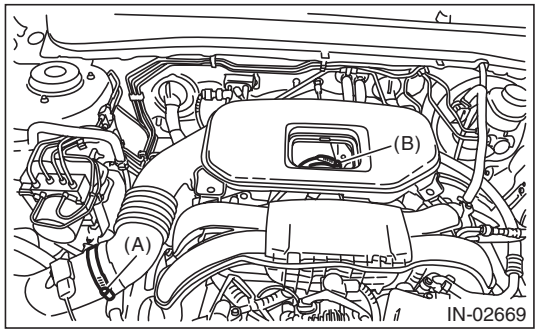

4) Remove the air intake boot from the throttle body, and move it to the left side wheel apron.

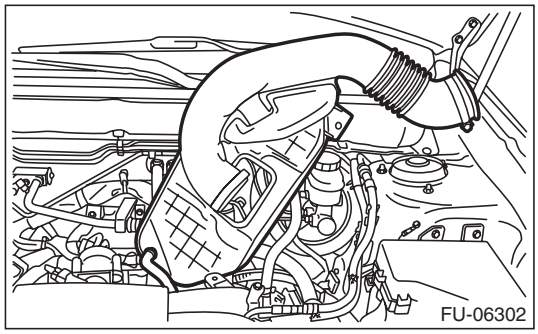

5) Disconnect the vacuum hose (A) and PCV hose (B) from the PCV valve and remove the PCV valve.

NOTE:
Pinch the clamp of the PCV hose (B) by fitting the cut out in the ST with the protrusion on the clamp as shown in the figure, and unlock the clamp.
ST 18353AA000 CLAMP PLIERS

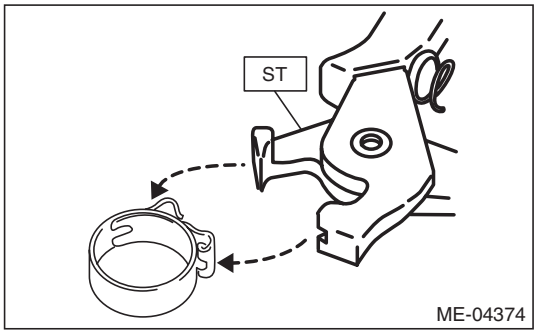

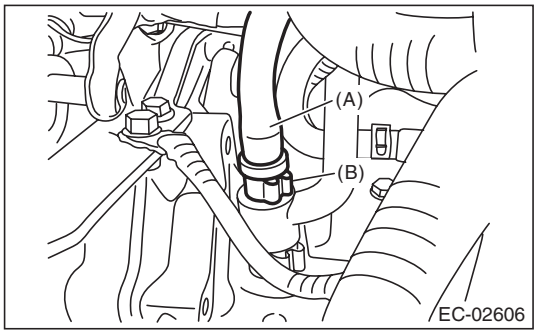

GETtheMANUALS.org

B: INSTALLATION

1) Connect the vacuum hose (A) and PCV hose (B) to the PCV valve.

NOTE:
Use a new clamp for the PCV hose (B), fit the cut out in the ST with the protrusion on the clamp as shown in the figure, and lock the clamp.
ST 18353AA000 CLAMP PLIERS

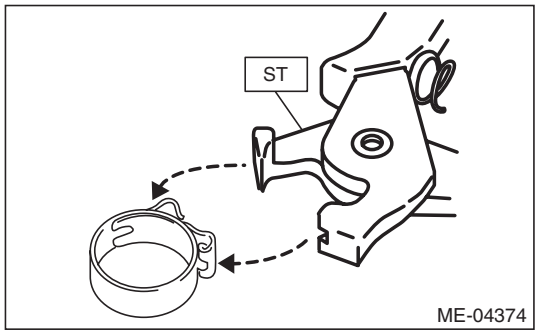

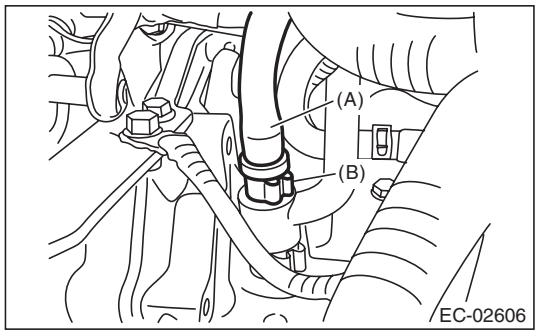

2) Install the air intake boot assembly.

NOTE:
Align the clamp hole with the protrusion of the air intake boot assembly.

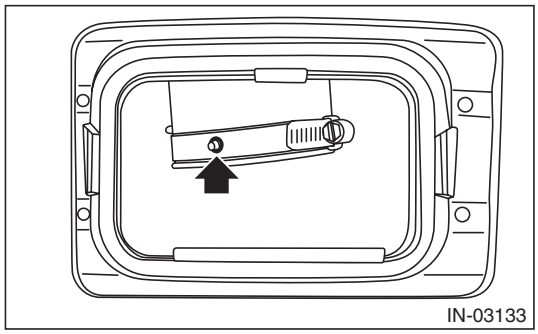

Tightening torque:
Clamp (A), (B)
3 N·m (0.3 kgf-m, 2.2 ft-lb)

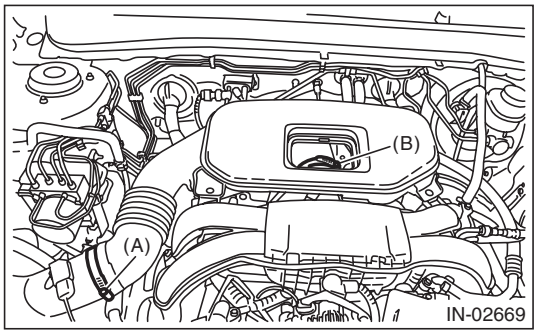

C: INSPECTION

1. PCV VALVE

1) Check that the PCV valve has no deformation, cracks or other damages.
2) Check that air is discharged from (B) when air is blown into (A).

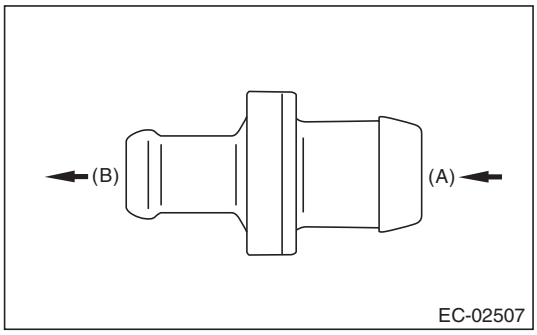

3) Check that air does not come out from (B) when air is blown into (A).

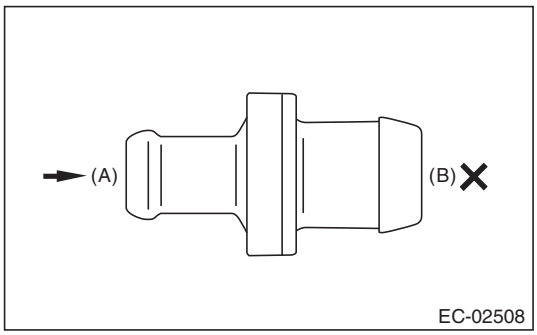

2. OTHER INSPECTIONS

Check the vacuum hose for cracks, damage or looseness.

GETthemanuals.org

GETtheMANUALS.org

INTAKE (INDUCTION)

IN(H4SO)

		Page
1.	General Description	2
2.	Air Cleaner Element	4
3.	Air Cleaner Case	6
4.	Air Intake Boot	8
5.	Air Intake Duct	9
6.	Resonator Chamber	10

GETtheMANUALS.org

1. General Description

A: COMPONENT

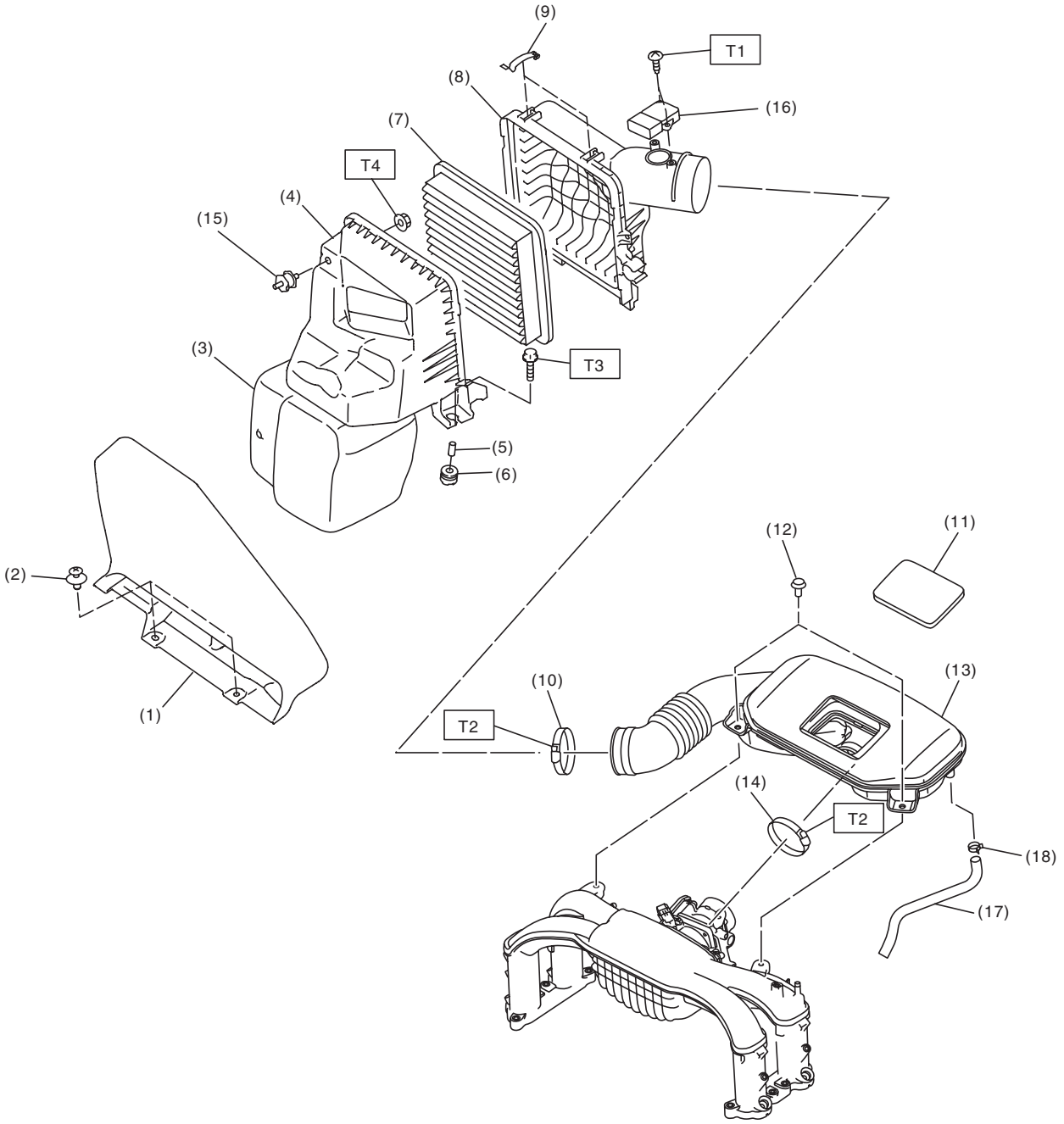

IN-03065

GETtheMANUALS.org

(1) Air intake duct
(2) Clip
(3) Resonator chamber
(4) Air cleaner case (front)
(5) Spacer
(6) Cushion
(7) Air cleaner element
(8) Air cleaner case (rear)
(9) Clip
(10) Clamp
(11) Cover
(12) Clip
(13) Air intake boot ASSY
(14) Clamp
(15) Cushion
(16) Mass air flow and intake air temperature sensor
(17) Blow-by hose
(18) Clip

Tightening torque:N·m (kgf-m, ft-lb)

T1: 1 (0.1, 0.7)
T2: 3 (0.3, 2.2)
T3: 6 (0.6, 4.4)
T4: 7.5 (0.8, 5.5)

B: CAUTION

- Wear appropriate work clothing, including a cap, protective goggles and protective shoes when performing any work.
- Remove contamination including dirt and corrosion before removal, installation or disassembly.
- Keep the disassembled parts in order and protect them from dust and dirt.
- Before removal, installation or disassembly, be sure to clarify the failure. Avoid unnecessary removal, installation, disassembly and replacement.
- Vehicle components are extremely hot after driving. Be wary of receiving burns from heated parts.
- Be sure to tighten fasteners including bolts and nuts to the specified torque.
- Place shop jacks or rigid racks at the specified points.
- Before disconnecting connectors of sensors or units, be sure to disconnect the ground cable from the battery.

GETtheMANUALS.org

2. Air Cleaner Element

A: REMOVAL

1) Disconnect the ground cable from battery.

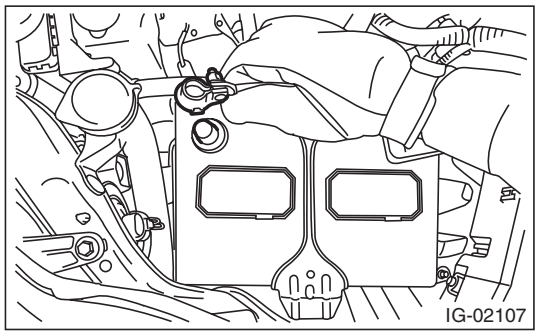

2) Disconnect the power steering oil pressure hose (suction hose) from the clip on the side of air cleaner case (rear).

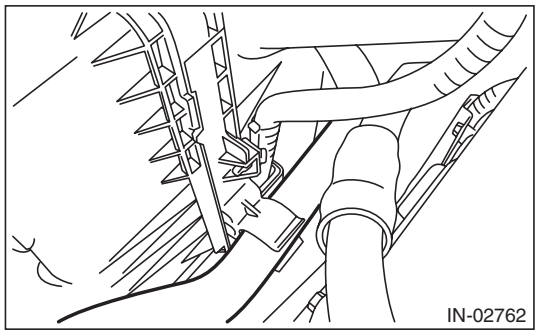

3) Disconnect the connector (A) from the mass air flow and intake air temperature sensor, and remove the clip (B).

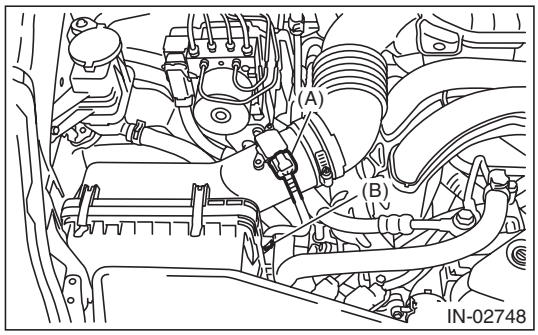

4) Loosen the clamp (A) which connects the air cleaner case (rear) and air intake boot assembly, and then remove the clip (B) from the air cleaner case (front).

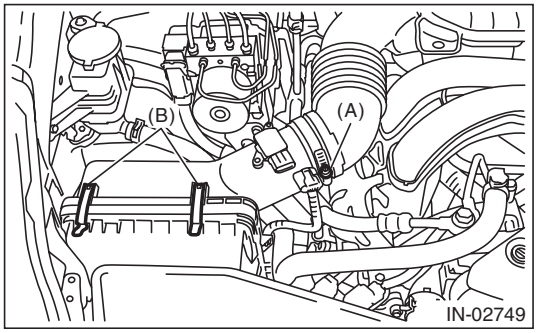

5) Pull the air cleaner case (rear) backward of the vehicle, and remove the air cleaner element.

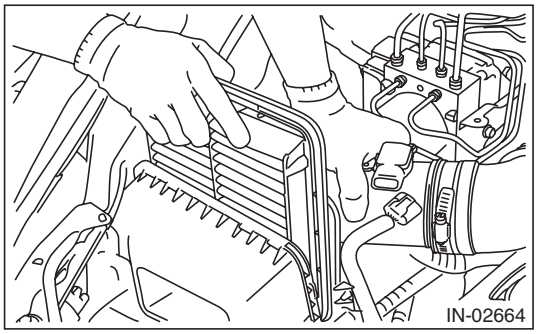

B: INSTALLATION

Install in the reverse order of removal.

CAUTION:
Be sure to use SUBARU genuine air cleaner element depending on the engine type when replacing the air cleaner elements. Using other air cleaner element may affect the engine performance.

NOTE:
- Check that there are no foreign objects in the air cleaner case.
- When installing the air cleaner case (rear), align the protrusion of the air cleaner case (rear) to the hole on the air cleaner case (front) to install.

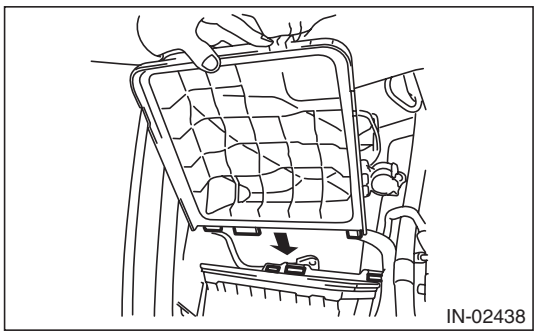

Tightening torque:
3 N·m (0.3 kgf-m, 2.2 ft-lb)

GETtheMANUALS.org

C: INSPECTION

1) Check that the air cleaner element has no deformation, cracks or other damages.
2) Check the air cleaner element for excessive dirt.

GETtheMANUALS.org

3. Air Cleaner Case

A: REMOVAL

1) Disconnect the ground cable from battery.

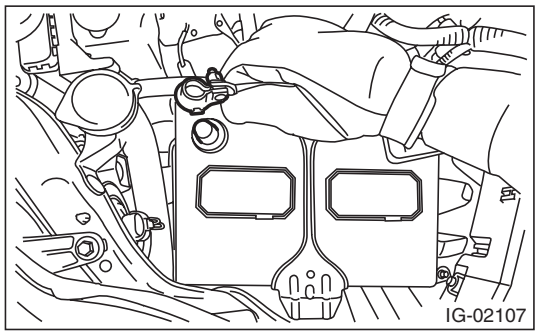

2) Remove the air intake duct. <Ref. to IN(H4SO)-9, REMOVAL, Air Intake Duct.>

3) Disconnect the power steering oil pressure hose (suction hose) from the clip on the side of air cleaner case (rear).

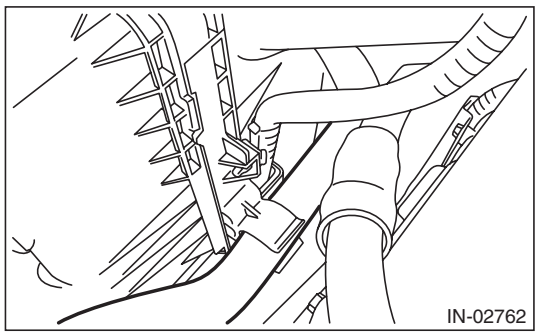

4) Disconnect the connector (A) from the mass air flow and intake air temperature sensor, and remove the clip (B).

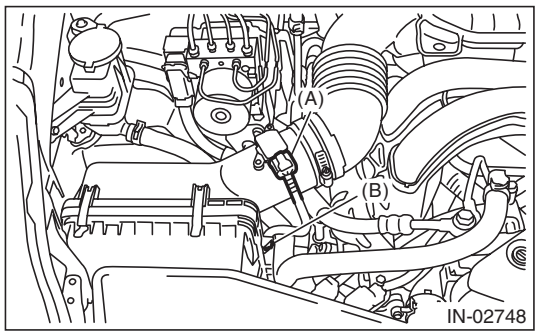

5) Loosen the clamp (A) which connects the air cleaner case (rear) and air intake boot assembly, and then remove the clip (B) from the air cleaner case (front).

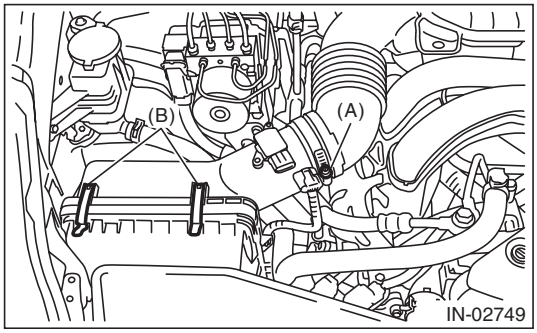

6) Remove the air cleaner case (rear) and air cleaner element.

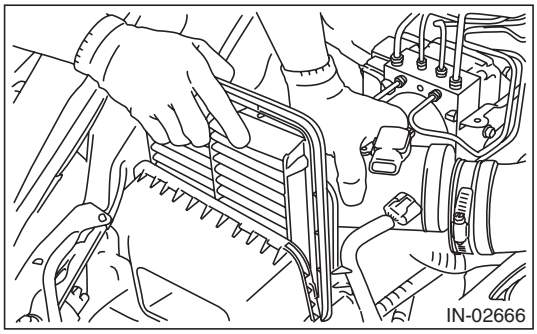

7) Remove bolts (A) and nuts (B) which secure the air cleaner case (front) to the body, and remove the air cleaner case (front).

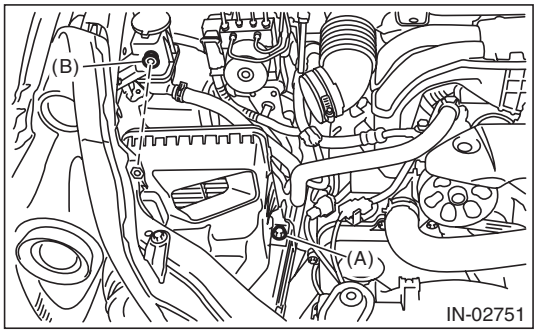

GETtheMANUALS.org

B: INSTALLATION

1) Install the bolt (A) and nut (B) which secure the air cleaner case (front) to the body.

Tightening torque:
Bolt (A)
6 N·m (0.6 kgf-m, 4.4 ft-lb)
Nut (B)
7.5 N·m (0.8 kgf-m, 5.5 ft-lb)

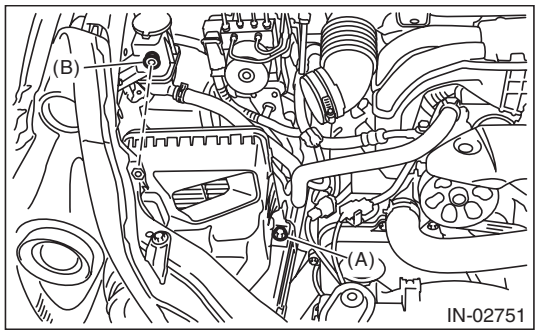

2) Install the air cleaner case (rear) and air cleaner element.

NOTE:
When installing the air cleaner case (rear), align the protrusion of the air cleaner case (rear) to the hole on the air cleaner case (front) to install.

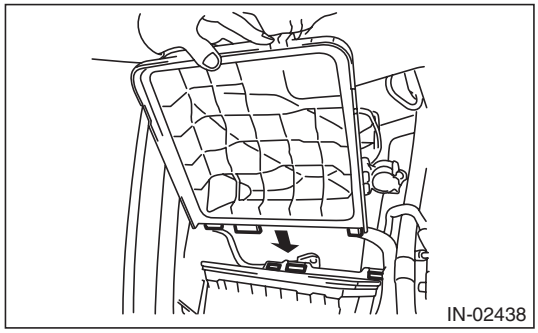

3) Attach the clip (B) to the air cleaner case (front), and tighten the clamp (A) connecting the air cleaner case (rear) and air intake boot assembly.

Tightening torque:
Clamp (A)
3 N·m (0.3 kgf-m, 2.2 ft-lb)

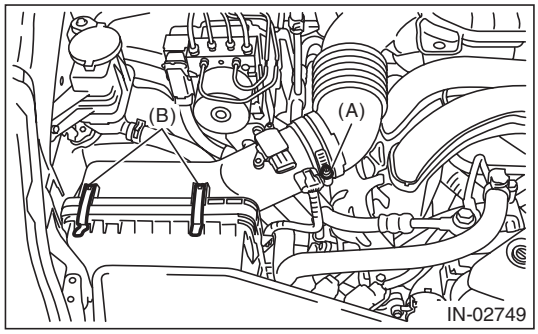

4) Connect the connector (A) to the mass air flow and intake air temperature sensor and secure the harness with clip (B).

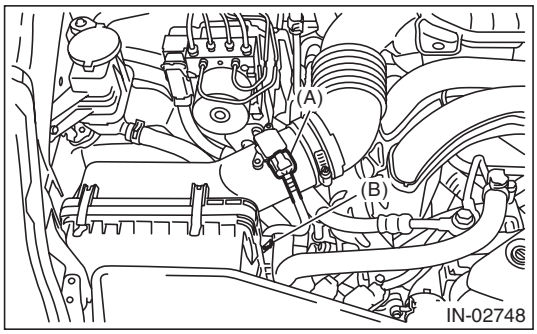

5) Connect the power steering oil pressure hose (suction hose) to the clip on the side of air cleaner case (rear).

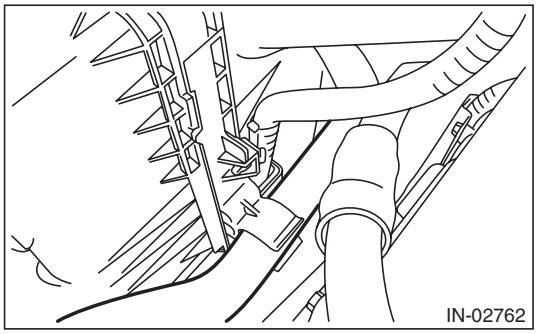

6) Install the air intake duct. <Ref. to IN(H4SO)-9, INSTALLATION, Air Intake Duct.>
7) Connect the battery ground terminal.

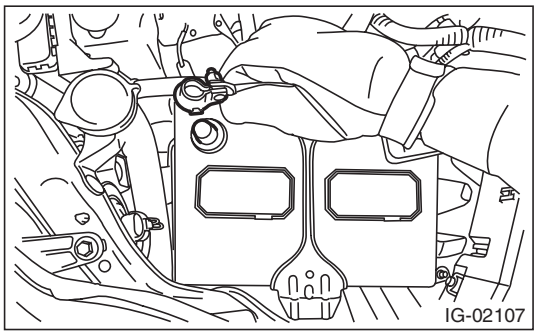

C: INSPECTION

1) Check that the air cleaner case has no deformation, cracks or other damages.
2) Check that the air intake boot has no cracks, damage or loose part.

GETtheMANUALS.org

4. Air Intake Boot

A: REMOVAL

1) Remove the cover (A) and clip (B) from air intake boot assembly.

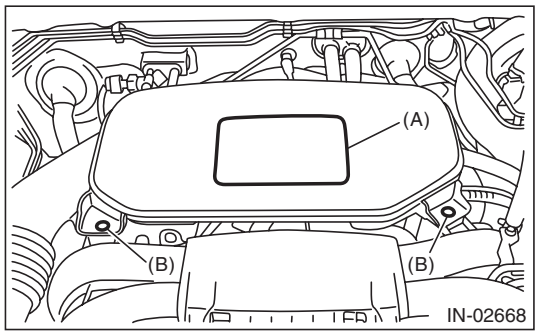

2) Loosen the clamp (A) which connects the air intake boot assembly and air cleaner case.
3) Loosen the clamp (B) which connects the air intake boot assembly and throttle body.

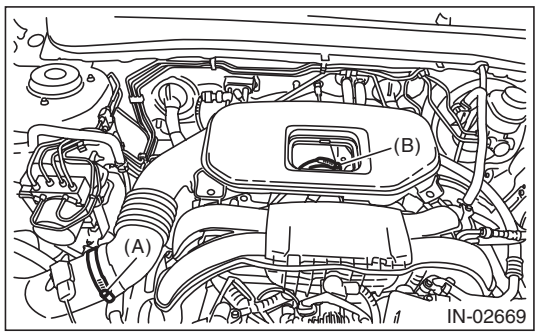

4) Disconnect the blow-by hose and remove the air intake boot assembly.

B: INSTALLATION

Install in the reverse order of removal.

NOTE:
Align the clamp hole with the protrusion of the air intake boot assembly.

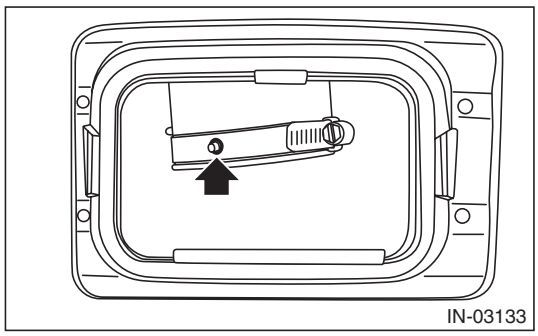

Tightening torque:
3 N·m (0.3 kgf-m, 2.2 ft-lb)

C: INSPECTION

1) Check that the air intake boot assembly does not have deformation, cracks or other damages.
2) Check there is no foreign matter in the air intake boot assembly.

GETtheMANUALS.org

5. Air Intake Duct

A: REMOVAL

1) Remove the clip which secures the air intake duct, and remove the air intake duct.

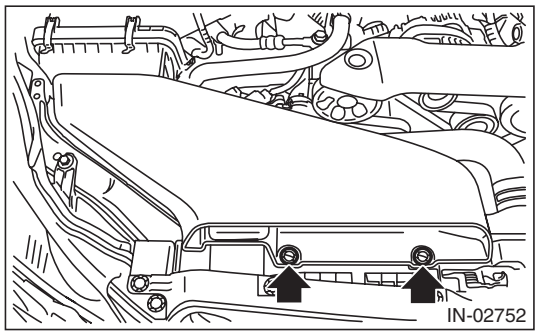

B: INSTALLATION

Install in the reverse order of removal.

C: INSPECTION

1) Check that the air intake duct has no deformation, cracks or other damages.
2) Inspect that no foreign objects are mixed in the air intake duct.

GETtheMANUALS.org

6. Resonator Chamber

A: REMOVAL

The resonator chamber and air cleaner case are integrated into one unit; therefore, refer to “Air Cleaner Case” for removal procedure. <Ref. to IN(H4SO)-6, REMOVAL, Air Cleaner Case.>

B: INSTALLATION

The resonator chamber and air cleaner case are integrated into one unit; therefore, refer to “Air Cleaner Case” for installation procedure. <Ref. to IN(H4SO)-7, INSTALLATION, Air Cleaner Case.>

C: INSPECTION

Check that the resonator chamber has no deformation, cracks or other damages.

GETtheMANUALS.org

MECHANICAL

ME(H4SO)

		Page
1.	General Description	2
2.	Compression	23
3.	Idle Speed	24
4.	Ignition Timing	25
5.	Intake Manifold Vacuum	26
6.	Engine Oil Pressure	27
7.	Fuel Pressure	28
8.	Valve Clearance	29
9.	Engine Assembly	31
10.	Engine Mounting	39
11.	Preparation for Overhaul	42
12.	V-belt	43
13.	Crank Pulley	45
14.	Timing Belt Cover	47
15.	Timing Belt	48
16.	Cam Sprocket	53
17.	Crank Sprocket	54
18.	Valve Rocker Assembly	55
19.	Camshaft	58
20.	Cylinder Head	63
21.	Cylinder Block	71
22.	Oil Switching Solenoid Valve	95
23.	Intake and Exhaust Valve	98
24.	Piston	99
25.	Connecting Rod	100
26.	Crankshaft	101
27.	Engine Trouble in General	102
28.	Engine Noise	108

GETtheMANUALS.org

1. General Description

A: SPECIFICATION

Engine	Model			2.5 L
	Cylinder arrangement			Horizontally opposed, liquid cooled, 4-cylinder, 4-stroke gasoline engine
	Valve system mechanism			Belt driven, single overhead camshaft, 4 valve/cylinder
	Bore × Stroke mm (in)			99.5 × 79.0 (3.92 × 3.11)
	Displacement cm^3 (cu in)			2,457 (149.94)
	Compression ratio			10.0
	Compression pressure (at 200 — 300 rpm) kPa (kg/cm^2, psi)		Standard	1,020 — 1,275 (10.4 — 13.0, 148 — 185)
	Number of piston rings			Pressure ring: 2, Oil ring: 1
	Intake valve timing	Constant	Open	BTDC 0°
			Close	ABDC 58°
		Low speed	Open	BTDC 0°
			Close	ABDC –10°
		High speed	Open	BTDC 14°
			Close	ABDC 62°
	Exhaust valve timing		Open	BBDC30°
			Close	ATDC14°
	Valve clearance mm (in)	Intake		0.20±0.04 (0.0079±0.0016)
		Exhaust		0.25±0.04 (0.0098±0.0016)
	Idle speed (For CVT model, select lever in “P” or “N” range. For MT model, gear shift lever in neutral position.) rpm	No load	Standard	CVT model: 675±100 MT model: 650±100
		A/C ON	Standard	700 — 850±100
	Ignition order			1 → 3 → 2 → 4
	Ignition timing BTDC/rpm		Standard	CVT model: 15°±10°/675 MT model: 10°±10°/650

GETtheMANUALS.org

NOTE:
US: Undersize OS: Oversize

Belt tension adjuster	Adjuster rod protrusion amount			mm (in)	5.2 — 6.2 (0.205 — 0.244)
Valve rocker arm	Clearance between arm and shaft			mm (in) Standard	0.020 — 0.054 (0.0008 — 0.0021)
	Rocker arm inside diameter			mm (in) Standard	22.020 — 22.041 (0.8669 — 0.8678)
	Rocker shaft diameter			mm (in) Standard	21.987 — 22.000 (0.8656 — 0.8661)
Camshaft	Bending limit			mm (in)	0.025 (0.00098)
	Cam lobe height mm (in)	Intake	Constant	Standard	40.075 — 40.175 (1.5778 — 1.5817)
			Low speed	Standard	35.496 — 35.596 (1.3975 — 1.4014)
			High speed	Standard	40.315 — 40.415 (1.5872 — 1.5911)
		Exhaust		Standard	39.289 — 39.389 (1.5468 — 1.5507)
	Cam base circle diameter			mm (in) Standard	34.00 (1.3386)
	Base circle step of adjacent intake cams (low speed and high speed)			mm (in) Standard	0.03 (0.001) or less
	Oil clearance			mm (in) Standard	0.055 — 0.090 (0.0022 — 0.0035)
	Journal O.D.			mm (in) Standard	31.928 — 31.945 (1.2570 — 1.2577)
	Cylinder head journal I.D.			mm (in) Standard	32.000 — 32.018 (1.2598 — 1.2605)
	Thrust clearance			mm (in) Standard	0.030 — 0.090 (0.0012 — 0.0035)
Cylinder head	Warping limit (mating surface with cylinder block)			mm (in)	0.035 (0.0014)
	Grinding limit			mm (in)	0.1 (0.004)
	Standard height			mm (in)	97.5 (3.84)
Valve seat	Seating angle between valve and valve seat				90°
	Contacting width between valve and valve seat mm (in)		Intake	Standard	0.8 — 1.4 (0.03 — 0.055)
			Exhaust	Standard	1.2 — 1.8 (0.047 — 0.071)
Valve guide	Clearance between the valve guide and valve stem mm (in)		Intake	Standard	0.035 — 0.062 (0.0014 — 0.0024)
			Exhaust	Standard	0.040 — 0.067 (0.0016 — 0.0026)
	Inside diameter			mm (in)	6.000 — 6.012 (0.2362 — 0.2367)
	Valve stem outer diameters			mm (in) Intake	5.950 — 5.965 (0.2343 — 0.2348)
				Exhaust	5.945 — 5.960 (0.2341 — 0.2346)
	Valve guide protrusion amount			mm (in) Intake	20.3 — 20.7 (0.799 — 0.815)
				Exhaust	16.8 — 17.2 (0.661 — 0.677)
Valve	Head edge thickness mm (in)		Intake	Standard	0.8 — 1.2 (0.03 — 0.047)
			Exhaust	Standard	1.0 — 1.4 (0.039 — 0.055)
	Overall length			mm (in) Intake	120.6 (4.75)
				Exhaust	121.7 (4.79)
Valve spring	Free length			mm (in)	55.2 (2.173)
	Tension/spring height			N (kgf, lb)/mm (in) Set	235.3 — 270.7 (24 — 27.6, 52.9 — 60.8)/ 45.0 (1.772)
				Lift	578.9 — 639.9 (59.1 — 65.3, 130.3 — 143.9)/34.7 (1.366)
	Squareness				2.5°, 2.4 mm (0.094 in) or less
Cylinder block	Warping limit (mating surface with cylinder head)			mm (in)	0.025 (0.00098)
	Grinding limit			mm (in)	0.1 (0.004)
	Standard height			mm (in)	201.0 (7.91)
	Cylindricality			mm (in) Limit	0.015 (0.0006)
	Out-of-roundness			mm (in) Limit	0.010 (0.0004)
	Clearance between cylinder and piston at 20°C (68°F)			mm (in) Standard	–0.015 — 0.005 (–0.00059 — 0.00020)
	Cylinder inner diameter boring limit (diameter)			mm (in)	To 100.005 (3.9372)

GETthemANUALS.org

Piston	Piston grade point mm (in)			38.2 (1.504)
	Outer diameter mm (in)	Standard	A	99.510 — 99.520 (3.9177 — 3.9181)
			B	99.500 — 99.510 (3.9173 — 3.9177)
		0.25 (0.0098) OS		99.750 — 99.770 (3.9272 — 3.9280)
		0.50 (0.0197) OS		100.000 — 100.020 (3.9370 — 3.9378)
Piston pin	Degree of fit			Piston pin must be fitted into position with thumb at 20°C (68°F).
	Clearance between piston pin hole and piston pin mm (in)		Standard	0.004 — 0.008 (0.0002 — 0.0003)
Piston ring	Piston ring gap mm (in)	Top ring	Standard	0.20 — 0.35 (0.0079 — 0.0138)
		Second ring	Standard	0.37 — 0.52 (0.0146 — 0.0205)
		Oil ring	Standard	0.20 — 0.50 (0.0079 — 0.0197)
	Clearance between piston ring and piston ring groove mm (in)	Top ring	Standard	0.040 — 0.080 (0.0016 — 0.0031)
		Second ring	Standard	0.030 — 0.070 (0.0012 — 0.0028)
Connecting rod and connecting rod bearing	Bend or twist per 100 mm (3.94 in) in length mm (in)		Limit	0.10 (0.0039)
	Thrust clearance mm (in)		Standard	0.070 — 0.330 (0.0028 — 0.0130)
	Oil clearance mm (in)		Standard	0.016 — 0.044 (0.0006 — 0.0017)
	Bearing size (Thickness at center) mm (in)	Standard		1.492 — 1.501 (0.0587 — 0.0591)
		0.03 (0.0012) US		1.510 — 1.513 (0.0594 — 0.0596)
		0.05 (0.0020) US		1.520 — 1.523 (0.0598 — 0.0600)
		0.25 (0.0098) US		1.620 — 1.623 (0.0638 — 0.0639)
Bushing of small end	Clearance between piston pin and bushing mm (in)		Standard	0 — 0.022 (0 — 0.0009)
Crankshaft and crankshaft bearing	Bending limit mm (in)			0.035 (0.0014)
	Crank pin	Cylindricality mm (in)	Limit	0.004 (0.0002)
		Out-of-roundness mm (in)	Limit	0.003 (0.0001)
		Grinding limit (dia.) mm (in)		To 51.750 (2.0374)
	Crank journal	Cylindricality mm (in)	Limit	0.006 (0.0002)
		Out-of-roundness mm (in)	Limit	0.005 (0.0002)
		Grinding limit (dia.) mm (in)		To 59.758 (2.3527)
	Crank pin outer diameter mm (in)	Standard		51.984 — 52.000 (2.0466 — 2.0472)
		0.03 (0.0012) US		51.954 — 51.970 (2.0454 — 2.0461)
		0.05 (0.0020) US		51.934 — 51.950 (2.0446 — 2.0453)
		0.25 (0.0098) US		51.734 — 51.750 (2.0368 — 2.0374)
	Crank journal outer diameter mm (in)	Standard		59.992 — 60.008 (2.3619 — 2.3625)
		0.03 (0.0012) US		59.962 — 59.978 (2.3607 — 2.3613)
		0.05 (0.0020) US		59.942 — 59.958 (2.3599 — 2.3605)
		0.25 (0.0098) US		59.742 — 59.758 (2.3520 — 2.3527)
	Bearing size (Thickness at center) mm (in)	#1, #3	Standard	1.998 — 2.011 (0.0787 — 0.0792)
			0.03 (0.0012) US	2.017 — 2.020 (0.0794 — 0.0795)
			0.05 (0.0020) US	2.027 — 2.030 (0.0798 — 0.0799)
			0.25 (0.0098) US	2.127 — 2.130 (0.0837 — 0.0839)
		#2, #4, #5	Standard	2.000 — 2.013 (0.0787 — 0.0793)
			0.03 (0.0012) US	2.019 — 2.022 (0.0795 — 0.0796)
			0.05 (0.0020) US	2.029 — 2.032 (0.0799 — 0.0800)
			0.25 (0.0098) US	2.129 — 2.132 (0.0838 — 0.0839)
	Thrust clearance mm (in)		Standard	0.030 — 0.115 (0.0012 — 0.0045)
	Oil clearance mm (in)		Standard	0.010 — 0.030 (0.0004 — 0.0012)

GETthemANUALS.org

B: COMPONENT

1. V-BELT

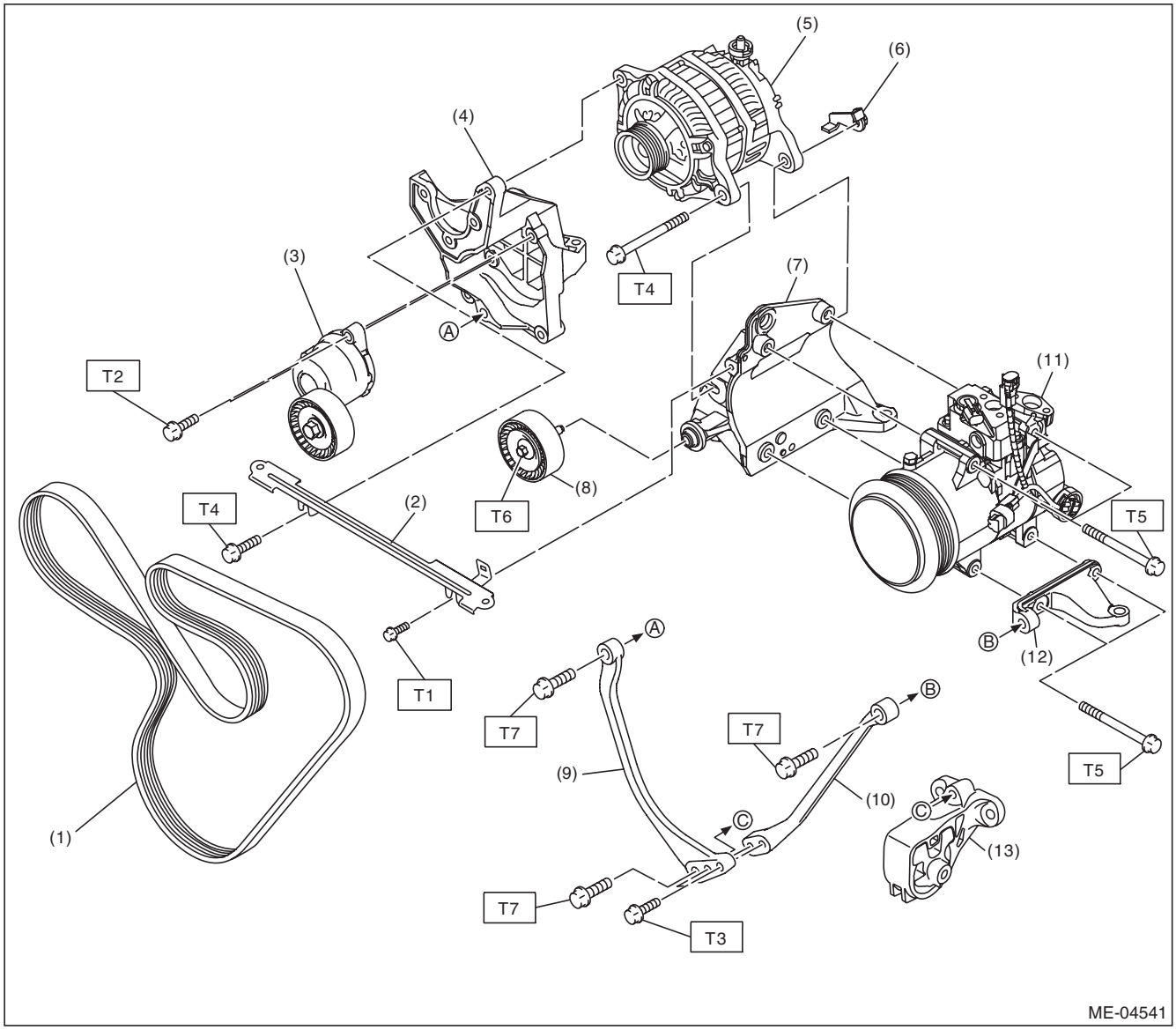

(1)	V-belt	(8)	Idler pulley ASSY
(2)	V-belt cover bracket	(9)	Stopper rod RH
(3)	V-belt tensioner ASSY	(10)	Stopper rod LH
(4)	Power steering pump bracket	(11)	A/C compressor
(5)	Generator	(12)	A/C compressor bracket B
(6)	Generator plate	(13)	Front cushion rubber
(7)	A/C compressor bracket A		

Tightening torque:N·m (kgf-m, ft-lb)

T1: 6.4 (0.7, 4.7)
T2: 20 (2.0, 14.8)
T3: 22 (2.2, 16.2)
T4: 25 (2.5, 18.4)
T5: 26.5 (2.7, 19.5)
T6: 33 (3.4, 24.3)
T7: 36 (3.7, 26.6)

GETthemANUALS.org

2. TIMING BELT

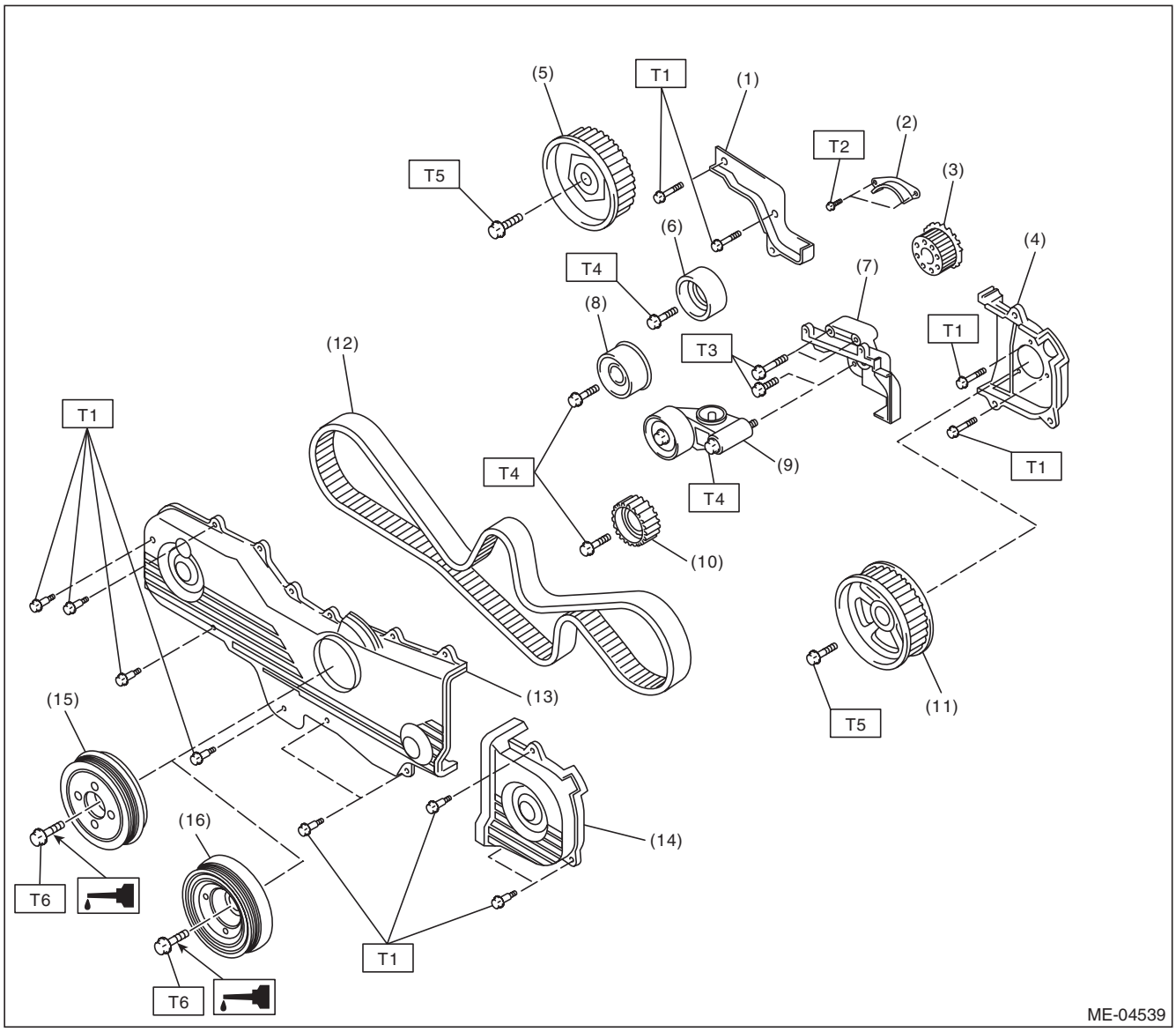

(1)	Timing belt cover No. 2 RH	(9)	Automatic belt tension adjuster ASSY
(2)	Timing belt guide (MT model)	(10)	Belt idler No. 2
(3)	Crank sprocket	(11)	Cam sprocket No. 2
(4)	Timing belt cover No. 2 LH	(12)	Timing belt
(5)	Cam sprocket No. 1	(13)	Front timing belt cover
(6)	Belt idler (A)	(14)	Timing belt cover LH
(7)	Tensioner bracket	(15)	Crank pulley (MT model)
(8)	Belt idler (B)	(16)	Crank pulley (CVT model)

Tightening torque:N·m (kgf-m, ft-lb)

T1: 5 (0.5, 3.7)
T2: 9.75 (1.0, 7.2)
T3: 24.5 (2.5, 18.1)
T4: 39 (4.0, 28.8)
T5: 78 (8.0, 57.5)
T6: <Ref. to ME(H4SO)-45, INSTALLATION, Crank Pulley.>

GETthemANUALS.org

3. CYLINDER HEAD AND CAMSHAFT

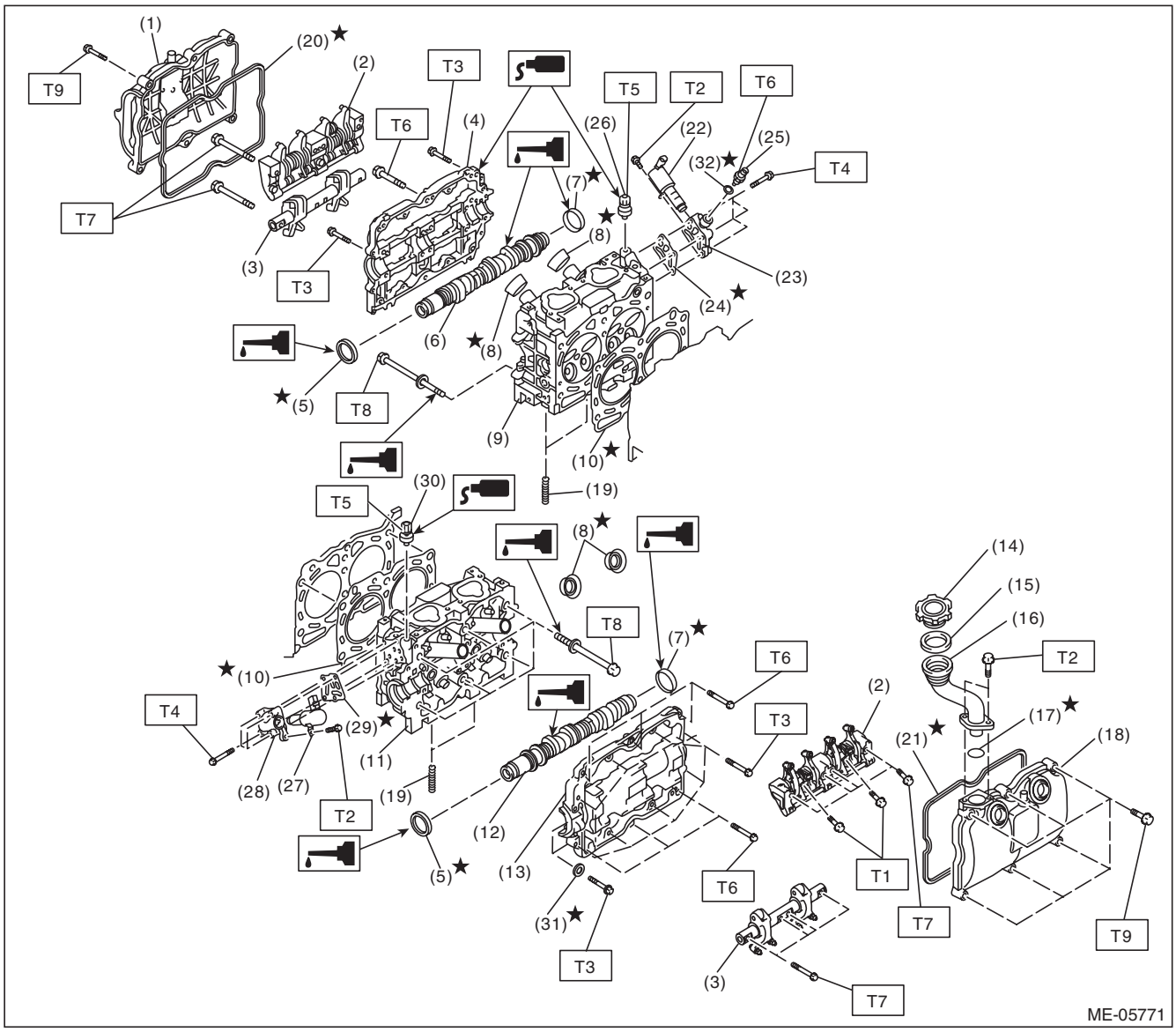

GETtheMANUALS.org

(1) Rocker cover RH
(2) Intake valve rocker ASSY
(3) Exhaust valve rocker ASSY
(4) Camshaft cap RH
(5) Oil seal
(6) Camshaft RH
(7) Plug
(8) Spark plug pipe gasket
(9) Cylinder head RH
(10) Cylinder head gasket
(11) Cylinder head LH
(12) Camshaft LH
(13) Camshaft cap LH
(14) Oil filler cap
(15) Gasket
(16) Oil filler duct
(17) O-ring
(18) Rocker cover LH
(19) Stud bolt
(20) Rocker cover gasket RH
(21) Rocker cover gasket LH
(22) Oil switching solenoid valve RH
(23) Oil switching solenoid valve holder RH
(24) Gasket
(25) Oil temperature sensor
(26) Variable valve lift diagnosis oil pressure switch RH
(27) Oil switching solenoid valve LH
(28) Oil switching solenoid valve holder LH
(29) Gasket
(30) Variable valve lift diagnosis oil pressure switch LH
(31) Seal washer
(32) Washer

Tightening torque:N·m (kgf-m, ft-lb)	
T1:	***6 (0.6, 4.4)***
T2:	***6.4 (0.7, 4.7)***
T3:	***9.75 (1.0, 7.2)***
T4:	***10 (1.0, 7.4)***
T5:	***17 (1.7, 12.5)***
T6:	***18 (1.8, 13.3)***
T7:	***25 (2.5, 18.4)***
T8:	***<Ref. to ME(H4SO)-63, INSTALLATION, Cylinder Head.>***
T9:	***<Ref. to ME(H4SO)-55, INSTALLATION, Valve Rocker Assembly.>***

GETtheMANUALS.org

4. VALVE ROCKER ASSY

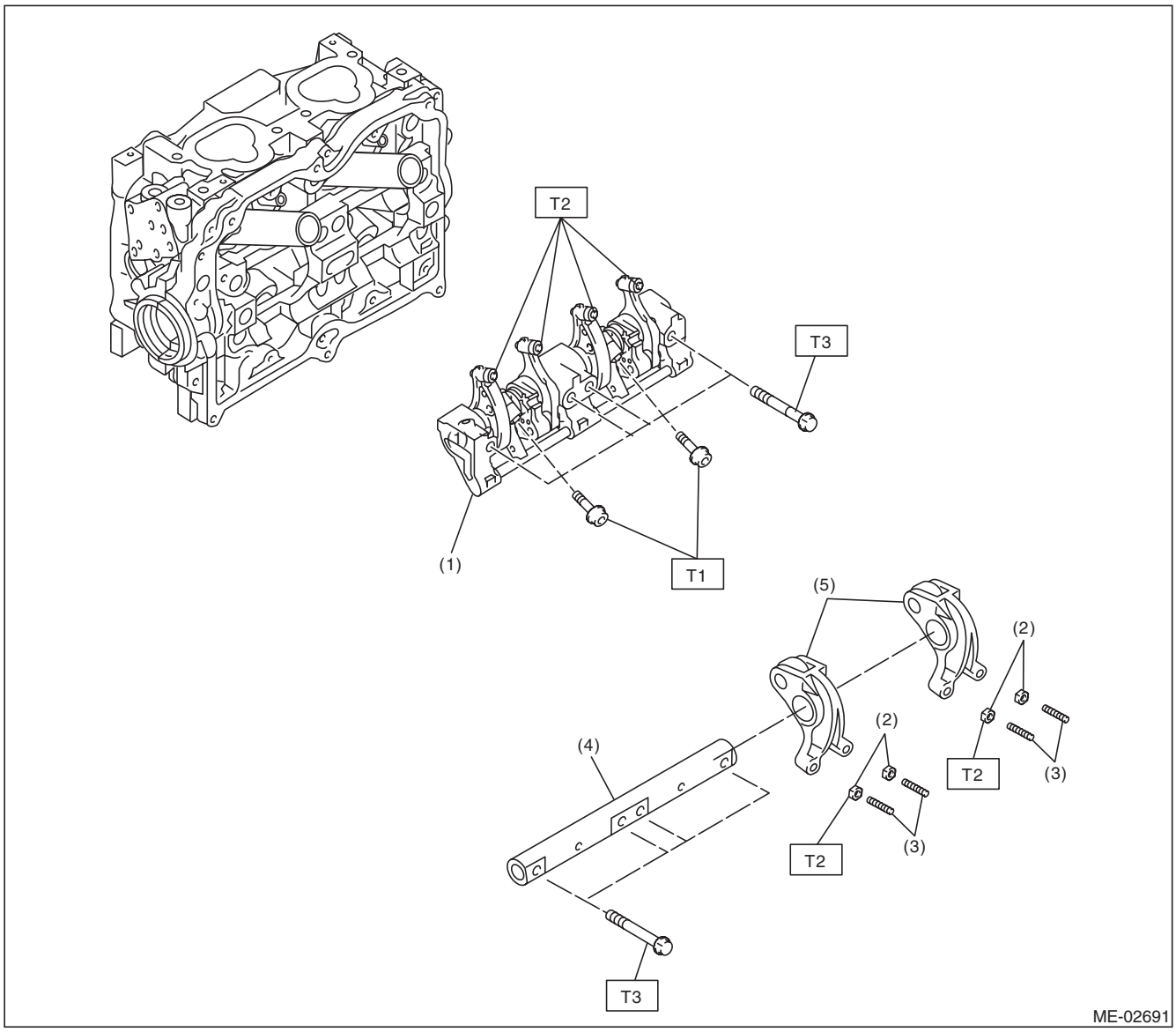

(1) Intake valve rocker ASSY
(2) Valve rocker nut
(3) Valve rocker adjusting screw
(4) Exhaust rocker shaft
(5) Exhaust valve rocker arm

Tightening torque:N·m (kgf-m, ft-lb)
T1: 6 (0.6, 4.4)
T2: 9.75 (1.0, 7.2)
T3: 25 (2.5, 18.4)

GETtheMANUALS.org

5. CYLINDER HEAD AND VALVE ASSEMBLY

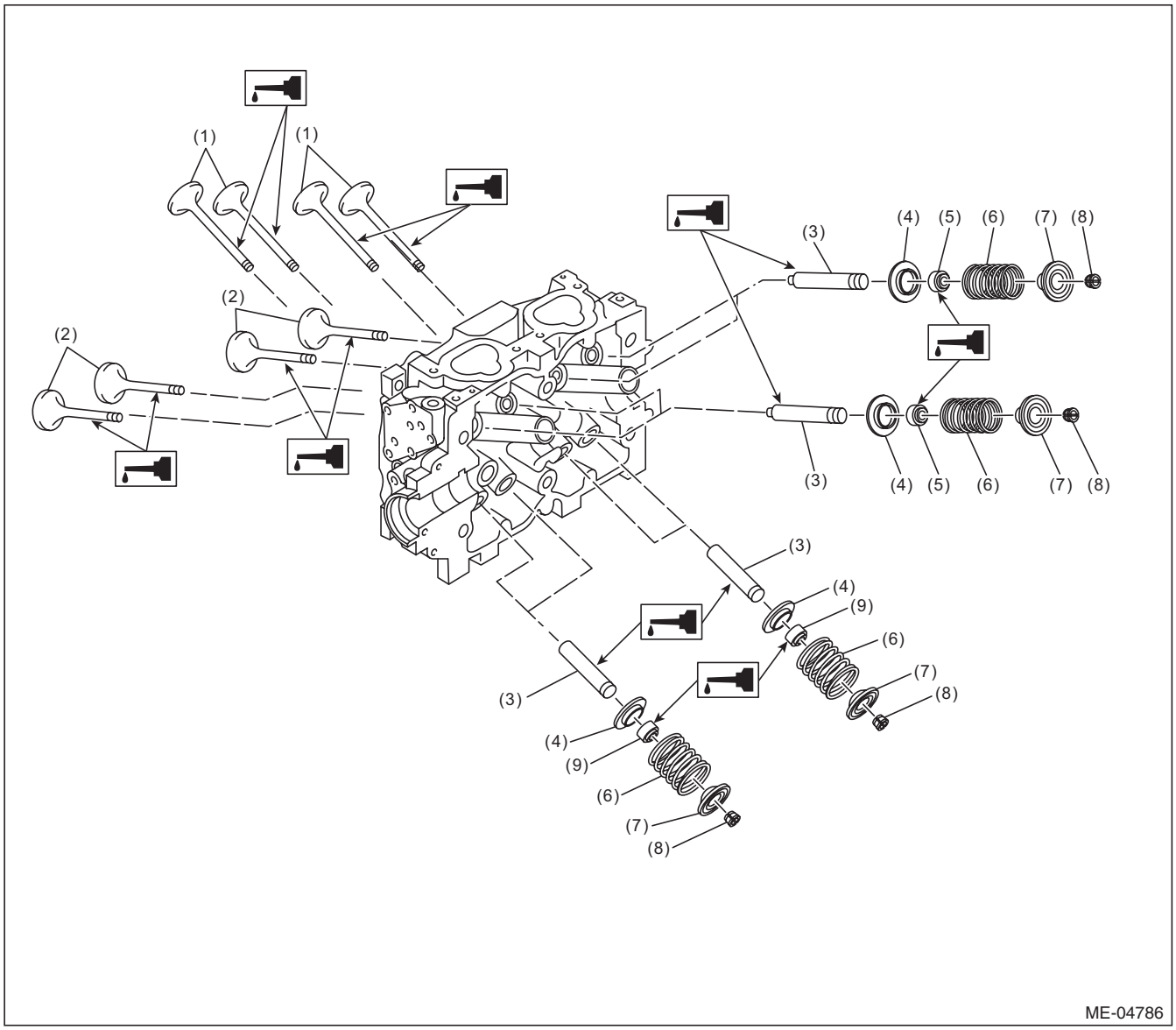

(1)	Exhaust valve	(4)	Valve spring seat	(7)	Valve spring retainer
(2)	Intake valve	(5)	Intake valve oil seal	(8)	Valve spring retainer key
(3)	Valve guide	(6)	Valve spring	(9)	Exhaust valve oil seal

GETtheMANUALS.org

6. CYLINDER BLOCK

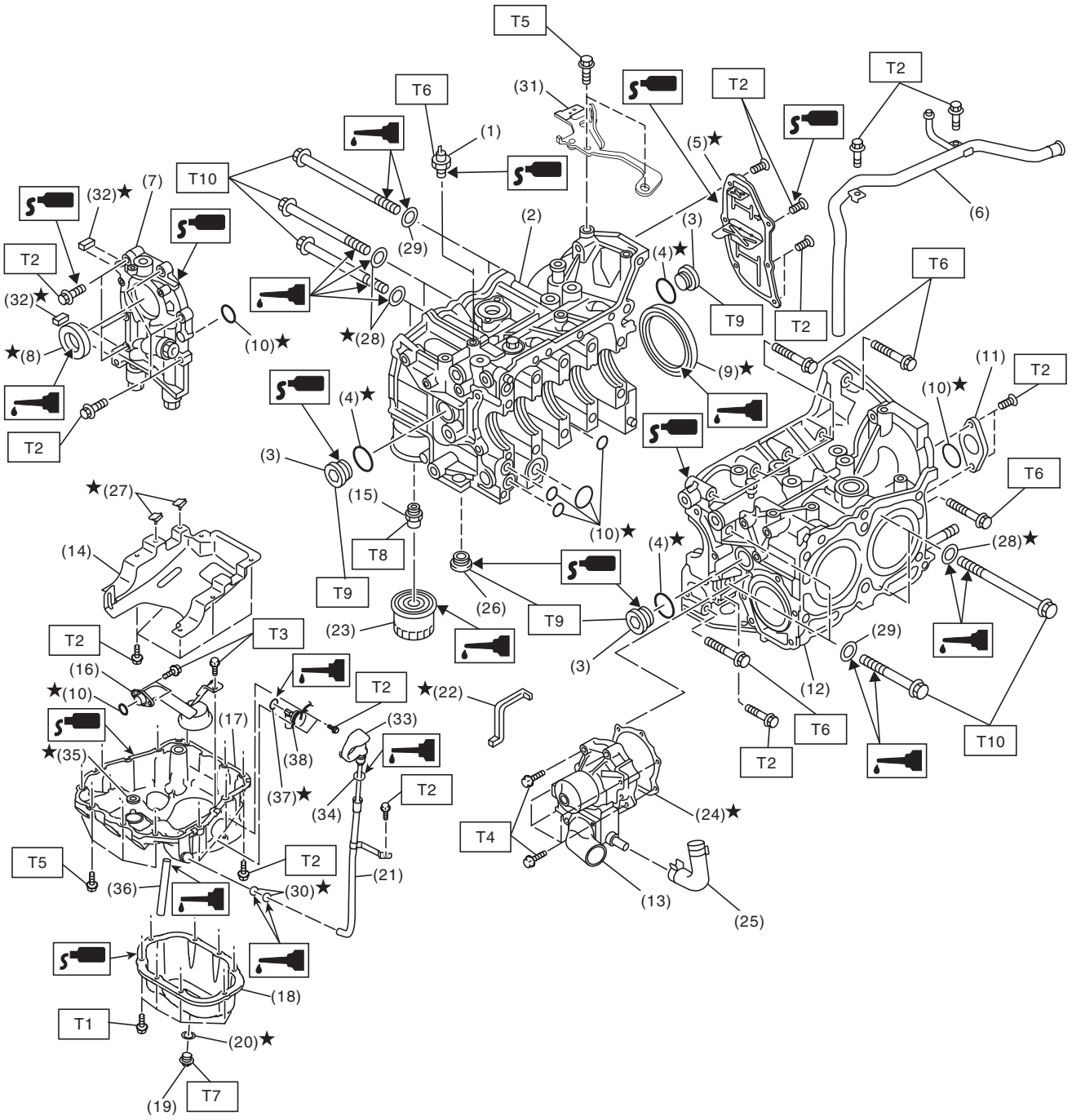

ME-05772

GETtheMANUALS.org

(1) Oil pressure switch
(2) Cylinder block RH
(3) Service hole plug
(4) Gasket
(5) Oil separator cover
(6) Water by-pass pipe
(7) Oil pump
(8) Front oil seal
(9) Rear oil seal
(10) O-ring
(11) Service hole cover
(12) Cylinder block LH
(13) Water pump
(14) Baffle plate
(15) Oil filter connector
(16) Oil strainer
(17) Cylinder block lower
(18) Oil pan
(19) Drain plug
(20) Drain plug gasket
(21) Oil level gauge guide
(22) Water pump sealing
(23) Oil filter
(24) Gasket
(25) Water pump hose
(26) Plug
(27) Seal
(28) Seal washer
(29) Washer
(30) O-ring
(31) Engine rear hanger
(32) Oil pump seal
(33) Oil level gauge
(34) O-ring
(35) O-ring
(36) Oil drain pipe
(37) O-ring
(38) Oil level switch

Tightening torque:N·m (kgf-m, ft-lb)	
T1:	***5 (0.5, 3.7)***
T2:	***6.4 (0.7, 4.7)***
T3:	***10 (1.0, 7.4)***
T4:	***First 12 (1.2, 8.9)*** ***Second 12 (1.2, 8.9)***
T5:	***16 (1.6, 11.8)***
T6:	***25 (2.5, 18.4)***
T7:	***41.7 (4.3, 30.8)***
T8:	***45 (4.6, 33.2)***
T9:	***70 (7.1, 51.6)***
T10:	***<Ref. to ME(H4SO)-76, INSTALLATION, Cylinder Block.>***

GETtheMANUALS.org

7. CRANKSHAFT AND PISTON

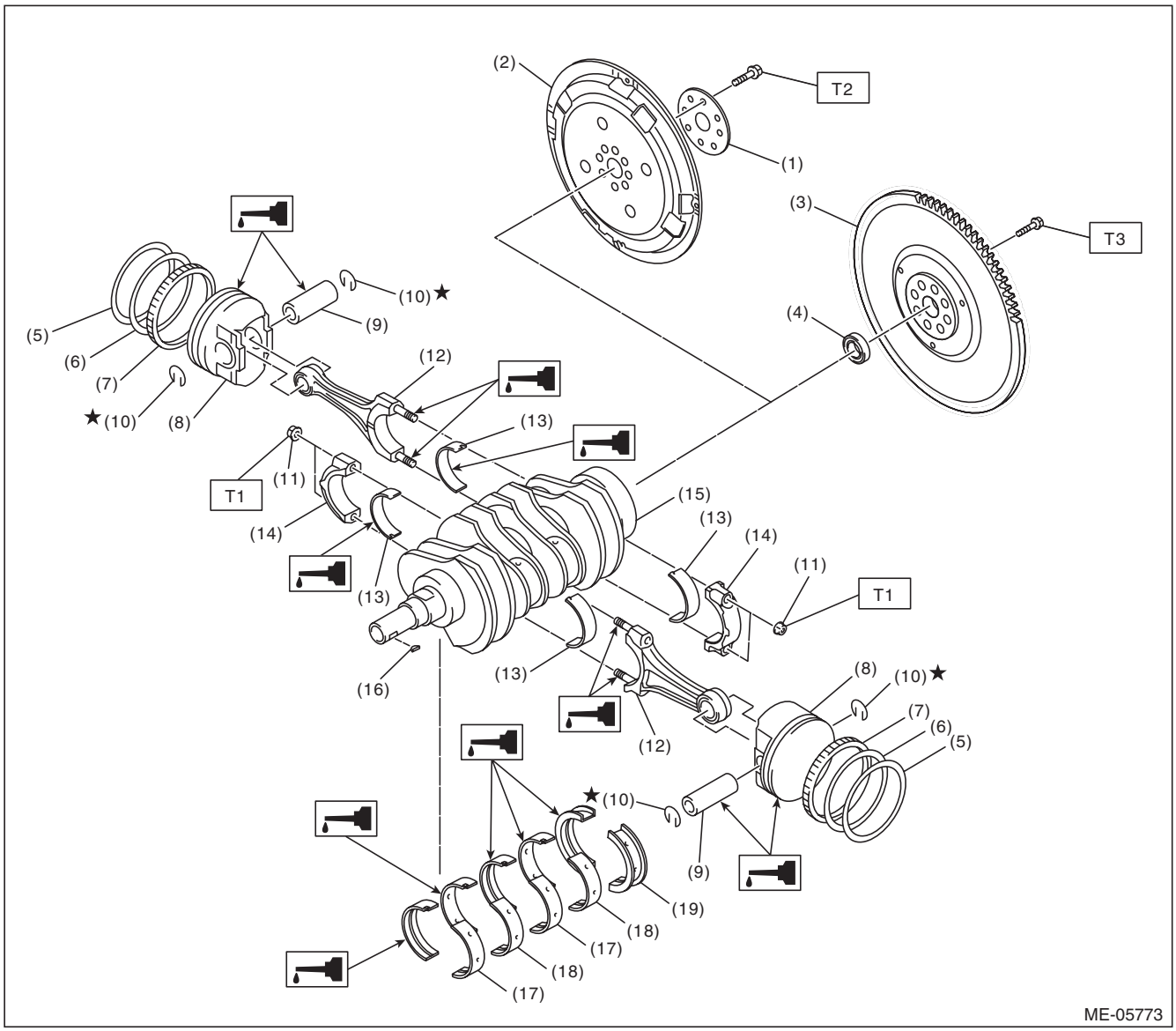

(1)	Reinforcement (CVT model)	(9)	Piston pin	(17)	Crankshaft bearing #1, #3
(2)	Drive plate (CVT model)	(10)	Snap ring	(18)	Crankshaft bearing #2, #4
(3)	Flywheel (MT model)	(11)	Connecting rod nut	(19)	Crankshaft bearing #5
(4)	Ball bearing (MT model)	(12)	Connecting rod		
(5)	Top ring	(13)	Connecting rod bearing		
(6)	Second ring	(14)	Connecting rod cap		
(7)	Oil ring	(15)	Crankshaft		
(8)	Piston	(16)	Woodruff key		

Tightening torque:N·m (kgf-m, ft-lb)

T1: 45 (4.6, 33.2)

T2: <Ref. to CVT-133, INSTALLATION, Drive Plate.>

T3: <Ref. to CL-14, INSTALLATION, Flywheel.>

GETtheMANUALS.org

8. ENGINE MOUNTING

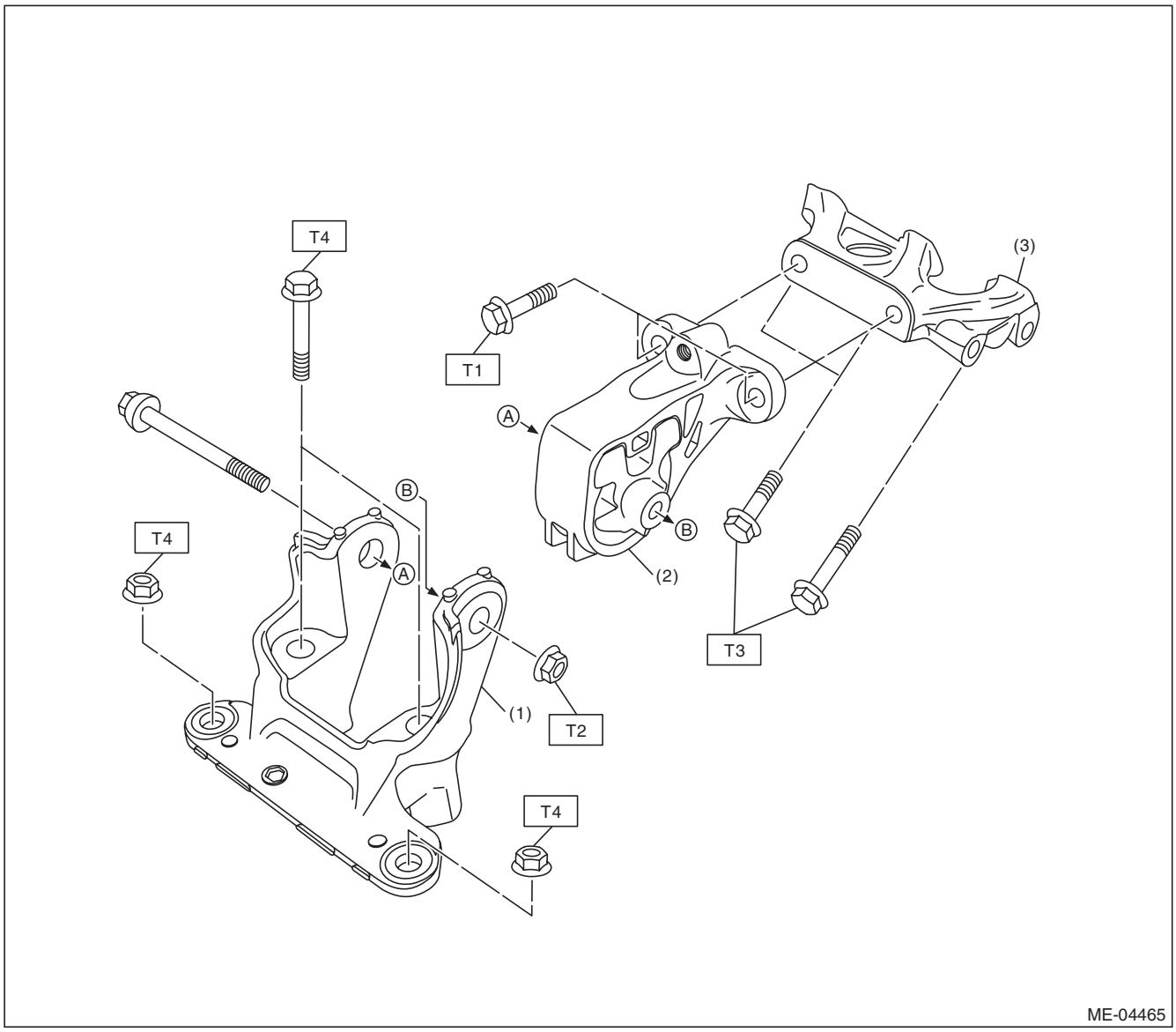

(1) Front mounting bracket
(2) Front cushion rubber
(3) Engine mounting bracket

Tightening torque:N·m (kgf-m, ft-lb)
T1: 25 (2.5, 18.4)
T2: 45 (4.6, 33.2)
T3: 58 (5.9, 42.8)
T4: 60 (6.1, 44.3)

GETtheMANUALS.org

C: CAUTION

- Wear appropriate work clothing, including a cap, protective goggles and protective shoes when performing any work.
- Remove contamination including dirt and corrosion before removal, installation or disassembly.
- Keep the disassembled parts in order and protect them from dust and dirt.
- Before removal, installation or disassembly, be sure to clarify the failure. Avoid unnecessary removal, installation, disassembly and replacement.
- Vehicle components are extremely hot after driving. Be wary of receiving burns from heated parts.
- Be sure to tighten fasteners including bolts and nuts to the specified torque.
- Place shop jacks or rigid racks at the specified points.
- Before disconnecting connectors of sensors or units, be sure to disconnect the ground cable from the battery.
- All parts should be thoroughly cleaned, paying special attention to engine oil passages, pistons and bearings.
- Rotating parts and sliding parts such as piston, bearing and gear should be coated with oil prior to assembly.
- Be careful not to let oil, grease or coolant contact the timing belt, clutch disc and flywheel.
- All removed parts, if to be reused, should be reinstalled in the original positions and directions.
- Bolts, nuts and washers should be replaced with new parts as required.
- Even if necessary inspections have been made in advance, proceed with assembly work while making rechecks.
- Remove or install the engine in an area where chain hoists, lifting devices, etc. are available for ready use.
- Be sure not to damage coated surfaces of body panels with tools, or not to stain seats and windows with coolant or oil. Place a cover over fender, as required, for protection.
- Prior to starting work, prepare the following:

Service tools, clean cloth, containers to catch coolant and oil, wire ropes, chain hoist, transmission jacks, etc.

- Lift up or lower the vehicle when necessary. Make sure to support the correct positions.

D: PREPARATION TOOL

1. SPECIAL TOOL

ILLUSTRATION	TOOL NUMBER	DESCRIPTION	REMARKS
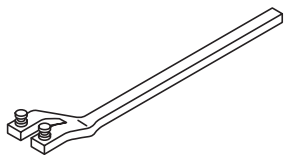 ST18231AA010	18231AA010	CAM SPROCKET WRENCH	Used for removing and installing cam sprocket. (LH side) NOTE: CAM SPROCKET WRENCH (499207100) can also be used.
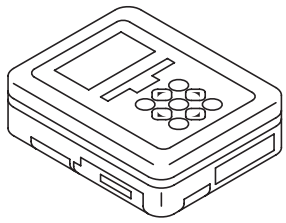 ST1B022XU0	1B022XU0	SUBARU SELECT MONITOR III KIT	Used for various inspections.

GETtheMANUALS.org

ILLUSTRATION	TOOL NUMBER	DESCRIPTION	REMARKS
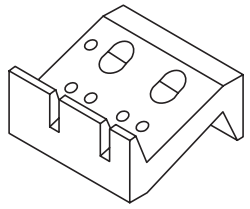 ST-498267800	498267800	CYLINDER HEAD TABLE	• Used for replacing valve guides. • Used for removing and installing valve spring.
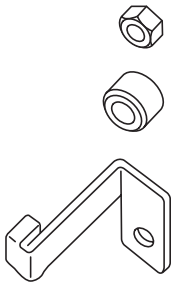 ST-498277200	498277200	STOPPER SET	Used for preventing the torque converter from falling when removing and installing the engine.
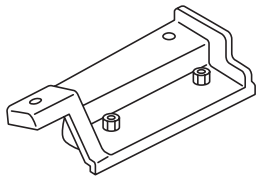 ST-498457000	498457000	ENGINE STAND ADAPTER RH	Used together with ENGINE STAND (499817100).
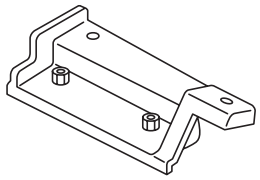 ST-498457100	498457100	ENGINE STAND ADAPTER LH	Used together with ENGINE STAND (499817100).
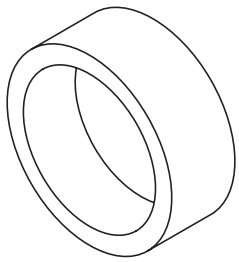 ST-498747300	498747300	PISTON GUIDE	Used for installing piston in cylinder.

GETtheMANUALS.org

ILLUSTRATION	TOOL NUMBER	DESCRIPTION	REMARKS
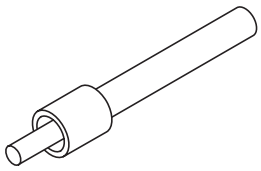 ST-498857100	498857100	VALVE OIL SEAL GUIDE	Used for press-fitting of intake valve guide oil seals and exhaust valve guide oil seals.
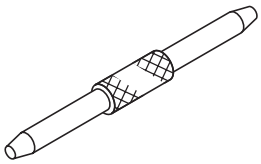 ST-499017100	499017100	PISTON PIN GUIDE	Used for installing piston pin, piston and connecting rod.
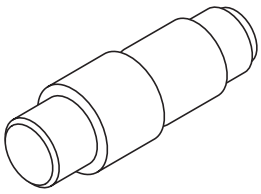 ST-499037100	499037100	CONNECTING ROD BUSHING REMOVER AND INSTALLER	Used for removing and installing connecting rod bushing.
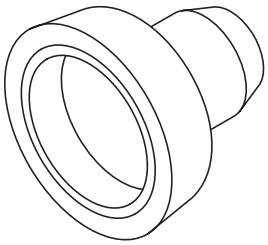 ST-499587200	499587200	CRANKSHAFT OIL SEAL INSTALLER	• Used for installing crankshaft oil seal. • Used together with CRANKSHAFT OIL SEAL GUIDE (499597100).
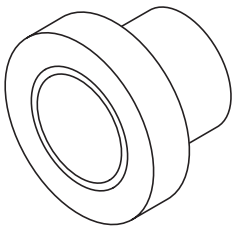 ST-499587500	499587500	OIL SEAL INSTALLER	• Used for installing the camshaft oil seal. • Used together with OIL SEAL GUIDE (499597000).

GETtheMANUALS.org

ILLUSTRATION	TOOL NUMBER	DESCRIPTION	REMARKS
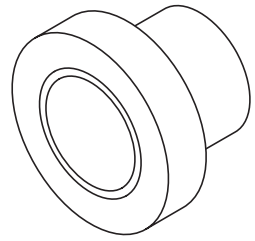 ST-499587700	499587700	CAMSHAFT OIL SEAL INSTALLER	Used for installing cylinder head plug.
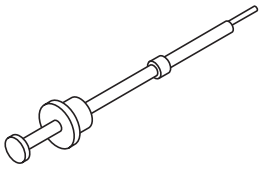 ST-499097700	499097700	PISTON PIN REMOVER ASSY	Used for removing piston pin.
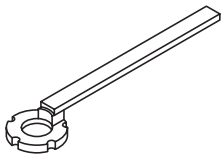 ST-499207400	499207400	CAM SPROCKET WRENCH	Used for removing and installing cam sprocket. (RH side)
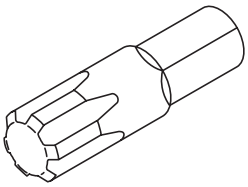 ST-499497000	499497000	TORX® PLUS	Used for removing and installing camshaft cap.
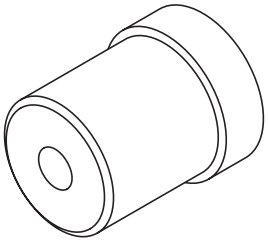 ST-499587100	499587100	OIL SEAL INSTALLER	Used for installing oil pump oil seal.

GETtheMANUALS.org

ILLUSTRATION	TOOL NUMBER	DESCRIPTION	REMARKS
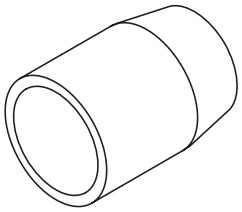 ST-499597000	499597000	OIL SEAL GUIDE	• Used for installing the camshaft oil seal. • Used together with CAMSHAFT OIL SEAL INSTALLER (499587500).
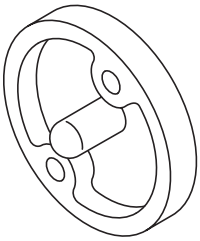 ST-499597100	499597100	CRANKSHAFT OIL SEAL GUIDE	• Used for installing crankshaft oil seal. • Used together with CRANKSHAFT OIL SEAL INSTALLER (499587200).
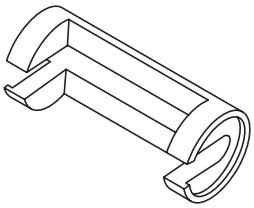 ST-499718000	499718000	VALVE SPRING REMOVER	Used for removing and installing valve spring.
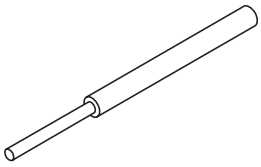 ST-499767200	499767200	VALVE GUIDE REMOVER	Used for removing valve guides.
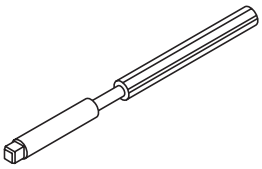 ST-499767400	499767400	VALVE GUIDE REAMER	Used for reaming valve guides.

GETtheMANUALS.org

ILLUSTRATION	TOOL NUMBER	DESCRIPTION	REMARKS
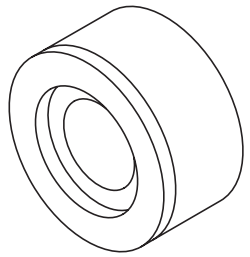 ST-499767700	499767700	VALVE GUIDE ADJUSTER	Used for installing valve guides. (Intake side)
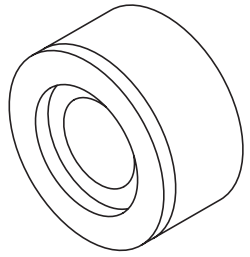 ST-499767800	499767800	VALVE GUIDE ADJUSTER	Used for installing valve guides. (Exhaust side)
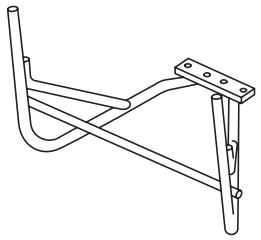 ST-499817100	499817100	ENGINE STAND	• Stand used for engine disassembly and assembly. • Used together with ENGINE STAND ADAPTER RH (498457000) & LH (498457100).
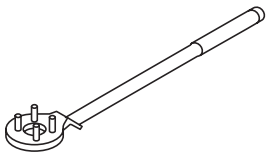 ST-499977100	499977100	CRANK PULLEY WRENCH	Used for removing and installing the crank pulley. (MT model)
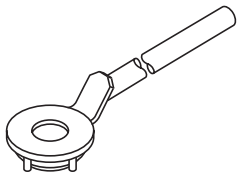 ST-499977400	499977400	CRANK PULLEY WRENCH	Used for removing and installing the crank pulley. (CVT model)

GETtheMANUALS.org

ILLUSTRATION	TOOL NUMBER	DESCRIPTION	REMARKS
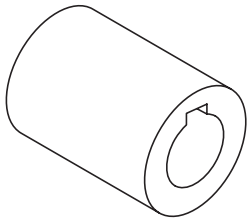 ST-499987500	499987500	CRANKSHAFT SOCKET	Used for rotating crankshaft.
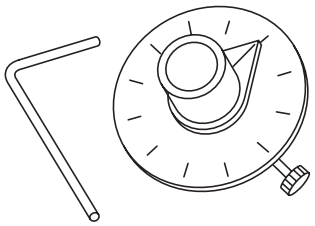 ST18854AA000	18854AA000	ANGLE GAUGE	Used for installing the crank pulley.
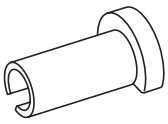 ST42099AE000	42099AE000	QUICK CONNECTOR RELEASE	Used for removing the quick connector.
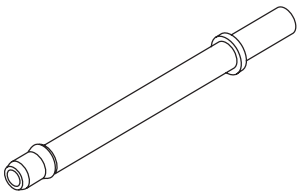 ST18471AA000	18471AA000	FUEL PIPE ADAPTER	Used for inspecting the fuel pressure.
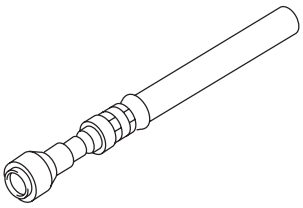 ST42075AG690	42075AG690	FUEL HOSE	Used for inspecting the fuel pressure. NOTE: This is the SUBARU genuine part.

GETtheMANUALS.org

ILLUSTRATION	TOOL NUMBER	DESCRIPTION	REMARKS
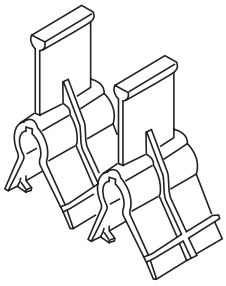 ST18354AA000	18354AA000	VALVE ROCKER HOLDER	Used for installing the valve rocker assembly (intake). (2-piece set)
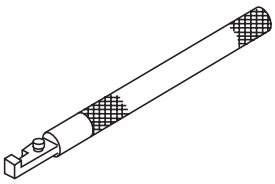 ST18258AA000	18258AA000	SPRING INSTALLER	Used for installing the valve rocker assembly (intake).

2. GENERAL TOOL

TOOL NAME	REMARKS
Compression gauge	Used for measuring compression.
Vacuum gauge	Used for measuring intake manifold vacuum.
Oil pressure gauge	Used for measuring engine oil pressure.
Fuel pressure gauge	Used for measuring fuel pressure.

GETtheMANUALS.org

2. Compression

A: INSPECTION

CAUTION:
After warming-up, engine becomes very hot. Be careful not to burn yourself during measurement.

1) After warming-up the engine, turn the ignition switch to OFF.
2) Make sure that the battery is fully charged.
3) Remove the fuse of fuel pump from main fuse box.

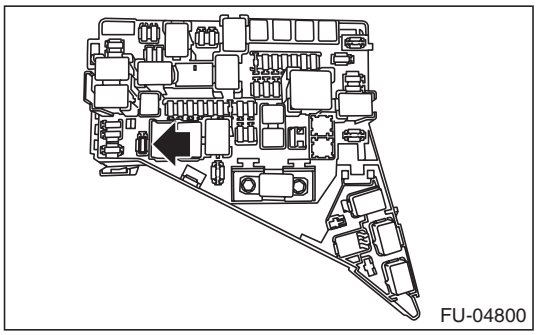

4) Start the engine and run it until it stalls.
5) After the engine stalls, crank it for five more seconds.
6) Turn the ignition switch to OFF.
7) Remove all spark plugs. <Ref. to IG(H4SO)-3, REMOVAL, Spark Plug.>
8) Fully open the throttle valve.
9) Check the starter motor for satisfactory performance and operation.
10) Install the compression gauge to the spark plug hole.

NOTE:
When using a screw-in type compression gauge, the screw should be less than 18 mm (0.71 in) long.

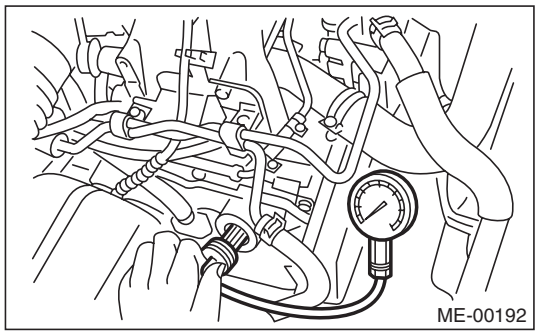

11) Crank the engine by starter motor and read the value when the needle of the compression gauge becomes stable.

NOTE:
- Perform at least two measurements per cylinder, and make sure that the values are correct.
- If the compression pressure is out of standard, check or adjust the pistons, valves and cylinders.

Compression (fully open throttle):
Standard
1,020 — 1,275 kPa (10.4 — 13.0 kgf/cm^2, 148 — 185 psi)
Difference between cylinders
49 kPa (0.5 kgf/cm^2, 7 psi) or less

12) After inspection, install the related parts in the reverse order of removal.

GETtheMANUALS.org

3. Idle Speed

A: INSPECTION

1) Before checking the idle speed, check the following item:
   (1) Check the air cleaner element is free from clogging, ignition timing is correct, spark plugs are in good condition, and hoses are connected properly.
   (2) Check the malfunction indicator light does not illuminate.
2) Warm up the engine.
3) Read the engine idle speed using Subaru Select Monitor. <Ref. to EN(H4SO)(diag)-33, READ CURRENT DATA FOR ENGINE (NORMAL MODE), OPERATION, Subaru Select Monitor.>

NOTE:
- Idle speed cannot be adjusted manually, because the idle speed is automatically adjusted.
- If idle speed is out of standard, refer to the General Diagnosis Table under “Engine Control System”. <Ref. to EN(H4SO)(diag)-2, Basic Diagnostic Procedure.>

(1) Check the idle speed when no-loaded. (Headlight, heater fan, rear defroster, radiator fan, A/C and etc. are OFF)

Idle speed (No load, and for CVT model, select lever in “P” or “N” range, for MT model, gear shift lever in neutral position.):

Standard

675±100 rpm (CVT model)
650±100 rpm (MT model)

(2) Check the idle speed when loaded. (Turn the A/C switch to “ON” and operate the compressor for at least one minute before measurement.)

Idle speed (A/C on, and for CVT model, select lever in “P” or “N” range, for MT model, gear shift lever in neutral position.):

Standard

700 — 850±100 rpm

GETtheMANUALS.org

4. Ignition Timing

A: INSPECTION

CAUTION:
After warming-up, engine becomes very hot. Be careful not to burn yourself at measurement.

1) Before checking the ignition timing, check the following item:
   (1) Check the air cleaner element is free from clogging, spark plugs are in good condition, and hoses are connected properly.
   (2) Check the malfunction indicator light does not illuminate.
2) Warm up the engine.
3) Read the ignition timing using Subaru Select Monitor. <Ref. to EN(H4SO)(diag)-33, READ CURRENT DATA FOR ENGINE (NORMAL MODE), OPERATION, Subaru Select Monitor.>

NOTE:
If ignition timing is out of standard, check the ignition control system. Refer to “Engine Control System”. <Ref. to EN(H4SO)(diag)-2, Basic Diagnostic Procedure.>

Ignition timing [BTDC/rpm]:
Standard
15°±10°/675 (CVT model)
10°±10°/650 (MT model)

GETtheMANUALS.org

5. Intake Manifold Vacuum

A: INSPECTION

1) Warm up the engine.
2) Disconnect the brake booster vacuum hose from the intake manifold, and attach the vacuum gauge.

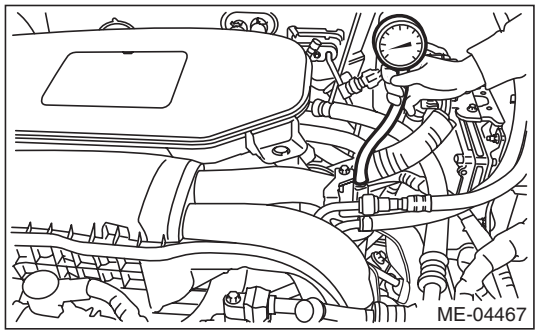

3) Keep the engine at idle speed and read the vacuum gauge indication.

NOTE:
Condition of engine inside can be diagnosed by observing the behavior of the vacuum gauge needle as described in table below.

Intake manifold vacuum (at idling, A/C OFF):
Standard
–60.0 kPa (–450 mmHg, –17.72 inHg) or more

4) After inspection, install the related parts in the reverse order of removal.

Diagnosis of engine condition by inspection of intake manifold vacuum	
Vacuum gauge needle behavior	Possible engine condition
1. Needle is steady but lower than standard value. This tendency becomes more evident as engine temperature rises.	Leakage around intake manifold gasket, disconnection or damage of vacuum hose
2. Needle intermittently drops to position lower than standard value.	Leakage around cylinder
3. Needle drops suddenly and intermittently from standard value.	Sticky valve
4. When engine speed is gradually increased, needle begins to vibrate rapidly at certain speed, and then vibration increases as engine speed increases.	Weak or broken valve springs
5. Needle vibrates above and below standard value in narrow range.	Defective ignition system

GETtheMANUALS.org

6. Engine Oil Pressure

A: INSPECTION

1) Disconnect the ground cable from battery.

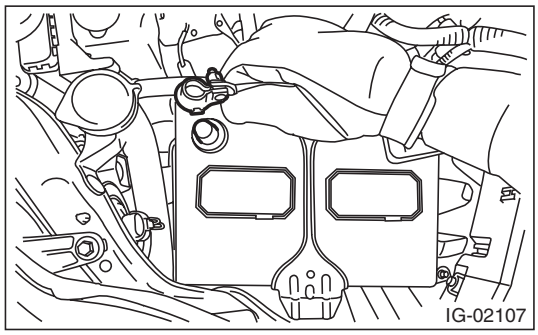

2) Remove the oil pressure switch. <Ref. to LU(H4SO)-25, REMOVAL, Oil Pressure Switch.>
3) Install the oil pressure gauge to cylinder block.

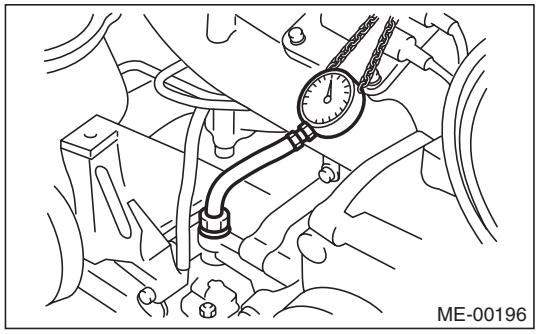

4) Connect the battery ground terminal.

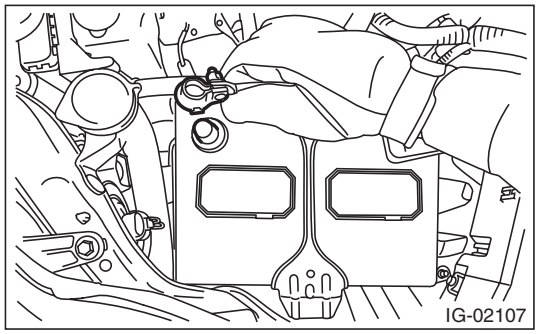

5) Start the engine, and check the oil pressure.

NOTE:
- Standard value is based on an engine oil temperature of 80°C (176°F).
- If the oil pressure is out of specification, check oil pump, oil filter and lubrication line. <Ref. to LU(H4SO)-45, INSPECTION, Engine Lubrication System Trouble in General.>
- If the oil pressure warning light is ON and oil pressure is within specification, check the oil pressure switch. <Ref. to LU(H4SO)-45, INSPECTION, Engine Lubrication System Trouble in General.>

Engine oil pressure:
Standard
98 kPa (1.0 kgf/cm^2, 14 psi) or more (at 600 rpm)
294 kPa (3.0 kgf/cm^2, 43 psi) or more (at 5,000 rpm)

6) After inspection, install the related parts in the reverse order of removal.

GETtheMANUALS.org

7. Fuel Pressure

A: INSPECTION

CAUTION:
- **Before removing the fuel pressure gauge, release the fuel pressure.**
- **Be careful not to spill fuel.**
- **Catch the fuel from hoses using a container or cloth.**

1) Release the fuel pressure. <Ref. to FU(H4SO)-53, RELEASING OF FUEL PRESSURE, PROCEDURE, Fuel.>
2) Open the fuel filler lid and remove the fuel filler cap.
3) Disconnect the fuel delivery hose from the fuel delivery pipe, and connect the fuel pressure gauge.

CAUTION:
- **Be careful not to spill fuel.**
- **Catch the fuel from hoses using a container or cloth.**

(1) Attach ST to the fuel delivery pipe and push ST1 in the direction of arrow mark to disconnect the quick connector of the fuel delivery hose.

ST 42099AE000 QUICK CONNECTOR RELEASE

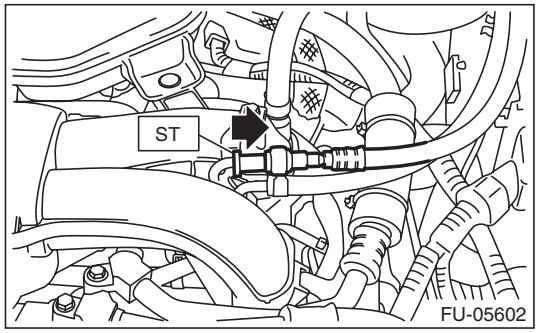

(2) Connect the fuel pressure gauge with ST2 and ST3.

NOTE:
ST2 is a SUBARU genuine part.
ST2 42075AG690 FUEL HOSE
ST3 18471AA000 FUEL PIPE ADAPTER

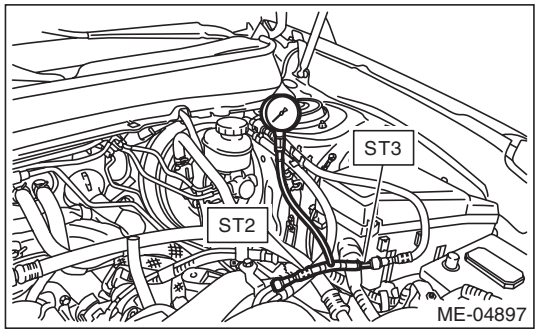

4) Start the engine.
5) Check the fuel pressure after warming up the engine.

NOTE:
- The fuel pressure gauge registers 10 to 20 kPa (0.1 to 0.2 kgf/cm^2, 1 to 3 psi) higher than standard values during high-altitude operations.
- Check or replace the fuel pump and fuel delivery line if the fuel pressure is out of the standard.

Fuel pressure:
Standard
340 — 400 kPa (3.5 — 4.1 kgf/cm^2, 49 — 58 psi)

6) After inspection, install the related parts in the reverse order of removal.

GETtheMANUALS.org

8. Valve Clearance

A: INSPECTION

CAUTION:
If engine oil is spilt onto the exhaust pipe, wipe it off with cloth to avoid emission of smoke or causing a fire.

NOTE:
Inspection of valve clearance should be performed while engine is cold.

1) Lift up the vehicle.
2) Remove the under cover. <Ref. to EI-35, REMOVAL, Front Under Cover.>
3) Lower the vehicle.
4) Disconnect the ground cable from battery.

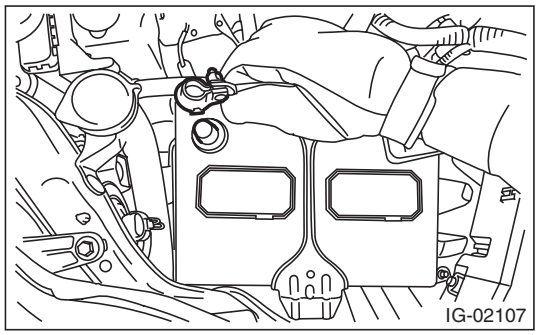

5) Remove the timing belt cover LH.

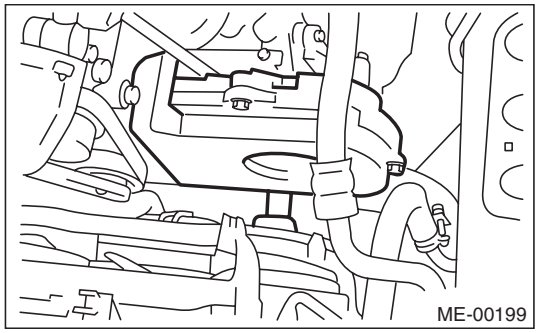

6) Remove the fuel injector. <Ref. to FU(H4SO)-37, REMOVAL, Fuel Injector.>
7) When inspecting #1 and #3 cylinders
   (1) Disconnect the ignition coil from spark plug on RH side. <Ref. to IG(H4SO)-3, RH SIDE, REMOVAL, Spark Plug.>
   (2) Place a suitable container under the vehicle.
   (3) Disconnect the PCV hose from the rocker cover RH.
   (4) Remove the bolts, then remove the rocker cover RH.
8) When inspecting #2 and #4 cylinders
   (1) Disconnect the ignition coil from spark plug on LH side. <Ref. to IG(H4SO)-3, LH SIDE, REMOVAL, Spark Plug.>
   (2) Place a suitable container under the vehicle.
   (3) Disconnect the PCV hose from the rocker cover LH.
   (4) Remove the bolts, then remove the rocker cover LH.
9) Set #1 cylinder piston to top dead center of compression stroke by rotating the crank pulley clockwise using the socket wrench.

NOTE:
When the arrow mark (A) on cam sprocket LH is at the top position, the #1 cylinder piston is at top dead center of the compression stroke.

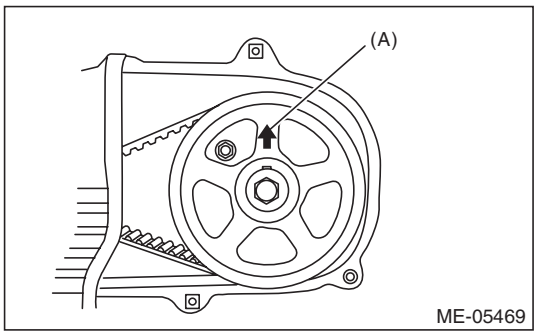

10) Measure #1 cylinder valve clearance by using thickness gauge (A).

NOTE:
- Insert the thickness gauge (A) in as horizontally as possible with respect to the valve stem end face.
- Lift up the vehicle, and then measure the exhaust valve clearances.
- If the measured value is not within the inspection value, take notes of the value in order to adjust the valve clearance later on.

Valve clearance (inspection value):
Intake
0.20±0.04 mm (0.0079±0.0016 in)
Exhaust
0.25±0.04 mm (0.0098±0.0016 in)

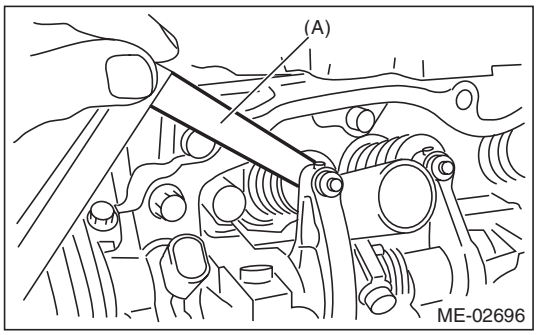

GETtheMANUALS.org

11) Measure the valve clearance in #3, #2 and #4 cylinder in the same measurement procedure as #1 cylinder in this order.

NOTE:
• Be sure to set the cylinder pistons to their respective top dead centers on compression stroke before measuring valve clearances.
• By rotating the crank pulley clockwise every 180° from the state that #1 cylinder piston is on the top dead center of compression stroke, #3, #2 and #4 cylinder pistons come to the top dead center of compression stroke in this order.

12) If necessary, adjust the valve clearance. <Ref. to ME(H4SO)-30, ADJUSTMENT, Valve Clearance.>
13) After inspection, install the related parts in the reverse order of removal.

NOTE:
Refer to "Camshaft" when installing the rocker cover. <Ref. to ME(H4SO)-59, INSTALLATION, Camshaft.>

B: ADJUSTMENT

CAUTION:
If engine oil is spilt onto the exhaust pipe, wipe it off with cloth to avoid emission of smoke or causing a fire.

NOTE:
Adjustment of valve clearance should be performed while engine is cold.

1) Set #1 cylinder piston to top dead center of compression stroke by rotating the crank pulley clockwise using the socket wrench.

NOTE:
When the arrow mark (A) on cam sprocket LH is at the top position, the #1 cylinder piston is at top dead center of the compression stroke.

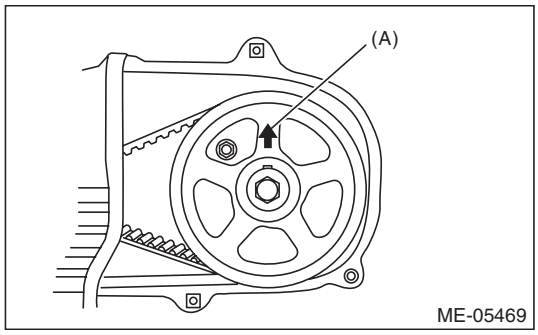

2) Adjust the #1 cylinder valve clearance.
(1) Loosen the valve rocker nut and screw.
(2) Set a suitable thickness gauge.
(3) While noting the valve clearance, tighten the valve rocker adjusting screw.
(4) When the specified valve clearance is obtained, tighten the valve rocker nut.

NOTE:
• Insert a thickness gauge in a direction as horizontal as possible with respect to the valve stem end face.
• Lift up the vehicle and adjust the exhaust valve clearances.

Valve clearance (adjustment value):
Intake
0.20±0.04 mm (0.0079±0.0016 in)
Exhaust
0.25±0.04 mm (0.0098±0.0016 in)

Tightening torque:
9.75 N·m (1.0 kgf-m, 7.2 ft-lb)

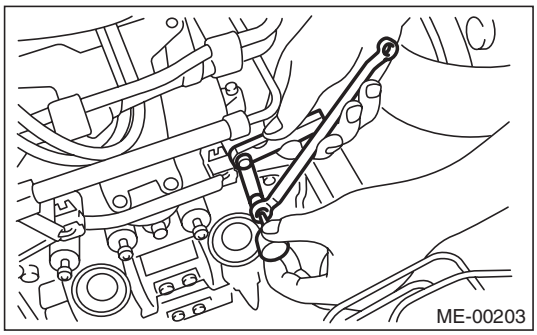

3) Adjust the valve clearance in #3, #2 and #4 cylinder in the same adjustment procedure as #1 cylinder in this order.

NOTE:
• Be sure to set the cylinder pistons to their respective top dead centers on compression stroke before adjusting valve clearances.
• By rotating the crank pulley clockwise every 180° from the state that #1 cylinder piston is on the top dead center of compression stroke, #3, #2 and #4 cylinder pistons come to the top dead center of compression stroke in this order.

4) Ensure the valve clearances of each cylinder are within specifications. If necessary, readjust the valve clearances.
5) After adjustment, install the related parts in the reverse order of removal.

NOTE:
Refer to "Camshaft" when installing the rocker cover. <Ref. to ME(H4SO)-59, INSTALLATION, Camshaft.>

GETtheMANUALS.org

9. Engine Assembly

A: REMOVAL

1) Change the front hood damper mounting position from (A) to (B), and completely open the front hood.

Tightening torque:
20 N·m (2.0 kgf-m, 14.8 ft-lb)

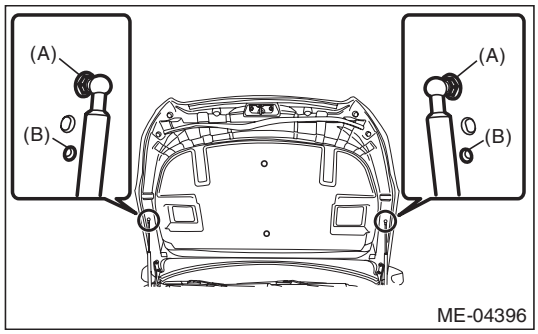

2) Remove the V-belt covers.
3) Collect the refrigerant from A/C system. <Ref. to AC-24, Refrigerant Recovery Procedure.>
4) Release the fuel pressure. <Ref. to FU(H4SO)-53, RELEASING OF FUEL PRESSURE, PROCEDURE, Fuel.>
5) Disconnect the ground cable from battery.

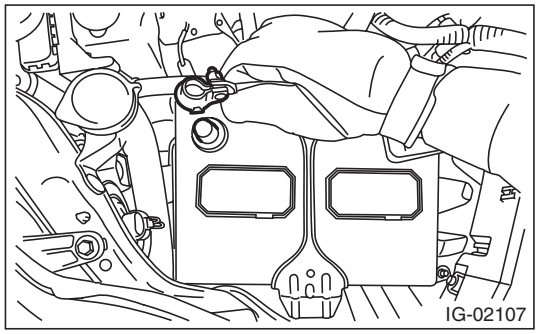

6) Open the fuel filler lid and remove the fuel filler cap.
7) Remove the air intake duct. <Ref. to IN(H4SO)-9, REMOVAL, Air Intake Duct.>
8) Remove the air intake boot assembly. <Ref. to IN(H4SO)-8, REMOVAL, Air Intake Boot.>
9) Remove the radiator. <Ref. to CO(H4SO)-20, REMOVAL, Radiator.>
10) Remove the front exhaust pipe. <Ref. to EX(H4SO)-5, REMOVAL, Front Exhaust Pipe.>
11) Lower the vehicle.
12) Remove the bolt, and disconnect the bulkhead harness connector from the engine harness connector and rear engine hanger.

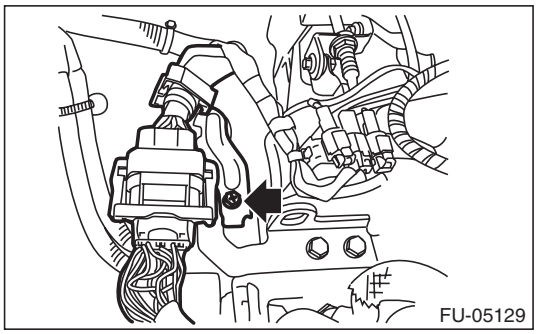

13) Slide the engine harness connector in the direction of the arrow and remove it from the rear engine hanger.

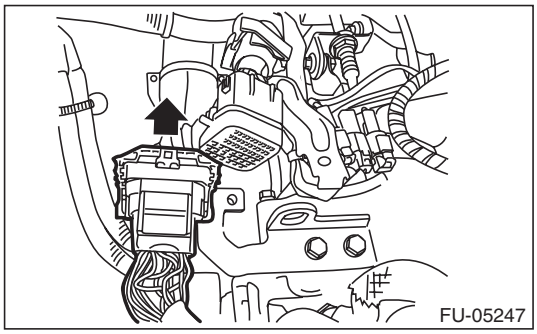

14) Disconnect connector (A) and terminal (B) from the generator, and remove the generator cord from clip (C).
15) Disconnect connector (D) from the A/C compressor.

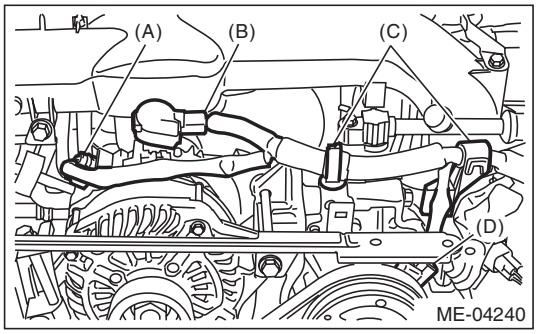

16) Remove the clip which secure the generator cord to the intake manifold protector LH.

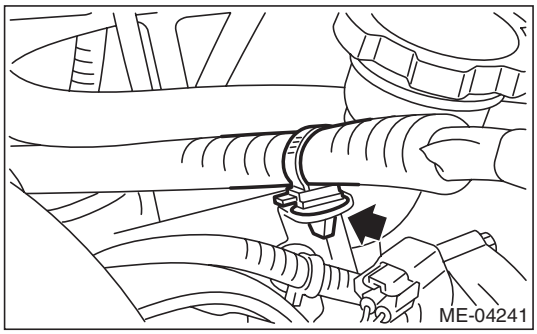

GETtheMANUALS.org

17) Disconnect the following hoses.
(1) A/C pressure hose <Ref. to AC-76, REMOVAL, Hose and Pipe.>
(2) Brake booster vacuum hose

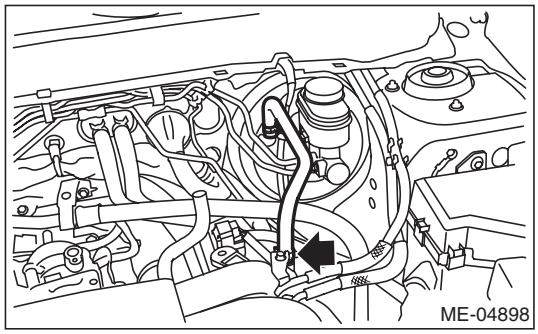
ME-04898

(3) Heater inlet hose and heater outlet hose

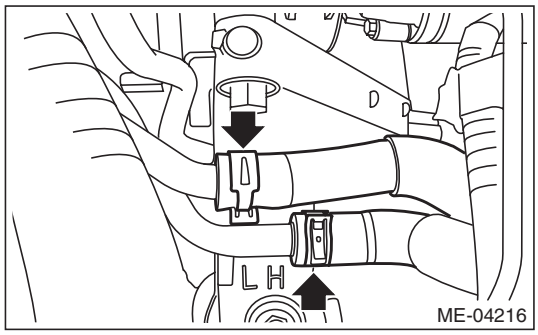

ME-04216

18) Remove the power steering pump.
(1) Remove the V-belts. <Ref. to ME(H4SO)-43, REMOVAL, V-belt.>
(2) Disconnect the connector (A) from power steering pump, and remove the power steering pump together with the power steering pump bracket from engine and stopper rod.

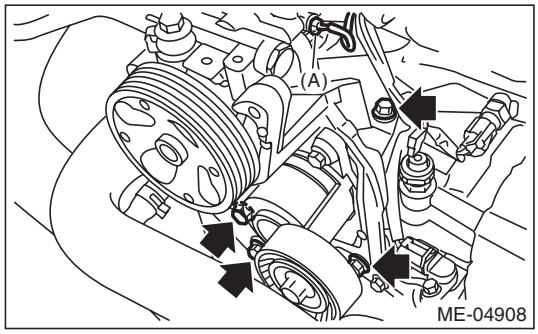

ME-04908

(3) Mount the power steering pump together with the power steering pump bracket on RH side wheel apron.

19) Lift up the vehicle.

20) Disconnect the ground cable on the engine side.

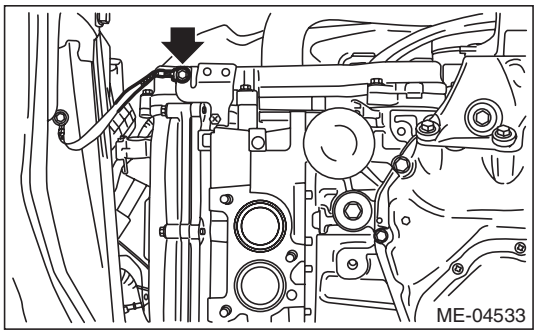
ME-04533

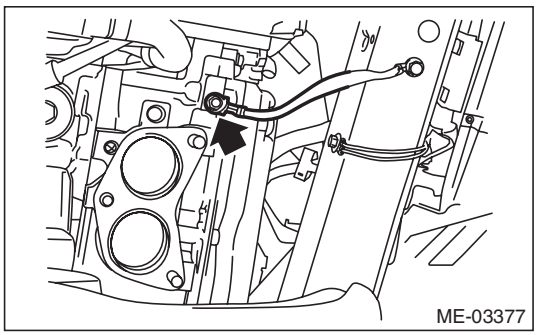
ME-03377

21) Lower the vehicle.

22) Separate the torque converter clutch from the drive plate. (CVT model)
(1) Remove the throttle body. <Ref. to FU(H4SO)-15, REMOVAL, Throttle Body.>
(2) Remove the manifold absolute pressure sensor. <Ref. to FU(H4SO)-33, REMOVAL, Manifold Absolute Pressure Sensor.>
(3) Remove the service hole plug.
(4) Insert the wrench into the crank pulley bolt, and rotate the crank pulley to remove the four bolts which hold torque converter clutch to the drive plate.

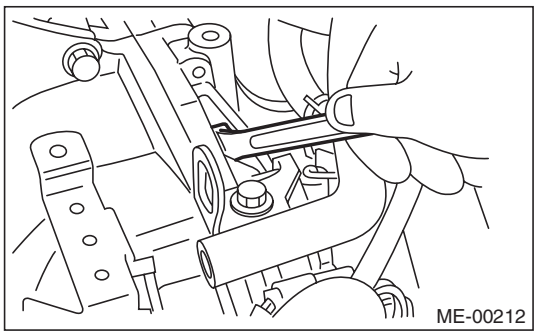
ME-00212

23) Disconnect the fuel delivery hose (A) and evaporation hose (B).

CAUTION:
- **Be careful not to spill fuel.**
- **Catch the fuel from hoses using a container or cloth.**

GETtheMANUALS.org

(1) Attach ST to the fuel delivery pipe and push ST in the direction of arrow mark to disconnect the quick connector of the fuel delivery hose (A).

ST 42099AE000 QUICK CONNECTOR RELEASE

(2) Remove the clip and disconnect the evaporation hose (B) from the evaporation pipe.

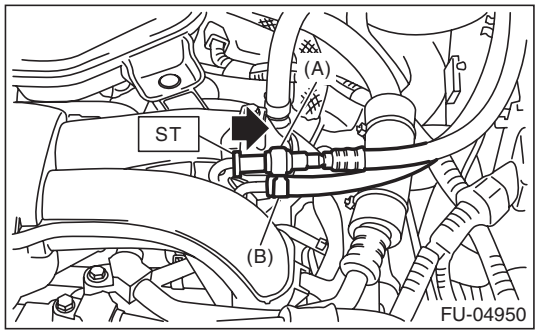

24) Support the engine with a lifting device and wire ropes.

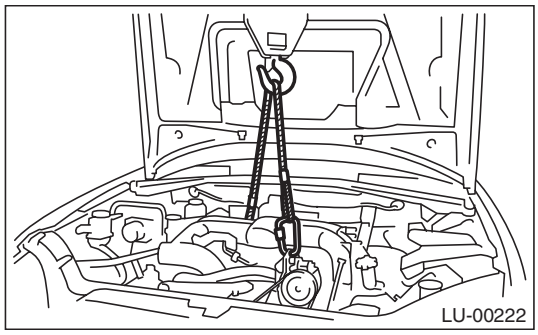

25) Remove the stopper rod.

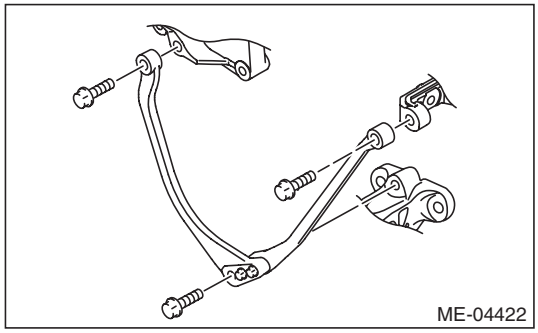

26) Remove the bolt and nut which secure engine mounting to the cradle.

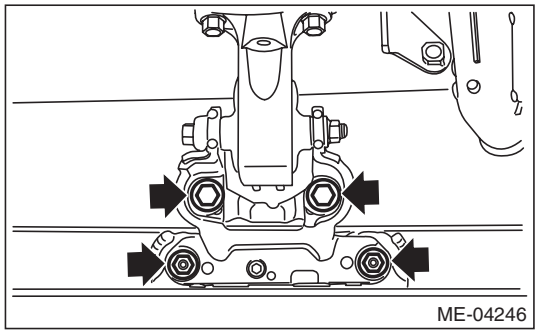

27) Lift up the vehicle.

CAUTION:
When lifting up the vehicle, raise up wire ropes at the same time.

28) Remove the bolts which secure the engine mounting onto the engine, and remove the engine mounting.

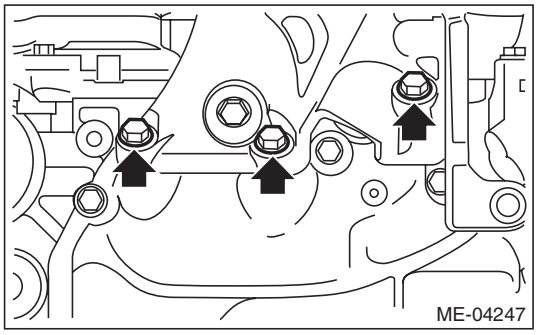

29) Remove the bolts and nuts which hold the lower side of transmission to the engine.

- CVT model

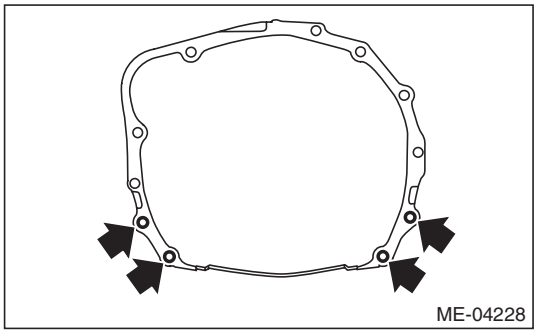

- MT model

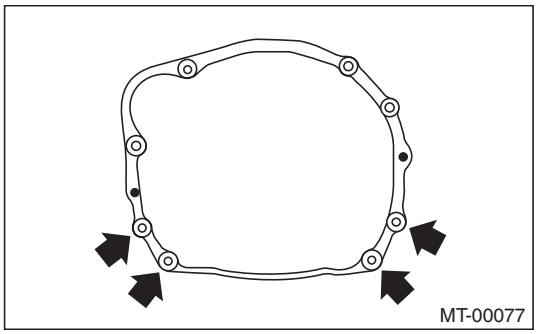

30) Lower the vehicle.

CAUTION:
When lifting down the vehicle, lower wire ropes at the same time.

GETtheMANUALS.org

31) Support the transmission with a garage jack.

NOTE:
Fine adjustment of the transmission height can be performed with this operation.

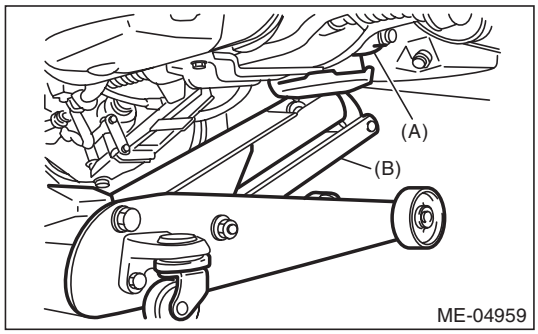

(A) Transmission
(B) Garage jack

32) Separation of engine and transmission

CAUTION:
Before removing the engine away from transmission, check to be sure no work has been overlooked.

(1) Remove the starter. <Ref. to SC(H4SO)-9, REMOVAL, Starter.>
(2) Attach the ST to the torque converter clutch case. (CVT model)

ST 498277200 STOPPER SET

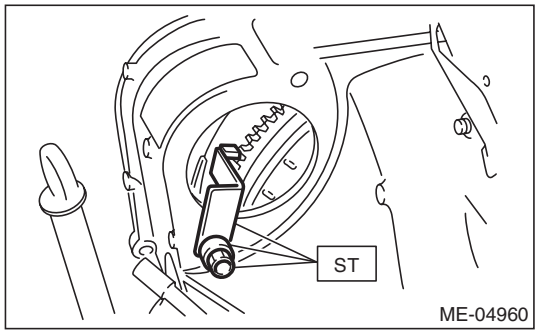

(3) Remove the bolts which hold the upper side of the transmission to the engine.

- CVT model

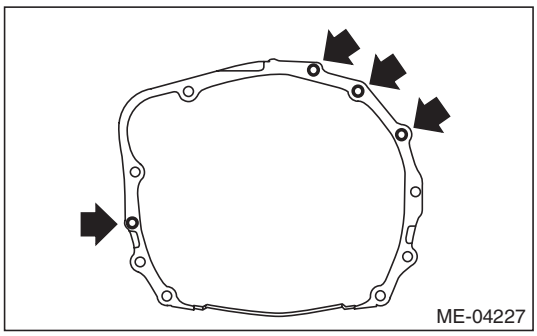

- MT model

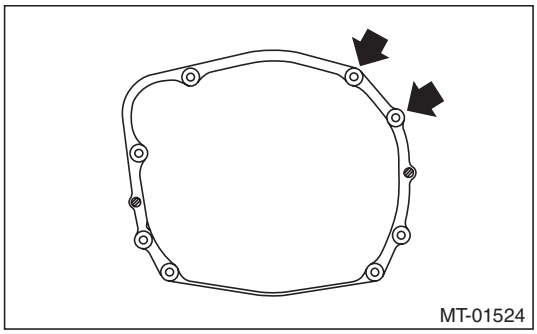

33) Remove the engine from the vehicle.

NOTE:
Be careful not to damage adjacent parts or body panels with crank pulley, oil level gauge, etc.

(1) Slightly raise the engine.
(2) Adjust the height of the transmission with garage jack.
(3) Move the engine horizontally until main shaft is withdrawn from clutch cover. (MT model)
(4) Slowly move the engine away from engine compartment.

GETtheMANUALS.org

B: INSTALLATION

1) Apply a small amount of grease to splines of main shaft. (MT model)

Grease:
NICHIMOLY N-130 or equivalent

2) Position the engine in engine compartment and align it with transmission.

NOTE:
Be careful not to damage adjacent parts or body panels with crank pulley, oil level gauge, etc.

3) Tighten the bolts which hold upper side of transmission to engine.

Tightening torque:
50 N·m (5.1 kgf-m, 36.9 ft-lb)

- CVT model

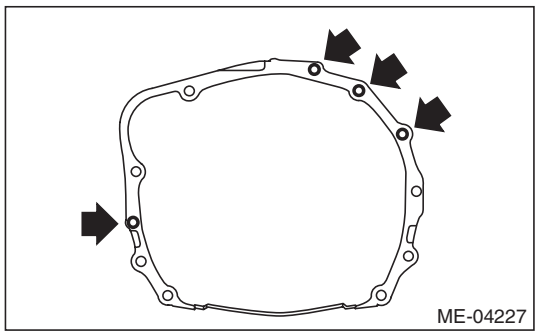

- MT model

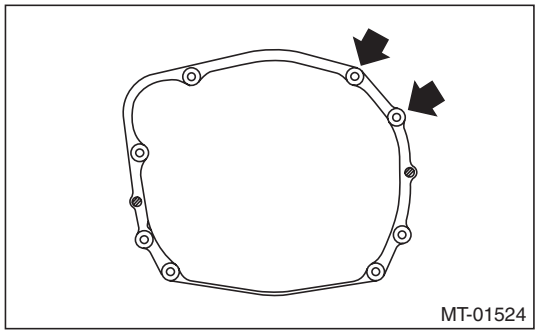

4) Remove the garage jack.

5) Remove the ST from torque converter clutch case. (CVT model)

NOTE:
Be careful not to drop the ST into the torque converter clutch case when removing the ST.

ST 498277200 STOPPER SET

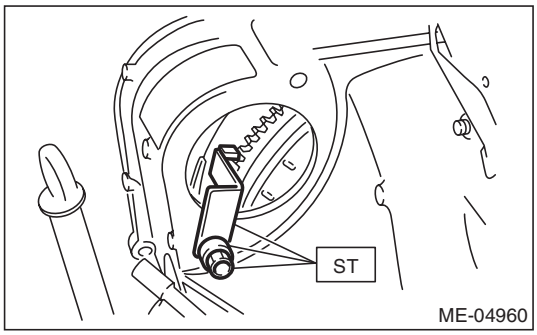

6) Install the starter. <Ref. to SC(H4SO)-10, INSTALLATION, Starter.>

7) Lift up the vehicle.

CAUTION:
When lifting up the vehicle, raise up wire ropes at the same time.

8) Attach the bolts and nuts which hold lower side of the transmission to engine.

Tightening torque:
50 N·m (5.1 kgf-m, 36.9 ft-lb)

- CVT model

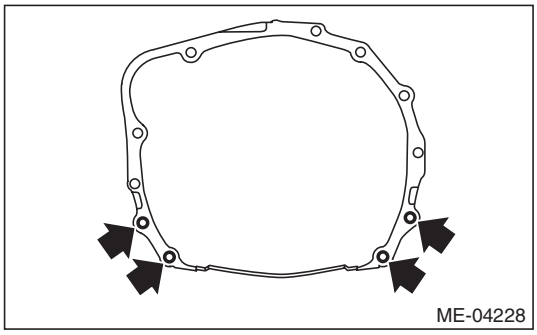

- MT model

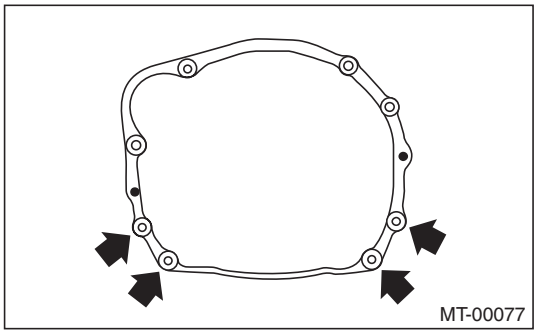

GETtheMANUALS.org

9) Set the engine mounting, and tighten the bolts which hold engine mounting to the engine.

Tightening torque:
58 N·m (5.9 kgf-m, 42.8 ft-lb)

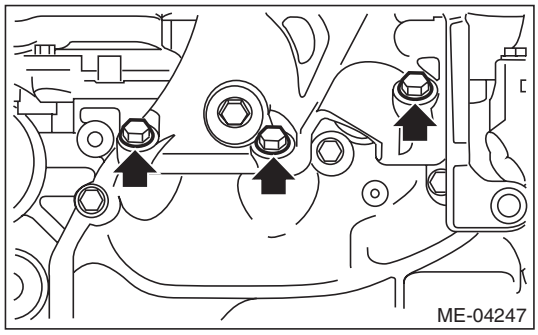

10) Lower the vehicle.

CAUTION:
When lifting down the vehicle, lower wire ropes at the same time.

11) Attach the bolts and nuts which secure engine mounting to the cradle.

Tightening torque:
60 N·m (6.1 kgf-m, 44.3 ft-lb)

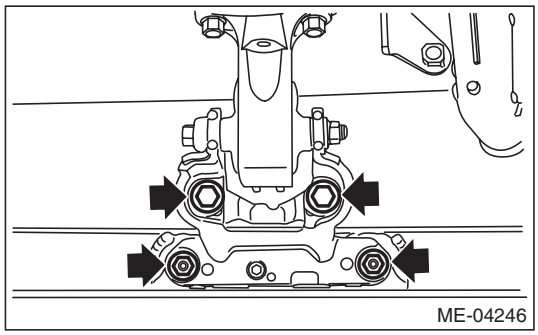

12) Install the stopper rod.

Tightening torque:
36 N·m (3.7 kgf-m, 26.6 ft-lb)

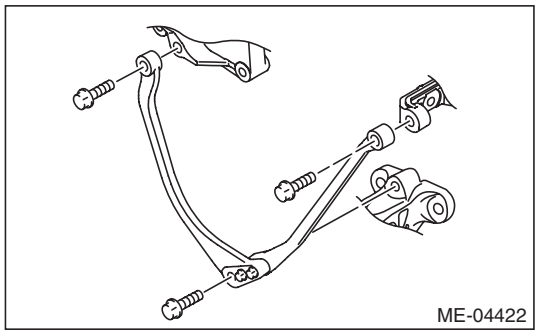

13) Remove the lifting device and wire ropes.

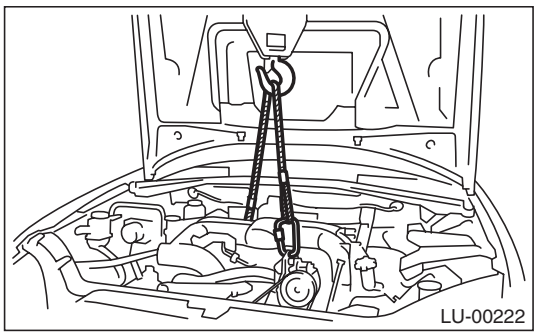

14) Install the torque converter clutch to drive plate. (CVT model)
(1) Insert the wrench into the crank pulley bolt, and rotate the crank pulley to attach the four bolts which hold torque converter clutch to the drive plate.

NOTE:
Be careful not to drop bolts into the torque converter clutch case.

Tightening torque:
25 N·m (2.5 kgf-m, 18.4 ft-lb)

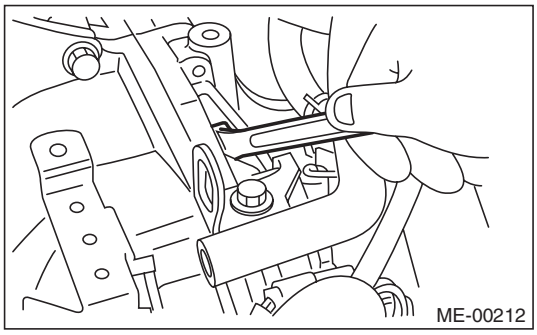

(2) Fit the plug to service hole.
(3) Install the throttle body. <Ref. to FU(H4SO)-15, INSTALLATION, Throttle Body.>
(4) Install the manifold absolute pressure sensor. <Ref. to FU(H4SO)-34, INSTALLATION, Manifold Absolute Pressure Sensor.>

15) Lift up the vehicle.

GETtheMANUALS.org

16) Connect the ground cable.

Tightening torque:
7.5 N·m (0.8 kgf-m, 5.5 ft-lb)

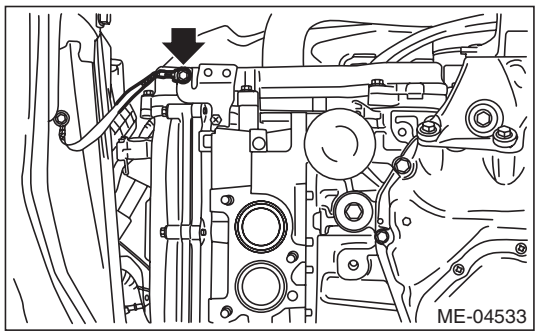

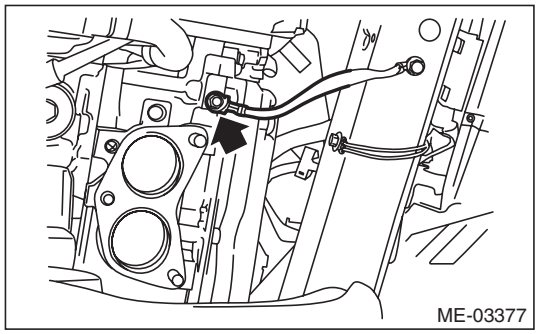

17) Lower the vehicle.
18) Install the power steering pump.
(1) Install the power steering pump together with the power steering pump bracket to engine and stopper rod, and connect the connector (A) to the power steering pump.

Tightening torque:
Refer to "COMPONENT" of "STARTING/ CHARGING SYSTEMS" for the tightening torque. <Ref. to SC(H4SO)-7, GENERATOR BRACKET, COMPONENT, General Description.>

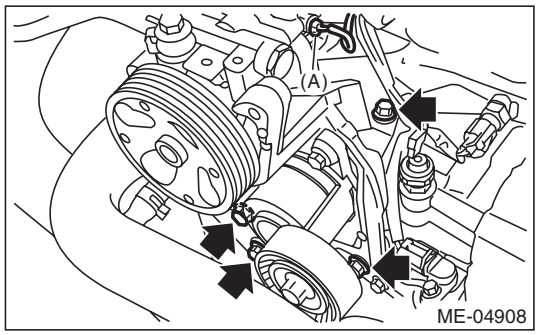

(2) Install the V-belts. <Ref. to ME(H4SO)-43, INSTALLATION, V-belt.>
19) Connect the following hoses.
(1) Fuel delivery hose and evaporation hose
(2) Heater inlet hose and heater outlet hose
(3) Brake booster vacuum hose
(4) A/C pressure hose <Ref. to AC-76, INSTALLATION, Hose and Pipe.>

20) Install the clip which secure the generator cord to the intake manifold protector LH.

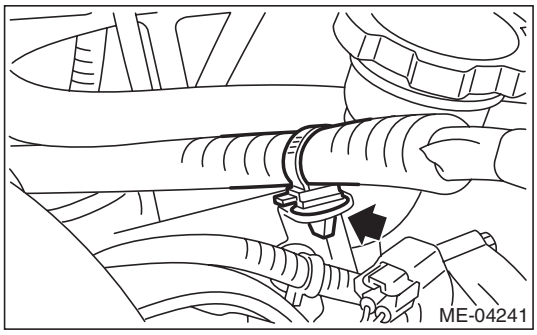

21) Connect connector (D) to the A/C compressor.
22) Install the generator cord to clip (C), and connect connector (A) and terminal (B) to the generator.

Tightening torque:
15 N·m (1.5 kgf-m, 11.1 ft-lb)

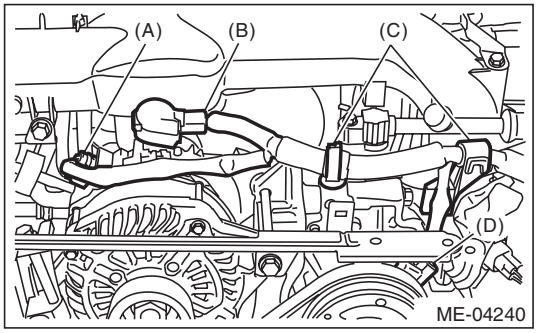

23) Connect the engine harness connector to the bulkhead harness connector, attach it to the rear engine hanger, and fasten with bolt.

Tightening torque:
6.4 N·m (0.7 kgf-m, 4.7 ft-lb)

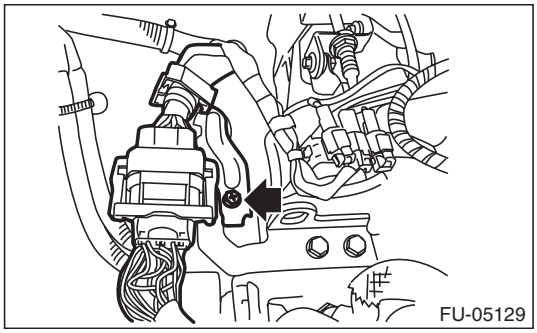

24) Install the front exhaust pipe. <Ref. to EX(H4SO)-6, INSTALLATION, Front Exhaust Pipe.>
25) Install the radiator. <Ref. to CO(H4SO)-21, INSTALLATION, Radiator.>
26) Install the air intake boot assembly. <Ref. to IN(H4SO)-8, INSTALLATION, Air Intake Boot.>
27) Install the air intake duct. <Ref. to IN(H4SO)-9, INSTALLATION, Air Intake Duct.>

GETtheMANUALS.org

28) Connect the battery ground terminal.

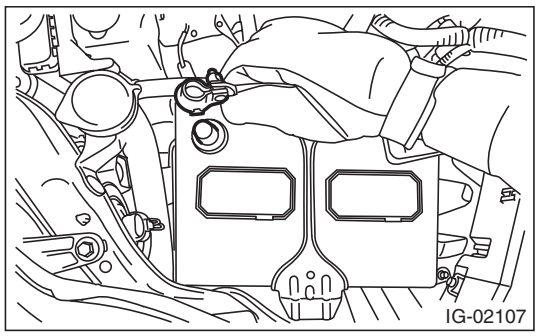

29) Fill engine coolant. <Ref. to CO(H4SO)-14, FILLING OF ENGINE COOLANT, REPLACEMENT, Engine Coolant.>
30) Charge the A/C system with refrigerant. <Ref. to AC-25, PROCEDURE, Refrigerant Charging Procedure.>
31) Check the CVTF level and replenish it if necessary. (CVT model) <Ref. to CVT-37, ADJUSTMENT, CVTF.>
32) Install the V-belt cover.
33) Change the front hood damper mounting position from (B) to (A), and close the front hood.

Tightening torque:
20 N·m (2.0 kgf-m, 14.8 ft-lb)

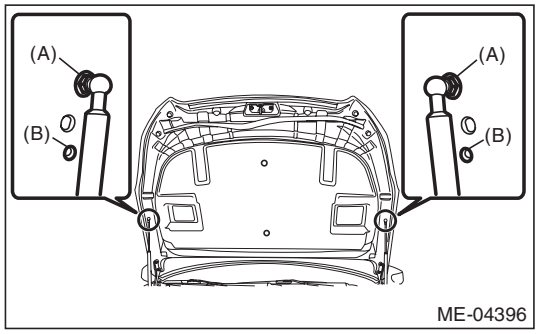

C: INSPECTION

1) Check that the pipes, hoses, connectors and clamps are securely connected.
2) Check that the engine coolant is up to specified level.
3) Check CVTF is at the specified level. (CVT model)
4) Start the engine and check for exhaust gas leakage, engine coolant leakage, fuel leakage, noise or vibration.

GETtheMANUALS.org

10. Engine Mounting

A: REMOVAL

1) Change the front hood damper mounting position from (A) to (B), and completely open the front hood.

Tightening torque:
20 N·m (2.0 kgf-m, 14.8 ft-lb)

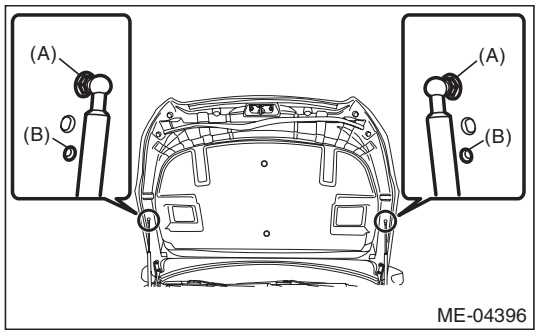

2) Disconnect the ground cable from battery.

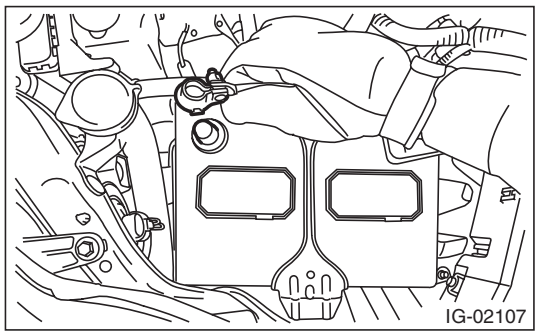

3) Remove the radiator main fan motor assembly and radiator sub fan motor assembly. <Ref. to CO(H4SO)-24, REMOVAL, Radiator Main Fan and Fan Motor.> <Ref. to CO(H4SO)-25, REMOVAL, Radiator Sub Fan and Fan Motor.>
4) Lift up the vehicle.
5) Remove the under cover. <Ref. to EI-35, REMOVAL, Front Under Cover.>
6) Remove the front exhaust pipe. <Ref. to EX(H4SO)-5, REMOVAL, Front Exhaust Pipe.>
7) Lower the vehicle.
8) Support the engine with a lifting device and wire ropes.

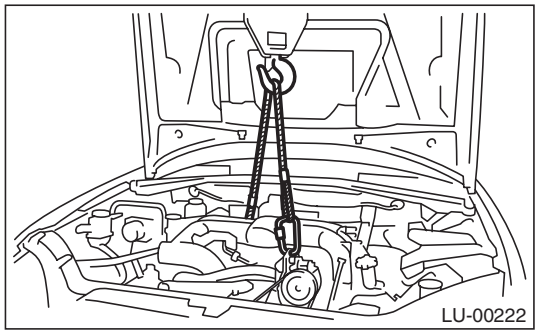

9) Remove the stopper rod.

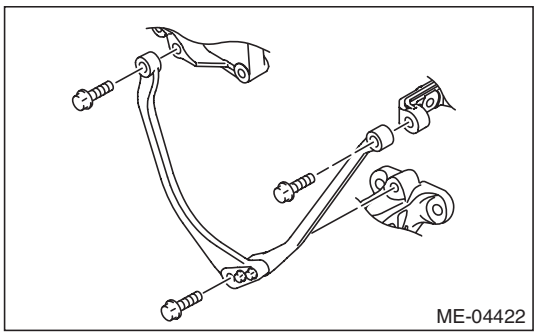

10) Remove the bolt and nut which secure engine mounting to the cradle.

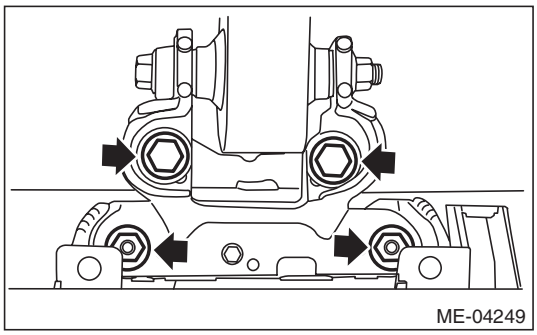

11) Lift up the vehicle.

CAUTION:
When lifting up the vehicle, raise up wire ropes at the same time.

12) Remove the bolts which secure the engine mounting onto the engine, and remove the engine mounting.

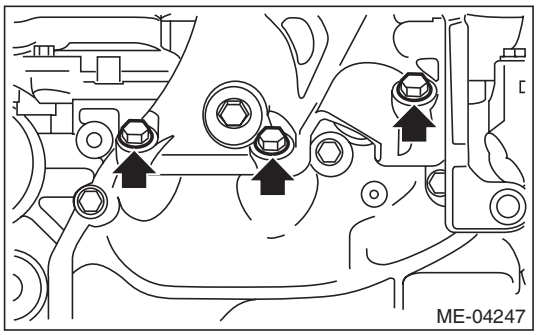

GETtheMANUALS.org

B: INSTALLATION

1) Set the engine mounting, and tighten the bolts which hold engine mounting to the engine.

Tightening torque:
58 N·m (5.9 kgf-m, 42.8 ft-lb)

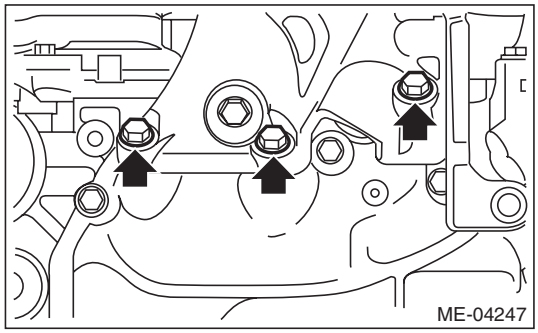

2) Lower the vehicle.

CAUTION:
When lifting down the vehicle, lower wire ropes at the same time.

3) Attach the bolts and nuts which secure engine mounting to the cradle.

Tightening torque:
60 N·m (6.1 kgf-m, 44.3 ft-lb)

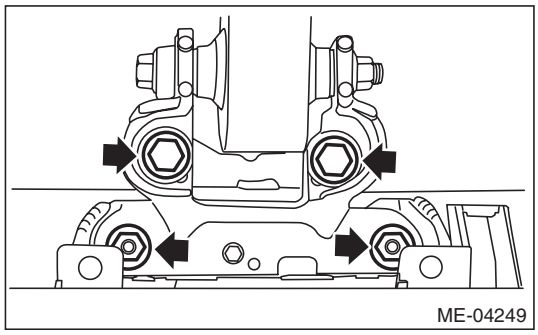

4) Install the stopper rod.

Tightening torque:
36 N·m (3.7 kgf-m, 26.6 ft-lb)

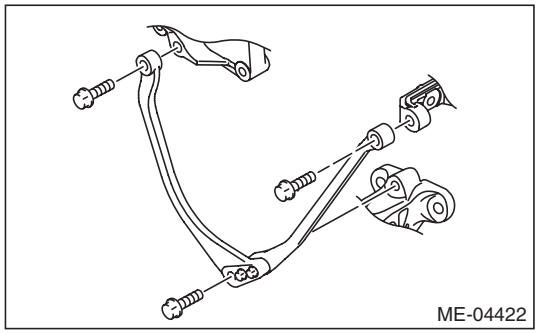

5) Remove the lifting device and wire ropes.

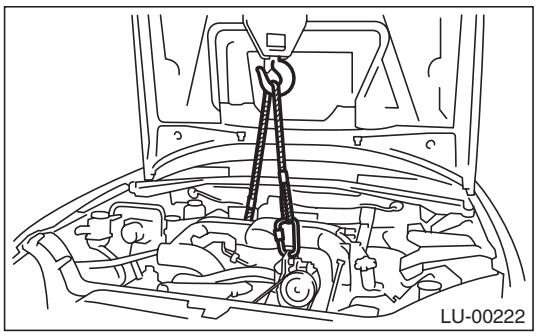

6) Lift up the vehicle.
7) Install the front exhaust pipe. <Ref. to EX(H4SO)-6, INSTALLATION, Front Exhaust Pipe.>
8) Install the under cover. <Ref. to EI-35, INSTALLATION, Front Under Cover.>
9) Lower the vehicle.
10) Install the radiator main fan motor assembly and radiator sub fan motor assembly. <Ref. to CO(H4SO)-24, INSTALLATION, Radiator Main Fan and Fan Motor.> <Ref. to CO(H4SO)-25, INSTALLATION, Radiator Sub Fan and Fan Motor.>
11) Connect the ground cable to battery.

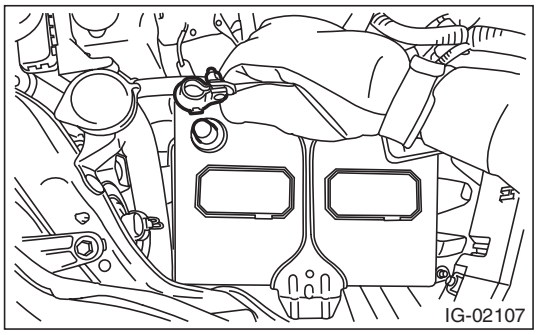

12) Change the front hood damper mounting position from (B) to (A), and close the front hood.

Tightening torque:
20 N·m (2.0 kgf-m, 14.8 ft-lb)

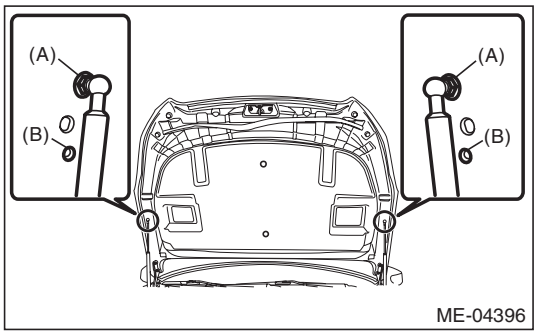

GETtheMANUALS.org

C: DISASSEMBLY

1) Remove the front cushion rubber from the engine mounting bracket.

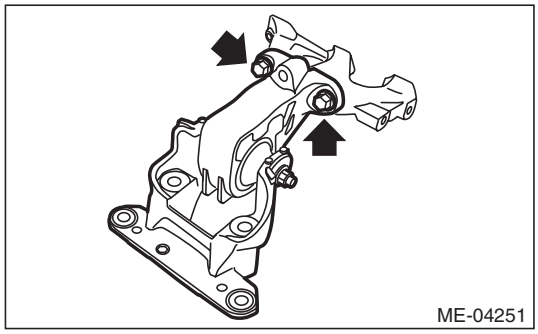

2) Remove the front cushion rubber from the front mounting bracket.

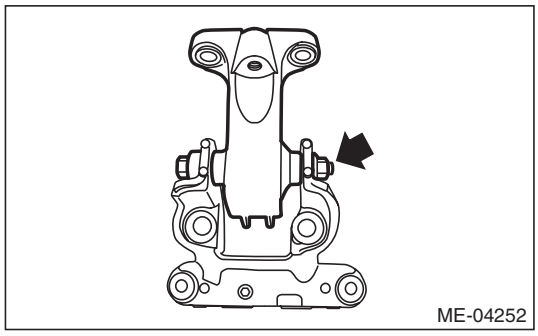

D: ASSEMBLY

1) Install the front cushion rubber to the front mounting bracket.

Tightening torque:
45 N·m (4.6 kgf-m, 33.2 ft-lb)

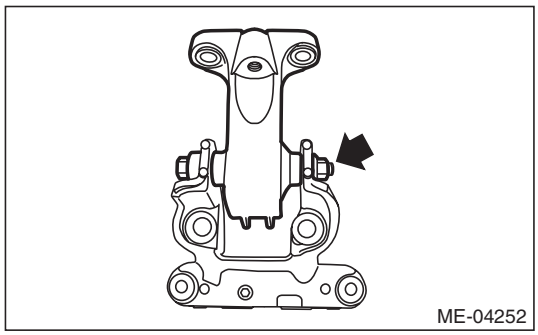

2) Install the front cushion rubber to the engine mounting bracket.

Tightening torque:
25 N·m (2.5 kgf-m, 18.4 ft-lb)

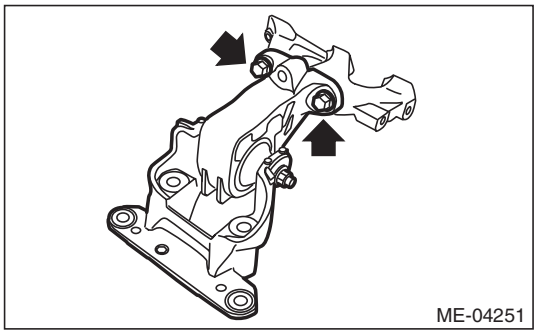

E: INSPECTION

Check that the engine mounting does not have deformation, cracks and any other damage.

GETtheMANUALS.org

11.Preparation for Overhaul

A: PROCEDURE

1) After removing the engine from vehicle body, attach the ST to the engine as shown in the figure.

ST1	498457000	ENGINE STAND ADAPTER RH
ST2	498457100	ENGINE STAND ADAPTER LH
ST3	499817100	ENGINE STAND

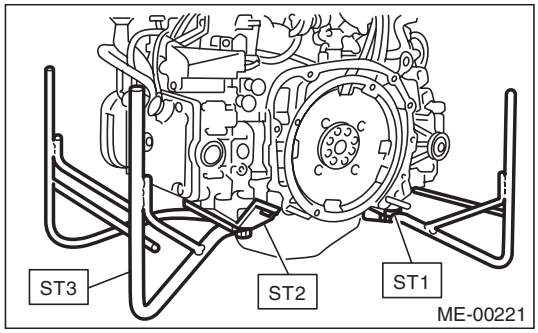

2) In this section the procedures described under each index are all connected and stated in order. Engine overhaul will be completed when you go through all steps in the procedure.
Therefore, in this section, to conduct the particular procedure within the flow of a section, you need to go back and conduct the procedure described previously in order to do that particular procedure.

GETtheMANUALS.org

12. V-belt

A: REMOVAL

NOTE:
When replacing a single part, perform the work with the engine assembly installed to body.

1. V-BELT

1) Remove the V-belt covers.
2) Remove the air intake duct. <Ref. to IN(H4SO)-9, REMOVAL, Air Intake Duct.>
3) Attach the tool to the V-belt tensioner assembly, and rotate the tool clockwise to loosen and remove the V-belt.

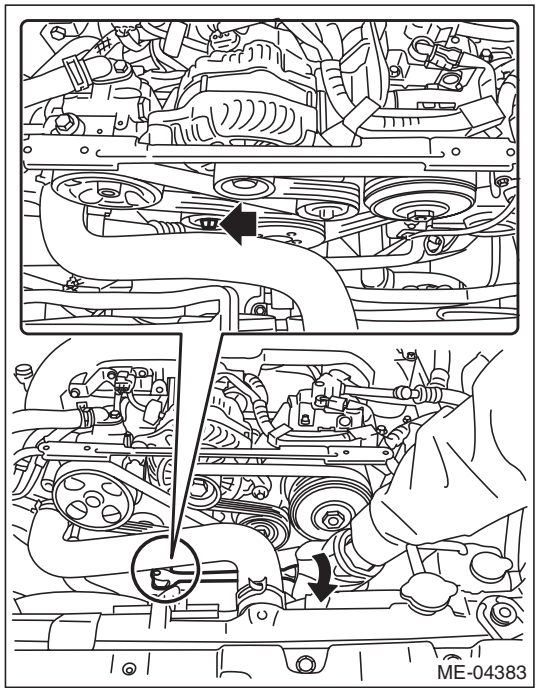

2. V-BELT TENSIONER ASSEMBLY AND IDLER PULLEY

1) Remove the V-belts. <Ref. to ME(H4SO)-43, V-BELT, REMOVAL, V-belt.>
2) Remove the bolt securing the V-belt tensioner assembly to the power steering pump bracket, and remove the V-belt tensioner assembly.

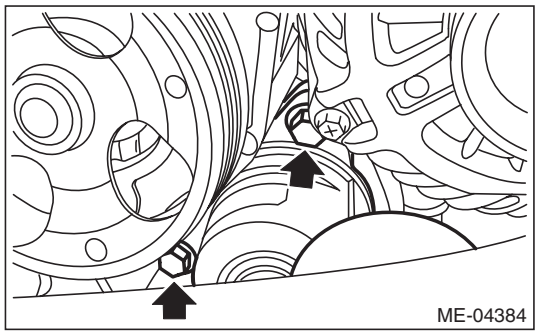

3) Remove the bolt securing the idler pulley to the A/C compressor bracket, and remove the idler pulley.

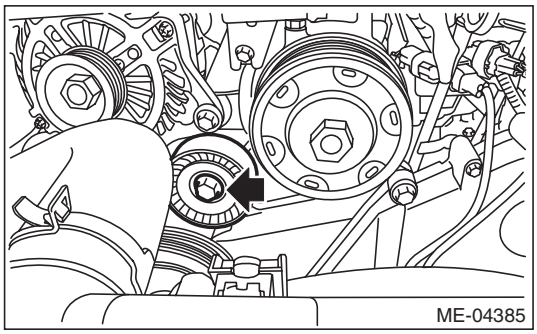

B: INSTALLATION

1. V-BELT

Install in the reverse order of removal.

CAUTION:
- **When reusing the V-belt, wipe off dust and water with cloth.**
- **Do not use the V-belt if there is any oil, grease or coolant on the belt.**
- **Be careful not to rub the V-belt end surface with bare hands; exposed core may cause injury.**
- **Wipe off any dust, oil and water on the groove of each pulley with cloth.**

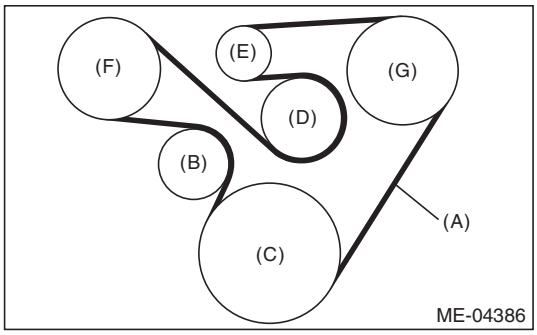

(A) V-belt
(B) V-belt tensioner ASSY
(C) Crank pulley
(D) Idler pulley
(E) Generator pulley
(F) Power steering pump pulley
(G) A/C compressor pulley

GETtheMANUALS.org

2. V-BELT TENSIONER ASSEMBLY AND IDLER PULLEY

Install in the reverse order of removal.

Tightening torque:
33 N·m (3.4 kgf-m, 24.3 ft-lb)

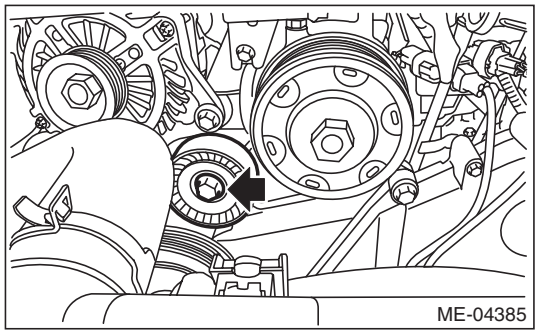

Tightening torque:
20 N·m (2.0 kgf-m, 14.8 ft-lb)

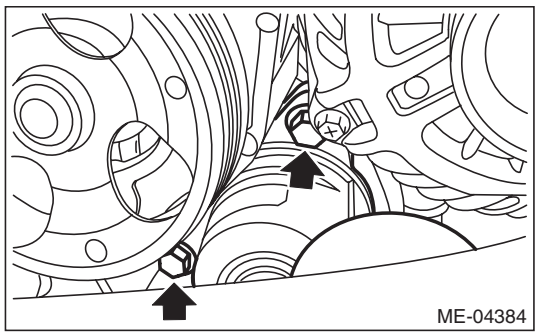

C: INSPECTION

1) Check the V-belt for cracks, tear or wear.
2) Remove the air intake duct. <Ref. to IN(H4SO)-9, REMOVAL, Air Intake Duct.>
3) Check the V-belt tensioner assembly and idler pulley for deformation, cracks or other damages.
4) Check that the V-belt tension indicator (A) is within the limit (B).

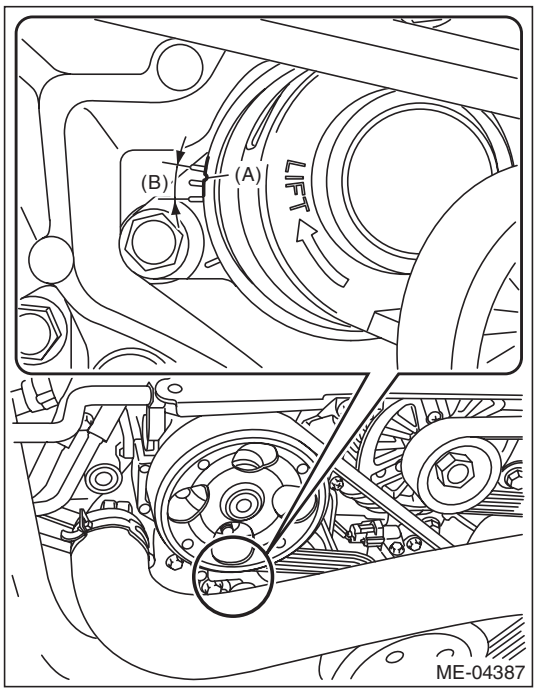

GETtheMANUALS.org

13. Crank Pulley

A: REMOVAL

NOTE:
When replacing a single part, perform the work with the engine assembly installed to body.

1) Remove the V-belts. <Ref. to ME(H4SO)-43, REMOVAL, V-belt.>
2) Use the ST to lock the crank pulley, and remove the crank pulley bolt.

ST 499977400 CRANK PULLEY WRENCH (CVT MODEL)
ST 499977100 CRANK PULLEY WRENCH (MT MODEL)

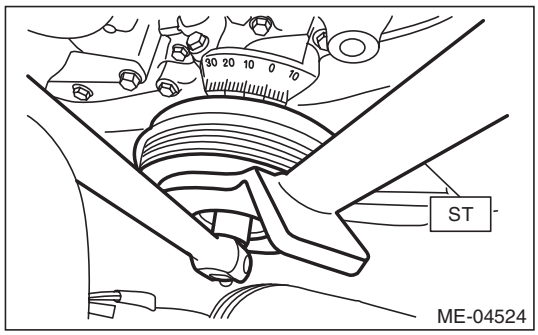

3) Remove the crank pulley.

B: INSTALLATION

1. METHOD WITHOUT ANGLE GAUGE

1) Clean the crankshaft thread using compressed air.
2) Install the crank pulley.
3) Apply engine oil to the crank pulley bolt seat and thread.
4) Tighten the crank pulley bolts.
   (1) Use the ST to lock the crank pulley, and temporarily tighten the crank pulley bolt.

ST 499977400 CRANK PULLEY WRENCH (CVT MODEL)
ST 499977100 CRANK PULLEY WRENCH (MT MODEL)

Tightening torque:
47 N·m (4.8 kgf-m, 34.7 ft-lb)

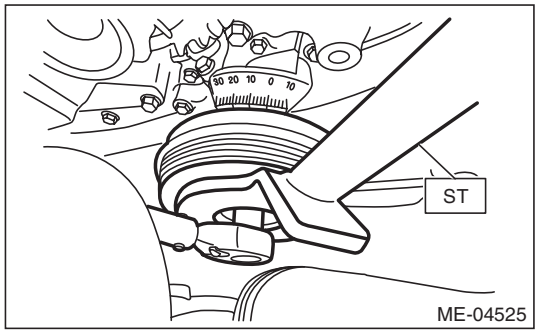

   (2) Draw reference lines (A) and (B) using a marker to set the socket to the crank pulley bolt as shown in the figure.

NOTE:
Set the socket onto the crank pulley bolt so that reference lines (A) and (B) is visible.

ST 499977400 CRANK PULLEY WRENCH (CVT MODEL)
ST 499977100 CRANK PULLEY WRENCH (MT MODEL)

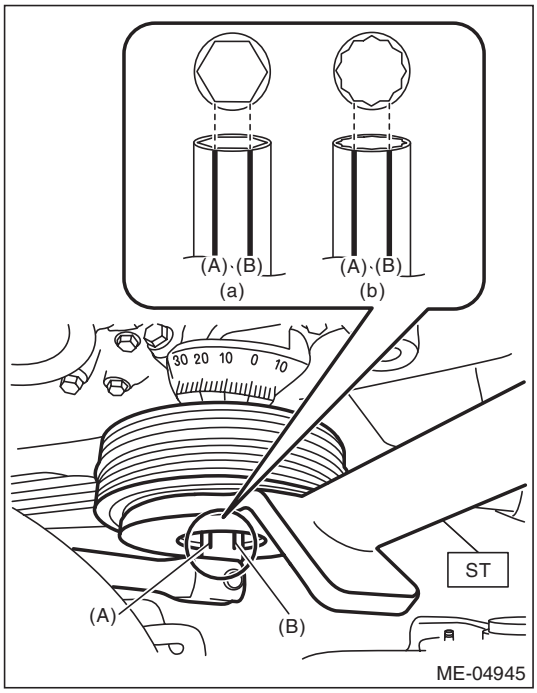

(a) When using 6-point socket
(b) When using 12-point socket

   (3) Draw end line (C) on ST using a marker at the same position as reference line (B) drawn on the socket in step (2).

ST 499977400 CRANK PULLEY WRENCH (CVT MODEL)
ST 499977100 CRANK PULLEY WRENCH (MT MODEL)

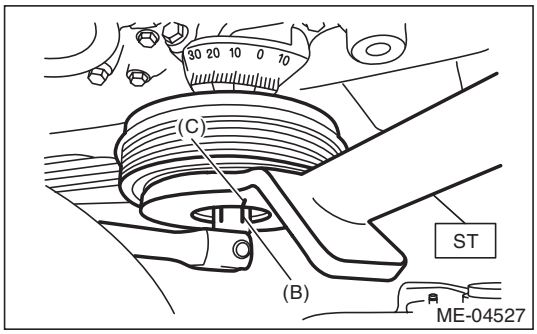

GETtheMANUALS.org

(4) Use the ST to lock the crank pulley, and tighten the crank pulley bolt to the angle where reference line (A) and end line (C) are aligned.

NOTE:
It should be approx. 60° when reference line (A) and end line (C) are aligned.

ST	499977400	CRANK PULLEY WRENCH (CVT MODEL)
ST	499977100	CRANK PULLEY WRENCH (MT MODEL)

Tightening angle:
60°±5°

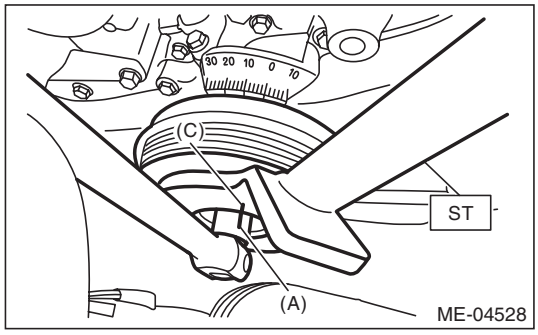

5) Install the V-belts. <Ref. to ME(H4SO)-43, INSTALLATION, V-belt.>

2. METHOD WITH ANGLE GAUGE

1) Clean the crankshaft thread using compressed air.
2) Install the crank pulley.
3) Apply engine oil to the crank pulley bolt seat and thread.
4) Tighten the crank pulley bolts.

(1) Remove the radiator main fan motor assembly and radiator sub fan motor assembly. <Ref. to CO(H4SO)-24, REMOVAL, Radiator Main Fan and Fan Motor.> <Ref. to CO(H4SO)-25, REMOVAL, Radiator Sub Fan and Fan Motor.>

(2) Use the ST1 to lock the crank pulley, and temporarily tighten the crank pulley bolt.

ST1	499977400	CRANK PULLEY WRENCH (CVT MODEL)
ST1	499977100	CRANK PULLEY WRENCH (MT MODEL)

Tightening torque:
47 N·m (4.8 kgf-m, 34.7 ft-lb)

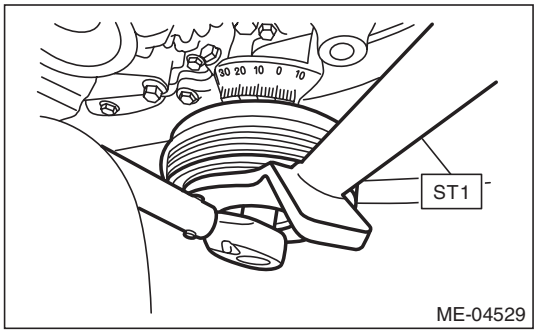

(3) Set the ST2, use the ST1 to lock the crank pulley, and tighten the crank pulley bolt to the specified angle.

NOTE:
Attach the magnet used for securing the ST2 (ANGLE GAUGE) to ST1.

ST1	499977400	CRANK PULLEY WRENCH (CVT MODEL)
ST1	499977100	CRANK PULLEY WRENCH (MT MODEL)
ST2	18854AA000	ANGLE GAUGE

Tightening angle:
60°±5°

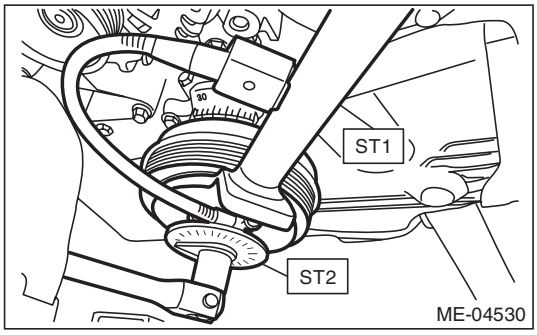

(4) Install the radiator main fan motor assembly and radiator sub fan motor assembly. <Ref. to CO(H4SO)-24, INSTALLATION, Radiator Main Fan and Fan Motor.> <Ref. to CO(H4SO)-25, INSTALLATION, Radiator Sub Fan and Fan Motor.>

5) Install the V-belts. <Ref. to ME(H4SO)-43, INSTALLATION, V-belt.>

C: INSPECTION

Check that the crank pulley has no deformation, cracks or other damages.

GETtheMANUALS.org

14.Timing Belt Cover

A: REMOVAL

NOTE:
When replacing a single part, perform the work with the engine assembly installed to body.
1) Remove the crank pulley. <Ref. to ME(H4SO)-45, REMOVAL, Crank Pulley.>
2) Remove the stopper rod.

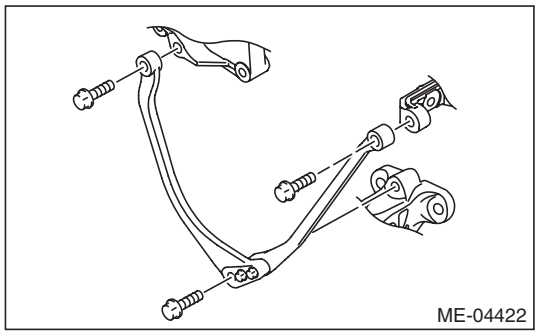

3) Remove the timing belt cover LH (A).
4) Remove the front timing belt cover (B).

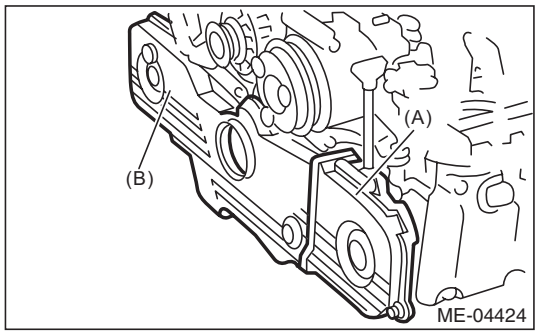

B: INSTALLATION

1) Install the front timing belt cover (B).

Tightening torque:
5 N·m (0.5 kgf-m, 3.7 ft-lb)

2) Install the timing belt cover LH (A).

Tightening torque:
5 N·m (0.5 kgf-m, 3.7 ft-lb)

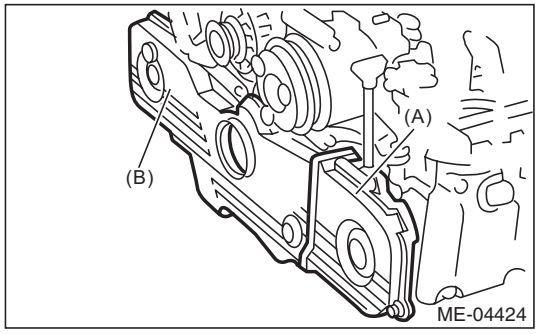

3) Install the stopper rod.

Tightening torque:
36 N·m (3.7 kgf-m, 26.6 ft-lb)

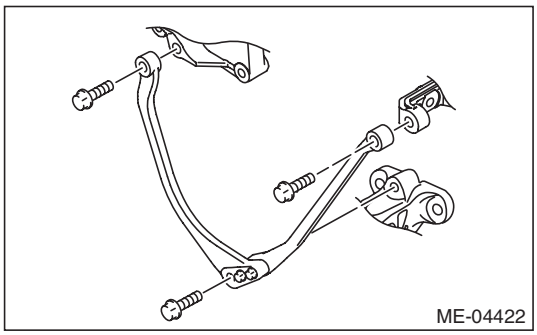

4) Install the crank pulley. <Ref. to ME(H4SO)-45, INSTALLATION, Crank Pulley.>

C: INSPECTION

Check that the timing belt cover does not have deformation, cracks and any other damage.

GETtheMANUALS.org

15. Timing Belt

A: REMOVAL

NOTE:
- When replacing a single part, perform the work with the engine assembly installed to body.
- When performing the work with the engine installed to body, the following parts must also be removed/installed.
  - Radiator main fan motor assembly <Ref. to CO(H4SO)-24, REMOVAL, Radiator Main Fan and Fan Motor.> <Ref. to CO(H4SO)-24, INSTALLATION, Radiator Main Fan and Fan Motor.>
  - Radiator sub fan motor assembly <Ref. to CO(H4SO)-25, REMOVAL, Radiator Sub Fan and Fan Motor.> <Ref. to CO(H4SO)-25, INSTALLATION, Radiator Sub Fan and Fan Motor.>
- When performing the work with the engine installed to body, protect the radiator with cardboards or blankets.

1. TIMING BELT

1) Remove the crank pulley. <Ref. to ME(H4SO)-45, REMOVAL, Crank Pulley.>
2) Remove the timing belt cover. <Ref. to ME(H4SO)-47, REMOVAL, Timing Belt Cover.>
3) Remove the timing belt guide. (MT model)

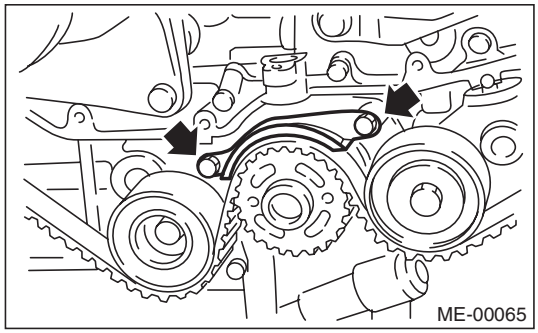

4) If the alignment mark or arrow mark (which indicates the direction of rotation) on timing belt fade away, put new marks before removing the timing belt as shown in procedures below.

(1) Use the ST to turn crankshaft. Align the mark (a) of sprocket to the mark (b) of oil pump, and then ensure the right side cam sprocket mark (c), cam cap and cylinder head matching surface (d) or left side cam sprocket mark (e), timing belt cover notch (f) are properly adjusted.

ST 499987500 CRANKSHAFT SOCKET

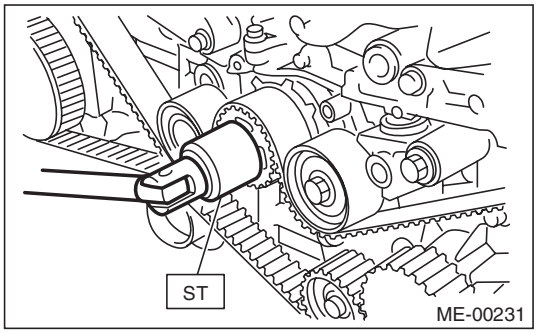

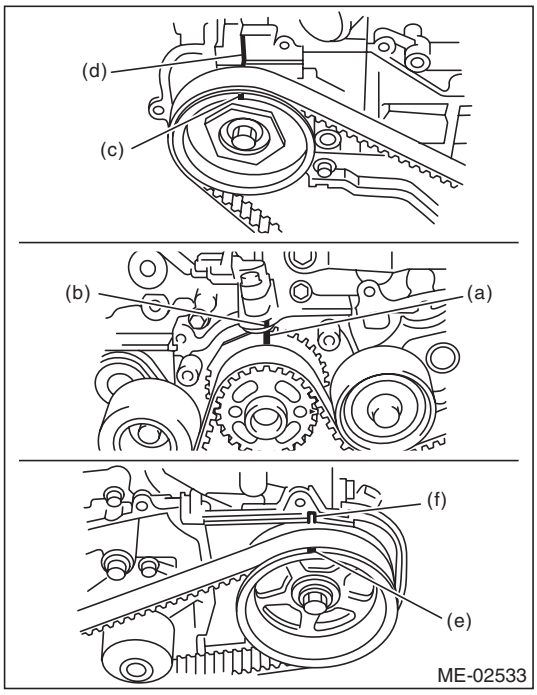

GETtheMANUALS.org

(2) Using white paint, put an alignment mark or an arrow mark on timing belts in relation to the crank sprocket and cam sprockets.

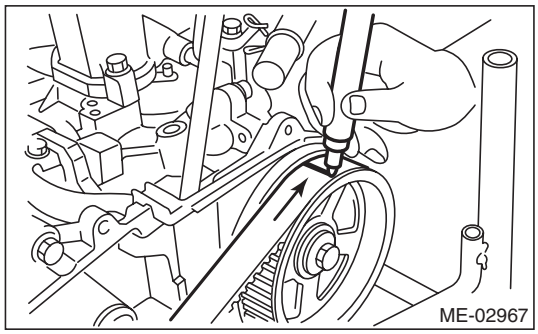

Z_1: 46.8 teeth
Z_2: 43.7 teeth

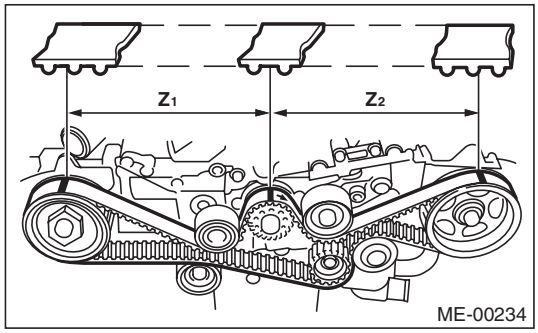

5) Remove the belt idler (A).
6) Remove the belt idler No. 2 (B).

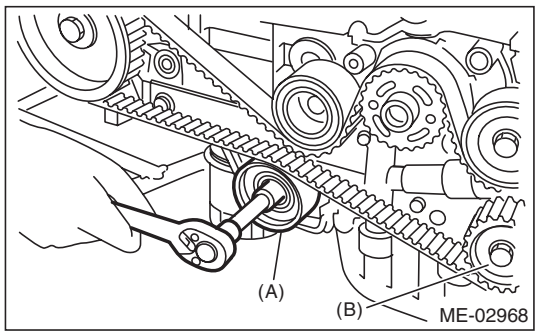

7) Remove the timing belt.

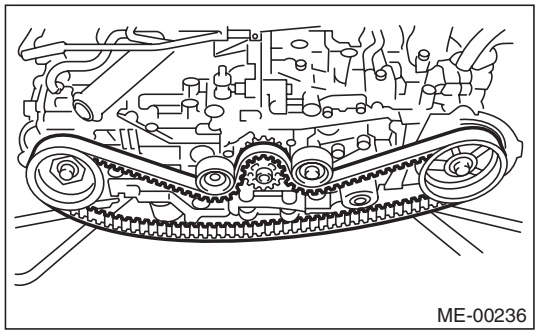

2. BELT IDLER AND AUTOMATIC BELT TENSION ADJUSTER ASSEMBLY

1) Remove the belt idler.

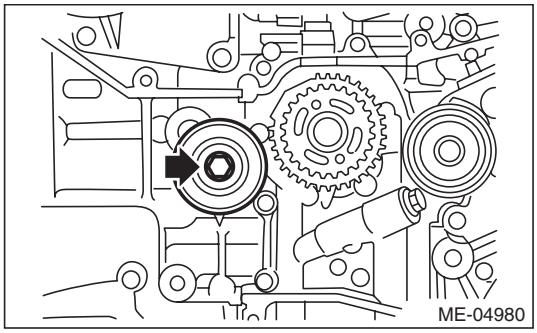

2) Remove the automatic belt tension adjuster assembly.

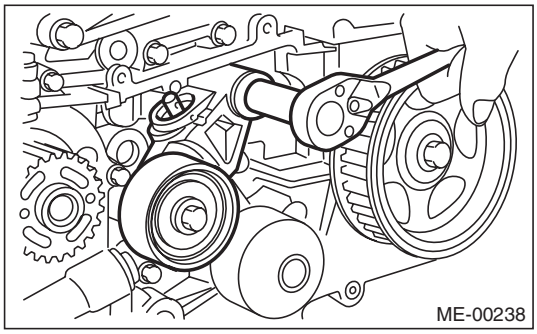

B: INSTALLATION

1. AUTOMATIC BELT TENSION ADJUSTER ASSEMBLY AND BELT IDLER

1) Prepare for installation of the automatic belt tension adjuster assembly.

CAUTION:
- **Always use a vertical type pressing tool to move the adjuster rod down.**
- **Do not use a lateral type vise.**
- **Push the adjuster rod vertically.**
- **Press-in the push adjuster rod gradually taking three minutes or more.**
- **Do not allow press pressure to exceed 9,807 N (1,000 kgf, 2,205 lb).**
- **Push in the adjuster rod to the end face of the cylinder. However, do not push in the adjuster rod below the end face of the cylinder. Doing so may damage the cylinder.**
- **Do not release the press pressure until stopper pin is completely inserted.**

(1) Attach the automatic belt tension adjuster assembly to vertical pressing tool.

GETtheMANUALS.org

(2) Slowly push in the adjuster rod with a pressure of 165 N (16.8 kgf, 37.1 lbf) or more until the adjuster rod is aligned with the stopper pin hole in the cylinder.

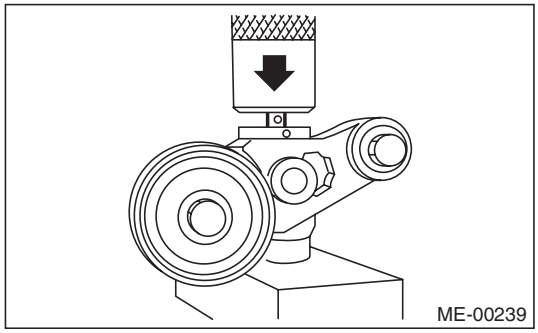

(3) With a 2 mm (0.08 in) dia. stopper pin or a 2 mm (nominal) dia. hex wrench inserted into the stopper pin hole in cylinder, secure the adjuster rod.

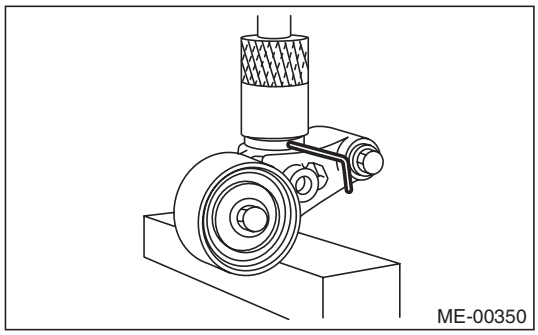

2) Install the automatic belt tension adjuster assembly.

Tightening torque:
39 N·m (4.0 kgf-m, 28.8 ft-lb)

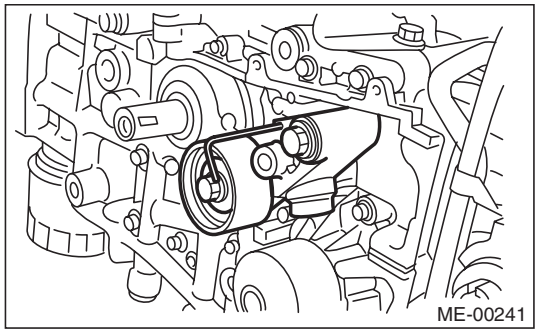

3) Install the belt idlers.

Tightening torque:
39 N·m (4.0 kgf-m, 28.8 ft-lb)

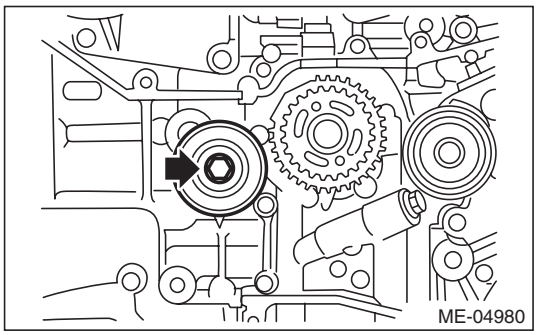

2. TIMING BELT

1) Prepare for installation of the automatic belt tension adjuster assembly. <Ref. to ME(H4SO)-49, AUTOMATIC BELT TENSION ADJUSTER ASSEMBLY AND BELT IDLER, INSTALLATION, Timing Belt.>

2) Align the mark (B) on oil pump with the mark (A) on crank sprocket.

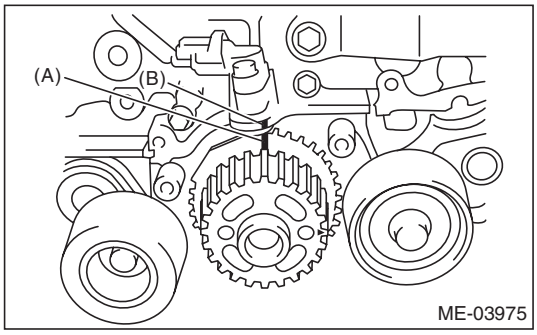

3) Turn the camshaft sprocket No. 2 using ST1, and turn the camshaft sprocket No. 1 using ST2 so that their alignment marks (A) come to top positions.

ST1 18231AA010 CAM SPROCKET WRENCH

NOTE:
CAM SPROCKET WRENCH (499207100) can also be used.

ST2 499207400 CAM SPROCKET WRENCH

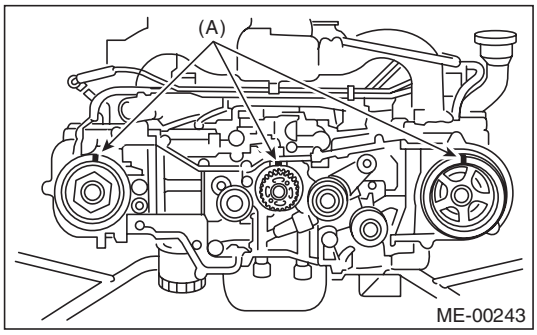

GETtheMANUALS.org

4) While aligning the alignment mark (B) on timing belt with the mark (A) on sprockets, position the timing belt properly.

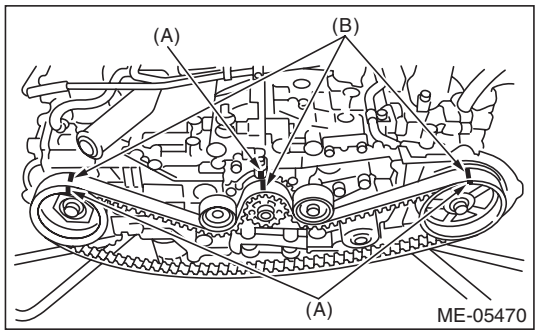

5) Install the belt idler No. 2 (B).

Tightening torque:
39 N·m (4.0 kgf-m, 28.8 ft-lb)

6) Install the belt idler (A).

Tightening torque:
39 N·m (4.0 kgf-m, 28.8 ft-lb)

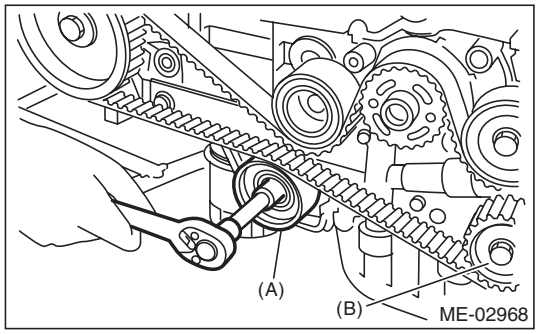

7) After ensuring the marks on timing belt and camshaft sprockets are aligned, remove the stopper pin from belt tension adjuster.

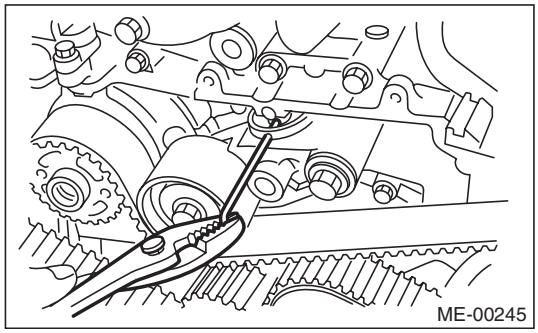

8) Install the timing belt guide. (MT model)

(1) Temporarily tighten the bolts mounting the timing belt guide.

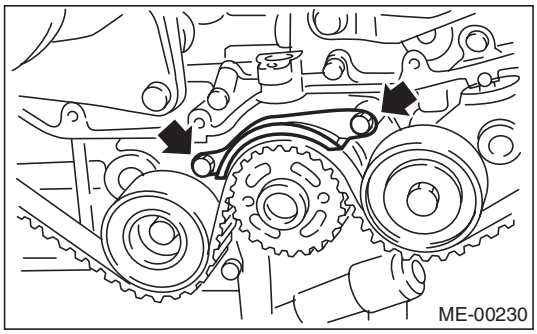

(2) Check and adjust the clearance between timing belt and timing belt guide by using thickness gauge.

Clearance:
1.0±0.5 mm (0.039±0.020 in)

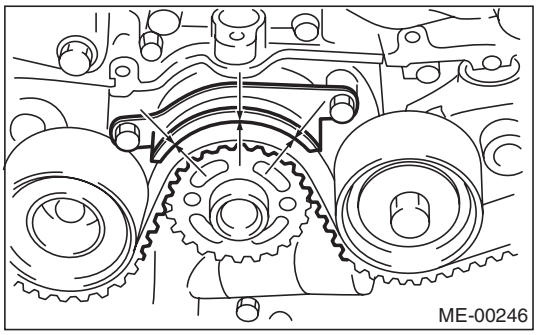

(3) Tighten the bolts mounting the timing belt guide.

Tightening torque:
9.75 N·m (1.0 kgf-m, 7.2 ft-lb)

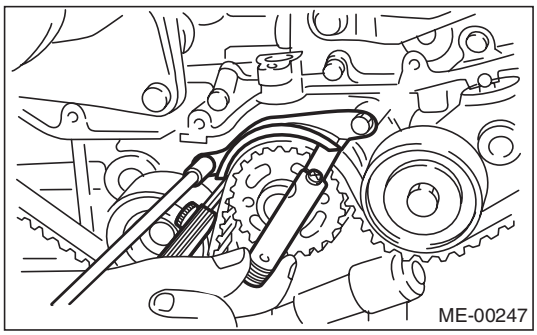

9) Install the timing belt cover. <Ref. to ME(H4SO)-47, INSTALLATION, Timing Belt Cover.>
10) Install the crank pulley. <Ref. to ME(H4SO)-45, INSTALLATION, Crank Pulley.>

GETtheMANUALS.org

C: INSPECTION

1. TIMING BELT

1) Check the timing belt teeth for breaks, cracks or wear. If any fault is found, replace the timing belt.
2) Check the condition on the back surface of the timing belt. If cracks are found, replace the timing belt.

CAUTION:
- **Be careful not to let oil, grease or coolant contact the timing belt. Remove quickly and thoroughly if this happens.**
- **Do not bend the timing belt sharply.**

In radial diameter h:
60 mm (2.36 in) or more

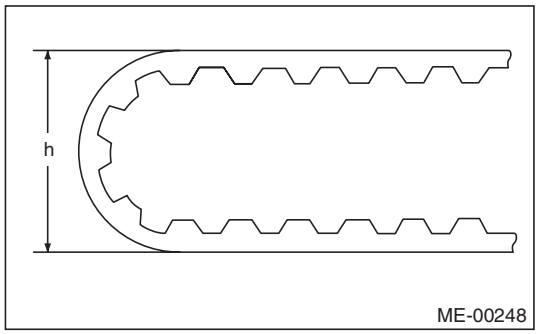

2. AUTOMATIC BELT TENSION ADJUSTER

1) Visually check the oil seals for leaks, and rod ends for abnormal wear and scratches. If necessary, replace the automatic belt tension adjuster assembly.

NOTE:
Slight traces of oil at rod's oil seal does not indicate a problem.
2) Check that the adjuster rod does not move when a pressure of 165 N (16.8 kgf, 37.1 lb) is applied to it. This is to check adjuster rod stiffness.
3) If the adjuster rod is not stiff and moves freely when applying 165 N (16.8 kgf, 37.1 lb), check it using the following procedures:
(1) Slowly press the adjuster rod down to the end surface of cylinder. Repeat this operation two to three times.
(2) With the adjuster rod moved all the way up, apply a pressure of 165 N (16.8 kgf, 37.1 lb) to it, and check the adjuster rod stiffness.
(3) If the adjuster rod is not stiff and moves down, replace the automatic belt tension adjuster assembly with a new part.

CAUTION:
- **Always use a vertical type pressing tool to move the adjuster rod down.**
- **Do not use a lateral type vise.**
- **Push the adjuster rod vertically.**
- **Press the adjuster rod gradually taking three minutes or more.**
- **Do not allow press pressure to exceed 9,807 N (1,000 kgf, 2,205 lb).**
- **Push in the adjuster rod to the end face of the cylinder. However, do not press the adjuster rod below the end face of the cylinder. Doing so may damage the cylinder.**

4) Measure the amount of adjuster rod protrusion "H" from the end surface of the cylinder. If it is not within specifications, replace the automatic belt tension adjuster assembly with a new part.

Amount of adjuster rod protrusion H:
5.2 — 6.2 mm (0.205 — 0.244 in)

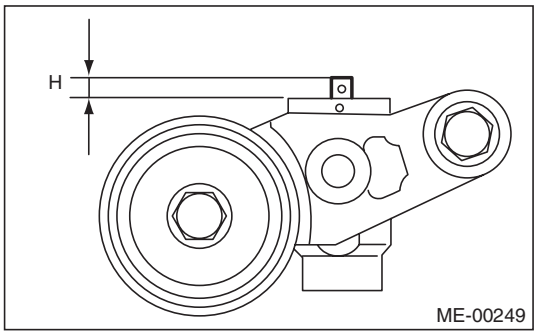

3. BELT TENSION PULLEY

1) Check the mating surfaces of timing belt and contact point of adjuster rod for abnormal wear or scratches. Replace the automatic belt tension adjuster assembly with a new part if faulty.
2) Check the belt tension pulley for smooth rotation. Replace the automatic belt tension adjuster assembly with a new part if abnormal noise or excessive play occurs.
3) Check the belt tension pulley for grease leakage.

4. BELT IDLER

1) Check the belt idler for smooth rotation. Replace if noise or excessive play occurs.
2) Check the outer contacting surfaces of idler pulley for abnormal wear and scratches.
3) Check the belt idler for grease leakage.

GETtheMANUALS.org

16. Cam Sprocket

A: REMOVAL

NOTE:
When replacing a single part, perform the work with the engine assembly installed to body.

1) Remove the crank pulley. <Ref. to ME(H4SO)-45, REMOVAL, Crank Pulley.>
2) Remove the timing belt cover. <Ref. to ME(H4SO)-47, REMOVAL, Timing Belt Cover.>
3) Remove the timing belt. <Ref. to ME(H4SO)-48, REMOVAL, Timing Belt.>
4) Remove the camshaft position sensor. <Ref. to FU(H4SO)-27, REMOVAL, Camshaft Position Sensor.>
5) Use the ST to lock the cam sprocket, and remove the cam sprocket bolt.

ST 18231AA010 CAM SPROCKET WRENCH

NOTE:
CAM SPROCKET WRENCH (499207100) can also be used.

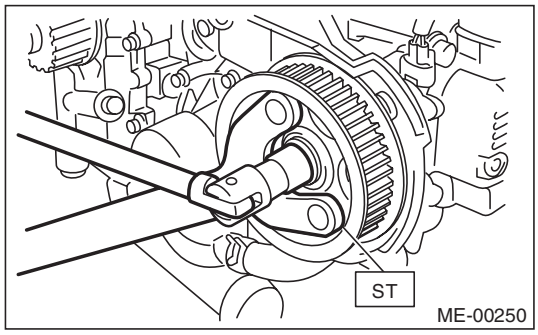

ST 499207400 CAM SPROCKET WRENCH

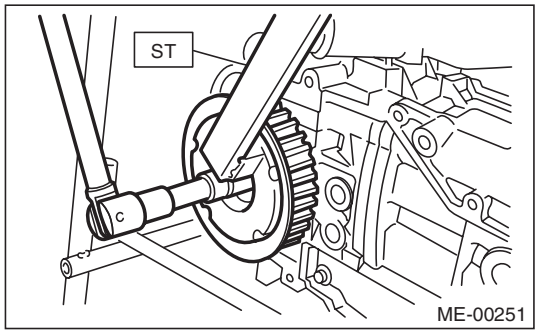

6) Remove the cam sprocket.

B: INSTALLATION

1) Install the cam sprocket.
2) Use the ST to lock the cam sprocket, and install the cam sprocket bolt.

NOTE:
- Do not confuse cam sprockets (LH) and (RH) during installation.
- They can be distinguished by the L or R indication.

ST 18231AA010 CAM SPROCKET WRENCH

NOTE:
CAM SPROCKET WRENCH (499207100) can also be used.

Tightening torque:
78 N·m (8.0 kgf-m, 57.5 ft-lb)

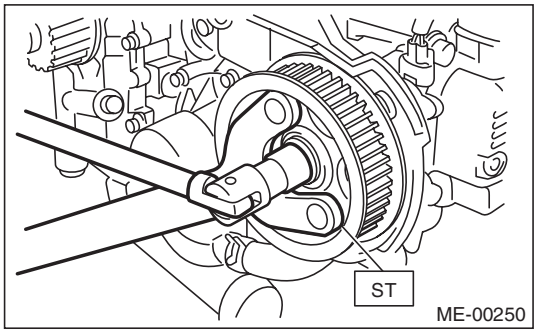

ST 499207400 CAM SPROCKET WRENCH

Tightening torque:
78 N·m (8.0 kgf-m, 57.5 ft-lb)

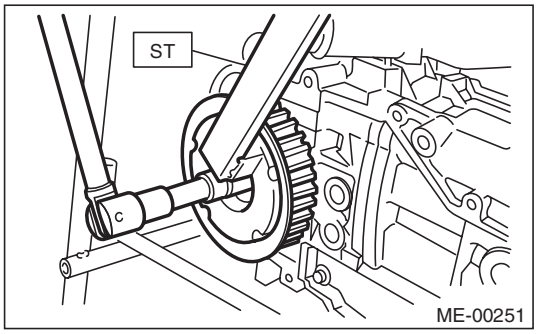

3) Install the camshaft position sensor. <Ref. to FU(H4SO)-27, INSTALLATION, Camshaft Position Sensor.>
4) Install the timing belt. <Ref. to ME(H4SO)-49, INSTALLATION, Timing Belt.>
5) Install the timing belt cover. <Ref. to ME(H4SO)-47, INSTALLATION, Timing Belt Cover.>
6) Install the crank pulley. <Ref. to ME(H4SO)-45, INSTALLATION, Crank Pulley.>

C: INSPECTION

1) Check the cam sprocket teeth for abnormal wear and scratches.
2) Make sure there is no free play between cam sprocket and key.
3) Check the cam sprocket protrusion used for sensor for damage and contamination of foreign matter.

GETtheMANUALS.org

17. Crank Sprocket

A: REMOVAL

NOTE:
When replacing a single part, perform the work with the engine assembly installed to body.

1) Remove the crank pulley. <Ref. to ME(H4SO)-45, REMOVAL, Crank Pulley.>
2) Remove the timing belt cover. <Ref. to ME(H4SO)-47, REMOVAL, Timing Belt Cover.>
3) Remove the timing belt. <Ref. to ME(H4SO)-48, REMOVAL, Timing Belt.>
4) Remove the crank sprocket.

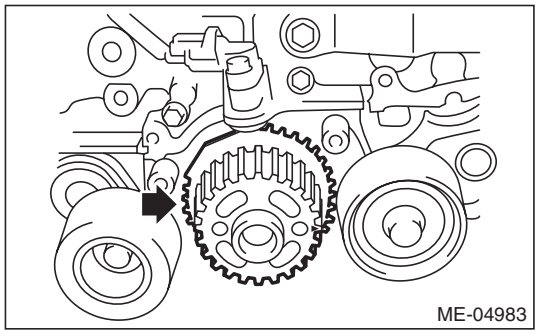

B: INSTALLATION

1) Install the crank sprocket.

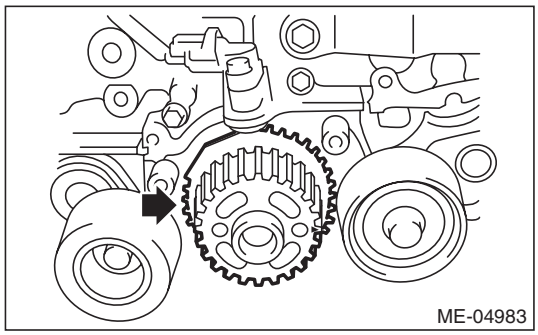

2) Install the timing belt. <Ref. to ME(H4SO)-49, INSTALLATION, Timing Belt.>
3) Install the timing belt cover. <Ref. to ME(H4SO)-47, INSTALLATION, Timing Belt Cover.>
4) Install the crank pulley. <Ref. to ME(H4SO)-45, INSTALLATION, Crank Pulley.>

C: INSPECTION

1) Check the crank sprocket teeth for abnormal wear and scratches.
2) Make sure there is no free play between crank sprocket and key.
3) Check the crank sprocket protrusion used for sensor for damage and contamination of foreign matter.

GETtheMANUALS.org

18. Valve Rocker Assembly

A: REMOVAL

NOTE:
When replacing a single part, perform the work with the engine assembly installed to body. Refer to "Valve Clearance" for preparation procedures. <Ref. to ME(H4SO)-29, Valve Clearance.>

1) Remove the ignition coil. <Ref. to IG(H4SO)-5, REMOVAL, Ignition Coil.>
2) Disconnect the PCV hose and remove the rocker cover.
3) Remove the valve rocker assembly.
   (1) Use the ST to rotate the spring stopper in the direction of the arrow to remove it from adjuster pin.

ST 18258AA000 SPRING INSTALLER

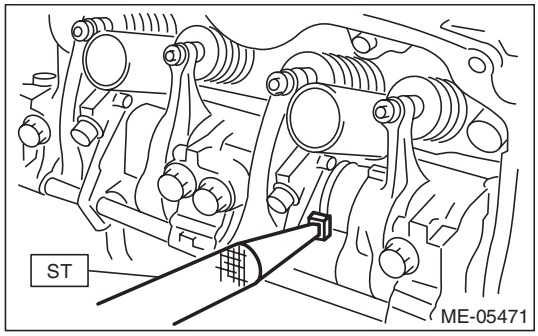

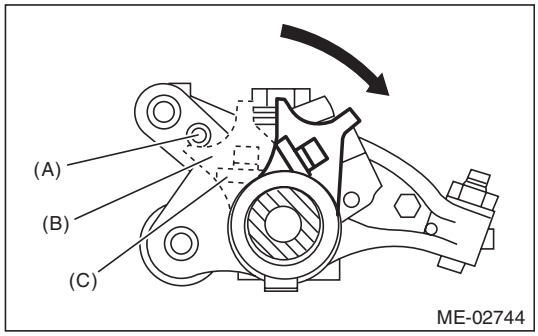

(A) Adjuster pin
(B) Spring stopper
(C) Spring

(2) Remove the bolts (a) through (j) in alphabetical sequence.

NOTE:
Leave two or three threads of bolts (i) and (j) engaged in order to retain the valve rocker assembly.

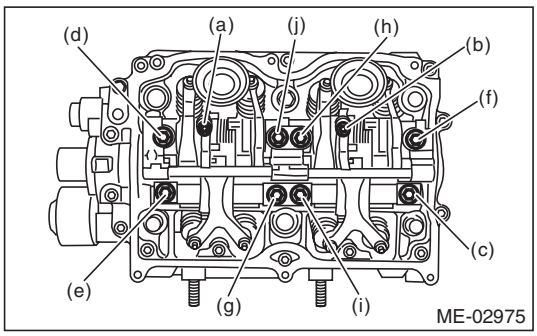

(3) Remove the valve rocker assembly.

NOTE:
Set the ST in the position shown in the drawing to remove the intake valve rocker assembly.

ST 18354AA000 VALVE ROCKER HOLDER

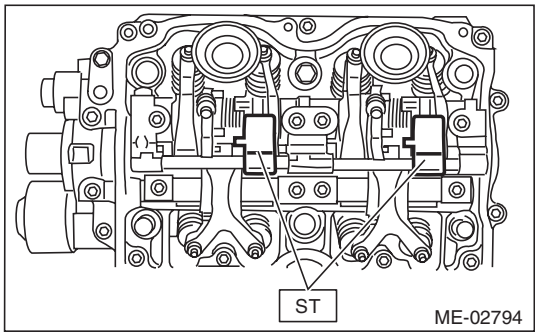

B: INSTALLATION

1) Install the valve rocker assembly.
   (1) Temporarily tighten the bolts equally in alphabetical order as shown in the figure.

NOTE:
- Do not temporarily tighten the bolts (i) and (j).
- Set the ST in the position shown in the drawing to mount the intake valve rocker assembly.

ST 18354AA000 VALVE ROCKER HOLDER

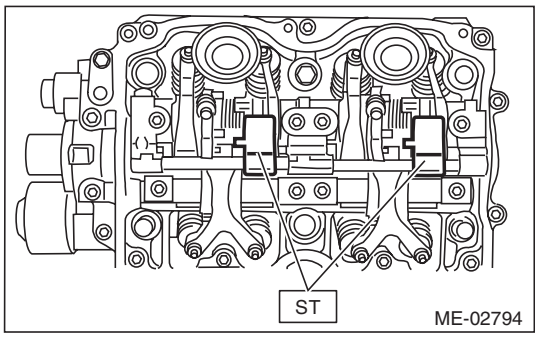

(2) Tighten the bolts (a) through (h) to specified torque.

Tightening torque:
25 N·m (2.5 kgf-m, 18.4 ft-lb)

GETtheMANUALS.org

(3) Tighten the bolts (i) through (j) to specified torque.

Tightening torque:
6 N·m (0.6 kgf-m, 4.4 ft-lb)

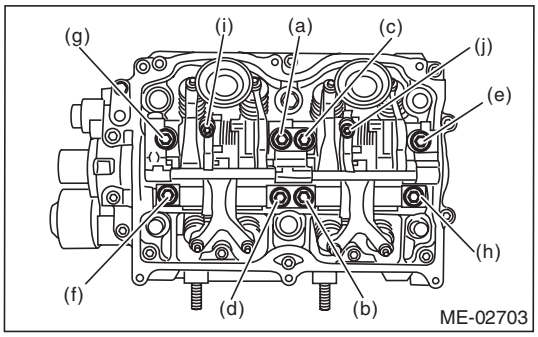

(4) Use the ST to rotate the spring stopper in the direction of the arrow to fasten the adjuster pin.

ST 18258AA000 SPRING INSTALLER

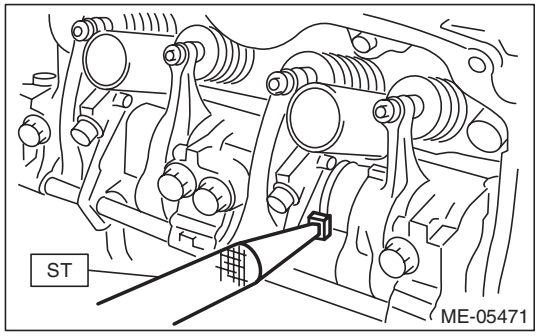

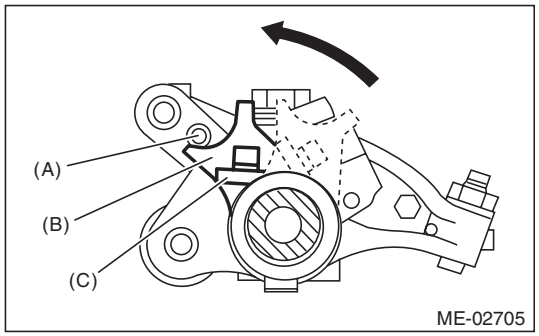

(A) Adjuster pin
(B) Spring stopper
(C) Spring

2) Remove the timing belt cover LH.
3) Adjust the valve clearance. <Ref. to ME(H4SO)-30, ADJUSTMENT, Valve Clearance.>
4) Install the timing belt cover LH.

Tightening torque:
5 N·m (0.5 kgf-m, 3.7 ft-lb)

5) Install the rocker cover.
(1) Install the rocker cover gasket to the rocker cover.

NOTE:
Use a new rocker cover gasket.

(2) Temporarily tighten the bolts in alphabetical order shown in the figure, tighten them in two stages.

Tightening torque:
First
6.4 N·m (0.7 kgf-m, 4.7 ft-lb)
Second (only (a) and (b) are tightened)
6.4 N·m (0.7 kgf-m, 4.7 ft-lb)

- RH side

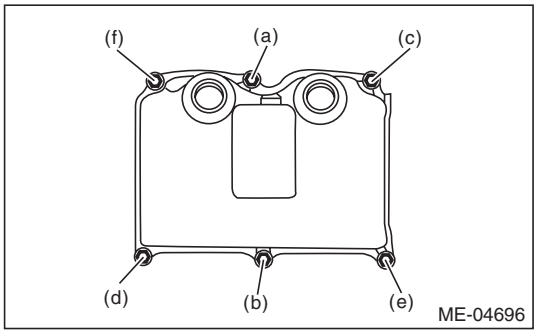

- LH side

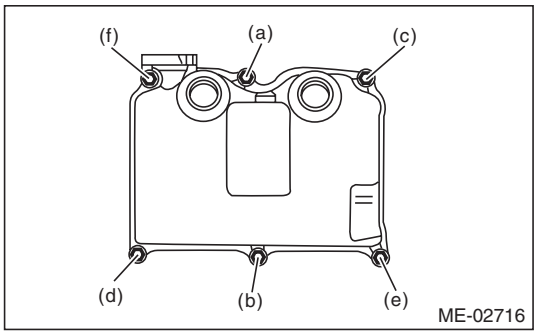

(3) Connect the PCV hose.

6) Install the ignition coil. <Ref. to IG(H4SO)-5, INSTALLATION, Ignition Coil.>

C: DISASSEMBLY

NOTE:
Intake valve rocker assembly cannot be disassembled.

1) Remove the exhaust valve rocker arm from the rocker shaft.

NOTE:
Keep all the removed parts in order for re-installing in their original positions.

2) Remove the nut and adjusting screw from exhaust valve rocker.

GETtheMANUALS.org

D: ASSEMBLY

NOTE:
Intake valve rocker assembly cannot be disassembled.
1) Install the adjusting screw and nut to the exhaust valve rocker.
2) Insert the exhaust valve rocker arm to rocker shaft.

NOTE:
Valve rocker arms, and rocker shaft have identification marks. Make sure the parts with same markings are properly assembled.

E: INSPECTION

1. INTAKE VALVE ROCKER ASSEMBLY

1) If the roller or valve contact surface of valve rocker arm is worn or dented excessively, replace the valve rocker assembly.
2) Check that the valve rocker arm roller rotates smoothly. If not, replace the valve rocker assembly.

2. EXHAUST VALVE ROCKER ASSEMBLY

1) Measure the inner diameter of valve rocker arm and outer diameter of valve rocker shaft, and confirm the difference (oil clearance) between the two values.

Clearance between arm and shaft:
Standard
0.020 — 0.054 mm (0.0008 — 0.0021 in)

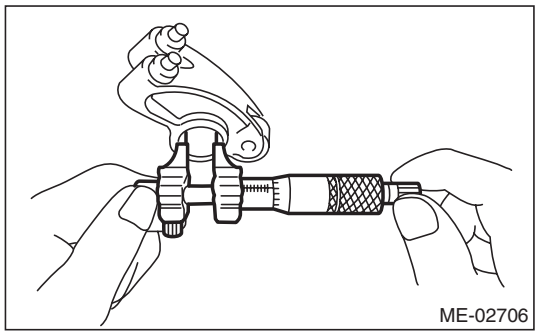
ME-02706

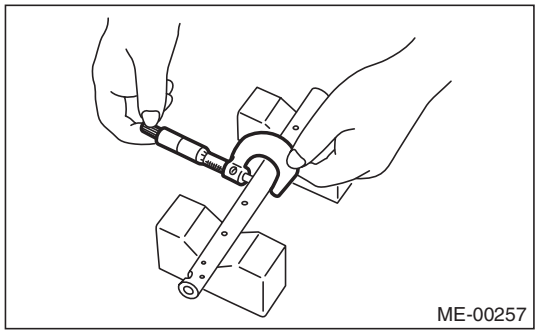
ME-00257

2) If the oil clearance exceeds the limit, replace the valve rocker arm or shaft, whichever shows the greater amount of wear.

Rocker arm inside diameter:
Standard
22.020 — 22.041 mm (0.8669 — 0.8678 in)

Rocker shaft diameter:
Standard
21.987 — 22.000 mm (0.8656 — 0.8661 in)

3) If the roller or valve contact surface of valve rocker arm is worn or dented excessively, replace the valve rocker arm.
4) Check that the valve rocker arm roller rotates smoothly. If not, replace the valve rocker arm.

GETtheMANUALS.org

19. Camshaft

A: REMOVAL

NOTE:
When replacing a single part, perform the work with the engine assembly installed to body. Refer to “Valve Clearance” for preparation procedures. <Ref. to ME(H4SO)-29, Valve Clearance.>

1) Remove the crank pulley. <Ref. to ME(H4SO)-45, REMOVAL, Crank Pulley.>
2) Remove the timing belt cover. <Ref. to ME(H4SO)-47, REMOVAL, Timing Belt Cover.>
3) Remove the timing belt. <Ref. to ME(H4SO)-48, REMOVAL, Timing Belt.>
4) Remove the cam sprocket. <Ref. to ME(H4SO)-53, REMOVAL, Cam Sprocket.>
5) Remove the timing belt cover No. 2 LH.
6) Remove the timing belt cover No. 2 RH.

NOTE:
When removing the timing belt cover, be careful not to damage the seal rubber.

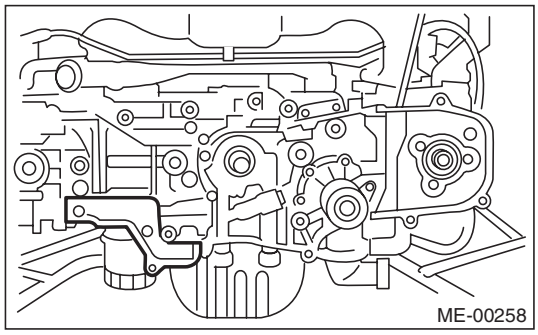

7) Remove the tensioner bracket.

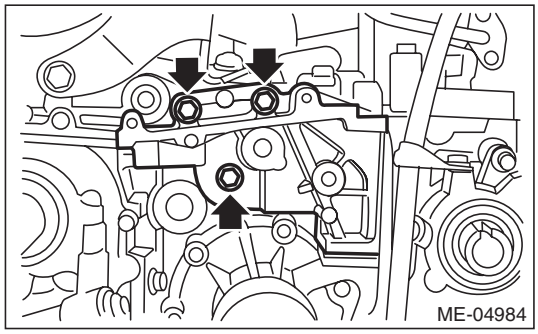

8) Remove the camshaft position sensor support. (LH side only)
9) Remove the valve rocker assembly. <Ref. to ME(H4SO)-55, REMOVAL, Valve Rocker Assembly.>
10) Remove the camshaft cap.
(1) Remove the bolts (a) and (b) in alphabetical sequence.

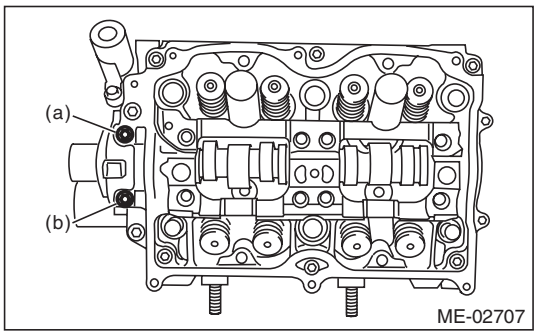

(2) Equally loosen the bolts (c) through (j) all the way in alphabetical sequence.

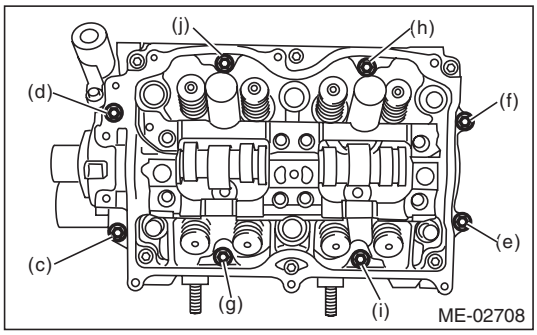

(3) Remove the bolts (k) through (p) in alphabetical sequence using ST.

ST 499497000 TORX® PLUS

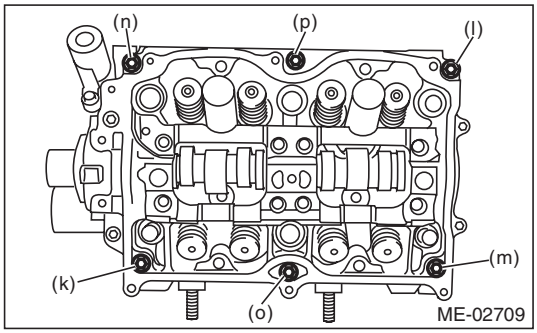

(4) Remove the camshaft cap.
11) Remove the camshaft.
12) Remove the oil seal.
13) Remove the plug from rear side of camshaft.

CAUTION:
Do not scratch the journal surface when removing the oil seal.

14) Similarly, remove the camshaft RH.

GETtheMANUALS.org

B: INSTALLATION

1) Apply a thin coat of engine oil to camshaft journals, and install the camshaft.
2) Install the camshaft cap.
   (1) Apply liquid gasket to the mating surfaces of camshaft cap.

NOTE:
Install within 5 min. after applying liquid gasket.

Liquid gasket:
THREE BOND 1217G (Part No. K0877Y0100) or equivalent

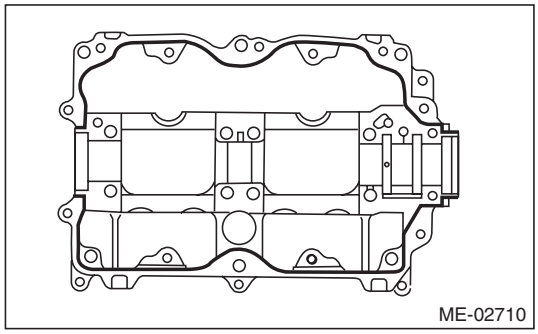

NOTE:
Apply a coat of liquid gasket of 3 mm (0.12 in) in diameter (A) along the edge (B) of camshaft cap (C) mating surface.

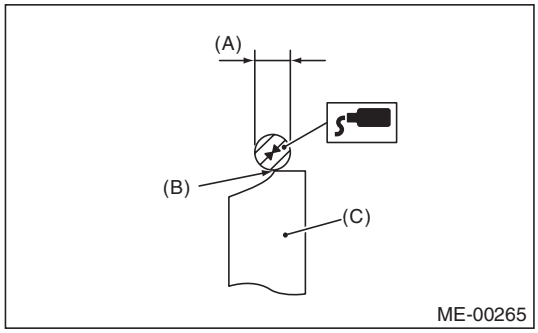

(2) Temporarily tighten the bolts (a) through (d) in alphabetical sequence.

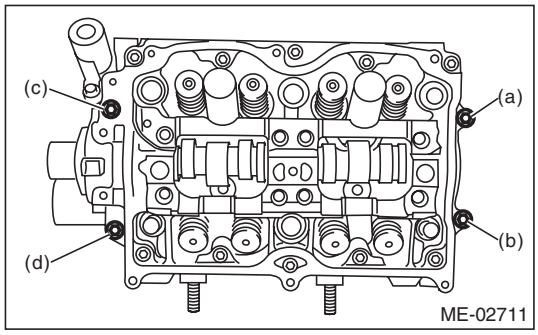

(3) Install the valve rocker assembly. <Ref. to ME(H4SO)-55, INSTALLATION, Valve Rocker Assembly.>

(4) Tighten the TORX® bolts (e) through (j) in alphabetical sequence using the ST.

ST 499497000 TORX® PLUS

Tightening torque:
18 N·m (1.8 kgf-m, 13.3 ft-lb)

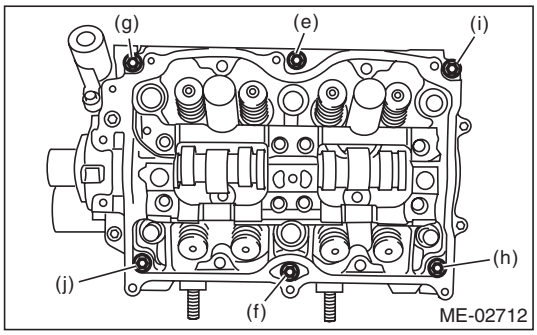

(5) Tighten the bolts (k) through (r) in alphabetical sequence.

Tightening torque:
9.75 N·m (1.0 kgf-m, 7.2 ft-lb)

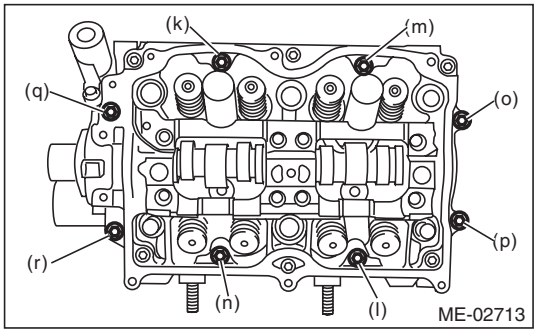

(6) Tighten the bolts (s) and (t) in alphabetical sequence.

NOTE:
- Use a new seal washer.
- Install and tighten the seal washer to the bolt.

Tightening torque:
9.75 N·m (1.0 kgf-m, 7.2 ft-lb)

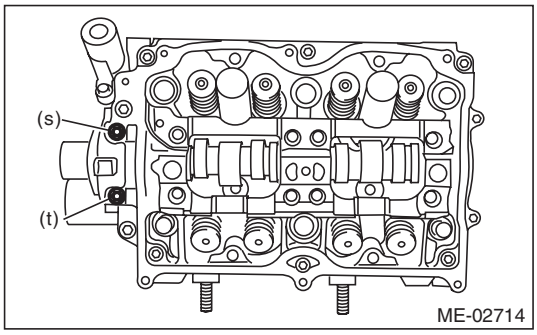

GETtheMANUALS.org

3) Apply a coat of engine oil to camshaft oil seal periphery and oil seal lips and install the oil seal (A) on camshaft using ST1 and ST2.

NOTE:
Use a new oil seal.

ST1	499597000	OIL SEAL GUIDE
ST2	499587500	OIL SEAL INSTALLER

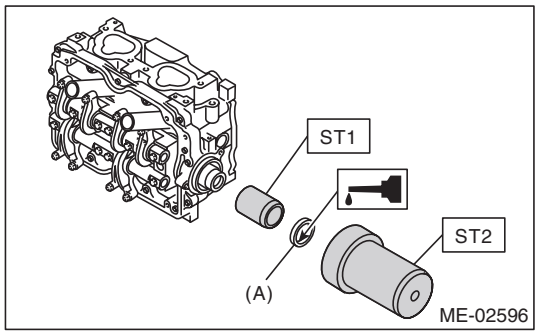

4) Apply a coat of engine oil to plug periphery and install the plug (A) using ST.

ST	499587700	CAMSHAFT OIL SEAL INSTALLER

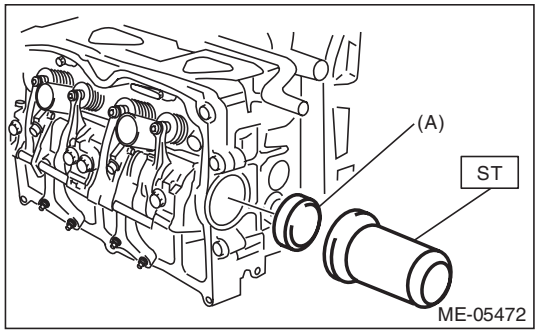

5) Install the camshaft position sensor support. (LH side only)

Tightening torque:
6.4 N·m (0.7 kgf-m, 4.7 ft-lb)

6) Similarly, install the camshaft RH.

7) Install the tensioner bracket.

Tightening torque:
24.5 N·m (2.5 kgf-m, 18.1 ft-lb)

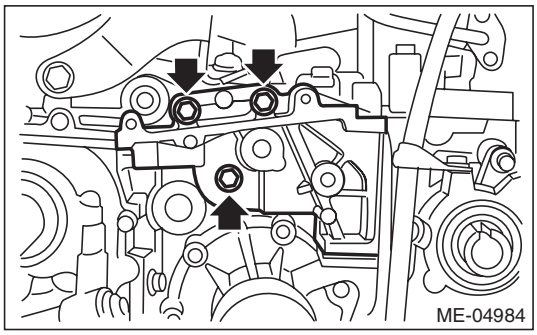

8) Install the timing belt cover No. 2 RH.

Tightening torque:
5 N·m (0.5 kgf-m, 3.7 ft-lb)

9) Install the timing belt cover No. 2 LH.

Tightening torque:
5 N·m (0.5 kgf-m, 3.7 ft-lb)

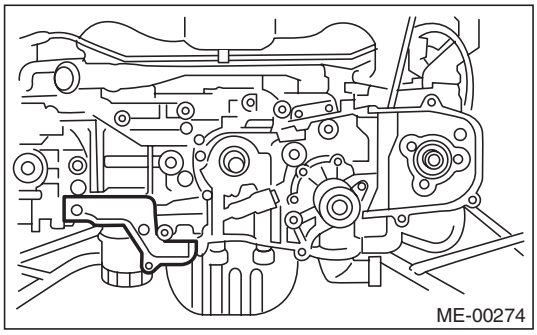

10) Install the cam sprocket. <Ref. to ME(H4SO)-53, INSTALLATION, Cam Sprocket.>

11) Install the timing belt. <Ref. to ME(H4SO)-49, INSTALLATION, Timing Belt.>

12) Adjust the valve clearance. <Ref. to ME(H4SO)-30, ADJUSTMENT, Valve Clearance.>

GETtheMANUALS.org

13) Install the rocker cover.
(1) Install the rocker cover gasket to the rocker cover.

NOTE:
Use a new rocker cover gasket.

(2) Temporarily tighten the bolts in alphabetical order shown in the figure, tighten them in two stages.

Tightening torque:
First
6.4 N·m (0.7 kgf-m, 4.7 ft-lb)
Second (only (a) and (b) are tightened)
6.4 N·m (0.7 kgf-m, 4.7 ft-lb)

- RH side

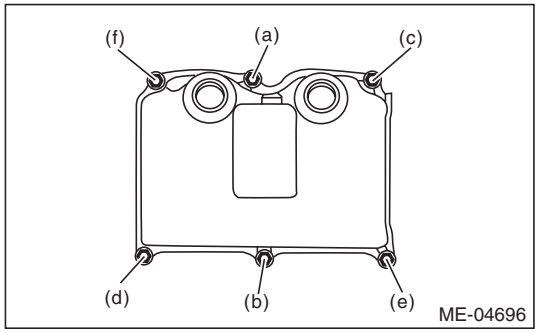

- LH side

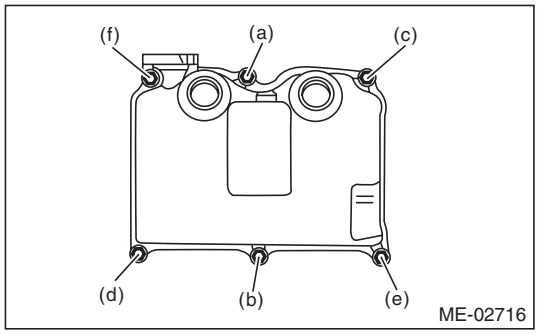

(3) Connect the PCV hose.

14) Install the timing belt cover. <Ref. to ME(H4SO)-47, INSTALLATION, Timing Belt Cover.>

15) Install the ignition coil. <Ref. to IG(H4SO)-5, INSTALLATION, Ignition Coil.>

16) Install the crank pulley. <Ref. to ME(H4SO)-45, INSTALLATION, Crank Pulley.>

C: INSPECTION

1) Measure the bend, and repair or replace if necessary.

Camshaft bend limit:
0.025 mm (0.00098 in)

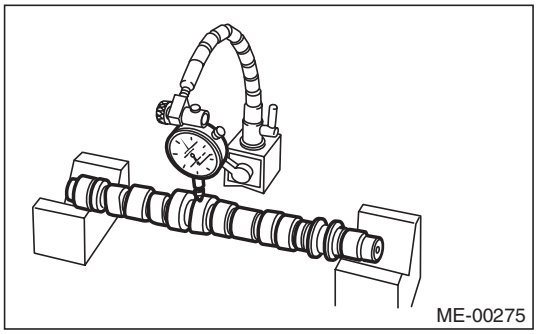

2) Check the journal for damage and wear. Replace if faulty.

3) Check the cam face condition, and remove the minor faults by grinding with oil stone. If offset wear occurs, replace it.

4) Measure the Cam height “H”, Cam base circle diameter “A”, and base circle step of adjacent intake cams (low speed and high speed). If it exceeds the standard or offset wear occurs, replace it.

Cam lobe height H:

			Unit: mm (in)
Intake	Constant	Standard	40.075 — 40.175 (1.5778 — 1.5817)
	Low speed	Standard	35.496 — 35.596 (1.3975 — 1.4014)
	High speed	Standard	40.315 — 40.415 (1.5872 — 1.5911)
Exhaust		Standard	39.289 — 39.389 (1.5468 — 1.5507)

Cam base circle diameter A:
Standard
34.00 mm (1.3386 in)

Base circle step of adjacent intake cams (low speed and high speed):
Standard
0.03 mm (0.001 in) or less

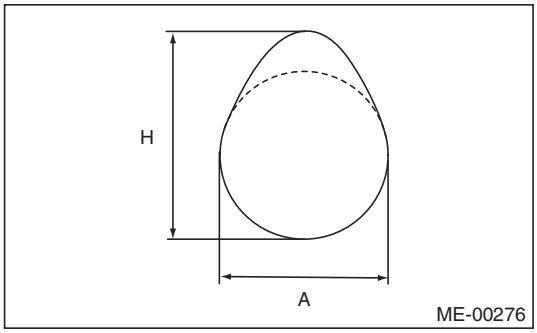

GETtheMANUALS.org

5) Measure the outer diameter of camshaft journal and inner diameter of cylinder head journal, and check the difference (oil clearance) between the two values. If the oil clearance is not within the standard, replace the camshaft or cylinder head as necessary.

		Unit: mm (in)
Oil clearance	Standard	0.055 — 0.090 (0.0022 — 0.0035)
Camshaft journal O.D.	Standard	31.928 — 31.945 (1.2570 — 1.2577)
Cylinder head journal I.D.	Standard	32.000 — 32.018 (1.2598 — 1.2605)

6) Measure the thrust clearance with setting the dial gauge at end surface of camshaft. If the thrust clearance is not within the standard or there is off-set wear, replace the camshaft caps and cylinder head as a set. If necessary, replace the camshaft.

Camshaft thrust clearance:
Standard
0.030 — 0.090 mm (0.0012 — 0.0035 in)

GETtheMANUALS.org

20. Cylinder Head

A: REMOVAL

NOTE:
- When replacing a single part, perform the work with the engine assembly installed to body. Refer to "Valve Clearance" for preparation procedures. <Ref. to ME(H4SO)-29, Valve Clearance.>
- When performing the work with the engine installed to body, the following parts must also be removed/installed.
  Front exhaust pipe <Ref. to EX(H4SO)-5, REMOVAL, Front Exhaust Pipe.> <Ref. to EX(H4SO)-6, INSTALLATION, Front Exhaust Pipe.>

1) Remove the intake manifold. <Ref. to FU(H4SO)-17, REMOVAL, Intake Manifold.>
2) Remove the crank pulley. <Ref. to ME(H4SO)-45, REMOVAL, Crank Pulley.>
3) Remove the timing belt cover. <Ref. to ME(H4SO)-47, REMOVAL, Timing Belt Cover.>
4) Remove the timing belt. <Ref. to ME(H4SO)-48, REMOVAL, Timing Belt.>
5) Remove the cam sprocket. <Ref. to ME(H4SO)-53, REMOVAL, Cam Sprocket.>
6) Remove the bolts which secure A/C compressor bracket to cylinder head.
7) Remove the valve rocker assembly. <Ref. to ME(H4SO)-55, REMOVAL, Valve Rocker Assembly.>
8) Remove the camshaft. <Ref. to ME(H4SO)-58, REMOVAL, Camshaft.>
9) Remove the oil level gauge guide. (LH side)
10) Remove the cylinder head bolts in alphabetical sequence as shown in the figure.

NOTE:
Leave bolts (a) and (c) engaged by three or four threads to prevent the cylinder head from falling.

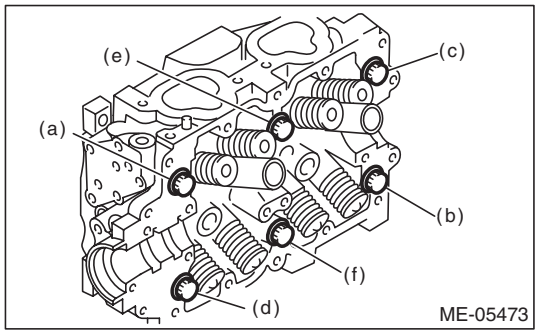

11) While tapping the cylinder head with a plastic hammer, separate it from cylinder block. Remove the bolts (a) and (c) to remove cylinder head.

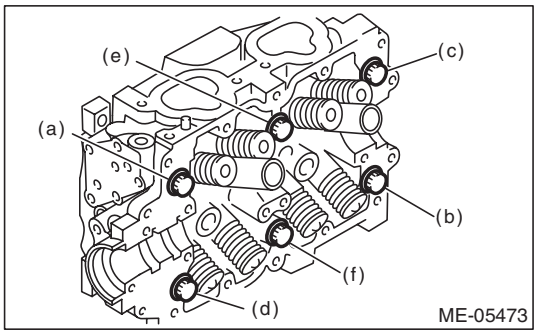

12) Remove the cylinder head gasket.

CAUTION:
Be careful not to scratch the mating surface of cylinder head and cylinder block.

13) Similarly, remove the right side cylinder head.

B: INSTALLATION

1) Install the cylinder head to the cylinder block.

CAUTION:
Be careful not to scratch the mating surface of cylinder head and cylinder block.

NOTE:
Use a new cylinder head gasket.

(1) Clean the bolt threads and the bolt holes in the cylinder block

CAUTION:
To avoid erroneous tightening of the bolts, clean out the bolt holes sufficiently by blowing with compressed air to eliminate engine coolant etc.

(2) Apply a sufficient coat of engine oil to the washer and bolt thread.
(3) Tighten all bolts to 40 N·m (4.1 kgf-m, 29.5 ft-lb) in alphabetical order.
(4) Retighten all bolts to 95 N·m (9.7 kgf-m, 70.1 ft-lb) in alphabetical order.

CAUTION:
If the bolt makes stick-slip sound during tightening, repeat the procedure from step (1). In this case, the cylinder head gasket can be reused.

(5) Loosen all the bolts by 180° in the reverse order of installing, and loosen them further by 180°.
(6) Tighten all bolts to 10 N·m (1.0 kgf-m, 7.4 ft-lb) in alphabetical order.
(7) Retighten all bolts to 30 N·m (3.1 kgf-m, 22.1 ft-lb) in alphabetical order.
(8) Retighten all bolts to 60 N·m (6.1 kgf-m, 44.3 ft-lb) in alphabetical order.

GETtheMANUALS.org

(9) Retighten all bolts by 80 — 90° in alphabetical order.
(10) Retighten all bolts by 40 — 45° in alphabetical order.

CAUTION:
The tightening angle of the bolt should not exceed 45°.

(11) Retighten bolts (a) and (b) by 40 — 45°.

CAUTION:
Make sure the total "tightening angle" of steps (10) and (11) does not exceed 90°.

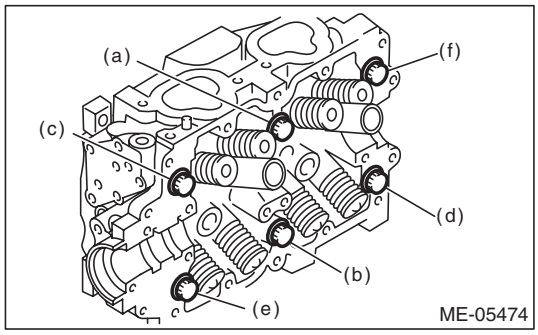

2) Similarly, install the right side cylinder head.
3) Install the oil level gauge guide. (LH side)

Tightening torque:
6.4 N·m (0.7 kgf-m, 4.7 ft-lb)

4) Install the camshaft. <Ref. to ME(H4SO)-59, INSTALLATION, Camshaft.>
5) Install the valve rocker assembly. <Ref. to ME(H4SO)-55, INSTALLATION, Valve Rocker Assembly.>
6) Install the A/C compressor bracket on cylinder head.

Tightening torque:
36 N·m (3.7 kgf-m, 26.6 ft-lb)

7) Install the cam sprocket. <Ref. to ME(H4SO)-53, INSTALLATION, Cam Sprocket.>
8) Install the timing belt. <Ref. to ME(H4SO)-49, INSTALLATION, Timing Belt.>
9) Adjust the valve clearance. <Ref. to ME(H4SO)-30, ADJUSTMENT, Valve Clearance.>
10) Install the rocker cover.
(1) Install the rocker cover gasket to the rocker cover.

NOTE:
Use a new rocker cover gasket.

(2) Temporarily tighten the bolts in alphabetical order shown in the figure, tighten them in two stages.

Tightening torque:
First
6.4 N·m (0.7 kgf-m, 4.7 ft-lb)
Second (only (a) and (b) are tightened)
6.4 N·m (0.7 kgf-m, 4.7 ft-lb)

- RH side

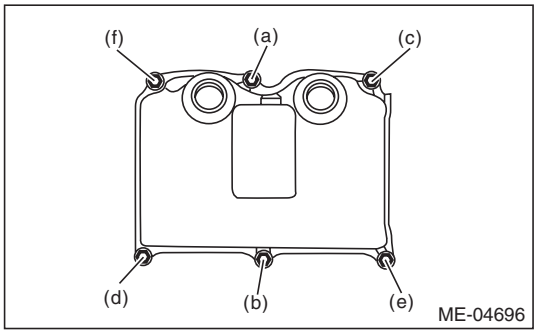

- LH side

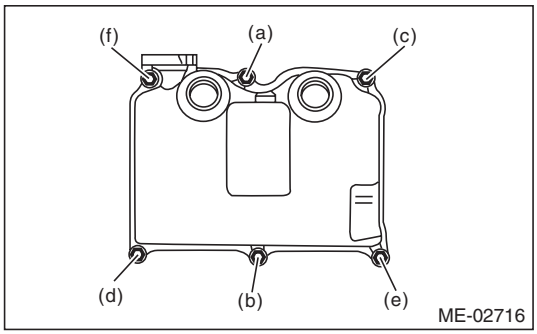

11) Install the timing belt cover. <Ref. to ME(H4SO)-47, INSTALLATION, Timing Belt Cover.>
12) Install the crank pulley. <Ref. to ME(H4SO)-45, INSTALLATION, Crank Pulley.>
13) Install the intake manifold. <Ref. to FU(H4SO)-21, INSTALLATION, Intake Manifold.>

GETtheMANUALS.org

C: DISASSEMBLY

1) Place the cylinder head on the ST.
ST 498267800 CYLINDER HEAD TABLE
2) Compress the valve spring and remove the valve spring retainer key using ST. Remove each valve and valve spring.
ST 499718000 VALVE SPRING REMOVER

NOTE:
- Keep all the removed parts in order for re-installing in their original positions.
- Mark each valve to prevent confusion.
- Pay careful attention not to damage the lips of intake valve oil seals and exhaust valve oil seals.
- For removal and installation procedures of the valve guide, intake valve oil seal and exhaust valve oil seal, refer to “INSPECTION”. <Ref. to ME(H4SO)-68, VALVE GUIDE, INSPECTION, Cylinder Head.> <Ref. to ME(H4SO)-70, INTAKE AND EXHAUST VALVE OIL SEAL, INSPECTION, Cylinder Head.>

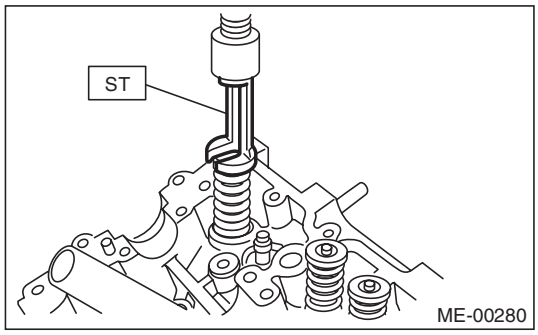

GETtheMANUALS.org

D: ASSEMBLY

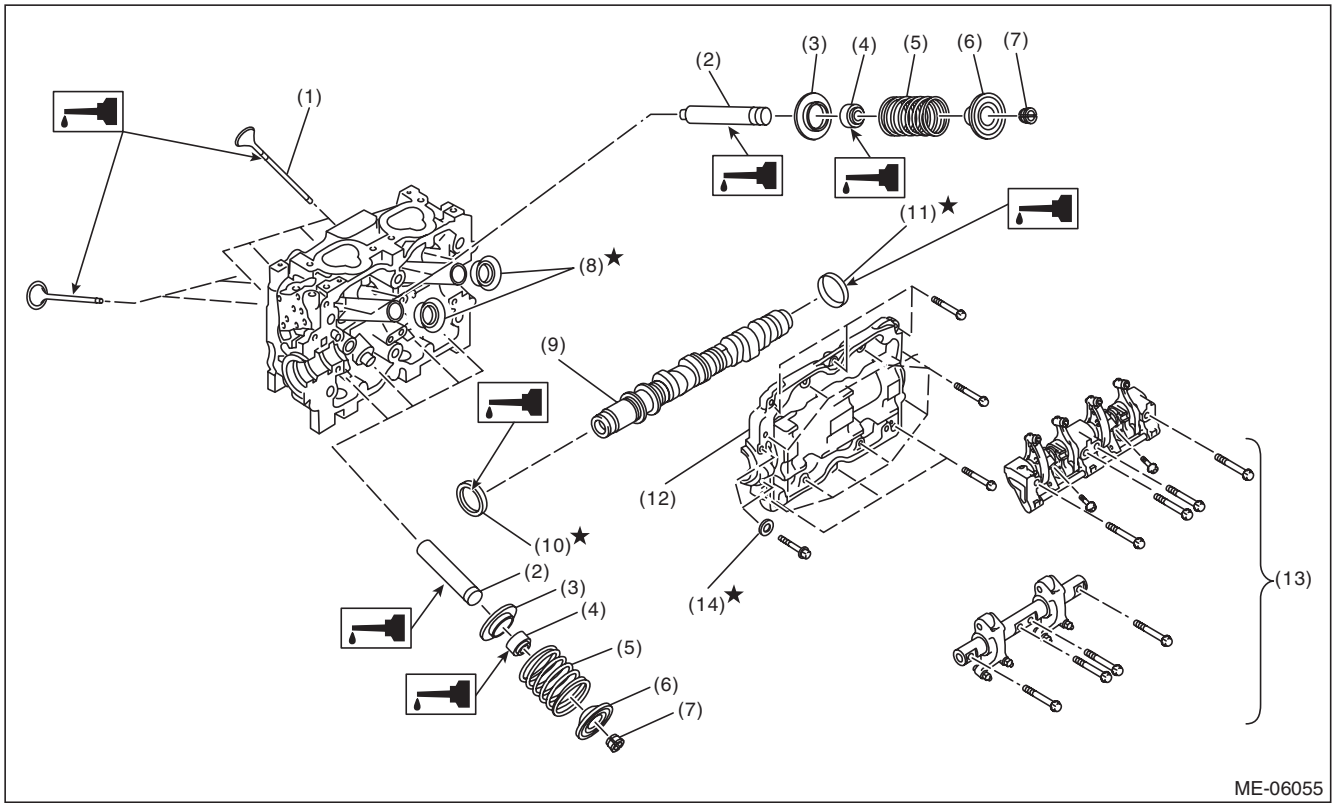

(1)	Valve	(6)	Valve spring retainer	(11)	Plug
(2)	Valve guide	(7)	Valve spring retainer key	(12)	Camshaft cap
(3)	Valve spring seat	(8)	Spark plug pipe gasket	(13)	Valve rocker ASSY
(4)	Oil seal	(9)	Camshaft	(14)	Seal washer
(5)	Valve spring	(10)	Oil seal		

1) Install the valve spring and valve.
   (1) Coat the stem of each valve with engine oil and insert the valve into valve guide.

NOTE:
When inserting the valve into valve guide, use special care not to damage the oil seal lip.
   (2) Set the cylinder head on ST.
ST 498267800 CYLINDER HEAD TABLE
   (3) Install the valve spring and valve spring retainer.

NOTE:
Be sure to install the valve spring with its close-coiled end facing the cylinder head side.
   (4) Set the ST on valve spring.
ST 499718000 VALVE SPRING REMOVER

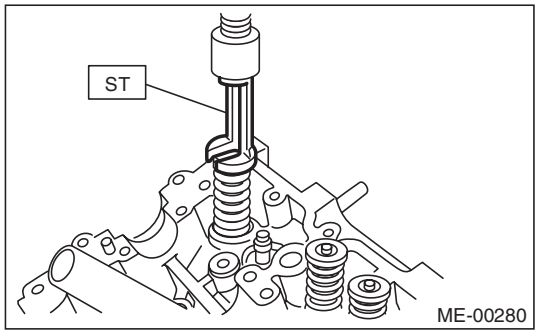

GETtheMANUALS.org

(5) Compress the valve spring and fit the valve spring retainer key.

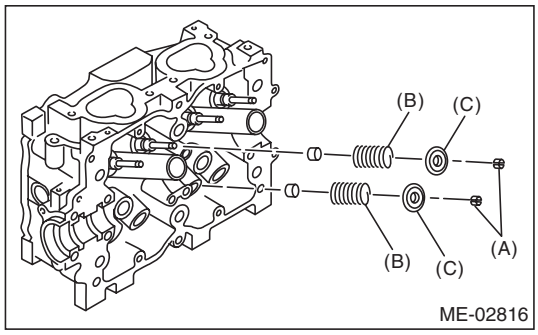

(A) Valve spring retainer key
(B) Valve spring
(C) Valve spring retainer

(6) After installing, tap the valve spring retainers lightly with a plastic hammer for better seating.

E: INSPECTION

1. CYLINDER HEAD

1) Check for cracks or damage. Use liquid penetrant tester on the important sections to check for fissures.
Check that there are no marks of gas leaking or water leaking on gasket installing surface.
2) Place the cylinder head on the ST.
ST 498267800 CYLINDER HEAD TABLE
3) Measure the warping of the cylinder head surface that mates with cylinder block using a straight edge (A) and thickness gauge (B).
If the warping exceeds the limit, correct the surface by grinding it with a surface grinder.

Warping limit:
0.035 mm (0.0014 in)

Grinding limit:
0.1 mm (0.004 in)

Standard height of cylinder head:
97.5 mm (3.84 in)

NOTE:
Uneven torque for the cylinder head bolts can cause warpage. When reassembling, pay special attention to the torque so as to tighten evenly.

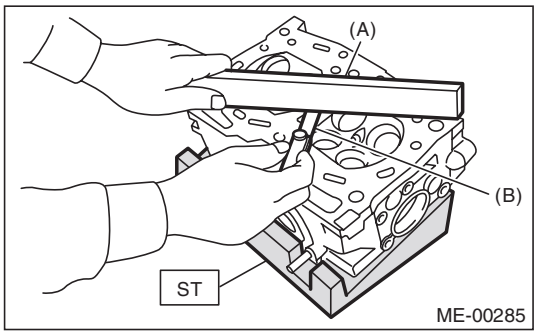

2. VALVE SEAT

Inspect the intake and exhaust valve seats, and correct the contact surfaces with a valve seat cutter if they are defective or when valve guides are replaced.

Contacting width of valve and valve seat W:

Standard
Intake (A)
0.8 — 1.4 mm (0.03 — 0.055 in)
Exhaust (B)
1.2 — 1.8 mm (0.047 — 0.071 in)

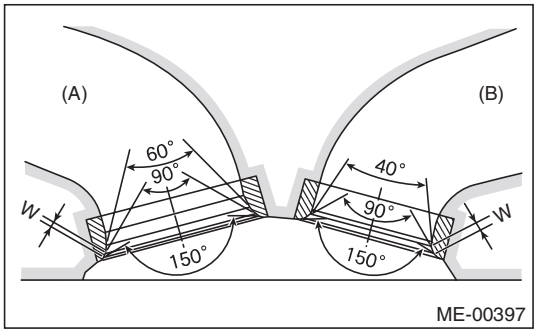

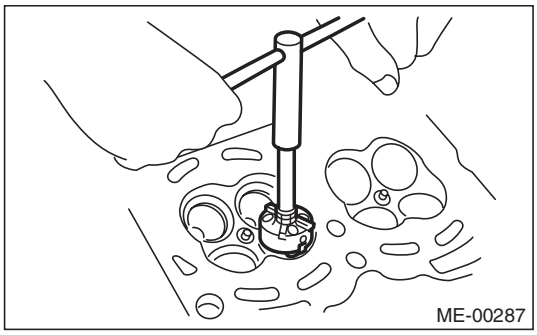

GETtheMANUALS.org

3. VALVE GUIDE

1) Check the clearance between valve guide and valve stem. The clearance can be checked by measuring respectively the outer diameter of valve stem with a micrometer and the inner diameter of valve guide with a caliper gauge.

Clearance between the valve guide and valve stem:

Standard
Intake
0.035 — 0.062 mm (0.0014 — 0.0024 in)
Exhaust
0.040 — 0.067 mm (0.0016 — 0.0026 in)

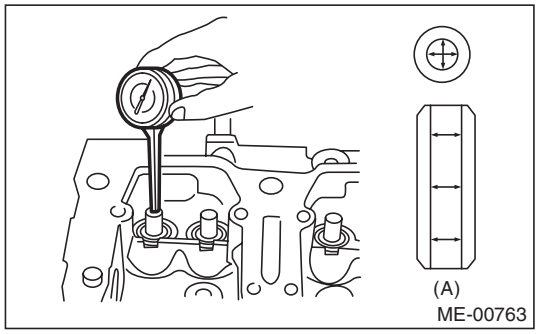

(A) Valve guide

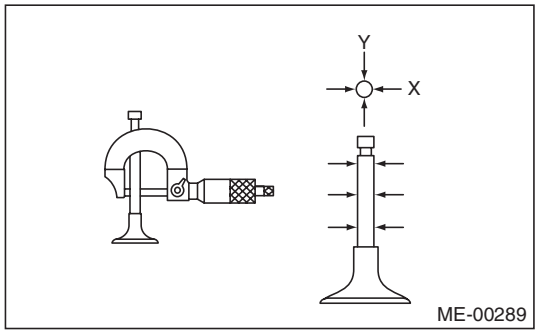

2) If the clearance between the valve guide and valve stem exceeds the standard, replace the valve guide or valve itself, whichever shows greater amount of wear or damage. See the following procedure for valve guide replacement.

Valve guide inner diameter:
6.000 — 6.012 mm (0.2362 — 0.2367 in)

Valve stem outer diameters:
Intake
5.950 — 5.965 mm (0.2343 — 0.2348 in)
Exhaust
5.945 — 5.960 mm (0.2341 — 0.2346 in)

(1) Place the cylinder head on ST1 with the combustion chamber upward so that valve guides fit the holes in ST1.

(2) Insert the ST2 into valve guide and press it down to remove the valve guide.

ST1 498267800 CYLINDER HEAD TABLE
ST2 499767200 VALVE GUIDE REMOVER

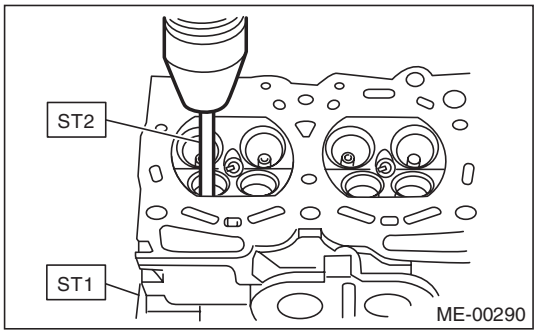

(3) Turn the cylinder head upside down and place the ST as shown in the figure.

Intake side
ST 499767700 VALVE GUIDE ADJUSTER
Exhaust side
ST 499767800 VALVE GUIDE ADJUSTER

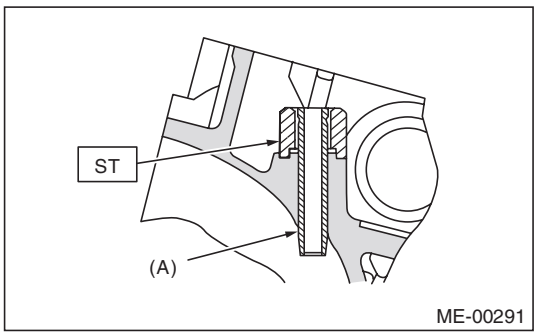

(A) Valve guide

(4) Before installing a new valve guide, make sure that neither scratches nor damages exist on the inner surface of valve guide holes in cylinder head.

GETtheMANUALS.org

(5) Put a new valve guide, coated with sufficient oil, in the cylinder head, and insert the ST1 into valve guide. Press in until the valve guide upper end is flush with the upper surface of ST2.

ST1 499767200 VALVE GUIDE REMOVER
Intake side
ST2 499767700 VALVE GUIDE ADJUSTER
Exhaust side
ST2 499767800 VALVE GUIDE ADJUSTER

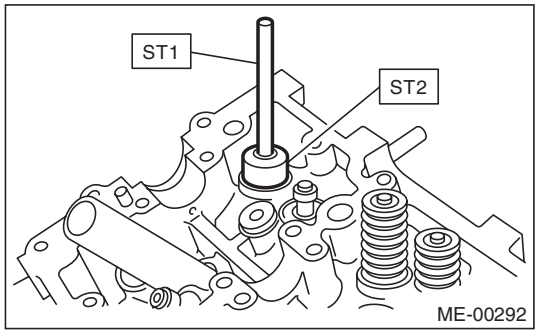

(6) Check the valve guide protrusion amount "L".

Valve guide protrusion amount L:
Intake
20.3 — 20.7 mm (0.799 — 0.815 in)
Exhaust
16.8 — 17.2 mm (0.661 — 0.677 in)

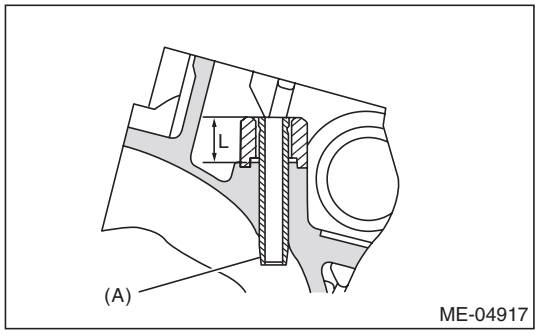

(A) Valve guide

(7) Ream the inside of valve guide using ST. Put the ST in valve guide, and rotate the ST slowly clockwise while pushing it lightly. Bring the ST back while rotating it clockwise.

NOTE:
- Apply engine oil to the ST when reaming.
- If the inner surface of valve guide is damaged, the edge of ST should be slightly ground with oil stone.
- If the inner surface of valve guide becomes lustrous and the ST does not chip, use a new ST or remedy the ST.

ST 499767400 VALVE GUIDE REAMER

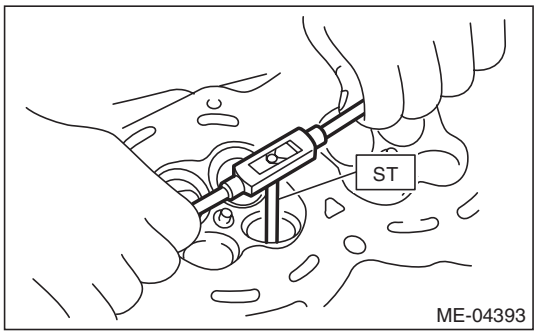

(8) After reaming, clean the valve guide to remove chips.
(9) Recheck the contact condition between valve and valve seat after replacing the valve guide.

4. INTAKE AND EXHAUST VALVE

1) Inspect the flange of valve and valve stem, and replace the valve with a new part if damaged, worn, deformed, or if dimension "H" in the figure is outside of the specified limit.

Head edge thickness H:

Intake (A)
Standard
0.8 — 1.2 mm (0.03 — 0.047 in)

Exhaust (B)
Standard
1.0 — 1.4 mm (0.039 — 0.055 in)

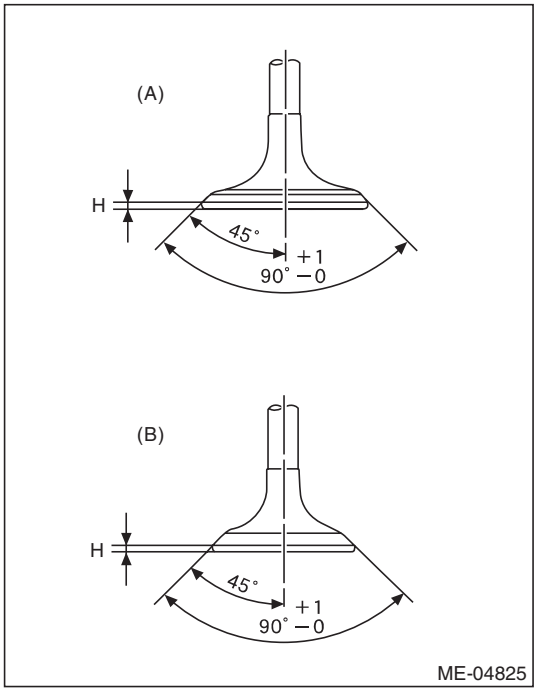

GETtheMANUALS.org

2) Put a small amount of grinding compound on the valve seat surface, and lap the valve and valve seat surface. Replace with a new valve oil seal after lapping.

NOTE:
It is possible to differentiate between the intake valve and the exhaust valve by their overall length.

Valve overall length:
Intake
120.6 mm (4.75 in)
Exhaust
121.7 mm (4.79 in)

5. VALVE SPRING

1) Check the valve springs for damage, free length, and tension. Replace the valve spring if it is not within the standard value presented in the table.
2) To measure the squareness of the valve spring, stand the valve spring on a surface plate and measure its deflection at the top of the valve spring using a try square.

Free length mm (in)		55.2 (2.173)
Tension/spring height N (kgf, lb)/mm (in)	Set	235.3 — 270.7 (24 — 27.6, 52.9 — 60.8)/45.0 (1.772)
	Lift	578.9 — 639.9 (59.1 — 65.3, 130.3 — 143.9)/ 34.7 (1.366)
Squareness		2.5°, 2.4 mm (0.094 in) or less

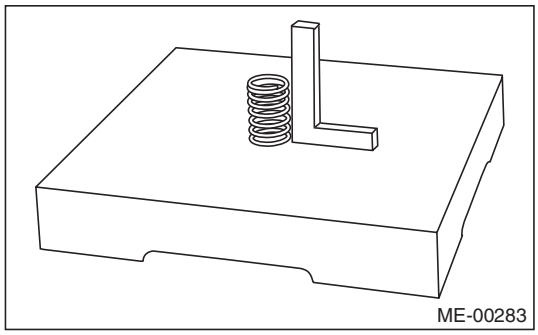

6. INTAKE AND EXHAUST VALVE OIL SEAL

1) For the following, replace the oil seal with a new part.
See the procedure 2) and subsequent for replacement procedures.
- When the lip is damaged.
- When the spring is out of the specified position.
- When readjusting the surfaces of valve and valve seat.
- When replacing the valve guide.

2) Place the cylinder head on ST1, and use ST2 to press-fit the oil seal.

ST1	498267800	CYLINDER HEAD TABLE
ST2	498857100	VALVE OIL SEAL GUIDE

NOTE:
- Apply engine oil to oil seal before press-fitting.
- When press-fitting the oil seal, do not use a hammer to strike in.
- The intake valve oil seals and exhaust valve oil seals are distinguished by their colors.

Color of rubber part:
Intake [Gray]
Exhaust [Green]

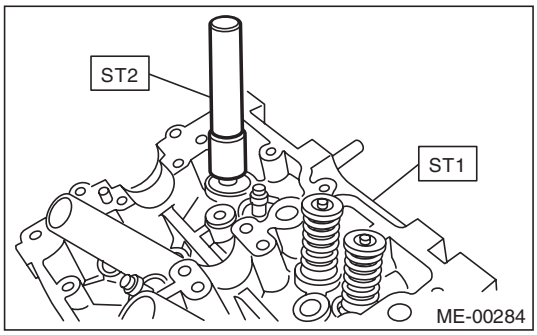

GETtheMANUALS.org

21.Cylinder Block

A: REMOVAL

NOTE:
Before conducting this procedure, drain the engine oil completely.

1) Remove the engine from the vehicle. <Ref. to ME(H4SO)-31, REMOVAL, Engine Assembly.>
2) Remove the intake manifold. <Ref. to FU(H4SO)-17, REMOVAL, Intake Manifold.>
3) Remove the crank pulley. <Ref. to ME(H4SO)-45, REMOVAL, Crank Pulley.>
4) Remove the timing belt cover. <Ref. to ME(H4SO)-47, REMOVAL, Timing Belt Cover.>
5) Remove the timing belt. <Ref. to ME(H4SO)-48, REMOVAL, Timing Belt.>
6) Remove the crank sprocket. <Ref. to ME(H4SO)-54, REMOVAL, Crank Sprocket.>
7) Remove the generator and A/C compressor with their brackets.
8) Remove the cylinder head. <Ref. to ME(H4SO)-63, REMOVAL, Cylinder Head.>
9) Remove the drive plate. (CVT model) <Ref. to CVT-133, REMOVAL, Drive Plate.>
10) Remove the clutch disc and cover. (MT model) <Ref. to CL-11, REMOVAL, Clutch Disc and Cover.>
11) Remove the flywheel. (MT model) <Ref. to CL-14, REMOVAL, Flywheel.>
12) Remove the oil separator cover.
13) Remove the water by-pass pipe for heater.
14) Remove the water pump. <Ref. to CO(H4SO)-16, REMOVAL, Water Pump.>
15) Remove the bolts which secure oil pump to cylinder block.

NOTE:
When disassembling and checking the oil pump, loosen the relief valve plug before removing the oil pump.

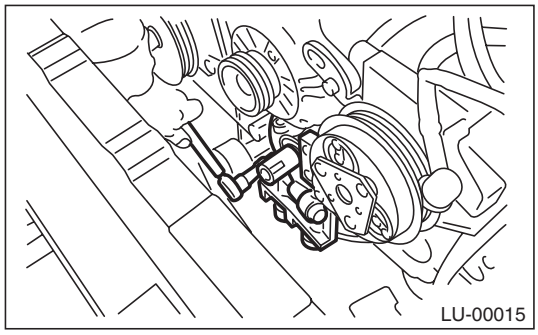

16) Remove the oil pump from cylinder block using a flat tip screwdriver.

CAUTION:
Be careful not to scratch the mating surface of cylinder block and oil pump.

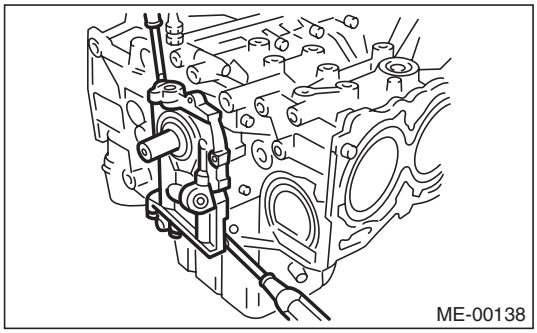

17) Remove the front oil seal from the oil pump.
18) Remove the clip holding the oil level switch harness from cylinder block.

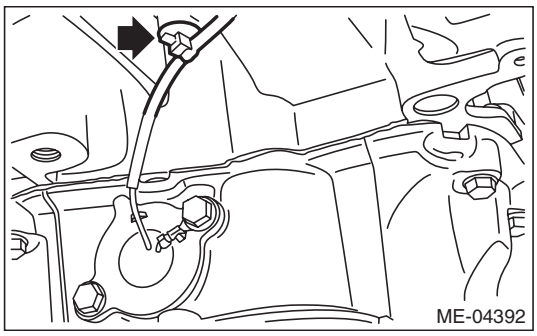

19) Remove the oil pan and cylinder block lower.
    (1) Set the part so that the cylinder block LH is on the upper side.
    (2) Remove the bolts which secure the oil pan to the cylinder block lower.
    (3) Insert an oil pan cutter blade into the gap between cylinder block lower and oil pan, and remove the oil pan.

CAUTION:
Do not use a screwdriver or similar tools in place of oil pan cutter.

GETtheMANUALS.org

(4) Remove the bolts which secure the cylinder block lower to the cylinder block, and remove the cylinder block lower by using flat tip screwdriver.

CAUTION:
Insert the flat tip screwdriver to the position shown in the figure, and be careful not to damage the mating surface of the cylinder block and cylinder block lower.

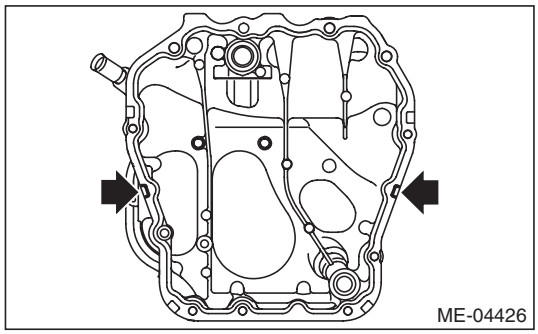

20) Remove the oil strainer.
21) Remove the baffle plate.
22) Remove the oil filter. <Ref. to LU(H4SO)-36, REMOVAL, Engine Oil Filter.>
23) Remove the water pipe assembly.

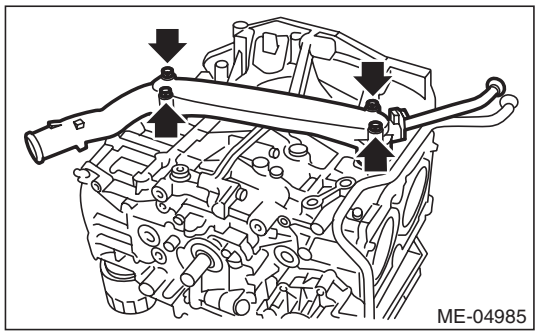

GETtheMANUALS.org

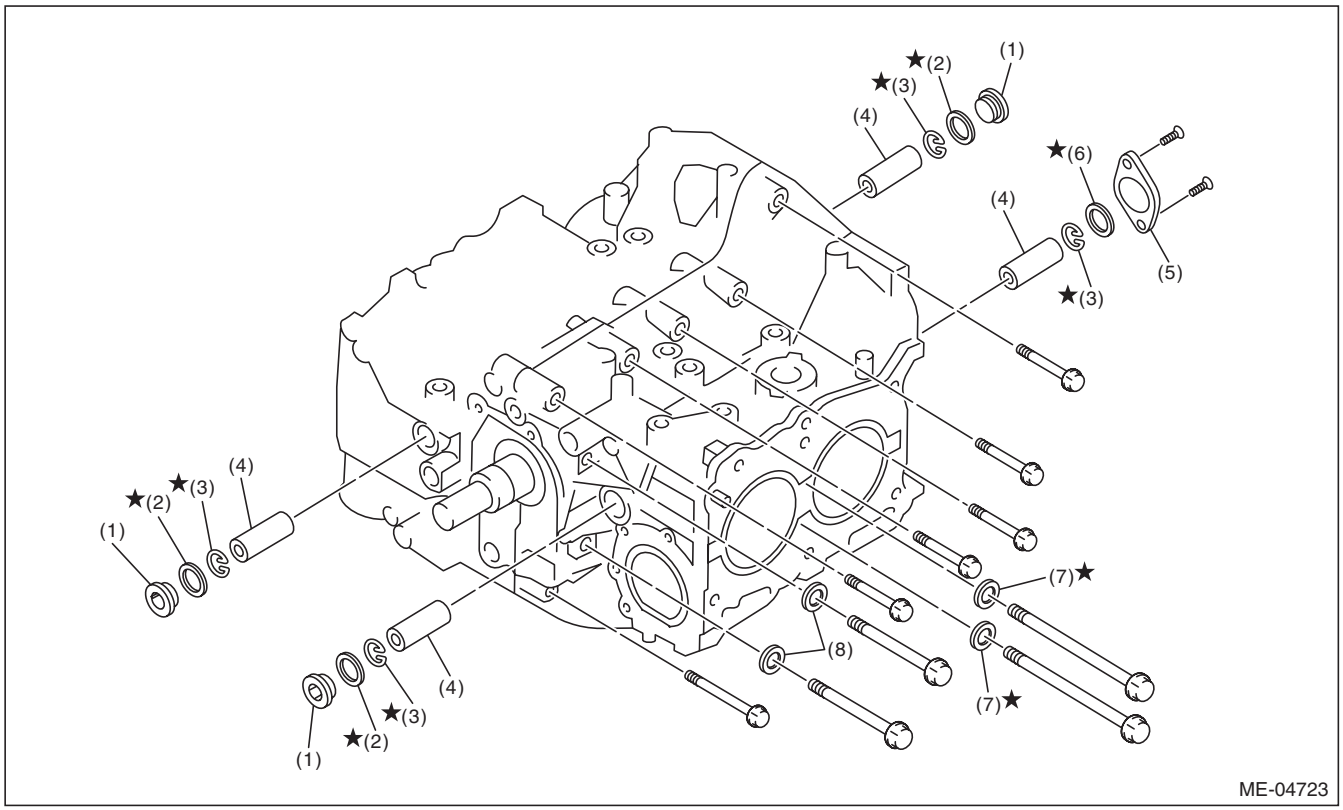

(1)	Service hole plug	(4)	Piston pin	(7)	Seal washer
(2)	Gasket	(5)	Service hole cover	(8)	Washer
(3)	Snap ring	(6)	O-ring		

24) Remove the service hole plugs using a hexagon wrench [14 mm].

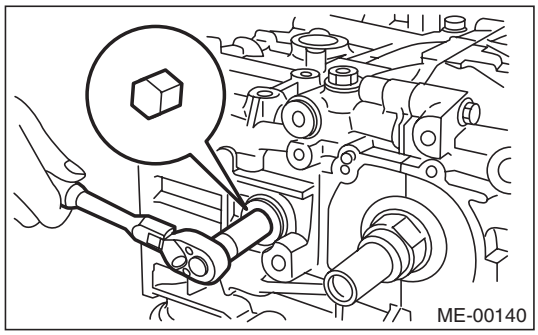

25) Remove the service hole cover.
26) Rotate the crankshaft to bring #1 and #2 pistons to bottom dead center position, then remove the piston snap ring through service hole of #1 and #2 cylinders.

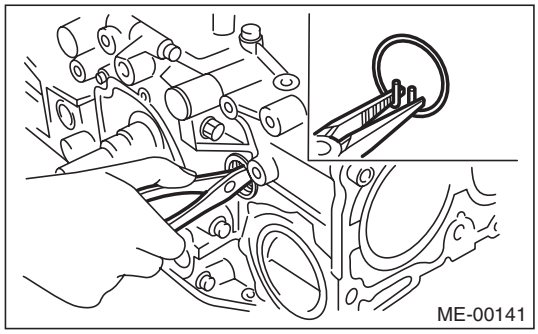

GETtheMANUALS.org

27) Draw out the piston pin from #1 and #2 pistons using ST.

ST	499097700	PISTON PIN REMOVER ASSY

NOTE:
Be careful not to confuse the original combination of piston, piston pin and cylinder.

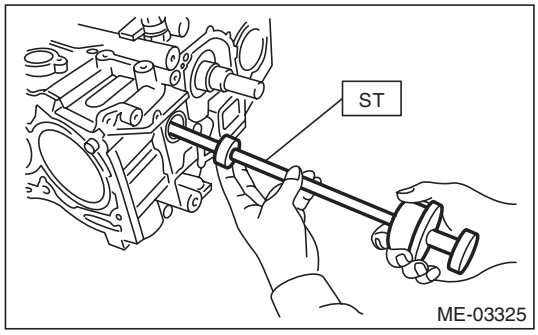

28) Similarly draw out the piston pins from #3 and #4 pistons.
29) Remove the cylinder block connecting bolt on the RH side.
30) Loosen the cylinder block connecting bolt on the LH side by 2 to 3 turns.
31) Set the part so that the cylinder block LH is on the upper side, and remove the cylinder block connecting bolt.

GETtheMANUALS.org

32) Separate the cylinder block LH and RH.

NOTE:
When separating the cylinder block, do not allow the connecting rod to fall or damage the cylinder block.

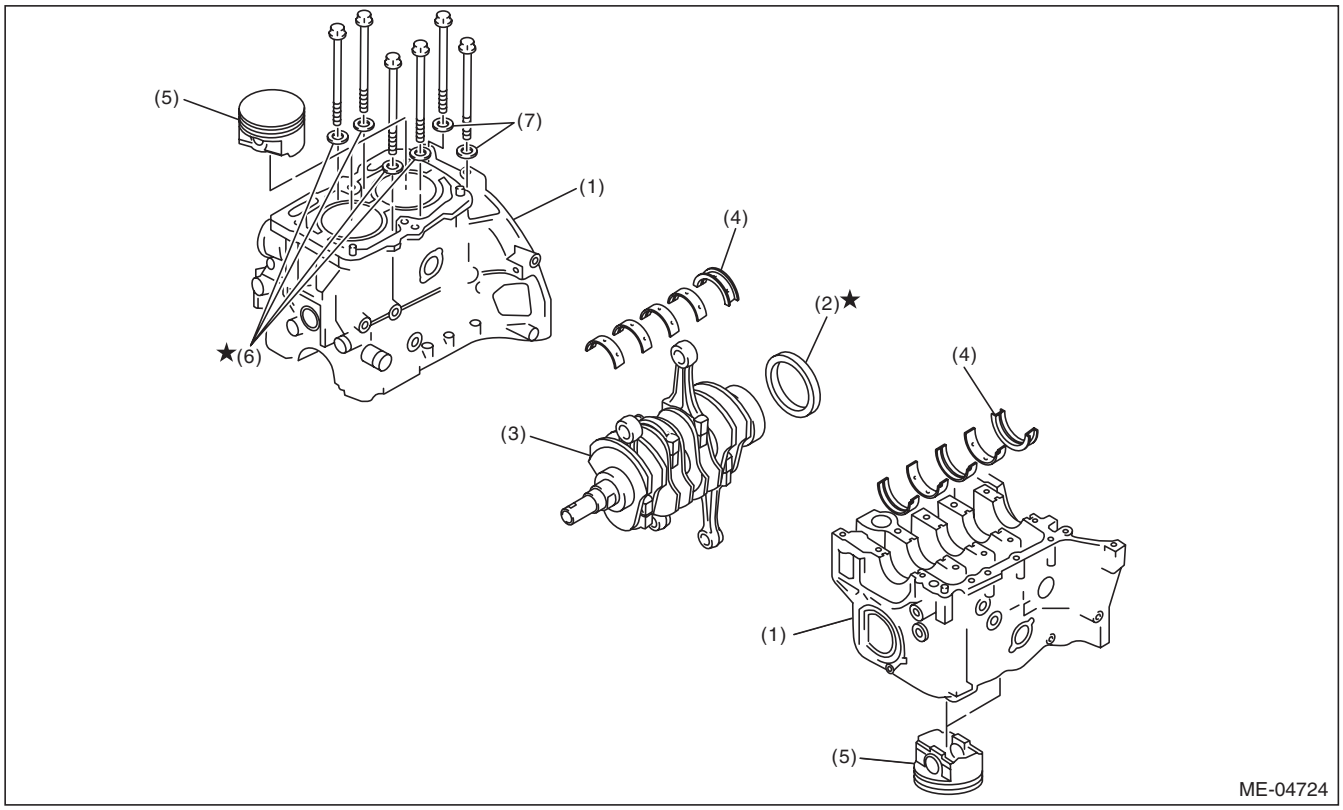

(1)	Cylinder block	(4)	Crankshaft bearing	(6)	Seal washer
(2)	Rear oil seal	(5)	Piston	(7)	Washer
(3)	Crankshaft				

33) Remove the rear oil seal.
34) Remove the crankshaft along with the connecting rods.
35) Remove the crankshaft bearings from cylinder block using a hammer handle.

NOTE:
- Press the crankshaft bearing at the end opposite to locking lip to remove.
- Be careful not to confuse the crankshaft bearing combination.

36) Remove each piston from the cylinder block using a wooden bar or hammer handle.

NOTE:
Be careful not to confuse the original combination of piston and cylinder.

GETtheMANUALS.org

B: INSTALLATION

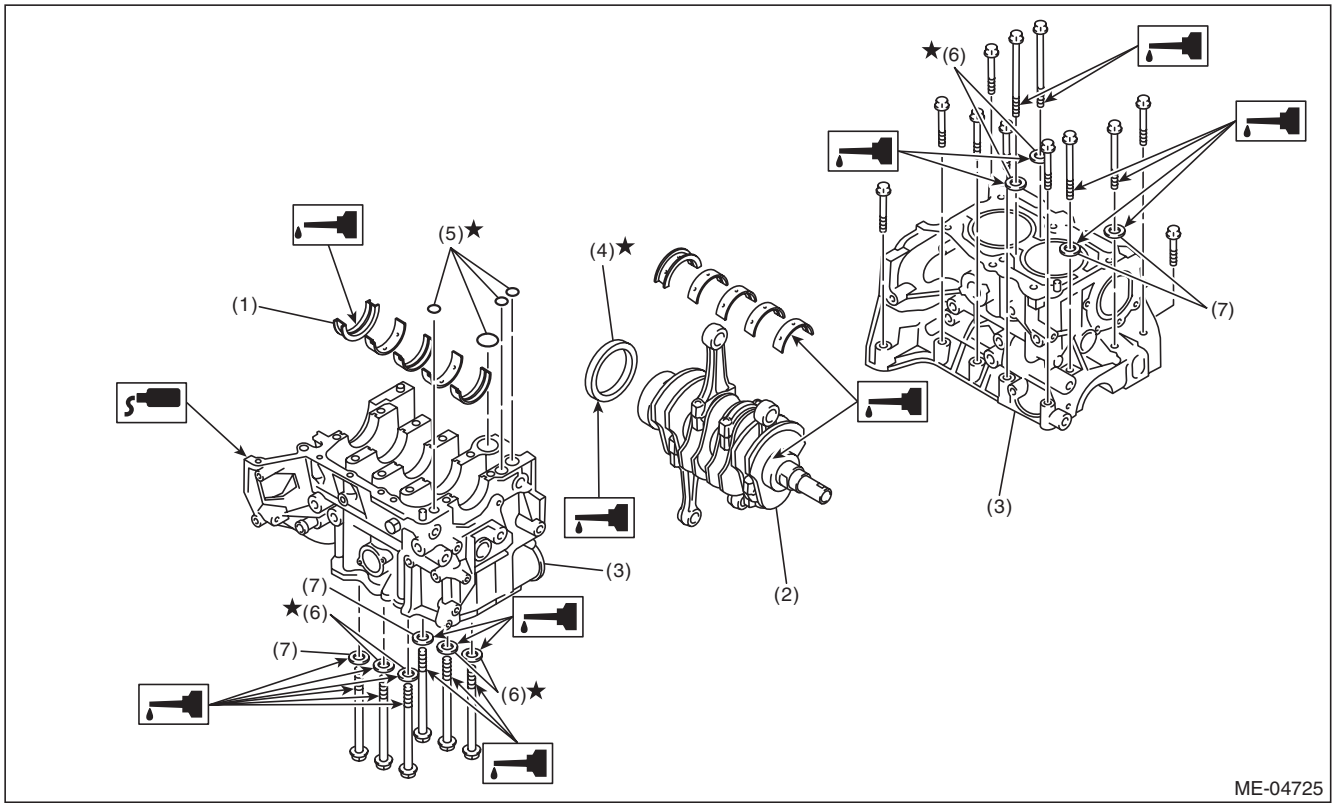

(1)	Crankshaft bearing	(4)	Rear oil seal	(6)	Seal washer
(2)	Crankshaft	(5)	O-ring	(7)	Washer
(3)	Cylinder block				

1) Remove oil on the mating surface of cylinder block before installation. Apply a coat of engine oil to the bearing and crankshaft journal.
2) Position the crankshaft and O-ring on cylinder block RH.

NOTE:
Use new O-rings.
3) Apply liquid gasket to the mating surfaces of cylinder block RH, and position cylinder block LH.

NOTE:
- Install within 5 min. after applying liquid gasket.
- Do not allow liquid gasket to jut into O-ring grooves, oil passages, bearing grooves, etc.

Liquid gasket:
THREE BOND 1217G (Part No. K0877Y0100) or equivalent

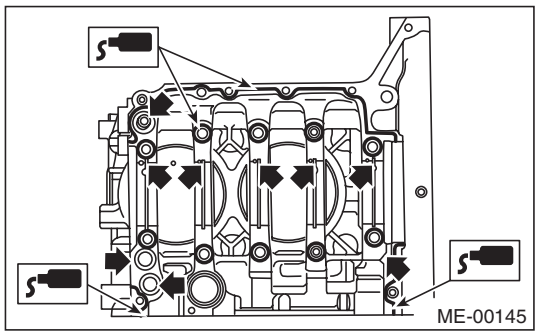

GETtheMANUALS.org

4) Apply a coat of engine oil to the washer and bolt thread.

NOTE:
Use a new seal washer.

5) Tighten the 10 mm cylinder block connecting bolts on the LH side (A — D) in alphabetical order.

Tightening torque:
10 N·m (1.0 kgf-m, 7.4 ft-lb)

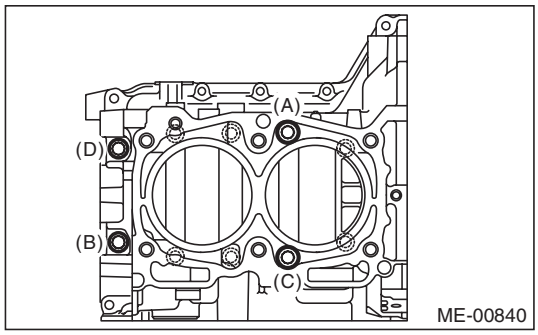

6) Tighten the 10 mm cylinder block connecting bolts on the RH side (E — J) in alphabetical order.

Tightening torque:
10 N·m (1.0 kgf-m, 7.4 ft-lb)

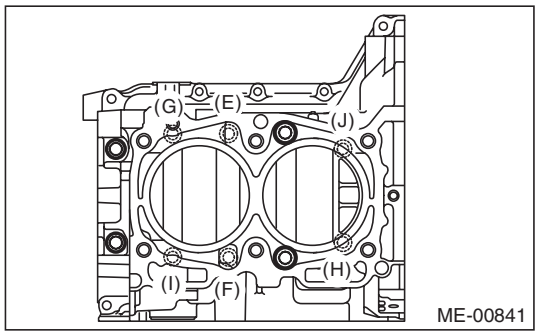

7) Tighten the LH side cylinder block connecting bolts (A — D) further in alphabetical order.

Tightening torque:
18 N·m (1.8 kgf-m, 13.3 ft-lb)

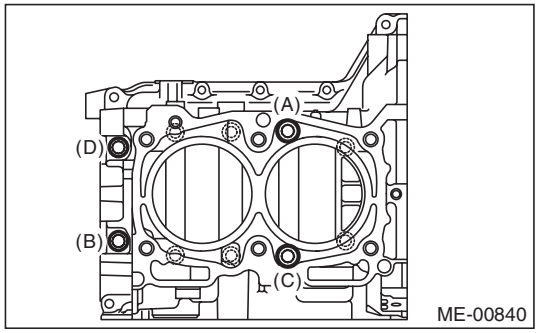

8) Tighten the RH side cylinder block connecting bolts (E — J) further in alphabetical order.

Tightening torque:
18 N·m (1.8 kgf-m, 13.3 ft-lb)

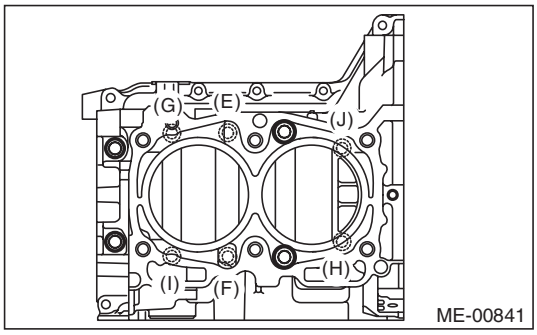

9) Tighten the LH side cylinder block connecting bolts (A — D) further in alphabetical order.

- (A), (C): Angle tightening

Tightening angle:
90°

- (B), (D): Torque tightening

Tightening torque:
40 N·m (4.1 kgf-m, 29.5 ft-lb)

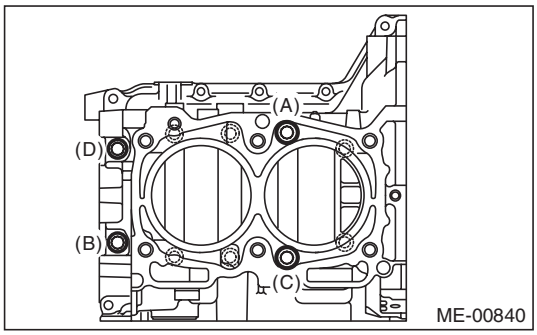

10) Tighten the RH side cylinder block connecting bolts (E — J) further in alphabetical order.

Tightening angle:
90°

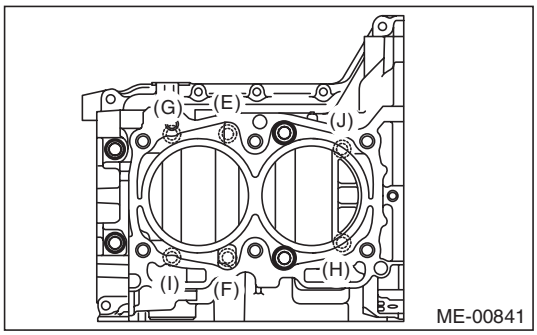

GETtheMANUALS.org

11) Tighten the 8 mm and 6 mm cylinder block connecting bolts on the LH side (A — H) in alphabetical order.

Tightening torque:
(A) — (G): 25 N·m (2.5 kgf-m, 18.4 ft-lb)
(H): 6.4 N·m (0.7 kgf-m, 4.7 ft-lb)

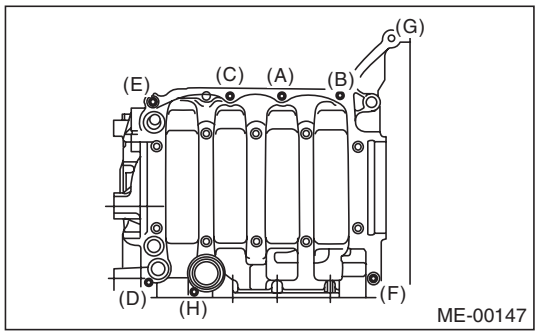

12) Apply a coat of engine oil to the oil seal inner periphery and outer periphery, and install the rear oil seal using ST1 and ST2.

NOTE:
Use a new rear oil seal.

ST1	499597100	CRANKSHAFT OIL SEAL GUIDE
ST2	499587200	CRANKSHAFT OIL SEAL INSTALLER

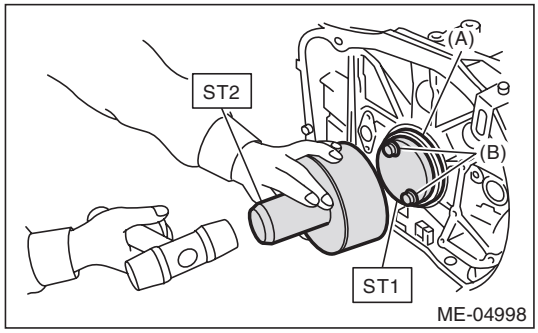

(A) Rear oil seal
(B) Mounting bolts for drive plate or flywheel

13) Position the top ring gap at (A) or (B) in the figure.
14) Position the second ring gap at 180° on the reverse side the top ring gap.

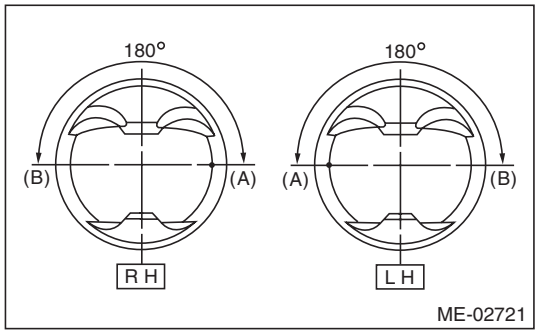

15) Position the upper rail gap at (C) in the figure.

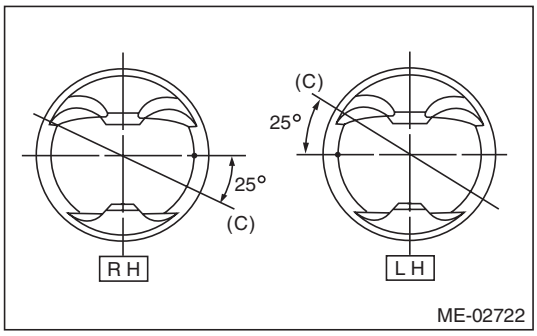

16) Align the upper rail spin stopper (E) to the side hole (D) on the piston.

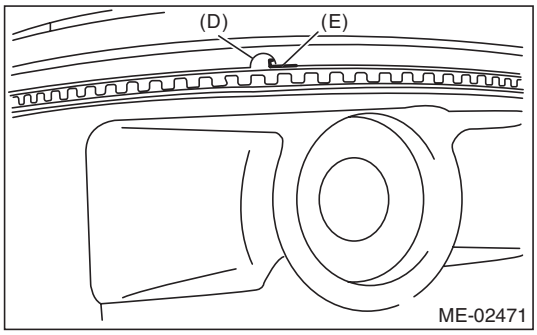

17) Position the expander gap at (F) in the figure on the 180° opposite direction of (C).

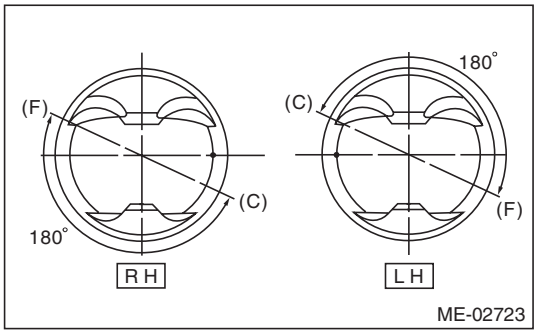

18) Set the lower rail gap at position (G), located 120° clockwise from (C) in the figure.

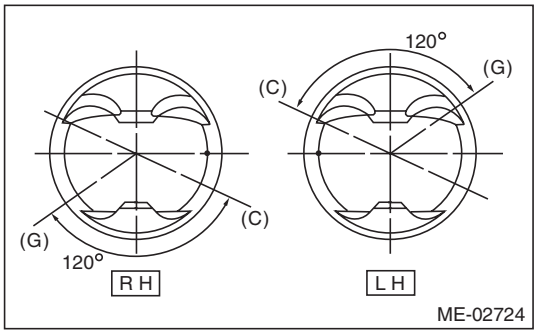

NOTE:
- Make sure ring gaps do not face the same direction.
- Make sure ring gaps are not within the piston skirt area.

GETtheMANUALS.org

19) Install the snap ring.
Before positioning the piston on the cylinder block, attach the snap ring in the service hole of the cylinder block, and the piston hole on the opposite side.

NOTE:
Use new snap rings.

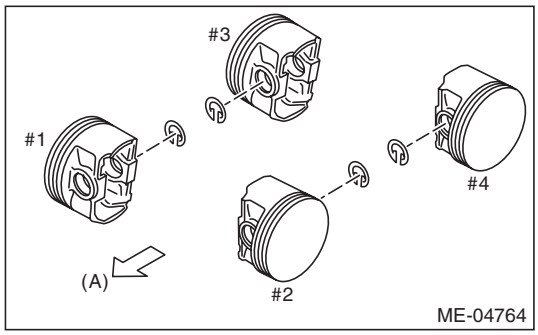

(A) Front side

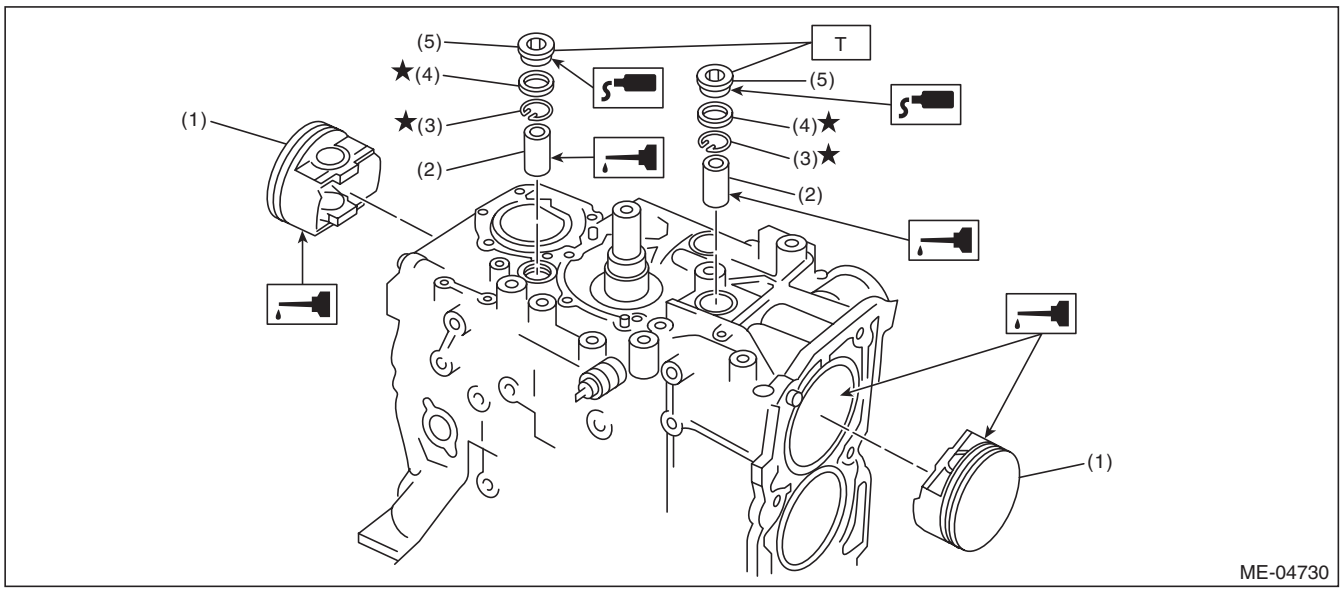

(1) Piston
(2) Piston pin
(3) Snap ring
(4) Gasket
(5) Service hole plug

Tightening torque:N·m (kgf-m, ft-lb)
T: 70 (7.1, 51.6)

GETtheMANUALS.org

20) Install the piston.
(1) Set the parts so that the #1 and #2 cylinders are on the upper side.
(2) Using the ST1, turn the crankshaft so that #1 and #2 connecting rods are set at bottom dead center.

ST1 499987500 CRANKSHAFT SOCKET

(3) Apply a coat of engine oil to the pistons and cylinders and insert pistons in their cylinders using ST2.

ST2 498747300 PISTON GUIDE

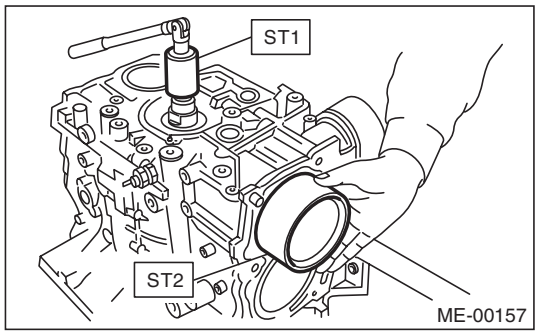

NOTE:
Face the piston front mark towards the front of the engine.

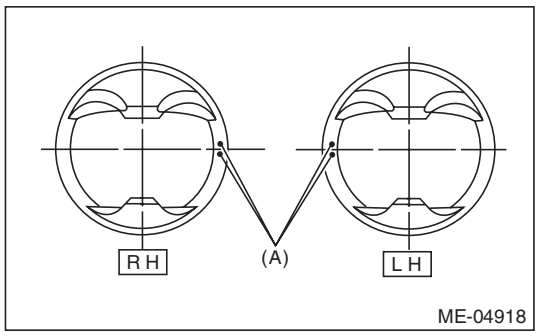

(A) Front mark

21) Install the piston pin.
(1) Apply a coat of engine oil to ST3.
(2) Insert ST3 into the service hole to align piston pin hole with connecting rod small end.

ST3 499017100 PISTON PIN GUIDE

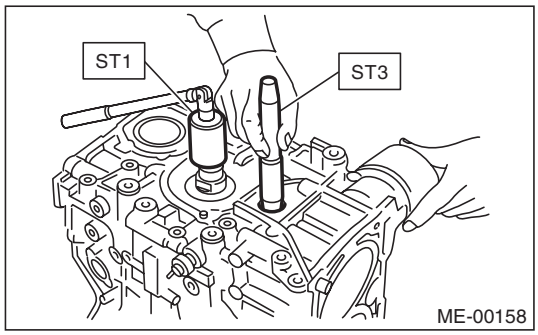

(3) Apply a thin coat of engine oil to piston pin, and insert the piston pin into piston and connecting rod through service hole.
(4) Install the snap ring.

NOTE:
Use new snap rings.

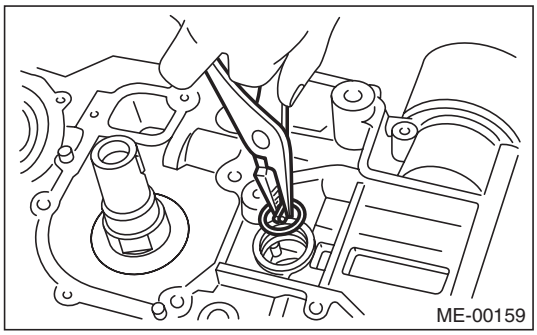

(5) Apply liquid gasket to the threaded portion of the service hole plug.

Liquid gasket:
THREE BOND 1105 (Part No. 004403010) or equivalent

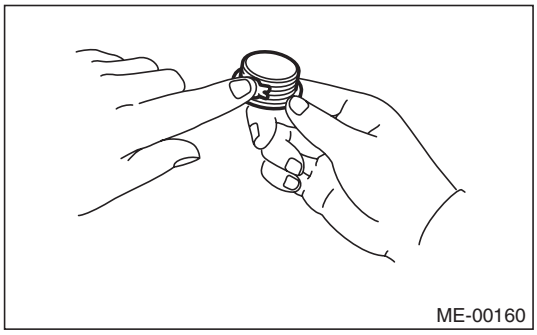

GETtheMANUALS.org

(6) Install the service hole plug and gasket.

NOTE:
Use a new gasket.

Tightening torque:
70 N·m (7.1 kgf-m, 51.6 ft-lb)

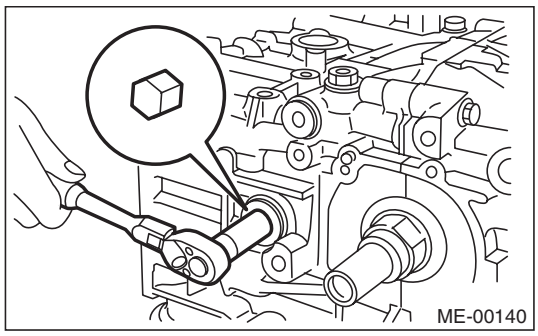

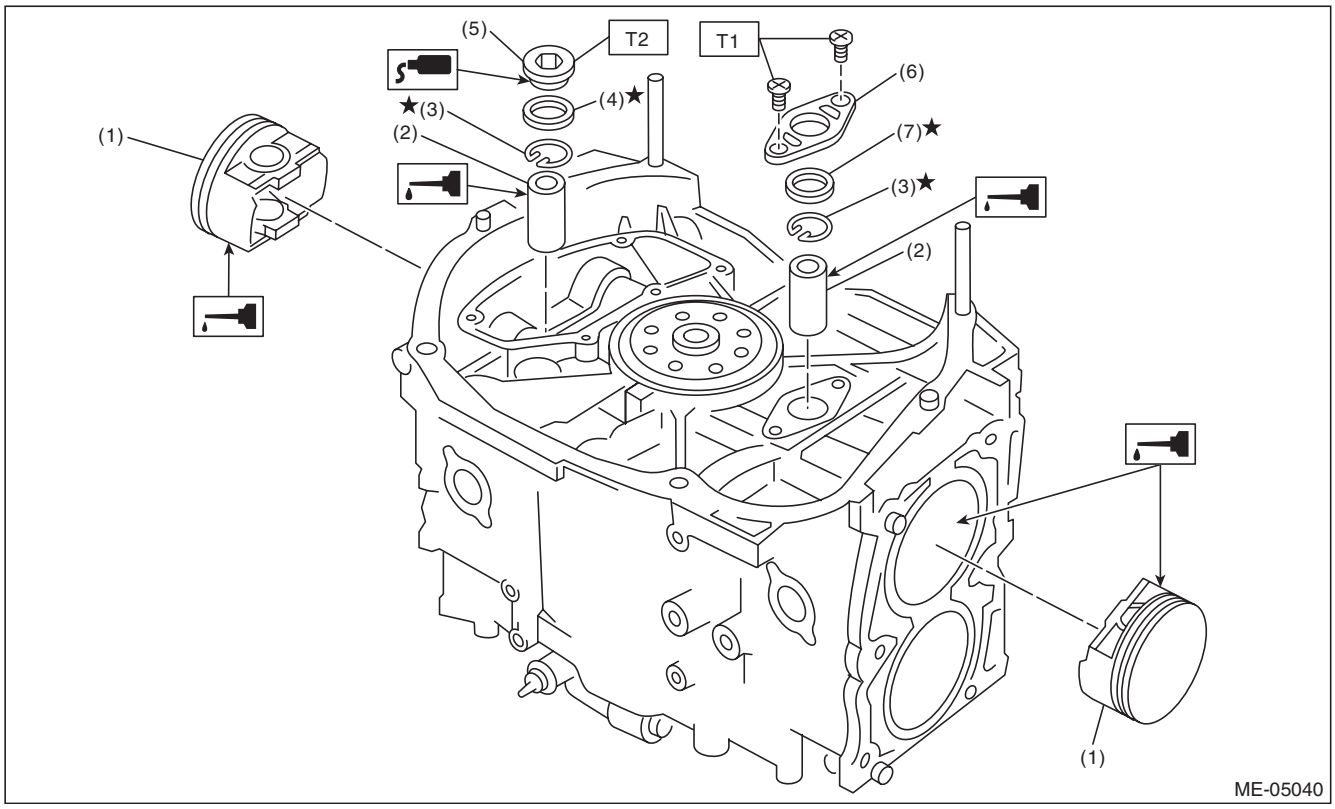

(1)	Piston	(5)	Service hole plug	***Tightening torque:N·m (kgf-m, ft-lb)***
(2)	Piston pin	(6)	Service hole cover	***T1: 6.4 (0.7, 4.7)***
(3)	Snap ring	(7)	O-ring	***T2: 70 (7.1, 51.6)***
(4)	Gasket			

(7) Set the parts so that the #3 and #4 cylinders are on the upper side. Following the same procedures as used for #1 and #2 cylinders, install the pistons and piston pins.
(8) Install the service hole cover.

NOTE:
Use new O-rings.

Tightening torque:
6.4 N·m (0.7 kgf-m, 4.7 ft-lb)

GETtheMANUALS.org

22) Install the water pipe assembly.

NOTE:
Use new O-rings.

Tightening torque:
6.4 N·m (0.7 kgf-m, 4.7 ft-lb)

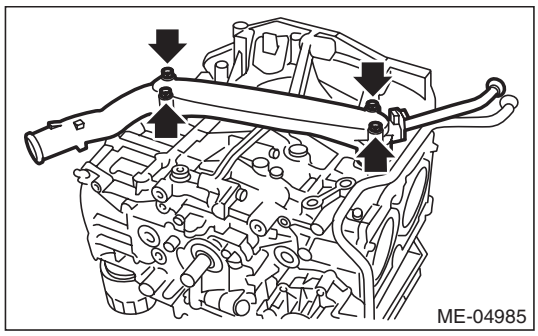

23) Install the baffle plate.

NOTE:
- Use a new seal.
- Make sure that the seals (A) are installed securely on the baffle plate in a direction as shown in the figure below.

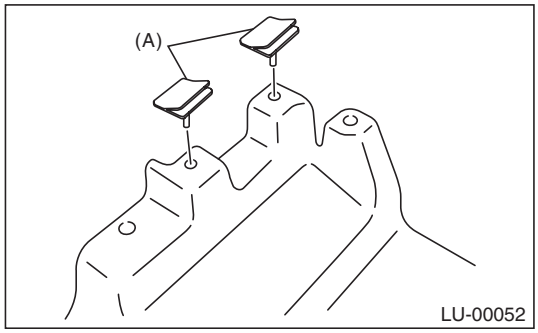

Tightening torque:
6.4 N·m (0.7 kgf-m, 4.7 ft-lb)

24) Apply liquid gasket to the mating surfaces of cylinder block lower, and install the cylinder block lower.

CAUTION:
Be careful not to apply any liquid gasket to the O-ring attachment section.

NOTE:
- Use new O-rings.
- Before installing the cylinder block lower, clean the mating surface of cylinder block lower and cylinder block.
- Install within 5 min. after applying liquid gasket.

Liquid gasket:
THREE BOND 1217G (Part No. K0877Y0100) or equivalent

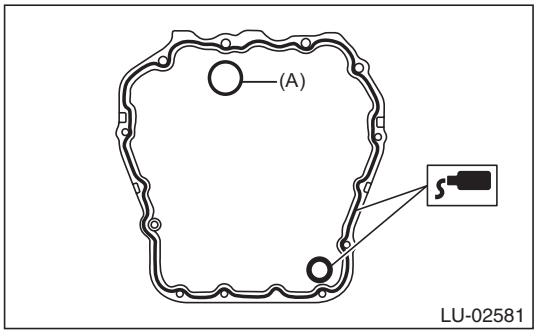

(A) O-ring

Tightening torque:
T1: 6.4 N·m (0.7 kgf-m, 4.7 ft-lb)
T2: 16 N·m (1.6 kgf-m, 11.8 ft-lb)

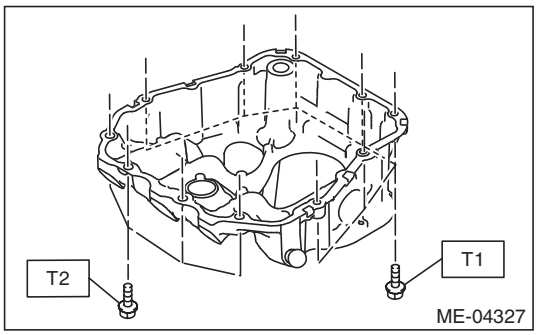

GETtheMANUALS.org

25) Apply liquid gasket to the mating surfaces of oil pan, and install the oil pan.

NOTE:
- Before installing the oil pan, clean the mating surface of oil pan and cylinder block.
- Install within 5 min. after applying liquid gasket.

Liquid gasket:
THREE BOND 1217G (Part No. K0877Y0100) or equivalent

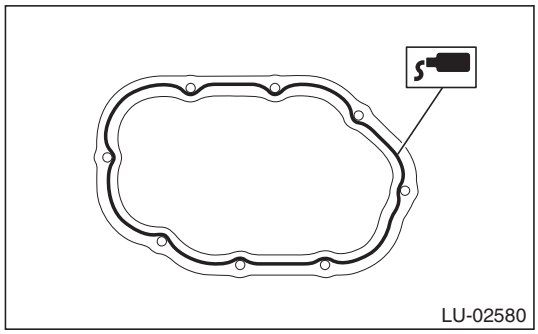

Tightening torque:
5 N·m (0.5 kgf-m, 3.7 ft-lb)

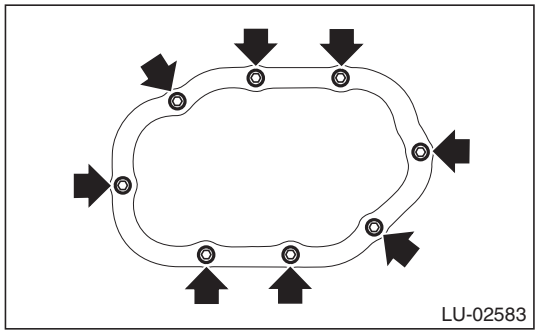

26) Secure the oil level switch harness to the cylinder block with clip.

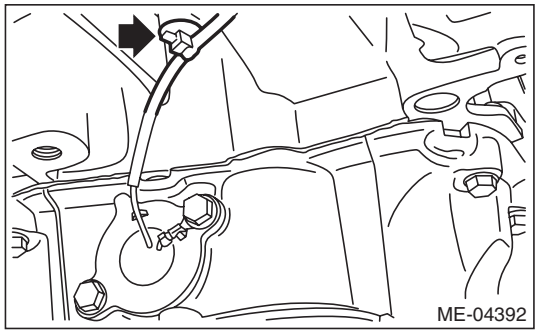

27) Apply liquid gasket to the mating surfaces of the oil separator cover and the threaded portion of bolt (A) shown in the figure (when reusing the bolt), and then install the oil separator cover.

NOTE:
- Install within 5 min. after applying liquid gasket.
- Use new oil separator cover.

Liquid gasket:
- ***Mating surface***
  THREE BOND 1217G (Part No. K0877Y0100) or equivalent
- ***(A) bolt thread (when reusing bolts)***
  THREE BOND 1324 (Part No. 004403042) or equivalent

Tightening torque:
6.4 N·m (0.7 kgf-m, 4.7 ft-lb)

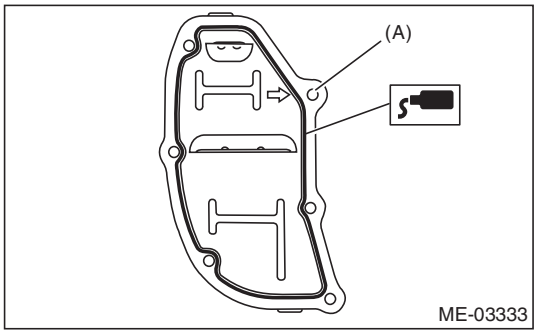

28) Install the drive plate. (CVT model) <Ref. to CVT-133, INSTALLATION, Drive Plate.>
29) Install the flywheel. (MT model) <Ref. to CL-14, INSTALLATION, Flywheel.>
30) Install the clutch disc and cover. (MT model) <Ref. to CL-11, INSTALLATION, Clutch Disc and Cover.>
31) Install the oil pump.
(1) Using the ST, install the front oil seal.

ST 499587100 OIL SEAL INSTALLER

NOTE:
Use a new front oil seal.

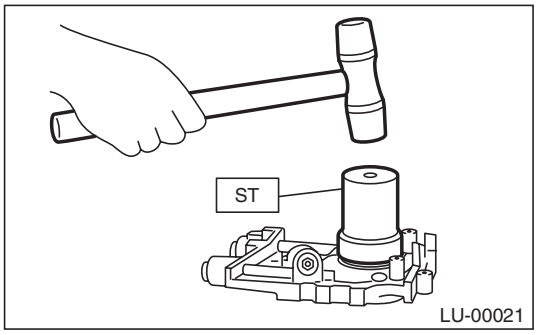

GETtheMANUALS.org

(2) Apply liquid gasket to the mating surfaces of oil pump.

NOTE:
Install within 5 min. after applying liquid gasket.

Liquid gasket:
THREE BOND 1217G (Part No. K0877Y0100) or equivalent

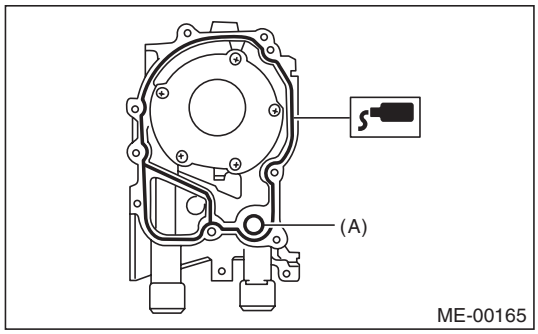

(A) O-ring

(3) Apply a thin coat of engine oil to the inside of front oil seal.

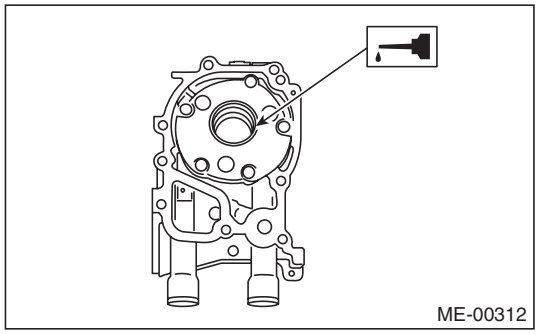

(4) Install the oil pump to cylinder block.

CAUTION:
- **Be careful not to damage the front oil seal during installation.**
- **Make sure the front oil seal lip is not folded.**

NOTE:
- Align the flat surface of oil pump's inner rotor with that of crankshaft before installation.
- Use new O-rings.
- Do not forget to assemble O-rings.

(5) Apply liquid gasket to the three bolts thread shown in figure. (when reusing bolts)

Liquid gasket:
THREE BOND 1324 (Part No. 004403042) or equivalent

Tightening torque:
6.4 N·m (0.7 kgf-m, 4.7 ft-lb)

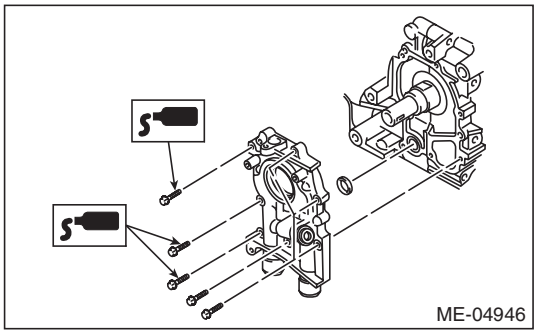

32) Install the water pump and gasket.

NOTE:
- When installing the water pump, tighten bolts in two stages in alphabetical order as shown in the figure.
- Use a new gasket.

Tightening torque:
First: 12 N·m (1.2 kgf-m, 8.9 ft-lb)
Second: 12 N·m (1.2 kgf-m, 8.9 ft-lb)

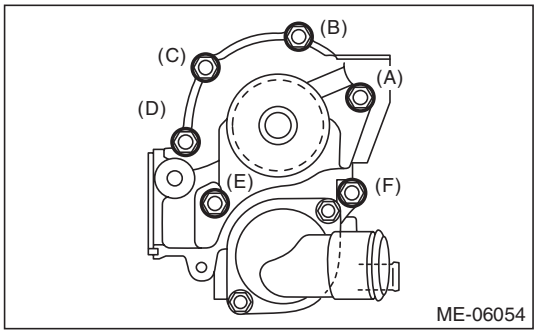

33) Install the water by-pass pipe for heater.

Tightening torque:
6.4 N·m (0.7 kgf-m, 4.7 ft-lb)

34) Install the oil filter.
<Ref. to LU(H4SO)-36, INSTALLATION, Engine Oil Filter.>
35) Install the cylinder head. <Ref. to ME(H4SO)-63, INSTALLATION, Cylinder Head.>
36) Install the generator and A/C compressor with their brackets.

Tightening torque:
36 N·m (3.7 kgf-m, 26.6 ft-lb)

37) Install the crank sprocket. <Ref. to ME(H4SO)-54, INSTALLATION, Crank Sprocket.>
38) Install the timing belt. <Ref. to ME(H4SO)-49, INSTALLATION, Timing Belt.>

GETtheMANUALS.org

39) Adjust the valve clearance. <Ref. to ME(H4SO)-30, ADJUSTMENT, Valve Clearance.>
40) Install the rocker cover.
(1) Install the rocker cover gasket to the rocker cover.

NOTE:
Use a new rocker cover gasket.

(2) Temporarily tighten the rocker cover bolts in alphabetical order shown in the figure, and then tighten to specified torque in alphabetical order in two steps.

Tightening torque:
First
6.4 N·m (0.7 kgf-m, 4.7 ft-lb)
Second (only (a) and (b) are tightened)
6.4 N·m (0.7 kgf-m, 4.7 ft-lb)

- RH side

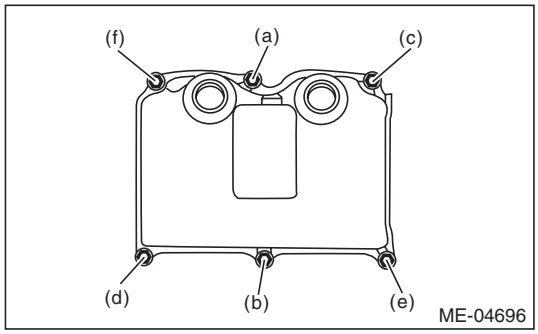

- LH side

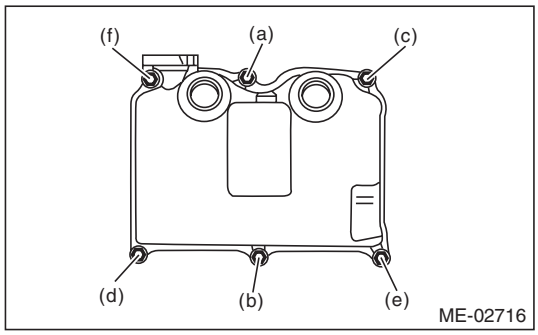

41) Install the timing belt cover. <Ref. to ME(H4SO)-47, INSTALLATION, Timing Belt Cover.>
42) Install the crank pulley. <Ref. to ME(H4SO)-45, INSTALLATION, Crank Pulley.>
43) Install the intake manifold. <Ref. to FU(H4SO)-21, INSTALLATION, Intake Manifold.>
44) Install the engine to the vehicle. <Ref. to ME(H4SO)-35, INSTALLATION, Engine Assembly.>

GETtheMANUALS.org

C: DISASSEMBLY

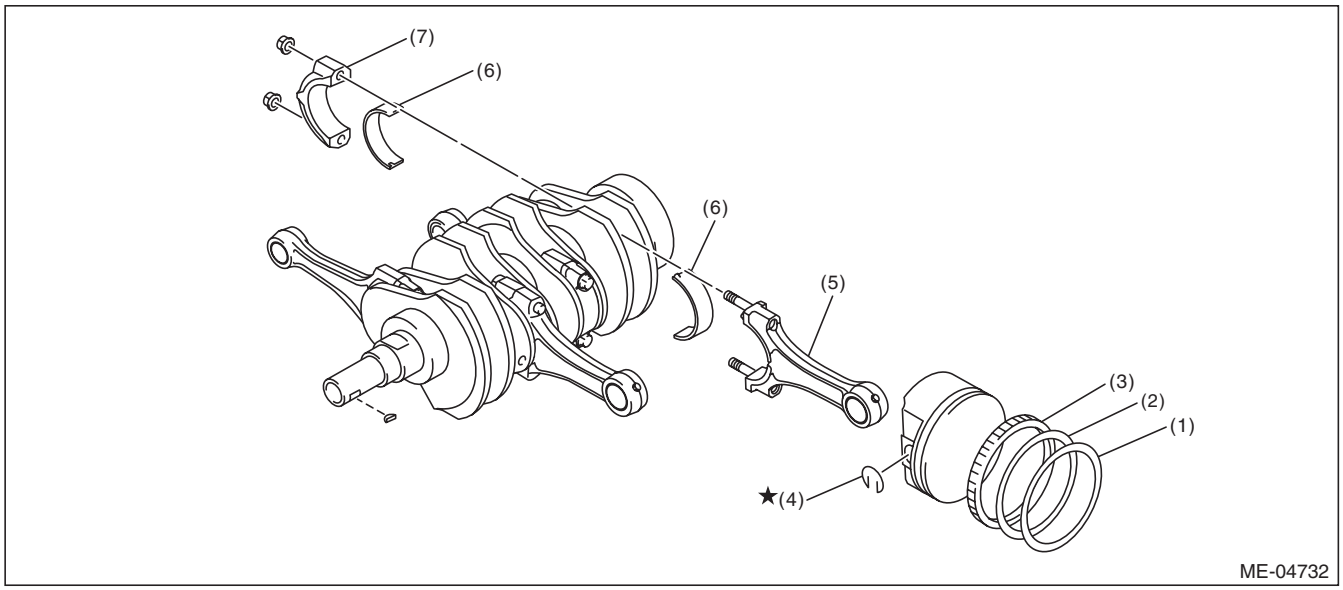

(1)	Top ring	(4)	Snap ring	(6)	Connecting rod bearing
(2)	Second ring	(5)	Connecting rod	(7)	Connecting rod cap
(3)	Oil ring				

1) Remove the connecting rod cap.
2) Remove the connecting rod bearing.

NOTE:
Keep the removed connecting rods, connecting rod caps and bearings in order so that they are kept in their original combinations/groups, and not mixed together.

3) Remove the piston rings using piston ring expander.
4) Remove the oil ring by hand.

NOTE:
Arrange the removed piston rings in proper order, to prevent confusion.

5) Remove the snap ring.

GETtheMANUALS.org

D: ASSEMBLY

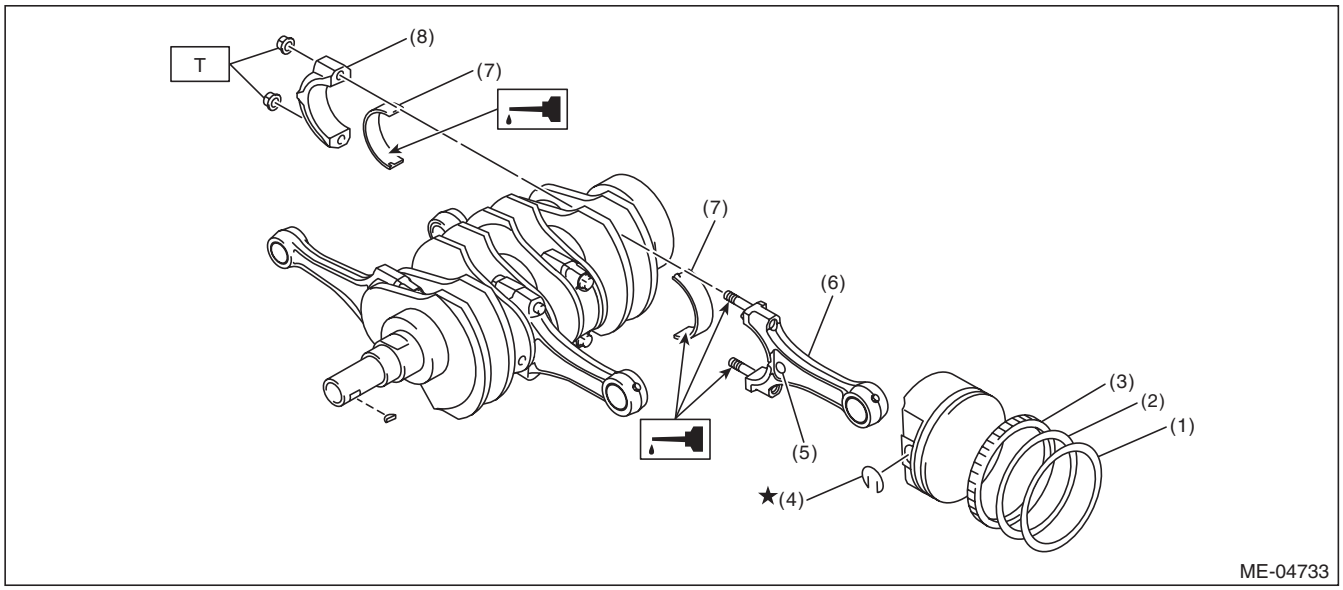

(1)	Top ring	(5)	Side mark
(2)	Second ring	(6)	Connecting rod
(3)	Oil ring	(7)	Connecting rod bearing
(4)	Snap ring	(8)	Connecting rod cap

Tightening torque:N·m (kgf-m, ft-lb)
T: 45 (4.6, 33.2)

1) Apply engine oil to the surface of the connecting rod bearings, and install the connecting rod bearings on connecting rods and connecting rod caps.
2) Position each connecting rod with the side with a side mark facing forward, and install it.
3) Attach the connecting rod cap, and tighten with connecting rod nut.
Make sure the arrow on connecting rod cap faces the front during installation.

NOTE:
- Each connecting rod has its own mating cap. Make sure that they are assembled correctly by checking their matching number.
- When tightening the connecting rod nuts, apply oil on the threads.

Tightening torque:
45 N·m (4.6 kgf-m, 33.2 ft-lb)

4) Install the oil ring upper rail, expander and lower rail by hand.
5) Install the second ring and top ring using piston ring expander.

NOTE:
Assemble so that the piston ring mark “R” faces the top side of the piston.

GETtheMANUALS.org

E: INSPECTION

1. CYLINDER BLOCK

1) Check for cracks or damage. Use liquid penetrant tester on the important sections to check for fissures. Check that there are no marks of gas leaking or water leaking on gasket installing surface.
2) Check the oil passages for clogging.
3) Inspect the cylinder head surface that mates with cylinder block for warping by using a straight edge, and correct by grinding if necessary.

Warping limit:
0.025 mm (0.00098 in)

Grinding limit:
0.1 mm (0.004 in)

Standard height of cylinder block:
201.0 mm (7.91 in)

2. CYLINDER AND PISTON

1) The cylinder bore size is stamped on the front upper face of the cylinder block.

NOTE:
- Measurement should be performed at a temperature of 20°C (68°F).
- Standard sized pistons are classified into two grades, “A” and “B”. These grades should be used as guide lines in selecting a standard piston.

Standard diameter:
A: 99.505 — 99.515 mm (3.9175 — 3.9179 in)
B: 99.495 — 99.505 mm (3.9171 — 3.9175 in)

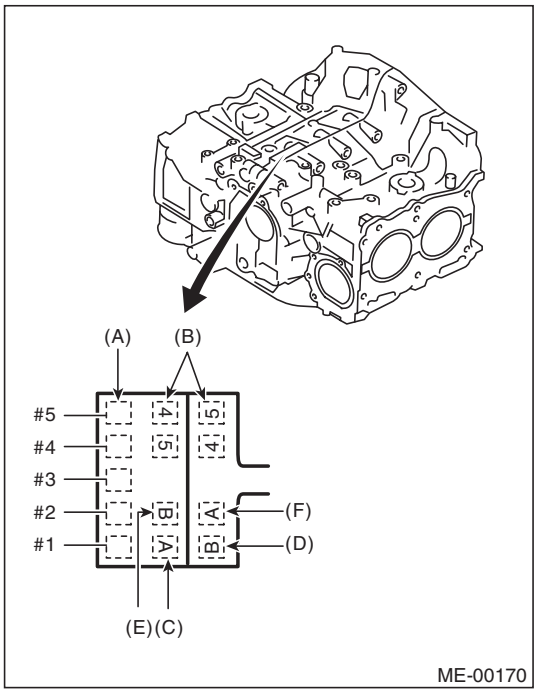

(A) Main journal size mark
(B) Cylinder block (RH) — (LH) combination mark
(C) #1 cylinder bore size mark
(D) #2 cylinder bore size mark
(E) #3 cylinder bore size mark
(F) #4 cylinder bore size mark

GETtheMANUALS.org

2) Measure inner diameter of each cylinder.
Measure the inner diameter of each cylinder in both the thrust and piston pin directions at the heights as shown in the figure, using a cylinder bore gauge.

NOTE:
Measurement should be performed at a temperature of 20°C (68°F).

Cylindricality:
Limit
0.015 mm (0.0006 in)

Out-of-roundness:
Limit
0.010 mm (0.0004 in)

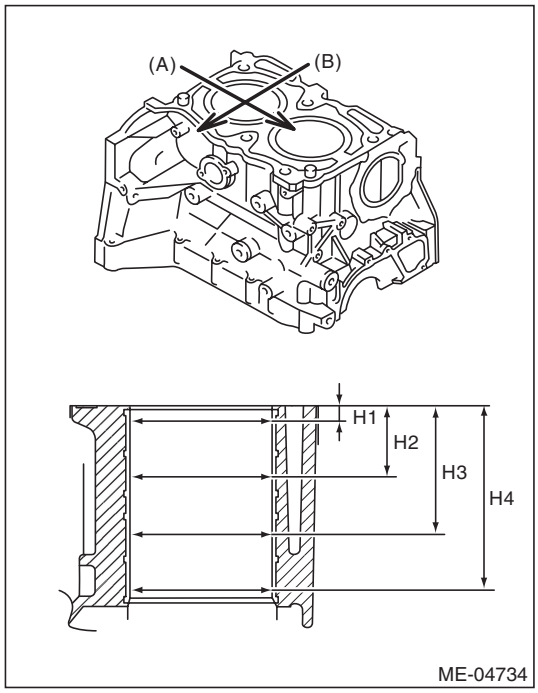

(A) Piston pin direction
(B) Thrust direction
H1 10 mm (0.39 in)
H2 45 mm (1.77 in)
H3 80 mm (3.15 in)
H4 115 mm (4.53 in)

3) When the piston is to be replaced due to general or cylinder wear, select a suitable sized piston by measuring the piston clearance.

4) Measure outer diameter of each piston.
Measure the outer diameter of each piston at the height as shown in the figure. (Thrust direction)

NOTE:
Measurement should be performed at a temperature of 20°C (68°F).

Piston grade point H:
38.2 mm (1.504 in)

Piston outer diameter:

Standard
A: 99.510 — 99.520 mm (3.9177 — 3.9181 in)
B: 99.500 — 99.510 mm (3.9173 — 3.9177 in)

0.25 mm (0.0098 in) oversize:
99.750 — 99.770 mm (3.9272 — 3.9280 in)

0.50 mm (0.0197 in) oversize:
100,000 — 100.020 mm (3.9370 — 3.9378 in)

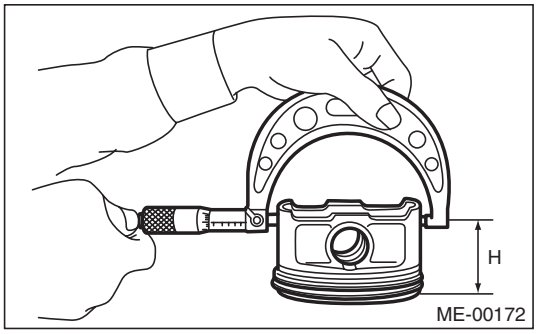

5) Calculate the clearance between cylinder and piston.

NOTE:
Measurement should be performed at a temperature of 20°C (68°F).

Clearance between cylinder and piston at 20°C (68°F):
Standard
–0.015 — 0.005 mm (–0.00059 — 0.00020 in)

6) Boring and honing
(1) If any of the measured value of cylindricality, out-of-roundness or cylinder-to-piston clearance is out of standard or if there is any damage on the cylinder wall, rebore it to replace with an oversize piston.

CAUTION:
When any of the cylinders needs reboring, all other cylinders must be bored at the same time, and replaced with oversize pistons.

GETtheMANUALS.org

(2) If the cylinder inner diameter exceeds the limit after boring and honing, replace the cylinder block.

NOTE:
Immediately after reboring, the cylinder diameter may differ from its real diameter due to temperature rise. Thus, when measuring the cylinder diameter, wait until it has cooled to room temperature.

Cylinder inner diameter boring limit:
To 100.005 mm (3.9372 in)

3. PISTON AND PISTON PIN

1) Check the piston and piston pin for damage, cracks or wear. Replace if faulty.
2) Check the piston ring groove for wear or damage. Replace if faulty.
3) Make sure that the piston pin can be inserted into the piston pin hole with a thumb at 20°C (68°F). Replace if faulty.

Clearance between piston pin hole and piston pin:
Standard
0.004 — 0.008 mm (0.0002 — 0.0003 in)

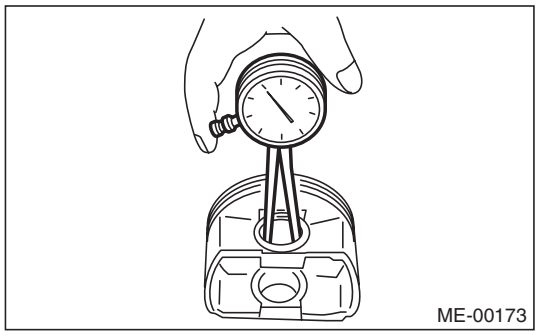
ME-00173

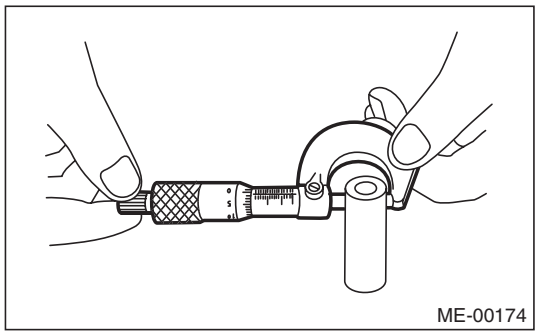
ME-00174

4) Check the snap ring installation groove (A) on the piston for burr. If necessary, remove burr from the groove so that the piston pin can lightly move.

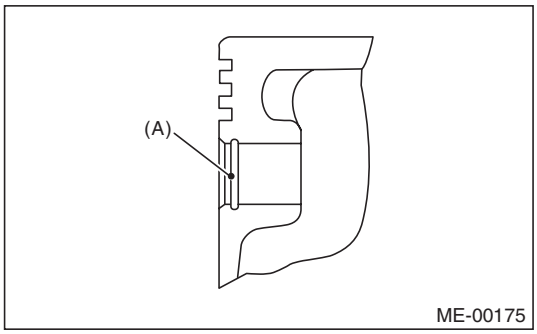

ME-00175

5) Check the snap ring for distortion, cracks and wear.

4. PISTON RING

1) If the piston ring is broken, damaged or worn, or if its tension is insufficient, or when the piston is replaced, replace the piston ring with a new part of the same size as piston.

NOTE:
- The top ring and second ring have the mark to determine the direction for installing. When installing the ring to piston, face marks to the top side.
- Oil ring consists of the upper rail, expander and lower rail. When installing oil ring on piston, be careful of the direction of each rail.

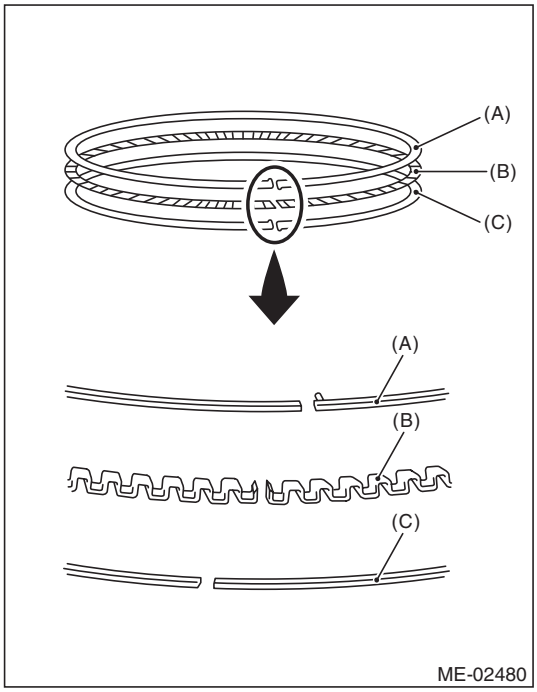

ME-02480

(A) Upper rail
(B) Expander
(C) Lower rail

GETtheMANUALS.org

2) Using the piston, insert the piston ring and oil ring into the cylinder block so that they are perpendicular to the cylinder wall, and measure the piston ring gap using a thickness gauge.

		Standard mm (in)
Piston ring gap	Top ring	0.20 — 0.35 (0.0079 — 0.0138)
	Second ring	0.37 — 0.52 (0.0146 — 0.0205)
	Oil ring rail	0.20 — 0.50 (0.0079 — 0.0197)

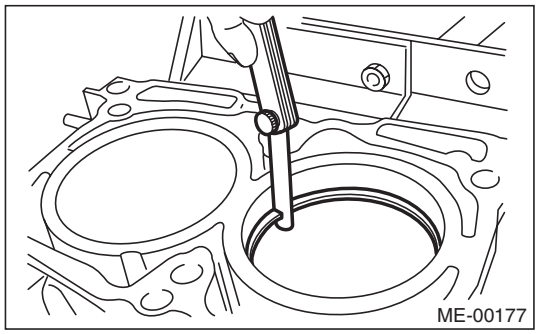

3) Fit the piston ring straight into the piston ring groove, then measure the clearance between piston ring and piston ring groove with a thickness gauge.

NOTE:
Before measuring the clearance, clean the piston ring groove and piston ring.

		Standard mm (in)
Clearance between piston ring and piston ring groove	Top ring	0.040 — 0.080 (0.0016 — 0.0031)
	Second ring	0.030 — 0.070 (0.0012 — 0.0028)

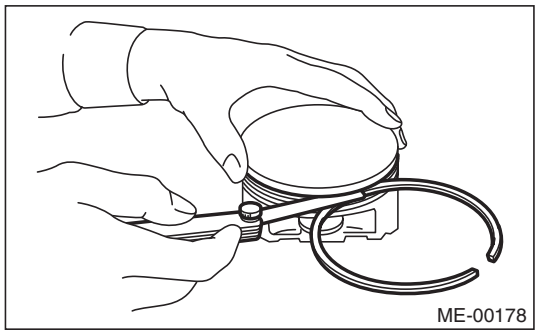

5. CONNECTING ROD

1) Replace the connecting rod, if the large or small end thrust surface is damaged.
2) Check for bend or twist using a connecting rod aligner. Replace the connecting rod if the bend or twist exceeds the limit.

Limit of bend or twist per 100 mm (3.94 in) in length:
0.10 mm (0.0039 in)

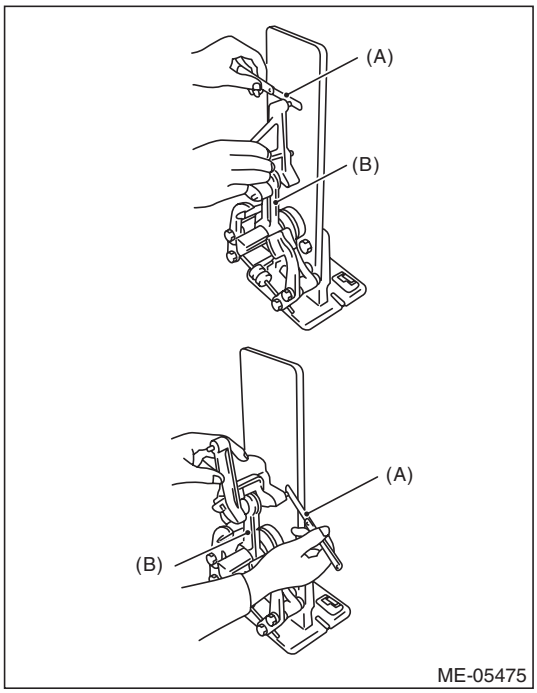

(A) Thickness gauge
(B) Connecting rod

3) Install the connecting rod with bearings attached to the crankshaft, and using a thickness gauge, measure the thrust clearance. If the thrust clearance exceeds the standard or uneven wear is found, replace the connecting rod.

Connecting rod thrust clearance:
Standard
0.070 — 0.330 mm (0.0028 — 0.0130 in)

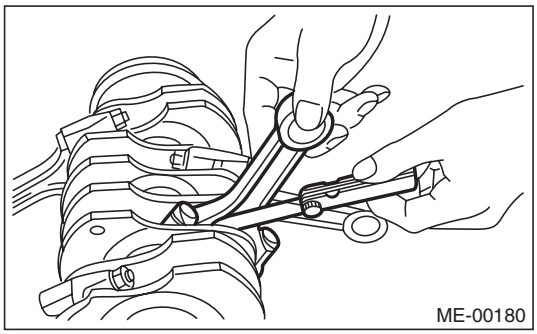

4) Inspect the connecting rod bearing for scar, peeling, seizure, melting, wear, etc.

GETtheMANUALS.org

5) Measure the oil clearance on each connecting rod bearing using plastigauge. If any oil clearance is not within the standard, replace the defective bearing with a new part of standard size or undersize as necessary.

Connecting rod oil clearance:
Standard
0.016 — 0.044 mm (0.0006 — 0.0017 in)

Unit: mm (in)

Bearing	Bearing size (Thickness at center)	Outer diameter of crank pin
Standard	1.492 — 1.501 (0.0587 — 0.0591)	51.984 — 52.000 (2.0466 — 2.0472)
0.03 (0.0012) Undersize	1.510 — 1.513 (0.0594 — 0.0596)	51.954 — 51.970 (2.0454 — 2.0461)
0.05 (0.0020) Undersize	1.520 — 1.523 (0.0598 — 0.0600)	51.934 — 51.950 (2.0446 — 2.0453)
0.25 (0.0098) Undersize	1.620 — 1.623 (0.0638 — 0.0639)	51.734 — 51.750 (2.0368 — 2.0374)

6) Inspect the bushing at connecting rod small end, and replace with a new part if worn or damaged.
7) Measure the piston pin clearance at connecting rod small end. If the measured value is not within the standard, replace it with a new part.

Clearance between piston pin and bushing:
Standard
0 — 0.022 mm (0 — 0.0009 in)

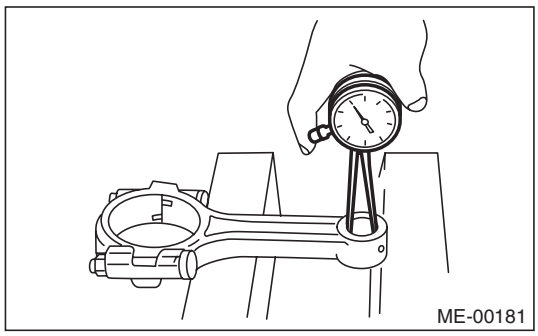
ME-00181

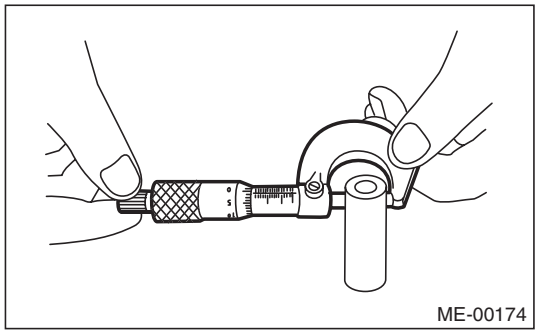
ME-00174

8) The replacement procedure for the connecting rod small end bushing is as follows.

(1) Remove the bushing from connecting rod with ST and press.
(2) Press the bushing with the ST after applying oil on the periphery of new bushing.

ST 499037100 CONNECTING ROD BUSHING REMOVER AND INSTALLER

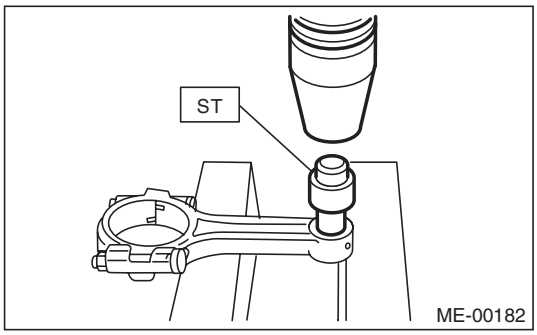

ME-00182

(3) Make two 3 mm (0.12 in) holes in the pressed bushing to match the pre-manufactured holes on the connecting rod, then ream the inside of the bushing.
(4) After completion of reaming, clean the bushing to remove chips.

6. CRANKSHAFT AND CRANKSHAFT BEARING

1) Clean the crankshaft completely, and check it for cracks using liquid penetrant tester. If defective, replace the crankshaft.
2) Measure warping of the crankshaft. If it exceeds the limit, correct or replace it.

NOTE:
If a suitable V-block is not available, using just the #1 and #5 crankshaft bearings on cylinder block, position the crankshaft on cylinder block. Then, measure the crankshaft bend using a dial gauge.

Crankshaft bend limit:
0.035 mm (0.0014 in)

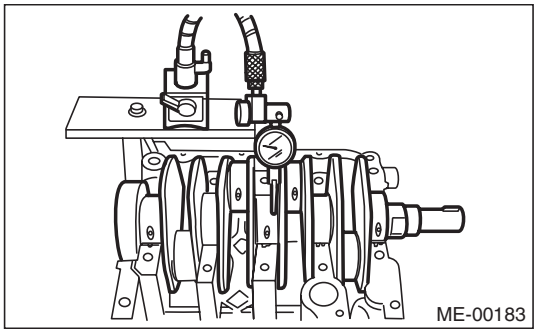
ME-00183

GETtheMANUALS.org

3) Inspect the crank journal and crank pin for wear. If they are not within the standard, replace the bearing with a suitable (undersize) one, and replace or grind to correct the crankshaft as necessary. When grinding the crank journal or crank pin, finish them to the specified dimensions according to the undersize bearing to be used.

Crank pin:
- ***Cylindricality***
  - ***Limit***
  - ***0.004 mm (0.0002 in)***
- ***Out-of-roundness***
  - ***Limit***
  - ***0.003 mm (0.0001 in)***
- ***Grinding limit (dia.)***
  - ***To 51.750 mm (2.0374 in)***

Crank journal:
- ***Cylindricality***
  - ***Limit***
  - ***0.006 mm (0.0002 in)***
- ***Out-of-roundness***
  - ***Limit***
  - ***0.005 mm (0.0002 in)***
- ***Grinding limit (dia.)***
  - ***To 59.758 mm (2.3527 in)***

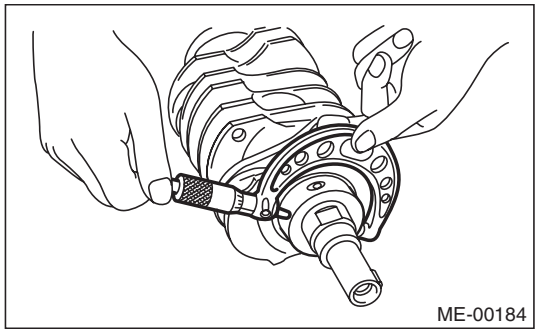

Unit: mm (in)

		Crank journal outer diameter		Crank pin outer diameter
		#1, #3	#2, #4, #5	
Standard	Journal O.D.	59.992 — 60.008 (2.3619 — 2.3625)	59.992 — 60.008 (2.3619 — 2.3625)	51.984 — 52.000 (2.0466 — 2.0472)
	Bearing size (Thickness at center)	1.998 — 2.011 (0.0787 — 0.0792)	2.000 — 2.013 (0.0787 — 0.0793)	1.492 — 1.501 (0.0587 — 0.0591)
0.03 (0.0012) Undersize	Journal O.D.	59.962 — 59.978 (2.3607 — 2.3613)	59.962 — 59.978 (2.3607 — 2.3613)	51.954 — 51.970 (2.0454 — 2.0461)
	Bearing size (Thickness at center)	2.017 — 2.020 (0.0794 — 0.0795)	2.019 — 2.022 (0.0795 — 0.0796)	1.510 — 1.513 (0.0594 — 0.0596)
0.05 (0.0020) Undersize	Journal O.D.	59.942 — 59.958 (2.3599 — 2.3605)	59.942 — 59.958 (2.3599 — 2.3605)	51.934 — 51.950 (2.0446 — 2.0453)
	Bearing size (Thickness at center)	2.027 — 2.030 (0.0798 — 0.0799)	2.029 — 2.032 (0.0799 — 0.0800)	1.520 — 1.523 (0.0598 — 0.0600)
0.25 (0.0098) Undersize	Journal O.D.	59.742 — 59.758 (2.3520 — 2.3527)	59.742 — 59.758 (2.3520 — 2.3527)	51.734 — 51.750 (2.0368 — 2.0374)
	Bearing size (Thickness at center)	2.127 — 2.130 (0.0837 — 0.0839)	2.129 — 2.132 (0.0838 — 0.0839)	1.620 — 1.623 (0.0638 — 0.0639)

GETtheMANUALS.org

4) Use a thickness gauge to measure the thrust clearance of crankshaft at #5 crank journal bearing. If clearance exceeds the standard, replace the bearing.

Crankshaft thrust clearance:
Standard
0.030 — 0.115 mm (0.0012 — 0.0045 in)

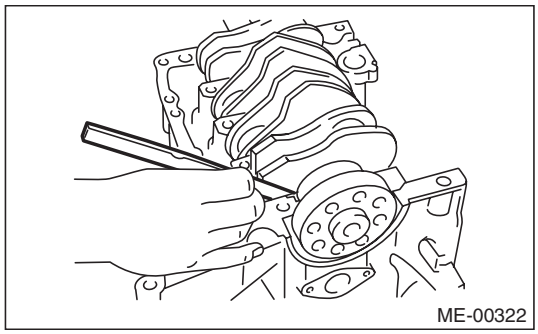

5) Inspect individual crankshaft bearings for signs of flaking, seizure, melting and wear.
6) Measure the oil clearance on each crankshaft bearing using plastigauge. If the measured value is out of standard, replace the defective bearing with an undersize one, and replace or grind to correct the crankshaft as necessary.

Crankshaft oil clearance:
Standard
0.010 — 0.030 mm (0.0004 — 0.0012 in)

GETtheMANUALS.org

22. Oil Switching Solenoid Valve

A: REMOVAL

1. RH SIDE

1) Disconnect the ground cable from battery.

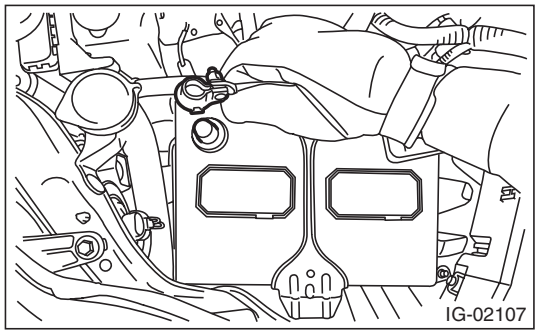

2) Remove the cover (A) and clip (B) from air intake boot assembly.

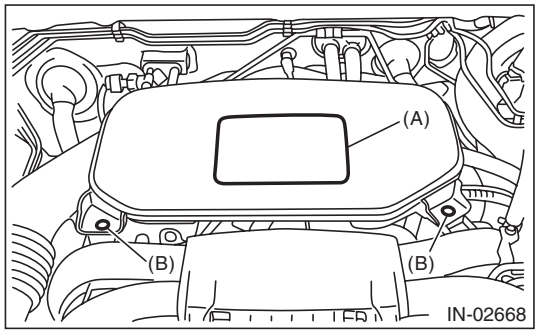

3) Loosen the clamp (A) which connects the air intake boot assembly and air cleaner case.
4) Loosen the clamp (B) which connects the air intake boot assembly and throttle body.

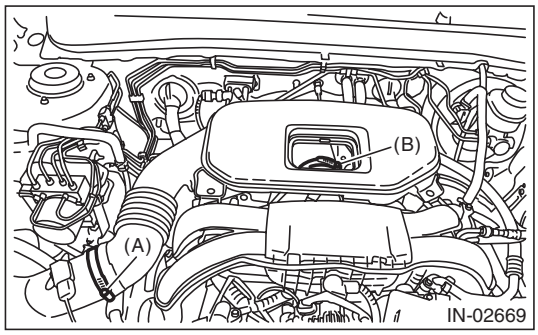

5) Remove the air intake boot from the throttle body, and move it to the left side wheel apron.

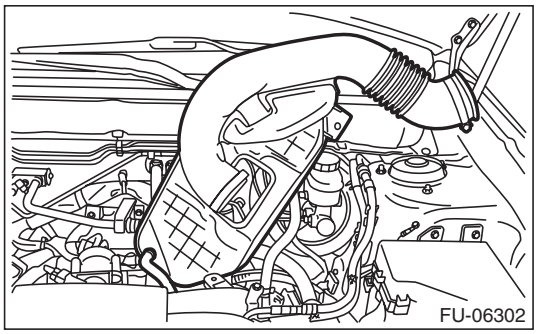

6) Remove the bolt, and disconnect the bulkhead harness connector from the engine harness connector and rear engine hanger.

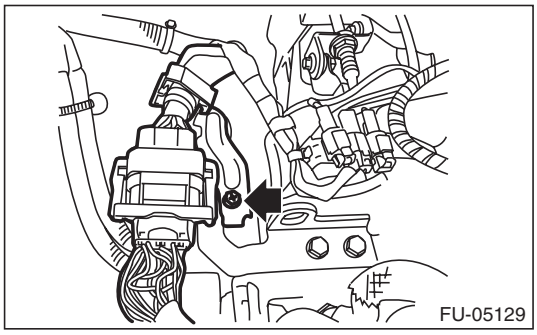

7) Slide the engine harness connector in the direction of the arrow and remove it from the rear engine hanger.

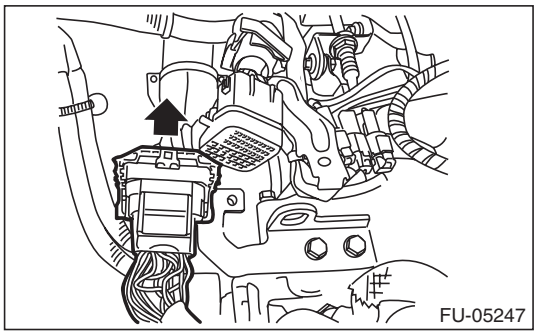

8) Disconnect the connector from the oil switching solenoid valve.
9) Remove the oil switching solenoid valve.
10) Remove the variable valve lift diagnosis oil pressure switch. <Ref. to FU(H4SO)-38, REMOVAL, Variable Valve Lift Diagnosis Oil Pressure Switch.>
11) Remove the oil temperature sensor. <Ref. to FU(H4SO)-40, REMOVAL, Oil Temperature Sensor.>

GETtheMANUALS.org

12) Remove the oil switching solenoid valve holder from the cylinder head.

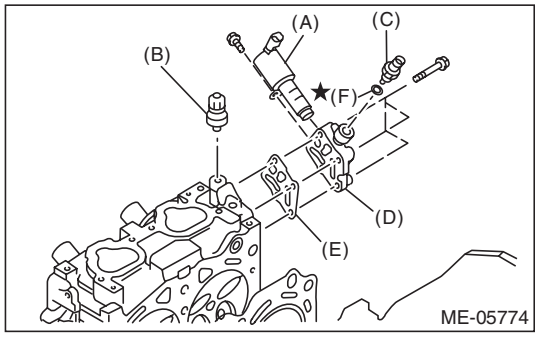

(A) Oil switching solenoid valve
(B) Variable valve lift diagnosis oil pressure switch
(C) Oil temperature sensor
(D) Oil switching solenoid valve holder
(E) Gasket
(F) Washer

2. LH SIDE

1) Disconnect the ground cable from battery.

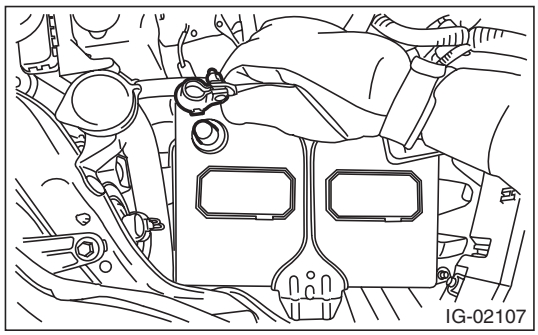

2) Remove the V-belts. <Ref. to ME(H4SO)-43, REMOVAL, V-belt.>
3) Remove the crank pulley. <Ref. to ME(H4SO)-45, REMOVAL, Crank Pulley.>
4) Remove the timing belt cover. <Ref. to ME(H4SO)-47, REMOVAL, Timing Belt Cover.>
5) Remove the timing belt. <Ref. to ME(H4SO)-48, REMOVAL, Timing Belt.>
6) Remove the cam sprocket. <Ref. to ME(H4SO)-53, REMOVAL, Cam Sprocket.>
7) Remove the timing belt cover No. 2 LH.
8) Disconnect the connector from the oil switching solenoid valve.
9) Remove the oil switching solenoid valve.
10) Remove the variable valve lift diagnosis oil pressure switch. <Ref. to FU(H4SO)-38, REMOVAL, Variable Valve Lift Diagnosis Oil Pressure Switch.>

11) Remove the oil switching solenoid valve holder from the cylinder head.

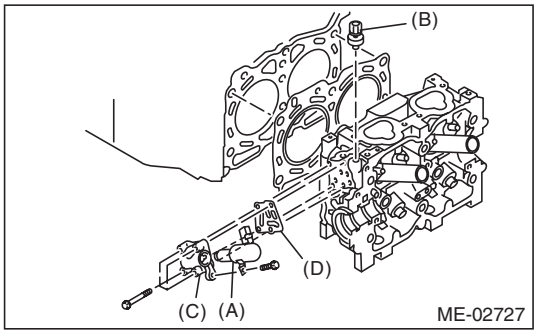

(A) Oil switching solenoid valve
(B) Variable valve lift diagnosis oil pressure switch
(C) Oil switching solenoid valve holder
(D) Gasket

B: INSTALLATION

1. RH SIDE

Install in the reverse order of removal.

NOTE:
- Use a new gasket and washer.
- Apply liquid gasket to variable valve lift diagnosis oil pressure switch threads.
- Install the oil switching solenoid valve to the holder, then install it to the cylinder head.

Tightening torque:
T1: 6.4 N·m (0.7 kgf-m, 4.7 ft-lb)
T2: 10 N·m (1.0 kgf-m, 7.4 ft-lb)
T3: 17 N·m (1.7 kgf-m, 12.5 ft-lb)
T4: 18 N·m (1.8 kgf-m, 13.3 ft-lb)

Liquid gasket:
THREE BOND 1324 (Part No. 004403042) or equivalent

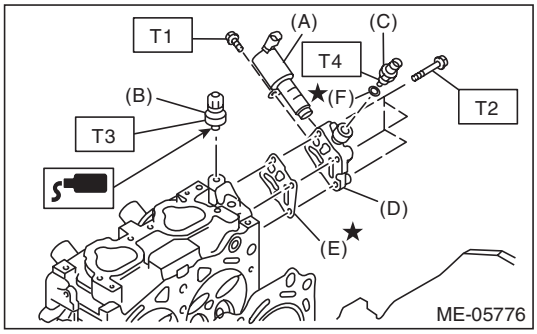

(A) Oil switching solenoid valve
(B) Variable valve lift diagnosis oil pressure switch
(C) Oil temperature sensor
(D) Oil switching solenoid valve holder
(E) Gasket
(F) Washer

GETtheMANUALS.org

Tightening torque:
6.4 N·m (0.7 kgf-m, 4.7 ft-lb)

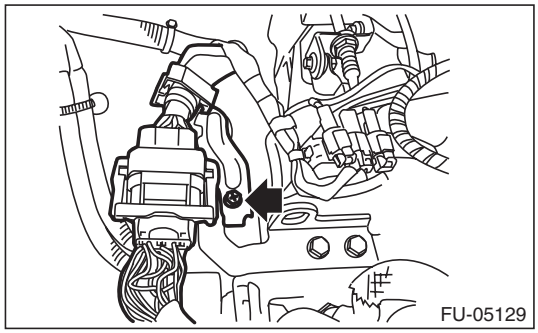

NOTE:
Align the clamp hole with the protrusion of the air intake boot assembly.

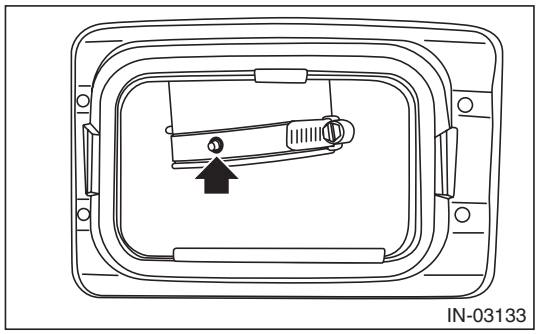

Tightening torque:
Clamp (A), (B)
3 N·m (0.3 kgf-m, 2.2 ft-lb)

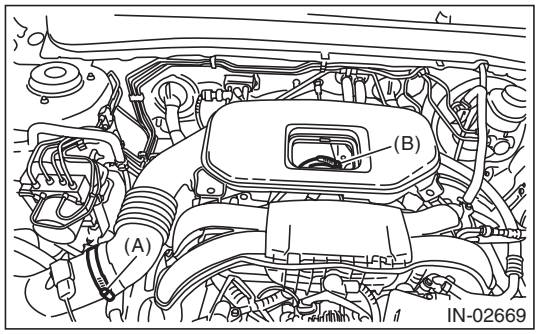

2. LH SIDE

Install in the reverse order of removal.

NOTE:
- Use a new gasket.
- Apply liquid gasket to variable valve lift diagnosis oil pressure switch threads.
- Install the oil switching solenoid valve to the holder, then install it to the cylinder head.

Tightening torque:
T1: 6.4 N·m (0.7 kgf-m, 4.7 ft-lb)
T2: 10 N·m (1.0 kgf-m, 7.4 ft-lb)
T3: 17 N·m (1.7 kgf-m, 12.5 ft-lb)

Liquid gasket:
THREE BOND 1324 (Part No. 004403042) or equivalent

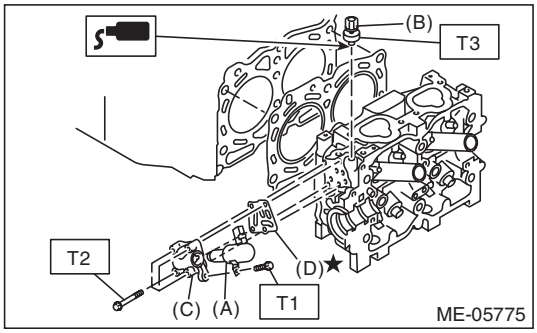

(A) Oil switching solenoid valve
(B) Variable valve lift diagnosis oil pressure switch
(C) Oil switching solenoid valve holder
(D) Gasket

GETtheMANUALS.org

23.Intake and Exhaust Valve

A: SPECIFICATION

Refer to “Cylinder Head” for removal and installation procedures of the intake and exhaust valves. <Ref. to ME(H4SO)-63, REMOVAL, Cylinder Head.> <Ref. to ME(H4SO)-63, INSTALLATION, Cylinder Head.>

GETtheMANUALS.org

24. Piston

A: SPECIFICATION

Refer to “Cylinder Block” for removal and installation procedures of pistons. <Ref. to ME(H4SO)-71, REMOVAL, Cylinder Block.> <Ref. to ME(H4SO)-76, INSTALLATION, Cylinder Block.>

GETtheMANUALS.org

25. Connecting Rod

A: SPECIFICATION

Refer to “Cylinder Block” for removal and installation procedures of connecting rods. <Ref. to ME(H4SO)-71, REMOVAL, Cylinder Block.> <Ref. to ME(H4SO)-76, INSTALLATION, Cylinder Block.>

GETtheMANUALS.org

26. Crankshaft

A: SPECIFICATION

Refer to “Cylinder Block” for removal and installation procedures of the crankshaft. <Ref. to ME(H4SO)-71, REMOVAL, Cylinder Block.> <Ref. to ME(H4SO)-76, INSTALLATION, Cylinder Block.>

GETtheMANUALS.org

27. Engine Trouble in General

A: INSPECTION

NOTE:
The “RANK” shown in the chart shows the possibilities of the cause of trouble in order from “Very often” to “Rarely”.
A — Very often
B — Sometimes
C — Rarely

Symptoms	Problem parts etc.	Possible cause	RANK
1. Engine does not start.			
1) Starter does not turn.	Starter	Defective battery-to-starter harness	B
		Defective starter switch	C
		Defective inhibitor switch	C
		Defective starter	B
	Battery	Improper connection of terminal	A
		Run-down battery	A
		Defective charging system	B
	Friction	Seizure of crankshaft and connecting rod bearing	C
		Seized camshaft	C
		Seized or stuck piston and cylinder	C
	Immobilizer system <Ref. to IM(diag)-2, Basic Diagnostic Procedure.>		A
2) Initial combustion does not occur.	Starter	Defective starter	C
	Engine control system <Ref. to EN(H4SO)(diag)-2, Basic Diagnostic Procedure.>		A
	Fuel line	Defective fuel pump and relay	A
		Clogged fuel line	C
		Lack of fuel or insufficient fuel	B
	Timing belt	Degradation, etc.	B
		Defective timing	B
	Compression	Incorrect valve clearance	C
		Loosened spark plug or defective gasket	C
		Loosened cylinder head bolt or defective cylinder head gasket	C
		Improper valve sealing	C
		Defective valve stem	C
		Worn or broken valve spring	B
		Worn or stuck piston rings, cylinder and piston	C
		Incorrect valve timing	B
		Improper engine oil (low viscosity)	B

GETtheMANUALS.org

Symptoms	Problem parts etc.	Possible cause	RANK
3) Initial combustion occurs.	Engine control system <Ref. to EN(H4SO)(diag)-2, Basic Diagnostic Procedure.>		A
	Intake system	Defective intake manifold gasket	B
		Defective throttle body gasket	B
	Fuel line	Defective fuel pump and relay	C
		Clogged fuel line	C
		Lack of fuel or insufficient fuel	B
	Timing belt	Degradation, etc.	B
		Defective timing	B
	Compression	Incorrect valve clearance	C
		Loosened spark plug or defective gasket	C
		Loosened cylinder head bolt or defective cylinder head gasket	C
		Improper valve sealing	C
		Defective valve stem	C
		Worn or broken valve spring	B
		Worn or stuck piston rings, cylinder and piston	C
		Incorrect valve timing	B
		Improper engine oil (low viscosity)	B
4) Engine stalls after initial combustion.	Engine control system <Ref. to EN(H4SO)(diag)-2, Basic Diagnostic Procedure.>		A
	Intake system	Loosened or cracked intake duct	B
		Loosened or cracked PCV hose	C
		Loosened or cracked vacuum hose	C
		Defective intake manifold gasket	B
		Defective throttle body gasket	B
		Dirty air cleaner element	C
	Fuel line	Clogged fuel line	C
		Lack of fuel or insufficient fuel	B
	Timing belt	Degradation, etc.	B
		Defective timing	B
	Compression	Incorrect valve clearance	C
		Loosened spark plug or defective gasket	C
		Loosened cylinder head bolt or defective cylinder head gasket	C
		Improper valve sealing	C
		Defective valve stem	C
		Worn or broken valve spring	B
		Worn or stuck piston rings, cylinder and piston	C
		Incorrect valve timing	B
		Improper engine oil (low viscosity)	B

GETtheMANUALS.org

Symptoms	Problem parts etc.	Possible cause	RANK
2. Rough idle and engine stall	Engine control system <Ref. to EN(H4SO)(diag)-2, Basic Diagnostic Procedure.>		A
	Intake system	Loosened or cracked intake duct	A
		Loosened or cracked PCV hose	A
		Loosened or cracked vacuum hose	A
		Defective intake manifold gasket	B
		Defective throttle body gasket	B
		Defective PCV valve	C
		Loosened oil filler cap	B
		Dirty air cleaner element	C
	Fuel line	Defective fuel pump and relay	C
		Clogged fuel line	C
		Lack of fuel or insufficient fuel	B
	Timing belt	Defective timing	C
	Compression	Incorrect valve clearance	B
		Loosened spark plug or defective gasket	B
		Loosened cylinder head bolt or defective cylinder head gasket	B
		Improper valve sealing	B
		Defective valve stem	C
		Worn or broken valve spring	B
		Worn or stuck piston rings, cylinder and piston	B
		Incorrect valve timing	A
		Improper engine oil (low viscosity)	B
	Lubrication system	Incorrect oil pressure	B
		Defective rocker cover gasket	C
	Cooling system	Over-heating	C
	Others	Evaporative emission control system malfunction	A
		Stuck or damaged throttle valve	B

GETtheMANUALS.org

Symptoms	Problem parts etc.	Possible cause	RANK
3. Low output, hesitation and poor acceleration	Engine control system <Ref. to EN(H4SO)(diag)-2, Basic Diagnostic Procedure.>		A
	Intake system	Loosened or cracked intake duct	A
		Loosened or cracked PCV hose	A
		Loosened or cracked vacuum hose	B
		Defective intake manifold gasket	B
		Defective throttle body gasket	B
		Defective PCV valve	B
		Loosened oil filler cap	B
		Dirty air cleaner element	A
	Fuel line	Defective fuel pump and relay	B
		Clogged fuel line	B
		Lack of fuel or insufficient fuel	C
	Timing belt	Defective timing	B
	Compression	Incorrect valve clearance	B
		Loosened spark plug or defective gasket	B
		Loosened cylinder head bolt or defective cylinder head gasket	B
		Improper valve sealing	B
		Defective valve stem	C
		Worn or broken valve spring	B
		Worn or stuck piston rings, cylinder and piston	C
		Incorrect valve timing	A
		Improper engine oil (low viscosity)	B
	Lubrication system	Incorrect oil pressure	B
	Cooling system	Over-heating	C
		Over-cooling	C
	Others	Evaporative emission control system malfunction	A

GETtheMANUALS.org

Symptoms	Problem parts etc.	Possible cause	RANK
4. Surging	Engine control system <Ref. to EN(H4SO)(diag)-2, Basic Diagnostic Procedure.>		A
	Intake system	Loosened or cracked intake duct	A
		Loosened or cracked PCV hose	A
		Loosened or cracked vacuum hose	A
		Defective intake manifold gasket	B
		Defective throttle body gasket	B
		Defective PCV valve	B
		Loosened oil filler cap	B
		Dirty air cleaner element	B
	Fuel line	Defective fuel pump and relay	B
		Clogged fuel line	B
		Lack of fuel or insufficient fuel	C
	Timing belt	Defective timing	B
	Compression	Incorrect valve clearance	B
		Loosened spark plug or defective gasket	C
		Loosened cylinder head bolt or defective cylinder head gasket	C
		Improper valve sealing	C
		Defective valve stem	C
		Worn or broken valve spring	C
		Worn or stuck piston rings, cylinder and piston	C
		Incorrect valve timing	A
		Improper engine oil (low viscosity)	B
	Cooling system	Over-heating	B
	Others	Evaporative emission control system malfunction	C
5. Engine does not return to idle.	Engine control system <Ref. to EN(H4SO)(diag)-2, Basic Diagnostic Procedure.>		A
	Intake system	Loosened or cracked vacuum hose	A
	Others	Stuck or damaged throttle valve	A
6. Dieseling (Run-on)	Engine control system <Ref. to EN(H4SO)(diag)-2, Basic Diagnostic Procedure.>		A
	Cooling system	Over-heating	B
	Others	Evaporative emission control system malfunction	B
7. After burning in exhaust system	Engine control system <Ref. to EN(H4SO)(diag)-2, Basic Diagnostic Procedure.>		A
	Intake system	Loosened or cracked intake duct	C
		Loosened or cracked PCV hose	C
		Loosened or cracked vacuum hose	B
		Defective PCV valve	B
		Loosened oil filler cap	C
	Timing belt	Defective timing	B
	Compression	Incorrect valve clearance	B
		Loosened spark plug or defective gasket	C
		Loosened cylinder head bolt or defective cylinder head gasket	C
		Improper valve sealing	B
		Defective valve stem	C
		Worn or broken valve spring	C
		Worn or stuck piston rings, cylinder and piston	C
		Incorrect valve timing	A
	Lubrication system	Incorrect oil pressure	C
	Cooling system	Over-cooling	C
	Others	Evaporative emission control system malfunction	C

GETtheMANUALS.org

Symptoms	Problem parts etc.	Possible cause	RANK
8. Knocking	Engine control system <Ref. to EN(H4SO)(diag)-2, Basic Diagnostic Procedure.>		A
	Intake system	Loosened oil filler cap	B
	Timing belt	Defective timing	B
	Compression	Incorrect valve clearance	C
		Incorrect valve timing	B
	Cooling system	Over-heating	A
9. Excessive engine oil consumption	Intake system	Loosened or cracked PCV hose	A
		Defective PCV valve	B
		Loosened oil filler cap	C
	Compression	Defective valve stem	A
		Worn or stuck piston rings, cylinder and piston	A
	Lubrication system	Loosened oil pump attaching bolts and defective gasket	B
		Defective oil filter gasket	B
		Defective crankshaft oil seal	B
		Defective rocker cover gasket	B
		Loosened oil drain plug or defective gasket	B
		Loosened oil pan fitting bolts or defective oil pan	B
10. Excessive fuel consumption	Engine control system <Ref. to EN(H4SO)(diag)-2, Basic Diagnostic Procedure.>		A
	Intake system	Dirty air cleaner element	A
	Timing belt	Defective timing	B
	Compression	Incorrect valve clearance	B
		Loosened spark plug or defective gasket	C
		Loosened cylinder head bolt or defective cylinder head gasket	C
		Improper valve sealing	B
		Defective valve stem	C
		Worn or broken valve spring	C
		Worn or stuck piston rings, cylinder and piston	B
		Incorrect valve timing	B
	Lubrication system	Incorrect oil pressure	C
	Cooling system	Over-cooling	C

GETtheMANUALS.org

28. Engine Noise

A: INSPECTION

Type of sound	Condition	Possible cause
Regular clicking sound	Sound increases as engine speed increases.	• Valve mechanism is defective. • Incorrect valve clearance • Worn valve rocker • Worn camshaft • Broken valve spring
Heavy and dull clank	Oil pressure is low.	• Worn crankshaft main bearing • Worn connecting rod bearing (large end)
	Oil pressure is normal.	• Damaged engine mounting • Loosened flywheel mounting bolt
High-pitched clank (Spark knock)	Sound is noticeable when accelerating with an overload condition.	• Ignition timing advanced • Accumulation of carbon inside combustion chamber • Wrong heat range of spark plug • Improper octane value gasoline
Clank when engine speed is 1,000 to 2,000 rpm	Sound is reduced when fuel injector connector of noisy cylinder is disconnected. *	• Worn crankshaft main bearing • Worn connecting rod bearing (large end)
Knocking sound when engine is operating under idling speed and engine is warm	Sound is reduced when fuel injector connector of noisy cylinder is disconnected. *	• Worn cylinder liner and piston ring • Broken or stuck piston ring • Worn piston pin and hole at piston end of connecting rod
	Sound is not reduced if each fuel injector connector is disconnected in turn. *	• Worn cam sprocket • Worn camshaft journal bore in cylinder head
Squeaky sound	—	Insufficient generator lubrication
Rubbing sound	—	Poor contact of generator brush and rotor
Gear scream when starting engine	—	• Defective ignition starter switch • Worn gear and starter pinion
Sound like polishing glass with a dry cloth	—	• Loose V-belt • Defective water pump shaft
Hissing sound	—	• Insufficient compression • Air leakage in air intake system, hose, connection or manifold
Timing belt noise	—	• Loose timing belt • Timing belt contacting with adjacent part
Valve noise	—	Incorrect valve clearance

* When disconnecting the fuel injector connector, the malfunction indicator light illuminates and DTC is stored in ECM memory. Therefore, perform the Clear Memory Mode <Ref. to EN(H4SO)(diag)-51, OPERATION, Clear Memory Mode.> and Inspection Mode <Ref. to EN(H4SO)(diag)-40, PROCEDURE, Inspection Mode.> after connecting the fuel injector connector.

GETtheMANUALS.org

EXHAUST

EX(H4SO)

Page

1. General Description 2
2. Front Exhaust Pipe 5
3. Center Exhaust Pipe 8
4. Rear Exhaust Pipe 9
5. Muffler 11

GETtheMANUALS.org

1. General Description

A: COMPONENT

- Models other than C6 model

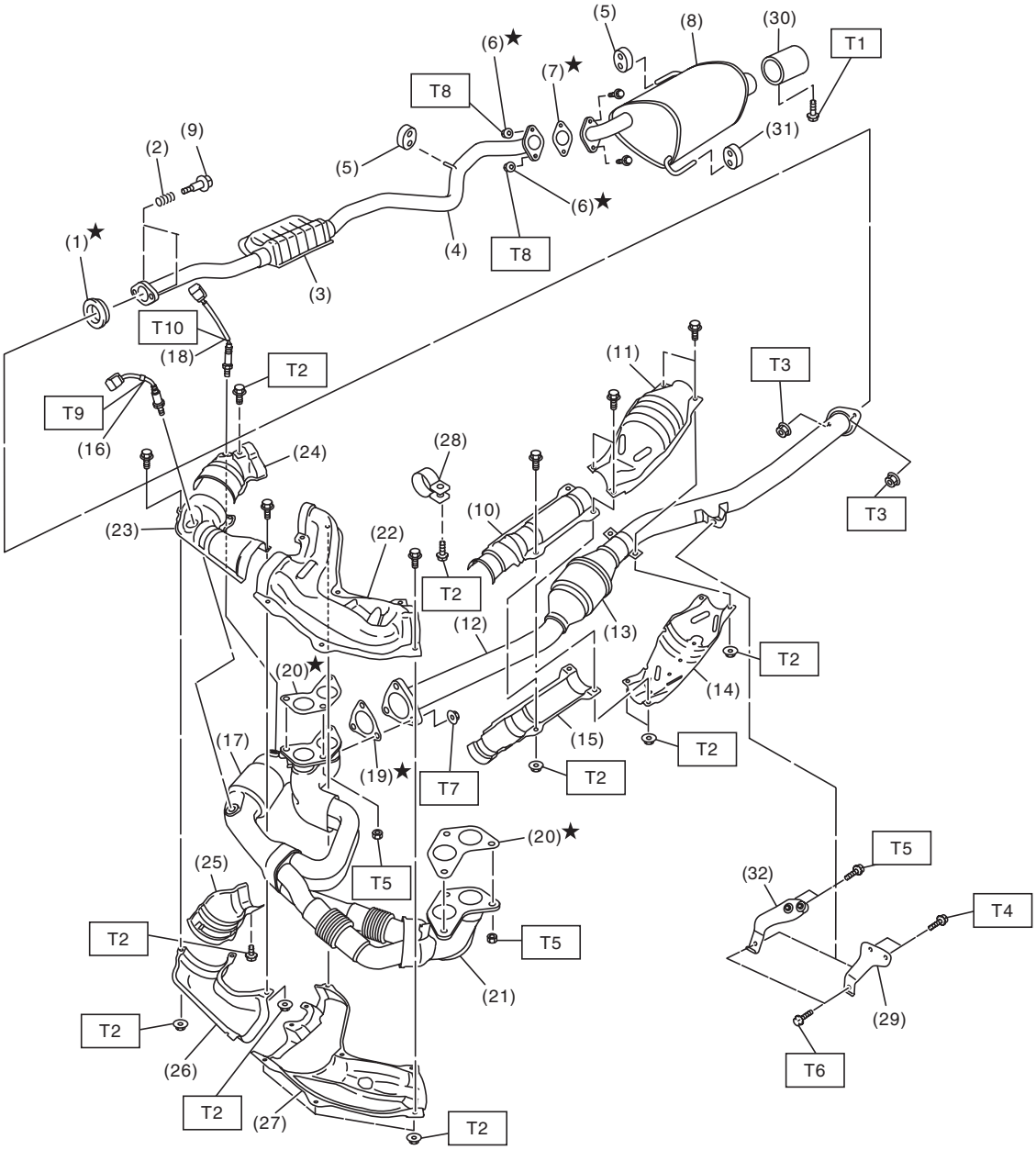

GETtheMANUALS.org

- C6 model

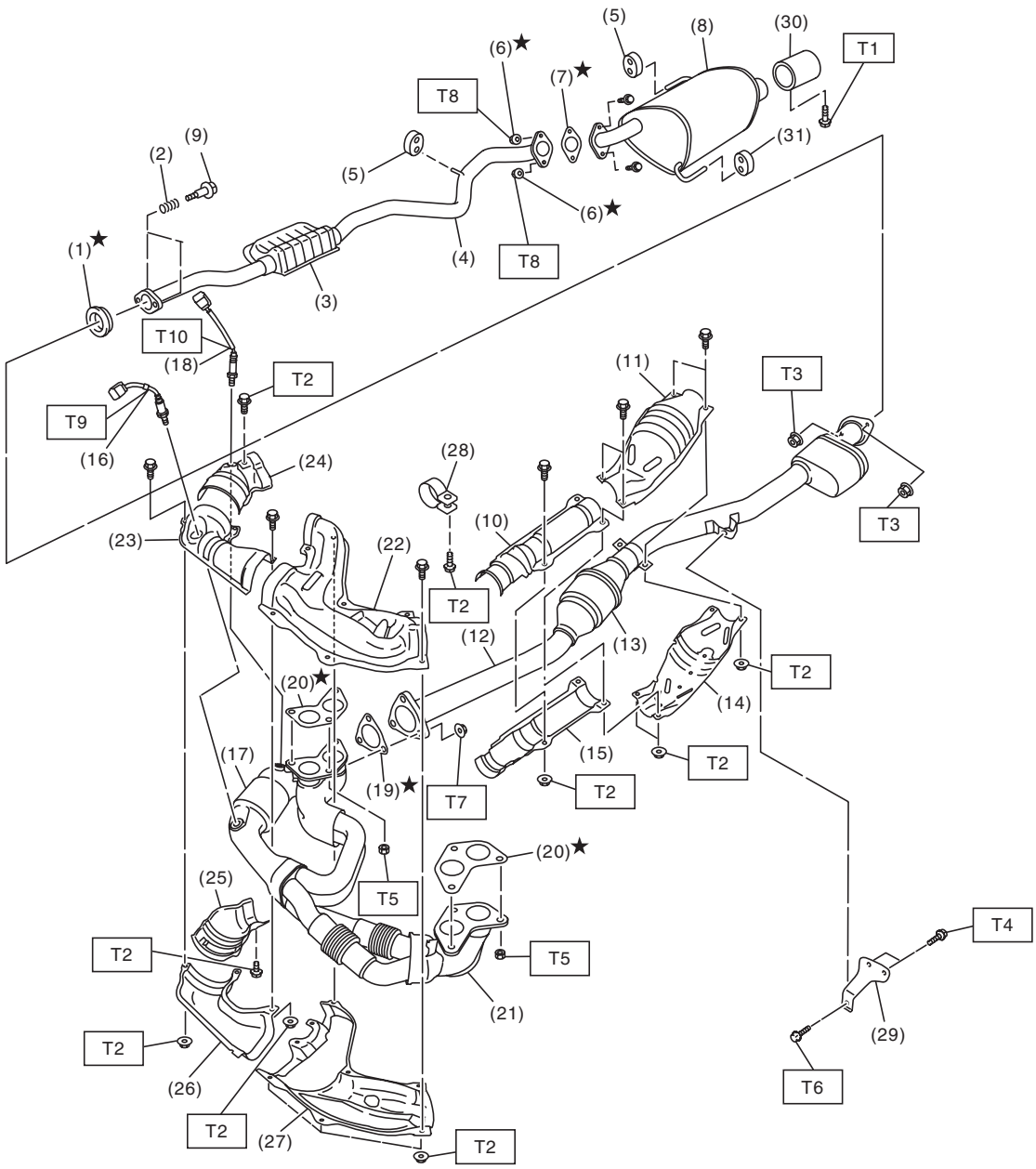

EX-02833

GETtheMANUALS.org

(1)	Gasket	(16)	Front oxygen (A/F) sensor	(31)	Cushion rubber (with protrusion)
(2)	Spring	(17)	Front catalytic converter	(32)	Hanger bracket (MT model)
(3)	Chamber	(18)	Rear oxygen sensor		
(4)	Rear exhaust pipe	(19)	Gasket		
(5)	Cushion rubber (without protrusion)	(20)	Gasket		
(6)	Self-locking nut	(21)	Front exhaust pipe		
(7)	Gasket	(22)	Front exhaust pipe upper cover LH		
(8)	Muffler	(23)	Front exhaust pipe upper cover RH		
(9)	Bolt	(24)	Front catalytic converter upper cover		
(10)	Center exhaust pipe front upper cover	(25)	Front catalytic converter lower cover		
(11)	Rear catalytic converter upper cover	(26)	Front exhaust pipe lower cover RH		
(12)	Center exhaust pipe	(27)	Front exhaust pipe lower cover LH		
(13)	Rear catalytic converter	(28)	Band		
(14)	Rear catalytic converter lower cover	(29)	Hanger bracket (CVT model)		
(15)	Center exhaust pipe front lower cover	(30)	Muffler cutter (models with muffler cutter)		

Tightening torque:N·m (kgf-m, ft-lb)	
T1:	***7.5 (0.8, 5.5)***
T2:	***13 (1.3, 9.6)***
T3:	***18 (1.8, 13.3)***
T4:	***23 (2.3, 17.0)***
T5:	***30 (3.1, 22.1)***
T6:	***35 (3.6, 25.8)***
T7:	***40 (4.1, 29.5)***
T8:	***48 (4.9, 35.4)***
T9:	***<Ref. to FU(H4SO)-42, INSTALLATION, Front Oxygen (A/F) Sensor.>***
T10:	***<Ref. to FU(H4SO)-44, INSTALLATION, Rear Oxygen Sensor.>***

B: CAUTION

- Wear appropriate work clothing, including a cap, protective goggles and protective shoes when performing any work.
- Remove contamination including dirt and corrosion before removal, installation or disassembly.
- Keep the disassembled parts in order and protect them from dust and dirt.
- Before removal, installation or disassembly, be sure to clarify the failure. Avoid unnecessary removal, installation, disassembly and replacement.
- Vehicle components are extremely hot after driving. Be wary of receiving burns from heated parts.
- Be sure to tighten fasteners including bolts and nuts to the specified torque.
- Place shop jacks or rigid racks at the specified points.
- Before disconnecting connectors of sensors or units, be sure to disconnect the ground cable from the battery.
- If any fat adheres to the exhaust pipe, wipe it off. Otherwise a fire may happen.

GETtheMANUALS.org

2. Front Exhaust Pipe

A: REMOVAL

CAUTION:
Vehicle components are extremely hot after driving. Be wary of receiving burns from heated parts.

1) Remove the air intake duct. <Ref. to IN(H4SO)-9, REMOVAL, Air Intake Duct.>
2) Disconnect the ground cable from battery.

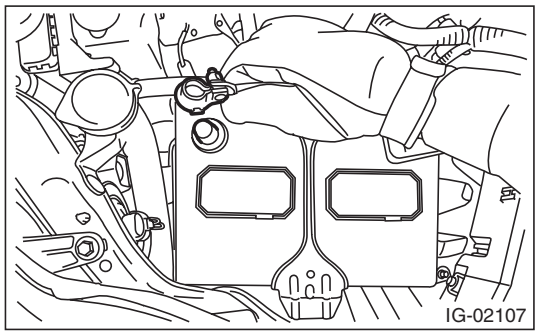

3) Disconnect the front oxygen (A/F) sensor connector (A) and rear oxygen sensor connector (B) and remove the clip (C) fastening the harness.

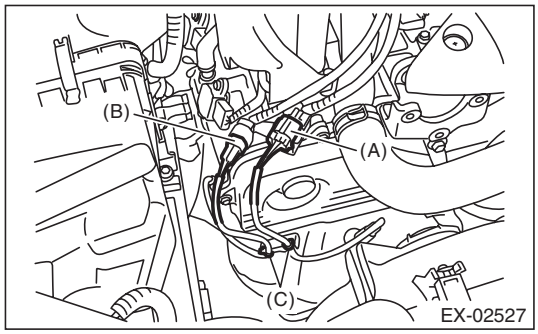

4) Lift up the vehicle.
5) Remove the under cover. <Ref. to EI-35, REMOVAL, Front Under Cover.>
6) Remove the rear exhaust pipe from center exhaust pipe.

- Models other than C6 model

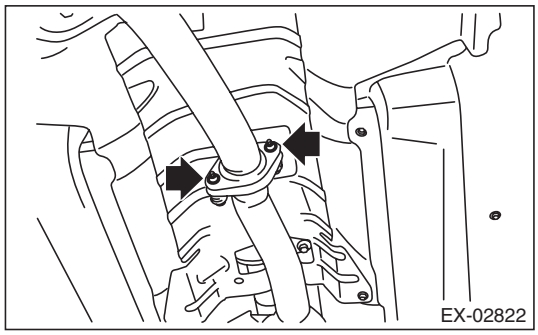

- C6 model

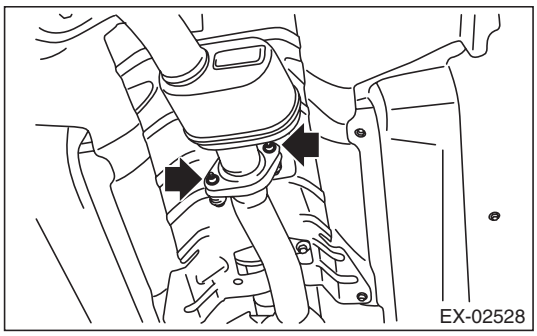

7) Remove the nuts which hold front exhaust pipe onto cylinder heads.

CAUTION:
Be careful not to drop the front exhaust pipe and center exhaust pipe assembly.

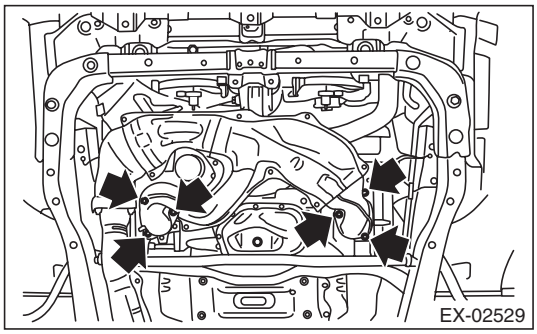

8) Remove the bolt which holds center exhaust pipe to hanger bracket.

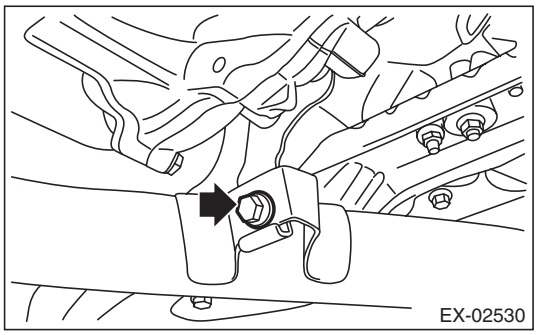

9) Remove the front exhaust pipe and center exhaust pipe from vehicle as a unit.

CAUTION:
- **The front exhaust pipe and center exhaust pipe assembly are very heavy. Be careful not to drop the exhaust pipes when removing.**
- **After removing the front exhaust pipe and center exhaust pipe assembly, do not pull the rear exhaust pipe with excessive force.**

GETtheMANUALS.org

10) Remove the center exhaust pipe from the front exhaust pipe.

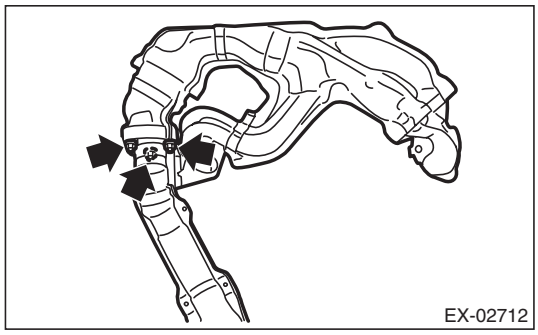

11) Remove the front oxygen (A/F) sensor and rear oxygen sensor from front exhaust pipe. <Ref. to FU(H4SO)-42, REMOVAL, Front Oxygen (A/F) Sensor.> <Ref. to FU(H4SO)-44, REMOVAL, Rear Oxygen Sensor.>

B: INSTALLATION

1) Install the front oxygen (A/F) sensor and rear oxygen sensor to the front exhaust pipe. <Ref. to FU(H4SO)-42, INSTALLATION, Front Oxygen (A/F) Sensor.> <Ref. to FU(H4SO)-44, INSTALLATION, Rear Oxygen Sensor.>
2) Install the center exhaust pipe to front exhaust pipe.

NOTE:
Use a new gasket.

Tightening torque:
40 N·m (4.1 kgf-m, 29.5 ft-lb)

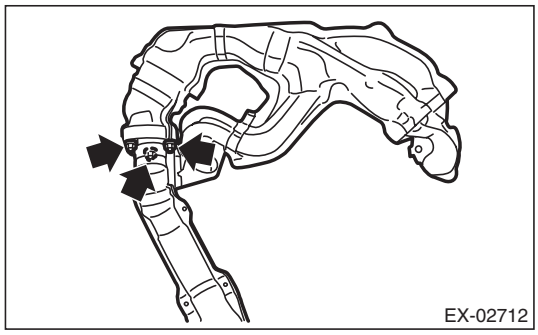

3) Install the front exhaust pipe and center exhaust pipe as a unit to the vehicle.

NOTE:
Use a new gasket.

4) Temporarily tighten the nuts which hold front exhaust pipe to cylinder heads.

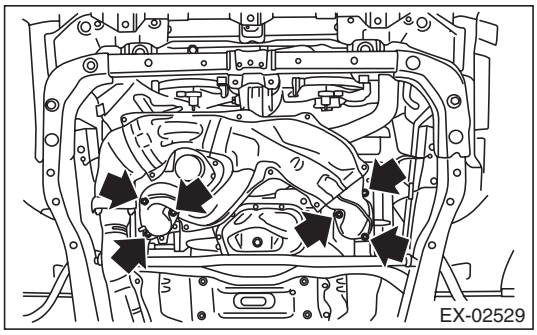

5) Install the rear exhaust pipe to center exhaust pipe.

NOTE:
Use a new gasket.

Tightening torque:
18 N·m (1.8 kgf-m, 13.3 ft-lb)

- ***Models other than C6 model***

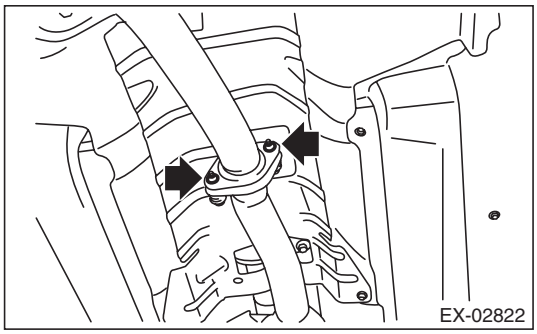

- ***C6 model***

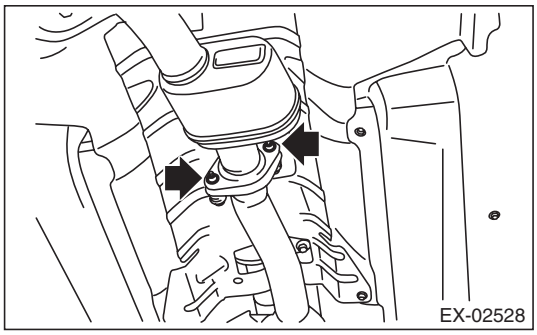

GETtheMANUALS.org

6) Tighten the bolts which secure the center exhaust pipe to the hanger bracket.

Tightening torque:
35 N·m (3.6 kgf-m, 25.8 ft-lb)

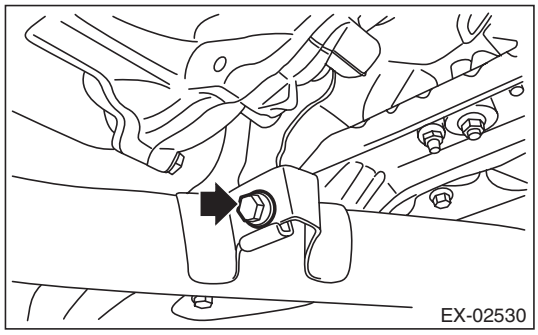

7) Tighten the nuts which hold front exhaust pipe to cylinder heads.

Tightening torque:
30 N·m (3.1 kgf-m, 22.1 ft-lb)

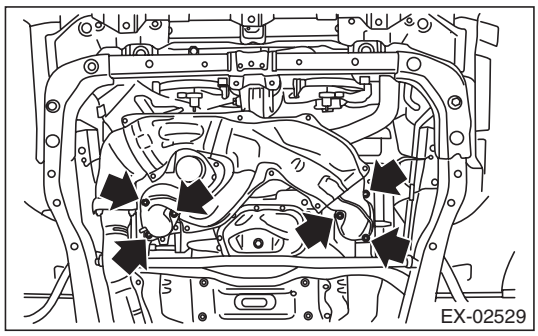

8) Install the under cover. <Ref. to EI-35, INSTALLATION, Front Under Cover.>
9) Lower the vehicle.
10) Connect the front oxygen (A/F) sensor connector (A) and rear oxygen sensor connector (B), and fasten the harness with the clip (C).

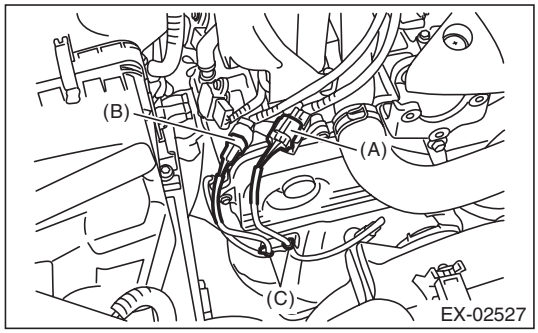

11) Connect the battery ground terminal.

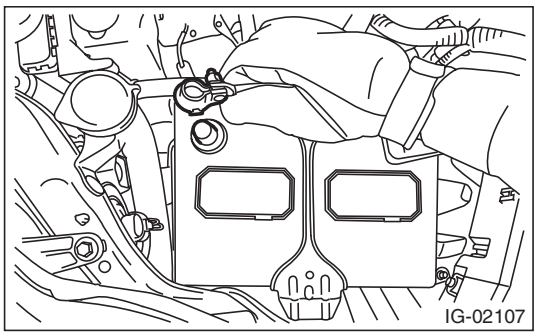

12) Install the air intake duct. <Ref. to IN(H4SO)-9, INSTALLATION, Air Intake Duct.>

C: INSPECTION

1) Check the connections and welds for exhaust leaks.
2) Make sure there are no holes or rusting.

GETtheMANUALS.org

3. Center Exhaust Pipe

A: REMOVAL

After removing the center exhaust pipe and front exhaust pipe as a unit, separate them. Refer to “Front Exhaust Pipe” for the removal procedure. <Ref. to EX(H4SO)-5, REMOVAL, Front Exhaust Pipe.>

B: INSTALLATION

Install the center exhaust pipe and front exhaust pipe as a unit. Refer to “Front Exhaust Pipe” for the installation procedure. <Ref. to EX(H4SO)-6, INSTALLATION, Front Exhaust Pipe.>

C: INSPECTION

1) Check the connections and welds for exhaust leaks.
2) Make sure there are no holes or rusting.

GETtheMANUALS.org

4. Rear Exhaust Pipe

A: REMOVAL

CAUTION:
Vehicle components are extremely hot after driving. Be wary of receiving burns from heated parts.

1) Lift up the vehicle.
2) Remove the center exhaust pipe from rear exhaust pipe.

- Models other than C6 model

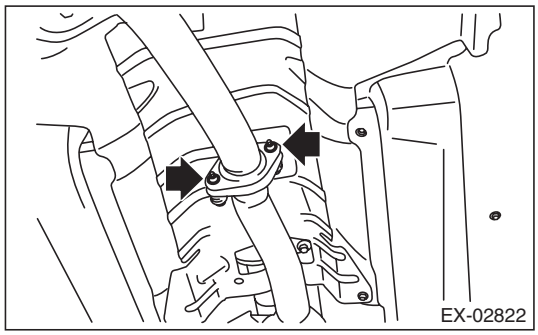

- C6 model

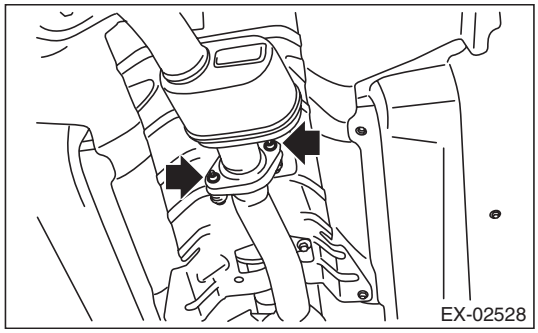

3) Remove the muffler from rear exhaust pipe.

CAUTION:
Be careful not to drop the rear exhaust pipe.

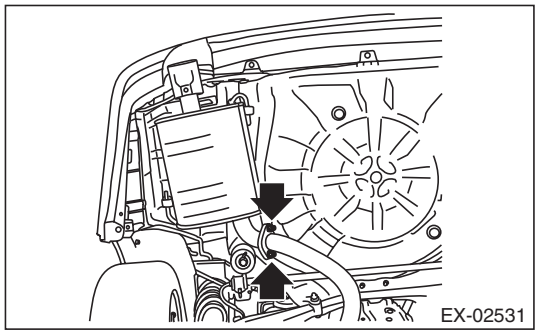

4) Apply a coat of spray type lubricant to the mating area of cushion rubber.
5) Remove the rear exhaust pipe from the cushion rubber.

CAUTION:
Be careful not to let the muffler contact the rear bumper.

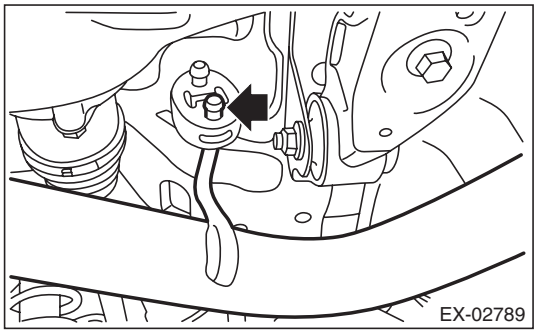

B: INSTALLATION

1) Apply a coat of spray type lubricant to the mating area of cushion rubber.
2) Install the rear exhaust pipe to cushion rubber.

NOTE:
After assembling, degrease the lubricant which was applied to the cushion rubber while removing/installing.

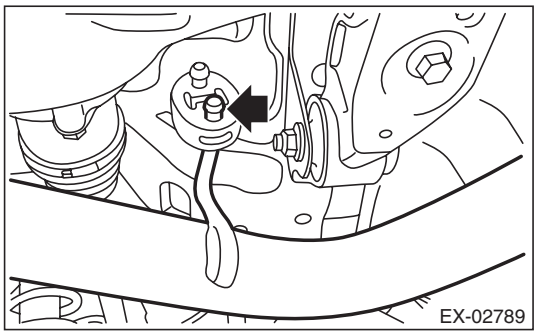

3) Install the rear exhaust pipe to the muffler.

NOTE:
Use a new gasket and self-locking nut.

Tightening torque:
48 N·m (4.9 kgf-m, 35.4 ft-lb)

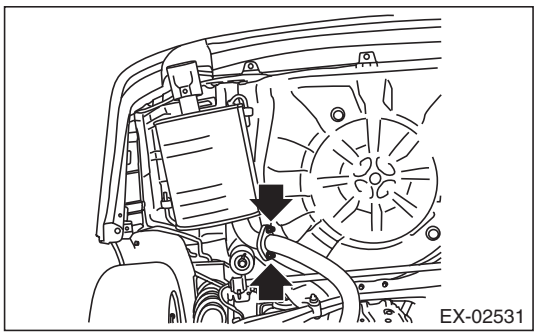

GETtheMANUALS.org

4) Install the center exhaust pipe to rear exhaust pipe.

NOTE:
Use a new gasket.

Tightening torque:
18 N·m (1.8 kgf-m, 13.3 ft-lb)

- ***Models other than C6 model***

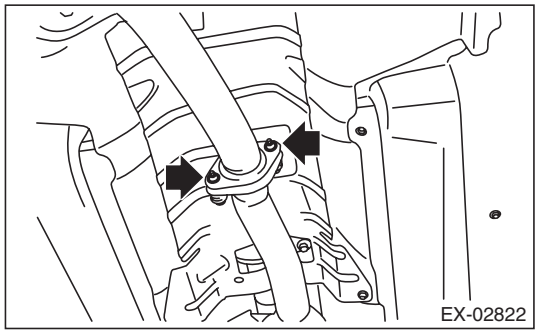

- ***C6 model***

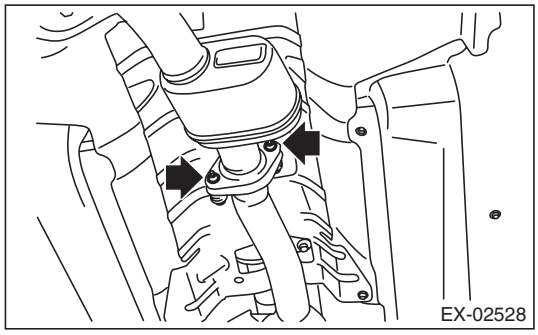

5) Lower the vehicle.

C: INSPECTION

1) Check the connections and welds for exhaust leaks.
2) Make sure there are no holes or rusting.
3) Check the cushion rubber for wear or crack.

GETthemANUALS.org

5. Muffler

A: REMOVAL

CAUTION:
Vehicle components are extremely hot after driving. Be wary of receiving burns from heated parts.

1) Lift up the vehicle.
2) Remove the rear exhaust pipe from the muffler.

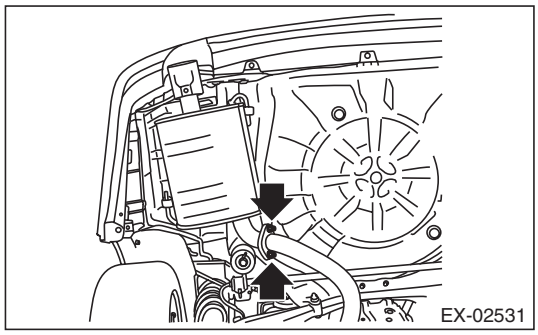

3) Apply a coat of spray type lubricant to the mating area of cushion rubber.
4) Remove the muffler from the cushion rubber.

CAUTION:
Be careful not to drop the muffler during removal.

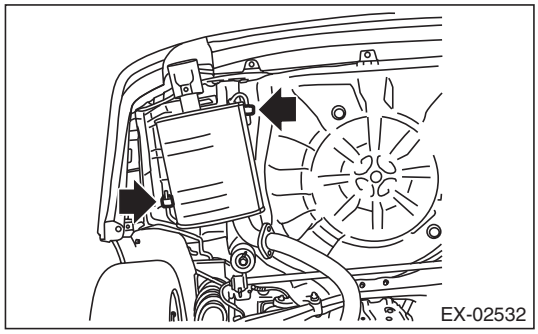

B: INSTALLATION

Install in the reverse order of removal.

NOTE:
- Use a new gasket and self-locking nut.
- After assembling, degrease the lubricant which was applied to the cushion rubber while removing/installing.

Tightening torque:
48 N·m (4.9 kgf-m, 35.4 ft-lb)

C: INSPECTION

1) Check the connections and welds for exhaust leaks.
2) Make sure there are no holes or rusting.
3) Check the cushion rubber for wear or crack.

GETthemANUALS.org

GETtheMANUALS.org

COOLING

CO(H4SO)

Page

1. General Description 2
2. Radiator Fan System 7
3. Engine Coolant 14
4. Water Pump 16
5. Thermostat 18
6. Radiator 20
7. Radiator Cap 23
8. Radiator Main Fan and Fan Motor 24
9. Radiator Sub Fan and Fan Motor 25
10. Reservoir Tank 26
11. Engine Cooling System Trouble in General 27

GETtheMANUALS.org

1. General Description

A: SPECIFICATION

Cooling system				Electric fan + Forced engine coolant circulation system
Total engine coolant capacity	ℓ (US qt, Imp qt)			MT: approx. 6.5 (6.9, 5.7)
				CVT: approx. 6.4 (6.8, 5.6)
Water pump	Type			Centrifugal impeller type
	Discharge performance	Discharge rate ℓ (US gal, Imp gal) /min.		200 (52.8, 44.0)
		Pump speed — Discharge pressure		6,000 rpm — 225.4 kPa (23 mAq)
		Engine coolant temperature		80°C (176°F)
	Impeller diameter mm (in)			76 (2.99)
	Number of impeller vanes			8
	Pump pulley diameter mm (in)			60 (2.36)
	Clearance between impeller and case mm (in)		Standard	0.5 — 1.6 (0.020 — 0.063)
Thermostat	Type			Wax pellet type
	Starting temperature to open			86 — 90°C (187 — 194°F)
	Fully opens			95°C (203°F)
	Valve lift mm (in)			9.0 (0.354) or more
	Valve bore mm (in)			35 (1.38)
Radiator fan	Motor input	Main fan W		90
		Sub fan W		90
	Fan diameter / Blade	Main fan		300 mm (11.81 in)/4
		Sub fan		300 mm (11.81 in)/5
Radiator	Type			Down flow, pressure type
	Core dimensions	Width × Height × Thickness mm (in)		687.4 × 340 × 16 (27.06 × 13.39 × 0.63)
	Pressure range in which cap valve is open kPa (kg/cm^2, psi)	Positive pressure side	Standard	93 — 123 (0.95 — 1.25, 14 — 18)
			Limit	83 (0.85, 12)
		Negative pressure side	Standard	–1.0 to –4.9 or less (–0.01 — –0.05, –0.1 — –0.7)
	Fins			Corrugated fin type
Reservoir tank	Capacity ℓ (US qt, Imp qt)			0.45 (0.48, 0.40)

	Recommended materials	Item number	Alternative
Coolant	SUBARU SUPER COOLANT (Concentrated type)	—	—
	SUBARU SUPER COOLANT (Diluted type)	K0670Y0001	
Water for dilution	Distilled water	—	Soft water or tap water
Cooling system protective agent	Cooling system conditioner	SOA345001	—

GETtheMANUALS.org

B: COMPONENT

1. WATER PUMP

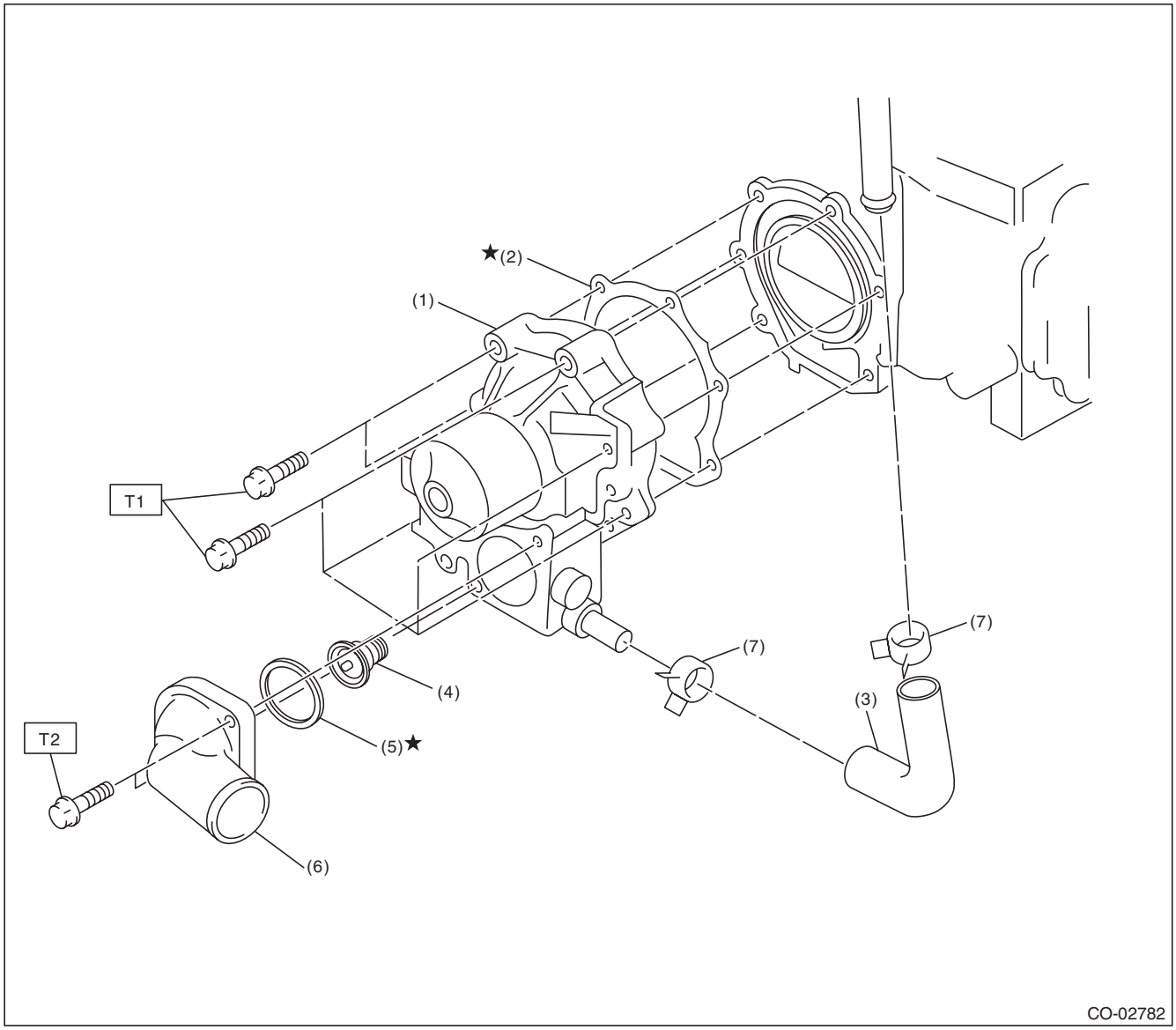

(1)	Water pump ASSY	(5)	Gasket	***Tightening torque:N·m (kgf-m, ft-lb)***
(2)	Gasket	(6)	Thermostat cover	***T1: First 12 (1.2, 8.9)***
(3)	Heater by-pass hose	(7)	Clip	***Second 12 (1.2, 8.9)***
(4)	Thermostat			***T2: 12 (1.2, 8.9)***

GETtheMANUALS.org

2. RADIATOR & RADIATOR FAN

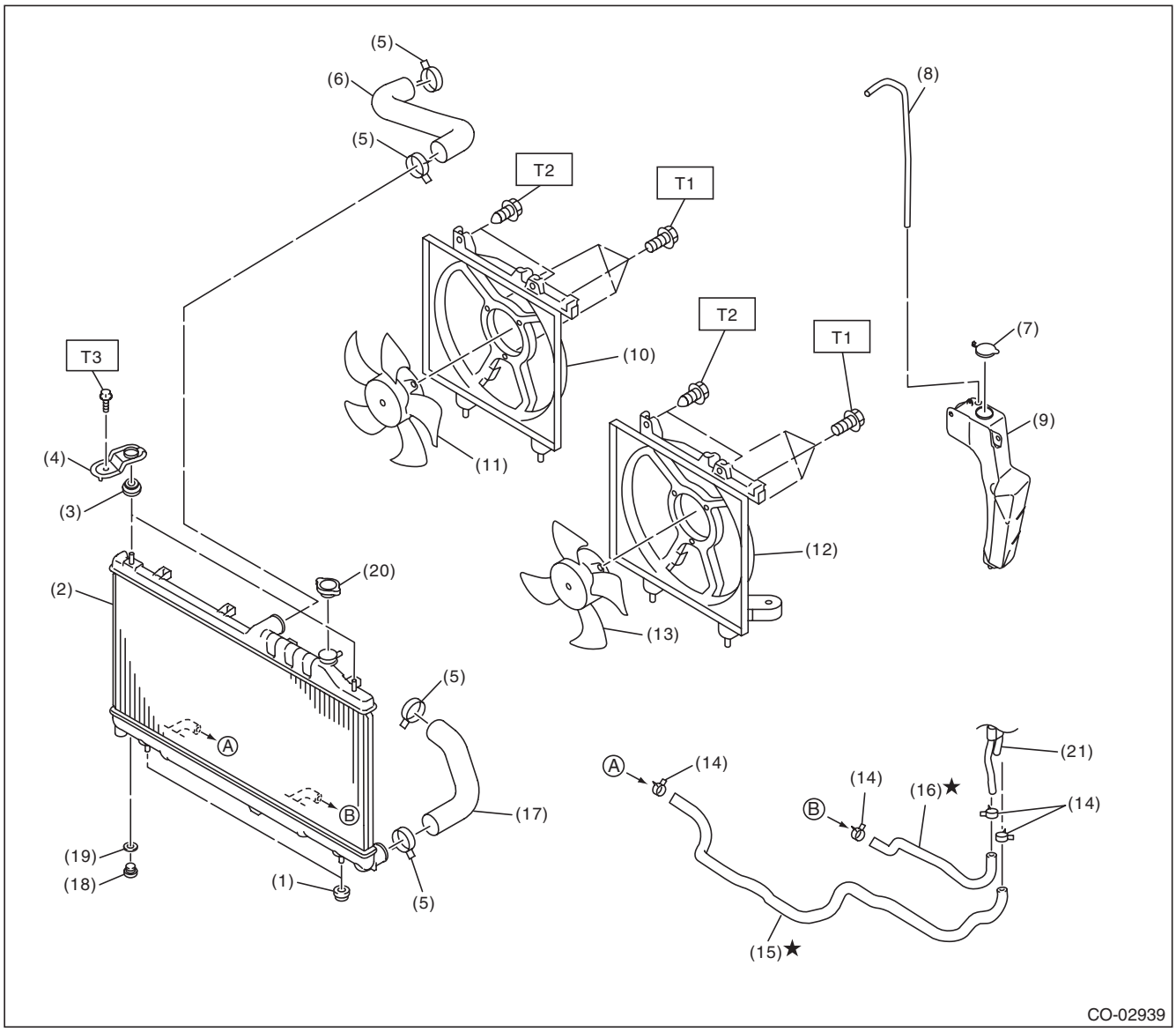

(1)	Radiator lower cushion	(10)	Radiator sub fan shroud	(19)	O-ring
(2)	Radiator	(11)	Radiator sub fan, radiator sub fan motor ASSY	(20)	Radiator cap
(3)	Radiator upper cushion	(12)	Radiator main fan shroud	(21)	CVTF pipe
(4)	Radiator upper bracket	(13)	Radiator main fan, radiator main fan motor ASSY		
(5)	Clip	(14)	Clip (CVT model)		
(6)	Radiator inlet hose	(15)	CVTF radiator inlet hose (CVT model)		
(7)	Engine coolant reservoir tank cap	(16)	CVTF radiator outlet hose (CVT model)		
(8)	Over flow hose	(17)	Radiator outlet hose		
(9)	Engine coolant reservoir tank	(18)	Radiator drain plug		

Tightening torque:N·m (kgf-m, ft-lb)

T1: 5 (0.5, 3.7)

T2: 7.5 (0.8, 5.5)

T3: 12 (1.2, 8.9)

GETthemANUALS.org

C: CAUTION

- Wear appropriate work clothing, including a cap, protective goggles and protective shoes when performing any work.
- Remove contamination including dirt and corrosion before removal, installation or disassembly.
- Keep the disassembled parts in order and protect them from dust and dirt.
- Before removal, installation or disassembly, be sure to clarify the failure. Avoid unnecessary removal, installation, disassembly and replacement.
- Vehicle components are extremely hot after driving. Be wary of receiving burns from heated parts.
- Be sure to tighten fasteners including bolts and nuts to the specified torque.
- Place shop jacks or rigid racks at the specified points.
- Before disconnecting connectors of sensors or units, be sure to disconnect the ground cable from battery.
- Prepare a container and cloth to prevent scattering of engine coolant when performing work where engine coolant can be spilled. If the fuel spills, wipe it off immediately to prevent from penetrating into floor or flowing out for environmental protection.
- Follow all government and local regulations concerning disposal of refuse when disposing engine coolant.

GETtheMANUALS.org

D: PREPARATION TOOL

1. SPECIAL TOOL

ILLUSTRATION	TOOL NUMBER	DESCRIPTION	REMARKS
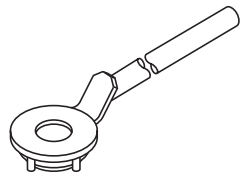 ST-499977400	499977400	CRANK PULLEY WRENCH	Used for removing and installing the crank pulley. (CVT model)
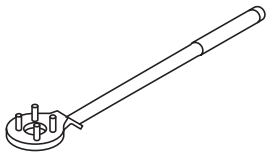 ST-499977100	499977100	CRANK PULLEY WRENCH	Used for removing and installing the crank pulley. (MT model)
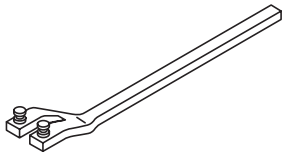 ST18231AA010	18231AA010	CAM SPROCKET WRENCH	Used for removing and installing cam sprocket. NOTE: CAM SPROCKET WRENCH (499207100) can also be used.
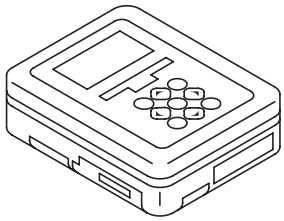 ST1B022XU0	1B022XU0	SUBARU SELECT MONITOR III KIT	Used for troubleshooting the electrical system.

2. GENERAL TOOL

TOOL NAME	REMARKS
Circuit tester	Used for measuring resistance and voltage.
Radiator cap tester	Used for checking radiator and radiator cap.

GETtheMANUALS.org

2. Radiator Fan System

A: WIRING DIAGRAM

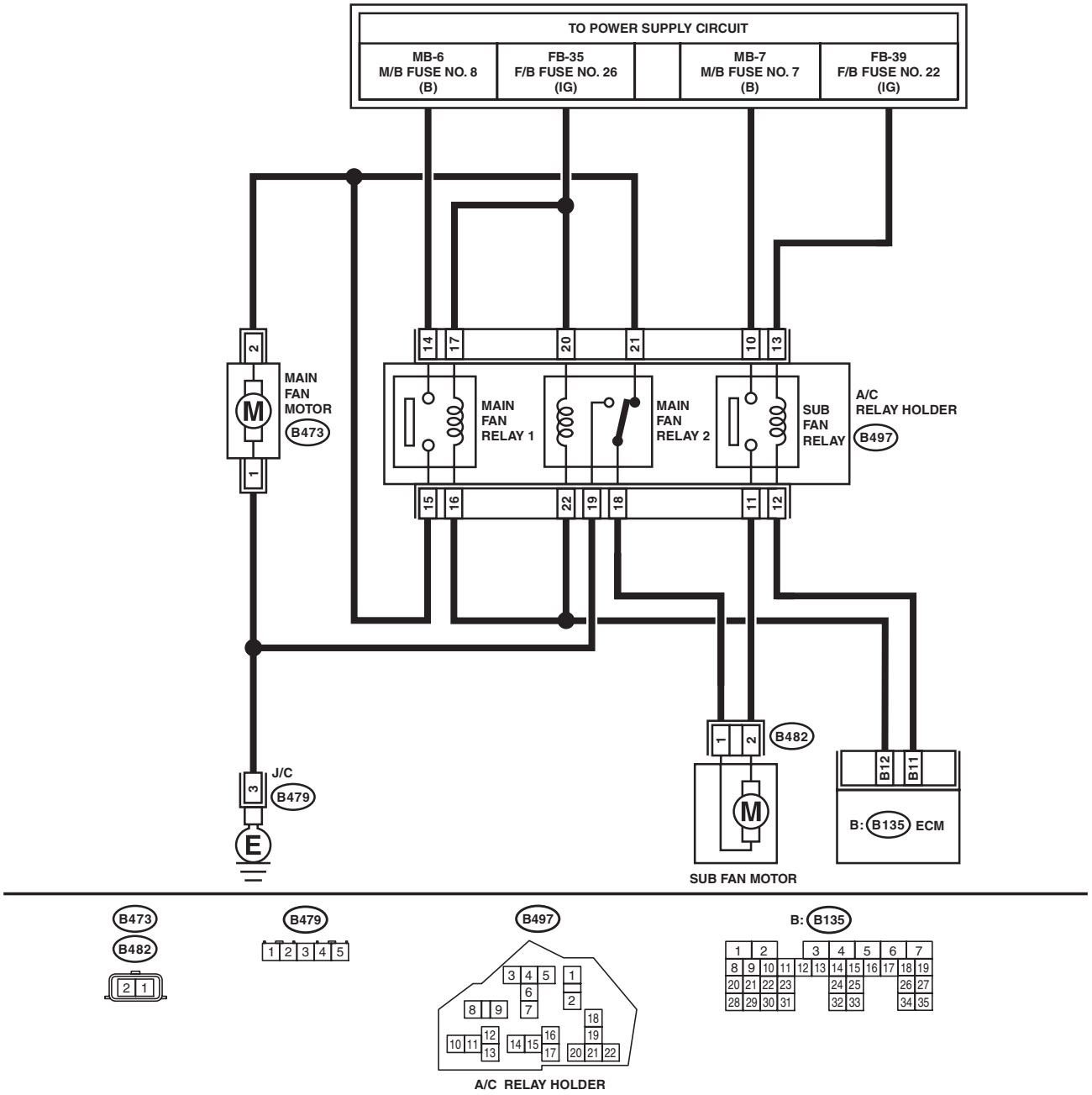

CO-02650

GETthemANUALS.org

B: INSPECTION

Operating condition:

Radiator fan operates depending on the radiator fan operation mode related to engine coolant temperature or the radiator fan operation mode related to A/C compressor load, whichever is higher as an operation mode.

- Radiator fan operation mode related to engine coolant temperature

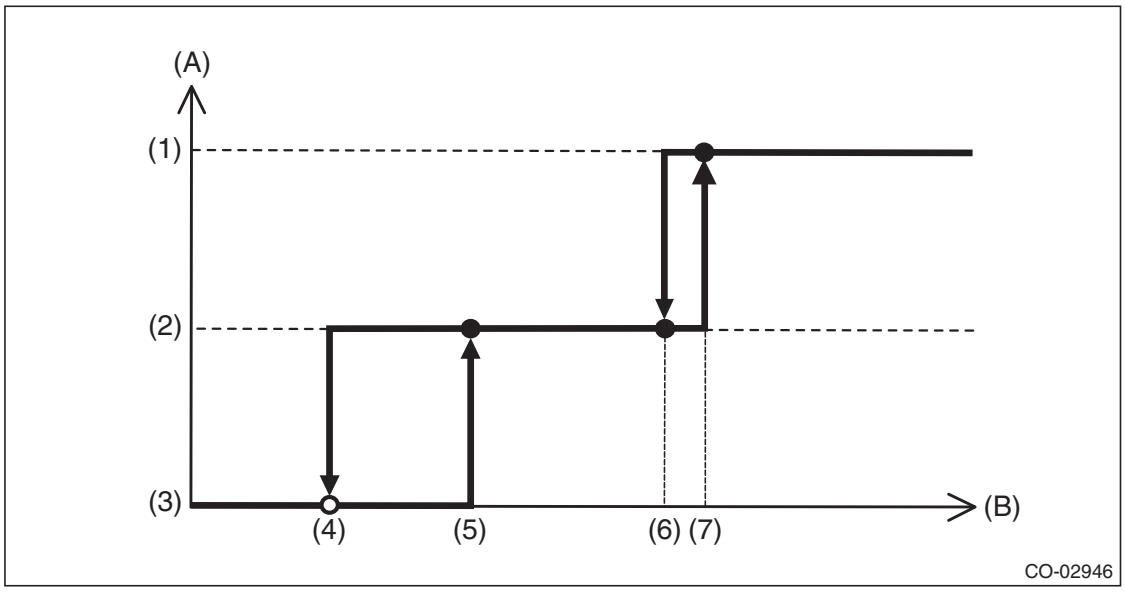

(A)	Radiator fan operation mode	(B)	Engine coolant temperature		
(1)	High-Speed	(4)	96°C (205°F)	(7)	101°C (214°F)
(2)	Low-Speed	(5)	98°C (208°F)		
(3)	OFF	(6)	100°C (212°F)		

GETtheMANUALS.org

- Radiator fan operation mode related to A/C compressor load

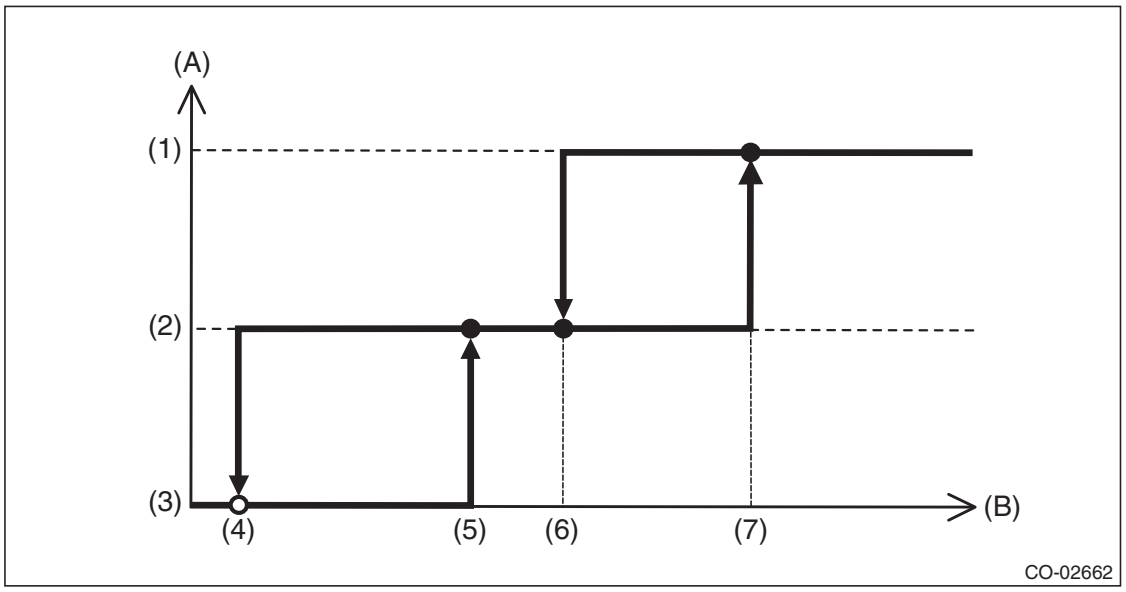

(A)	Radiator fan operation mode	(B)	A/C compressor refrigerant pressure		
(1)	High-Speed	(4)	0.8 MPa (8.16 kgf/cm^2, 116 psi)	(7)	1.5 MPa (15.30 kgf/cm^2, 218 psi)
(2)	Low-Speed	(5)	1.125 MPa (11.47 kgf/cm^2, 163 psi)		
(3)	OFF	(6)	1.25 MPa (12.75 kgf/cm^2, 181 psi)		

GETtheMANUALS.org

DIAGNOSIS:
Radiator main fan and radiator sub fans do not rotate under the above operating conditions.

	Step	Check	Yes	No
1	**CHECK OPERATION OF RADIATOR FAN.** 1) Connect the delivery mode fuse. 2) Turn the ignition switch to ON. 3) Perform the compulsory operation check for the radiator fan relay using Subaru Select Monitor. NOTE: • When performing a forced operation radiator fan relay check using the Subaru Select Monitor, the radiator main fan and radiator sub fan will repeat low speed revolution → high speed revolution → OFF in this order. • Subaru Select Monitor For detailed operation procedures, refer to "PC application help for Subaru Select Monitor".	Do the radiator main fans and radiator sub fans rotate at low speed?	Go to step **2**.	Go to step **3**.
2	**CHECK OPERATION OF RADIATOR FAN.** 1) Connect the delivery mode fuse. 2) Turn the ignition switch to ON. 3) Perform the compulsory operation check for the radiator fan relay using Subaru Select Monitor. NOTE: • When performing a forced operation radiator fan relay check using the Subaru Select Monitor, the radiator main fan and radiator sub fan will repeat low speed revolution → high speed revolution → OFF in this order. • Subaru Select Monitor For detailed operation procedures, refer to "PC application help for Subaru Select Monitor".	Do the radiator main fans and radiator sub fans rotate at high speed?	Radiator main fan system is normal.	Go to step **27**.
3	**CHECK POWER SUPPLY TO SUB FAN RELAY.** 1) Turn the ignition switch to OFF. 2) Remove the sub fan relay from A/C relay holder. 3) Measure the voltage between sub fan relay connector and chassis ground. ***Connector & terminal*** ***(B497) No. 10 (+) — Chassis ground (–):***	Is the voltage 10 V or more?	Go to step **4**.	Go to step **5**.
4	**CHECK POWER SUPPLY TO SUB FAN RELAY.** 1) Turn the ignition switch to ON. 2) Measure the voltage between sub fan relay connector and chassis ground. ***Connector & terminal*** ***(B497) No. 13 (+) — Chassis ground (–):***	Is the voltage 10 V or more?	Go to step **7**.	Go to step **6**.
5	**CHECK FUSE.** 1) Turn the ignition switch to OFF. 2) Remove the fuse No. 7. 3) Check the condition of fuse.	Is the fuse blown out?	Replace the fuse.	Repair the power supply line.
6	**CHECK FUSE.** 1) Turn the ignition switch to OFF. 2) Remove the fuse No. 22. 3) Check the condition of fuse.	Is the fuse blown out?	Replace the fuse.	Repair the power supply line.

GETtheMANUALS.org

Step		Check	Yes	No
7	**CHECK SUB FAN RELAY.** 1) Turn the ignition switch to OFF. 2) Measure the resistance between sub fan relay terminals. ***Terminals*** ***No. 10 — No. 11:***	Is the resistance 1 MΩ or more?	Go to step **8**.	Replace the sub fan relay. <Ref. to AC-30, Relay and Fuse.>
8	**CHECK SUB FAN RELAY.** 1) Connect the battery to terminals No. 13 and No. 12 of the sub fan relay. 2) Measure the resistance between sub fan relay terminals. ***Terminals*** ***No. 10 — No. 11:***	Is the resistance less than 1 Ω?	Go to step **9**.	Replace the sub fan relay. <Ref. to AC-30, Relay and Fuse.>
9	**CHECK HARNESS BETWEEN SUB FAN RELAY CONNECTOR AND SUB FAN MOTOR CONNECTOR.** 1) Disconnect the connector from the sub fan motor. 2) Measure the resistance of harness between sub fan relay connector and sub fan motor connector. ***Connector & terminal*** ***(B482) No. 2 — (B497) No. 11:***	Is the resistance less than 1 Ω?	Go to step **10**.	Repair the open circuit of harness between sub fan relay connector and sub fan motor connector.
10	**CHECK HARNESS BETWEEN SUB FAN MOTOR CONNECTOR AND MAIN FAN RELAY 2 CONNECTOR.** 1) Remove the main fan relay 2 from A/C relay holder. 2) Measure the resistance of harness between sub fan motor connector and main fan relay 2 connector. ***Connector & terminal*** ***(B482) No. 1 — (B497) No. 18:***	Is the resistance less than 1 Ω?	Go to step **11**.	Repair the open circuit of the harness between sub fan motor connector and main fan relay 2 connector.
11	**CHECK FOR POOR CONTACT.** Check poor contact of sub fan motor connector.	Is there poor contact of the sub fan motor connector?	Repair the poor contact of sub fan motor connector.	Go to step **12**.
12	**CHECK SUB FAN MOTOR.** Connect the battery positive (+) terminal to terminal No. 2 of the sub fan motor, and the ground (–) terminal to terminal No. 1.	Does the radiator sub fan rotate?	Go to step **13**.	Replace the sub fan motor. <Ref. to CO(H4SO)-25, Radiator Sub Fan and Fan Motor.>
13	**CHECK MAIN FAN RELAY 2.** Measure the resistance between main fan relay 2 terminals. ***Terminals*** ***No. 21 — No. 18:***	Is the resistance less than 1 Ω?	Go to step **14**.	Replace the main fan relay 2. <Ref. to AC-30, Relay and Fuse.>
14	**CHECK HARNESS BETWEEN MAIN FAN RELAY 2 CONNECTOR AND MAIN FAN MOTOR CONNECTOR.** 1) Disconnect the connector from the main fan motor. 2) Measure the resistance of the harness between main fan relay 2 connector and main fan motor connector. ***Connector & terminal*** ***(B473) No. 2 — (B497) No. 21:***	Is the resistance less than 1 Ω?	Go to step **15**.	Repair the open circuit of the harness between main fan relay 2 connector and main fan motor connector.

GETtheMANUALS.org

	Step	Check	Yes	No
15	**CHECK GROUND CIRCUIT OF MAIN FAN MOTOR.** Measure the resistance between main fan motor connector and chassis ground. ***Connector & terminal*** ***(B473) No. 1 — Chassis ground:***	Is the resistance less than 5 Ω?	Go to step **16**.	Repair the open circuit of the harness between the main fan motor connector and chassis ground or poor contact of the joint connector.
16	**CHECK FOR POOR CONTACT.** Check poor contact of main fan motor connector.	Is there poor contact of the main fan motor connector?	Repair the poor contact of main fan motor connector.	Go to step **17**.
17	**CHECK MAIN FAN MOTOR.** Connect the battery positive (+) terminal to terminal No. 2 of the main fan motor, and the ground (–) terminal to terminal No. 1.	Does the radiator main fan rotate?	Go to step **18**.	Replace the main fan motor. <Ref. to CO(H4SO)-24, Radiator Main Fan and Fan Motor.>
18	**CHECK HARNESS BETWEEN SUB FAN RELAY CONNECTOR AND ECM.** 1) Disconnect the connector from ECM. 2) Measure the resistance between the sub fan relay connector and ECM connector. ***Connector & terminal*** ***(B135) No. 11 — (B497) No. 12:***	Is the resistance less than 1 Ω?	Go to step **19**.	Repair the open circuit of harness between sub fan relay connector and ECM.
19	**CHECK FOR POOR CONTACT.** Check for poor contact of ECM connector.	Is there poor contact of ECM connector?	Repair the poor contact of ECM connector.	Check the DTC. Repair the trouble cause. <Ref. to EN(H4SO)(diag)-39, Read Diagnostic Trouble Code (DTC).>
20	**CHECK MAIN FAN RELAY 1.** 1) Turn the ignition switch to OFF. 2) Remove the main fan relay 1 from A/C relay holder. 3) Measure the resistance between main fan relay 1 terminals. ***Terminals*** ***No. 14 — No. 15:***	Is the resistance 1 MΩ or more?	Go to step **21**.	Replace the main fan relay 1. <Ref. to AC-30, Relay and Fuse.>
21	**CHECK MAIN FAN RELAY 1.** 1) Connect terminals No. 17 and No. 16 of the main fan relay 1 to the battery. 2) Measure the resistance between terminals of main fan relay 1 switch. ***Terminals*** ***No. 14 — No. 15:***	Is the resistance less than 1 Ω?	Go to step **22**.	Replace the main fan relay 1. <Ref. to AC-30, Relay and Fuse.>
22	**CHECK HARNESS BETWEEN MAIN FAN RELAY 1 CONNECTOR AND MAIN FAN MOTOR CONNECTOR.** 1) Disconnect the connector from the main fan motor. 2) Measure the resistance of the harness between main fan relay 1 connector and main fan motor connector. ***Connector & terminal*** ***(B473) No. 2 — (B497) No. 15:***	Is the resistance less than 1 Ω?	Go to step **23**.	Repair the open circuit of the harness between main fan relay 1 connector and main fan motor connector.

GETtheMANUALS.org

	Step	Check	Yes	No
23	**CHECK HARNESS BETWEEN MAIN FAN RELAY 1 CONNECTOR AND ECM.** 1) Disconnect the connector from ECM. 2) Measure the resistance between the main fan relay 1 connector and ECM connector. ***Connector & terminal*** ***(B135) No. 12 — (B497) No. 16:***	Is the resistance less than 1 Ω?	Go to step **24**.	Repair the open circuit of the harness between main fan relay 1 connector and ECM.
24	**CHECK HARNESS BETWEEN MAIN FAN RELAY 2 CONNECTOR AND ECM.** Measure the resistance between the main fan relay 2 connector and ECM connector. ***Connector & terminal*** ***(B135) No. 12 — (B497) No. 22:***	Is the resistance less than 1 Ω?	Go to step **25**.	Repair the open circuit of the harness between main fan relay 2 connector and ECM.
25	**CHECK FUSE.** 1) Turn the ignition switch to OFF. 2) Remove the fuse No. 8 and No. 26. 3) Check the condition of fuse.	Is the fuse blown out?	Replace the fuse.	Go to step **26**.
26	**CHECK FOR POOR CONTACT.** Check for poor contact of ECM connector.	Is there poor contact of ECM connector?	Repair the poor contact of ECM connector.	Repair the power supply circuit to the main fuse box.
27	**CHECK OPERATION OF RADIATOR FAN.** If the both fans do not rotate at high speed in the condition of step 2, check whether the radiator sub fan is rotating.	Does the radiator sub fan rotate?	Go to step **20**.	Go to step **28**.
28	**CHECK GROUND CIRCUIT OF MAIN FAN RELAY 2.** 1) Remove the main fan relay 2 from A/C relay holder. 2) Measure the resistance between main fan relay 2 connector and chassis ground. ***Connector & terminal*** ***(B497) No. 19 — Chassis ground:***	Is the resistance less than 1 Ω?	Go to step **29**.	Repair the open circuit of the harness between main fan relay 2 connector and chassis ground or poor contact of the joint connector.
29	**CHECK POWER SUPPLY TO MAIN FAN RELAY 2.** 1) Turn the ignition switch to ON. 2) Measure the voltage between main fan relay 2 connector and chassis ground. ***Connector & terminal*** ***(B497) No. 20 (+) — Chassis ground (–):***	Is the voltage 10 V or more?	Go to step **30**.	Repair the power supply line.
30	**CHECK MAIN FAN RELAY 2.** 1) Turn the ignition switch to OFF. 2) Remove the main fan relay 2. 3) Measure the resistance between main fan relay 2 terminals. ***Terminals*** ***No. 18 — No. 19:***	Is the resistance 1 MΩ or more?	Go to step **31**.	Replace the main fan relay 2. <Ref. to AC-30, Relay and Fuse.>
31	**CHECK MAIN FAN RELAY 2.** 1) Connect the battery to terminals No. 20 and No. 22 of the main fan relay 2. 2) Measure the resistance between main fan relay 2 terminals. ***Terminals*** ***No. 18 — No. 19:***	Is the resistance less than 1 Ω?	Go to step **23**.	Replace the main fan relay 2. <Ref. to AC-30, Relay and Fuse.>

GETtheMANUALS.org

3. Engine Coolant

A: REPLACEMENT

1. DRAINING OF ENGINE COOLANT

1) Lift up the vehicle.
2) Remove the under cover. <Ref. to EI-35, REMOVAL, Front Under Cover.>
3) Remove the drain plug to drain engine coolant into container.

NOTE:
Remove the radiator cap so that engine coolant will drain faster.

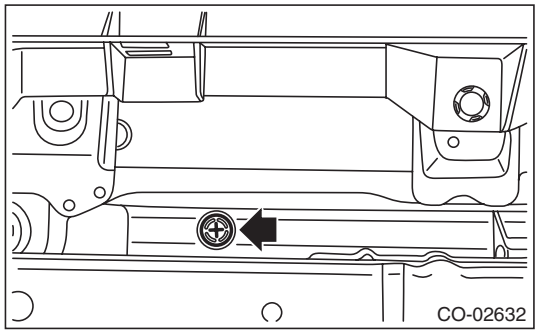

4) Install the drain plug.
5) Install the under cover. <Ref. to EI-35, INSTALLATION, Front Under Cover.>

2. FILLING OF ENGINE COOLANT

1) Pour cooling system conditioner through the filler neck.

Cooling system protective agent:
Refer to "SPECIFICATION" for cooling system protective agent. <Ref. to CO(H4SO)-2, SPECIFICATION, General Description.>

2) Pour engine coolant into the radiator up to the filler neck position.

Recommended engine coolant:
Refer to "SPECIFICATION" for recommended engine coolant. <Ref. to CO(H4SO)-2, SPECIFICATION, General Description.>

Engine coolant level:
Refer to "SPECIFICATION" for engine coolant level. <Ref. to CO(H4SO)-2, SPECIFICATION, General Description.>

Engine coolant concentration:
Refer to "ADJUSTMENT" for the recommended engine coolant concentration. <Ref. to CO(H4SO)-15, ADJUSTMENT, Engine Coolant.>

NOTE:
The SUBARU Super Coolant contains anti-freeze and anti-rust agents, and is especially made for Subaru engines with an aluminum cylinder block. Be sure to use SUBARU Super Coolant, since other coolant may cause corrosion.

3) Fill engine coolant into the reservoir tank up to "FULL" level.

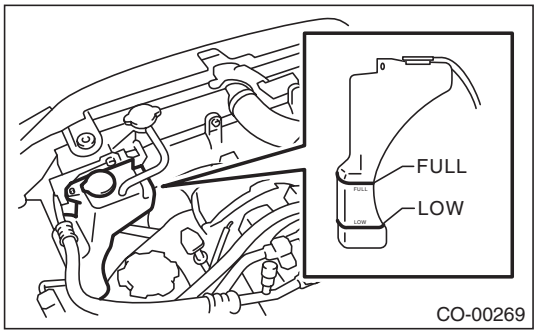

4) Close the radiator cap and start the engine. Race 5 to 6 times at 3,000 rpm or less, then stop the engine. (Complete this operation within 40 seconds.)
5) Wait for one minute after the engine stops, and open the radiator cap. If the engine coolant level drops, add engine coolant into radiator up to the filler neck position.
6) Perform the procedures 4) and 5) again.
7) Attach the radiator cap and reservoir tank cap properly.
8) Start the engine and operate the heater at maximum hot position and the blower speed setting to "LO".
9) Run the engine at 2,000 rpm or less until radiator fan starts and stops.

NOTE:
Be careful with the engine coolant temperature to prevent overheating.

10) Stop the engine and wait until the engine coolant temperature lowers to 30°C (86°F) or less.
11) Open the radiator cap. If the engine coolant level drops, add engine coolant into the radiator up to the filler neck position and the reservoir tank to "FULL" level.
12) Attach the radiator cap correctly.
13) Set the heater setting to maximum hot position and the blower speed setting to "LO" and start the engine. Perform racing at 3,000 rpm or less. If the flowing sound is heard from the heater core, repeat the procedures from step 9).

GETtheMANUALS.org

B: ADJUSTMENT

1. PROCEDURE TO ADJUST THE SUBARU SUPER COOLANT CONCENTRATION

CAUTION:
SUBARU Super Coolant concentration must be used from 50 to 60% to assure the best performance of the anti-freeze and anti-rust agents.
To adjust the concentration of SUBARU Super Coolant according to temperature, find the proper SUBARU Super Coolant concentration in the table, and add diluting water to the SUBARU Super Coolant (concentrated type) until it reaches the proper dilution.

Relationship of SUBARU Super Coolant concentration and freezing temperature			
SUBARU Super Coolant concentration	50%	55%	60%
Freezing temperature	–36°C (–33°F)	–41°C (–42°F)	–50°C (–58°F)

Recommended Engine Coolant and Water for Dilution:
Refer to "SPECIFICATION" for the recommended engine coolant and diluting water. <Ref. to CO(H4SO)-2, SPECIFICATION, General Description.>

GETtheMANUALS.org

4. Water Pump

A: REMOVAL

1) Remove the radiator. <Ref. to CO(H4SO)-20, REMOVAL, Radiator.>
2) Remove the V-belts. <Ref. to ME(H4SO)-43, REMOVAL, V-belt.>
3) Remove the crank pulley. <Ref. to ME(H4SO)-45, REMOVAL, Crank Pulley.>
4) Remove the timing belt cover. <Ref. to ME(H4SO)-47, REMOVAL, Timing Belt Cover.>
5) Remove the timing belt. <Ref. to ME(H4SO)-48, TIMING BELT, REMOVAL, Timing Belt.>
6) Remove the automatic belt tension adjuster.

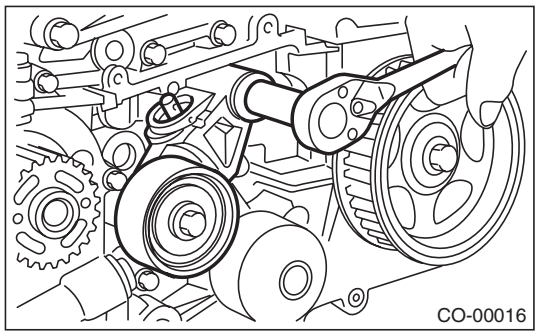

7) Remove the camshaft position sensor. <Ref. to FU(H4SO)-27, REMOVAL, Camshaft Position Sensor.>
8) Remove the cam sprocket LH. <Ref. to ME(H4SO)-53, REMOVAL, Cam Sprocket.>
9) Remove the belt cover No. 2 LH.

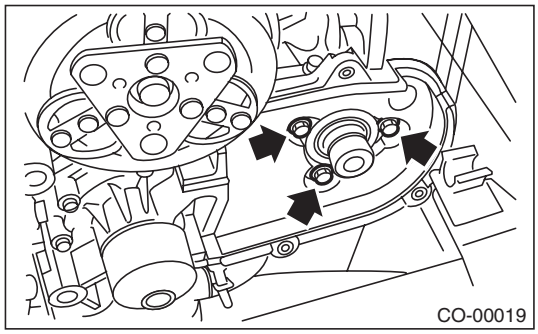

10) Remove the tensioner bracket.

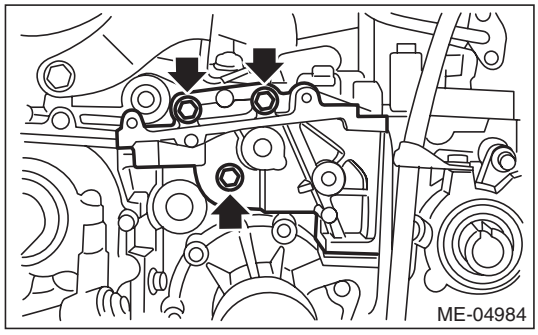

11) Disconnect the hose from water pump.
12) Remove the water pump.

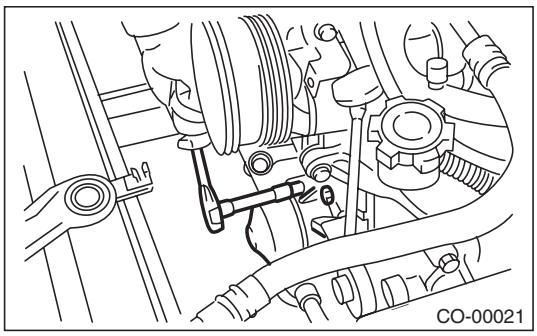

B: INSTALLATION

1) Install the water pump onto cylinder block LH.

NOTE:
- Use a new gasket.
- When installing the water pump, tighten the bolts in two stages in alphabetical sequence as shown in figure.

Tightening torque:
1st
12 N·m (1.2 kgf-m, 8.9 ft-lb)
2nd
12 N·m (1.2 kgf-m, 8.9 ft-lb)

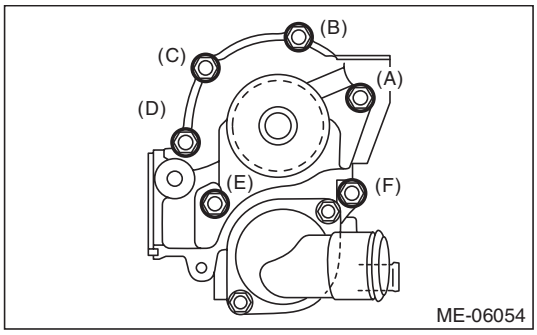

2) Install the hose to water pump.
3) Install the tensioner bracket.

Tightening torque:
24.5 N·m (2.5 kgf-m, 18.1 ft-lb)

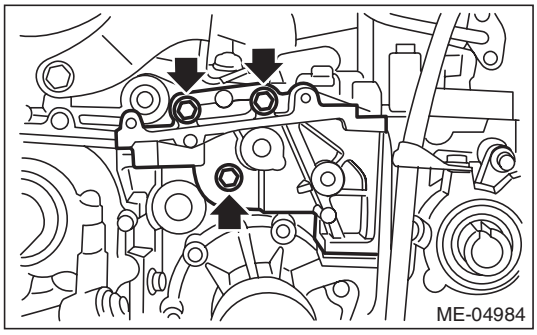

GETtheMANUALS.org

4) Install the belt cover No. 2 LH.

Tightening torque:
5 N·m (0.5 kgf-m, 3.7 ft-lb)

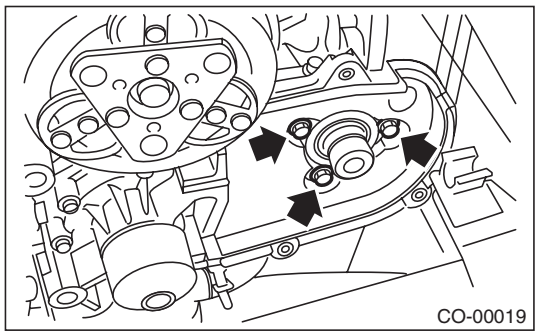

5) Install the cam sprocket LH. <Ref. to ME(H4SO)-53, INSTALLATION, Cam Sprocket.>
6) Install the camshaft position sensor. <Ref. to FU(H4SO)-27, INSTALLATION, Camshaft Position Sensor.>
7) Install an automatic belt tension adjuster with the tension rod held by a pin. <Ref. to ME(H4SO)-49, AUTOMATIC BELT TENSION ADJUSTER ASSEMBLY AND BELT IDLER, INSTALLATION, Timing Belt.>
8) Install the timing belt. <Ref. to ME(H4SO)-50, TIMING BELT, INSTALLATION, Timing Belt.>
9) Install the timing belt cover. <Ref. to ME(H4SO)-47, INSTALLATION, Timing Belt Cover.>
10) Install the crank pulley. <Ref. to ME(H4SO)-45, INSTALLATION, Crank Pulley.>
11) Install the V-belts. <Ref. to ME(H4SO)-43, INSTALLATION, V-belt.>
12) Install the radiator. <Ref. to CO(H4SO)-21, INSTALLATION, Radiator.>

C: INSPECTION

1) Check the water pump bearing for smooth rotation.
2) Check the water pump pulley for abnormalities.
3) Make sure the impeller is not abnormally deformed or damaged.
4) Inspect the clearance between impeller and pump case.

Clearance between impeller and pump case:
Standard
0.5 — 1.6 mm (0.020 — 0.063 in)

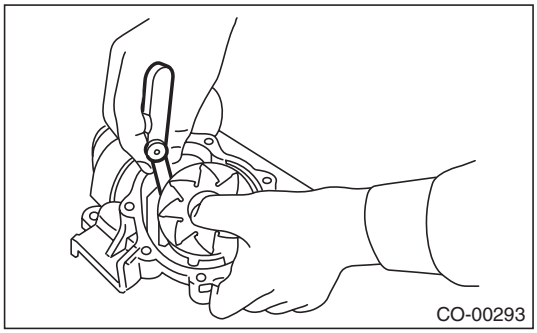

5) After water pump installation, check pulley shaft for engine coolant leaks or noise. If leaks or noise are noted, replace the water pump assembly.

GETtheMANUALS.org

5. Thermostat

A: REMOVAL

1) Lift up the vehicle.
2) Remove the under cover. <Ref. to EI-35, REMOVAL, Front Under Cover.>
3) Drain engine coolant. <Ref. to CO(H4SO)-14, DRAINING OF ENGINE COOLANT, REPLACEMENT, Engine Coolant.>
4) Disconnect the radiator outlet hose from thermostat cover.

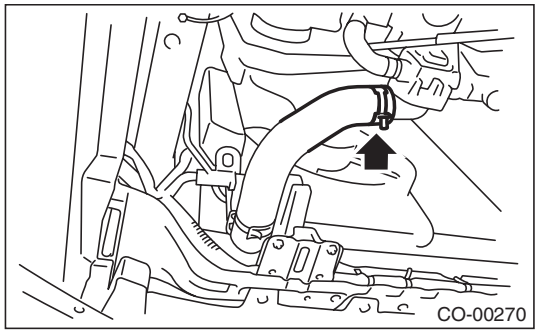

5) Remove the thermostat cover, and then remove the gasket and thermostat.

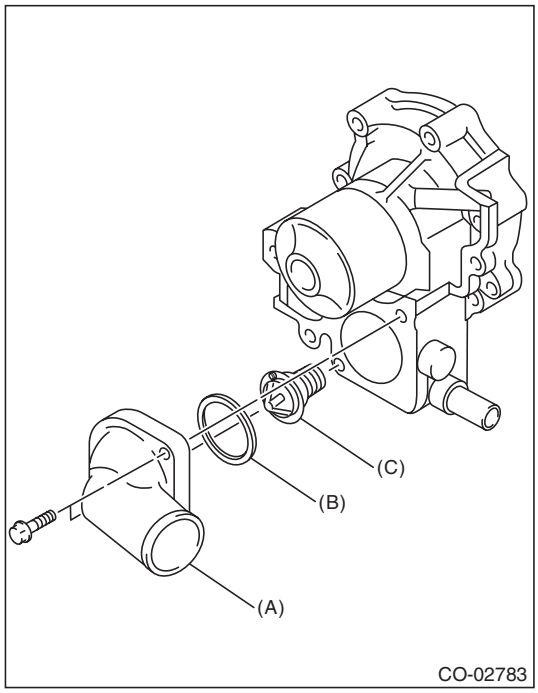

(A) Thermostat cover
(B) Gasket
(C) Thermostat

B: INSTALLATION

1) Install a gasket to thermostat.

NOTE:
Use a new gasket.
2) Install the thermostat and thermostat cover.

NOTE:
Install the parts with the jiggle pin facing upward.

Tightening torque:
12 N·m (1.2 kgf-m, 8.9 ft-lb)

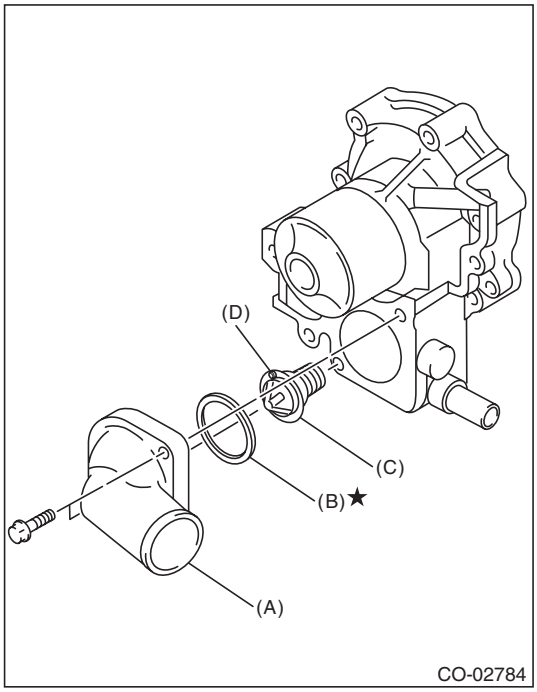

(A) Thermostat cover
(B) Gasket
(C) Thermostat
(D) Jiggle pin

3) Connect the radiator outlet hose to thermostat cover.
4) Install the under cover. <Ref. to EI-35, INSTALLATION, Front Under Cover.>
5) Lower the vehicle.
6) Fill engine coolant. <Ref. to CO(H4SO)-14, FILLING OF ENGINE COOLANT, REPLACEMENT, Engine Coolant.>

GETtheMANUALS.org

C: INSPECTION

1) Check that the thermostat does not have deformation, cracks or damage.
2) Check that the thermostat valve closes completely at an ambient temperature.
3) Immerse the thermostat and a thermometer in water. Raise water temperature gradually, and check the temperature and valve lift when the valve begins to open and when the valve is fully opened. Replace the thermostat if faulty.

NOTE:
- During the test, agitate the water for even temperature distribution.
- Leave the thermostat in the boiling water for five minutes or more before measuring the valve lift.
- Hold the thermostat with a wire or the like to avoid contacting with container bottom.

Starting temperature to open:
86 — 90°C (187 — 194°F)

Full open temperature:
95°C (203°F)

Total valve lift:
9.0 mm (0.354 in) or more

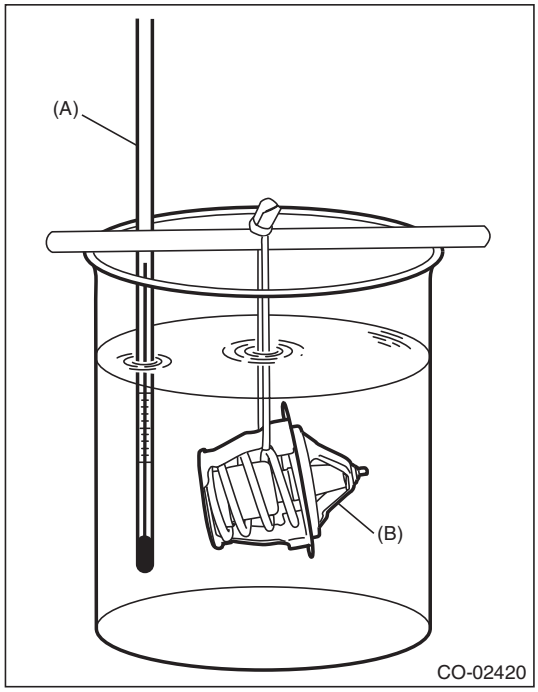

(A) Thermometer
(B) Thermostat

GETtheMANUALS.org

6. Radiator

A: REMOVAL

CAUTION:
The radiator is pressurized when the engine and radiator are hot. Wait until engine and radiator cool down before working on the radiator.

1) Disconnect the ground cable from battery.

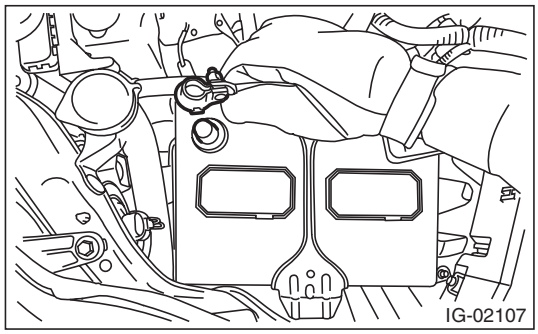

2) Lift up the vehicle.
3) Remove the under cover. <Ref. to EI-35, REMOVAL, Front Under Cover.>
4) Drain engine coolant. <Ref. to CO(H4SO)-14, DRAINING OF ENGINE COOLANT, REPLACEMENT, Engine Coolant.>
5) Disconnect the radiator outlet hose from thermostat cover.

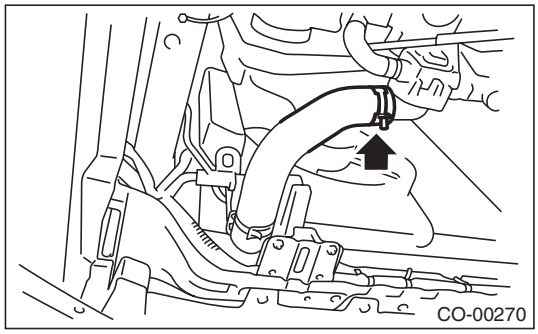

6) Disconnect the CVTF radiator hose from the CVTF pipe. (CVT model)

NOTE:
Plug the CVTF pipe to prevent CVTF from leaking.

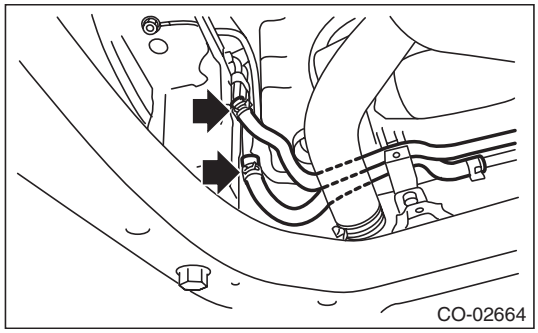

7) Lower the vehicle.
8) Remove the air intake duct. <Ref. to IN(H4SO)-9, REMOVAL, Air Intake Duct.>
9) Remove the reservoir tank. <Ref. to CO(H4SO)-26, REMOVAL, Reservoir Tank.>
10) Disconnect the connector (A) from the main fan motor and the connector (B) from the sub fan motor.

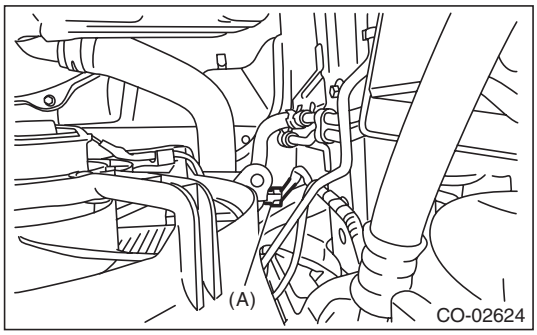

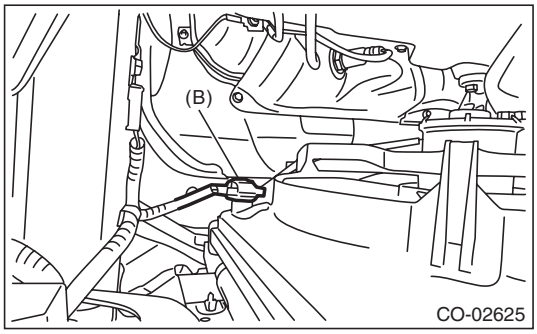

11) Disconnect the radiator inlet hoses from the engine.

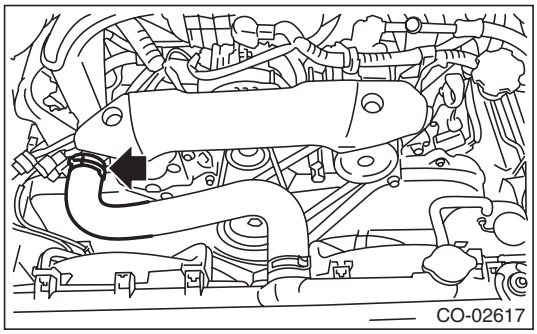

12) Remove the grille bracket.

NOTE:
Remove ten clips when removing the grille bracket.

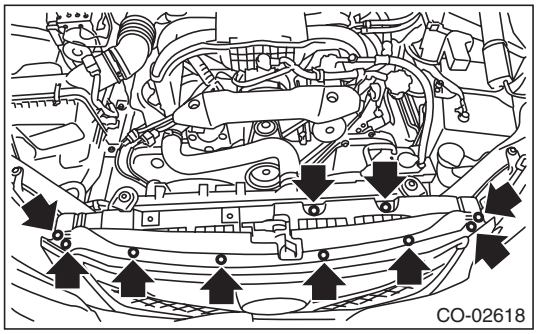

GETtheMANUALS.org

13) Remove the radiator upper brackets.

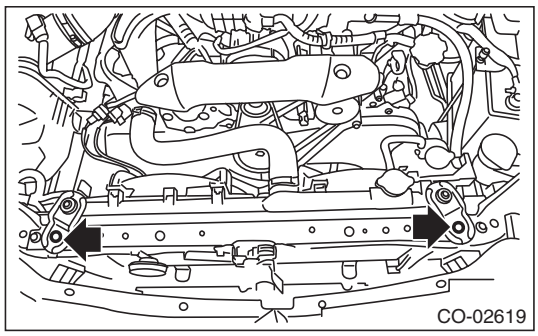

14) Lift the radiator up and away from vehicle.
15) Remove the radiator lower cushion from the vehicle body.

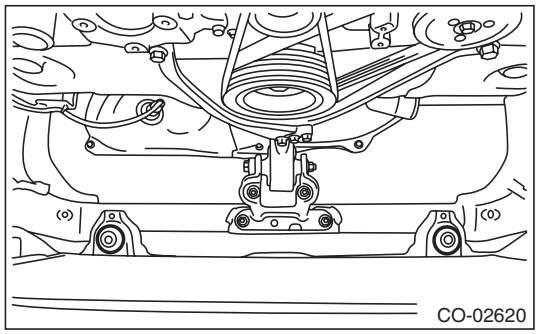

B: INSTALLATION

1) Install the radiator lower cushion to the vehicle body.

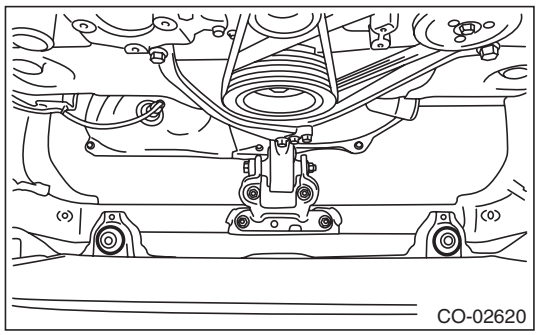

2) Install the radiator to vehicle.

NOTE:
Make pins on the lower side of radiator be fitted into the radiator lower cushions.

3) Install the radiator upper brackets.

Tightening torque:
12 N·m (1.2 kgf-m, 8.9 ft-lb)

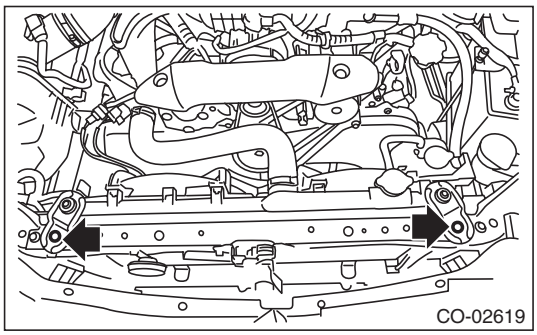

4) Attach the grille bracket.

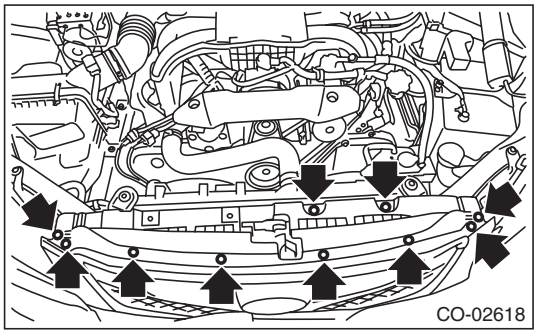

5) Connect the radiator inlet hose.

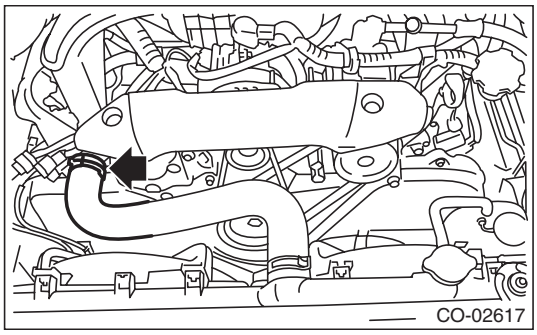

GETtheMANUALS.org

6) Connect the connector (A) to the radiator main fan motor and the connector (B) to the sub fan motor connector.

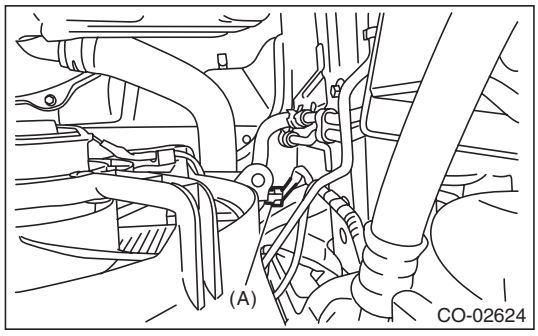

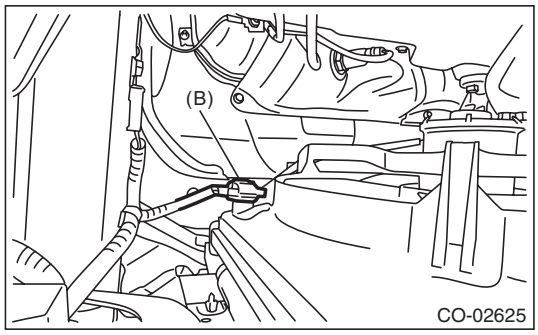

7) Install the air intake duct. <Ref. to IN(H4SO)-9, INSTALLATION, Air Intake Duct.>
8) Install the reservoir tank. <Ref. to CO(H4SO)-26, INSTALLATION, Reservoir Tank.>
9) Lift up the vehicle.
10) Connect the CVTF radiator hose. (CVT model)

NOTE:
Use a new CVTF radiator hose.

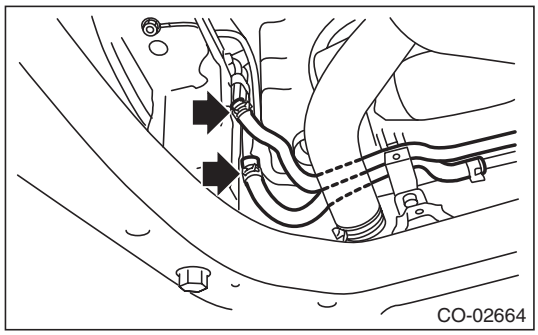

11) Connect the radiator outlet hose.

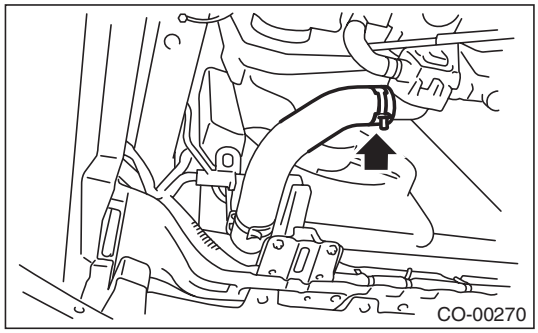

12) Install the under cover. <Ref. to EI-35, INSTALLATION, Front Under Cover.>
13) Lower the vehicle.
14) Connect the battery ground terminal.

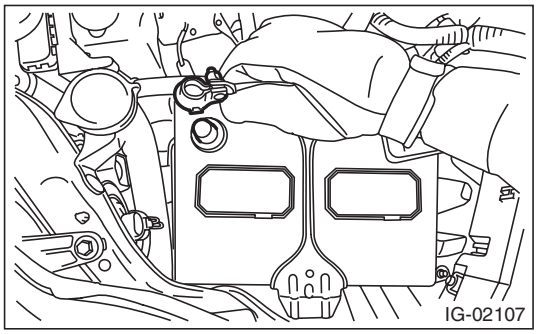

15) Fill engine coolant. <Ref. to CO(H4SO)-14, FILLING OF ENGINE COOLANT, REPLACEMENT, Engine Coolant.>
16) Adjust the CVTF level. (CVT model) <Ref. to CVT-37, ADJUSTMENT, CVTF.>

C: INSPECTION

1) Check that the radiator does not have deformation, cracks or damage.
2) Check that the hose has no cracks, damage or loose part.
3) Remove the radiator cap, fill the radiator with engine coolant, and then install the radiator cap tester to the filler neck of radiator.

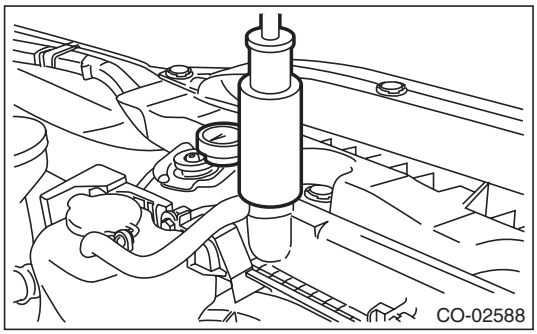

4) Apply a pressure of 157 kPa (1.6 kgf/cm^2, 23 psi) to the radiator, and check the following items.
- Leakage from the radiator or its vicinity
- Leakage from the hose or its connections

CAUTION:
- **Engine should be turned off.**
- **Wipe engine coolant from check points in advance.**
- **Be careful not to deform the filler neck of radiator when installing and removing the radiator cap tester.**
- **Be careful of engine coolant from spurting out when removing the radiator cap tester.**

GETtheMANUALS.org

7. Radiator Cap

A: INSPECTION

1) Check that the radiator cap does not have deformation, cracks or damage.
2) Attach the radiator cap tester to radiator cap.

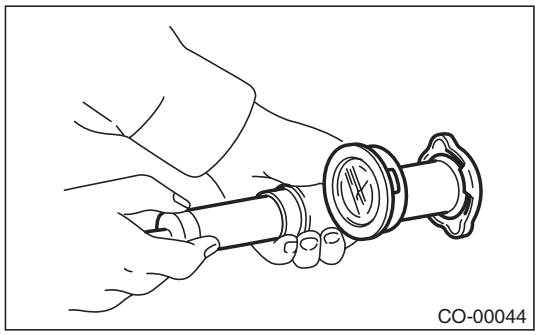

3) Increase pressure until the radiator cap tester gauge needle stops. Radiator cap is functioning properly if it holds the service limit pressure for 5 — 6 seconds. Replace the radiator cap if its valve opens at less than the service limit.

Standard:
93 — 123 kPa (0.95 — 1.25 kgf/cm^2, 14 — 18 psi)

Service limit:
83 kPa (0.85 kgf/cm^2, 12 psi)

CAUTION:
Be sure to remove foreign matter and rust from the cap in advance. Otherwise, results of pressure test will be incorrect.

GETtheMANUALS.org

8. Radiator Main Fan and Fan Motor

A: REMOVAL

1) Disconnect the ground cable from battery.

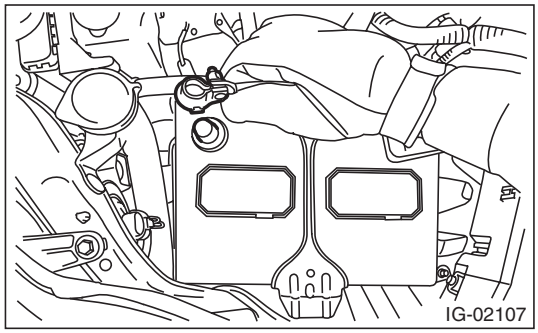

2) Remove the reservoir tank. <Ref. to CO(H4SO)-26, REMOVAL, Reservoir Tank.>
3) Disconnect the connector from the main fan motor assembly.

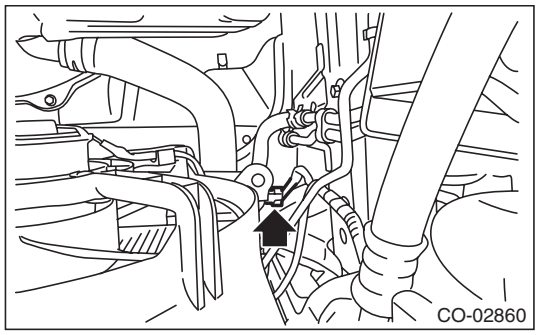

4) Remove the CVTF radiator hose from the clip of the radiator main fan shroud. (CVT model)
5) Remove the bolts which hold the radiator main fan shroud onto the radiator.

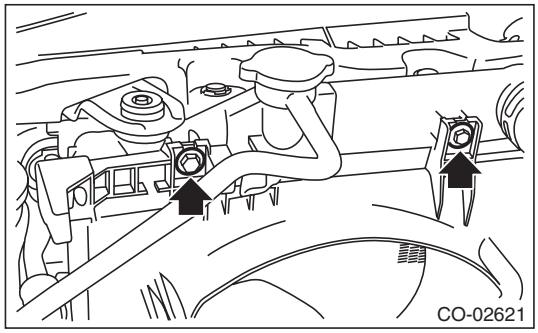

6) Remove the radiator main fan and fan motor from vehicle.

B: INSTALLATION

CAUTION:
Confirm that the radiator hose is securely connected.
Install in the reverse order of removal.

Tightening torque:
7.5 N·m (0.8 kgf-m, 5.5 ft-lb)

C: DISASSEMBLY

1) Remove the clip which holds the main fan motor assembly connector onto the radiator main fan shroud.
2) Remove the bolts which hold the main fan motor assembly onto the radiator main shroud.

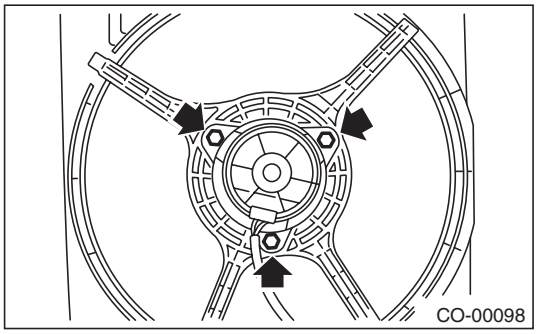

D: ASSEMBLY

Assemble in the reverse order of disassembly.

Tightening torque:
5 N·m (0.5 kgf-m, 3.7 ft-lb)

E: INSPECTION

Check that the radiator main fan, radiator main fan shroud and main fan motor assembly do not have deformation, cracks or damage.

GETtheMANUALS.org

9. Radiator Sub Fan and Fan Motor

A: REMOVAL

1) Disconnect the ground cable from battery.

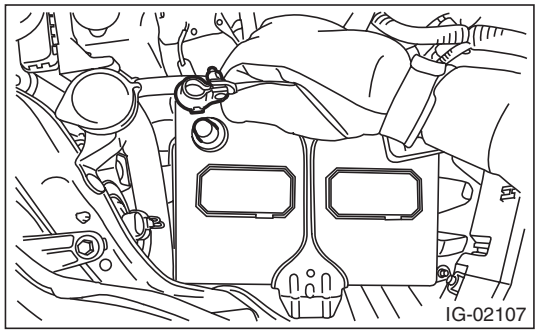

2) Remove the air intake duct. <Ref. to IN(H4SO)-9, REMOVAL, Air Intake Duct.>
3) Disconnect the connector from the sub fan motor assembly.

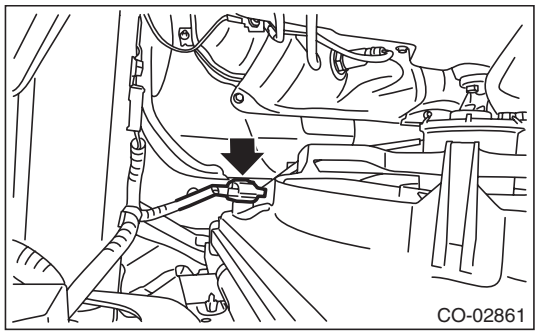

4) Remove the CVTF radiator hose from the clip of the radiator sub fan & fan motor. (CVT model)
5) Remove the bolts which hold the radiator sub fan shroud onto the radiator.

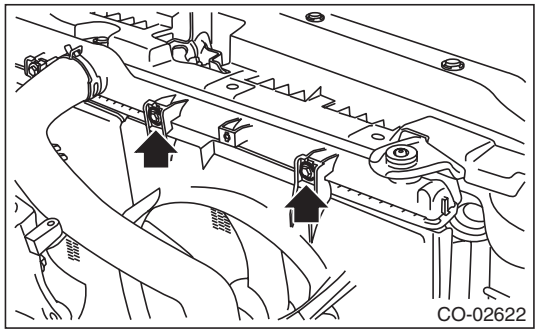

6) Remove the radiator sub fan and fan motor from vehicle.

B: INSTALLATION

CAUTION:
Confirm that the radiator hose is securely connected.
Install in the reverse order of removal.

Tightening torque:
7.5 N·m (0.8 kgf-m, 5.5 ft-lb)

C: DISASSEMBLY

1) Remove the clip which holds the radiator sub fan motor assembly connector onto the radiator sub fan shroud.
2) Remove the bolts which hold the sub fan motor assembly onto the radiator sub fan shroud.

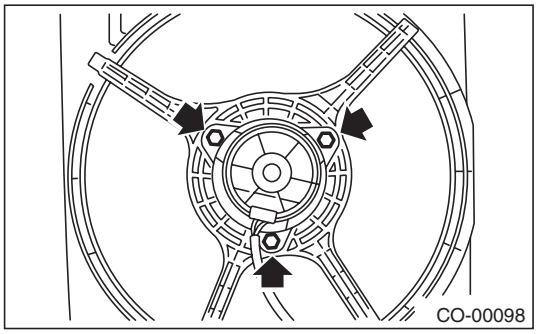

D: ASSEMBLY

Assemble in the reverse order of disassembly.

Tightening torque:
5 N·m (0.5 kgf-m, 3.7 ft-lb)

E: INSPECTION

Check that the radiator sub fan, radiator sub fan shroud and sub fan motor assembly do not have deformation, cracks or damage.

GETtheMANUALS.org

10. Reservoir Tank

A: REMOVAL

1) Pull out the over flow hose (A) from the reservoir tank.
2) Pull out the reservoir tank to the arrow direction while pushing the claw (B).

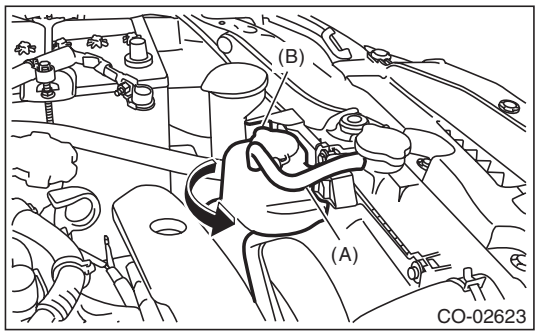

B: INSTALLATION

Install in the reverse order of removal.

C: INSPECTION

1) Check that the reservoir tank does not have deformation, cracks or damage.
2) Make sure the over flow hoses are not cracked, damaged or loose.
3) Make sure the engine coolant level is between “FULL” and “LOW”.

GETtheMANUALS.org

11.Engine Cooling System Trouble in General

A: INSPECTION

Trouble	Possible cause	Corrective action
Over-heating	a. Insufficient engine coolant	Replenish engine coolant, inspect for leakage, and repair it if necessary.
	b. Loose timing belt	Repair or replace timing belt tensioner.
	c. Oil on timing belt	Replace.
	d. Malfunction of thermostat	Replace.
	e. Malfunction of water pump	Replace.
	f. Clogged engine coolant passage	Clean.
	g. Improper ignition timing	Inspect and repair ignition control system. <Ref. to EN(H4SO)(diag)-2, Basic Diagnostic Procedure.>
	h. Clogged or leaking radiator	Clean, repair or replace.
	i. Defective radiator fan	Replace.
	j. Improper engine oil in engine coolant	Replace the engine coolant. If ineffective, check, repair or replace engine components.
	k. Air/fuel mixture ratio too lean	Inspect and repair the fuel injection system. <Ref. to EN(H4SO)(diag)-2, Basic Diagnostic Procedure.>
	l. Excessive back pressure in exhaust system	Clean or replace.
	m. Insufficient clearance between piston and cylinder	Adjust or replace.
	n. Slipping clutch	Repair or replace.
	o. Dragging brake	Adjust.
	p. Defective radiator fan	Inspect the radiator fan relay, engine coolant temperature sensor or fan motor and replace them.
Over-cooling	a. Ambient temperature extremely low	Partly cover radiator front area.
	b. Defective thermostat	Replace.
Engine coolant leaks	a. Loosened or damaged connecting units on hoses	Repair or replace.
	b. Leakage from water pump	Replace.
	c. Leakage from water pipe	Repair or replace.
	d. Leakage around cylinder head gasket	Retighten cylinder head bolts or replace cylinder head gasket.
	e. Damaged or cracked cylinder head and cylinder block	Repair or replace.
	f. Damaged or cracked thermostat cover	Repair or replace.
	g. Leakage from radiator	Repair or replace.
Noise	a. Timing belt problem	Replace.
	b. Defective radiator fan	Replace.
	c. Defective water pump bearing	Replace water pump.
	d. Defective water pump mechanical seal	Replace water pump.

GETtheMANUALS.org

GETtheMANUALS.org

LUBRICATION

LU(H4SO)

		Page
1.	General Description	2
2.	Oil Pressure System	11
3.	Engine Oil	13
4.	Oil Pump	15
5.	Oil Pan and Strainer	19
6.	Oil Pressure Switch	25
7.	Engine Oil Cooler	27
8.	Oil Catch Tank	29
9.	Scavenge Pump	30
10.	Oil Pipe	31
11.	Engine Oil Filter	36
12.	Oil Level Switch	37
13.	Engine Lubrication System Trouble in General	45

GETtheMANUALS.org

1. General Description

A: SPECIFICATION

- Non-turbo model

Lubrication method				Forced lubrication
Oil pump	Pump type			Trochoid type
	Number of teeth	Inner rotor		9
		Outer rotor		10
	Outer rotor diameter × thickness		mm (in)	76 × 10 (2.99 × 0.39)
	Tip clearance between inner and outer rotors		mm (in) Standard	0.04 — 0.14 (0.0016 — 0.0055)
	Case clearance between outer rotor and pump case		mm (in) Standard	0.10 — 0.175 (0.0039 — 0.0069)
	Side clearance between inner rotor and pump case		mm (in) Standard	0.02 — 0.07 (0.0008 — 0.0028)
	Relief valve spring	Free length	mm (in)	73.7 (2.902)
		Installed length	mm (in)	54.7 (2.154)
		Load when installed	N (kgf, lbf)	93.1 (9.49, 20.93)
	Performance (Oil temperature 80°C (176°F))	600 rpm	Discharge pressure kPa (kgf/cm^2, psi)	98 (1.0, 14)
			Discharge rate ℓ (US qt, Imp qt)/min.	4.6 (4.9, 4.0) or more
		5,000 rpm	Discharge pressure kPa (kgf/cm^2, psi)	294 (3.0, 43)
			Discharge rate ℓ (US qt, Imp qt)/min.	47.0 (49.7, 41.4) or more
	Relief valve working pressure		kPa (kgf/cm^2, psi)	588 (6.0, 85)
Oil filter	Filter type			Full-flow filter type
	Filtration area cm^2 (sq in)	Outer diameter: 68 mm (2.68 in) (Black)		800 (124)
		Outer diameter: 67.4 mm (2.65 in) (Blue)		555 (86)
	By-pass valve opening pressure		kPa (kgf/cm^2, psi)	160 (1.63, 23.2)
	Outer diameter × width mm (in)	Outer diameter: 68 mm (2.68 in) (Black)		68 × 65 (2.68 × 2.56)
		Outer diameter: 67.4 mm (2.65 in) (Blue)		67.4 × 65.3 (2.65 × 2.57)
	Installation screw specifications			M 20 × 1.5
Oil pressure switch	Type			Immersed contact point type
	Operating voltage — power consumption			12 V — 3.4 W or less
	Warning light operating pressure		kPa (kgf/cm^2, psi)	14.7 (0.15, 2.1)
	Proof pressure		kPa (kgf/cm^2, psi)	981 (10, 142) or more
Engine oil	Total capacity (at overhaul)		ℓ (US qt, Imp qt)	4.8 (5.1, 4.2)
	When replacing engine oil and oil filter		ℓ (US qt, Imp qt)	4.2 (4.4, 3.7)
	When replacing engine oil only		ℓ (US qt, Imp qt)	4.0 (4.2, 3.5)

GETtheMANUALS.org

Recommended oil:

CAUTION:
It is acceptable to fill an engine with oil of another brand when replacing the oil, but make sure to use the following engine oil specified by Subaru.

Engine oil standard		SAE viscosity No.
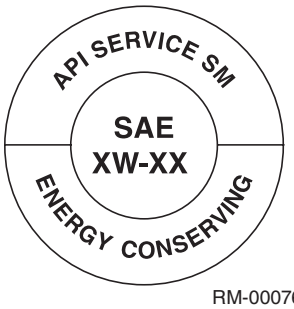 RM-00076 Those with the API standard SM "Energy Conserving" or SN "Resource Conserving" logo.	or	RM-00002 Those with the ILSAC standard GF-4 or GF-5 "starburst mark" displayed on top of the container.	5W-30 (synthetic oil)

NOTE:
The proper viscosity oil helps the engine maintain its ideal temperature, and cranking speed increased by reducing viscosity friction in hot condition.

GETtheMANUALS.org

- Turbo model

Lubrication method					Forced lubrication
Oil pump	Pump type				Trochoid type
	Number of teeth	Inner rotor			9
		Outer rotor			10
	Outer rotor diameter × thickness			mm (in)	78 × 11 (3.07 × 0.43)
	Tip clearance between inner and outer rotors			mm (in)	Standard 0.04 — 0.14 (0.0016 — 0.0055)
	Case clearance between outer rotor and pump case			mm (in)	Standard 0.10 — 0.175 (0.0039 — 0.0069)
	Side clearance between inner rotor and pump case			mm (in)	Standard 0.02 — 0.07 (0.0008 — 0.0028)
	Relief valve spring	Free length		mm (in)	73.7 (2.902)
		Installed length		mm (in)	54.7 (2.154)
		Load when installed		N (kgf, lbf)	93.1 (9.49, 20.93)
	Performance (Oil temperature 80°C (176°F))	600 rpm	Discharge pressure	kPa (kg/cm^2, psi)	98 (1.0, 14)
			Discharge rate	ℓ (US qt, Imp qt)/min.	6.4 (6.8, 5.6) or more
		6,000 rpm	Discharge pressure	kPa (kg/cm^2, psi)	392 (4.0, 56.8)
			Discharge rate	ℓ (US qt, Imp qt)/min.	63.0 (66.6, 55.4) or more
	Relief valve working pressure			kPa (kg/cm^2, psi)	538 (5.5, 78)
Oil filter	Filter type				Full-flow filter type
	Filtration area		Outer diameter: 68 mm (2.68 in) (Black)	cm^2 (sq in)	800 (124)
			Outer diameter: 67.4 mm (2.65 in) (Blue)		555 (86)
	By-pass valve opening pressure			kPa (kg/cm^2, psi)	160 (1.63, 23.2)
	Outer diameter × width		Outer diameter: 68 mm (2.68 in) (Black)	mm (in)	68 × 65 (2.68 × 2.56)
			Outer diameter: 67.4 mm (2.65 in) (Blue)		67.4 × 65.3 (2.65 × 2.57)
	Installation screw specifications				M 20 × 1.5
Oil pressure switch	Type				Immersed contact point type
	Operating voltage — power consumption				12 V — 3.4 W or less
	Warning light operating pressure			kPa (kg/cm^2, psi)	14.7 (0.15, 2.1)
	Proof pressure			kPa (kg/cm^2, psi)	981 (10, 142) or more
Engine oil	Total capacity (at overhaul)			ℓ (US qt, Imp qt)	5.2 (5.5, 4.6)
	When replacing engine oil and oil filter			ℓ (US qt, Imp qt)	4.3 (4.5, 3.8)
	When replacing engine oil only			ℓ (US qt, Imp qt)	4.0 (4.2, 3.5)

GETtheMANUALS.org

Required oil:

CAUTION:

- **Use 5W-30 (synthetic oil).**
- **It is acceptable to fill an engine with oil of another brand when replacing the oil, but make sure to use the following engine oil specified by Subaru.**

Engine oil standard		SAE viscosity No.
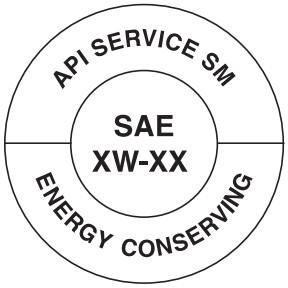 RM-00076 Those with the API standard SM "Energy Conserving" or SN "Resource Conserving" logo.	or RM-00002 Those with the ILSAC standard GF-4 or GF-5 "starburst mark" displayed on top of the container.	5W-30 (synthetic oil)

NOTE:
The proper viscosity oil helps the engine maintain its ideal temperature, and cranking speed increased by reducing viscosity friction in hot condition.

GETtheMANUALS.org

B: COMPONENT

- Non-turbo model

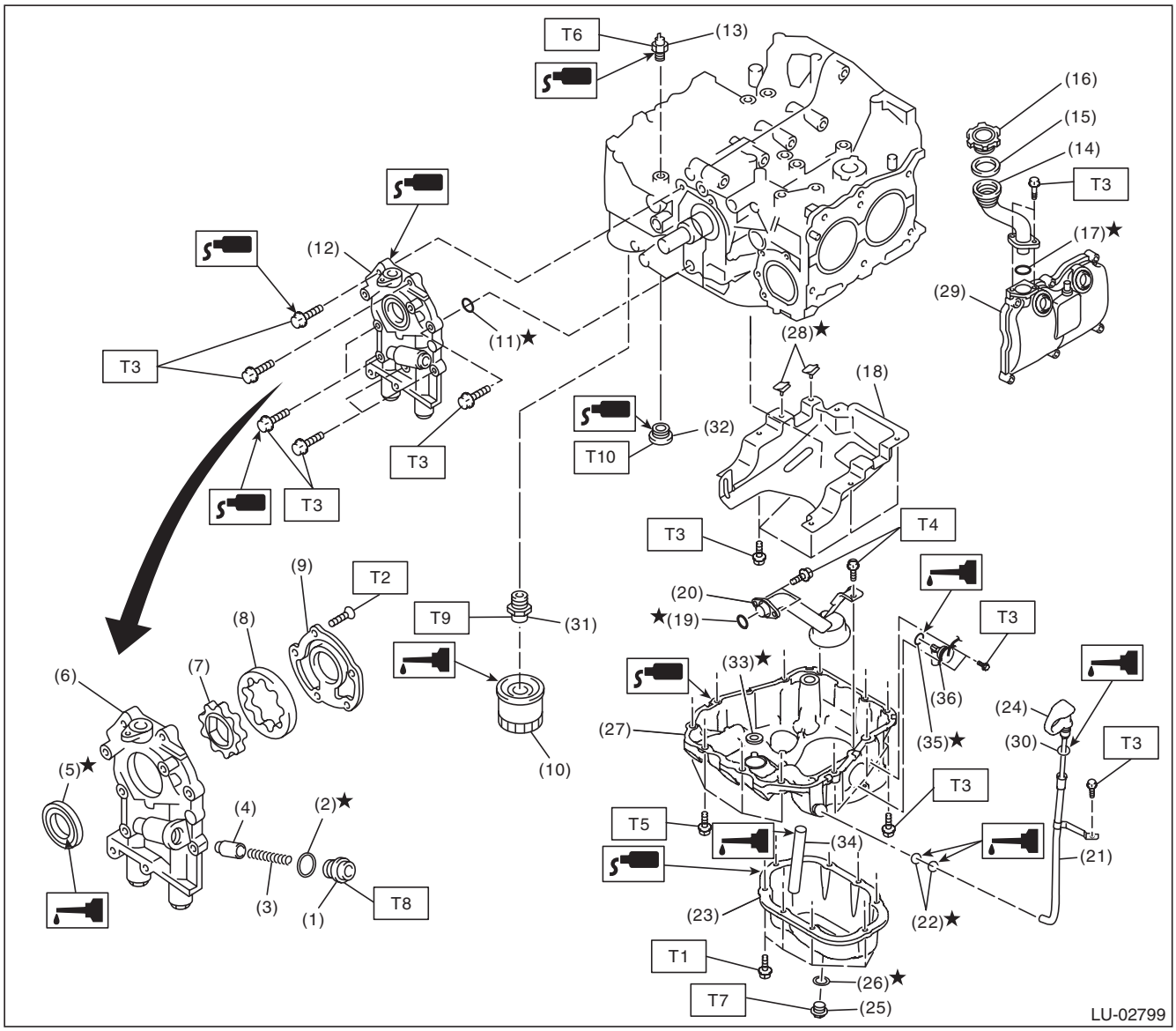

GETtheMANUALS.org

(1) Plug
(2) Gasket
(3) Relief valve spring
(4) Relief valve
(5) Front oil seal
(6) Oil pump case
(7) Inner rotor
(8) Outer rotor
(9) Oil pump cover
(10) Oil filter
(11) O-ring
(12) Oil pump ASSY
(13) Oil pressure switch
(14) Oil filler duct
(15) Gasket
(16) Oil filler cap
(17) O-ring
(18) Baffle plate
(19) O-ring
(20) Oil strainer
(21) Oil level gauge guide
(22) O-ring
(23) Oil pan
(24) Oil level gauge
(25) Drain plug
(26) Drain plug gasket
(27) Cylinder block lower
(28) Seal
(29) Rocker cover
(30) O-ring
(31) Oil filter connector
(32) Plug
(33) O-ring
(34) Oil drain pipe
(35) O-ring
(36) Oil level switch

Tightening torque:N·m (kgf-m, ft-lb)	
T1:	***5 (0.5, 3.7)***
T2:	***5.4 (0.6, 4.0)***
T3:	***6.4 (0.7, 4.7)***
T4:	***10 (1.0, 7.4)***
T5:	***16 (1.6, 11.8)***
T6:	***25 (2.5, 18.4)***
T7:	***41.7 (4.3, 30.8)***
T8:	***44 (4.5, 32.5)***
T9:	***45 (4.6, 33.2)***
T10:	***70 (7.1, 51.6)***

GETtheMANUALS.org

- Turbo model

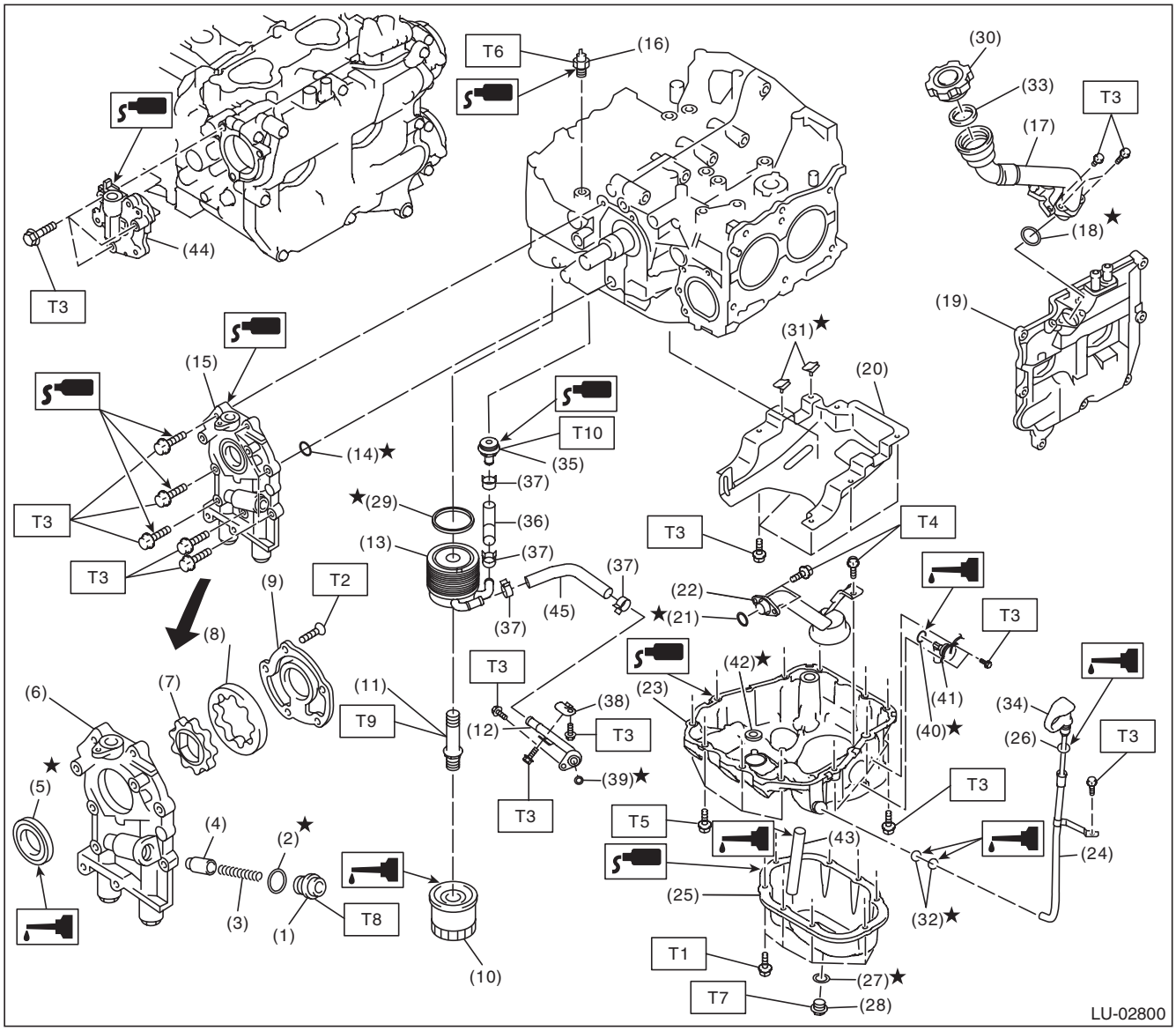

GETtheMANUALS.org

(1) Plug
(2) Gasket
(3) Relief valve spring
(4) Relief valve
(5) Front oil seal
(6) Oil pump case
(7) Inner rotor
(8) Outer rotor
(9) Oil pump cover
(10) Oil filter
(11) Oil cooler connector
(12) Oil cooler pipe
(13) Oil cooler
(14) O-ring
(15) Oil pump ASSY
(16) Oil pressure switch
(17) Oil filler duct
(18) O-ring
(19) Rocker cover
(20) Baffle plate
(21) O-ring
(22) Oil strainer
(23) Cylinder block lower
(24) Oil level gauge guide
(25) Oil pan
(26) O-ring
(27) Drain plug gasket
(28) Drain plug
(29) Gasket
(30) Oil filler cap
(31) Seal
(32) O-ring
(33) Gasket
(34) Oil level gauge
(35) Plug
(36) Oil cooler hose A
(37) Clip
(38) Oil cooler pipe stay
(39) O-ring
(40) O-ring
(41) Oil level switch
(42) O-ring
(43) Oil drain pipe
(44) Scavenge pump
(45) Oil cooler hose B

Tightening torque:N·m (kgf-m, ft-lb)	
T1:	***5 (0.5, 3.7)***
T2:	***5.4 (0.6, 4.0)***
T3:	***6.4 (0.7, 4.7)***
T4:	***10 (1.0, 7.4)***
T5:	***16 (1.6, 11.8)***
T6:	***25 (2.5, 18.4)***
T7:	***41.7 (4.3, 30.8)***
T8:	***44 (4.5, 32.5)***
T9:	***54 (5.5, 39.8)***
T10:	***69 (7.0, 50.9)***

C: CAUTION

- Wear appropriate work clothing, including a cap, protective goggles and protective shoes when performing any work.
- Remove contamination including dirt and corrosion before removal, installation or disassembly.
- Keep the disassembled parts in order and protect them from dust and dirt.
- Before removal, installation or disassembly, be sure to clarify the failure. Avoid unnecessary removal, installation, disassembly and replacement.
- Vehicle components are extremely hot after driving. Be wary of receiving burns from heated parts.
- Be sure to tighten fasteners including bolts and nuts to the specified torque.
- Place shop jacks or rigid racks at the specified points.
- Before disconnecting connectors of sensors or units, be sure to disconnect the ground cable from battery.
- If the engine oil is spilt over exhaust pipe or the under cover, wipe it off with cloth to avoid emitting smoke or causing a fire.
- Prepare a container and cloth to prevent scattering of fuels when performing work where oil can be spilled. If the oil spills, wipe it off immediately to prevent from penetrating into floor or flowing out for environmental protection.
- Follow all government and local regulations concerning disposal of refuse when disposing of oil.

GETtheMANUALS.org

D: PREPARATION TOOL

1. SPECIAL TOOL

ILLUSTRATION	TOOL NUMBER	DESCRIPTION	REMARKS
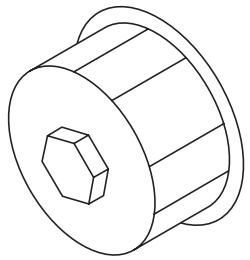 ST18332AA000	18332AA000	OIL FILTER WRENCH	Used for removing and installing black oil filter (outer diameter: 68 mm (2.68 in)).
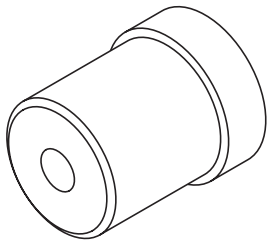 ST-499587100	499587100	OIL SEAL INSTALLER	Used for installing oil pump oil seal.

2. GENERAL TOOL

TOOL NAME	REMARKS
Oil filter wrench (65/67 mm 14 flutes)	Used for removing and installing blue oil filter (outer diameter: 67.4 mm (2.65 in)).
Circuit tester	Used for measuring resistance and voltage.

GETthemanuals.org

2. Oil Pressure System

A: WIRING DIAGRAM

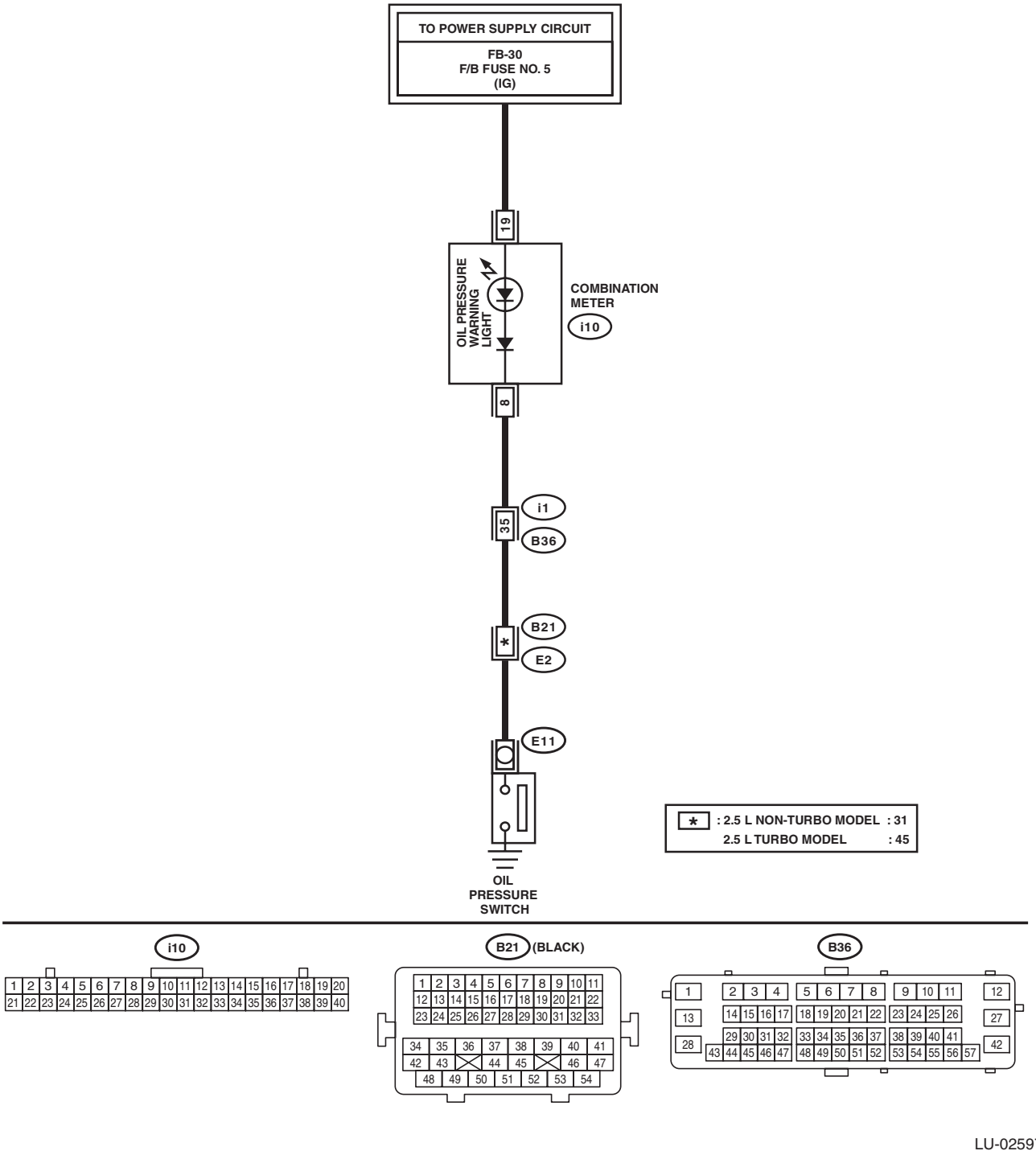

LU-02597

GETtheMANUALS.org

B: INSPECTION

	Step	Check	Yes	No
1	**CHECK COMBINATION METER.** 1) Turn the ignition switch to ON. (engine OFF) 2) Check the warning light in the combination meter.	Does the warning light illuminate?	Go to step **2**.	Repair or replace the combination meter. <Ref. to IDI-11, INSPECTION, Combination Meter System.>
2	**CHECK HARNESS CONNECTOR BETWEEN COMBINATION METER AND OIL PRESSURE SWITCH.** 1) Turn the ignition switch to OFF. 2) Disconnect the connector from oil pressure switch. 3) Turn the ignition switch to ON. 4) Measure the voltage of harness between oil pressure switch connector and chassis ground. ***Connector & terminal*** ***(E11) No. 1 (+) — Chassis ground (–):***	Is the voltage 10 V or more?	Replace the oil pressure switch. <Ref. to LU(H4SO)-25, Oil Pressure Switch.>	Go to step **3**.
3	**CHECK COMBINATION METER.** 1) Turn the ignition switch to OFF. 2) Remove the combination meter. 3) Measure the resistance of combination meter. ***Terminals*** ***No. 8 — No. 19:***	Is the resistance less than 10 Ω?	Repair the harness and connector. NOTE: In this case, repair the following item: • Open circuit of harness between combination meter and oil pressure switch • Poor contact of combination meter connector • Poor contact of oil pressure switch connector • Poor contact of coupling connector	Repair or replace the combination meter. <Ref. to IDI-11, INSPECTION, Combination Meter System.>

GETthemanuals.org

3. Engine Oil

A: INSPECTION

CAUTION:
If the engine oil is spilt over exhaust pipe or the under cover, wipe it off with cloth to avoid emitting smoke or causing a fire.

1) Park the vehicle on a level surface.
2) Remove the oil level gauge and wipe away the oil.
3) Reinsert the oil level gauge all the way. Be sure that the oil level gauge is correctly inserted and properly orientated.
4) Pull out the oil level gauge again, and check the oil level. If the engine oil level is below “L” line, check for oil leakage from engine and add oil to bring the level up to “F” line.
5) Start the engine to circulate the oil in engine room.
6) After turning off the engine, wait a few minutes for the oil to return to the oil pan before checking the level.

NOTE:
- Just after driving or while the engine is warm, engine oil level shows in the range between the “F” line and the notch mark. This is caused by thermal expansion of engine oil.
- To prevent overfilling of engine oil, do not add oil above “F” line when the engine is cold.
- As the oil level gauge is used for daily maintenance, “F” line and “L” line is set assuming that the engine is cold.

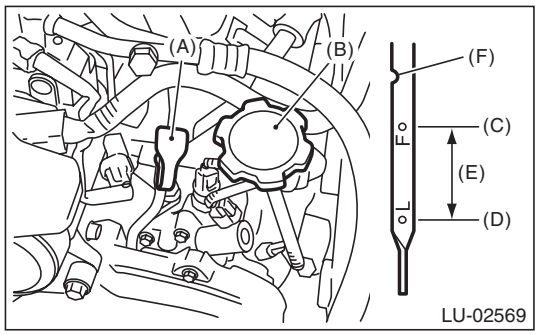

(A) Oil level gauge
(B) Oil filler cap
(C) “F” line
(D) “L” line
(E) Approx. 1.0 ℓ (1.1 US qt, 0.9 Imp qt)
(F) Notch mark

B: REPLACEMENT

CAUTION:
If the engine oil is spilt over exhaust pipe or the under cover, wipe it off with cloth to avoid emitting smoke or causing a fire.

1) Open the oil filler cap for quick draining of engine oil.
2) Lift up the vehicle.
3) Remove the service hole cover of the under cover. (Large under cover model)

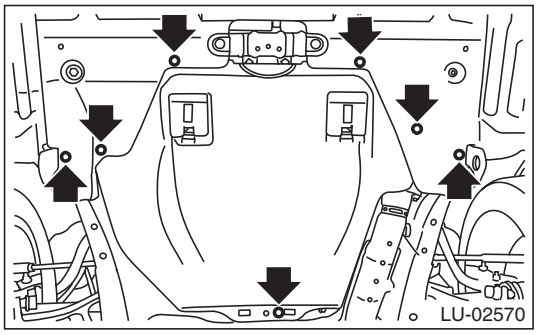

4) Drain engine oil by loosening the drain plug.

NOTE:
Prepare the container for draining of engine oil.
- Models with small and medium size under covers

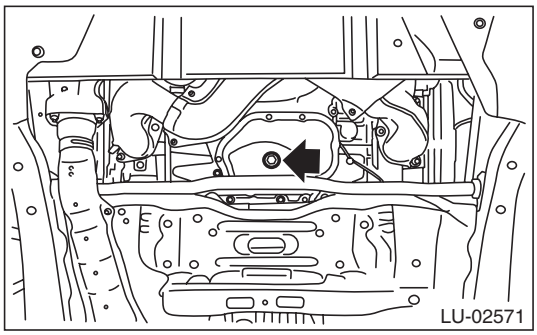

- Models with large under cover

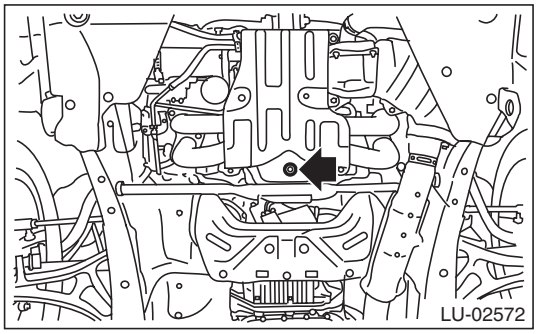

GETthemanuals.org

5) After draining the engine oil, tighten the engine oil drain plug.

NOTE:
Use a new drain plug gasket.

Tightening torque:
41.7 N·m (4.3 kgf-m, 30.8 ft-lb)

- Models with small and medium size under covers

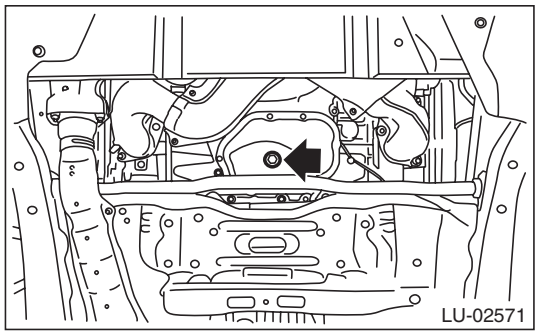

- Models with large under cover

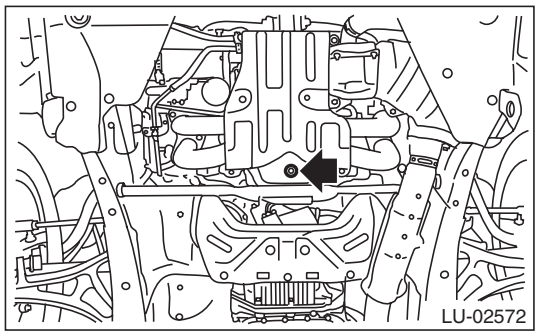

6) Install the service hole cover of the under cover. (Large under cover model)

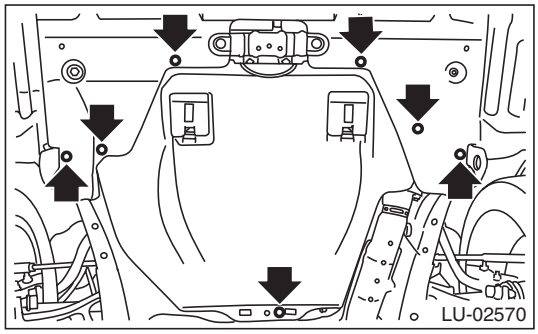

7) Lower the vehicle.

8) Select engine oil of adequate quality and viscosity and fill it through the oil filler duct to the “F” line on the oil level gauge. Make sure that the vehicle is parked on a level surface when checking oil level.

Recommended oil:
Refer to “SPECIFICATION” for recommended oil. <Ref. to LU(H4SO)-2, SPECIFICATION, General Description.>

Engine oil capacity:
Refer to “SPECIFICATION” for engine oil capacity. <Ref. to LU(H4SO)-2, SPECIFICATION, General Description.>

9) Close the oil filler cap.
10) Start the engine to circulate the oil in engine room.
11) After stopping the engine, recheck the oil level. If necessary, add engine oil up to the “F” line on oil level gauge.

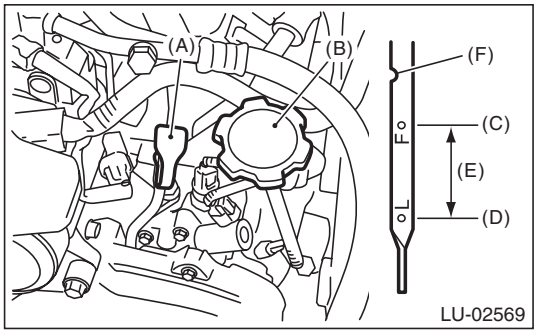

(A) Oil level gauge
(B) Oil filler cap
(C) “F” line
(D) “L” line
(E) Approx. 1.0 ℓ (1.1 US qt, 0.9 Imp qt)
(F) Notch mark

GETthemanuals.org

4. Oil Pump

A: REMOVAL

1) Remove the collector cover. (turbo model)
2) Disconnect the ground cable from battery.

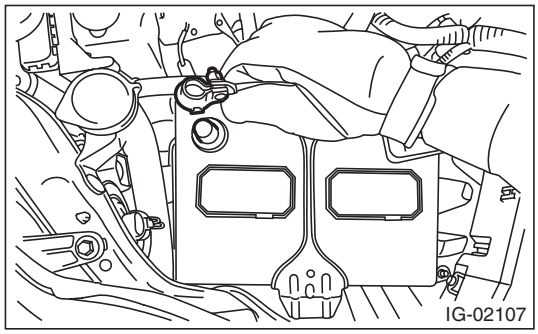

3) Remove the radiator. <Ref. to CO(H4SO)-20, REMOVAL, Radiator.> <Ref. to CO(H4DOTC)-21, REMOVAL, Radiator.>
4) Remove the crankshaft position sensor. <Ref. to FU(H4SO)-25, REMOVAL, Crankshaft Position Sensor.> <Ref. to FU(H4DOTC)-35, REMOVAL, Crankshaft Position Sensor.>
5) Remove the water pump. <Ref. to CO(H4SO)-16, REMOVAL, Water Pump.> <Ref. to CO(H4DOTC)-16, REMOVAL, Water Pump.>
6) Remove the crank sprocket. <Ref. to ME(H4SO)-54, REMOVAL, Crank Sprocket.> <Ref. to ME(H4DOTC)-62, REMOVAL, Crank Sprocket.>
7) Remove the bolts which install oil pump onto cylinder block.

NOTE:
When disassembling and checking the oil pump, loosen the relief valve plug before removing the oil pump.

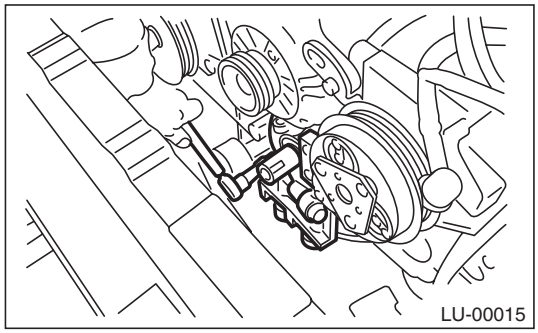

8) Remove the oil pump by using flat tip screwdriver.

CAUTION:
Be careful not to scratch the mating surface of the cylinder block and oil pump.

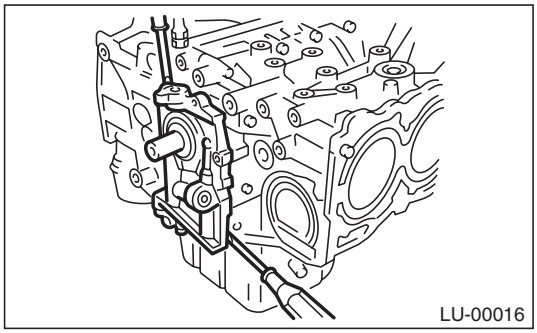

9) Remove the front oil seal from the oil pump.

B: INSTALLATION

1) Using the ST, install the front oil seal.
ST 499587100 OIL SEAL INSTALLER

NOTE:
Use a new front oil seal.

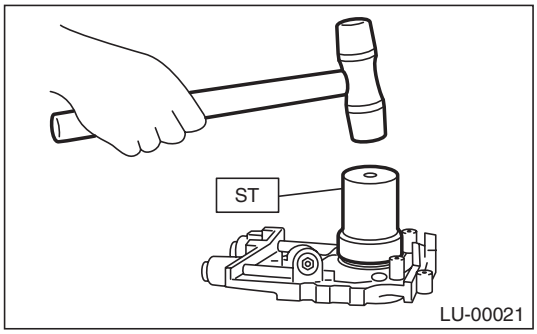

2) Apply liquid gasket to the mating surfaces of oil pump.

NOTE:
Install within 5 min. after applying liquid gasket.

Liquid gasket:
THREE BOND 1217G (Part No. K0877Y0100) or equivalent

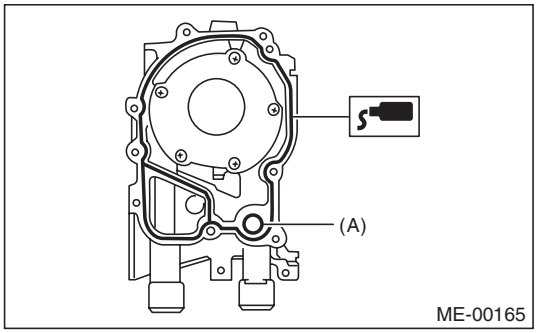

(A) O-ring

GETthemanuals.org

3) Apply a coat of engine oil to the inside of front oil seal.

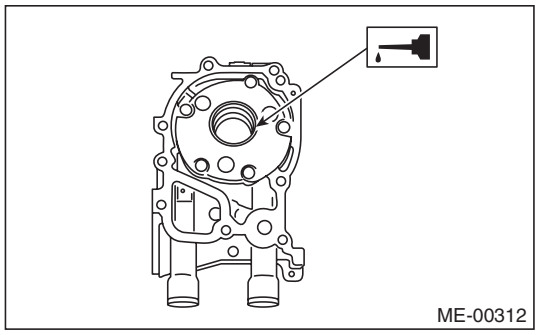

4) Install the oil pump to cylinder block.

CAUTION:
- **Be careful not to damage the front oil seal during installation.**
- **Make sure the front oil seal lip is not folded.**

NOTE:
- Align the flat surface of oil pump's inner rotor with that of crankshaft before installation.
- Use new O-rings.
- Do not forget to assemble O-rings.

5) Apply liquid gasket to the three bolts thread shown in figure. (when reusing bolts)

Liquid gasket:
THREE BOND 1324 (Part No. 004403042) or equivalent

Tightening torque:
6.4 N·m (0.7 kgf-m, 4.7 ft-lb)

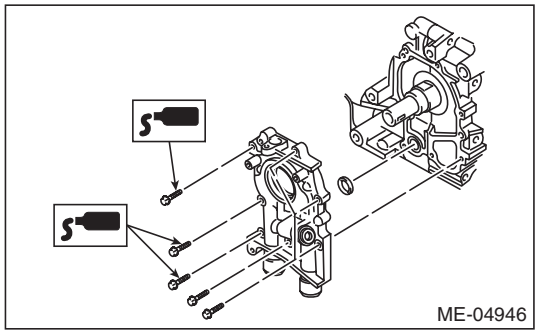

6) Install the crank sprocket. <Ref. to ME(H4SO)-54, INSTALLATION, Crank Sprocket.> <Ref. to ME(H4DOTC)-62, INSTALLATION, Crank Sprocket.>
7) Install the water pump. <Ref. to CO(H4SO)-16, INSTALLATION, Water Pump.> <Ref. to CO(H4DOTC)-17, INSTALLATION, Water Pump.>
8) Install the crankshaft position sensor. <Ref. to FU(H4SO)-25, INSTALLATION, Crankshaft Position Sensor.> <Ref. to FU(H4DOTC)-35, INSTALLATION, Crankshaft Position Sensor.>
9) Install the radiator. <Ref. to CO(H4SO)-21, INSTALLATION, Radiator.> <Ref. to CO(H4DOTC)-22, INSTALLATION, Radiator.>
10) Connect the battery ground terminal.

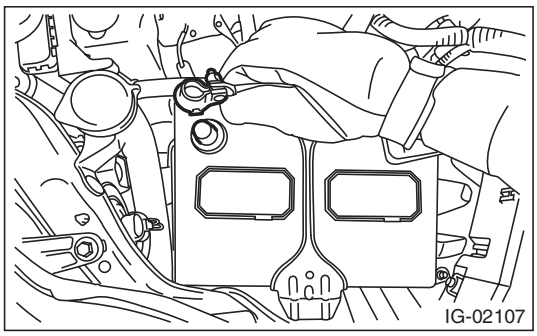

C: DISASSEMBLY

Remove the screw which secures oil pump cover and then disassemble oil pump. Inscribe alignment marks on the inner rotor and outer rotor so that they can be replaced in their original positions during reassembly.

NOTE:
Before disassembling the oil pump, remove the relief valve.

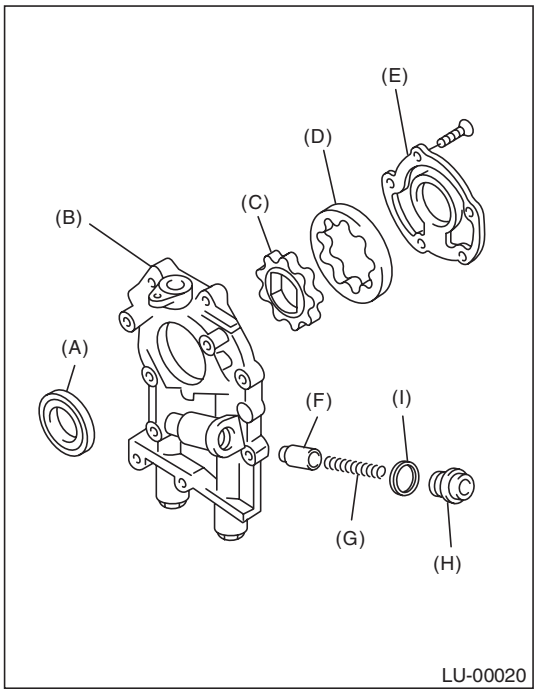

(A) Front oil seal
(B) Oil pump case
(C) Inner rotor
(D) Outer rotor
(E) Oil pump cover
(F) Relief valve
(G) Relief valve spring
(H) Plug
(I) Gasket

GETtheMANUALS.org

D: ASSEMBLY

1) Using the ST, install the front oil seal.
ST 499587100 OIL SEAL INSTALLER

NOTE:
Use a new front oil seal.

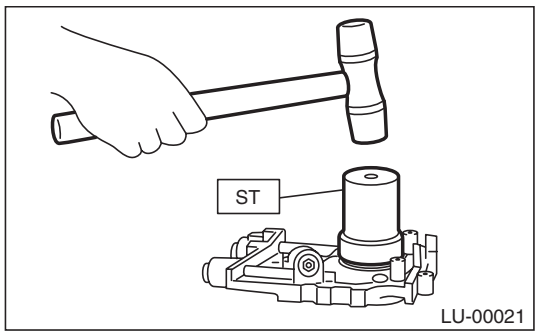

2) Apply a coat of engine oil to the inner rotor and outer rotor.
3) Install the inner rotor and outer rotor.
4) Assemble the oil relief valve and install relief valve spring and plug.

NOTE:
Use a new gasket.

5) Install the oil pump cover.

Tightening torque:
T1: 5.4 N·m (0.6 kgf-m, 4.0 ft-lb)
T2: 44 N·m (4.5 kgf-m, 32.5 ft-lb)

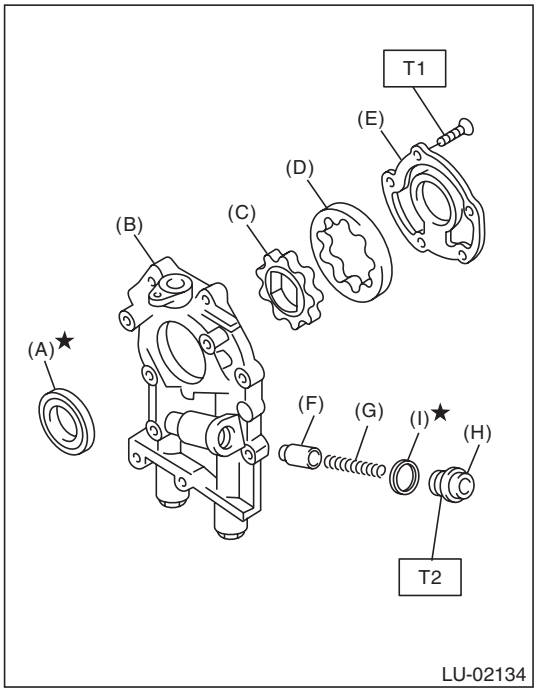

(A) Front oil seal
(B) Oil pump case
(C) Inner rotor
(D) Outer rotor
(E) Oil pump cover
(F) Relief valve
(G) Relief valve spring
(H) Plug
(I) Gasket

GETtheMANUALS.org

E: INSPECTION

1. TIP CLEARANCE

Measure the tip clearance of rotors. If the clearance is out of standard, replace the rotors as a set.

Tip clearance between inner and outer rotors:
Standard
0.04 — 0.14 mm (0.0016 — 0.0055 in)

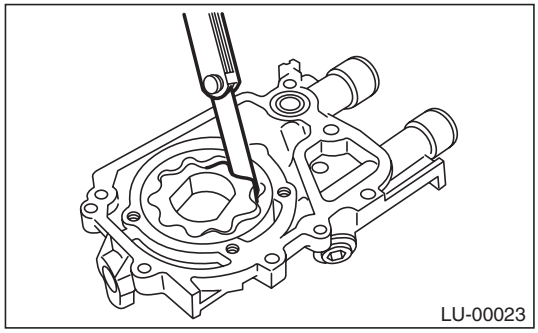

2. CASE CLEARANCE

Measure the clearance between outer rotor and oil pump case. If clearance is out of standard, replace the oil pump case.

Case clearance between outer rotor and pump case:
Standard
0.10 — 0.175 mm (0.0039 — 0.0069 in)

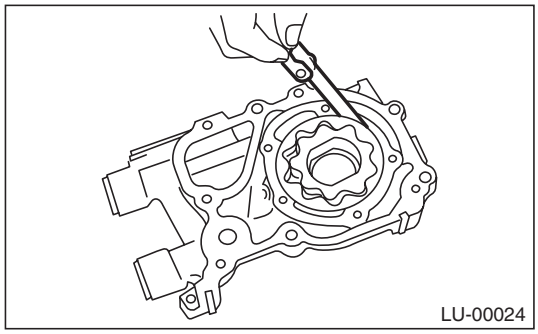

3. SIDE CLEARANCE

Measure the gap between the inner rotor and the oil pump case to measure the clearance between the inner rotor and the oil pump cover as shown in the figure. If clearance is out of standard, replace the rotor or the oil pump case.

Side clearance between inner rotor and pump case:
Standard
0.02 — 0.07 mm (0.0008 — 0.0028 in)

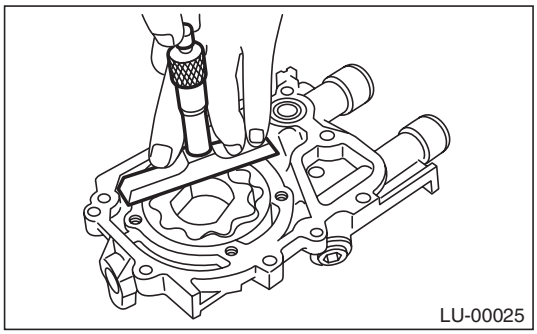

4. OIL RELIEF VALVE

Check the valve for assembly condition and damage, and the relief valve spring for damage and deterioration. Replace the parts if defective.

Relief valve spring:
Free length
73.7 mm (2.902 in)
Installed length
54.7 mm (2.154 in)
Load when installed
93.1 N (9.49 kgf, 20.93 lbf)

5. OIL PUMP CASE

Check for worn shaft hole, clogged oil passage, worn rotor chamber, cracks and other faults.

6. FRONT OIL SEAL

Check the front oil seal lips for deformation and hardening, wear.

GETthemanuals.org

5. Oil Pan and Strainer

A: REMOVAL

1. OIL PAN

1) Disconnect the ground cable from battery.

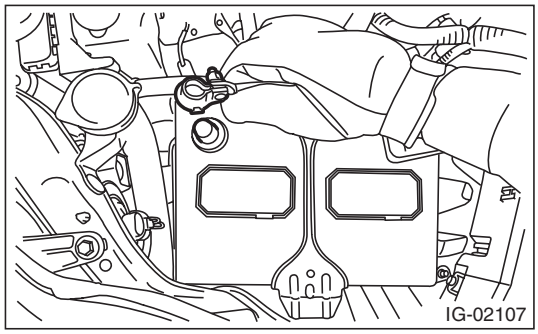

2) Lift up the vehicle.
3) Remove the under cover. <Ref. to EI-35, REMOVAL, Front Under Cover.>
4) Drain the engine oil. <Ref. to LU(H4SO)-13, REPLACEMENT, Engine Oil.>
5) Remove the front exhaust pipe. <Ref. to EX(H4SO)-5, REMOVAL, Front Exhaust Pipe.> <Ref. to EX(H4DOTC)-5, REMOVAL, Front Exhaust Pipe.>
6) Remove the bolts which secure the oil pan to the cylinder block lower.

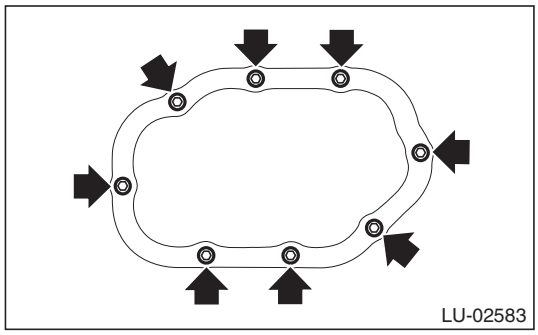

7) Insert an oil pan cutter blade into the gap between cylinder block lower and oil pan, and remove the oil pan.

CAUTION:
Do not use a screwdriver or similar tool in place of oil pan cutter.

2. CYLINDER BLOCK LOWER

1) Remove the collector cover. (turbo model)
2) Disconnect the ground cable from battery.

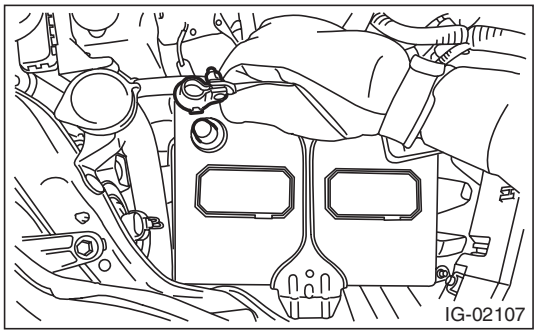

3) Remove the cover (A) and clip (B) from air intake boot assembly. (non-turbo model)

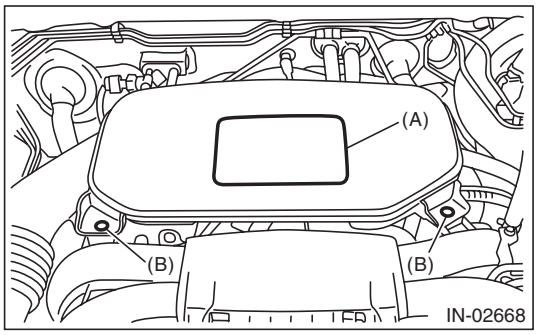

4) Loosen the clamp (A) which connects the air intake boot assembly and air cleaner case. (non-turbo model)
5) Loosen the clamp (B) which connects the air intake boot assembly and throttle body. (non-turbo model)

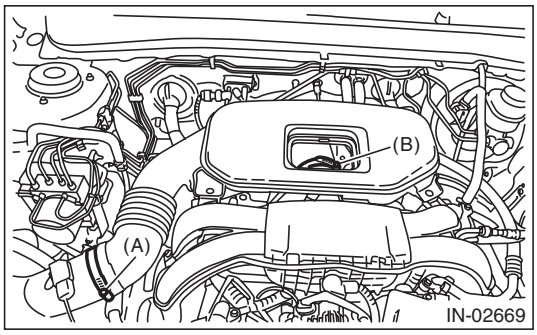

GETthemanuals.org

6) Remove the air intake boot from the throttle body, and move it to the left side wheel apron. (non-turbo model)

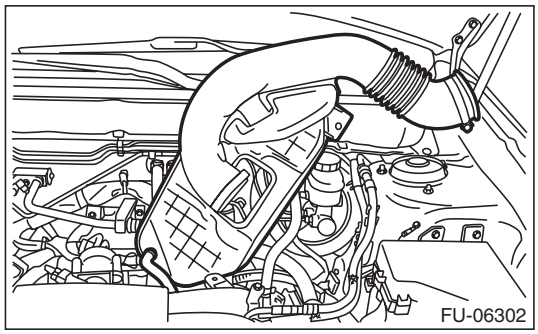

7) Remove the intercooler. (turbo model) <Ref. to IN(H4DOTC)-17, REMOVAL, Intercooler.>

8) Support the engine with a lifting device and wire ropes.

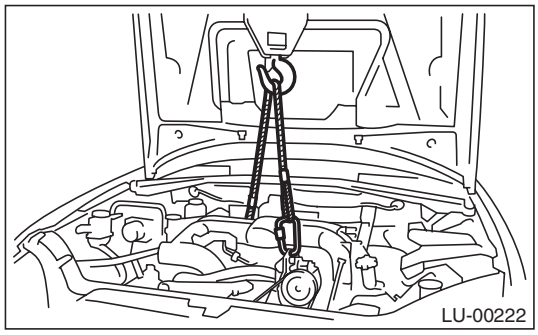

9) Lift up the vehicle.

CAUTION:
When lifting up the vehicle, raise up wire ropes at the same time.

10) Remove the oil pan. <Ref. to LU(H4SO)-19, OIL PAN, REMOVAL, Oil Pan and Strainer.>

11) Remove the engine mounting. <Ref. to ME(H4SO)-39, REMOVAL, Engine Mounting.> <Ref. to ME(H4DOTC)-38, REMOVAL, Engine Mounting.>

12) Remove the bolt which secures the cylinder block lower to the cylinder block.

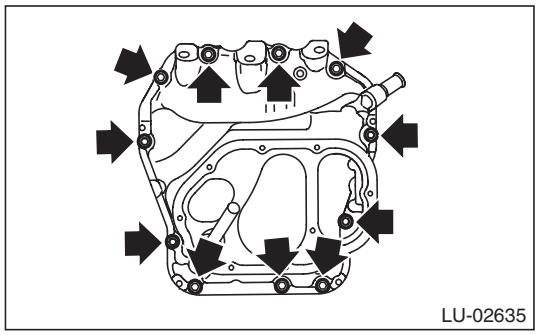

13) Use a flat tip screwdriver through the gap between the cylinder block and cylinder block lower to remove the cylinder block lower.

CAUTION:
Insert the flat tip screwdriver to the position shown in the figure, and be careful not to damage the mating surface of the cylinder block and cylinder block lower.

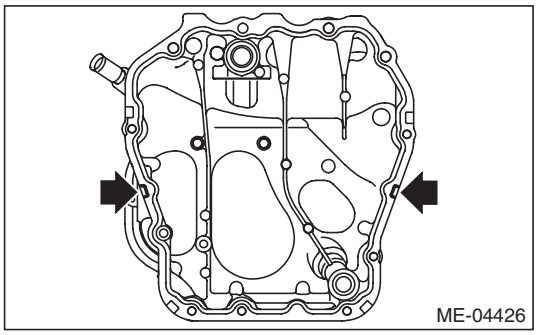

14) Remove the oil strainer from the cylinder block lower.

15) Remove the oil level switch from the cylinder block lower. <Ref. to LU(H4SO)-37, REMOVAL, Oil Level Switch.>

16) Remove the baffle plate.

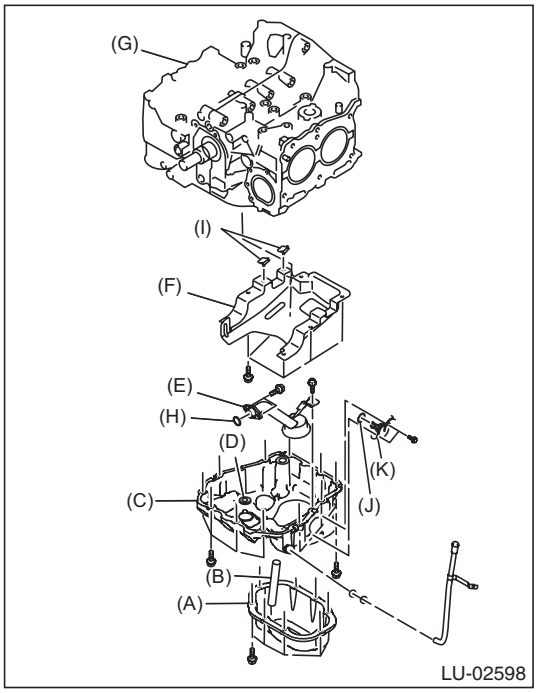

(A) Oil pan
(B) Oil drain pipe
(C) Cylinder block lower
(D) O-ring
(E) Oil strainer
(F) Baffle plate
(G) Cylinder block
(H) O-ring
(I) Seal
(J) O-ring
(K) Oil level switch

GETthemanuals.org

B: INSTALLATION

1. OIL PAN

NOTE:
Before installing the oil pan, clean the mating surface of oil pan and cylinder block.

1) Apply liquid gasket to the mating surfaces of oil pan, and install the oil pan.

NOTE:
Install within 5 min. after applying liquid gasket.

Liquid gasket:
THREE BOND 1217G (Part No. K0877Y0100) or equivalent

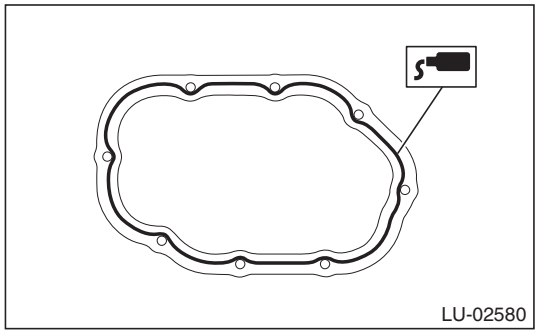

2) Tighten the bolts to install the oil pan to the cylinder block lower.

Tightening torque:
5 N·m (0.5 kgf-m, 3.7 ft-lb)

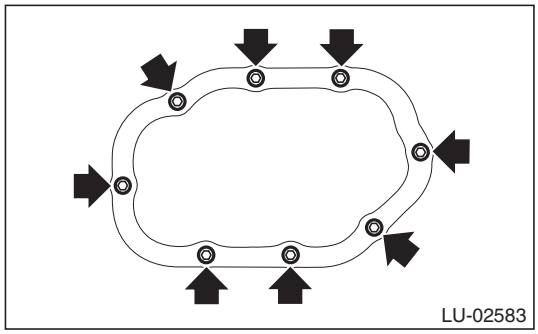

3) Install the front exhaust pipe. <Ref. to EX(H4SO)-6, INSTALLATION, Front Exhaust Pipe.> <Ref. to EX(H4DOTC)-7, INSTALLATION, Front Exhaust Pipe.>

4) Install the under cover. <Ref. to EI-35, INSTALLATION, Front Under Cover.>

5) Lower the vehicle.

6) Connect the battery ground terminal.

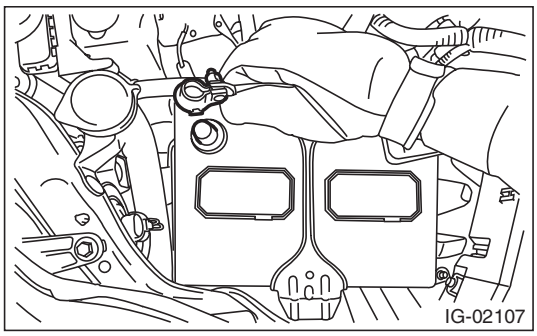

7) Refill the engine oil. <Ref. to LU(H4SO)-13, REPLACEMENT, Engine Oil.>

2. CYLINDER BLOCK LOWER

NOTE:
Before installing the cylinder block lower, clean the mating surface of cylinder block lower and cylinder block.

1) Make sure that the seals (A) are installed securely on the baffle plate in a direction as shown in the figure below.

NOTE:
Use a new seal.

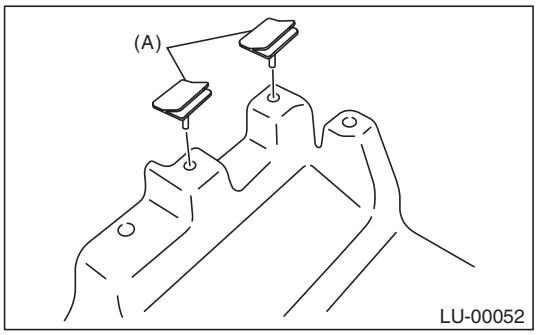

2) Install the baffle plate.

Tightening torque:
6.4 N·m (0.7 kgf-m, 4.7 ft-lb)

GETthemanuals.org

3) Install the oil drain pipe to the cylinder block lower.

(1) Draw a reference line (A) on the oil drain pipe using a marker as shown in the figure.

Oil drain pipe protrusion L:
90.0 mm (3.54 in)

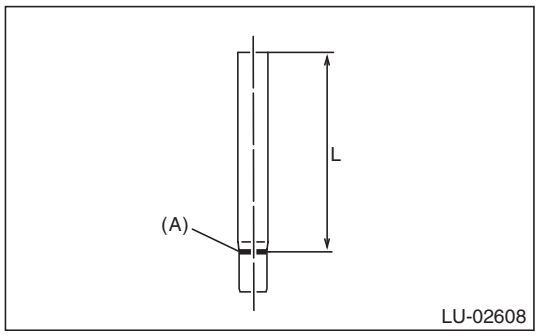

(2) Insert the oil drain pipe up to the reference line (A) using a plastic hammer.

NOTE:
Be careful not to deform the oil drain pipe.

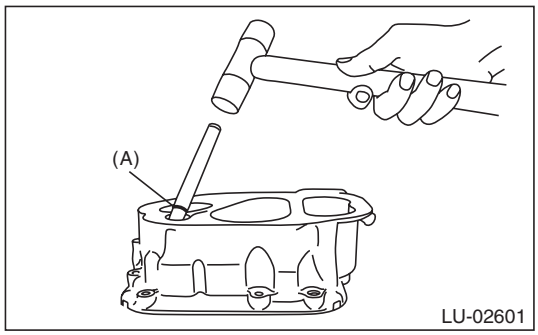

(3) Measure the oil drain pipe protrusion “L” and check that the value is within the specified range.

Oil drain pipe protrusion L:
Standard
89.0 — 91.0 mm (3.50 — 3.58 in)

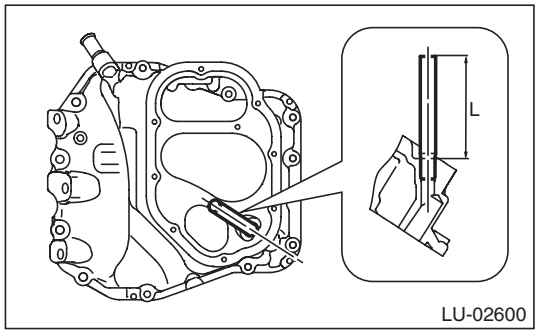

4) Install the oil level switch to the cylinder block lower. <Ref. to LU(H4SO)-38, INSTALLATION, Oil Level Switch.>

5) Install the oil strainer to the cylinder block lower.

NOTE:
Use new O-rings.

Tightening torque:
10 N·m (1.0 kgf-m, 7.4 ft-lb)

6) Install the O-ring to the cylinder block lower.

NOTE:
- Use new O-rings.
- Install the O-ring with the metal side facing upward.

7) Apply liquid gasket to the mating surfaces of the oil pan, and install the cylinder block lower.

CAUTION:
Be careful not to apply any liquid gasket to the O-ring (A).

NOTE:
Install within 5 min. after applying liquid gasket.

Liquid gasket:
THREE BOND 1217G (Part No. K0877Y0100) or equivalent

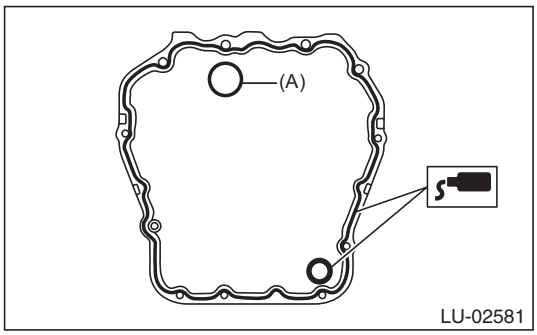

(A) O-ring

GETthemanuals.org

8) Tighten the bolts to install the cylinder block lower to the cylinder block.

Tightening torque:
T1: 5 N·m (0.5 kgf-m, 3.7 ft-lb)
T2: 6.4 N·m (0.7 kgf-m, 4.7 ft-lb)
T3: 10 N·m (1.0 kgf-m, 7.4 ft-lb)
T4: 16 N·m (1.6 kgf-m, 11.8 ft-lb)

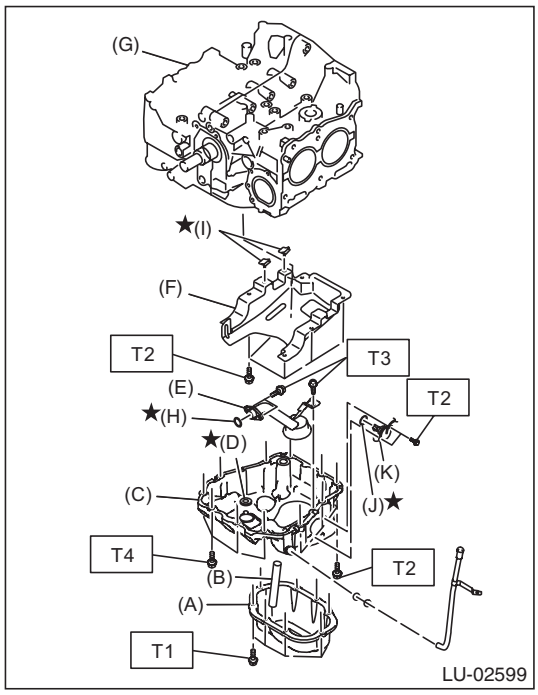

(A) Oil pan
(B) Oil drain pipe
(C) Cylinder block lower
(D) O-ring
(E) Oil strainer
(F) Baffle plate
(G) Cylinder block
(H) O-ring
(I) Seal
(J) O-ring
(K) Oil level switch

9) Install the engine mount. <Ref. to ME(H4SO)-40, INSTALLATION, Engine Mounting.> <Ref. to ME(H4DOTC)-39, INSTALLATION, Engine Mounting.>
10) Install the oil pan. <Ref. to LU(H4SO)-21, OIL PAN, INSTALLATION, Oil Pan and Strainer.>
11) Lower the vehicle.

CAUTION:
When lowering the vehicle, lower the lift up device and wire ropes at the same time.

12) Remove the lifting device and wire ropes.

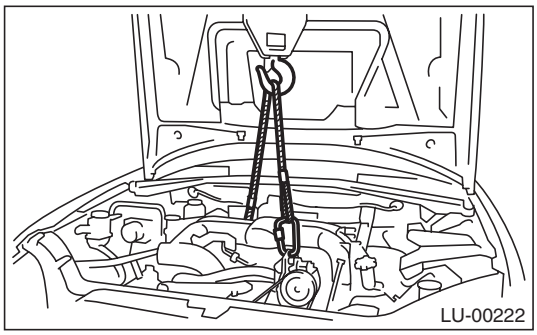

13) Install the intercooler. (turbo model) <Ref. to IN(H4DOTC)-18, INSTALLATION, Intercooler.>
14) Install the air intake boot assembly. (non-turbo model)

NOTE:
Align the clamp hole with the protrusion of the air intake boot assembly.

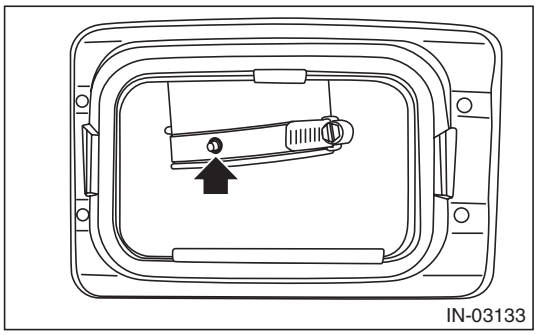

Tightening torque:
Clamp (A), (B)
3 N·m (0.3 kgf-m, 2.2 ft-lb)

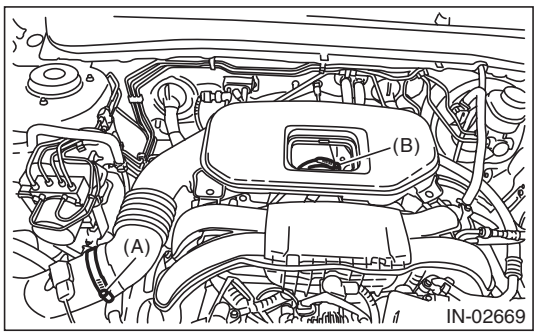

GETthemanuals.org

15) Connect the battery ground terminal.

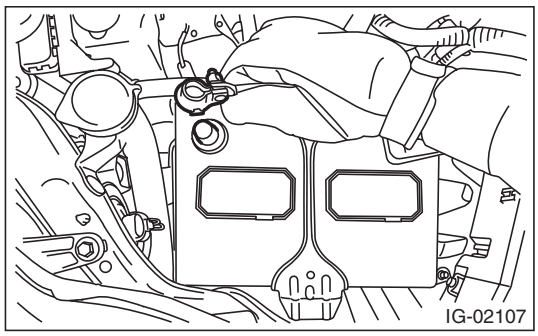

16) Install the collector cover. (turbo model)
17) Refill the engine oil. <Ref. to LU(H4SO)-13, REPLACEMENT, Engine Oil.>

C: INSPECTION

Check that the oil pan, oil strainer and baffle plate do not have deformation, cracks or damage.

GETtheMANUALS.org

6. Oil Pressure Switch

A: REMOVAL

1) Disconnect the ground cable from battery.

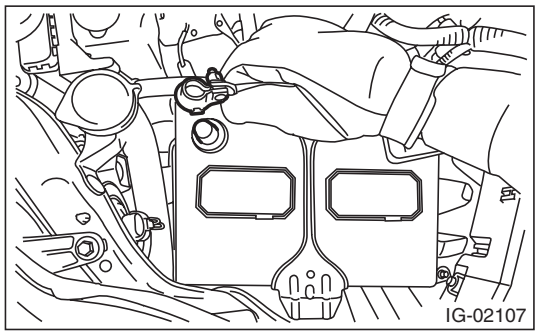

2) Remove the generator. <Ref. to SC(H4SO)-18, REMOVAL, Generator.>

3) Disconnect the terminal from oil pressure switch.

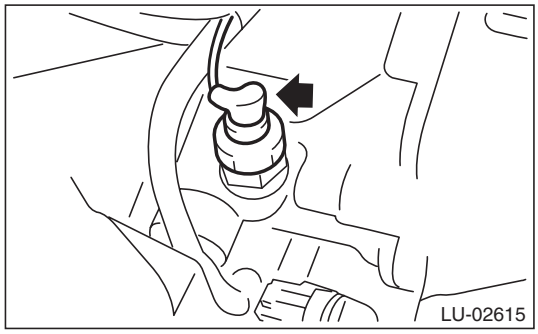

4) Remove the oil pressure switch.

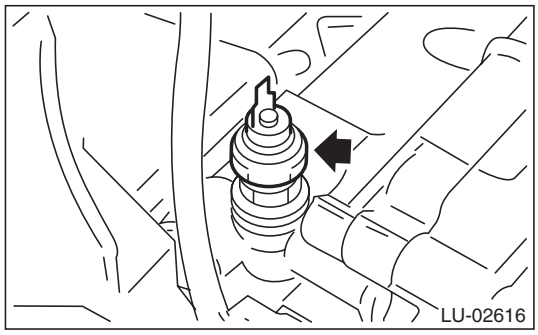

B: INSTALLATION

1) Apply liquid gasket to the oil pressure switch threads.

Liquid gasket:
THREE BOND 1324 (Part No. 004403042) or equivalent

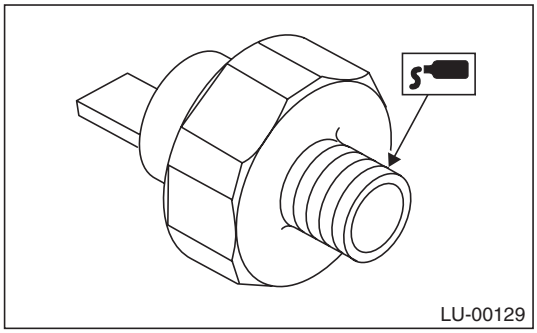

2) Install the oil pressure switch to cylinder block.

Tightening torque:
25 N·m (2.5 kgf-m, 18.4 ft-lb)

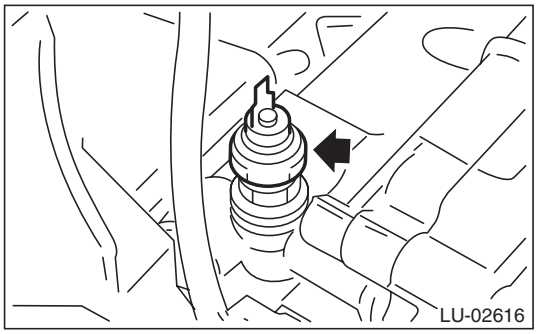

3) Connect the terminal to the oil pressure switch.

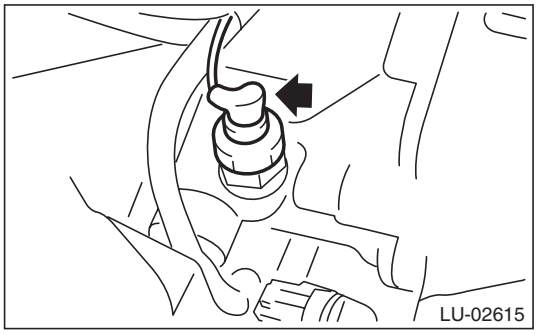

4) Install the generator. <Ref. to SC(H4SO)-18, INSTALLATION, Generator.>

GETthemanuals.org

5) Connect the battery ground terminal.

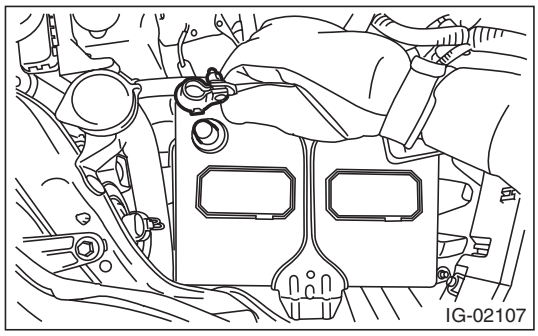

C: INSPECTION

1) Check that the oil pressure switch does not have deformation, cracks or damage.
2) Check the oil pressure switch installation portion for oil leakage and oil seepage.

GETthemanuals.org

7. Engine Oil Cooler

A: REMOVAL

CAUTION:
If engine oil is spilt onto the exhaust pipe, wipe it off with cloth to avoid emission of smoke or causing a fire.

NOTE:
Turbo model is equipped with engine oil cooler.

1) Lift up the vehicle.
2) Remove the under cover. <Ref. to EI-35, REMOVAL, Front Under Cover.>
3) Drain engine coolant. <Ref. to CO(H4DOTC)-14, DRAINING OF ENGINE COOLANT, REPLACEMENT, Engine Coolant.>
4) Remove the front exhaust pipe. <Ref. to EX(H4DOTC)-5, REMOVAL, Front Exhaust Pipe.>
5) Remove the engine oil filter. <Ref. to LU(H4SO)-36, REMOVAL, Engine Oil Filter.>
6) Remove the bolt (B) holding the oil cooler pipe (A) to the oil pump.
7) Remove the oil cooler pipe (A), oil cooler hose A (C) and oil cooler hose B (J).
8) Remove the oil cooler connector (D) and oil cooler (E).

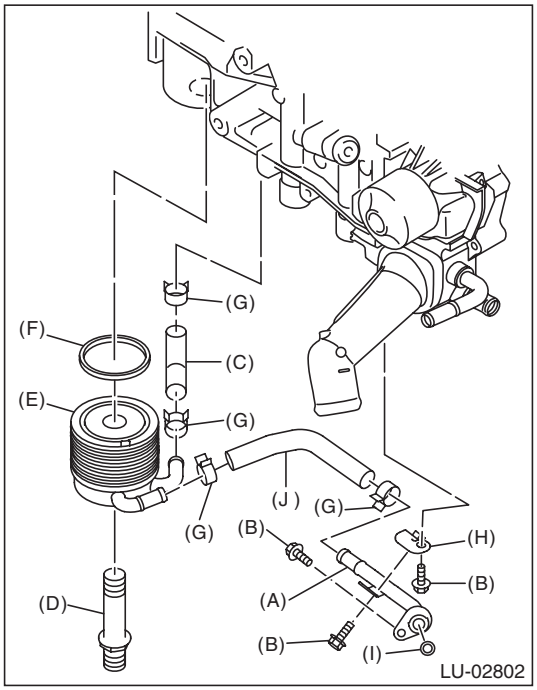

(A) Oil cooler pipe
(B) Bolt
(C) Oil cooler hose A
(D) Oil cooler connector
(E) Oil cooler
(F) Gasket
(G) Clip
(H) Oil cooler pipe stay
(I) O-ring
(J) Oil cooler hose B

GETtheMANUALS.org

B: INSTALLATION

Install in the reverse order of removal.

NOTE:
- Use new gaskets and O-rings.
- After installing, check the engine oil level and replenish it if necessary. <Ref. to LU(H4SO)-13, INSPECTION, Engine Oil.>
- After temporarily installing the oil cooler pipe, tighten the bolts in alphabetical order as shown below.

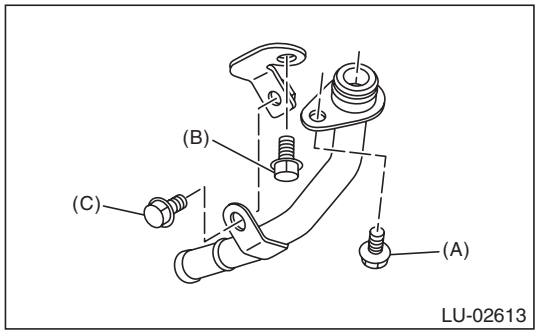

Tightening torque:
T1: 6.4 N·m (0.7 kgf-m, 4.7 ft-lb)
T2: 54 N·m (5.5 kgf-m, 39.8 ft-lb)

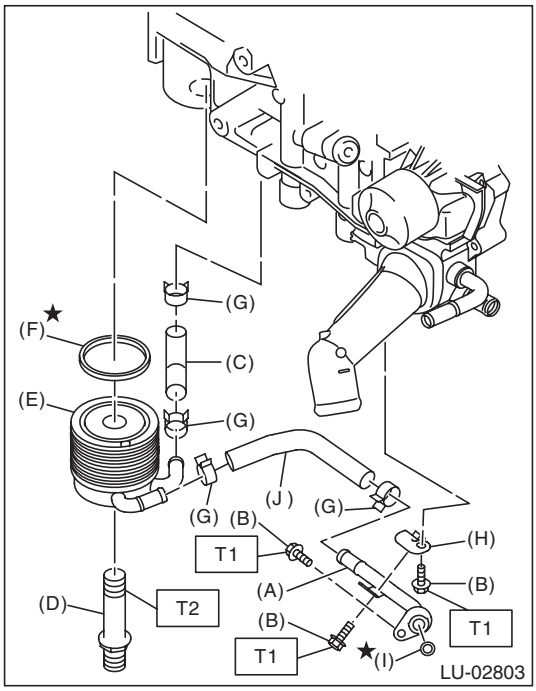

(A) Oil cooler pipe
(B) Bolt
(C) Oil cooler hose A
(D) Oil cooler connector
(E) Oil cooler
(F) Gasket
(G) Clip
(H) Oil cooler pipe stay
(I) O-ring
(J) Oil cooler hose B

C: INSPECTION

1) Check that the engine oil cooler, oil cooler pipe and oil cooler connector do not have deformation, cracks or damage.
2) Make sure the oil cooler hoses are not cracked, damaged or loose.
3) Check the coolant paths for clogs while spraying compressed air.
4) Make sure the mating surfaces of the cylinder block do not have damage.

GETthemanuals.org

8. Oil Catch Tank

A: REMOVAL

For the removal procedures, refer to IN (H4DOTC) section. <Ref. to IN(H4DOTC)-23, REMOVAL, Oil Catch Tank.>

B: INSTALLATION

For the installation procedures, refer to IN (H4DOTC) section. <Ref. to IN(H4DOTC)-23, INSTALLATION, Oil Catch Tank.>

C: INSPECTION

For the inspection procedures, refer to IN (H4DOTC) section. <Ref. to IN(H4DOTC)-24, INSPECTION, Oil Catch Tank.>

GETtheMANUALS.org

9. Scavenge Pump

A: REMOVAL

CAUTION:
If engine oil is spilt onto the exhaust pipe, wipe it off with cloth to avoid emission of smoke or causing a fire.

NOTE:
The scavenge pump is installed on turbo models.
1) Lift up the vehicle.
2) Remove the under cover. <Ref. to EI-35, REMOVAL, Front Under Cover.>
3) Remove the union bolt (A) which fixes the oil pipe (C) to the scavenge pump (E).
4) Remove the bolt (D) which fixes the scavenge pump (E) to the cylinder head, and remove the scavenge pump using a flat tip screwdriver.

CAUTION:
Be careful not to damage the mating surfaces of the cylinder head and scavenge pump.

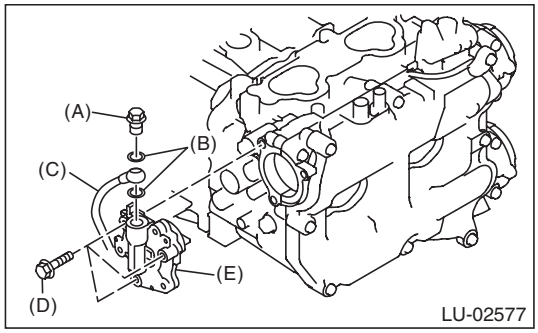

(A) Union bolt
(B) Gasket
(C) Oil pipe
(D) Bolt
(E) Scavenge pump

B: INSTALLATION

Install in the reverse order of removal.

CAUTION:
Do not start applying liquid gasket from (A) as shown in the following figure.

NOTE:
- Use a new gasket.
- Install within 5 min. after applying liquid gasket.

Liquid gasket:
THREE BOND 1217G (Part No. K0877Y0100) or equivalent

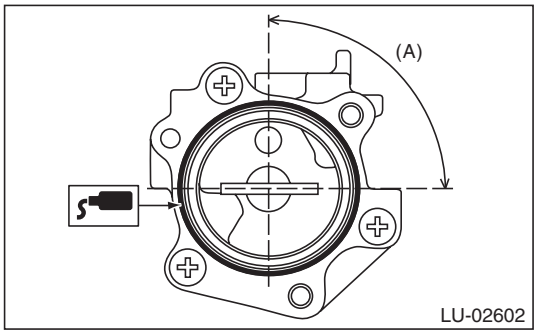

Tightening torque:
T1: 6.4 N·m (0.7 kgf-m, 4.7 ft-lb)
T2: 29 N·m (3.0 kgf-m, 21.4 ft-lb)

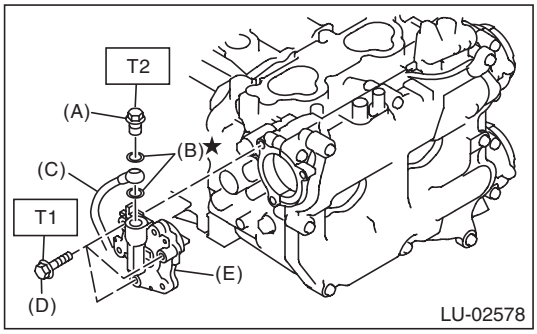

(A) Union bolt
(B) Gasket
(C) Oil pipe
(D) BOLT
(E) Scavenge pump

C: INSPECTION

1) Check that the scavenge pump and oil pipe have no deformation, cracks and other damages.
2) Check that the scavenge pump has no cracks, damage or loose part.

GETthemanuals.org

10. Oil Pipe

A: REMOVAL

NOTE:
Turbo model is equipped with oil pipe.
1) Remove the collector cover.
2) Disconnect the ground cable from battery.

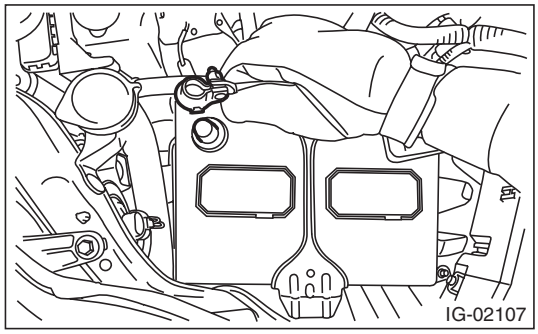

3) Remove the intercooler. <Ref. to IN(H4DOTC)-17, REMOVAL, Intercooler.>
4) Lift up the vehicle.
5) Remove the under cover. <Ref. to EI-35, REMOVAL, Front Under Cover.>
6) Remove the ground cable from the oil outlet pipe.
7) Disconnect the oil outlet hose from the oil outlet pipe.

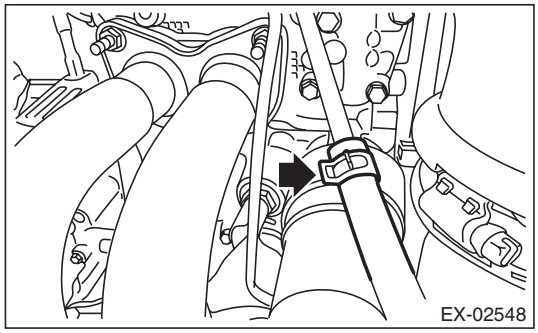

8) Remove oil inlet pipe B (B) from oil inlet pipe A (A), and remove the bolt which holds oil outlet pipe C (C) and oil inlet pipe A (A).

CAUTION:
In order to prevent damaging the oil inlet pipe, fix the section (a) shown in the figure when loosing the oil inlet pipe flare nut, and avoid the part from rotating together while loosening the nut.

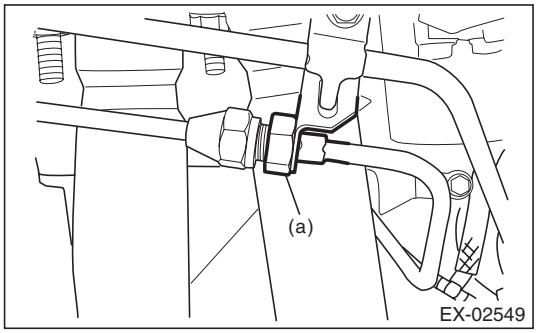

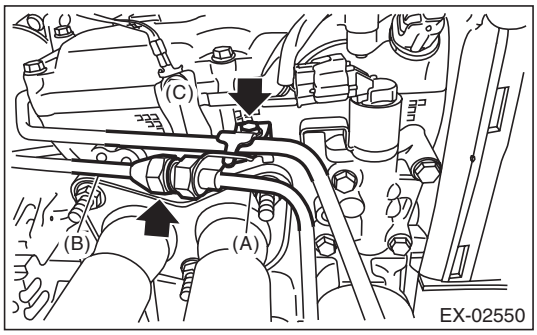

9) Lower the vehicle.
10) Remove the union bolt (B) securing the oil outlet pipe (A) from the scavenge pump.
11) Remove the bolts (C) and (D) securing the oil outlet pipe (A) to the cylinder head, and remove the oil outlet pipe (A).

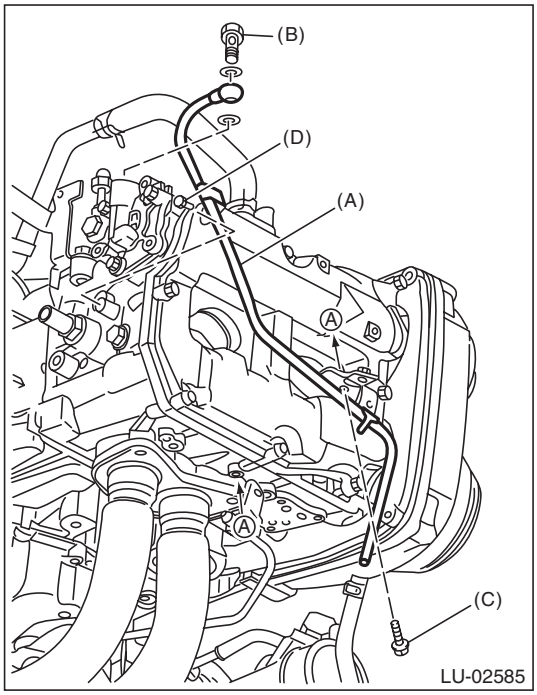

GETthemanuals.org

12) Remove the oil inlet pipe B (A) from the oil inlet pipe C (C).

CAUTION:
In order to avoid damaging the oil inlet pipe C (C), fix the section (a) shown in the figure so that it will not rotate together when loosening the flare nut of the oil inlet pipe B (A).

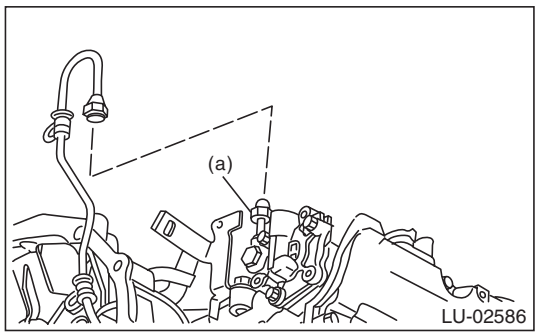

13) Remove the bolt (B) securing the oil inlet pipe B (A) to the cylinder head and stay, and remove the oil inlet pipe B (A).
14) Remove the union bolt (D) securing the oil inlet pipe C (C) to the cylinder head, and remove the oil inlet pipe C (C).

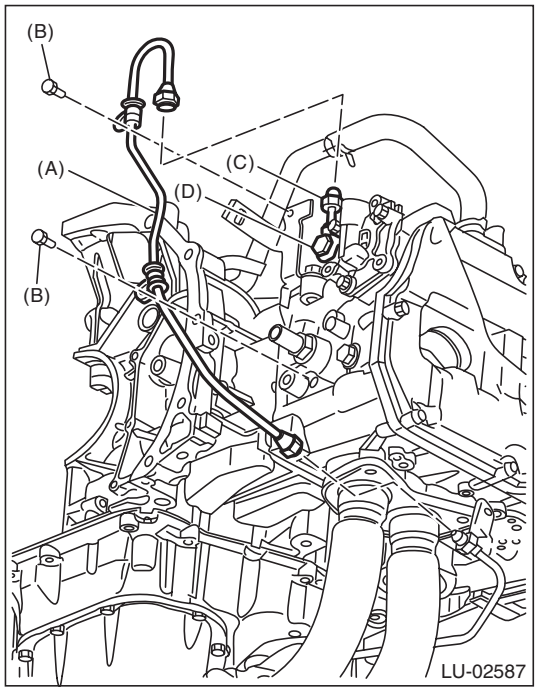

15) Remove the intake manifold. <Ref. to FU(H4DOTC)-18, REMOVAL, Intake Manifold.>
16) Remove the radiator main fan and radiator sub fan. <Ref. to CO(H4DOTC)-25, REMOVAL, Radiator Main Fan and Fan Motor.> <Ref. to CO(H4DOTC)-27, REMOVAL, Radiator Sub Fan and Fan Motor.>
17) Remove the V-belts. <Ref. to ME(H4DOTC)-42, REMOVAL, V-belt.>
18) Remove the crank pulley. <Ref. to ME(H4DOTC)-44, REMOVAL, Crank Pulley.>
19) Remove the timing belt cover. <Ref. to ME(H4DOTC)-46, REMOVAL, Timing Belt Cover.>
20) Remove the timing belt. <Ref. to ME(H4DOTC)-52, REMOVAL, Timing Belt.>
21) Remove the cam sprocket LH. <Ref. to ME(H4DOTC)-61, REMOVAL, Cam Sprocket.>
22) Remove the belt cover No. 2 LH.

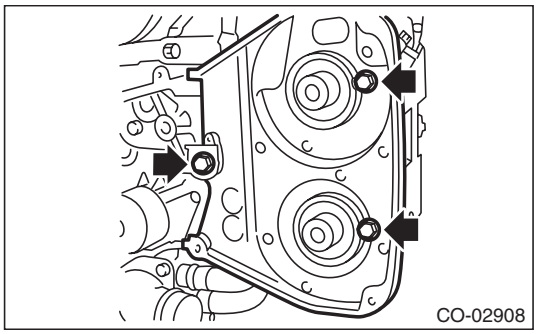

23) Remove the oil pipe.

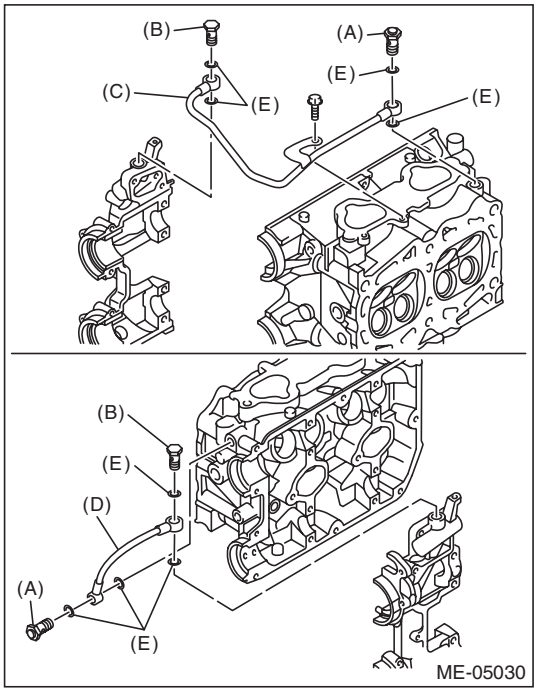

(A) Union bolt with filter (with protrusion)
(B) Union bolt without filter (without protrusion)
(C) Oil pipe RH
(D) Oil pipe LH
(E) Gasket

GETthemanuals.org

B: INSTALLATION

1) Inspect the union bolt with filter. <Ref. to LU(H4SO)-35, INSPECTING UNION BOLT WITH FILTER, INSPECTION, Oil Pipe.>
2) Install the oil pipe.

NOTE:
- Be careful of the install location of the union bolt; the location will differ depending on the presence of filter.
- Use a new gasket.

Tightening torque:
T1: 6.4 N·m (0.7 kgf-m, 4.7 ft-lb)
T2: 29 N·m (3.0 kgf-m, 21.4 ft-lb)

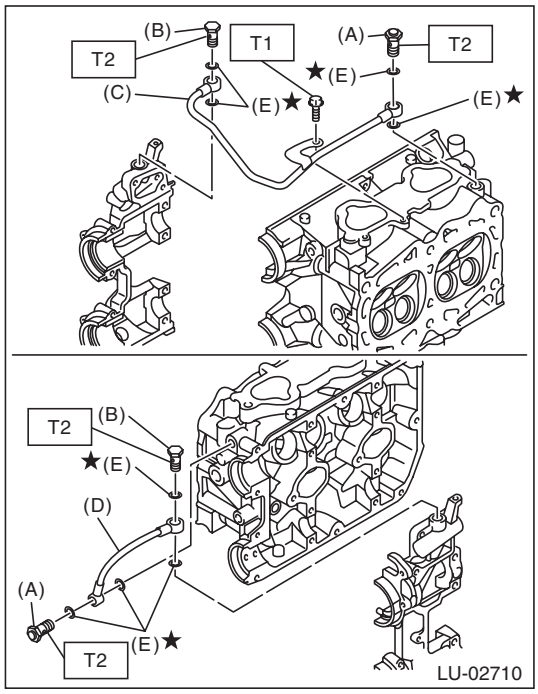

(A) Union bolt with filter (with protrusion)
(B) Union bolt without filter (without protrusion)
(C) Oil pipe RH
(D) Oil pipe LH
(E) Gasket

3) Install the belt cover No. 2 LH.

Tightening torque:
5 N·m (0.5 kgf-m, 3.7 ft-lb)

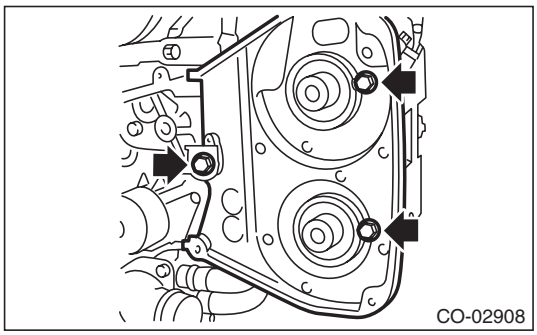

4) Install the cam sprocket LH. <Ref. to ME(H4DOTC)-61, INSTALLATION, Cam Sprocket.>
5) Install the timing belt. <Ref. to ME(H4DOTC)-55, TIMING BELT, INSTALLATION, Timing Belt.>
6) Install the timing belt cover. <Ref. to ME(H4DOTC)-49, INSTALLATION, Timing Belt Cover.>
7) Install the crank pulley. <Ref. to ME(H4DOTC)-44, INSTALLATION, Crank Pulley.>
8) Install the V-belts. <Ref. to ME(H4DOTC)-42, INSTALLATION, V-belt.>
9) Install the radiator main fan and the radiator sub fan. <Ref. to CO(H4DOTC)-25, INSTALLATION, Radiator Main Fan and Fan Motor.> <Ref. to CO(H4DOTC)-27, INSTALLATION, Radiator Sub Fan and Fan Motor.>
10) Install the intake manifold. <Ref. to FU(H4DOTC)-22, INSTALLATION, Intake Manifold.>
11) Install the oil inlet pipe C (C) to the cylinder head with the union bolt (D).

NOTE:
Use a new gasket.

Tightening torque:
29 N·m (3.0 kgf-m, 21.4 ft-lb)

12) Temporarily install the oil inlet pipe B (A) to the oil inlet pipe C (C).
13) Install the oil inlet pipe B (A) to the cylinder head with the bolt (B).

Tightening torque:
6.4 N·m (0.7 kgf-m, 4.7 ft-lb)

GETthemanuals.org

14) Tighten the flare nut of the oil inlet pipe B (A).

CAUTION:
In order to avoid damaging the oil inlet pipe C (C), fix the section (a) shown in the figure so that it will not rotate together when tightening the flare nut of the oil inlet pipe B (A).

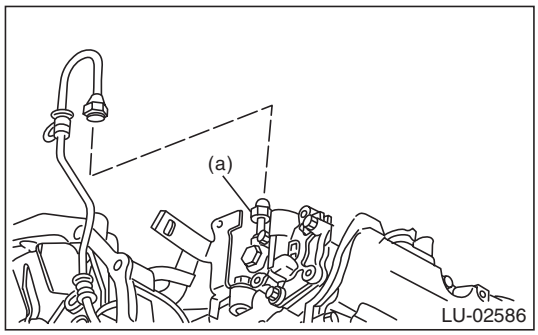

Tightening torque:
20 N·m (2.0 kgf-m, 14.8 ft-lb)

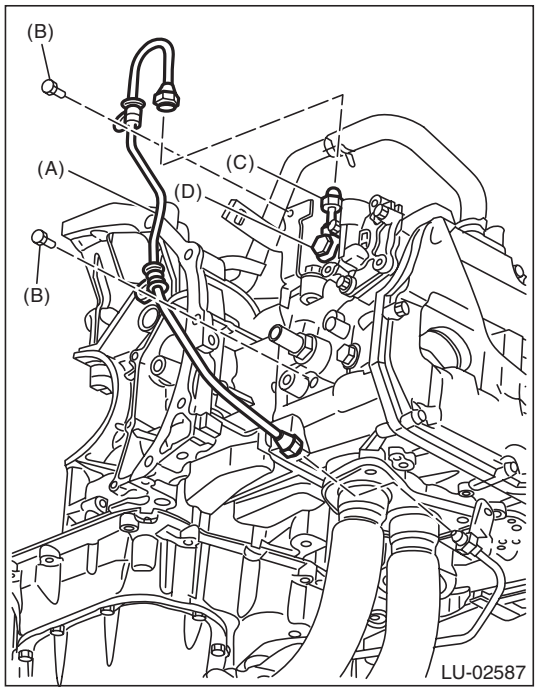

15) Temporarily install the oil outlet pipe (A) to the scavenge pump using the union bolt (B).
16) Secure the oil outlet pipe (A) to the cylinder head and stay with bolts (C) and (D).

Tightening torque:
6.4 N·m (0.7 kgf-m, 4.7 ft-lb)

17) Tighten the union bolt (B) of the oil outlet pipe (A).

Tightening torque:
29 N·m (3.0 kgf-m, 21.4 ft-lb)

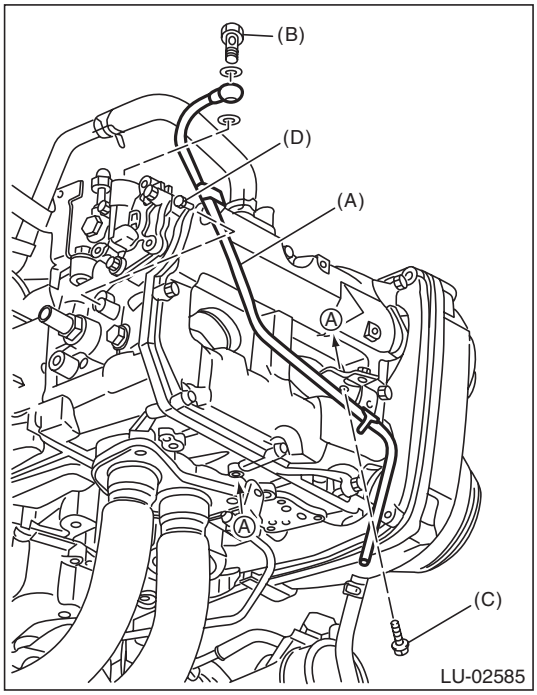

18) Lift up the vehicle.
19) Install the bolt which holds oil outlet pipe (C) and oil inlet pipe A (A), and install oil inlet pipe B (B) to oil inlet pipe A (A).

CAUTION:
In order to prevent damaging the oil inlet pipe, fix the section (a) shown in the figure when tightening the oil inlet pipe flare nut, and avoid the part from rotating together while tightening the nut.

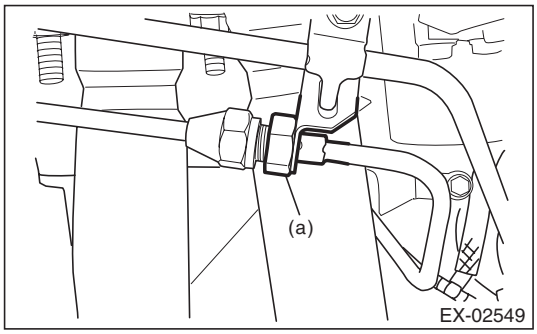

GETthemanuals.org

Tightening torque:
T1: 6.4 N·m (0.7 kgf-m, 4.7 ft-lb)
T2: 20 N·m (2.0 kgf-m, 14.8 ft-lb)

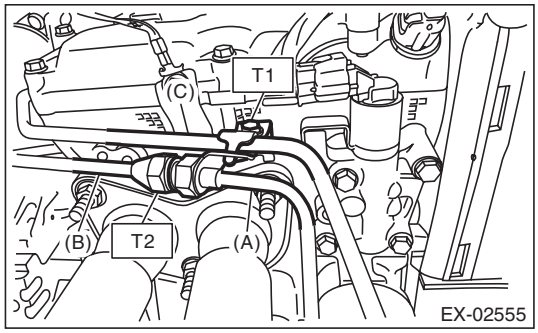

20) Attach the ground cable to the oil outlet pipe.

Tightening torque:
7 N·m (0.7 kgf-m, 5.2 ft-lb)

21) Connect the oil outlet hose to the oil outlet pipe.

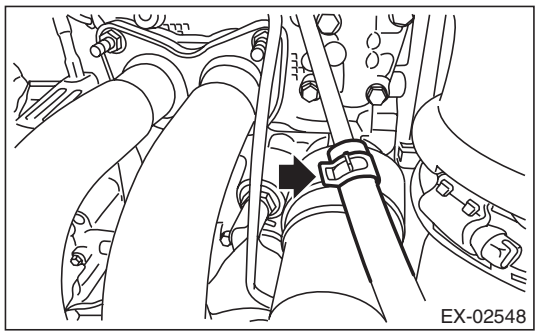

22) Install the under cover. <Ref. to EI-35, INSTALLATION, Front Under Cover.>
23) Lower the vehicle.
24) Install the intercooler. <Ref. to IN(H4DOTC)-18, INSTALLATION, Intercooler.>
25) Connect the battery ground terminal.

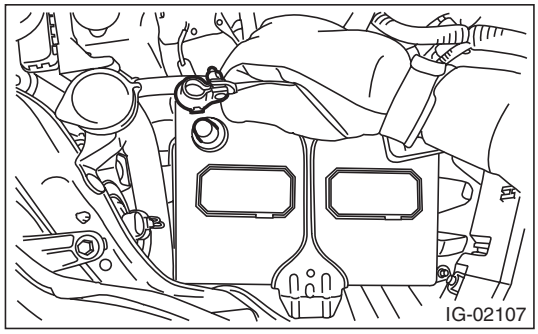

26) Install the collector cover.

C: INSPECTION

1. INSPECTING UNION BOLT WITH FILTER

Check the filter part of union bolt for clogging or damage, and if defective, replace the union bolt with filter with the new part.

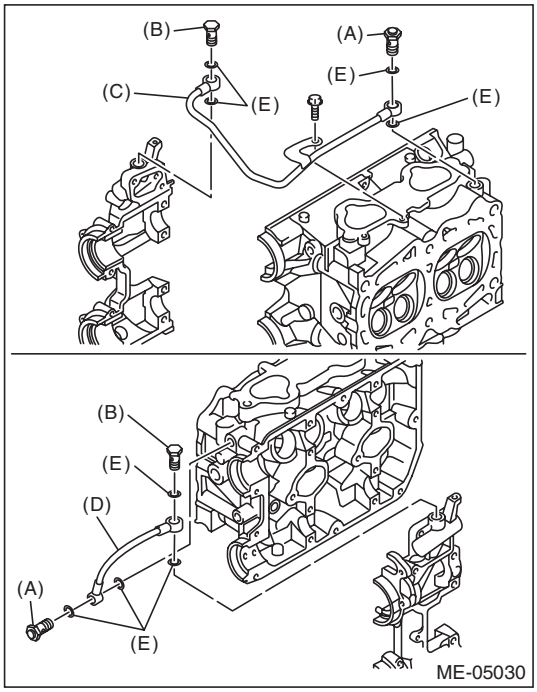

(A) Union bolt with filter (with protrusion)
(B) Union bolt without filter (without protrusion)
(C) Oil pipe RH
(D) Oil pipe LH
(E) Gasket

2. OTHER INSPECTIONS

1) Check that the oil pipe and union bolt have no deformation, cracks and other damages.
2) Check that there are no oil leaks or oil oozing from the oil pipe attachment section.

GETthemanuals.org

11. Engine Oil Filter

A: REMOVAL

CAUTION:
If the engine oil is spilt over exhaust pipe or the under cover, wipe it off with cloth to avoid emitting smoke or causing a fire.

1) Lift up the vehicle.
2) Remove the service hole cover of under cover.
- Medium under cover model

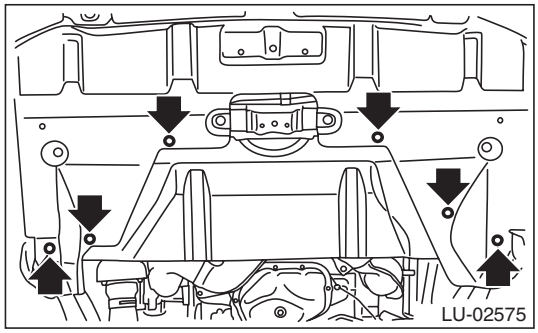

- Models with large under cover

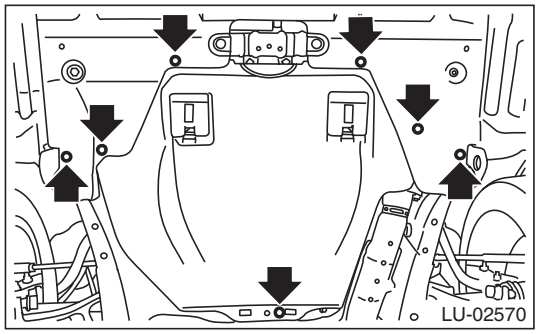

3) Remove the oil filter.
- Black oil filter

Remove it using the ST.

ST	18332AA000	OIL FILTER WRENCH (OUTER DIAMETER: 68 MM (2.68 IN) FOR OIL FILTER)

- Blue oil filter

Remove it using the general tool (65/67 mm 14 flutes).

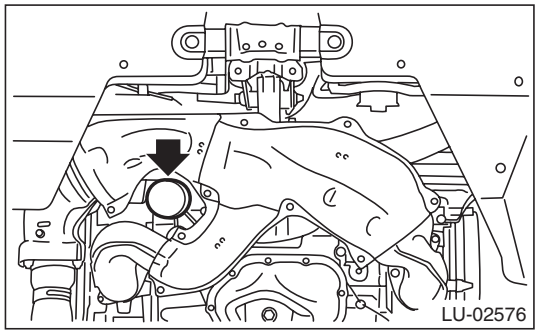

B: INSTALLATION

CAUTION:
Do not tighten excessively, or oil may leak.

1) Clean the oil filter installation surface on the cylinder block or engine oil cooler.
2) Obtain a new oil filter and apply a thin coat of engine oil to the seal rubber.
3) Install the oil filter turning it by hand, being careful not to damage the seal rubber of the oil filter.
- Tighten the oil filter (Black) with an outer diameter of 68 mm (2.68 in) (approx. 1 rotation) after the seal rubber of the oil filter comes in contact with cylinder block. When using a torque wrench, tighten to 14 N·m (1.4 kgf-m, 10.3 ft-lb).
- Tighten the oil filter (Blue) with an outer diameter of 67.4 mm (2.65 in) (approx. 7/8 rotation) after the seal rubber of the oil filter comes in contact with cylinder block. When using a torque wrench, tighten to 12 N·m (1.2 kgf-m, 8.9 ft-lb).

4) Return the service hole cover to its original position.
5) Lower the vehicle.
6) After installing, check the engine oil level and replenish it if necessary. <Ref. to LU(H4SO)-13, INSPECTION, Engine Oil.>

C: INSPECTION

1) After installing the oil filter, run the engine and make sure that no oil is leaking around seal rubber.

NOTE:
The filter element and filter case are permanently jointed; therefore, interior cleaning is not necessary.

2) Check the engine oil level. <Ref. to LU(H4SO)-13, INSPECTION, Engine Oil.>

GETthemanuals.org

12. Oil Level Switch

A: REMOVAL

1) Disconnect the ground cable from battery.

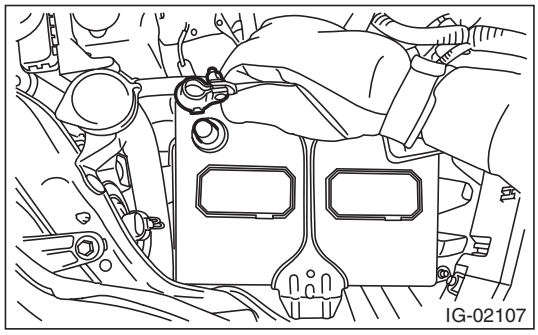

2) Lift up the vehicle.
3) Remove the under cover. <Ref. to EI-35, REMOVAL, Front Under Cover.>
4) Drain the engine oil. <Ref. to LU(H4SO)-13, REPLACEMENT, Engine Oil.>
5) Disconnect the connector of the oil level switch from the engine harness.

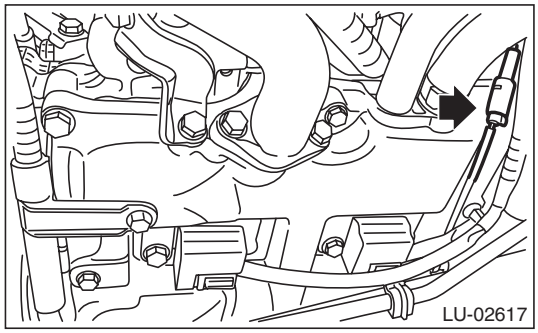

6) Remove the clip holding the oil level switch harness.

- Turbo model

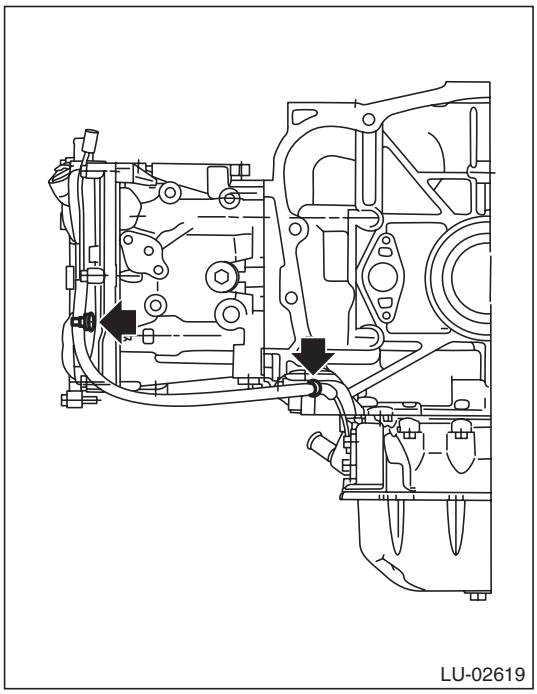

- Non-turbo model

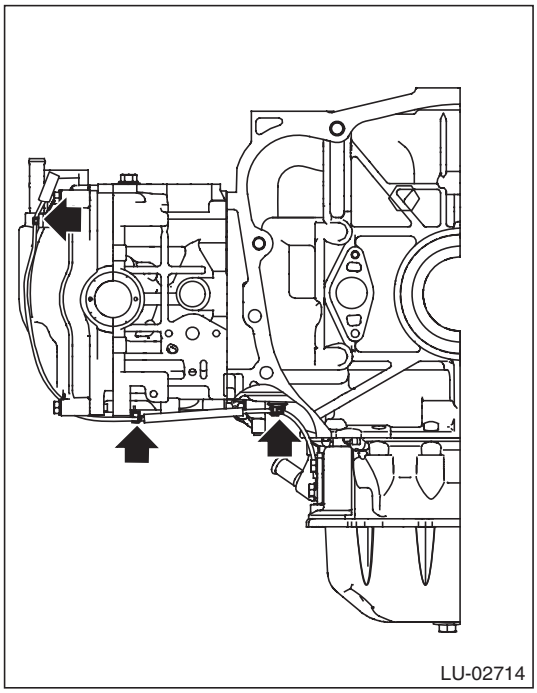

GETthemanuals.org

7) Remove the oil level switch from the cylinder block lower.

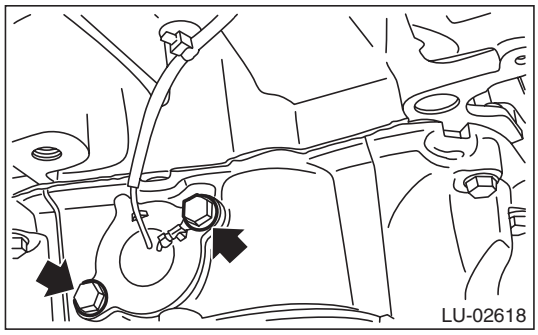

B: INSTALLATION

1) Install the oil level switch to the cylinder block lower.

NOTE:
- Use new O-rings.
- Apply a coat of engine oil to the O-rings.

Tightening torque:
6.4 N·m (0.7 kgf-m, 4.7 ft-lb)

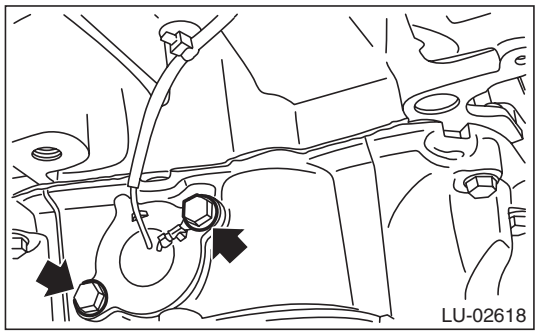

2) Hold the oil level switch harness with the clip.
- Turbo model

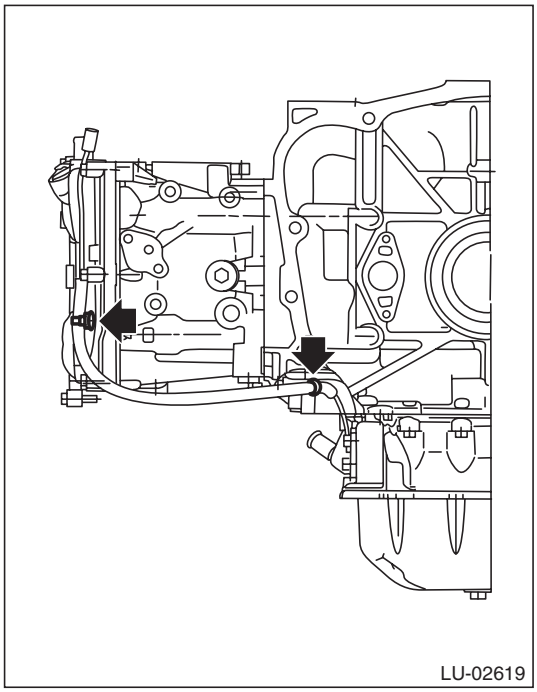

- Non-turbo model

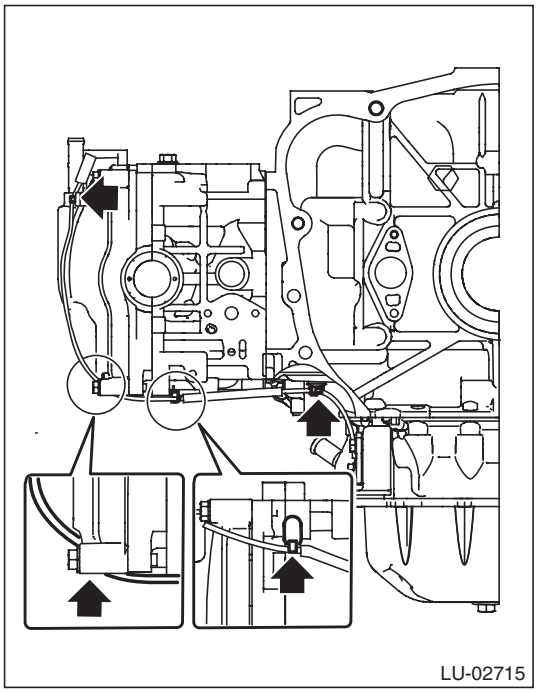

GETthemanuals.org

3) Connect the connector of the oil level switch to the engine harness.

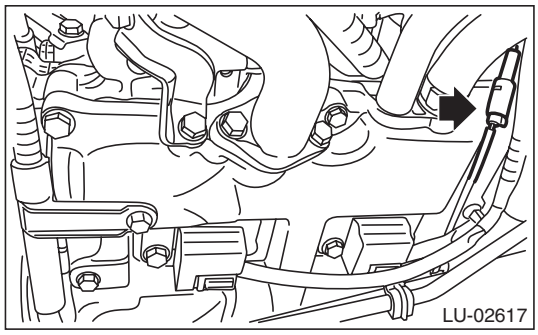

4) Install the under cover. <Ref. to EI-35, INSTALLATION, Front Under Cover.>
5) Lower the vehicle.
6) Refill the engine oil. <Ref. to LU(H4SO)-13, REPLACEMENT, Engine Oil.>
7) Check the engine oil level. <Ref. to LU(H4SO)-13, INSPECTION, Engine Oil.>
8) Connect the battery ground terminal.

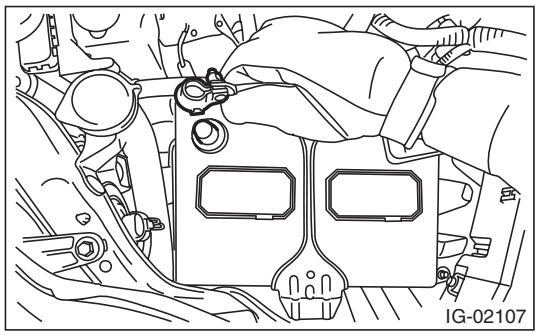

GETthemanuals.org

C: WIRING DIAGRAM

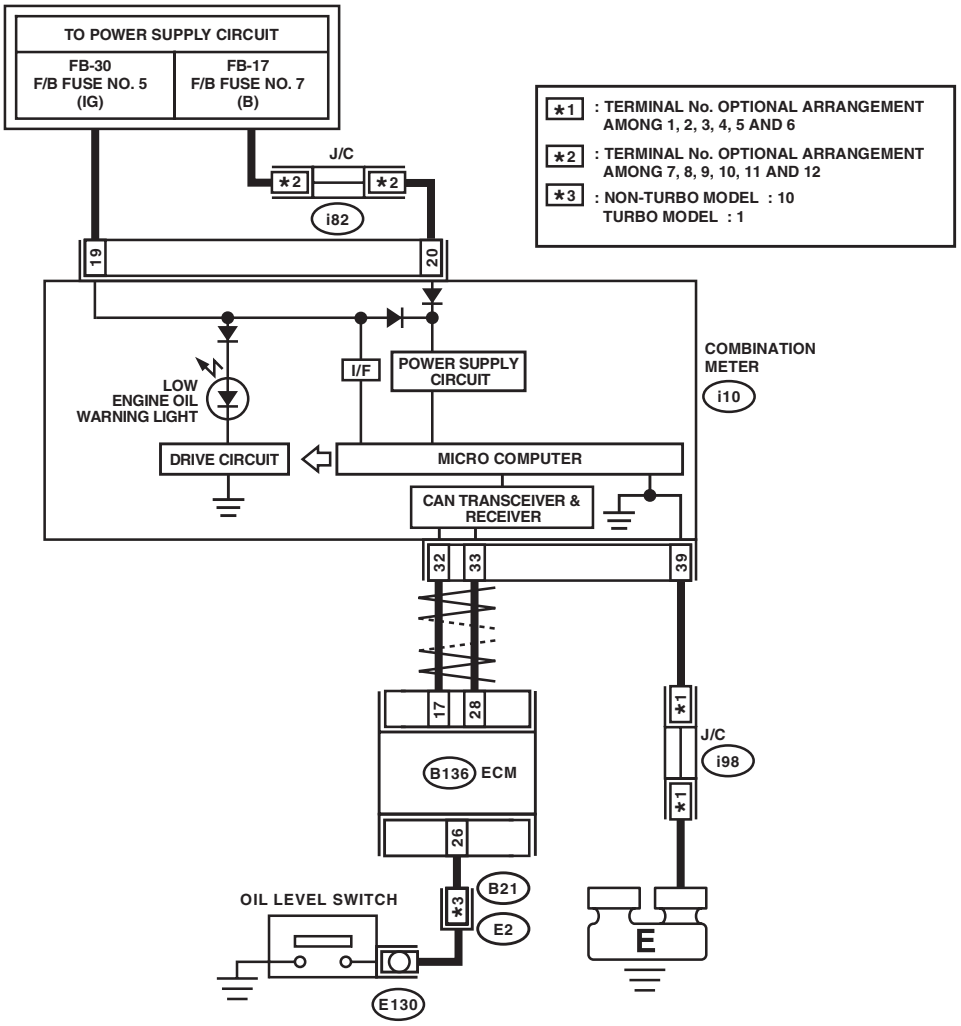

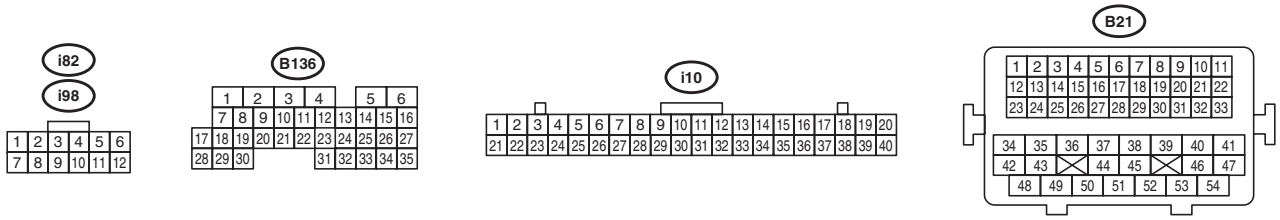

LU-02653

GETtheMANUALS.org

D: INSPECTION

1. INSPECTION WHEN LOW ENGINE OIL WARNING LIGHT IS ILLUMINATED

Step	Check	Yes	No
1 CHECK ENGINE OIL LEVEL.	Is engine oil level normal?	Go to step **2**.	Replace engine oil or refill, and check again while the oil level is normal condition. <Ref. to LU(H4SO)-13, REPLACEMENT, Engine Oil.> To turn off the low engine oil warning light, install the spare fuse at the delivery (test) mode fuse in the main fuse box. Then turn the ignition switch to ON (engine off) again, to confirm the low engine oil warning light turns off. Remove the spare fuse installed to finish. NOTE: The engine oil level switch is normal, if the low engine oil level warning light turns off with the delivery (test) mode fuse installed.
2 CHECK LAN SYSTEM.	Has a DTC of the LAN system been input?	Perform the diagnosis according to DTC.	Go to step **3**.

GETthemANUALS.org

Step		Check	Yes	No
3	**CHECK OIL LEVEL SWITCH CIRCUIT.** 1) Turn the ignition switch to ON (engine OFF). 2) Read the current data for engine in the Subaru Select Monitor to confirm the item for "Oil level switch". <Ref. to EN(H4SO)(diag)-33, READ CURRENT DATA FOR ENGINE (NORMAL MODE), OPERATION, Subaru Select Monitor.> <Ref. to EN(H4DOTC)(diag)-34, READ CURRENT DATA FOR ENGINE (NORMAL MODE), OPERATION, Subaru Select Monitor.>	Is the "Oil level switch" signal displayed in Subaru Select Monitor HIGH?	To turn off the low engine oil warning light, install the spare fuse at the delivery (test) mode fuse in the main fuse box. Then turn the ignition switch to ON (engine off) again, to confirm the low engine oil warning light turns off. Remove the spare fuse installed to finish. NOTE: The engine oil level switch is normal, if the low engine oil level warning light turns off with the delivery (test) mode fuse installed.	Go to step **4**.
4	**CHECK COMBINATION METER.** Perform the self-diagnosis of combination meter to check if there are any faults in the combination meter. <Ref. to IDI-6, OPERATION, Combination Meter System.>	Is combination meter OK?	Go to step **5**.	Replace the combination meter. <Ref. to IDI-21, REMOVAL, Combination Meter.>
5	**CHECK SECURE CONNECTION OF CONNECTOR BETWEEN ENGINE HARNESS AND OIL LEVEL SWITCH.**	Is there any insecure connection?	Remedy the connection condition. Then, to turn off the low engine oil warning light, install the spare fuse at the delivery (test) mode fuse in the main fuse box. Then turn the ignition switch to ON (engine off) again, to confirm the low engine oil warning light turns off. Remove the spare fuse installed to finish. NOTE: The engine oil level switch is normal, if the low engine oil level warning light turns off with the delivery (test) mode fuse installed.	Go to step **6**.

GETtheMANUALS.org

	Step	Check	Yes	No
6	**CHECK OIL LEVEL SWITCH.** 1) Deliberately short circuits by connecting the engine harness connector terminal and chassis ground. 2) Turn the ignition switch to ON (engine OFF). 3) Read the current data for engine in the Subaru Select Monitor to confirm the item for "Oil level switch". <Ref. to EN(H4SO)(diag)-33, READ CURRENT DATA FOR ENGINE (NORMAL MODE), OPERATION, Subaru Select Monitor.> <Ref. to EN(H4DOTC)(diag)-34, READ CURRENT DATA FOR ENGINE (NORMAL MODE), OPERATION, Subaru Select Monitor.> ***Connector & terminal*** ***(E130) No. 1 — Chassis ground:***	Is the "Oil level switch" signal displayed in Subaru Select Monitor HIGH?	Replace the oil level switch. <Ref. to LU(H4SO)-37, REMOVAL, Oil Level Switch.>	Go to step **7**.
7	**CHECK SECURE CONNECTION OF CONNECTOR BETWEEN BULKHEAD HARNESS AND ENGINE HARNESS.**	Is there any insecure connection?	Remedy the connection condition. Then, to turn off the low engine oil warning light, install the spare fuse at the delivery (test) mode fuse in the main fuse box. Then turn the ignition switch to ON (engine off) again, to confirm the low engine oil warning light turns off. Remove the spare fuse installed to finish. NOTE: The engine oil level switch is normal, if the low engine oil level warning light turns off with the delivery (test) mode fuse installed.	Go to step **8**.
8	**CHECK ENGINE HARNESS.** 1) Disconnect the connector on the oil level switch side for the engine harness. 2) Disconnect the connector on the bulkhead harness side for the engine harness. 3) Measure the resistance between connector terminals. ***Connector & terminal*** ***• Non-turbo model*** ***(E2) No. 10 — (E130) No. 1:*** ***• Turbo model*** ***(E2) No. 1 — (E130) No. 1:***	Is the resistance less than 1 Ω?	Go to step **9**.	Repair or replace the open circuit of engine harness.

GETthemanuals.org

Step		Check	Yes	No
9	**CHECK SECURE CONNECTION OF CONNECTOR BETWEEN ENGINE CONTROL MODULE (ECM) AND BULKHEAD HARNESS.** Remove the glove box lid assembly. <Ref. to EI-66, REMOVAL, Glove Box.>	Is there any insecure connection?	Remedy the connection condition. Then, to turn off the low engine oil warning light, install the spare fuse at the delivery (test) mode fuse in the main fuse box. Then turn the ignition switch to ON (engine off) again, to confirm the low engine oil warning light turns off. Remove the spare fuse installed to finish. NOTE: The engine oil level switch is normal, if the low engine oil level warning light turns off with the delivery (test) mode fuse installed.	Go to step **10**.
10	**CHECK BULKHEAD HARNESS.** 1) Remove the glove box lid assembly. <Ref. to EI-66, REMOVAL, Glove Box.> 2) Disconnect the engine control module (ECM) side connector for the bulkhead harness. 3) Disconnect the engine harness connectors from the bulkhead harness. 4) Measure the resistance between connector terminals. ***Connector & terminal*** ***• Non-turbo model*** ***(B136) No. 26 — (B21) No. 10:*** ***• Turbo model*** ***(B136) No. 26 — (B21) No. 1:***	Is the resistance less than 1 Ω?	Replace the engine control module (ECM). <Ref. to FU(H4SO)-46, REMOVAL, Engine Control Module (ECM).> <Ref. to FU(H4DOTC)-58, REMOVAL, Engine Control Module (ECM).>	Repair or replace the open circuit of the bulkhead harness.

2. OTHER INSPECTIONS

1) Check that the oil level switch does not have deformation, cracks, or damage.
2) Check the oil level switch installation part for oil leakage and oil seepage.

GETthemanuals.org

13. Engine Lubrication System Trouble in General

A: INSPECTION

Before performing diagnostics, make sure that the engine oil level is correct and no oil leakage exists.

Trouble	Possible cause	Corrective action
Warning light remains ON.	a. Oil pressure switch failure	
	❍ Cracked diaphragm or oil leakage within switch	Replace.
	❍ Broken spring or seized contacts	Replace.
	b. Low oil pressure	
	❍ Clogging of oil filter	Replace.
	❍ Malfunction of oil by-pass valve in oil filter	Replace.
	❍ Malfunction of oil relief valve in oil pump	Clean or replace.
	❍ Clogged oil passage	Clean.
	❍ Excessive tip clearance and side clearance of oil pump rotor	Replace.
	❍ Clogged oil strainer or broken pipe	Clean or replace.
	c. No oil pressure	
	❍ Insufficient engine oil (degradation, etc.)	Replace.
	❍ Broken pipe of oil strainer	Replace.
	❍ Stuck oil pump rotor	Replace.
Warning light does not illuminate.	a. Defective combination meter	Replace.
	b. Poor contact of switch contact points	Replace.
	c. Disconnection of wiring	Repair.
Warning light flickers momentarily.	a. Defective terminal contact	Repair.
	b. Defective wiring harness	Repair.
	c. Oil pressure switch failure	
	❍ Cracked diaphragm or oil leakage within switch	Replace.
	❍ Broken spring or seized contacts	Replace.
	d. Low oil pressure	
	❍ Clogging of oil filter	Replace.
	❍ Malfunction of oil by-pass valve in oil filter	Replace.
	❍ Malfunction of oil relief valve in oil pump	Clean or replace.
	❍ Clogged oil passage	Clean.
	❍ Excessive tip clearance and side clearance of oil pump rotor	Replace.
	❍ Clogged oil strainer or broken pipe	Clean or replace.

GETthemanuals.org

GETtheMANUALS.org

SPEED CONTROL SYSTEMS

SP(H4SO)

Page

1. General Description 2
2. Accelerator Pedal 4

GETtheMANUALS.org

1. General Description

A: SPECIFICATION

Accelerator pedal	Stroke	At pedal pad	54 — 59 mm (2.13 — 2.32 in)

B: COMPONENT

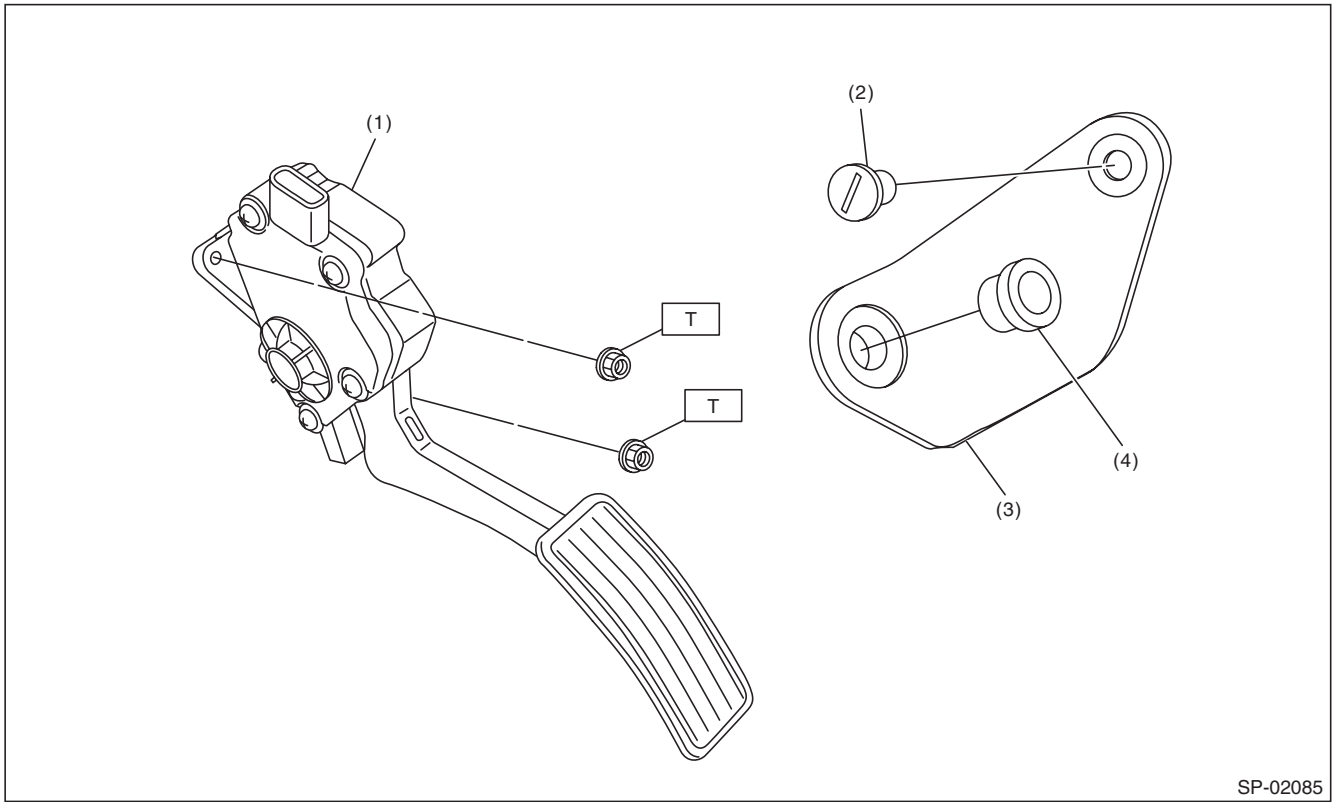

(1) Accelerator pedal ASSY
(2) Clip
(3) Accelerator plate
(4) Accelerator stopper

Tightening torque:N·m (kgf-m, ft-lb)
T: 18 (1.8, 13.3)

C: CAUTION

- Wear appropriate work clothing, including a cap, protective goggles and protective shoes when performing any work.
- Remove contamination including dirt and corrosion before removal or installation.
- Keep the parts in order and protect them from dust and dirt.
- Before removal or installation, be sure to clarify the failure. Avoid unnecessary removal, installation, disassembly and replacement.
- Vehicle components are extremely hot after driving. Be wary of receiving burns from heated parts.
- Be sure to tighten fasteners including bolts and nuts to the specified torque.
- Place shop jacks or rigid racks at the specified points.
- Before disconnecting connectors of sensors or units, be sure to disconnect the ground cable from the battery.

GETtheMANUALS.org

D: PREPARATION TOOL

1. SPECIAL TOOL

ILLUSTRATION	TOOL NUMBER	DESCRIPTION	REMARKS
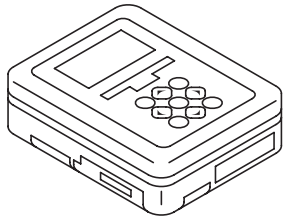 ST1B022XU0	1B022XU0	SUBARU SELECT MONITOR III KIT	Used for inspecting the accelerator pedal.

2. GENERAL TOOL

TOOL NAME	REMARKS
Circuit tester	Used for measuring voltage.

GETtheMANUALS.org

2. Accelerator Pedal

A: REMOVAL

1) Disconnect the ground cable from battery.

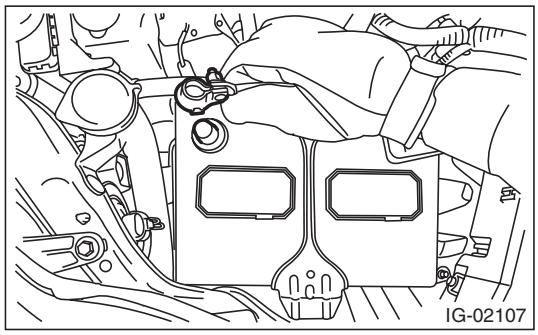

2) Disconnect the connector (A).
3) Remove the nut (B) securing accelerator pedal assembly and remove the accelerator pedal assembly.

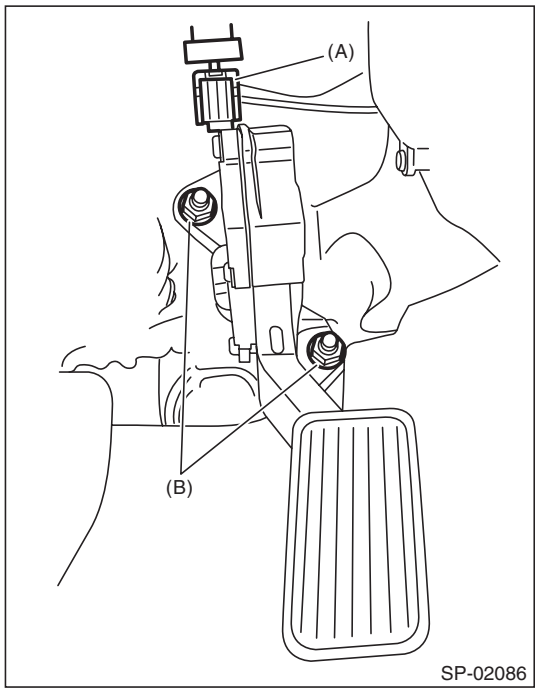

B: INSTALLATION

Install in the reverse order of removal.

Tightening torque:
18 N·m (1.8 kgf-m, 13.3 ft-lb)

C: DISASSEMBLY

NOTE:
The accelerator pedal cannot be disassembled.

D: INSPECTION

1. CHECK ACCELERATOR PEDAL SENSOR AREA (METHOD WITH CIRCUIT TESTER)

1) Remove the glove box lid assembly, glove box lower cover, instrument panel side cover RH and glove box back panel. <Ref. to EI-66, REMOVAL, Glove Box.>
2) Turn the ignition switch to ON. (engine OFF)
3) Measure the voltage between ECM connector terminals.

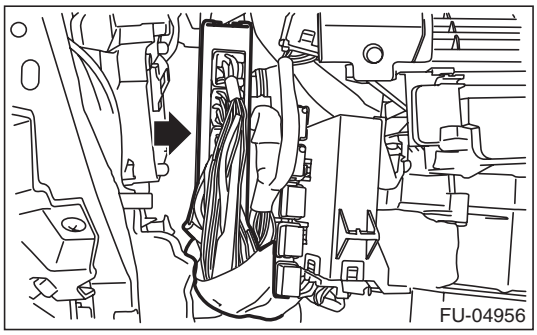

Main sensor side

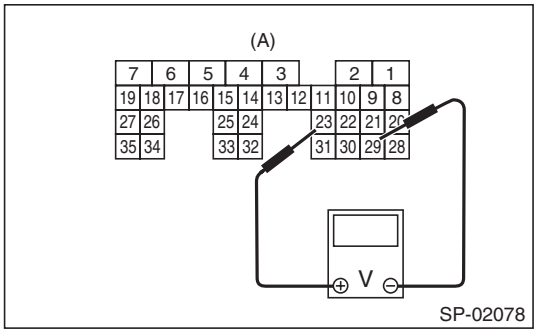

Sub sensor side

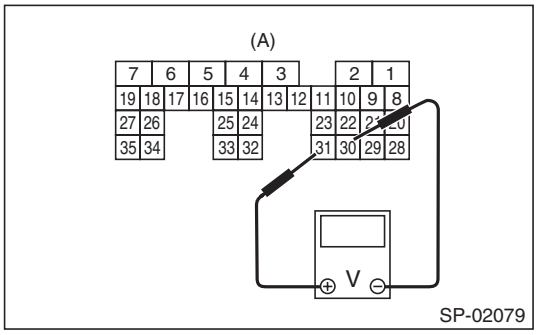

(A) To ECM connector

GETtheMANUALS.org

Accelerator pedal sensor	Accelerator pedal	Terminal No.	Standard
Main	Not depressed (Full closed)	23 (+) and 29 (–)	1 V
	Depressed (Full opened)		3.5 V
Sub	Not depressed (Full closed)	31 (+) and 30 (–)	1 V
	Depressed (Full opened)		3.5 V

4) After inspection, install the related parts in the reverse order of removal.

2. CHECK ACCELERATOR PEDAL SENSOR AREA (METHOD WITH SUBARU SELECT MONITOR)

1) Turn the ignition switch to ON. (engine OFF)
2) Read the accelerator pedal opening angle signal and voltage of accelerator pedal sensor using Subaru Select Monitor. <Ref. to EN(H4SO)(diag)-33, READ CURRENT DATA FOR ENGINE (NORMAL MODE), OPERATION, Subaru Select Monitor.> <Ref. to EN(H4DOTC)(diag)-34, READ CURRENT DATA FOR ENGINE (NORMAL MODE), OPERATION, Subaru Select Monitor.> <Ref. to EN(H6DO)(diag)-35, READ CURRENT DATA FOR ENGINE (NORMAL MODE), OPERATION, Subaru Select Monitor.>

Accelerator pedal sensor	Accelerator pedal opening angle signal	Standard
Main	0.0%	1 V
	100.0%	3.5 V
Sub	0.0%	1 V
	100.0%	3.5 V

3. OTHER INSPECTIONS

1) Check that the accelerator pedal does not have deformation, cracks or damage.
2) Check for smooth operation when the accelerator pedal is depressed.
3) Check if the accelerator pedal returns to its original position smoothly when the pedal is released.

GETtheMANUALS.org

GETtheMANUALS.org

IGNITION

IG(H4SO)

		Page
1.	General Description	2
2.	Spark Plug	3
3.	Ignition Coil	5

GETtheMANUALS.org

1. General Description

A: SPECIFICATION

Item				Specifications
Ignition coil	Type			FK 0376
	Ignition system			Independent ignition coil
	Manufacturer			Diamond Electric
Spark plug	Manufacturer and type			NGK: SIFR6A11
	Thread size (diameter, pitch, length)	mm		14, 1.25, 19
	Spark plug gap	mm (in)	Standard	1.0 — 1.1 (0.039 — 0.043)
	Electrode			Iridium

B: COMPONENT

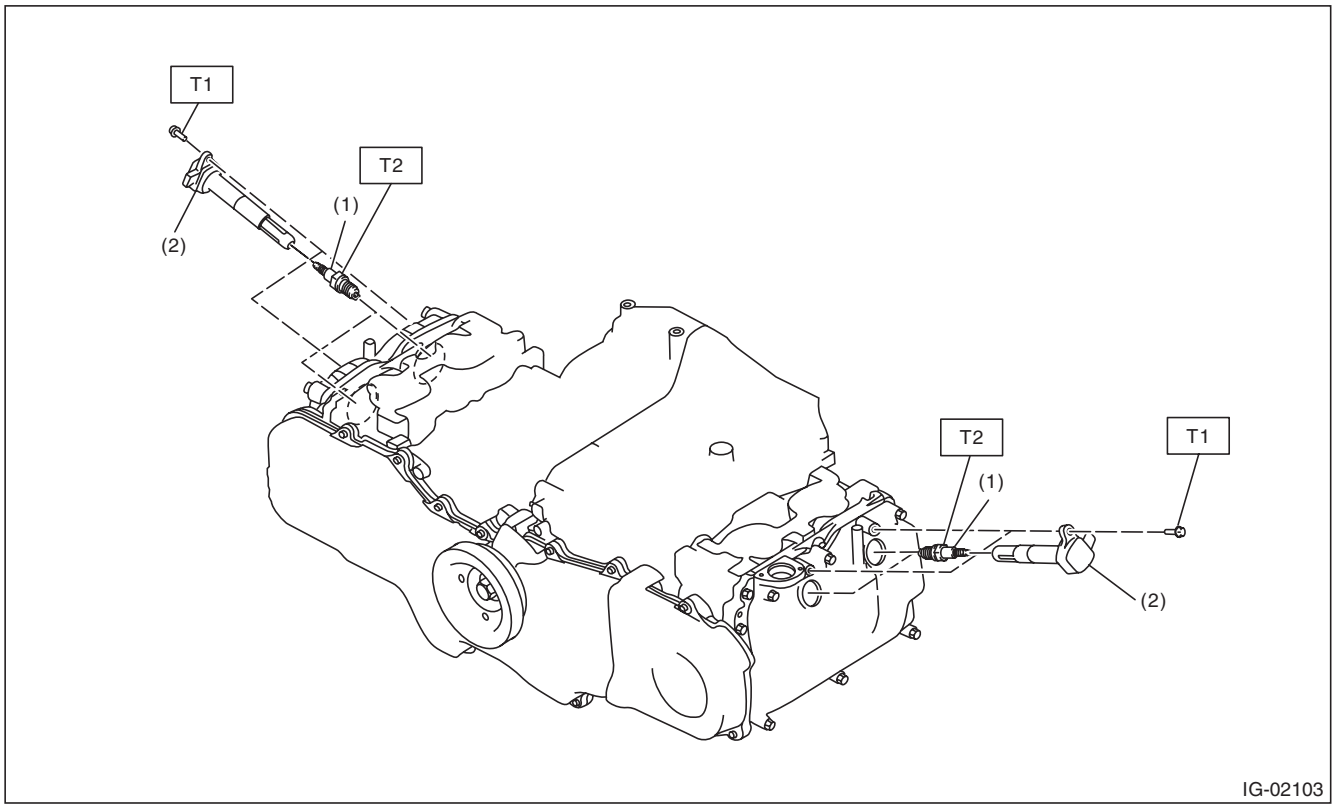

(1) Spark plug
(2) Ignition coil

Tightening torque:N·m (kgf-m, ft-lb)
T1: 9 (0.9, 6.6)
T2: 21 (2.1, 15.5)

C: CAUTION

- Wear appropriate work clothing, including a cap, protective goggles and protective shoes when performing any work.
- Remove contamination including dirt and corrosion before removal, installation or disassembly.
- Keep the disassembled parts in order and protect them from dust and dirt.
- Before removal, installation or disassembly, be sure to clarify the failure. Avoid unnecessary removal, installation, disassembly and replacement.
- Vehicle components are extremely hot after driving. Be wary of receiving burns from heated parts.
- Be sure to tighten fasteners including bolts and nuts to the specified torque.
- Place shop jacks or rigid racks at the specified points.
- Before disconnecting connectors of sensors or units, be sure to disconnect the ground cable from the battery.

GETtheMANUALS.org

2. Spark Plug

A: REMOVAL

Spark plug:
Refer to "SPECIFICATION" for the spark plug. <Ref. to IG(H4SO)-2, SPECIFICATION, General Description.>

1. RH SIDE

1) Disconnect the ground cable from battery.

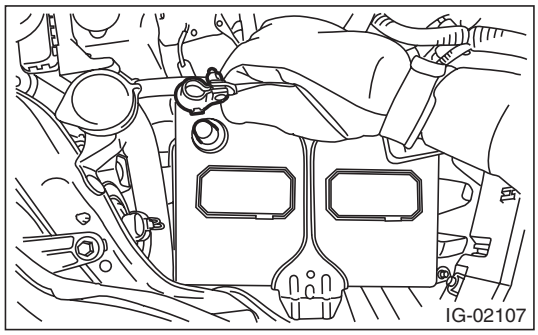

2) Remove the air cleaner case. <Ref. to IN(H4SO)-6, REMOVAL, Air Cleaner Case.>
3) Disconnect the connector (A) from the ignition coil.
4) Remove the bolt (B), and remove the ignition coil.

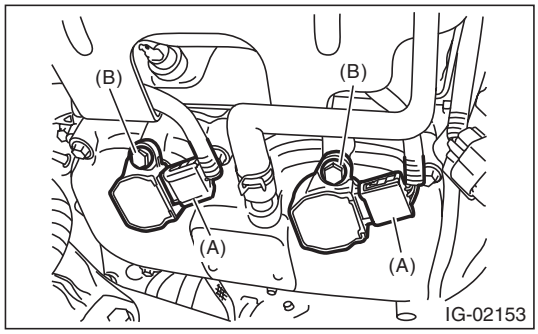

5) Remove the spark plug with a spark plug socket.

2. LH SIDE

1) Disconnect the ground cable from battery.

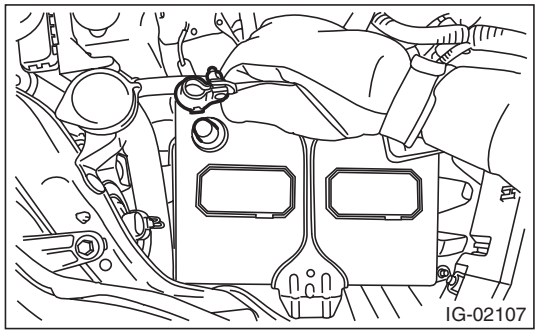

2) Disconnect the connector (A) from the ignition coil.
3) Remove the bolt (B), and remove the ignition coil.

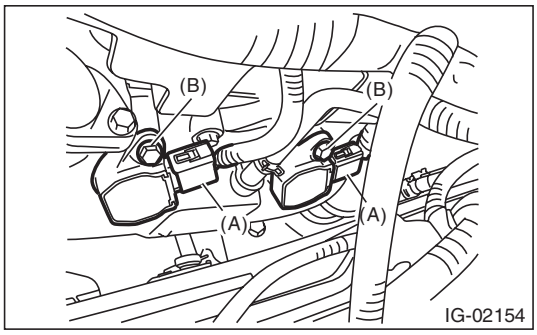

4) Remove the spark plug with a spark plug socket.

B: INSTALLATION

1. RH SIDE

Install in the reverse order of removal.

Tightening torque (Spark plug):
21 N·m (2.1 kgf-m, 15.5 ft-lb)

Tightening torque (Ignition coil):
9 N·m (0.9 kgf-m, 6.6 ft-lb)

2. LH SIDE

Install in the reverse order of removal.

Tightening torque (Spark plug):
21 N·m (2.1 kgf-m, 15.5 ft-lb)

Tightening torque (Ignition coil):
9 N·m (0.9 kgf-m, 6.6 ft-lb)

C: INSPECTION

1) Check the spark plug for abnormalities. If defective, replace the spark plug.

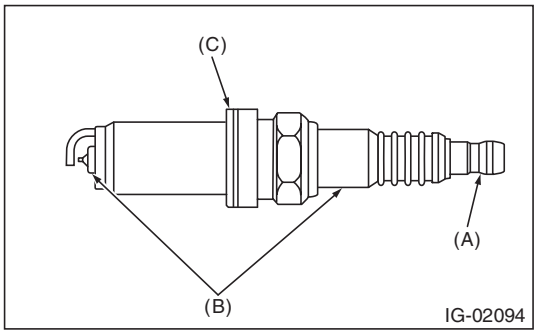

(A) Terminal damage
(B) Crack or damage in insulator
(C) Damaged gasket

2) Check the spark plug electrode and condition of the insulator. If abnormal, check and repair the cause and replace the spark plug.

GETtheMANUALS.org

(1) Normal:
Brown to grayish-tan deposits and slight electrode wear indicate correct spark plug heat range.

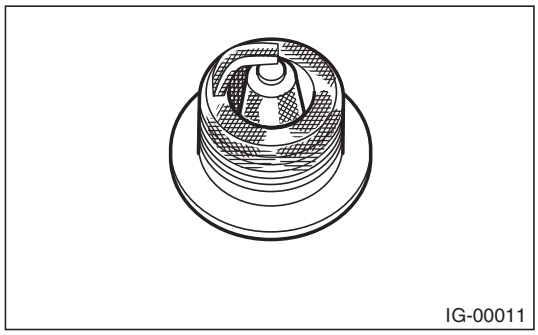
IG-00011

(2) Carbon fouled:
Dry fluffy carbon deposits on insulator and electrode are mostly caused by slow speed driving in the city, weak ignition, too rich fuel mixture, etc.

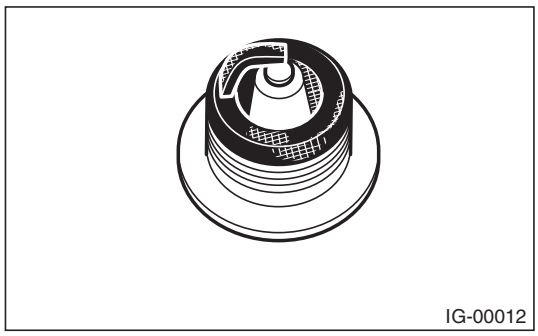
IG-00012

(3) Oil fouled:
Wet black deposits show oil entrance into combustion chamber through worn piston rings or increased clearance between valve guides and valve stems.

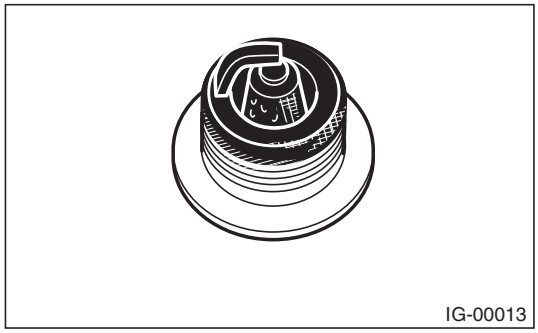
IG-00013

(4) Overheating:
White or light gray insulator with black or brown spots and bluish burnt electrodes indicate engine overheating, wrong selection of fuel, or loose spark plugs.

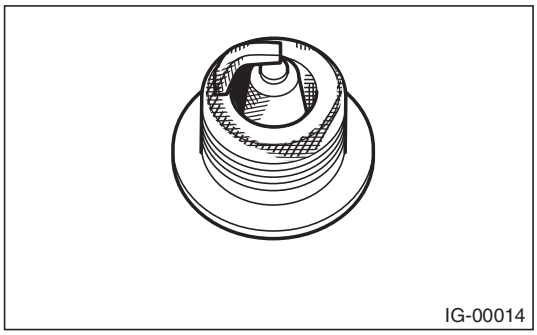
IG-00014

3) Using a nylon brush, etc., clean and remove the carbon or oxide deposits from the spark plug. If deposits are too stubborn, replace the spark plugs. After cleaning the spark plugs, check the spark plug gap “L” using a gap gauge. If it is not within the standard, replace the spark plug.

NOTE:
- Never use a plug cleaner.
- Do not use a metal brush as it may damage the electrode area.

Spark plug gap L:
Standard
1.0 — 1.1 mm (0.039 — 0.043 in)

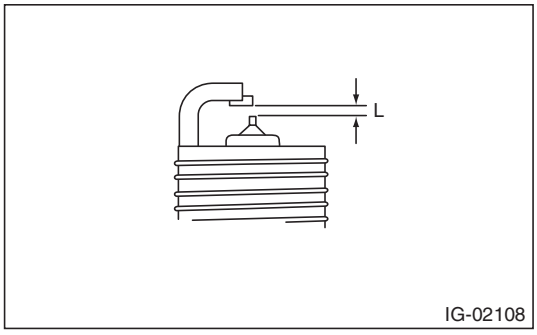

IG-02108

GETtheMANUALS.org

3. Ignition Coil

A: REMOVAL

Direct ignition type is adopted. Refer to “Spark Plug” for removal procedure. <Ref. to IG(H4SO)-3, REMOVAL, Spark Plug.>

B: INSTALLATION

Install in the reverse order of removal.

Tightening torque:
9 N·m (0.9 kgf-m, 6.6 ft-lb)

C: INSPECTION

For inspection procedure, refer to “Diagnostics for Engine Starting Failure”. <Ref. to EN(H4SO)(diag)-70, IGNITION CONTROL SYSTEM, Diagnostics for Engine Starting Failure.>

GETtheMANUALS.org

GETtheMANUALS.org

STARTING/CHARGING SYSTEMS

SC(H4SO)

Page

1. General Description 2
2. Starter 9
3. Generator 18
4. Battery 28

GETtheMANUALS.org

1. General Description

A: SPECIFICATION

1. 2.5 L MODEL

Item			Specifications	
Vehicle model			CVT	MT
Starter	Type		Reduction type	
	Model		428000-4790	428000-4780
	Manufacturer		DENSO	
	Voltage and output		12 V — 1.6 kW	
	Direction of rotation		Counterclockwise (when observed from pinion)	
	Number of pinion teeth		9	
	No-load characteristics	Voltage	11 V	
		Current	90 A or less	
		Rotating speed	1,900 rpm or more	
	Load characteristics	Voltage	8 V	
		Current	370 A	
		Torque	11.1 N·m (1.1 kgf-m, 8.2 ft-lb) or more	
		Rotating speed	910 rpm or more	
	Lock characteristics	Voltage	3 V	
		Current	750 A or less	
		Torque	15.5 N·m (1.6 kgf-m, 11.4 ft-lb) or more	
Generator	Type		Rotating-field three-phase type, voltage regulator built-in type, with load response control system	
	Model		A3TG6191	
	Manufacturer		Mitsubishi Electric	
	Voltage and output		12 V — 110 A	
	Polarity on ground side		Negative	
	Direction of rotation		Clockwise (when observed from pulley side)	
	Stator connection		3-phase △ type	
	Output current		1,500 rpm — 50 A or more 2,500 rpm — 91 A or more 5,000 rpm — 105 A or more	
	Regulated voltage		14.1 — 14.8 V [20°C (68°F)]	
	Rotor slip ring outer diameter	Standard	22.7 mm (0.894 in)	
		Limit	22.1 mm (0.870 in)	
	Brush length	Standard	18.5 mm (0.728 in)	
		Limit	5.0 mm (0.197 in)	
Battery	Type and capacity		12 V — 52 AH (75D 23R)	

GETthemANUALS.org

2. 3.6 L MODEL

Item			Specifications
Vehicle model			AT
Starter	Type		Reduction type
	Model		428000-5250
	Manufacturer		DENSO
	Voltage and output		12 V — 1.6 kW
	Direction of rotation		Counterclockwise (when observed from pinion)
	Number of pinion teeth		9
	No-load characteristics	Voltage	11 V
		Current	90 A or less
		Rotating speed	1,550 rpm or more
	Load characteristics	Voltage	8 V
		Current	370 A
		Torque	12.8 N·m (1.3 kgf-m, 9.4 ft-lb) or more
		Rotating speed	800 rpm or more
	Lock characteristics	Voltage	3 V
		Current	750 A or less
		Torque	19.0 N·m (1.9 kgf-m, 14.0 ft-lb) or more
Generator	Type		Rotating-field three-phase type, voltage regulator built-in type, with load response control system
	Model		A3TJ3591
	Manufacturer		Mitsubishi Electric
	Voltage and output		12 V — 130 A
	Polarity on ground side		Negative
	Direction of rotation		Clockwise (when observed from pulley side)
	Stator connection		3-phase △ type
	Output current		1,500 rpm — 55 A or more 2,500 rpm — 108 A or more 5,000 rpm — 127 A or more
	Regulated voltage		14.1 — 14.8 V [20°C (68°F)]
	Rotor slip ring outer diameter	Standard	22.7 mm (0.894 in)
		Limit	22.1 mm (0.870 in)
	Brush length	Standard	22.5 mm (0.886 in)
		Limit	5.0 mm (0.197 in)
Battery	Type and capacity		12 V — 52 AH (75D 23R)

GETtheMANUALS.org

B: COMPONENT

1. STARTER

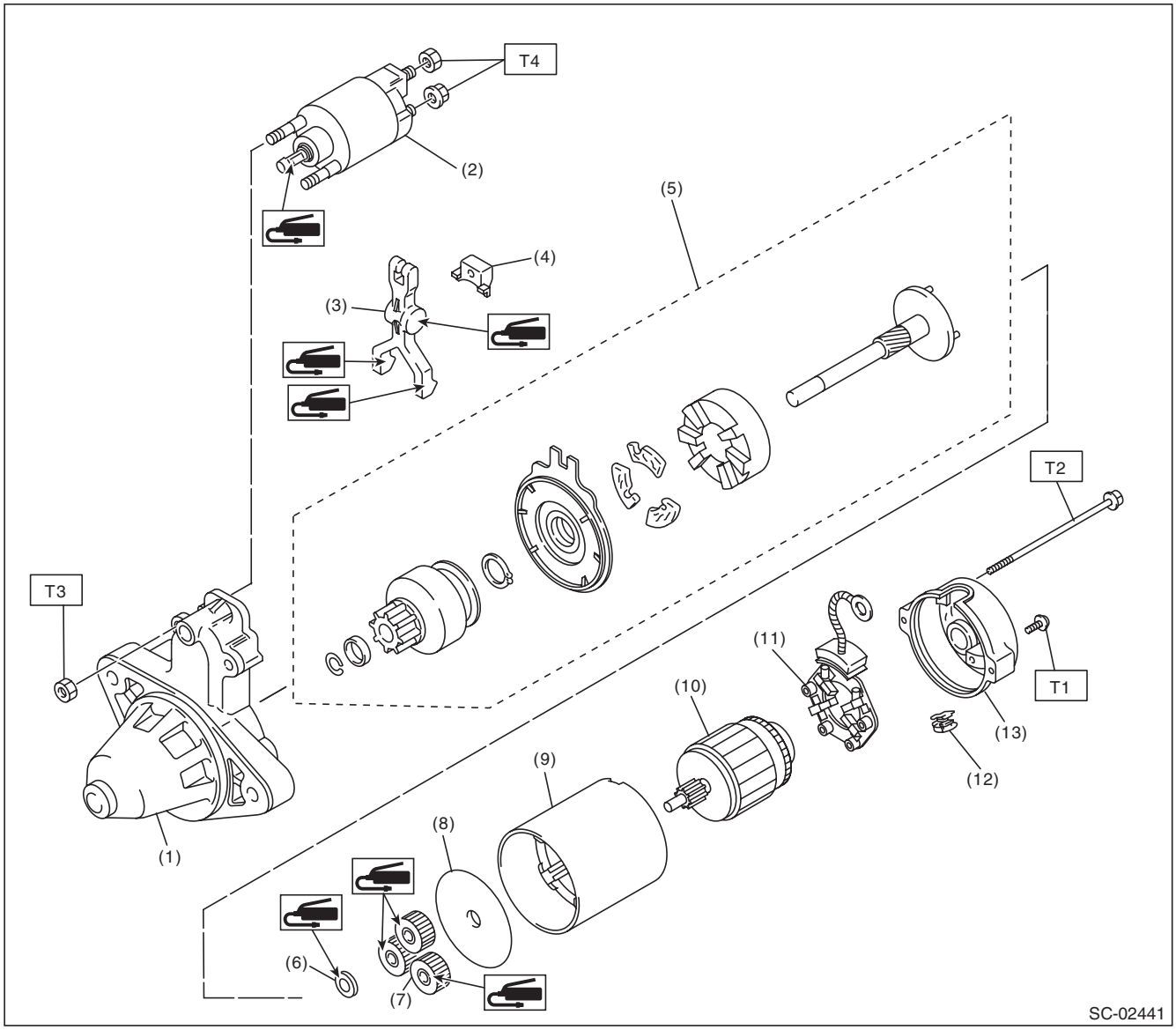

(1)	Starter housing	(8)	Starter plate	***Tightening torque:N·m (kgf-m, ft-lb)***
(2)	Magnet switch ASSY	(9)	Yoke	***T1: 1.4 (0.1, 1.0)***
(3)	Shift lever	(10)	Armature	***T2: 6 (0.6, 4.4)***
(4)	Starter seal	(11)	Brush holder ASSY	***T3: 7.5 (0.8, 5.5)***
(5)	Overrunning clutch ASSY	(12)	Drain duct	***T4: 10 (1.0, 7.4)***
(6)	Washer	(13)	Starter cover	
(7)	Planetary gear			

GETtheMANUALS.org

2. GENERATOR

- 2.5 L model

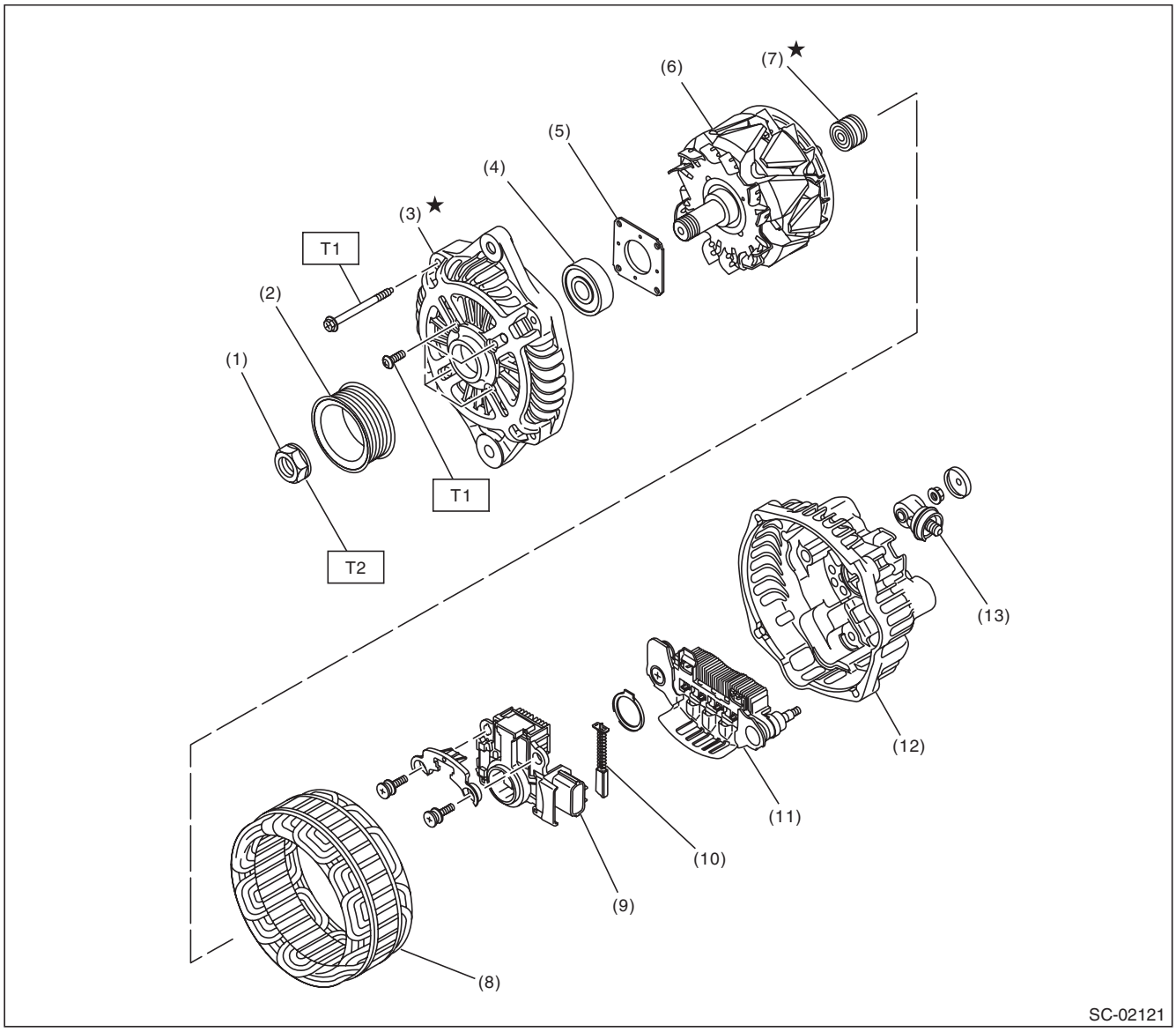

(1)	Pulley nut	(7)	Bearing	(13)	Terminal B
(2)	Pulley	(8)	Stator coil		
(3)	Front cover	(9)	IC regulator		
(4)	Ball bearing	(10)	Brush		
(5)	Bearing retainer	(11)	Rectifier		
(6)	Rotor	(12)	Rear cover		

Tightening torque:N·m (kgf-m, ft-lb)
T1: 4.7 (0.5, 3.5)
T2: 108 (11.0, 79.8)

GETtheMANUALS.org

- 3.6 L model

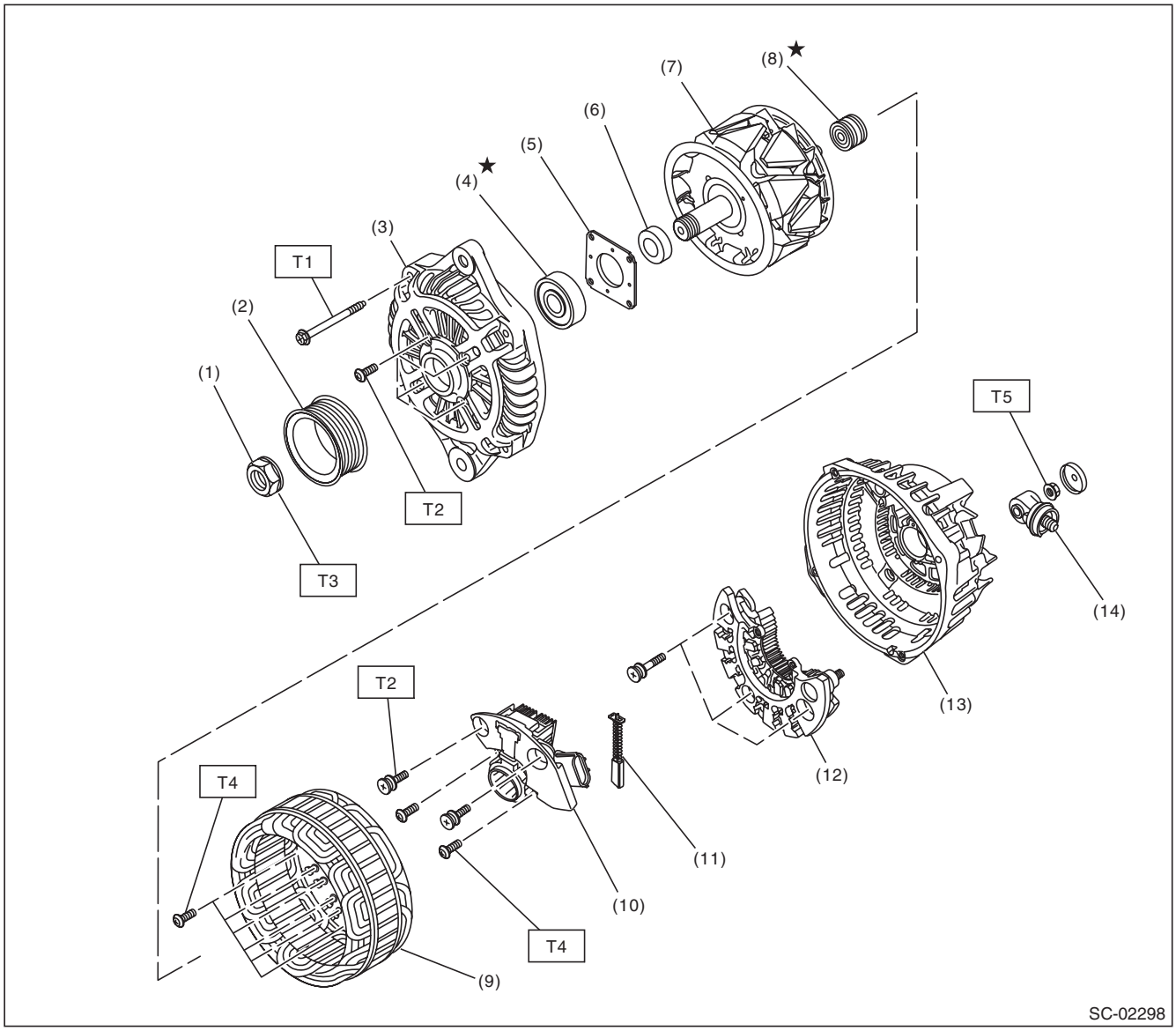

(1)	Pulley nut	(8)	Bearing
(2)	Pulley	(9)	Stator coil
(3)	Front cover	(10)	IC regulator
(4)	Ball bearing	(11)	Brush
(5)	Bearing retainer	(12)	Rectifier
(6)	Spacer	(13)	Rear cover
(7)	Rotor	(14)	Terminal B

Tightening torque:N·m (kgf-m, ft-lb)	
T1:	***4.4 (0.4, 3.2)***
T2:	***3.9 (0.4, 2.9)***
T3:	***117.5 (12.0, 86.7)***
T4:	***2 (0.2, 1.5)***
T5:	***8.9 (0.9, 6.6)***

GETtheMANUALS.org

3. GENERATOR BRACKET

- 2.5 L model

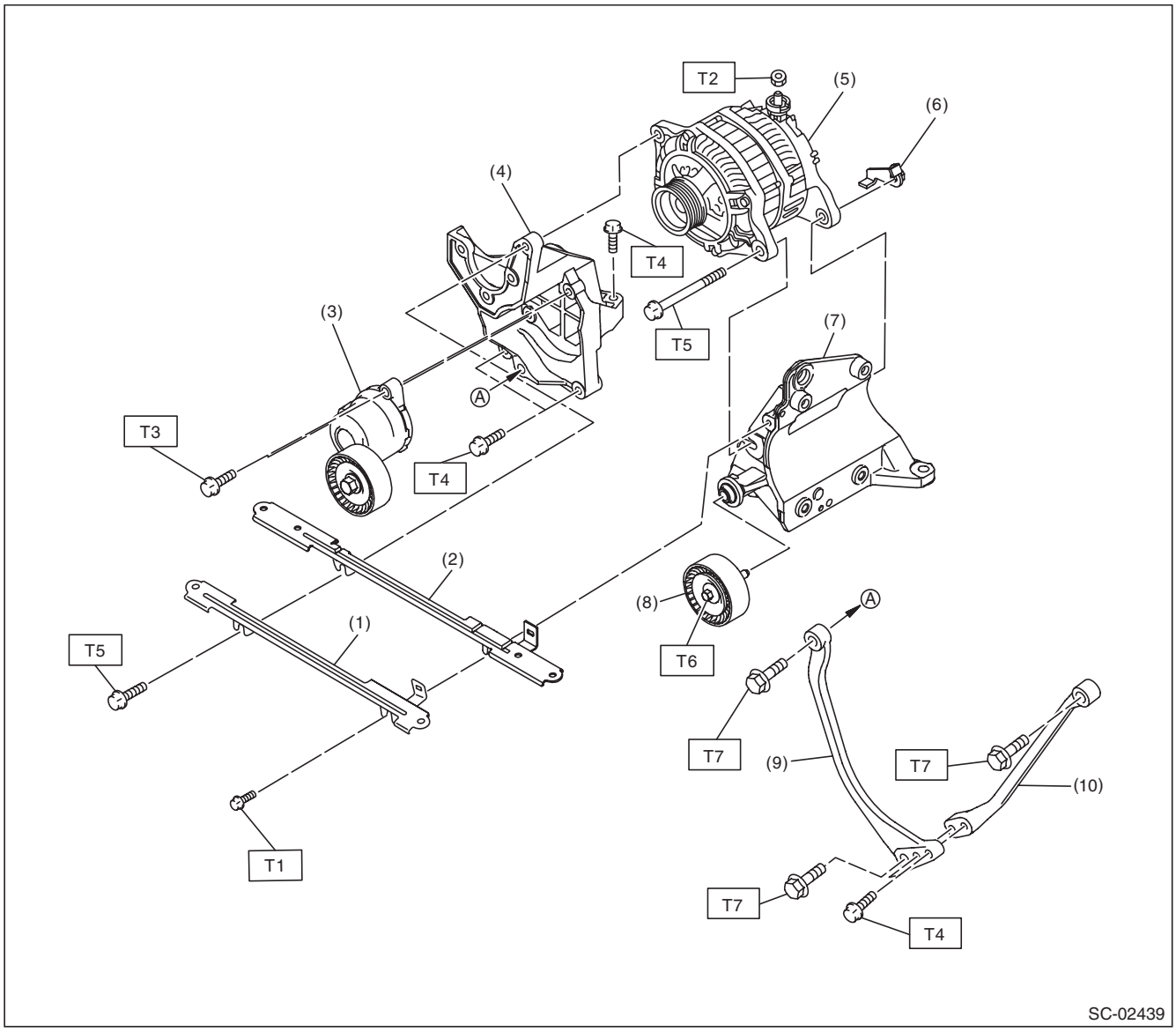

(1)	V-belt cover bracket	(6)	Generator plate
(2)	Collector cover bracket	(7)	A/C compressor bracket
(3)	V-belt tensioner ASSY	(8)	Idler pulley
(4)	Power steering pump bracket	(9)	Stopper rod RH
(5)	Generator	(10)	Stopper rod LH

Tightening torque:N·m (kgf-m, ft-lb)
T1: 6.4 (0.7, 4.7)
T2: 16 (1.6, 11.8)
T3: 20 (2.0, 14.8)
T4: 22 (2.2, 16.2)
T5: 25 (2.5, 18.4)
T6: 33 (3.4, 24.3)
T7: 36 (3.7, 26.6)

GETtheMANUALS.org

- 3.6 L model

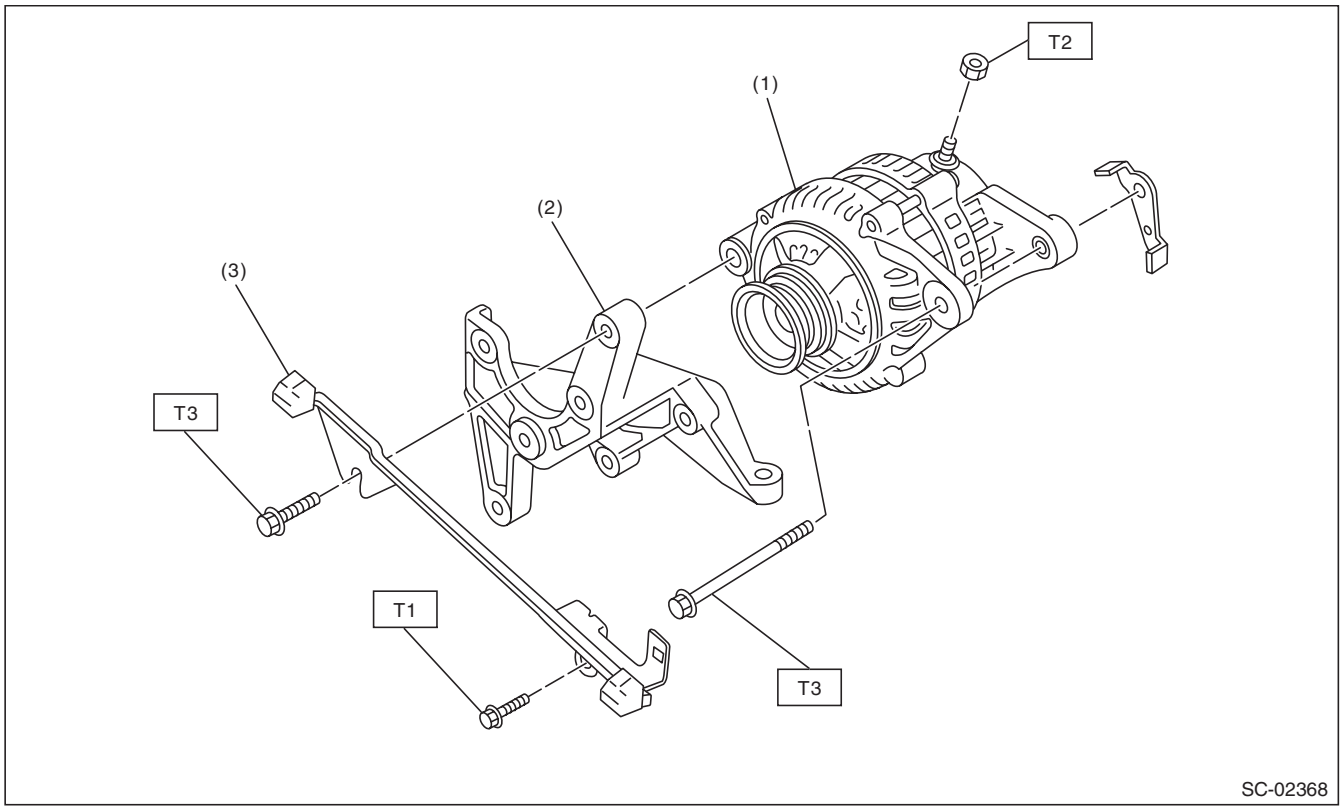

(1) Generator
(2) Power steering pump bracket
(3) Collector cover bracket

Tightening torque:N·m (kgf-m, ft-lb)
T1: 6.4 (0.7, 4.7)
T2: 16 (1.6, 11.8)
T3: 25 (2.5, 18.4)

C: CAUTION

- Wear appropriate work clothing, including a cap, protective goggles and protective shoes when performing any work.
- Remove contamination including dirt and corrosion before removal, installation or disassembly.
- Keep the disassembled parts in order and protect them from dust and dirt.
- Before removal, installation or disassembly, be sure to clarify the failure. Avoid unnecessary removal, installation, disassembly and replacement.
- Vehicle components are extremely hot after driving. Be wary of receiving burns from heated parts.
- Be sure to tighten fasteners including bolts and nuts to the specified torque.
- Place shop jacks or rigid racks at the specified points.
- Before disconnecting connectors of sensors or units, be sure to disconnect the ground cable from the battery.

D: PREPARATION TOOL

1. GENERAL TOOL

TOOL NAME	REMARKS
Circuit tester	Used for measuring resistance, voltage and current.

GETtheMANUALS.org

2. Starter

A: REMOVAL

1) Disconnect the ground cable from battery.

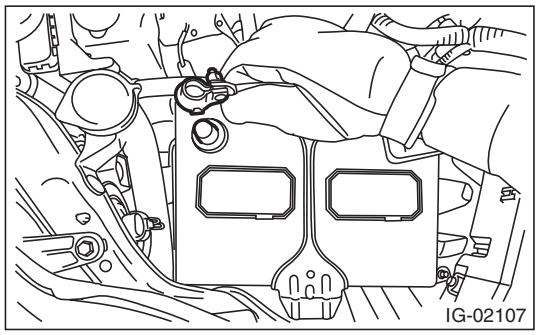

2) Remove the cover (A) and clip (B) from air intake boot assembly. (2.5 L non-turbo model)

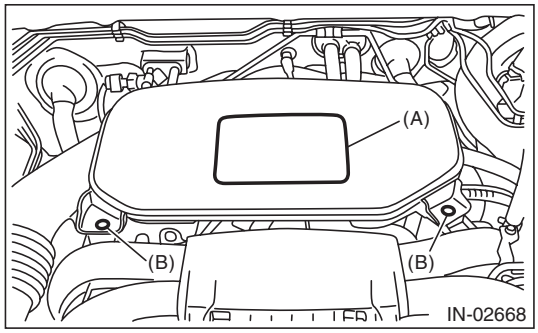

3) Loosen the clamp (A) which connects the air intake boot assembly and air cleaner case. (2.5 L non-turbo model)

4) Loosen the clamp (B) which connects the air intake boot assembly and throttle body. (2.5 L non-turbo model)

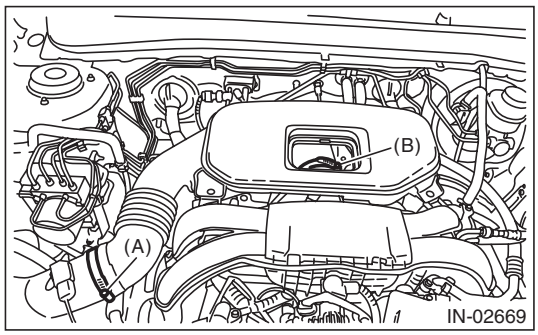

5) Remove the air intake boot from the throttle body, and move it to the left side wheel apron. (2.5 L non-turbo model)

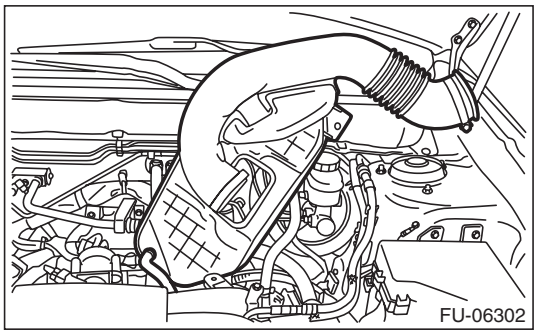

6) Loosen the clamp (A) which connects the air intake boot assembly. (3.6 L model)

7) Loosen the bolt (B) which secures the air intake boot assembly to the collector cover bracket. (3.6 L model)

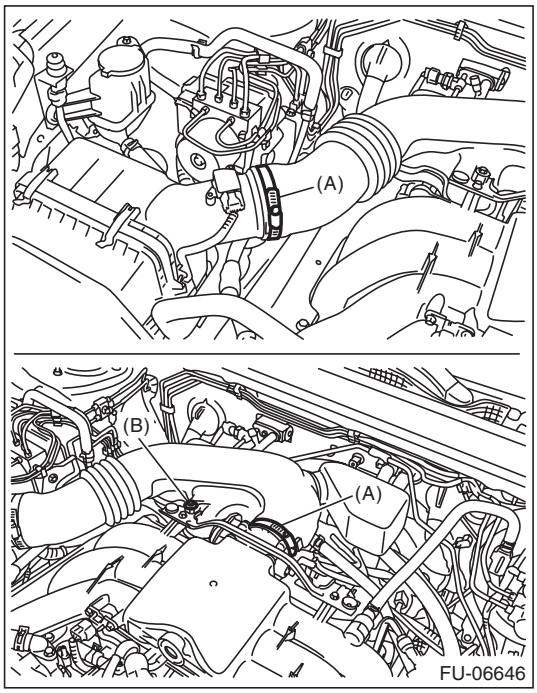

8) Remove the air intake boot assembly, and move it to the left side wheel apron. (3.6 L model)

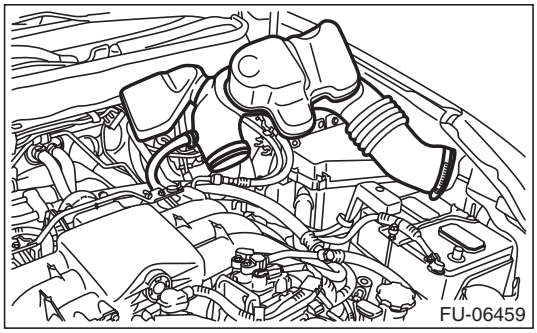

9) Remove the intercooler. (turbo model) <Ref. to IN(H4DOTC)-17, REMOVAL, Intercooler.>

GETtheMANUALS.org

10) Disconnect the connector (B) and terminal (A) from starter.

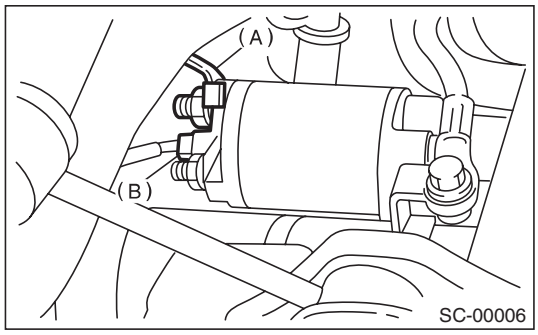

11) Remove the starter from transmission.

NOTE:
For the MT model, a bolt is used in place (A).

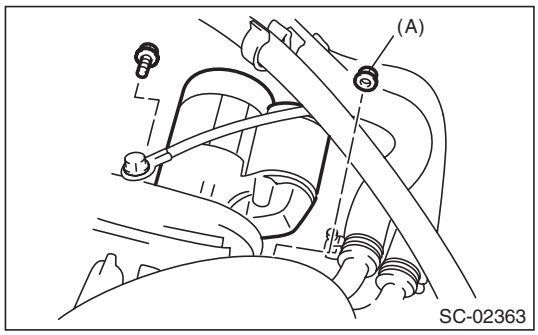

B: INSTALLATION

Install in the reverse order of removal.

NOTE:
For the MT model, a bolt is used in place (A).

Tightening torque:
50 N·m (5.1 kgf-m, 36.9 ft-lb)

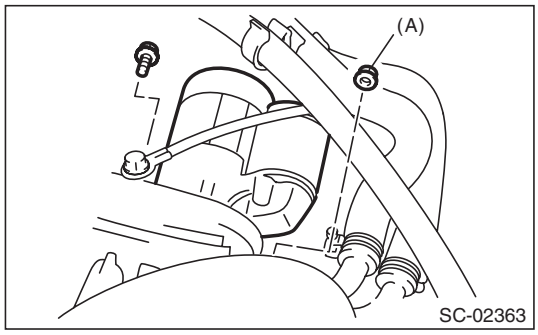

Tightening torque:
10 N·m (1.0 kgf-m, 7.4 ft-lb)

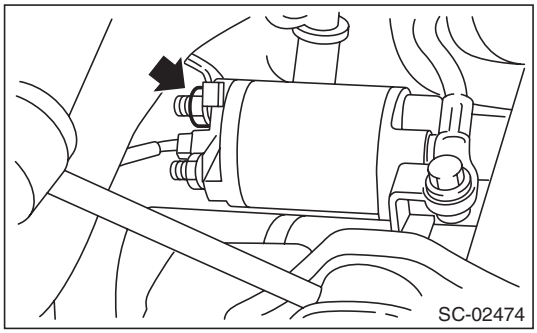

- 2.5 L non-turbo model

NOTE:
Align the clamp hole with the protrusion of the air intake boot assembly.

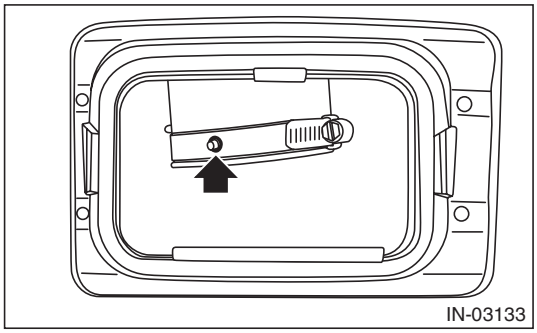

Tightening torque:
Clamp (A), (B)
3 N·m (0.3 kgf-m, 2.2 ft-lb)

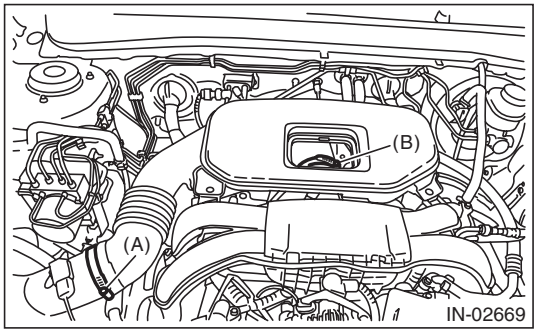

GETtheMANUALS.org

- 3.6 L model

Tightening torque:
Clamp (A)
3 N·m (0.3 kgf-m, 2.2 ft-lb)
Bolt (B)
6.5 N·m (0.7 kgf-m, 4.8 ft-lb)

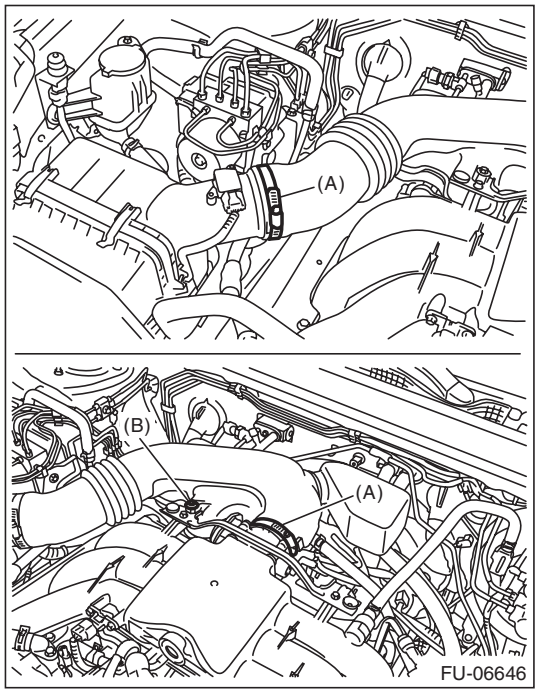

C: DISASSEMBLY

1) Remove the nut which holds terminal M (A) of the magnet switch assembly, then disconnect the harness from the terminal.

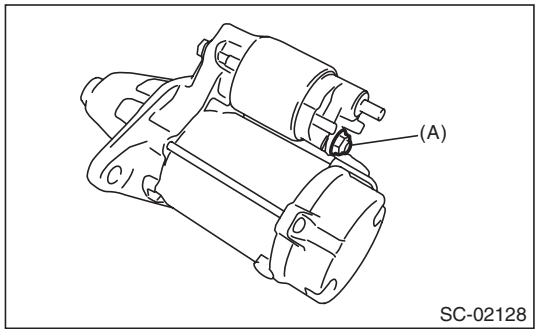

2) Remove the nuts fastening the magnet switch assembly to the starter housing, then remove the magnet switch assembly.

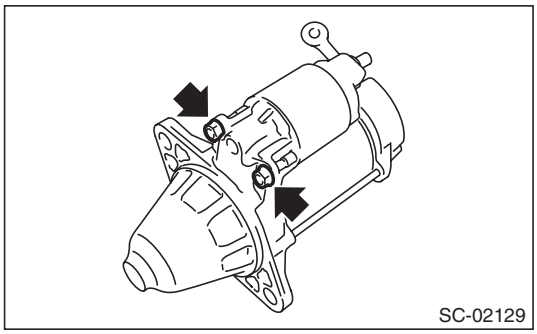

3) Remove the starter seal.

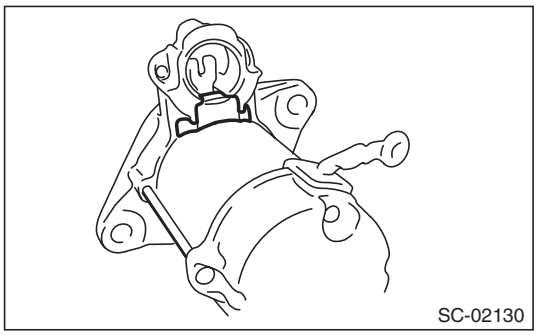

4) Remove the through bolts on both sides, and remove the starter housing.

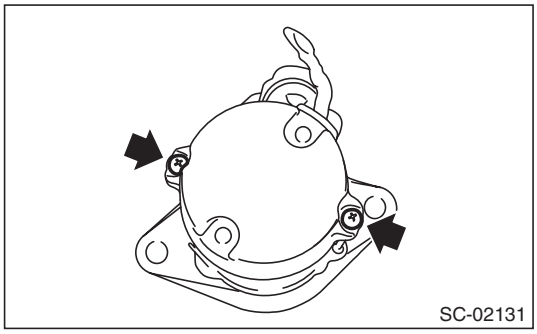

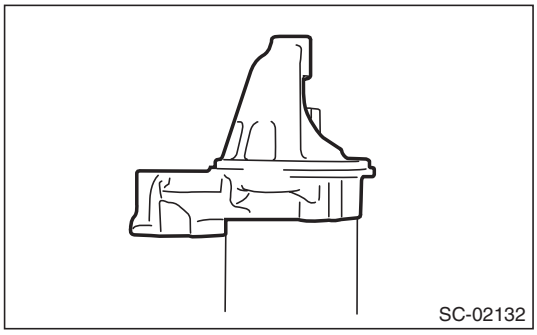

GETtheMANUALS.org

5) Remove the shift lever.

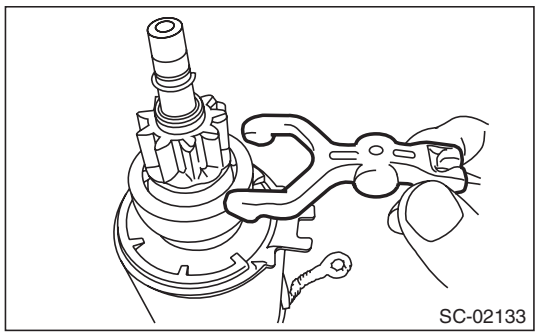

6) Remove the overrunning clutch assembly from the yoke.

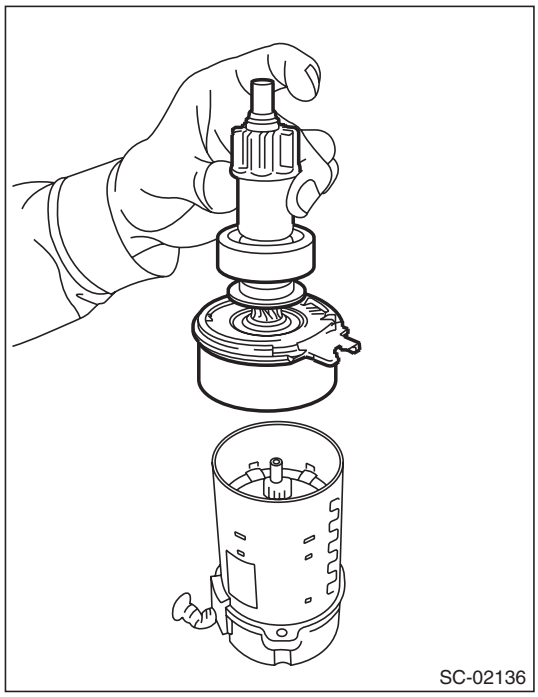

7) Remove the starter plate.

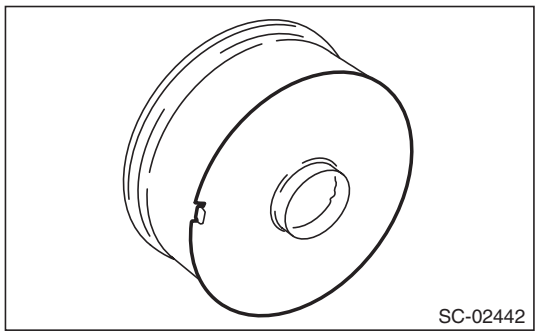

8) Remove the planetary gear (A) and washer (B) from internal gear.

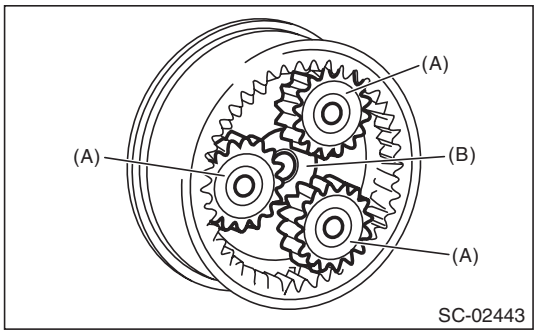

9) Remove the screws, and remove the starter cover from the brush holder assembly.

NOTE:
Separate the starter cover by pressing the brush holder assembly using the screws so that the assembly stays onto the armature side.

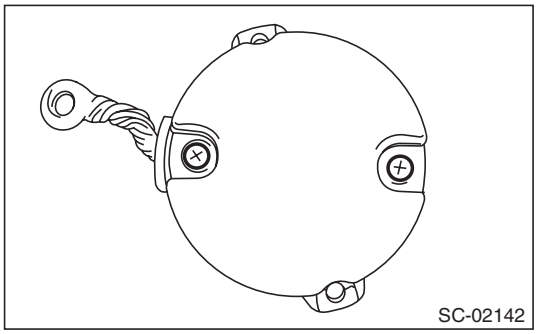

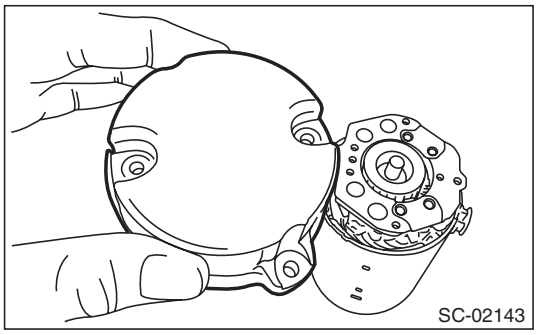

GETtheMANUALS.org

10) Remove the brush holder assembly from the armature.

NOTE:
Spread the brush with your fingers, being careful not to damage the brush.

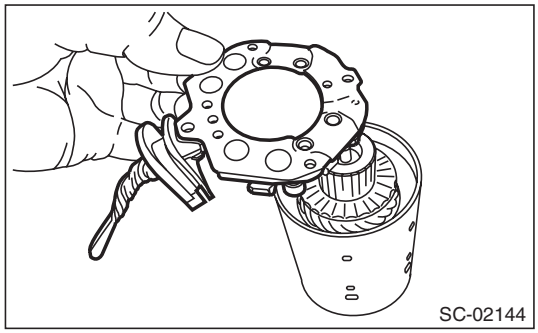

11) Remove the armature from the yoke.

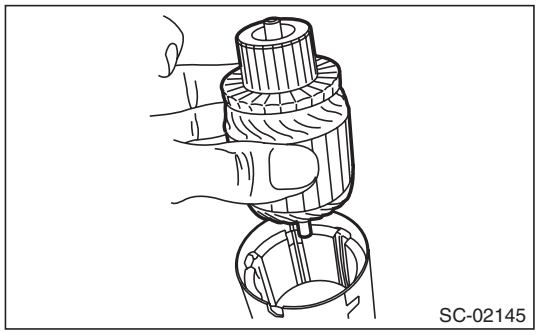

D: ASSEMBLY

1) Install the armature to the yoke.

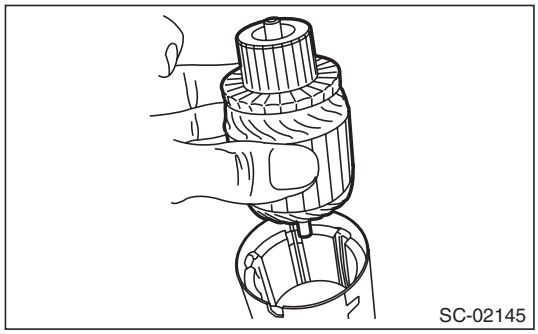

2) Install the brush holder assembly to the armature.

NOTE:
Spread the brush with your fingers, being careful not to damage the brush.

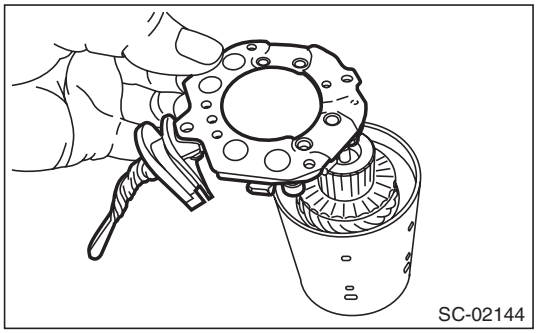

3) Install the starter cover, and secure it to the brush holder assembly with the screws.

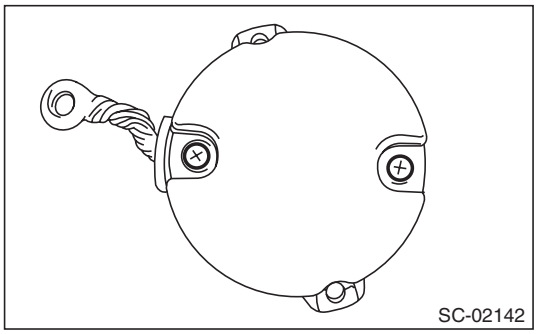

4) Assemble the planetary gear (A) and washer (B) to the internal gear.

(1) Apply grease to the planetary gear installation position.

Grease:
DENSO HL50

(2) Install the planetary gear to the pin.
(3) Apply grease to the planetary gear, internal gear, washer, and upper part of the pin.

NOTE:
- Apply grease so that it contacts each gear.
- Be careful not to allow dirt to get in.

Grease:
DENSO HL50

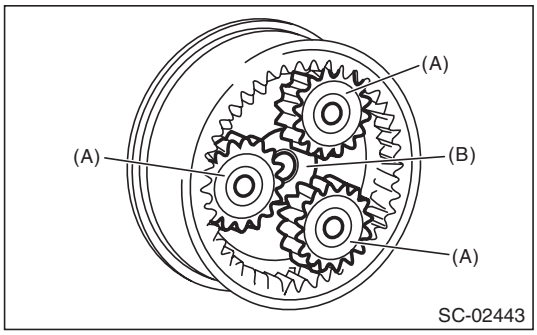

GETtheMANUALS.org

(4) Install the starter plate.

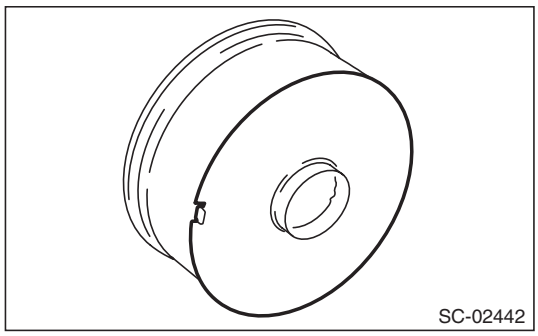

5) Assemble the overrunning clutch assembly to the yoke.

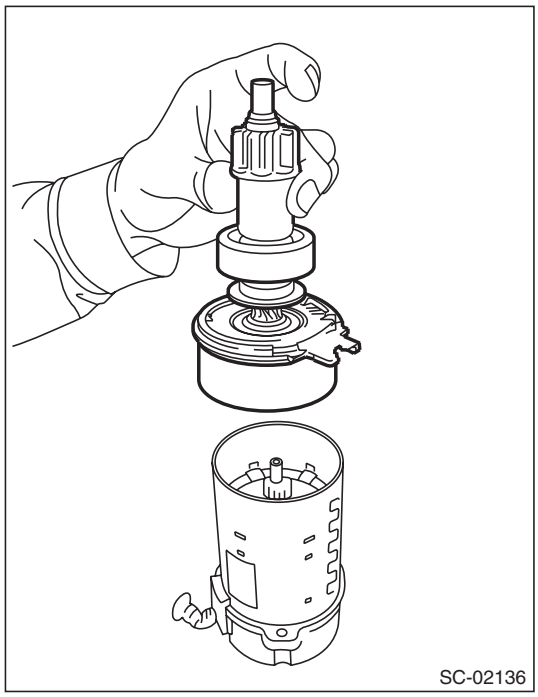

6) Install the shift lever.

NOTE:
Apply grease to the contact portion of the shift lever.

Grease:
DENSO HL50

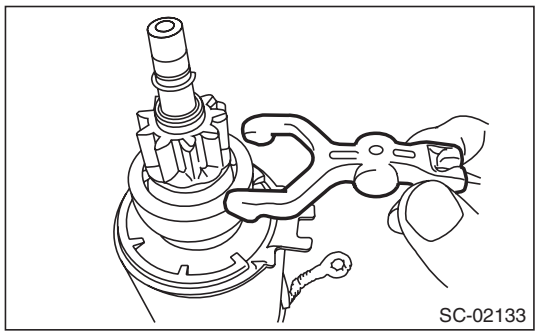

7) Install the starter housing, and tighten through bolts on both sides.

Tightening torque:
6 N·m (0.6 kgf-m, 4.4 ft-lb)

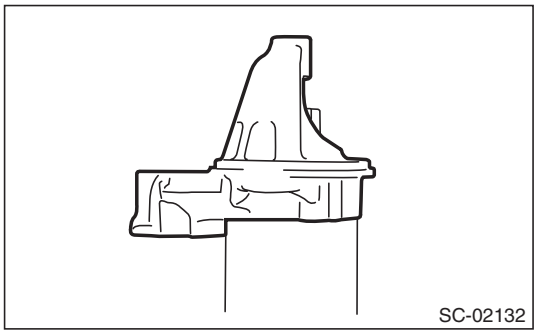

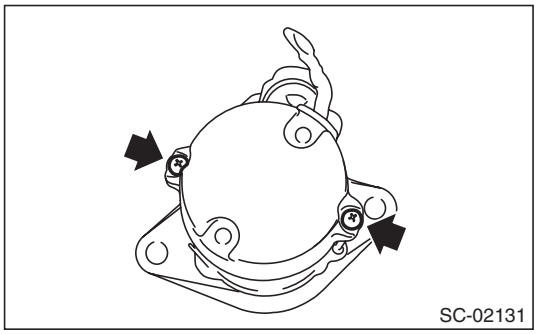

8) Install the starter seal.

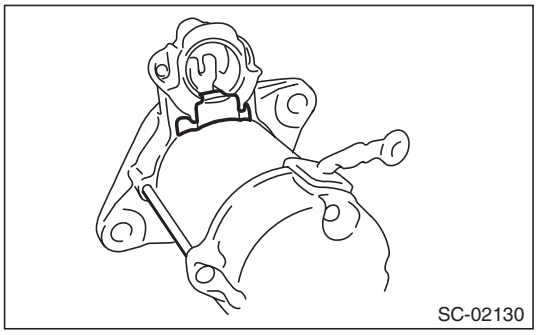

GETtheMANUALS.org

9) Install the magnet switch assembly to the starter housing, and tighten the nuts.

NOTE:
Apply grease to the shift lever installation position.

Grease:
DENSO HL50

Tightening torque:
7.5 N·m (0.8 kgf-m, 5.5 ft-lb)

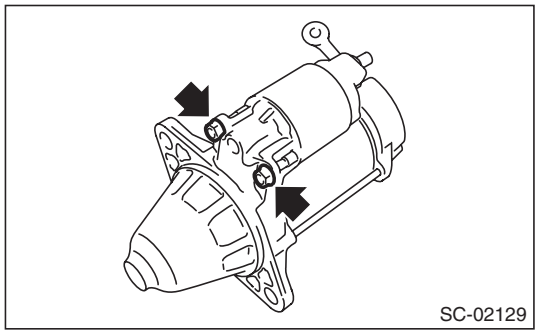

10) Install the harness to the terminal M (A) of the magnet switch assembly, and tighten the nut.

Tightening torque:
10 N·m (1.0 kgf-m, 7.4 ft-lb)

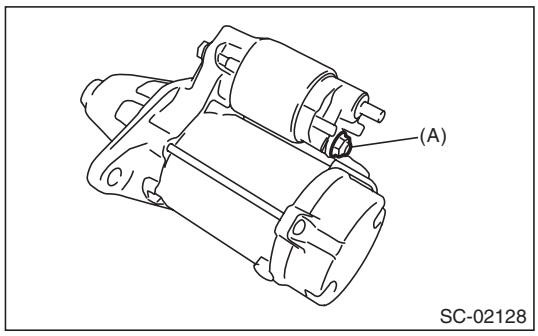

E: INSPECTION

1. SWITCH ASSEMBLY

Using a circuit tester (set to “ohm”), check that there is continuity between terminals S and M, and between terminal S and ground.
Also check to be sure there is no continuity between terminals M and B.

Terminal/Resistance:
S — M/1 Ω or less
S — Ground/1 Ω or less
M — B/1 MΩ or more

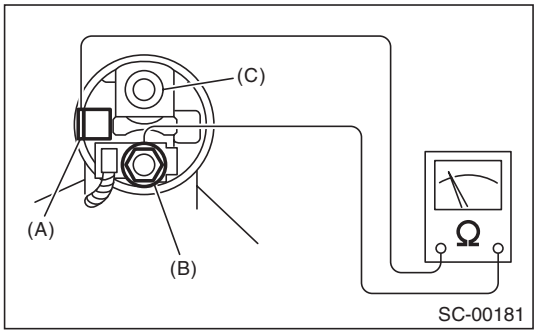

(A) Terminal S
(B) Terminal M
(C) Terminal B

2. SWITCH ASSEMBLY OPERATION

NOTE:
Perform each test in a short period of time (3 — 5 sec).
1) Suction test
Check that the pinion gear comes flying out when the harness is disconnected from terminal M and connected as shown in the figure.

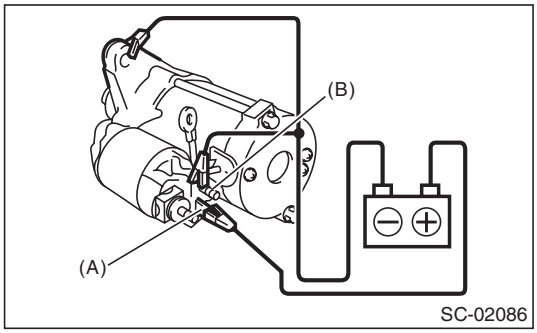

(A) Terminal S
(B) Terminal M

GETtheMANUALS.org

2) Holding test
Check that the pinion gear remains flying out after the cable is disconnected from terminal M.

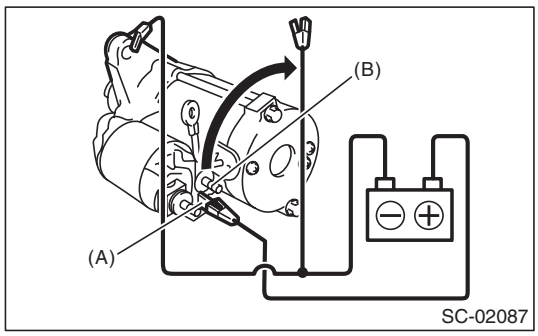

(A) Terminal S
(B) Terminal M

3) Returning test
With terminal S connected to the positive terminal, and terminal M and starter body connected to the battery ground terminal to suction the main contact point, check that the pinion gear returns to its original position when terminal S is disconnected.

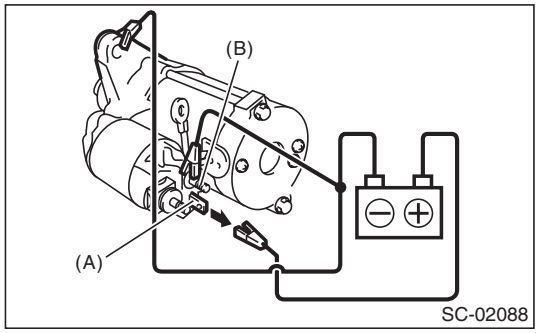

(A) Terminal S
(B) Terminal M

3. PERFORMANCE TEST

The starter should be submitted to performance tests whenever it has been overhauled, to assure its satisfactory performance when installed on the engine.
Three performance tests, no-load test, load test, and lock test, are presented here; however, if the load test and lock test cannot be performed, carry out at least the no-load test.

For these performance tests, use the circuit shown in figure.

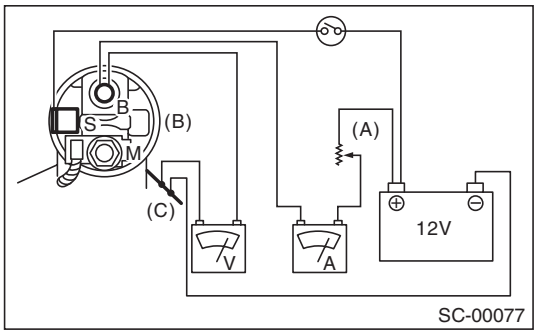

(A) Variable resistance
(B) Magnetic switch
(C) Starter body

1) No-load test
Adjust the variable resistance with the switch on until the voltage is 11 V, and read the value displayed on the ammeter to measure rotating speed. Compare these values with the standard.

No-load test (standard):

Voltage/Current
Max. 11 V/90 A or less

Rotating speed
2.5 L model
1,900 rpm or more
3.6 L model
1,550 rpm or more

2) Load test
Apply the specified braking torque to starter. The condition is normal if the current draw and rotating speed are within standard.

Load test (standard):

Voltage/Load
2.5 L model
8 V/11.1 N·m (1.1 kgf-m, 8.2 ft-lb) or more
3.6 L model
8 V/12.8 N·m (1.3 kgf-m, 9.4 ft-lb) or more

Current/Rotating speed
2.5 L model
370 A/910 rpm or more
3.6 L model
370 A/800 rpm or more

GETthemanuals.org

3) Lock test
With the starter stalled, or not rotating, measure the torque developed and current draw when the voltage is adjusted to standard voltage.

Lock test (standard):

Voltage/Current
3 V/750 A or less

Torque
2.5 L model
15.5 N·m (1.6 kgf-m, 11.4 ft-lb) or more
3.6 L model
19.0 N·m (1.9 kgf-m, 14.0 ft-lb) or more

4. OTHER INSPECTIONS

Check that the starter does not have deformation, cracks and any other damage.

GETthemanuals.org

3. Generator

A: REMOVAL

1) Disconnect the ground cable from battery.

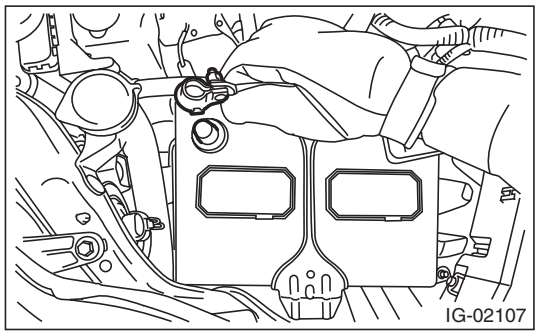

2) Remove the V-belts. <Ref. to ME(H4SO)-43, V-BELT, REMOVAL, V-belt.> <Ref. to ME(H4DOTC)-42, V-BELT, REMOVAL, V-belt.> <Ref. to ME(H6DO)-51, REMOVAL, V-belt.>

3) Disconnect the connector and terminal from generator.

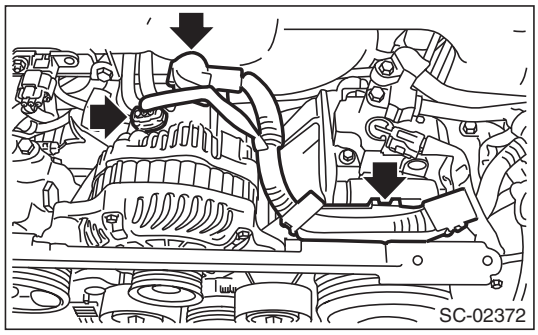

4) Remove the collector cover bracket or v-belt cover bracket.

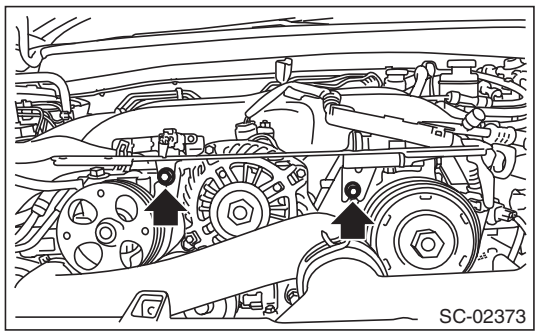

5) Remove the generator from the bracket.

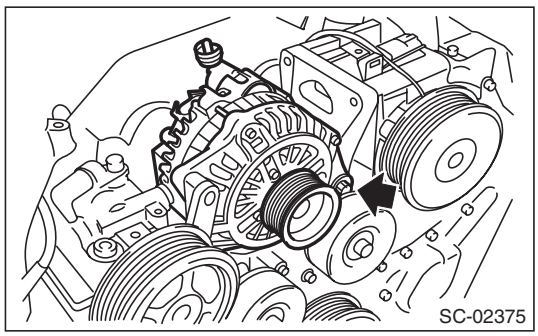

B: INSTALLATION

Install in the reverse order of removal.

Tightening torque:
T1: 25 N·m (2.5 kgf-m, 18.4 ft-lb)
T2: 6.4 N·m (0.7 kgf-m, 4.7 ft-lb)

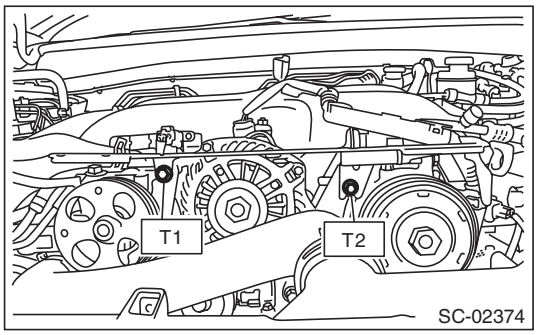

C: DISASSEMBLY

1. 2.5 L MODEL

1) Remove the four through-bolts.

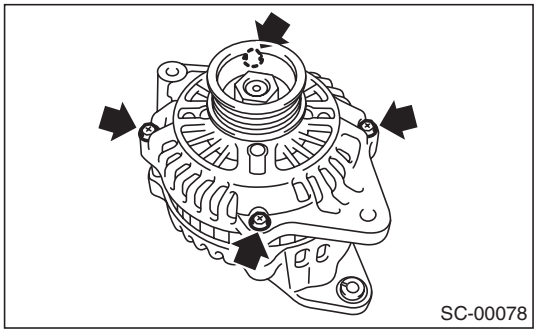

2) Use a drier to heat the rear cover (A) portion to 50°C (122°F).

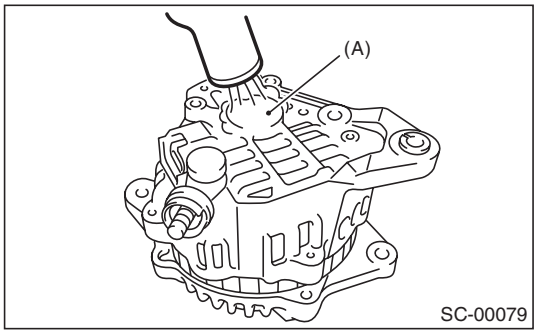

GETtheMANUALS.org

3) Insert the end of a flat tip screwdriver into the gap between stator core and front cover. Pry them apart to disassemble.

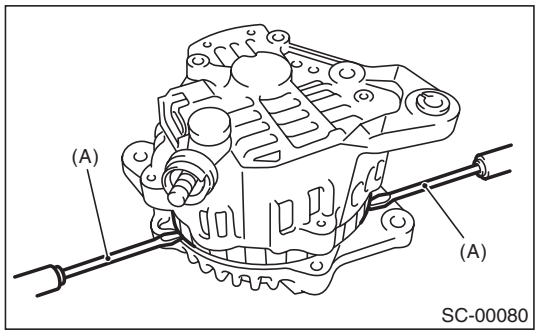

(A) Screwdriver

4) Using a vise, support the rotor and remove the pulley nut, then remove the rotor from the front cover.

CAUTION:
When holding the rotor with a vise, place aluminum plates or wooden pieces on the vise jaws to prevent rotor from damage.

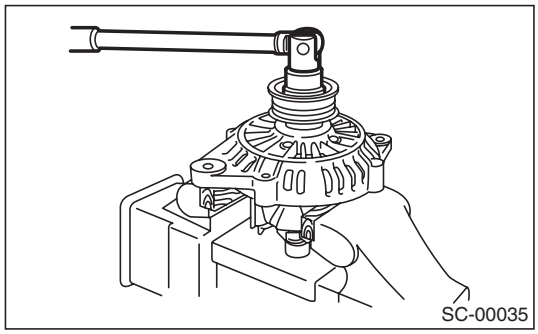

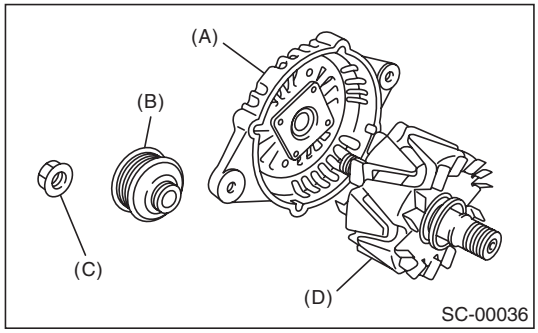

(A) Front cover
(B) Pulley
(C) Pulley nut
(D) Rotor

5) Use the following procedures to remove the ball bearings.

(1) Remove the bolt, and then detach the bearing retainer.

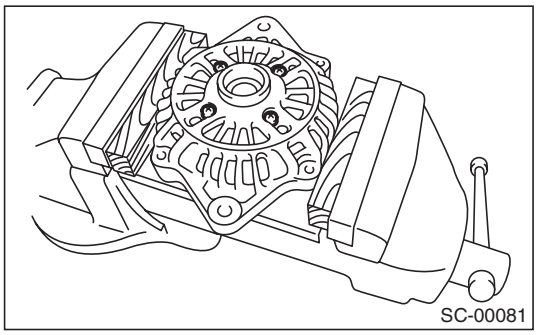

(2) Firmly attach an appropriate tool (such as a correct size socket wrench) to the bearing inner race.

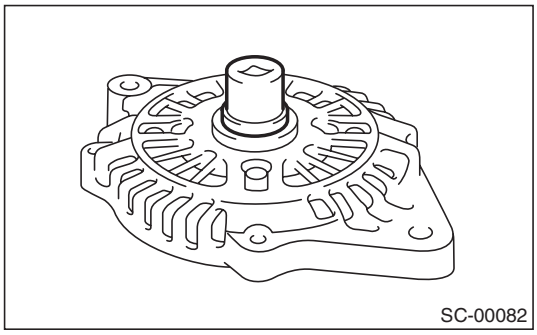

(3) Use the press to push the ball bearings out from the front cover.

6) Using the bearing puller, remove the bearings from the rotor.

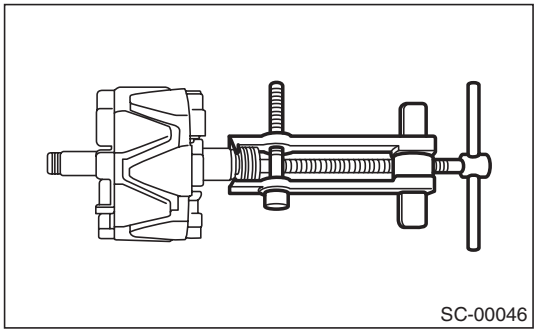

GETtheMANUALS.org

7) Disconnect the connection between the rectifier and stator coil, then remove the stator coil.

CAUTION:
The rectifier is easily damaged by heat. Do not allow a 180 — 270 W soldering iron to contact the terminals for 5 seconds or more at a time.

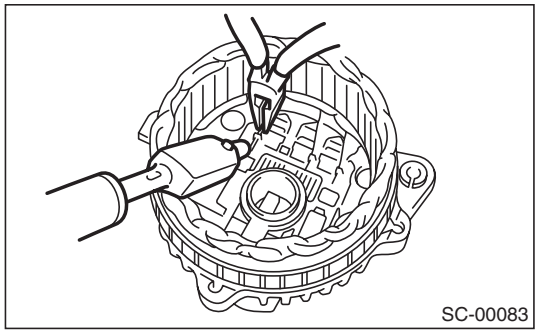

8) Use the following procedures to remove the IC regulator.

(1) Remove the screws which secure the IC regulator to the rear cover.

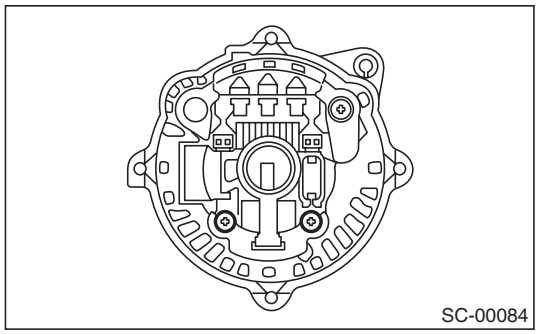

(2) Disconnect the connection between the IC regulator and rectifier, then remove the IC regulator.

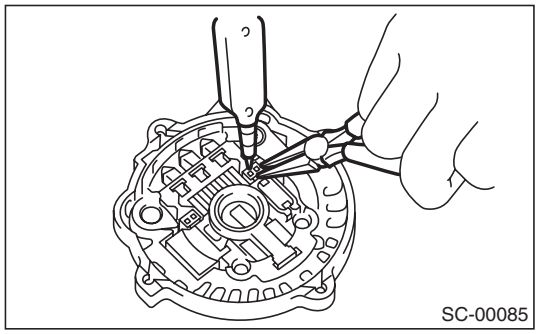

9) Use the following procedures to remove the brush.

(1) Remove the cover A.

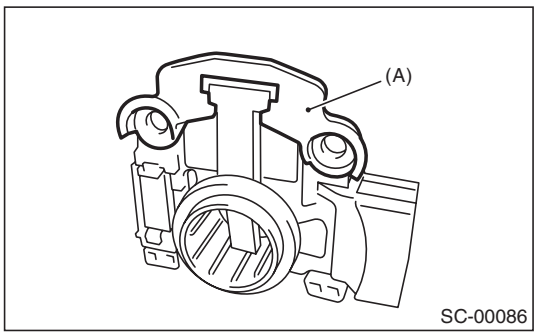

(A) Cover A

(2) Remove the cover B.

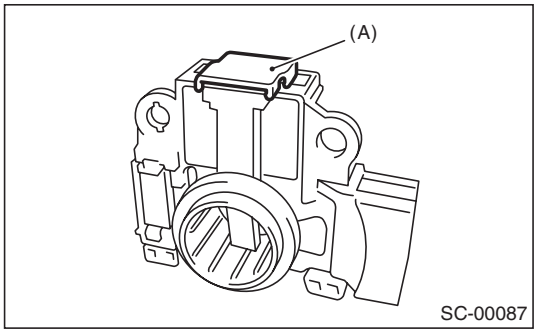

(A) Cover B

(3) Disconnect the connection and remove the brush.

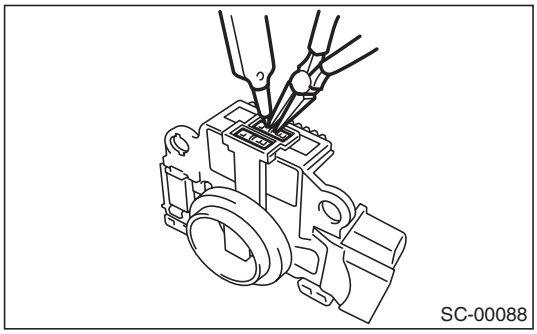

10) Remove the rectifier as follows.

(1) Remove the bolts which secure the rectifier.

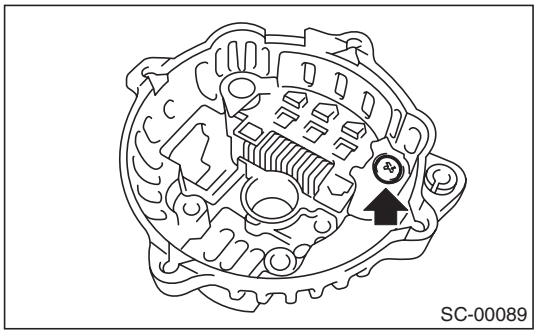

GETtheMANUALS.org

(2) Remove the cover on terminal B.

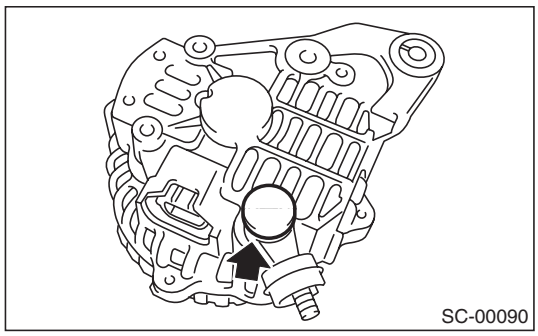

(3) Remove the nuts of terminal B, then remove the rectifier.

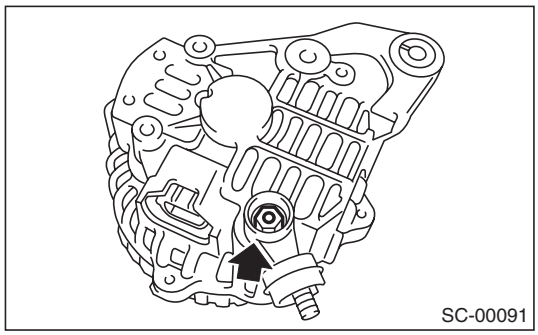

2. 3.6 L MODEL

1) Remove the four through-bolts.

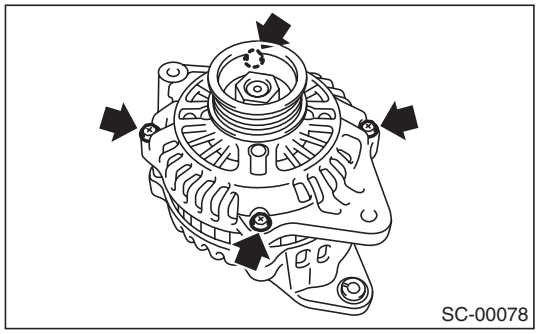

2) Use a drier to heat the rear cover (A) portion to 50 — 60°C (122 — 140°F).

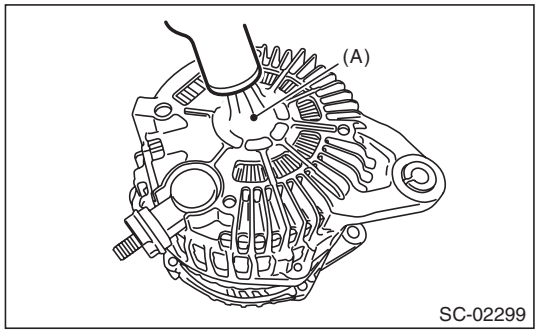

3) Insert the end of a flat tip screwdriver into the gap between stator core and front cover. Pry them apart to disassemble.

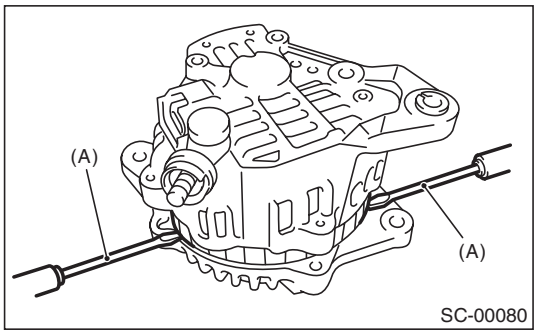

(A) Screwdriver

4) Using a vise, support the rotor and remove the pulley nut, then remove the rotor from the front cover.

CAUTION:
When holding the rotor with a vise, place aluminum plates or wooden pieces on the vise jaws to prevent rotor from damage.

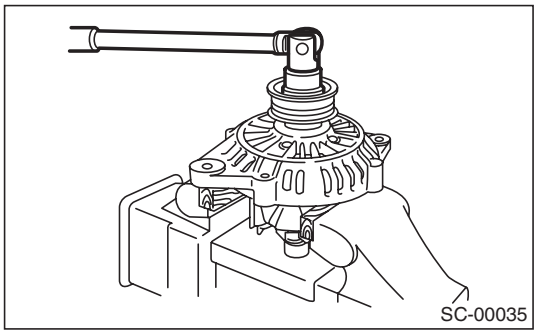

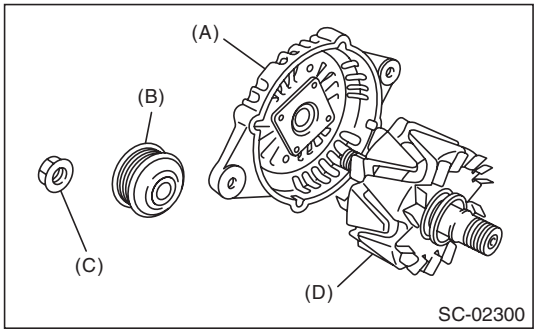

(A) Front cover
(B) Pulley
(C) Pulley nut
(D) Rotor

GETtheMANUALS.org

5) Use the following procedures to remove the ball bearings.

(1) Remove the bolt, and then detach the bearing retainer.

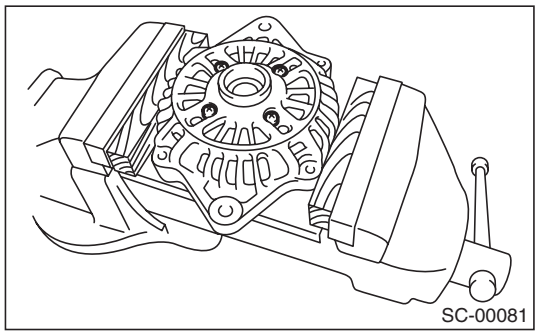
SC-00081

(2) Firmly attach an appropriate tool (such as a correct size socket wrench) to the bearing inner race.

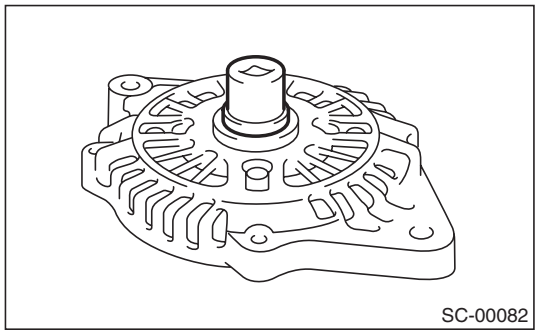
SC-00082

(3) Use the press to push the ball bearings out from the front cover.

6) Using the bearing puller, remove the bearings from the rotor.

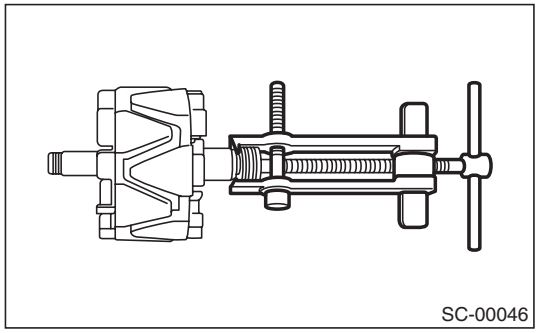
SC-00046

7) Remove six bolts between the rectifier and stator coil, then remove the stator coil.

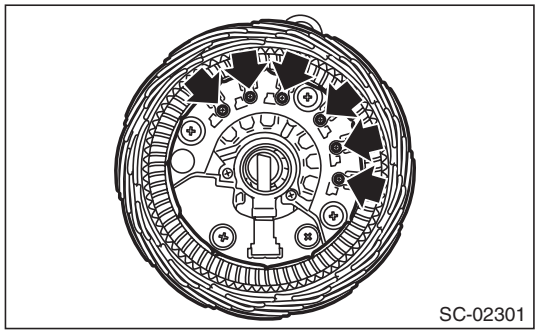
SC-02301

8) Remove four screws which secure the IC regulator to the rear cover, then remove the IC regulator.

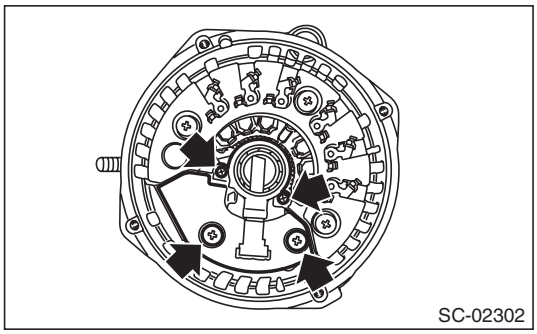
SC-02302

9) Use the following procedures to remove the brush.

(1) Remove the cover A.

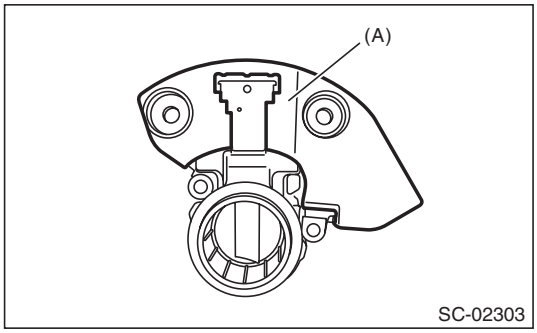

SC-02303

(A) Cover A

(2) Remove the cover B.

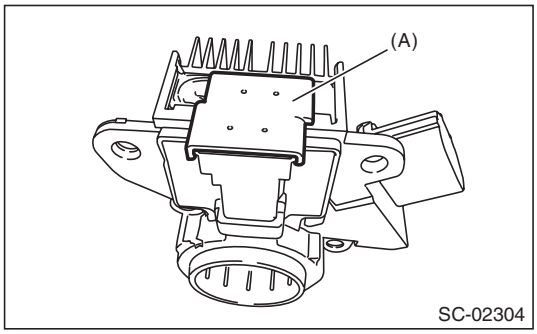

SC-02304

(A) Cover B

(3) Disconnect the connection and remove the brush.

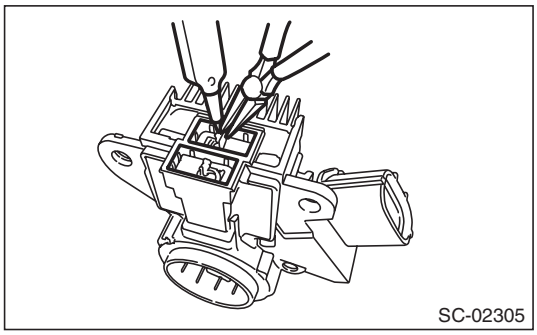
SC-02305

GETtheMANUALS.org

10) Remove the rectifier as follows.
(1) Remove the cover on terminal B.

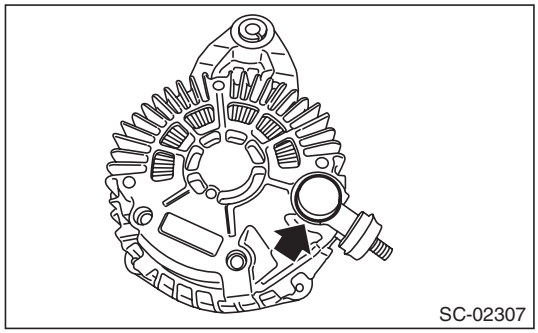

(2) Remove the nut on terminal B.

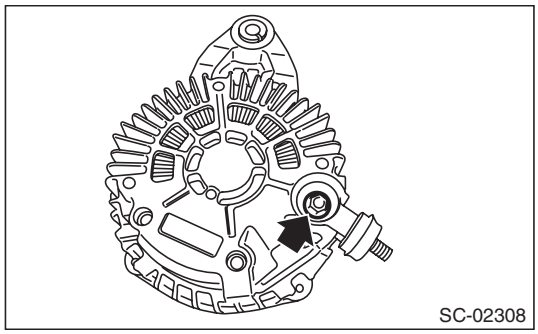

(3) Remove the bolts which secure the rectifier, and remove the rectifier.

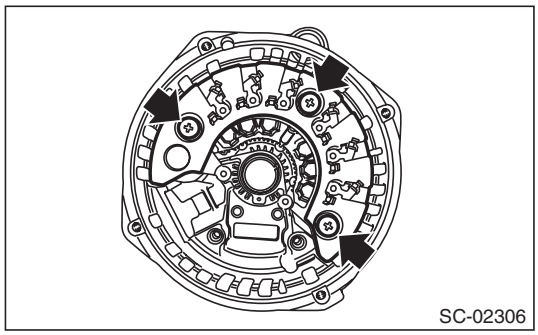

D: ASSEMBLY

1. 2.5 L MODEL

Assemble in the reverse order of disassembly.

NOTE:
- Refer to component for tightening torque of each part. <Ref. to SC(H4SO)-5, GENERATOR, COMPONENT, General Description.>
- After assembling, manually turn the pulley to check that the rotor rotates smoothly.

1) Push of the brush
Before assembling the front and rear parts, press the brush down into the brush holder, then fix the brush in that position by inserting a [1 mm (0.04 in) dia., 40 — 50 mm (1.6 — 2.0 in) long] wire through the hole as shown in the figure.

CAUTION:
After re-assembling, remove the wire.

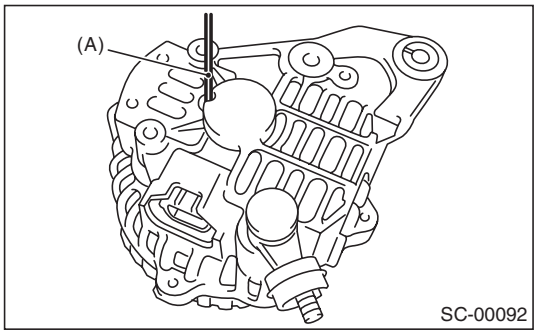

(A) Wire

2) Install the ball bearings.
(1) Set the ball bearings in the front cover, then securely install an appropriate tool (such as a socket wrench of proper size) to the bearing outer race.
(2) Using a press to press the ball bearings into the specified location.
(3) Install the bearing retainer.

3) Use a press to install the bearings (rear side) to the rotor shaft.

4) Heat the bearing box in rear cover to 50 — 60°C (122 — 140°F), and then press the rear bearing into rear cover.

CAUTION:
Do not apply grease to the rear bearings. If there is any oil on the bearing box, remove it completely.

GETtheMANUALS.org

2. 3.6 L MODEL

Assemble in the reverse order of disassembly.

NOTE:
- Refer to component for tightening torque of each part. <Ref. to SC(H4SO)-5, GENERATOR, COMPONENT, General Description.>
- After assembling, manually turn the pulley to check that the rotor rotates smoothly.

1) Push of the brush
Before assembling the front and rear parts, press the brush down into the brush holder, then fix the brush in that position by inserting a [1 mm (0.08 in) dia., 40 — 50 mm (1.6 — 2.0 in) long] wire through the hole as shown in the figure.

CAUTION:
After re-assembling, remove the wire.

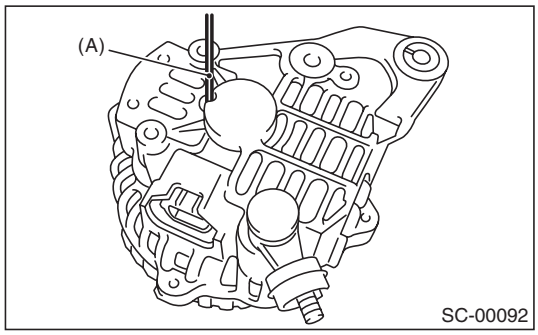

(A) Wire

2) Install the ball bearings.
(1) Set the ball bearings in the front cover, then securely install an appropriate tool (such as a socket wrench of proper size) to the bearing outer race.
(2) Using a press to press the ball bearings into the specified location.
(3) Install the bearing retainer.

3) Use a press to install the bearings (rear side) to the rotor shaft.
4) Heat the bearing box in rear cover to 50 — 60°C (122 — 140°F), and then press the rear bearing into rear cover.

CAUTION:
Do not apply grease to the rear bearings. If there is any oil on the bearing box, remove it completely.

E: INSPECTION

1. DIODE (2.5 L MODEL)

CAUTION:
There is the possibility of damaging the diodes if a mega-tester (used to measure high voltages) or a similar measuring instrument is used. Never use a mega tester or equivalent for this test.

1) Check for continuity between the diode lead and positive side heat sink. If resistance is 1 Ω or more only in the direction from the diode lead to the heat sink, replace the rectifier.

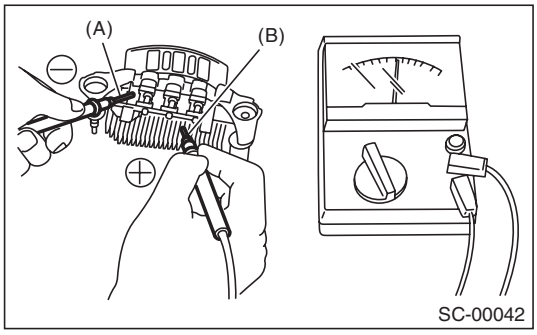

(A) Diode lead
(B) Heat sink (positive side)

2) Check for continuity between the negative side heat sink and diode lead. If resistance is 1 Ω or more only in the direction from the heat sink to the diode lead, replace the rectifier.

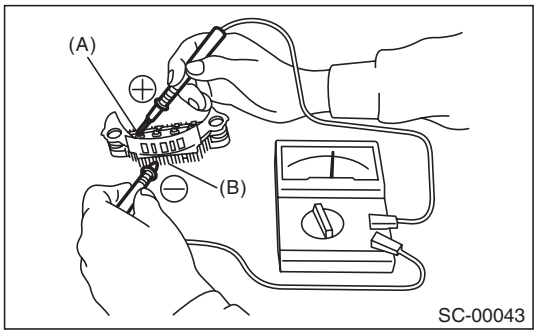

(A) Diode lead
(B) Heat sink (negative side)

GETtheMANUALS.org

2. DIODE (3.6 L MODEL)

CAUTION:
There is the possibility of damaging the diodes if a mega-tester (used to measure high voltages) or a similar measuring instrument is used. Never use a mega tester or equivalent for this test.

1) Check for continuity between the diode lead and terminal E or B. If continuity is not as shown in the table, replace the rectifier.

- At analog type tester

Tester lead		Continuity
–lead	+lead	
E	P1, P2, P3, P4, P5, P6	Yes
B		None
P1, P2, P3, P4, P5, P6	E	None
	B	Yes

- At digital type tester

Tester lead		Continuity
–lead	+lead	
E	P1, P2, P3, P4, P5, P6	None
B		Yes
P1, P2, P3, P4, P5, P6	E	Yes
	B	None

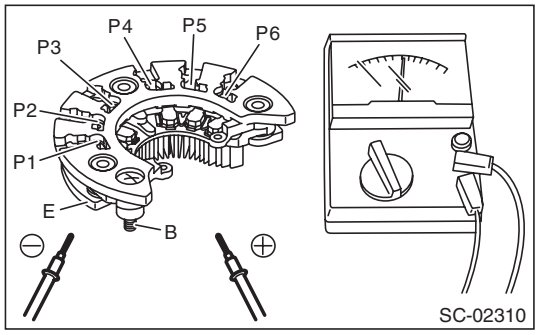

3. ROTOR

1) Inspect the slip rings for contamination or any roughness on the sliding surface. Repair the slip ring surface using a lathe or sand paper.

2) Measure the slip ring outer diameter. Replace the rotor if the slip ring is worn.

Slip ring outer diameter:
Standard
22.7 mm (0.894 in)
Limit
22.1 mm (0.870 in)

3) Using a circuit tester, check the resistance between slip rings. If resistance exceeds the standard, replace the rotor.

Standard:
Approx. 1.8 — 2.2 Ω

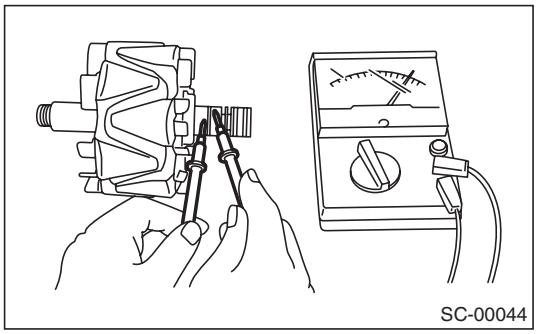

4) Check the continuity between slip ring and rotor core or shaft. If there is continuity, replace the rotor because the rotor coil is grounded.

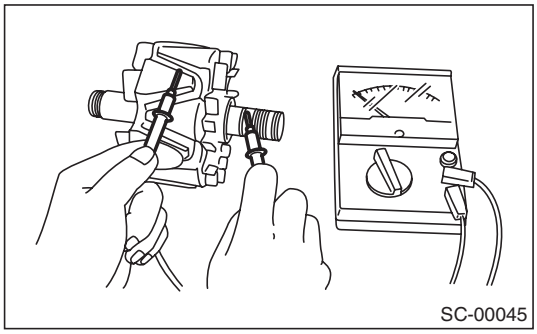

5) Check the ball bearings. If there is any noise, or the rotor does not rotate smoothly, replace the bearings.

4. STATOR COIL (2.5 L MODEL)

1) Inspect continuity between the stator coil lead wire terminals. If the resistance is 1 MΩ or more, replace the stator coil.

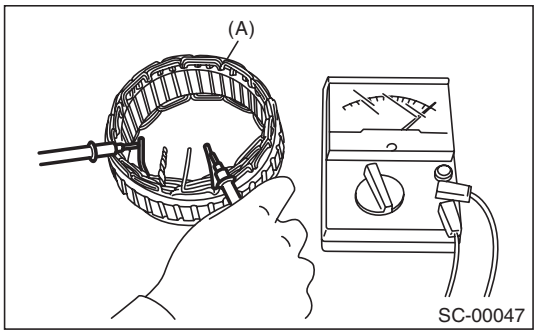

(A) Stator

GETtheMANUALS.org

2) Inspect the continuity between the stator coil stator core and lead wire terminals. If the resistance is 1 Ω or less, replace the stator coil.

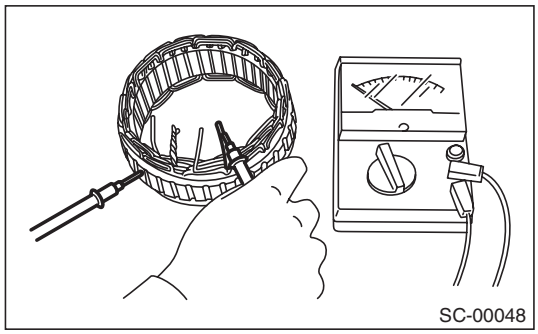

5. 3.6 L MODEL

1) Continuity test
Inspect the continuity between the stator coil terminals. If continuity is not as shown in the table, replace the stator coil.

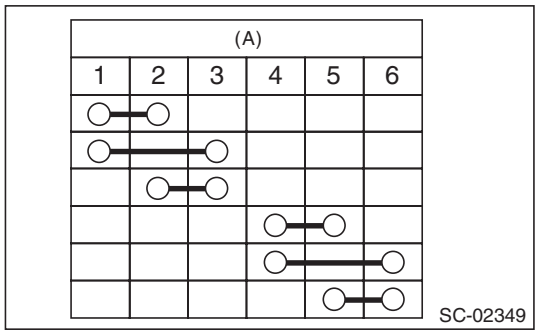

(A) Terminals

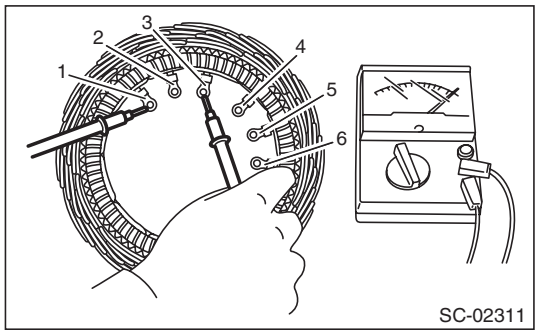

2) Insulation test
Inspect the continuity between the stator coil stator core and lead wire terminals. If there is continuity, replace the stator coil because the stator coil is grounded.

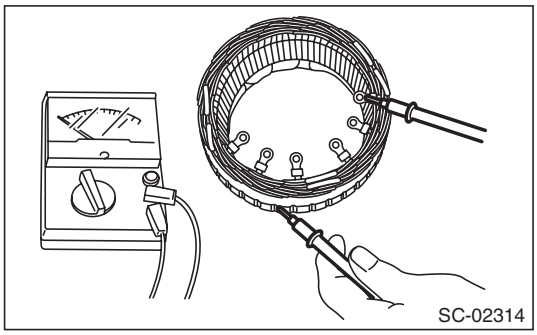

6. BRUSH

1) Measure the length of each brush. Replace the brush if wear exceeds service limits. There is a service limit mark (A) on each brush.

Brush length:

- ***2.5 L model***
  Standard (1)
  18.5 mm (0.728 in)
  Limit (2)
  5.0 mm (0.197 in)
- ***3.6 L model***
  Standard (1)
  22.5 mm (0.886 in)
  Limit (2)
  5.0 mm (0.197 in)

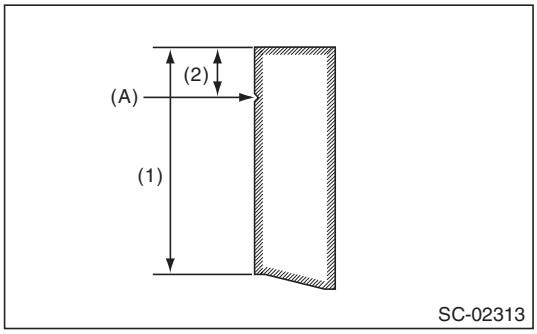

GETtheMANUALS.org

2) Using a spring pressure indicator, push the brush into the brush holder until its tip protrudes 2 mm (0.08 in). Then measure the pressure of brush spring. If the pressure is 2.648 N (270 g, 9.52 oz) or less, replace the brush spring with a new part. 4.609 — 5.786 N (470 — 590 g, 16.58 — 20.810 oz) pressure is required on the new spring.

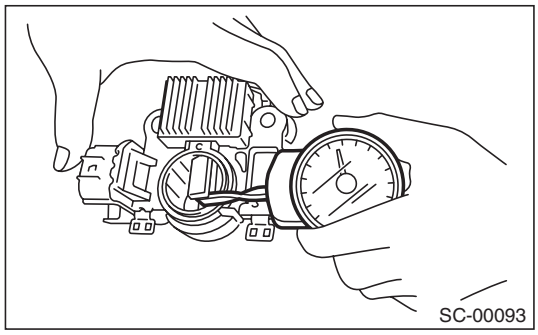

7. BALL BEARING

Check the ball bearings. Replace the ball bearings if there is resistance in the rotation, or if there is any abnormal noise.

8. OTHER INSPECTIONS

Check that the generator does not have deformation, cracks and any other damage.

GETtheMANUALS.org

4. Battery

A: REMOVAL

1) After disconnecting the battery ground terminal, remove the terminal cover, then disconnect the positive terminal.
2) Remove the battery cable holder from the battery rod.
3) Remove flange nut from the battery rod and remove battery holder.

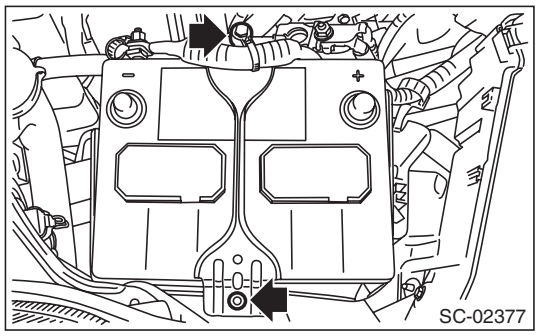

4) Remove the battery.

B: INSTALLATION

Install in the reverse order of removal.

Tightening torque:
3.5 N·m (0.4 kgf-m, 2.6 ft-lb)

NOTE:
• Clean the battery cable terminals and apply grease to retard the formation of corrosion.
• Connect the positive (+) terminal, and then connect the negative (–) terminal of the battery.
• After the battery is installed, initial diagnosis of the electronic throttle control is performed. Wait for 10 seconds or more after turning the ignition switch to ON, and then start the engine.

C: INSPECTION

WARNING:
• Electrolyte is corrosive acid, and has toxicity; be careful of handling the fluid.
• Make sure the electrode does not come into contact with skin, eyes or clothing. Especially at contact with eyes, flush with water for 15 minutes and get prompt medical attention.
• In addition, be careful not to let the electrode contact with the coated parts.
• Be careful when handling the batteries because they produce explosive gases.
• Be sure to keep battery away from any fire.
• For safety, in case an explosion does occur, wear eye protection or shield your eyes when working near any battery. In addition, never lean over the battery.
• Ventilate sufficiently when using or charging battery in enclosed space.
• Before starting work, remove rings, metal watch-bands, and other metal jewelry.
• Never allow metal tools to contact the positive battery terminal and anything connected to it while you are at the same time in contact with any other metallic portion of the vehicle.

1. EXTERNAL PARTS

Check the battery case, top cover, vent plugs, and terminal posts for dirt or cracks. If necessary, clean with water and wipe with a dry cloth.
Apply a thin coat of grease on the terminal posts to prevent corrosion.

2. ELECTROLYTE LEVEL

Check the electrolyte level in each cell. If the level is below MIN level, bring the level to MAX level by pouring distilled water into the battery cell. Do not fill beyond MAX level.

3. SPECIFIC GRAVITY OF ELECTROLYTE

1) Measure specific gravity of electrolyte using a hydrometer and a thermometer.
Specific gravity varies with temperature of electrolyte so that it must be corrected at 20°C (68°F) using the following calculation:

$$S_{20} = St + 0.0007 \times (t - 20)$$

S_{20}: Specific gravity corrected at electrolyte temperature of 20°C (68°F)
St: Measured specific gravity
t: Measured temperature (°C)
Judge whether or not battery must be charged, according to corrected specific gravity.
Standard specific gravity: 1.220 — 1.290 [at 20°C (68°F)]

GETtheMANUALS.org

2) Measuring the specific gravity of the electrolyte in the battery will disclose the state of charge of the battery. The relation between specific gravity and state of charge is as shown in the figure.

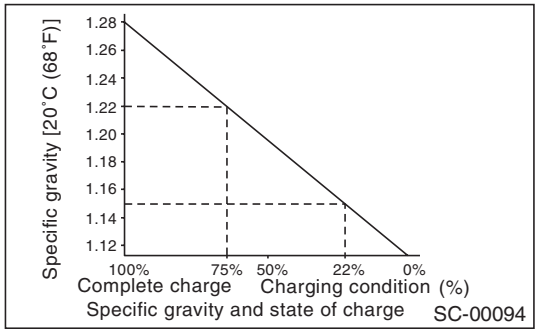

D: MEASUREMENT

WARNING:
Do not bring an open flame close to the battery when working.

CAUTION:
- **Prior to charging, corroded terminals should be cleaned with a brush and common caustic soda solution.**
- **Be careful since battery electrolyte overflows while charging the battery.**
- **Observe instructions when handling the battery charger.**
- **Before charging the battery on the vehicle, disconnect the battery ground terminal to prevent damage of generator diodes or other electrical units.**

1. JUDGMENT OF BATTERY IN CHARGED CONDITION

1) Specific gravity of electrolyte should be held within the specific range from 1.250 to 1.290 for one hour or more.
2) Voltage per battery cell should be held at a specific value in a range from 2.5 to 2.8 V for one hour or more.

2. CHECK CONDITION OF CHARGE WITH HYDROMETER

Hydrometer indicator	State of charge	Corrective action
Green dot	65% or more	Load test
Dark dot	65% or less	Charge battery
Clear dot	Low electrolyte	Replace the battery.* (If cranking is difficult)
* Check electrical system before replacement.		

3. NORMAL CHARGING

Charge the battery at the current value specified by manufacturer or at approximately 1/10 of battery's ampere-hour rating.

4. QUICK CHARGING

CAUTION:
- **Observe the items in "3. NORMAL CHARGING".**
- **Never use 10 A or more when charging the battery because it will shorten the battery life.**

Quick charging is a method that the battery is charged in a short period of time with a relatively large current by using a quick charger.
Since a large current flow raises electrolyte temperature, the battery is subject to damage if the large current is used for prolonged time. For this reason, quick charging must be carried out within a current range that will not raise the electrolyte temperature to 40°C (104°F) or more.
Also the quick charging is a temporary mean to bring battery voltage up to some level, and battery should be charged slowly with low current as a rule.

GETtheMANUALS.org

GETthemANUALS.org

ENGINE (DIAGNOSTICS)

EN(H4SO)(diag)

		Page
1.	Basic Diagnostic Procedure	2
2.	Check List for Interview	4
3.	General Description	6
4.	Electrical Component Location	9
5.	Engine Control Module (ECM) I/O Signal	17
6.	Engine Condition Data	26
7.	Data Link Connector	27
8.	General Scan Tool	28
9.	Subaru Select Monitor	33
10.	Read Diagnostic Trouble Code (DTC)	39
11.	Inspection Mode	40
12.	Drive Cycle	45
13.	Clear Memory Mode	51
14.	System Operation Check Mode	52
15.	Malfunction Indicator Light	53
16.	Diagnostics for Engine Starting Failure	63
17.	Diagnostic Procedure for Subaru Select Monitor Communication	76
18.	List of Diagnostic Trouble Code (DTC)	78
19.	Diagnostic Procedure with Diagnostic Trouble Code (DTC)	86
20.	General Diagnostic Table	292

GETtheMANUALS.org

1. Basic Diagnostic Procedure

A: PROCEDURE

1. ENGINE

Step		Check	Yes	No
1	**CHECK ENGINE START FAILURE.** 1) Ask the customer when and how the trouble occurred using the interview check list. <Ref. to EN(H4SO)(diag)-4, CHECK, Check List for Interview.> 2) Start the engine.	Does the engine start?	Go to step **2**.	Inspection using "Diagnostics for Engine Start Failure". <Ref. to EN(H4SO)(diag)-63, Diagnostics for Engine Starting Failure.>
2	**CHECK ILLUMINATION OF MALFUNCTION INDICATOR LIGHT.**	Does the malfunction indicator light illuminate?	Go to step **3**.	Inspection using "General Diagnostic Table". <Ref. to EN(H4SO)(diag)-292, INSPECTION, General Diagnostic Table.>
3	**CHECK COMMUNICATION STATUS.** 1) Turn the ignition switch to OFF. 2) Connect the Subaru Select Monitor or general scan tool to the data link connector. 3) Turn the ignition switch to ON, and run the Subaru Select Monitor or general scan tool. NOTE: • Subaru Select Monitor For detailed procedures, refer to "Subaru Select Monitor". <Ref. to EN(H4SO)(diag)-33, Subaru Select Monitor.> • General scan tool For detailed operation procedures, refer to the general scan tool operation manual.	Does Subaru Select Monitor or general scan tool communicate with vehicle normally?	Go to step **4**.	Inspection using "Diagnostics Procedure for Subaru Select Monitor Communication". <Ref. to EN(H4SO)(diag)-76, Diagnostic Procedure for Subaru Select Monitor Communication.>
4	**CHECK DTC.** Read DTC using Subaru Select Monitor or general scan tool. NOTE: • Subaru Select Monitor Refer to "Read Diagnostic Trouble Code" for detailed operation procedure. <Ref. to EN(H4SO)(diag)-39, Read Diagnostic Trouble Code (DTC).> • General scan tool For detailed operation procedures, refer to the general scan tool operation manual.	Is DTC displayed on Subaru Select Monitor or general scan tool?	Record the DTC. Repair the trouble cause. <Ref. to EN(H4SO)(diag)-78, List of Diagnostic Trouble Code (DTC).> Go to step **5**.	Repair the related parts. NOTE: If DTC is not shown on display although the malfunction indicator light illuminates, perform the diagnosis of malfunction indicator light circuit or combination meter. <Ref. to EN(H4SO)(diag)-53, Malfunction Indicator Light.>

GETTHEMANUALS.org

Step		Check	Yes	No
5	**CHECK FREEZE FRAME DATA.** Check the freeze frame data using the Subaru Select Monitor or general scan tool. NOTE: • Subaru Select Monitor For detailed procedures, refer to “Subaru Select Monitor”. <Ref. to EN(H4SO)(diag)-33, Subaru Select Monitor.> • General scan tool For detailed operation procedures, refer to the general scan tool operation manual.	Is freeze frame data displayed on Subaru Select Monitor or general scan tool?	Record the freeze frame data. Repair the cause of fault, and go to the next step. Go to step **6**.	Go to step **6**.
6	**PERFORM DIAGNOSIS.** 1) Perform the Clear Memory Mode. <Ref. to EN(H4SO)(diag)-51, Clear Memory Mode.> 2) Perform the Inspection Mode or Drive Cycle. <Ref. to EN(H4SO)(diag)-40, Inspection Mode.> <Ref. to EN(H4SO)(diag)-45, Drive Cycle.>	Is DTC displayed on Subaru Select Monitor or general scan tool?	Inspect using “Diagnostic Procedure with Diagnostic Trouble Code (DTC)”. <Ref. to EN(H4SO)(diag)-86, Diagnostic Procedure with Diagnostic Trouble Code (DTC).>	Finish the diagnosis.

GETTHEMANUALS.org

2. Check List for Interview

A: CHECK

1. CHECK LIST NO. 1

Check the following item when problem has occurred.

NOTE:
Use copies of this page for interviewing customers.

Customer's name		Engine No.	
Date of purchase		Fuel type	
Date of repair		Odometer reading	km
V.I.N.			miles
Weather	❑ Fine ❑ Cloudy ❑ Rainy ❑ Snowy ❑ Various/Others:		
Ambient air temperature	°C (°F)		
	❑ Hot ❑ Warm ❑ Cool ❑ Cold		
Place	❑ Highway ❑ Suburbs ❑ Inner city ❑ Uphill ❑ Downhill ❑ Rough road ❑ Others:		
Engine temperature	❑ Cold ❑ Warming-up ❑ After warming-up ❑ Any temperature ❑ Others:		
Engine speed	rpm		
Vehicle speed	km/h (MPH)		
Driving conditions	❑ Not affected ❑ At starting ❑ While idling ❑ At racing ❑ While accelerating ❑ While cruising ❑ While decelerating ❑ While turning (RH/LH)		
Headlight	❑ ON/❑ OFF	Rear defogger	❑ ON/❑ OFF
Blower	❑ ON/❑ OFF	Audio	❑ ON/❑ OFF
A/C compressor	❑ ON/❑ OFF	Rear entertainment system	❑ ON/❑ OFF
Radiator fan	❑ ON/❑ OFF	Car phone	❑ ON/❑ OFF
Front wiper	❑ ON/❑ OFF	Wireless device	❑ ON/❑ OFF
Rear wiper	❑ ON/❑ OFF		

GETTHEMANUALS.org

2. CHECK LIST NO. 2

Check the following item about the vehicle's state when the malfunction indicator light turns on.

NOTE:
Use copies of this page for interviewing customers.

a) Other warning lights or indicators illuminate: ❑ Yes / ❑ No
❑ Fuel level warning light ❑ Charge warning light ❑ Engine coolant temperature warning light ❑ Oil pressure warning light ❑ ATF temperature warning light or SPORT indicator light ❑ Driver's control center differential indicator light ❑ ABS warning light ❑ VDC warning light ❑ Cruise indicator light ❑ SI-CRUISE warning light ❑ Immobilizer indicator light ❑ STEERING warning light ❑ Electronic parking brake warning light ❑ Glow indicator light ❑ Sedimenter warning light ❑ Others:
b) Fuel level
• Lack of fuel: ❑ Yes / ❑ No • Indicator position of fuel gauge: • Experienced running out of fuel: ❑ Yes / ❑ No
c) Intentional connecting or disconnecting of harness connectors or spark plug cords: ❑ Yes / ❑ No
• What:
d) Intentional connecting or disconnecting of hoses: ❑ Yes / ❑ No
• What:
e) Installing of other parts except genuine parts: ❑ Yes / ❑ No
• What: • Where:
f) Occurrence of noise: ❑ Yes / ❑ No
• From where: • What kind:
g) Occurrence of smell: ❑ Yes / ❑ No
• From where: • What kind:
h) Intrusion of water into engine compartment or passenger compartment: ❑ Yes / ❑ No
i) Troubles occurred
❑ Engine does not start. ❑ Engine stalls during idling. ❑ Engine stalls while driving. ❑ Engine speed decreases. ❑ Engine speed does not decrease. ❑ Rough idling ❑ Poor acceleration ❑ Back fire ❑ After fire ❑ Does not shift. ❑ Excessive shift shock

GETTHEMANUALS.org

3. General Description

A: CAUTION

1) Airbag system wiring harness is routed near the ECM, main relay and fuel pump relay.

CAUTION:
- **Do not use electrical test equipment on the airbag system circuits.**
- **Be careful not to damage the airbag system wiring harness when servicing the ECM, TCM, main relay and fuel pump relay.**

2) Never connect the battery in reverse polarity. Doing so will damage the ECM instantly, and other parts will also be damaged.
3) Do not disconnect the battery terminals while the engine is running. A large counter electromotive force will be generated in the generator, and this voltage may damage electronic parts such as ECM etc.
4) Before disconnecting the connectors of each sensor and ECM, be sure to turn the ignition switch to OFF. Perform the Clear Memory Mode after connecting the connectors. <Ref. to EN(H4SO)(diag)-51, Clear Memory Mode.>
5) When measuring the voltage or resistance of individual sensor or all electrical control modules, use a tapered pin with a diameter of less than 0.6 mm (0.024 in). Do not insert the pin 4 mm (0.16 in) or more into the part.

CAUTION:
When replacing the ECM, be careful not to use the wrong spec. ECM to avoid any damage on the fuel injection system.

NOTE:
When replacing the ECM of the models with Immobilizer, immobilizer system must be registered. To do so, all ignition keys and ID cards need to be prepared. Refer to the “PC application help for Subaru Select Monitor”.
6) Take care not to allow water to get into the connectors when servicing or washing the vehicle in rainy weather. Avoid exposure to water even if the connectors are waterproof.
7) Use ECM mounting stud bolts at the body side grounding point when measuring voltage and resistance inside the passenger compartment.

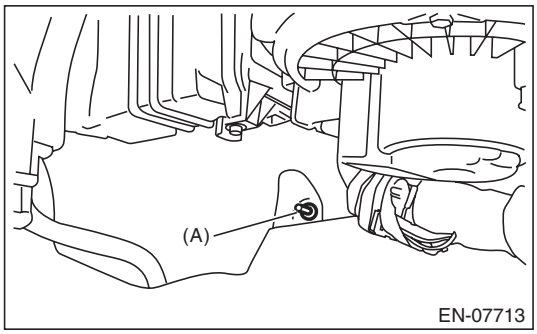

(A) Stud bolt

8) Use the engine ground terminal or engine assembly for the grounding point to chassis when measuring the voltage and resistance in engine compartment.

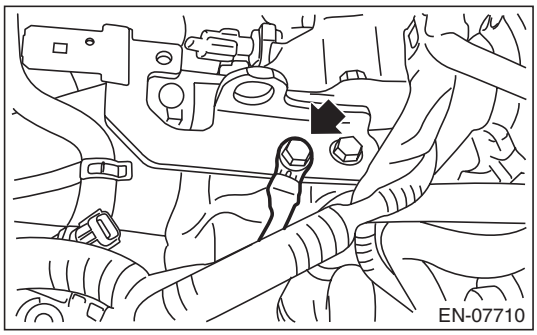

9) Every engine control system-related part is a precision part. Do not drop them.
10) Observe the following cautions when installing a radio in vehicle.

CAUTION:
- **The antenna must be kept as far apart as possible from control module. (ECM is installed at the back of the glove box.)**
- **The antenna feeder must be placed as far apart as possible from the ECM and engine control system harness.**
- **Carefully adjust the antenna for correct matching.**
- **When mounting a large power type radio, pay special attention to the three items mentioned above.**
- **Incorrect installation of the radio may affect the operation of ECM.**

11) When disconnecting the fuel hose, release the fuel pressure. <Ref. to FU(H4SO)-53, RELEASING OF FUEL PRESSURE, PROCEDURE, Fuel.>

GETTHEMANUALS.org

12) Warning lights may illuminate when performing driving test with jacked-up or lifted-up condition, but this is not a system malfunction. The reason for this is the speed difference between the front and rear wheels. When engine control system diagnosis is finished, perform the VDC memory clearance procedure of self-diagnosis function. <Ref. to VDC(diag)-25, Clear Memory Mode.>

B: INSPECTION

Before performing diagnostics, check the following item which might affect engine problems.

1. BATTERY

1) Measure the battery voltage and specific gravity of the electrolyte.

Standard voltage: 12 V

Specific gravity: 1.260 or more

2) Check the condition of the main and other fuses, and harnesses and connectors. Also check for proper grounding.

2. ENGINE GROUND

Make sure that the engine ground terminal has no contamination, corrosion or looseness and is properly connected to the engine.

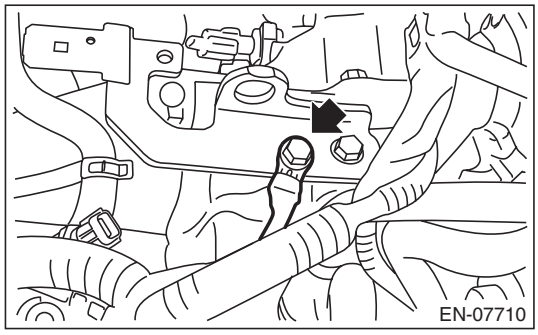

C: NOTE

- The on-board diagnostic (OBD) system detects and indicates a fault in various inputs and outputs of the complex electronic control. Malfunction indicator light in the combination meter indicates occurrence of a fault or trouble.
- Further, against such a failure of sensors as may disable the drive, the fail-safe function is provided to ensure the minimal drivability.
- The OBD system incorporated with the vehicles within this type of engine complies with OBD-II regulations. The OBD system monitors the components and the system malfunction listed in “Engine Section” which affects on emissions.
- When the system decides that a malfunction occurs, malfunction indicator light illuminates. At the same time of the malfunction indicator light illumination or blinking, a DTC and a freeze frame engine conditions are stored into on-board computer.
- The OBD system stores freeze frame engine condition data (engine load, engine coolant temperature, fuel trim, engine speed and vehicle speed, etc.) into on-board computer when it detects a malfunction.
- Freeze frame engine condition data are stored until the DTCs are cleared. However when such malfunctions as fuel trim fault and misfire are detected with the freeze frame engine condition data stored, they are rewritten into those related to the fuel trim fault and misfire.
- When the malfunction does not occur again for three consecutive driving cycles*, malfunction indicator light is turned off, but DTC remains at on-board computer.

*: One driving cycle means the period between the ignition switch ON and the ignition switch OFF after driving.

- When performing diagnosis, connect the Subaru Select Monitor or general scan tool to the vehicle.

GETTHEMANUALS.org

D: PREPARATION TOOL

ILLUSTRATION	TOOL NUMBER	DESCRIPTION	REMARKS
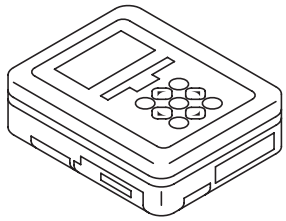 ST1B022XU0	1B022XU0	SUBARU SELECT MONITOR III KIT	Used for troubleshooting the electrical system.
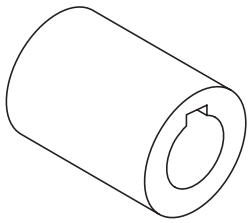 ST-499987500	499987500	CRANKSHAFT SOCKET	Used for rotating crankshaft.

GETTHEMANUALS.org

4. Electrical Component Location

A: LOCATION

1. CONTROL MODULE

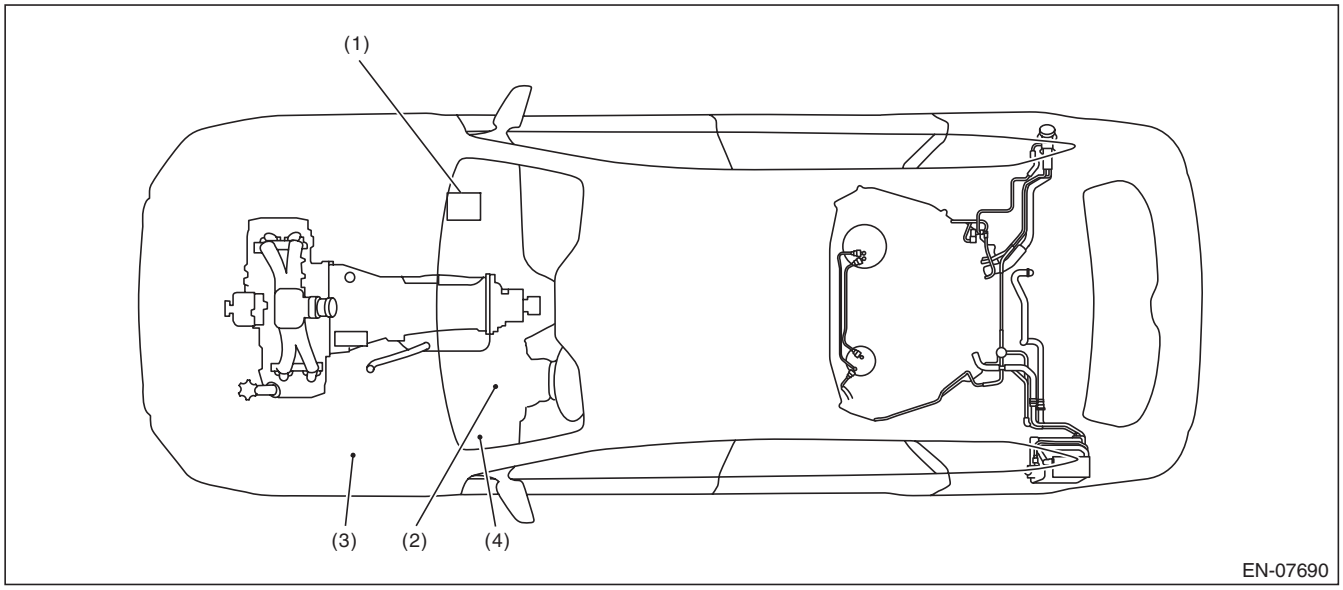

(1) Engine control module (ECM)
(2) Malfunction indicator light
(3) Delivery (test) mode fuse
(4) Data link connector

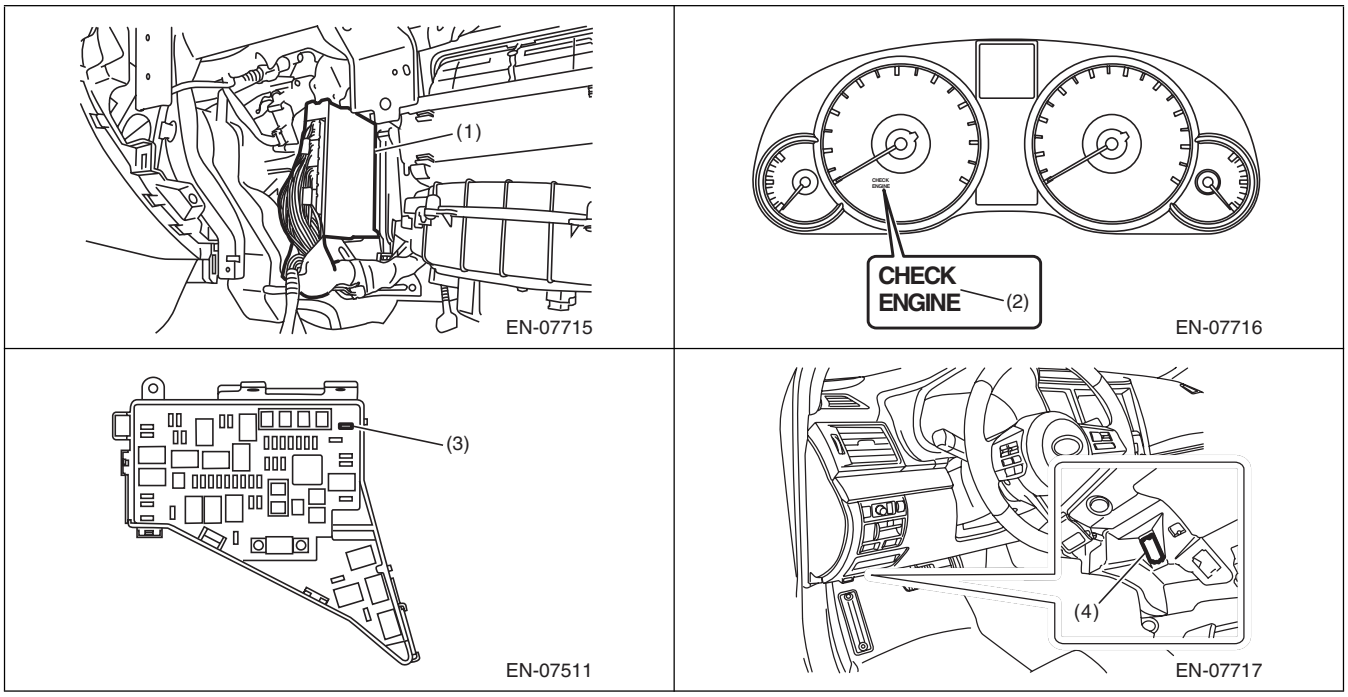

GETTHEMANUALS.org

2. SENSOR

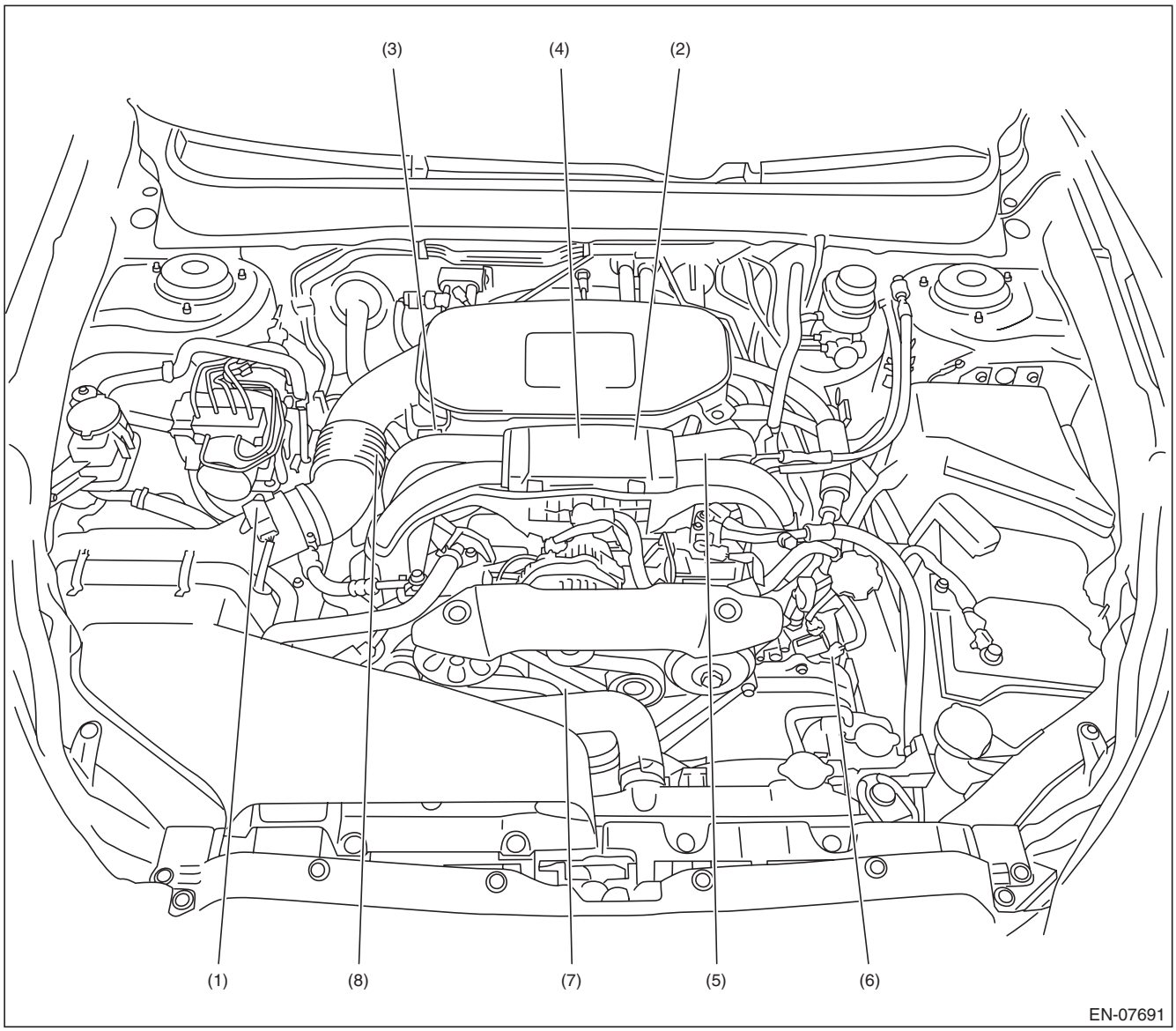

(1)	Mass air flow and intake air temperature sensor	(4)	Electronic throttle control	(7)	Crankshaft position sensor
(2)	Manifold absolute pressure sensor	(5)	Knock sensor	(8)	Engine oil temperature sensor
(3)	Engine coolant temperature sensor	(6)	Camshaft position sensor		

GETmeMANUALS.org

Electrical Component Location

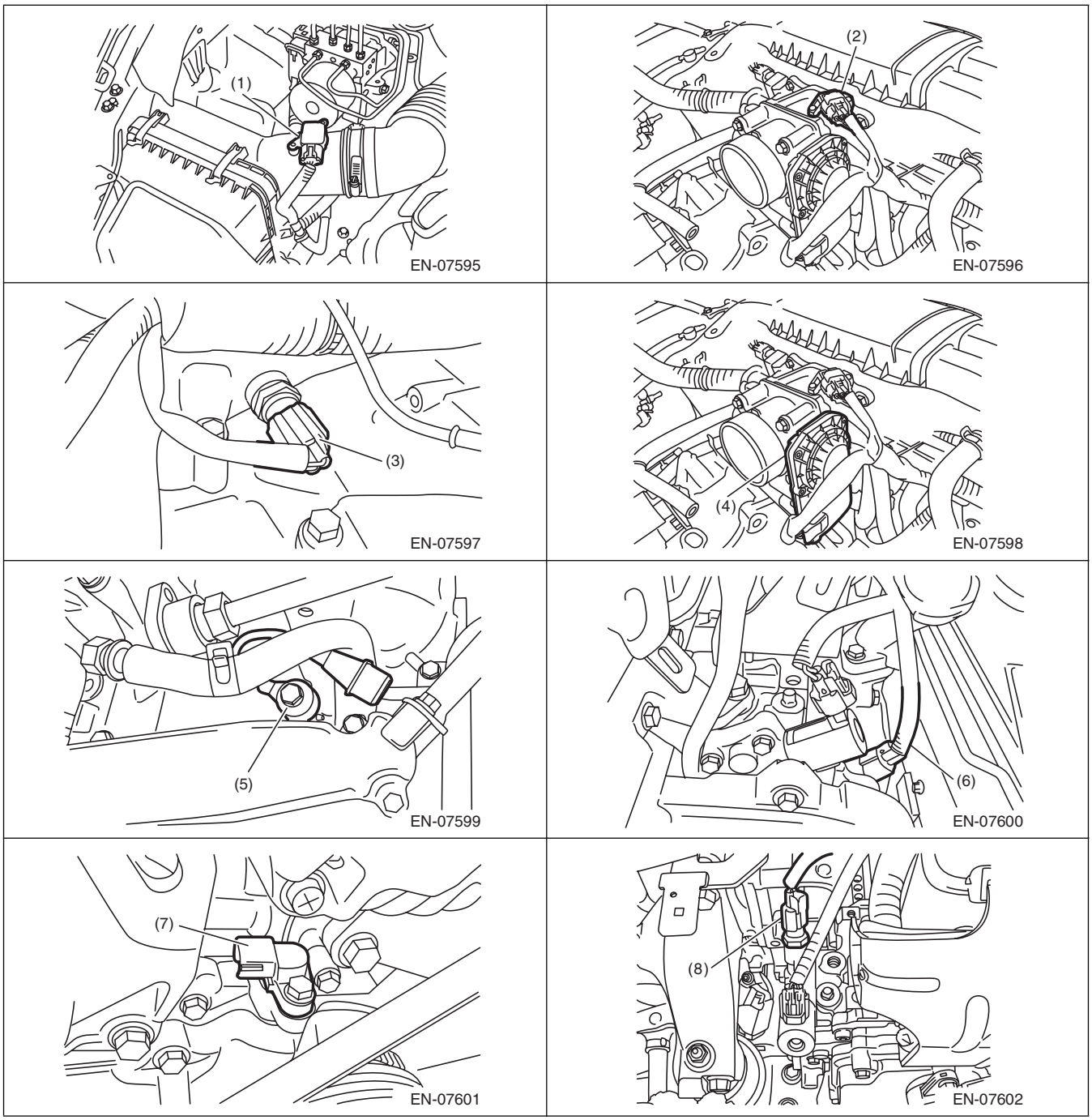

GETthemANSWERS.org

Electrical Component Location

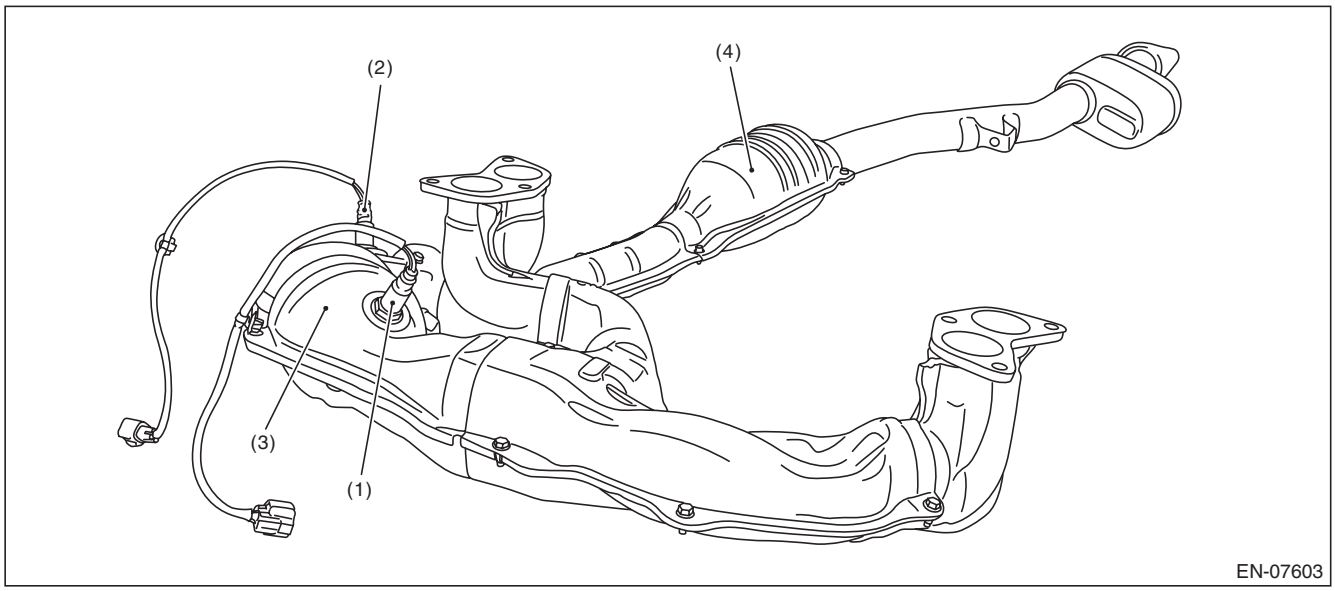

(1) Front oxygen (A/F) sensor
(2) Rear oxygen sensor
(3) Front catalytic converter
(4) Rear catalytic converter

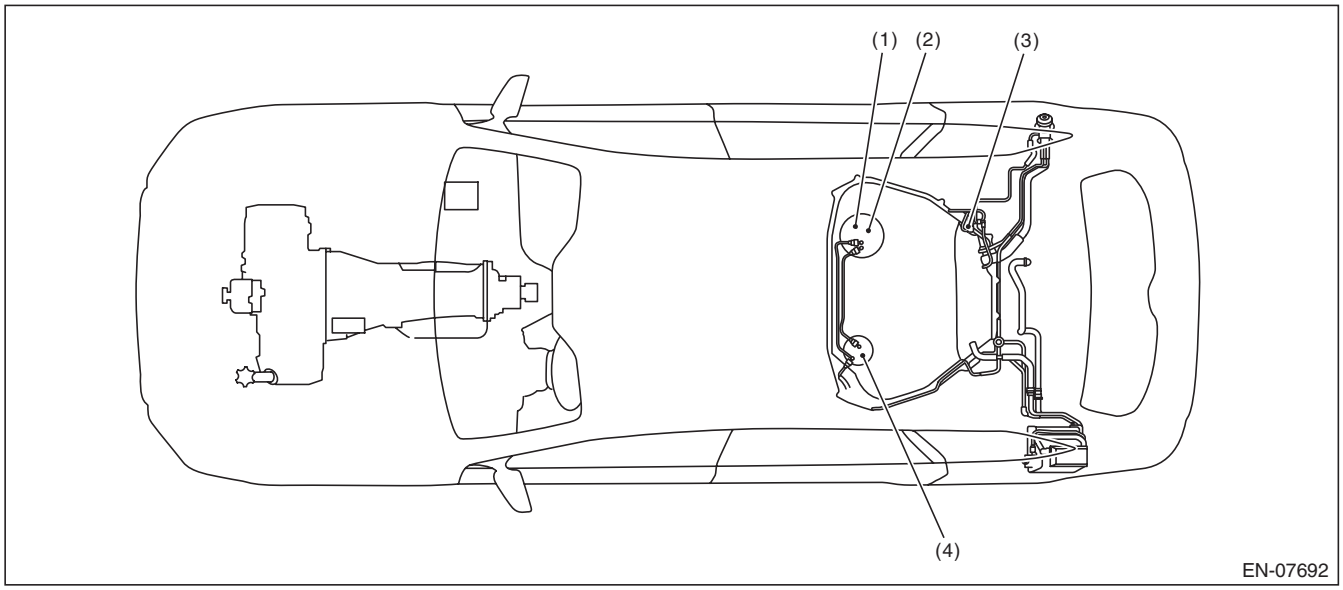

(1) Fuel level sensor
(2) Fuel temperature sensor
(3) Fuel tank pressure sensor
(4) Fuel sub level sensor

GETmeMANUALS.org

Electrical Component Location

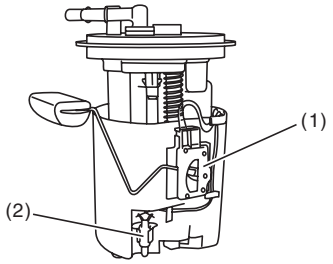

EN-07718

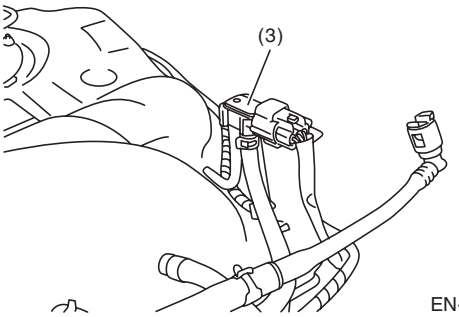

EN-07719

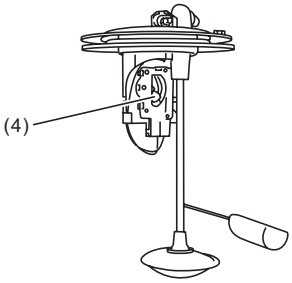

EN-07720

SUBARU.

GETthemANSWERS.org

3. SOLENOID VALVE, ACTUATOR, EMISSION CONTROL SYSTEM PARTS AND IGNITION SYSTEM PARTS

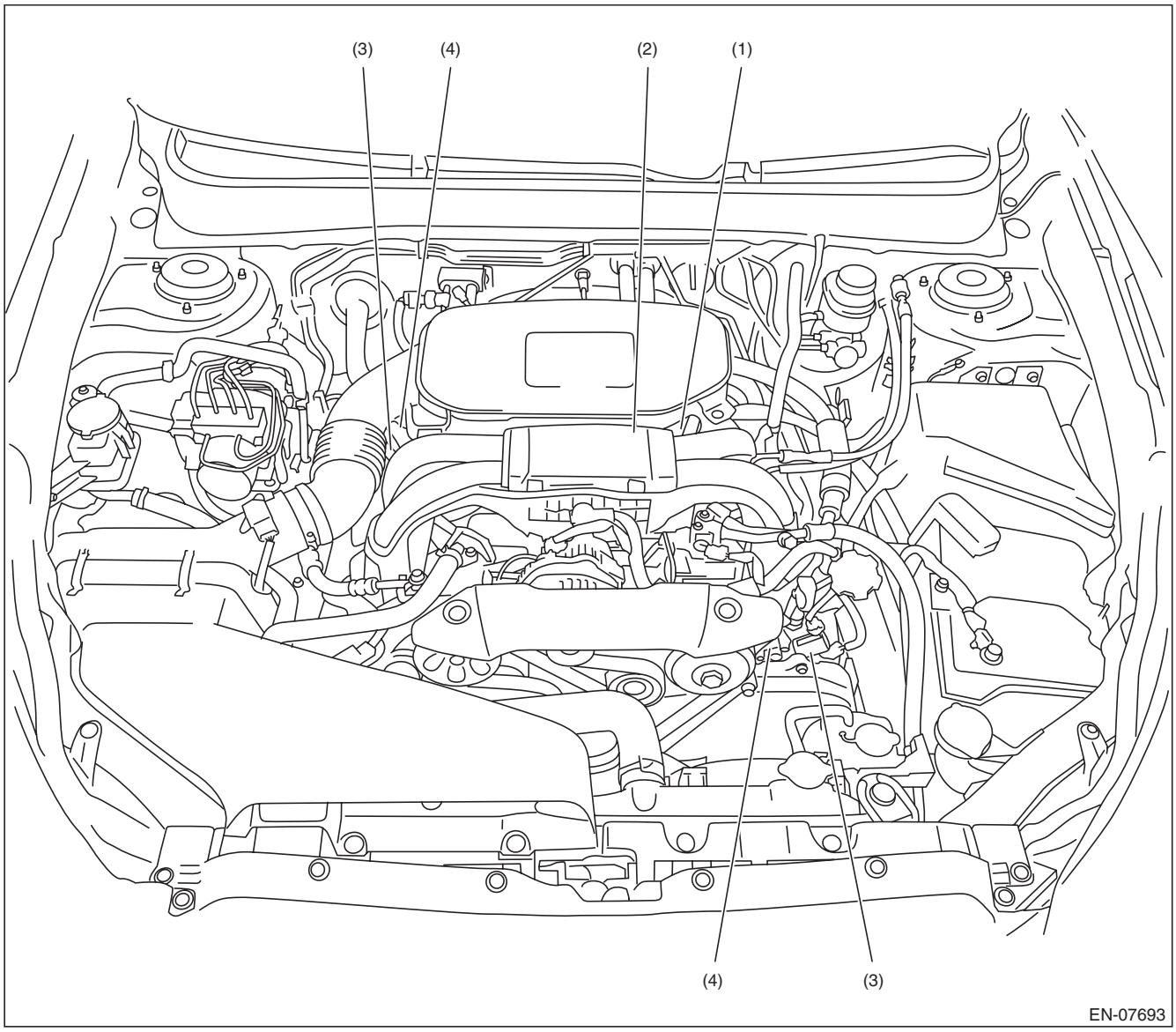

(1) Purge control solenoid valve
(2) EGR control valve
(3) Oil switching solenoid valve
(4) Variable valve lift diagnosis oil pressure switch

GETmeMANUALS.org

Electrical Component Location

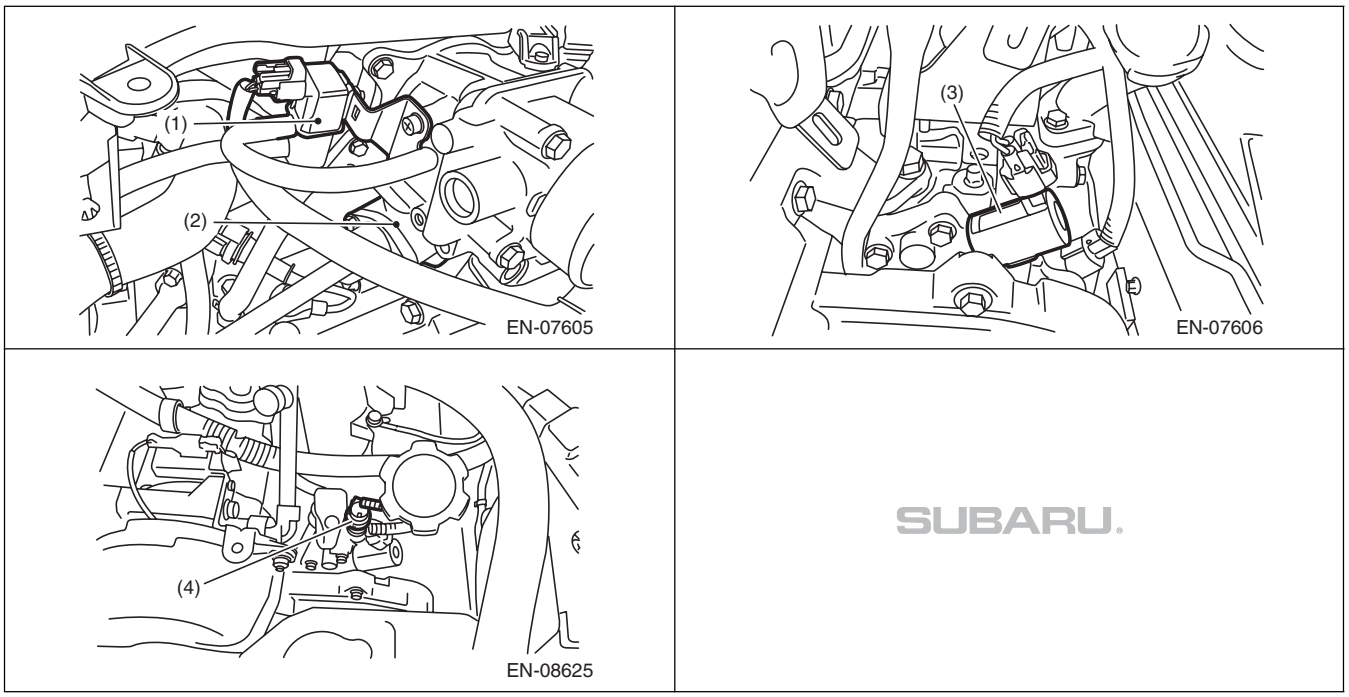

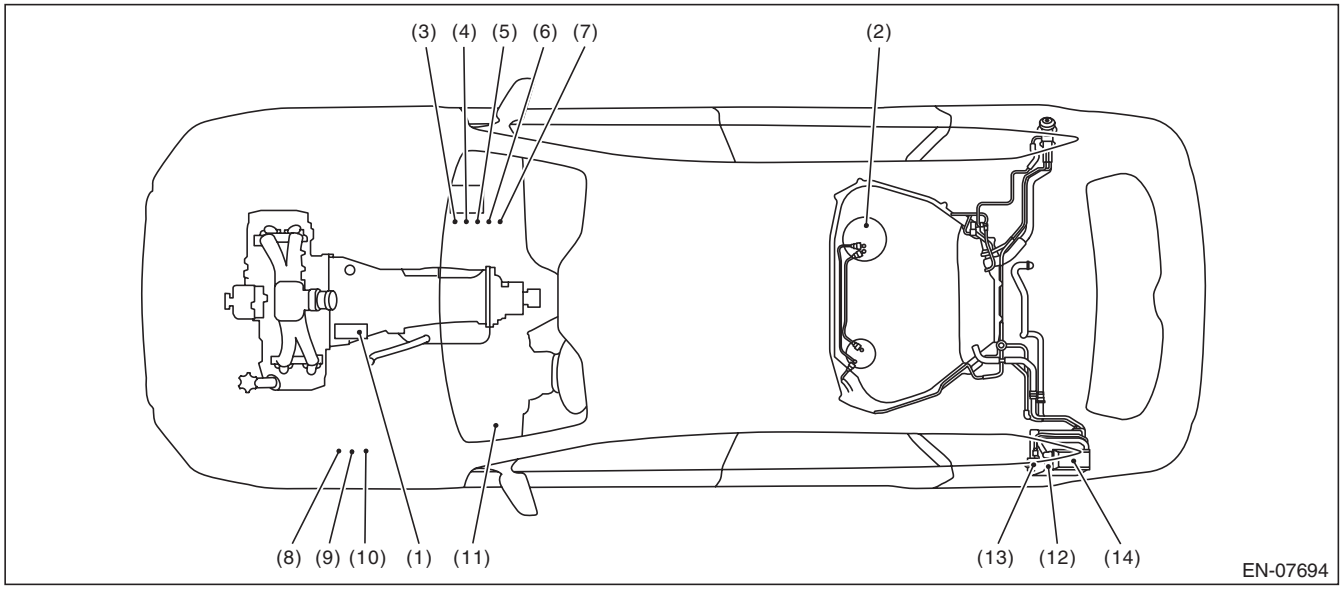

(1)	Starter	(6)	Electronic throttle control relay	(11)	Starter relay
(2)	Fuel pump	(7)	Fuel pump relay	(12)	Canister
(3)	Main relay	(8)	Radiator main fan relay 1	(13)	Drain valve
(4)	IG relay	(9)	Radiator main fan relay 2	(14)	Drain filter
(5)	A/F, oxygen sensor relay	(10)	Radiator sub fan relay		

GETmeMANUALS.org

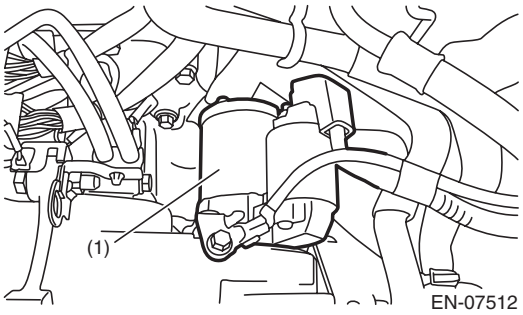

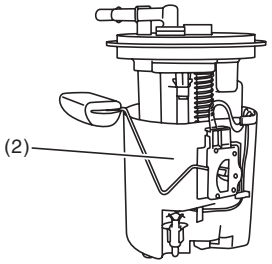

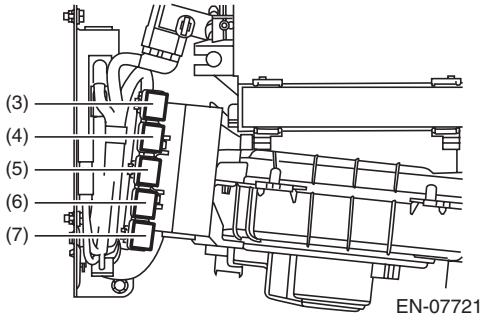

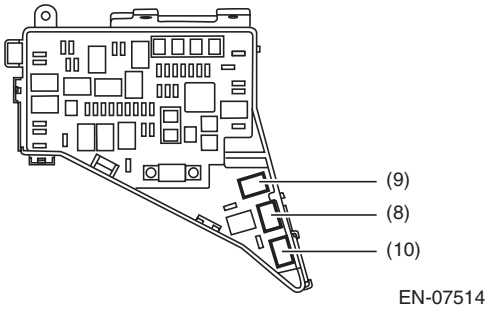

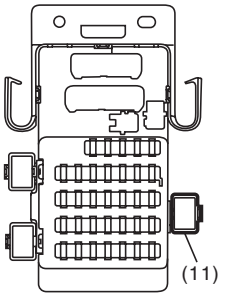

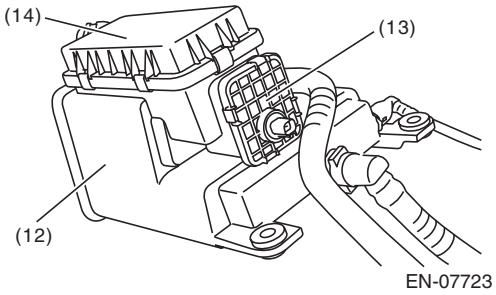

4. TRANSMISSION

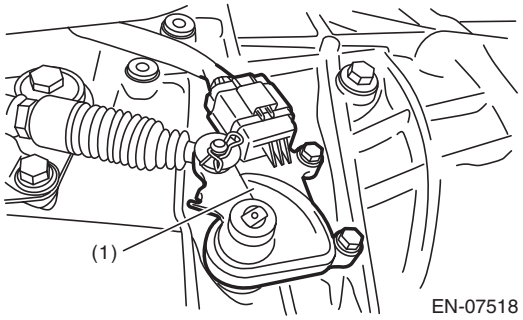

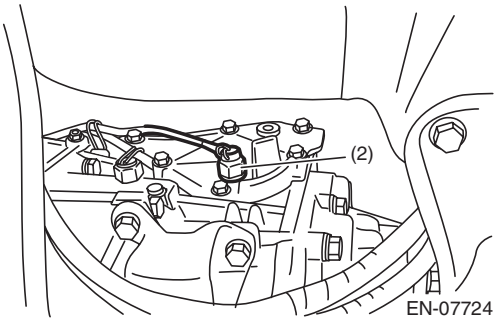

(1) Inhibitor switch (CVT model)

(2) Neutral position switch (MT model)

GETthemANSWERS.org

5. Engine Control Module (ECM) I/O Signal

A: ELECTRICAL SPECIFICATION

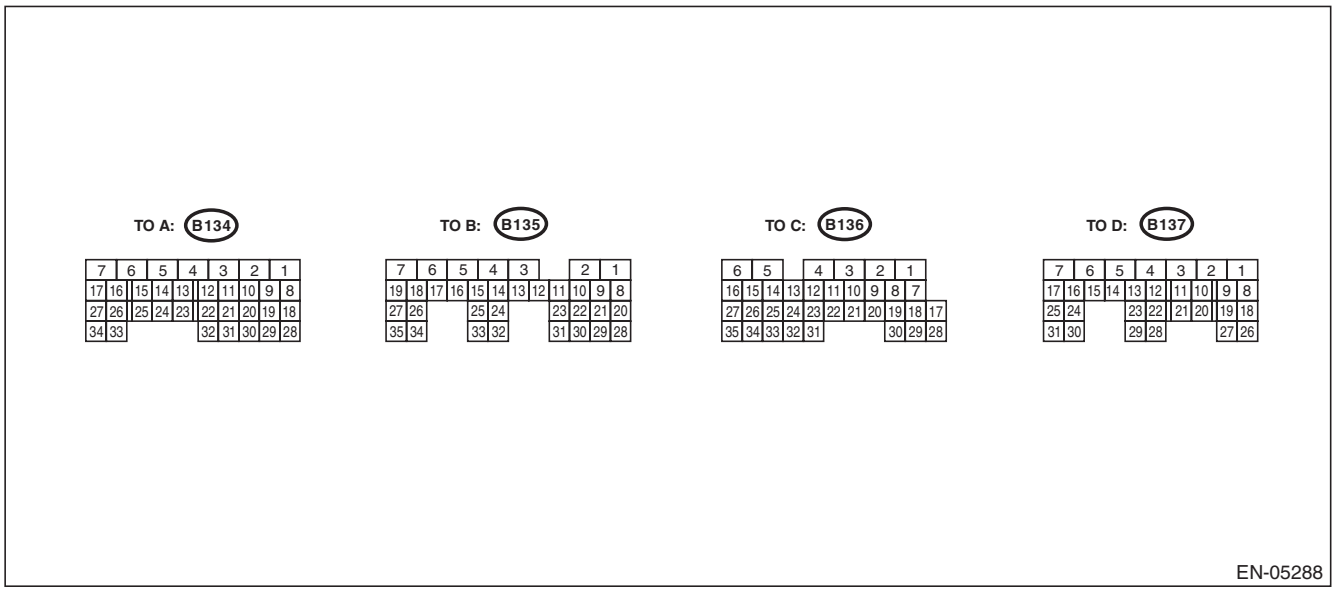

Description		Connector No.	Terminal No.	Signal (V)		Note
				Ignition SW ON (engine OFF)	Engine ON (idling)	
Crankshaft position sensor	Signal (+)	B137	17	0	–7 — +7	Waveform
	Signal (–)	B137	25	0	0	—
	Shield	B137	31	0	0	—
Camshaft position sensor	Signal (+)	B137	24	0	–7 — +7	Waveform
	Signal (–)	B137	30	0	0	—
	Shield	B137	31	0	0	—
Electronic throttle control	Main	B134	18	Approx. 0.9 (After engine is warmed up.)	Approx. 0.6 — 0.7 (After engine is warmed up.)	Fully closed: Approx. 0.6 Fully open: Approx. 4.0
	Sub	B134	28	Approx. 1.7 (After engine is warmed up.)	Approx. 1.5 — 1.6 (After engine is warmed up.)	Fully closed: Approx. 1.5 Fully open: Approx. 4.2
	Power supply	B134	19	5	5	—
	Ground (sensor)	B134	29	0	0	—
Electronic throttle control motor (+)		B134	2	Duty waveform	Duty waveform	Drive frequency: 500 Hz
Electronic throttle control motor (–)		B134	1	Duty waveform	Duty waveform	Drive frequency: 500 Hz
Electronic throttle control motor power supply		B135	7	10 — 13	12 — 14	—
Electronic throttle control motor relay		B135	17	ON: 0 OFF: 10 — 13	ON: 0 OFF: 12 — 14	When ignition switch is turned to ON: ON

GETmeMANUALS.org

Engine Control Module (ECM) I/O Signal

Description		Connector No.	Terminal No.	Signal (V)		Note
				Ignition SW ON (engine OFF)	Engine ON (idling)	
Accelerator pedal position sensor	Main sensor signal	B135	23	Fully closed: 1.0 Fully opened: 3.5	Fully closed: 1.0 Fully opened: 3.5	—
	Main power supply	B135	21	5	5	—
	Ground (Main sensor)	B135	29	0	0	—
	Sub sensor signal	B135	31	Fully closed: 1.0 Fully opened: 3.5	Fully closed: 1.0 Fully opened: 3.5	—
	Sub power supply	B135	22	5	5	—
	Ground (Sub sensor)	B135	30	0	0	—
Front oxygen (A/F) sensor	Signal (+)	B136	19	—	2.7 — 2.9	—
	Signal (–)	B136	18	—	2.35 — 2.25	—
	Shield	B136	9	0	0	—
Rear oxygen sensor	Signal	B136	20	0	0 — 0.9	—
	Shield	B136	9	0	0	—
Front oxygen (A/F) sensor heater	Signal 1	B136	6	10 — 13	1 — 14	Duty waveform
	Signal 2	B136	5	10 — 13	1 — 14	Duty waveform
Rear oxygen sensor heater signal		B135	6	10 — 13	1 — 14	Duty waveform
Engine coolant temperature sensor		B137	22	1.0 — 1.4	1.0 — 1.4	After engine is warmed up.
Starter switch		B136	16	0	0	CVT model Cranking: 8 — 14 MT model Cranking with the clutch pedal pressed: 8 — 14
Starter relay control		B135	26	ON: 0.5 or less OFF: 10 — 13	ON: 0.5 or less OFF: 12 — 14	—
Ignition switch		B136	30	10 — 13	12 — 14	—
Neutral position switch		B136	35	ON: 0 OFF: 12±0.5		CVT model: Switch is ON when select lever is in “P” range or “N” range. MT model: Switch is ON when the shift lever is in neutral.
Delivery (test) mode switch		B136	34	10 — 13	13 — 14	When fuse is installed: 0
Knock sensor	Signal	B137	2	2.5	2.5	—
	Shield	B137	8	0	0	—
Back-up power supply		B136	2	10 — 13	12 — 14	Ignition switch “OFF”: 10 — 13
Control module power supply		B137	7	10 — 13	12 — 14	—
		B136	1	10 — 13	12 — 14	—
Ignition control	#1	B134	21	0	0 or 5	Waveform
	#2	B134	22	0	0 or 5	Waveform
	#3	B134	31	0	0 or 5	Waveform
	#4	B134	32	0	0 or 5	Waveform

GETfreeMANUALS.org

Engine Control Module (ECM) I/O Signal

Description		Connector No.	Terminal No.	Signal (V)		Note
				Ignition SW ON (engine OFF)	Engine ON (idling)	
Fuel injector	#1	B134	10	10 — 13	1 — 14	Waveform
	#2	B134	11	10 — 13	1 — 14	Waveform
	#3	B134	12	10 — 13	1 — 14	Waveform
	#4	B134	13	10 — 13	1 — 14	Waveform
Fuel pump relay control		B136	33	ON: 0.5 or less OFF: 10 — 13	ON: 0.5 or less OFF: 12 — 14	—
Main fan relay control		B135	12	ON: 0.5 or less OFF: 10 — 13	ON: 0.5 or less OFF: 12 — 14	—
Sub fan relay control		B135	11	ON: 0.5 or less OFF: 10 — 13	ON: 0.5 or less OFF: 12 — 14	—
Self-shutoff control		B135	13	0.5 or less	0.5 or less	—
Malfunction indicator light		B135	33	—	—	C6 model Light “ON”: 1 or less Light “OFF”: 10 — 14
Engine speed output		B135	15	—	0 — 13 or more	Waveform
Engine oil temperature sensor signal		B137	21	1.0 — 1.4	1.0 — 1.4	After engine is warmed up.
Purge control solenoid valve		B137	6	ON: 1 or less OFF: 10 — 13	ON: 1 or less OFF: 12 — 14	Duty waveform
EGR control valve	Signal 1	B134	8	0 or 10 — 13	0 or 12 — 14	Waveform
	Signal 2	B134	9	0 or 10 — 13	0 or 12 — 14	Waveform
	Signal 3	B134	20	0 or 10 — 13	0 or 12 — 14	Waveform
	Signal 4	B134	30	0 or 10 — 13	0 or 12 — 14	Waveform
Power steering oil pressure switch		B137	28	ON: 1 or less OFF: 10 — 13	ON: 1 or less OFF: 12 — 14	—
Oil level switch		B136	26	0	0	Oil level LOW: 10 — 14
Oil switching solenoid valve RH	Signal (+)	B134	7	0	Duty waveform	Drive frequency: 300 Hz
	Signal (–)	B134	15	0	0	—
Oil switching solenoid valve LH	Signal (+)	B134	5	0	Duty waveform	Drive frequency: 300 Hz
	Signal (–)	B134	14	0	0	—
Variable valve lift diagnosis oil pressure switch RH		B137	14	0	0	—
Variable valve lift diagnosis oil pressure switch LH		B137	13	0	0	—
Manifold absolute pressure sensor		B137	20	3.4 — 3.8	1.4 — 1.8	—
Air flow sensor	Signal	B136	22	—	0.3 — 4.5	—
	Shield	B136	10	0	0	—
	Ground	B136	11	0	0	—
Intake air temperature sensor signal		B136	31	0.3 — 4.6	0.3 — 4.6	—
Immobilizer communication		B135	25	1 or less ←→ 4 or more	1 or less ←→ 4 or more	—
SSM communication		B135	14	1 or less ←→ 4 or more	1 or less ←→ 4 or more	—
Sensor power supply		B134	19	5	5	—
		B135	22	5	5	—

GETthemANSWERS.org

Engine Control Module (ECM) I/O Signal

Description		Connector No.	Terminal No.	Signal (V)		Note
				Ignition SW ON (engine OFF)	Engine ON (idling)	
Ground	Sensor	B134	29	0	0	—
		B135	30	0	0	—
	Engine 1	B134	6	0	0	—
	Engine 2	B134	4	0	0	—
	Engine 3	B134	3	0	0	—
	Engine 4	B137	1	0	0	—
	Engine 5	B137	3	0	0	—
	Body	B136	4	0	0	—
Clutch switch		B135	9	When clutch pedal is depressed: 0 When clutch pedal is released: 10 — 13	When clutch pedal is depressed: 0 When clutch pedal is released: 12 — 14	—
Brake switch 1 (brake switch)		B136	15	When brake pedal is depressed: 0 When brake pedal is released: 10 — 13	When brake pedal is depressed: 0 When brake pedal is released: 12 — 14	—
Brake switch 2 (stop light switch)		B136	3	When brake pedal is depressed: 10 — 13 When brake pedal is released: 0	When brake pedal is depressed: 12 — 14 When brake pedal is released: 0	—
Cruise control main switch		B136	13	ON: 0 OFF: 5	ON: 0 OFF: 5	—
Cruise control command switch		B136	12	When operating nothing: 3.5 — 4.5 When operating RES/ACC: 2.5 — 3.5 When operating SET/COAST: 0.5 — 1.5 When operating CANCEL: 0 — 0.5	When operating nothing: 3.5 — 4.5 When operating RES/ACC: 2.5 — 3.5 When operating SET/COAST: 0.5 — 1.5 When operating CANCEL: 0 — 0.5	—
Fuel temperature sensor		B136	23	2.5 — 3.8	2.5 — 3.8	Ambient temperature: 25°C (77°F)
Fuel tank pressure sensor		B136	21	2.3 — 2.7	2.3 — 2.7	Value after removing fuel filler cap and installing again
Drain valve		B135	4	ON: 1 or less OFF: 10 — 13	ON: 1 or less OFF: 12 — 14	—
CAN communication	(Hi)	B136	17	2.5 — 3.5	2.5 — 3.5	Waveform
	(Lo)	B136	28	1.5 — 2.5	1.5 — 2.5	Waveform

GETmeMANUALS.org

Engine Control Module (ECM) I/O Signal

Input/output name:

- Crankshaft position sensor
- Camshaft position sensor

Measuring condition:

- After warming-up
- At idling

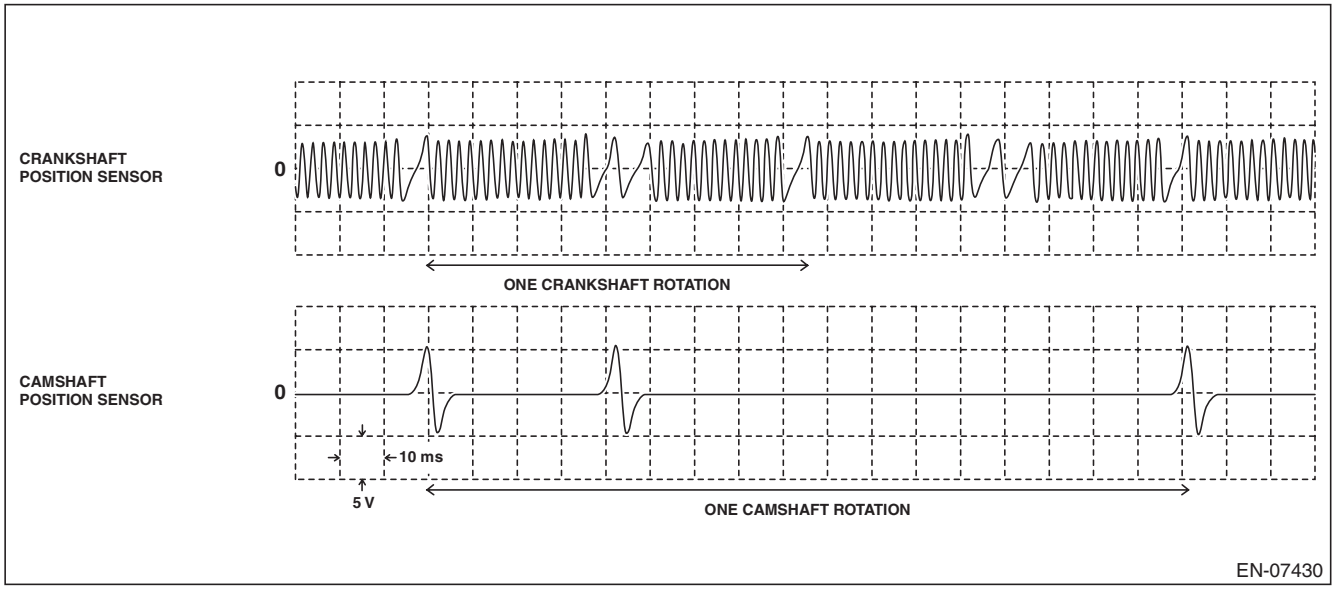

GETthemANSWERS.org

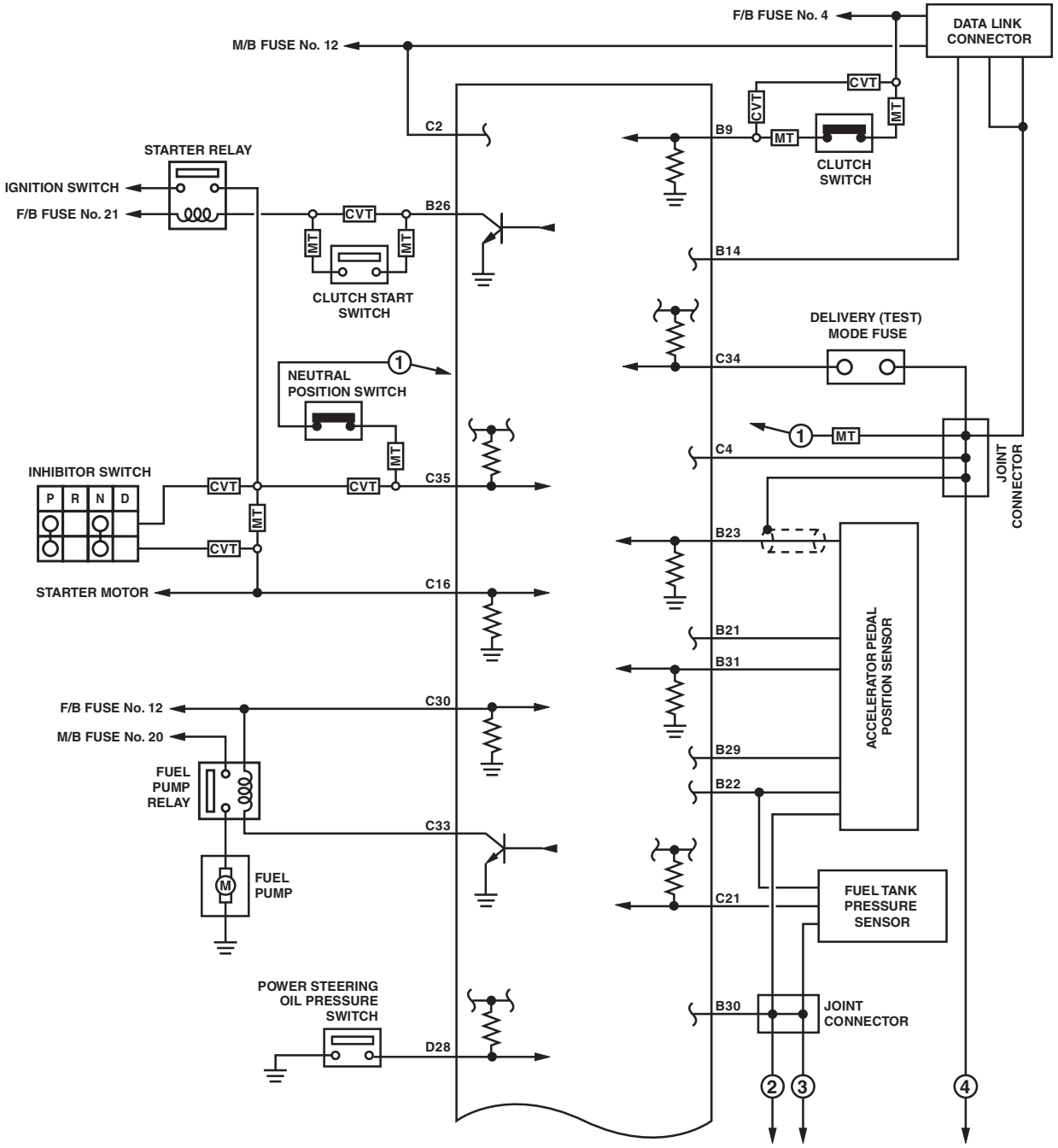

GETfreeMANUALS.org

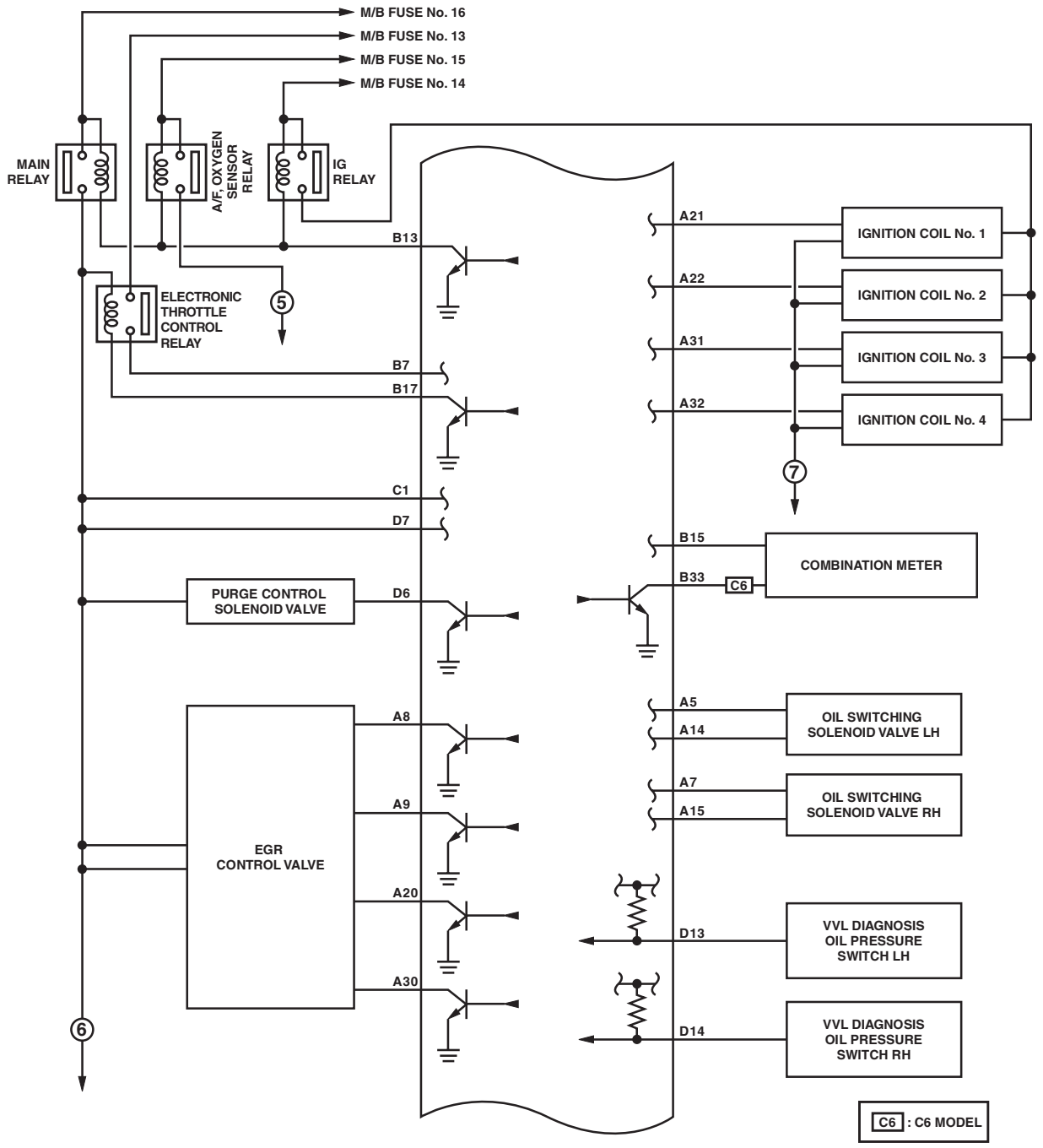

EN-09178

GETmeMANUALS.org

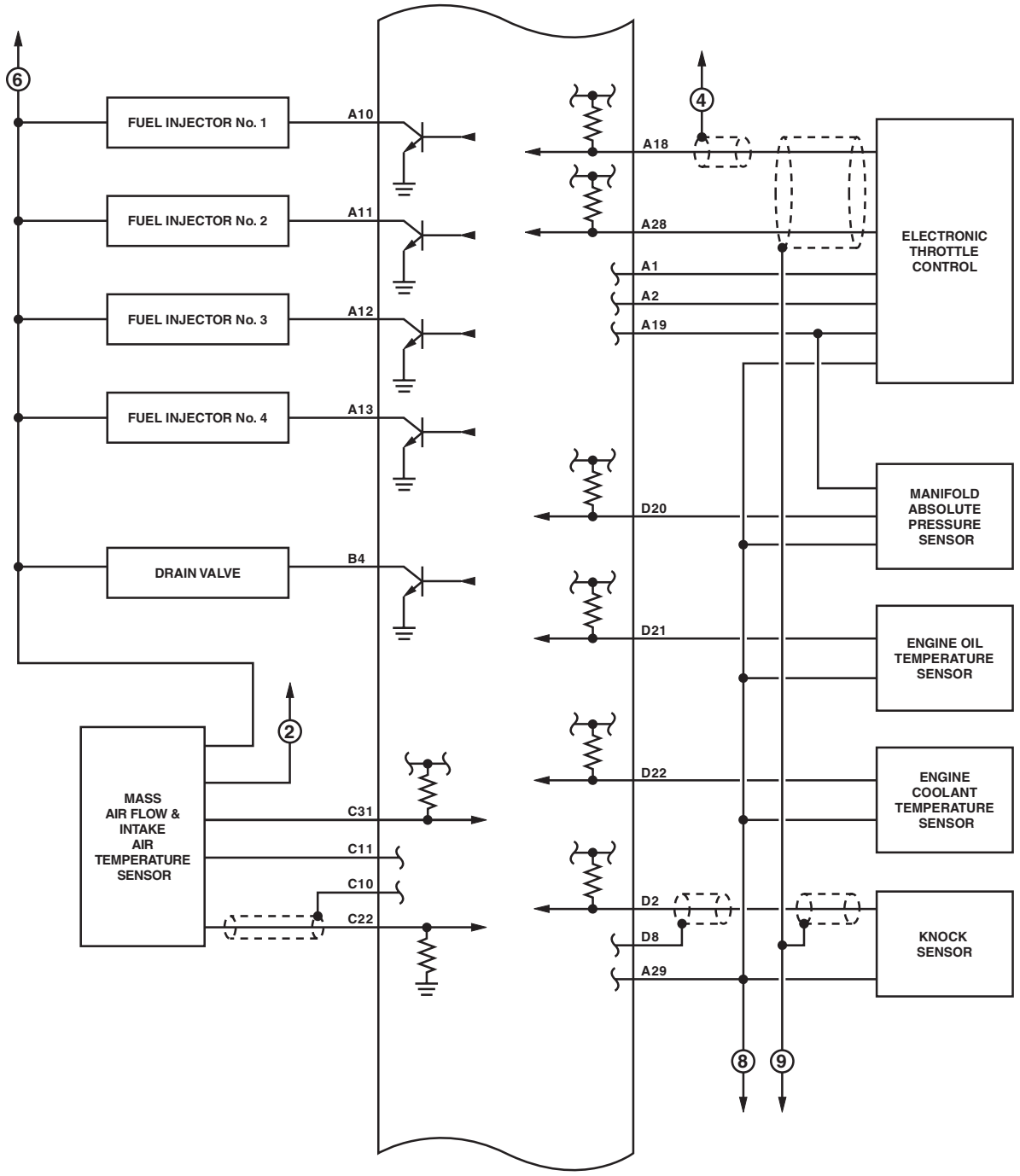

EN-09179

GETtheMANUALs.com

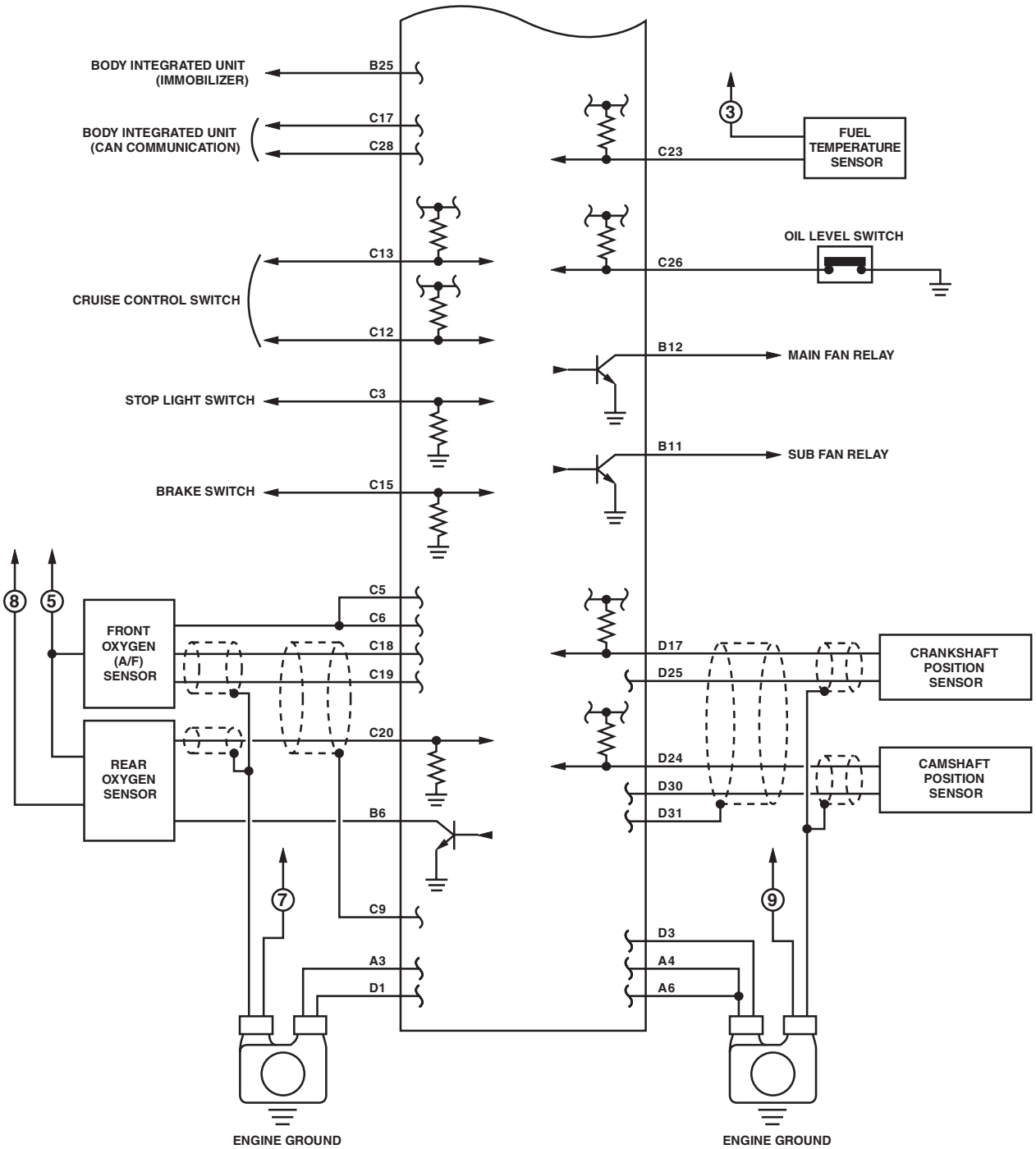

EN-08629

GETfreeMANUALS.org

6. Engine Condition Data

A: ELECTRICAL SPECIFICATION

Contents	Specifications
Engine load	17.6 — 40.5 (%): Idling
	14.7 — 29.8 (%): 2,500 rpm racing

Measuring condition:
- After engine is warmed up.
- Set the select lever in “P” range or “N” range, or the shift lever in neutral.
- Turn the A/C to OFF.
- Turn all the accessory switches to OFF.

GETmeMANUALS.org

7. Data Link Connector

A: NOTE

This connector is used for Subaru Select Monitor.

CAUTION:
Do not connect any scan tools other than Subaru Select Monitor or general scan tool because the circuit for Subaru Select Monitor may be damaged.

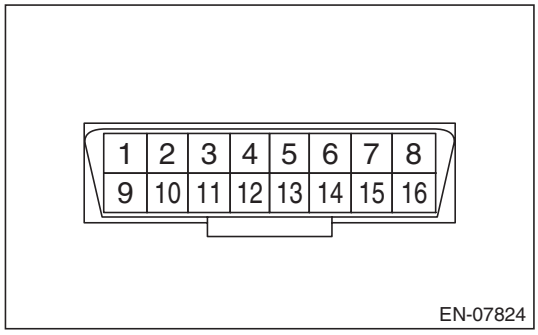

Terminal No.	Contents	Terminal No.	Contents
1	Blank	9	Blank
2	Blank	10	Blank
3	Blank	11	Blank
4	Ground	12	Blank
5	Ground	13	Blank
6	CAN communication (Hi)	14	CAN communication (Lo)
7	Subaru Select Monitor signal	15	Blank
8	Blank	16	Power supply

GETmeMANUALS.org

8. General Scan Tool

A: OPERATION

1. HOW TO USE GENERAL SCAN TOOL

1) Prepare a scan tool (general scan tool) required by SAE J1978.
2) Connect the general scan tool to data link connector located in the lower portion of the instrument panel (on the driver's side).

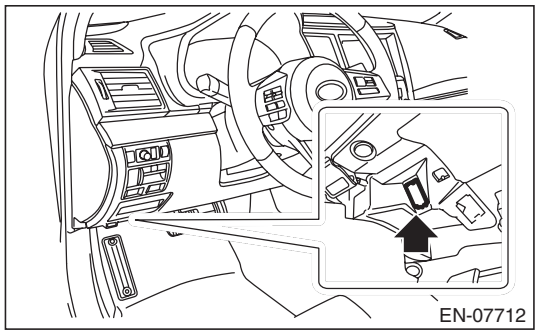

3) Using the general scan tool, call up each data. General scan tool functions consist of:
   (1) MODE $01: Current powertrain diagnostic data
   (2) MODE $02: Powertrain freeze frame data
   (3) MODE $03: Emission-related powertrain DTC
   (4) MODE $04: Clear/Reset emission-related diagnostic information
   (5) MODE $06: Request on-board monitoring test results for intermittently monitored systems
   (6) MODE $07: Request on-board monitoring test results for continuously monitored systems
   (7) MODE $09: Request vehicle information
4) Read out the data according to repair procedures. (For detailed operation procedure, refer to the general scan tool operation manual.)

NOTE:
For details concerning DTC, refer to "List of Diagnostic Trouble Code (DTC)". <Ref. to EN(H4SO)(diag)-78, List of Diagnostic Trouble Code (DTC).>

2. MODE $01: (CURRENT POWERTRAIN DIAGNOSTIC DATA)

Refer to data denoting the current operating condition of analog input/output, digital input/output or the powertrain system.
A list of the support data and PID (Parameter Identification) codes are shown in the following table.

PID	Data	Unit of measure
$01	Number of emission-related powertrain DTC, and malfunction indicator light status and diagnosis support information	—
$03	Fuel system control status	—
$04	Calculated engine load value	%
$05	Engine coolant temperature	°C
$06	Short term fuel trim	%
$07	Long term fuel trim	%
$0B	Intake manifold absolute pressure	kPa
$0C	Engine speed	rpm
$0D	Vehicle speed	MPH
$0E	Ignition timing advance	°
$0F	Intake air temperature	°C
$10	Intake air amount	g/s
$11	Throttle valve opening angle	%
$13	Air fuel ratio sensor	—

GETmeMANUALS.org

PID	Data	Unit of measure
$15	Oxygen sensor output voltage and short term fuel trim associated with oxygen sensor (Bank 1 Sensor 2)	V and %
$1C	Supporting OBD system	—
$1F	Elapsed time after starting the engine	sec
$21	Travel distance after the malfunction indicator light illuminates	miles
$24	A/F value and A/F sensor output voltage (Bank 1 Sensor 1)	– and V
$2C	Target EGR	%
$2D	EGR deviation	%
$2E	Evaporative purge	%
$2F	Fuel level	%
$30	Number of warm ups after DTC clear	—
$31	Travel distance after DTC clear	miles
$32	Fuel tank pressure	Pa
$33	Barometric pressure	kPa
$34	A/F value and A/F sensor current (Bank 1 Sensor 1)	– and mA
$3C	Catalyst temperature #1	°C
$41	Diagnostic monitor of each drive cycle	—
$42	ECM power voltage	V
$43	Absolute load	%
$44	A/F target lambda	—
$45	Relative throttle opening angle	%
$46	Ambient temperature	°C
$47	Absolute throttle opening angle 2	%
$49	Absolute accelerator opening angle 1	%
$4A	Absolute accelerator opening angle 2	%
$4C	Target throttle opening angle	%
$4D	Engine operating time while malfunction indicator lit	min
$4E	Elapsed time after DTC clear	min
$51	Fuel used	—
$5A	Relative accelerator opening angle	%
$65	Neutral status	—

NOTE:
Refer to general scan tool manufacturer's operation manual to access current powertrain diagnostic data (MODE $01).

GETmeMANUALS.org

3. MODE $02 (POWERTRAIN FREEZE FRAME DATA)

Refer to data denoting the operating condition when trouble is detected by on-board diagnosis system.
A list of the support data and PID (Parameter Identification) codes are shown in the following table.

PID	Data	Unit of measure
$02	DTC that caused the freeze frame data storage required by CARB	—
$03	Fuel system control status	—
$04	Calculated engine load value	%
$05	Engine coolant temperature	°C
$06	Short term fuel trim (Bank 1 Sensor 1)	%
$07	Long term fuel trim (Bank 1 Sensor 1)	%
$0B	Intake manifold absolute pressure	kPa
$0C	Engine speed	rpm
$0D	Vehicle speed	MPH
$0E	Ignition timing advance	°
$0F	Intake air temperature	°C
$10	Intake air amount	g/s
$11	Throttle valve opening angle	%
$13	Air fuel ratio sensor	—
$15	Oxygen sensor output voltage and short term fuel trim associated with oxygen sensor (Bank 1 Sensor 2)	V and %
$1C	Supporting OBD system	—
$1F	Elapsed time after starting the engine	sec
$2C	Target EGR	%
$2D	EGR deviation	%
$2E	Evaporative purge	%
$2F	Fuel level	%
$32	Fuel tank pressure	Pa
$33	Barometric pressure	kPa
$42	ECM power voltage	V
$43	Absolute load	%
$44	A/F target lambda	—
$45	Relative throttle opening angle	%
$46	Ambient temperature	°C
$47	Absolute throttle opening angle 2	%
$49	Absolute accelerator opening angle 1	%
$4A	Absolute accelerator opening angle 2	%
$4C	Target throttle opening angle	%
$65	Neutral status	—

NOTE:
Refer to general scan tool manufacturer's instruction manual to access freeze frame data (MODE $02).

4. MODE $03 (EMISSION-RELATED POWERTRAIN DTC)

Refer to "List of Diagnostic Trouble Code (DTC)" for information about data denoting emission-related powertrain DTC. <Ref. to EN(H4SO)(diag)-78, List of Diagnostic Trouble Code (DTC).>

GETmeMANUALS.org

5. MODE $04 (CLEAR/RESET EMISSION-RELATED DIAGNOSTIC INFORMATION)

Refer to the mode used to clear or reset emission-related diagnostic information (OBD-II trouble diagnostic information).

NOTE:
- Refer to general scan tool manufacturer's instruction manual to clear the emission-related diagnostic information (MODE $04).
- Initial diagnosis of electronic throttle control is performed after memory clearance. Wait for 10 seconds or more after turning the ignition switch to ON, and then start the engine.

6. MODE $06

Refer to diagnostic value of troubleshooting and data of test limit indicated on the support data bit sequence table. A list of the support data is shown in the following table.

OBDMID	TID	SID	Diagnostic item
$01	$84	$1E	A/F sensor range failure (Bank 1 Sensor 1)
	$85	$1E	
	$86	$20	A/F sensor response failure (Bank 1 Sensor 1)
	$91	$20	
	$92	$10	
	$A3	$20	
	$A4	$10	
	$AC	$10	
	$AD	$10	
	$AE	$10	
	$AF	$10	
	$CD	$20	
	$CF	$20	
$02	$07	$0B	Oxygen sensor drop failure (Bank 1 Sensor 2)
	$08	$0B	
	$A5	$0B	
	$05	$10	Oxygen sensor response failure (Bank 1 Sensor 2)
	$06	$10	
	$D1	$10	Oxygen sensor delay failure (Bank 1 Sensor 2)
	$D2	$01	
$21	$89	$20	Catalyst deterioration diagnosis (Bank 1)
$31	$8A	$FD	EGR system diagnosis
$39	$93	$FE	Evaporative emission control system (Cap off)
$3B	$94	$FE	Evaporative emission control system (0.04 inch leak)
	$95	$FE	
	$A6	$FE	
$3C	$96	$FE	Evaporative emission control system (0.02 inch leak)
	$C1	$FE	
	$C2	$FE	
	$C3	$FE	
	$C4	$FE	
	$C5	$FE	
	$C6	$35	
	$C7	$FE	
	$C8	$FE	
	$C9	$FE	
	$CA	$FE	
$3D	$98	$FE	Evaporative emission control system (Purge flow)

GETmeMANUALS.org

OBDMID	TID	SID	Diagnostic item
$41	$9B	$14	A/F sensor heater characteristics failure (Bank 1 Sensor 1)
$42	$A2	$24	Oxygen sensor heater characteristics failure (Bank 1 Sensor 2)
$A1	$0B	$24	Misfire monitoring (All cylinders)
	$0C	$24	
$A2	$0B	$24	Misfire monitoring (#1 cylinder)
	$0C	$24	
$A3	$0B	$24	Misfire monitoring (#2 cylinder)
	$0C	$24	
$A4	$0B	$24	Misfire monitoring (#3 cylinder)
	$0C	$24	
$A5	$0B	$24	Misfire monitoring (#4 cylinder)
	$0C	$24	

7. MODE $07

Refer to the data of DTC (pending code) for troubleshooting result about emission in the first time.

8. MODE $09

Refer to data of vehicle specification (V.I.N., calibration ID, diagnosis frequency etc.).

GETmeMANUALS.org

9. Subaru Select Monitor

A: OPERATION

1. HOW TO USE SUBARU SELECT MONITOR

NOTE:
For detailed operation procedures, refer to “PC application help for Subaru Select Monitor”.

2. READ CURRENT DATA FOR ENGINE (NORMAL MODE)

NOTE:
- For detailed operation procedures, refer to “PC application help for Subaru Select Monitor”.
- A list of the support data is shown in the following table.
- *: For models without cruise control, the brake switch signal does not change.

Content	Display	Unit of measure	Note (at idling)
Engine load	Engine Load	%	21.0%
Engine coolant temperature signal	Coolant Temperature	°C or °F	85°C or 185°F or more (after warm-up)
A/F correction #1	A/F Correction #1	%	–0.8%
A/F learning #1	A/F Learning #1	%	0.0%
Intake manifold absolute pressure	Mani. Absolute Pressure	mmHg, kPa, inHg or psig	200 — 300 mmHg, 26.7 — 40 kPa, 7.8 — 11.8 inHg or 3.8 — 5.8 psig
Engine speed signal	Engine Speed	rpm	700 rpm (Agree with the tachometer indication)
Meter vehicle speed signal	Vehicle Speed	km/h or MPH	0 km/h or 0 MPH (at parking)
Ignition timing signal	Ignition Timing	deg	14 — 16 deg
Intake air temperature signal	Intake Air Temp.	°C or °F	(Ambient air temperature)
Intake air amount	Mass Air Flow	g/s or lb/m	2.5 g/s or 0.33 lb/m
Throttle opening angle signal	Throttle Opening Angle	%	2.0%
Rear oxygen sensor voltage	Rear O2 Sensor	V	0.1 — 0.7 V
Battery voltage	Battery Voltage	V	12 — 14 V
Mass air flow voltage	Air Flow Sensor Voltage	V	1.26 V
Injection 1 pulse width	Fuel Injection #1 Pulse	ms	2.82 ms
Atmospheric pressure signal	Atmosphere Pressure	mmHg, kPa, inHg or psig	(Atmospheric pressure)
Intake manifold relative pressure	Mani. Relative Pressure	mmHg, kPa, inHg or psig	(Air intake absolute pressure – Atmospheric pressure)
Learned ignition timing	Learned Ignition Timing	deg	0 deg
Acceleration opening angle signal	Accel. Opening Angle	%	0.0%
Fuel temperature signal	Fuel Temperature	°C or °F	+20°C or +68°F
Purge control solenoid duty ratio	CPC Valve Duty Ratio	%	0 — 3%
Number of EGR steps	No. of EGR steps	STEP	0 STEP
A/F sensor current value 1	A/F Sensor #1 Current	mA	–0.2 — 0.2 mA
A/F sensor resistance value 1	A/F Sensor #1 Resistance	Ω	32 Ω
A/F sensor output lambda 1	A/F Sensor #1	—	1.0
A/F correction #3	A/F Correction #3	%	0.3%
A/F learning #3	A/F Learning #3	%	0.00%
Throttle motor duty	Throttle Motor Duty	%	–15%
Throttle motor voltage	Throttle Motor Voltage	V	(Battery voltage)
Sub throttle sensor voltage	Sub-Throttle Sensor	V	1.52 V

GETmeMANUALS.org

Content	Display	Unit of measure	Note (at idling)
Main throttle sensor voltage	Main-Throttle Sensor	V	0.66 V
Sub accelerator sensor voltage	Sub-Accelerator Sensor	V	0.68 V
Main acceleration sensor voltage	Main-Accelerator Sensor	V	0.68 V
Memory vehicle speed	Memorized Cruise Speed	km/h or MPH	0 km/h or 0 MPH
Fuel level sensor signal	Fuel level resistance	Ω	2 — 96 Ω
Engine oil temperature signal	Engine Oil Temperature	°C	≥ 85°C (after warm-up)
Oil switching solenoid valve duty RH	OSV Duty R	%	16.9%
Oil switching solenoid valve duty LH	OSV Duty L	%	16.9%
Oil switching solenoid valve current RH	OSV Current R	mA	192 mA
Oil switching solenoid valve current LH	OSV Current L	mA	192 mA
Variable valve lift lift mode	VVL Lift Mode	—	1
#1 cylinder roughness monitor	Roughness Monitor #1	—	0
#2 cylinder roughness monitor	Roughness Monitor #2	—	0
#3 cylinder roughness monitor	Roughness Monitor #3	—	0
#4 cylinder roughness monitor	Roughness Monitor #4	—	0
Knock sensor correction	Knocking Correction	deg	0.0 deg
Fuel tank pressure signal	Fuel Tank Pressure	mmHg, kPa, inHg or psig	+7.7 mmHg, +1.1 kPa, +0.31 inHg or +0.15 psig
AT vehicle ID signal	AT Vehicle ID Signal	—	ON/OFF
D-check require Flag	D-check Require Flag	—	OFF
Delivery (test) mode terminal	Delivery Mode Connector (Test Mode Connector)	—	OFF
Neutral position switch signal	Neutral Position Switch	—	ON
Soft idle switch signal	Idle Switch Signal	—	ON
Ignition switch signal	Ignition Switch	—	ON
Power steering switch signal	P/S Switch	—	OFF (when OFF)
Air conditioning switch signal	A/C Switch	—	OFF (when OFF)
Starter switch signal	Starter Switch	—	OFF
Rear oxygen monitor	Rear O2 Rich Signal	—	Rich/Lean
Knocking signal	Knocking Signal	—	OFF
Crankshaft position sensor signal	Crankshaft Position Sig.	—	ON
Camshaft position sensor signal	Camshaft Position Sig.	—	ON
Rear defogger switch signal	Rear Defogger SW	—	OFF (when OFF)
Blower fan switch signal	Blower Fan SW	—	OFF (when OFF)
Light switch signal	Light Switch	—	OFF (when OFF)
Radiator fan relay 1 signal	Radiator Fan Relay #1	—	OFF (when OFF)
Radiator fan relay 2 signal	Radiator Fan Relay #2	—	OFF (when OFF)
Fuel pump relay signal	Fuel Pump Relay	—	ON output
Drain valve signal	Vent. Solenoid Valve	—	OFF output
Variable valve lift diagnosis oil pressure switch signal 1	Eng. Oil Press. SW 1	—	ON
Variable valve lift diagnosis oil pressure switch signal 2	Eng. Oil Press. SW 2	—	ON
AT coordinate retard angle demand signal	Retard Signal from AT	—	OFF
AT coordinate fuel cut demand signal	Fuel Cut signal from AT	—	OFF
Vehicle dynamics control (VDC) torque down prohibition output	Ban of Torque Down	—	ON
Vehicle dynamics control (VDC) torque down demand	Request Torque Down VDC	—	OFF

GETtheMANUALS.org

Content	Display	Unit of measure	Note (at idling)
AT coordinate permission signal	Torque Permission Signal	—	ON (OFF on MT vehicles)
Electronic throttle control motor relay signal	ETC Motor Relay	—	ON
Clutch switch signal	Clutch Switch	—	OFF (when OFF)
Stop light switch signal	Stop Light Switch	—	OFF (when OFF)
SET/COAST switch signal	SET/COAST Switch	—	OFF (when OFF)
RES/ACC switch signal	RESUME/ACCEL Switch	—	OFF (when OFF)
Brake switch signal*	Brake Switch	—	OFF (when OFF)
Main switch signal	Main Switch	—	OFF (when OFF)
Cruise control cancel switch signal	CC Cancel SW	—	OFF (when OFF)
Malfunction indicator light signal	MIL On Flag	—	OFF (when unlit)
Oil level switch	Oil level switch	—	HIGH level

3. READ CURRENT DATA FOR ENGINE (OBD MODE)

NOTE:
- For detailed operation procedures, refer to “PC application help for Subaru Select Monitor”.
- A list of the support data is shown in the following table.

Contents	Display	Note (at idling)	Unit of measure
Number of diagnosis code	Number of Diag. Code:	0	—
Condition of malfunction indicator light	MI(MIL)	OFF	—
Monitoring test of misfire	Misfire monitoring (Supp)	YES	—
Monitoring test of misfire	Misfire monitoring (Rdy)	YES	—
Monitoring test of fuel system	Fuel system monitoring (Supp)	YES	—
Monitoring test of fuel system	Fuel system monitoring (Rdy)	YES	—
Monitoring test of comprehensive component	Component monitoring (Supp)	YES	—
Monitoring test of comprehensive component	Component monitoring (Rdy)	YES	—
Test of catalyst	Catalyst Diagnosis (Supp)	YES	—
Test of catalyst	Catalyst Diagnosis (Rdy)	NO	—
Test of heating-type catalyst	Heated catalyst (Supp)	NO	—
Test of heating-type catalyst	Heated catalyst (Rdy)	N/A	—
Test of evaporative emission purge control system	Evaporative purge system (Supp)	YES	—
Test of evaporative emission purge control system	Evaporative purge system (Rdy)	NO	—
Secondary air system test	Secondary air system (Supp)	NO	—
Secondary air system test	Secondary air system (Rdy)	N/A	—
Test of air conditioning system refrigerant	A/C system refrigerant (Supp)	NO	—
Test of air conditioning system refrigerant	A/C system refrigerant (Rdy)	N/A	—
Test of oxygen sensor	Oxygen sensor (Supp)	YES	—
Test of oxygen sensor	Oxygen sensor (Rdy)	NO	—
Test of oxygen sensor heater	O2 Heater Diagnosis (Supp)	YES	—

GETtheMANUALS.org

Contents	Display	Note (at idling)	Unit of measure
Test of oxygen sensor heater	O2 Heater Diagnosis (Rdy)	NO	—
Test of EGR system	EGR system (Supp)	YES	—
Test of EGR system	EGR system (Rdy)	NO	—
Air fuel ratio control system for bank 1	Fuel system for Bank 1	Cl_normal	—
Engine load data	Calculated load value	23.0	%
Engine coolant temperature signal	Coolant Temp.	92	°C
Short term fuel trim by front oxygen (A/F) sensor (Bank 1)	Short term fuel trim B1	–0.8	%
Long term fuel trim by front oxygen (A/F) sensor (Bank 1)	Long term fuel trim B1	0.0	%
Intake manifold absolute pressure signal	Mani. Absolute Pressure	28	kPa
Engine speed signal	Engine Speed	700	rpm
Vehicle speed signal	Vehicle Speed	0	km/h
#1 Cylinder ignition timing	Ignition timing adv. #1	16.0	°
Intake air temperature signal	Intake Air Temp.	36	°C
Intake air amount	Mass Air Flow	2.7	g/s
Throttle position signal	Throttle Opening Angle	13	%
Oxygen sensor (Bank 1 Sensor 2)	Oxygen sensor #12	0.7	V
A/F correction (Bank 1 Sensor 2)	Short term fuel trim #12	0.0	%
On-board diagnostic system	OBD System	OBD/OBD2	—
Front oxygen (A/F) sensor (Bank 1 Sensor 1)	Oxygen sensor #11	Supported	—
Oxygen sensor (Bank 1 Sensor 2)	Oxygen sensor #12	Supported	—
Elapsed time after engine start	Time Since Engine Start	—	sec
Travel distance after the malfunction indicator light illuminates	Lighted MI lamp history	—	km
A/F lambda signal (Bank 1 Sensor 1)	A/F Sensor #11	1.001	—
A/F sensor output signal (Bank 1 Sensor 1)	A/F Sensor #11	2.79	V
Target EGR	Commanded EGR	—	%
EGR deviation	EGR Error	—	%
Evaporative purge	Commanded Evap Purge	0	%
Fuel level signal	Fuel Level	—	%
Number of warm ups after DTC clear	Number of warm-ups	—	—
Travel distance after DTC clear	Meter since DTC cleared	—	km
Fuel tank pressure signal	Fuel Tank Pressure	–32.00	Pa
Atmospheric pressure signal	Atmosphere Pressure	Atmospheric pressure	kPa
A/F lambda signal (Bank 1 Sensor 1)	A/F Sensor #11	1.001	—
A/F sensor current (Bank 1 Sensor 1)	A/F Sensor #11	0.00	mA
Catalyst temperature #1	Catalyst Temperature #11	—	°C
Monitoring test of misfire	Misfire monitoring (Enable)	YES	—
Monitoring test of misfire	Misfire monitoring (Comp)	NO	—
Monitoring test of fuel system	Fuel system monitoring (Enable)	YES	—
Monitoring test of fuel system	Fuel system monitoring (Comp)	NO	—
Monitoring test of comprehensive component	Component monitoring (Enable)	YES	—
Monitoring test of comprehensive component	Component monitoring (Comp)	NO	—
Test of catalyst	Catalyst Diagnosis (Enable)	YES	—

GETthemANSWERS.org

Contents	Display	Note (at idling)	Unit of measure
Test of catalyst	Catalyst Diagnosis (Comp)	NO	—
Test of heating-type catalyst	Heated catalyst (Enable)	N/A	—
Test of heating-type catalyst	Heated catalyst (Comp)	N/A	—
Test of evaporative emission purge control system	Evaporative purge system (Enable)	YES	—
Test of evaporative emission purge control system	Evaporative purge system (Comp)	NO	—
Secondary air system test	Secondary air system (Enable)	N/A	—
Secondary air system test	Secondary air system (Comp)	N/A	—
Test of air conditioning system refrigerant	A/C system refrigerant (Enable)	N/A	—
Test of air conditioning system refrigerant	A/C system refrigerant (Comp)	N/A	—
Test of oxygen sensor	Oxygen sensor (Enable)	YES	—
Test of oxygen sensor	Oxygen sensor (Comp)	NO	—
Test of oxygen sensor heater	O2 Heater Diagnosis (Enable)	YES	—
Test of oxygen sensor heater	O2 Heater Diagnosis (Comp)	NO	—
Test of EGR system	EGR system (Enable)	YES	—
Test of EGR system	EGR system (Comp)	NO	—
ECM power supply voltage	Control module voltage	13.789	V
Absolute load	Absolute Load Value	22	%
A/F target lambda	Target Equivalence Ratio	0.976	—
Relative throttle opening angle	Relative Throttle Pos.	2	%
Ambient temperature	Ambient Temperature	Ambient air temperature	°C
Absolute throttle opening angle 2	Absolute Throttle Pos.#2	32	%
Absolute accelerator opening angle 1	Accelerator Pedal Pos.#1	13	%
Absolute accelerator opening angle 2	Accelerator Pedal Pos.#2	13	%
Target throttle opening angle	Target Throt. Act. Cont.	0	%
Engine operating time while malfunction indicator light lit	Time while MIL lighted	—	min
Elapsed time after DTC clear	Time since DTC cleared	—	min
Type of fuel	Type of fuel	GAS	—
Relative acceleration opening angle	Relative Accelera. Pos.	0	%
Neutral condition	AT drive status/MT gear status	NEUT	—

GETmeMANUALS.org

4. READ FREEZE FRAME DATA FOR ENGINE (OBD MODE)

NOTE:
- For detailed operation procedures, refer to “PC application help for Subaru Select Monitor”.
- A list of the support data is shown in the following table.

Description	Display	Unit of measure
DTCs of freeze frame data	Freeze frame data	—
Air fuel ratio control system for bank 1	Fuel system for Bank 1	—
Engine load data	Calculated load value	%
Engine coolant temperature signal	Coolant Temp.	°C or °F
Short term fuel trim by front oxygen (A/F) sensor	Short term fuel trim B1	%
Long term fuel trim by front oxygen (A/F) sensor	Long term fuel trim B1	%
Intake manifold absolute pressure signal	Mani. Absolute Pressure	mmHg, kPa, inHg or psig
Engine speed signal	Engine Speed	rpm
Vehicle speed signal	Vehicle Speed	km/h or MPH
Ignition timing advance for #1 cylinder	Ignition timing adv. #1	°
Intake air temperature signal	Intake Air Temp.	°C or °F
Intake air amount	Mass Air Flow	g/s or lb/m
Throttle position signal	Throttle Opening Angle	%
Oxygen sensor (Bank 1 Sensor 2)	Oxygen sensor #12	V
A/F correction (Bank 1 Sensor 2)	Short term fuel trim #12	%
On-board diagnostic system	OBD System	—
Front oxygen (A/F) sensor (Bank 1 Sensor 1)	Oxygen sensor #11	—
Oxygen sensor (Bank 1 Sensor 2)	Oxygen sensor #12	—
Elapsed time after engine start	Time Since Engine Start	sec
Target EGR	Commanded EGR	%
EGR deviation	EGR Error	%
Evaporative purge	Commanded Evap Purge	%
Fuel level signal	Fuel Level	%
Fuel tank pressure signal	Fuel Tank Pressure	mmHg, kPa, inHg or psig
Atmospheric pressure	Atmosphere Pressure	mmHg, kPa, inHg or psig
ECM power supply voltage	Control module voltage	V
Absolute load	Absolute Load Value	%
A/F target lambda	Target Equivalence Ratio	—
Relative throttle opening angle	Relative Throttle Pos.	%
Ambient temperature	Ambient Temperature	°C or °F
Absolute throttle opening angle 2	Absolute Throttle Pos.#2	%
Absolute accelerator opening angle 1	Accelerator Pedal Pos.#1	%
Absolute accelerator opening angle 2	Accelerator Pedal Pos.#2	%
Target throttle opening angle	Target Throt. Act. Cont.	%
Neutral condition	AT drive status/MT gear status	—

5. V.I.N REGISTRATION

1) On «Main Menu» display, select {Each System Check}.
2) On «System Selection Menu» display, select {Engine Control System}.
3) Click the [OK] button after the information of engine type has been displayed.
4) On the «Engine Diagnosis» display, select {Entry VIN}.
5) Perform the procedures shown on the display screen.

GETthemANSWERS.org

10. Read Diagnostic Trouble Code (DTC)

A: OPERATION

1. SUBARU SELECT MONITOR

NOTE:
- For detailed operation procedures, refer to “PC application help for Subaru Select Monitor”.
- For details concerning DTC, refer to “List of Diagnostic Trouble Code (DTC)”. <Ref. to EN(H4SO)(diag)-78, List of Diagnostic Trouble Code (DTC).>

2. GENERAL SCAN TOOL

Refer to data denoting emission-related powertrain DTC.
For details concerning DTC, refer to “List of Diagnostic Trouble Code (DTC)”. <Ref. to EN(H4SO)(diag)-78, List of Diagnostic Trouble Code (DTC).>

NOTE:
Refer to general scan tool manufacturer’s instruction manual to access powertrain DTC (MODE $03).

GETthemANSWERS.org

11.Inspection Mode

A: PROCEDURE

Perform the diagnosis shown in the following DTC table.
When performing the diagnosis not listed in “List of Diagnostic Trouble Code (DTC)”, refer to the item on the drive cycle. <Ref. to EN(H4SO)(diag)-45, Drive Cycle.>

DTC	Item	Condition
P0031	HO2S Heater Control Circuit Low (Bank 1 Sensor 1)	—
P0032	HO2S Heater Control Circuit High (Bank 1 Sensor 1)	—
P0037	HO2S Heater Control Circuit Low (Bank 1 Sensor 2)	—
P0038	HO2S Heater Control Circuit High (Bank 1 Sensor 2)	—
P0077	Intake Valve Control Solenoid Circuit High (Bank 1)	—
P0083	Intake Valve Control Solenoid Circuit High (Bank 2)	—
P0102	Mass or Volume Air Flow Circuit Low Input	—
P0103	Mass or Volume Air Flow Circuit High Input	—
P0107	Manifold Absolute Pressure/Barometric Pressure Circuit Low Input	—
P0108	Manifold Absolute Pressure/Barometric Pressure Circuit High Input	—
P0112	Intake Air Temperature Sensor 1 Circuit Low	—
P0113	Intake Air Temperature Sensor 1 Circuit High	—
P0117	Engine Coolant Temperature Circuit Low	—
P0118	Engine Coolant Temperature Circuit High	—
P0122	Throttle/Pedal Position Sensor/Switch “A” Circuit Low	—
P0123	Throttle/Pedal Position Sensor/Switch “A” Circuit High	—
P0131	O2 Sensor Circuit Low Voltage (Bank 1 Sensor 1)	—
P0132	O2 Sensor Circuit High Voltage (Bank 1 Sensor 1)	—
P0137	O2 Sensor Circuit Low Voltage (Bank 1 Sensor 2)	—
P0138	O2 Sensor Circuit High Voltage (Bank 1 Sensor 2)	—
P0140	O2 Sensor Circuit No Activity Detected (Bank1 Sensor2)	—
P0182	Fuel Temperature Sensor “A” Circuit Low Input	—
P0183	Fuel Temperature Sensor “A” Circuit High Input	—
P0197	Engine Oil Temperature Sensor Low	—
P0198	Engine Oil Temperature Sensor High	—
P0201	Injector #1	—
P0202	Injector #2	—
P0203	Injector #3	—
P0204	Injector #4	—
P0222	Throttle/Pedal Position Sensor/Switch “B” Circuit Low	—
P0223	Throttle/Pedal Position Sensor/Switch “B” Circuit High	—
P0327	Knock Sensor 1 Circuit Low (Bank 1 or Single Sensor)	—
P0328	Knock Sensor 1 Circuit High (Bank 1 or Single Sensor)	—
P0335	Crankshaft Position Sensor “A” Circuit	—
P0336	Crankshaft Position Sensor “A” Circuit Range/Performance	—
P0340	Camshaft Position Sensor “A” Circuit (Bank 1 or Single Sensor)	—
P0341	Camshaft Position Sensor “A” Circuit Range/Performance (Bank 1 or Single Sensor)	—
P0351	Ignition Coil A Primary/Secondary Circuit	—
P0352	Ignition Coil B Primary/Secondary Circuit	—
P0353	Ignition Coil C Primary/Secondary Circuit	—
P0354	Ignition Coil D Primary/Secondary Circuit	—
P0447	Evaporative Emission Control System Vent Control Circuit Open	—
P0448	Evaporative Emission Control System Vent Control Circuit Shorted	—

GETmeMANUALS.org

DTC	Item	Condition
P0452	Evaporative Emission Control System Pressure Sensor Low Input	—
P0453	Evaporative Emission Control System Pressure Sensor High Input	—
P0458	Evaporative Emission System Purge Control Valve Circuit Low	—
P0462	Fuel Level Sensor “A” Circuit Low	—
P0463	Fuel Level Sensor “A” Circuit High	—
P0500	Vehicle Speed Sensor “A”	—
P0512	Starter Request Circuit	—
P0513	Incorrect Immobilizer Key	—
P0604	Internal Control Module Random Access Memory (RAM) Error	—
P0605	Internal Control Module Read Only Memory (ROM) Error	—
P0607	Throttle Control System Circuit Range/Performance	—
P0638	Throttle Actuator Control Range/Performance (Bank 1)	—
P0700	Transmission Control System (MIL Request)	—
P0851	Park/Neutral Switch Input Circuit Low	—
P0852	Park/Neutral Switch Input Circuit High	—
P1152	O2 Sensor Circuit Range/Performance (Low) (Bank1 Sensor1)	—
P1153	O2 Sensor Circuit Range/Performance (High) (Bank1 Sensor1)	—
P1160	Return Spring Failure	—
P1518	Starter Switch Circuit Low Input	—
P1560	Back-Up Voltage Circuit Malfunction	—
P1570	Antenna	—
P1571	Reference Code Incompatibility	—
P1572	IMM Circuit Failure (Except Antenna Circuit)	—
P1574	Key Communication Failure	—
P1576	EGI Control Module EEPROM	—
P1577	IMM Control Module EEPROM	—
P1578	Meter Failure	—
P2101	Throttle Actuator Control Motor Circuit Range/Performance	—
P2102	Throttle Actuator Control Motor Circuit Low	—
P2103	Throttle Actuator Control Motor Circuit High	—
P2109	Throttle/Pedal Position Sensor “A” Minimum Stop Performance	—
P2122	Throttle/Pedal Position Sensor/Switch “D” Circuit Low Input	—
P2123	Throttle/Pedal Position Sensor/Switch “D” Circuit High Input	—
P2127	Throttle/Pedal Position Sensor/Switch “E” Circuit Low Input	—
P2128	Throttle/Pedal Position Sensor/Switch “E” Circuit High Input	—
P2135	Throttle/Pedal Position Sensor/Switch “A”/“B” Voltage Correlation	—
P2138	Throttle/Pedal Position Sensor/Switch “D”/“E” Voltage Correlation	—
P2227	Barometric Pressure Circuit Range/Performance	—
P2228	Barometric Pressure Circuit Low	—
P2229	Barometric Pressure Circuit High	—

GETmeMANUALS.org

1. PREPARATION FOR THE INSPECTION MODE

1) Check that the battery voltage is 12 V or more and fuel remains approx. half [20 — 40 ℓ (5.3 — 10.6 US gal, 4.4 — 8.8 Imp gal)].
2) Lift up the vehicle using a garage jack and place it on rigid racks, or drive the vehicle onto free rollers.

WARNING:
- **Before lifting up the vehicle, ensure parking brake is applied.**
- **Do not use a pantograph jack in place of a rigid rack.**
- **Secure a rope or wire to the front or rear towing hooks to prevent the lateral runout of front wheels.**
- **Before rotating the wheels, make sure that there is no one in front of the vehicle. Besides while the wheels are rotating, make sure that no one approaches the vehicle front side.**
- **Make sure that there is nothing around the wheels. For AWD model, pay attention to all four wheels.**
- **While servicing, do not depress or release the clutch pedal or accelerator pedal quickly regardless of the engine speed. Quick operation may cause the vehicle to drop off the free roller.**
- **To prevent the vehicle from slipping due to vibration, do not place anything between rigid rack and the vehicle.**

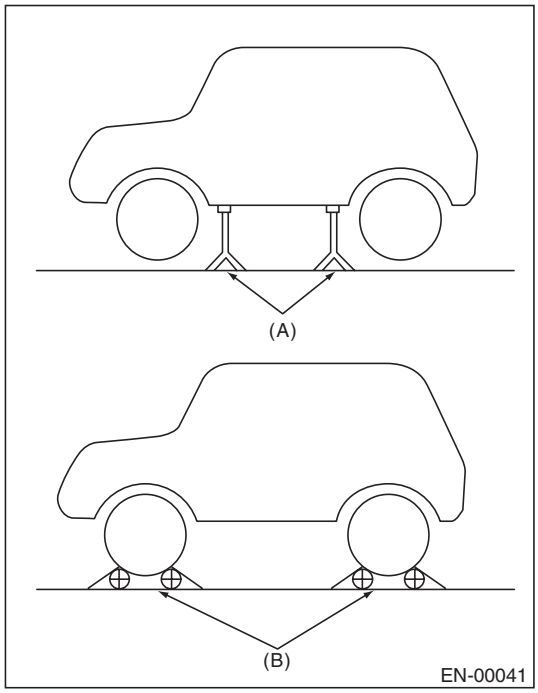

(A) Rigid rack
(B) Free roller

2. SUBARU SELECT MONITOR

1) Check that no DTC remains after clearing memory. <Ref. to EN(H4SO)(diag)-51, Clear Memory Mode.>
2) Warm up the engine.
3) Prepare the Subaru Select Monitor kit. <Ref. to EN(H4SO)(diag)-8, PREPARATION TOOL, General Description.>

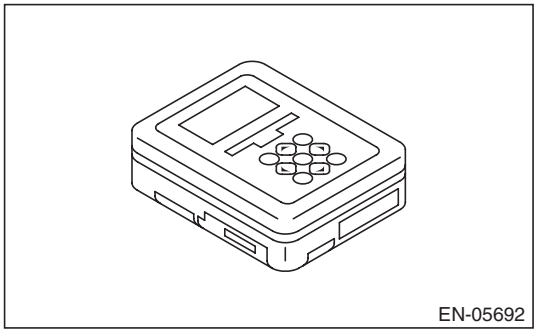

4) Prepare PC with Subaru Select Monitor installed.
5) Connect the USB cable to SDI (Subaru Diagnosis Interface) and USB port on the personal computer (dedicated port for the Subaru Select Monitor).

NOTE:
The dedicated port for the Subaru Select Monitor means the USB port which was used to install the Subaru Select Monitor.
6) Connect the diagnosis cable to SDI.
7) Install the delivery (test) mode fuse (A) of the fuse box.

CAUTION:
Do not use any fuses that are installed on the vehicle.

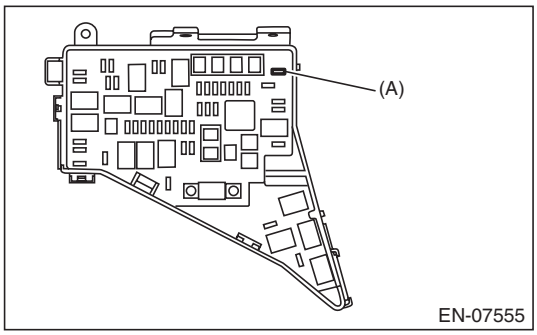

GETthemANSWERS.org

8) Connect SDI to data link connector located in the lower portion of the instrument panel (on the driver's side).

CAUTION:
Do not connect the scan tools except for Subaru Select Monitor and general scan tool.

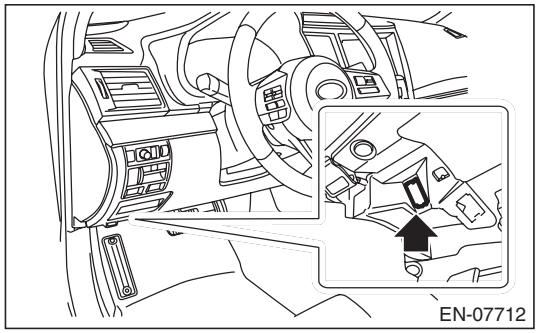

9) Start the PC.
10) Turn the ignition switch to ON (engine OFF) and run the "PC application for Subaru Select Monitor".
11) On «Main Menu» display, select {Each System Check}.
12) On «System Selection Menu» display, select {Engine Control System}.
13) Click the [OK] button after the information of engine type has been displayed.
14) On «Engine Diagnosis» display, select {Dealer Check Mode Procedure}.
15) When the "Perform Inspection (Dealer Check) Mode ?" is shown on the screen, click the [Next] button.
16) Perform subsequent procedures as instructed on the display screen.
• If trouble still remains in the memory, the corresponding DTC appears on the display screen.

NOTE:
• For detailed operation procedures, refer to "PC application help for Subaru Select Monitor".
• For details concerning DTC, refer to "List of Diagnostic Trouble Code (DTC)". <Ref. to EN(H4SO)(diag)-78, List of Diagnostic Trouble Code (DTC).>
• Release the parking brake.
• The speed difference between front and rear wheels may illuminate the ABS warning light, but this does not indicate a malfunction. When engine control system diagnosis is finished, perform the VDC memory clearance procedure of self-diagnosis function. <Ref. to VDC(diag)-25, Clear Memory Mode.>

3. GENERAL SCAN TOOL

1) Check that no DTC remains after clearing memory. <Ref. to EN(H4SO)(diag)-31, MODE $04 (CLEAR/RESET EMISSION-RELATED DIAGNOSTIC INFORMATION), OPERATION, General Scan Tool.>
2) Warm up the engine.
3) Install the delivery (test) mode fuse (A) of the main fuse box.

CAUTION:
Do not use any fuses that are installed on the vehicle.

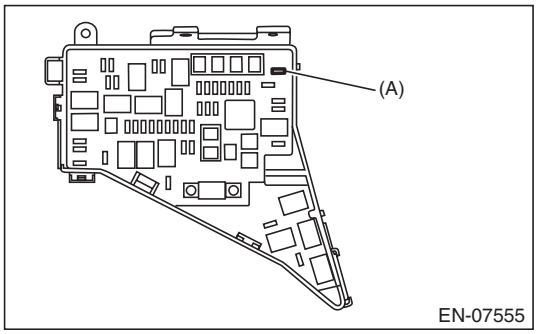

4) Connect the general scan tool to data link connector located in the lower portion of the instrument panel (on the driver's side).

CAUTION:
Do not connect the scan tools except for Subaru Select Monitor and general scan tool.

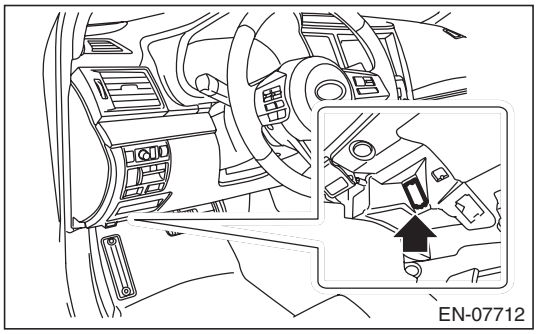

5) Start the engine.

NOTE:
• Ensure the selector lever is placed in the "P" range before starting. (CVT model)
• Depress the clutch pedal when starting engine. (MT model)
6) Turn the neutral position switch to ON using select lever or shift lever.
7) Depress the brake pedal to turn the brake switch ON. (CVT model)
8) Keep the engine speed in 2,500 — 3,000 rpm range for 40 seconds.

GETmeMANUALS.org

9) Place the select lever or shift lever in “D” position (CVT model) or “1st gear” (MT model) and drive the vehicle at 5 to 10 km/h (3 to 6 MPH).

NOTE:
- For AWD model, release the parking brake.
- The speed difference between front and rear wheels may illuminate the ABS warning light, but this does not indicate a malfunction. When engine control system diagnosis is finished, perform the VDC memory clearance procedure of self-diagnosis function. <Ref. to VDC(diag)-25, Clear Memory Mode.>

10) Using the general scan tool, check for DTC and record the result(s).

NOTE:
- For detailed operation procedures, refer to the general scan tool operation manual.
- For details concerning DTC, refer to “List of Diagnostic Trouble Code (DTC)”.

<Ref. to EN(H4SO)(diag)-78, List of Diagnostic Trouble Code (DTC).>

GETmeMANUALS.org

12. Drive Cycle

A: PROCEDURE

It is necessary to perform the drive cycle listed below if DTC is not found in the Inspection Mode. It is possible to complete diagnosis of the DTC by performing the indicated drive cycle. After the repair for the DTC, perform a necessary drive cycle and make sure the function recovers and the DTC is recorded.

1. PREPARATION FOR DRIVE CYCLE

1) Check that the battery voltage is 12 V or more and fuel remains approx. half [20 — 40 ℓ (5.3 — 10.6 US gal, 4.4 — 8.8 Imp gal)].
2) After performing the diagnostics and Clear Memory Mode, check that no DTC remains. <Ref. to EN(H4SO)(diag)-51, Clear Memory Mode.>
3) Check the delivery (test) mode fuse is removed.

NOTE:
- Perform the drive cycle after warming up the engine except when the engine coolant temperature at engine start is specified.
- Perform the drive cycle twice if the DTC in the list is marked with *. After completing the first drive cycle, stop the engine and perform second diagnosis in same condition.

2. DRIVE CYCLE A

DTC	Item	Condition
*P0125	Insufficient Coolant Temperature for Closed Loop Fuel Control	Engine coolant temperature at engine start is less than 20°C (68°F).
*P0126	Insufficient Engine Coolant Temperature for Stable Operation	—
*P0128	Coolant Thermostat (Engine Coolant Temperature Below Thermostat Regulating Temperature)	—
*P0133	O2 Sensor Circuit Slow Response (Bank 1 Sensor 1)	—
*P0141	O2 Sensor Heater Circuit (Bank1 Sensor2)	—
*P014C	O2 Sensor Slow Response - Rich to Lean (Bank 1 Sensor 1)	—
*P014D	O2 Sensor Slow Response - Lean to Rich (Bank 1 Sensor 1)	—
*P015A	O2 Sensor Delayed Response - Rich to Lean (Bank 1 Sensor 1)	—
*P015B	O2 Sensor Delayed Response - Lean to Rich (Bank 1 Sensor 1)	—
*P0171	System Too Lean (Bank 1)	Complete diagnosis with drive cycle B or C as well.
*P0172	System Too Rich (Bank 1)	Complete diagnosis with drive cycle B or C as well.
*P0196	Engine Oil Temperature Sensor Circuit Range/Performance	—
*P0301	Cylinder 1 Misfire Detected	Complete diagnosis with drive cycle B or C as well.
*P0302	Cylinder 2 Misfire Detected	Complete diagnosis with drive cycle B or C as well.
*P0303	Cylinder 3 Misfire Detected	Complete diagnosis with drive cycle B or C as well.
*P0304	Cylinder 4 Misfire Detected	Complete diagnosis with drive cycle B or C as well.
*P0420	Catalyst System Efficiency Below Threshold (Bank 1)	—
*P0442	Evaporative Emission Control System Leak Detected (Small Leak)	Engine coolant temperature at engine start is less than 30°C (86°F).
*P0451	Evaporative Emission Control System Pressure Sensor	—
*P0456	Evaporative Emission Control System Leak Detected (Very Small Leak)	Engine coolant temperature at engine start is less than 30°C (86°F).

GETmeMANUALS.org

DTC	Item	Condition
*P0457	Evaporative Emission Control System Leak Detected (Fuel Cap Loose/Off)	Engine coolant temperature at engine start is less than 30°C (86°F).
*P0459	Evaporative Emission System Purge Control Valve Circuit High	—
P1443	Vent Control Solenoid Valve Function Problem	—
*P2096	Post Catalyst Fuel Trim System Too Lean (Bank 1)	Complete diagnosis with drive cycle B or C as well.
*P2097	Post Catalyst Fuel Trim System Too Rich (Bank 1)	Complete diagnosis with drive cycle B or C as well.

Diagnostic procedure:
1) Drive for 20 minutes or more at a constant speed of 80 km/h (50 MPH) or more.
2) Stop the vehicle and idle for one minute.

3. DRIVE CYCLE B

DTC	Item	Condition
*P0171	System Too Lean (Bank 1)	Complete diagnosis with drive cycle A or C as well.
*P0172	System Too Rich (Bank 1)	Complete diagnosis with drive cycle A or C as well.
*P0301	Cylinder 1 Misfire Detected	Complete diagnosis with drive cycle A or C as well.
*P0302	Cylinder 2 Misfire Detected	Complete diagnosis with drive cycle A or C as well.
*P0303	Cylinder 3 Misfire Detected	Complete diagnosis with drive cycle A or C as well.
*P0304	Cylinder 4 Misfire Detected	Complete diagnosis with drive cycle A or C as well.
*P0464	Fuel Level Sensor Circuit Intermittent	—
*P0506	Idle Air Control System RPM Lower Than Expected	—
*P0507	Idle Air Control System RPM Higher Than Expected	—
*P2096	Post Catalyst Fuel Trim System Too Lean (Bank 1)	Complete diagnosis with drive cycle A or C as well.
*P2097	Post Catalyst Fuel Trim System Too Rich (Bank 1)	Complete diagnosis with drive cycle A or C as well.

Diagnostic procedure:
1) Drive at 10 km/h (6 MPH) or more.
2) Stop the vehicle and idle for ten minutes.

4. DRIVE CYCLE C

DTC	Item	Condition
P0026	Intake Valve Control Solenoid Circuit Range/Performance (Bank 1)	—
P0028	Intake Valve Control Solenoid Circuit Range/Performance (Bank 2)	—
*P0030	HO2S Heater Control Circuit (Bank 1 Sensor 1)	—
*P0068	MAP/MAF - Throttle Position Correlation	—
P0076	Intake Valve Control Solenoid Circuit Low (Bank 1)	—
P0082	Intake Valve Control Solenoid Circuit Low (Bank 2)	—
*P0101	Mass or Volume Air Flow Circuit Range/Performance	—
P0134	O2 Sensor Circuit No Activity Detected (Bank 1 Sensor 1)	—
*P013A	O2 Sensor Slow Response - Rich to Lean (Bank 1 Sensor 2)	—
*P013B	O2 Sensor Slow Response - Lean to Rich (Bank 1 Sensor 2)	—
*P013E	O2 Sensor Delayed Response - Rich to Lean (Bank 1 Sensor 2)	—
*P013F	O2 Sensor Delayed Response - Lean to Rich (Bank 1 Sensor 2)	—

GETmeMANUALS.org

Drive Cycle

DTC	Item	Condition
*P0171	System Too Lean (Bank 1)	Complete diagnosis with drive cycle A or B as well.
*P0172	System Too Rich (Bank 1)	Complete diagnosis with drive cycle A or B as well.
*P0301	Cylinder 1 Misfire Detected	Complete diagnosis with drive cycle A or B as well.
*P0302	Cylinder 2 Misfire Detected	Complete diagnosis with drive cycle A or B as well.
*P0303	Cylinder 3 Misfire Detected	Complete diagnosis with drive cycle A or B as well.
*P0304	Cylinder 4 Misfire Detected	Complete diagnosis with drive cycle A or B as well.
*P0400	Exhaust Gas Recirculation Flow	—
P1492	EGR Solenoid Valve Signal #1 Circuit Malfunction (Low Input)	—
P1493	EGR Solenoid Valve Signal #1 Circuit Malfunction (High Input)	—
P1494	EGR Solenoid Valve Signal #2 Circuit Malfunction (Low Input)	—
P1495	EGR Solenoid Valve Signal #2 Circuit Malfunction (High Input)	—
P1496	EGR Solenoid Valve Signal #3 Circuit Malfunction (Low Input)	—
P1497	EGR Solenoid Valve Signal #3 Circuit Malfunction (High Input)	—
P1498	EGR Solenoid Valve Signal #4 Circuit Malfunction (Low Input)	—
P1499	EGR Solenoid Valve Signal #4 Circuit Malfunction (High Input)	—
*P2096	Post Catalyst Fuel Trim System Too Lean (Bank 1)	Complete diagnosis with drive cycle A or B as well.
*P2097	Post Catalyst Fuel Trim System Too Rich (Bank 1)	Complete diagnosis with drive cycle A or B as well.

Diagnostic procedure:

Drive according to the drive pattern described below.

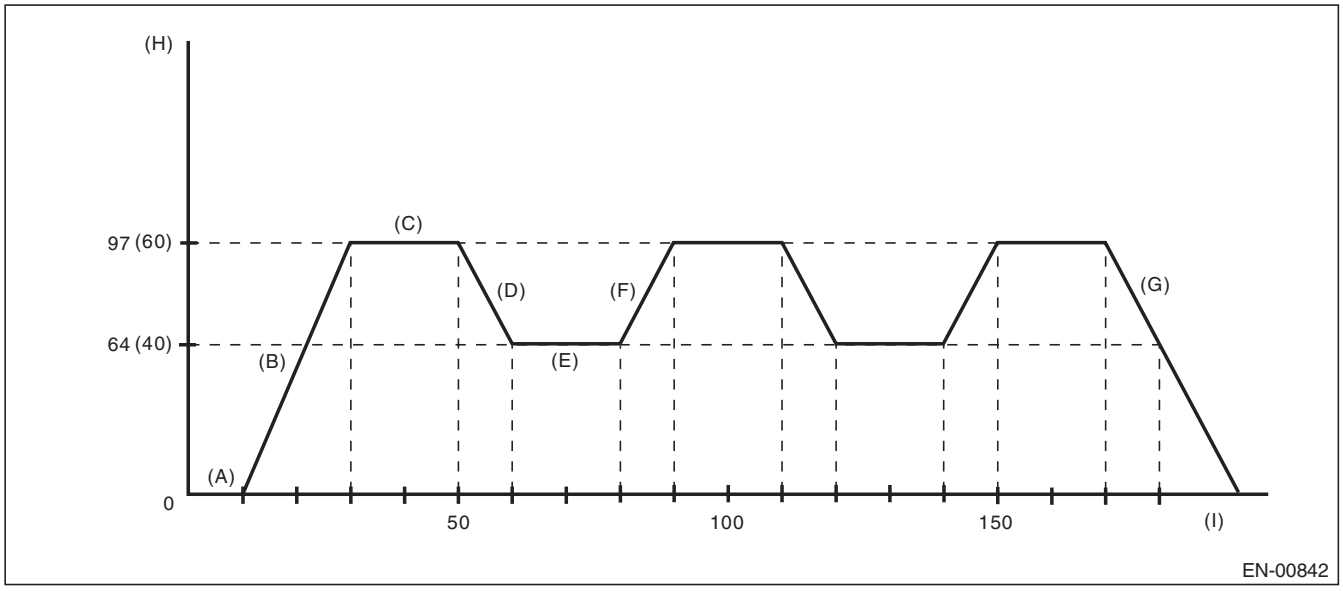

(A) Idle the engine for 10 seconds or more.

(B) Accelerate to 97 km/h (60 MPH) or more within 20 seconds.

(C) Drive for 20 seconds or more at 97 km/h (60 MPH) or more.

(D) Decelerate with fully closed throttle to 64 km/h (40 MPH) or less.

(E) Drive for 20 seconds or more at 64 km/h (40 MPH) or less.

(F) Accelerate to 97 km/h (60 MPH) or more within 10 seconds.

(G) Stop the vehicle with throttle fully closed.

(H) Vehicle speed km/h (MPH)

(I) Sec.

GETmeMANUALS.org

5. DRIVE CYCLE D

DTC	Item	Condition
*P0181	Fuel Temperature Sensor “A” Circuit Range/Performance	—

NOTE:
In drive cycle D, one drive cycle will be established when both the drift diagnosis and stuck diagnosis have completed.

Diagnostic procedure:

DRIFT DIAGNOSIS

1) Make sure of the items below before starting the engine.
- Engine coolant temperature is less than 30°C (86°F).
- Remaining fuel is 10 ℓ (2.6 US gal, 2.2 Imp gal) or more.
- Battery voltage is 10.9 V or more.

2) Idle the engine until engine coolant temperature is at least 10°C (18°F) higher than it was when engine started.
3) After the engine has reached the state of procedure 2), idle the engine for another 5 minutes or more.

STUCK DIAGNOSIS

1) Make sure that the battery voltage is 10.9 V or more.
2) Perform the Clear Memory Mode. <Ref. to EN(H4SO)(diag)-51, Clear Memory Mode.>
3) Drive for approximately 50 ℓ (13.2 US gal, 11 Imp gal) of fuel.

NOTE:
- It is acceptable to drive the vehicle intermittently.
- Do not disconnect the battery terminals during stuck diagnosis. (Data will be cleared by disconnecting the battery terminals.)

6. DRIVE CYCLE E

DTC	Item	Condition
*P0461	Fuel Level Sensor “A” Circuit Range/Performance	—

Diagnostic procedure:
1) Make sure that the battery voltage is 10.9 V or more.
2) Perform the Clear Memory Mode. <Ref. to EN(H4SO)(diag)-51, Clear Memory Mode.>
3) Drive for approximately 30 ℓ (7.9 US gal, 6.6 Imp gal) of fuel.

NOTE:
- It is acceptable to drive the vehicle intermittently.
- Do not disconnect the battery terminals while diagnosing. (Data will be cleared by disconnecting the battery terminals.)

GETmeMANUALS.org

7. DRIVE CYCLE F

DTC	Item	Condition
*P0111	Intake Air Temperature Sensor 1 Circuit Range/Performance	—

Diagnostic procedure:
1) Make sure that the engine coolant temperature is less than 30°C (86°F).
2) Drive according to the drive pattern described below.

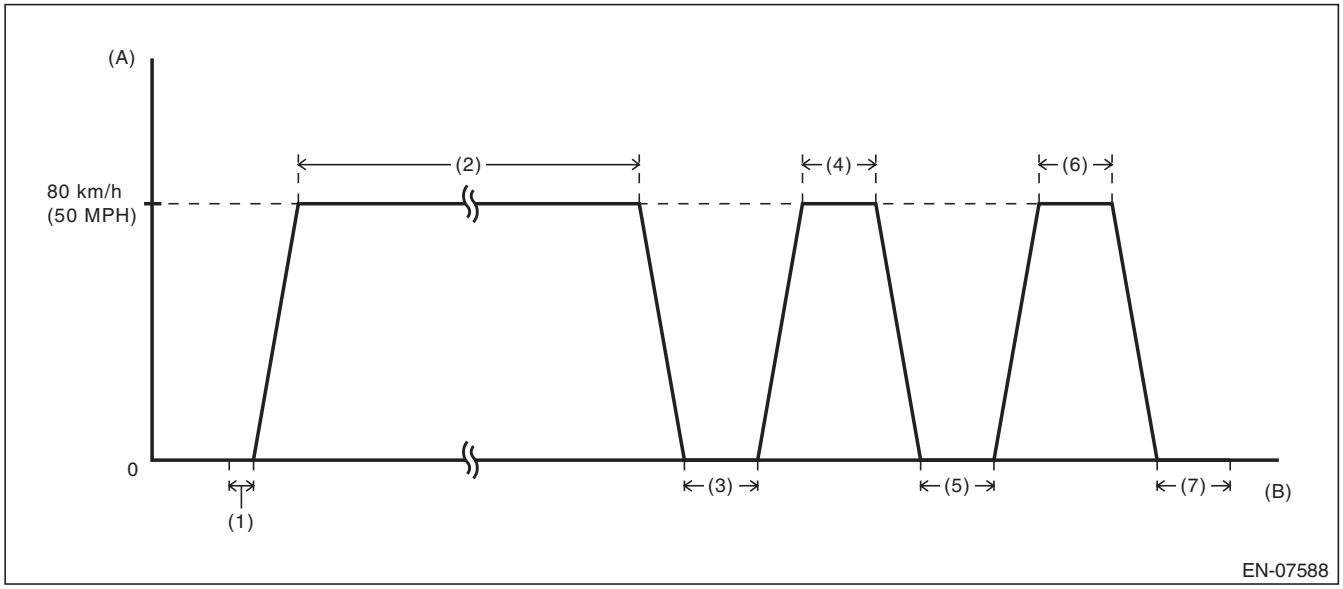

(A) Vehicle speed
(B) Elapsed time

(1) Idle the engine for 10 seconds or more after engine start.
(2) Drive for 8 minutes or more at a constant speed of 80 km/h (50 MPH) or more.
(3) Stop the vehicle and idle for 30 seconds or more.
(4) Drive for 30 seconds or more at a constant speed of 80 km/h (50 MPH) or more.
(5) Stop the vehicle and idle for 30 seconds or more.
(6) Drive for 30 seconds or more at a constant speed of 80 km/h (50 MPH) or more.
(7) Stop the vehicle and idle for 30 seconds.

NOTE:
- There is no given transition time between idling and cruising.
- Driving at constant speed only on a downhill causes smaller engine load and may result in failure to obtain a right diagnostic result.
- When the engine stops while performing drive cycle F, perform it again from the state of procedure 1).

GETFreeMANUALS.org

8. DRIVE CYCLE H

DTC	Item	Condition
*P050A	Cold Start Idle Air Control System Performance	—
*P050B	Cold Start Ignition Timing Performance	—

Diagnostic procedure:
1) Perform the Clear Memory Mode. <Ref. to EN(H4SO)(diag)-51, Clear Memory Mode.>
2) With the ignition switch ON (engine OFF), read the engine coolant temperature, intake air temperature and fuel temperature. <Ref. to EN(H4SO)(diag)-33, READ CURRENT DATA FOR ENGINE (NORMAL MODE), OPERATION, Subaru Select Monitor.>
3) If the values from step 2) satisfy the following two conditions, idle the engine for one minute.

Condition:
|Engine coolant temperature — Intake air temperature| ≤ 5°C (9°F)
|Engine coolant temperature — Fuel temperature| ≤ 2°C (3.6°F)

NOTE:
- If the conditions are not satisfied, turn the ignition switch to OFF and wait until the parameters are satisfied.
- For CVT models, hold the select lever to “P” range or “N” range at idling, and for MT models, the shift lever in the neutral position at idling.

9. DRIVE CYCLE J

DTC	Item	Condition
P2610	ECM/PCM Internal Engine Off Timer Performance	—

1) Idle the engine for 15 minutes or more.
2) Turn the ignition switch to OFF.
3) After 6 hours passed from the start of step 2), read the temporary code using the Subaru Select Monitor. <Ref. to EN(H4SO)(diag)-39, OPERATION, Read Diagnostic Trouble Code (DTC).>

GETmeMANUALS.org

13. Clear Memory Mode

A: OPERATION

1. SUBARU SELECT MONITOR

NOTE:
- Initial diagnosis of electronic throttle control is performed after memory clearance. Wait for 10 seconds or more after turning the ignition switch to ON, and then start the engine.
- For detailed operation procedures, refer to “PC application help for Subaru Select Monitor”.

2. GENERAL SCAN TOOL

For clear memory procedures using the general scan tool, refer to “General Scan Tool Instruction Manual”.

NOTE:
Initial diagnosis of electronic throttle control is performed after memory clearance. Wait for 10 seconds or more after turning the ignition switch to ON, and then start the engine.

GETmeMANUALS.org

14. System Operation Check Mode

A: OPERATION

CAUTION:
After executing the system operation check mode, execute the Clear Memory Mode. <Ref. to EN(H4SO)(diag)-51, OPERATION, Clear Memory Mode.>

NOTE:
For detailed operation procedures, refer to “PC application help for Subaru Select Monitor”.

GETthemANSWERS.org

15. Malfunction Indicator Light

A: PROCEDURE

1. Activation of malfunction indicator light. <Ref. to EN(H4SO)(diag)-53, ACTIVATION OF MALFUNCTION INDICATOR LIGHT, Malfunction Indicator Light.>
↓
2. Malfunction indicator light does not come on. <Ref. to EN(H4SO)(diag)-55, MALFUNCTION INDICATOR LIGHT DOES NOT COME ON, Malfunction Indicator Light.>
↓
3. Malfunction indicator light does not go off <Ref. to EN(H4SO)(diag)-57, MALFUNCTION INDICATOR LIGHT DOES NOT GO OFF, Malfunction Indicator Light.>
↓
4. Malfunction indicator light does not blink <Ref. to EN(H4SO)(diag)-59, MALFUNCTION INDICATOR LIGHT DOES NOT BLINK, Malfunction Indicator Light.>
↓
5. Malfunction indicator light remains blinking <Ref. to EN(H4SO)(diag)-61, MALFUNCTION INDICATOR LIGHT REMAINS BLINKING, Malfunction Indicator Light.>

B: ACTIVATION OF MALFUNCTION INDICATOR LIGHT

1) When the ignition switch is turned to ON (engine OFF), the malfunction indicator light (A) in the combination meter illuminates.

NOTE:
If the malfunction indicator light does not illuminate, perform diagnostics of the malfunction indicator light circuit or the combination meter circuit. <Ref. to EN(H4SO)(diag)-55, MALFUNCTION INDICATOR LIGHT DOES NOT COME ON, Malfunction Indicator Light.>

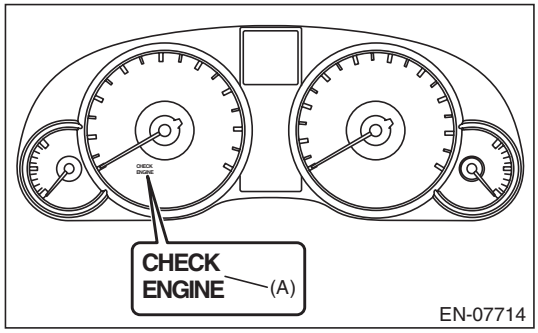

2) After starting the engine, the malfunction indicator light goes out. If it does not go off, any of the engine and emission control system has malfunction.

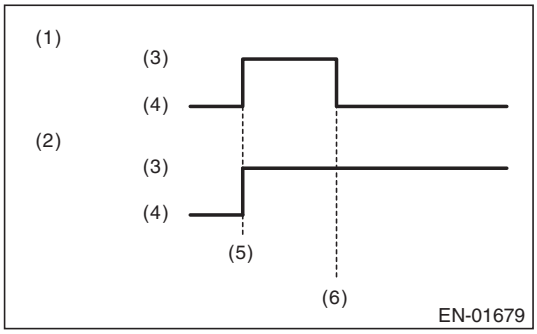

(1) No faulty
(2) Trouble occurs
(3) ON
(4) OFF
(5) Ignition switch ON
(6) Engine start

GETmeMANUALS.org

3) If the diagnostic system detects a misfire which could damage the catalyst, the malfunction indicator light will blink at a cycle of 1 Hz.

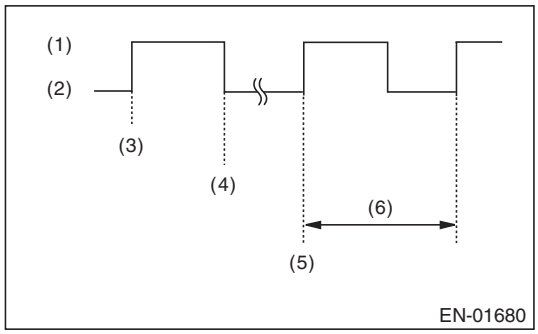

(1) ON
(2) OFF
(3) Ignition switch ON
(4) Engine start
(5) Misfire start
(6) 1 second

4) Install the delivery (test) mode fuse (A) with ignition switch to OFF.

CAUTION:
Do not use any fuses that are installed on the vehicle.

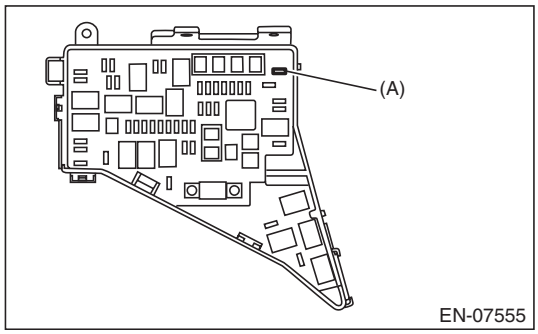

(1) When the ignition switch is turned to ON (engine OFF), the malfunction indicator light illuminates.
(2) After the engine starts, malfunction indicator light blinks in a cycle of 0.5 Hz. (During diagnosis)

(3) Malfunction indicator light blinks at a cycle of 3 Hz after diagnosis if there is no trouble. Malfunction indicator light illuminates if faulty.

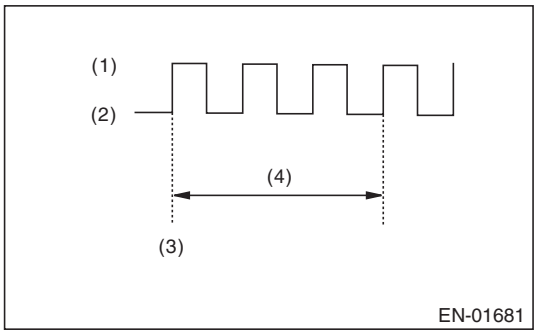

(1) ON
(2) OFF
(3) Ignition switch ON
(4) 1 second

GETthemANSWERS.org

C: MALFUNCTION INDICATOR LIGHT DOES NOT COME ON

TROUBLE SYMPTOM:

When the ignition switch is turned to ON (engine OFF), malfunction indicator light does not illuminate.

WIRING DIAGRAM:

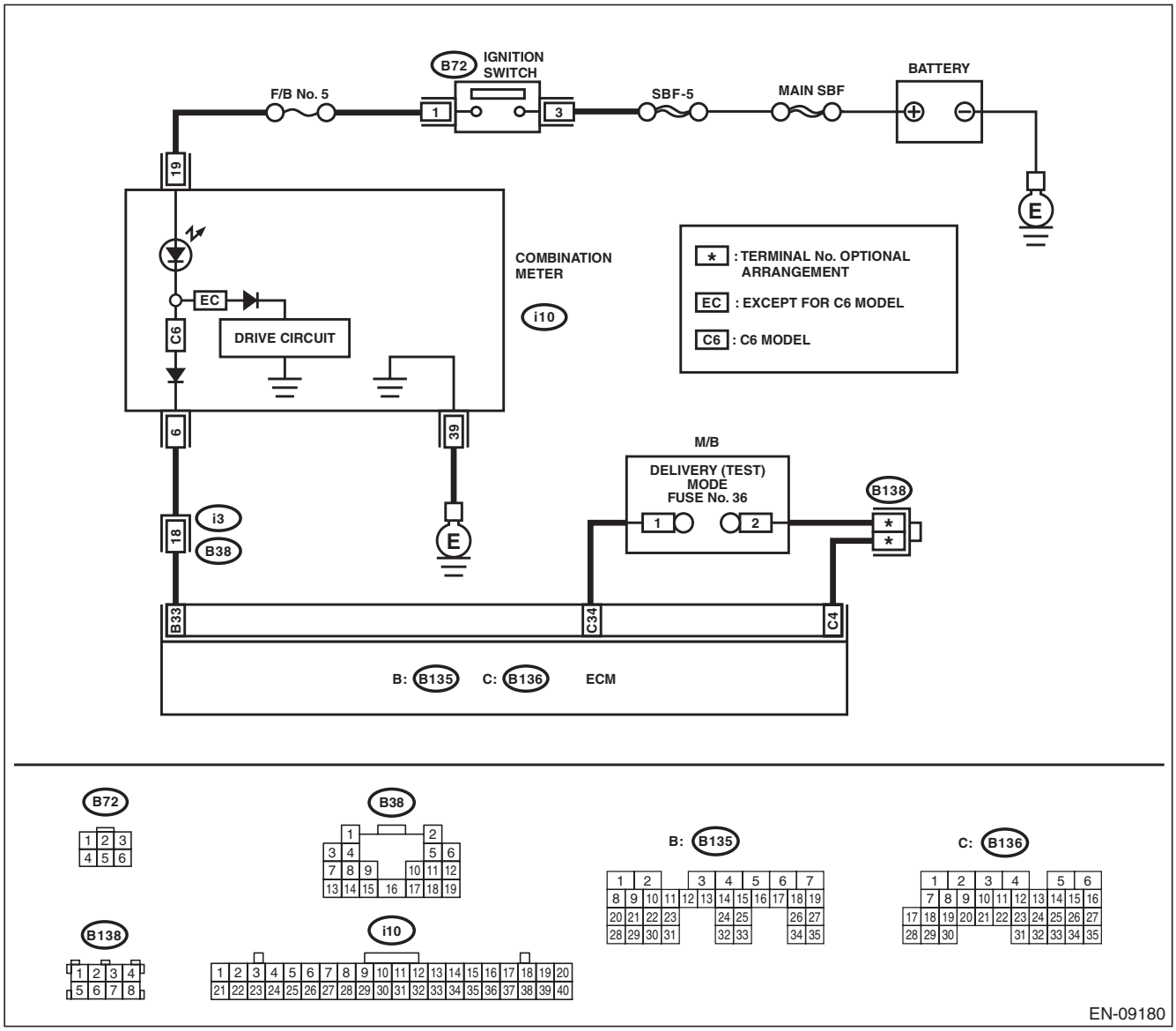

Step		Check	Yes	No
1	**CHECK VEHICLE SPECIFICATION.**	Is the vehicle except for C6 model?	Go to step **2**.	Go to step **3**.
2	**CHECK DTC.**	Is DTC of LAN system displayed? <Ref. to LAN(diag)-10, OPERATION, Read Diagnostic Trouble Code (DTC).>	Check the appropriate DTC using the “List of Diagnostic Trouble Code (DTC)”. <Ref. to LAN(diag)-32, List of Diagnostic Trouble Code (DTC).>	Replace the meter case assembly of combination meter. <Ref. to IDI-21, Combination Meter.>

GETmeMANUALS.org

	Step	Check	Yes	No
3	**CHECK OUTPUT SIGNAL OF ECM.** 1) Turn the ignition switch to OFF. 2) Disconnect the connector from ECM. 3) Turn the ignition switch to ON. 4) Measure the voltage between ECM connector and chassis ground. ***Connector & terminal*** ***(B135) No. 33 (+) — Chassis ground (–):***	Is the voltage 10 V or more?	Go to step **7**.	Go to step **4**.
4	**CHECK HARNESS BETWEEN COMBINATION METER AND IGNITION SWITCH CONNECTOR.** 1) Turn the ignition switch to OFF. 2) Remove the combination meter. <Ref. to IDI-21, Combination Meter.> 3) Turn the ignition switch to ON. 4) Measure the voltage between combination meter connector and chassis ground. ***Connector & terminal*** ***(i10) No. 19 (+) — Chassis ground (–):***	Is the voltage 10 V or more?	Go to step **5**.	Check the following item and repair if necessary. NOTE: • Blown out of fuse • Open circuit or short circuit to ground in harness of power supply circuit
5	**CHECK HARNESS BETWEEN ECM AND COMBINATION METER CONNECTOR.** Measure the resistance of harness between ECM and combination meter connector. ***Connector & terminal*** ***(B135) No. 33 — (i10) No. 6:***	Is the resistance less than 1 Ω?	Go to step **6**.	Repair the harness and connector. NOTE: In this case, repair the following item: • Open circuit in harness between ECM and combination meter connector • Poor contact of coupling connector
6	**CHECK FOR POOR CONTACT.** Check for poor contact of combination meter connector.	Is there poor contact of combination meter connector?	Repair the poor contact of combination meter connector.	Replace the meter case assembly of combination meter. <Ref. to IDI-21, Combination Meter.>
7	**CHECK ECM CONNECTOR.** Check the connection of ECM connector.	Is the ECM connector correctly connected?	Go to step **8**.	Connect the ECM connector correctly.
8	**CHECK FOR POOR CONTACT.** Check for poor connection by shaking or pulling ECM connector and harness.	Does the malfunction indicator light illuminate?	Repair the poor contact of ECM connector.	Replace the ECM. <Ref. to FU(H4SO)-46, Engine Control Module (ECM).>

GETFreeMANUALS.org

D: MALFUNCTION INDICATOR LIGHT DOES NOT GO OFF

TROUBLE SYMPTOM:

Although malfunction indicator light comes on when the engine runs, DTC is not shown on the Subaru Select Monitor or general scan tool display.

WIRING DIAGRAM:

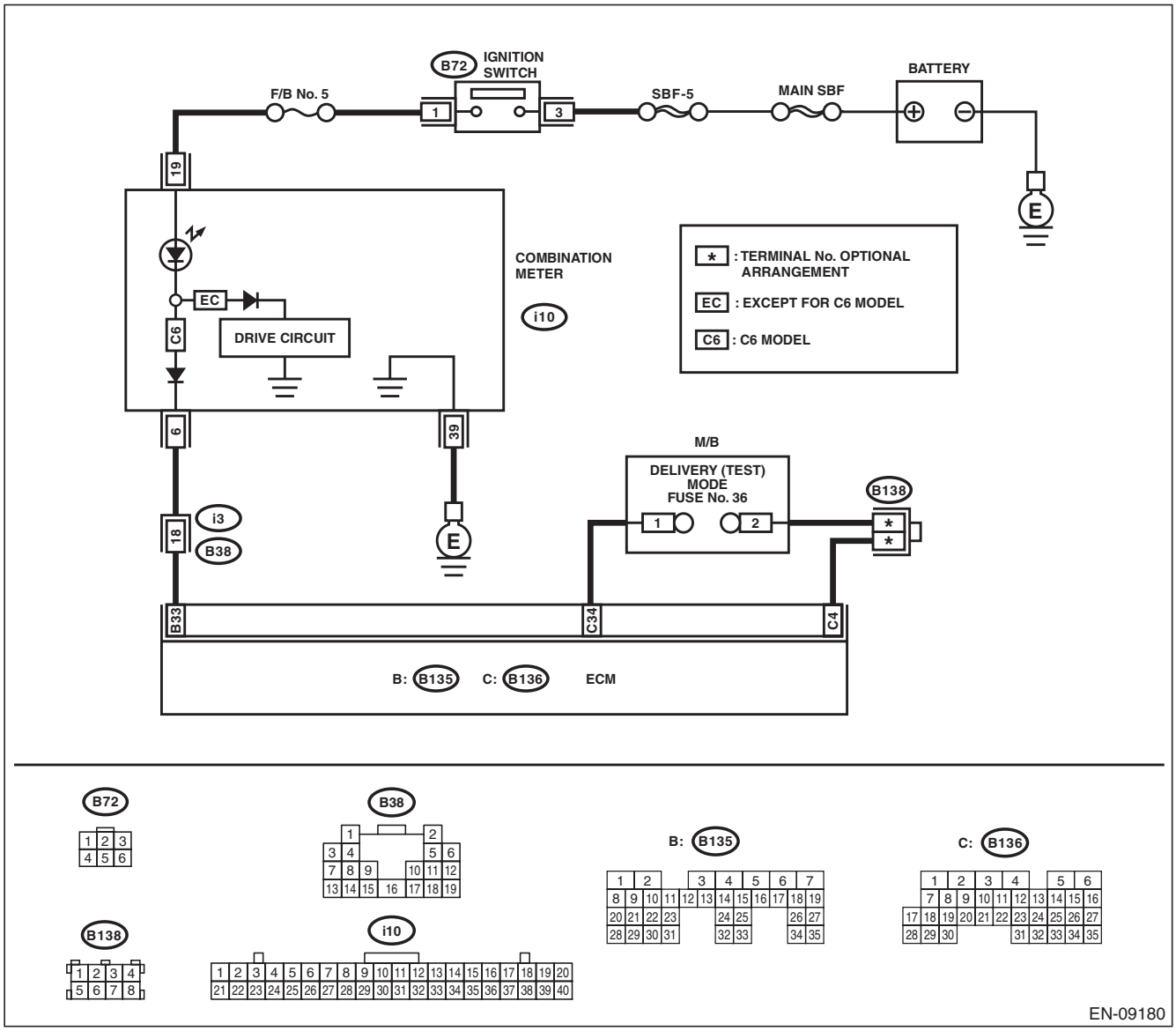

Step	Check	Yes	No
1 CHECK DTC.	Is DTC of engine or LAN system displayed? <Ref. to EN(H4SO)(diag)-39, OPERATION, Read Diagnostic Trouble Code (DTC).>	Check the appropriate DTC using the “List of Diagnostic Trouble Code (DTC)”. <Ref. to EN(H4SO)(diag)-78, List of Diagnostic Trouble Code (DTC).> <Ref. to LAN(diag)-32, List of Diagnostic Trouble Code (DTC).>	Go to step **2**.

GETmeMANUALS.org

Step		Check	Yes	No
2	**CHECK VEHICLE SPECIFICATION.**	Is the vehicle except for C6 model?	Go to step **3**.	Go to step **4**.
3	**CHECK COMBINATION METER.** Perform the self-diagnosis for combination meter system. <Ref. to IDI-6, SELF-DIAGNOSIS DISPLAY MODE, OPERATION, Combination Meter System.>	Does the malfunction indicator light illuminate and go off normally?	Replace the ECM. <Ref. to FU(H4SO)-46, Engine Control Module (ECM).>	Replace the meter case assembly of combination meter. <Ref. to IDI-21, Combination Meter.>
4	**CHECK HARNESS BETWEEN ECM AND COMBINATION METER CONNECTOR.** 1) Turn the ignition switch to OFF. 2) Disconnect the connector from ECM. 3) Turn the ignition switch to ON.	Does the malfunction indicator light illuminate?	Go to step **5**.	Replace the ECM. <Ref. to FU(H4SO)-46, Engine Control Module (ECM).>
5	**CHECK HARNESS BETWEEN ECM AND COMBINATION METER CONNECTOR.** 1) Turn the ignition switch to OFF. 2) Remove the combination meter. <Ref. to IDI-21, Combination Meter.> 3) Measure the resistance between ECM and chassis ground. ***Connector & terminal*** ***(B135) No. 33 — Chassis ground:***	Is the resistance 1 MΩ or more?	Replace the meter case assembly of combination meter. <Ref. to IDI-21, Combination Meter.>	Repair the ground short circuit of harness between ECM and combination meter connector.

GETmeMANUALS.org

E: MALFUNCTION INDICATOR LIGHT DOES NOT BLINK

DIAGNOSIS:

- The malfunction indicator light circuit is open or shorted.
- The delivery (test) mode fuse circuit is open.

TROUBLE SYMPTOM:

Malfunction indicator light does not blink during Inspection Mode.

WIRING DIAGRAM:

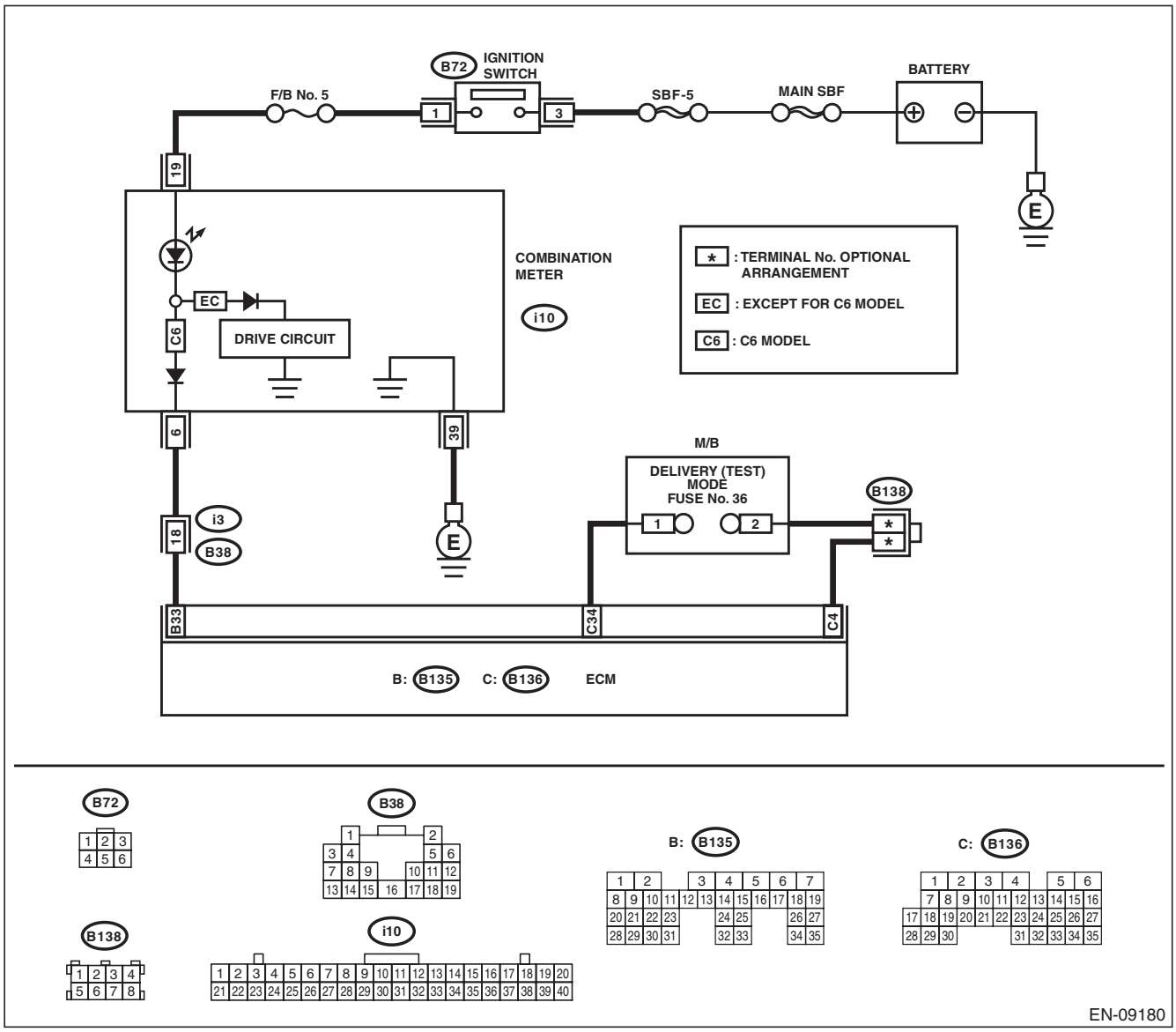

GETmeMANUALS.org

	Step	Check	Yes	No
1	**CHECK STATUS OF MALFUNCTION INDICATOR LIGHT.** 1) Turn the ignition switch to OFF. 2) Check the delivery (test) mode fuse is removed. 3) Turn the ignition switch to ON. (engine OFF)	Does the malfunction indicator light illuminate?	Go to step **2**.	Repair the malfunction indicator light circuit. <Ref. to EN(H4SO)(diag)-55, MALFUNCTION INDICATOR LIGHT DOES NOT COME ON, Malfunction Indicator Light.>
2	**CHECK VEHICLE SPECIFICATION.**	Is the vehicle except for C6 model?	Go to step **4**.	Go to step **3**.
3	**CHECK HARNESS BETWEEN ECM AND COMBINATION METER CONNECTOR.** 1) Turn the ignition switch to OFF. 2) Disconnect the connector from ECM. 3) Turn the ignition switch to ON.	Does the malfunction indicator light illuminate?	Repair the ground short circuit of harness between ECM and combination meter connector.	Go to step **4**.
4	**CHECK HARNESS BETWEEN ECM AND DELIVERY (TEST) MODE FUSE.** 1) Turn the ignition switch to OFF. 2) Disconnect the connector from ECM. 3) Install the delivery (test) mode fuse. **CAUTION:** **Do not use any fuses that are installed on the vehicle.** 4) Measure the resistance of harness between ECM connectors. ***Connector & terminal*** ***(B136) No. 34 — (B136) No. 4:***	Is the resistance less than 1 Ω?	Go to step **5**.	Repair the harness and connector. NOTE: In this case, repair the following item: • Open circuit of harness between ECM and delivery (test) mode fuse • Poor contact of joint connector
5	**CHECK FOR POOR CONTACT.** Check for poor contact of ECM connector.	Is there poor contact of ECM connector?	Repair the poor contact of ECM connector.	Replace the ECM. <Ref. to FU(H4SO)-46, Engine Control Module (ECM).>

GETmeMANUALS.org

F: MALFUNCTION INDICATOR LIGHT REMAINS BLINKING

DIAGNOSIS:
The delivery (test) mode fuse circuit is short-circuited to ground.
TROUBLE SYMPTOM:
Malfunction indicator light blinks when delivery (test) mode fuse is not connected.
WIRING DIAGRAM:

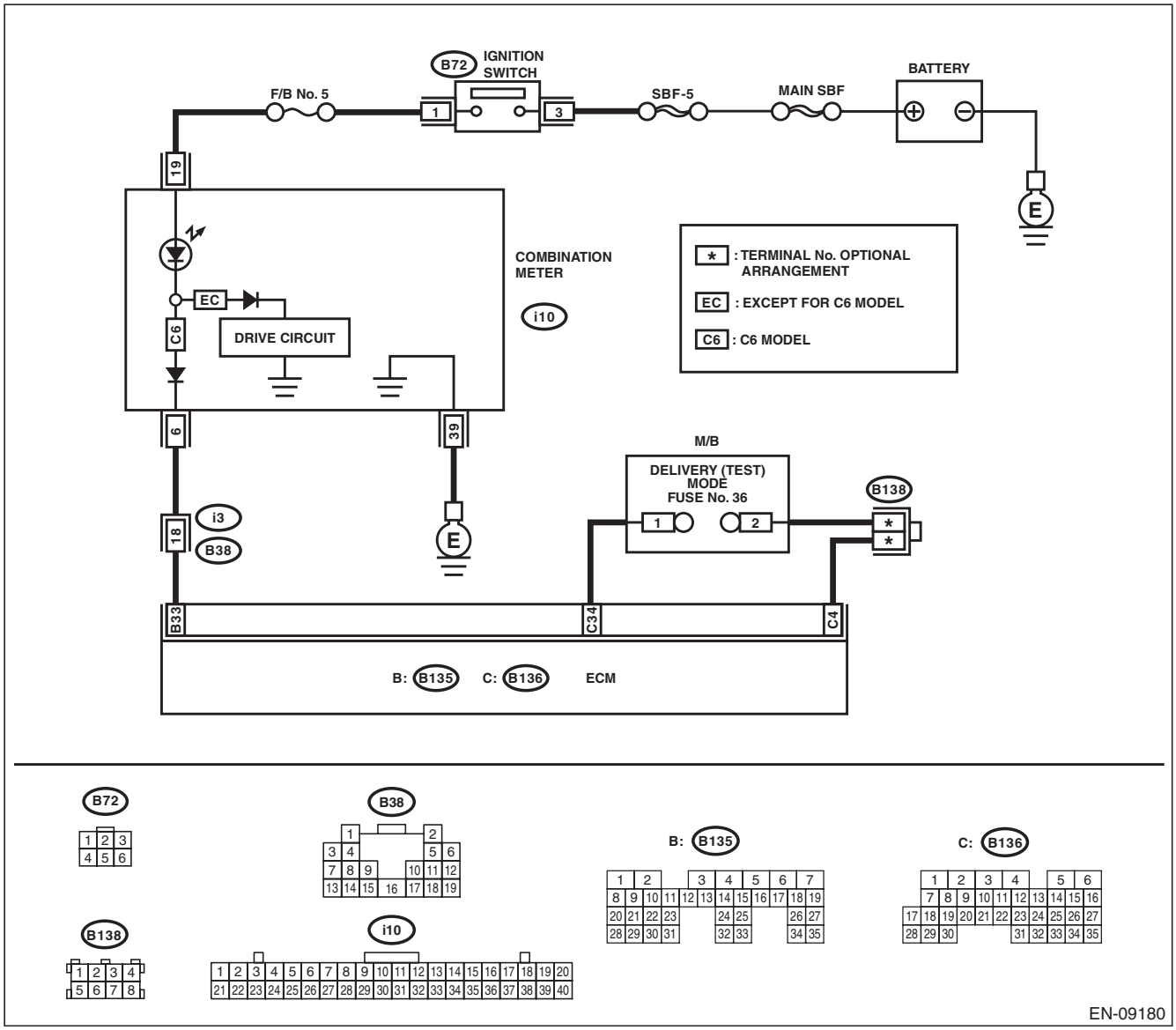

Step	Check	Yes	No
1 **CHECK DELIVERY (TEST) MODE FUSE.** 1) Check the delivery (test) mode fuse is removed. 2) Turn the ignition switch to ON.	Does the malfunction indicator light blink?	Go to step **2**.	System is normal. NOTE: Malfunction indicator light blinks at a cycle of 3 Hz when delivery (test) mode fuse is attached.

GETfreeMANUALS.org

Step		Check	Yes	No
2	**CHECK HARNESS BETWEEN ECM AND DELIVERY (TEST) MODE FUSE.** 1) Turn the ignition switch to OFF. 2) Disconnect the connector from ECM. 3) Measure the resistance between ECM and chassis ground. ***Connector & terminal*** ***(B136) No. 34 — Chassis ground:***	Is the resistance 1 MΩ or more?	Replace the ECM. <Ref. to FU(H4SO)-46, Engine Control Module (ECM).>	Repair the short circuit to ground in harness between ECM and delivery (test) mode fuse.

GETmeMANUALS.org

16. Diagnostics for Engine Starting Failure

A: PROCEDURE

1. Check of the fuel amount
↓
2. Inspection of starter motor circuit <Ref. to EN(H4SO)(diag)-64, STARTER MOTOR CIRCUIT, Diagnostics for Engine Starting Failure.>
↓
3. Inspection of ECM power supply and ground line <Ref. to EN(H4SO)(diag)-68, CHECK POWER SUPPLY AND GROUND LINE OF ENGINE CONTROL MODULE (ECM), Diagnostics for Engine Starting Failure.>
↓
4. Inspection of ignition control system <Ref. to EN(H4SO)(diag)-70, IGNITION CONTROL SYSTEM, Diagnostics for Engine Starting Failure.>
↓
5. Inspection of fuel pump circuit <Ref. to EN(H4SO)(diag)-72, FUEL PUMP CIRCUIT, Diagnostics for Engine Starting Failure.>
↓
6. Inspection of fuel injector circuit <Ref. to EN(H4SO)(diag)-74, FUEL INJECTOR CIRCUIT, Diagnostics for Engine Starting Failure.>

GETmeMANUALS.org

B: STARTER MOTOR CIRCUIT

CAUTION:
After servicing or replacing faulty parts, perform Clear Memory Mode <Ref. to EN(H4SO)(diag)-51, Clear Memory Mode.>, and Inspection Mode <Ref. to EN(H4SO)(diag)-40, Inspection Mode.>.
WIRING DIAGRAM:

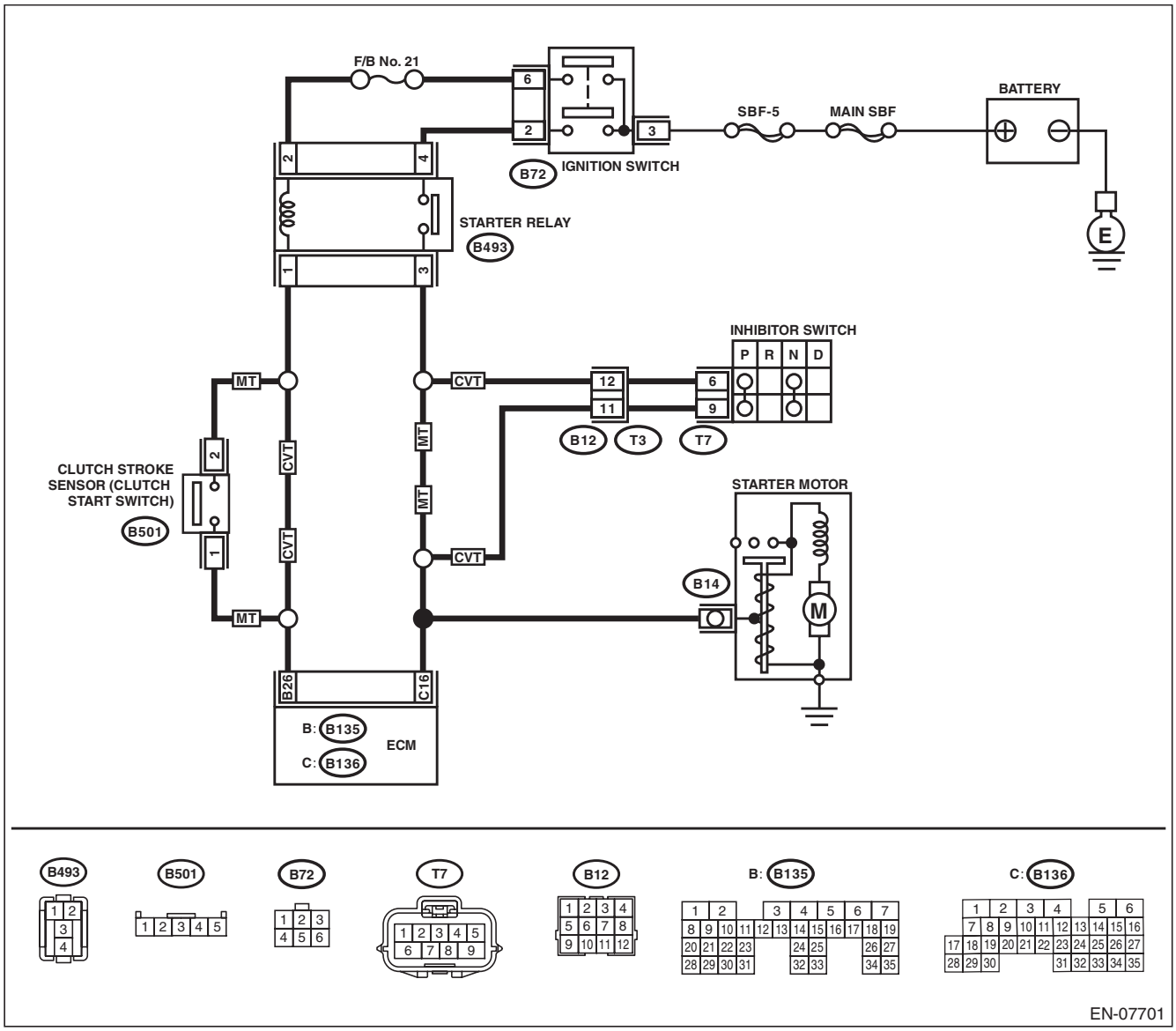

Step		Check	Yes	No
1	**CHECK BATTERY.** Check the battery voltage.	Is the voltage 12 V or more?	Go to step **2**.	Charge or replace the battery.
2	**CHECK OPERATION OF STARTER MOTOR.**	Does the starter motor operate?	Go to step **3**.	Go to step **4**.

GETfreeMANUALS.org

Step		Check	Yes	No
3	**CHECK DTC.**	Is DTC displayed? <Ref. to EN(H4SO)(diag)-39, OPERATION, Read Diagnostic Trouble Code (DTC).>	Check the appropriate DTC using the “List of Diagnostic Trouble Code (DTC)”. <Ref. to EN(H4SO)(diag)-78, List of Diagnostic Trouble Code (DTC).>	The circuit has returned to a normal condition at this time. Reproduce the failure, and then perform the diagnosis again. NOTE: In this case, temporary poor contact of connector, temporary open or short circuit of harness may be the cause.
4	**CHECK INPUT SIGNAL FOR STARTER MOTOR.** 1) Turn the ignition switch to OFF. 2) Disconnect the connector from starter motor. 3) Turn the ignition switch to START. 4) Measure the voltage between the starter motor connector and the engine ground. ***Connector & terminal*** ***(B14) No. 1 (+) — Engine ground (–):*** NOTE: For CVT model, place the select lever in “P” range or “N” range. For MT model, depress the clutch pedal.	Is the voltage 10 V or more?	Check the starter motor. <Ref. to SC(H4SO)-9, Starter.>	Go to step **5**.
5	**CHECK HARNESS BETWEEN BATTERY AND IGNITION SWITCH CONNECTOR.** 1) Turn the ignition switch to OFF. 2) Disconnect the connector from ignition switch. 3) Measure the voltage between ignition switch connector and chassis ground. ***Connector & terminal*** ***(B72) No. 3 (+) — Chassis ground (–):***	Is the voltage 10 V or more?	Go to step **6**.	Repair the power supply circuit.
6	**CHECK IGNITION SWITCH.** Measure the resistance between ignition switch terminals after turning the ignition switch to START position. ***Terminals*** ***No. 3 — No. 2:*** ***No. 3 — No. 6:***	Is the resistance less than 1 Ω?	Go to step **7**.	Replace the ignition switch. <Ref. to SL-58, REPLACEMENT, Ignition Key Lock.>
7	**CHECK INPUT VOLTAGE OF STARTER RELAY.** 1) Turn the ignition switch to OFF. 2) Remove the starter relay. 3) Connect the connector to ignition switch. 4) Measure the input voltage between starter relay connector and chassis ground after turning the ignition switch to START position. ***Connector & terminal*** ***(B493) No. 2 (+) — Chassis ground (–):*** ***(B493) No. 4 (+) — Chassis ground (–):***	Is the voltage 10 V or more?	Go to step **8**.	Repair open or short circuit to ground in harness between starter relay and ignition switch connector.

GETmeMANUALS.org

	Step	Check	Yes	No
8	**CHECK STARTER RELAY.** 1) Connect the battery to starter relay terminals No. 1 and No. 2. 2) Measure the resistance between starter relay terminals. ***Terminals*** ***No. 3 — No. 4:***	Is the resistance less than 1 Ω?	Go to step **9**.	Replace the starter relay. <Ref. to EN(H4SO)(diag)-9, Electrical Component Location.>
9	**CHECK TRANSMISSION TYPE.**	Is the transmission type CVT?	Go to step **10**.	Go to step **14**.
10	**CHECK HARNESS BETWEEN ECM AND STARTER RELAY CONNECTOR.** 1) Turn the ignition switch to OFF. 2) Disconnect the connectors from ECM. 3) Measure the resistance of harness connector between ECM and starter relay. ***Connector & terminal*** ***(B493) No. 1 — (B135) No. 26:***	Is the resistance less than 1 Ω?	Go to step **11**.	Repair the open circuit of harness between ECM and starter relay connector.
11	**CHECK HARNESS BETWEEN STARTER RELAY AND INHIBITOR SWITCH CONNECTOR.** 1) Disconnect the connector from inhibitor switch. 2) Measure the resistance of harness between starter relay connector and inhibitor relay connector. ***Connector & terminal*** ***(B493) No. 3 — (T7) No. 6:***	Is the resistance less than 1 Ω?	Go to step **12**.	Repair the harness and connector. NOTE: In this case, repair the following item: • Open circuit in harness between starter relay connector and inhibitor switch connector • Poor contact of coupling connector
12	**CHECK HARNESS BETWEEN INHIBITOR SWITCH AND STARTER MOTOR.** Measure the resistance of harness between the inhibitor switch and starter motor. ***Connector & terminal*** ***(T7) No. 9 — (B14) No. 1:***	Is the resistance less than 1 Ω?	Go to step **13**.	Repair the harness and connector. NOTE: In this case, repair the following item: • Open circuit in harness between inhibitor switch connector and starter motor • Poor contact of coupling connector
13	**CHECK INHIBITOR SWITCH.** 1) Place the select lever in “P” range or “N” range. 2) Measure the resistance between inhibitor switch terminals. ***Terminals*** ***No. 6 — No. 9:***	Is the resistance less than 1 Ω?	Check the ECM power supply and ground line. <Ref. to EN(H4SO)(diag)-68, CHECK POWER SUPPLY AND GROUND LINE OF ENGINE CONTROL MODULE (ECM), Diagnostics for Engine Starting Failure.>	Replace the inhibitor switch. <Ref. to CVT-95, Inhibitor Switch.>

GETmeMANUALS.org

Step		Check	Yes	No
14	**CHECK HARNESS BETWEEN STARTER RELAY AND CLUTCH STROKE SENSOR CONNECTOR.** 1) Turn the ignition switch to OFF. 2) Disconnect the connector from clutch stroke sensor. 3) Measure the resistance of harness between starter relay connector and clutch stroke sensor connector. ***Connector & terminal*** ***(B493) No. 1 — (B501) No. 2:***	Is the voltage 10 V or more?	Go to step **15**.	Repair the open circuit in harness between starter relay connector and clutch stroke sensor connector.
15	**CHECK HARNESS BETWEEN ECM AND CLUTCH STROKE SENSOR CONNECTOR.** 1) Disconnect the connectors from ECM. 2) Measure the resistance of harness between ECM and clutch stroke sensor connector. ***Connector & terminal*** ***(B135) No. 26 — (B501) No. 1:***	Is the resistance less than 1 Ω?	Go to step **16**.	Repair the open circuit of harness between ECM and clutch stroke sensor connector.
16	**CHECK CLUTCH STROKE SENSOR.** Measure the resistance between clutch stroke sensor terminals while depressing the clutch. ***Terminals*** ***No. 1 — No. 2:***	Is the resistance less than 1 Ω?	Go to step **17**.	Replace the clutch stroke sensor. <Ref. to PB(diag)-10, Electrical Component Location.>
17	**CHECK HARNESS BETWEEN STARTER RELAY AND STARTER MOTOR.** Measure the resistance of harness between starter relay connector and starter motor. ***Connector & terminal*** ***(B493) No. 3 — (B14) No. 1:***	Is the resistance less than 1 Ω?	Check the ECM power supply and ground line. <Ref. to EN(H4SO)(diag)-68, CHECK POWER SUPPLY AND GROUND LINE OF ENGINE CONTROL MODULE (ECM), Diagnostics for Engine Starting Failure.>	Repair the open circuit of the harness between starter relay connector and starter motor.

GETmeMANUALS.org

C: CHECK POWER SUPPLY AND GROUND LINE OF ENGINE CONTROL MODULE (ECM)

CAUTION:
After servicing or replacing faulty parts, perform Clear Memory Mode <Ref. to EN(H4SO)(diag)-51, OPERATION, Clear Memory Mode.>, and Inspection Mode <Ref. to EN(H4SO)(diag)-40, PROCEDURE, Inspection Mode.>.
WIRING DIAGRAM:

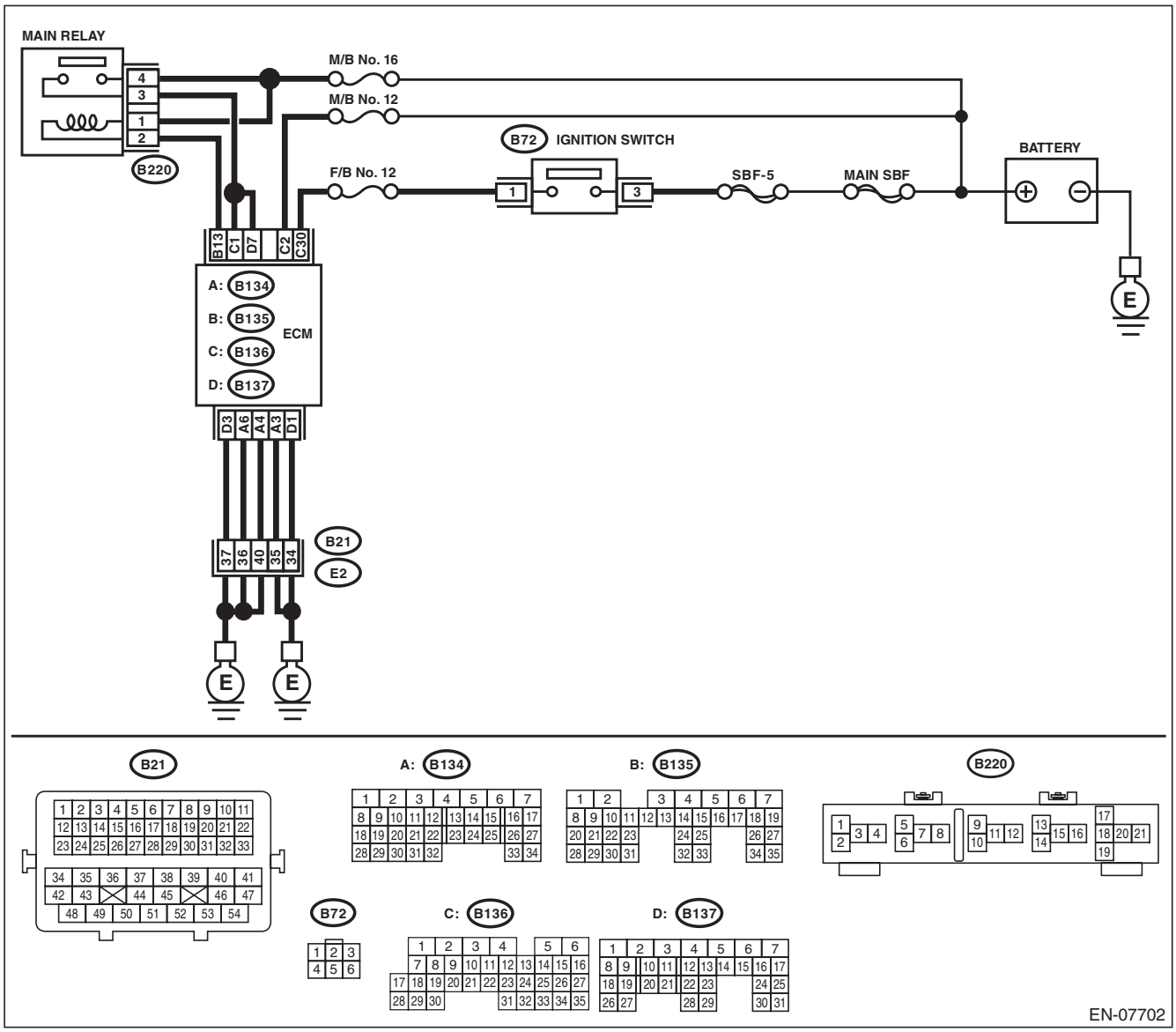

Step		Check	Yes	No
1	**CHECK MAIN RELAY.** 1) Turn the ignition switch to OFF. 2) Remove the main relay. 3) Connect the battery to main relay terminals No. 1 and No. 2. 4) Measure the resistance between main relay terminals. ***Terminals*** ***No. 3 — No. 4:***	Is the resistance less than 1 Ω?	Go to step **2**.	Replace the main relay. <Ref. to FU(H4SO)-47, Main Relay.>

GETthemANSWERS.org

	Step	Check	Yes	No
2	**CHECK GROUND CIRCUIT FOR ECM.** 1) Disconnect the connectors from ECM. 2) Measure the resistance of harness between ECM and chassis ground. ***Connector & terminal*** ***(B134) No. 3 — Chassis ground:*** ***(B134) No. 4 — Chassis ground:*** ***(B134) No. 6 — Chassis ground:*** ***(B137) No. 1 — Chassis ground:*** ***(B137) No. 3 — Chassis ground:***	Is the resistance less than 5 Ω?	Go to step **3**.	Repair the harness and connector. NOTE: In this case, repair the following item: • Open circuit in harness between ECM and engine ground terminal • Poor contact of coupling connector
3	**CHECK INPUT VOLTAGE OF ECM.** 1) Turn the ignition switch to ON. 2) Measure the voltage between ECM and chassis ground. ***Connector & terminal*** ***(B136) No. 2 (+) — Chassis ground (–):*** ***(B136) No. 30 (+) — Chassis ground (–):***	Is the voltage 10 V or more?	Go to step **4**.	Repair the open or ground short circuit of harness of power supply circuit.
4	**CHECK INPUT VOLTAGE OF MAIN RELAY.** Measure the voltage between main relay connector and chassis ground. ***Connector & terminal*** ***(B220) No. 1 (+) — Chassis ground (–):*** ***(B220) No. 4 (+) — Chassis ground (–):***	Is the voltage 10 V or more?	Go to step **5**.	Repair the open or ground short circuit of harness of power supply circuit.
5	**CHECK INPUT VOLTAGE OF ECM.** 1) Turn the ignition switch to OFF. 2) Install the main relay. 3) Turn the ignition switch to ON. 4) Measure the voltage between ECM and chassis ground. ***Connector & terminal*** ***(B135) No. 13 (+) — Chassis ground (–):***	Is the voltage 10 V or more?	Go to step **6**.	Repair the open circuit in harness between ECM and main relay connector.
6	**CHECK INPUT VOLTAGE OF ECM.** 1) Turn the ignition switch to OFF. 2) Connect the connector to ECM. 3) Turn the ignition switch to ON. 4) Measure the voltage between ECM and chassis ground. ***Connector & terminal*** ***(B136) No. 1 (+) — Chassis ground (–):*** ***(B137) No. 7 (+) — Chassis ground (–):***	Is the voltage 10 V or more?	Check ignition control system. <Ref. to EN(H4SO)(diag)-70, IGNITION CONTROL SYSTEM, Diagnostics for Engine Starting Failure.>	Repair the harness and connector. NOTE: In this case, repair the following item: • Open circuit in harness between ECM and main relay connector • Poor contact of main relay connector • Poor contact of ECM connector

GETthemANSWERS.org

D: IGNITION CONTROL SYSTEM

CAUTION:
After servicing or replacing faulty parts, perform Clear Memory Mode <Ref. to EN(H4SO)(diag)-51, Clear Memory Mode.>, and Inspection Mode <Ref. to EN(H4SO)(diag)-40, Inspection Mode.>.
WIRING DIAGRAM:

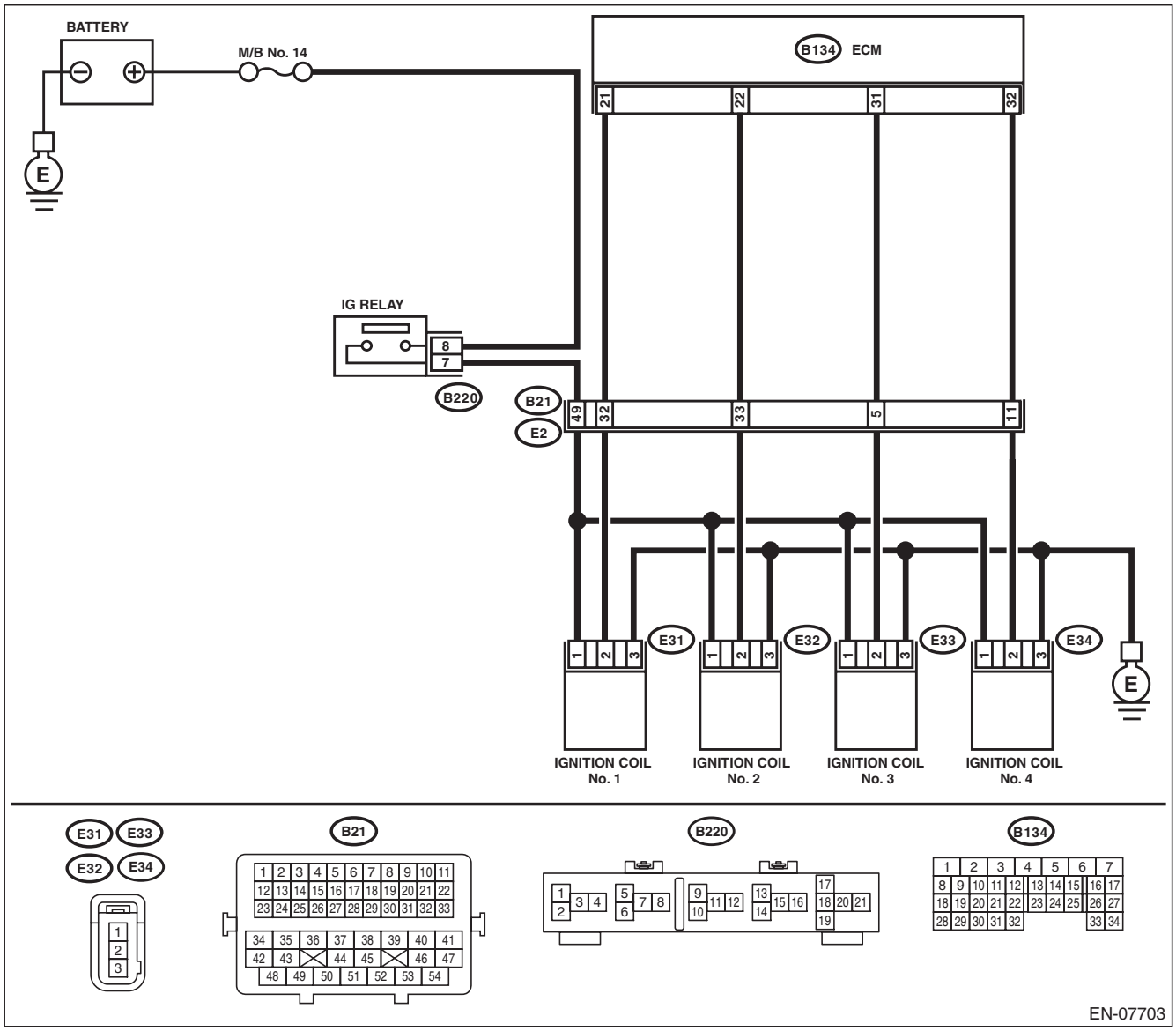

Step		Check	Yes	No
1	**CHECK SPARK PLUG CONDITION.** 1) Remove the spark plug. <Ref. to IG(H4SO)-3, REMOVAL, Spark Plug.> 2) Check the spark plug condition. <Ref. to IG(H4SO)-3, INSPECTION, Spark Plug.>	Is the spark plug condition normal?	Go to step **2**.	Replace the spark plug. <Ref. to IG(H4SO)-3, Spark Plug.>

GETmeMANUALS.org

	Step	Check	Yes	No
2	**CHECK IGNITION SYSTEM FOR SPARKS.** 1) Connect the spark plug to ignition coil. 2) Release the fuel pressure. <Ref. to FU(H4SO)-53, RELEASING OF FUEL PRESSURE, PROCEDURE, Fuel.> 3) Contact the spark plug thread portion to engine. 4) While opening the throttle valve fully, crank the engine to check that spark occurs at each cylinder.	Does spark occur at each cylinder?	Check fuel pump system. <Ref. to EN(H4SO)(diag)-72, FUEL PUMP CIRCUIT, Diagnostics for Engine Starting Failure.>	Go to step **3**.
3	**CHECK IGNITION COIL POWER SUPPLY CIRCUIT.** 1) Turn the ignition switch to OFF. 2) Disconnect the connector from ignition coil. 3) Turn the ignition switch to ON. 4) Measure the voltage between ignition coil connector and engine ground. ***Connector & terminal*** ***(E31) No. 1 (+) — Engine ground (–):*** ***(E32) No. 1 (+) — Engine ground (–):*** ***(E33) No. 1 (+) — Engine ground (–):*** ***(E34) No. 1 (+) — Engine ground (–):***	Is the voltage 10 V or more?	Go to step **4**.	Repair the harness and connector. NOTE: In this case, repair the following item: • Open circuit or short circuit to ground in harness of power supply circuit • Poor contact of coupling connector • Blown out of fuse (M/B No. 14)
4	**CHECK HARNESS OF IGNITION COIL GROUND CIRCUIT.** 1) Turn the ignition switch to OFF. 2) Measure the resistance of harness between ignition coil connector and engine ground. ***Connector & terminal*** ***(E31) No. 3 — Engine ground:*** ***(E32) No. 3 — Engine ground:*** ***(E33) No. 3 — Engine ground:*** ***(E34) No. 3 — Engine ground:***	Is the resistance less than 5 Ω?	Go to step **5**.	Repair the open circuit in harness between ignition coil connector and engine grounding terminal.
5	**CHECK HARNESS BETWEEN ECM AND IGNITION COIL CONNECTOR.** 1) Disconnect the connector from ECM. 2) Measure the resistance of harness between ECM and ignition coil connector. ***Connector & terminal*** ***(B134) No. 21 — (E31) No. 2:*** ***(B134) No. 22 — (E32) No. 2:*** ***(B134) No. 31 — (E33) No. 2:*** ***(B134) No. 32 — (E34) No. 2:***	Is the resistance less than 1 Ω?	Go to step **6**.	Repair the harness and connector. NOTE: In this case, repair the following item: • Open circuit of harness between ECM and ignition coil connector • Poor contact of coupling connector
6	**CHECK HARNESS BETWEEN ECM AND IGNITION COIL CONNECTOR.** Measure the resistance of harness between ECM and engine ground. ***Connector & terminal:*** ***(B134) No. 21 — Engine ground:*** ***(B134) No. 22 — Engine ground:*** ***(B134) No. 31 — Engine ground:*** ***(B134) No. 32 — Engine ground:***	Is the resistance 1 MΩ or more?	Go to step **7**.	Repair the ground short circuit of harness between ECM and ignition coil connector.
7	**CHECK FOR POOR CONTACT.** Check for poor contact of ECM connector.	Is there poor contact of ECM connector?	Repair the poor contact of ECM connector.	Replace the ignition coil. <Ref. to IG(H4SO)-5, Ignition Coil.>

GETmeMANUALS.org

E: FUEL PUMP CIRCUIT

CAUTION:
After servicing or replacing faulty parts, perform Clear Memory Mode <Ref. to EN(H4SO)(diag)-51, OPERATION, Clear Memory Mode.>, and Inspection Mode <Ref. to EN(H4SO)(diag)-40, PROCEDURE, Inspection Mode.>.
WIRING DIAGRAM:

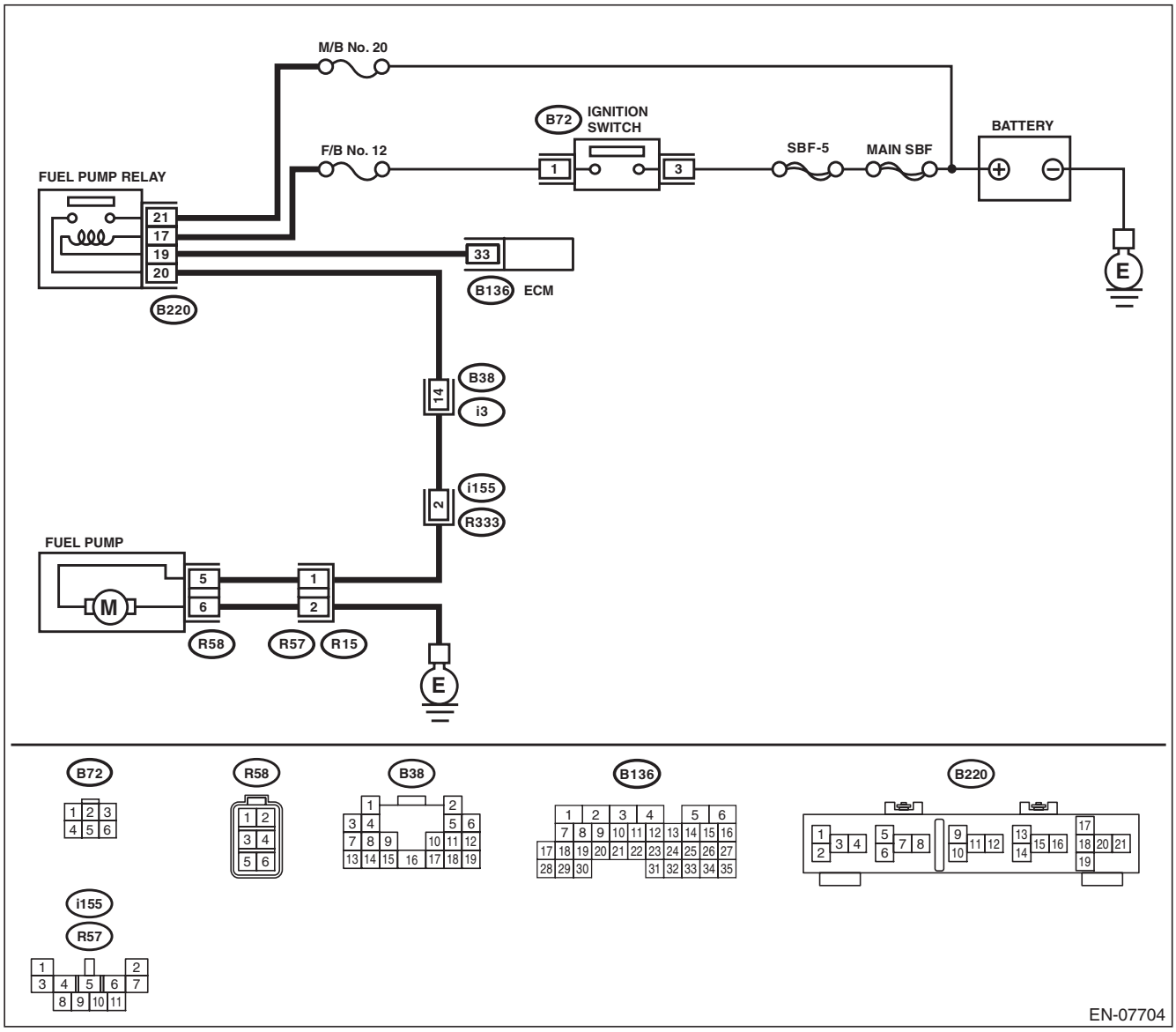

Step		Check	Yes	No
1	**CHECK OPERATING SOUND OF FUEL PUMP.** Check if the fuel pump operates for two seconds when turning the ignition switch to ON. NOTE: Fuel pump operation can be executed using the Subaru Select Monitor. For detailed procedures, refer to “SYSTEM OPERATION CHECK MODE”. <Ref. to EN(H4SO)(diag)-52, System Operation Check Mode.>	Does the fuel pump emit operating sound?	Check the fuel injector circuit. <Ref. to EN(H4SO)(diag)-74, FUEL INJECTOR CIRCUIT, Diagnostics for Engine Starting Failure.>	Go to step **2**.

GETmeMANUALS.org

	Step	Check	Yes	No
2	**CHECK GROUND CIRCUIT OF FUEL PUMP.** 1) Turn the ignition switch to OFF. 2) Remove the fuel pump access hole lid. 3) Disconnect the connector from fuel pump. 4) Measure the resistance of harness connector between fuel pump and chassis ground. ***Connector & terminal*** ***(R58) No. 6 — Chassis ground:***	Is the resistance less than 5 Ω?	Go to step **3**.	Repair the harness and connector. NOTE: In this case, repair the following item: • Open circuit in harness between fuel pump connector and chassis grounding terminal • Poor contact of coupling connector
3	**CHECK POWER SUPPLY TO FUEL PUMP.** 1) Turn the ignition switch to ON. 2) Measure the voltage between fuel pump connector and chassis ground. ***Connector & terminal*** ***(R58) No. 5 (+) — Chassis ground (–):***	Is the voltage 10 V or more?	Replace the fuel pump. <Ref. to FU(H4SO)-65, Fuel Pump.>	Go to step **4**.
4	**CHECK HARNESS BETWEEN FUEL PUMP AND FUEL PUMP RELAY CONNECTOR.** 1) Turn the ignition switch to OFF. 2) Measure the resistance of harness between fuel pump connector and fuel pump relay connector. ***Connector & terminal*** ***(R58) No. 5 — (B220) No. 20:***	Is the resistance less than 1 Ω?	Go to step **5**.	Repair the harness and connector. NOTE: In this case, repair the following item: • Open circuit in harness between fuel pump connector and fuel pump relay connector • Poor contact of coupling connector
5	**CHECK HARNESS BETWEEN FUEL PUMP AND FUEL PUMP RELAY CONNECTOR.** Measure the resistance of harness between fuel pump and fuel pump relay connector. ***Connector & terminal*** ***(R58) No. 5 — Chassis ground:***	Is the resistance 1 MΩ or more?	Go to step **6**.	Repair the short circuit to ground in harness between fuel pump connector and fuel pump relay connector.
6	**CHECK FUEL PUMP RELAY.** 1) Remove the fuel pump relay. 2) Connect the battery to fuel pump relay terminals No. 17 and No. 19. 3) Measure the resistance between fuel pump relay terminals. ***Terminals*** ***No. 20 — No. 21:***	Is the resistance less than 1 Ω?	Go to step **7**.	Replace the fuel pump relay. <Ref. to FU(H4SO)-49, Fuel Pump Relay.>
7	**CHECK HARNESS BETWEEN ECM AND FUEL PUMP RELAY CONNECTOR.** 1) Disconnect the connectors from ECM. 2) Measure the resistance of harness between ECM and fuel pump relay connector. ***Connector & terminal*** ***(B136) No. 33 — (B220) No. 19:***	Is the resistance less than 1 Ω?	Go to step **8**.	Repair the open circuit of harness between ECM and fuel pump relay connector.
8	**CHECK POWER SUPPLY OF FUEL PUMP RELAY.** 1) Turn the ignition switch to ON. 2) Measure the voltage between fuel pump relay connector and chassis ground. ***Connector & terminal*** ***(B220) No. 17 (+) — Chassis ground (–):*** ***(B220) No. 21 (+) — Chassis ground (–):***	Is the voltage 10 V or more?	Repair the poor contact of ECM connector.	Repair the open or ground short circuit of harness of power supply circuit.

GETmeMANUALS.org

F: FUEL INJECTOR CIRCUIT

CAUTION:
- **Check or repair only faulty parts.**
- **After servicing or replacing faulty parts, perform Clear Memory Mode <Ref. to EN(H4SO)(diag)-51, OPERATION, Clear Memory Mode.>, and Inspection Mode <Ref. to EN(H4SO)(diag)-40, PROCEDURE, Inspection Mode.>.**

WIRING DIAGRAM:

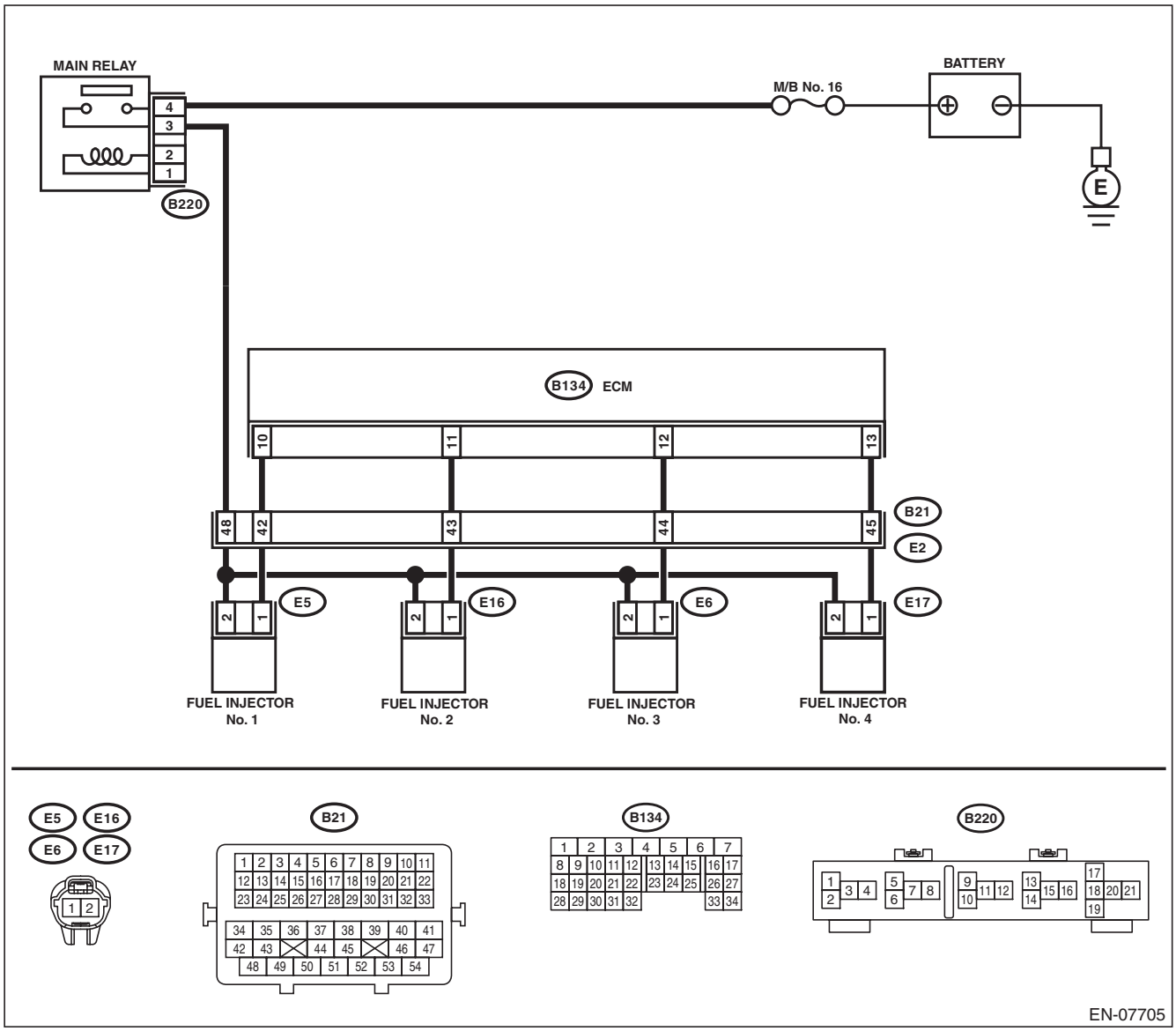

Step		Check	Yes	No
1	**CHECK OPERATION OF EACH FUEL INJECTOR.** While cranking the engine, check each fuel injector emits operating sound. Use a sound scope or attach a screwdriver to the injector to listen to sounds for this check.	Does the fuel pump emit operating sound?	Check the fuel pressure. <Ref. to ME(H4SO)-28, INSPECTION, Fuel Pressure.>	Go to step **2**.

GETtheMANUAL.org

	Step	Check	Yes	No
2	**CHECK POWER SUPPLY TO EACH FUEL INJECTOR.** 1) Turn the ignition switch to OFF. 2) Disconnect the connector from fuel injector. 3) Turn the ignition switch to ON. 4) Measure the voltage between fuel injector connector and the engine ground. ***Connector & terminal*** ***#1 (E5) No. 2 (+) — Engine ground (–):*** ***#2 (E16) No. 2 (+) — Engine ground (–):*** ***#3 (E6) No. 2 (+) — Engine ground (–):*** ***#4 (E17) No. 2 (+) — Engine ground (–):***	Is the voltage 10 V or more?	Go to step **3**.	Repair the harness and connector. NOTE: In this case, repair the following item: • Open circuit in harness between main relay connector and fuel injector connector • Poor contact of main relay connector • Poor contact of coupling connector
3	**CHECK HARNESS BETWEEN ECM AND FUEL INJECTOR CONNECTOR.** 1) Turn the ignition switch to OFF. 2) Disconnect the connectors from ECM. 3) Measure the resistance of harness between ECM and fuel injector connector. ***Connector & terminal*** ***#1 (B134) No. 10 — (E5) No. 1:*** ***#2 (B134) No. 11 — (E16) No. 1:*** ***#3 (B134) No. 12 — (E6) No. 1:*** ***#4 (B134) No. 13 — (E17) No. 1:***	Is the resistance less than 1 Ω?	Go to step **4**.	Repair the harness and connector. NOTE: In this case, repair the following item: • Open circuit in harness between ECM and fuel injector connector • Poor contact of coupling connector
4	**CHECK HARNESS BETWEEN ECM AND FUEL INJECTOR CONNECTOR.** Measure the resistance between ECM and chassis ground. ***Connector & terminal*** ***#1 (B134) No. 10 — Chassis ground:*** ***#2 (B134) No. 11 — Chassis ground:*** ***#3 (B134) No. 12 — Chassis ground:*** ***#4 (B134) No. 13 — Chassis ground:***	Is the resistance 1 MΩ or more?	Go to step **5**.	Repair the short circuit to ground in harness between ECM and fuel injector connector.
5	**CHECK EACH FUEL INJECTOR.** Measure the resistance between each fuel injector terminals. ***Terminals*** ***No. 1 — No. 2:***	Is the resistance 5 — 20 Ω?	Go to step **6**.	Replace the faulty fuel injector. <Ref. to FU(H4SO)-37, Fuel Injector.>
6	**CHECK FOR POOR CONTACT.** Check for poor contact of ECM connector.	Is there poor contact of ECM connector?	Repair the poor contact of ECM connector.	Inspection using “General Diagnostic Table”. <Ref. to EN(H4SO)(diag)-292, INSPECTION, General Diagnostic Table.>

GETfreeMANUALS.org

17. Diagnostic Procedure for Subaru Select Monitor Communication

A: COMMUNICATION FOR INITIALIZING IMPOSSIBLE

DIAGNOSIS:
Open or short circuit in data link connector
TROUBLE SYMPTOM:
Subaru Select Monitor communication failure
WIRING DIAGRAM:

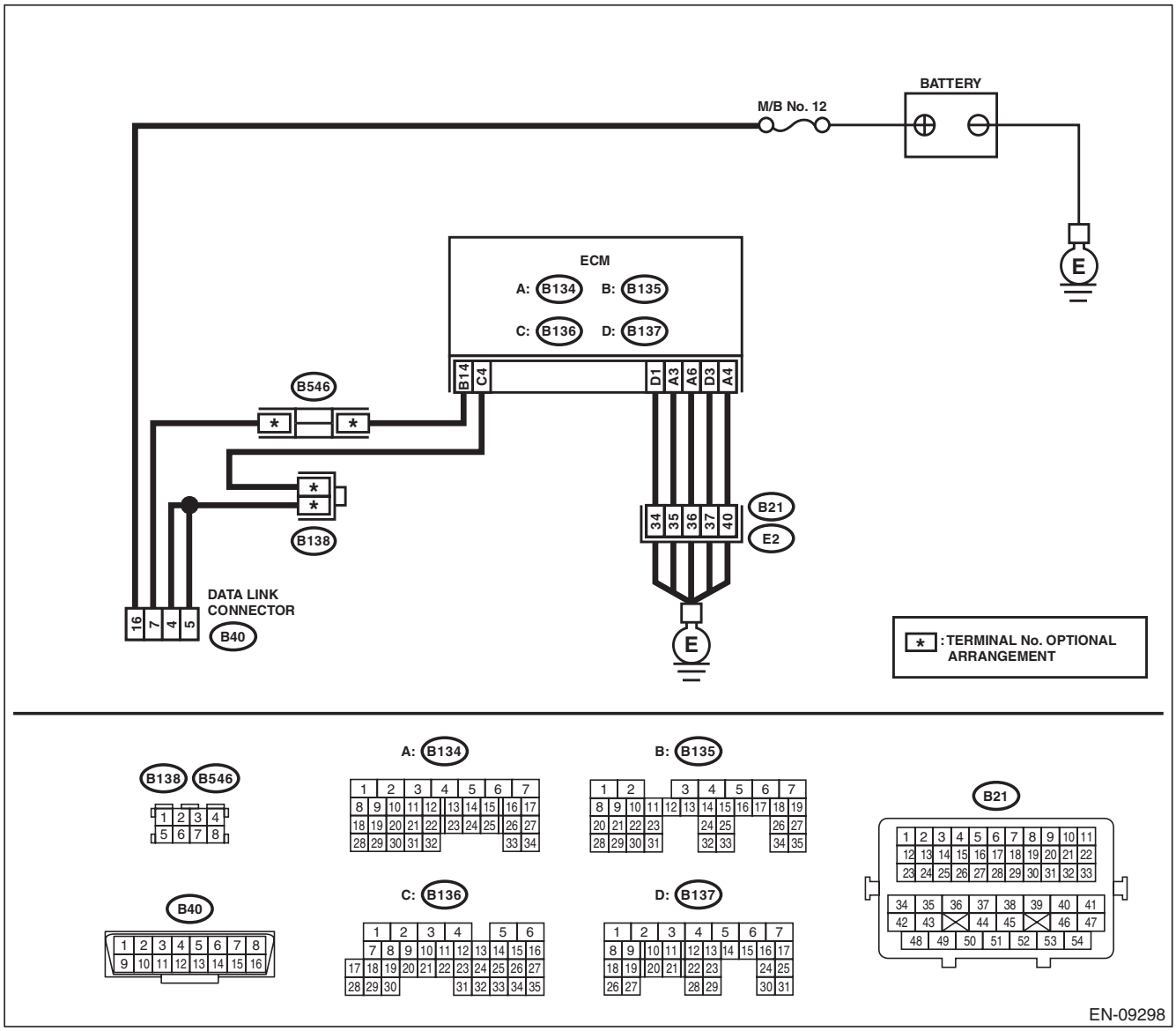

Step		Check	Yes	No
1	**CHECK POWER SUPPLY CIRCUIT.** Connect the SDI (Subaru Diagnosis Interface) or general scan tool to data link connector.	Does SDI or general scan tool turn ON?	Go to step **4**.	Go to step **2**.

GETFreeMANUALS.org

	Step	Check	Yes	No
2	**CHECK POWER SUPPLY CIRCUIT.** Measure the voltage between data link connector and chassis ground. ***Connector & terminal*** ***(B40) No. 16 (+) — Chassis ground (–):***	Is the voltage 10 V or more?	Go to step **3**.	Repair the power supply circuit. NOTE: In this case, repair the following item: • Open or ground short circuit of harness between battery and data link connector • Blown out of fuse (M/B No. 12)
3	**CHECK HARNESS BETWEEN DATA LINK CONNECTOR AND CHASSIS GROUND.** 1) Turn the ignition switch to OFF. 2) Measure the resistance of harness between data link connector and chassis ground. ***Connector & terminal*** ***(B40) No. 4 — Chassis ground:*** ***(B40) No. 5 — Chassis ground:***	Is the resistance less than 5 Ω?	Repair the poor contact of data link connector.	Repair the harness and connector. NOTE: In this case, repair the following item: • Open circuit of harness between ECM and data link connector • Open circuit of harness between ECM and engine ground • Poor contact of ECM connector • Poor contact of coupling connector
4	**CHECK HARNESS BETWEEN ECM AND DATA LINK CONNECTOR.** 1) Turn the ignition switch to OFF. 2) Disconnect the connector from ECM, TCM, VDC CM, airbag CM and body integrated unit. **CAUTION:** **When disconnecting the connector from airbag CM, always follow the precautions on AB section. <Ref. to AB-9, CAUTION, General Description.>** 3) Measure the resistance of harness between ECM and data link connector. ***Connector & terminal*** ***(B135) No. 14 — (B40) No. 7:***	Is the resistance less than 1 Ω?	Go to step **5**.	Repair the harness and connector. NOTE: In this case, repair the following item: • Open circuit of harness between ECM and data link connector • Poor contact of coupling connector
5	**CHECK HARNESS BETWEEN ECM AND DATA LINK CONNECTOR.** Measure the resistance between data link connector and chassis ground. ***Connector & terminal*** ***(B40) No. 7 — Chassis ground:***	Is the resistance 1 MΩ or more?	Repair the poor contact of the ECM or data link connector.	Repair the ground short circuit of harness between ECM and data link connector.

GETmeMANUALS.org

18. List of Diagnostic Trouble Code (DTC)

A: LIST

DTC	Item	Note
P0026	Intake Valve Control Solenoid Circuit Range/Performance (Bank 1)	<Ref. to EN(H4SO)(diag)-86, DTC P0026 INTAKE VALVE CONTROL SOLENOID CIRCUIT RANGE/PERFORMANCE (BANK 1), Diagnostic Procedure with Diagnostic Trouble Code (DTC).>
P0028	Intake Valve Control Solenoid Circuit Range/Performance (Bank 2)	<Ref. to EN(H4SO)(diag)-88, DTC P0028 INTAKE VALVE CONTROL SOLENOID CIRCUIT RANGE/PERFORMANCE (BANK 2), Diagnostic Procedure with Diagnostic Trouble Code (DTC).>
P0030	HO2S Heater Control Circuit (Bank 1 Sensor 1)	<Ref. to EN(H4SO)(diag)-90, DTC P0030 HO2S HEATER CONTROL CIRCUIT (BANK 1 SENSOR 1), Diagnostic Procedure with Diagnostic Trouble Code (DTC).>
P0031	HO2S Heater Control Circuit Low (Bank 1 Sensor 1)	<Ref. to EN(H4SO)(diag)-92, DTC P0031 HO2S HEATER CONTROL CIRCUIT LOW (BANK 1 SENSOR 1), Diagnostic Procedure with Diagnostic Trouble Code (DTC).>
P0032	HO2S Heater Control Circuit High (Bank 1 Sensor 1)	<Ref. to EN(H4SO)(diag)-94, DTC P0032 HO2S HEATER CONTROL CIRCUIT HIGH (BANK 1 SENSOR 1), Diagnostic Procedure with Diagnostic Trouble Code (DTC).>
P0037	HO2S Heater Control Circuit Low (Bank 1 Sensor 2)	<Ref. to EN(H4SO)(diag)-96, DTC P0037 HO2S HEATER CONTROL CIRCUIT LOW (BANK 1 SENSOR 2), Diagnostic Procedure with Diagnostic Trouble Code (DTC).>
P0038	HO2S Heater Control Circuit High (Bank 1 Sensor 2)	<Ref. to EN(H4SO)(diag)-98, DTC P0038 HO2S HEATER CONTROL CIRCUIT HIGH (BANK 1 SENSOR 2), Diagnostic Procedure with Diagnostic Trouble Code (DTC).>
P0068	MAP/MAF - Throttle Position Correlation	<Ref. to EN(H4SO)(diag)-100, DTC P0068 MAP/MAF - THROTTLE POSITION CORRELATION, Diagnostic Procedure with Diagnostic Trouble Code (DTC).>
P0076	Intake Valve Control Solenoid Circuit Low (Bank 1)	<Ref. to EN(H4SO)(diag)-101, DTC P0076 INTAKE VALVE CONTROL SOLENOID CIRCUIT LOW (BANK 1), Diagnostic Procedure with Diagnostic Trouble Code (DTC).>
P0077	Intake Valve Control Solenoid Circuit High (Bank 1)	<Ref. to EN(H4SO)(diag)-103, DTC P0077 INTAKE VALVE CONTROL SOLENOID CIRCUIT HIGH (BANK 1), Diagnostic Procedure with Diagnostic Trouble Code (DTC).>
P0082	Intake Valve Control Solenoid Circuit Low (Bank 2)	<Ref. to EN(H4SO)(diag)-105, DTC P0082 INTAKE VALVE CONTROL SOLENOID CIRCUIT LOW (BANK 2), Diagnostic Procedure with Diagnostic Trouble Code (DTC).>
P0083	Intake Valve Control Solenoid Circuit High (Bank 2)	<Ref. to EN(H4SO)(diag)-107, DTC P0083 INTAKE VALVE CONTROL SOLENOID CIRCUIT HIGH (BANK 2), Diagnostic Procedure with Diagnostic Trouble Code (DTC).>
P0101	Mass or Volume Air Flow Circuit Range/Performance	<Ref. to EN(H4SO)(diag)-109, DTC P0101 MASS OR VOLUME AIR FLOW CIRCUIT RANGE/PERFORMANCE, Diagnostic Procedure with Diagnostic Trouble Code (DTC).>
P0102	Mass or Volume Air Flow Circuit Low Input	<Ref. to EN(H4SO)(diag)-110, DTC P0102 MASS OR VOLUME AIR FLOW CIRCUIT LOW INPUT, Diagnostic Procedure with Diagnostic Trouble Code (DTC).>
P0103	Mass or Volume Air Flow Circuit High Input	<Ref. to EN(H4SO)(diag)-112, DTC P0103 MASS OR VOLUME AIR FLOW CIRCUIT HIGH INPUT, Diagnostic Procedure with Diagnostic Trouble Code (DTC).>
P0107	Manifold Absolute Pressure/Barometric Pressure Circuit Low Input	<Ref. to EN(H4SO)(diag)-114, DTC P0107 MANIFOLD ABSOLUTE PRESSURE/BAROMETRIC PRESSURE CIRCUIT LOW INPUT, Diagnostic Procedure with Diagnostic Trouble Code (DTC).>
P0108	Manifold Absolute Pressure/Barometric Pressure Circuit High Input	<Ref. to EN(H4SO)(diag)-116, DTC P0108 MANIFOLD ABSOLUTE PRESSURE/BAROMETRIC PRESSURE CIRCUIT HIGH INPUT, Diagnostic Procedure with Diagnostic Trouble Code (DTC).>

GETmeMANUALS.org

List of Diagnostic Trouble Code (DTC)

DTC	Item	Note
P0111	Intake Air Temperature Sensor 1 Circuit Range/Performance	<Ref. to EN(H4SO)(diag)-118, DTC P0111 INTAKE AIR TEMPERATURE SENSOR 1 CIRCUIT RANGE/PERFORMANCE, Diagnostic Procedure with Diagnostic Trouble Code (DTC).>
P0112	Intake Air Temperature Sensor 1 Circuit Low	<Ref. to EN(H4SO)(diag)-119, DTC P0112 INTAKE AIR TEMPERATURE SENSOR 1 CIRCUIT LOW, Diagnostic Procedure with Diagnostic Trouble Code (DTC).>
P0113	Intake Air Temperature Sensor 1 Circuit High	<Ref. to EN(H4SO)(diag)-121, DTC P0113 INTAKE AIR TEMPERATURE SENSOR 1 CIRCUIT HIGH, Diagnostic Procedure with Diagnostic Trouble Code (DTC).>
P0117	Engine Coolant Temperature Circuit Low	<Ref. to EN(H4SO)(diag)-123, DTC P0117 ENGINE COOLANT TEMPERATURE CIRCUIT LOW, Diagnostic Procedure with Diagnostic Trouble Code (DTC).>
P0118	Engine Coolant Temperature Circuit High	<Ref. to EN(H4SO)(diag)-125, DTC P0118 ENGINE COOLANT TEMPERATURE CIRCUIT HIGH, Diagnostic Procedure with Diagnostic Trouble Code (DTC).>
P0122	Throttle/Pedal Position Sensor/Switch “A” Circuit Low	<Ref. to EN(H4SO)(diag)-127, DTC P0122 THROTTLE/PEDAL POSITION SENSOR/SWITCH “A” CIRCUIT LOW, Diagnostic Procedure with Diagnostic Trouble Code (DTC).>
P0123	Throttle/Pedal Position Sensor/Switch “A” Circuit High	<Ref. to EN(H4SO)(diag)-129, DTC P0123 THROTTLE/PEDAL POSITION SENSOR/SWITCH “A” CIRCUIT HIGH, Diagnostic Procedure with Diagnostic Trouble Code (DTC).>
P0125	Insufficient Coolant Temperature for Closed Loop Fuel Control	<Ref. to EN(H4SO)(diag)-131, DTC P0125 INSUFFICIENT COOLANT TEMPERATURE FOR CLOSED LOOP FUEL CONTROL, Diagnostic Procedure with Diagnostic Trouble Code (DTC).>
P0126	Insufficient Engine Coolant Temperature for Stable Operation	<Ref. to EN(H4SO)(diag)-132, DTC P0126 INSUFFICIENT ENGINE COOLANT TEMPERATURE FOR STABLE OPERATION, Diagnostic Procedure with Diagnostic Trouble Code (DTC).>
P0128	Coolant Thermostat (Engine Coolant Temperature Below Thermostat Regulating Temperature)	<Ref. to EN(H4SO)(diag)-132, DTC P0128 COOLANT THERMOSTAT (ENGINE COOLANT TEMPERATURE BELOW THERMOSTAT REGULATING TEMPERATURE), Diagnostic Procedure with Diagnostic Trouble Code (DTC).>
P0131	O2 Sensor Circuit Low Voltage (Bank 1 Sensor 1)	<Ref. to EN(H4SO)(diag)-133, DTC P0131 O2 SENSOR CIRCUIT LOW VOLTAGE (BANK 1 SENSOR 1), Diagnostic Procedure with Diagnostic Trouble Code (DTC).>
P0132	O2 Sensor Circuit High Voltage (Bank 1 Sensor 1)	<Ref. to EN(H4SO)(diag)-135, DTC P0132 O2 SENSOR CIRCUIT HIGH VOLTAGE (BANK 1 SENSOR 1), Diagnostic Procedure with Diagnostic Trouble Code (DTC).>
P0133	O2 Sensor Circuit Slow Response (Bank 1 Sensor 1)	<Ref. to EN(H4SO)(diag)-137, DTC P0133 O2 SENSOR CIRCUIT SLOW RESPONSE (BANK 1 SENSOR 1), Diagnostic Procedure with Diagnostic Trouble Code (DTC).>
P0134	O2 Sensor Circuit No Activity Detected (Bank 1 Sensor 1)	<Ref. to EN(H4SO)(diag)-138, DTC P0134 O2 SENSOR CIRCUIT NO ACTIVITY DETECTED (BANK 1 SENSOR 1), Diagnostic Procedure with Diagnostic Trouble Code (DTC).>
P0137	O2 Sensor Circuit Low Voltage (Bank 1 Sensor 2)	<Ref. to EN(H4SO)(diag)-140, DTC P0137 O2 SENSOR CIRCUIT LOW VOLTAGE (BANK 1 SENSOR 2), Diagnostic Procedure with Diagnostic Trouble Code (DTC).>
P0138	O2 Sensor Circuit High Voltage (Bank 1 Sensor 2)	<Ref. to EN(H4SO)(diag)-142, DTC P0138 O2 SENSOR CIRCUIT HIGH VOLTAGE (BANK 1 SENSOR 2), Diagnostic Procedure with Diagnostic Trouble Code (DTC).>
P013A	O2 Sensor Slow Response - Rich to Lean (Bank 1 Sensor 2)	<Ref. to EN(H4SO)(diag)-144, DTC P013A O2 SENSOR SLOW RESPONSE - RICH TO LEAN (BANK 1 SENSOR 2), Diagnostic Procedure with Diagnostic Trouble Code (DTC).>
P013B	O2 Sensor Slow Response - Lean to Rich (Bank 1 Sensor 2)	<Ref. to EN(H4SO)(diag)-145, DTC P013B O2 SENSOR SLOW RESPONSE - LEAN TO RICH (BANK 1 SENSOR 2), Diagnostic Procedure with Diagnostic Trouble Code (DTC).>

GETmeMANUALS.org

List of Diagnostic Trouble Code (DTC)

DTC	Item	Note
P013E	O2 Sensor Delayed Response - Rich to Lean (Bank 1 Sensor 2)	<Ref. to EN(H4SO)(diag)-145, DTC P013E O2 SENSOR DELAYED RESPONSE - RICH TO LEAN (BANK 1 SENSOR 2), Diagnostic Procedure with Diagnostic Trouble Code (DTC).>
P013F	O2 Sensor Delayed Response - Lean to Rich (Bank 1 Sensor 2)	<Ref. to EN(H4SO)(diag)-145, DTC P013F O2 SENSOR DELAYED RESPONSE - LEAN TO RICH (BANK 1 SENSOR 2), Diagnostic Procedure with Diagnostic Trouble Code (DTC).>
P0140	O2 Sensor Circuit No Activity Detected (Bank1 Sensor2)	<Ref. to EN(H4SO)(diag)-146, DTC P0140 O2 SENSOR CIRCUIT NO ACTIVITY DETECTED (BANK1 SENSOR2), Diagnostic Procedure with Diagnostic Trouble Code (DTC).>
P0141	O2 Sensor Heater Circuit (Bank1 Sensor2)	<Ref. to EN(H4SO)(diag)-148, DTC P0141 O2 SENSOR HEATER CIRCUIT (BANK1 SENSOR2), Diagnostic Procedure with Diagnostic Trouble Code (DTC).>
P014C	O2 Sensor Slow Response - Rich to Lean (Bank 1 Sensor 1)	<Ref. to EN(H4SO)(diag)-149, DTC P014C O2 SENSOR SLOW RESPONSE - RICH TO LEAN (BANK 1 SENSOR 1), Diagnostic Procedure with Diagnostic Trouble Code (DTC).>
P014D	O2 Sensor Slow Response - Lean to Rich (Bank 1 Sensor 1)	<Ref. to EN(H4SO)(diag)-149, DTC P014D O2 SENSOR SLOW RESPONSE - LEAN TO RICH (BANK 1 SENSOR 1), Diagnostic Procedure with Diagnostic Trouble Code (DTC).>
P015A	O2 Sensor Delayed Response - Rich to Lean (Bank 1 Sensor 1)	<Ref. to EN(H4SO)(diag)-149, DTC P015A O2 SENSOR DELAYED RESPONSE - RICH TO LEAN (BANK 1 SENSOR 1), Diagnostic Procedure with Diagnostic Trouble Code (DTC).>
P015B	O2 Sensor Delayed Response - Lean to Rich (Bank 1 Sensor 1)	<Ref. to EN(H4SO)(diag)-149, DTC P015B O2 SENSOR DELAYED RESPONSE - LEAN TO RICH (BANK 1 SENSOR 1), Diagnostic Procedure with Diagnostic Trouble Code (DTC).>
P0171	System Too Lean (Bank 1)	<Ref. to EN(H4SO)(diag)-149, DTC P0171 SYSTEM TOO LEAN (BANK 1), Diagnostic Procedure with Diagnostic Trouble Code (DTC).>
P0172	System Too Rich (Bank 1)	<Ref. to EN(H4SO)(diag)-150, DTC P0172 SYSTEM TOO RICH (BANK 1), Diagnostic Procedure with Diagnostic Trouble Code (DTC).>
P0181	Fuel Temperature Sensor “A” Circuit Range/Performance	<Ref. to EN(H4SO)(diag)-152, DTC P0181 FUEL TEMPERATURE SENSOR “A” CIRCUIT RANGE/PERFORMANCE, Diagnostic Procedure with Diagnostic Trouble Code (DTC).>
P0182	Fuel Temperature Sensor “A” Circuit Low Input	<Ref. to EN(H4SO)(diag)-153, DTC P0182 FUEL TEMPERATURE SENSOR “A” CIRCUIT LOW INPUT, Diagnostic Procedure with Diagnostic Trouble Code (DTC).>
P0183	Fuel Temperature Sensor “A” Circuit High Input	<Ref. to EN(H4SO)(diag)-155, DTC P0183 FUEL TEMPERATURE SENSOR “A” CIRCUIT HIGH INPUT, Diagnostic Procedure with Diagnostic Trouble Code (DTC).>
P0196	Engine Oil Temperature Sensor Circuit Range/Performance	<Ref. to EN(H4SO)(diag)-157, DTC P0196 ENGINE OIL TEMPERATURE SENSOR CIRCUIT RANGE/PERFORMANCE, Diagnostic Procedure with Diagnostic Trouble Code (DTC).>
P0197	Engine Oil Temperature Sensor Low	<Ref. to EN(H4SO)(diag)-158, DTC P0197 ENGINE OIL TEMPERATURE SENSOR LOW, Diagnostic Procedure with Diagnostic Trouble Code (DTC).>
P0198	Engine Oil Temperature Sensor High	<Ref. to EN(H4SO)(diag)-160, DTC P0198 ENGINE OIL TEMPERATURE SENSOR HIGH, Diagnostic Procedure with Diagnostic Trouble Code (DTC).>
P0201	Injector #1	<Ref. to EN(H4SO)(diag)-162, DTC P0201 INJECTOR #1, Diagnostic Procedure with Diagnostic Trouble Code (DTC).>
P0202	Injector #2	<Ref. to EN(H4SO)(diag)-164, DTC P0202 INJECTOR #2, Diagnostic Procedure with Diagnostic Trouble Code (DTC).>
P0203	Injector #3	<Ref. to EN(H4SO)(diag)-164, DTC P0203 INJECTOR #3, Diagnostic Procedure with Diagnostic Trouble Code (DTC).>
P0204	Injector #4	<Ref. to EN(H4SO)(diag)-164, DTC P0204 INJECTOR #4, Diagnostic Procedure with Diagnostic Trouble Code (DTC).>
P0222	Throttle/Pedal Position Sensor/Switch “B” Circuit Low	<Ref. to EN(H4SO)(diag)-165, DTC P0222 THROTTLE/PEDAL POSITION SENSOR/SWITCH “B” CIRCUIT LOW, Diagnostic Procedure with Diagnostic Trouble Code (DTC).>

GETmeMANUALS.org

List of Diagnostic Trouble Code (DTC)

DTC	Item	Note
P0223	Throttle/Pedal Position Sensor/Switch “B” Circuit High	<Ref. to EN(H4SO)(diag)-167, DTC P0223 THROTTLE/PEDAL POSITION SENSOR/SWITCH “B” CIRCUIT HIGH, Diagnostic Procedure with Diagnostic Trouble Code (DTC).>
P0301	Cylinder 1 Misfire Detected	<Ref. to EN(H4SO)(diag)-169, DTC P0301 CYLINDER 1 MISFIRE DETECTED, Diagnostic Procedure with Diagnostic Trouble Code (DTC).>
P0302	Cylinder 2 Misfire Detected	<Ref. to EN(H4SO)(diag)-169, DTC P0302 CYLINDER 2 MISFIRE DETECTED, Diagnostic Procedure with Diagnostic Trouble Code (DTC).>
P0303	Cylinder 3 Misfire Detected	<Ref. to EN(H4SO)(diag)-169, DTC P0303 CYLINDER 3 MISFIRE DETECTED, Diagnostic Procedure with Diagnostic Trouble Code (DTC).>
P0304	Cylinder 4 Misfire Detected	<Ref. to EN(H4SO)(diag)-170, DTC P0304 CYLINDER 4 MISFIRE DETECTED, Diagnostic Procedure with Diagnostic Trouble Code (DTC).>
P0327	Knock Sensor 1 Circuit Low (Bank 1 or Single Sensor)	<Ref. to EN(H4SO)(diag)-175, DTC P0327 KNOCK SENSOR 1 CIRCUIT LOW (BANK 1 OR SINGLE SENSOR), Diagnostic Procedure with Diagnostic Trouble Code (DTC).>
P0328	Knock Sensor 1 Circuit High (Bank 1 or Single Sensor)	<Ref. to EN(H4SO)(diag)-177, DTC P0328 KNOCK SENSOR 1 CIRCUIT HIGH (BANK 1 OR SINGLE SENSOR), Diagnostic Procedure with Diagnostic Trouble Code (DTC).>
P0335	Crankshaft Position Sensor “A” Circuit	<Ref. to EN(H4SO)(diag)-179, DTC P0335 CRANKSHAFT POSITION SENSOR “A” CIRCUIT, Diagnostic Procedure with Diagnostic Trouble Code (DTC).>
P0336	Crankshaft Position Sensor “A” Circuit Range/Performance	<Ref. to EN(H4SO)(diag)-181, DTC P0336 CRANKSHAFT POSITION SENSOR “A” CIRCUIT RANGE/PERFORMANCE, Diagnostic Procedure with Diagnostic Trouble Code (DTC).>
P0340	Camshaft Position Sensor “A” Circuit (Bank 1 or Single Sensor)	<Ref. to EN(H4SO)(diag)-182, DTC P0340 CAMSHAFT POSITION SENSOR “A” CIRCUIT (BANK 1 OR SINGLE SENSOR), Diagnostic Procedure with Diagnostic Trouble Code (DTC).>
P0341	Camshaft Position Sensor “A” Circuit Range/Performance (Bank 1 or Single Sensor)	<Ref. to EN(H4SO)(diag)-184, DTC P0341 CAMSHAFT POSITION SENSOR “A” CIRCUIT RANGE/PERFORMANCE (BANK 1 OR SINGLE SENSOR), Diagnostic Procedure with Diagnostic Trouble Code (DTC).>
P0351	Ignition Coil A Primary/Secondary Circuit	<Ref. to EN(H4SO)(diag)-186, DTC P0351 IGNITION COIL A PRIMARY/SECONDARY CIRCUIT, Diagnostic Procedure with Diagnostic Trouble Code (DTC).>
P0352	Ignition Coil B Primary/Secondary Circuit	<Ref. to EN(H4SO)(diag)-188, DTC P0352 IGNITION COIL B PRIMARY/SECONDARY CIRCUIT, Diagnostic Procedure with Diagnostic Trouble Code (DTC).>
P0353	Ignition Coil C Primary/Secondary Circuit	<Ref. to EN(H4SO)(diag)-188, DTC P0353 IGNITION COIL C PRIMARY/SECONDARY CIRCUIT, Diagnostic Procedure with Diagnostic Trouble Code (DTC).>
P0354	Ignition Coil D Primary/Secondary Circuit	<Ref. to EN(H4SO)(diag)-188, DTC P0354 IGNITION COIL D PRIMARY/SECONDARY CIRCUIT, Diagnostic Procedure with Diagnostic Trouble Code (DTC).>
P0400	Exhaust Gas Recirculation Flow	<Ref. to EN(H4SO)(diag)-189, DTC P0400 EXHAUST GAS RECIRCULATION FLOW, Diagnostic Procedure with Diagnostic Trouble Code (DTC).>
P0420	Catalyst System Efficiency Below Threshold (Bank 1)	<Ref. to EN(H4SO)(diag)-190, DTC P0420 CATALYST SYSTEM EFFICIENCY BELOW THRESHOLD (BANK 1), Diagnostic Procedure with Diagnostic Trouble Code (DTC).>
P0442	Evaporative Emission Control System Leak Detected (Small Leak)	<Ref. to EN(H4SO)(diag)-194, DTC P0442 EVAPORATIVE EMISSION CONTROL SYSTEM LEAK DETECTED (SMALL LEAK), Diagnostic Procedure with Diagnostic Trouble Code (DTC).>
P0447	Evaporative Emission Control System Vent Control Circuit Open	<Ref. to EN(H4SO)(diag)-196, DTC P0447 EVAPORATIVE EMISSION CONTROL SYSTEM VENT CONTROL CIRCUIT OPEN, Diagnostic Procedure with Diagnostic Trouble Code (DTC).>
P0448	Evaporative Emission Control System Vent Control Circuit Shorted	<Ref. to EN(H4SO)(diag)-198, DTC P0448 EVAPORATIVE EMISSION CONTROL SYSTEM VENT CONTROL CIRCUIT SHORTED, Diagnostic Procedure with Diagnostic Trouble Code (DTC).>

GETthemANSWERS.org

List of Diagnostic Trouble Code (DTC)

DTC	Item	Note
P0451	Evaporative Emission Control System Pressure Sensor	<Ref. to EN(H4SO)(diag)-200, DTC P0451 EVAPORATIVE EMISSION CONTROL SYSTEM PRESSURE SENSOR, Diagnostic Procedure with Diagnostic Trouble Code (DTC).>
P0452	Evaporative Emission Control System Pressure Sensor Low Input	<Ref. to EN(H4SO)(diag)-201, DTC P0452 EVAPORATIVE EMISSION CONTROL SYSTEM PRESSURE SENSOR LOW INPUT, Diagnostic Procedure with Diagnostic Trouble Code (DTC).>
P0453	Evaporative Emission Control System Pressure Sensor High Input	<Ref. to EN(H4SO)(diag)-203, DTC P0453 EVAPORATIVE EMISSION CONTROL SYSTEM PRESSURE SENSOR HIGH INPUT, Diagnostic Procedure with Diagnostic Trouble Code (DTC).>
P0456	Evaporative Emission Control System Leak Detected (Very Small Leak)	<Ref. to EN(H4SO)(diag)-205, DTC P0456 EVAPORATIVE EMISSION CONTROL SYSTEM LEAK DETECTED (VERY SMALL LEAK), Diagnostic Procedure with Diagnostic Trouble Code (DTC).>
P0457	Evaporative Emission Control System Leak Detected (Fuel Cap Loose/Off)	<Ref. to EN(H4SO)(diag)-207, DTC P0457 EVAPORATIVE EMISSION CONTROL SYSTEM LEAK DETECTED (FUEL CAP LOOSE/OFF), Diagnostic Procedure with Diagnostic Trouble Code (DTC).>
P0458	Evaporative Emission System Purge Control Valve Circuit Low	<Ref. to EN(H4SO)(diag)-209, DTC P0458 EVAPORATIVE EMISSION SYSTEM PURGE CONTROL VALVE CIRCUIT LOW, Diagnostic Procedure with Diagnostic Trouble Code (DTC).>
P0459	Evaporative Emission System Purge Control Valve Circuit High	<Ref. to EN(H4SO)(diag)-211, DTC P0459 EVAPORATIVE EMISSION SYSTEM PURGE CONTROL VALVE CIRCUIT HIGH, Diagnostic Procedure with Diagnostic Trouble Code (DTC).>
P0461	Fuel Level Sensor “A” Circuit Range/Performance	<Ref. to EN(H4SO)(diag)-213, DTC P0461 FUEL LEVEL SENSOR “A” CIRCUIT RANGE/PERFORMANCE, Diagnostic Procedure with Diagnostic Trouble Code (DTC).>
P0462	Fuel Level Sensor “A” Circuit Low	<Ref. to EN(H4SO)(diag)-213, DTC P0462 FUEL LEVEL SENSOR “A” CIRCUIT LOW, Diagnostic Procedure with Diagnostic Trouble Code (DTC).>
P0463	Fuel Level Sensor “A” Circuit High	<Ref. to EN(H4SO)(diag)-213, DTC P0463 FUEL LEVEL SENSOR “A” CIRCUIT HIGH, Diagnostic Procedure with Diagnostic Trouble Code (DTC).>
P0464	Fuel Level Sensor Circuit Intermittent	<Ref. to EN(H4SO)(diag)-214, DTC P0464 FUEL LEVEL SENSOR CIRCUIT INTERMITTENT, Diagnostic Procedure with Diagnostic Trouble Code (DTC).>
P0500	Vehicle Speed Sensor “A”	<Ref. to EN(H4SO)(diag)-214, DTC P0500 VEHICLE SPEED SENSOR “A”, Diagnostic Procedure with Diagnostic Trouble Code (DTC).>
P0506	Idle Air Control System RPM Lower Than Expected	<Ref. to EN(H4SO)(diag)-215, DTC P0506 IDLE AIR CONTROL SYSTEM RPM LOWER THAN EXPECTED, Diagnostic Procedure with Diagnostic Trouble Code (DTC).>
P0507	Idle Air Control System RPM Higher Than Expected	<Ref. to EN(H4SO)(diag)-216, DTC P0507 IDLE AIR CONTROL SYSTEM RPM HIGHER THAN EXPECTED, Diagnostic Procedure with Diagnostic Trouble Code (DTC).>
P050A	Cold Start Idle Air Control System Performance	<Ref. to EN(H4SO)(diag)-217, DTC P050A COLD START IDLE AIR CONTROL SYSTEM PERFORMANCE, Diagnostic Procedure with Diagnostic Trouble Code (DTC).>
P050B	Cold Start Ignition Timing Performance	<Ref. to EN(H4SO)(diag)-225, DTC P050B COLD START IGNITION TIMING PERFORMANCE, Diagnostic Procedure with Diagnostic Trouble Code (DTC).>
P0512	Starter Request Circuit	<Ref. to EN(H4SO)(diag)-226, DTC P0512 STARTER REQUEST CIRCUIT, Diagnostic Procedure with Diagnostic Trouble Code (DTC).>
P0513	Incorrect Immobilizer Key	<Ref. to IM(diag)-16, DTC P0513 INCORRECT IMMOBILIZER KEY, Diagnostic Procedure with Diagnostic Trouble Code (DTC).>
P0604	Internal Control Module Random Access Memory (RAM) Error	<Ref. to EN(H4SO)(diag)-228, DTC P0604 INTERNAL CONTROL MODULE RANDOM ACCESS MEMORY (RAM) ERROR, Diagnostic Procedure with Diagnostic Trouble Code (DTC).>
P0605	Internal Control Module Read Only Memory (ROM) Error	<Ref. to EN(H4SO)(diag)-228, DTC P0605 INTERNAL CONTROL MODULE READ ONLY MEMORY (ROM) ERROR, Diagnostic Procedure with Diagnostic Trouble Code (DTC).>

GETmeMANUALS.org

List of Diagnostic Trouble Code (DTC)

DTC	Item	Note
P0607	Throttle Control System Circuit Range/Performance	<Ref. to EN(H4SO)(diag)-229, DTC P0607 THROTTLE CONTROL SYSTEM CIRCUIT RANGE/PERFORMANCE, Diagnostic Procedure with Diagnostic Trouble Code (DTC).>
P0638	Throttle Actuator Control Range/Performance (Bank 1)	<Ref. to EN(H4SO)(diag)-230, DTC P0638 THROTTLE ACTUATOR CONTROL RANGE/PERFORMANCE (BANK 1), Diagnostic Procedure with Diagnostic Trouble Code (DTC).>
P0700	Transmission Control System (MIL Request)	<Ref. to EN(H4SO)(diag)-230, DTC P0700 TRANSMISSION CONTROL SYSTEM (MIL REQUEST), Diagnostic Procedure with Diagnostic Trouble Code (DTC).>
P0851	Park/Neutral Switch Input Circuit Low (AT Model)	<Ref. to EN(H4SO)(diag)-231, DTC P0851 PARK/NEUTRAL SWITCH INPUT CIRCUIT LOW (AT MODEL), Diagnostic Procedure with Diagnostic Trouble Code (DTC).>
P0851	Neutral Switch Input Circuit Low (MT Model)	<Ref. to EN(H4SO)(diag)-233, DTC P0851 NEUTRAL SWITCH INPUT CIRCUIT LOW (MT MODEL), Diagnostic Procedure with Diagnostic Trouble Code (DTC).>
P0852	Park/Neutral Switch Input Circuit High (AT Model)	<Ref. to EN(H4SO)(diag)-235, DTC P0852 PARK/NEUTRAL SWITCH INPUT CIRCUIT HIGH (AT MODEL), Diagnostic Procedure with Diagnostic Trouble Code (DTC).>
P0852	Neutral Switch Input Circuit High (MT Model)	<Ref. to EN(H4SO)(diag)-237, DTC P0852 NEUTRAL SWITCH INPUT CIRCUIT HIGH (MT MODEL), Diagnostic Procedure with Diagnostic Trouble Code (DTC).>
P1152	O2 Sensor Circuit Range/Performance (Low) (Bank1 Sensor1)	<Ref. to EN(H4SO)(diag)-239, DTC P1152 O2 SENSOR CIRCUIT RANGE/PERFORMANCE (LOW) (BANK1 SENSOR1), Diagnostic Procedure with Diagnostic Trouble Code (DTC).>
P1153	O2 Sensor Circuit Range/Performance (High) (Bank1 Sensor1)	<Ref. to EN(H4SO)(diag)-241, DTC P1153 O2 SENSOR CIRCUIT RANGE/PERFORMANCE (HIGH) (BANK1 SENSOR1), Diagnostic Procedure with Diagnostic Trouble Code (DTC).>
P1160	Return Spring Failure	<Ref. to EN(H4SO)(diag)-242, DTC P1160 RETURN SPRING FAILURE, Diagnostic Procedure with Diagnostic Trouble Code (DTC).>
P1443	Vent Control Solenoid Valve Function Problem	<Ref. to EN(H4SO)(diag)-243, DTC P1443 VENT CONTROL SOLENOID VALVE FUNCTION PROBLEM, Diagnostic Procedure with Diagnostic Trouble Code (DTC).>
P1492	EGR Solenoid Valve Signal #1 Circuit Malfunction (Low Input)	<Ref. to EN(H4SO)(diag)-244, DTC P1492 EGR SOLENOID VALVE SIGNAL #1 CIRCUIT MALFUNCTION (LOW INPUT), Diagnostic Procedure with Diagnostic Trouble Code (DTC).>
P1493	EGR Solenoid Valve Signal #1 Circuit Malfunction (High Input)	<Ref. to EN(H4SO)(diag)-244, DTC P1493 EGR SOLENOID VALVE SIGNAL #1 CIRCUIT MALFUNCTION (HIGH INPUT), Diagnostic Procedure with Diagnostic Trouble Code (DTC).>
P1494	EGR Solenoid Valve Signal #2 Circuit Malfunction (Low Input)	<Ref. to EN(H4SO)(diag)-244, DTC P1494 EGR SOLENOID VALVE SIGNAL #2 CIRCUIT MALFUNCTION (LOW INPUT), Diagnostic Procedure with Diagnostic Trouble Code (DTC).>
P1495	EGR Solenoid Valve Signal #2 Circuit Malfunction (High Input)	<Ref. to EN(H4SO)(diag)-244, DTC P1495 EGR SOLENOID VALVE SIGNAL #2 CIRCUIT MALFUNCTION (HIGH INPUT), Diagnostic Procedure with Diagnostic Trouble Code (DTC).>
P1496	EGR Solenoid Valve Signal #3 Circuit Malfunction (Low Input)	<Ref. to EN(H4SO)(diag)-244, DTC P1496 EGR SOLENOID VALVE SIGNAL #3 CIRCUIT MALFUNCTION (LOW INPUT), Diagnostic Procedure with Diagnostic Trouble Code (DTC).>
P1497	EGR Solenoid Valve Signal #3 Circuit Malfunction (High Input)	<Ref. to EN(H4SO)(diag)-244, DTC P1497 EGR SOLENOID VALVE SIGNAL #3 CIRCUIT MALFUNCTION (HIGH INPUT), Diagnostic Procedure with Diagnostic Trouble Code (DTC).>
P1498	EGR Solenoid Valve Signal #4 Circuit Malfunction (Low Input)	<Ref. to EN(H4SO)(diag)-245, DTC P1498 EGR SOLENOID VALVE SIGNAL #4 CIRCUIT MALFUNCTION (LOW INPUT), Diagnostic Procedure with Diagnostic Trouble Code (DTC).>
P1499	EGR Solenoid Valve Signal #4 Circuit Malfunction (High Input)	<Ref. to EN(H4SO)(diag)-248, DTC P1499 EGR SOLENOID VALVE SIGNAL #4 CIRCUIT MALFUNCTION (HIGH INPUT), Diagnostic Procedure with Diagnostic Trouble Code (DTC).>

GETthemANSWERS.org

List of Diagnostic Trouble Code (DTC)

DTC	Item	Note
P1518	Starter Switch Circuit Low Input	<Ref. to EN(H4SO)(diag)-251, DTC P1518 STARTER SWITCH CIRCUIT LOW INPUT, Diagnostic Procedure with Diagnostic Trouble Code (DTC).>
P1560	Back-Up Voltage Circuit Malfunction	<Ref. to EN(H4SO)(diag)-253, DTC P1560 BACK-UP VOLTAGE CIRCUIT MALFUNCTION, Diagnostic Procedure with Diagnostic Trouble Code (DTC).>
P1570	Antenna	<Ref. to IM(diag)-17, DTC P1570 ANTENNA, Diagnostic Procedure with Diagnostic Trouble Code (DTC).>
P1571	Reference Code Incompatibility	<Ref. to IM(diag)-19, DTC P1571 REFERENCE CODE INCOMPATIBILITY, Diagnostic Procedure with Diagnostic Trouble Code (DTC).>
P1572	IMM Circuit Failure (Except Antenna Circuit)	<Ref. to IM(diag)-20, DTC P1572 IMM CIRCUIT FAILURE (EXCEPT ANTENNA CIRCUIT), Diagnostic Procedure with Diagnostic Trouble Code (DTC).>
P1574	Key Communication Failure	<Ref. to IM(diag)-22, DTC P1574 KEY COMMUNICATION FAILURE, Diagnostic Procedure with Diagnostic Trouble Code (DTC).>
P1576	EGI Control Module EEPROM	<Ref. to IM(diag)-22, DTC P1576 EGI CONTROL MODULE EEPROM, Diagnostic Procedure with Diagnostic Trouble Code (DTC).>
P1577	IMM Control Module EEPROM	<Ref. to IM(diag)-23, DTC P1577 IMM CONTROL MODULE EEPROM, Diagnostic Procedure with Diagnostic Trouble Code (DTC).>
P1578	Meter Failure	<Ref. to IM(diag)-24, DTC P1578 METER FAILURE, Diagnostic Procedure with Diagnostic Trouble Code (DTC).>
P2096	Post Catalyst Fuel Trim System Too Lean (Bank 1)	<Ref. to EN(H4SO)(diag)-255, DTC P2096 POST CATALYST FUEL TRIM SYSTEM TOO LEAN (BANK 1), Diagnostic Procedure with Diagnostic Trouble Code (DTC).>
P2097	Post Catalyst Fuel Trim System Too Rich (Bank 1)	<Ref. to EN(H4SO)(diag)-261, DTC P2097 POST CATALYST FUEL TRIM SYSTEM TOO RICH (BANK 1), Diagnostic Procedure with Diagnostic Trouble Code (DTC).>
P2101	Throttle Actuator Control Motor Circuit Range/Performance	<Ref. to EN(H4SO)(diag)-267, DTC P2101 THROTTLE ACTUATOR CONTROL MOTOR CIRCUIT RANGE/PERFORMANCE, Diagnostic Procedure with Diagnostic Trouble Code (DTC).>
P2102	Throttle Actuator Control Motor Circuit Low	<Ref. to EN(H4SO)(diag)-272, DTC P2102 THROTTLE ACTUATOR CONTROL MOTOR CIRCUIT LOW, Diagnostic Procedure with Diagnostic Trouble Code (DTC).>
P2103	Throttle Actuator Control Motor Circuit High	<Ref. to EN(H4SO)(diag)-274, DTC P2103 THROTTLE ACTUATOR CONTROL MOTOR CIRCUIT HIGH, Diagnostic Procedure with Diagnostic Trouble Code (DTC).>
P2109	Throttle/Pedal Position Sensor “A” Minimum Stop Performance	<Ref. to EN(H4SO)(diag)-275, DTC P2109 THROTTLE/PEDAL POSITION SENSOR “A” MINIMUM STOP PERFORMANCE, Diagnostic Procedure with Diagnostic Trouble Code (DTC).>
P2122	Throttle/Pedal Position Sensor/Switch “D” Circuit Low Input	<Ref. to EN(H4SO)(diag)-276, DTC P2122 THROTTLE/PEDAL POSITION SENSOR/SWITCH “D” CIRCUIT LOW INPUT, Diagnostic Procedure with Diagnostic Trouble Code (DTC).>
P2123	Throttle/Pedal Position Sensor/Switch “D” Circuit High Input	<Ref. to EN(H4SO)(diag)-278, DTC P2123 THROTTLE/PEDAL POSITION SENSOR/SWITCH “D” CIRCUIT HIGH INPUT, Diagnostic Procedure with Diagnostic Trouble Code (DTC).>
P2127	Throttle/Pedal Position Sensor/Switch “E” Circuit Low Input	<Ref. to EN(H4SO)(diag)-280, DTC P2127 THROTTLE/PEDAL POSITION SENSOR/SWITCH “E” CIRCUIT LOW INPUT, Diagnostic Procedure with Diagnostic Trouble Code (DTC).>
P2128	Throttle/Pedal Position Sensor/Switch “E” Circuit High Input	<Ref. to EN(H4SO)(diag)-282, DTC P2128 THROTTLE/PEDAL POSITION SENSOR/SWITCH “E” CIRCUIT HIGH INPUT, Diagnostic Procedure with Diagnostic Trouble Code (DTC).>
P2135	Throttle/Pedal Position Sensor/Switch “A”/“B” Voltage Correlation	<Ref. to EN(H4SO)(diag)-284, DTC P2135 THROTTLE/PEDAL POSITION SENSOR/SWITCH “A”/“B” VOLTAGE CORRELATION, Diagnostic Procedure with Diagnostic Trouble Code (DTC).>
P2138	Throttle/Pedal Position Sensor/Switch “D”/“E” Voltage Correlation	<Ref. to EN(H4SO)(diag)-287, DTC P2138 THROTTLE/PEDAL POSITION SENSOR/SWITCH “D”/“E” VOLTAGE CORRELATION, Diagnostic Procedure with Diagnostic Trouble Code (DTC).>

GETmeMANUALS.org

List of Diagnostic Trouble Code (DTC)

DTC	Item	Note
P2227	Barometric Pressure Circuit Range/ Performance	<Ref. to EN(H4SO)(diag)-289, DTC P2227 BAROMETRIC PRESSURE CIRCUIT RANGE/PERFORMANCE, Diagnostic Procedure with Diagnostic Trouble Code (DTC).>
P2228	Barometric Pressure Circuit Low	<Ref. to EN(H4SO)(diag)-289, DTC P2228 BAROMETRIC PRESSURE CIRCUIT LOW, Diagnostic Procedure with Diagnostic Trouble Code (DTC).>
P2229	Barometric Pressure Circuit High	<Ref. to EN(H4SO)(diag)-290, DTC P2229 BAROMETRIC PRESSURE CIRCUIT HIGH, Diagnostic Procedure with Diagnostic Trouble Code (DTC).>
P2610	ECM/PCM Internal Engine Off Timer Performance	<Ref. to EN(H4SO)(diag)-290, DTC P2610 ECM/PCM INTERNAL ENGINE OFF TIMER PERFORMANCE, Diagnostic Procedure with Diagnostic Trouble Code (DTC).>
U0073	CAN Failure, Bus ‘Off’ Detection	<Ref. to EN(H4SO)(diag)-291, DTC U0073 CAN FAILURE, BUS ‘OFF’ DETECTION, Diagnostic Procedure with Diagnostic Trouble Code (DTC).>
U0101	CAN (TCU) Data Not Loaded	<Ref. to EN(H4SO)(diag)-291, DTC U0101 CAN (TCU) DATA NOT LOADED, Diagnostic Procedure with Diagnostic Trouble Code (DTC).>
U0122	CAN (VDC) Data Not Loaded	<Ref. to EN(H4SO)(diag)-291, DTC U0122 CAN (VDC) DATA NOT LOADED, Diagnostic Procedure with Diagnostic Trouble Code (DTC).>
U0140	CAN (BCU) Data Not Loaded	<Ref. to EN(H4SO)(diag)-291, DTC U0140 CAN (BCU) DATA NOT LOADED, Diagnostic Procedure with Diagnostic Trouble Code (DTC).>
U0402	CAN (TCU) Data Abnormal	<Ref. to EN(H4SO)(diag)-291, DTC U0402 CAN (TCU) DATA ABNORMAL, Diagnostic Procedure with Diagnostic Trouble Code (DTC).>
U0416	CAN (VDC) Data Abnormal	<Ref. to EN(H4SO)(diag)-291, DTC U0416 CAN (VDC) DATA ABNORMAL, Diagnostic Procedure with Diagnostic Trouble Code (DTC).>
U0422	CAN (BCU) Data Abnormal	<Ref. to EN(H4SO)(diag)-291, DTC U0422 CAN (BCU) DATA ABNORMAL, Diagnostic Procedure with Diagnostic Trouble Code (DTC).>

GETmeMANUALS.org

19. Diagnostic Procedure with Diagnostic Trouble Code (DTC)

A: DTC P0026 INTAKE VALVE CONTROL SOLENOID CIRCUIT RANGE/PERFORMANCE (BANK 1)

DTC DETECTING CONDITION:

- Immediately at fault recognition
- GENERAL DESCRIPTION <Ref. to GD(H4SO)-9, DTC P0026 INTAKE VALVE CONTROL SOLENOID CIRCUIT RANGE/PERFORMANCE (BANK 1), Diagnostic Trouble Code (DTC) Detecting Criteria.>

TROUBLE SYMPTOM:

Improper idling

CAUTION:

After servicing or replacing faulty parts, perform Clear Memory Mode <Ref. to EN(H4SO)(diag)-51, OPERATION, Clear Memory Mode.>, and Inspection Mode <Ref. to EN(H4SO)(diag)-40, PROCEDURE, Inspection Mode.>.

WIRING DIAGRAM:

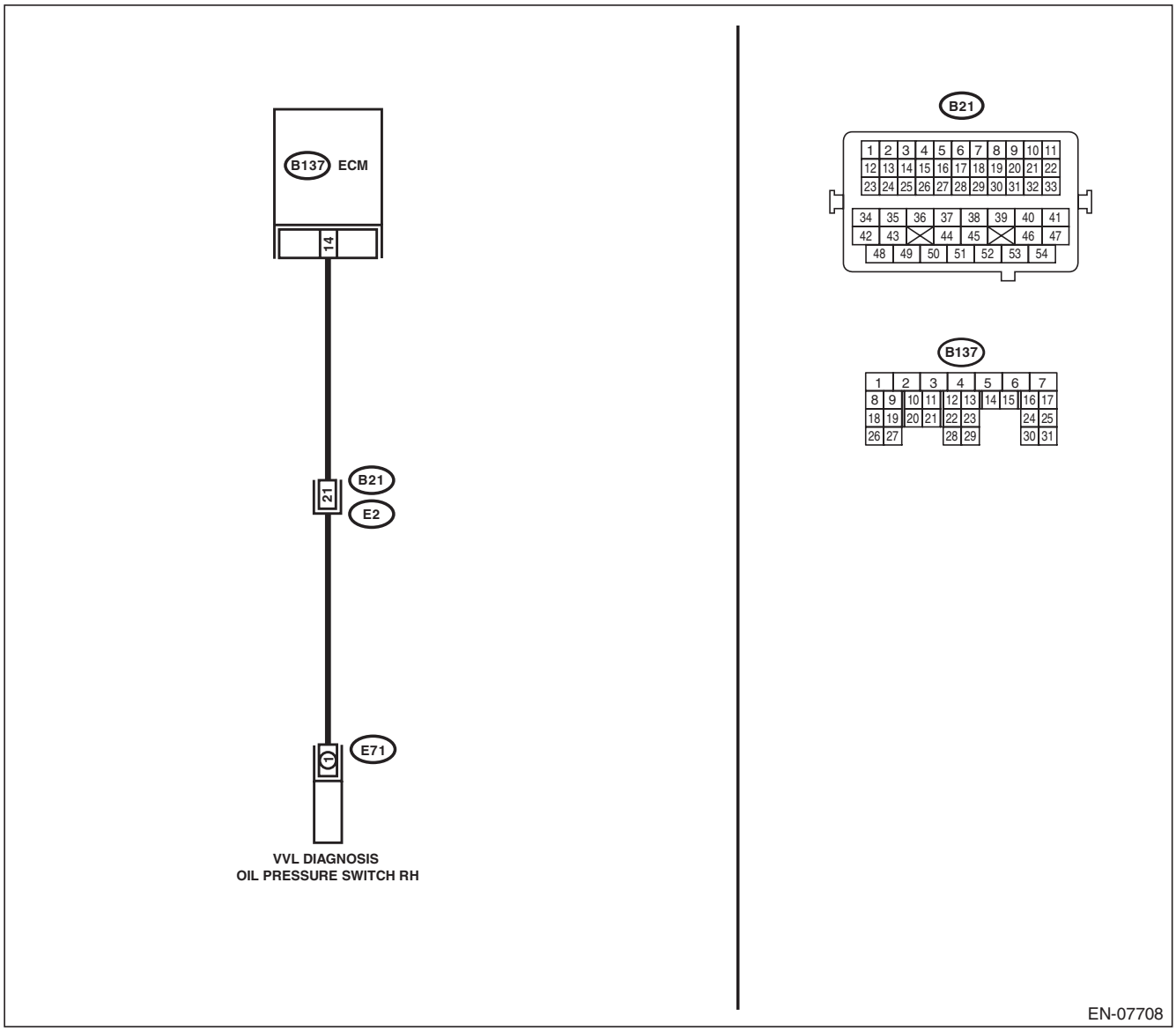

GETtheMANUALS.org

	Step	Check	Yes	No
1	**CHECK HARNESS BETWEEN ECM AND VARIABLE VALVE LIFT DIAGNOSIS OIL PRESSURE SWITCH RH CONNECTOR.** 1) Warm up the engine. 2) Turn the ignition switch to OFF. 3) Disconnect the connectors from the ECM and variable valve lift diagnosis oil pressure switch RH. 4) Measure the resistance of harness between ECM and variable valve lift diagnosis oil pressure switch RH connector. ***Connector & terminal*** ***(B137) No. 14 — (E71) No. 1:***	Is the resistance less than 1 Ω?	Go to step **2**.	Repair the harness and connector. NOTE: In this case, repair the following item: • Open circuit in harness between ECM and variable valve lift diagnosis oil pressure switch RH connector • Poor contact of coupling connector
2	**CHECK HARNESS BETWEEN ECM AND VARIABLE VALVE LIFT DIAGNOSIS OIL PRESSURE SWITCH RH CONNECTOR.** Measure the resistance between the variable valve lift diagnosis oil pressure switch RH connector and engine ground. ***Connector & terminal*** ***(E71) No. 1 — Engine ground:***	Is the resistance 1 MΩ or more?	Go to step **3**.	Repair the ground short circuit in harness between ECM and variable valve lift diagnosis oil pressure switch RH connector.
3	**CHECK HARNESS BETWEEN ECM AND VARIABLE VALVE LIFT DIAGNOSIS OIL PRESSURE SWITCH RH CONNECTOR.** 1) Turn the ignition switch to ON. 2) Measure the voltage between the variable valve lift diagnosis oil pressure switch RH connector and engine ground. ***Connector & terminal*** ***(E71) No. 1 (+) — Engine ground (–):***	Is the voltage 10 V or more?	Repair the short circuit to power supply in harness between ECM and variable valve lift diagnosis oil pressure switch RH connector.	Go to step **4**.
4	**CHECK DTC.** 1) Perform the Clear Memory Mode. <Ref. to EN(H4SO)(diag)-51, Clear Memory Mode.> 2) After idling the engine, check the DTC.	Is DTC displayed?	Replace the oil switching solenoid valve RH. <Ref. to ME(H4SO)-95, Oil Switching Solenoid Valve.> After replacement, go to the next step. Go to step **5**.	End.
5	**CHECK DTC.** 1) Perform the Clear Memory Mode. <Ref. to EN(H4SO)(diag)-51, Clear Memory Mode.> 2) After idling the engine, check the DTC.	Is DTC displayed?	Check for oil routing.	End.

GETtheMANUALS.com

B: DTC P0028 INTAKE VALVE CONTROL SOLENOID CIRCUIT RANGE/PERFORMANCE (BANK 2)

DTC DETECTING CONDITION:

- Immediately at fault recognition
- GENERAL DESCRIPTION <Ref. to GD(H4SO)-10, DTC P0028 INTAKE VALVE CONTROL SOLENOID CIRCUIT RANGE/PERFORMANCE (BANK 2), Diagnostic Trouble Code (DTC) Detecting Criteria.>

TROUBLE SYMPTOM:

Improper idling

CAUTION:

After servicing or replacing faulty parts, perform Clear Memory Mode <Ref. to EN(H4SO)(diag)-51, OPERATION, Clear Memory Mode.>, and Inspection Mode <Ref. to EN(H4SO)(diag)-40, PROCEDURE, Inspection Mode.>.

WIRING DIAGRAM:

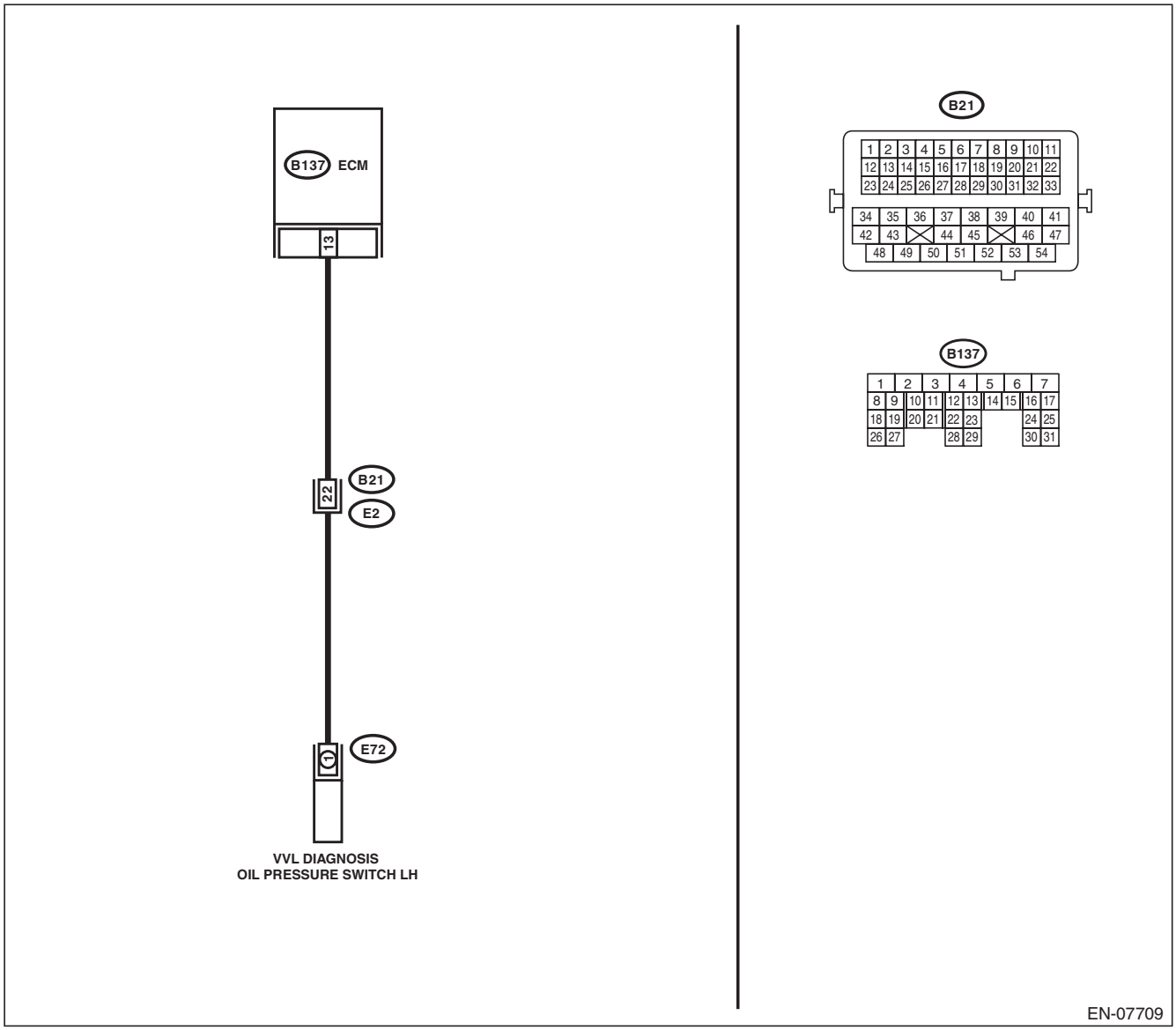

GETfreeMANUALS.org

	Step	Check	Yes	No
1	**CHECK HARNESS BETWEEN ECM AND VARIABLE VALVE LIFT DIAGNOSIS OIL PRESSURE SWITCH LH CONNECTOR.** 1) Warm up the engine. 2) Turn the ignition switch to OFF. 3) Disconnect the connectors from the ECM and variable valve lift diagnosis oil pressure switch LH. 4) Measure the resistance of harness between ECM and variable valve lift diagnosis oil pressure switch LH connector. ***Connector & terminal*** ***(B137) No. 13 — (E72) No. 1:***	Is the resistance less than 1 Ω?	Go to step **2**.	Repair the harness and connector. NOTE: In this case, repair the following item: • Open circuit in harness between ECM and variable valve lift diagnosis oil pressure switch LH connector • Poor contact of coupling connector
2	**CHECK HARNESS BETWEEN ECM AND VARIABLE VALVE LIFT DIAGNOSIS OIL PRESSURE SWITCH LH CONNECTOR.** Measure the resistance between the variable valve lift diagnosis oil pressure switch LH connector and engine ground. ***Connector & terminal*** ***(E72) No. 1 — Engine ground:***	Is the resistance 1 MΩ or more?	Go to step **3**.	Repair the ground short circuit in harness between ECM and variable valve lift diagnosis oil pressure switch LH connector.
3	**CHECK HARNESS BETWEEN ECM AND VARIABLE VALVE LIFT DIAGNOSIS OIL PRESSURE SWITCH LH CONNECTOR.** 1) Turn the ignition switch to ON. 2) Measure the voltage between the variable valve lift diagnosis oil pressure switch LH connector and engine ground. ***Connector & terminal*** ***(E72) No. 1 (+) — Engine ground (–):***	Is the voltage 10 V or more?	Repair the short circuit to power supply in harness between ECM and variable valve lift diagnosis oil pressure switch LH connector.	Go to step **4**.
4	**CHECK DTC.** 1) Perform the Clear Memory Mode. <Ref. to EN(H4SO)(diag)-51, Clear Memory Mode.> 2) After idling the engine, check the DTC.	Is DTC displayed?	Replace the oil switching solenoid valve LH. <Ref. to ME(H4SO)-95, Oil Switching Solenoid Valve.> After replacement, go to the next step. Go to step **5**.	End.
5	**CHECK DTC.** 1) Perform the Clear Memory Mode. <Ref. to EN(H4SO)(diag)-51, Clear Memory Mode.> 2) After idling the engine, check the DTC.	Is DTC displayed?	Check for oil routing.	End.

GETmeMANUALS.org

C: DTC P0030 HO2S HEATER CONTROL CIRCUIT (BANK 1 SENSOR 1)

DTC DETECTING CONDITION:

- Detected when two consecutive driving cycles with fault occur.
- GENERAL DESCRIPTION <Ref. to GD(H4SO)-11, DTC P0030 HO2S HEATER CONTROL CIRCUIT (BANK 1 SENSOR 1), Diagnostic Trouble Code (DTC) Detecting Criteria.>

CAUTION:

After servicing or replacing faulty parts, perform Clear Memory Mode <Ref. to EN(H4SO)(diag)-51, OPERATION, Clear Memory Mode.>, and Inspection Mode <Ref. to EN(H4SO)(diag)-40, PROCEDURE, Inspection Mode.>.

WIRING DIAGRAM:

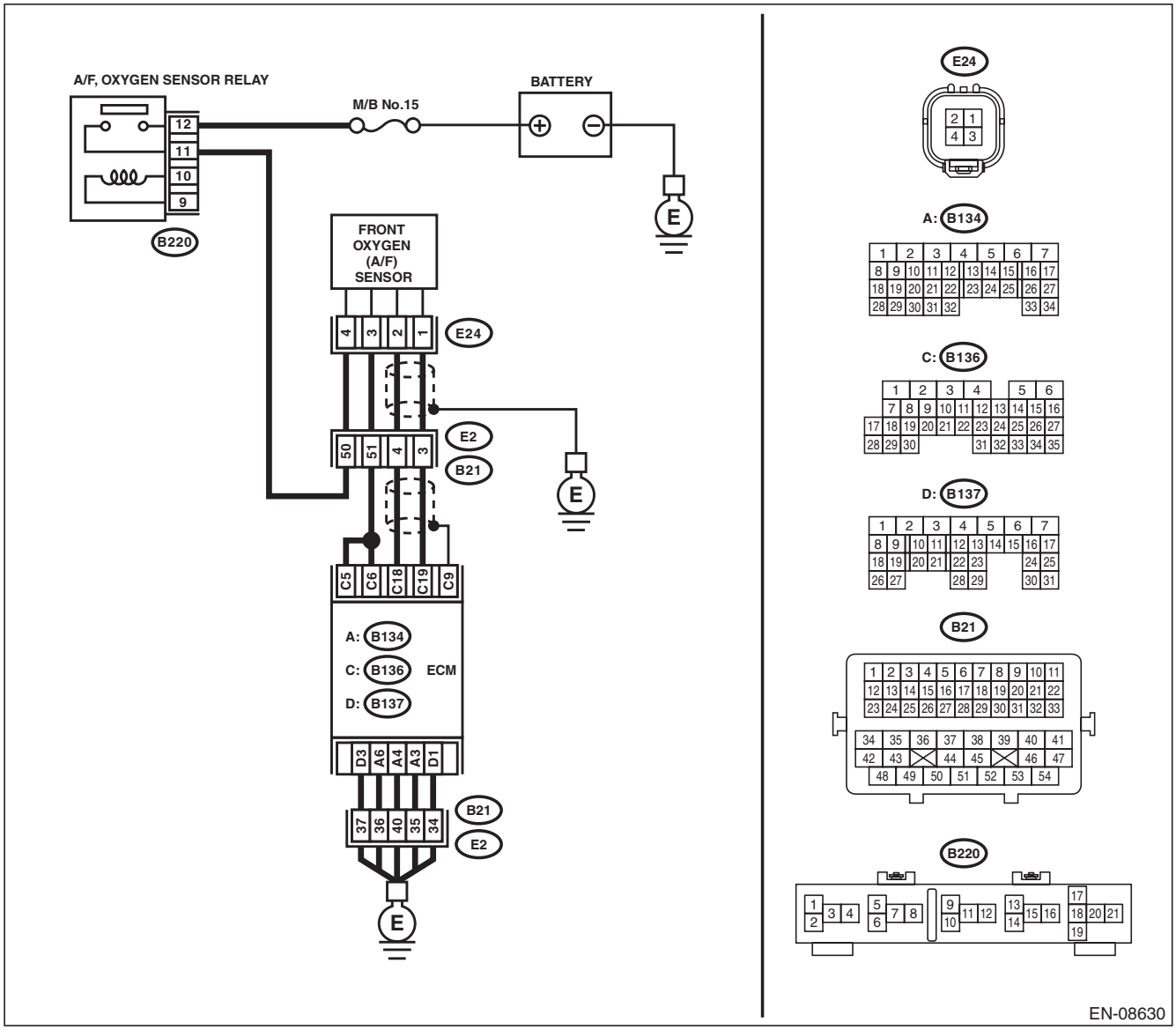

GETmeMANUALS.org

	Step	Check	Yes	No
1	**CHECK HARNESS BETWEEN ECM AND FRONT OXYGEN (A/F) SENSOR CONNECTOR.** 1) Start and warm up the engine. 2) Turn the ignition switch to OFF. 3) Disconnect the connectors from ECM and front oxygen (A/F) sensor. 4) Measure the resistance of harness between ECM and front oxygen (A/F) sensor connector. ***Connector & terminal*** ***(B136) No. 5 — (E24) No. 3:*** ***(B136) No. 6 — (E24) No. 3:*** ***(B136) No. 18 — (E24) No. 2:*** ***(B136) No. 19 — (E24) No. 1:***	Is the resistance less than 1 Ω?	Go to step **2**.	Repair the harness and connector. NOTE: In this case, repair the following item: • Open circuit in harness between ECM and front oxygen (A/F) sensor connector • Poor contact of coupling connector	
2	**CHECK FRONT OXYGEN (A/F) SENSOR.** Measure the resistance between front oxygen (A/F) sensor connector terminals. ***Terminals*** ***No. 3 — No. 4:***	Is the resistance 2 — 3 Ω?	Go to step **3**.	Replace the front oxygen (A/F) sensor. <Ref. to FU(H4SO)-42, Front Oxygen (A/F) Sensor.>
3	**CHECK FOR POOR CONTACT.** Check for poor contact of ECM and front oxygen (A/F) sensor connector.	Is there poor contact of ECM or front oxygen (A/F) sensor connector?	Repair the poor contact of ECM or front oxygen (A/F) sensor connector.	Replace the front oxygen (A/F) sensor. <Ref. to FU(H4SO)-42, Front Oxygen (A/F) Sensor.>

GETthemANSWERS.org

D: DTC P0031 HO2S HEATER CONTROL CIRCUIT LOW (BANK 1 SENSOR 1)

DTC DETECTING CONDITION:

- Immediately at fault recognition
- GENERAL DESCRIPTION <Ref. to GD(H4SO)-13, DTC P0031 HO2S HEATER CONTROL CIRCUIT LOW (BANK 1 SENSOR 1), Diagnostic Trouble Code (DTC) Detecting Criteria.>

CAUTION:

After servicing or replacing faulty parts, perform Clear Memory Mode <Ref. to EN(H4SO)(diag)-51, OPERATION, Clear Memory Mode.>, and Inspection Mode <Ref. to EN(H4SO)(diag)-40, PROCEDURE, Inspection Mode.>.

WIRING DIAGRAM:

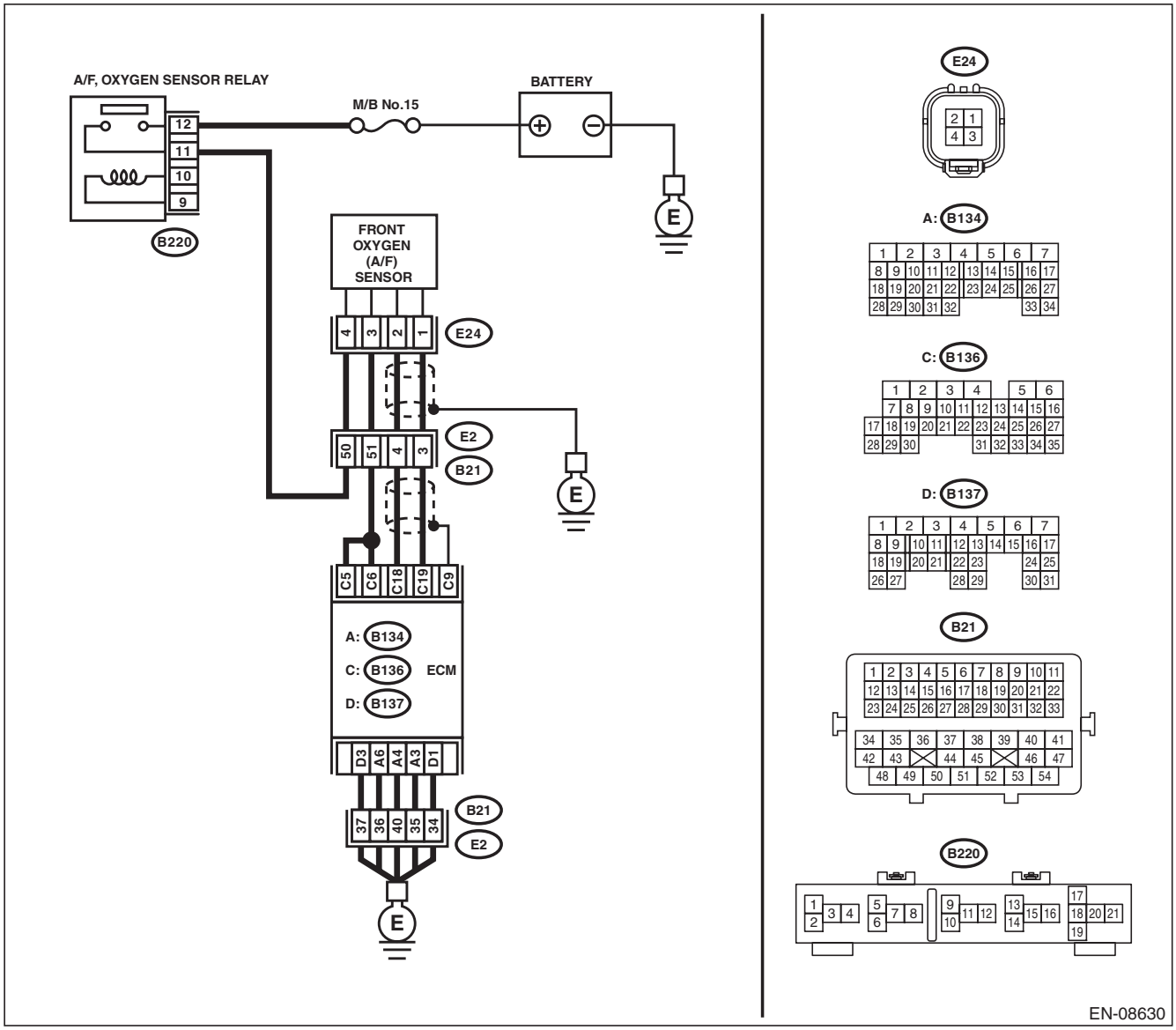

GETmeMANUALS.org

	Step	Check	Yes	No
1	**CHECK POWER SUPPLY TO FRONT OXYGEN (A/F) SENSOR.** 1) Turn the ignition switch to OFF. 2) Disconnect the connectors from front oxygen (A/F) sensor. 3) Turn the ignition switch to ON. 4) Measure the voltage between front oxygen (A/F) sensor connector and engine ground. ***Connector & terminal*** ***(E24) No. 4 (+) — Engine ground (–):***	Is the voltage 10 V or more?	Go to step **2**.	Repair the power supply line. NOTE: In this case, repair the following item: • Open circuit in harness between A/F, oxygen sensor relay connector and front oxygen (A/F) sensor connector • Poor contact of A/F, oxygen sensor relay connector • Poor contact of coupling connector • Malfunction of A/F, oxygen sensor relay
2	**CHECK HARNESS BETWEEN ECM AND FRONT OXYGEN (A/F) SENSOR CONNECTOR.** 1) Turn the ignition switch to OFF. 2) Disconnect the connectors from ECM. 3) Measure the resistance between ECM and front oxygen (A/F) sensor connector. ***Connector & terminal*** ***(B136) No. 5 — (E24) No. 3:*** ***(B136) No. 6 — (E24) No. 3:***	Is the resistance less than 1 Ω?	Go to step **3**.	Repair the harness and connector. NOTE: In this case, repair the following item: • Open circuit in harness between ECM and front oxygen (A/F) sensor connector • Poor contact of coupling connector
3	**CHECK GROUND CIRCUIT FOR ECM.** Measure the resistance of harness between ECM and chassis ground. ***Connector & terminal*** ***(B134) No. 3 — Chassis ground:*** ***(B134) No. 4 — Chassis ground:*** ***(B134) No. 6 — Chassis ground:*** ***(B137) No. 1 — Chassis ground:*** ***(B137) No. 3 — Chassis ground:***	Is the resistance less than 5 Ω?	Go to step **4**.	Repair the harness and connector. NOTE: In this case, repair the following item: • Open circuit of harness between ECM and engine ground • Poor contact of coupling connector
4	**CHECK FRONT OXYGEN (A/F) SENSOR.** Measure the resistance between front oxygen (A/F) sensor connector terminals. ***Terminals*** ***No. 3 — No. 4:***	Is the resistance 2 — 3 Ω?	Repair the poor contact of ECM connector.	Replace the front oxygen (A/F) sensor. <Ref. to FU(H4SO)-42, Front Oxygen (A/F) Sensor.>

GETmeMANUALS.org

E: DTC P0032 HO2S HEATER CONTROL CIRCUIT HIGH (BANK 1 SENSOR 1)

DTC DETECTING CONDITION:

- Immediately at fault recognition
- GENERAL DESCRIPTION <Ref. to GD(H4SO)-15, DTC P0032 HO2S HEATER CONTROL CIRCUIT HIGH (BANK 1 SENSOR 1), Diagnostic Trouble Code (DTC) Detecting Criteria.>

CAUTION:

After servicing or replacing faulty parts, perform Clear Memory Mode <Ref. to EN(H4SO)(diag)-51, OPERATION, Clear Memory Mode.>, and Inspection Mode <Ref. to EN(H4SO)(diag)-40, PROCEDURE, Inspection Mode.>.

WIRING DIAGRAM:

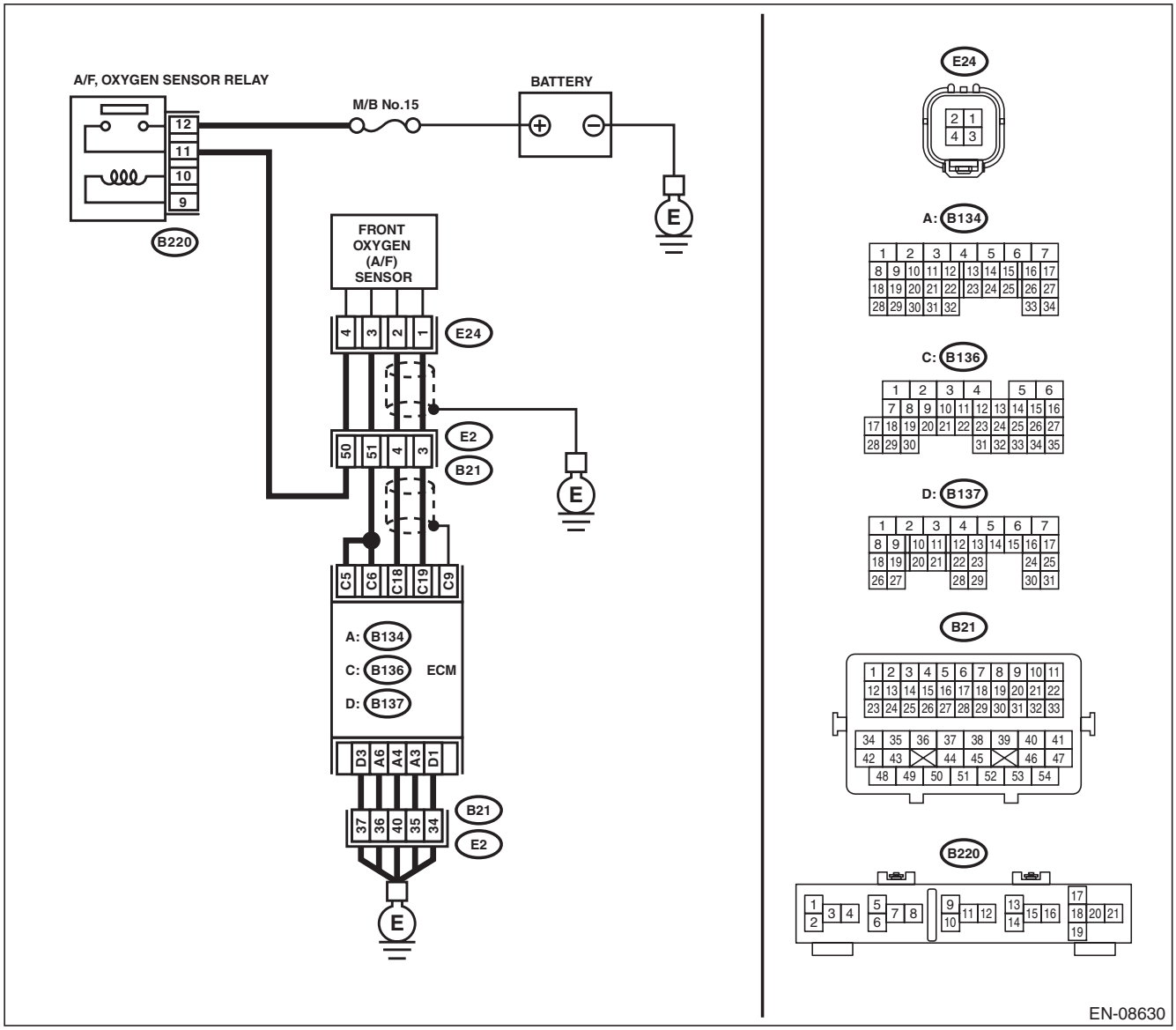

GETfreeMANUALS.org

Step		Check	Yes	No
1	**CHECK HARNESS BETWEEN ECM AND FRONT OXYGEN (A/F) SENSOR CONNECTOR.** 1) Turn the ignition switch to OFF. 2) Measure the voltage between ECM and chassis ground. ***Connector & terminal*** ***(B136) No. 5 (+) — Chassis ground (–):*** ***(B136) No. 6 (+) — Chassis ground (–):***	Is the voltage 10 V or more?	Repair the short circuit to power in the harness between ECM and front oxygen (A/F) sensor connector.	Go to step **2**.
2	**CHECK GROUND CIRCUIT FOR ECM.** 1) Disconnect the connectors from ECM. 2) Measure the resistance between ECM and chassis ground. ***Connector & terminal*** ***(B134) No. 3 — Chassis ground:*** ***(B134) No. 4 — Chassis ground:*** ***(B134) No. 6 — Chassis ground:*** ***(B137) No. 1 — Chassis ground:*** ***(B137) No. 3 — Chassis ground:***	Is the resistance less than 5 Ω?	Repair the poor contact of ECM connector.	Repair the harness and connector. NOTE: In this case, repair the following item: • Open circuit of harness between ECM and engine ground • Poor contact of coupling connector

GETfreeMANUALS.org

F: DTC P0037 HO2S HEATER CONTROL CIRCUIT LOW (BANK 1 SENSOR 2)

DTC DETECTING CONDITION:

- Detected when two consecutive driving cycles with fault occur.
- GENERAL DESCRIPTION <Ref. to GD(H4SO)-17, DTC P0037 HO2S HEATER CONTROL CIRCUIT LOW (BANK 1 SENSOR 2), Diagnostic Trouble Code (DTC) Detecting Criteria.>

CAUTION:

After servicing or replacing faulty parts, perform Clear Memory Mode <Ref. to EN(H4SO)(diag)-51, OPERATION, Clear Memory Mode.>, and Inspection Mode <Ref. to EN(H4SO)(diag)-40, PROCEDURE, Inspection Mode.>.

WIRING DIAGRAM:

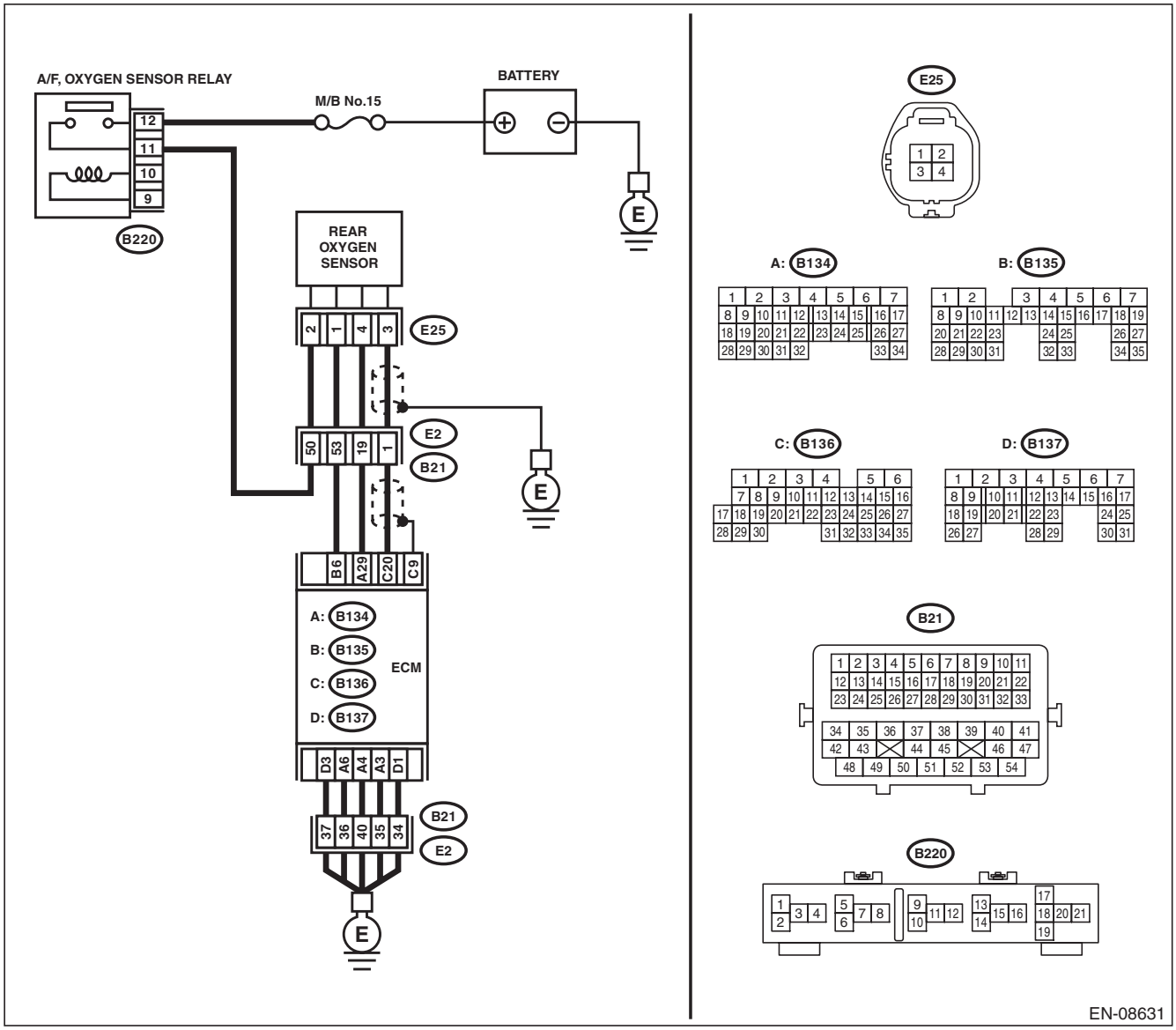

GETmeMANUALS.org

	Step	Check	Yes	No
1	**CHECK POWER SUPPLY TO REAR OXYGEN SENSOR.** 1) Turn the ignition switch to OFF. 2) Disconnect the connector from rear oxygen sensor. 3) Turn the ignition switch to ON. 4) Measure the voltage between rear oxygen sensor connector and engine ground. ***Connector & terminal*** ***(E25) No. 2 (+) — Engine ground (–):***	Is the voltage 10 V or more?	Go to step **2**.	Repair the power supply line. NOTE: In this case, repair the following item: • Open circuit in harness between A/F, oxygen sensor relay connector and rear oxygen sensor connector • Poor contact of A/F, oxygen sensor relay connector • Poor contact of coupling connector
2	**CHECK HARNESS BETWEEN ECM AND REAR OXYGEN SENSOR CONNECTOR.** 1) Turn the ignition switch to OFF. 2) Disconnect the connector from ECM. 3) Measure the resistance between ECM and oxygen sensor connector. ***Connector & terminal*** ***(B135) No. 6 — (E25) No. 1:***	Is the resistance less than 1 Ω?	Go to step **3**.	Repair the harness and connector. NOTE: In this case, repair the following item: • Open circuit in harness between ECM and rear oxygen sensor connector • Poor contact of coupling connector
3	**CHECK GROUND CIRCUIT FOR ECM.** Measure the resistance of harness between ECM and chassis ground. ***Connector & terminal*** ***(B134) No. 3 — Chassis ground:*** ***(B134) No. 4 — Chassis ground:*** ***(B134) No. 6 — Chassis ground:*** ***(B137) No. 1 — Chassis ground:*** ***(B137) No. 3 — Chassis ground:***	Is the resistance less than 5 Ω?	Go to step **4**.	Repair the harness and connector. NOTE: In this case, repair the following item: • Open circuit of harness between ECM and engine ground • Poor contact of coupling connector
4	**CHECK REAR OXYGEN SENSOR.** Measure the resistance between rear oxygen sensor connector terminals. ***Terminals*** ***No. 2 — No. 1:***	Is the resistance 5 — 7 Ω?	Repair the poor contact of ECM connector.	Replace the rear oxygen sensor. <Ref. to FU(H4SO)-44, Rear Oxygen Sensor.>

GETmeMANUALS.org

G: DTC P0038 HO2S HEATER CONTROL CIRCUIT HIGH (BANK 1 SENSOR 2)

DTC DETECTING CONDITION:

- Detected when two consecutive driving cycles with fault occur.
- GENERAL DESCRIPTION <Ref. to GD(H4SO)-19, DTC P0038 HO2S HEATER CONTROL CIRCUIT HIGH (BANK 1 SENSOR 2), Diagnostic Trouble Code (DTC) Detecting Criteria.>

CAUTION:

After servicing or replacing faulty parts, perform Clear Memory Mode <Ref. to EN(H4SO)(diag)-51, OPERATION, Clear Memory Mode.>, and Inspection Mode <Ref. to EN(H4SO)(diag)-40, PROCEDURE, Inspection Mode.>.

WIRING DIAGRAM:

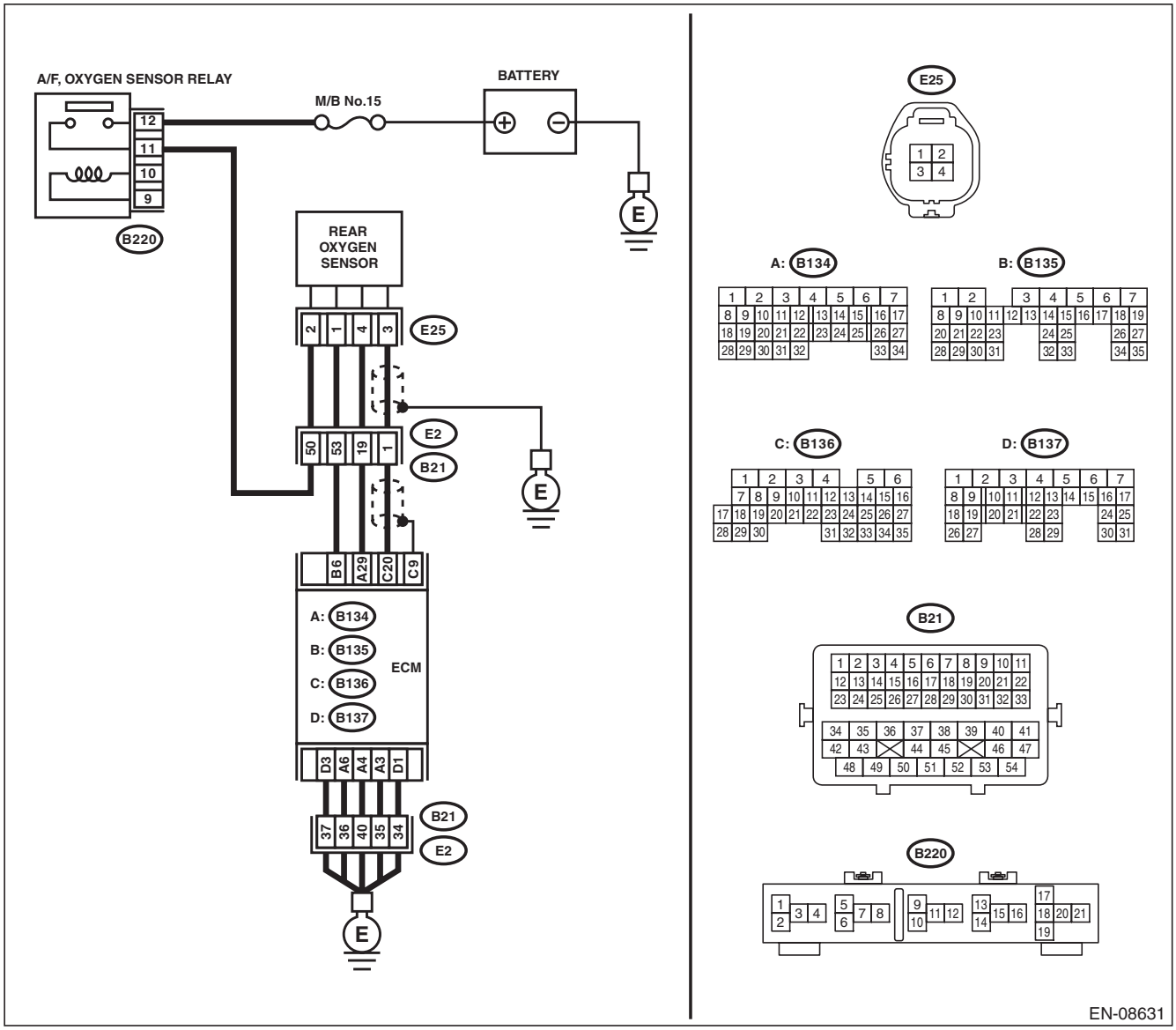

Step		Check	Yes	No
1	**CHECK HARNESS BETWEEN ECM AND REAR OXYGEN SENSOR CONNECTOR.** 1) Turn the ignition switch to OFF. 2) Measure the voltage between ECM and chassis ground. ***Connector & terminal*** ***(B135) No. 6 (+) — Chassis ground (–):***	Is the voltage 10 V or more?	Repair the short circuit to power in the harness between ECM and rear oxygen sensor connector.	Go to step **2**.

GETmeMANUALS.org

Step		Check	Yes	No
2	**CHECK GROUND CIRCUIT FOR ECM.** 1) Disconnect the connector from ECM. 2) Measure the resistance between ECM and chassis ground. ***Connector & terminal*** ***(B134) No. 3 — Chassis ground:*** ***(B134) No. 4 — Chassis ground:*** ***(B134) No. 6 — Chassis ground:*** ***(B137) No. 1 — Chassis ground:*** ***(B137) No. 3 — Chassis ground:***	Is the resistance less than 5 Ω?	Repair the poor contact of ECM connector.	Repair the harness and connector. NOTE: In this case, repair the following item: • Open circuit of harness between ECM and engine ground • Poor contact of coupling connector

GETmeMANUALS.org

H: DTC P0068 MAP/MAF - THROTTLE POSITION CORRELATION

DTC DETECTING CONDITION:

- Detected when two consecutive driving cycles with fault occur.
- GENERAL DESCRIPTION <Ref. to GD(H4SO)-21, DTC P0068 MAP/MAF - THROTTLE POSITION CORRELATION, Diagnostic Trouble Code (DTC) Detecting Criteria.>

CAUTION:

After servicing or replacing faulty parts, perform Clear Memory Mode <Ref. to EN(H4SO)(diag)-51, OPERATION, Clear Memory Mode.>, and Inspection Mode <Ref. to EN(H4SO)(diag)-40, PROCEDURE, Inspection Mode.>.

	Step	Check	Yes	No
1	**CHECK AIR INTAKE SYSTEM.**	Are there holes, loose bolts or disconnection of hose on air intake system?	Repair the air intake system.	Go to step **2**.
2	**CHECK MANIFOLD ABSOLUTE PRESSURE SENSOR.** 1) Start the engine and warm up engine until coolant temperature is higher than 75°C (167°F). 2) For CVT models, set the select lever to “P” range or “N” range, and for MT models, place the shift lever in the neutral position. 3) Turn the A/C switch to OFF. 4) Turn all the accessory switches to OFF. 5) Read the value of «Mani. Absolute Pressure» using the Subaru Select Monitor or a general scan tool. NOTE: • Subaru Select Monitor For detailed operation procedures, refer to “READ CURRENT DATA FOR ENGINE”. <Ref. to EN(H4SO)(diag)-33, Subaru Select Monitor.> • General scan tool For detailed operation procedures, refer to the “General Scan Tool Instruction Manual”.	Is the value in «Mani. Absolute Pressure» 73.3 — 106.6 kPa (550 — 800 mmHg, 21.65 — 31.50 inHg) when the ignition is turned ON, and 20.0 — 46.7 kPa (150 — 350 mmHg, 5.91 — 13.78 inHg) during idling?	Go to step **3**.	Replace the manifold absolute pressure sensor. <Ref. to FU(H4SO)-33, Manifold Absolute Pressure Sensor.>
3	**CHECK THROTTLE OPENING ANGLE.** Using the Subaru Select Monitor or a general scan tool, read the value in «Throttle Opening Angle». NOTE: • Subaru Select Monitor For detailed operation procedures, refer to “READ CURRENT DATA FOR ENGINE”. <Ref. to EN(H4SO)(diag)-33, Subaru Select Monitor.> • General scan tool For detailed operation procedures, refer to the “General Scan Tool Instruction Manual”.	Is the value in «Throttle Opening Angle» with the throttle fully closed less than 5%?	Go to step **4**.	Replace the electronic throttle control. <Ref. to FU(H4SO)-15, Throttle Body.>
4	**CHECK THROTTLE OPENING ANGLE.**	Is the value in «Throttle Opening Angle» with the throttle fully open 85% or more?	Replace the manifold absolute pressure sensor. <Ref. to FU(H4SO)-33, Manifold Absolute Pressure Sensor.>	Replace the electronic throttle control. <Ref. to FU(H4SO)-15, Throttle Body.>

GETtheMANUALS.org

I: DTC P0076 INTAKE VALVE CONTROL SOLENOID CIRCUIT LOW (BANK 1)

DTC DETECTING CONDITION:

- Immediately at fault recognition
- GENERAL DESCRIPTION <Ref. to GD(H4SO)-23, DTC P0076 INTAKE VALVE CONTROL SOLENOID CIRCUIT LOW (BANK 1), Diagnostic Trouble Code (DTC) Detecting Criteria.>

TROUBLE SYMPTOM:

Improper idling

CAUTION:

After servicing or replacing faulty parts, perform Clear Memory Mode <Ref. to EN(H4SO)(diag)-51, OPERATION, Clear Memory Mode.>, and Inspection Mode <Ref. to EN(H4SO)(diag)-40, PROCEDURE, Inspection Mode.>.

WIRING DIAGRAM:

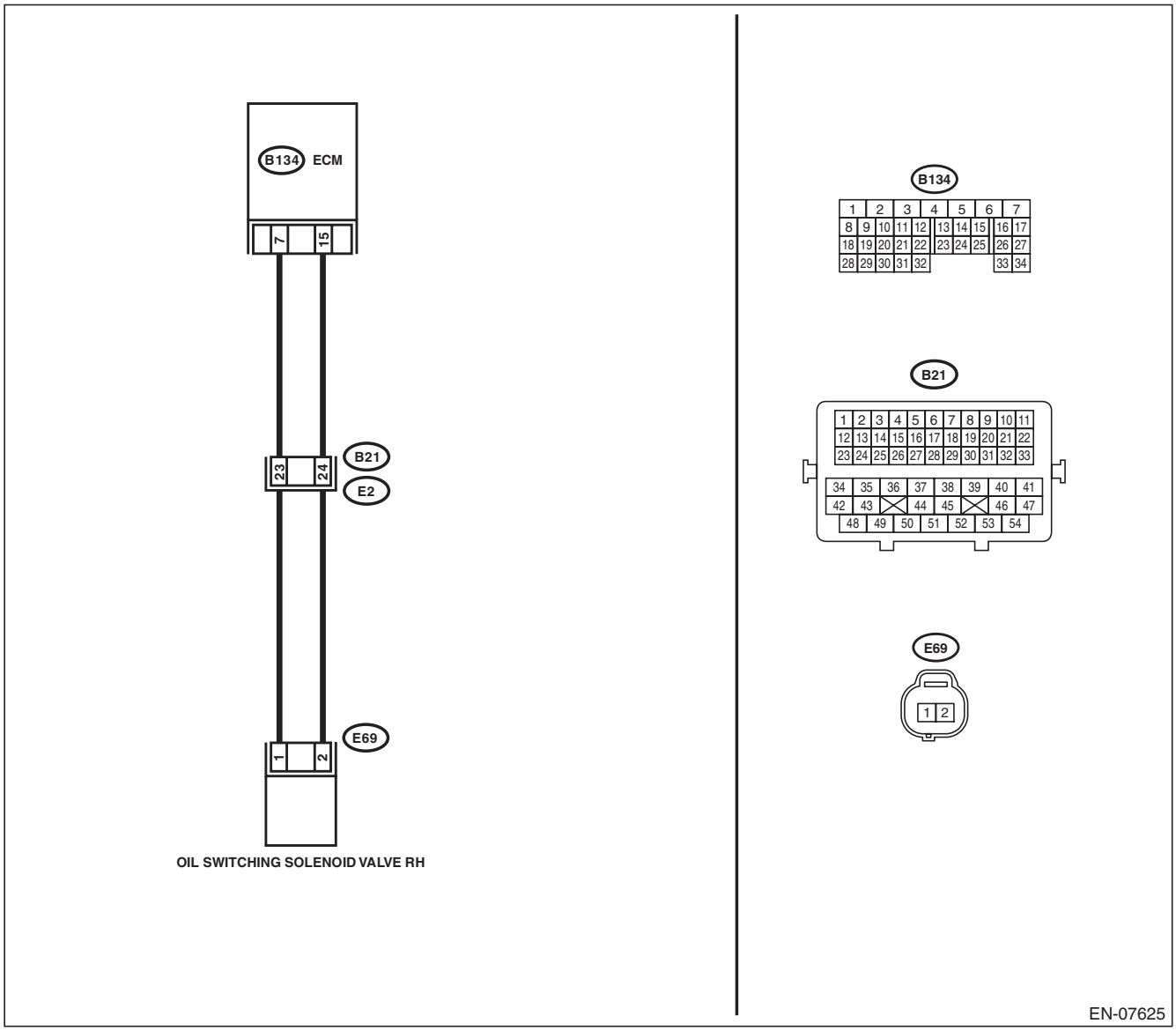

GETmeMANUALS.org

	Step	Check	Yes	No
1	**CHECK HARNESS BETWEEN ECM AND OIL SWITCHING SOLENOID VALVE RH CONNECTOR.** 1) Turn the ignition switch to OFF. 2) Disconnect the connectors from the ECM and oil switching solenoid valve RH. 3) Measure the resistance of harness between ECM and oil switching solenoid valve RH. ***Connector & terminal*** ***(B134) No. 7 — (E69) No. 1:*** ***(B134) No. 15 — (E69) No. 2:***	Is the resistance less than 1 Ω?	Go to step **2**.	Repair the harness and connector. NOTE: In this case, repair the following item: • Open circuit in harness between ECM and oil switching solenoid valve RH connector • Poor contact of coupling connector
2	**CHECK HARNESS BETWEEN ECM AND OIL SWITCHING SOLENOID VALVE RH CONNECTOR.** Measure the resistance between ECM and chassis ground. ***Connector & terminal*** ***(B134) No. 7 — Chassis ground:*** ***(B134) No. 15 — Chassis ground:***	Is the resistance 1 MΩ or more?	Go to step **3**.	Repair the short circuit to ground in harness between ECM and oil switching solenoid valve RH connector.
3	**CHECK OIL SWITCHING SOLENOID VALVE RH.** Measure the resistance between oil switching solenoid valve RH terminals. ***Terminals*** ***No. 1 — No. 2:***	Is the resistance 6 — 12 Ω?	Repair the poor contact of ECM and oil switching solenoid valve RH connector.	Replace the oil switching solenoid valve RH. <Ref. to ME(H4SO)-95, Oil Switching Solenoid Valve.>

GETtheMANUALS.org

J: DTC P0077 INTAKE VALVE CONTROL SOLENOID CIRCUIT HIGH (BANK 1)

DTC DETECTING CONDITION:

- Immediately at fault recognition
- GENERAL DESCRIPTION <Ref. to GD(H4SO)-24, DTC P0077 INTAKE VALVE CONTROL SOLENOID CIRCUIT HIGH (BANK 1), Diagnostic Trouble Code (DTC) Detecting Criteria.>

TROUBLE SYMPTOM:

Improper idling

CAUTION:

After servicing or replacing faulty parts, perform Clear Memory Mode <Ref. to EN(H4SO)(diag)-51, OPERATION, Clear Memory Mode.>, and Inspection Mode <Ref. to EN(H4SO)(diag)-40, PROCEDURE, Inspection Mode.>.

WIRING DIAGRAM:

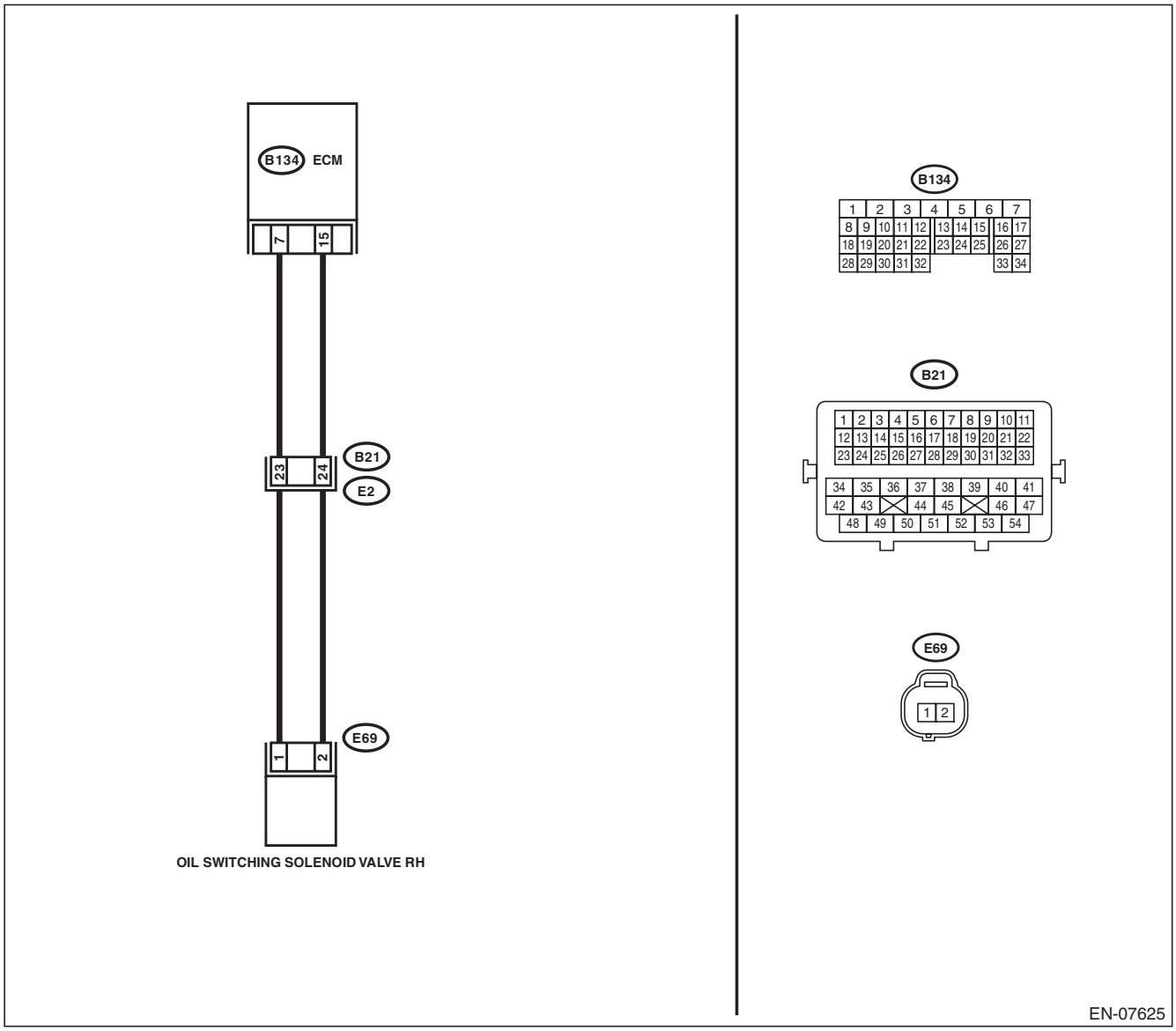

GETtheMANUALS.org

	Step	Check	Yes	No
1	**CHECK HARNESS BETWEEN ECM AND OIL SWITCHING SOLENOID VALVE RH CONNECTOR.** 1) Turn the ignition switch to OFF. 2) Disconnect the connectors from the ECM and oil switching solenoid valve RH. 3) Measure the voltage between ECM and chassis ground. ***Connector & terminal*** ***(B134) No. 7 (+) — Chassis ground (–):*** ***(B134) No. 15 (+) — Chassis ground (–):***	Is the voltage less than 1 V?	Go to step **2**.	Repair the short circuit to power supply in harness between ECM and oil switching solenoid valve RH connector.
2	**CHECK HARNESS BETWEEN ECM AND OIL SWITCHING SOLENOID VALVE RH CONNECTOR.** Measure the resistance of harness between ECM and oil switching solenoid valve RH connector. ***Connector & terminal*** ***(B134) No. 7 — (E69) No. 1:*** ***(B134) No. 15 — (E69) No. 2:***	Is the resistance less than 1 Ω?	Go to step **3**.	Repair the harness and connector. NOTE: In this case, repair the following item: • Open circuit in harness between ECM and oil switching solenoid valve RH connector • Poor contact of coupling connector
3	**CHECK OIL SWITCHING SOLENOID VALVE RH.** Measure the resistance between oil switching solenoid valve RH terminals. ***Terminals*** ***No. 1 — No. 2:***	Is the resistance 6 — 12 Ω?	Repair the poor contact of ECM and oil switching solenoid valve RH connector.	Replace the oil switching solenoid valve RH. <Ref. to ME(H4SO)-95, Oil Switching Solenoid Valve.>

GETthemANSWERS.org

K: DTC P0082 INTAKE VALVE CONTROL SOLENOID CIRCUIT LOW (BANK 2)

DTC DETECTING CONDITION:

- Immediately at fault recognition
- GENERAL DESCRIPTION <Ref. to GD(H4SO)-24, DTC P0082 INTAKE VALVE CONTROL SOLENOID CIRCUIT LOW (BANK 2), Diagnostic Trouble Code (DTC) Detecting Criteria.>

TROUBLE SYMPTOM:

Improper idling

CAUTION:

After servicing or replacing faulty parts, perform Clear Memory Mode <Ref. to EN(H4SO)(diag)-51, OPERATION, Clear Memory Mode.>, and Inspection Mode <Ref. to EN(H4SO)(diag)-40, PROCEDURE, Inspection Mode.>.

WIRING DIAGRAM:

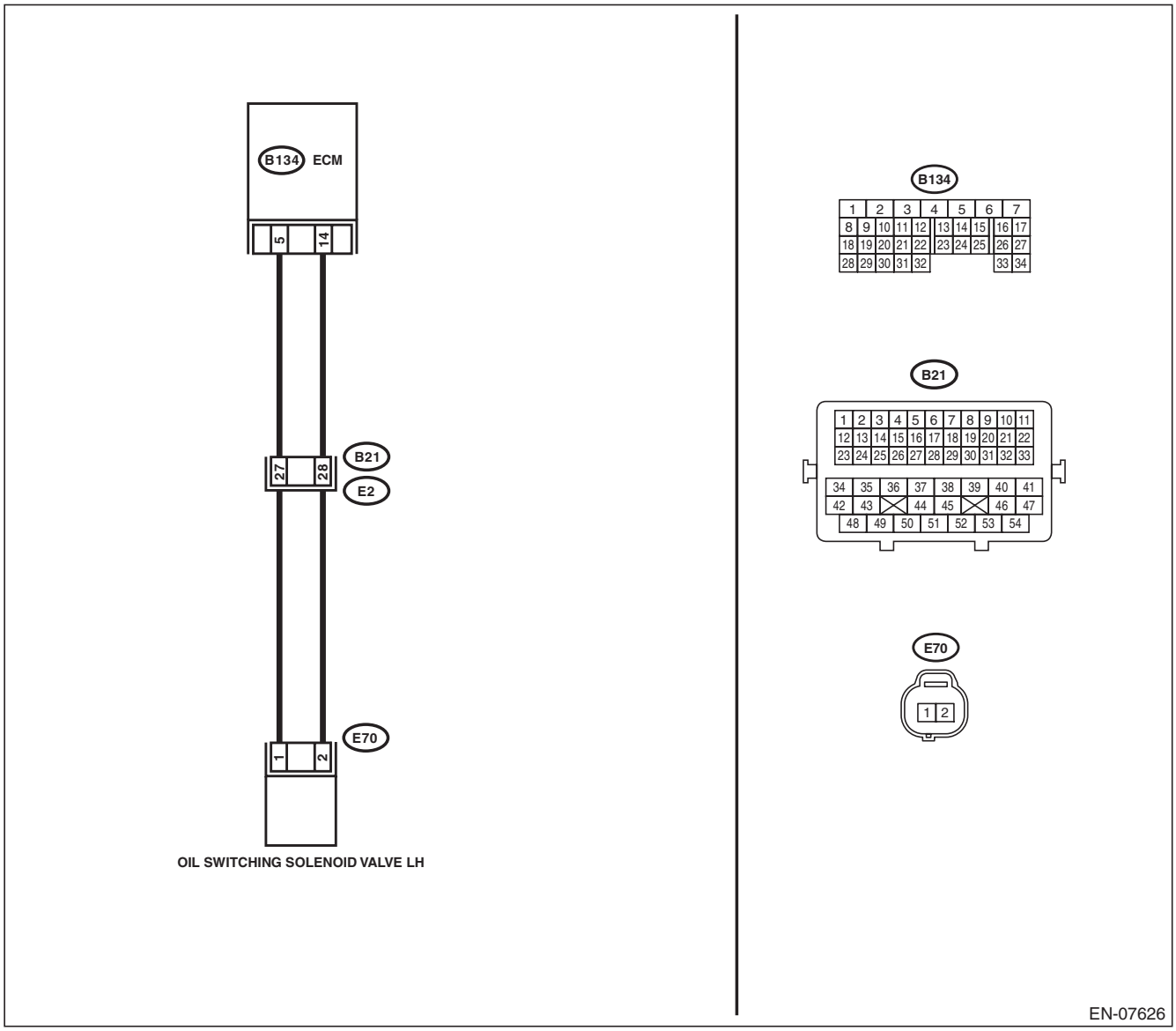

GETmeMANUALS.org

	Step	Check	Yes	No
1	**CHECK HARNESS BETWEEN ECM AND OIL SWITCHING SOLENOID VALVE LH CONNECTOR.** 1) Turn the ignition switch to OFF. 2) Disconnect the connectors from the ECM and oil switching solenoid valve LH. 3) Measure the resistance between ECM and oil switching solenoid valve LH. ***Connector & terminal*** ***(B134) No. 5 — (E70) No. 1:*** ***(B134) No. 14 — (E70) No. 2:***	Is the resistance less than 1 Ω?	Go to step **2**.	Repair the harness and connector. NOTE: In this case, repair the following item: • Open circuit in harness between ECM and oil switching solenoid valve LH connector • Poor contact of coupling connector
2	**CHECK HARNESS BETWEEN ECM AND OIL SWITCHING SOLENOID VALVE LH CONNECTOR.** Measure the resistance between ECM and chassis ground. ***Connector & terminal*** ***(B134) No. 5 — Chassis ground:*** ***(B134) No. 14 — Chassis ground:***	Is the resistance 1 MΩ or more?	Go to step **3**.	Repair the short circuit to ground in harness between ECM and oil switching solenoid valve LH connector.
3	**CHECK OIL SWITCHING SOLENOID VALVE LH.** Measure the resistance between oil switching solenoid valve LH terminals. ***Terminals*** ***No. 1 — No. 2:***	Is the resistance 6 — 12 Ω?	Repair the poor contact of ECM and oil switching solenoid valve LH connector.	Replace the oil switching solenoid valve LH. <Ref. to ME(H4SO)-95, Oil Switching Solenoid Valve.>

GETtheMANUALS.org

L: DTC P0083 INTAKE VALVE CONTROL SOLENOID CIRCUIT HIGH (BANK 2)

DTC DETECTING CONDITION:

- Immediately at fault recognition
- GENERAL DESCRIPTION <Ref. to GD(H4SO)-24, DTC P0083 INTAKE VALVE CONTROL SOLENOID CIRCUIT HIGH (BANK 2), Diagnostic Trouble Code (DTC) Detecting Criteria.>

TROUBLE SYMPTOM:

Improper idling

CAUTION:

After servicing or replacing faulty parts, perform Clear Memory Mode <Ref. to EN(H4SO)(diag)-51, OPERATION, Clear Memory Mode.>, and Inspection Mode <Ref. to EN(H4SO)(diag)-40, PROCEDURE, Inspection Mode.>.

WIRING DIAGRAM:

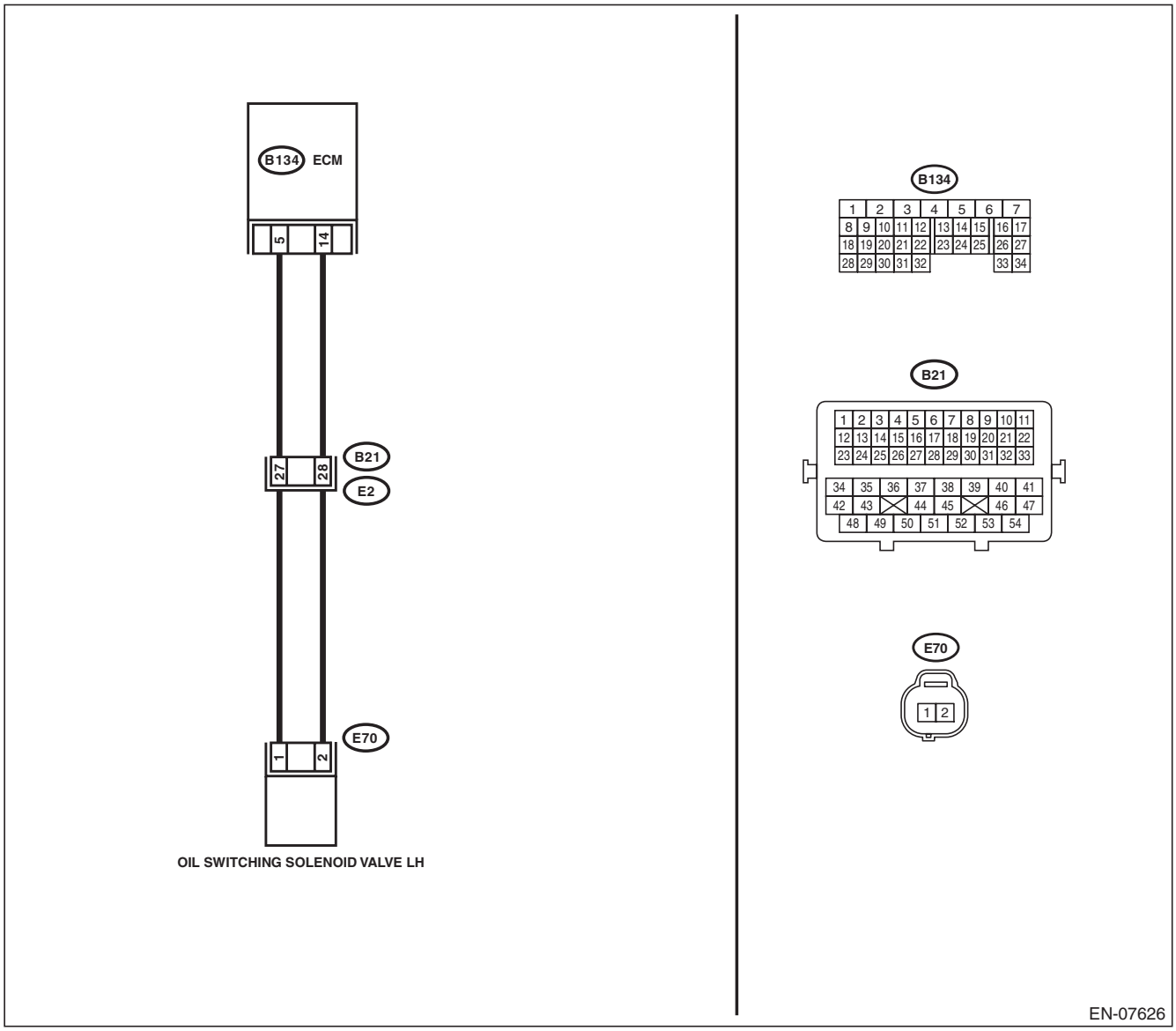

GETtheMANUALS.org

Step		Check	Yes	No
1	**CHECK HARNESS BETWEEN ECM AND OIL SWITCHING SOLENOID VALVE LH CONNECTOR.** 1) Turn the ignition switch to OFF. 2) Disconnect the connectors from the ECM and oil switching solenoid valve LH. 3) Measure the voltage between ECM and chassis ground. ***Connector & terminal*** ***(B134) No. 5 (+) — Chassis ground (–):*** ***(B134) No. 14 (+) — Chassis ground (–):***	Is the voltage less than 1 V?	Go to step **2**.	Repair the short circuit to power supply in harness between ECM and oil switching solenoid valve LH connector.
2	**CHECK HARNESS BETWEEN ECM AND OIL SWITCHING SOLENOID VALVE LH CONNECTOR.** Measure the resistance between ECM and oil switching solenoid valve LH connector. ***Connector & terminal*** ***(B134) No. 5 — (E70) No. 1:*** ***(B134) No. 14 — (E70) No. 2:***	Is the resistance less than 1 Ω?	Go to step **3**.	Repair the harness and connector. NOTE: In this case, repair the following item: • Open circuit in harness between ECM and oil switching solenoid valve LH connector • Poor contact of coupling connector
3	**CHECK OIL SWITCHING SOLENOID VALVE LH.** Measure the resistance between oil switching solenoid valve LH terminals. ***Terminals*** ***No. 1 — No. 2:***	Is the resistance 6 — 12 Ω?	Repair the poor contact of ECM and oil switching solenoid valve LH connector.	Replace the oil switching solenoid valve LH. <Ref. to ME(H4SO)-95, Oil Switching Solenoid Valve.>

GETthemANSWERS.org

M: DTC P0101 MASS OR VOLUME AIR FLOW CIRCUIT RANGE/PERFORMANCE

DTC DETECTING CONDITION:

- Detected when two consecutive driving cycles with fault occur.
- GENERAL DESCRIPTION <Ref. to GD(H4SO)-25, DTC P0101 MASS OR VOLUME AIR FLOW CIRCUIT RANGE/PERFORMANCE, Diagnostic Trouble Code (DTC) Detecting Criteria.>

TROUBLE SYMPTOM:

- Improper idling
- Engine stalls.
- Poor driving performance

CAUTION:

After servicing or replacing faulty parts, perform Clear Memory Mode <Ref. to EN(H4SO)(diag)-51, OPERATION, Clear Memory Mode.>, and Inspection Mode <Ref. to EN(H4SO)(diag)-40, PROCEDURE, Inspection Mode.>.

Step	Check	Yes	No
1 CHECK FOR ANY OTHER DTC ON DISPLAY.	Is any other DTC displayed?	Check the appropriate DTC using the “List of Diagnostic Trouble Code (DTC)”. <Ref. to EN(H4SO)(diag)-78, List of Diagnostic Trouble Code (DTC).>	Replace the mass air flow and intake air temperature sensor. <Ref. to FU(H4SO)-32, Mass Air Flow and Intake Air Temperature Sensor.>

GETtheMANUALS.org

N: DTC P0102 MASS OR VOLUME AIR FLOW CIRCUIT LOW INPUT

DTC DETECTING CONDITION:

- Immediately at fault recognition
- GENERAL DESCRIPTION <Ref. to GD(H4SO)-28, DTC P0102 MASS OR VOLUME AIR FLOW CIRCUIT LOW INPUT, Diagnostic Trouble Code (DTC) Detecting Criteria.>

TROUBLE SYMPTOM:

- Improper idling
- Engine stalls.
- Poor driving performance

CAUTION:

After servicing or replacing faulty parts, perform Clear Memory Mode <Ref. to EN(H4SO)(diag)-51, OPERATION, Clear Memory Mode.>, and Inspection Mode <Ref. to EN(H4SO)(diag)-40, PROCEDURE, Inspection Mode.>.

WIRING DIAGRAM:

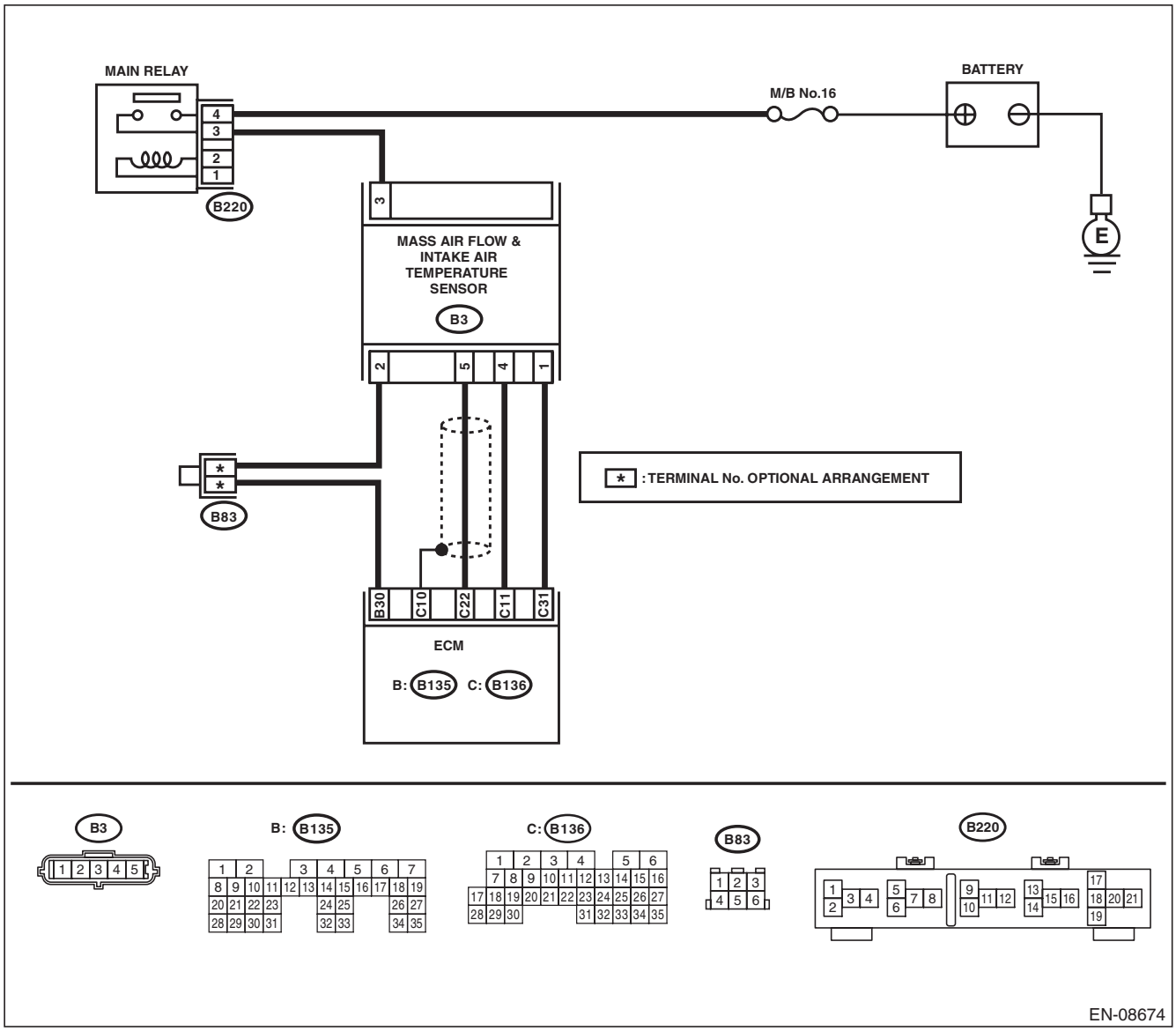

GETtheMANUALS.org

	Step	Check	Yes	No
1	**CHECK CURRENT DATA.** 1) Start the engine. 2) Read the value of «Air Flow Sensor Voltage» using Subaru Select Monitor. NOTE: For detailed operation procedures, refer to "READ CURRENT DATA FOR ENGINE". <Ref. to EN(H4SO)(diag)-33, Subaru Select Monitor.>	Is the value of «Air Flow Sensor Voltage» less than 0.2 V?	Go to step **2**.	Even if DTC is detected, the circuit has returned to a normal condition at this time. Reproduce the failure, and then perform the diagnosis again. NOTE: In this case, temporary poor contact of connector, temporary open or short circuit of harness may be the cause.
2	**CHECK POWER SUPPLY OF MASS AIR FLOW AND INTAKE AIR TEMPERATURE SENSOR.** 1) Turn the ignition switch to OFF. 2) Disconnect the connectors from the mass air flow and intake air temperature sensor. 3) Turn the ignition switch to ON. 4) Measure the voltage between mass air flow and intake air temperature sensor connector and engine ground. ***Connector & terminal*** ***(B3) No. 3 (+) — Engine ground (–):***	Is the voltage 10 V or more?	Go to step **3**.	Repair the harness and connector. NOTE: In this case, repair the following item: • Open circuit in harness between main relay and mass air flow and intake air temperature sensor connector • Poor contact of main relay connector
3	**CHECK HARNESS BETWEEN ECM AND MASS AIR FLOW AND INTAKE AIR TEMPERATURE SENSOR CONNECTOR.** 1) Turn the ignition switch to OFF. 2) Disconnect the connector from ECM. 3) Measure the resistance of harness between ECM and the mass air flow and intake air temperature sensor connector. ***Connector & terminal*** ***(B136) No. 22 — (B3) No. 5:***	Is the resistance less than 1 Ω?	Go to step **4**.	Repair the open circuit in harness between ECM and the mass air flow and intake air temperature sensor connector.
4	**CHECK HARNESS BETWEEN ECM AND MASS AIR FLOW AND INTAKE AIR TEMPERATURE SENSOR CONNECTOR.** Measure the resistance between ECM and chassis ground. ***Connector & terminal*** ***(B136) No. 22 — Chassis ground:***	Is the resistance 1 MΩ or more?	Go to step **5**.	Repair the short circuit to ground in harness between ECM and mass air flow and intake air temperature sensor connector.
5	**CHECK FOR POOR CONTACT.** Check for poor contact of ECM and mass air flow and intake air temperature sensor connector.	Is there poor contact of ECM or mass air flow and intake air temperature sensor connector?	Repair the poor contact of ECM or mass air flow and intake air temperature sensor connector.	Replace the mass air flow and intake air temperature sensor. <Ref. to FU(H4SO)-32, Mass Air Flow and Intake Air Temperature Sensor.>

GETtheMANUALS.org

O: DTC P0103 MASS OR VOLUME AIR FLOW CIRCUIT HIGH INPUT

DTC DETECTING CONDITION:

- Immediately at fault recognition
- GENERAL DESCRIPTION <Ref. to GD(H4SO)-30, DTC P0103 MASS OR VOLUME AIR FLOW CIRCUIT HIGH INPUT, Diagnostic Trouble Code (DTC) Detecting Criteria.>

TROUBLE SYMPTOM:

- Improper idling
- Engine stalls.
- Poor driving performance

CAUTION:

After servicing or replacing faulty parts, perform Clear Memory Mode <Ref. to EN(H4SO)(diag)-51, OPERATION, Clear Memory Mode.>, and Inspection Mode <Ref. to EN(H4SO)(diag)-40, PROCEDURE, Inspection Mode.>.

WIRING DIAGRAM:

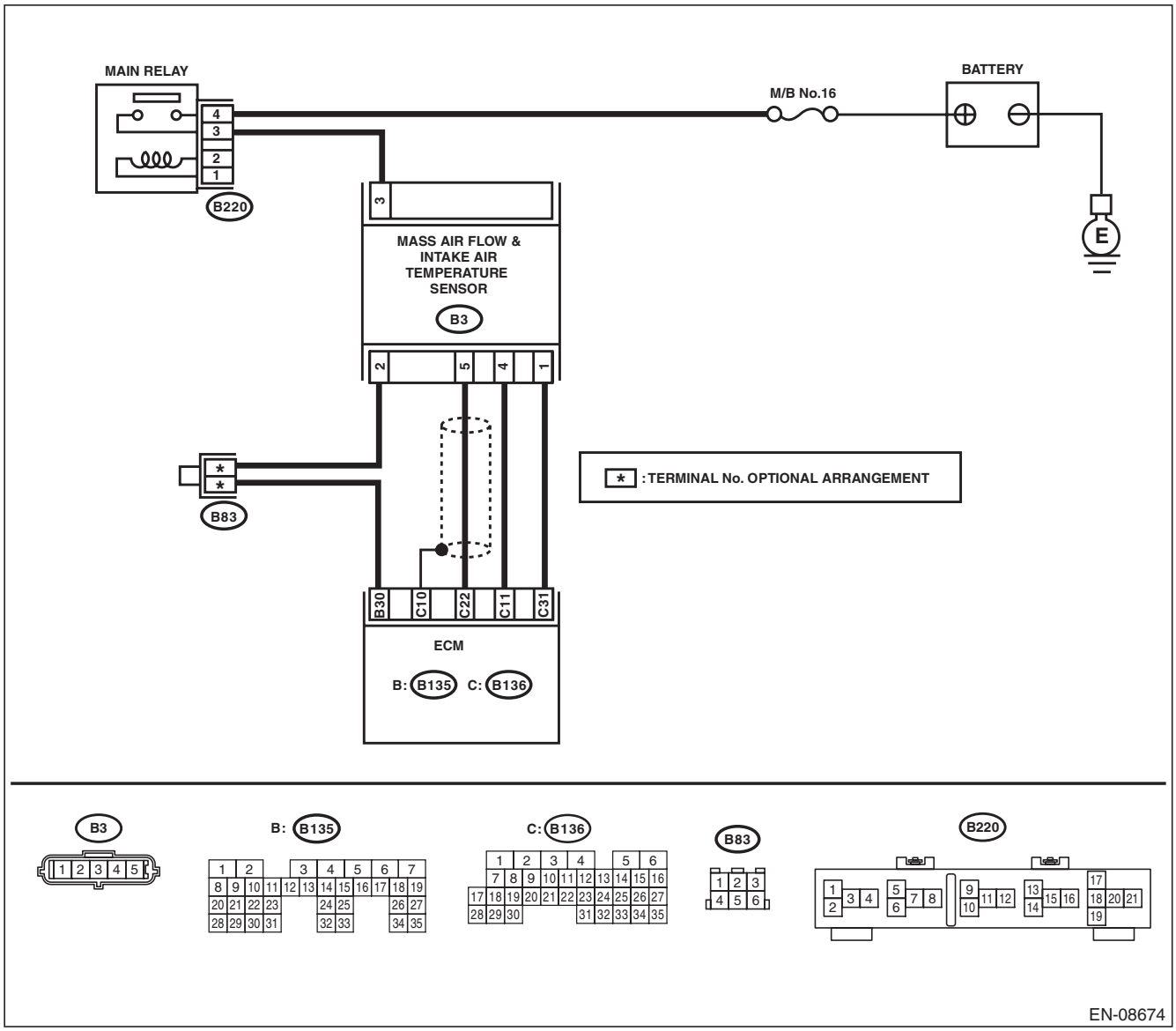

GETmeMANUALS.org

	Step	Check	Yes	No
1	**CHECK CURRENT DATA.** 1) Start the engine. 2) Read the value of «Air Flow Sensor Voltage» using Subaru Select Monitor. NOTE: For detailed operation procedures, refer to "READ CURRENT DATA FOR ENGINE". <Ref. to EN(H4SO)(diag)-33, Subaru Select Monitor.>	Is the value of «Air Flow Sensor Voltage» 5 V or more?	Go to step **2**.	Even if DTC is detected, the circuit has returned to a normal condition at this time. Reproduce the failure, and then perform the diagnosis again. NOTE: In this case, temporary poor contact of connector, temporary open or short circuit of harness may be the cause.
2	**CHECK HARNESS BETWEEN ECM AND MASS AIR FLOW AND INTAKE AIR TEMPERATURE SENSOR CONNECTOR.** 1) Turn the ignition switch to OFF. 2) Disconnect the connectors from the mass air flow and intake air temperature sensor. 3) Start the engine. 4) Read the value of «Air Flow Sensor Voltage» using Subaru Select Monitor. NOTE: For detailed operation procedures, refer to "READ CURRENT DATA FOR ENGINE". <Ref. to EN(H4SO)(diag)-33, Subaru Select Monitor.>	Is the value of «Air Flow Sensor Voltage» 5 V or more?	Repair the short circuit of harness to power supply between ECM and mass air flow and intake air temperature sensor connector.	Go to step **3**.
3	**CHECK HARNESS BETWEEN ECM AND MASS AIR FLOW AND INTAKE AIR TEMPERATURE SENSOR CONNECTOR.** 1) Turn the ignition switch to OFF. 2) Measure the resistance of harness between mass air flow and intake air temperature sensor connector and engine ground. ***Connector & terminal*** ***(B3) No. 4 — Engine ground:***	Is the resistance less than 5 Ω?	Go to step **4**.	Repair the harness and connector. NOTE: In this case, repair the following item: • Open circuit in harness between ECM and mass air flow and intake air temperature sensor connector • Poor contact of ECM connector
4	**CHECK FOR POOR CONTACT.** Check for poor contact of mass air flow and intake air temperature sensor connector.	Is there poor contact of mass air flow and intake air temperature sensor connector?	Repair the poor contact of mass air flow and intake air temperature sensor connector.	Replace the mass air flow and intake air temperature sensor. <Ref. to FU(H4SO)-32, Mass Air Flow and Intake Air Temperature Sensor.>

GETtheMANUALS.org

P: DTC P0107 MANIFOLD ABSOLUTE PRESSURE/BAROMETRIC PRESSURE CIRCUIT LOW INPUT

DTC DETECTING CONDITION:

- Immediately at fault recognition
- GENERAL DESCRIPTION <Ref. to GD(H4SO)-32, DTC P0107 MANIFOLD ABSOLUTE PRESSURE/ BAROMETRIC PRESSURE CIRCUIT LOW INPUT, Diagnostic Trouble Code (DTC) Detecting Criteria.>

CAUTION:

After servicing or replacing faulty parts, perform Clear Memory Mode <Ref. to EN(H4SO)(diag)-51, OPERATION, Clear Memory Mode.>, and Inspection Mode <Ref. to EN(H4SO)(diag)-40, PROCEDURE, Inspection Mode.>.

WIRING DIAGRAM:

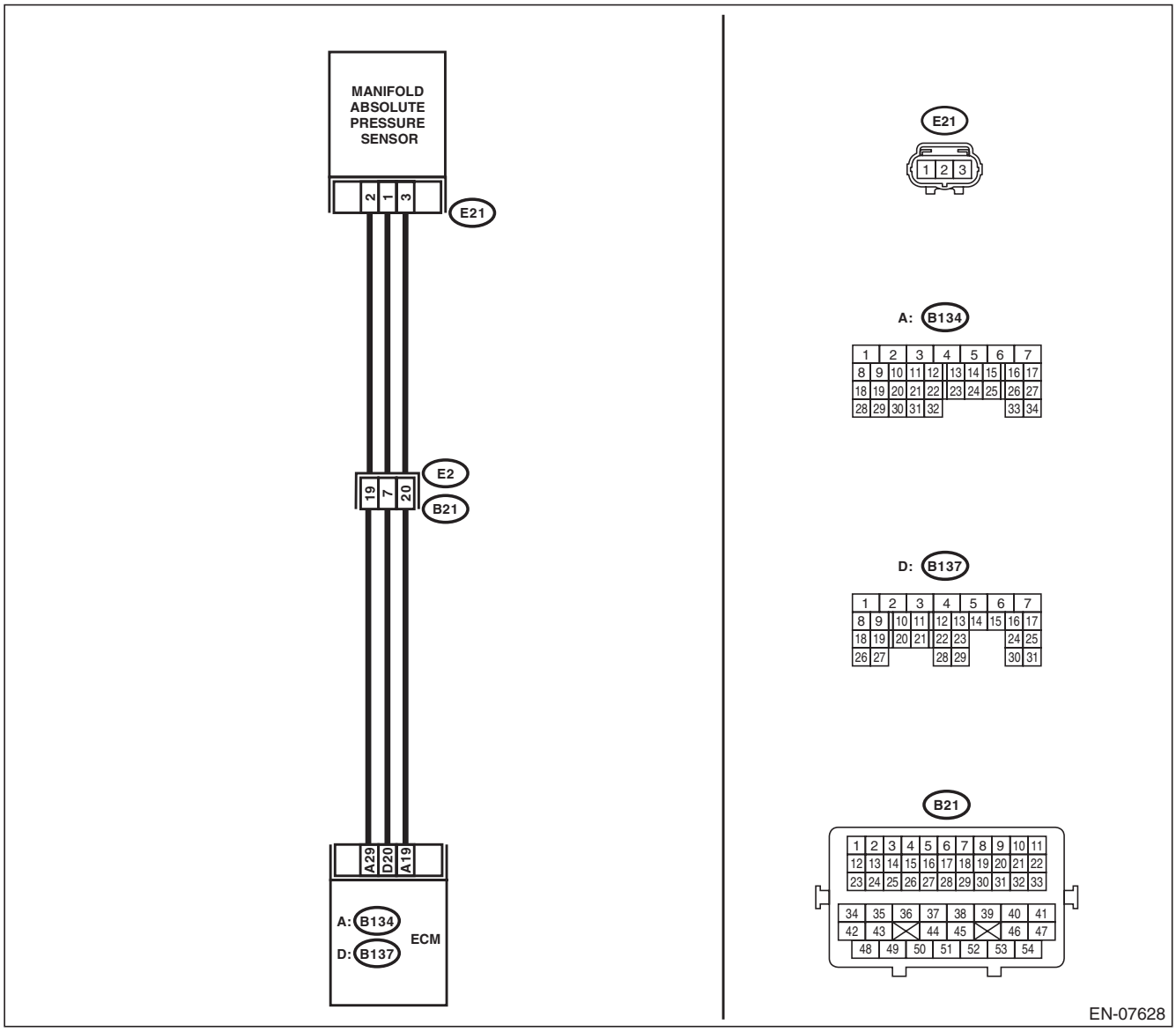

GETtheMANUALS.org

	Step	Check	Yes	No
1	**CHECK CURRENT DATA.** 1) Start the engine. 2) Read the value of «Mani. Absolute Pressure» using the Subaru Select Monitor or a general scan tool. NOTE: • Subaru Select Monitor For detailed operation procedures, refer to "READ CURRENT DATA FOR ENGINE". <Ref. to EN(H4SO)(diag)-33, Subaru Select Monitor.> • General scan tool For detailed operation procedures, refer to the general scan tool operation manual.	Is the value of «Mani. Absolute Pressure» less than 13.3 kPa (100 mmHg, 3.94 inHg)?	Go to step **2**.	Even if DTC is detected, the circuit has returned to a normal condition at this time. Reproduce the failure, and then perform the diagnosis again. NOTE: In this case, temporary poor contact of connector, temporary open or short circuit of harness may be the cause.
2	**CHECK POWER SUPPLY OF MANIFOLD ABSOLUTE PRESSURE SENSOR.** 1) Turn the ignition switch to OFF. 2) Disconnect the connector from manifold absolute pressure sensor. 3) Turn the ignition switch to ON. 4) Measure the voltage between manifold absolute pressure sensor connector and engine ground. ***Connector & terminal*** ***(E21) No. 3 (+) — Engine ground (–):***	Is the voltage 4.5 V or more?	Go to step **3**.	Repair the harness and connector. NOTE: In this case, repair the following item: • Open circuit of harness between ECM and manifold absolute pressure sensor connector. • Poor contact of ECM connector • Poor contact of coupling connector
3	**CHECK HARNESS BETWEEN ECM AND MANIFOLD ABSOLUTE PRESSURE SENSOR CONNECTOR.** 1) Turn the ignition switch to OFF. 2) Disconnect the connector from ECM. 3) Measure the resistance of harness between ECM and manifold absolute pressure sensor connector. ***Connector & terminal*** ***(B137) No. 20 — (E21) No. 1:***	Is the resistance less than 1 Ω?	Go to step **4**.	Repair the harness and connector. NOTE: In this case, repair the following item: • Open circuit of harness between ECM and manifold absolute pressure sensor connector. • Poor contact of coupling connector
4	**CHECK HARNESS BETWEEN ECM AND MANIFOLD ABSOLUTE PRESSURE SENSOR CONNECTOR.** Measure the resistance between ECM and chassis ground. ***Connector & terminal*** ***(B137) No. 20 — Chassis ground:***	Is the resistance 1 MΩ or more?	Go to step **5**.	Repair ground short circuit of harness between ECM and manifold absolute pressure sensor connector.
5	**CHECK FOR POOR CONTACT.** Check for poor contact of ECM and manifold absolute pressure sensor connector.	Is there poor contact of ECM or manifold absolute pressure sensor connector?	Repair the poor contact of ECM or manifold absolute pressure sensor connector.	Replace the manifold absolute pressure sensor. <Ref. to FU(H4SO)-33, Manifold Absolute Pressure Sensor.>

GETthemMANUALS.org

Q: DTC P0108 MANIFOLD ABSOLUTE PRESSURE/BAROMETRIC PRESSURE CIRCUIT HIGH INPUT

DTC DETECTING CONDITION:

- Immediately at fault recognition
- GENERAL DESCRIPTION <Ref. to GD(H4SO)-34, DTC P0108 MANIFOLD ABSOLUTE PRESSURE/ BAROMETRIC PRESSURE CIRCUIT HIGH INPUT, Diagnostic Trouble Code (DTC) Detecting Criteria.>

CAUTION:

After servicing or replacing faulty parts, perform Clear Memory Mode <Ref. to EN(H4SO)(diag)-51, OPERATION, Clear Memory Mode.>, and Inspection Mode <Ref. to EN(H4SO)(diag)-40, PROCEDURE, Inspection Mode.>.

WIRING DIAGRAM:

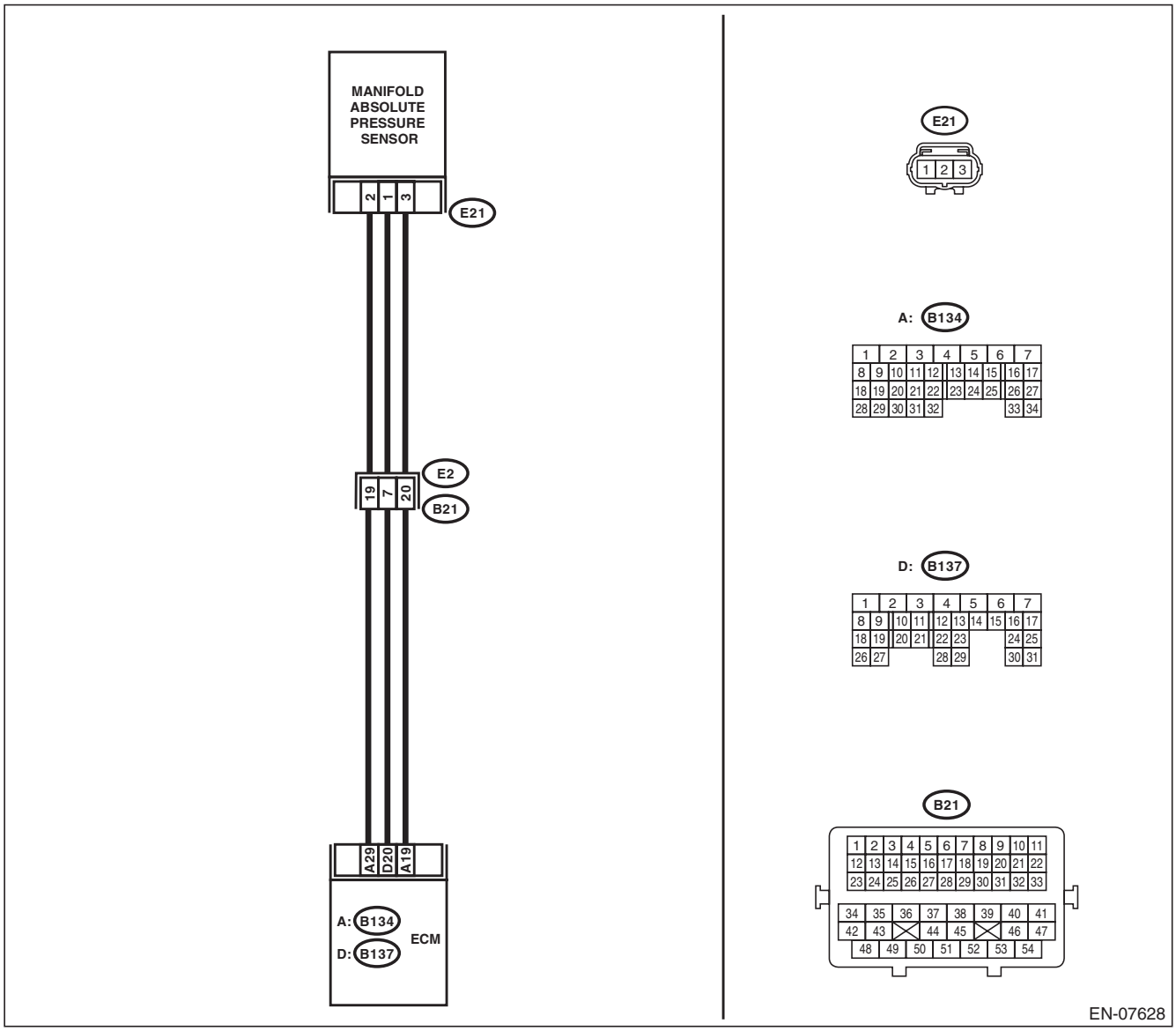

GETtheMANUALS.org

	Step	Check	Yes	No
1	**CHECK CURRENT DATA.** 1) Start the engine. 2) Read the value of «Mani. Absolute Pressure» using the Subaru Select Monitor or a general scan tool. NOTE: • Subaru Select Monitor For detailed operation procedures, refer to "READ CURRENT DATA FOR ENGINE". <Ref. to EN(H4SO)(diag)-33, Subaru Select Monitor.> • General scan tool For detailed operation procedures, refer to the general scan tool operation manual.	Is the value of «Mani. Absolute Pressure» 119.5 kPa (896.5 mmHg, 35.29 inHg) or more?	Go to step **2**.	Even if DTC is detected, the circuit has returned to a normal condition at this time. Reproduce the failure, and then perform the diagnosis again. NOTE: In this case, temporary poor contact of connector, temporary open or short circuit of harness may be the cause.
2	**CHECK HARNESS BETWEEN ECM AND MANIFOLD ABSOLUTE PRESSURE SENSOR CONNECTOR.** 1) Turn the ignition switch to OFF. 2) Disconnect the connector from manifold absolute pressure sensor. 3) Start the engine. 4) Read the value of «Mani. Absolute Pressure» using the Subaru Select Monitor or a general scan tool. NOTE: • Subaru Select Monitor For detailed operation procedures, refer to "READ CURRENT DATA FOR ENGINE". <Ref. to EN(H4SO)(diag)-33, Subaru Select Monitor.> • General scan tool For detailed operation procedures, refer to the general scan tool operation manual.	Is the value of «Mani. Absolute Pressure» 119.5 kPa (896.5 mmHg, 35.29 inHg) or more?	Repair the short circuit to power in harness between ECM and manifold absolute pressure sensor connector.	Go to step **3**.
3	**CHECK HARNESS BETWEEN ECM AND MANIFOLD ABSOLUTE PRESSURE SENSOR CONNECTOR.** 1) Turn the ignition switch to OFF. 2) Measure the resistance of harness between manifold absolute pressure sensor connector and engine ground. ***Connector & terminal*** ***(E21) No. 2 — Engine ground:***	Is the resistance less than 5 Ω?	Go to step **4**.	Repair the harness and connector. NOTE: In this case, repair the following item: • Open circuit of harness between ECM and manifold absolute pressure sensor connector. • Poor contact of ECM connector • Poor contact of coupling connector
4	**CHECK FOR POOR CONTACT.** Check for poor contact of manifold absolute pressure sensor connector.	Is there poor contact of manifold absolute pressure sensor connector?	Repair the poor contact of manifold absolute pressure sensor connector.	Replace the manifold absolute pressure sensor. <Ref. to FU(H4SO)-33, Manifold Absolute Pressure Sensor.>

GETtheMANUALS.org

R: DTC P0111 INTAKE AIR TEMPERATURE SENSOR 1 CIRCUIT RANGE/PERFORMANCE

DTC DETECTING CONDITION:

- Detected when two consecutive driving cycles with fault occur.
- GENERAL DESCRIPTION <Ref. to GD(H4SO)-36, DTC P0111 INTAKE AIR TEMPERATURE SENSOR 1 CIRCUIT RANGE/PERFORMANCE, Diagnostic Trouble Code (DTC) Detecting Criteria.>

TROUBLE SYMPTOM:

- Improper idling
- Poor driving performance

CAUTION:

After servicing or replacing faulty parts, perform Clear Memory Mode <Ref. to EN(H4SO)(diag)-51, OPERATION, Clear Memory Mode.>, and Inspection Mode <Ref. to EN(H4SO)(diag)-40, PROCEDURE, Inspection Mode.>.

	Step	Check	Yes	No
1	**CHECK ENGINE COOLANT TEMPERATURE.** 1) Start the engine and warm up completely. 2) Read the value of «Coolant Temp.» using the Subaru Select Monitor or a general scan tool. NOTE: • Subaru Select Monitor For detailed operation procedures, refer to “READ CURRENT DATA FOR ENGINE”. <Ref. to EN(H4SO)(diag)-33, Subaru Select Monitor.> • General scan tool For detailed operation procedures, refer to the general scan tool operation manual.	Is the value of «Coolant Temp.» 75°C (167°F) or more?	Replace the mass air flow and intake air temperature sensor. <Ref. to FU(H4SO)-32, Mass Air Flow and Intake Air Temperature Sensor.>	Check for DTC P0125. <Ref. to EN(H4SO)(diag)-131, DTC P0125 INSUFFICIENT COOLANT TEMPERATURE FOR CLOSED LOOP FUEL CONTROL, Diagnostic Procedure with Diagnostic Trouble Code (DTC).>

GETthemANUALS.org

S: DTC P0112 INTAKE AIR TEMPERATURE SENSOR 1 CIRCUIT LOW

DTC DETECTING CONDITION:

- Immediately at fault recognition
- GENERAL DESCRIPTION <Ref. to GD(H4SO)-39, DTC P0112 INTAKE AIR TEMPERATURE SENSOR 1 CIRCUIT LOW, Diagnostic Trouble Code (DTC) Detecting Criteria.>

TROUBLE SYMPTOM:

- Improper idling
- Poor driving performance

CAUTION:

After servicing or replacing faulty parts, perform Clear Memory Mode <Ref. to EN(H4SO)(diag)-51, OPERATION, Clear Memory Mode.>, and Inspection Mode <Ref. to EN(H4SO)(diag)-40, PROCEDURE, Inspection Mode.>.

WIRING DIAGRAM:

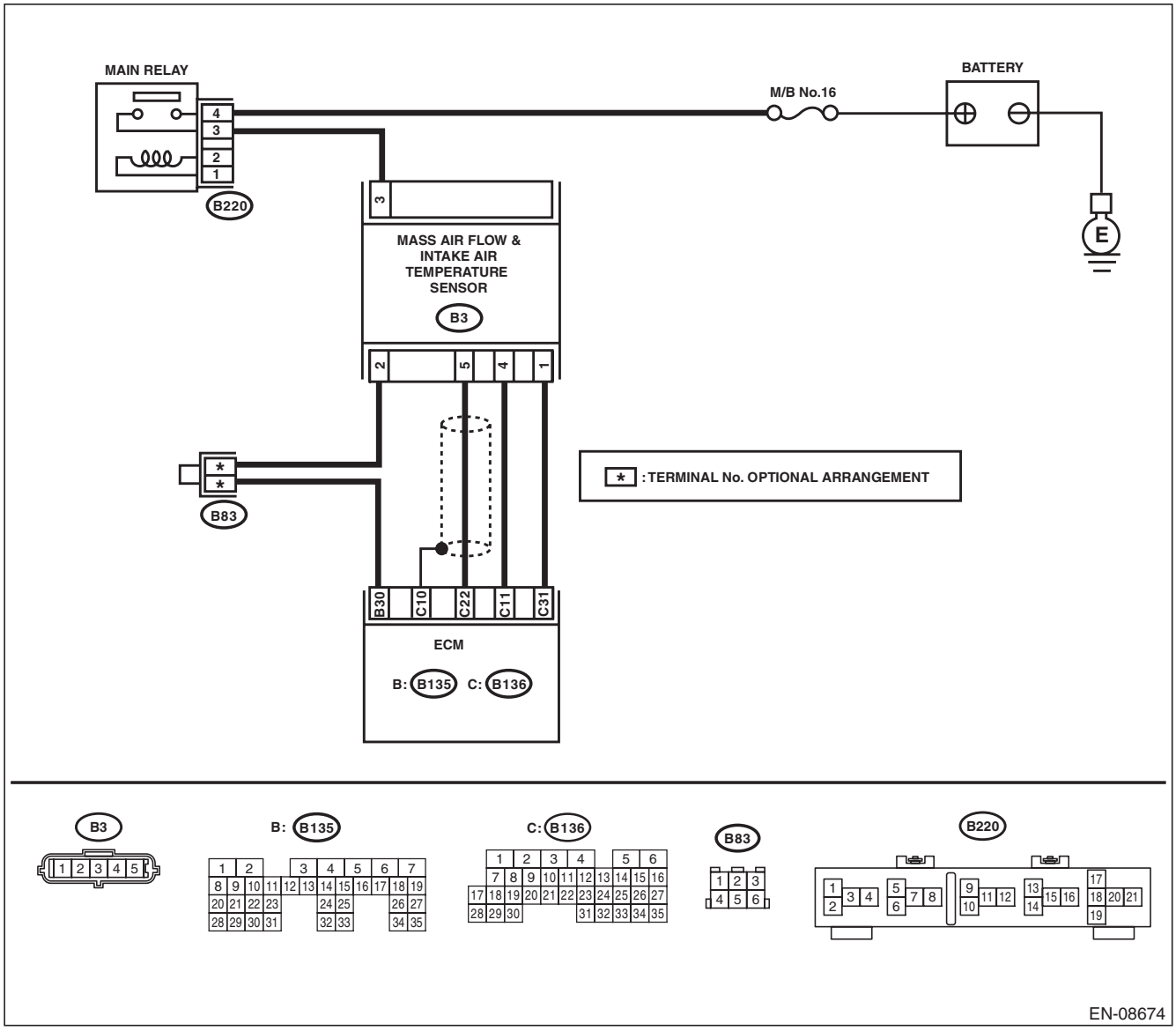

GETtheMANUALS.org

	Step	Check	Yes	No
1	**CHECK CURRENT DATA.** 1) Start the engine. 2) Read the value of «Intake Air Temp.» using the Subaru Select Monitor or a general scan tool. NOTE: • Subaru Select Monitor For detailed operation procedures, refer to "READ CURRENT DATA FOR ENGINE". <Ref. to EN(H4SO)(diag)-33, Subaru Select Monitor.> • General scan tool For detailed operation procedures, refer to the general scan tool operation manual.	Is the value of «Intake Air Temp.» 120°C (248°F) or more?	Go to step **2**.	Even if DTC is detected, the circuit has returned to a normal condition at this time. Reproduce the failure, and then perform the diagnosis again. NOTE: In this case, temporary poor contact of connector, temporary open or short circuit of harness may be the cause.
2	**CHECK HARNESS BETWEEN ECM AND MASS AIR FLOW AND INTAKE AIR TEMPERATURE SENSOR CONNECTOR.** 1) Turn the ignition switch to OFF. 2) Disconnect the connector from ECM and the mass air flow and intake air temperature sensor. 3) Measure the resistance between ECM and chassis ground. ***Connector & terminal*** ***(B136) No. 31 — Chassis ground:***	Is the resistance 1 MΩ or more?	Replace the mass air flow and intake air temperature sensor. <Ref. to FU(H4SO)-32, Mass Air Flow and Intake Air Temperature Sensor.>	Repair the short circuit to ground in harness between ECM and mass air flow and intake air temperature sensor connector.

GETtheMANUALS.org

T: DTC P0113 INTAKE AIR TEMPERATURE SENSOR 1 CIRCUIT HIGH

DTC DETECTING CONDITION:

- Immediately at fault recognition
- GENERAL DESCRIPTION <Ref. to GD(H4SO)-41, DTC P0113 INTAKE AIR TEMPERATURE SENSOR 1 CIRCUIT HIGH, Diagnostic Trouble Code (DTC) Detecting Criteria.>

TROUBLE SYMPTOM:

- Improper idling
- Poor driving performance

CAUTION:

After servicing or replacing faulty parts, perform Clear Memory Mode <Ref. to EN(H4SO)(diag)-51, OPERATION, Clear Memory Mode.>, and Inspection Mode <Ref. to EN(H4SO)(diag)-40, PROCEDURE, Inspection Mode.>.

WIRING DIAGRAM:

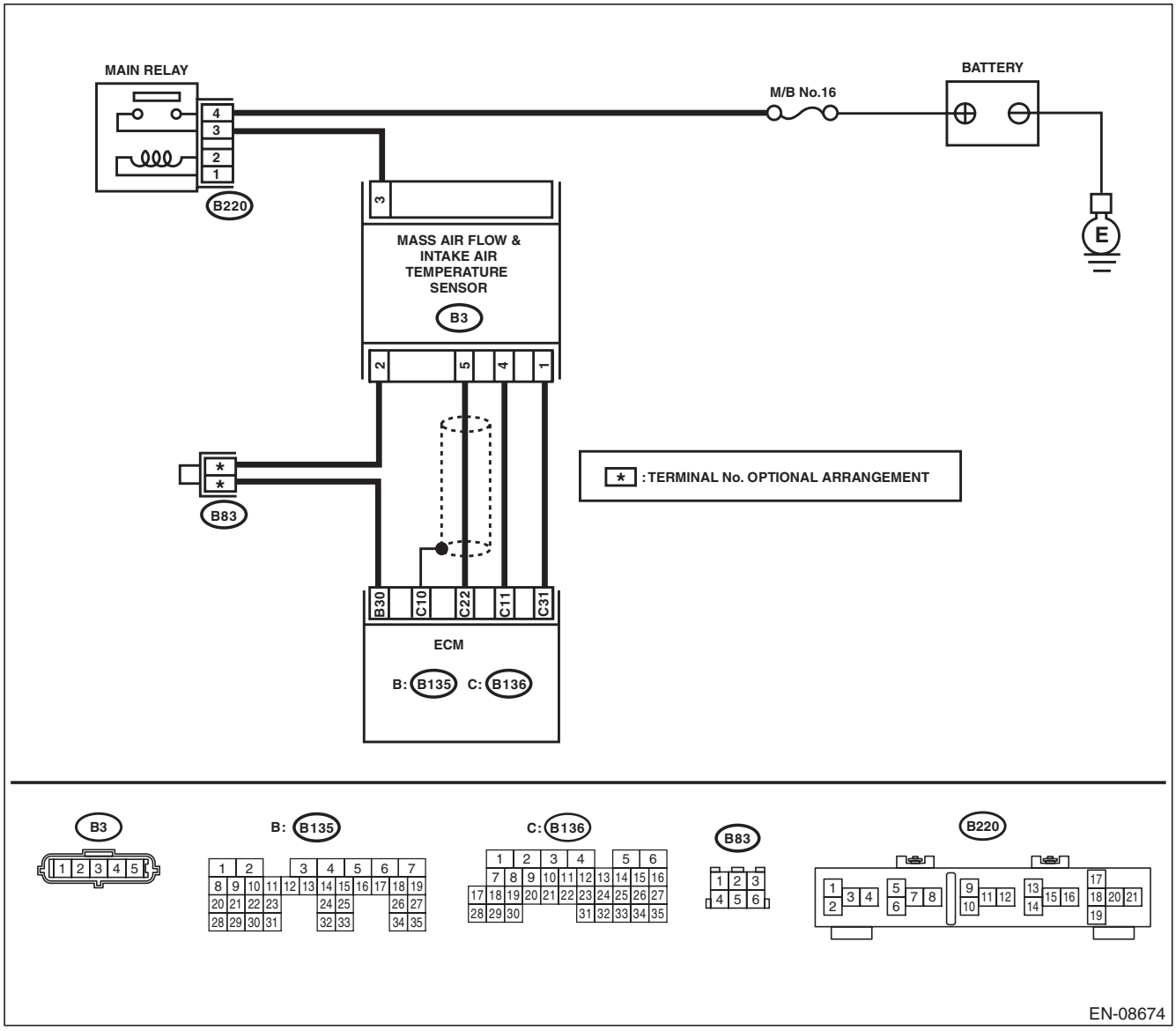

GETtheMANUALS.org

	Step	Check	Yes	No
1	**CHECK CURRENT DATA.** 1) Start the engine. 2) Read the value of «Intake Air Temp.» using the Subaru Select Monitor or a general scan tool. NOTE: • Subaru Select Monitor For detailed operation procedures, refer to "READ CURRENT DATA FOR ENGINE". <Ref. to EN(H4SO)(diag)-33, Subaru Select Monitor.> • General scan tool For detailed operation procedures, refer to the general scan tool operation manual.	Is the value of «Intake Air Temp.» less than –40°C (–40°F)?	Go to step **2**.	Even if DTC is detected, the circuit has returned to a normal condition at this time. Reproduce the failure, and then perform the diagnosis again. NOTE: In this case, temporary poor contact of connector, temporary open or short circuit of harness may be the cause.
2	**CHECK FOR POOR CONTACT.** Check for poor contact of ECM and mass air flow and intake air temperature sensor connector.	Is there poor contact of ECM or mass air flow and intake air temperature sensor connector?	Repair the poor contact of ECM or mass air flow and intake air temperature sensor connector.	Go to step **3**.
3	**CHECK HARNESS BETWEEN ECM AND MASS AIR FLOW AND INTAKE AIR TEMPERATURE SENSOR CONNECTOR.** 1) Turn the ignition switch to OFF. 2) Disconnect the connector from ECM and the mass air flow and intake air temperature sensor. 3) Measure the resistance of harness between ECM and the mass air flow and intake air temperature sensor connector. ***Connector & terminal*** ***(B136) No. 31 — (B3) No. 1:*** ***(B135) No. 30 — (B3) No. 2:***	Is the resistance less than 1 Ω?	Go to step **4**.	Repair the harness and connector. NOTE: In this case, repair the following item: • Open circuit in harness between ECM and mass air flow and intake air temperature sensor connector • Poor contact of joint connector
4	**CHECK HARNESS BETWEEN ECM AND MASS AIR FLOW AND INTAKE AIR TEMPERATURE SENSOR CONNECTOR.** 1) Connect all connectors. 2) Turn the ignition switch to ON. 3) Measure the voltage between ECM and chassis ground. ***Connector & terminal*** ***(B136) No. 31 (+) — Chassis ground (–):***	Is the voltage 5 V or more?	Repair the short circuit of harness to power supply between ECM and mass air flow and intake air temperature sensor connector.	Replace the mass air flow and intake air temperature sensor. <Ref. to FU(H4SO)-32, Mass Air Flow and Intake Air Temperature Sensor.>

GETtheMANUALS.org

U: DTC P0117 ENGINE COOLANT TEMPERATURE CIRCUIT LOW

DTC DETECTING CONDITION:

- Immediately at fault recognition
- GENERAL DESCRIPTION <Ref. to GD(H4SO)-43, DTC P0117 ENGINE COOLANT TEMPERATURE CIRCUIT LOW, Diagnostic Trouble Code (DTC) Detecting Criteria.>

TROUBLE SYMPTOM:

- Hard to start
- Improper idling
- Poor driving performance

CAUTION:

After servicing or replacing faulty parts, perform Clear Memory Mode <Ref. to EN(H4SO)(diag)-51, OPERATION, Clear Memory Mode.>, and Inspection Mode <Ref. to EN(H4SO)(diag)-40, PROCEDURE, Inspection Mode.>.

WIRING DIAGRAM:

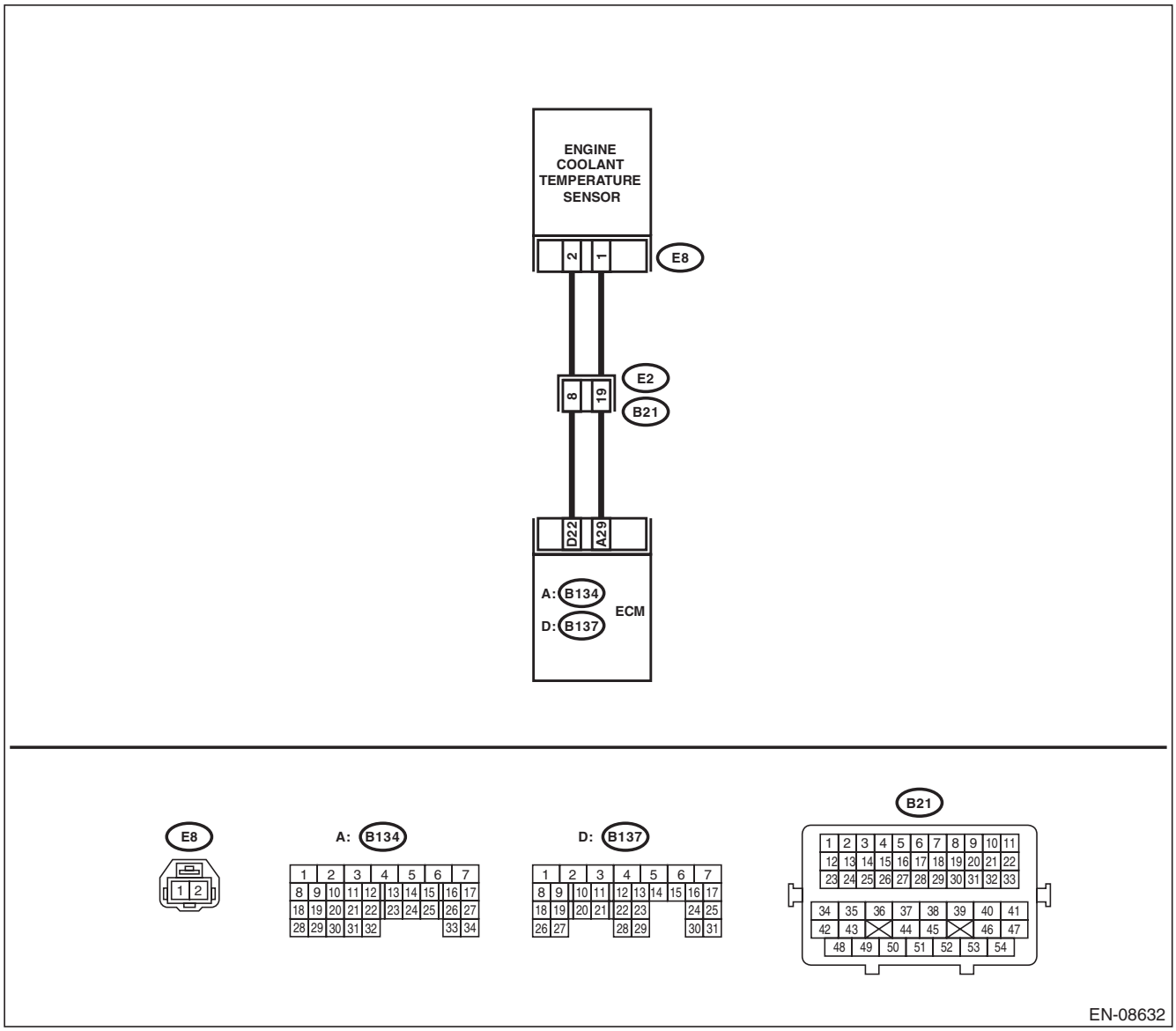

GETTHEMANUALS.org

	Step	Check	Yes	No
1	**CHECK CURRENT DATA.** 1) Start the engine. 2) Read the value of «Coolant Temp.» using the Subaru Select Monitor or a general scan tool. NOTE: • Subaru Select Monitor For detailed operation procedures, refer to "READ CURRENT DATA FOR ENGINE". <Ref. to EN(H4SO)(diag)-33, Subaru Select Monitor.> • General scan tool For detailed operation procedures, refer to the general scan tool operation manual.	Is the value of «Coolant Temp.» 150°C (302°F) or more?	Go to step **2**.	Even if DTC is detected, the circuit has returned to a normal condition at this time. Reproduce the failure, and then perform the diagnosis again. NOTE: In this case, temporary poor contact of connector, temporary open or short circuit of harness may be the cause.
2	**CHECK HARNESS BETWEEN ECM AND ENGINE COOLANT TEMPERATURE SENSOR CONNECTOR.** 1) Turn the ignition switch to OFF. 2) Disconnect the connectors from ECM and engine coolant temperature sensor. 3) Measure the resistance between ECM and chassis ground. ***Connector & terminal*** ***(B137) No. 22 — Chassis ground:***	Is the resistance 1 MΩ or more?	Replace the engine coolant temperature sensor. <Ref. to FU(H4SO)-24, Engine Coolant Temperature Sensor.>	Repair short circuit in harness to ground between ECM and engine coolant temperature sensor connector.

GETtheMANUALS.org

V: DTC P0118 ENGINE COOLANT TEMPERATURE CIRCUIT HIGH

DTC DETECTING CONDITION:

- Immediately at fault recognition
- GENERAL DESCRIPTION <Ref. to GD(H4SO)-45, DTC P0118 ENGINE COOLANT TEMPERATURE CIRCUIT HIGH, Diagnostic Trouble Code (DTC) Detecting Criteria.>

TROUBLE SYMPTOM:

- Hard to start
- Improper idling
- Poor driving performance

CAUTION:

After servicing or replacing faulty parts, perform Clear Memory Mode <Ref. to EN(H4SO)(diag)-51, OPERATION, Clear Memory Mode.>, and Inspection Mode <Ref. to EN(H4SO)(diag)-40, PROCEDURE, Inspection Mode.>.

WIRING DIAGRAM:

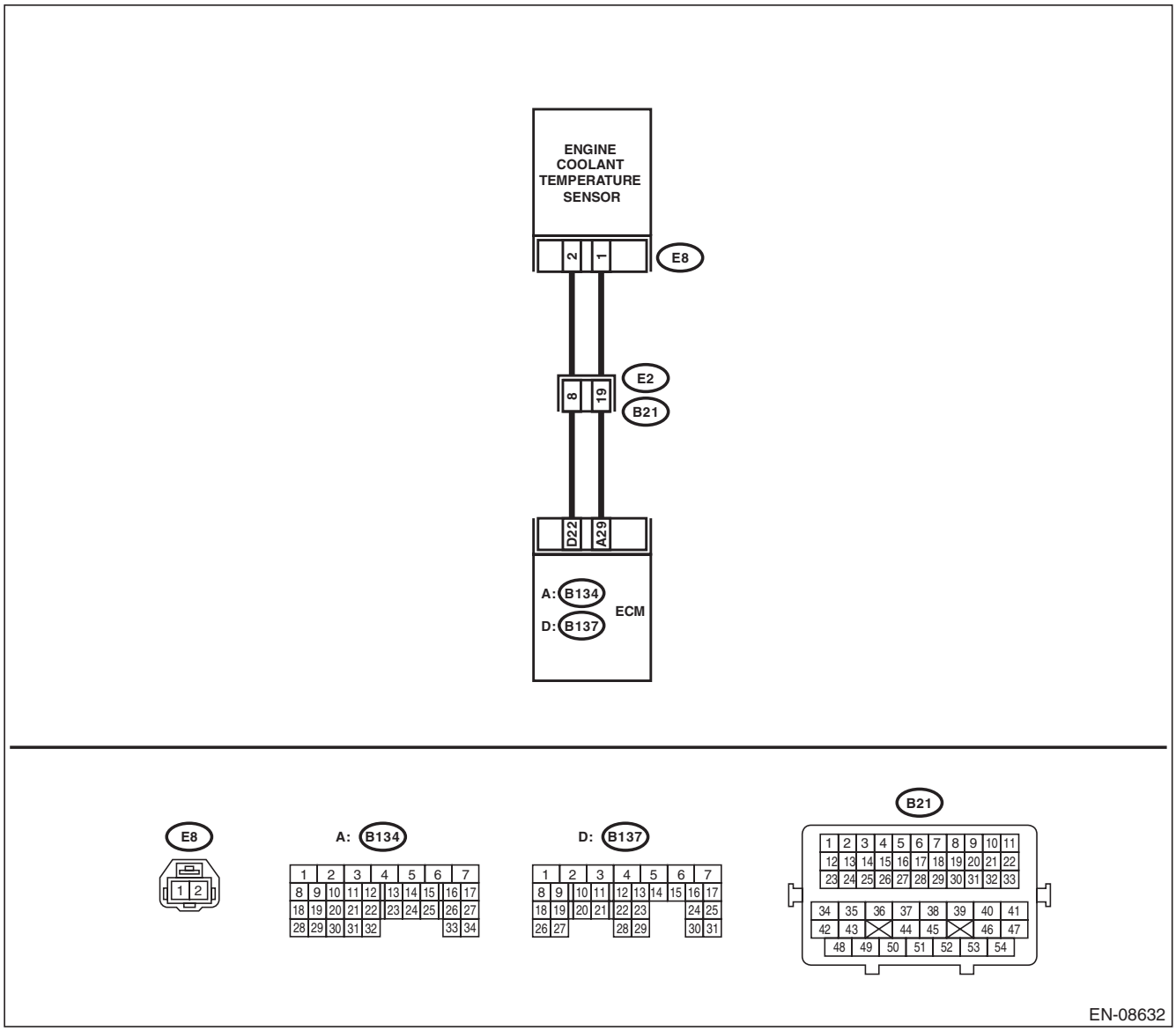

GETTHEMANUALS.org

	Step	Check	Yes	No
1	**CHECK CURRENT DATA.** 1) Start the engine. 2) Read the value of «Coolant Temp.» using the Subaru Select Monitor or a general scan tool. NOTE: • Subaru Select Monitor For detailed operation procedures, refer to "READ CURRENT DATA FOR ENGINE". <Ref. to EN(H4SO)(diag)-33, Subaru Select Monitor.> • General scan tool For detailed operation procedures, refer to the general scan tool operation manual.	Is the value of «Coolant Temp.» less than –40°C (–40°F)?	Go to step **2**.	Even if DTC is detected, the circuit has returned to a normal condition at this time. Reproduce the failure, and then perform the diagnosis again. NOTE: In this case, temporary poor contact of connector, temporary open or short circuit of harness may be the cause.
2	**CHECK FOR POOR CONTACT.** Check for poor contact of ECM and engine coolant temperature sensor connector.	Is there poor contact of ECM or engine coolant temperature sensor connector?	Repair the poor contact of ECM or engine coolant temperature sensor connector.	Go to step **3**.
3	**CHECK HARNESS BETWEEN ECM AND ENGINE COOLANT TEMPERATURE SENSOR CONNECTOR.** 1) Turn the ignition switch to OFF. 2) Disconnect the connectors from ECM and engine coolant temperature sensor. 3) Measure the resistance of harness between ECM and engine coolant temperature sensor connector. ***Connector & terminal*** ***(B137) No. 22 — (E8) No. 2:*** ***(B134) No. 29 — (E8) No. 1:***	Is the resistance less than 1 Ω?	Go to step **4**.	Repair the harness and connector. NOTE: In this case, repair the following item: • Open circuit in harness between ECM and engine coolant temperature sensor connector • Poor contact of coupling connector
4	**CHECK HARNESS BETWEEN ECM AND ENGINE COOLANT TEMPERATURE SENSOR CONNECTOR.** 1) Connect all connectors. 2) Turn the ignition switch to ON. 3) Measure the voltage between ECM and chassis ground. ***Connector & terminal*** ***(B137) No. 22 (+) — Chassis ground (–):***	Is the voltage 5 V or more?	Repair the short circuit to power in harness between ECM and engine coolant temperature sensor connector.	Replace the engine coolant temperature sensor. <Ref. to FU(H4SO)-24, Engine Coolant Temperature Sensor.>

GETtheMANUALS.org

W: DTC P0122 THROTTLE/PEDAL POSITION SENSOR/SWITCH “A” CIRCUIT LOW

DTC DETECTING CONDITION:

- Immediately at fault recognition
- GENERAL DESCRIPTION <Ref. to GD(H4SO)-47, DTC P0122 THROTTLE/PEDAL POSITION SENSOR/SWITCH “A” CIRCUIT LOW, Diagnostic Trouble Code (DTC) Detecting Criteria.>

TROUBLE SYMPTOM:

- Improper idling
- Engine stalls.
- Poor driving performance

CAUTION:

After servicing or replacing faulty parts, perform Clear Memory Mode <Ref. to EN(H4SO)(diag)-51, OPERATION, Clear Memory Mode.>, and Inspection Mode <Ref. to EN(H4SO)(diag)-40, PROCEDURE, Inspection Mode.>.

WIRING DIAGRAM:

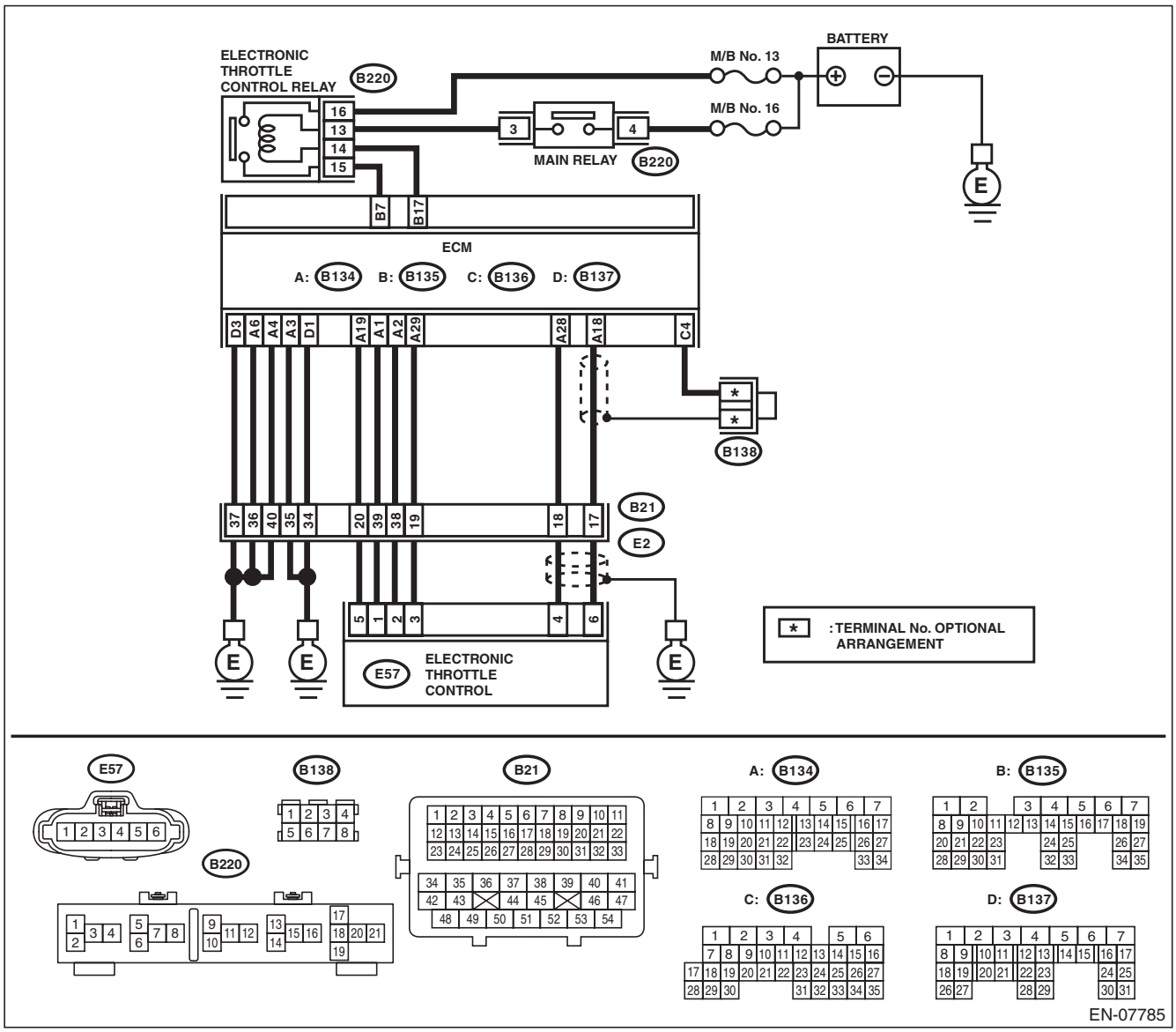

GETmeMANUALS.org

Step		Check	Yes	No
1	**CHECK HARNESS BETWEEN ECM AND ELECTRONIC THROTTLE CONTROL CONNECTOR.** 1) Turn the ignition switch to OFF. 2) Disconnect the connectors from ECM and electronic throttle control. 3) Measure the resistance between ECM and chassis ground. ***Connector & terminal*** ***(B134) No. 19 — Chassis ground:*** ***(B134) No. 18 — Chassis ground:*** ***(B134) No. 18 — (B136) No. 4:***	Is the resistance 1 MΩ or more?	Go to step **2**.	Repair the short circuit to ground in harness between ECM and electronic throttle control connector.
2	**CHECK SHORT CIRCUIT INSIDE THE ECM.** 1) Connect the connector to ECM. 2) Measure the resistance between electronic throttle control connector and engine ground. ***Connector & terminal*** ***(E57) No. 6 — Engine ground:***	Is the resistance 1 MΩ or more?	Replace the electronic throttle control. <Ref. to FU(H4SO)-15, Throttle Body.>	Repair the short circuit to ground in harness between ECM and electronic throttle control connector. Replace the ECM if defective. <Ref. to FU(H4SO)-46, Engine Control Module (ECM).>

GETtheMANUALS.org

X: DTC P0123 THROTTLE/PEDAL POSITION SENSOR/SWITCH “A” CIRCUIT HIGH

DTC DETECTING CONDITION:

- Immediately at fault recognition
- GENERAL DESCRIPTION <Ref. to GD(H4SO)-49, DTC P0123 THROTTLE/PEDAL POSITION SENSOR/SWITCH “A” CIRCUIT HIGH, Diagnostic Trouble Code (DTC) Detecting Criteria.>

TROUBLE SYMPTOM:

- Improper idling
- Engine stalls.
- Poor driving performance

CAUTION:

After servicing or replacing faulty parts, perform Clear Memory Mode <Ref. to EN(H4SO)(diag)-51, OPERATION, Clear Memory Mode.>, and Inspection Mode <Ref. to EN(H4SO)(diag)-40, PROCEDURE, Inspection Mode.>.

WIRING DIAGRAM:

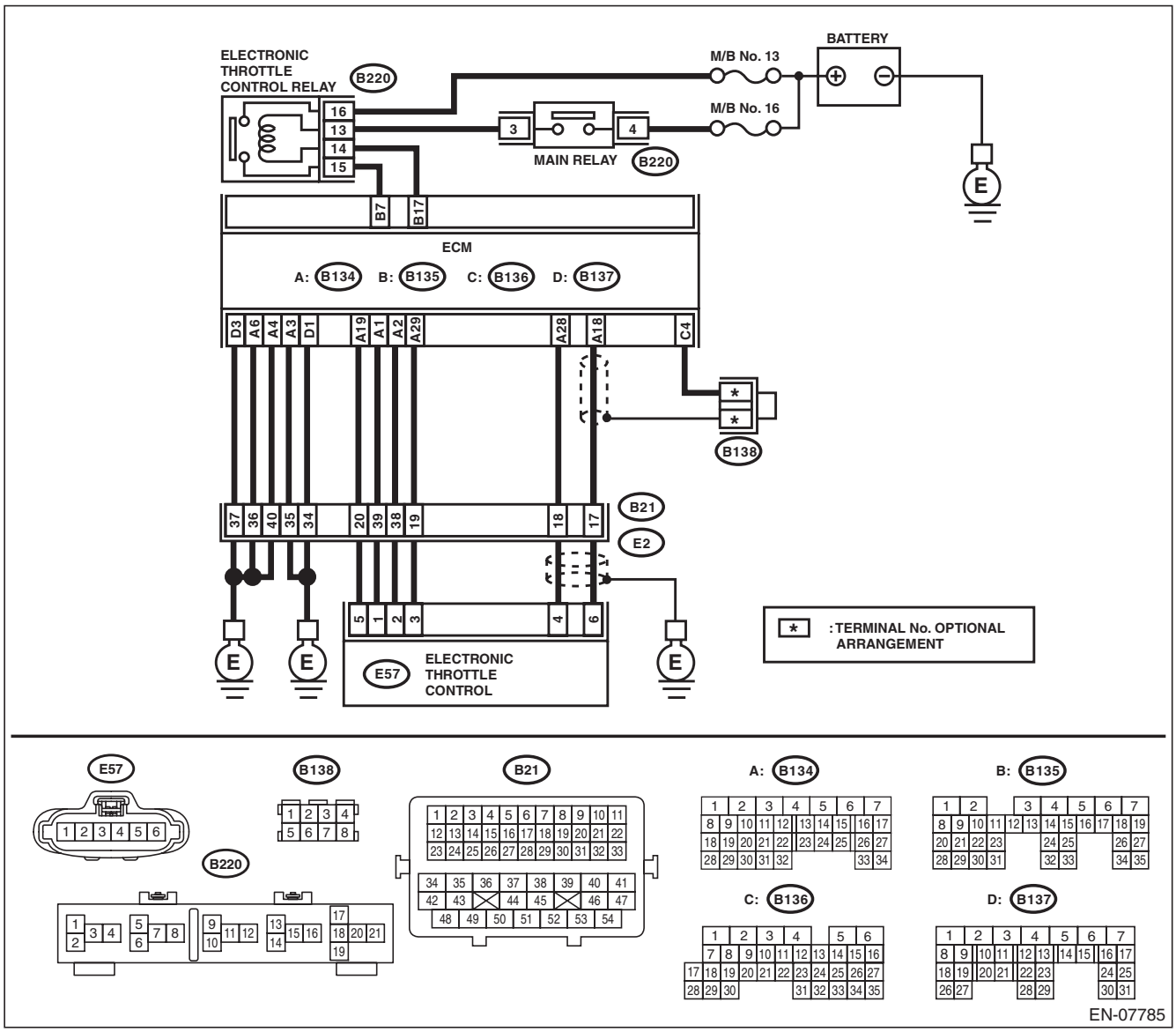

GETTHEMANUALS.org

	Step	Check	Yes	No
1	**CHECK HARNESS BETWEEN ECM AND ELECTRONIC THROTTLE CONTROL CONNECTOR.** 1) Turn the ignition switch to OFF. 2) Disconnect the connectors from ECM and electronic throttle control. 3) Measure the resistance of harness between ECM and electronic throttle control connector. ***Connector & terminal*** ***(B134) No. 18 — (E57) No. 6:*** ***(B134) No. 29 — (E57) No. 3:***	Is the resistance less than 1 Ω?	Go to step **2**.	Repair the harness and connector. NOTE: In this case, repair the following item: • Open circuit in harness between ECM and electronic throttle control connector • Poor contact of coupling connector
2	**CHECK HARNESS BETWEEN ECM AND ELECTRONIC THROTTLE CONTROL CONNECTOR.** 1) Connect the connector to ECM. 2) Measure the resistance between electronic throttle control connector and engine ground. ***Connector & terminal*** ***(E57) No. 3 — Engine ground:***	Is the resistance less than 5 Ω?	Go to step **3**.	Repair the harness and connector. NOTE: In this case, repair the following item: • Open circuit of harness between ECM and engine ground • Poor contact of ECM connector • Poor contact of coupling connector
3	**CHECK HARNESS BETWEEN ECM AND ELECTRONIC THROTTLE CONTROL CONNECTOR.** 1) Turn the ignition switch to ON. 2) Measure the voltage between electronic throttle control connector and engine ground. ***Connector & terminal*** ***(E57) No. 6 (+) — Engine ground (–):***	Is the voltage 5 V or more?	Repair the short circuit to power in harness between ECM and electronic throttle control connector.	Go to step **4**.
4	**CHECK HARNESS BETWEEN ECM AND ELECTRONIC THROTTLE CONTROL CONNECTOR.** 1) Turn the ignition switch to OFF. 2) Disconnect the connectors from ECM. 3) Measure the resistance between ECM connectors. ***Connector & terminal*** ***(B134) No. 19 — (B134) No. 18:***	Is the resistance 1 MΩ or more?	Repair the poor contact of electronic throttle control connector. Replace the electronic throttle control if defective. <Ref. to FU(H4SO)-15, Throttle Body.>	Repair the short circuit to power in harness between ECM and electronic throttle control connector.

GETthemANUALS.org

Y: DTC P0125 INSUFFICIENT COOLANT TEMPERATURE FOR CLOSED LOOP FUEL CONTROL

DTC DETECTING CONDITION:

- Detected when two consecutive driving cycles with fault occur.
- GENERAL DESCRIPTION <Ref. to GD(H4SO)-51, DTC P0125 INSUFFICIENT COOLANT TEMPERATURE FOR CLOSED LOOP FUEL CONTROL, Diagnostic Trouble Code (DTC) Detecting Criteria.>

TROUBLE SYMPTOM:

Engine does not return to idle.

CAUTION:

After servicing or replacing faulty parts, perform Clear Memory Mode <Ref. to EN(H4SO)(diag)-51, OPERATION, Clear Memory Mode.>, and Inspection Mode <Ref. to EN(H4SO)(diag)-40, PROCEDURE, Inspection Mode.>.

Step		Check	Yes	No
1	**CHECK TIRE SIZE.**	Is the tire size as specified and the same size as three other wheels?	Go to step **2**.	Replace the tire.
2	**CHECK ENGINE COOLANT.** Check the following items: • Amount of engine coolant • Engine coolant freeze • Contamination of engine coolant	Is the engine coolant normal?	Go to step **3**.	Fill or replace the engine coolant. <Ref. to CO(H4SO)-14, REPLACEMENT, Engine Coolant.>
3	**CHECK THERMOSTAT.**	Does the thermostat remain opened?	Replace the thermostat. <Ref. to CO(H4SO)-18, Thermostat.>	Replace the engine coolant temperature sensor. <Ref. to FU(H4SO)-24, Engine Coolant Temperature Sensor.>

GETthemANUALS.org

Z: DTC P0126 INSUFFICIENT ENGINE COOLANT TEMPERATURE FOR STABLE OPERATION

DTC DETECTING CONDITION:
- Detected when two consecutive driving cycles with fault occur.
- GENERAL DESCRIPTION <Ref. to GD(H4SO)-53, DTC P0126 INSUFFICIENT ENGINE COOLANT TEMPERATURE FOR STABLE OPERATION, Diagnostic Trouble Code (DTC) Detecting Criteria.>

TROUBLE SYMPTOM:
- Hard to start
- Improper idling
- Poor driving performance

CAUTION:
After servicing or replacing faulty parts, perform Clear Memory Mode <Ref. to EN(H4SO)(diag)-51, OPERATION, Clear Memory Mode.>, and Inspection Mode <Ref. to EN(H4SO)(diag)-40, PROCEDURE, Inspection Mode.>.

	Step	Check	Yes	No
1	**CHECK ENGINE COOLANT TEMPERATURE SENSOR.** 1) Disconnect the connectors from the engine coolant temperature sensor. 2) Measure the resistance between engine coolant temperature sensor terminals when the engine coolant is cold and after warmed up. ***Terminals*** ***No. 1 — No. 2:***	Is the resistance of engine coolant temperature sensor different between when engine coolant is cold and after warmed up?	Repair the poor contact of ECM connector.	Replace the engine coolant temperature sensor. <Ref. to FU(H4SO)-24, Engine Coolant Temperature Sensor.>

AA:DTC P0128 COOLANT THERMOSTAT (ENGINE COOLANT TEMPERATURE BELOW THERMOSTAT REGULATING TEMPERATURE)

DTC DETECTING CONDITION:
- Detected when two consecutive driving cycles with fault occur.
- GENERAL DESCRIPTION <Ref. to GD(H4SO)-55, DTC P0128 COOLANT THERMOSTAT (ENGINE COOLANT TEMPERATURE BELOW THERMOSTAT REGULATING TEMPERATURE), Diagnostic Trouble Code (DTC) Detecting Criteria.>

TROUBLE SYMPTOM:
Thermostat remains open.

CAUTION:
After servicing or replacing faulty parts, perform Clear Memory Mode <Ref. to EN(H4SO)(diag)-51, OPERATION, Clear Memory Mode.>, and Inspection Mode <Ref. to EN(H4SO)(diag)-40, PROCEDURE, Inspection Mode.>.

	Step	Check	Yes	No
1	**CHECK ENGINE COOLANT.**	Is the engine coolant amount normal?	Go to step **2**.	Refill the engine coolant. <Ref. to CO(H4SO)-14, Engine Coolant.>
2	**CHECK RADIATOR FAN.** 1) Start the engine. 2) Check the radiator fan operation.	Does the radiator fan continuously rotate for 3 minutes or more during idling?	Repair radiator fan circuit. <Ref. to CO(H4SO)-24, Radiator Main Fan and Fan Motor.> and <Ref. to CO(H4SO)-25, Radiator Sub Fan and Fan Motor.>	Replace the thermostat. <Ref. to CO(H4SO)-18, Thermostat.>

GETtheMANUALS.org

AB:DTC P0131 O2 SENSOR CIRCUIT LOW VOLTAGE (BANK 1 SENSOR 1)

DTC DETECTING CONDITION:

- Immediately at fault recognition
- GENERAL DESCRIPTION <Ref. to GD(H4SO)-59, DTC P0131 O2 SENSOR CIRCUIT LOW VOLTAGE (BANK 1 SENSOR 1), Diagnostic Trouble Code (DTC) Detecting Criteria.>

CAUTION:

After servicing or replacing faulty parts, perform Clear Memory Mode <Ref. to EN(H4SO)(diag)-51, OPERATION, Clear Memory Mode.>, and Inspection Mode <Ref. to EN(H4SO)(diag)-40, PROCEDURE, Inspection Mode.>.

WIRING DIAGRAM:

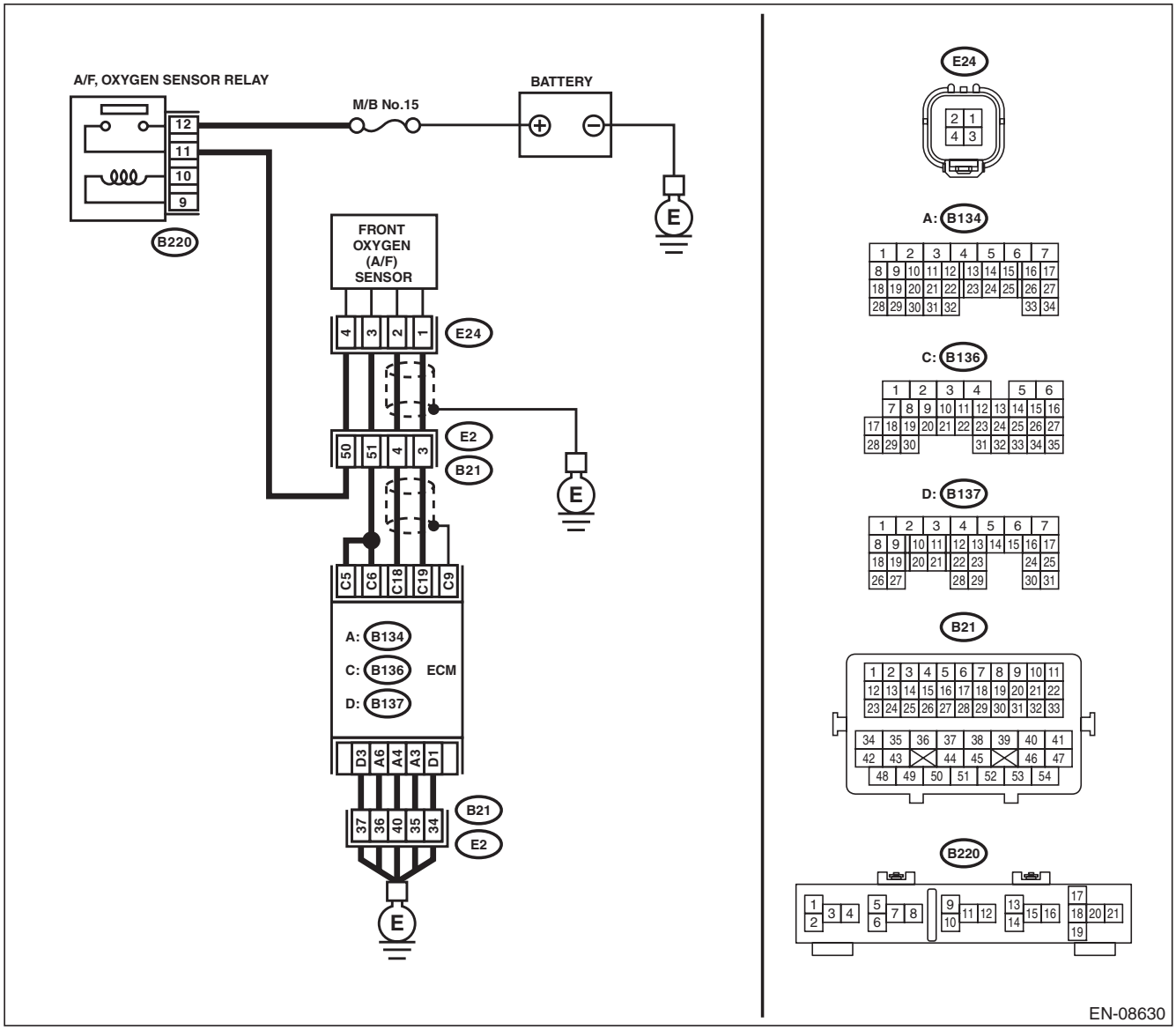

Step		Check	Yes	No
1	**CHECK FRONT OXYGEN (A/F) SENSOR CONNECTOR AND COUPLING CONNECTOR.**	Has water entered the connector?	Completely remove any water inside.	Go to step **2**.

GETtheMANUALS.org

Step		Check	Yes	No
2	**CHECK HARNESS BETWEEN ECM AND FRONT OXYGEN (A/F) SENSOR CONNECTOR.** 1) Turn the ignition switch to OFF. 2) Disconnect the connectors from ECM and front oxygen (A/F) sensor connector. 3) Measure the resistance between ECM and chassis ground. ***Connector & terminal*** ***(B136) No. 18 — Chassis ground:*** ***(B136) No. 19 — Chassis ground:***	Is the resistance 1 MΩ or more?	Go to step **3**.	Repair the ground short circuit of harness between ECM and front oxygen (A/F) sensor connector.
3	**CHECK FOR POOR CONTACT.** Check for poor contact of the front oxygen (A/F) sensor connector.	Is there poor contact of front oxygen (A/F) sensor connector?	Repair the poor contact of front oxygen (A/F) sensor connector.	Replace the front oxygen (A/F) sensor. <Ref. to FU(H4SO)-42, Front Oxygen (A/F) Sensor.>

GETtheMANUALS.org

AC:DTC P0132 O2 SENSOR CIRCUIT HIGH VOLTAGE (BANK 1 SENSOR 1)

DTC DETECTING CONDITION:

- Immediately at fault recognition
- GENERAL DESCRIPTION <Ref. to GD(H4SO)-61, DTC P0132 O2 SENSOR CIRCUIT HIGH VOLTAGE (BANK 1 SENSOR 1), Diagnostic Trouble Code (DTC) Detecting Criteria.>

CAUTION:

After servicing or replacing faulty parts, perform Clear Memory Mode <Ref. to EN(H4SO)(diag)-51, OPERATION, Clear Memory Mode.>, and Inspection Mode <Ref. to EN(H4SO)(diag)-40, PROCEDURE, Inspection Mode.>.

WIRING DIAGRAM:

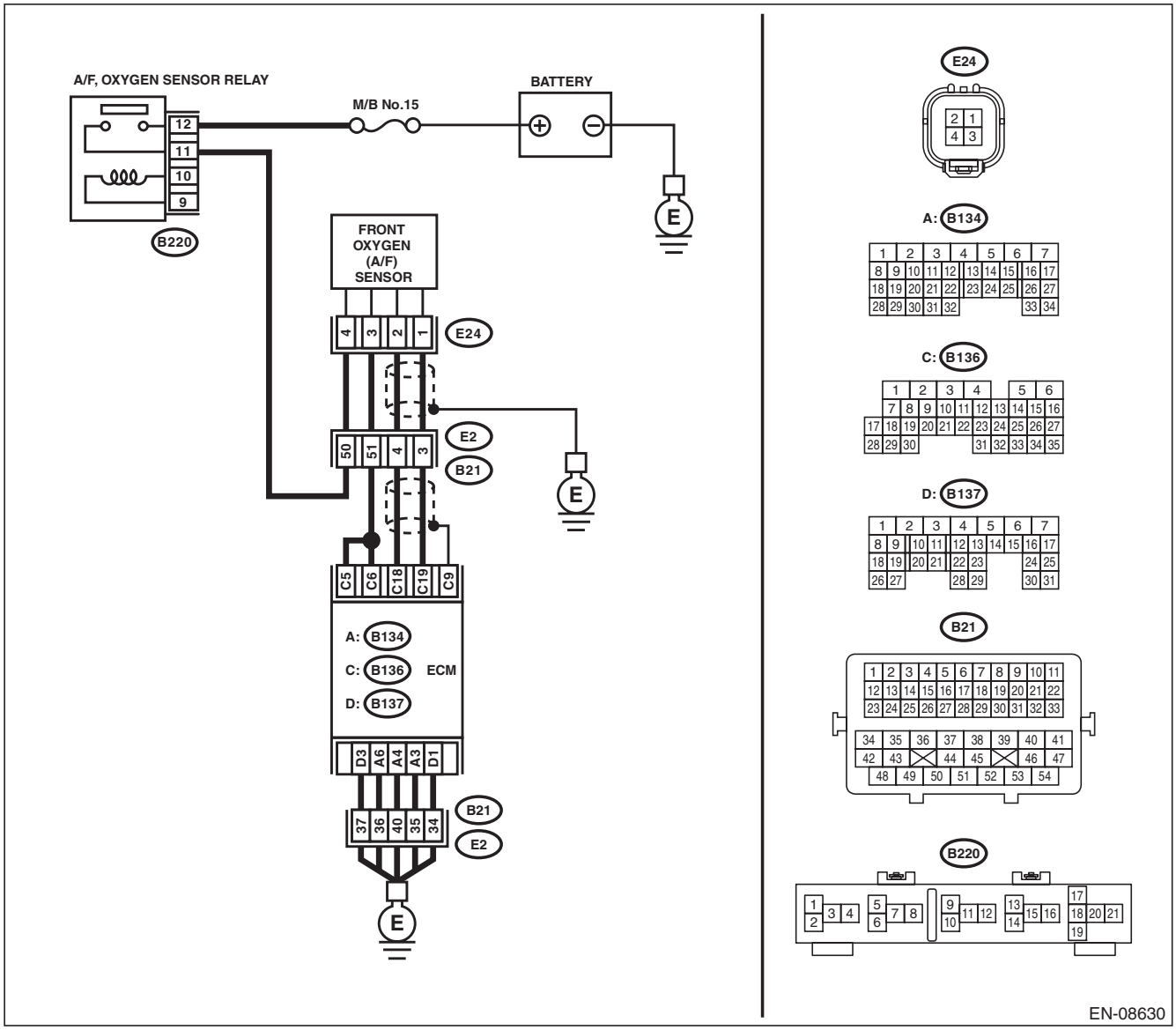

Step		Check	Yes	No
1	**CHECK FRONT OXYGEN (A/F) SENSOR CONNECTOR AND COUPLING CONNECTOR.**	Has water entered the connector?	Completely remove any water inside.	Go to step **2**.

GETtheMANUALS.org

Step		Check	Yes	No
2	**CHECK HARNESS BETWEEN ECM AND FRONT OXYGEN (A/F) SENSOR CONNECTOR.** 1) Turn the ignition switch to OFF. 2) Disconnect the connectors from front oxygen (A/F) sensor. 3) Turn the ignition switch to ON. 4) Measure the voltage between ECM and chassis ground. ***Connector & terminal*** ***(B136) No. 18 (+) — Chassis ground (–):*** ***(B136) No. 19 (+) — Chassis ground (–):***	Is the voltage 8 V or more?	Repair the short circuit to power in the harness between ECM and front oxygen (A/F) sensor connector.	Replace the front oxygen (A/F) sensor. <Ref. to FU(H4SO)-42, Front Oxygen (A/F) Sensor.>

GETtheMANUALS.org

AD:DTC P0133 O2 SENSOR CIRCUIT SLOW RESPONSE (BANK 1 SENSOR 1)

DTC DETECTING CONDITION:

- Detected when two consecutive driving cycles with fault occur.
- GENERAL DESCRIPTION <Ref. to GD(H4SO)-63, DTC P0133 O2 SENSOR CIRCUIT SLOW RESPONSE (BANK 1 SENSOR 1), Diagnostic Trouble Code (DTC) Detecting Criteria.>

CAUTION:

After servicing or replacing faulty parts, perform Clear Memory Mode <Ref. to EN(H4SO)(diag)-51, OPERATION, Clear Memory Mode.>, and Inspection Mode <Ref. to EN(H4SO)(diag)-40, PROCEDURE, Inspection Mode.>.

Step		Check	Yes	No
1	**CHECK EXHAUST SYSTEM.** NOTE: Check the following items. • Loose installation of front portion of exhaust pipe onto cylinder heads • Loose connection between front exhaust pipe and front catalytic converter • Damage of exhaust pipe resulting in a hole	Is there any fault in exhaust system?	Repair the exhaust system.	Replace the front oxygen (A/F) sensor. <Ref. to FU(H4SO)-42, Front Oxygen (A/F) Sensor.>

GETtheMANUALS.org

AE:DTC P0134 O2 SENSOR CIRCUIT NO ACTIVITY DETECTED (BANK 1 SENSOR 1)

DTC DETECTING CONDITION:

- Immediately at fault recognition
- GENERAL DESCRIPTION <Ref. to GD(H4SO)-66, DTC P0134 O2 SENSOR CIRCUIT NO ACTIVITY DETECTED (BANK 1 SENSOR 1), Diagnostic Trouble Code (DTC) Detecting Criteria.>

CAUTION:

After servicing or replacing faulty parts, perform Clear Memory Mode <Ref. to EN(H4SO)(diag)-51, OPERATION, Clear Memory Mode.>, and Inspection Mode <Ref. to EN(H4SO)(diag)-40, PROCEDURE, Inspection Mode.>.

WIRING DIAGRAM:

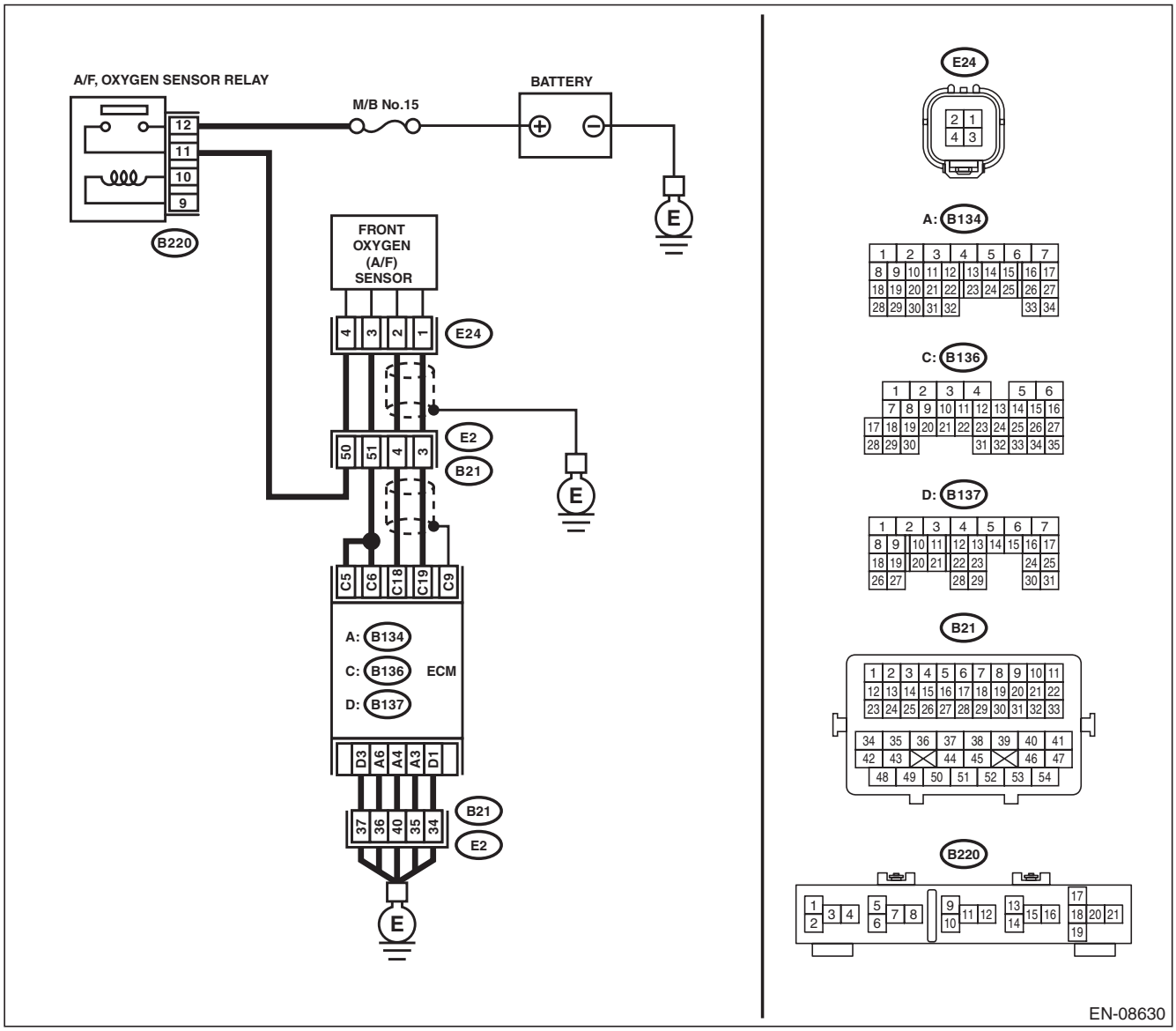

GETtheMANUALS.org

Step		Check	Yes	No
1	**CHECK HARNESS BETWEEN ECM AND FRONT OXYGEN (A/F) SENSOR CONNECTOR.** 1) Turn the ignition switch to OFF. 2) Disconnect the connectors from ECM and front oxygen (A/F) sensor connector. 3) Measure the resistance of harness between ECM and front oxygen (A/F) sensor connector. ***Connector & terminal*** ***(B136) No. 18 — (E24) No. 2:*** ***(B136) No. 19 — (E24) No. 1:***	Is the resistance less than 1 Ω?	Go to step **2**.	Repair the harness and connector. NOTE: In this case, repair the following item: • Open circuit in harness between ECM and front oxygen (A/F) sensor connector • Poor contact of coupling connector
2	**CHECK FOR POOR CONTACT.** Check for poor contact of ECM and front oxygen (A/F) sensor connector.	Is there poor contact of ECM or front oxygen (A/F) sensor connector?	Repair the poor contact of ECM or front oxygen (A/F) sensor connector.	Replace the front oxygen (A/F) sensor. <Ref. to FU(H4SO)-42, Front Oxygen (A/F) Sensor.>

GETthemANSWERS.org

AF:DTC P0137 O2 SENSOR CIRCUIT LOW VOLTAGE (BANK 1 SENSOR 2)

DTC DETECTING CONDITION:

- Detected when two consecutive driving cycles with fault occur.
- GENERAL DESCRIPTION <Ref. to GD(H4SO)-68, DTC P0137 O2 SENSOR CIRCUIT LOW VOLTAGE (BANK 1 SENSOR 2), Diagnostic Trouble Code (DTC) Detecting Criteria.>

CAUTION:

After servicing or replacing faulty parts, perform Clear Memory Mode <Ref. to EN(H4SO)(diag)-51, OPERATION, Clear Memory Mode.>, and Inspection Mode <Ref. to EN(H4SO)(diag)-40, PROCEDURE, Inspection Mode.>.

WIRING DIAGRAM:

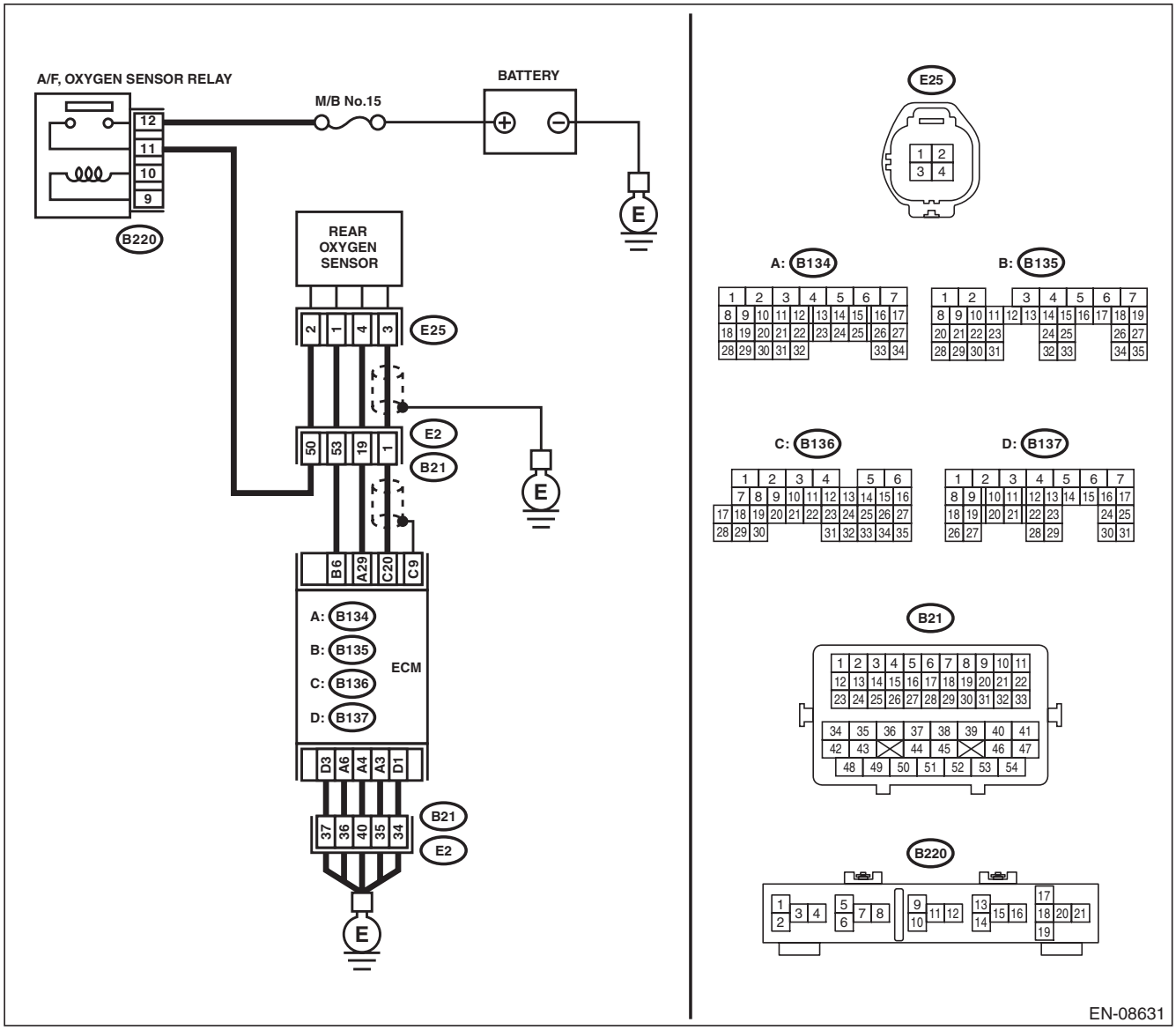

GET THE MANUALS.org

	Step	Check	Yes	No
1	**CHECK REAR OXYGEN SENSOR DATA.** 1) Warm up the engine until engine coolant temperature is higher than 75°C (167°F), and keep the engine speed at 3,000 rpm. (2 minutes maximum) 2) Read the value of «Rear O2 Sensor» using the Subaru Select Monitor or a general scan tool. NOTE: • Subaru Select Monitor For detailed operation procedures, refer to "READ CURRENT DATA FOR ENGINE". <Ref. to EN(H4SO)(diag)-33, Subaru Select Monitor.> • General scan tool For detailed operation procedures, refer to the general scan tool operation manual.	Is the value of «Rear O2 Sensor» 0.490 V or more?	Go to step **5**.	Go to step **2**.
2	**CHECK REAR OXYGEN SENSOR CONNECTOR AND COUPLING CONNECTOR.**	Has water entered the connector?	Completely remove any water inside.	Go to step **3**.
3	**CHECK HARNESS BETWEEN ECM AND REAR OXYGEN SENSOR CONNECTOR.** 1) Turn the ignition switch to OFF. 2) Disconnect the connector from ECM and rear oxygen sensor. 3) Measure the resistance of harness between ECM and rear oxygen sensor connector. ***Connector & terminal*** ***(B136) No. 20 — (E25) No. 3:*** ***(B134) No. 29 — (E25) No. 4:***	Is the resistance less than 1 Ω?	Go to step **4**.	Repair the harness and connector. NOTE: In this case, repair the following item: • Open circuit in harness between ECM and rear oxygen sensor connector • Poor contact of coupling connector
4	**CHECK HARNESS BETWEEN ECM AND REAR OXYGEN SENSOR CONNECTOR.** 1) Connect the connector to ECM. 2) Turn the ignition switch to ON. 3) Measure the voltage between rear oxygen sensor connector and chassis ground. ***Connector & terminal*** ***(E25) No. 3 (+) — Chassis ground (–):***	Is the voltage 0.2 — 0.5 V?	Replace the rear oxygen sensor. <Ref. to FU(H4SO)-44, Rear Oxygen Sensor.>	Repair the harness and connector. NOTE: In this case, repair the following item: • Open circuit in harness between ECM and rear oxygen sensor connector • Poor contact of coupling connector • Poor contact of ECM connector
5	**CHECK EXHAUST SYSTEM.** Check exhaust system parts. NOTE: Check the following items. • Looseness and improper fitting of exhaust system parts • Damage (crack, hole etc.) of parts • Loose part and improper installation between front oxygen (A/F) sensor and rear oxygen sensor	Is there any fault in exhaust system?	Repair or replace faulty parts.	Replace the rear oxygen sensor. <Ref. to FU(H4SO)-44, Rear Oxygen Sensor.>

GETmeMANUALS.org

AG:DTC P0138 O2 SENSOR CIRCUIT HIGH VOLTAGE (BANK 1 SENSOR 2)

DTC DETECTING CONDITION:

- Detected when two consecutive driving cycles with fault occur.
- GENERAL DESCRIPTION <Ref. to GD(H4SO)-71, DTC P0138 O2 SENSOR CIRCUIT HIGH VOLTAGE (BANK 1 SENSOR 2), Diagnostic Trouble Code (DTC) Detecting Criteria.>

CAUTION:

After servicing or replacing faulty parts, perform Clear Memory Mode <Ref. to EN(H4SO)(diag)-51, OPERATION, Clear Memory Mode.>, and Inspection Mode <Ref. to EN(H4SO)(diag)-40, PROCEDURE, Inspection Mode.>.

WIRING DIAGRAM:

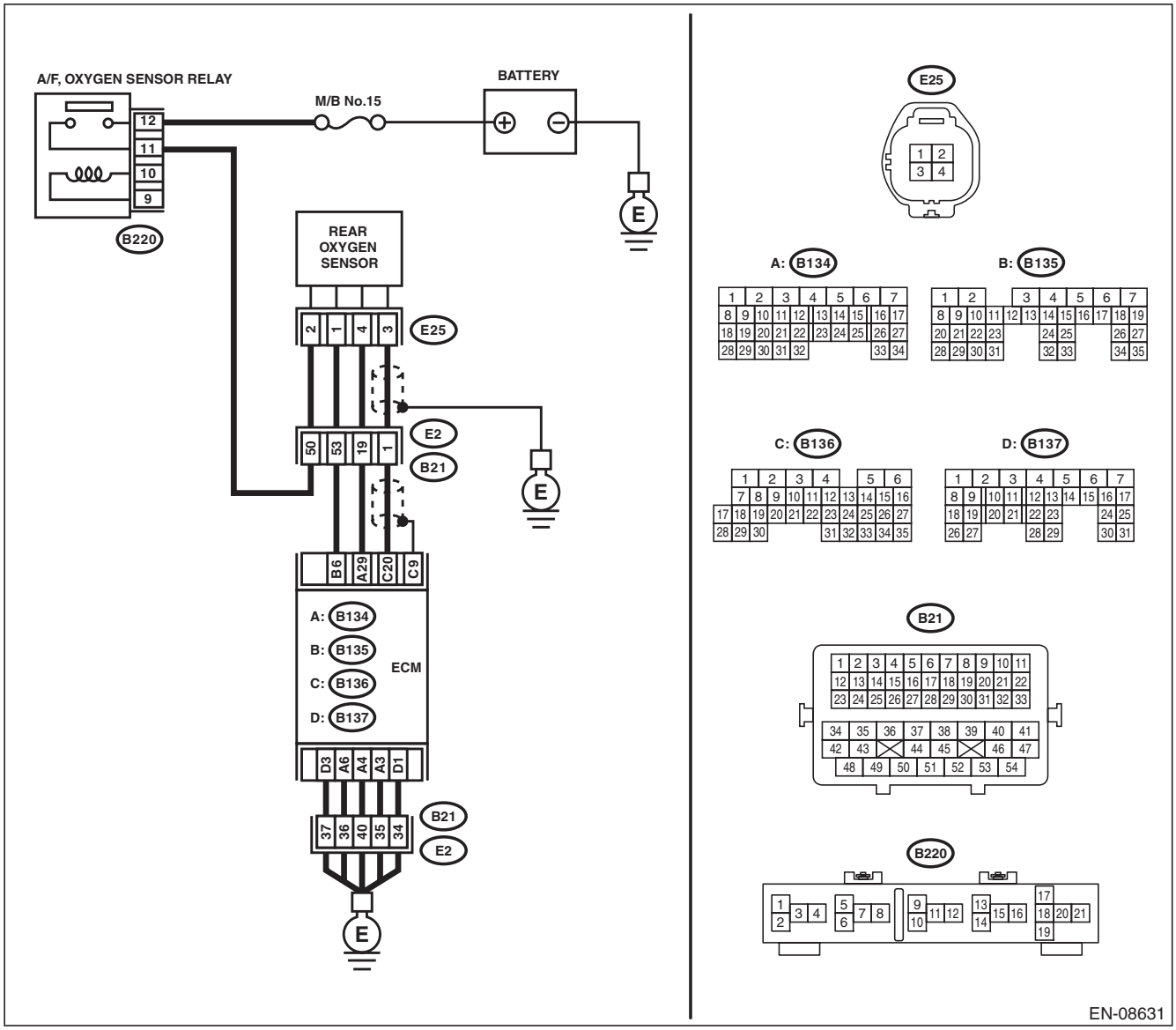

GETtheMANUALS.org

	Step	Check	Yes	No
1	**CHECK REAR OXYGEN SENSOR DATA.** 1) Warm up the engine until engine coolant temperature is higher than 75°C (167°F), and rapidly reduce the engine speed from 3,000 rpm. 2) Read the value of «Rear O2 Sensor» using the Subaru Select Monitor or a general scan tool. NOTE: • Subaru Select Monitor For detailed operation procedures, refer to "READ CURRENT DATA FOR ENGINE". <Ref. to EN(H4SO)(diag)-33, Subaru Select Monitor.> • General scan tool For detailed operation procedures, refer to the general scan tool operation manual.	Is the value of «Rear O2 Sensor» 0.250 V or less?	Go to step **5**.	Go to step **2**.
2	**CHECK REAR OXYGEN SENSOR CONNECTOR AND COUPLING CONNECTOR.**	Has water entered the connector?	Completely remove any water inside.	Go to step **3**.
3	**CHECK HARNESS BETWEEN ECM AND REAR OXYGEN SENSOR CONNECTOR.** 1) Turn the ignition switch to OFF. 2) Disconnect the connector from ECM and rear oxygen sensor. 3) Measure the resistance of harness between ECM and rear oxygen sensor connector. ***Connector & terminal*** ***(B136) No. 20 — (E25) No. 3:*** ***(B134) No. 29 — (E25) No. 4:***	Is the resistance less than 1 Ω?	Go to step **4**.	Repair the harness and connector. NOTE: In this case, repair the following item: • Open circuit in harness between ECM and rear oxygen sensor connector • Poor contact of coupling connector
4	**CHECK HARNESS BETWEEN ECM AND REAR OXYGEN SENSOR CONNECTOR.** 1) Connect the connector to ECM. 2) Turn the ignition switch to ON. 3) Measure the voltage between rear oxygen sensor connector and chassis ground. ***Connector & terminal*** ***(E25) No. 3 (+) — Chassis ground (–):***	Is the voltage 0.2 — 0.5 V?	Replace the rear oxygen sensor. <Ref. to FU(H4SO)-44, Rear Oxygen Sensor.>	Repair the harness and connector. NOTE: In this case, repair the following item: • Open circuit in harness between ECM and rear oxygen sensor connector • Poor contact of coupling connector • Poor contact of ECM connector
5	**CHECK EXHAUST SYSTEM.** Check exhaust system parts. NOTE: Check the following items. • Looseness and improper fitting of exhaust system parts • Damage (crack, hole etc.) of parts • Loose part and improper installation between front oxygen (A/F) sensor and rear oxygen sensor	Is there any fault in exhaust system?	Repair or replace faulty parts.	Replace the rear oxygen sensor. <Ref. to FU(H4SO)-44, Rear Oxygen Sensor.>

GETtheMANUALS.org

AH:DTC P013A O2 SENSOR SLOW RESPONSE - RICH TO LEAN (BANK 1 SENSOR 2)

DTC DETECTING CONDITION:

- Detected when two consecutive driving cycles with fault occur.
- GENERAL DESCRIPTION <Ref. to GD(H4SO)-72, DTC P013A O2 SENSOR SLOW RESPONSE - RICH TO LEAN (BANK 1 SENSOR 2), Diagnostic Trouble Code (DTC) Detecting Criteria.>

CAUTION:

After servicing or replacing faulty parts, perform Clear Memory Mode <Ref. to EN(H4SO)(diag)-51, OPERATION, Clear Memory Mode.>, and Inspection Mode <Ref. to EN(H4SO)(diag)-40, PROCEDURE, Inspection Mode.>.

WIRING DIAGRAM:

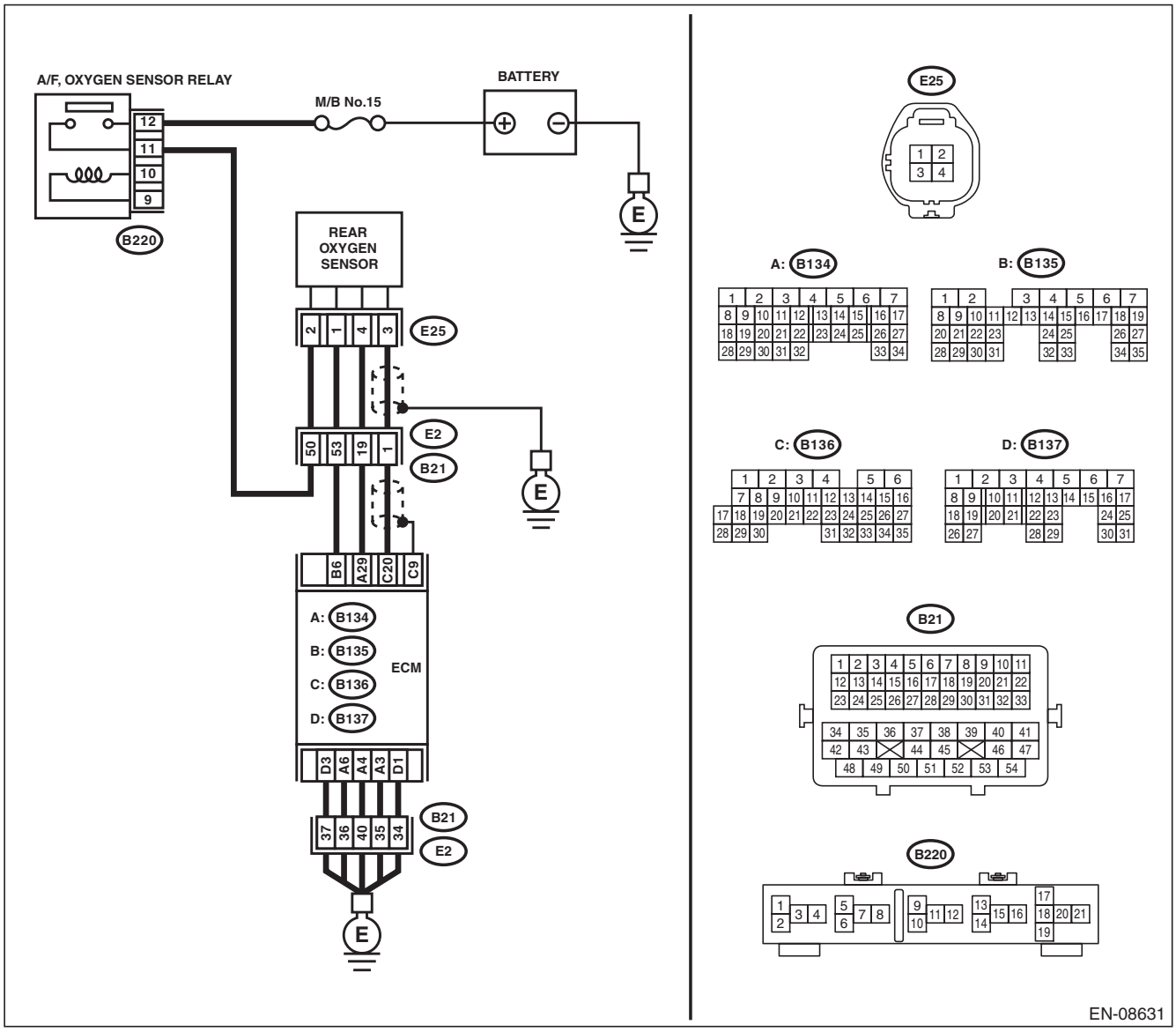

GETtheMANUALS.org

	Step	Check	Yes	No
1	**CHECK HARNESS BETWEEN ECM AND REAR OXYGEN SENSOR CONNECTOR.** 1) Turn the ignition switch to OFF. 2) Disconnect the connector from ECM and rear oxygen sensor. 3) Measure the resistance of harness between ECM and rear oxygen sensor connector. ***Connector & terminal*** ***(B136) No. 20 — (E25) No. 3:***	Is the resistance less than 1 Ω?	Go to step **2**.	Repair the harness and connector. NOTE: In this case, repair the following item: • Open circuit in harness between ECM and rear oxygen sensor connector • Poor contact of coupling connector
2	**CHECK HARNESS BETWEEN ECM AND REAR OXYGEN SENSOR CONNECTOR.** Measure the resistance between rear oxygen sensor connector and chassis ground. ***Connector & terminal*** ***(E25) No. 3 — Chassis ground:***	Is the resistance 1 MΩ or more?	Go to step **3**.	Repair the ground short circuit of harness between ECM and rear oxygen sensor connector.
3	**CHECK REAR OXYGEN SENSOR.** Measure the resistance between rear oxygen sensor terminals. ***Terminals*** ***No. 3 — No. 4***	Is the resistance less than 1 Ω?	Replace the rear oxygen sensor. <Ref. to FU(H4SO)-44, Rear Oxygen Sensor.>	Even if DTC is detected, the circuit has returned to a normal condition at this time. Reproduce the failure, and then perform the diagnosis again. NOTE: In this case, temporary poor contact of connector, temporary open or short circuit of harness may be the cause.

AI: DTC P013B O2 SENSOR SLOW RESPONSE - LEAN TO RICH (BANK 1 SENSOR 2)

NOTE:
For the diagnostic procedure, refer to DTC P013A. <Ref. to EN(H4SO)(diag)-144, DTC P013A O2 SENSOR SLOW RESPONSE - RICH TO LEAN (BANK 1 SENSOR 2), Diagnostic Procedure with Diagnostic Trouble Code (DTC).>

AJ:DTC P013E O2 SENSOR DELAYED RESPONSE - RICH TO LEAN (BANK 1 SENSOR 2)

NOTE:
For the diagnostic procedure, refer to DTC P013A. <Ref. to EN(H4SO)(diag)-144, DTC P013A O2 SENSOR SLOW RESPONSE - RICH TO LEAN (BANK 1 SENSOR 2), Diagnostic Procedure with Diagnostic Trouble Code (DTC).>

AK:DTC P013F O2 SENSOR DELAYED RESPONSE - LEAN TO RICH (BANK 1 SENSOR 2)

NOTE:
For the diagnostic procedure, refer to DTC P013A. <Ref. to EN(H4SO)(diag)-144, DTC P013A O2 SENSOR SLOW RESPONSE - RICH TO LEAN (BANK 1 SENSOR 2), Diagnostic Procedure with Diagnostic Trouble Code (DTC).>

GETtheMANUALS.org

AL:DTC P0140 O2 SENSOR CIRCUIT NO ACTIVITY DETECTED (BANK1 SENSOR2)

DTC DETECTING CONDITION:

- Detected when two consecutive driving cycles with fault occur.
- GENERAL DESCRIPTION <Ref. to GD(H4SO)-80, DTC P0140 O2 SENSOR CIRCUIT NO ACTIVITY DETECTED (BANK1 SENSOR2), Diagnostic Trouble Code (DTC) Detecting Criteria.>

CAUTION:

After servicing or replacing faulty parts, perform Clear Memory Mode <Ref. to EN(H4SO)(diag)-51, OPERATION, Clear Memory Mode.>, and Inspection Mode <Ref. to EN(H4SO)(diag)-40, PROCEDURE, Inspection Mode.>.

WIRING DIAGRAM:

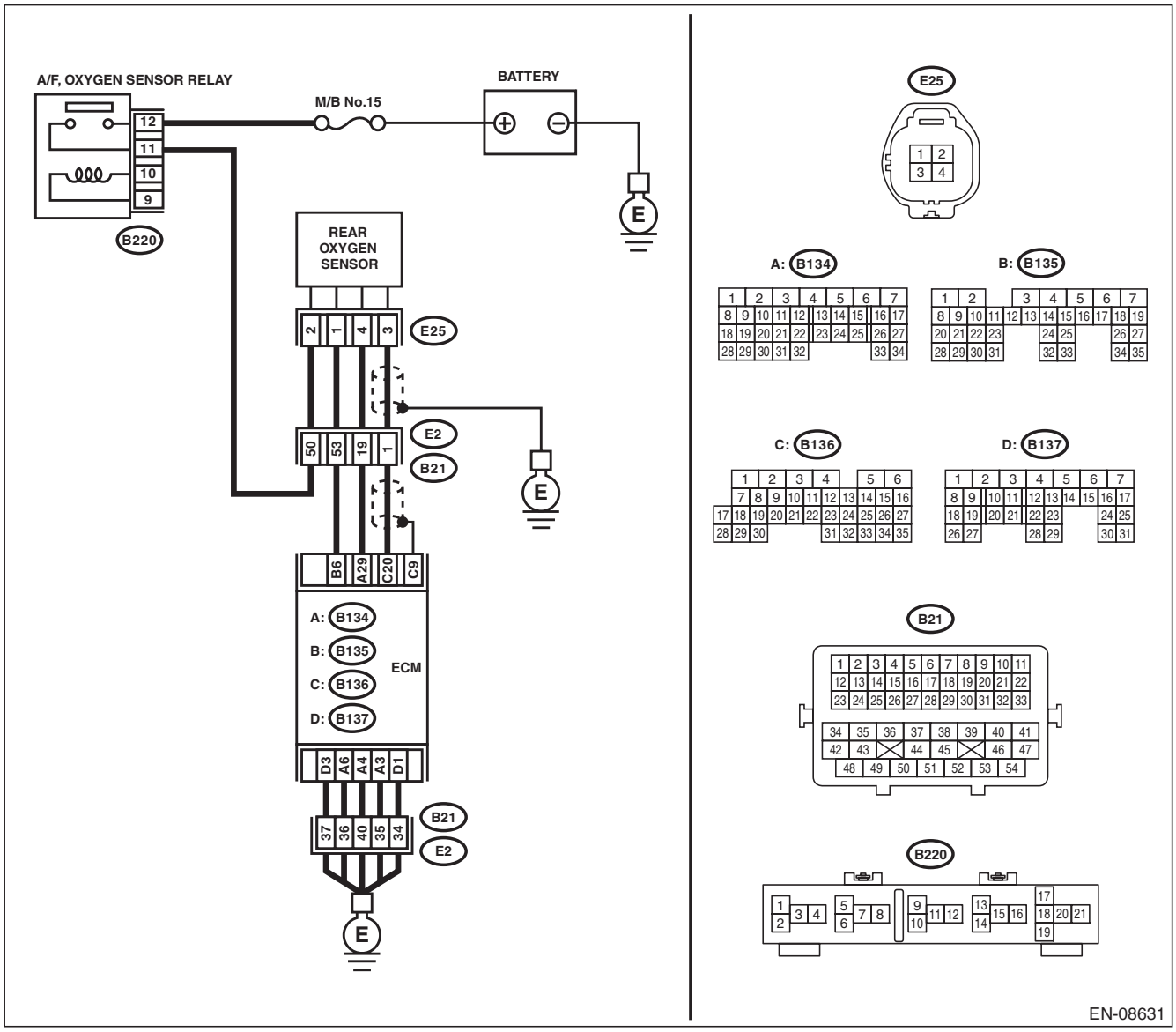

GETtheMANUALS.org

	Step	Check	Yes	No
1	**CHECK REAR OXYGEN SENSOR DATA.** 1) Warm up the engine until engine coolant temperature is higher than 75°C (167°F), and keep the engine speed at 3,000 rpm. (2 minutes maximum) 2) Read the value of «Rear O2 Sensor» using the Subaru Select Monitor or a general scan tool. NOTE: • Subaru Select Monitor For detailed operation procedures, refer to "READ CURRENT DATA FOR ENGINE". <Ref. to EN(H4SO)(diag)-33, Subaru Select Monitor.> • General scan tool For detailed operation procedures, refer to the general scan tool operation manual.	Is the value of «Rear O2 Sensor» 0.490 V or more?	Go to step **6**.	Go to step **2**.
2	**CHECK REAR OXYGEN SENSOR DATA.** 1) Warm up the engine until engine coolant temperature is higher than 75°C (167°F), and rapidly reduce the engine speed from 3,000 rpm. 2) Read the value of «Rear O2 Sensor» using the Subaru Select Monitor or a general scan tool. NOTE: • Subaru Select Monitor For detailed operation procedures, refer to "READ CURRENT DATA FOR ENGINE". <Ref. to EN(H4SO)(diag)-33, Subaru Select Monitor.> • General scan tool For detailed operation procedures, refer to the general scan tool operation manual.	Is the value of «Rear O2 Sensor» 0.250 V or less?	Go to step **6**.	Go to step **3**.
3	**CHECK REAR OXYGEN SENSOR CONNECTOR AND COUPLING CONNECTOR.**	Has water entered the connector?	Completely remove any water inside.	Go to step **4**.
4	**CHECK HARNESS BETWEEN ECM AND REAR OXYGEN SENSOR CONNECTOR.** 1) Turn the ignition switch to OFF. 2) Disconnect the connector from ECM and rear oxygen sensor. 3) Measure the resistance of harness between ECM and rear oxygen sensor connector. ***Connector & terminal*** ***(B136) No. 20 — (E25) No. 3:*** ***(B134) No. 29 — (E25) No. 4:***	Is the resistance less than 1 Ω?	Go to step **5**.	Repair the harness and connector. NOTE: In this case, repair the following item: • Open circuit in harness between ECM and rear oxygen sensor connector • Poor contact of coupling connector

GETtheMANUALS.org

	Step	Check	Yes	No
5	**CHECK HARNESS BETWEEN ECM AND REAR OXYGEN SENSOR CONNECTOR.** 1) Connect the connector to ECM. 2) Turn the ignition switch to ON. 3) Measure the voltage between rear oxygen sensor connector and chassis ground. ***Connector & terminal*** ***(E25) No. 3 (+) — Chassis ground (–):***	Is the voltage 0.2 — 0.5 V?	Replace the rear oxygen sensor. <Ref. to FU(H4SO)-44, Rear Oxygen Sensor.>	Repair the harness and connector. NOTE: In this case, repair the following item: • Open circuit in harness between ECM and rear oxygen sensor connector • Poor contact of coupling connector • Poor contact of ECM connector
6	**CHECK EXHAUST SYSTEM.** Check exhaust system parts. NOTE: Check the following items. • Looseness and improper fitting of exhaust system parts • Damage (crack, hole etc.) of parts • Loose part and improper installation between front oxygen (A/F) sensor and rear oxygen sensor	Is there any fault in exhaust system?	Repair or replace faulty parts.	Replace the rear oxygen sensor. <Ref. to FU(H4SO)-44, Rear Oxygen Sensor.>

AM:DTC P0141 O2 SENSOR HEATER CIRCUIT (BANK1 SENSOR2)

Refer to DTC P0037 for diagnostic procedure. <Ref. to EN(H4SO)(diag)-96, DTC P0037 HO2S HEATER CONTROL CIRCUIT LOW (BANK 1 SENSOR 2), Diagnostic Procedure with Diagnostic Trouble Code (DTC).>

GETtheMANUALS.org

AN:DTC P014C O2 SENSOR SLOW RESPONSE - RICH TO LEAN (BANK 1 SENSOR 1)

DTC DETECTING CONDITION:

- Detected when two consecutive driving cycles with fault occur.
- GENERAL DESCRIPTION <Ref. to GD(H4SO)-84, DTC P014C O2 SENSOR SLOW RESPONSE - RICH TO LEAN (BANK 1 SENSOR 1), Diagnostic Trouble Code (DTC) Detecting Criteria.>

CAUTION:

After servicing or replacing faulty parts, perform Clear Memory Mode <Ref. to EN(H4SO)(diag)-51, OPERATION, Clear Memory Mode.>, and Inspection Mode <Ref. to EN(H4SO)(diag)-40, PROCEDURE, Inspection Mode.>.

Step		Check	Yes	No
1	**CHECK EXHAUST SYSTEM.** NOTE: Check the following items. • Loose installation of front portion of exhaust pipe onto cylinder heads • Loose connection between front exhaust pipe and front catalytic converter • Damage of exhaust pipe resulting in a hole	Is there any fault in exhaust system?	Repair the exhaust system.	Replace the front oxygen (A/F) sensor. <Ref. to FU(H4SO)-42, Front Oxygen (A/F) Sensor.>

AO:DTC P014D O2 SENSOR SLOW RESPONSE - LEAN TO RICH (BANK 1 SENSOR 1)

NOTE:
For the diagnostic procedure, refer to DTC P014C. <Ref. to EN(H4SO)(diag)-149, DTC P014C O2 SENSOR SLOW RESPONSE - RICH TO LEAN (BANK 1 SENSOR 1), Diagnostic Procedure with Diagnostic Trouble Code (DTC).>

AP:DTC P015A O2 SENSOR DELAYED RESPONSE - RICH TO LEAN (BANK 1 SENSOR 1)

NOTE:
For the diagnostic procedure, refer to DTC P014C. <Ref. to EN(H4SO)(diag)-149, DTC P014C O2 SENSOR SLOW RESPONSE - RICH TO LEAN (BANK 1 SENSOR 1), Diagnostic Procedure with Diagnostic Trouble Code (DTC).>

AQ:DTC P015B O2 SENSOR DELAYED RESPONSE - LEAN TO RICH (BANK 1 SENSOR 1)

NOTE:
For the diagnostic procedure, refer to DTC P014C. <Ref. to EN(H4SO)(diag)-149, DTC P014C O2 SENSOR SLOW RESPONSE - RICH TO LEAN (BANK 1 SENSOR 1), Diagnostic Procedure with Diagnostic Trouble Code (DTC).>

AR:DTC P0171 SYSTEM TOO LEAN (BANK 1)

Refer to DTC P0172 for diagnostic procedure. <Ref. to EN(H4SO)(diag)-150, DTC P0172 SYSTEM TOO RICH (BANK 1), Diagnostic Procedure with Diagnostic Trouble Code (DTC).>

GET THE MANUALS.org

AS:DTC P0172 SYSTEM TOO RICH (BANK 1)

DTC DETECTING CONDITION:

- Detected when two consecutive driving cycles with fault occur.
- GENERAL DESCRIPTION <Ref. to GD(H4SO)-92, DTC P0172 SYSTEM TOO RICH (BANK 1), Diagnostic Trouble Code (DTC) Detecting Criteria.>

TROUBLE SYMPTOM:

- Improper idling
- Engine stalls.
- Poor driving performance

CAUTION:

After servicing or replacing faulty parts, perform Clear Memory Mode <Ref. to EN(H4SO)(diag)-51, OPERATION, Clear Memory Mode.>, and Inspection Mode <Ref. to EN(H4SO)(diag)-40, PROCEDURE, Inspection Mode.>.

	Step	Check	Yes	No
1	**CHECK EXHAUST SYSTEM.**	Are there holes or loose bolts on exhaust system?	Repair the exhaust system.	Go to step **2**.
2	**CHECK AIR INTAKE SYSTEM.**	Are there holes, loose bolts or disconnection of hose on air intake system?	Repair the air intake system.	Go to step **3**.
3	**CHECK FUEL PRESSURE.** **WARNING:** **Place "NO OPEN FLAMES" signs near the working area.** **CAUTION:** **Be careful not to spill fuel.** Measure the fuel pressure. <Ref. to ME(H4SO)-28, INSPECTION, Fuel Pressure.> **CAUTION:** **Release fuel pressure before removing the fuel pressure gauge.**	Is the measured value 340 — 400 kPa (3.5 — 4.1 kg/cm^2, 49 — 58 psi)?	Go to step **4**.	Repair the following item. Fuel pressure is too high: • Clogged fuel line or bent hose Fuel pressure is too low: • Improper fuel pump discharge • Clogged fuel line
4	**CHECK ENGINE COOLANT TEMPERATURE SENSOR.** 1) Start the engine and warm up completely. 2) Read the value of «Coolant Temp.» using the Subaru Select Monitor or a general scan tool. NOTE: • Subaru Select Monitor For detailed operation procedures, refer to "READ CURRENT DATA FOR ENGINE". <Ref. to EN(H4SO)(diag)-33, Subaru Select Monitor.> • General scan tool For detailed operation procedures, refer to the general scan tool operation manual.	Is the value of «Coolant Temp.» 75°C (167°F) or more?	Go to step **5**.	Replace the engine coolant temperature sensor. <Ref. to FU(H4SO)-24, Engine Coolant Temperature Sensor.>

GETtheMANUALS.org

	Step	Check	Yes	No
5	**CHECK MASS AIR FLOW AND INTAKE AIR TEMPERATURE SENSOR.** 1) Start the engine and warm up engine until coolant temperature is higher than 75°C (167°F). 2) For CVT models, set the select lever to “P” range or “N” range, and for MT models, place the shift lever in the neutral position. 3) Turn the A/C switch to OFF. 4) Turn all the accessory switches to OFF. 5) Read the value of «Mass Air Flow» using the Subaru Select Monitor or a general scan tool. NOTE: • Subaru Select Monitor For detailed operation procedures, refer to “READ CURRENT DATA FOR ENGINE”. <Ref. to EN(H4SO)(diag)-33, Subaru Select Monitor.> • General scan tool For detailed operation procedures, refer to the general scan tool operation manual.	Is the value of «Mass Air Flow» 2.0 — 5.0 g/s (0.26 — 0.66 lb/m)?	Go to step **6**.	Replace the mass air flow and intake air temperature sensor. <Ref. to FU(H4SO)-32, Mass Air Flow and Intake Air Temperature Sensor.>
6	**CHECK MASS AIR FLOW AND INTAKE AIR TEMPERATURE SENSOR.** 1) Start the engine and warm up engine until coolant temperature is higher than 70°C (158°F). 2) For CVT models, set the select lever to “P” range or “N” range, and for MT models, place the shift lever in the neutral position. 3) Turn the A/C switch to OFF. 4) Turn all the accessory switches to OFF. 5) Open the front hood. 6) Measure the ambient temperature. 7) Read the value of «Intake Air Temp.» using the Subaru Select Monitor or a general scan tool. NOTE: • Subaru Select Monitor For detailed operation procedures, refer to “READ CURRENT DATA FOR ENGINE”. <Ref. to EN(H4SO)(diag)-33, Subaru Select Monitor.> • General scan tool For detailed operation procedures, refer to the general scan tool operation manual.	Subtract ambient temperature from «Intake Air Temp.». Is the obtained value –10 — 50°C (–18 — 90°F)?	Repair the poor contact of ECM connector.	Check the mass air flow and intake air temperature sensor. <Ref. to FU(H4SO)-32, Mass Air Flow and Intake Air Temperature Sensor.>

GETtheMANUALS.org

AT:DTC P0181 FUEL TEMPERATURE SENSOR “A” CIRCUIT RANGE/PERFORMANCE

DTC DETECTING CONDITION:

- Detected when two consecutive driving cycles with fault occur.
- GENERAL DESCRIPTION <Ref. to GD(H4SO)-94, DTC P0181 FUEL TEMPERATURE SENSOR “A” CIRCUIT RANGE/PERFORMANCE, Diagnostic Trouble Code (DTC) Detecting Criteria.>

CAUTION:

After servicing or replacing faulty parts, perform Clear Memory Mode <Ref. to EN(H4SO)(diag)-51, OPERATION, Clear Memory Mode.>, and Inspection Mode <Ref. to EN(H4SO)(diag)-40, PROCEDURE, Inspection Mode.>.

Step	Check	Yes	No
1 CHECK FOR ANY OTHER DTC ON DISPLAY.	Is any other DTC displayed?	Check the appropriate DTC using the “List of Diagnostic Trouble Code (DTC)”. <Ref. to EN(H4SO)(diag)-78, List of Diagnostic Trouble Code (DTC).>	Replace the fuel temperature sensor. <Ref. to EC(H4SO)-14, Fuel Temperature Sensor.>

GETtheMANUALS.org

AU:DTC P0182 FUEL TEMPERATURE SENSOR “A” CIRCUIT LOW INPUT

DTC DETECTING CONDITION:

- Immediately at fault recognition
- GENERAL DESCRIPTION <Ref. to GD(H4SO)-97, DTC P0182 FUEL TEMPERATURE SENSOR “A” CIRCUIT LOW INPUT, Diagnostic Trouble Code (DTC) Detecting Criteria.>

CAUTION:

After servicing or replacing faulty parts, perform Clear Memory Mode <Ref. to EN(H4SO)(diag)-51, OPERATION, Clear Memory Mode.>, and Inspection Mode <Ref. to EN(H4SO)(diag)-40, PROCEDURE, Inspection Mode.>.

WIRING DIAGRAM:

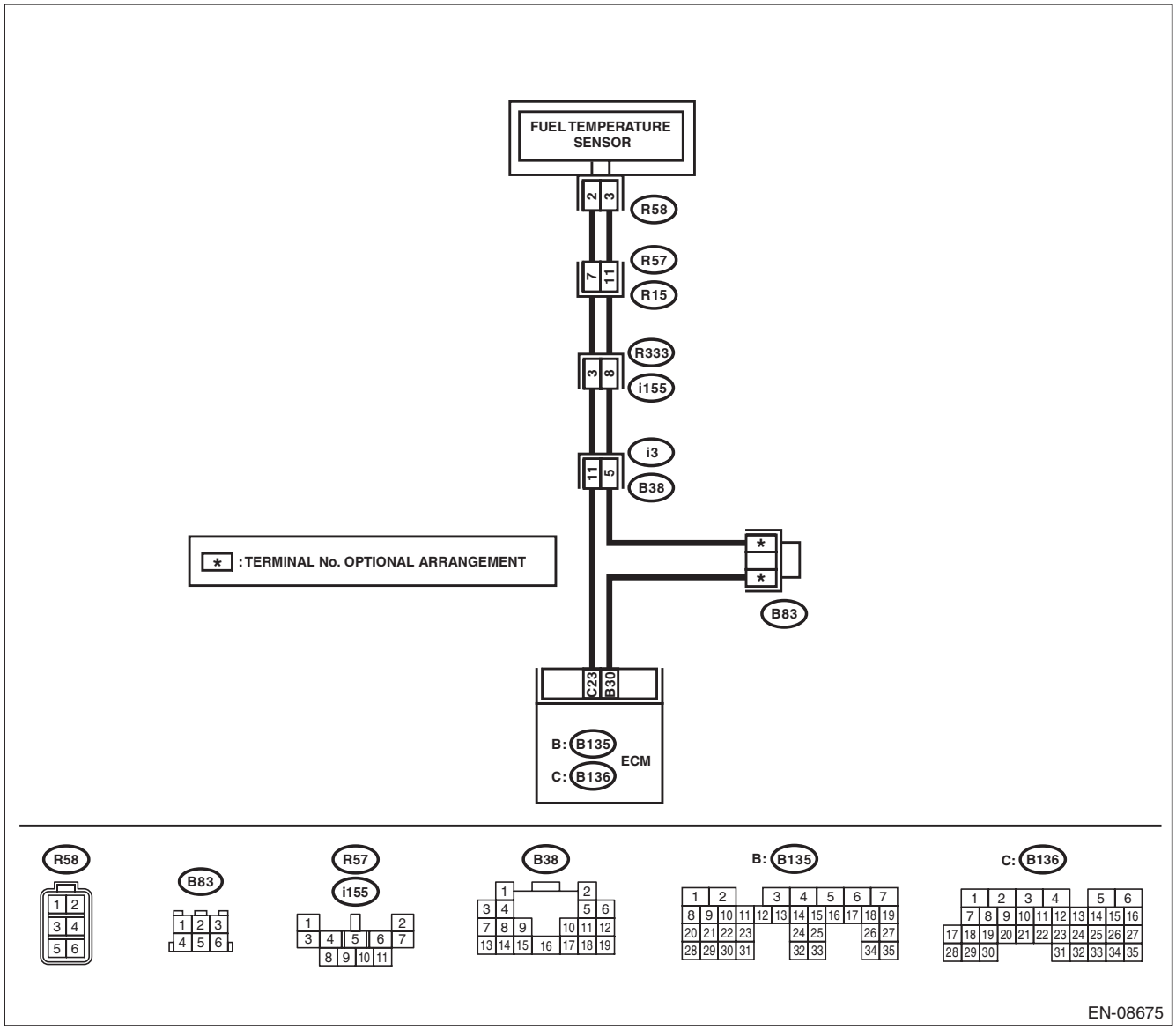

GETtheMANUALS.org

	Step	Check	Yes	No
1	**CHECK CURRENT DATA.** 1) Start the engine. 2) Using the Subaru Select Monitor, read the value in «Fuel Temp.». NOTE: For detailed operation procedures, refer to “READ CURRENT DATA FOR ENGINE”. <Ref. to EN(H4SO)(diag)-33, Subaru Select Monitor.>	Is the value in «Fuel Temp.» 120°C (248°F) or more?	Go to step **2**.	Even if DTC is detected, the circuit has returned to a normal condition at this time. Reproduce the failure, and then perform the diagnosis again. NOTE: In this case, temporary poor contact of connector, temporary open or short circuit of harness may be the cause.
2	**CHECK HARNESS BETWEEN ECM AND FUEL TEMPERATURE SENSOR CONNECTOR.** 1) Turn the ignition switch to OFF. 2) Disconnect the connectors from ECM and fuel temperature sensor. 3) Measure the resistance between ECM and chassis ground. ***Connector & terminal*** ***(B136) No. 23 — Chassis ground:***	Is the resistance 1 MΩ or more?	Replace the fuel temperature sensor. <Ref. to EC(H4SO)-14, Fuel Temperature Sensor.>	Repair the ground short circuit of harness between ECM and fuel pump.

GETtheMANUALS.org

AV:DTC P0183 FUEL TEMPERATURE SENSOR “A” CIRCUIT HIGH INPUT

DTC DETECTING CONDITION:

- Immediately at fault recognition
- GENERAL DESCRIPTION <Ref. to GD(H4SO)-99, DTC P0183 FUEL TEMPERATURE SENSOR “A” CIRCUIT HIGH INPUT, Diagnostic Trouble Code (DTC) Detecting Criteria.>

CAUTION:

After servicing or replacing faulty parts, perform Clear Memory Mode <Ref. to EN(H4SO)(diag)-51, OPERATION, Clear Memory Mode.>, and Inspection Mode <Ref. to EN(H4SO)(diag)-40, PROCEDURE, Inspection Mode.>.

WIRING DIAGRAM:

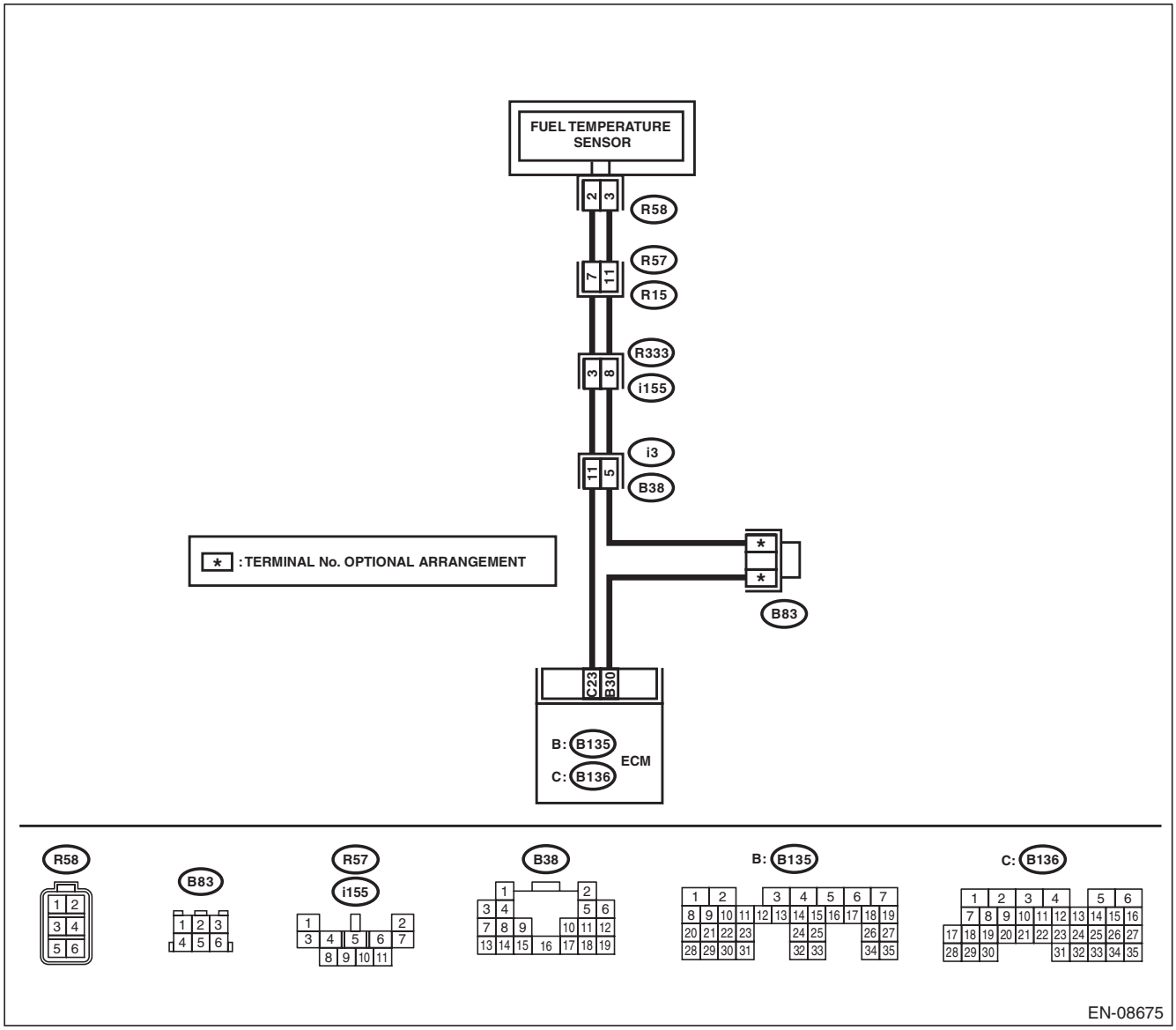

GETtheMANUALS.org

	Step	Check	Yes	No
1	**CHECK CURRENT DATA.** 1) Start the engine. 2) Using the Subaru Select Monitor, read the value in «Fuel Temp.». NOTE: For detailed operation procedures, refer to "READ CURRENT DATA FOR ENGINE". <Ref. to EN(H4SO)(diag)-33, Subaru Select Monitor.>	Is the value in «Fuel Temp.» less than –40°C (–40°F)?	Go to step **2**.	Even if DTC is detected, the circuit has returned to a normal condition at this time. Reproduce the failure, and then perform the diagnosis again. NOTE: In this case, temporary poor contact of connector, temporary open or short circuit of harness may be the cause.
2	**CHECK FOR POOR CONTACT.** Check any poor contact of the ECM and fuel temperature sensor connectors.	Is there poor contact of the ECM or fuel temperature sensor connectors?	Repair any poor contact of the ECM or fuel temperature sensor connectors.	Go to step **3**.
3	**CHECK HARNESS BETWEEN ECM AND FUEL TEMPERATURE SENSOR CONNECTOR.** 1) Turn the ignition switch to OFF. 2) Disconnect the connectors from ECM and fuel temperature sensor. 3) Measure the resistance of the harness between the ECM and fuel temperature sensor connector. ***Connector & terminal*** ***(B136) No. 23 — (R58) No. 2:*** ***(B135) No. 30 — (R58) No. 3:***	Is the resistance less than 1 Ω?	Go to step **4**.	Repair the harness and connector. NOTE: In this case, repair the following item: • Open circuit in harness between ECM and fuel temperature sensor connector • Poor contact of coupling connector • Poor contact of joint connector
4	**CHECK HARNESS BETWEEN ECM AND FUEL TEMPERATURE SENSOR CONNECTOR.** 1) Connect all connectors. 2) Turn the ignition switch to ON. 3) Measure the voltage between ECM and chassis ground. ***Connector & terminal*** ***(B136) No. 23 (+) — Chassis ground (–):***	Is the voltage 5 V or more?	Repair the short circuit to power in the harness between the ECM and fuel temperature sensor connector.	Replace the fuel temperature sensor. <Ref. to EC(H4SO)-14, Fuel Temperature Sensor.>

GETthemANUALS.org

AW:DTC P0196 ENGINE OIL TEMPERATURE SENSOR CIRCUIT RANGE/PERFORMANCE

DTC DETECTING CONDITION:

- Detected when two consecutive driving cycles with fault occur.
- GENERAL DESCRIPTION <Ref. to GD(H4SO)-101, DTC P0196 ENGINE OIL TEMPERATURE SENSOR CIRCUIT RANGE/PERFORMANCE, Diagnostic Trouble Code (DTC) Detecting Criteria.>

TROUBLE SYMPTOM:

- Hard to start
- Improper idling
- Poor driving performance

CAUTION:

After servicing or replacing faulty parts, perform Clear Memory Mode <Ref. to EN(H4SO)(diag)-51, OPERATION, Clear Memory Mode.>, and Inspection Mode <Ref. to EN(H4SO)(diag)-40, PROCEDURE, Inspection Mode.>.

Step	Check	Yes	No
1 **CHECK FOR ANY OTHER DTC ON DISPLAY.**	Is any other DTC displayed?	Check the appropriate DTC using the “List of Diagnostic Trouble Code (DTC)”. <Ref. to EN(H4SO)(diag)-78, List of Diagnostic Trouble Code (DTC).>	Replace the engine oil temperature sensor. <Ref. to FU(H4SO)-40, Oil Temperature Sensor.>

GETthemANUALS.org

AX:DTC P0197 ENGINE OIL TEMPERATURE SENSOR LOW

DTC DETECTING CONDITION:

- Immediately at fault recognition
- GENERAL DESCRIPTION <Ref. to GD(H4SO)-103, DTC P0197 ENGINE OIL TEMPERATURE SENSOR LOW, Diagnostic Trouble Code (DTC) Detecting Criteria.>

TROUBLE SYMPTOM:

- Hard to start
- Improper idling
- Poor driving performance

CAUTION:

After servicing or replacing faulty parts, perform Clear Memory Mode <Ref. to EN(H4SO)(diag)-51, OPERATION, Clear Memory Mode.>, and Inspection Mode <Ref. to EN(H4SO)(diag)-40, PROCEDURE, Inspection Mode.>.

WIRING DIAGRAM:

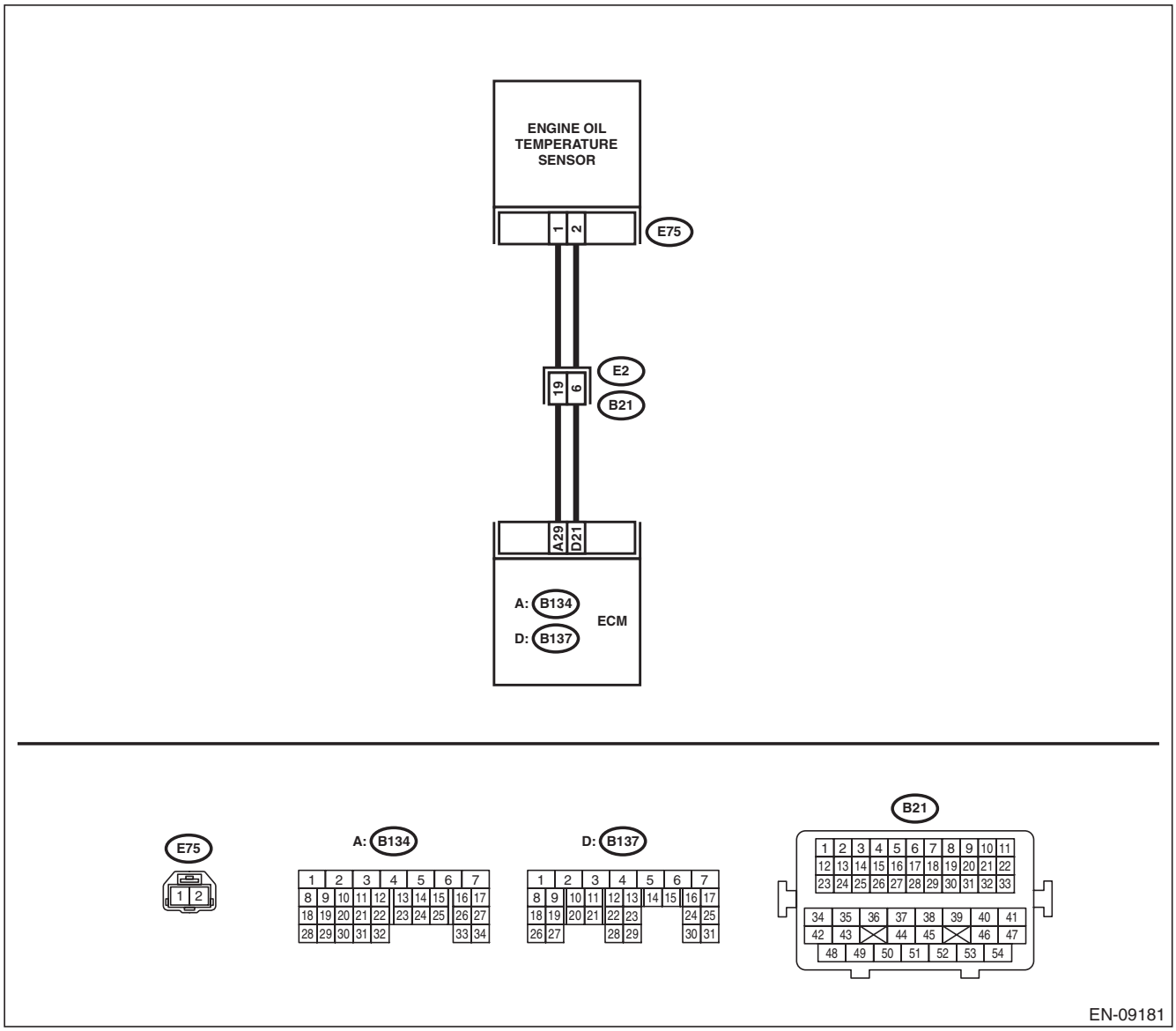

GETtheMANUALS.org

Step		Check	Yes	No
1	**CHECK CURRENT DATA.** 1) Start the engine. 2) Read the value of «Oil Temperature» using Subaru Select Monitor. NOTE: For detailed operation procedures, refer to “READ CURRENT DATA FOR ENGINE”. <Ref. to EN(H4SO)(diag)-33, Subaru Select Monitor.>	Is the value of «Oil Temperature» 215°C (419°F) or more?	Go to step **2**.	Even if DTC is detected, the circuit has returned to a normal condition at this time. Reproduce the failure, and then perform the diagnosis again. NOTE: In this case, temporary poor contact of connector, temporary open or short circuit of harness may be the cause.
2	**CHECK HARNESS BETWEEN ECM AND ENGINE OIL TEMPERATURE SENSOR CONNECTOR.** 1) Turn the ignition switch to OFF. 2) Disconnect the connectors from the ECM and engine oil temperature sensor. 3) Measure the resistance between ECM and chassis ground. ***Connector & terminal*** ***(B137) No. 21 — Chassis ground:***	Is the resistance 1 MΩ or more?	Replace the engine oil temperature sensor. <Ref. to FU(H4SO)-40, Oil Temperature Sensor.>	Repair the short circuit to ground in the harness between the ECM and engine oil temperature sensor connector.

GETthemANUALS.org

AY:DTC P0198 ENGINE OIL TEMPERATURE SENSOR HIGH

DTC DETECTING CONDITION:

- Immediately at fault recognition
- GENERAL DESCRIPTION <Ref. to GD(H4SO)-104, DTC P0198 ENGINE OIL TEMPERATURE SENSOR HIGH, Diagnostic Trouble Code (DTC) Detecting Criteria.>

TROUBLE SYMPTOM:

- Hard to start
- Improper idling
- Poor driving performance

CAUTION:

After servicing or replacing faulty parts, perform Clear Memory Mode <Ref. to EN(H4SO)(diag)-51, OPERATION, Clear Memory Mode.>, and Inspection Mode <Ref. to EN(H4SO)(diag)-40, PROCEDURE, Inspection Mode.>.

WIRING DIAGRAM:

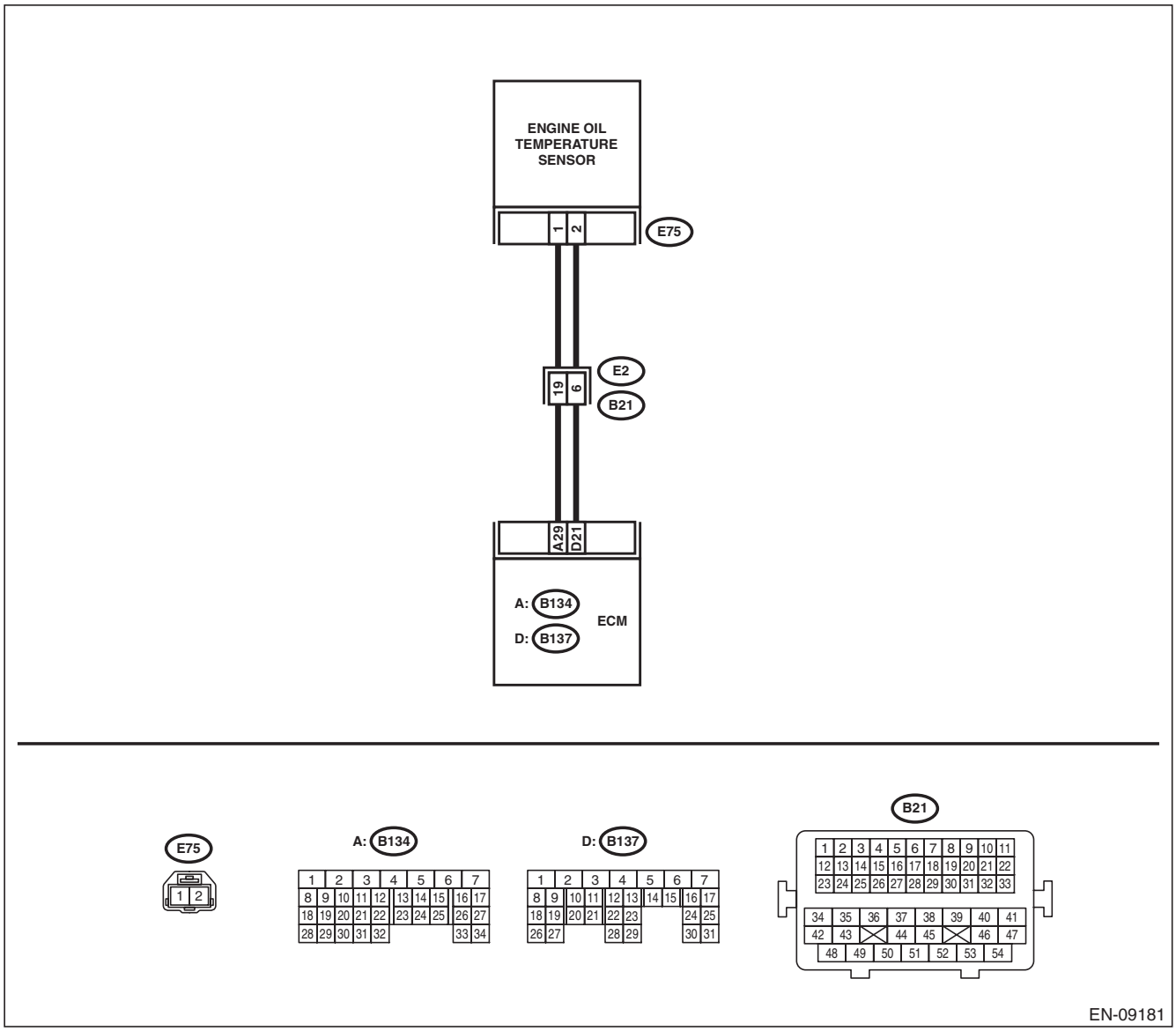

GETtheMANUALS.org

	Step	Check	Yes	No
1	**CHECK CURRENT DATA.** 1) Start the engine. 2) Read the value of «Oil Temperature» using Subaru Select Monitor. NOTE: For detailed operation procedures, refer to “READ CURRENT DATA FOR ENGINE”. <Ref. to EN(H4SO)(diag)-33, Subaru Select Monitor.>	Is the value of «Oil Temperature» less than –40°C (–40°F)?	Go to step **2**.	Even if DTC is detected, the circuit has returned to a normal condition at this time. Reproduce the failure, and then perform the diagnosis again. NOTE: In this case, temporary poor contact of connector, temporary open or short circuit of harness may be the cause.
2	**CHECK FOR POOR CONTACT.** Check for poor contact between the ECM and engine oil temperature sensor connectors.	Is there poor contact of the ECM or engine oil temperature sensor connectors?	Repair the poor contact of ECM or engine oil temperature sensor connector.	Go to step **3**.
3	**CHECK HARNESS BETWEEN ECM AND ENGINE OIL TEMPERATURE SENSOR CONNECTOR.** 1) Turn the ignition switch to OFF. 2) Disconnect the connectors from the ECM and engine oil temperature sensor. 3) Measure the resistance of the harness between the ECM and engine oil temperature sensor connector. ***Connector & terminal*** ***(B137) No. 21 — (E75) No. 2:*** ***(B134) No. 29 — (E75) No. 1:***	Is the resistance less than 1 Ω?	Go to step **4**.	Repair the harness and connector. NOTE: In this case, repair the following item: • Open circuit in harness between ECM and engine oil temperature sensor connector • Poor contact of coupling connector
4	**CHECK HARNESS BETWEEN ECM AND ENGINE OIL TEMPERATURE SENSOR CONNECTOR.** 1) Connect all connectors. 2) Turn the ignition switch to ON. 3) Measure the voltage between ECM and chassis ground. ***Connector & terminal*** ***(B137) No. 21 (+) — Chassis ground (–):***	Is the voltage 5 V or more?	Repair the short circuit to power in harness between ECM and engine oil temperature sensor connector.	Replace the engine oil temperature sensor. <Ref. to FU(H4SO)-40, Oil Temperature Sensor.>

GETthemANUALS.org

AZ:DTC P0201 INJECTOR #1

DTC DETECTING CONDITION:

- Immediately at fault recognition
- GENERAL DESCRIPTION <Ref. to GD(H4SO)-105, DTC P0201 INJECTOR #1, Diagnostic Trouble Code (DTC) Detecting Criteria.>

TROUBLE SYMPTOM:

- Improper idling
- Poor driving performance

CAUTION:

After servicing or replacing faulty parts, perform Clear Memory Mode <Ref. to EN(H4SO)(diag)-51, OPERATION, Clear Memory Mode.>, and Inspection Mode <Ref. to EN(H4SO)(diag)-40, PROCEDURE, Inspection Mode.>.

WIRING DIAGRAM:

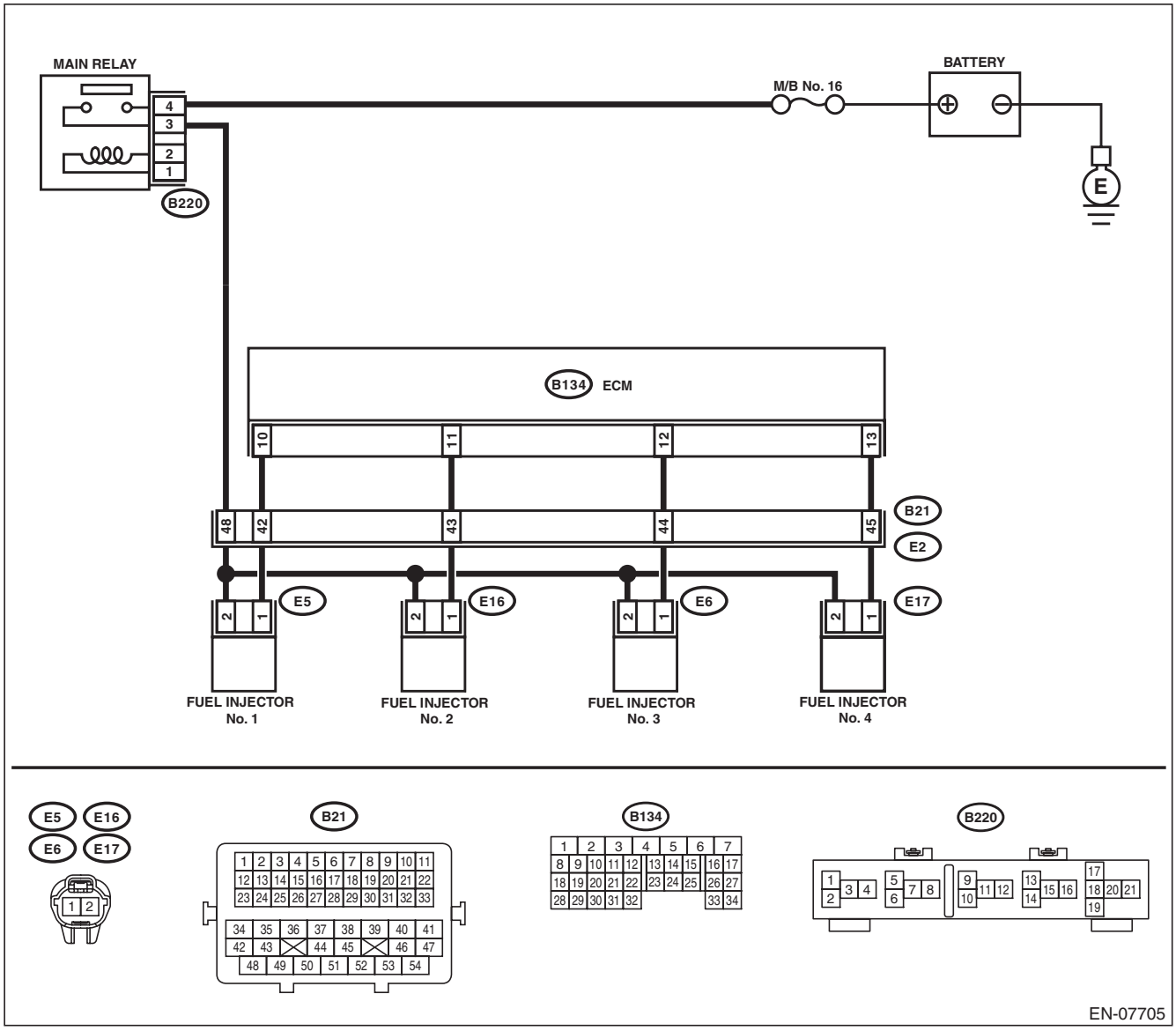

GETmeMANUALS.org

	Step	Check	Yes	No
1	**CHECK POWER SUPPLY TO FUEL INJECTOR.** 1) Turn the ignition switch to OFF. 2) Disconnect the connector from fuel injector. 3) Turn the ignition switch to ON. 4) Measure the voltage between fuel injector connector and the engine ground. ***Connector & terminal*** ***DTC P0201; (E5) No. 2 (+) — Engine ground (–):*** ***DTC P0202; (E16) No. 2 (+) — Engine ground (–):*** ***DTC P0203; (E6) No. 2 (+) — Engine ground (–):*** ***DTC P0204; (E17) No. 2 (+) — Engine ground (–):***	Is the voltage 10 V or more?	Go to step **2**.	Repair the harness and connector. NOTE: In this case, repair the following item: • Open circuit in harness between main relay and fuel injector connector • Poor contact of main relay connector • Poor contact of coupling connector
2	**CHECK HARNESS BETWEEN ECM AND FUEL INJECTOR CONNECTOR.** 1) Turn the ignition switch to OFF. 2) Disconnect the connector from ECM. 3) Measure the resistance between fuel injector connector and engine ground. ***Connector & terminal*** ***DTC P0201; (E5) No. 1 — Engine ground:*** ***DTC P0202; (E16) No. 1 — Engine ground:*** ***DTC P0203; (E6) No. 1 — Engine ground:*** ***DTC P0204; (E17) No. 1 — Engine ground:***	Is the resistance 1 MΩ or more?	Go to step **3**.	Repair the short circuit to ground in harness between ECM connector and fuel injector connector.
3	**CHECK HARNESS BETWEEN ECM AND FUEL INJECTOR CONNECTOR.** Measure the resistance of harness between ECM connector and fuel injector connector. ***Connector & terminal*** ***DTC P0201; (B134) No. 10 — (E5) No. 1:*** ***DTC P0202; (B134) No. 11 — (E16) No. 1:*** ***DTC P0203; (B134) No. 12 — (E6) No. 1:*** ***DTC P0204; (B134) No. 13 — (E17) No. 1:***	Is the resistance less than 1 Ω?	Go to step **4**.	Repair the harness and connector. NOTE: In this case, repair the following item: • Open circuit in harness between ECM connector and fuel injector connector • Poor contact of coupling connector
4	**CHECK FUEL INJECTOR.** Measure the resistance between fuel injector terminals on the corresponding cylinder. ***Terminals*** ***No. 1 — No. 2:***	Is the resistance 5 — 20 Ω?	Go to step **5**.	Replace the fuel injector. <Ref. to FU(H4SO)-37, Fuel Injector.>
5	**CHECK FOR POOR CONTACT.** Check for poor contact of ECM connector.	Is there poor contact of ECM connector?	Repair the poor contact of ECM connector.	Go to step **6**.

GETtheMANUALS.org

Step		Check	Yes	No
6	**CHECK FUEL INJECTOR OPERATION.** 1) Connect all connectors. 2) Start the engine. 3) Check if the corresponding fuel injector emits operating sound. NOTE: Use a sound scope to check the operating sound.	Does the fuel injector emit operating sound?	Even if DTC is detected, the circuit has returned to a normal condition at this time. Reproduce the failure, and then perform the diagnosis again. NOTE: In this case, temporary poor contact of connector, temporary open or short circuit of harness may be the cause.	Repair the poor contact of fuel injector connector.

BA:DTC P0202 INJECTOR #2

NOTE:
For the diagnostic procedure, refer to DTC P0201. <Ref. to EN(H4SO)(diag)-162, DTC P0201 INJECTOR #1, Diagnostic Procedure with Diagnostic Trouble Code (DTC).>

BB:DTC P0203 INJECTOR #3

NOTE:
For the diagnostic procedure, refer to DTC P0201. <Ref. to EN(H4SO)(diag)-162, DTC P0201 INJECTOR #1, Diagnostic Procedure with Diagnostic Trouble Code (DTC).>

BC:DTC P0204 INJECTOR #4

NOTE:
For the diagnostic procedure, refer to DTC P0201. <Ref. to EN(H4SO)(diag)-162, DTC P0201 INJECTOR #1, Diagnostic Procedure with Diagnostic Trouble Code (DTC).>

GETthemANUALS.org

BD:DTC P0222 THROTTLE/PEDAL POSITION SENSOR/SWITCH “B” CIRCUIT LOW

DTC DETECTING CONDITION:

- Immediately at fault recognition
- GENERAL DESCRIPTION <Ref. to GD(H4SO)-107, DTC P0222 THROTTLE/PEDAL POSITION SENSOR/SWITCH “B” CIRCUIT LOW, Diagnostic Trouble Code (DTC) Detecting Criteria.>

TROUBLE SYMPTOM:

- Improper idling
- Poor driving performance
- Engine stalls.

CAUTION:

After servicing or replacing faulty parts, perform Clear Memory Mode <Ref. to EN(H4SO)(diag)-51, OPERATION, Clear Memory Mode.>, and Inspection Mode <Ref. to EN(H4SO)(diag)-40, PROCEDURE, Inspection Mode.>.

WIRING DIAGRAM:

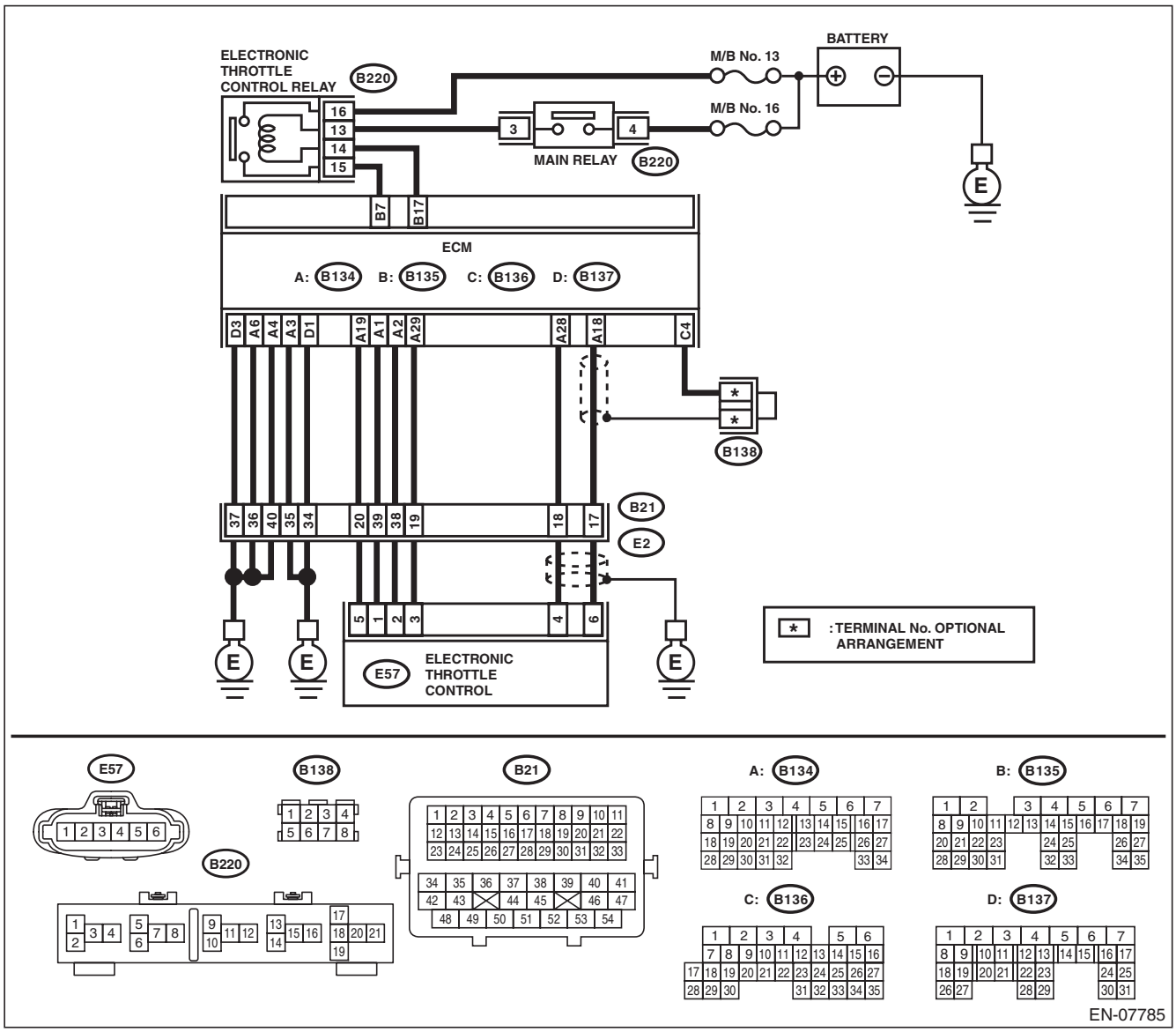

GETmeMANUALS.org

Step		Check	Yes	No
1	**CHECK HARNESS BETWEEN ECM AND ELECTRONIC THROTTLE CONTROL CONNECTOR.** 1) Turn the ignition switch to OFF. 2) Disconnect the connectors from ECM and electronic throttle control. 3) Measure the resistance between ECM and chassis ground. ***Connector & terminal*** ***(B134) No. 19 — Chassis ground:*** ***(B134) No. 28 — Chassis ground:***	Is the resistance 1 MΩ or more?	Go to step **2**.	Repair the short circuit to ground in harness between ECM and electronic throttle control connector.
2	**CHECK SHORT CIRCUIT INSIDE THE ECM.** 1) Connect the connector to ECM. 2) Measure the resistance between electronic throttle control connector and engine ground. ***Connector & terminal*** ***(E57) No. 4 — Engine ground:***	Is the resistance 1 MΩ or more?	Replace the electronic throttle control. <Ref. to FU(H4SO)-15, Throttle Body.>	Repair the short circuit to ground in harness between ECM and electronic throttle control connector. Replace the ECM if defective. <Ref. to FU(H4SO)-46, Engine Control Module (ECM).>

GETthemANUALS.org

BE:DTC P0223 THROTTLE/PEDAL POSITION SENSOR/SWITCH “B” CIRCUIT HIGH

DTC DETECTING CONDITION:

- Immediately at fault recognition
- GENERAL DESCRIPTION <Ref. to GD(H4SO)-109, DTC P0223 THROTTLE/PEDAL POSITION SENSOR/SWITCH “B” CIRCUIT HIGH, Diagnostic Trouble Code (DTC) Detecting Criteria.>

TROUBLE SYMPTOM:

- Improper idling
- Poor driving performance
- Engine stalls.

CAUTION:

After servicing or replacing faulty parts, perform Clear Memory Mode <Ref. to EN(H4SO)(diag)-51, OPERATION, Clear Memory Mode.>, and Inspection Mode <Ref. to EN(H4SO)(diag)-40, PROCEDURE, Inspection Mode.>.

WIRING DIAGRAM:

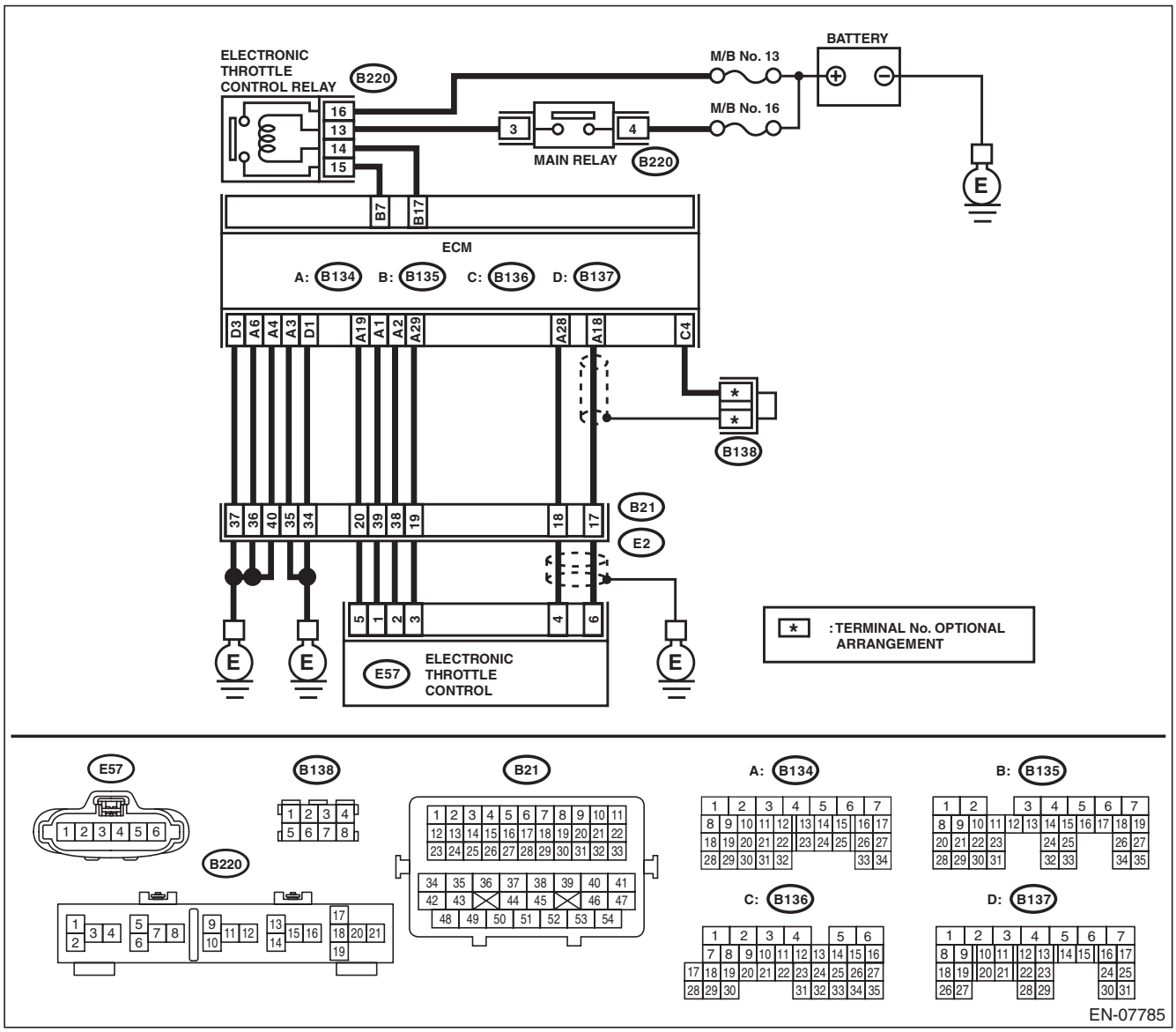

GETmeMANUALS.org

	Step	Check	Yes	No
1	**CHECK HARNESS BETWEEN ECM AND ELECTRONIC THROTTLE CONTROL CONNECTOR.** 1) Turn the ignition switch to OFF. 2) Disconnect the connectors from ECM and electronic throttle control. 3) Measure the resistance of harness between ECM and electronic throttle control connector. ***Connector & terminal*** ***(B134) No. 28 — (E57) No. 4:*** ***(B134) No. 29 — (E57) No. 3:***	Is the resistance less than 1 Ω?	Go to step **2**.	Repair the harness and connector. NOTE: In this case, repair the following item: • Open circuit in harness between ECM and electronic throttle control connector • Poor contact of coupling connector
2	**CHECK HARNESS BETWEEN ECM AND ELECTRONIC THROTTLE CONTROL CONNECTOR.** 1) Connect the connector to ECM. 2) Measure the resistance between electronic throttle control connector and engine ground. ***Connector & terminal*** ***(E57) No. 3 — Engine ground:***	Is the resistance less than 5 Ω?	Go to step **3**.	Repair the harness and connector. NOTE: In this case, repair the following item: • Open circuit of harness between ECM and engine ground • Poor contact of ECM connector • Poor contact of coupling connector
3	**CHECK HARNESS BETWEEN ECM AND ELECTRONIC THROTTLE CONTROL CONNECTOR.** 1) Turn the ignition switch to ON. 2) Measure the voltage between electronic throttle control connector and engine ground. ***Connector & terminal*** ***(E57) No. 4 (+) — Engine ground (–):***	Is the voltage 5 V or more?	Repair the short circuit to power in harness between ECM and electronic throttle control connector.	Go to step **4**.
4	**CHECK HARNESS BETWEEN ECM AND ELECTRONIC THROTTLE CONTROL CONNECTOR.** 1) Turn the ignition switch to OFF. 2) Disconnect the connectors from ECM. 3) Measure the resistance between ECM connectors. ***Connector & terminal*** ***(B134) No. 19 — (B134) No. 28:***	Is the resistance 1 MΩ or more?	Repair the poor contact of electronic throttle control connector. Replace the electronic throttle control if defective. <Ref. to FU(H4SO)-15, Throttle Body.>	Repair the short circuit to power in harness between ECM and electronic throttle control connector.

GETthemANSWERS.org

BF:DTC P0301 CYLINDER 1 MISFIRE DETECTED

NOTE:
For the diagnostic procedure, refer to DTC P0304. <Ref. to EN(H4SO)(diag)-170, DTC P0304 CYLINDER 4 MISFIRE DETECTED, Diagnostic Procedure with Diagnostic Trouble Code (DTC).>

BG:DTC P0302 CYLINDER 2 MISFIRE DETECTED

NOTE:
For the diagnostic procedure, refer to DTC P0304. <Ref. to EN(H4SO)(diag)-170, DTC P0304 CYLINDER 4 MISFIRE DETECTED, Diagnostic Procedure with Diagnostic Trouble Code (DTC).>

BH:DTC P0303 CYLINDER 3 MISFIRE DETECTED

NOTE:
For the diagnostic procedure, refer to DTC P0304. <Ref. to EN(H4SO)(diag)-170, DTC P0304 CYLINDER 4 MISFIRE DETECTED, Diagnostic Procedure with Diagnostic Trouble Code (DTC).>

GETtheMANUALS.org

BI: DTC P0304 CYLINDER 4 MISFIRE DETECTED

DTC DETECTING CONDITION:

- Detected when two consecutive driving cycles with fault occur.
- Immediately at fault recognition (A misfire which could damage catalyst occurs.)
- GENERAL DESCRIPTION <Ref. to GD(H4SO)-121, DTC P0304 CYLINDER 4 MISFIRE DETECTED, Diagnostic Trouble Code (DTC) Detecting Criteria.>

TROUBLE SYMPTOM:

- Engine stalls.
- Improper idling
- Rough driving

CAUTION:

After servicing or replacing faulty parts, perform Clear Memory Mode <Ref. to EN(H4SO)(diag)-51, OPERATION, Clear Memory Mode.>, and Inspection Mode <Ref. to EN(H4SO)(diag)-40, PROCEDURE, Inspection Mode.>.

WIRING DIAGRAM:

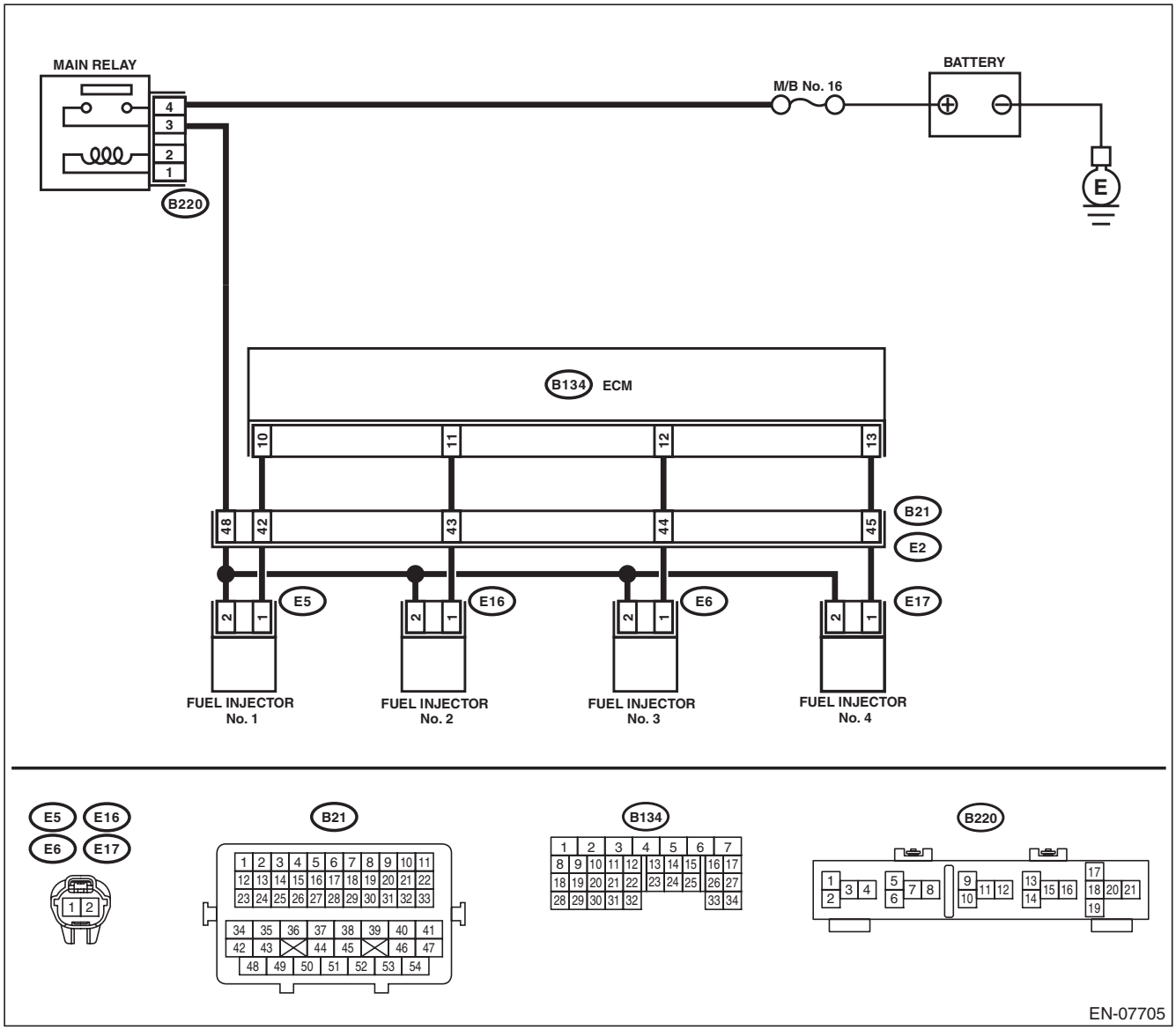

GETtheMANUALS.org

	Step	Check	Yes	No
1	**CHECK OUTPUT SIGNAL OF ECM.** 1) Turn the ignition switch to ON. 2) Measure the voltage between ECM and chassis ground on faulty cylinders. ***Connector & terminal*** ***#1 (B134) No. 10 (+) — Chassis ground (–):*** ***#2 (B134) No. 11 (+) — Chassis ground (–):*** ***#3 (B134) No. 12 (+) — Chassis ground (–):*** ***#4 (B134) No. 13 (+) — Chassis ground (–):***	Is the voltage 10 V or more?	Go to step **6**.	Go to step **2**.
2	**CHECK HARNESS BETWEEN ECM AND FUEL INJECTOR CONNECTOR.** 1) Turn the ignition switch to OFF. 2) Disconnect the connector from fuel injector on faulty cylinders. 3) Measure the resistance between fuel injector connector and engine ground on faulty cylinders. ***Connector & terminal*** ***#1 (E5) No. 1 — Engine ground:*** ***#2 (E16) No. 1 — Engine ground:*** ***#3 (E6) No. 1 — Engine ground:*** ***#4 (E17) No. 1 — Engine ground:***	Is the resistance 1 MΩ or more?	Go to step **3**.	Repair the short circuit to ground in harness between ECM and fuel injector connector.
3	**CHECK HARNESS BETWEEN ECM AND FUEL INJECTOR CONNECTOR.** Measure the resistance of harness between ECM and fuel injector connector on faulty cylinders. ***Connector & terminal*** ***#1 (B134) No. 10 — (E5) No. 1:*** ***#2 (B134) No. 11 — (E16) No. 1:*** ***#3 (B134) No. 12 — (E6) No. 1:*** ***#4 (B134) No. 13 — (E17) No. 1:***	Is the resistance less than 1 Ω?	Go to step **4**.	Repair the harness and connector. NOTE: In this case, repair the following item: • Open circuit in harness between ECM and fuel injector connector • Poor contact of coupling connector
4	**CHECK FUEL INJECTOR.** Measure the resistance between fuel injector terminals on faulty cylinder. ***Terminals*** ***No. 1 — No. 2:***	Is the resistance 5 — 20 Ω?	Go to step **5**.	Replace the faulty fuel injector. <Ref. to FU(H4SO)-37, Fuel Injector.>
5	**CHECK POWER SUPPLY LINE.** 1) Turn the ignition switch to ON. 2) Measure the voltage between fuel injector and engine ground on faulty cylinders. ***Connector & terminal*** ***#1 (E5) No. 2 (+) — Engine ground (–):*** ***#2 (E16) No. 2 (+) — Engine ground (–):*** ***#3 (E6) No. 2 (+) — Engine ground (–):*** ***#4 (E17) No. 2 (+) — Engine ground (–):***	Is the voltage 10 V or more?	Repair the poor contact of all connectors in fuel injector circuit.	Repair the harness and connector. NOTE: In this case, repair the following item: • Open circuit in harness between the main relay connector and fuel injector connector on faulty cylinders • Poor contact of coupling connector • Poor contact of main relay connector

GETthemANUALS.org

	Step	Check	Yes	No
6	**CHECK HARNESS BETWEEN ECM AND FUEL INJECTOR CONNECTOR.** 1) Turn the ignition switch to OFF. 2) Disconnect the connector from fuel injector on faulty cylinders. 3) Turn the ignition switch to ON. 4) Measure the voltage between ECM and chassis ground on faulty cylinders. ***Connector & terminal*** ***#1 (B134) No. 10 (+) — Chassis ground (–):*** ***#2 (B134) No. 11 (+) — Chassis ground (–):*** ***#3 (B134) No. 12 (+) — Chassis ground (–):*** ***#4 (B134) No. 13 (+) — Chassis ground (–):***	Is the voltage 10 V or more?	Repair the short circuit to power in harness between ECM and fuel injector connector.	Go to step **7**.
7	**CHECK FUEL INJECTOR.** 1) Turn the ignition switch to OFF. 2) Measure the resistance between fuel injector terminals on faulty cylinder. ***Terminals*** ***No. 1 — No. 2:***	Is the resistance 5 — 20 Ω?	Go to step **8**.	Replace the faulty fuel injector. <Ref. to FU(H4SO)-37, Fuel Injector.>
8	**CHECK INSTALLATION CONDITION OF CAMSHAFT POSITION SENSOR/CRANKSHAFT POSITION SENSOR.**	Is the camshaft position sensor or crankshaft position sensor loosely installed?	Tighten the camshaft position sensor or crankshaft position sensor.	Go to step **9**.
9	**CHECK CRANK SPROCKET.** Remove the timing belt cover. <Ref. to ME(H4SO)-47, REMOVAL, Timing Belt Cover.>	Is the crank sprocket rusted or does it have broken teeth?	Replace the crank sprocket. <Ref. to ME(H4SO)-54, Crank Sprocket.>	Go to step **10**.
10	**CHECK INSTALLATION CONDITION OF TIMING BELT.** Turn the crankshaft using ST, and align the alignment mark on crank sprocket with alignment mark on cylinder block. ST 499987500 CRANKSHAFT SOCKET	Is the timing belt dislocated from its proper position?	Repair the installation condition of timing belt. <Ref. to ME(H4SO)-48, Timing Belt.>	Go to step **11**.
11	**CHECK FUEL LEVEL.**	Is the fuel meter indication higher than the “Lower” level?	Go to step **12**.	Refill the fuel so that the fuel meter indication is higher than the “Lower” level, and proceed to the next step. Go to step **12**.
12	**CHECK STATUS OF MALFUNCTION INDICATOR LIGHT.** 1) Clear the memory using the Subaru Select Monitor or general scan tool. <Ref. to EN(H4SO)(diag)-51, Clear Memory Mode.> 2) Start the engine, and drive the vehicle 10 minutes or more.	Does the malfunction indicator light illuminate or blink?	Go to step **14**.	Go to step **13**.

GETtheMANUALS.org

Step		Check	Yes	No
13	**CHECK CAUSE OF MISFIRE.**	Was the cause of misfire identified when the engine is running?	Finish diagnostics operation, if the engine has no abnormality.	Repair the poor contact of connector. NOTE: In this case, repair the following item: • Poor contact of ignition coil connector • Poor contact of fuel injector connector on faulty cylinders • Poor contact of ECM connector • Poor contact of coupling connector
14	**CHECK AIR INTAKE SYSTEM.**	Is there any fault in air intake system?	Repair the air intake system. NOTE: Check the following items. • Are there air leaks or air suction caused by loose or dislocated nuts and bolts? • Are there cracks or any disconnection of hoses?	Go to step **15**.
15	**CHECK MISFIRE SYMPTOM.** 1) Turn the ignition switch to ON. 2) Check for DTC. <Ref. to EN(H4SO)(diag)-39, Read Diagnostic Trouble Code (DTC).>	Does the Subaru Select Monitor or general scan tool indicate only one DTC?	Go to step **18**.	Go to step **16**.
16	**CHECK DTC.**	Is DTC P0301 and P0303 displayed on the Subaru Select Monitor or general scan tool?	Go to step **19**.	Go to step **17**.
17	**CHECK DTC.**	Is DTC P0302 and P0304 displayed on the Subaru Select Monitor or general scan tool?	Go to step **20**.	Go to step **21**.
18	**ONLY ONE CYLINDER.**	Is there any fault in the cylinder?	Repair or replace faulty parts. NOTE: Check the following items. • Spark plug • Ignition coil • Fuel injector • Compression ratio	Go to DTC P0171. <Ref. to EN(H4SO)(diag)-149, DTC P0171 SYSTEM TOO LEAN (BANK 1), Diagnostic Procedure with Diagnostic Trouble Code (DTC).>

GETthemANSWERS.org

Step		Check	Yes	No
19	**GROUP OF #1 AND #3 CYLINDERS.**	Are there any faults in #1 and #3 cylinders?	Repair or replace faulty parts. NOTE: Check the following items. • Spark plug • Ignition coil • Fuel injector • Compression ratio • Skipping timing belt teeth	Go to DTC P0171. <Ref. to EN(H4SO)(diag)-149, DTC P0171 SYSTEM TOO LEAN (BANK 1), Diagnostic Procedure with Diagnostic Trouble Code (DTC).>
20	**GROUP OF #2 AND #4 CYLINDERS.**	Are there any faults in #2 and #4 cylinders?	Repair or replace faulty parts. NOTE: Check the following items. • Spark plug • Ignition coil • Fuel injector • Compression ratio • Skipping timing belt teeth	Go to DTC P0171. <Ref. to EN(H4SO)(diag)-149, DTC P0171 SYSTEM TOO LEAN (BANK 1), Diagnostic Procedure with Diagnostic Trouble Code (DTC).>
21	**CYLINDER AT RANDOM.**	Is the engine idle rough?	Go to DTC P0171. <Ref. to EN(H4SO)(diag)-149, DTC P0171 SYSTEM TOO LEAN (BANK 1), Diagnostic Procedure with Diagnostic Trouble Code (DTC).>	Repair or replace faulty parts. NOTE: Check the following items. • Spark plug • Ignition coil • Fuel injector • Compression ratio

GETtheMANUALS.org

BJ:DTC P0327 KNOCK SENSOR 1 CIRCUIT LOW (BANK 1 OR SINGLE SENSOR)

DTC DETECTING CONDITION:

- Immediately at fault recognition
- GENERAL DESCRIPTION <Ref. to GD(H4SO)-122, DTC P0327 KNOCK SENSOR 1 CIRCUIT LOW (BANK 1 OR SINGLE SENSOR), Diagnostic Trouble Code (DTC) Detecting Criteria.>

TROUBLE SYMPTOM:

- Poor driving performance
- Knocking occurs.

CAUTION:

After servicing or replacing faulty parts, perform Clear Memory Mode <Ref. to EN(H4SO)(diag)-51, OPERATION, Clear Memory Mode.>, and Inspection Mode <Ref. to EN(H4SO)(diag)-40, PROCEDURE, Inspection Mode.>.

WIRING DIAGRAM:

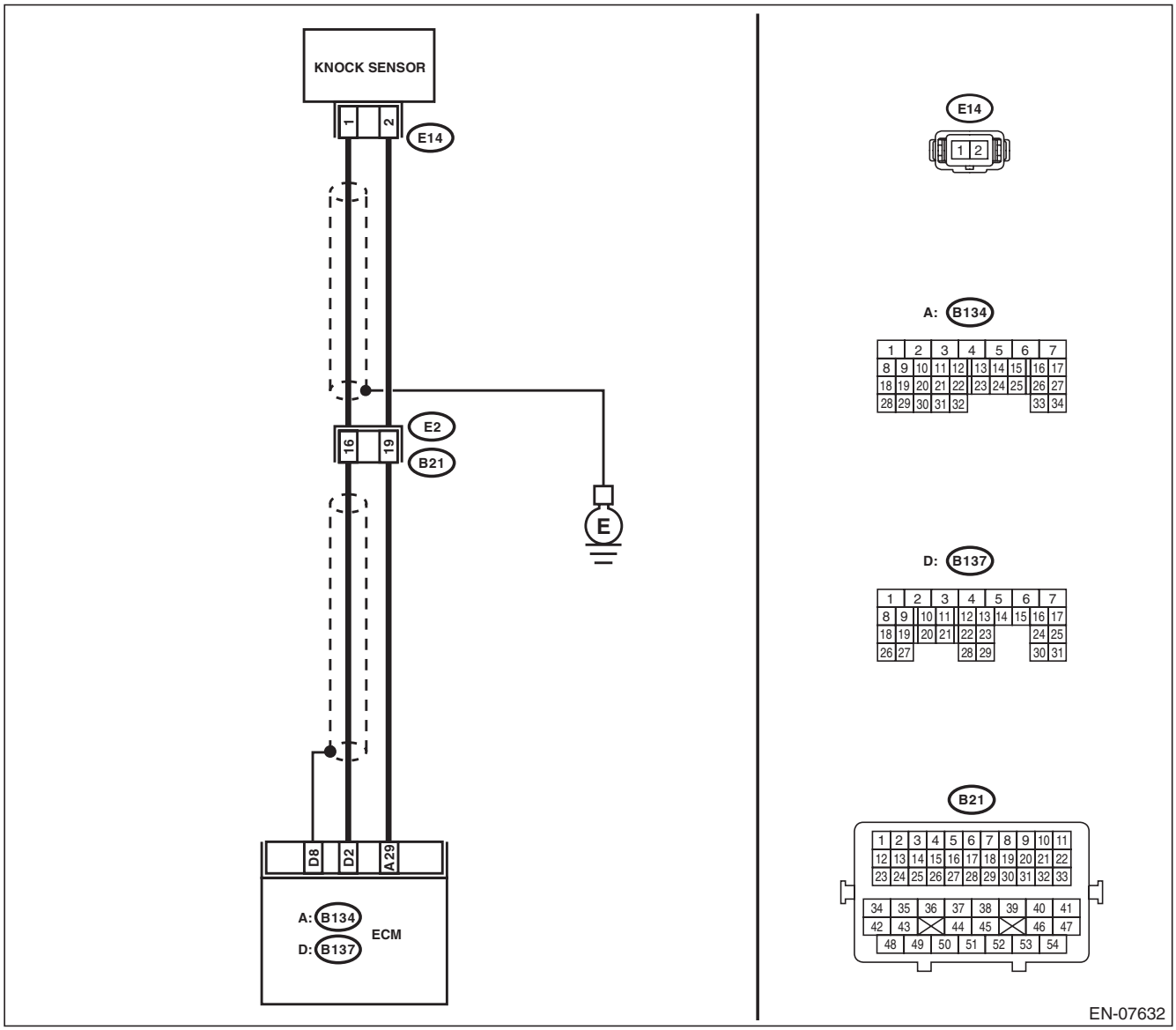

GETtheMANUALS.org

Step		Check	Yes	No
1	**CHECK HARNESS BETWEEN ECM AND KNOCK SENSOR CONNECTOR.** 1) Turn the ignition switch to OFF. 2) Disconnect the connectors from ECM. 3) Measure the resistance between ECM connectors. ***Connector & terminal*** ***(B137) No. 2 — (B134) No. 29:***	Is the resistance 600 kΩ or more?	Go to step **2**.	Repair the poor contact of ECM connector.
2	**CHECK KNOCK SENSOR.** 1) Disconnect the connector from the knock sensor. 2) Measure the resistance between knock sensor terminals. ***Terminals*** ***No. 1 — No. 2:***	Is the resistance 600 kΩ or more?	Replace the knock sensor. <Ref. to FU(H4SO)-29, Knock Sensor.>	Repair the harness and connector. NOTE: In this case, repair the following item: • Open circuit in harness between ECM and knock sensor connector • Poor contact of knock sensor connector • Poor contact of coupling connector

GETthemANUALS.org

BK:DTC P0328 KNOCK SENSOR 1 CIRCUIT HIGH (BANK 1 OR SINGLE SENSOR)

DTC DETECTING CONDITION:

- Immediately at fault recognition
- GENERAL DESCRIPTION <Ref. to GD(H4SO)-124, DTC P0328 KNOCK SENSOR 1 CIRCUIT HIGH (BANK 1 OR SINGLE SENSOR), Diagnostic Trouble Code (DTC) Detecting Criteria.>

TROUBLE SYMPTOM:

- Poor driving performance
- Knocking occurs.

CAUTION:

After servicing or replacing faulty parts, perform Clear Memory Mode <Ref. to EN(H4SO)(diag)-51, OPERATION, Clear Memory Mode.>, and Inspection Mode <Ref. to EN(H4SO)(diag)-40, PROCEDURE, Inspection Mode.>.

WIRING DIAGRAM:

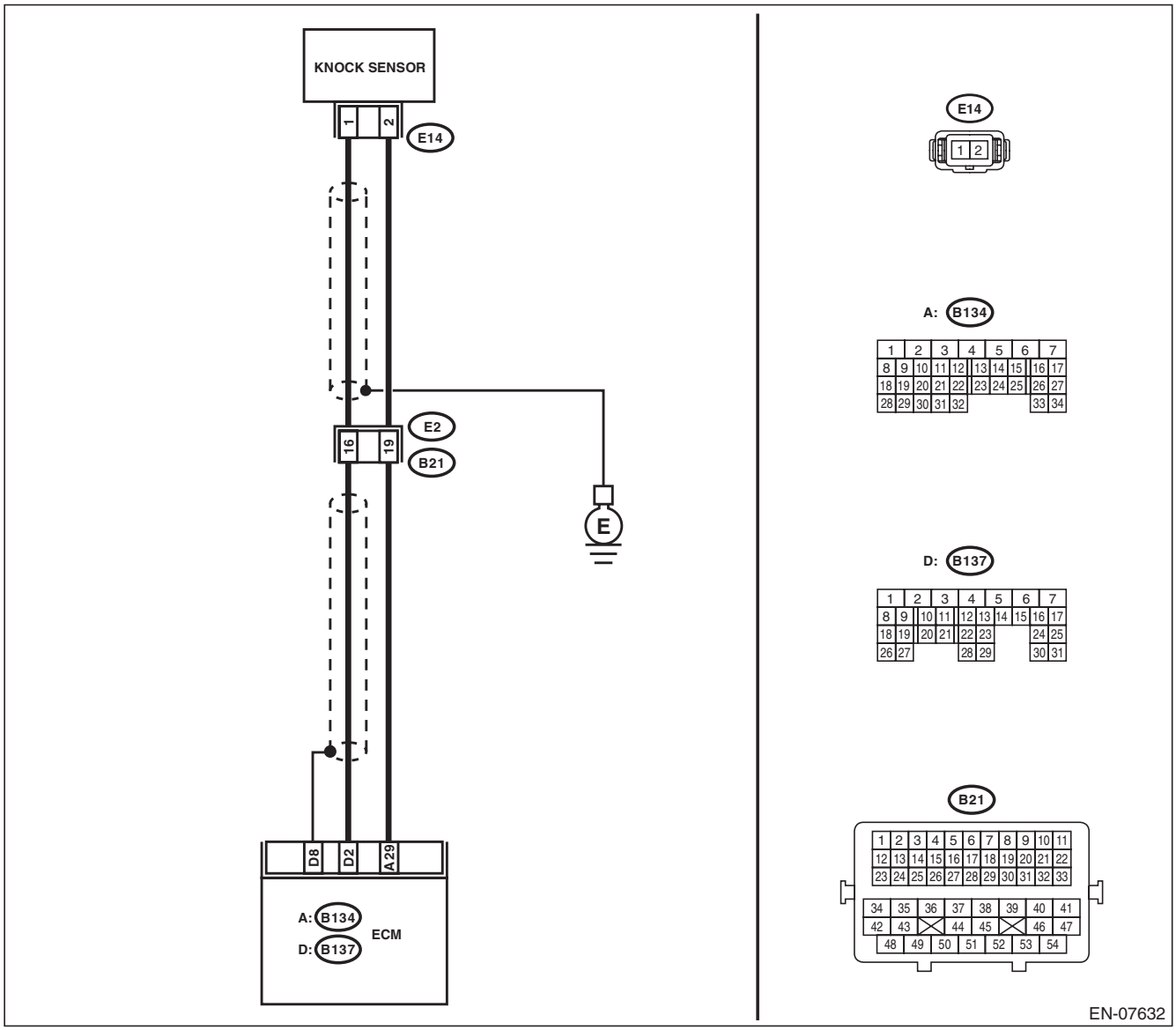

GETmeMANUALS.org

	Step	Check	Yes	No
1	**CHECK HARNESS BETWEEN ECM AND KNOCK SENSOR CONNECTOR.** 1) Turn the ignition switch to OFF. 2) Disconnect the connectors from ECM. 3) Measure the resistance between ECM connectors. ***Connector & terminal*** ***(B137) No. 2 — (B134) No. 29:***	Is the resistance less than 500 kΩ?	Go to step **2**.	Go to step **3**.
2	**CHECK KNOCK SENSOR.** 1) Disconnect the connector from the knock sensor. 2) Measure the resistance between knock sensor terminals. ***Terminals*** ***No. 1 — No. 2:***	Is the resistance less than 500 kΩ?	Replace the knock sensor. <Ref. to FU(H4SO)-29, Knock Sensor.>	Repair the short circuit to ground in harness between ECM and knock sensor connector. NOTE: The harness between both connectors are shielded. Remove the shield and repair the short circuit of harness.
3	**CHECK INPUT SIGNAL OF ECM.** 1) Connect the connector to ECM. 2) Turn the ignition switch to ON. 3) Measure the voltage between ECM and chassis ground. ***Connector & terminal*** ***(B137) No. 2 (+) — Chassis ground (–):***	Is the voltage 2 V or more?	Even if DTC is detected, the circuit has returned to a normal condition at this time. Reproduce the failure, and then perform the diagnosis again. NOTE: In this case, temporary poor contact of connector, temporary open or short circuit of harness may be the cause.	Repair the poor contact of ECM connector.

GETtheMANUALS.org

BL:DTC P0335 CRANKSHAFT POSITION SENSOR “A” CIRCUIT

DTC DETECTING CONDITION:

- Immediately at fault recognition
- GENERAL DESCRIPTION <Ref. to GD(H4SO)-126, DTC P0335 CRANKSHAFT POSITION SENSOR “A” CIRCUIT, Diagnostic Trouble Code (DTC) Detecting Criteria.>

TROUBLE SYMPTOM:

- Engine stalls.
- Failure of engine to start

CAUTION:

After servicing or replacing faulty parts, perform Clear Memory Mode <Ref. to EN(H4SO)(diag)-51, OPERATION, Clear Memory Mode.>, and Inspection Mode <Ref. to EN(H4SO)(diag)-40, PROCEDURE, Inspection Mode.>.

WIRING DIAGRAM:

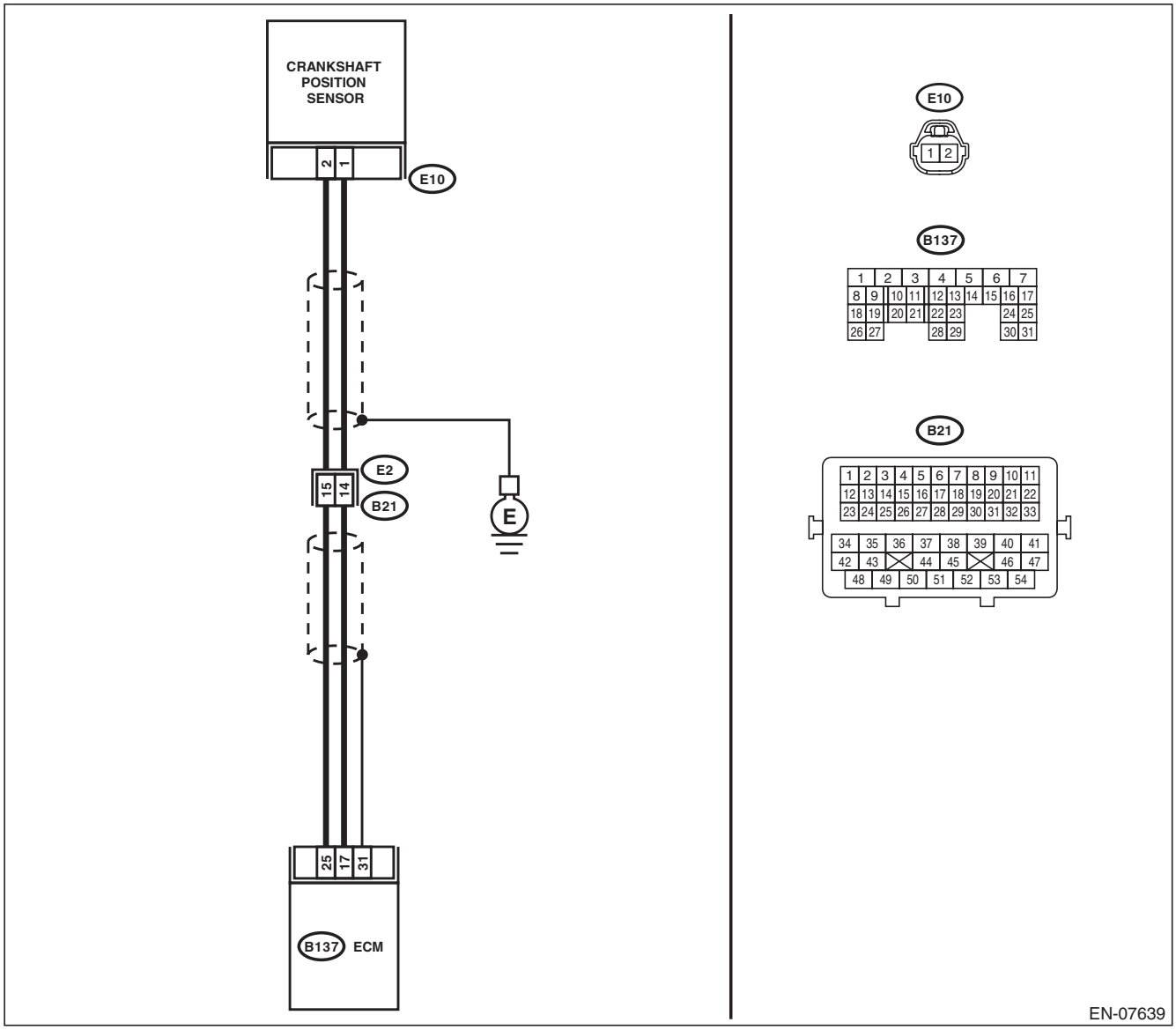

GETtheMANUALS.org

	Step	Check	Yes	No
1	**CHECK INSTALLATION CONDITION OF CRANKSHAFT POSITION SENSOR.**	Is the crankshaft position sensor installation bolt tightened securely?	Go to step **2**.	Tighten the crankshaft position sensor installation bolt securely. <Ref. to FU(H4SO)-25, Crankshaft Position Sensor.>
2	**CHECK CRANKSHAFT POSITION SENSOR.** 1) Turn the ignition switch to OFF. 2) Remove the crankshaft position sensor. 3) Measure the resistance between terminals of crankshaft position sensor connector. ***Terminals*** ***No. 1 — No. 2:***	Is the resistance between 1 and 4 kΩ?	Go to step **3**.	Replace the crankshaft position sensor. <Ref. to FU(H4SO)-25, Crankshaft Position Sensor.>
3	**CHECK HARNESS BETWEEN ECM AND CRANKSHAFT POSITION SENSOR CONNECTOR.** 1) Disconnect the connectors from ECM. 2) Measure the resistance of harness between ECM and crankshaft position sensor connector. ***Connector & terminal*** ***(B137) No. 17 — (E10) No. 1:*** ***(B137) No. 25 — (E10) No. 2:***	Is the resistance less than 1 Ω?	Repair the poor contact of ECM and crankshaft position sensor connector.	Repair the harness and connector. NOTE: In this case, repair the following item: • Open circuit in harness between ECM and crankshaft position sensor connector • Poor contact of coupling connector

GETthemANUALS.org

BM:DTC P0336 CRANKSHAFT POSITION SENSOR “A” CIRCUIT RANGE/PERFORMANCE

DTC DETECTING CONDITION:

- Detected when two consecutive driving cycles with fault occur.
- GENERAL DESCRIPTION <Ref. to GD(H4SO)-128, DTC P0336 CRANKSHAFT POSITION SENSOR “A” CIRCUIT RANGE/PERFORMANCE, Diagnostic Trouble Code (DTC) Detecting Criteria.>

TROUBLE SYMPTOM:

- Engine stalls.
- Failure of engine to start

CAUTION:

After servicing or replacing faulty parts, perform Clear Memory Mode <Ref. to EN(H4SO)(diag)-51, OPERATION, Clear Memory Mode.>, and Inspection Mode <Ref. to EN(H4SO)(diag)-40, PROCEDURE, Inspection Mode.>.

	Step	Check	Yes	No
1	**CHECK CONDITION OF CRANKSHAFT POSITION SENSOR.** Turn the ignition switch to OFF.	Is the crankshaft position sensor installation bolt tightened securely?	Go to step **2**.	Tighten the crankshaft position sensor installation bolt securely. <Ref. to FU(H4SO)-25, Crankshaft Position Sensor.>
2	**CHECK CRANK SPROCKET.** Remove the timing belt cover.	Are crank sprocket teeth cracked or damaged?	Replace the crank sprocket. <Ref. to ME(H4SO)-54, Crank Sprocket.>	Go to step **3**.
3	**CHECK INSTALLATION CONDITION OF TIMING BELT.** Turn the crankshaft, and align alignment mark on crank sprocket with alignment mark on cylinder block. ST 499987500 CRANKSHAFT SOCKET	Is the timing belt dislocated from its proper position?	Repair the installation condition of timing belt. <Ref. to ME(H4SO)-48, Timing Belt.>	Replace the crankshaft position sensor. <Ref. to FU(H4SO)-25, Crankshaft Position Sensor.>

GETthemANUALS.org

BN:DTC P0340 CAMSHAFT POSITION SENSOR “A” CIRCUIT (BANK 1 OR SINGLE SENSOR)

DTC DETECTING CONDITION:

- Immediately at fault recognition
- GENERAL DESCRIPTION <Ref. to GD(H4SO)-130, DTC P0340 CAMSHAFT POSITION SENSOR “A” CIRCUIT (BANK 1 OR SINGLE SENSOR), Diagnostic Trouble Code (DTC) Detecting Criteria.>

TROUBLE SYMPTOM:

- Engine stalls.
- Failure of engine to start

CAUTION:

After servicing or replacing faulty parts, perform Clear Memory Mode <Ref. to EN(H4SO)(diag)-51, OPERATION, Clear Memory Mode.>, and Inspection Mode <Ref. to EN(H4SO)(diag)-40, PROCEDURE, Inspection Mode.>.

WIRING DIAGRAM:

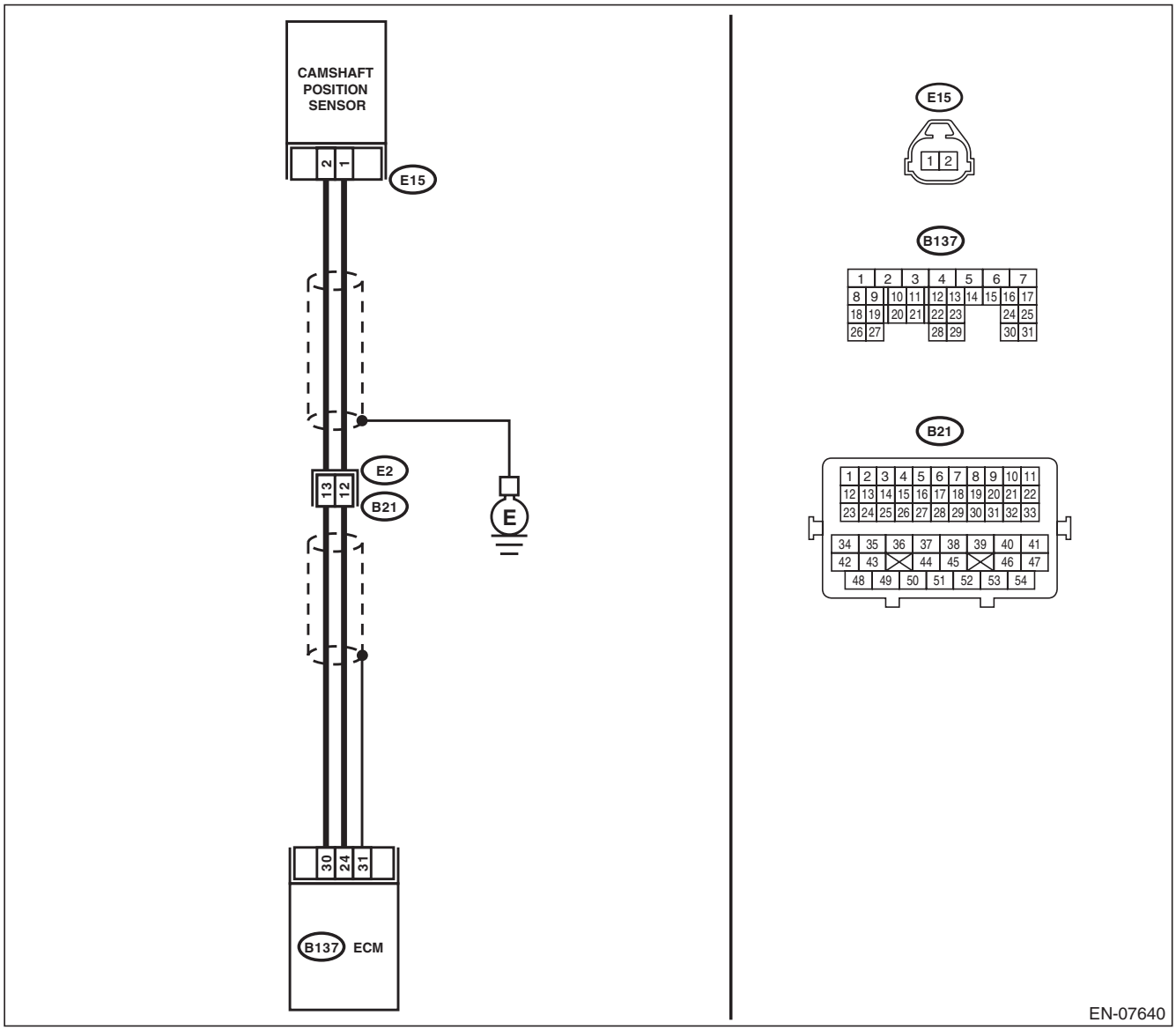

GETmeMANUALS.org

	Step	Check	Yes	No
1	**CHECK HARNESS BETWEEN ECM AND CAMSHAFT POSITION SENSOR CONNECTOR.** 1) Turn the ignition switch to OFF. 2) Disconnect the connectors from ECM and camshaft position sensor. 3) Measure the resistance of harness between ECM and camshaft position sensor connector. ***Connector & terminal*** ***(B137) No. 24 — (E15) No. 1:*** ***(B137) No. 30 — (E15) No. 2:***	Is the resistance less than 1 Ω?	Go to step **2**.	Repair the harness and connector. NOTE: In this case, repair the following item: • Open circuit in harness between ECM and camshaft position sensor connector • Poor contact of ECM connector • Poor contact of coupling connector
2	**CHECK HARNESS BETWEEN ECM AND CAMSHAFT POSITION SENSOR CONNECTOR.** Measure the resistance between camshaft position sensor connector and engine ground. ***Connector & terminal*** ***(E15) No. 1 — Engine ground:***	Is the resistance 1 MΩ or more?	Go to step **3**.	Repair short circuit to ground in harness between ECM and camshaft position sensor connector. NOTE: The harness between both connectors are shielded. Remove the shield and repair the ground short circuit of the harness circuit.
3	**CHECK INSTALLATION CONDITION OF CAMSHAFT POSITION SENSOR.**	Is the camshaft position sensor installation bolt tightened securely?	Go to step **4**.	Tighten the camshaft position sensor installation bolt securely. <Ref. to FU(H4SO)-27, Camshaft Position Sensor.>
4	**CHECK CAMSHAFT POSITION SENSOR.** 1) Remove the camshaft position sensor. 2) Measure the resistance between terminals of camshaft position sensor connector. ***Terminals*** ***No. 1 — No. 2:***	Is the resistance between 1 and 4 kΩ?	Repair the poor contact of ECM or camshaft position sensor connector.	Replace the camshaft position sensor. <Ref. to FU(H4SO)-27, Camshaft Position Sensor.>

GETthemANUALS.org

BO:DTC P0341 CAMSHAFT POSITION SENSOR “A” CIRCUIT RANGE/PERFORMANCE (BANK 1 OR SINGLE SENSOR)

DTC DETECTING CONDITION:

- Detected when two consecutive driving cycles with fault occur.
- GENERAL DESCRIPTION <Ref. to GD(H4SO)-132, DTC P0341 CAMSHAFT POSITION SENSOR “A” CIRCUIT RANGE/PERFORMANCE (BANK 1 OR SINGLE SENSOR), Diagnostic Trouble Code (DTC) Detecting Criteria.>

TROUBLE SYMPTOM:

- Engine stalls.
- Failure of engine to start

CAUTION:

After servicing or replacing faulty parts, perform Clear Memory Mode <Ref. to EN(H4SO)(diag)-51, OPERATION, Clear Memory Mode.>, and Inspection Mode <Ref. to EN(H4SO)(diag)-40, PROCEDURE, Inspection Mode.>.

WIRING DIAGRAM:

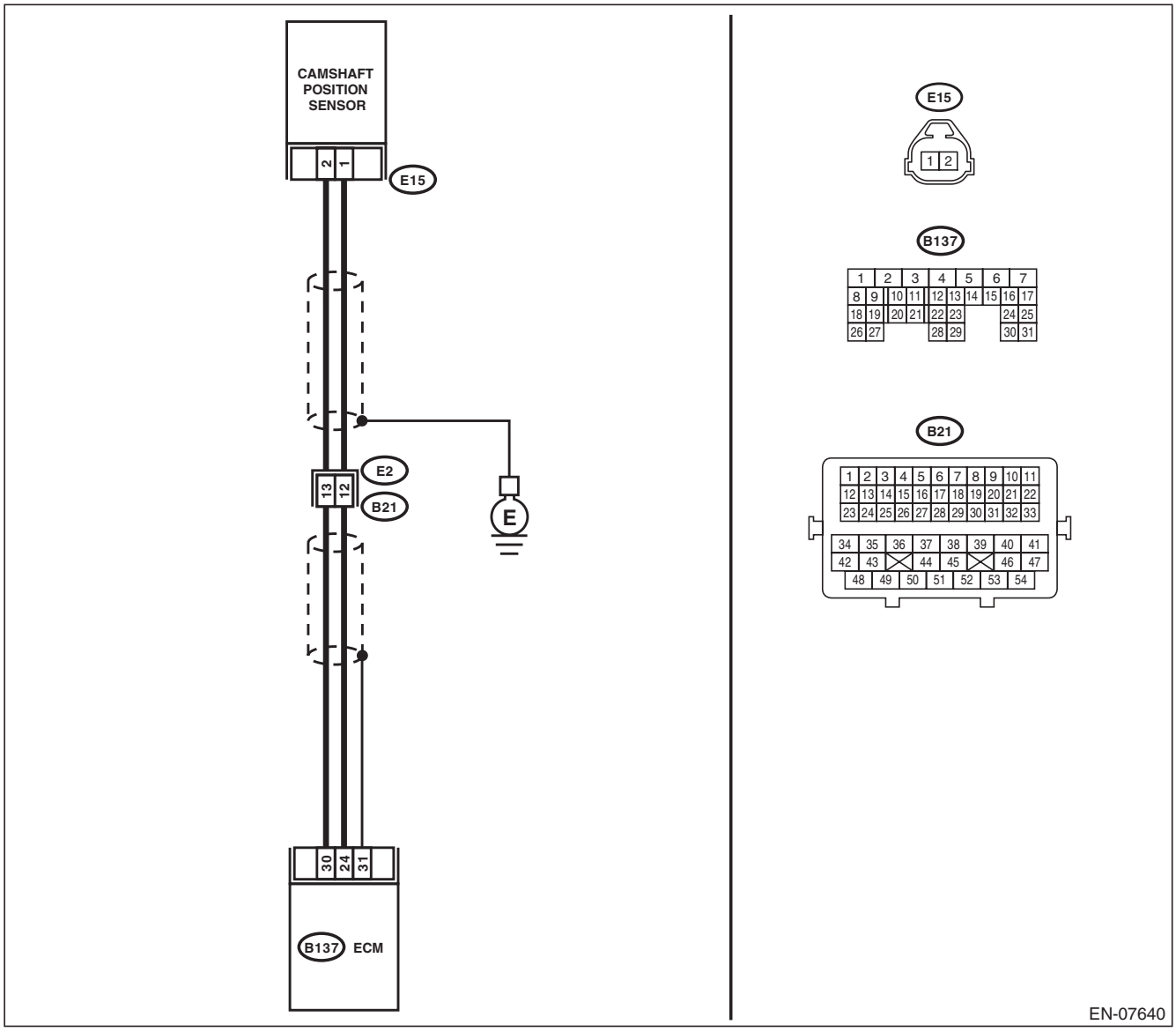

GETmeMANUALS.org

	Step	Check	Yes	No
1	**CHECK HARNESS BETWEEN ECM AND CAMSHAFT POSITION SENSOR CONNECTOR.** 1) Turn the ignition switch to OFF. 2) Disconnect the connectors from ECM and camshaft position sensor. 3) Measure the resistance of harness between ECM and camshaft position sensor connector. ***Connector & terminal*** ***(B137) No. 24 — (E15) No. 1:*** ***(B137) No. 30 — (E15) No. 2:***	Is the resistance less than 1 Ω?	Go to step **2**.	Repair the harness and connector. NOTE: In this case, repair the following item: • Open circuit in harness between ECM and camshaft position sensor connector • Poor contact of ECM connector • Poor contact of coupling connector
2	**CHECK HARNESS BETWEEN ECM AND CAMSHAFT POSITION SENSOR CONNECTOR.** Measure the resistance between camshaft position sensor connector and engine ground. ***Connector & terminal*** ***(E15) No. 1 — Engine ground:***	Is the resistance 1 MΩ or more?	Go to step **3**.	Repair short circuit to ground in harness between ECM and camshaft position sensor connector. NOTE: The harness between both connectors are shielded. Remove the shield and repair the ground short circuit of the harness circuit.
3	**CHECK INSTALLATION CONDITION OF CAMSHAFT POSITION SENSOR.**	Is the camshaft position sensor installation bolt tightened securely?	Go to step **4**.	Tighten the camshaft position sensor installation bolt securely. <Ref. to FU(H4SO)-27, Camshaft Position Sensor.>
4	**CHECK CAMSHAFT POSITION SENSOR.** 1) Remove the camshaft position sensor. 2) Measure the resistance between terminals of camshaft position sensor connector. ***Terminals*** ***No. 1 — No. 2:***	Is the resistance between 1 and 4 kΩ?	Go to step **5**.	Replace the camshaft position sensor. <Ref. to FU(H4SO)-27, Camshaft Position Sensor.>
5	**CHECK CAM SPROCKET.** Remove the timing belt cover. <Ref. to ME(H4SO)-47, Timing Belt Cover.>	Are cam sprocket teeth cracked or damaged?	Replace the cam sprocket. <Ref. to ME(H4SO)-53, Cam Sprocket.>	Go to step **6**.
6	**CHECK INSTALLATION CONDITION OF TIMING BELT.** Turn the crankshaft using the ST, and align the alignment mark on the cam sprocket with the alignment mark on the timing belt cover LH. ST 499987500 CRANKSHAFT SOCKET	Is the timing belt dislocated from its proper position?	Repair the installation condition of timing belt. <Ref. to ME(H4SO)-48, Timing Belt.>	Replace the camshaft position sensor. <Ref. to FU(H4SO)-27, Camshaft Position Sensor.>

GETtheMANUALS.org

BP:DTC P0351 IGNITION COIL A PRIMARY/SECONDARY CIRCUIT

DTC DETECTING CONDITION:

- Immediately at fault recognition
- GENERAL DESCRIPTION <Ref. to GD(H4SO)-134, DTC P0351 IGNITION COIL A PRIMARY/SECONDARY CIRCUIT, Diagnostic Trouble Code (DTC) Detecting Criteria.>

TROUBLE SYMPTOM:

- Improper idling
- Poor driving performance

CAUTION:

After servicing or replacing faulty parts, perform Clear Memory Mode <Ref. to EN(H4SO)(diag)-51, OPERATION, Clear Memory Mode.>, and Inspection Mode <Ref. to EN(H4SO)(diag)-40, PROCEDURE, Inspection Mode.>.

WIRING DIAGRAM:

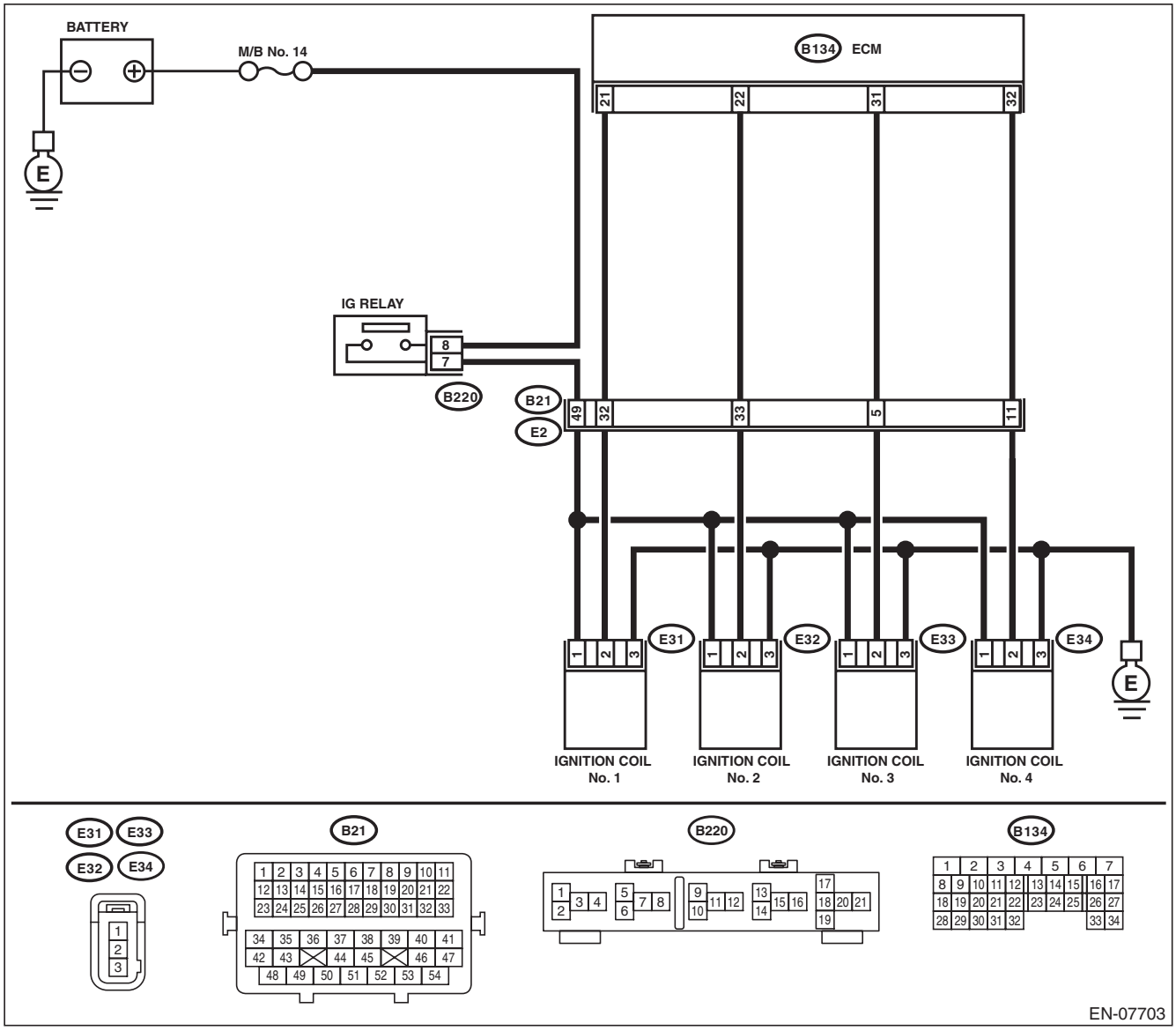

GETtheMANUALS.org

	Step	Check	Yes	No
1	**CHECK IGNITION COIL POWER SUPPLY CIRCUIT.** 1) Turn the ignition switch to OFF. 2) Disconnect the connector from ignition coil. 3) Turn the ignition switch to ON. 4) Measure the voltage between ignition coil connector and engine ground. ***Connector & terminal*** ***DTC P0351; (E31) No. 1 (+) — Engine ground (–):*** ***DTC P0352; (E32) No. 1 (+) — Engine ground (–):*** ***DTC P0353; (E33) No. 1 (+) — Engine ground (–):*** ***DTC P0354; (E34) No. 1 (+) — Engine ground (–):***	Is the voltage 10 V or more?	Go to step **2**.	Repair the harness and connector. NOTE: In this case, repair the following item: • Open circuit or short circuit to ground in harness of power supply circuit • Blown out of fuse (M/B No. 14) • Poor contact of IG relay connector • Poor contact of coupling connector • Faulty IG relay
2	**CHECK HARNESS OF IGNITION COIL GROUND CIRCUIT.** 1) Turn the ignition switch to OFF. 2) Measure the resistance of harness between ignition coil connector and engine ground. ***Connector & terminal*** ***DTC P0351; (E31) No. 3 — Engine ground:*** ***DTC P0352; (E32) No. 3 — Engine ground:*** ***DTC P0353; (E33) No. 3 — Engine ground:*** ***DTC P0354; (E34) No. 3 — Engine ground:***	Is the resistance less than 5 Ω?	Go to step **3**.	Repair the open circuit in harness between ignition coil connector and engine grounding terminal.
3	**CHECK HARNESS BETWEEN ECM AND IGNITION COIL CONNECTOR.** 1) Disconnect the connector from ECM. 2) Measure the resistance between ignition coil connector and engine ground. ***Connector & terminal*** ***DTC P0351; (E31) No. 2 — Engine ground:*** ***DTC P0352; (E32) No. 2 — Engine ground:*** ***DTC P0353; (E33) No. 2 — Engine ground:*** ***DTC P0354; (E34) No. 2 — Engine ground:***	Is the resistance 1 MΩ or more?	Go to step **4**.	Repair the ground short circuit of harness between ECM connector and ignition coil connector.
4	**CHECK HARNESS BETWEEN ECM AND IGNITION COIL CONNECTOR.** Measure the resistance of harness between ECM connector and ignition coil connector. ***Connector & terminal*** ***DTC P0351; (B134) No. 21 — (E31) No. 2:*** ***DTC P0352; (B134) No. 22 — (E32) No. 2:*** ***DTC P0353; (B134) No. 31 — (E33) No. 2:*** ***DTC P0354; (B134) No. 32 — (E34) No. 2:***	Is the resistance less than 1 Ω?	Go to step **5**.	Repair the harness and connector. NOTE: In this case, repair the following item: • Open circuit of harness between ECM connector and the ignition coil connector • Poor contact of coupling connector
5	**CHECK FOR POOR CONTACT.** Check for poor contact of ECM connector.	Is there poor contact of ECM connector?	Repair the poor contact of ECM connector.	Go to step **6**.
6	**CHECK SPARK PLUG CONDITION.** 1) Remove the spark plug of the corresponding cylinder. <Ref. to IG(H4SO)-3, REMOVAL, Spark Plug.> 2) Check the spark plug condition. <Ref. to IG(H4SO)-3, INSPECTION, Spark Plug.>	Is the spark plug condition normal?	Replace the ignition coil. <Ref. to IG(H4SO)-5, Ignition Coil.>	Replace the spark plug. <Ref. to IG(H4SO)-3, Spark Plug.>

GETthemANUALS.org

BQ:DTC P0352 IGNITION COIL B PRIMARY/SECONDARY CIRCUIT

NOTE:
For the diagnostic procedure, refer to DTC P0351. <Ref. to EN(H4SO)(diag)-186, DTC P0351 IGNITION COIL A PRIMARY/SECONDARY CIRCUIT, Diagnostic Procedure with Diagnostic Trouble Code (DTC).>

BR:DTC P0353 IGNITION COIL C PRIMARY/SECONDARY CIRCUIT

NOTE:
For the diagnostic procedure, refer to DTC P0351. <Ref. to EN(H4SO)(diag)-186, DTC P0351 IGNITION COIL A PRIMARY/SECONDARY CIRCUIT, Diagnostic Procedure with Diagnostic Trouble Code (DTC).>

BS:DTC P0354 IGNITION COIL D PRIMARY/SECONDARY CIRCUIT

NOTE:
For the diagnostic procedure, refer to DTC P0351. <Ref. to EN(H4SO)(diag)-186, DTC P0351 IGNITION COIL A PRIMARY/SECONDARY CIRCUIT, Diagnostic Procedure with Diagnostic Trouble Code (DTC).>

GETthemANUALS.org

BT:DTC P0400 EXHAUST GAS RECIRCULATION FLOW

DTC DETECTING CONDITION:

- Detected when two consecutive driving cycles with fault occur.
- GENERAL DESCRIPTION <Ref. to GD(H4SO)-135, DTC P0400 EXHAUST GAS RECIRCULATION FLOW, Diagnostic Trouble Code (DTC) Detecting Criteria.>

TROUBLE SYMPTOM:

- Movement performance problem when engine is low speed.
- Improper idling
- Movement performance problem

CAUTION:

After servicing or replacing faulty parts, perform Clear Memory Mode <Ref. to EN(H4SO)(diag)-51, OPERATION, Clear Memory Mode.>, and Inspection Mode <Ref. to EN(H4SO)(diag)-40, PROCEDURE, Inspection Mode.>.

	Step	Check	Yes	No
1	**CHECK CURRENT DATA.** 1) Start the engine. 2) Read the value of «Mani. Absolute Pressure» using the Subaru Select Monitor or a general scan tool. NOTE: • Subaru Select Monitor For detailed operation procedures, refer to “READ CURRENT DATA FOR ENGINE”. <Ref. to EN(H4SO)(diag)-33, Subaru Select Monitor.> • General scan tool For detailed operation procedures, refer to the general scan tool operation manual.	Is the value of «Mani. Absolute Pressure» 53.3 kPa (400 mmHg, 15.75 inHg) or more?	Make sure that the EGR control valve, manifold absolute pressure sensor and throttle body are installed securely.	Go to step **2**.
2	**CHECK EGR CONTROL VALVE.** Remove the EGR control valve.	Are there any holes, clogged lines or foreign matters in the EGR system?	Repair the EGR system.	Replace EGR control valve. <Ref. to FU(H4SO)-36, EGR Valve.>

GETtheMANUALS.org

BU:DTC P0420 CATALYST SYSTEM EFFICIENCY BELOW THRESHOLD (BANK 1)

DTC DETECTING CONDITION:

- Detected when two consecutive driving cycles with fault occur.
- GENERAL DESCRIPTION <Ref. to GD(H4SO)-138, DTC P0420 CATALYST SYSTEM EFFICIENCY BELOW THRESHOLD (BANK 1), Diagnostic Trouble Code (DTC) Detecting Criteria.>

TROUBLE SYMPTOM:

- Engine stalls.
- Idle mixture is out of specifications.

CAUTION:

After servicing or replacing faulty parts, perform Clear Memory Mode <Ref. to EN(H4SO)(diag)-51, OPERATION, Clear Memory Mode.>, and Inspection Mode <Ref. to EN(H4SO)(diag)-40, PROCEDURE, Inspection Mode.>.

WIRING DIAGRAM:

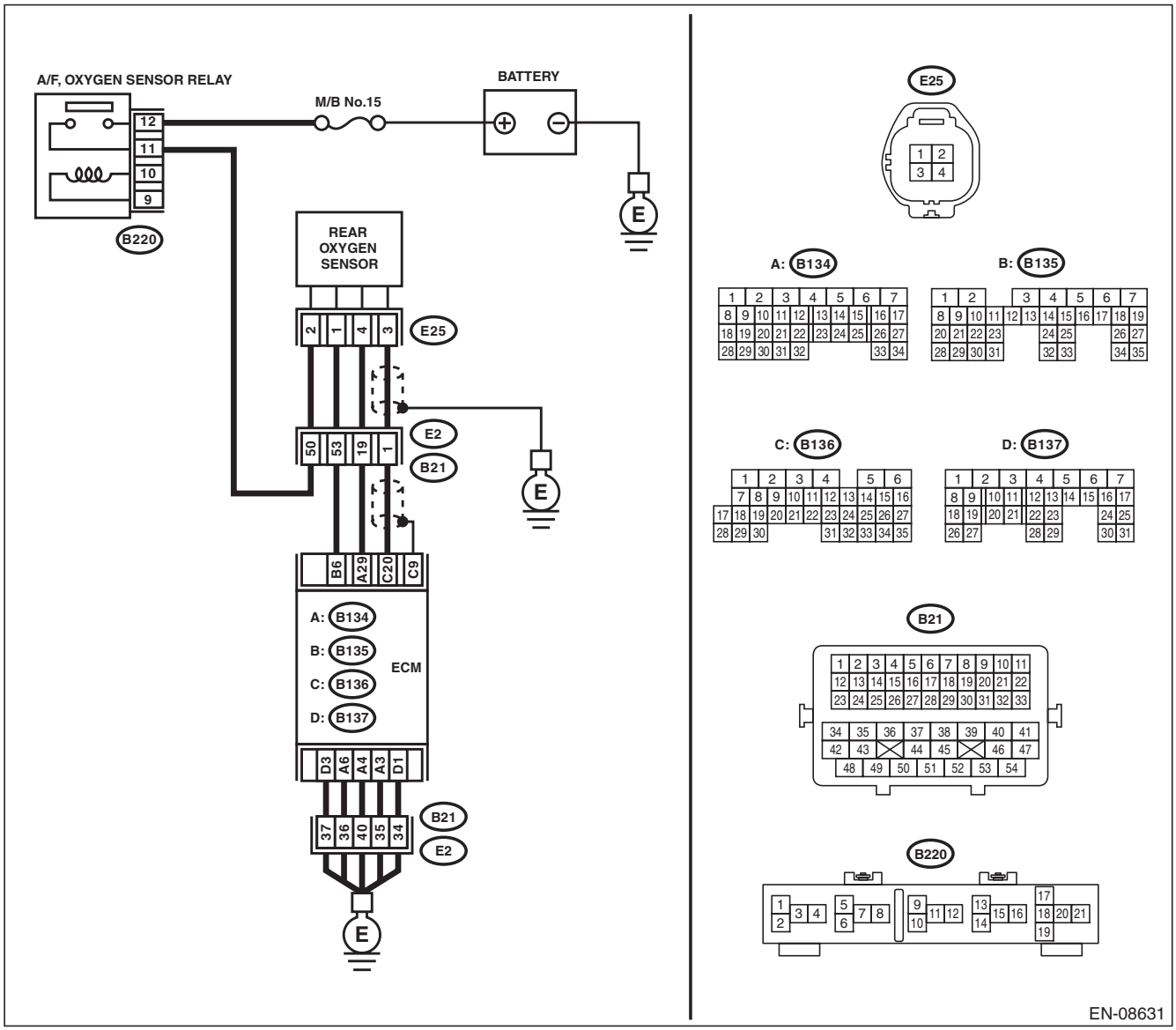

GETtheMANUALS.org

	Step	Check	Yes	No
1	**CHECK EXHAUST SYSTEM.** Check for gas leaks or air suction caused by loose or dislocated nuts and bolts, and open hole at exhaust pipes. NOTE: Check the following positions. • Between cylinder head and front exhaust pipe • Between front exhaust pipe and front catalytic converter • Between front catalytic converter and rear catalytic converter • Loose or improperly attached front oxygen (A/F) sensor or rear oxygen sensor	Is there any fault in exhaust system?	Repair or replace the exhaust system. <Ref. to EX(H4SO)-2, General Description.>	Go to step **2**.
2	**CHECK WAVEFORM DATA ON THE SUBARU SELECT MONITOR (WHILE DRIVING).** 1) Drive at a constant speed between 80 — 112 km/h (50 — 70 MPH). 2) After 5 minutes have elapsed in the condition of step 1), use the Subaru Select Monitor while still driving to read the waveform data. • At normal condition 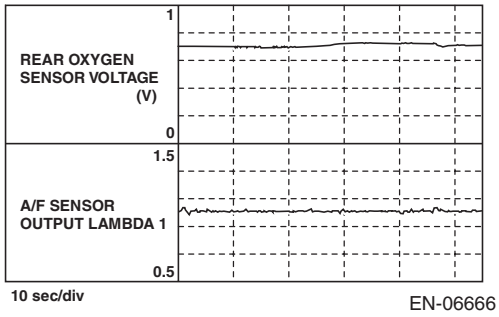 EN-06666 • At abnormal condition (numerous inversion) 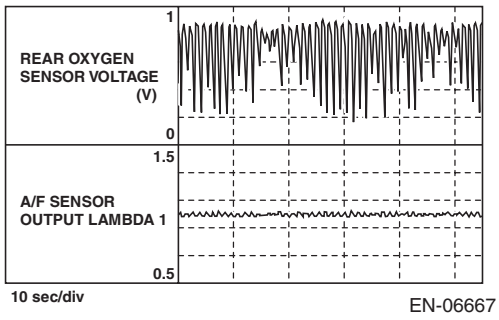 EN-06667	Is a normal waveform displayed?	Even if DTC is detected, the circuit has returned to a normal condition at this time. Reproduce the failure, and then perform the diagnosis again. NOTE: In this case, temporary poor contact of connector, temporary open or short circuit of harness may be the cause.	Go to step **3**.

GETtheMANUALS.org

Step		Check	Yes	No
3	**CHECK WAVEFORM DATA ON THE SUBARU SELECT MONITOR (WHILE IDLING).** 1) Run the engine at idle. 2) In the condition of step 1), use the Subaru Select Monitor to read the waveform data. • At normal condition 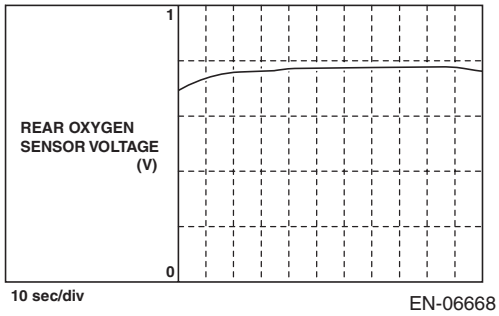 EN-06668 • At abnormal condition 1 (numerous inversion) 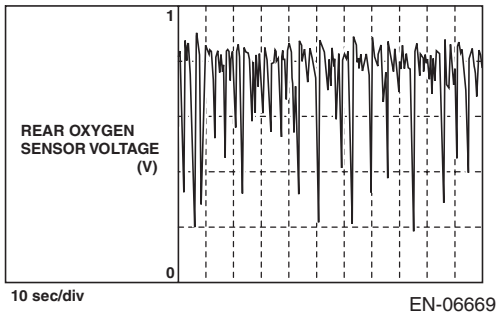 EN-06669 • At abnormal condition 2 (noise input) 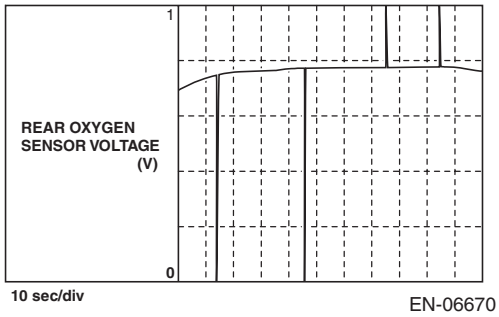 EN-06670	Is a normal waveform displayed?	Go to step **4**.	• The waveform is displayed at abnormal condition 1: Go to step **4**. • The waveform is displayed at abnormal condition 2: Go to step **5**.
4	**CHECK CATALYTIC CONVERTER.**	Is the catalytic converter damaged?	Replace the catalytic converter. <Ref. to EC(H4SO)-3, Front Catalytic Converter.>	Go to step **5**.
5	**CHECK REAR OXYGEN SENSOR CONNECTOR AND COUPLING CONNECTOR.**	Has water entered the connector?	Completely remove any water inside.	Go to step **6**.

GETtheMANUALS.org

	Step	Check	Yes	No
6	**CHECK HARNESS BETWEEN ECM AND REAR OXYGEN SENSOR CONNECTOR.** 1) Turn the ignition switch to OFF. 2) Disconnect the connector from ECM and rear oxygen sensor. 3) Measure the resistance of harness between ECM and rear oxygen sensor connector. ***Connector & terminal*** ***(B136) No. 20 — (E25) No. 3:*** ***(B134) No. 29 — (E25) No. 4:***	Is the resistance less than 1 Ω?	Go to step **7**.	Repair the harness and connector. NOTE: In this case, repair the following item: • Open circuit in harness between ECM and rear oxygen sensor connector • Poor contact of coupling connector
7	**CHECK HARNESS BETWEEN ECM AND REAR OXYGEN SENSOR CONNECTOR.** 1) Connect the connector to ECM. 2) Turn the ignition switch to ON. 3) Measure the voltage between rear oxygen sensor connector and chassis ground. ***Connector & terminal*** ***(E25) No. 3 (+) — Chassis ground (–):***	Is the voltage 0.2 — 0.5 V?	Go to step **8**.	Repair the harness and connector. NOTE: Repair the following locations. • Open circuit in harness between ECM and rear oxygen sensor connector • Poor contact of coupling connector • Poor contact of ECM connector
8	**CHECK REAR OXYGEN SENSOR SHIELD.** 1) Turn the ignition switch to OFF. 2) Expose the rear oxygen sensor connector body side harness sensor shield. 3) Measure the resistance between sensor shield and chassis ground.	Is the resistance less than 1 Ω?	Replace the rear oxygen sensor. <Ref. to FU(H4SO)-44, Rear Oxygen Sensor.>	Repair the open circuit of rear oxygen sensor harness.

GETthemANUALS.org

BV:DTC P0442 EVAPORATIVE EMISSION CONTROL SYSTEM LEAK DETECTED (SMALL LEAK)

DTC DETECTING CONDITION:

- Detected when two consecutive driving cycles with fault occur.
- GENERAL DESCRIPTION <Ref. to GD(H4SO)-141, DTC P0442 EVAPORATIVE EMISSION CONTROL SYSTEM LEAK DETECTED (SMALL LEAK), Diagnostic Trouble Code (DTC) Detecting Criteria.>

TROUBLE SYMPTOM:

- Fuel odor
- There is a hole of more than 1.0 mm (0.04 in) dia. in evaporation system or fuel tank.

CAUTION:

After servicing or replacing faulty parts, perform Clear Memory Mode <Ref. to EN(H4SO)(diag)-51, OPERATION, Clear Memory Mode.>, and Inspection Mode <Ref. to EN(H4SO)(diag)-40, PROCEDURE, Inspection Mode.>.

	Step	Check	Yes	No
1	**CHECK FUEL FILLER CAP.** 1) Turn the ignition switch to OFF. 2) Check the fuel filler cap. NOTE: The DTC is stored in memory if fuel filler cap is or was loose or if the cap chain has caught while tightening.	Is the fuel filler cap tightened securely?	Go to step **2**.	Tighten fuel filler cap securely.
2	**CHECK FUEL FILLER CAP.**	Is the fuel filler cap genuine?	Go to step **3**.	Replace with a genuine fuel filler cap.
3	**CHECK FUEL FILLER PIPE GASKET.**	Is there any damage to the seal between fuel filler cap and fuel filler pipe?	Repair or replace the fuel filler cap and fuel filler pipe. <Ref. to FU(H4SO)-62, Fuel Filler Pipe.>	Go to step **4**.
4	**CHECK DRAIN VALVE.** 1) Install the delivery (test) mode fuse. **CAUTION:** **Do not use any fuses that are installed on the vehicle.** 2) Turn the ignition switch to ON. 3) Operate the drain valve using the Subaru Select Monitor. NOTE: The drain valve can be operated using Subaru Select Monitor. For detailed procedures, refer to “SYSTEM OPERATION CHECK MODE”. <Ref. to EN(H4SO)(diag)-52, System Operation Check Mode.>	Does the drain valve operate?	Go to step **5**.	Replace the drain valve. <Ref. to EC(H4SO)-19, Drain Valve.>
5	**CHECK PURGE CONTROL SOLENOID VALVE.** Operate the purge control solenoid valve using the Subaru Select Monitor. NOTE: Purge control solenoid valve operation can be executed using Subaru Select Monitor. For detailed procedures, refer to “SYSTEM OPERATION CHECK MODE”. <Ref. to EN(H4SO)(diag)-52, System Operation Check Mode.>	Does the purge control solenoid valve operate?	Go to step **6**.	Replace the purge control solenoid valve. <Ref. to EC(H4SO)-9, Purge Control Solenoid Valve.>

GETtheMANUALS.org

Step		Check	Yes	No
6	**CHECK EVAPORATIVE EMISSION CONTROL SYSTEM LINE.** 1) Turn the ignition switch to OFF. 2) Check the delivery (test) mode fuse is removed.	Is there any hole of more than 1.0 mm (0.04 in) dia. on evaporation line?	Repair or replace the evaporation line. <Ref. to FU(H4SO)-73, Fuel Delivery and Evaporation Lines.>	Go to step **7**.
7	**CHECK CANISTER.**	Is the canister damaged or is there a hole of more than 1.0 mm (0.04 in) dia. in it?	Repair or replace the canister. <Ref. to EC(H4SO)-5, Canister.>	Go to step **8**.
8	**CHECK FUEL TANK.** Remove the fuel tank. <Ref. to FU(H4SO)-55, Fuel Tank.>	Is the fuel tank damaged or is there any hole of more than 1.0 mm (0.04 in) dia. in it?	Repair or replace the fuel tank. <Ref. to FU(H4SO)-55, Fuel Tank.>	Go to step **9**.
9	**CHECK ANY OTHER MECHANICAL TROUBLE IN EVAPORATIVE EMISSION CONTROL SYSTEM.**	Is there any hole of more than 1.0 mm (0.04 in) dia., crack, clogging, or disconnection, bend, misconnection of hoses or pipes in evaporative emission control system?	Repair or replace the hoses or pipes.	Repair the poor contact of ECM connector.

GETthemANUALS.org

BW:DTC P0447 EVAPORATIVE EMISSION CONTROL SYSTEM VENT CONTROL CIRCUIT OPEN

DTC DETECTING CONDITION:

- Immediately at fault recognition
- GENERAL DESCRIPTION <Ref. to GD(H4SO)-155, DTC P0447 EVAPORATIVE EMISSION CONTROL SYSTEM VENT CONTROL CIRCUIT OPEN, Diagnostic Trouble Code (DTC) Detecting Criteria.>

CAUTION:

After servicing or replacing faulty parts, perform Clear Memory Mode <Ref. to EN(H4SO)(diag)-51, OPERATION, Clear Memory Mode.>, and Inspection Mode <Ref. to EN(H4SO)(diag)-40, PROCEDURE, Inspection Mode.>.

WIRING DIAGRAM:

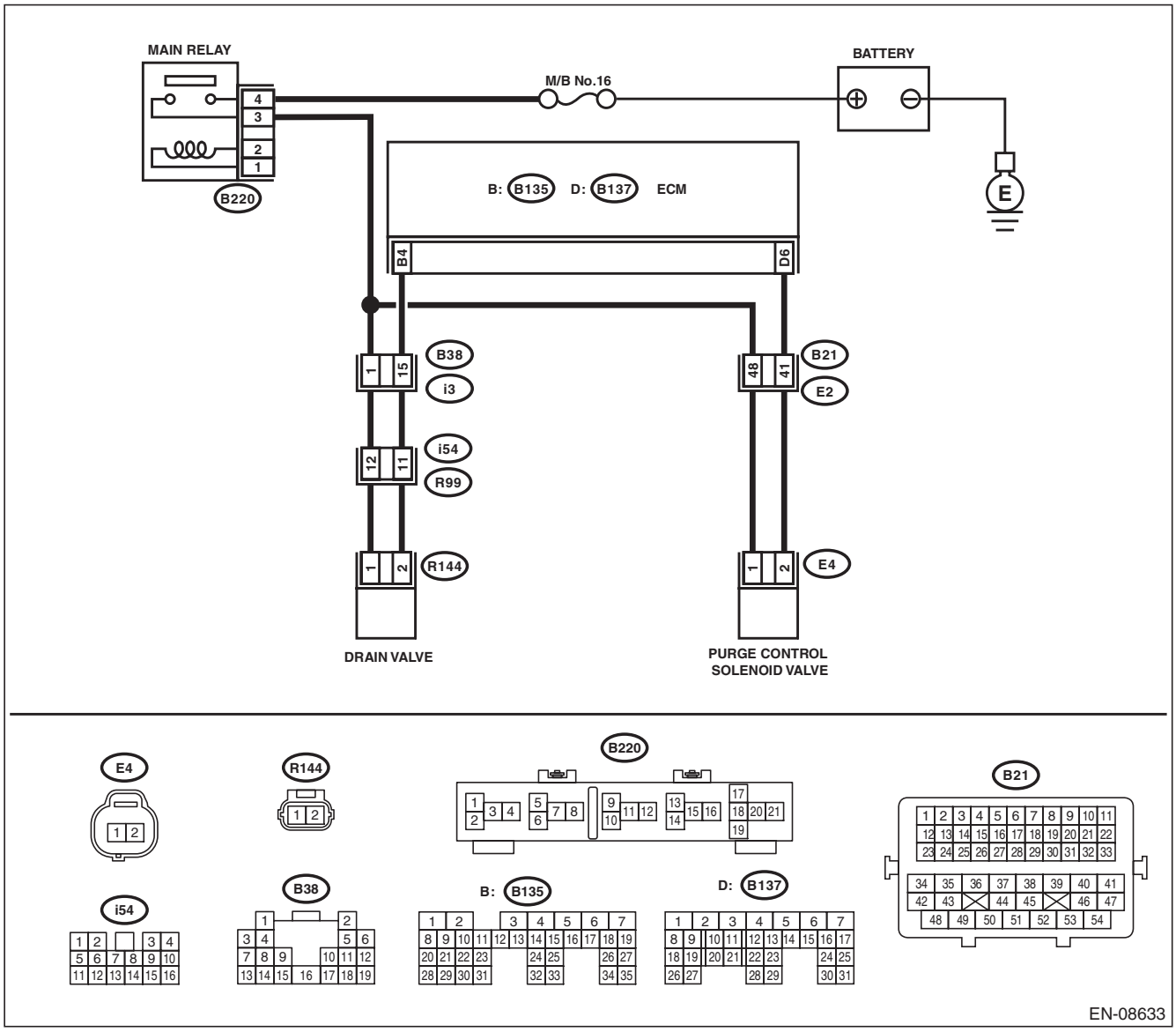

GETtheMANUALS.org

	Step	Check	Yes	No
1	**CHECK OUTPUT SIGNAL OF ECM.** 1) Turn the ignition switch to ON. 2) Measure the voltage between ECM and chassis ground. ***Connector & terminal*** ***(B135) No. 4 (+) — Chassis ground (–):***	Is the voltage 10 V or more?	Go to step **2**.	Go to step **3**.
2	**CHECK FOR POOR CONTACT.** Check for poor contact of ECM connector.	Is there poor contact of ECM connector?	Repair the poor contact of ECM connector.	Even if DTC is detected, the circuit has returned to a normal condition at this time. Reproduce the failure, and then perform the diagnosis again. NOTE: In this case, temporary open or short circuit of harness or temporary poor contact of connector may be the cause.
3	**CHECK POWER SUPPLY TO DRAIN VALVE.** Measure the voltage between drain valve and chassis ground. ***Connector & terminal*** ***(R144) No. 1 (+) — Chassis ground (–):***	Is the voltage 10 V or more?	Go to step **4**.	Repair the power supply circuit.
4	**CHECK HARNESS BETWEEN ECM AND DRAIN VALVE CONNECTOR.** 1) Turn the ignition switch to OFF. 2) Disconnect the connectors from the ECM and drain valve. 3) Measure the resistance between the drain valve connector and chassis ground. ***Connector & terminal*** ***(R144) No. 2 — Chassis ground:***	Is the resistance 1 MΩ or more?	Go to step **5**.	Repair the ground short circuit of harness between ECM and drain valve connector.
5	**CHECK HARNESS BETWEEN ECM AND DRAIN VALVE CONNECTOR.** Measure the resistance of harness between ECM and drain valve connector. ***Connector & terminal*** ***(B135) No. 4 — (R144) No. 2:***	Is the resistance less than 1 Ω?	Go to step **6**.	Repair the harness and connector. NOTE: In this case, repair the following item: • Open circuit of harness between ECM and drain valve connector • Poor contact of coupling connector
6	**CHECK DRAIN VALVE.** Measure the resistance between drain valve terminals. ***Terminals*** ***No. 1 — No. 2:***	Is the resistance 10 — 100 Ω?	Repair the poor contact of drain valve connector.	Replace the drain valve. <Ref. to EC(H4SO)-19, Drain Valve.>

GETthemANUALS.org

BX:DTC P0448 EVAPORATIVE EMISSION CONTROL SYSTEM VENT CONTROL CIRCUIT SHORTED

DTC DETECTING CONDITION:

- Immediately at fault recognition
- GENERAL DESCRIPTION <Ref. to GD(H4SO)-157, DTC P0448 EVAPORATIVE EMISSION CONTROL SYSTEM VENT CONTROL CIRCUIT SHORTED, Diagnostic Trouble Code (DTC) Detecting Criteria.>

CAUTION:

After servicing or replacing faulty parts, perform Clear Memory Mode <Ref. to EN(H4SO)(diag)-51, OPERATION, Clear Memory Mode.>, and Inspection Mode <Ref. to EN(H4SO)(diag)-40, PROCEDURE, Inspection Mode.>.

WIRING DIAGRAM:

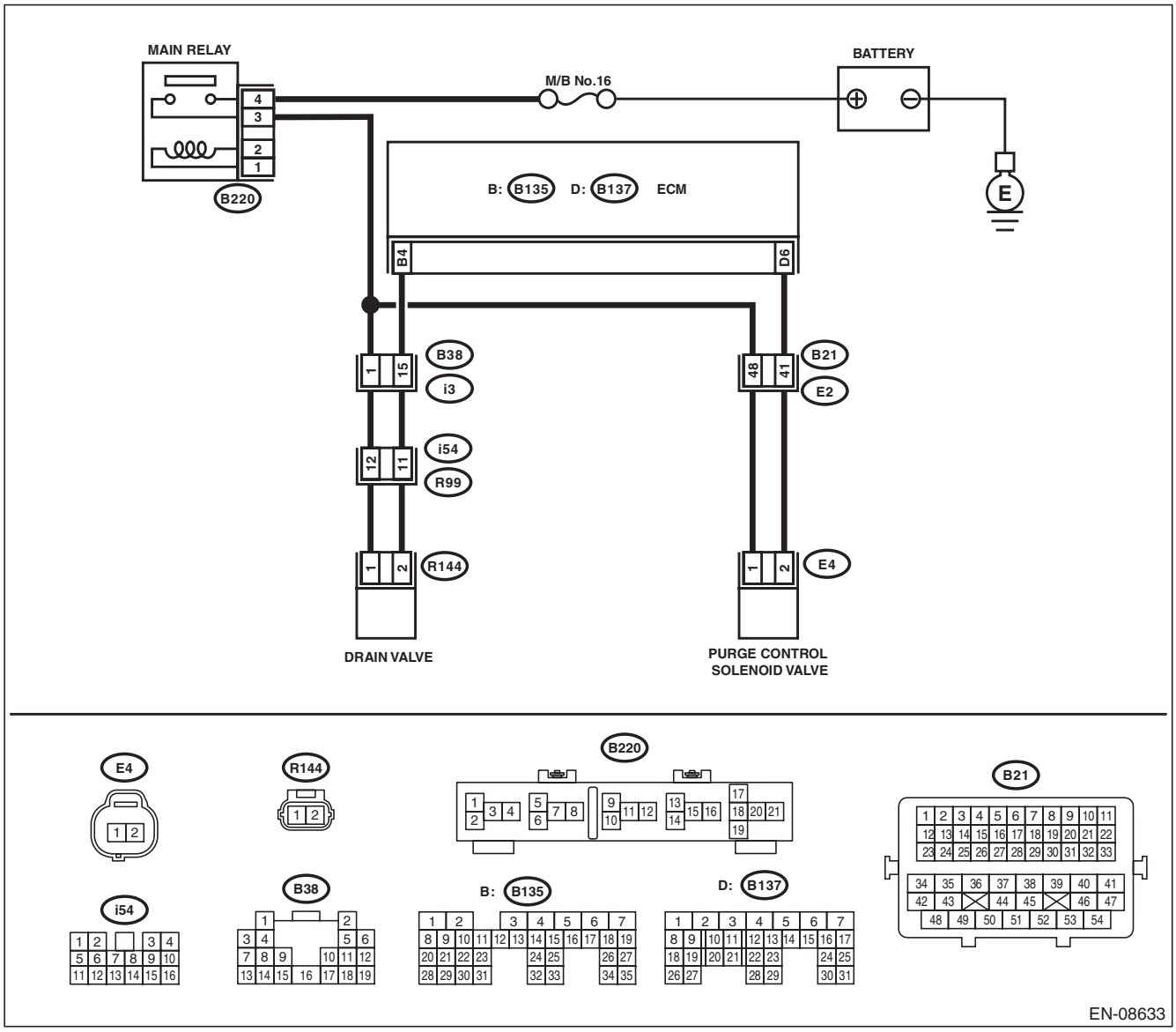

GETtheMANUALS.org

Step		Check	Yes	No
1	**CHECK HARNESS BETWEEN ECM AND DRAIN VALVE CONNECTOR.** 1) Turn the ignition switch to OFF. 2) Disconnect the connectors from the ECM and drain valve. 3) Turn the ignition switch to ON. 4) Measure the voltage between ECM and chassis ground. ***Connector & terminal*** ***(B135) No. 4 (+) — Chassis ground (–):***	Is the voltage 10 V or more?	Repair the short circuit to power in the harness between ECM and drain valve connector.	Go to step **2**.
2	**CHECK DRAIN VALVE.** 1) Turn the ignition switch to OFF. 2) Measure the resistance between drain valve terminals. ***Terminals*** ***No. 1 — No. 2:***	Is the resistance less than 1 Ω?	Replace the drain valve. <Ref. to EC(H4SO)-19, Drain Valve.>	Repair the poor contact of ECM connector.

GETthemANUALS.org

BY:DTC P0451 EVAPORATIVE EMISSION CONTROL SYSTEM PRESSURE SENSOR

DTC DETECTING CONDITION:

- Detected when two consecutive driving cycles with fault occur.
- GENERAL DESCRIPTION <Ref. to GD(H4SO)-159, DTC P0451 EVAPORATIVE EMISSION CONTROL SYSTEM PRESSURE SENSOR, Diagnostic Trouble Code (DTC) Detecting Criteria.>

CAUTION:

After servicing or replacing faulty parts, perform Clear Memory Mode <Ref. to EN(H4SO)(diag)-51, OPERATION, Clear Memory Mode.>, and Inspection Mode <Ref. to EN(H4SO)(diag)-40, PROCEDURE, Inspection Mode.>.

	Step	Check	Yes	No
1	**CHECK FUEL FILLER CAP.** 1) Turn the ignition switch to OFF. 2) Open the fuel flap.	Is the fuel filler cap tightened securely?	Go to step **2**.	Tighten fuel filler cap securely.
2	**CHECK PRESSURE VACUUM LINE.** NOTE: Check the following items. • Disconnection, leakage and clogging of the vacuum hoses and pipes between fuel tank pressure sensor and fuel tank • Disconnection, leakage and clogging of air ventilation hoses and pipes between fuel filler pipe and fuel tank	Is there any fault in pressure/ vacuum line?	Repair or replace the hoses and pipes.	Replace the fuel tank pressure sensor. <Ref. to EC(H4SO)-16, Fuel Tank Pressure Sensor.>

GETthemANUALS.org

BZ:DTC P0452 EVAPORATIVE EMISSION CONTROL SYSTEM PRESSURE SENSOR LOW INPUT

DTC DETECTING CONDITION:

- Immediately at fault recognition
- GENERAL DESCRIPTION <Ref. to GD(H4SO)-163, DTC P0452 EVAPORATIVE EMISSION CONTROL SYSTEM PRESSURE SENSOR LOW INPUT, Diagnostic Trouble Code (DTC) Detecting Criteria.>

CAUTION:

After servicing or replacing faulty parts, perform Clear Memory Mode <Ref. to EN(H4SO)(diag)-51, OPERATION, Clear Memory Mode.>, and Inspection Mode <Ref. to EN(H4SO)(diag)-40, PROCEDURE, Inspection Mode.>.

WIRING DIAGRAM:

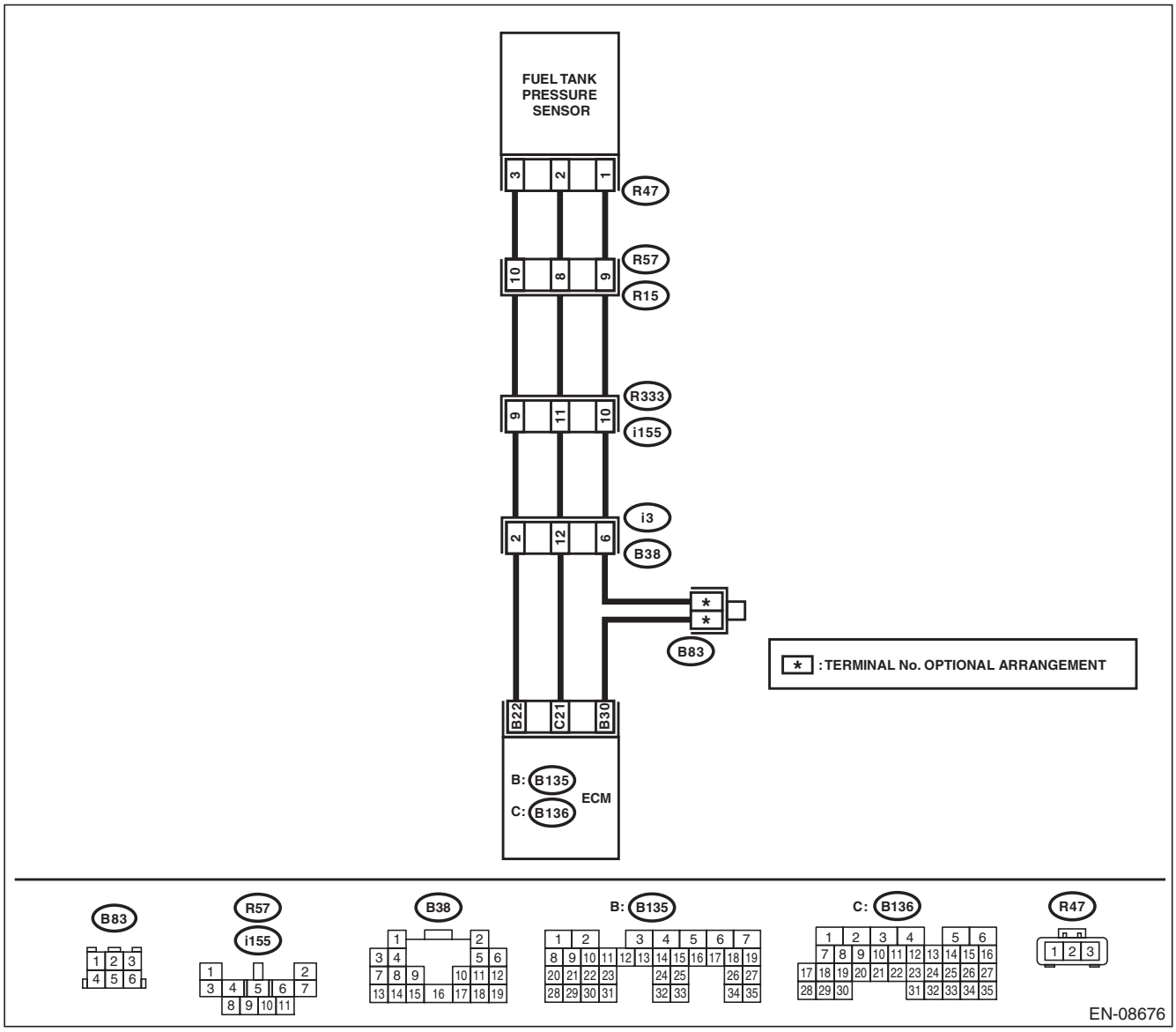

GETTHEMANUALS.org

	Step	Check	Yes	No
1	**CHECK CURRENT DATA.** 1) Turn the ignition switch to ON. 2) Using the Subaru Select Monitor or a general scan tool, read the value in «Fuel Tank Pressure». NOTE: • Subaru Select Monitor For detailed operation procedures, refer to "READ CURRENT DATA FOR ENGINE". <Ref. to EN(H4SO)(diag)-33, Subaru Select Monitor.> • General scan tool For detailed operation procedures, refer to the general scan tool operation manual.	Is the value in «Fuel Tank Pressure» less than –7.41 kPa (–55.6 mmHg, –2.19 inHg)?	Go to step **2**.	Even if DTC is detected, the circuit has returned to a normal condition at this time. Reproduce the failure, and then perform the diagnosis again. NOTE: In this case, temporary poor contact of connector, temporary open or short circuit of harness may be the cause.
2	**CHECK FUEL TANK PRESSURE SENSOR POWER SUPPLY.** 1) Turn the ignition switch to OFF. 2) Disconnect the connector from the fuel tank pressure sensor. 3) Turn the ignition switch to ON. 4) Measure the voltage between the fuel tank pressure sensor connector and chassis ground. ***Connector & terminal*** ***(R47) No. 3 (+) — Chassis ground (–):***	Is the voltage 4.5 V or more?	Go to step **3**.	Repair the harness and connector. NOTE: In this case, repair the following item: • Open circuit of harness between ECM and fuel tank pressure sensor connector • Poor contact of ECM connector • Poor contact of coupling connector
3	**CHECK HARNESS BETWEEN ECM AND FUEL TANK PRESSURE SENSOR CONNECTOR.** 1) Turn the ignition switch to OFF. 2) Disconnect the connector from ECM. 3) Measure the resistance of harness between the ECM and fuel tank pressure sensor connector. ***Connector & terminal*** ***(B136) No. 21 — (R47) No. 2:***	Is the resistance less than 1 Ω?	Go to step **4**.	Repair the harness and connector. NOTE: In this case, repair the following item: • Open circuit of harness between ECM and fuel tank pressure sensor connector • Poor contact of coupling connector
4	**CHECK HARNESS BETWEEN ECM AND FUEL TANK PRESSURE SENSOR CONNECTOR.** Measure the resistance between ECM and chassis ground. ***Connector & terminal*** ***(B136) No. 21 — Chassis ground:***	Is the resistance 1 MΩ or more?	Go to step **5**.	Repair the ground short circuit of harness between ECM and fuel tank pressure sensor connector.
5	**CHECK FOR POOR CONTACT.** Check for poor contact between the ECM and fuel tank pressure sensor connector.	Is there poor contact of the ECM or fuel tank pressure sensor connector?	Repair the poor contact of the ECM or fuel tank pressure sensor connector.	Replace the fuel tank pressure sensor. <Ref. to EC(H4SO)-16, Fuel Tank Pressure Sensor.>

GETthemMANUALS.org

CA:DTC P0453 EVAPORATIVE EMISSION CONTROL SYSTEM PRESSURE SENSOR HIGH INPUT

DTC DETECTING CONDITION:

- Immediately at fault recognition
- GENERAL DESCRIPTION <Ref. to GD(H4SO)-165, DTC P0453 EVAPORATIVE EMISSION CONTROL SYSTEM PRESSURE SENSOR HIGH INPUT, Diagnostic Trouble Code (DTC) Detecting Criteria.>

CAUTION:

After servicing or replacing faulty parts, perform Clear Memory Mode <Ref. to EN(H4SO)(diag)-51, OPERATION, Clear Memory Mode.>, and Inspection Mode <Ref. to EN(H4SO)(diag)-40, PROCEDURE, Inspection Mode.>.

WIRING DIAGRAM:

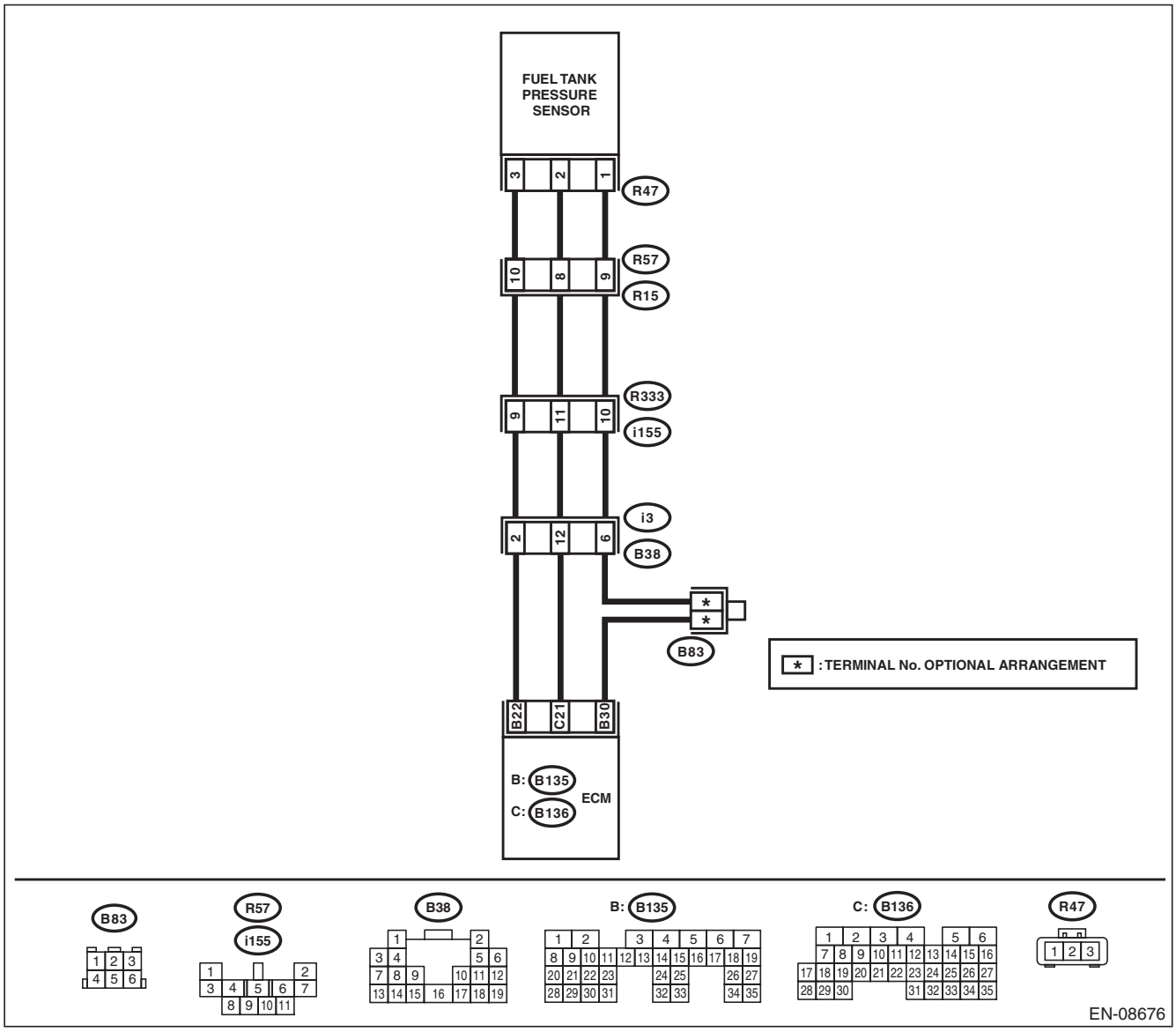

GETTHEMANUALS.org

	Step	Check	Yes	No
1	**CHECK CURRENT DATA.** 1) Turn the ignition switch to ON. 2) Using the Subaru Select Monitor or a general scan tool, read the value in «Fuel Tank Pressure». NOTE: • Subaru Select Monitor For detailed operation procedures, refer to "READ CURRENT DATA FOR ENGINE". <Ref. to EN(H4SO)(diag)-33, Subaru Select Monitor.> • General scan tool For detailed operation procedures, refer to the general scan tool operation manual.	Is the value in «Fuel Tank Pressure» 7.95 kPa (59.6 mmHg, 2.35 inHg) or more?	Go to step **2**.	Even if DTC is detected, the circuit has returned to a normal condition at this time. Reproduce the failure, and then perform the diagnosis again. NOTE: In this case, temporary poor contact of connector, temporary open or short circuit of harness may be the cause.
2	**CHECK HARNESS BETWEEN ECM AND FUEL TANK PRESSURE SENSOR CONNECTOR.** 1) Turn the ignition switch to OFF. 2) Disconnect the connector from the fuel tank pressure sensor. 3) Turn the ignition switch to ON. 4) Using the Subaru Select Monitor or a general scan tool, read the value in «Fuel Tank Pressure». NOTE: • Subaru Select Monitor For detailed operation procedures, refer to "READ CURRENT DATA FOR ENGINE". <Ref. to EN(H4SO)(diag)-33, Subaru Select Monitor.> • General scan tool For detailed operation procedures, refer to the general scan tool operation manual.	Is the value in «Fuel Tank Pressure» 7.95 kPa (59.6 mmHg, 2.35 inHg) or more?	Repair the short circuit to power in the harness between ECM and fuel tank pressure sensor connector.	Go to step **3**.
3	**CHECK HARNESS BETWEEN ECM AND FUEL TANK PRESSURE SENSOR CONNECTOR.** 1) Turn the ignition switch to OFF. 2) Measure the resistance of harness between fuel tank pressure sensor connector and engine ground. ***Connector & terminal*** ***(R47) No. 1 — Engine ground:***	Is the resistance less than 5 Ω?	Go to step **4**.	Repair the harness and connector. NOTE: In this case, repair the following item: • Open circuit of harness between ECM and fuel tank pressure sensor connector • Poor contact of ECM connector • Poor contact of coupling connector • Poor contact of joint connector
4	**CHECK FOR POOR CONTACT.** Check for poor contact of the fuel tank pressure sensor connector.	Is there poor contact of fuel tank pressure sensor connector?	Repair the poor contact of fuel tank pressure sensor connector.	Replace the fuel tank pressure sensor. <Ref. to EC(H4SO)-16, Fuel Tank Pressure Sensor.>

GETtheMANUALS.org

CB:DTC P0456 EVAPORATIVE EMISSION CONTROL SYSTEM LEAK DETECTED (VERY SMALL LEAK)

DTC DETECTING CONDITION:

- Detected when two consecutive driving cycles with fault occur.
- GENERAL DESCRIPTION <Ref. to GD(H4SO)-166, DTC P0456 EVAPORATIVE EMISSION CONTROL SYSTEM LEAK DETECTED (VERY SMALL LEAK), Diagnostic Trouble Code (DTC) Detecting Criteria.>

TROUBLE SYMPTOM:

- Fuel odor
- There is a hole of more than 0.5 mm (0.020 in) dia. in evaporation system or fuel tank.

CAUTION:

After servicing or replacing faulty parts, perform Clear Memory Mode <Ref. to EN(H4SO)(diag)-51, OPERATION, Clear Memory Mode.>, and Inspection Mode <Ref. to EN(H4SO)(diag)-40, PROCEDURE, Inspection Mode.>.

	Step	Check	Yes	No
1	**CHECK FUEL FILLER CAP.** 1) Turn the ignition switch to OFF. 2) Check the fuel filler cap. NOTE: The DTC is stored in memory if fuel filler cap is or was loose or if the cap chain has caught while tightening.	Is the fuel filler cap tightened securely?	Go to step **2**.	Tighten fuel filler cap securely.
2	**CHECK FUEL FILLER CAP.**	Is the fuel filler cap genuine?	Go to step **3**.	Replace with a genuine fuel filler cap.
3	**CHECK FUEL FILLER PIPE GASKET.**	Is there any damage to the seal between fuel filler cap and fuel filler pipe?	Repair or replace the fuel filler cap and fuel filler pipe. <Ref. to FU(H4SO)-62, Fuel Filler Pipe.>	Go to step **4**.
4	**CHECK DRAIN VALVE.** 1) Install the delivery (test) mode fuse. **CAUTION:** **Do not use any fuses that are installed on the vehicle.** 2) Turn the ignition switch to ON. 3) Operate the drain valve using the Subaru Select Monitor. NOTE: Drain valve can be operated using the Subaru Select Monitor. For detailed procedures, refer to “SYSTEM OPERATION CHECK MODE”. <Ref. to EN(H4SO)(diag)-52, System Operation Check Mode.>	Does the drain valve operate?	Go to step **5**.	Replace the drain valve. <Ref. to EC(H4SO)-19, Drain Valve.>
5	**CHECK PURGE CONTROL SOLENOID VALVE.** Operate the purge control solenoid valve using the Subaru Select Monitor. NOTE: Purge control solenoid valve operation can be executed using Subaru Select Monitor. For detailed procedures, refer to “SYSTEM OPERATION CHECK MODE”. <Ref. to EN(H4SO)(diag)-52, System Operation Check Mode.>	Does the purge control solenoid valve operate?	Go to step **6**.	Replace the purge control solenoid valve. <Ref. to EC(H4SO)-9, Purge Control Solenoid Valve.>

GETtheMANUALS.org

Step		Check	Yes	No
6	**CHECK EVAPORATIVE EMISSION CONTROL SYSTEM LINE.** 1) Turn the ignition switch to OFF. 2) Check the delivery (test) mode fuse is removed.	Is there any hole of more than 0.5 mm (0.020 in) dia. on evaporation line?	Repair or replace the evaporation line. <Ref. to FU(H4SO)-73, Fuel Delivery and Evaporation Lines.>	Go to step **7**.
7	**CHECK CANISTER.**	Is the canister damaged or is there a hole of more than 0.5 mm (0.020 in) dia. in it?	Repair or replace the canister. <Ref. to EC(H4SO)-5, Canister.>	Go to step **8**.
8	**CHECK FUEL TANK.** Remove the fuel tank. <Ref. to FU(H4SO)-55, Fuel Tank.>	Is the fuel tank damaged or is there any hole of more than 0.5 mm (0.020 in) dia. in it?	Repair or replace the fuel tank. <Ref. to FU(H4SO)-55, Fuel Tank.>	Go to step **9**.
9	**CHECK ANY OTHER MECHANICAL TROUBLE IN EVAPORATIVE EMISSION CONTROL SYSTEM.**	Is there any hole of more than 0.5 mm (0.020 in) dia., crack, clogging, or disconnection, bend, misconnection of hoses or pipes in evaporative emission control system?	Repair or replace the hoses or pipes.	Repair the poor contact of ECM connector.

GETthemANUALS.org

CC:DTC P0457 EVAPORATIVE EMISSION CONTROL SYSTEM LEAK DETECTED (FUEL CAP LOOSE/OFF)

DTC DETECTING CONDITION:

- Detected when two consecutive driving cycles with fault occur.
- GENERAL DESCRIPTION <Ref. to GD(H4SO)-166, DTC P0457 EVAPORATIVE EMISSION CONTROL SYSTEM LEAK DETECTED (FUEL CAP LOOSE/OFF), Diagnostic Trouble Code (DTC) Detecting Criteria.>

TROUBLE SYMPTOM:

- Fuel odor
- Fuel filler cap loose or lost

CAUTION:

After servicing or replacing faulty parts, perform Clear Memory Mode <Ref. to EN(H4SO)(diag)-51, OPERATION, Clear Memory Mode.>, and Inspection Mode <Ref. to EN(H4SO)(diag)-40, PROCEDURE, Inspection Mode.>.

	Step	Check	Yes	No
1	**CHECK FUEL FILLER CAP.** 1) Turn the ignition switch to OFF. 2) Check the fuel filler cap. NOTE: The DTC is stored in memory if fuel filler cap is or was loose or if the cap chain has caught while tightening.	Is the fuel filler cap tightened securely?	Go to step **2**.	Tighten fuel filler cap securely.
2	**CHECK FUEL FILLER CAP.**	Is the fuel filler cap genuine?	Go to step **3**.	Replace with a genuine fuel filler cap.
3	**CHECK FUEL FILLER PIPE GASKET.**	Is there any damage to the seal between fuel filler cap and fuel filler pipe?	Repair or replace the fuel filler cap and fuel filler pipe. <Ref. to FU(H4SO)-62, Fuel Filler Pipe.>	Go to step **4**.
4	**CHECK DRAIN VALVE.** 1) Install the delivery (test) mode fuse. **CAUTION:** **Do not use any fuses that are installed on the vehicle.** 2) Turn the ignition switch to ON. 3) Operate the drain valve using the Subaru Select Monitor. NOTE: Drain valve can be operated using the Subaru Select Monitor. For detailed procedures, refer to “SYSTEM OPERATION CHECK MODE”. <Ref. to EN(H4SO)(diag)-52, System Operation Check Mode.>	Does the drain valve operate?	Go to step **5**.	Replace the drain valve. <Ref. to EC(H4SO)-19, Drain Valve.>
5	**CHECK PURGE CONTROL SOLENOID VALVE.** Operate the purge control solenoid valve using the Subaru Select Monitor. NOTE: Purge control solenoid valve operation can be executed using Subaru Select Monitor. For detailed procedures, refer to “SYSTEM OPERATION CHECK MODE”. <Ref. to EN(H4SO)(diag)-52, System Operation Check Mode.>	Does the purge control solenoid valve operate?	Go to step **6**.	Replace the purge control solenoid valve. <Ref. to EC(H4SO)-9, Purge Control Solenoid Valve.>

GETtheMANUALS.org

Step		Check	Yes	No
6	**CHECK EVAPORATIVE EMISSION CONTROL SYSTEM LINE.** 1) Turn the ignition switch to OFF. 2) Check the delivery (test) mode fuse is removed.	Is there any disconnection, damage or clogging on the evaporation line?	Repair or replace the evaporation line. <Ref. to FU(H4SO)-73, Fuel Delivery and Evaporation Lines.>	Go to step **7**.
7	**CHECK CANISTER.**	Is the canister damaged?	Repair or replace the canister. <Ref. to EC(H4SO)-5, Canister.>	Go to step **8**.
8	**CHECK FUEL TANK.** Remove the fuel tank. <Ref. to FU(H4SO)-55, Fuel Tank.>	Is the fuel tank damaged?	Repair or replace the fuel tank. <Ref. to FU(H4SO)-55, Fuel Tank.>	Go to step **9**.
9	**CHECK ANY OTHER MECHANICAL TROUBLE IN EVAPORATIVE EMISSION CONTROL SYSTEM.**	Are there holes, cracks, clogging, or disconnection, misconnection of hoses or pipes in evaporative emission control system?	Repair or replace the hoses or pipes.	Repair the poor contact of ECM connector.

GETthemANUALS.org

CD:DTC P0458 EVAPORATIVE EMISSION SYSTEM PURGE CONTROL VALVE CIRCUIT LOW

DTC DETECTING CONDITION:

- Detected when two consecutive driving cycles with fault occur.
- GENERAL DESCRIPTION <Ref. to GD(H4SO)-167, DTC P0458 EVAPORATIVE EMISSION SYSTEM PURGE CONTROL VALVE CIRCUIT LOW, Diagnostic Trouble Code (DTC) Detecting Criteria.>

TROUBLE SYMPTOM:

Improper idling

CAUTION:

After servicing or replacing faulty parts, perform Clear Memory Mode <Ref. to EN(H4SO)(diag)-51, OPERATION, Clear Memory Mode.>, and Inspection Mode <Ref. to EN(H4SO)(diag)-40, PROCEDURE, Inspection Mode.>.

WIRING DIAGRAM:

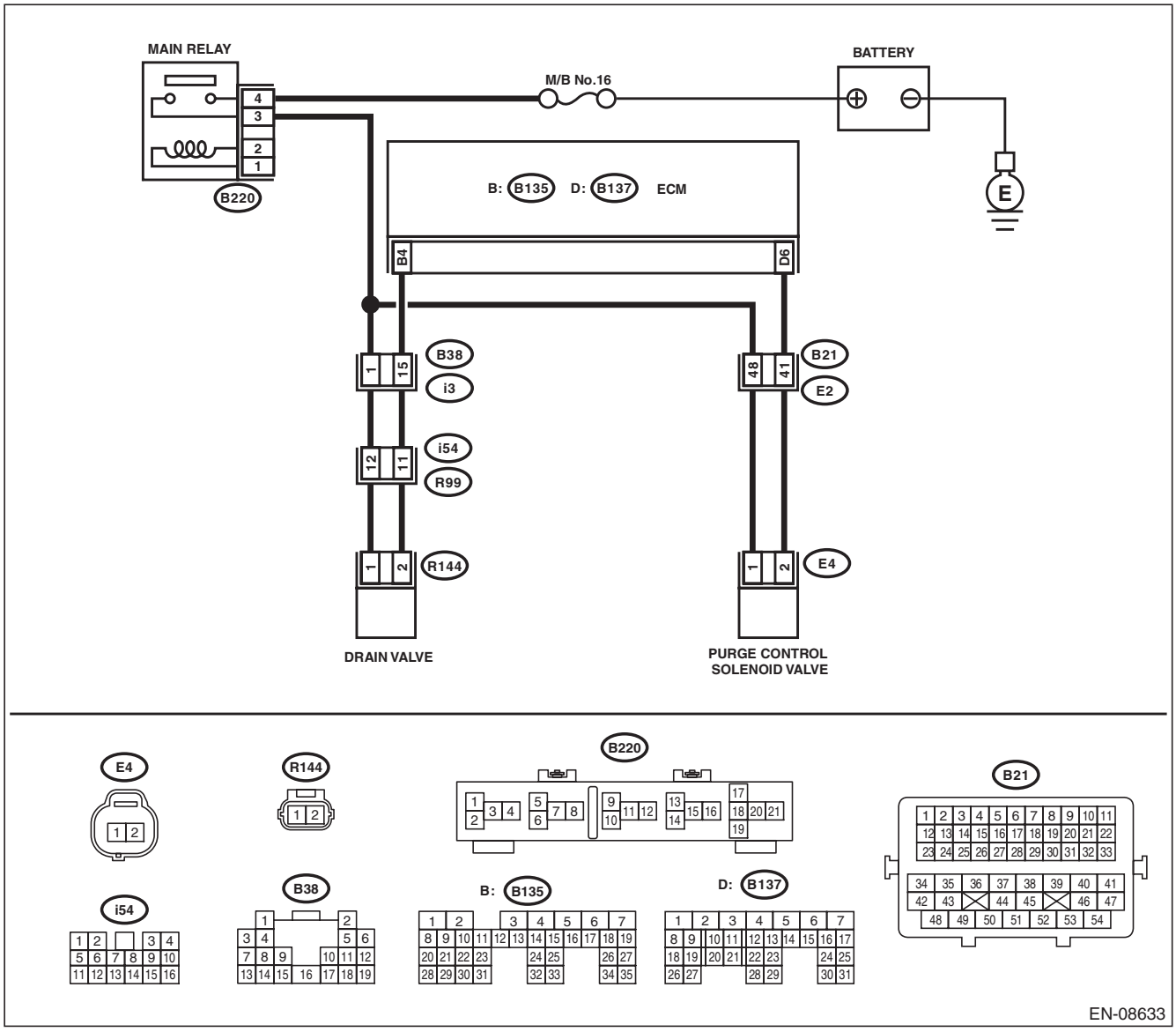

GETtheMANUALS.org

	Step	Check	Yes	No
1	**CHECK OUTPUT SIGNAL OF ECM.** 1) Turn the ignition switch to ON. 2) Measure the voltage between ECM and chassis ground. ***Connector & terminal*** ***(B137) No. 6 (+) — Chassis ground (–):***	Is the voltage 10 V or more?	Go to step **2**.	Go to step **3**.
2	**CHECK FOR POOR CONTACT.** Check for poor contact of ECM connector.	Is there poor contact of ECM connector?	Repair the poor contact of ECM connector.	Even if DTC is detected, the circuit has returned to a normal condition at this time. Reproduce the failure, and then perform the diagnosis again. NOTE: In this case, temporary open or short circuit of harness or temporary poor contact of connector may be the cause.
3	**CHECK POWER SUPPLY TO PURGE CONTROL SOLENOID VALVE.** Measure the voltage between purge control solenoid valve and engine ground. ***Connector & terminal*** ***(E4) No. 1 (+) — Engine ground (–):***	Is the voltage 10 V or more?	Go to step **4**.	Repair the power supply circuit.
4	**CHECK HARNESS BETWEEN ECM AND PURGE CONTROL SOLENOID VALVE CONNECTOR.** 1) Turn the ignition switch to OFF. 2) Disconnect the connectors from ECM and purge control solenoid valve. 3) Measure the resistance between the purge control solenoid valve connector and engine ground. ***Connector & terminal*** ***(E4) No. 2 — Engine ground:***	Is the resistance 1 MΩ or more?	Go to step **5**.	Repair the ground short circuit of harness between ECM and purge control solenoid valve connector.
5	**CHECK HARNESS BETWEEN ECM AND PURGE CONTROL SOLENOID VALVE CONNECTOR.** Measure the resistance of harness between ECM and purge control solenoid valve. ***Connector & terminal*** ***(B137) No. 6 — (E4) No. 2:***	Is the resistance less than 1 Ω?	Go to step **6**.	Repair the harness and connector. NOTE: In this case, repair the following item: • Open circuit in harness between ECM and purge control solenoid valve connector • Poor contact of coupling connector
6	**CHECK PURGE CONTROL SOLENOID VALVE.** 1) Remove the purge control solenoid valve. 2) Measure the resistance between purge control solenoid valve terminals. ***Terminals*** ***No. 1 — No. 2:***	Is the resistance 10 — 100 Ω?	Repair the poor contact of purge control solenoid valve connector.	Replace the purge control solenoid valve. <Ref. to EC(H4SO)-9, Purge Control Solenoid Valve.>

GETthemANSWERS.org

CE:DTC P0459 EVAPORATIVE EMISSION SYSTEM PURGE CONTROL VALVE CIRCUIT HIGH

DTC DETECTING CONDITION:

- Detected when two consecutive driving cycles with fault occur.
- GENERAL DESCRIPTION <Ref. to GD(H4SO)-169, DTC P0459 EVAPORATIVE EMISSION SYSTEM PURGE CONTROL VALVE CIRCUIT HIGH, Diagnostic Trouble Code (DTC) Detecting Criteria.>

TROUBLE SYMPTOM:

Improper idling

CAUTION:

After servicing or replacing faulty parts, perform Clear Memory Mode <Ref. to EN(H4SO)(diag)-51, OPERATION, Clear Memory Mode.>, and Inspection Mode <Ref. to EN(H4SO)(diag)-40, PROCEDURE, Inspection Mode.>.

WIRING DIAGRAM:

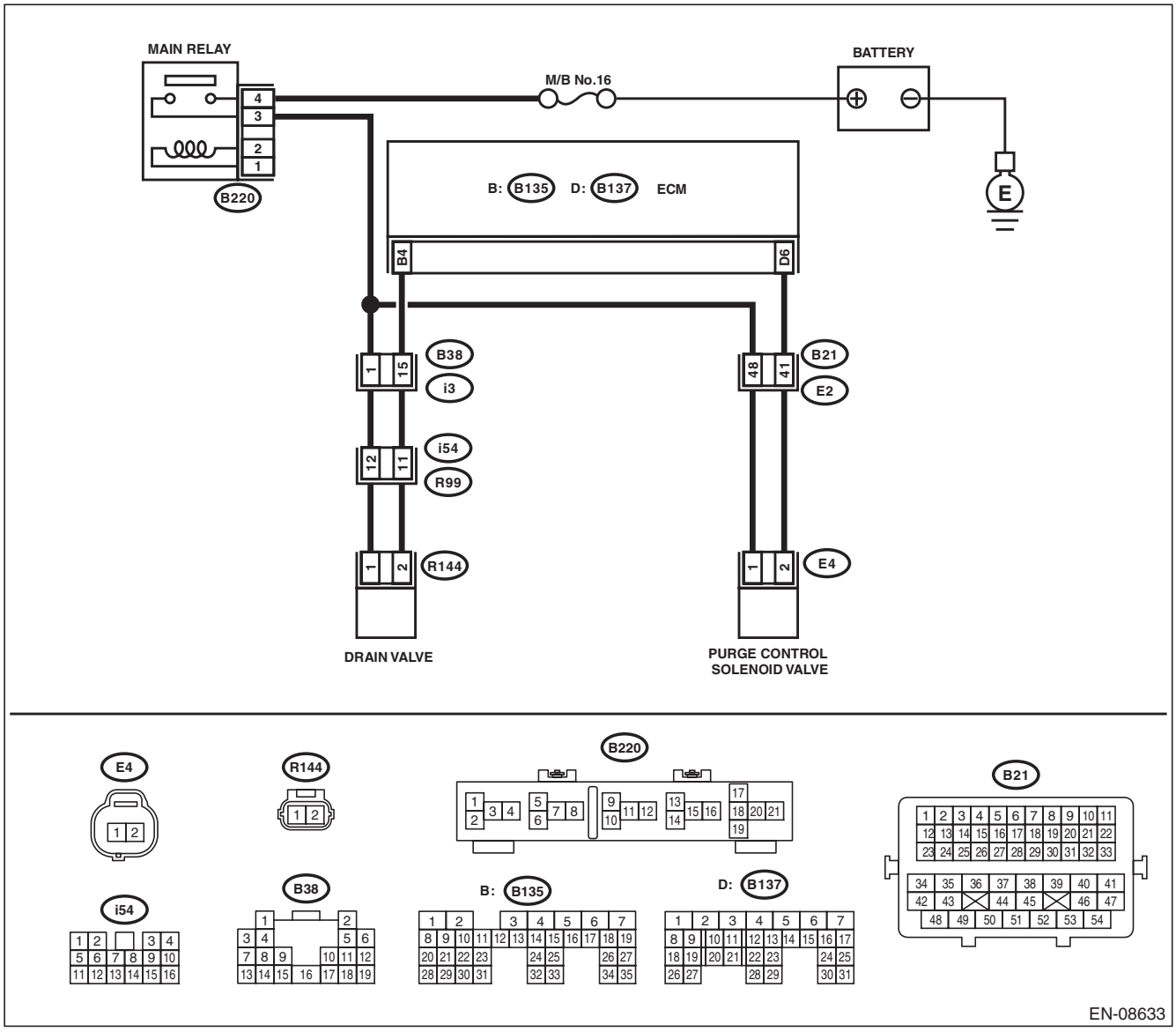

GETTHEMANUALS.org

Step		Check	Yes	No
1	**CHECK HARNESS BETWEEN ECM AND PURGE CONTROL SOLENOID VALVE CONNECTOR.** 1) Turn the ignition switch to OFF. 2) Disconnect the connectors from ECM and purge control solenoid valve. 3) Turn the ignition switch to ON. 4) Measure the voltage between ECM and chassis ground. ***Connector & terminal*** ***(B137) No. 6 (+) — Chassis ground (–):***	Is the voltage 10 V or more?	Repair the short circuit to power in the harness between ECM and purge control solenoid valve connector.	Go to step **2**.
2	**CHECK PURGE CONTROL SOLENOID VALVE.** 1) Turn the ignition switch to OFF. 2) Measure the resistance between purge control solenoid valve terminals. ***Terminals*** ***No. 1 — No. 2:***	Is the resistance less than 1 Ω?	Replace the purge control solenoid valve. <Ref. to EC(H4SO)-9, Purge Control Solenoid Valve.>	Repair the poor contact of ECM connector.

GETthemANUALS.org

CF:DTC P0461 FUEL LEVEL SENSOR “A” CIRCUIT RANGE/PERFORMANCE

DTC DETECTING CONDITION:

- Detected when two consecutive driving cycles with fault occur.
- GENERAL DESCRIPTION <Ref. to GD(H4SO)-171, DTC P0461 FUEL LEVEL SENSOR “A” CIRCUIT RANGE/PERFORMANCE, Diagnostic Trouble Code (DTC) Detecting Criteria.>

CAUTION:

After servicing or replacing faulty parts, perform Clear Memory Mode <Ref. to EN(H4SO)(diag)-51, OPERATION, Clear Memory Mode.>, and Inspection Mode <Ref. to EN(H4SO)(diag)-40, PROCEDURE, Inspection Mode.>.

Step	Check	Yes	No
1 **CHECK FOR ANY OTHER DTC ON DISPLAY.**	Is any other DTC displayed?	Check the appropriate DTC using the “List of Diagnostic Trouble Code (DTC)”. <Ref. to EN(H4SO)(diag)-78, List of Diagnostic Trouble Code (DTC).>	Replace the fuel level sensor and fuel sub level sensor. <Ref. to FU(H4SO)-67, Fuel Level Sensor.> <Ref. to FU(H4SO)-69, Fuel Sub Level Sensor.>

CG:DTC P0462 FUEL LEVEL SENSOR “A” CIRCUIT LOW

NOTE:
For the diagnostic procedure, refer to DTC P0463. <Ref. to EN(H4SO)(diag)-213, DTC P0463 FUEL LEVEL SENSOR “A” CIRCUIT HIGH, Diagnostic Procedure with Diagnostic Trouble Code (DTC).>

CH:DTC P0463 FUEL LEVEL SENSOR “A” CIRCUIT HIGH

DTC DETECTING CONDITION:

- Detected when two consecutive driving cycles with fault occur.
- GENERAL DESCRIPTION <Ref. to GD(H4SO)-175, DTC P0463 FUEL LEVEL SENSOR “A” CIRCUIT HIGH, Diagnostic Trouble Code (DTC) Detecting Criteria.>

CAUTION:

After servicing or replacing faulty parts, perform Clear Memory Mode <Ref. to EN(H4SO)(diag)-51, OPERATION, Clear Memory Mode.>, and Inspection Mode <Ref. to EN(H4SO)(diag)-40, PROCEDURE, Inspection Mode.>.

Step	Check	Yes	No
1 **CHECK FOR ANY OTHER DTC ON DISPLAY.**	Is DTC P0462 or P0463 displayed on the Subaru Select Monitor?	Check the combination meter. <Ref. to IDI-13, CHECK FUEL LEVEL SENSOR, INSPECTION, Combination Meter System.>	Even if DTC is detected, the circuit has returned to a normal condition at this time. Reproduce the failure, and then perform the diagnosis again. NOTE: In this case, temporary poor contact of connector, temporary open or short circuit of harness may be the cause.

GETtheMANUALS.org

CI: DTC P0464 FUEL LEVEL SENSOR CIRCUIT INTERMITTENT

DTC DETECTING CONDITION:

- Detected when two consecutive driving cycles with fault occur.
- GENERAL DESCRIPTION <Ref. to GD(H4SO)-177, DTC P0464 FUEL LEVEL SENSOR CIRCUIT INTERMITTENT, Diagnostic Trouble Code (DTC) Detecting Criteria.>

CAUTION:

After servicing or replacing faulty parts, perform Clear Memory Mode <Ref. to EN(H4SO)(diag)-51, OPERATION, Clear Memory Mode.>, and Inspection Mode <Ref. to EN(H4SO)(diag)-40, PROCEDURE, Inspection Mode.>.

Step	Check	Yes	No
1 **CHECK FOR ANY OTHER DTC ON DISPLAY.**	Is DTC P0464 displayed on the display?	Check the combination meter. <Ref. to IDI-13, CHECK FUEL LEVEL SENSOR, INSPECTION, Combination Meter System.>	Even if DTC is detected, the circuit has returned to a normal condition at this time. Reproduce the failure, and then perform the diagnosis again. NOTE: In this case, temporary poor contact of connector, temporary open or short circuit of harness may be the cause.

CJ:DTC P0500 VEHICLE SPEED SENSOR “A”

DTC DETECTING CONDITION:

- Immediately at fault recognition
- GENERAL DESCRIPTION <Ref. to GD(H4SO)-180, DTC P0500 VEHICLE SPEED SENSOR “A”, Diagnostic Trouble Code (DTC) Detecting Criteria.>

CAUTION:

After servicing or replacing faulty parts, perform Clear Memory Mode <Ref. to EN(H4SO)(diag)-51, OPERATION, Clear Memory Mode.>, and Inspection Mode <Ref. to EN(H4SO)(diag)-40, PROCEDURE, Inspection Mode.>.

Step	Check	Yes	No
1 **CHECK DTC OF VDC.** Check DTC of VDC.	Is DTC of VDC displayed?	Perform the diagnosis according to DTC. <Ref. to VDC(diag)-35, List of Diagnostic Trouble Code (DTC).>	Repair the poor contact of ECM connector.

GETthemANUALS.org

CK:DTC P0506 IDLE AIR CONTROL SYSTEM RPM LOWER THAN EXPECTED

DTC DETECTING CONDITION:

- Detected when two consecutive driving cycles with fault occur.
- GENERAL DESCRIPTION <Ref. to GD(H4SO)-181, DTC P0506 IDLE AIR CONTROL SYSTEM RPM LOWER THAN EXPECTED, Diagnostic Trouble Code (DTC) Detecting Criteria.>

TROUBLE SYMPTOM:

- Hard to start the engine.
- Engine does not start.
- Improper idling
- Engine stalls.

CAUTION:

After servicing or replacing faulty parts, perform Clear Memory Mode <Ref. to EN(H4SO)(diag)-51, OPERATION, Clear Memory Mode.>, and Inspection Mode <Ref. to EN(H4SO)(diag)-40, PROCEDURE, Inspection Mode.>.

Step		Check	Yes	No
1	**CHECK FOR ANY OTHER DTC ON DISPLAY.**	Is any other DTC displayed?	Check the appropriate DTC using the “List of Diagnostic Trouble Code (DTC)”. <Ref. to EN(H4SO)(diag)-78, List of Diagnostic Trouble Code (DTC).>	Go to step **2**.
2	**CHECK AIR CLEANER ELEMENT.** 1) Turn the ignition switch to OFF. 2) Check the air cleaner element.	Is there excessive clogging on air cleaner element?	Replace the air cleaner element. <Ref. to IN(H4SO)-4, Air Cleaner Element.>	Go to step **3**.
3	**CHECK ELECTRONIC THROTTLE CONTROL.** 1) Remove the electronic throttle control. <Ref. to FU(H4SO)-15, REMOVAL, Throttle Body.> 2) Check the electronic throttle control.	Are foreign matter found inside electronic throttle control?	Remove foreign matter from electronic throttle control.	Perform the diagnosis of DTC P2101. <Ref. to EN(H4SO)(diag)-267, DTC P2101 THROTTLE ACTUATOR CONTROL MOTOR CIRCUIT RANGE/PERFORMANCE, Diagnostic Procedure with Diagnostic Trouble Code (DTC).>

GETthemANUALS.org

CL:DTC P0507 IDLE AIR CONTROL SYSTEM RPM HIGHER THAN EXPECTED

DTC DETECTING CONDITION:

- Detected when two consecutive driving cycles with fault occur.
- GENERAL DESCRIPTION <Ref. to GD(H4SO)-182, DTC P0507 IDLE AIR CONTROL SYSTEM RPM HIGHER THAN EXPECTED, Diagnostic Trouble Code (DTC) Detecting Criteria.>

TROUBLE SYMPTOM:

Engine keeps running at higher speed than specified idle speed.

CAUTION:

After servicing or replacing faulty parts, perform Clear Memory Mode <Ref. to EN(H4SO)(diag)-51, OPERATION, Clear Memory Mode.>, and Inspection Mode <Ref. to EN(H4SO)(diag)-40, PROCEDURE, Inspection Mode.>.

Step		Check	Yes	No
1	**CHECK FOR ANY OTHER DTC ON DISPLAY.**	Is any other DTC displayed?	Check the appropriate DTC using the “List of Diagnostic Trouble Code (DTC)”. <Ref. to EN(H4SO)(diag)-78, List of Diagnostic Trouble Code (DTC).>	Go to step **2**.
2	**CHECK AIR INTAKE SYSTEM.** 1) Start and idle the engine. 2) Check the following items. • Loose installation of intake manifold and throttle body • Cracks of intake manifold gasket and throttle body gasket • Disconnection of vacuum hoses	Is there any fault in air intake system?	Repair air suction and leaks.	Go to step **3**.
3	**CHECK ELECTRONIC THROTTLE CONTROL.** 1) Turn the ignition switch to OFF. 2) Remove the electronic throttle control. <Ref. to FU(H4SO)-15, REMOVAL, Throttle Body.> 3) Check the electronic throttle control.	Are foreign matter found inside electronic throttle control?	Remove foreign matter from electronic throttle control.	Perform the diagnosis of DTC P2101. <Ref. to EN(H4SO)(diag)-267, DTC P2101 THROTTLE ACTUATOR CONTROL MOTOR CIRCUIT RANGE/PERFORMANCE, Diagnostic Procedure with Diagnostic Trouble Code (DTC).>

GETthemANUALS.org

CM:DTC P050A COLD START IDLE AIR CONTROL SYSTEM PERFORMANCE

DTC DETECTING CONDITION:

- Detected when two consecutive driving cycles with fault occur.
- GENERAL DESCRIPTION <Ref. to GD(H4SO)-183, DTC P050A COLD START IDLE AIR CONTROL SYSTEM PERFORMANCE, Diagnostic Trouble Code (DTC) Detecting Criteria.>

TROUBLE SYMPTOM:

- Engine keeps running at higher speed than specified idle speed.
- Engine keeps running at a lower speed than the specified idle speed.
- Engine stalls.

CAUTION:

After servicing or replacing faulty parts, perform Clear Memory Mode <Ref. to EN(H4SO)(diag)-51, OPERATION, Clear Memory Mode.>, and Inspection Mode <Ref. to EN(H4SO)(diag)-40, PROCEDURE, Inspection Mode.>.

WIRING DIAGRAM:

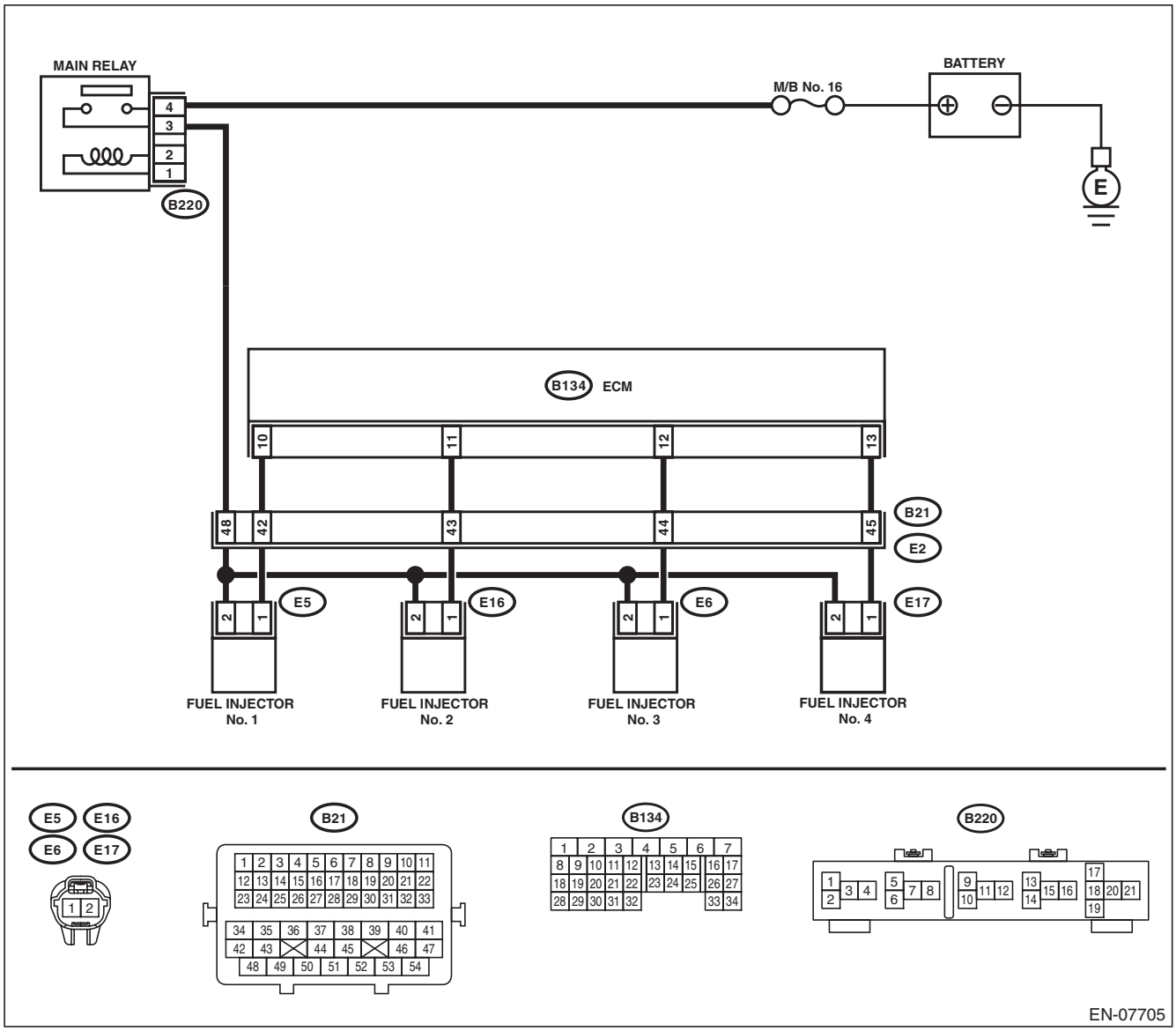

GETTHEMANUALS.org

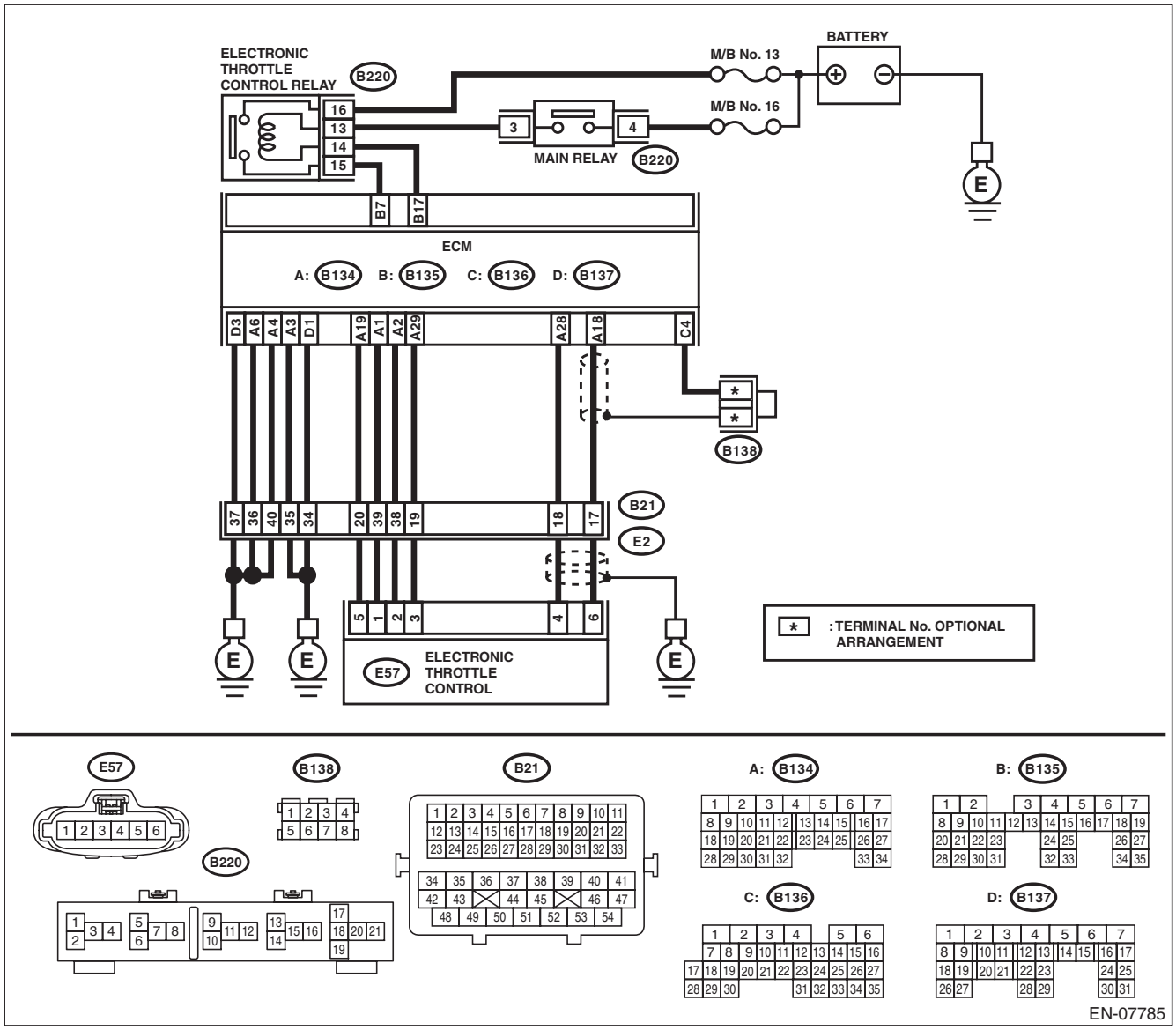

Step		Check	Yes	No
1	**CHECK FOR ANY OTHER DTC ON DISPLAY.**	Is any other DTC displayed?	Check the appropriate DTC using the “List of Diagnostic Trouble Code (DTC)”. <Ref. to EN(H4SO)(diag)-78, List of Diagnostic Trouble Code (DTC).>	Go to step **2**.
2	**CHECK ENGINE OIL.**	Is there a proper amount of engine oil?	Go to step **3**.	Replace engine oil. <Ref. to LU(H4SO)-13, REPLACEMENT, Engine Oil.>
3	**CHECK EXHAUST SYSTEM.**	Are there holes or loose bolts on exhaust system?	Repair the exhaust system.	Go to step **4**.

GETTHEMANUALS.org

	Step	Check	Yes	No
4	**CHECK AIR INTAKE SYSTEM.**	Are there holes, loose bolts or disconnection of hose on air intake system?	Repair the air intake system.	Go to step **5**.
5	**CHECK FUEL PRESSURE.** **WARNING:** **Place "NO OPEN FLAMES" signs near the working area.** **CAUTION:** **Be careful not to spill fuel.** Measure the fuel pressure. <Ref. to ME(H4SO)-28, INSPECTION, Fuel Pressure.> **CAUTION:** **Release fuel pressure before removing the fuel pressure gauge.**	Is the measured value 340 — 400 kPa (3.5 — 4.1 kg/cm^2, 49 — 58 psi)?	Go to step **6**.	Repair the following item. Fuel pressure is too high: • Clogged fuel line or bent hose Fuel pressure is too low: • Improper fuel pump discharge • Clogged fuel line
6	**CHECK ENGINE COOLANT TEMPERATURE SENSOR.** 1) Start the engine and warm up completely. 2) Read the value of «Coolant Temp.» using the Subaru Select Monitor or a general scan tool. NOTE: • Subaru Select Monitor For detailed operation procedures, refer to "READ CURRENT DATA FOR ENGINE". <Ref. to EN(H4SO)(diag)-33, Subaru Select Monitor.> • General scan tool For detailed operation procedures, refer to the general scan tool operation manual.	Is the value of «Coolant Temp.» 75°C (167°F) or more?	Go to step **7**.	Replace the engine coolant temperature sensor. <Ref. to FU(H4SO)-24, Engine Coolant Temperature Sensor.>
7	**CHECK MASS AIR FLOW AND INTAKE AIR TEMPERATURE SENSOR.** 1) Start the engine and warm up engine until coolant temperature is higher than 75°C (167°F). 2) For CVT models, set the select lever to "P" range or "N" range, and for MT models, place the shift lever in the neutral position. 3) Turn the A/C switch to OFF. 4) Turn all the accessory switches to OFF. 5) Read the value of «Mass Air Flow» using the Subaru Select Monitor or a general scan tool. NOTE: • Subaru Select Monitor For detailed operation procedures, refer to "READ CURRENT DATA FOR ENGINE". <Ref. to EN(H4SO)(diag)-33, Subaru Select Monitor.> • General scan tool For detailed operation procedures, refer to the general scan tool operation manual.	Is the value of «Mass Air Flow» 2.0 — 5.0 g/s (0.26 — 0.66 lb/m)?	Go to step **8**.	Replace the mass air flow and intake air temperature sensor. <Ref. to FU(H4SO)-32, Mass Air Flow and Intake Air Temperature Sensor.>

GETtheMANUALS.org

	Step	Check	Yes	No
8	**CHECK MASS AIR FLOW AND INTAKE AIR TEMPERATURE SENSOR.** 1) Start the engine and warm up engine until coolant temperature is higher than 75°C (167°F). 2) For CVT models, set the select lever to “P” range or “N” range, and for MT models, place the shift lever in the neutral position. 3) Turn the A/C switch to OFF. 4) Turn all the accessory switches to OFF. 5) Open the front hood. 6) Measure the ambient temperature. 7) Read the value of «Intake Air Temp.» using the Subaru Select Monitor or a general scan tool. NOTE: • Subaru Select Monitor For detailed operation procedures, refer to “READ CURRENT DATA FOR ENGINE”. <Ref. to EN(H4SO)(diag)-33, Subaru Select Monitor.> • General scan tool For detailed operation procedures, refer to the general scan tool operation manual.	Subtract ambient temperature from «Intake Air Temp.». Is the obtained value –10 — 50°C (–18 — 90°F)?	Go to step **9**.	Check the mass air flow and intake air temperature sensor. <Ref. to FU(H4SO)-32, Mass Air Flow and Intake Air Temperature Sensor.>
9	**CHECK OUTPUT SIGNAL OF ECM.** 1) Turn the ignition switch to ON. 2) Measure the voltage between ECM and chassis ground on faulty cylinders. ***Connector & terminal*** ***#1 (B134) No. 10 (+) — Chassis ground (–):*** ***#2 (B134) No. 11 (+) — Chassis ground (–):*** ***#3 (B134) No. 12 (+) — Chassis ground (–):*** ***#4 (B134) No. 13 (+) — Chassis ground (–):***	Is the voltage 10 V or more?	Go to step **14**.	Go to step **10**.
10	**CHECK HARNESS BETWEEN ECM AND FUEL INJECTOR CONNECTOR.** 1) Turn the ignition switch to OFF. 2) Disconnect the connector from fuel injector on faulty cylinders. 3) Measure the resistance between fuel injector connector and engine ground on faulty cylinders. ***Connector & terminal*** ***#1 (E5) No. 1 — Engine ground:*** ***#2 (E16) No. 1 — Engine ground:*** ***#3 (E6) No. 1 — Engine ground:*** ***#4 (E17) No. 1 — Engine ground:***	Is the resistance 1 MΩ or more?	Go to step **11**.	Repair the short circuit to ground in harness between ECM and fuel injector connector.
11	**CHECK HARNESS BETWEEN ECM AND FUEL INJECTOR CONNECTOR.** Measure the resistance of harness between ECM and fuel injector on faulty cylinders. ***Connector & terminal*** ***#1 (B134) No. 10 — (E5) No. 1:*** ***#2 (B134) No. 11 — (E16) No. 1:*** ***#3 (B134) No. 12 — (E6) No. 1:*** ***#4 (B134) No. 13 — (E17) No. 1:***	Is the resistance less than 1 Ω?	Go to step **12**.	Repair the harness and connector. NOTE: In this case, repair the following item: • Open circuit in harness between ECM and fuel injector connector • Poor contact of coupling connector

GETtheMANUALS.org

	Step	Check	Yes	No
12	**CHECK FUEL INJECTOR.** Measure the resistance between fuel injector terminals on faulty cylinder. ***Terminals*** ***No. 1 — No. 2:***	Is the resistance 5 — 20 Ω?	Go to step **13**.	Replace the faulty fuel injector. <Ref. to FU(H4SO)-37, Fuel Injector.>
13	**CHECK POWER SUPPLY LINE.** 1) Turn the ignition switch to ON. 2) Measure the voltage between fuel injector and engine ground on faulty cylinders. ***Connector & terminal*** ***#1 (E5) No. 2 (+) — Engine ground (–):*** ***#2 (E16) No. 2 (+) — Engine ground (–):*** ***#3 (E6) No. 2 (+) — Engine ground (–):*** ***#4 (E17) No. 2 (+) — Engine ground (–):***	Is the voltage 10 V or more?	Repair the poor contact of all connectors in fuel injector circuit.	Repair the harness and connector. NOTE: In this case, repair the following item: • Open circuit in harness between the main relay connector and fuel injector connector on faulty cylinders • Poor contact of coupling connector • Poor contact of main relay connector
14	**CHECK HARNESS BETWEEN ECM AND FUEL INJECTOR CONNECTOR.** 1) Turn the ignition switch to OFF. 2) Disconnect the connector from fuel injector on faulty cylinders. 3) Turn the ignition switch to ON. 4) Measure the voltage between ECM and chassis ground on faulty cylinders. ***Connector & terminal*** ***#1 (B134) No. 10 (+) — Chassis ground (–):*** ***#2 (B134) No. 11 (+) — Chassis ground (–):*** ***#3 (B134) No. 12 (+) — Chassis ground (–):*** ***#4 (B134) No. 13 (+) — Chassis ground (–):***	Is the voltage 10 V or more?	Repair the short circuit to power in the harness between the ECM and fuel injector.	Go to step **15**.
15	**CHECK FUEL INJECTOR.** 1) Turn the ignition switch to OFF. 2) Measure the resistance between fuel injector terminals on faulty cylinder. ***Terminals*** ***No. 1 — No. 2:***	Is the resistance 5 — 20 Ω?	Go to step **16**.	Replace the faulty fuel injector. <Ref. to FU(H4SO)-37, Fuel Injector.>
16	**CHECK INSTALLATION CONDITION OF CAMSHAFT POSITION SENSOR/CRANKSHAFT POSITION SENSOR.**	Is the camshaft position sensor or crankshaft position sensor loosely installed?	Tighten the camshaft position sensor or crankshaft position sensor. <Ref. to FU(H4SO)-27, Camshaft Position Sensor.> <Ref. to FU(H4SO)-25, Crankshaft Position Sensor.>	Go to step **17**.
17	**CHECK CRANK SPROCKET.** Remove the timing belt cover. <Ref. to ME(H4SO)-47, REMOVAL, Timing Belt Cover.>	Is the crank sprocket rusted or does it have broken teeth?	Replace the crank sprocket. <Ref. to ME(H4SO)-54, Crank Sprocket.>	Go to step **18**.

GETthemANSWERS.org

	Step	Check	Yes	No
18	**CHECK INSTALLATION CONDITION OF TIMING BELT.** Turn the crankshaft using ST, and align the alignment mark on crank sprocket with alignment mark on cylinder block. ST 499987500 CRANKSHAFT SOCKET	Is the timing belt dislocated from its proper position?	Repair the installation condition of timing belt. <Ref. to ME(H4SO)-48, Timing Belt.>	Go to step **19**.
19	**CHECK ELECTRONIC THROTTLE CONTROL RELAY.** 1) Turn the ignition switch to OFF. 2) Remove the electronic throttle control relay. 3) Connect the battery to terminals No. 13 and No. 14 of electronic throttle control relay. 4) Measure the resistance between electronic throttle control relay terminals. ***Terminals*** ***No. 15 — No. 16:***	Is the resistance less than 1 Ω?	Go to step **20**.	Replace the electronic throttle control relay. <Ref. to FU(H4SO)-51, Electronic Throttle Control Relay.>
20	**CHECK POWER SUPPLY OF ELECTRONIC THROTTLE CONTROL RELAY.** Measure the voltage between electronic throttle control relay connector and chassis ground. ***Connector & terminal*** ***(B220) No. 16 (+) — Chassis ground (–):***	Is the voltage 10 V or more?	Go to step **21**.	Repair the open or ground short circuit of power supply circuit.
21	**CHECK HARNESS BETWEEN ECM AND ELECTRONIC THROTTLE CONTROL RELAY CONNECTOR.** 1) Disconnect the connector from ECM. 2) Turn the ignition switch to ON. 3) Measure the voltage between electronic throttle control relay connector and chassis ground. ***Connector & terminal*** ***(B220) No. 14 (+) — Chassis ground (–):***	Is the voltage 10 V or more?	Repair the short circuit to power in the harness between ECM and electronic throttle control relay connector.	Go to step **22**.
22	**CHECK HARNESS BETWEEN ECM AND ELECTRONIC THROTTLE CONTROL RELAY CONNECTOR.** 1) Turn the ignition switch to OFF. 2) Measure the resistance between electronic throttle control relay connector and chassis ground. ***Connector & terminal*** ***(B220) No. 14 — Chassis ground:*** ***(B220) No. 15 — Chassis ground:***	Is the resistance 1 MΩ or more?	Go to step **23**.	Repair the short circuit in harness to ground between ECM and electronic throttle control relay connector.
23	**CHECK HARNESS BETWEEN ECM AND ELECTRONIC THROTTLE CONTROL RELAY CONNECTOR.** Measure the resistance between ECM and electronic throttle control relay connector. ***Connector & terminal*** ***(B135) No. 17 — (B220) No. 14:*** ***(B135) No. 7 — (B220) No. 15:***	Is the resistance less than 1 Ω?	Go to step **24**.	Repair the open circuit in harness between ECM and electronic throttle control relay connector.

GETtheMANUALS.org

	Step	Check	Yes	No
24	**CHECK HARNESS BETWEEN ECM AND ELECTRONIC THROTTLE CONTROL CONNECTOR.** 1) Turn the ignition switch to OFF. 2) Disconnect the connectors from ECM and electronic throttle control. 3) Measure the resistance between ECM and chassis ground. ***Connector & terminal*** ***(B134) No. 19 — Chassis ground:*** ***(B134) No. 18 — Chassis ground:*** ***(B134) No. 18 — (B136) No. 4:*** ***(B134) No. 28 — Chassis ground:***	Is the resistance 1 MΩ or more?	Go to step **25**.	Repair the short circuit to ground in harness between ECM and electronic throttle control connector.
25	**CHECK SHORT CIRCUIT INSIDE THE ECM.** 1) Connect the connector to ECM. 2) Measure the resistance between electronic throttle control connector and engine ground. ***Connector & terminal*** ***(E57) No. 6 — Engine ground:*** ***(E57) No. 4 — Engine ground:***	Is the resistance 1 MΩ or more?	Go to step **26**.	Repair the short circuit to ground in harness between ECM and electronic throttle control connector. Replace the ECM if defective. <Ref. to FU(H4SO)-46, Engine Control Module (ECM).>
26	**CHECK HARNESS BETWEEN ECM AND ELECTRONIC THROTTLE CONTROL CONNECTOR.** 1) Disconnect the connector from ECM. 2) Measure the resistance of harness between ECM and electronic throttle control connector. ***Connector & terminal*** ***(B134) No. 18 — (E57) No. 6:*** ***(B134) No. 28 — (E57) No. 4:*** ***(B134) No. 29 — (E57) No. 3:***	Is the resistance less than 1 Ω?	Go to step **27**.	Repair the harness and connector. NOTE: In this case, repair the following item: • Open circuit in harness between ECM and electronic throttle control connector • Poor contact of coupling connector
27	**CHECK HARNESS BETWEEN ECM AND ELECTRONIC THROTTLE CONTROL CONNECTOR.** 1) Connect the connector to ECM. 2) Measure the resistance between electronic throttle control connector and engine ground. ***Connector & terminal*** ***(E57) No. 3 — Engine ground:***	Is the resistance less than 5 Ω?	Go to step **28**.	Repair the harness and connector. NOTE: In this case, repair the following item: • Open circuit of harness between ECM and engine ground • Poor contact of ECM connector • Poor contact of coupling connector
28	**CHECK HARNESS BETWEEN ECM AND ELECTRONIC THROTTLE CONTROL CONNECTOR.** 1) Turn the ignition switch to ON. 2) Measure the voltage between electronic throttle control connector and engine ground. ***Connector & terminal*** ***(E57) No. 6 (+) — Engine ground (–):*** ***(E57) No. 4 (+) — Engine ground (–):***	Is the voltage 5 V or more?	Repair the short circuit to power in harness between ECM and electronic throttle control connector.	Go to step **29**.

GETtheMANUALS.org

	Step	Check	Yes	No
29	**CHECK HARNESS BETWEEN ECM AND ELECTRONIC THROTTLE CONTROL CONNECTOR.** 1) Turn the ignition switch to OFF. 2) Disconnect the connector from ECM. 3) Measure the resistance between ECM connectors. ***Connector & terminal*** ***(B134) No. 19 — (B134) No. 18:*** ***(B134) No. 19 — (B134) No. 28:***	Is the resistance 1 MΩ or more?	Go to step **30**.	Repair the short circuit to power in harness between ECM and electronic throttle control connector.
30	**CHECK SENSOR OUTPUT.** 1) Connect all connectors. 2) Turn the ignition switch to ON. 3) Read the value of «Main-Throttle Sensor» using Subaru Select Monitor. NOTE: For detailed operation procedures, refer to "READ CURRENT DATA FOR ENGINE". <Ref. to EN(H4SO)(diag)-33, Subaru Select Monitor.>	Is the value of «Main-Throttle Sensor» 0.81 — 0.87 V?	Go to step **31**.	Repair the poor contact of electronic throttle control connector. Replace the electronic throttle control if defective. <Ref. to FU(H4SO)-15, Throttle Body.>
31	**CHECK SENSOR OUTPUT.** Read the value of «Sub-Throttle Sensor» using Subaru Select Monitor. NOTE: For detailed operation procedures, refer to "READ CURRENT DATA FOR ENGINE". <Ref. to EN(H4SO)(diag)-33, Subaru Select Monitor.>	Is the value of «Sub-Throttle Sensor» 1.64 — 1.70 V?	Go to step **32**.	Repair the poor contact of electronic throttle control connector. Replace the electronic throttle control if defective. <Ref. to FU(H4SO)-15, Throttle Body.>
32	**CHECK HARNESS BETWEEN ECM AND ELECTRONIC THROTTLE CONTROL CONNECTOR.** 1) Turn the ignition switch to OFF. 2) Disconnect the connectors from ECM and electronic throttle control. 3) Measure the resistance between ECM and electronic throttle control connector. ***Connector & terminal*** ***(B134) No. 2 — (E57) No. 2:*** ***(B134) No. 1 — (E57) No. 1:***	Is the resistance less than 1 Ω?	Go to step **33**.	Repair the harness and connector. NOTE: In this case, repair the following item: • Open circuit in harness between ECM and electronic throttle control connector • Poor contact of coupling connector
33	**CHECK HARNESS BETWEEN ECM AND ELECTRONIC THROTTLE CONTROL CONNECTOR.** 1) Connect the connector to ECM. 2) Turn the ignition switch to ON. 3) Measure the voltage between electronic throttle control connector and engine ground. ***Connector & terminal*** ***(E57) No. 2 (+) — Engine ground (–):*** ***(E57) No. 1 (+) — Engine ground (–):***	Is the voltage 5 V or more?	Repair the short circuit to power in the harness between ECM and electronic throttle control.	Go to step **34**.

GETtheMANUALS.org

	Step	Check	Yes	No
34	**CHECK HARNESS BETWEEN ECM AND ELECTRONIC THROTTLE CONTROL CONNECTOR.** 1) Turn the ignition switch to OFF. 2) Disconnect the connector from ECM. 3) Measure the resistance between electronic throttle control connector and engine ground. ***Connector & terminal*** ***(E57) No. 2 — Engine ground:*** ***(E57) No. 1 — Engine ground:***	Is the resistance 1 MΩ or more?	Go to step **35**.	Repair the short circuit to ground in harness between ECM and electronic throttle control connector.
35	**CHECK HARNESS BETWEEN ELECTRONIC THROTTLE CONTROL CONNECTOR.** Measure the resistance between electronic throttle control connectors. ***Connector & terminal*** ***(E57) No. 2 — (E57) No. 1:***	Is the resistance 1 MΩ or more?	Go to step **36**.	Repair the short circuit of harness between ECM and electronic throttle control connector.
36	**CHECK ELECTRONIC THROTTLE CONTROL GROUND CIRCUIT.** Measure the resistance between ECM and chassis ground. ***Connector & terminal*** ***(B134) No. 3 — Chassis ground:*** ***(B134) No. 4 — Chassis ground:*** ***(B134) No. 6 — Chassis ground:*** ***(B137) No. 1 — Chassis ground:*** ***(B137) No. 3 — Chassis ground:***	Is the resistance less than 5 Ω?	Go to step **37**.	Repair the harness and connector. NOTE: In this case, repair the following item: • Open circuit of harness between ECM and engine ground • Poor contact of coupling connector
37	**CHECK ELECTRONIC THROTTLE CONTROL.** Measure the resistance between electronic throttle control terminals. ***Terminals*** ***No. 2 — No. 1:***	Is the resistance 50 Ω or less?	Go to step **38**.	Replace the electronic throttle control. <Ref. to FU(H4SO)-15, Throttle Body.>
38	**CHECK ELECTRONIC THROTTLE CONTROL.** Move the throttle valve to the fully open and fully closed positions with fingers. Check that the valve returns to the specified position when releasing fingers.	Does the valve return to the specified position? Standard value: 3 mm (0.12 in) from fully closed position	Repair the poor contact of ECM connector.	Replace the electronic throttle control. <Ref. to FU(H4SO)-15, Throttle Body.>

CN:DTC P050B COLD START IGNITION TIMING PERFORMANCE

NOTE:
For the diagnostic procedure, refer to DTC P050A. <Ref. to EN(H4SO)(diag)-217, DTC P050A COLD START IDLE AIR CONTROL SYSTEM PERFORMANCE, Diagnostic Procedure with Diagnostic Trouble Code (DTC).>

GETthemANUALS.org

CO:DTC P0512 STARTER REQUEST CIRCUIT

DTC DETECTING CONDITION:

- Immediately at fault recognition
- GENERAL DESCRIPTION <Ref. to GD(H4SO)-189, DTC P0512 STARTER REQUEST CIRCUIT, Diagnostic Trouble Code (DTC) Detecting Criteria.>

TROUBLE SYMPTOM:

Failure of engine to start

CAUTION:

After servicing or replacing faulty parts, perform Clear Memory Mode <Ref. to EN(H4SO)(diag)-51, OPERATION, Clear Memory Mode.>, and Inspection Mode <Ref. to EN(H4SO)(diag)-40, PROCEDURE, Inspection Mode.>.

WIRING DIAGRAM:

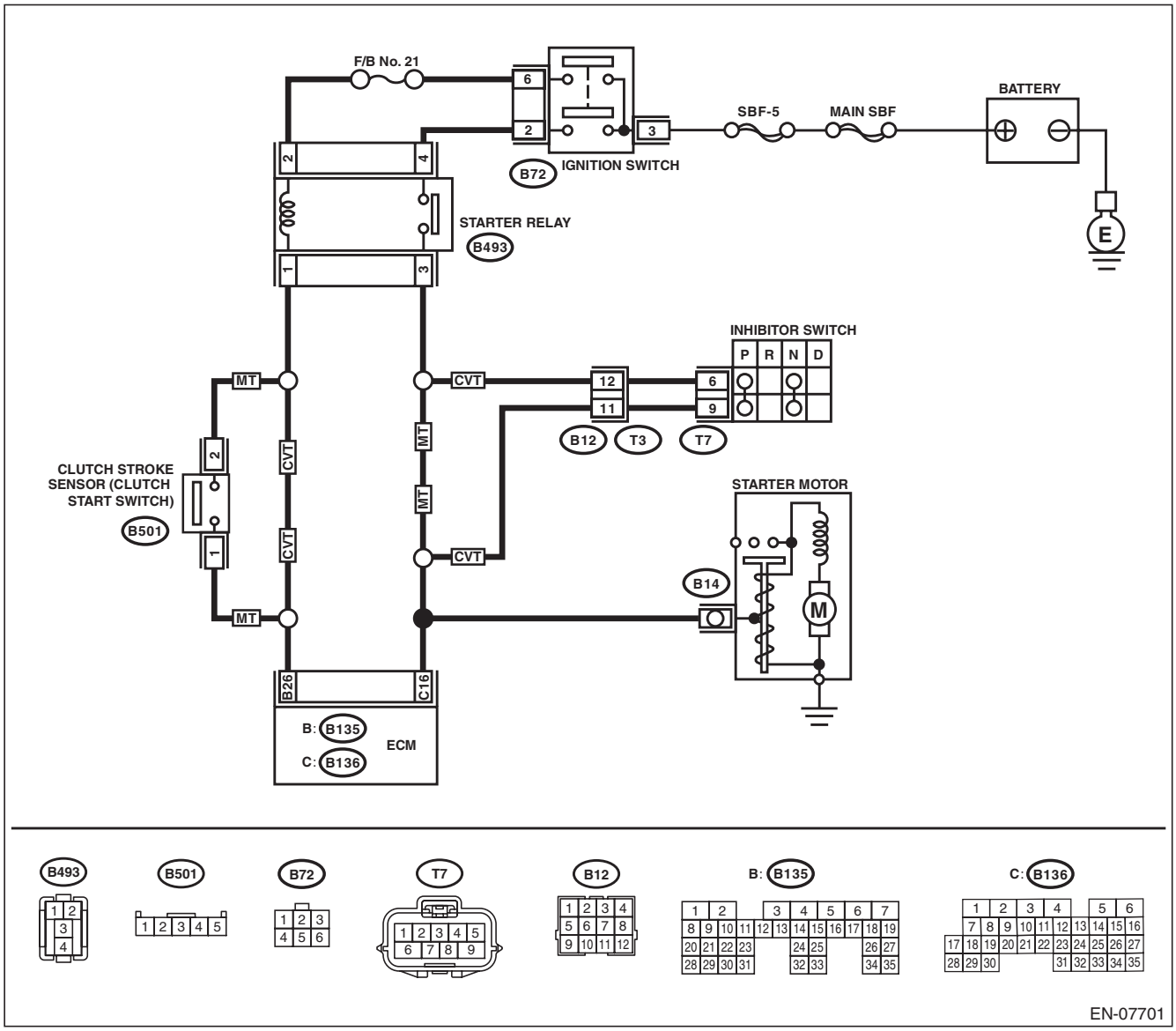

GETTHEMANUALS.org

Step		Check	Yes	No
1	**CHECK FOR ANY OTHER DTC ON DISPLAY.**	Is any other DTC displayed?	Check the appropriate DTC using the “List of Diagnostic Trouble Code (DTC)”. <Ref. to EN(H4SO)(diag)-78, List of Diagnostic Trouble Code (DTC).>	Go to step **2**.
2	**CHECK HARNESS BETWEEN ECM AND STARTER RELAY CONNECTOR.** 1) Turn the ignition switch to OFF. 2) Disconnect the connectors from ECM. 3) Turn the ignition switch to ON. 4) Measure the voltage between ECM and chassis ground. ***Connector & terminal*** ***(B136) No. 16 (+) — Chassis ground (–):*** NOTE: For CVT model, place the select lever in “P” range or “N” range.	Is the voltage 10 V or more?	Repair the short circuit to power supply in harness between ECM and starter relay connector.	Repair the poor contact of ECM connector.

GETthemANUALS.org

CP:DTC P0604 INTERNAL CONTROL MODULE RANDOM ACCESS MEMORY (RAM) ERROR

DTC DETECTING CONDITION:
- Immediately at fault recognition
- GENERAL DESCRIPTION <Ref. to GD(H4SO)-191, DTC P0604 INTERNAL CONTROL MODULE RANDOM ACCESS MEMORY (RAM) ERROR, Diagnostic Trouble Code (DTC) Detecting Criteria.>

TROUBLE SYMPTOM:
- Engine does not start.
- Engine stalls.

CAUTION:
After servicing or replacing faulty parts, perform Clear Memory Mode <Ref. to EN(H4SO)(diag)-51, OPERATION, Clear Memory Mode.>, and Inspection Mode <Ref. to EN(H4SO)(diag)-40, PROCEDURE, Inspection Mode.>.

Step	Check	Yes	No
1 CHECK FOR ANY OTHER DTC ON DISPLAY.	Is any other DTC displayed?	Check the appropriate DTC using the “List of Diagnostic Trouble Code (DTC)”. <Ref. to EN(H4SO)(diag)-78, List of Diagnostic Trouble Code (DTC).>	Even if DTC is detected, the circuit has returned to a normal condition at this time. Reproduce the failure, and then perform the diagnosis again. NOTE: In this case, temporary poor contact of connector, temporary open or short circuit of harness may be the cause.

CQ:DTC P0605 INTERNAL CONTROL MODULE READ ONLY MEMORY (ROM) ERROR

NOTE:
For the diagnostic procedure, refer to DTC P0607. <Ref. to EN(H4SO)(diag)-229, DTC P0607 THROTTLE CONTROL SYSTEM CIRCUIT RANGE/PERFORMANCE, Diagnostic Procedure with Diagnostic Trouble Code (DTC).>

GET THE MANUALS.org

CR:DTC P0607 THROTTLE CONTROL SYSTEM CIRCUIT RANGE/PERFORMANCE

DTC DETECTING CONDITION:

- Immediately at fault recognition
- GENERAL DESCRIPTION <Ref. to GD(H4SO)-193, DTC P0607 THROTTLE CONTROL SYSTEM CIRCUIT RANGE/PERFORMANCE, Diagnostic Trouble Code (DTC) Detecting Criteria.>

TROUBLE SYMPTOM:

- Improper idling
- Poor driving performance

CAUTION:

After servicing or replacing faulty parts, perform Clear Memory Mode <Ref. to EN(H4SO)(diag)-51, OPERATION, Clear Memory Mode.>, and Inspection Mode <Ref. to EN(H4SO)(diag)-40, PROCEDURE, Inspection Mode.>.

WIRING DIAGRAM:

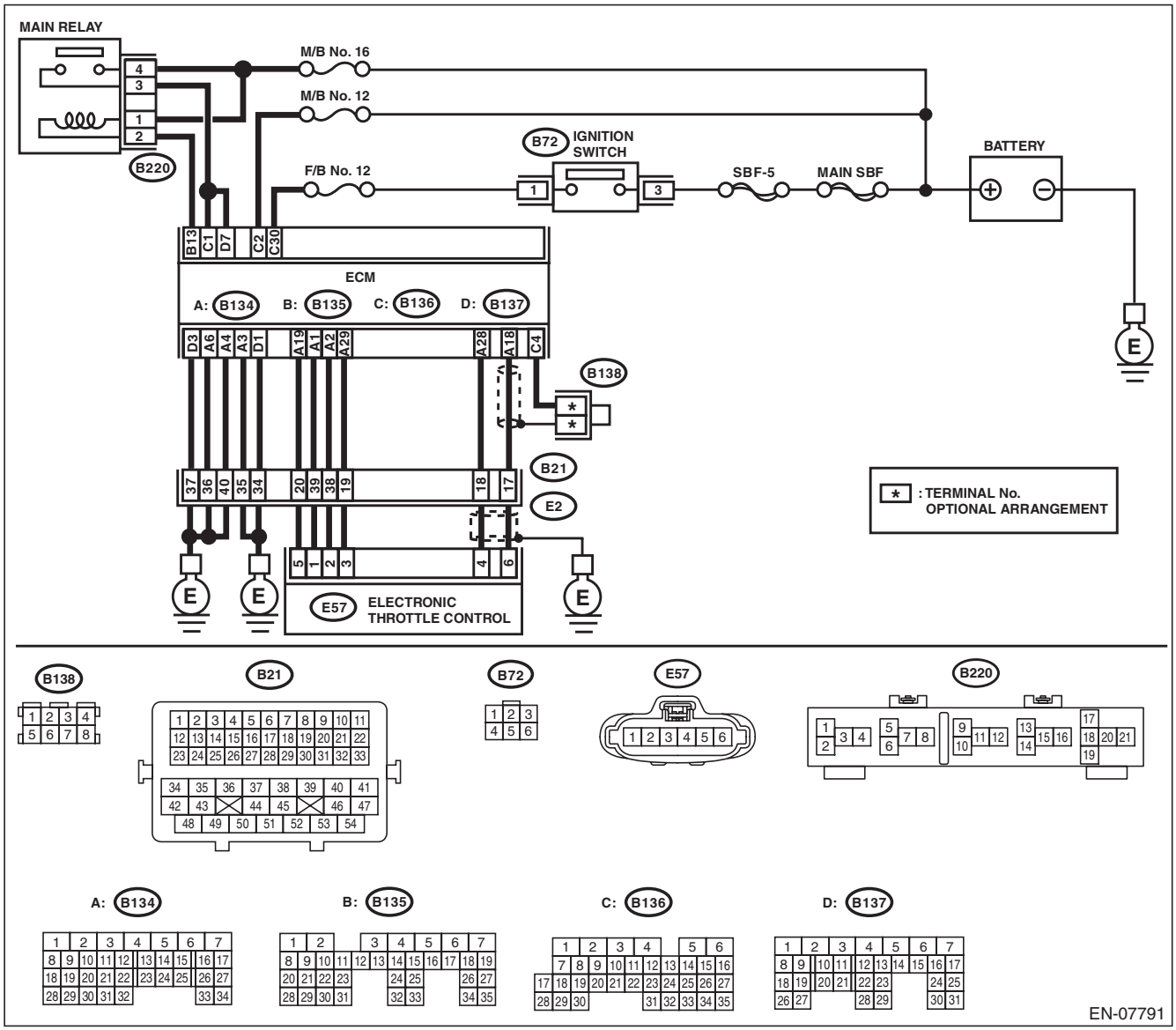

GET THE MANUALS.org

Step		Check	Yes	No
1	**CHECK INPUT VOLTAGE OF ECM.** 1) Turn the ignition switch to ON. 2) Measure the voltage between ECM and chassis ground. ***Connector & terminal*** ***(B136) No. 1 (+) — Chassis ground (–):*** ***(B137) No. 7 (+) — Chassis ground (–):***	Is the voltage 10 — 13 V?	Go to step **2**.	Repair the open or ground short circuit of power supply circuit.
2	**CHECK INPUT VOLTAGE OF ECM.** 1) Start the engine. 2) Measure the voltage between ECM and chassis ground. ***Connector & terminal*** ***(B136) No. 1 (+) — Chassis ground (–):*** ***(B137) No. 7 (+) — Chassis ground (–):***	Is the voltage 13 — 15 V?	Go to step **3**.	Repair the open or ground short circuit of power supply circuit.
3	**CHECK HARNESS BETWEEN ECM AND ELECTRONIC THROTTLE CONTROL CONNECTOR.** 1) Turn the ignition switch to OFF. 2) Disconnect the connectors from ECM and electronic throttle control. 3) Measure the resistance of harness between ECM and electronic throttle control connector. ***Connector & terminal*** ***(B134) No. 19 — (E57) No. 5:*** ***(B134) No. 29 — (E57) No. 3:***	Is the resistance less than 1 Ω?	Go to step **4**.	Repair the harness and connector. NOTE: In this case, repair the following item: • Open circuit in harness between ECM and electronic throttle control connector • Poor contact of coupling connector
4	**CHECK ECM GROUND HARNESS.** 1) Connect all connectors. 2) Turn the ignition switch to ON. 3) Measure the voltage between ECM and chassis ground. ***Connector & terminal*** ***(B134) No. 3 (+) — Chassis ground (–):*** ***(B134) No. 4 (+) — Chassis ground (–):*** ***(B134) No. 6 (+) — Chassis ground (–):*** ***(B137) No. 1 (+) — Chassis ground (–):*** ***(B137) No. 3 (+) — Chassis ground (–):***	Is the voltage less than 1 V?	Repair the poor contact of ECM connector.	Repair the following item. • Open circuit in ground circuit • Further tightening of the engine ground terminal • Poor contact of coupling connector

CS:DTC P0638 THROTTLE ACTUATOR CONTROL RANGE/PERFORMANCE (BANK 1)

NOTE:
For the diagnostic procedure, refer to DTC P2101. <Ref. to EN(H4SO)(diag)-267, DTC P2101 THROTTLE ACTUATOR CONTROL MOTOR CIRCUIT RANGE/PERFORMANCE, Diagnostic Procedure with Diagnostic Trouble Code (DTC).>

CT:DTC P0700 TRANSMISSION CONTROL SYSTEM (MIL REQUEST)

NOTE:
For the diagnostic procedure, refer to CVT section. <Ref. to CVT(diag)-2, Basic Diagnostic Procedure.>

GETthemANUALS.org

CU:DTC P0851 PARK/NEUTRAL SWITCH INPUT CIRCUIT LOW (AT MODEL)

DTC DETECTING CONDITION:

- Detected when two consecutive driving cycles with fault occur.
- GENERAL DESCRIPTION <Ref. to GD(H4SO)-198, DTC P0851 PARK/NEUTRAL SWITCH INPUT CIRCUIT LOW (AT MODEL), Diagnostic Trouble Code (DTC) Detecting Criteria.>

TROUBLE SYMPTOM:

Improper idling

CAUTION:

After servicing or replacing faulty parts, perform Clear Memory Mode <Ref. to EN(H4SO)(diag)-51, OPERATION, Clear Memory Mode.>, and Inspection Mode <Ref. to EN(H4SO)(diag)-40, PROCEDURE, Inspection Mode.>.

WIRING DIAGRAM:

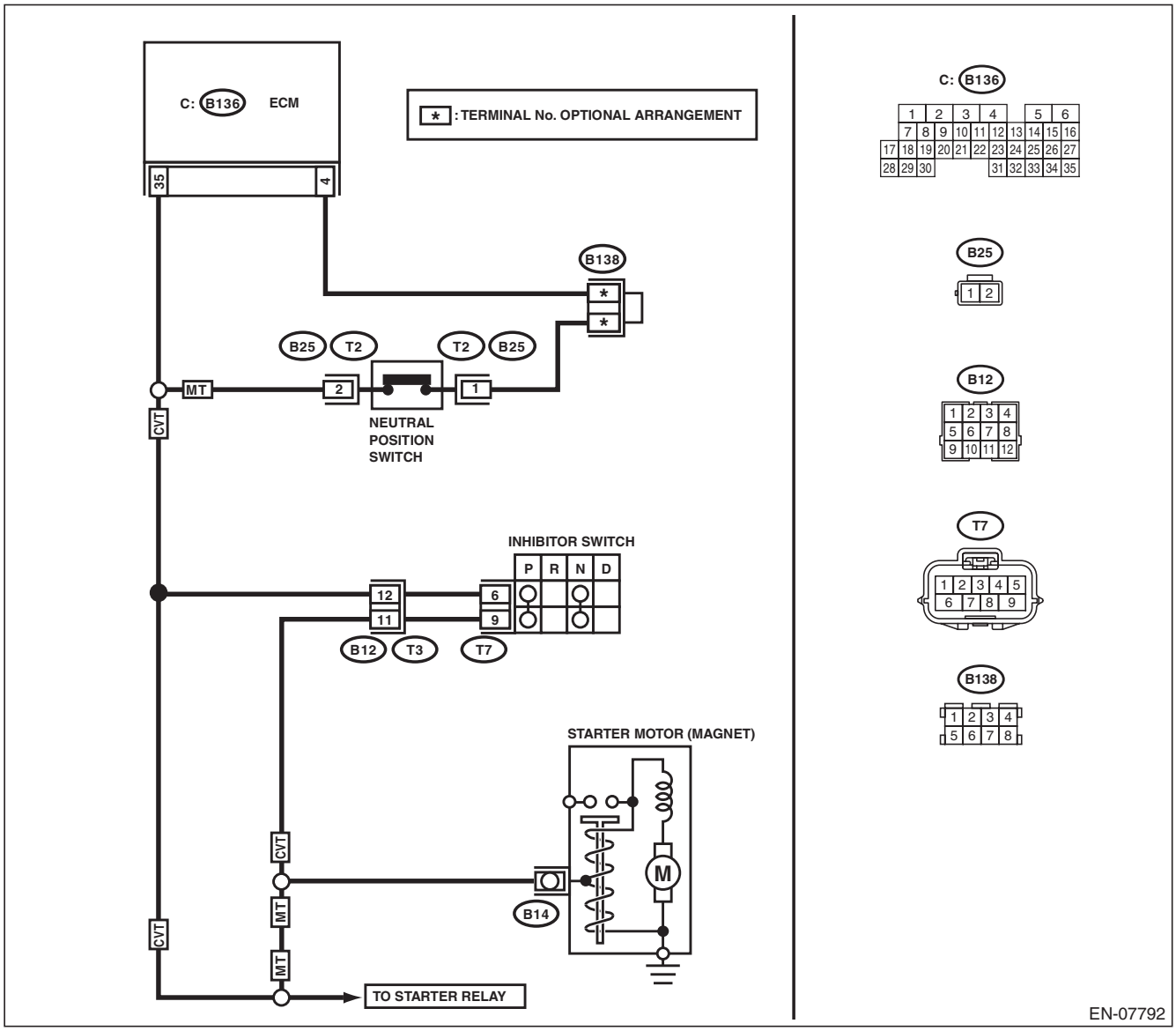

Step	Check	Yes	No
1 CHECK SELECT CABLE.	Is there any fault in select cable?	Repair or adjust the select cable. <Ref. to CS-42, Select Cable.>	Go to step **2**.

GETTHEMANUALS.org

Step		Check	Yes	No
2	**CHECK INPUT SIGNAL OF ECM.** 1) Turn the ignition switch to ON. 2) Place the select lever in other than “P” range and “N” range. 3) Measure the voltage between ECM and chassis ground. ***Connector & terminal*** ***(B136) No. 35 (+) — Chassis ground (–):***	Is the voltage 10 V or more?	Repair the poor contact of ECM connector.	Go to step **3**.
3	**CHECK HARNESS BETWEEN ECM AND TRANSMISSION HARNESS CONNECTOR.** 1) Turn the ignition switch to OFF. 2) Disconnect the connectors from ECM and transmission harness connector (T3). 3) Measure the resistance between ECM and chassis ground. ***Connector & terminal*** ***(B136) No. 35 — Chassis ground:***	Is the resistance 1 MΩ or more?	Go to step **4**.	Repair the ground short circuit of harness between ECM and transmission harness connector.
4	**CHECK TRANSMISSION HARNESS CONNECTOR.** 1) Disconnect the connector from inhibitor switch. 2) Measure the resistance between transmission harness connector and engine ground. ***Connector & terminal*** ***(T3) No. 12 — Engine ground:***	Is the resistance 1 MΩ or more?	Replace the inhibitor switch. <Ref. to CVT-95, Inhibitor Switch.>	Repair short circuit to ground in harness between transmission harness connector and inhibitor switch connector.

GETtheMANUALS.org

CV:DTC P0851 NEUTRAL SWITCH INPUT CIRCUIT LOW (MT MODEL)

DTC DETECTING CONDITION:

- Detected when two consecutive driving cycles with fault occur.
- GENERAL DESCRIPTION <Ref. to GD(H4SO)-199, DTC P0851 NEUTRAL SWITCH INPUT CIRCUIT LOW (MT MODEL), Diagnostic Trouble Code (DTC) Detecting Criteria.>

TROUBLE SYMPTOM:

Improper idling

CAUTION:

After servicing or replacing faulty parts, perform Clear Memory Mode <Ref. to EN(H4SO)(diag)-51, OPERATION, Clear Memory Mode.>, and Inspection Mode <Ref. to EN(H4SO)(diag)-40, PROCEDURE, Inspection Mode.>.

WIRING DIAGRAM:

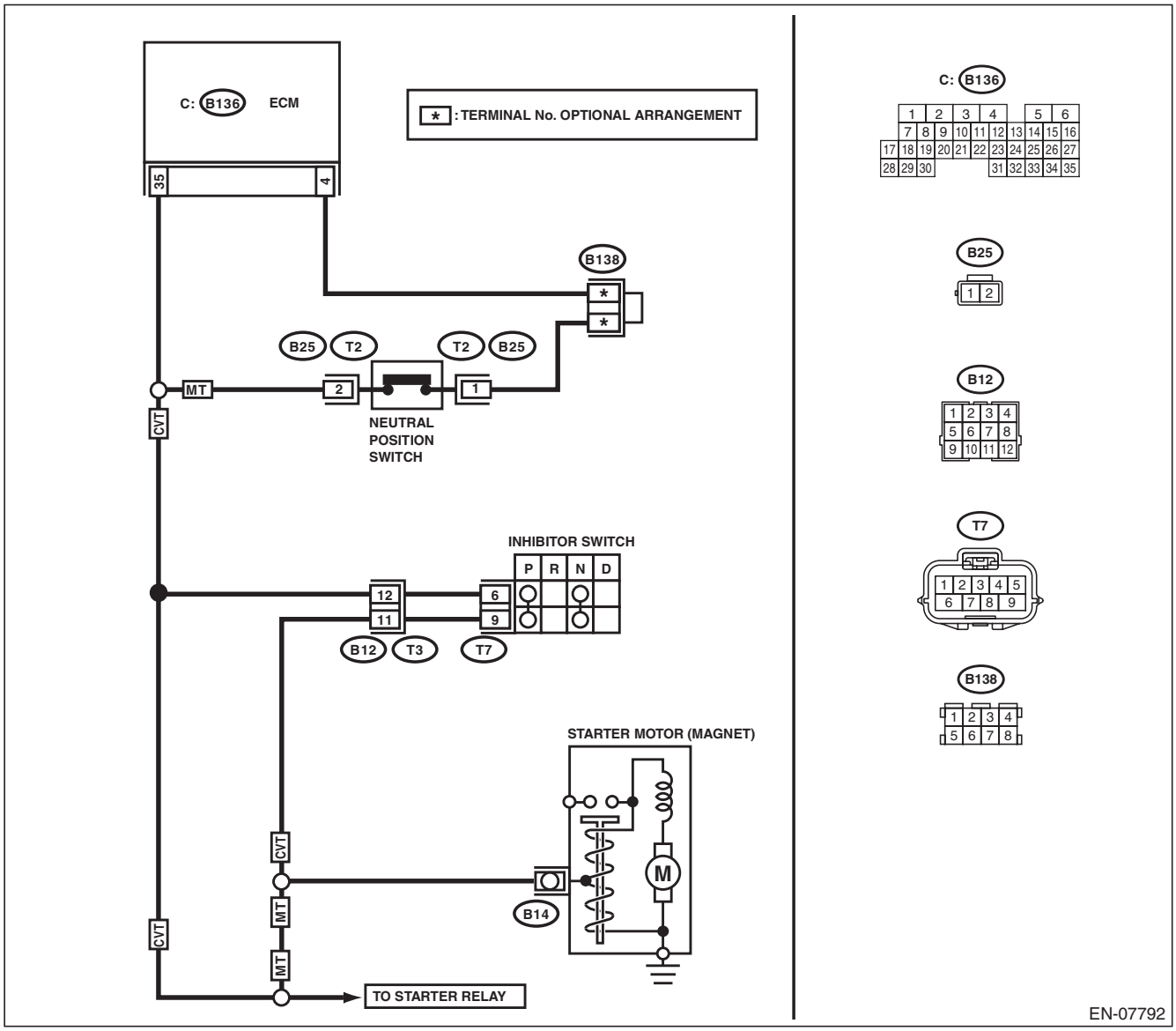

GET THE MANUALS.org

Step		Check	Yes	No
1	**CHECK INPUT SIGNAL OF ECM.** 1) Turn the ignition switch to ON. 2) Place the shift lever in a position other than neutral. 3) Measure the voltage between ECM and chassis ground. ***Connector & terminal*** ***(B136) No. 35 (+) — Chassis ground (–):***	Is the voltage 10 V or more?	Repair the poor contact of ECM connector.	Go to step **2**.
2	**CHECK HARNESS BETWEEN ECM AND NEUTRAL POSITION SWITCH CONNECTOR.** 1) Turn the ignition switch to OFF. 2) Disconnect the connectors from ECM and neutral position switch. 3) Measure the resistance between ECM and chassis ground. ***Connector & terminal*** ***(B136) No. 35 — Chassis ground:***	Is the resistance 1 MΩ or more?	Replace the neutral position switch. <Ref. to 6MT-37, Switches and Harness.>	Repair the short circuit to ground harness between ECM and neutral position switch connector.

GETtheMANUALS.org

CW:DTC P0852 PARK/NEUTRAL SWITCH INPUT CIRCUIT HIGH (AT MODEL)

DTC DETECTING CONDITION:

- Detected when two consecutive driving cycles with fault occur.
- GENERAL DESCRIPTION <Ref. to GD(H4SO)-200, DTC P0852 PARK/NEUTRAL SWITCH INPUT CIRCUIT HIGH (AT MODEL), Diagnostic Trouble Code (DTC) Detecting Criteria.>

TROUBLE SYMPTOM:

Improper idling

CAUTION:

After servicing or replacing faulty parts, perform Clear Memory Mode <Ref. to EN(H4SO)(diag)-51, OPERATION, Clear Memory Mode.>, and Inspection Mode <Ref. to EN(H4SO)(diag)-40, PROCEDURE, Inspection Mode.>.

WIRING DIAGRAM:

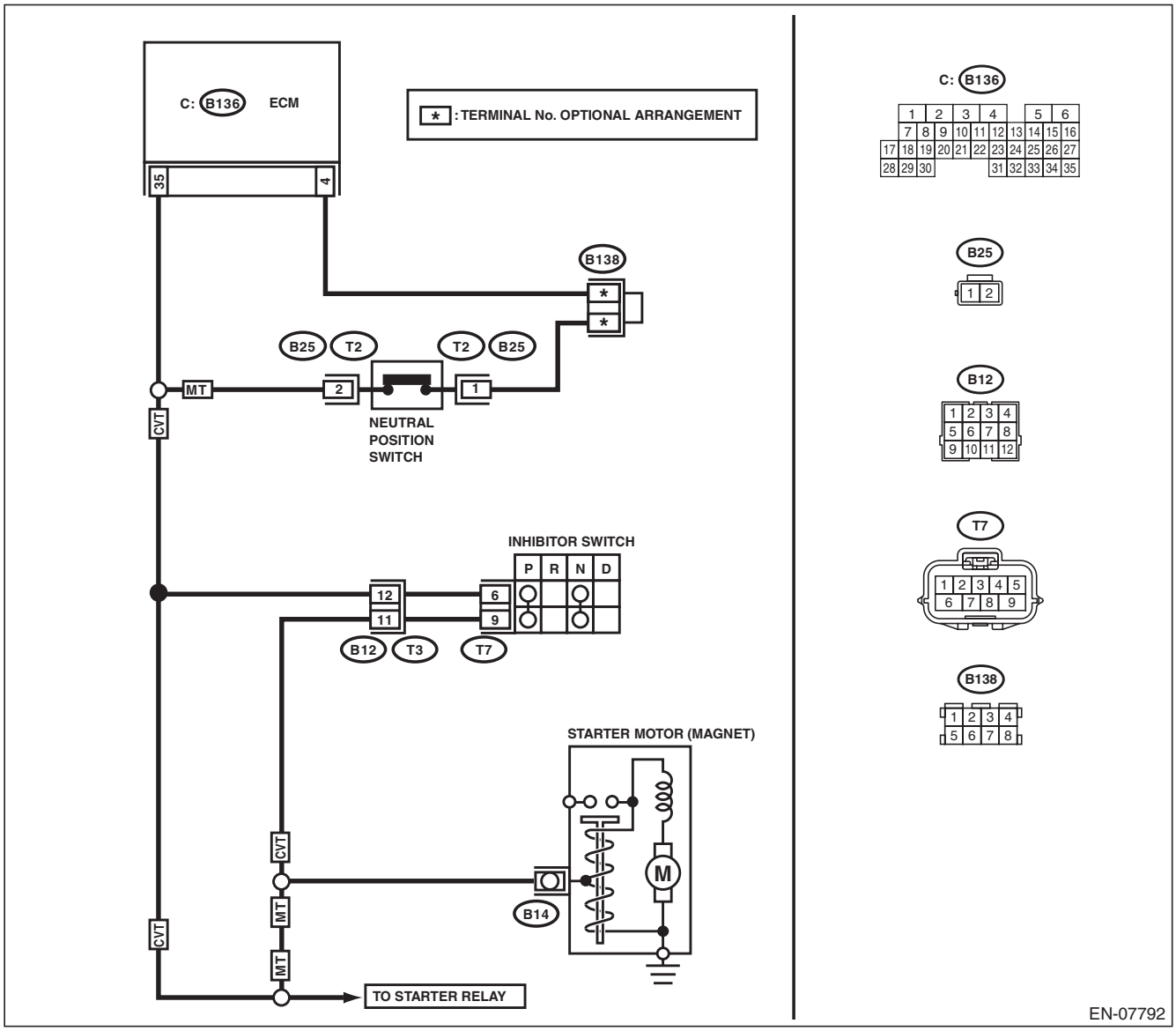

Step	Check	Yes	No
1 CHECK SELECT CABLE.	Is there any fault in select cable?	Repair or adjust the select cable. <Ref. to CS-42, Select Cable.>	Go to step **2**.

GETTHEMANUALS.org

Step		Check	Yes	No
2	**CHECK INPUT SIGNAL OF ECM.** 1) Turn the ignition switch to ON. 2) Measure the voltage between ECM and chassis ground with select lever at “P” range and “N” range. ***Connector & terminal*** ***(B136) No. 35 (+) — Chassis ground (–):***	Is the voltage less than 1 V?	Repair the poor contact of ECM connector.	Go to step **3**.
3	**CHECK HARNESS BETWEEN ECM AND INHIBITOR SWITCH CONNECTOR.** 1) Turn the ignition switch to OFF. 2) Disconnect the connectors from ECM and inhibitor switch. 3) Measure the resistance of harness between ECM and inhibitor switch connector. ***Connector & terminal*** ***(B136) No. 35 — (T7) No. 6:***	Is the resistance less than 1 Ω?	Go to step **4**.	Repair the harness and connector. NOTE: In this case, repair the following item: • Open circuit in harness between ECM and inhibitor switch connector • Poor contact of coupling connector
4	**CHECK INHIBITOR SWITCH GROUND LINE.** Measure the resistance of harness between inhibitor switch connector and engine ground. ***Connector & terminal*** ***(T7) No. 9 — Engine ground:***	Is the resistance less than 5 Ω?	Replace the inhibitor switch. <Ref. to CVT-95, Inhibitor Switch.>	Repair the harness and connector. NOTE: In this case, repair the following item: • Open circuit of harness between inhibitor switch connector and starter motor ground line • Poor contact of coupling connector • Poor contact of starter motor connector • Poor contact of starter motor ground • Starter motor

GETthemANUALS.org

CX:DTC P0852 NEUTRAL SWITCH INPUT CIRCUIT HIGH (MT MODEL)

DTC DETECTING CONDITION:

- Detected when two consecutive driving cycles with fault occur.
- GENERAL DESCRIPTION <Ref. to GD(H4SO)-201, DTC P0852 NEUTRAL SWITCH INPUT CIRCUIT HIGH (MT MODEL), Diagnostic Trouble Code (DTC) Detecting Criteria.>

TROUBLE SYMPTOM:

Improper idling

CAUTION:

After servicing or replacing faulty parts, perform Clear Memory Mode <Ref. to EN(H4SO)(diag)-51, OPERATION, Clear Memory Mode.>, and Inspection Mode <Ref. to EN(H4SO)(diag)-40, PROCEDURE, Inspection Mode.>.

WIRING DIAGRAM:

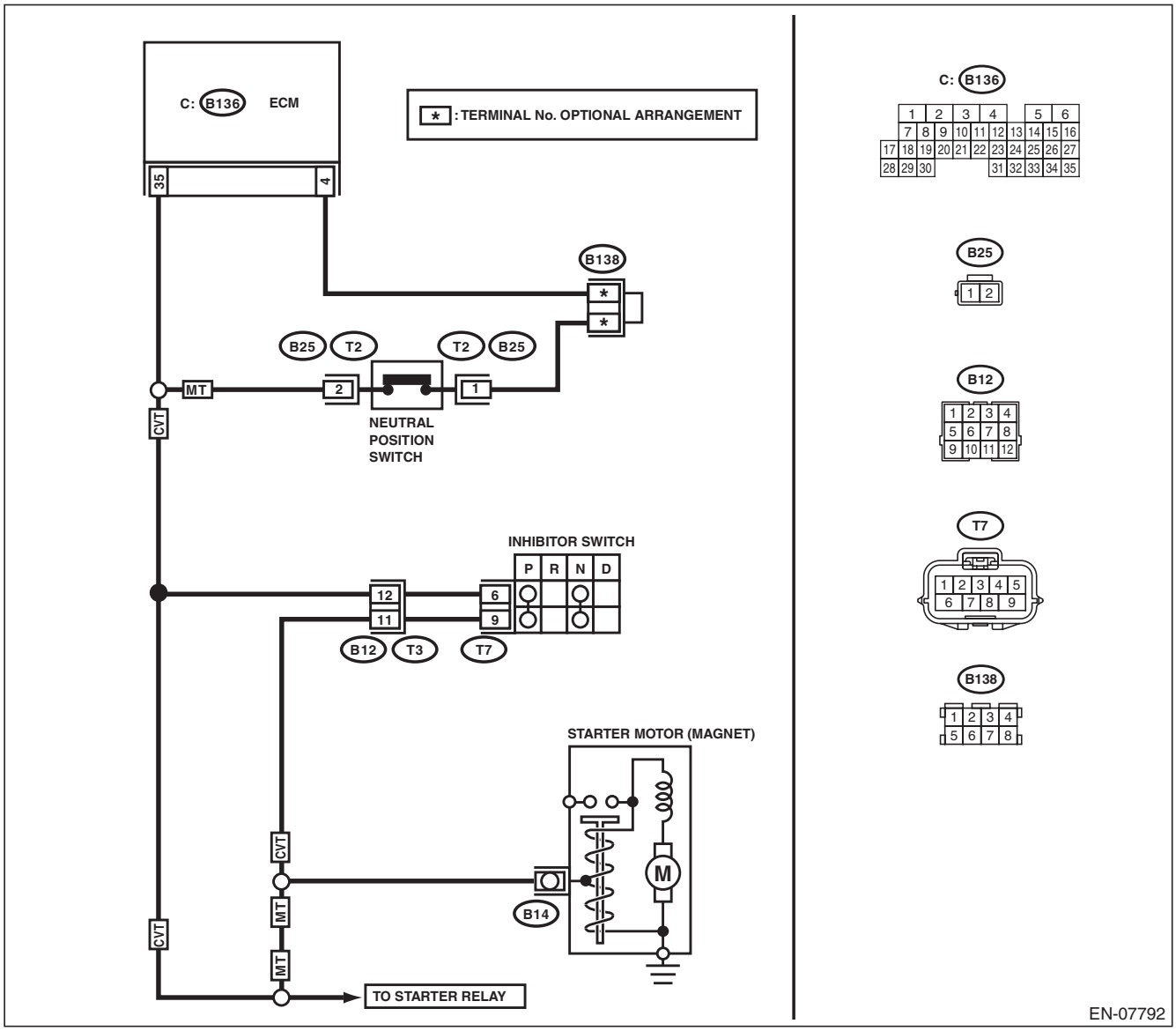

GETTHEMANUALS.org

	Step	Check	Yes	No
1	**CHECK INPUT SIGNAL OF ECM.** 1) Turn the ignition switch to ON. 2) Place the shift lever in neutral. 3) Measure the voltage between ECM and chassis ground. ***Connector & terminal*** ***(B136) No. 35 (+) — Chassis ground (–):***	Is the voltage less than 1 V?	Repair the poor contact of ECM connector.	Go to step **2**.
2	**CHECK HARNESS BETWEEN ECM AND NEUTRAL POSITION SWITCH CONNECTOR.** 1) Turn the ignition switch to OFF. 2) Disconnect the connectors from ECM and neutral position switch. 3) Measure the resistance of harness between ECM and neutral position switch connector. ***Connector & terminal*** ***(B136) No. 35 — (B25) No. 2:*** ***(B136) No. 4 — (B25) No. 1:***	Is the resistance less than 1 Ω?	Go to step **3**.	Repair the harness and connector. NOTE: In this case, repair the following item: • Open circuit in harness between ECM and neutral position switch connector • Poor contact of joint connector
3	**CHECK NEUTRAL POSITION SWITCH.** 1) Place the shift lever in neutral. 2) Measure the resistance between neutral position switch terminals. ***Terminals*** ***No. 1 — No. 2:***	Is the resistance less than 1 Ω?	Repair the poor contact of neutral position switch connector.	Replace the neutral position switch. <Ref. to 6MT-37, Switches and Harness.>

GETtheMANUALS.org

CY:DTC P1152 O2 SENSOR CIRCUIT RANGE/PERFORMANCE (LOW) (BANK1 SENSOR1)

DTC DETECTING CONDITION:

- Detected when two consecutive driving cycles with fault occur.
- GENERAL DESCRIPTION <Ref. to GD(H4SO)-202, DTC P1152 O2 SENSOR CIRCUIT RANGE/PERFORMANCE (LOW) (BANK1 SENSOR1), Diagnostic Trouble Code (DTC) Detecting Criteria.>

CAUTION:

After servicing or replacing faulty parts, perform Clear Memory Mode <Ref. to EN(H4SO)(diag)-51, OPERATION, Clear Memory Mode.>, and Inspection Mode <Ref. to EN(H4SO)(diag)-40, PROCEDURE, Inspection Mode.>.

WIRING DIAGRAM:

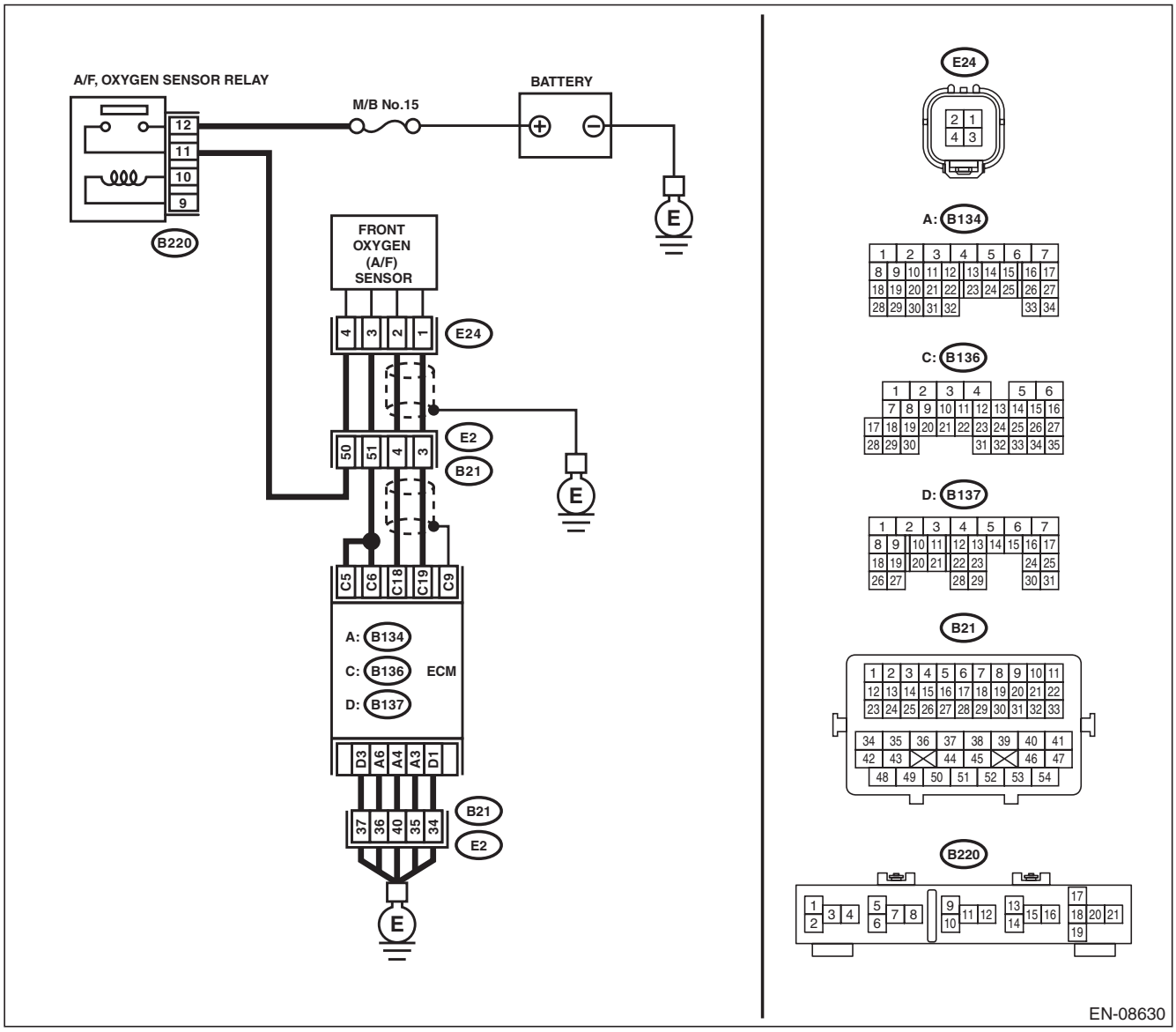

Step		Check	Yes	No
1	**CHECK FRONT OXYGEN (A/F) SENSOR CONNECTOR AND COUPLING CONNECTOR.**	Has water entered the connector?	Completely remove any water inside.	Go to step **2**.

GETtheMANUALS.org

Step		Check	Yes	No
2	**CHECK HARNESS BETWEEN ECM AND FRONT OXYGEN (A/F) SENSOR CONNECTOR.** 1) Turn the ignition switch to OFF. 2) Disconnect the connectors from ECM and front oxygen (A/F) sensor. 3) Measure the resistance of harness between ECM and front oxygen (A/F) sensor connector. ***Connector & terminal*** ***(B136) No. 18 — (E24) No. 2:*** ***(B136) No. 19 — (E24) No. 1:***	Is the resistance less than 1 Ω?	Go to step **3**.	Repair the harness and connector. NOTE: In this case, repair the following item: • Open circuit in harness between ECM and front oxygen (A/F) sensor connector • Poor contact of coupling connector
3	**CHECK FOR POOR CONTACT.** Check for poor contact of the front oxygen (A/F) sensor connector.	Is there poor contact of front oxygen (A/F) sensor connector?	Repair the poor contact of front oxygen (A/F) sensor connector.	Replace the front oxygen (A/F) sensor. <Ref. to FU(H4SO)-42, Front Oxygen (A/F) Sensor.>

GETtheMANUALS.org

CZ:DTC P1153 O2 SENSOR CIRCUIT RANGE/PERFORMANCE (HIGH) (BANK1 SENSOR1)

DTC DETECTING CONDITION:

- Detected when two consecutive driving cycles with fault occur.
- GENERAL DESCRIPTION <Ref. to GD(H4SO)-204, DTC P1153 O2 SENSOR CIRCUIT RANGE/PERFORMANCE (HIGH) (BANK1 SENSOR1), Diagnostic Trouble Code (DTC) Detecting Criteria.>

CAUTION:

After servicing or replacing faulty parts, perform Clear Memory Mode <Ref. to EN(H4SO)(diag)-51, OPERATION, Clear Memory Mode.>, and Inspection Mode <Ref. to EN(H4SO)(diag)-40, PROCEDURE, Inspection Mode.>.

WIRING DIAGRAM:

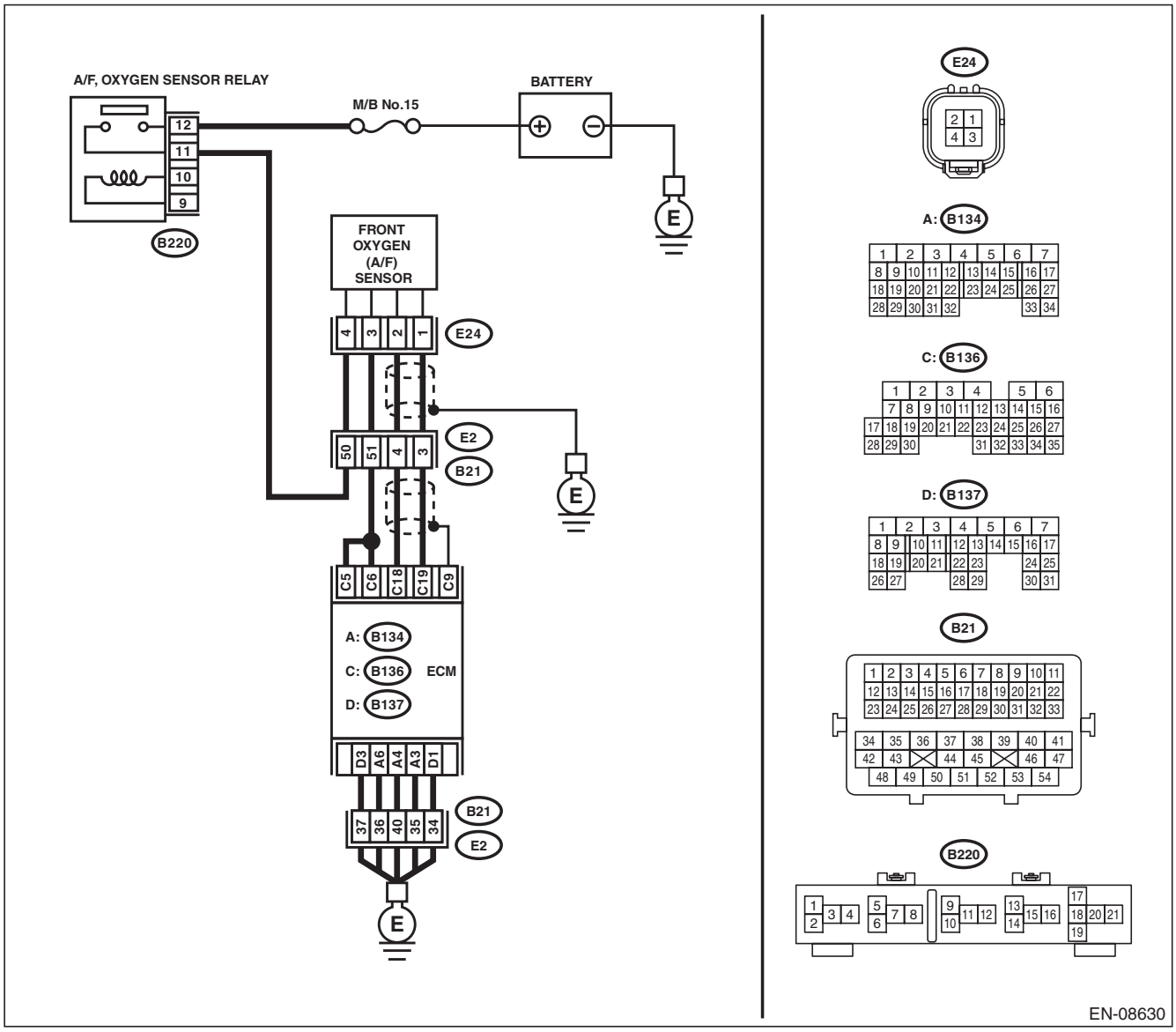

Step		Check	Yes	No
1	**CHECK FRONT OXYGEN (A/F) SENSOR CONNECTOR AND COUPLING CONNECTOR.**	Has water entered the connector?	Completely remove any water inside.	Go to step **2**.

GETTHEMANUALS.org

Step		Check	Yes	No
2	**CHECK HARNESS BETWEEN ECM AND FRONT OXYGEN (A/F) SENSOR CONNECTOR.** 1) Turn the ignition switch to OFF. 2) Disconnect the connector from ECM. 3) Measure the resistance between ECM and chassis ground. ***Connector & terminal*** ***(B136) No. 18 — Chassis ground:*** ***(B136) No. 19 — Chassis ground:***	Is the resistance 1 MΩ or more?	Go to step **3**.	Repair the ground short circuit of harness between ECM and front oxygen (A/F) sensor connector.
3	**CHECK OUTPUT SIGNAL FOR ECM.** 1) Connect the connector to ECM. 2) Turn the ignition switch to ON. 3) Measure the voltage between ECM and chassis ground. ***Connector & terminal*** ***(B136) No. 19 (+) — Chassis ground (–):***	Is the voltage 4.5 V or more?	Go to step **5**.	Go to step **4**.
4	**CHECK OUTPUT SIGNAL FOR ECM.** Measure the voltage between ECM and chassis ground. ***Connector & terminal*** ***(B136) No. 18 (+) — Chassis ground (–):***	Is the voltage 4.95 V or more?	Go to step **5**.	Replace the front oxygen (A/F) sensor. <Ref. to FU(H4SO)-42, Front Oxygen (A/F) Sensor.>
5	**CHECK OUTPUT SIGNAL FOR ECM.** Measure the voltage between ECM and chassis ground. ***Connector & terminal*** ***(B136) No. 18 (+) — Chassis ground (–):*** ***(B136) No. 19 (+) — Chassis ground (–):***	Is the voltage 8 V or more?	Repair the short circuit to power in the harness between ECM and front oxygen (A/F) sensor connector. After repair, replace the ECM. <Ref. to FU(H4SO)-46, Engine Control Module (ECM).>	Repair the poor contact of ECM connector.

DA:DTC P1160 RETURN SPRING FAILURE

NOTE:
For the diagnostic procedure, refer to DTC P2101. <Ref. to EN(H4SO)(diag)-267, DTC P2101 THROTTLE ACTUATOR CONTROL MOTOR CIRCUIT RANGE/PERFORMANCE, Diagnostic Procedure with Diagnostic Trouble Code (DTC).>

GETtheMANUALS.org

DB:DTC P1443 VENT CONTROL SOLENOID VALVE FUNCTION PROBLEM

DTC DETECTING CONDITION:

- Immediately at fault recognition
- GENERAL DESCRIPTION <Ref. to GD(H4SO)-207, DTC P1443 VENT CONTROL SOLENOID VALVE FUNCTION PROBLEM, Diagnostic Trouble Code (DTC) Detecting Criteria.>

TROUBLE SYMPTOM:

Improper fuel supply

CAUTION:

After servicing or replacing faulty parts, perform Clear Memory Mode <Ref. to EN(H4SO)(diag)-51, OPERATION, Clear Memory Mode.>, and Inspection Mode <Ref. to EN(H4SO)(diag)-40, PROCEDURE, Inspection Mode.>.

Step		Check	Yes	No
1	**CHECK FOR ANY OTHER DTC ON DISPLAY.**	Is any other DTC displayed?	Check the appropriate DTC using the “List of Diagnostic Trouble Code (DTC)”. <Ref. to EN(H4SO)(diag)-78, List of Diagnostic Trouble Code (DTC).>	Go to step **2**.
2	**CHECK DRAIN HOSE.** Check the drain hose for clogging.	Is there clogging in the drain hose?	Replace the drain hose.	Go to step **3**.
3	**CHECK DRAIN VALVE OPERATION.** 1) Turn the ignition switch to OFF. 2) Install the delivery (test) mode fuse. **CAUTION:** **Do not use any fuses that are installed on the vehicle.** 3) Turn the ignition switch to ON. 4) Operate the drain valve. NOTE: Drain valve can be operated using the Subaru Select Monitor. For detailed procedures, refer to “SYSTEM OPERATION CHECK MODE”. <Ref. to EN(H4SO)(diag)-52, System Operation Check Mode.>	Does the drain valve operate?	Repair the poor contact of ECM connector.	Replace the drain valve. <Ref. to EC(H4SO)-19, Drain Valve.>

GETthemANUALS.org

DC:DTC P1492 EGR SOLENOID VALVE SIGNAL #1 CIRCUIT MALFUNCTION (LOW INPUT)

NOTE:
For the diagnostic procedure, refer to DTC P1498. <Ref. to EN(H4SO)(diag)-245, DTC P1498 EGR SOLENOID VALVE SIGNAL #4 CIRCUIT MALFUNCTION (LOW INPUT), Diagnostic Procedure with Diagnostic Trouble Code (DTC).>

DD:DTC P1493 EGR SOLENOID VALVE SIGNAL #1 CIRCUIT MALFUNCTION (HIGH INPUT)

NOTE:
For the diagnostic procedure, refer to DTC P1499. <Ref. to EN(H4SO)(diag)-248, DTC P1499 EGR SOLENOID VALVE SIGNAL #4 CIRCUIT MALFUNCTION (HIGH INPUT), Diagnostic Procedure with Diagnostic Trouble Code (DTC).>

DE:DTC P1494 EGR SOLENOID VALVE SIGNAL #2 CIRCUIT MALFUNCTION (LOW INPUT)

NOTE:
For the diagnostic procedure, refer to DTC P1498. <Ref. to EN(H4SO)(diag)-245, DTC P1498 EGR SOLENOID VALVE SIGNAL #4 CIRCUIT MALFUNCTION (LOW INPUT), Diagnostic Procedure with Diagnostic Trouble Code (DTC).>

DF:DTC P1495 EGR SOLENOID VALVE SIGNAL #2 CIRCUIT MALFUNCTION (HIGH INPUT)

NOTE:
For the diagnostic procedure, refer to DTC P1499. <Ref. to EN(H4SO)(diag)-248, DTC P1499 EGR SOLENOID VALVE SIGNAL #4 CIRCUIT MALFUNCTION (HIGH INPUT), Diagnostic Procedure with Diagnostic Trouble Code (DTC).>

DG:DTC P1496 EGR SOLENOID VALVE SIGNAL #3 CIRCUIT MALFUNCTION (LOW INPUT)

NOTE:
For the diagnostic procedure, refer to DTC P1498. <Ref. to EN(H4SO)(diag)-245, DTC P1498 EGR SOLENOID VALVE SIGNAL #4 CIRCUIT MALFUNCTION (LOW INPUT), Diagnostic Procedure with Diagnostic Trouble Code (DTC).>

DH:DTC P1497 EGR SOLENOID VALVE SIGNAL #3 CIRCUIT MALFUNCTION (HIGH INPUT)

NOTE:
For the diagnostic procedure, refer to DTC P1499. <Ref. to EN(H4SO)(diag)-248, DTC P1499 EGR SOLENOID VALVE SIGNAL #4 CIRCUIT MALFUNCTION (HIGH INPUT), Diagnostic Procedure with Diagnostic Trouble Code (DTC).>

GETtheMANUALS.org

DI: DTC P1498 EGR SOLENOID VALVE SIGNAL #4 CIRCUIT MALFUNCTION (LOW INPUT)

DTC DETECTING CONDITION:

- Immediately at fault recognition
- GENERAL DESCRIPTION <Ref. to GD(H4SO)-209, DTC P1492 EGR SOLENOID VALVE SIGNAL #1 CIRCUIT MALFUNCTION (LOW INPUT), Diagnostic Trouble Code (DTC) Detecting Criteria.> <Ref. to GD(H4SO)-213, DTC P1494 EGR SOLENOID VALVE SIGNAL #2 CIRCUIT MALFUNCTION (LOW INPUT), Diagnostic Trouble Code (DTC) Detecting Criteria.> <Ref. to GD(H4SO)-213, DTC P1496 EGR SOLENOID VALVE SIGNAL #3 CIRCUIT MALFUNCTION (LOW INPUT), Diagnostic Trouble Code (DTC) Detecting Criteria.> <Ref. to GD(H4SO)-213, DTC P1498 EGR SOLENOID VALVE SIGNAL #4 CIRCUIT MALFUNCTION (LOW INPUT), Diagnostic Trouble Code (DTC) Detecting Criteria.>

TROUBLE SYMPTOM:

- Improper idling
- Poor driving performance
- Engine breathing

CAUTION:

After servicing or replacing faulty parts, perform Clear Memory Mode <Ref. to EN(H4SO)(diag)-51, OPERATION, Clear Memory Mode.>, and Inspection Mode <Ref. to EN(H4SO)(diag)-40, PROCEDURE, Inspection Mode.>.

GETtheMANUALS.org

WIRING DIAGRAM:

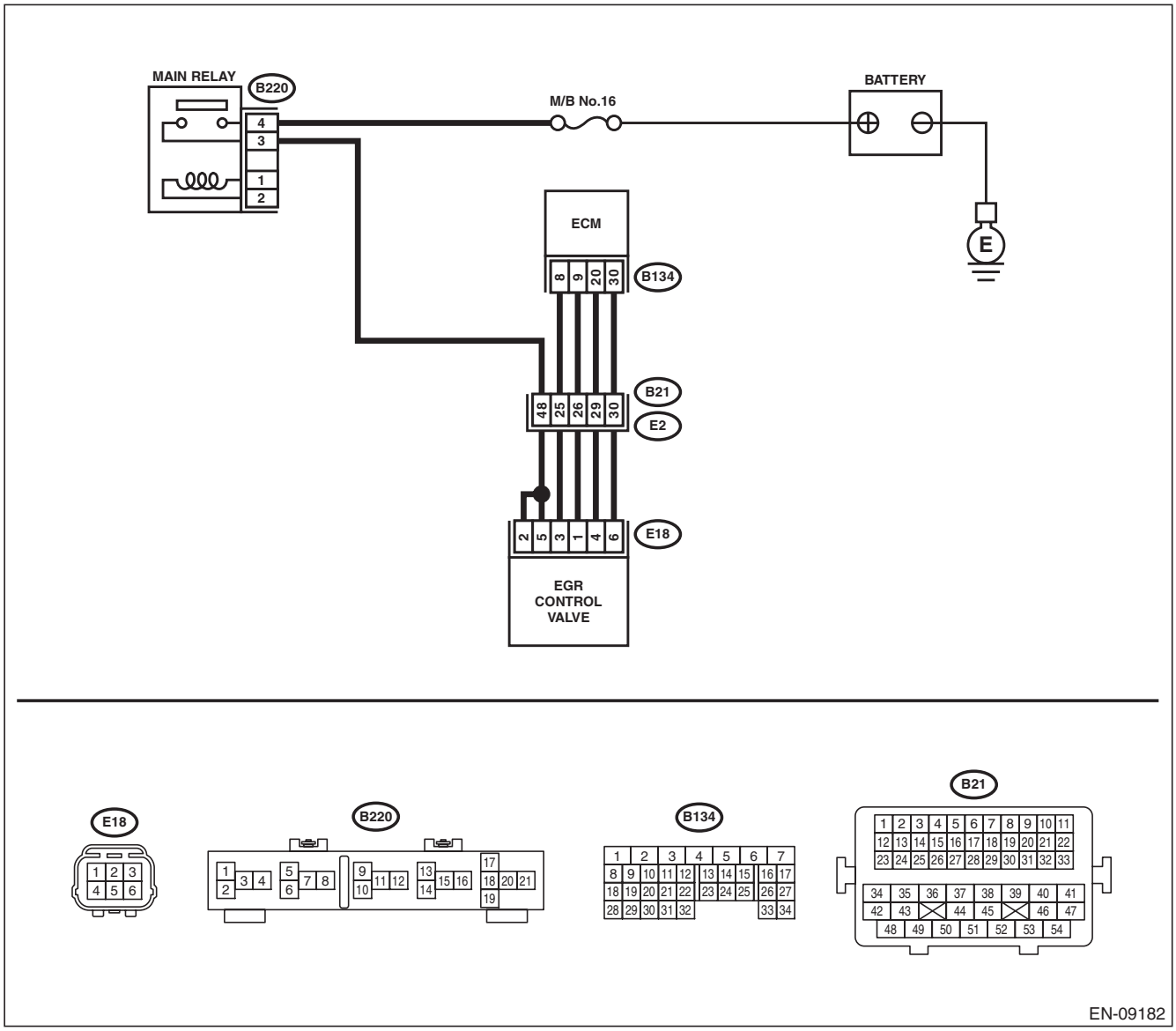

Step	Check	Yes	No
1 **CHECK POWER SUPPLY TO EGR CONTROL VALVE.** 1) Turn the ignition switch to OFF. 2) Disconnect the connector from the EGR control valve. 3) Turn the ignition switch to ON. 4) Measure the voltage between EGR control valve connector and engine ground. ***Connector & terminal*** ***(E18) No. 2 (+) — Engine ground (–):*** ***(E18) No. 5 (+) — Engine ground (–):***	Is the voltage 10 V or more?	Go to step **2**.	Repair the harness and connector. NOTE: In this case, repair the following item: • Open circuit in harness between EGR control valve and main relay connector • Poor contact of coupling connector

GETTHEMANUALS.org

Step		Check	Yes	No
2	**CHECK HARNESS BETWEEN ECM AND EGR CONTROL VALVE CONNECTOR.** 1) Turn the ignition switch to OFF. 2) Disconnect the connector from ECM. 3) Measure the resistance between ECM and EGR control valve connector. ***Connector & terminal*** ***DTC P1492; (B134) No. 8 — (E18) No. 3:*** ***DTC P1494; (B134) No. 9 — (E18) No. 1:*** ***DTC P1496; (B134) No. 20 — (E18) No. 4:*** ***DTC P1498; (B134) No. 30 — (E18) No. 6:***	Is the resistance less than 1 Ω?	Go to step **3**.	Repair the harness and connector. NOTE: In this case, repair the following item: • Open circuit of harness between ECM and EGR control valve connector • Poor contact of coupling connector
3	**CHECK HARNESS BETWEEN ECM AND EGR CONTROL VALVE CONNECTOR.** 1) Disconnect the connector from ECM. 2) Measure the resistance between ECM and chassis ground. ***Connector & terminal*** ***DTC P1492; (B134) No. 8 — Chassis ground:*** ***DTC P1494; (B134) No. 9 — Chassis ground:*** ***DTC P1496; (B134) No. 20 — Chassis ground:*** ***DTC P1498; (B134) No. 30 — Chassis ground:***	Is the resistance 1 MΩ or more?	Go to step **4**.	Repair the ground short in harness between ECM and EGR control valve connector.
4	**CHECK FOR POOR CONTACT.** Check poor contact between ECM and EGR control valve connector.	Is there poor contact in ECM or EGR control valve connector?	Repair the poor contact of ECM or EGR control valve connector.	Replace EGR control valve. <Ref. to FU(H4SO)-36, EGR Valve.>

GETthemANUALS.org

DJ:DTC P1499 EGR SOLENOID VALVE SIGNAL #4 CIRCUIT MALFUNCTION (HIGH INPUT)

DTC DETECTING CONDITION:

- Immediately at fault recognition
- GENERAL DESCRIPTION <Ref. to GD(H4SO)-211, DTC P1493 EGR SOLENOID VALVE SIGNAL #1 CIRCUIT MALFUNCTION (HIGH INPUT), Diagnostic Trouble Code (DTC) Detecting Criteria.> <Ref. to GD(H4SO)-213, DTC P1495 EGR SOLENOID VALVE SIGNAL #2 CIRCUIT MALFUNCTION (HIGH INPUT), Diagnostic Trouble Code (DTC) Detecting Criteria.> <Ref. to GD(H4SO)-213, DTC P1497 EGR SOLENOID VALVE SIGNAL #3 CIRCUIT MALFUNCTION (HIGH INPUT), Diagnostic Trouble Code (DTC) Detecting Criteria.> <Ref. to GD(H4SO)-213, DTC P1499 EGR SOLENOID VALVE SIGNAL #4 CIRCUIT MALFUNCTION (HIGH INPUT), Diagnostic Trouble Code (DTC) Detecting Criteria.>

TROUBLE SYMPTOM:

- Improper idling
- Poor driving performance
- Engine breathing

CAUTION:

After servicing or replacing faulty parts, perform Clear Memory Mode <Ref. to EN(H4SO)(diag)-51, OPERATION, Clear Memory Mode.>, and Inspection Mode <Ref. to EN(H4SO)(diag)-40, PROCEDURE, Inspection Mode.>.

GETthemANSWERS.org

WIRING DIAGRAM:

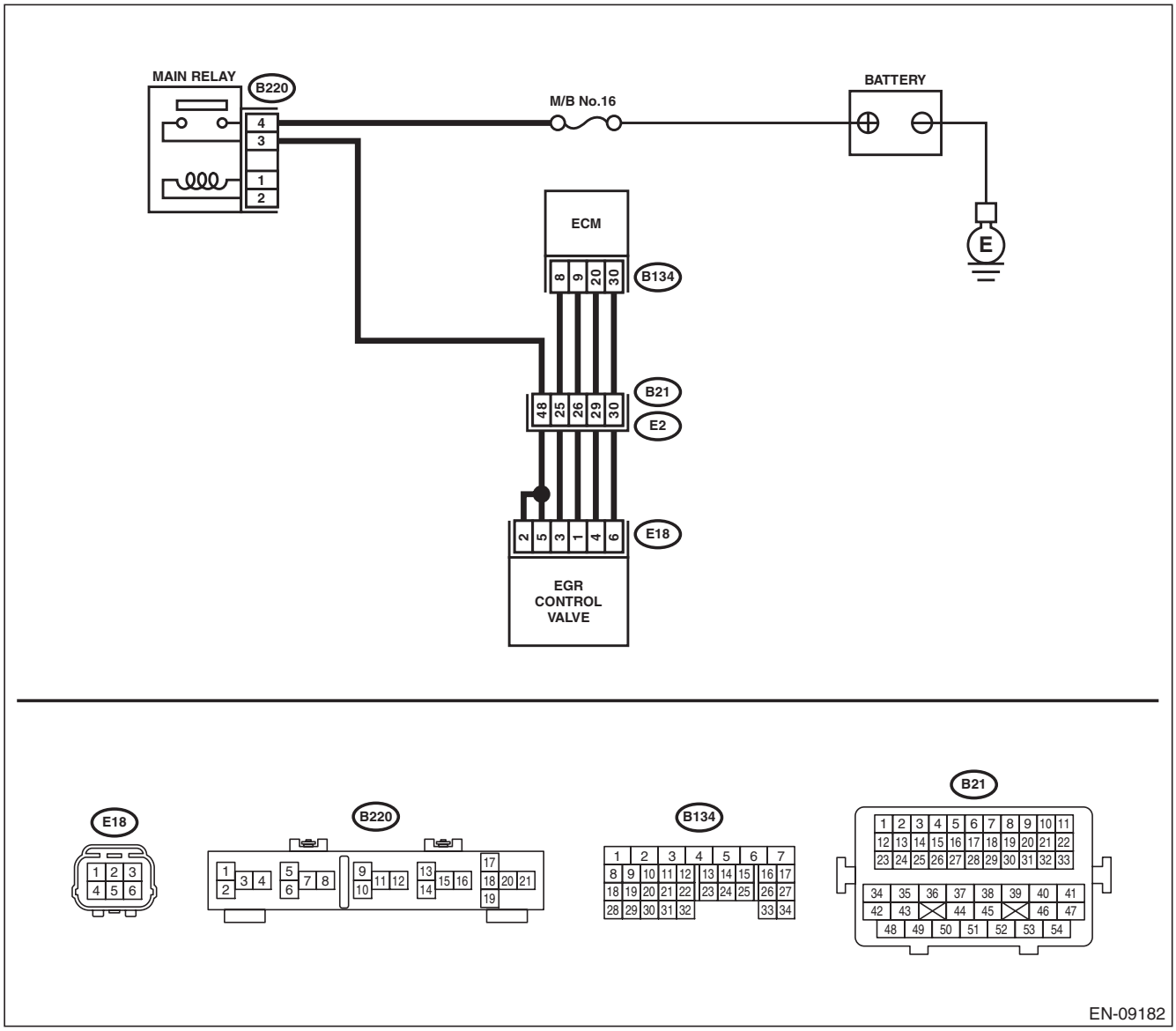

Step		Check	Yes	No
1	**CHECK HARNESS BETWEEN ECM AND EGR CONTROL VALVE CONNECTOR.** 1) Turn the ignition switch to OFF. 2) Disconnect the connector from ECM and EGR control valve. 3) Turn the ignition switch to ON. 4) Measure the voltage between ECM and chassis ground. ***Connector & terminal*** ***DTC P1493; (B134) No. 8 (+) — Chassis ground (–):*** ***DTC P1495; (B134) No. 9 (+) — Chassis ground (–):*** ***DTC P1497; (B134) No. 20 (+) — Chassis ground (–):*** ***DTC P1499; (B134) No. 30 (+) — Chassis ground (–):***	Is the voltage 10 V or more?	Repair the short circuit to power in the harness between the ECM and EGR control valve connector.	Go to step **2**.

GETTHEMANUALS.org

Step		Check	Yes	No
2	**CHECK EGR CONTROL VALVE.** Measure the resistance between EGR control valve terminals. ***Terminals*** ***DTC P1493; No. 2 — No. 3:*** ***DTC P1495; No. 2 — No. 1:*** ***DTC P1497; No. 5 — No. 4:*** ***DTC P1499; No. 5 — No. 6:***	Is the resistance 20 Ω or more?	Repair the poor contact of ECM connector.	Replace EGR control valve. <Ref. to FU(H4SO)-36, EGR Valve.>

GETthemANUALS.org

DK:DTC P1518 STARTER SWITCH CIRCUIT LOW INPUT

DTC DETECTING CONDITION:

- Immediately at fault recognition
- GENERAL DESCRIPTION <Ref. to GD(H4SO)-214, DTC P1518 STARTER SWITCH CIRCUIT LOW INPUT, Diagnostic Trouble Code (DTC) Detecting Criteria.>

CAUTION:

After servicing or replacing faulty parts, perform Clear Memory Mode <Ref. to EN(H4SO)(diag)-51, OPERATION, Clear Memory Mode.>, and Inspection Mode <Ref. to EN(H4SO)(diag)-40, PROCEDURE, Inspection Mode.>.

WIRING DIAGRAM:

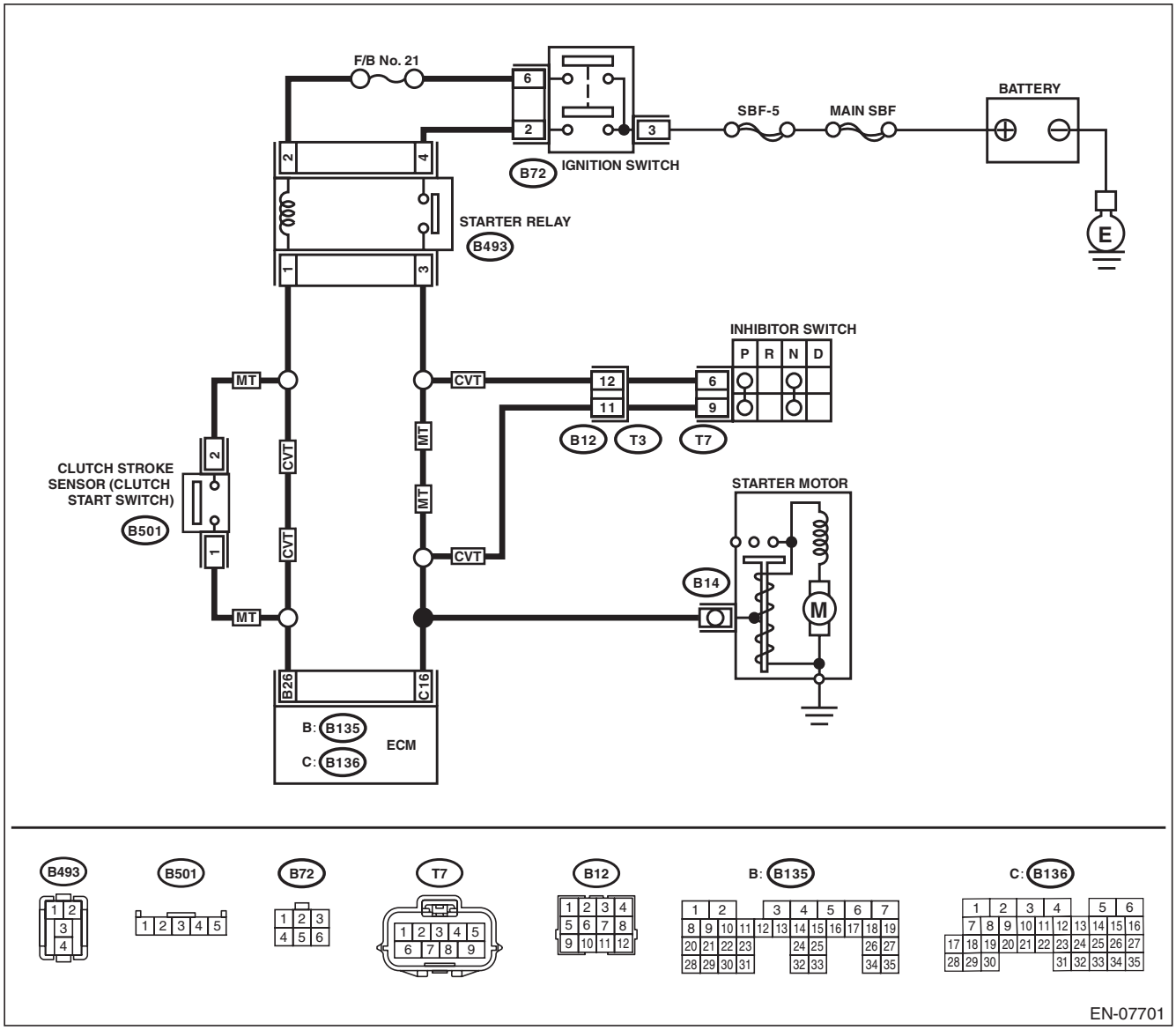

GETtheMANUALS.org

Step		Check	Yes	No
1	**CHECK FOR ANY OTHER DTC ON DISPLAY.**	Is any other DTC displayed?	Check DTC using "List of Diagnostic Trouble Code (DTC)". <Ref. to EN(H4SO)(diag)-78, List of Diagnostic Trouble Code (DTC).>	Go to step **2**.
2	**CHECK HARNESS BETWEEN ECM AND STARTER RELAY CONNECTOR.** 1) Turn the ignition switch to OFF. 2) Remove the starter relay. 3) Disconnect the connectors from ECM and starter motor. 4) Measure the resistance of harness between ECM and starter relay connector. ***Connector & terminal*** ***(B136) No. 16 — (B493) No. 3:*** NOTE: For CVT model, place the select lever in "P" range or "N" range.	Is the resistance less than 1 Ω?	Go to step **3**.	NOTE: Check the following item and repair or replace if necessary. • Open circuit of harness between ECM and starter relay connector • Poor contact of coupling connector
3	**CHECK HARNESS BETWEEN ECM AND STARTER RELAY CONNECTOR.** Measure the resistance between ECM and chassis ground. ***Connector & terminal*** ***(B136) No. 16 — Chassis ground:***	Is the resistance 1 MΩ or more?	Repair the poor contact of ECM connector.	Repair the short circuit to ground in harness between ECM and starter relay connector.

GETtheMANUALS.org

DL:DTC P1560 BACK-UP VOLTAGE CIRCUIT MALFUNCTION

DTC DETECTING CONDITION:

- Immediately at fault recognition
- GENERAL DESCRIPTION <Ref. to GD(H4SO)-215, DTC P1560 BACK-UP VOLTAGE CIRCUIT MALFUNCTION, Diagnostic Trouble Code (DTC) Detecting Criteria.>

CAUTION:

After servicing or replacing faulty parts, perform Clear Memory Mode <Ref. to EN(H4SO)(diag)-51, OPERATION, Clear Memory Mode.>, and Inspection Mode <Ref. to EN(H4SO)(diag)-40, PROCEDURE, Inspection Mode.>.

WIRING DIAGRAM:

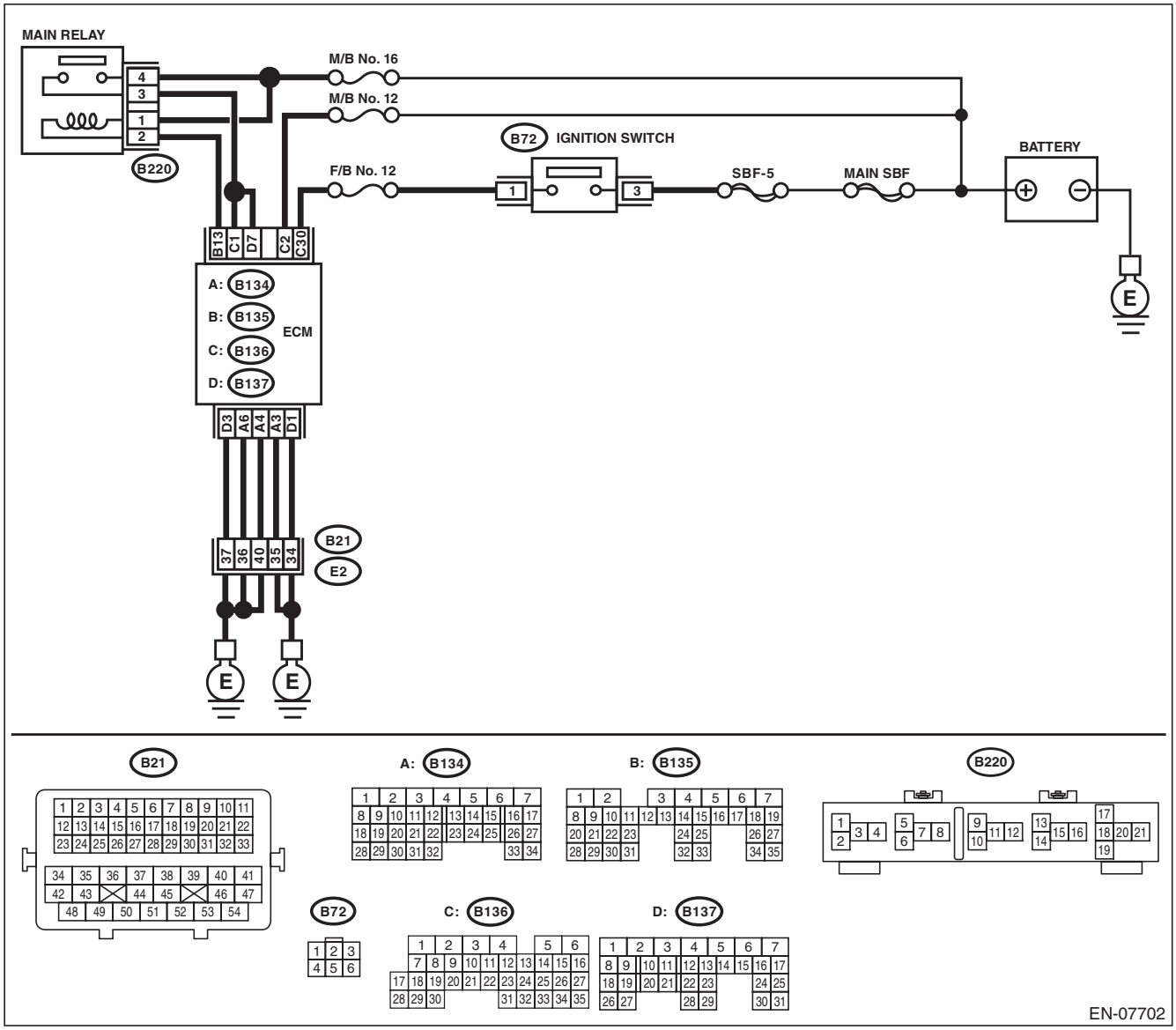

Step	Check	Yes	No
1 **CHECK INPUT SIGNAL OF ECM.** 1) Turn the ignition switch to OFF. 2) Measure the voltage between ECM and chassis ground. ***Connector & terminal*** ***(B136) No. 2 (+) — Chassis ground (–):***	Is the voltage 10 V or more?	Repair the poor contact of ECM connector.	Go to step **2**.

GETtheMANUALS.org

Step		Check	Yes	No
2	**CHECK HARNESS BETWEEN ECM AND MAIN FUSE BOX CONNECTOR.** 1) Disconnect the connectors from ECM. 2) Measure the resistance between ECM and chassis ground. ***Connector & terminal*** ***(B136) No. 2 — Chassis ground:***	Is the resistance 1 MΩ or more?	Go to step **3**.	Repair the ground short circuit of harness between ECM and battery terminal.
3	**CHECK M/B NO. 12 FUSE.**	Is the fuse blown out?	Replace the fuse.	Repair the harness and connector. NOTE: In this case, repair the following item: • Open circuit in harness between ECM and battery • Poor contact of ECM connector • Poor contact of battery terminal

GETthemANSWERS.org

DM:DTC P2096 POST CATALYST FUEL TRIM SYSTEM TOO LEAN (BANK 1)

DTC DETECTING CONDITION:

- Detected when two consecutive driving cycles with fault occur.
- GENERAL DESCRIPTION <Ref. to GD(H4SO)-217, DTC P2096 POST CATALYST FUEL TRIM SYSTEM TOO LEAN (BANK 1), Diagnostic Trouble Code (DTC) Detecting Criteria.>

CAUTION:

After servicing or replacing faulty parts, perform Clear Memory Mode <Ref. to EN(H4SO)(diag)-51, OPERATION, Clear Memory Mode.>, and Inspection Mode <Ref. to EN(H4SO)(diag)-40, PROCEDURE, Inspection Mode.>.

WIRING DIAGRAM:

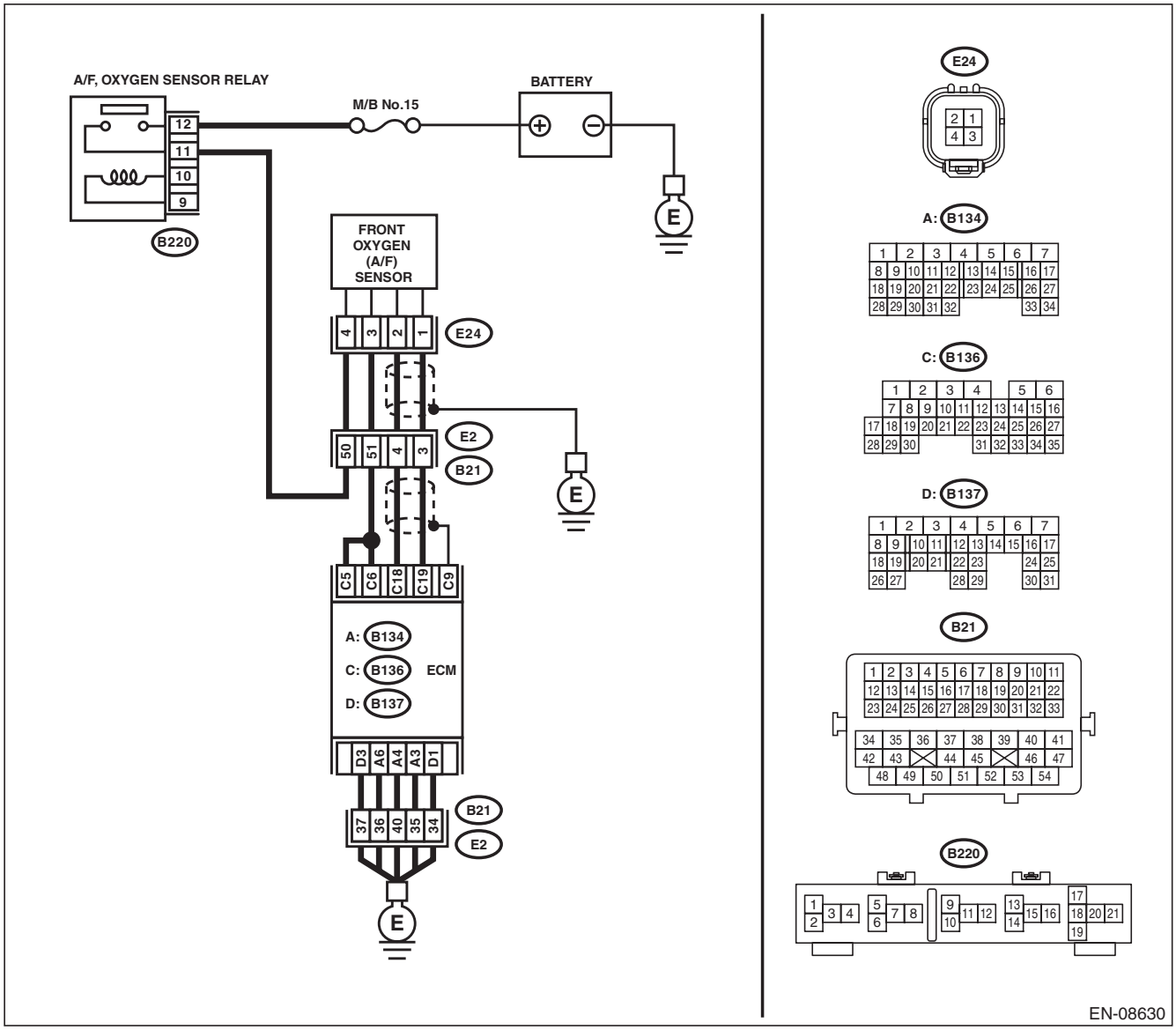

GETtheMANUALS.org

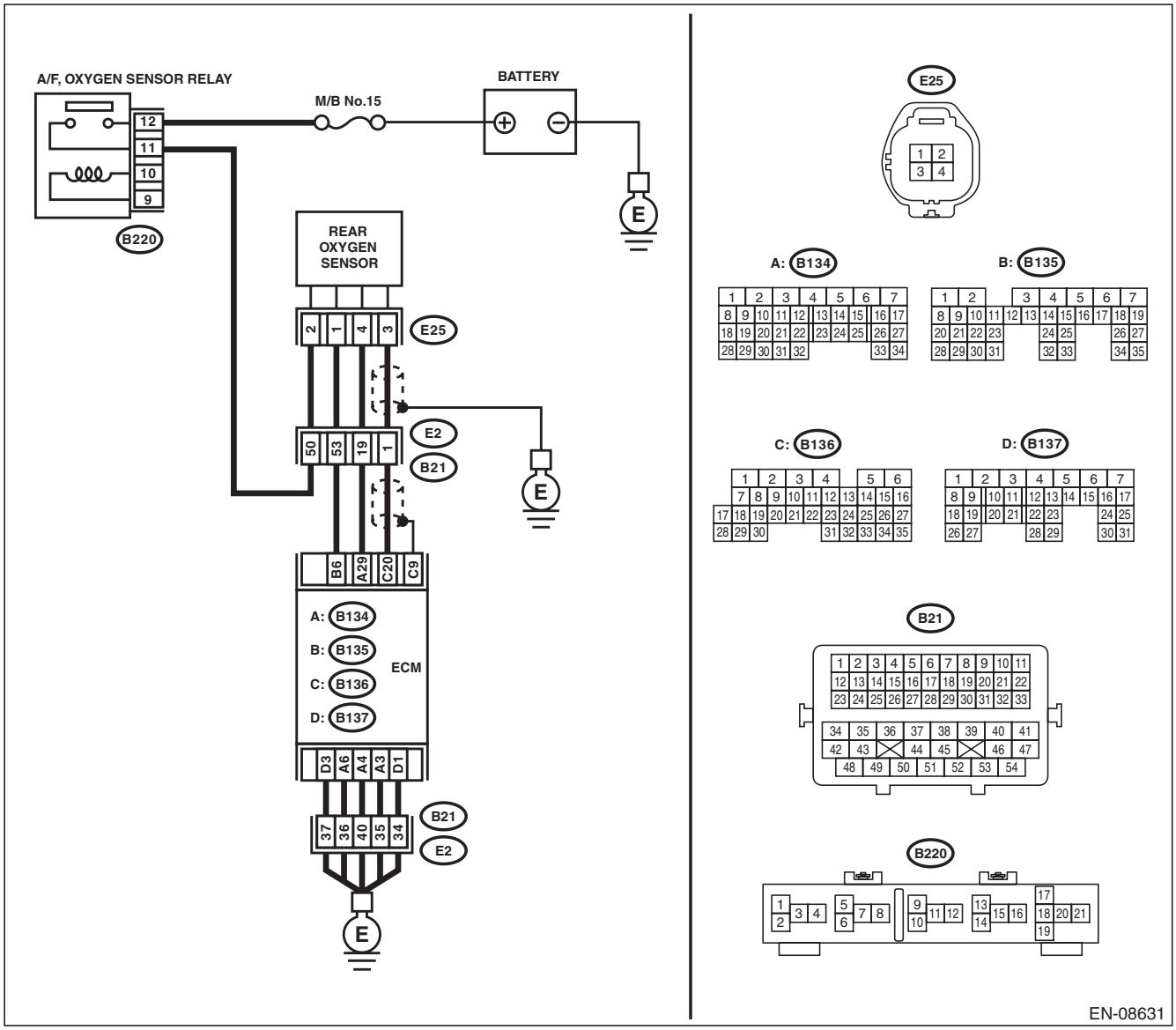

Step		Check	Yes	No
1	**CHECK FOR ANY OTHER DTC ON DISPLAY.**	Is any other DTC displayed?	Check DTC using "List of Diagnostic Trouble Code (DTC)". <Ref. to EN(H4SO)(diag)-78, List of Diagnostic Trouble Code (DTC).>	Go to step **2**.
2	**CHECK FRONT OXYGEN (A/F) SENSOR CONNECTOR AND COUPLING CONNECTOR.**	Has water entered the connector?	Completely remove any water inside.	Go to step **3**.

GETmeMANUALS.org

Step		Check	Yes	No
3	**CHECK HARNESS BETWEEN ECM AND FRONT OXYGEN (A/F) SENSOR CONNECTOR.** 1) Turn the ignition switch to OFF. 2) Disconnect the connectors from ECM and front oxygen (A/F) sensor. 3) Measure the resistance of harness between ECM and front oxygen (A/F) sensor connector. ***Connector & terminal*** ***(B136) No. 19 — (E24) No. 1:*** ***(B136) No. 18 — (E24) No. 2:***	Is the resistance less than 1 Ω?	Go to step **4**.	Repair the harness and connector. NOTE: In this case, repair the following item: • Open circuit in harness between ECM and front oxygen (A/F) sensor connector • Poor contact of coupling connector
4	**CHECK HARNESS BETWEEN ECM AND FRONT OXYGEN (A/F) SENSOR CONNECTOR.** Measure the resistance between ECM and chassis ground. ***Connector & terminal*** ***(B136) No. 19 — Chassis ground:*** ***(B136) No. 18 — Chassis ground:***	Is the resistance 1 MΩ or more?	Go to step **5**.	Repair the ground short circuit of harness between ECM and front oxygen (A/F) sensor connector.
5	**CHECK OUTPUT SIGNAL FOR ECM.** 1) Connect the connector to ECM. 2) Turn the ignition switch to ON. 3) Measure the voltage between front oxygen (A/F) sensor connector and chassis ground. ***Connector & terminal*** ***(E24) No. 1 (+) — Chassis ground (–):***	Is the voltage 4.5 V or more?	Go to step **7**.	Go to step **6**.
6	**CHECK OUTPUT SIGNAL FOR ECM.** Measure the voltage between front oxygen (A/F) sensor connector and chassis ground. ***Connector & terminal*** ***(E24) No. 2 (+) — Chassis ground (–):***	Is the voltage 4.95 V or more?	Go to step **7**.	Go to step **8**.
7	**CHECK OUTPUT SIGNAL FOR ECM.** Measure the voltage between front oxygen (A/F) sensor connector and chassis ground. ***Connector & terminal*** ***(E24) No. 1 (+) — Chassis ground (–):*** ***(E24) No. 2 (+) — Chassis ground (–):***	Is the voltage 8 V or more?	Repair the short circuit to power in the harness between ECM and front oxygen (A/F) sensor connector. After repair, replace the ECM. <Ref. to FU(H4SO)-46, Engine Control Module (ECM).>	Repair the poor contact of ECM connector.
8	**CHECK EXHAUST SYSTEM.**	Are there holes or loose bolts on exhaust system?	Repair the exhaust system.	Go to step **9**.
9	**CHECK AIR INTAKE SYSTEM.**	Are there holes, loose bolts or disconnection of hose on air intake system?	Repair the air intake system.	Go to step **10**.

GETtheMANUALS.org

Step		Check	Yes	No
10	**CHECK FUEL PRESSURE.** **WARNING:** **Place "NO OPEN FLAMES" signs near the working area.** **CAUTION:** **Be careful not to spill fuel.** 1) Connect the front oxygen (A/F) sensor connector. 2) Measure the fuel pressure. <Ref. to ME(H4SO)-28, INSPECTION, Fuel Pressure.> **CAUTION:** **Release fuel pressure before removing the fuel pressure gauge.**	Is the measured value 340 — 400 kPa (3.5 — 4.1 kg/cm^2, 49 — 58 psi)?	Go to step **11**.	Repair the following item. Fuel pressure is too high: • Clogged fuel line or bent hose Fuel pressure is too low: • Improper fuel pump discharge • Clogged fuel line
11	**CHECK ENGINE COOLANT TEMPERATURE SENSOR.** 1) Start the engine and warm up completely. 2) Read the value of «Coolant Temp.» using the Subaru Select Monitor or a general scan tool. NOTE: • Subaru Select Monitor For detailed operation procedures, refer to "READ CURRENT DATA FOR ENGINE". <Ref. to EN(H4SO)(diag)-33, Subaru Select Monitor.> • General scan tool For detailed operation procedures, refer to the general scan tool operation manual.	Is the value of «Coolant Temp.» 75°C (167°F) or more?	Go to step **12**.	Replace the engine coolant temperature sensor. <Ref. to FU(H4SO)-24, Engine Coolant Temperature Sensor.>
12	**CHECK MASS AIR FLOW AND INTAKE AIR TEMPERATURE SENSOR.** 1) Start the engine and warm up engine until coolant temperature is higher than 75°C (167°F). 2) For CVT models, set the select lever to "P" range or "N" range, and for MT models, place the shift lever in the neutral position. 3) Turn the A/C switch to OFF. 4) Turn all the accessory switches to OFF. 5) Read the value of «Mass Air Flow» using the Subaru Select Monitor or a general scan tool. NOTE: • Subaru Select Monitor For detailed operation procedures, refer to "READ CURRENT DATA FOR ENGINE". <Ref. to EN(H4SO)(diag)-33, Subaru Select Monitor.> • General scan tool For detailed operation procedures, refer to the general scan tool operation manual.	Is the value of «Mass Air Flow» 2.0 — 5.0 g/s (0.26 — 0.66 lb/m)?	Go to step **13**.	Replace the mass air flow and intake air temperature sensor. <Ref. to FU(H4SO)-32, Mass Air Flow and Intake Air Temperature Sensor.>

GETtheMANUALS.org

	Step	Check	Yes	No
13	**CHECK MASS AIR FLOW AND INTAKE AIR TEMPERATURE SENSOR.** 1) Start the engine and warm up engine until coolant temperature is higher than 75°C (167°F). 2) For CVT models, set the select lever to “P” range or “N” range, and for MT models, place the shift lever in the neutral position. 3) Turn the A/C switch to OFF. 4) Turn all the accessory switches to OFF. 5) Open the front hood. 6) Measure the ambient temperature. 7) Read the value of «Intake Air Temp.» using the Subaru Select Monitor or a general scan tool. NOTE: • Subaru Select Monitor For detailed operation procedures, refer to “READ CURRENT DATA FOR ENGINE”. <Ref. to EN(H4SO)(diag)-33, Subaru Select Monitor.> • General scan tool For detailed operation procedures, refer to the general scan tool operation manual.	Subtract ambient temperature from «Intake Air Temp.». Is the obtained value –10 — 50°C (–18 — 90°F)?	Go to step **14**.	Check the mass air flow and intake air temperature sensor. <Ref. to FU(H4SO)-32, Mass Air Flow and Intake Air Temperature Sensor.>
14	**CHECK REAR OXYGEN SENSOR DATA.** 1) Warm up the engine until engine coolant temperature is higher than 75°C (167°F), and keep the engine speed at 3,000 rpm. (2 minutes maximum) 2) Read the value of «Rear O2 Sensor» using the Subaru Select Monitor or a general scan tool. NOTE: • Depress the clutch pedal. (MT model) • Subaru Select Monitor For detailed operation procedures, refer to “READ CURRENT DATA FOR ENGINE”. <Ref. to EN(H4SO)(diag)-33, Subaru Select Monitor.> • General scan tool For detailed operation procedures, refer to the general scan tool operation manual.	Is the value of «Rear O2 Sensor» 0.490 V or more?	Go to step **15**.	Go to step **16**.
15	**CHECK REAR OXYGEN SENSOR DATA.** 1) Warm up the engine until engine coolant temperature is higher than 75°C (167°F), and rapidly reduce the engine speed from 3,000 rpm. 2) Read the value of «Rear O2 Sensor» using the Subaru Select Monitor or a general scan tool. NOTE: • Depress the clutch pedal. (MT model) • Subaru Select Monitor For detailed operation procedures, refer to “READ CURRENT DATA FOR ENGINE”. <Ref. to EN(H4SO)(diag)-33, Subaru Select Monitor.> • General scan tool For detailed operation procedures, refer to the general scan tool operation manual.	Is the value of «Rear O2 Sensor» 0.250 V or less?	Go to step **17**.	Go to step **16**.

GETthemANUALS.org

Step		Check	Yes	No
16	**CHECK REAR OXYGEN SENSOR CONNECTOR AND COUPLING CONNECTOR.**	Has water entered the connector?	Completely remove any water inside.	Go to step **18**.
17	**CHECK FRONT OXYGEN (A/F) SENSOR USING REAR OXYGEN SENSOR SIGNAL.** 1) Warm up the engine until engine coolant temperature is higher than 75°C (167°F), then keep the engine idling for 5 minutes or more. 2) Read the value of «Rear O2 Sensor» using the Subaru Select Monitor or a general scan tool. NOTE: • Subaru Select Monitor For detailed operation procedures, refer to "READ CURRENT DATA FOR ENGINE". <Ref. to EN(H4SO)(diag)-33, Subaru Select Monitor.> • General scan tool For detailed operation procedures, refer to the general scan tool operation manual.	Is the value in «Rear O2 Sensor» kept at 0.250 V or less for 5 minutes or more?	Replace the front oxygen (A/F) sensor. <Ref. to FU(H4SO)-42, Front Oxygen (A/F) Sensor.>	Go to step **18**.
18	**CHECK HARNESS BETWEEN ECM AND REAR OXYGEN SENSOR CONNECTOR.** 1) Turn the ignition switch to OFF. 2) Disconnect the connector from ECM and rear oxygen sensor. 3) Measure the resistance of harness between ECM and rear oxygen sensor connector. ***Connector & terminal*** ***(B136) No. 20 — (E25) No. 3:*** ***(B134) No. 29 — (E25) No. 4:***	Is the resistance less than 1 Ω?	Go to step **19**.	Repair the harness and connector. NOTE: In this case, repair the following item: • Open circuit in harness between ECM and rear oxygen sensor connector • Poor contact of coupling connector
19	**CHECK HARNESS BETWEEN ECM AND REAR OXYGEN SENSOR CONNECTOR.** 1) Connect the connector to ECM. 2) Turn the ignition switch to ON. 3) Measure the voltage between rear oxygen sensor connector and chassis ground. ***Connector & terminal*** ***(E25) No. 3 (+) — Chassis ground (–):***	Is the voltage 0.2 — 0.5 V?	Replace the rear oxygen sensor. <Ref. to FU(H4SO)-44, Rear Oxygen Sensor.>	Repair the harness and connector. NOTE: In this case, repair the following item: • Open circuit in harness between ECM and rear oxygen sensor connector • Poor contact of ECM connector • Poor contact of coupling connector

GETthemANUALS.org

DN:DTC P2097 POST CATALYST FUEL TRIM SYSTEM TOO RICH (BANK 1)

DTC DETECTING CONDITION:

- Detected when two consecutive driving cycles with fault occur.
- GENERAL DESCRIPTION <Ref. to GD(H4SO)-219, DTC P2097 POST CATALYST FUEL TRIM SYSTEM TOO RICH (BANK 1), Diagnostic Trouble Code (DTC) Detecting Criteria.>

CAUTION:

After servicing or replacing faulty parts, perform Clear Memory Mode <Ref. to EN(H4SO)(diag)-51, OPERATION, Clear Memory Mode.>, and Inspection Mode <Ref. to EN(H4SO)(diag)-40, PROCEDURE, Inspection Mode.>.

WIRING DIAGRAM:

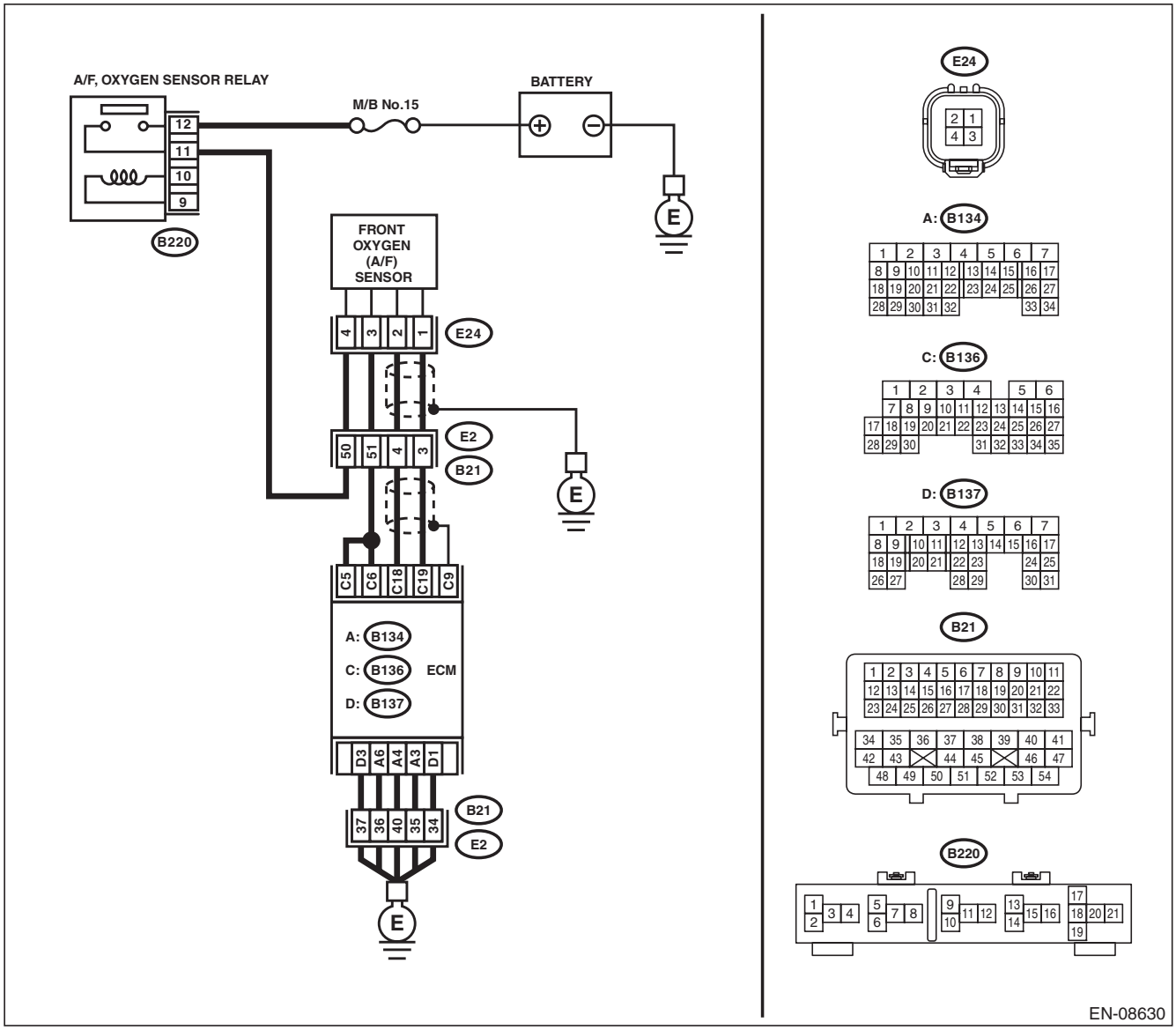

GETtheMANUALS.org

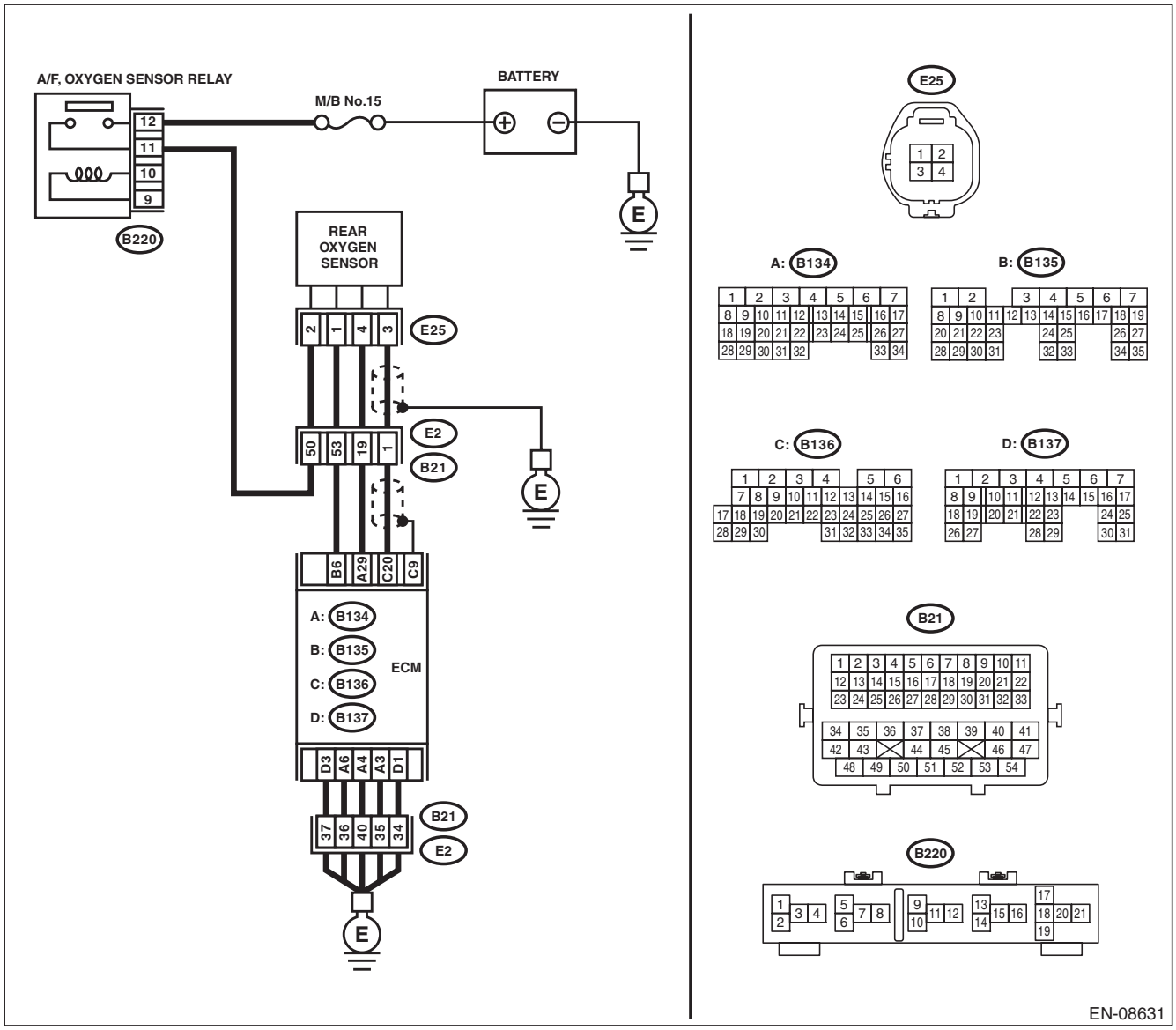

Step		Check	Yes	No
1	**CHECK FOR ANY OTHER DTC ON DISPLAY.**	Is any other DTC displayed?	Check DTC using "List of Diagnostic Trouble Code (DTC)". <Ref. to EN(H4SO)(diag)-78, List of Diagnostic Trouble Code (DTC).>	Go to step **2**.
2	**CHECK FRONT OXYGEN (A/F) SENSOR CONNECTOR AND COUPLING CONNECTOR.**	Has water entered the connector?	Completely remove any water inside.	Go to step **3**.

GETmeMANUALS.org

Step		Check	Yes	No
3	**CHECK HARNESS BETWEEN ECM AND FRONT OXYGEN (A/F) SENSOR CONNECTOR.** 1) Turn the ignition switch to OFF. 2) Disconnect the connectors from ECM and front oxygen (A/F) sensor. 3) Measure the resistance of harness between ECM and front oxygen (A/F) sensor connector. ***Connector & terminal*** ***(B136) No. 19 — (E24) No. 1:*** ***(B136) No. 18 — (E24) No. 2:***	Is the resistance less than 1 Ω?	Go to step **4**.	Repair the harness and connector. NOTE: In this case, repair the following item: • Open circuit in harness between ECM and front oxygen (A/F) sensor connector • Poor contact of coupling connector
4	**CHECK HARNESS BETWEEN ECM AND FRONT OXYGEN (A/F) SENSOR CONNECTOR.** Measure the resistance between ECM and chassis ground. ***Connector & terminal*** ***(B136) No. 19 — Chassis ground:*** ***(B136) No. 18 — Chassis ground:***	Is the resistance 1 MΩ or more?	Go to step **5**.	Repair the ground short circuit of harness between ECM and front oxygen (A/F) sensor connector.
5	**CHECK OUTPUT SIGNAL FOR ECM.** 1) Connect the connector to ECM. 2) Turn the ignition switch to ON. 3) Measure the voltage between front oxygen (A/F) sensor connector and chassis ground. ***Connector & terminal*** ***(E24) No. 1 (+) — Chassis ground (–):***	Is the voltage 4.5 V or more?	Go to step **7**.	Go to step **6**.
6	**CHECK OUTPUT SIGNAL FOR ECM.** Measure the voltage between front oxygen (A/F) sensor connector and chassis ground. ***Connector & terminal*** ***(E24) No. 2 (+) — Chassis ground (–):***	Is the voltage 4.95 V or more?	Go to step **7**.	Go to step **8**.
7	**CHECK OUTPUT SIGNAL FOR ECM.** Measure the voltage between front oxygen (A/F) sensor connector and chassis ground. ***Connector & terminal*** ***(E24) No. 1 (+) — Chassis ground (–):*** ***(E24) No. 2 (+) — Chassis ground (–):***	Is the voltage 8 V or more?	Repair the short circuit to power in the harness between ECM and front oxygen (A/F) sensor connector. After repair, replace the ECM. <Ref. to FU(H4SO)-46, Engine Control Module (ECM).>	Repair the poor contact of ECM connector.
8	**CHECK EXHAUST SYSTEM.**	Are there holes or loose bolts on exhaust system?	Repair the exhaust system.	Go to step **9**.
9	**CHECK AIR INTAKE SYSTEM.**	Are there holes, loose bolts or disconnection of hose on air intake system?	Repair the air intake system.	Go to step **10**.

GETthemANUALS.org

Step		Check	Yes	No
10	**CHECK FUEL PRESSURE.** **WARNING:** **Place "NO OPEN FLAMES" signs near the working area.** **CAUTION:** **Be careful not to spill fuel.** 1) Connect the front oxygen (A/F) sensor connector. 2) Measure the fuel pressure. <Ref. to ME(H4SO)-28, INSPECTION, Fuel Pressure.> **CAUTION:** **Release fuel pressure before removing the fuel pressure gauge.**	Is the measured value 340 — 400 kPa (3.5 — 4.1 kg/cm^2, 49 — 58 psi)?	Go to step **11**.	Repair the following item. Fuel pressure is too high: • Clogged fuel line or bent hose Fuel pressure is too low: • Improper fuel pump discharge • Clogged fuel line
11	**CHECK ENGINE COOLANT TEMPERATURE SENSOR.** 1) Start the engine and warm up completely. 2) Read the value of «Coolant Temp.» using the Subaru Select Monitor or a general scan tool. NOTE: • Subaru Select Monitor For detailed operation procedures, refer to "READ CURRENT DATA FOR ENGINE". <Ref. to EN(H4SO)(diag)-33, Subaru Select Monitor.> • General scan tool For detailed operation procedures, refer to the general scan tool operation manual.	Is the value of «Coolant Temp.» 75°C (167°F) or more?	Go to step **12**.	Replace the engine coolant temperature sensor. <Ref. to FU(H4SO)-24, Engine Coolant Temperature Sensor.>
12	**CHECK MASS AIR FLOW AND INTAKE AIR TEMPERATURE SENSOR.** 1) Start the engine and warm up engine until coolant temperature is higher than 75°C (167°F). 2) For CVT models, set the select lever to "P" range or "N" range, and for MT models, place the shift lever in the neutral position. 3) Turn the A/C switch to OFF. 4) Turn all the accessory switches to OFF. 5) Read the value of «Mass Air Flow» using the Subaru Select Monitor or a general scan tool. NOTE: • Subaru Select Monitor For detailed operation procedures, refer to "READ CURRENT DATA FOR ENGINE". <Ref. to EN(H4SO)(diag)-33, Subaru Select Monitor.> • General scan tool For detailed operation procedures, refer to the general scan tool operation manual.	Is the value of «Mass Air Flow» 2.0 — 5.0 g/s (0.26 — 0.66 lb/m)?	Go to step **13**.	Replace the mass air flow and intake air temperature sensor. <Ref. to FU(H4SO)-32, Mass Air Flow and Intake Air Temperature Sensor.>

GETtheMANUALS.org

	Step	Check	Yes	No
13	**CHECK MASS AIR FLOW AND INTAKE AIR TEMPERATURE SENSOR.** 1) Start the engine and warm up engine until coolant temperature is higher than 75°C (167°F). 2) For CVT models, set the select lever to “P” range or “N” range, and for MT models, place the shift lever in the neutral position. 3) Turn the A/C switch to OFF. 4) Turn all the accessory switches to OFF. 5) Open the front hood. 6) Measure the ambient temperature. 7) Read the value of «Intake Air Temp.» using the Subaru Select Monitor or a general scan tool. NOTE: • Subaru Select Monitor For detailed operation procedures, refer to “READ CURRENT DATA FOR ENGINE”. <Ref. to EN(H4SO)(diag)-33, Subaru Select Monitor.> • General scan tool For detailed operation procedures, refer to the general scan tool operation manual.	Subtract ambient temperature from «Intake Air Temp.». Is the obtained value –10 — 50°C (–18 — 90°F)?	Go to step **14**.	Check the mass air flow and intake air temperature sensor. <Ref. to FU(H4SO)-32, Mass Air Flow and Intake Air Temperature Sensor.>
14	**CHECK REAR OXYGEN SENSOR DATA.** 1) Warm up the engine until engine coolant temperature is higher than 75°C (167°F), and keep the engine speed at 3,000 rpm. (2 minutes maximum) 2) Read the value of «Rear O2 Sensor» using the Subaru Select Monitor or a general scan tool. NOTE: • Depress the clutch pedal. (MT model) • Subaru Select Monitor For detailed operation procedures, refer to “READ CURRENT DATA FOR ENGINE”. <Ref. to EN(H4SO)(diag)-33, Subaru Select Monitor.> • General scan tool For detailed operation procedures, refer to the general scan tool operation manual.	Is the value of «Rear O2 Sensor» 0.490 V or more?	Go to step **15**.	Go to step **16**.
15	**CHECK REAR OXYGEN SENSOR DATA.** 1) Warm up the engine until engine coolant temperature is higher than 75°C (167°F), and rapidly reduce the engine speed from 3,000 rpm. 2) Read the value of «Rear O2 Sensor» using the Subaru Select Monitor or a general scan tool. NOTE: • Depress the clutch pedal. (MT model) • Subaru Select Monitor For detailed operation procedures, refer to “READ CURRENT DATA FOR ENGINE”. <Ref. to EN(H4SO)(diag)-33, Subaru Select Monitor.> • General scan tool For detailed operation procedures, refer to the general scan tool operation manual.	Is the value of «Rear O2 Sensor» 0.250 V or less?	Go to step **17**.	Go to step **16**.

GETtheMANUALS.org

	Step	Check	Yes	No
16	**CHECK REAR OXYGEN SENSOR CONNECTOR AND COUPLING CONNECTOR.**	Has water entered the connector?	Completely remove any water inside.	Go to step **18**.
17	**CHECK FRONT OXYGEN (A/F) SENSOR USING REAR OXYGEN SENSOR SIGNAL.** 1) Warm up the engine until engine coolant temperature is higher than 75°C (167°F), then keep the engine idling for 5 minutes or more. 2) Read the value of «Rear O2 Sensor» using the Subaru Select Monitor or a general scan tool. NOTE: • Subaru Select Monitor For detailed operation procedures, refer to "READ CURRENT DATA FOR ENGINE". <Ref. to EN(H4SO)(diag)-33, Subaru Select Monitor.> • General scan tool For detailed operation procedures, refer to the general scan tool operation manual.	Is the value in «Rear O2 Sensor» kept at 0.8 V or more for 5 minutes or more?	Replace the front oxygen (A/F) sensor. <Ref. to FU(H4SO)-42, Front Oxygen (A/F) Sensor.>	Go to step **18**.
18	**CHECK HARNESS BETWEEN ECM AND REAR OXYGEN SENSOR CONNECTOR.** 1) Turn the ignition switch to OFF. 2) Disconnect the connector from ECM and rear oxygen sensor. 3) Measure the resistance of harness between ECM and rear oxygen sensor connector. ***Connector & terminal*** ***(B136) No. 20 — (E25) No. 3:*** ***(B134) No. 29 — (E25) No. 4:***	Is the resistance less than 1 Ω?	Go to step **19**.	Repair the harness and connector. NOTE: In this case, repair the following item: • Open circuit in harness between ECM and rear oxygen sensor connector • Poor contact of coupling connector
19	**CHECK HARNESS BETWEEN ECM AND REAR OXYGEN SENSOR CONNECTOR.** 1) Connect the connector to ECM. 2) Turn the ignition switch to ON. 3) Measure the voltage between rear oxygen sensor connector and chassis ground. ***Connector & terminal*** ***(E25) No. 3 (+) — Chassis ground (–):***	Is the voltage 0.2 — 0.5 V?	Replace the rear oxygen sensor. <Ref. to FU(H4SO)-44, Rear Oxygen Sensor.>	Repair the harness and connector. NOTE: In this case, repair the following item: • Open circuit in harness between ECM and rear oxygen sensor connector • Poor contact of ECM connector • Poor contact of coupling connector

GETtheMANUALS.org

DO:DTC P2101 THROTTLE ACTUATOR CONTROL MOTOR CIRCUIT RANGE/ PERFORMANCE

DTC DETECTING CONDITION:

- Immediately at fault recognition
- GENERAL DESCRIPTION <Ref. to GD(H4SO)-221, DTC P2101 THROTTLE ACTUATOR CONTROL MOTOR CIRCUIT RANGE/PERFORMANCE, Diagnostic Trouble Code (DTC) Detecting Criteria.>

TROUBLE SYMPTOM:

- Improper idling
- Poor driving performance
- Engine stalls.

CAUTION:

After servicing or replacing faulty parts, perform Clear Memory Mode <Ref. to EN(H4SO)(diag)-51, OPERATION, Clear Memory Mode.>, and Inspection Mode <Ref. to EN(H4SO)(diag)-40, PROCEDURE, Inspection Mode.>.

WIRING DIAGRAM:

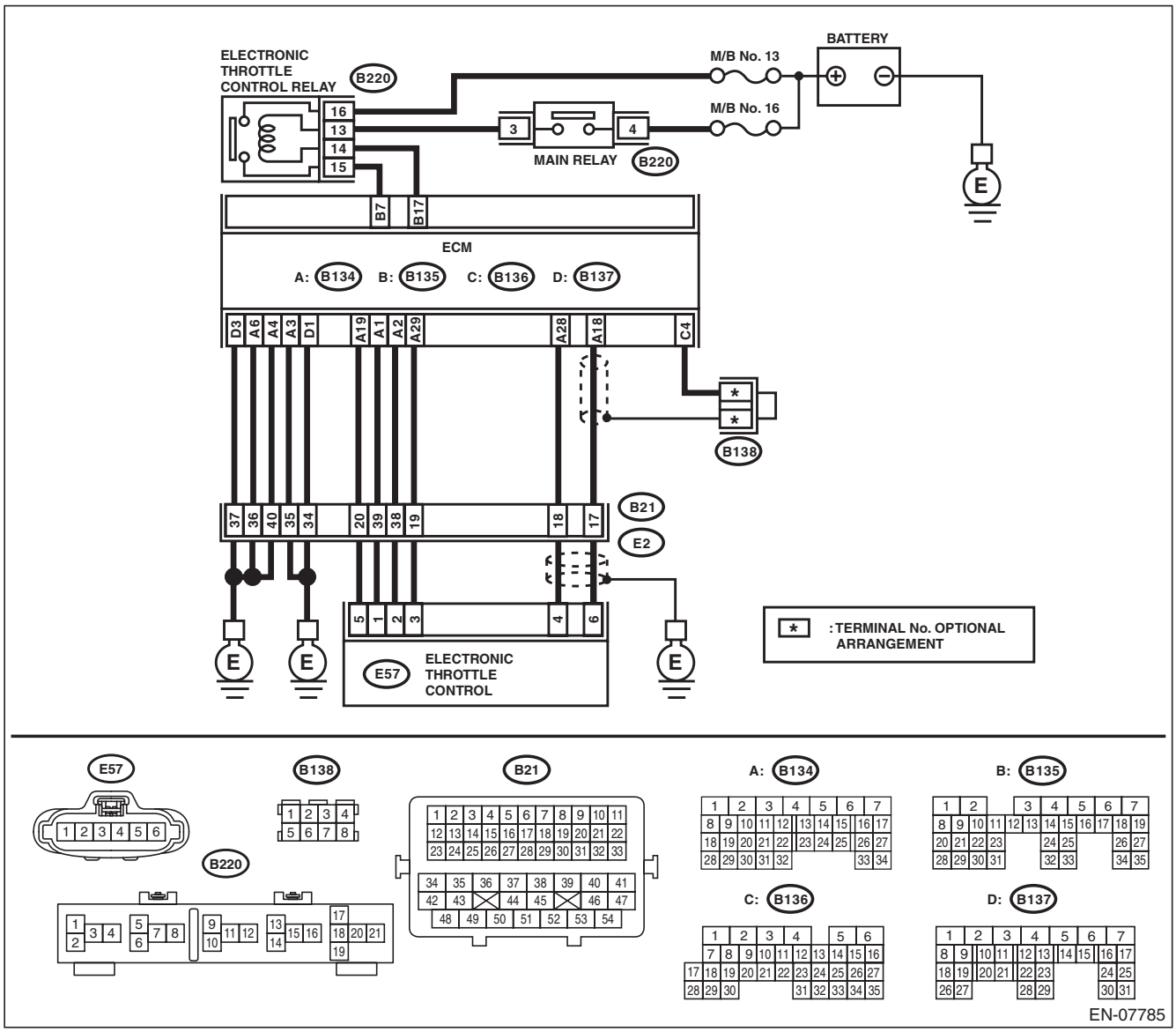

GETtheMANUALS.org

	Step	Check	Yes	No
1	**CHECK ELECTRONIC THROTTLE CONTROL RELAY.** 1) Turn the ignition switch to OFF. 2) Remove the electronic throttle control relay. 3) Connect the battery to terminals No. 13 and No. 14 of electronic throttle control relay. 4) Measure the resistance between electronic throttle control relay terminals. ***Terminals*** ***No. 15 — No. 16:***	Is the resistance less than 1 Ω?	Go to step **2**.	Replace the electronic throttle control relay. <Ref. to FU(H4SO)-51, Electronic Throttle Control Relay.>
2	**CHECK POWER SUPPLY OF ELECTRONIC THROTTLE CONTROL RELAY.** Measure the voltage between electronic throttle control relay connector and chassis ground. ***Connector & terminal*** ***(B220) No. 16 (+) — Chassis ground (–):***	Is the voltage 10 V or more?	Go to step **3**.	Repair the open or ground short circuit of power supply circuit.
3	**CHECK HARNESS BETWEEN ECM AND ELECTRONIC THROTTLE CONTROL RELAY CONNECTOR.** 1) Disconnect the connector from ECM. 2) Turn the ignition switch to ON. 3) Measure the voltage between electronic throttle control relay connector and chassis ground. ***Connector & terminal*** ***(B220) No. 14 (+) — Chassis ground (–):***	Is the voltage 10 V or more?	Repair the short circuit to power in the harness between ECM and electronic throttle control relay connector.	Go to step **4**.
4	**CHECK HARNESS BETWEEN ECM AND ELECTRONIC THROTTLE CONTROL RELAY CONNECTOR.** 1) Turn the ignition switch to OFF. 2) Measure the resistance between electronic throttle control relay connector and chassis ground. ***Connector & terminal*** ***(B220) No. 14 — Chassis ground:*** ***(B220) No. 15 — Chassis ground:***	Is the resistance 1 MΩ or more?	Go to step **5**.	Repair the short circuit in harness to ground between ECM and electronic throttle control relay connector.
5	**CHECK HARNESS BETWEEN ECM AND ELECTRONIC THROTTLE CONTROL RELAY CONNECTOR.** Measure the resistance between ECM and electronic throttle control relay connector. ***Connector & terminal*** ***(B135) No. 17 — (B220) No. 14:*** ***(B135) No. 7 — (B220) No. 15:***	Is the resistance less than 1 Ω?	Go to step **6**.	Repair the open circuit in harness between ECM and electronic throttle control relay connector.
6	**CHECK HARNESS BETWEEN ECM AND ELECTRONIC THROTTLE CONTROL CONNECTOR.** 1) Turn the ignition switch to OFF. 2) Disconnect the connectors from electronic throttle control. 3) Measure the resistance between ECM and chassis ground. ***Connector & terminal*** ***(B134) No. 19 — Chassis ground:*** ***(B134) No. 18 — Chassis ground:*** ***(B134) No. 18 — (B136) No. 4:*** ***(B134) No. 28 — Chassis ground:***	Is the resistance 1 MΩ or more?	Go to step **7**.	Repair the short circuit to ground in harness between ECM and electronic throttle control connector.

GETthemANUALS.org

	Step	Check	Yes	No
7	**CHECK SHORT CIRCUIT INSIDE THE ECM.** 1) Connect the connector to ECM. 2) Measure the resistance between electronic throttle control connector and engine ground. ***Connector & terminal*** ***(E57) No. 6 — Engine ground:*** ***(E57) No. 4 — Engine ground:***	Is the resistance 1 MΩ or more?	Go to step **8**.	Repair the short circuit to ground in harness between ECM and electronic throttle control connector. Replace the ECM if defective. <Ref. to FU(H4SO)-46, Engine Control Module (ECM).>
8	**CHECK HARNESS BETWEEN ECM AND ELECTRONIC THROTTLE CONTROL CONNECTOR.** 1) Disconnect the connector from ECM. 2) Measure the resistance of harness between ECM and electronic throttle control connector. ***Connector & terminal*** ***(B134) No. 18 — (E57) No. 6:*** ***(B134) No. 28 — (E57) No. 4:*** ***(B134) No. 29 — (E57) No. 3:***	Is the resistance less than 1 Ω?	Go to step **9**.	Repair the harness and connector. NOTE: In this case, repair the following item: • Open circuit in harness between ECM and electronic throttle control connector • Poor contact of coupling connector
9	**CHECK HARNESS BETWEEN ECM AND ELECTRONIC THROTTLE CONTROL CONNECTOR.** 1) Connect the connector to ECM. 2) Measure the resistance between electronic throttle control connector and engine ground. ***Connector & terminal*** ***(E57) No. 3 — Engine ground:***	Is the resistance less than 5 Ω?	Go to step **10**.	Repair the harness and connector. NOTE: In this case, repair the following item: • Open circuit of harness between ECM and engine ground • Poor contact of ECM connector • Poor contact of coupling connector
10	**CHECK HARNESS BETWEEN ECM AND ELECTRONIC THROTTLE CONTROL CONNECTOR.** 1) Turn the ignition switch to ON. 2) Measure the voltage between electronic throttle control connector and engine ground. ***Connector & terminal*** ***(E57) No. 6 (+) — Engine ground (–):*** ***(E57) No. 4 (+) — Engine ground (–):***	Is the voltage 5 V or more?	Repair the short circuit to power in harness between ECM and electronic throttle control connector.	Go to step **11**.
11	**CHECK HARNESS BETWEEN ECM AND ELECTRONIC THROTTLE CONTROL CONNECTOR.** 1) Turn the ignition switch to OFF. 2) Disconnect the connector from ECM. 3) Measure the resistance between ECM connectors. ***Connector & terminal*** ***(B134) No. 19 — (B134) No. 18:*** ***(B134) No. 19 — (B134) No. 28:***	Is the resistance 1 MΩ or more?	Go to step **12**.	Repair the short circuit to power in harness between ECM and electronic throttle control connector.

GETthemMANUALS.org

	Step	Check	Yes	No
12	**CHECK SENSOR OUTPUT.** 1) Connect all connectors. 2) Turn the ignition switch to ON. 3) Read the value of «Main-Throttle Sensor» using Subaru Select Monitor. NOTE: For detailed operation procedures, refer to "READ CURRENT DATA FOR ENGINE". <Ref. to EN(H4SO)(diag)-33, Subaru Select Monitor.>	Is the value of «Main-Throttle Sensor» 0.81 — 0.87 V?	Go to step **13**.	Repair the poor contact of electronic throttle control connector. Replace the electronic throttle control if defective. <Ref. to FU(H4SO)-15, Throttle Body.>
13	**CHECK SENSOR OUTPUT.** Read the value of «Sub-Throttle Sensor» using Subaru Select Monitor. NOTE: For detailed operation procedures, refer to "READ CURRENT DATA FOR ENGINE". <Ref. to EN(H4SO)(diag)-33, Subaru Select Monitor.>	Is the value of «Sub-Throttle Sensor» 1.64 — 1.70 V?	Go to step **14**.	Repair the poor contact of electronic throttle control connector. Replace the electronic throttle control if defective. <Ref. to FU(H4SO)-15, Throttle Body.>
14	**CHECK HARNESS BETWEEN ECM AND ELECTRONIC THROTTLE CONTROL CONNECTOR.** 1) Turn the ignition switch to OFF. 2) Disconnect the connectors from ECM and electronic throttle control. 3) Measure the resistance between ECM and electronic throttle control connector. ***Connector & terminal*** ***(B134) No. 2 — (E57) No. 2:*** ***(B134) No. 1 — (E57) No. 1:***	Is the resistance less than 1 Ω?	Go to step **15**.	Repair the harness and connector. NOTE: In this case, repair the following item: • Open circuit in harness between ECM and electronic throttle control connector • Poor contact of coupling connector
15	**CHECK HARNESS BETWEEN ECM AND ELECTRONIC THROTTLE CONTROL CONNECTOR.** 1) Connect the connector to ECM. 2) Turn the ignition switch to ON. 3) Measure the voltage between electronic throttle control connector and engine ground. ***Connector & terminal*** ***(E57) No. 2 (+) — Engine ground (–):*** ***(E57) No. 1 (+) — Engine ground (–):***	Is the voltage 5 V or more?	Repair the short circuit to power in harness between ECM and electronic throttle control connector.	Go to step **16**.
16	**CHECK HARNESS BETWEEN ECM AND ELECTRONIC THROTTLE CONTROL CONNECTOR.** 1) Turn the ignition switch to OFF. 2) Disconnect the connector from ECM. 3) Measure the resistance between electronic throttle control connector and engine ground. ***Connector & terminal*** ***(E57) No. 2 — Engine ground:*** ***(E57) No. 1 — Engine ground:***	Is the resistance 1 MΩ or more?	Go to step **17**.	Repair the short circuit to ground in harness between ECM and electronic throttle control connector.
17	**CHECK ELECTRONIC THROTTLE CONTROL CONNECTOR HARNESS.** Measure the resistance between electronic throttle control connectors. ***Connector & terminal*** ***(E57) No. 2 — (E57) No. 1:***	Is the resistance 1 MΩ or more?	Go to step **18**.	Repair the short circuit of harness between ECM and electronic throttle control connector.

GETtheMANUALS.org

Step		Check	Yes	No
18	**CHECK ELECTRONIC THROTTLE CONTROL GROUND CIRCUIT.** Measure the resistance between ECM and chassis ground. ***Connector & terminal*** ***(B134) No. 3 — Chassis ground:*** ***(B134) No. 4 — Chassis ground:*** ***(B134) No. 6 — Chassis ground:*** ***(B137) No. 1 — Chassis ground:*** ***(B137) No. 3 — Chassis ground:***	Is the resistance less than 5 Ω?	Go to step **19**.	Repair the harness and connector. NOTE: In this case, repair the following item: • Open circuit of harness between ECM and engine ground • Poor contact of coupling connector
19	**CHECK ELECTRONIC THROTTLE CONTROL.** Measure the resistance between electronic throttle control terminals. ***Terminals*** ***No. 2 — No. 1:***	Is the resistance 50 Ω or less?	Go to step **20**.	Replace the electronic throttle control. <Ref. to FU(H4SO)-15, Throttle Body.>
20	**CHECK ELECTRONIC THROTTLE CONTROL.** Move the throttle valve to the fully open and fully closed positions with fingers. Check that the valve returns to the specified position when releasing fingers.	Does the valve return to the specified position? Standard value: 3 mm (0.12 in) from fully closed position	Repair the poor contact of ECM connector.	Replace the electronic throttle control. <Ref. to FU(H4SO)-15, Throttle Body.>

GETthemANSWERS.org

DP:DTC P2102 THROTTLE ACTUATOR CONTROL MOTOR CIRCUIT LOW

DTC DETECTING CONDITION:

- Immediately at fault recognition
- GENERAL DESCRIPTION <Ref. to GD(H4SO)-223, DTC P2102 THROTTLE ACTUATOR CONTROL MOTOR CIRCUIT LOW, Diagnostic Trouble Code (DTC) Detecting Criteria.>

TROUBLE SYMPTOM:

- Improper idling
- Poor driving performance
- Engine stalls.

CAUTION:

After servicing or replacing faulty parts, perform Clear Memory Mode <Ref. to EN(H4SO)(diag)-51, OPERATION, Clear Memory Mode.>, and Inspection Mode <Ref. to EN(H4SO)(diag)-40, PROCEDURE, Inspection Mode.>.

WIRING DIAGRAM:

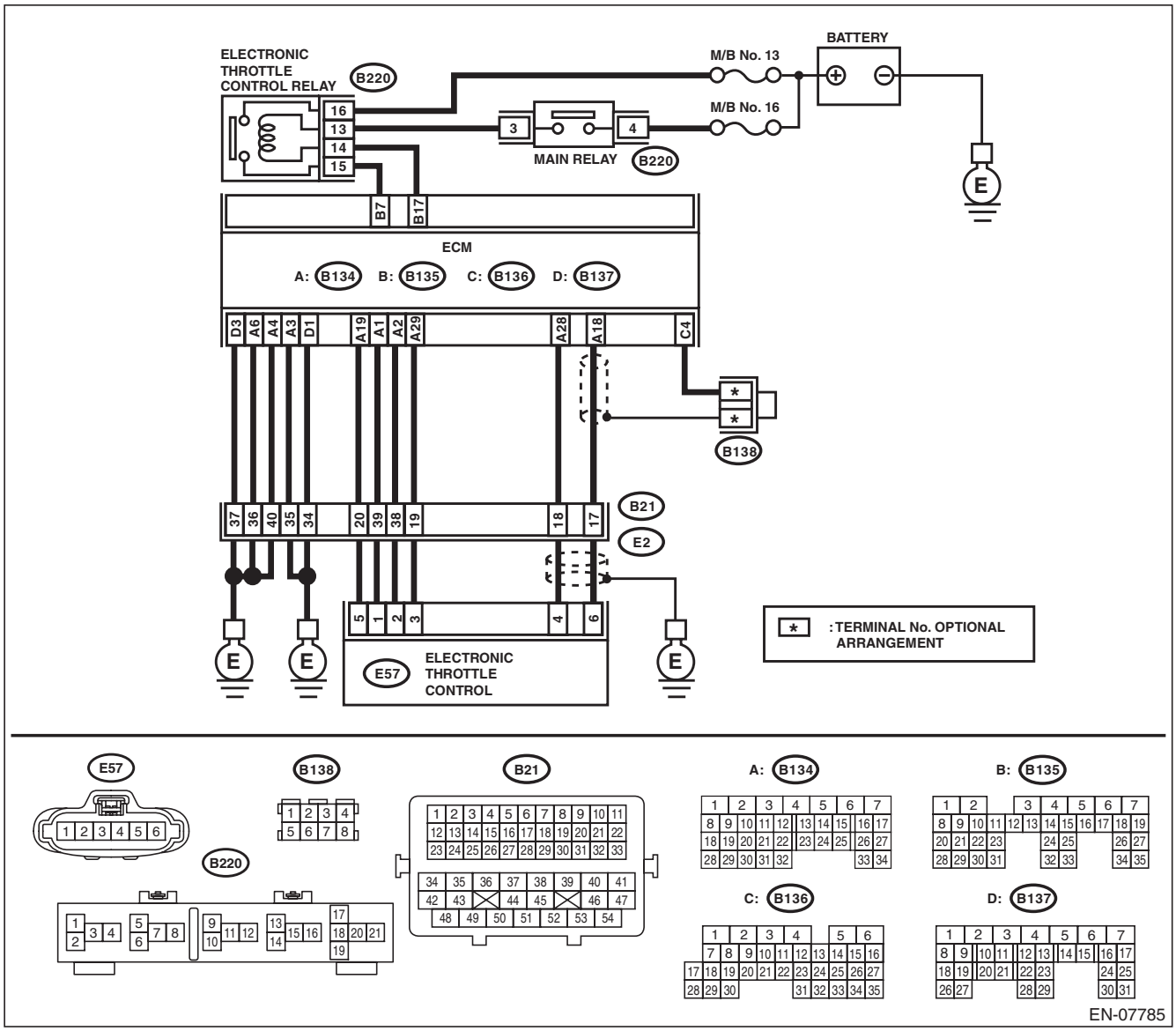

GETtheMANUALS.org

	Step	Check	Yes	No
1	**CHECK ELECTRONIC THROTTLE CONTROL RELAY.** 1) Turn the ignition switch to OFF. 2) Remove the electronic throttle control relay. 3) Connect the battery to terminals No. 13 and No. 14 of electronic throttle control relay. 4) Measure the resistance between electronic throttle control relay terminals. ***Terminals*** ***No. 15 — No. 16:***	Is the resistance less than 1 Ω?	Go to step **2**.	Replace the electronic throttle control relay. <Ref. to FU(H4SO)-51, Electronic Throttle Control Relay.>
2	**CHECK POWER SUPPLY OF ELECTRONIC THROTTLE CONTROL RELAY.** Measure the voltage between electronic throttle control relay connector and chassis ground. ***Connector & terminal*** ***(B220) No. 16 (+) — Chassis ground (–):***	Is the voltage 10 V or more?	Go to step **3**.	Repair the open or ground short circuit of power supply circuit.
3	**CHECK HARNESS BETWEEN ECM AND ELECTRONIC THROTTLE CONTROL RELAY CONNECTOR.** 1) Disconnect the connectors from ECM. 2) Turn the ignition switch to ON. 3) Measure the voltage between electronic throttle control relay connector and chassis ground. ***Connector & terminal*** ***(B220) No. 14 (+) — Chassis ground (–):***	Is the voltage 10 V or more?	Repair the short circuit to power in the harness between ECM and electronic throttle control relay connector.	Go to step **4**.
4	**CHECK HARNESS BETWEEN ECM AND ELECTRONIC THROTTLE CONTROL RELAY CONNECTOR.** 1) Turn the ignition switch to OFF. 2) Measure the resistance between electronic throttle control relay connector and chassis ground. ***Connector & terminal*** ***(B220) No. 14 — Chassis ground:*** ***(B220) No. 15 — Chassis ground:***	Is the resistance 1 MΩ or more?	Go to step **5**.	Repair the short circuit in harness to ground between ECM and electronic throttle control relay connector.
5	**CHECK HARNESS BETWEEN ECM AND ELECTRONIC THROTTLE CONTROL RELAY CONNECTOR.** Measure the resistance between ECM and electronic throttle control relay connector. ***Connector & terminal*** ***(B135) No. 17 — (B220) No. 14:*** ***(B135) No. 7 — (B220) No. 15:***	Is the resistance less than 1 Ω?	Repair the poor contact of ECM connector.	Repair the open circuit in harness between ECM and electronic throttle control relay connector.

GETmeMANUALS.org

DQ:DTC P2103 THROTTLE ACTUATOR CONTROL MOTOR CIRCUIT HIGH

DTC DETECTING CONDITION:

- Immediately at fault recognition
- GENERAL DESCRIPTION <Ref. to GD(H4SO)-224, DTC P2103 THROTTLE ACTUATOR CONTROL MOTOR CIRCUIT HIGH, Diagnostic Trouble Code (DTC) Detecting Criteria.>

CAUTION:

After servicing or replacing faulty parts, perform Clear Memory Mode <Ref. to EN(H4SO)(diag)-51, OPERATION, Clear Memory Mode.>, and Inspection Mode <Ref. to EN(H4SO)(diag)-40, PROCEDURE, Inspection Mode.>.

WIRING DIAGRAM:

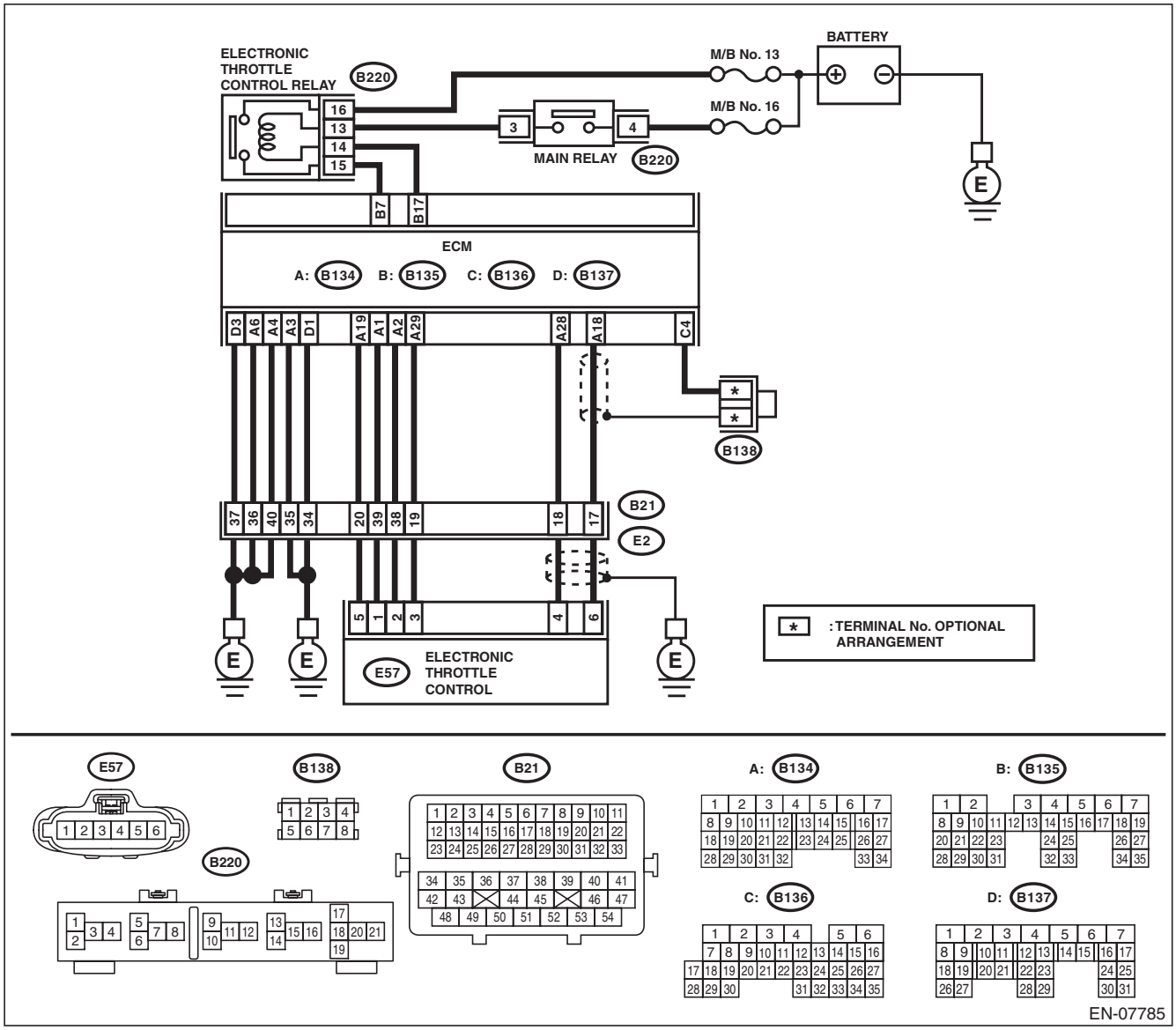

GETTHEMANUALS.org

Step		Check	Yes	No
1	**CHECK ELECTRONIC THROTTLE CONTROL RELAY.** 1) Turn the ignition switch to OFF. 2) Remove the electronic throttle control relay. 3) Measure the resistance between electronic throttle control relay terminals. ***Terminals*** ***No. 15 — No. 16:***	Is the resistance 1 MΩ or more?	Go to step **2**.	Replace the electronic throttle control relay. <Ref. to FU(H4SO)-51, Electronic Throttle Control Relay.>
2	**CHECK SHORT CIRCUIT OF ELECTRONIC THROTTLE CONTROL RELAY POWER SUPPLY.** 1) Turn the ignition switch to ON. 2) Measure the voltage between electronic throttle control relay connector and chassis ground. ***Connector & terminal*** ***(B220) No. 15 (+) — Chassis ground (–):***	Is the voltage 10 V or more?	Repair the short circuit to power in the harness between ECM and electronic throttle control relay connector.	Go to step **3**.
3	**CHECK HARNESS BETWEEN ECM AND ELECTRONIC THROTTLE CONTROL RELAY CONNECTOR.** 1) Turn the ignition switch to OFF. 2) Disconnect the connectors from ECM. 3) Measure the resistance between ECM and chassis ground. ***Connector & terminal*** ***(B135) No. 17 — Chassis ground:***	Is the resistance 1 MΩ or more?	Repair the poor contact of ECM connector.	Repair the short circuit in harness to ground between ECM and electronic throttle control relay connector.

DR:DTC P2109 THROTTLE/PEDAL POSITION SENSOR “A” MINIMUM STOP PERFORMANCE

NOTE:
For the diagnostic procedure, refer to DTC P2101. <Ref. to EN(H4SO)(diag)-267, DTC P2101 THROTTLE ACTUATOR CONTROL MOTOR CIRCUIT RANGE/PERFORMANCE, Diagnostic Procedure with Diagnostic Trouble Code (DTC).>

GETthemANUALS.org

DS:DTC P2122 THROTTLE/PEDAL POSITION SENSOR/SWITCH “D” CIRCUIT LOW INPUT

DTC DETECTING CONDITION:

- Immediately at fault recognition
- GENERAL DESCRIPTION <Ref. to GD(H4SO)-226, DTC P2122 THROTTLE/PEDAL POSITION SENSOR/SWITCH “D” CIRCUIT LOW INPUT, Diagnostic Trouble Code (DTC) Detecting Criteria.>

TROUBLE SYMPTOM:

- Improper idling
- Poor driving performance

CAUTION:

After servicing or replacing faulty parts, perform Clear Memory Mode <Ref. to EN(H4SO)(diag)-51, OPERATION, Clear Memory Mode.>, and Inspection Mode <Ref. to EN(H4SO)(diag)-40, PROCEDURE, Inspection Mode.>.

WIRING DIAGRAM:

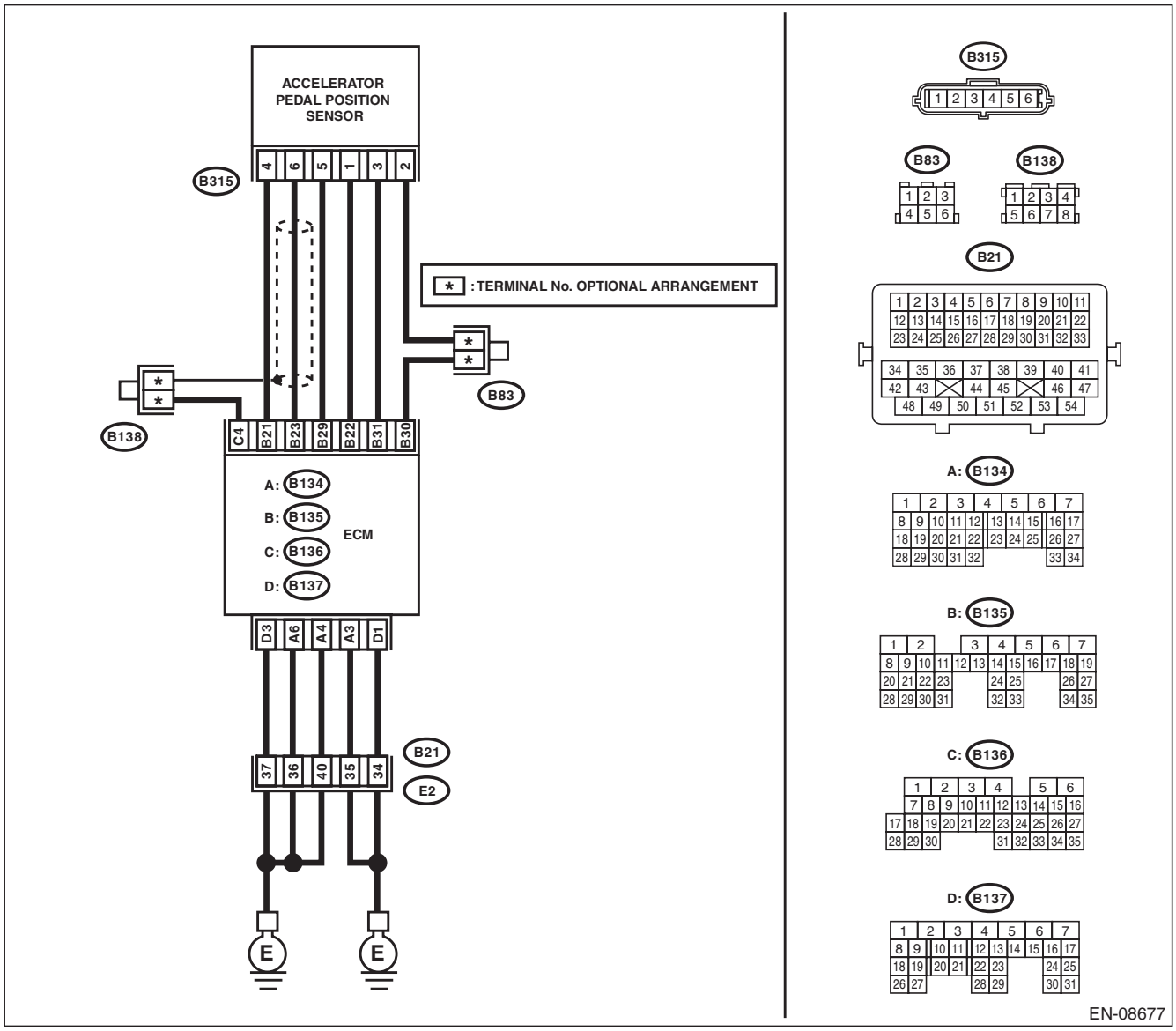

GETTHEMANUALS.org

	Step	Check	Yes	No
1	**CHECK HARNESS BETWEEN ECM AND ACCELERATOR PEDAL POSITION SENSOR CONNECTOR.** 1) Turn the ignition switch to OFF. 2) Disconnect the connectors from ECM and accelerator pedal position sensor. 3) Measure the resistance between ECM and chassis ground. ***Connector & terminal*** ***(B135) No. 21 — Chassis ground:*** ***(B135) No. 23 — Chassis ground:*** ***(B135) No. 23 — (B136) No. 4:***	Is the resistance 1 MΩ or more?	Go to step **2**.	Repair the short circuit to ground in harness between ECM and accelerator pedal position sensor connector.
2	**CHECK SHORT CIRCUIT INSIDE THE ECM.** 1) Connect the connector to ECM. 2) Measure the resistance between accelerator pedal position sensor connector and chassis ground. ***Connector & terminal*** ***(B315) No. 6 — Chassis ground:***	Is the resistance 1 MΩ or more?	Replace the accelerator pedal. <Ref. to SP(H4SO)-4, Accelerator Pedal.>	Repair the short circuit to ground in harness between ECM and accelerator pedal position sensor connector. Replace the ECM if defective. <Ref. to FU(H4SO)-46, Engine Control Module (ECM).>

GETthemANUALS.org

DT:DTC P2123 THROTTLE/PEDAL POSITION SENSOR/SWITCH “D” CIRCUIT HIGH INPUT

DTC DETECTING CONDITION:

- Immediately at fault recognition
- GENERAL DESCRIPTION <Ref. to GD(H4SO)-228, DTC P2123 THROTTLE/PEDAL POSITION SENSOR/SWITCH “D” CIRCUIT HIGH INPUT, Diagnostic Trouble Code (DTC) Detecting Criteria.>

TROUBLE SYMPTOM:

- Improper idling
- Poor driving performance

CAUTION:

After servicing or replacing faulty parts, perform Clear Memory Mode <Ref. to EN(H4SO)(diag)-51, OPERATION, Clear Memory Mode.>, and Inspection Mode <Ref. to EN(H4SO)(diag)-40, PROCEDURE, Inspection Mode.>.

WIRING DIAGRAM:

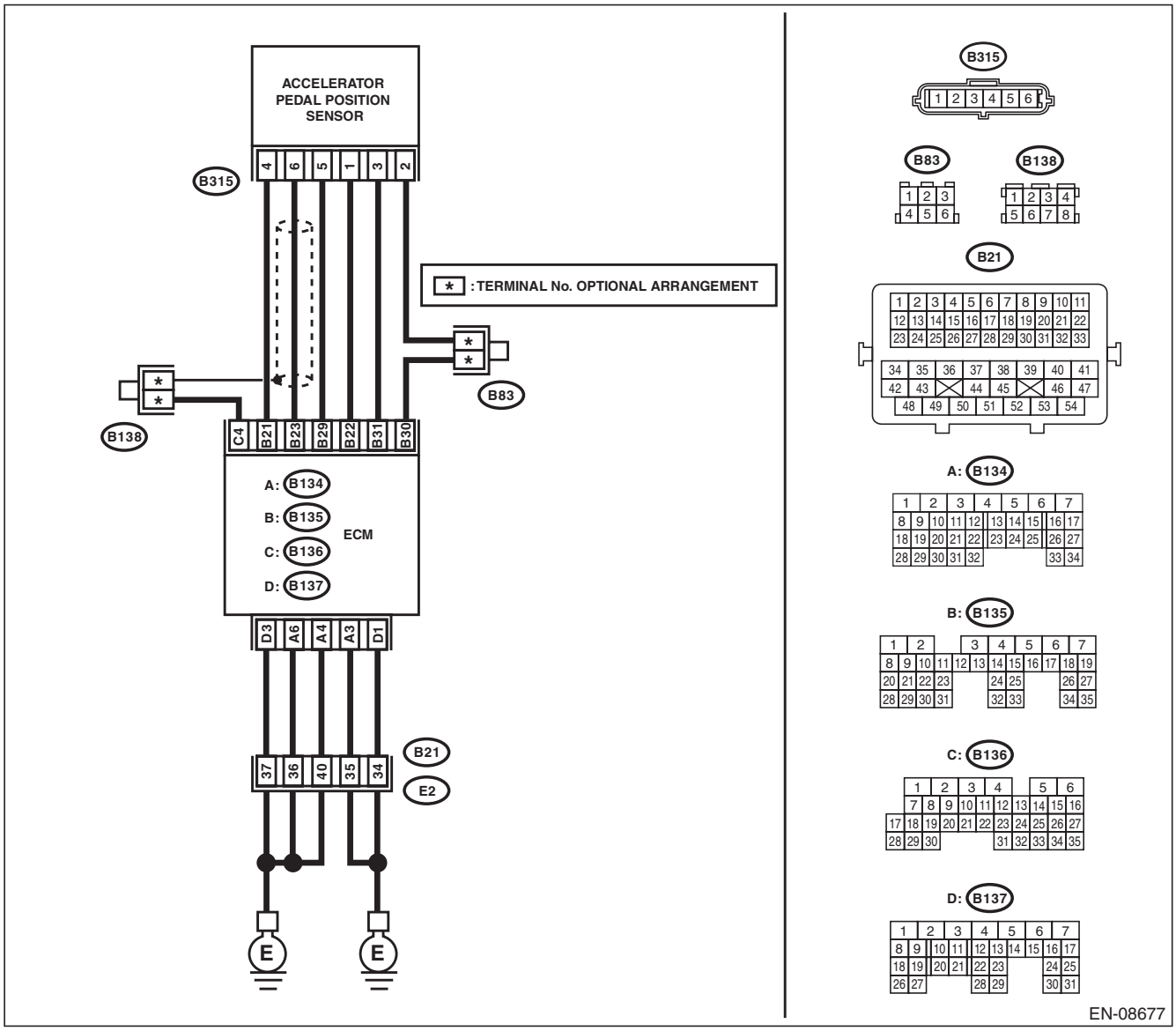

GETTHEMANUALS.org

	Step	Check	Yes	No
1	**CHECK HARNESS BETWEEN ECM AND ACCELERATOR PEDAL POSITION SENSOR CONNECTOR.** 1) Turn the ignition switch to OFF. 2) Disconnect the connectors from ECM and accelerator pedal position sensor. 3) Measure the resistance of harness between ECM and accelerator pedal position sensor connector. ***Connector & terminal*** ***(B135) No. 23 — (B315) No. 6:*** ***(B135) No. 29 — (B315) No. 5:***	Is the resistance less than 1 Ω?	Go to step **2**.	Repair the open circuit in harness between ECM and accelerator pedal position sensor connector.
2	**CHECK HARNESS BETWEEN ECM AND ACCELERATOR PEDAL POSITION SENSOR CONNECTOR.** 1) Connect the connector to ECM. 2) Measure the resistance between accelerator pedal position sensor connector and chassis ground. ***Connector & terminal*** ***(B315) No. 5 — Chassis ground:***	Is the resistance less than 5 Ω?	Go to step **3**.	Repair the harness and connector. NOTE: In this case, repair the following item: • Open circuit of harness between ECM and engine ground • Poor contact of ECM connector • Poor contact of coupling connector
3	**CHECK HARNESS BETWEEN ECM AND ACCELERATOR PEDAL POSITION SENSOR CONNECTOR.** 1) Turn the ignition switch to ON. 2) Measure the voltage between accelerator pedal position sensor connector and chassis ground. ***Connector & terminal*** ***(B315) No. 6 (+) — Chassis ground (–):***	Is the voltage 5 V or more?	Repair the short circuit to power supply in the harness between the ECM and accelerator pedal position sensor connector.	Go to step **4**.
4	**CHECK HARNESS BETWEEN ECM AND ACCELERATOR PEDAL POSITION SENSOR CONNECTOR.** 1) Turn the ignition switch to OFF. 2) Disconnect the connectors from ECM. 3) Measure the resistance between ECM connectors. ***Connector & terminal*** ***(B135) No. 21 — (B135) No. 23:***	Is the resistance 1 MΩ or more?	Repair the poor contact of accelerator pedal position sensor connector. Replace the accelerator pedal if defective. <Ref. to SP(H4SO)-4, Accelerator Pedal.>	Repair the short circuit to power supply in the harness between the ECM and accelerator pedal position sensor connector.

GETtheMANUALS.org

DU:DTC P2127 THROTTLE/PEDAL POSITION SENSOR/SWITCH “E” CIRCUIT LOW INPUT

DTC DETECTING CONDITION:

- Immediately at fault recognition
- GENERAL DESCRIPTION <Ref. to GD(H4SO)-230, DTC P2127 THROTTLE/PEDAL POSITION SENSOR/SWITCH “E” CIRCUIT LOW INPUT, Diagnostic Trouble Code (DTC) Detecting Criteria.>

TROUBLE SYMPTOM:

- Improper idling
- Poor driving performance

CAUTION:

After servicing or replacing faulty parts, perform Clear Memory Mode <Ref. to EN(H4SO)(diag)-51, OPERATION, Clear Memory Mode.>, and Inspection Mode <Ref. to EN(H4SO)(diag)-40, PROCEDURE, Inspection Mode.>.

WIRING DIAGRAM:

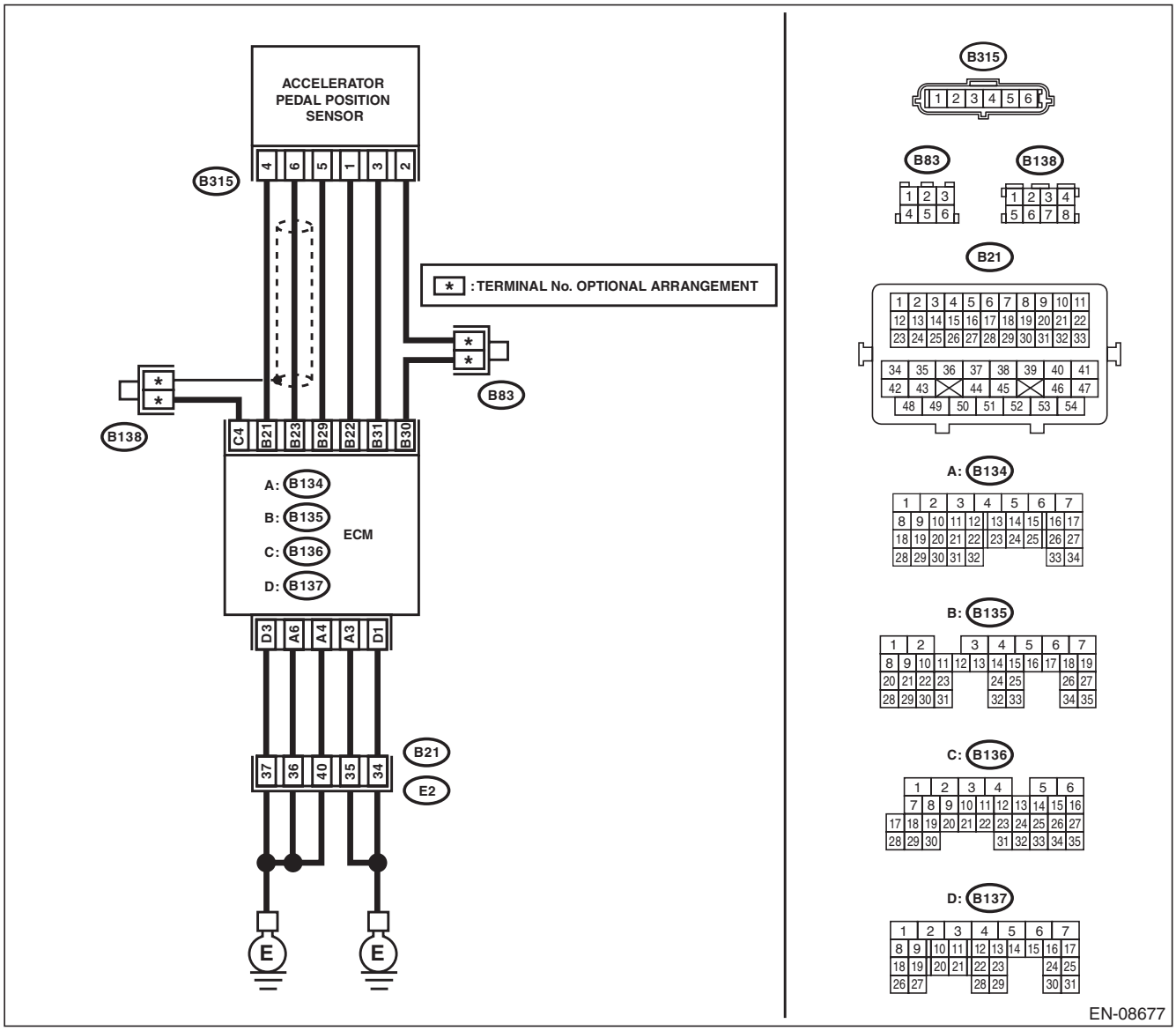

GETthemANUALS.org

Step		Check	Yes	No
1	**CHECK HARNESS BETWEEN ECM AND ACCELERATOR PEDAL POSITION SENSOR CONNECTOR.** 1) Turn the ignition switch to OFF. 2) Disconnect the connectors from ECM and accelerator pedal position sensor. 3) Measure the resistance between ECM and chassis ground. ***Connector & terminal*** ***(B135) No. 22 — Chassis ground:*** ***(B135) No. 31 — Chassis ground:***	Is the resistance 1 MΩ or more?	Go to step **2**.	Repair the short circuit to ground in harness between ECM and accelerator pedal position sensor connector.
2	**CHECK SHORT CIRCUIT INSIDE THE ECM.** 1) Connect the connector to ECM. 2) Measure the resistance between accelerator pedal position sensor connector and chassis ground. ***Connector & terminal*** ***(B315) No. 3 — Chassis ground:***	Is the resistance 1 MΩ or more?	Replace the accelerator pedal. <Ref. to SP(H4SO)-4, Accelerator Pedal.>	Repair the short circuit to ground in harness between ECM and accelerator pedal position sensor connector. Replace the ECM if defective. <Ref. to FU(H4SO)-46, Engine Control Module (ECM).>

GETthemANUALS.org

DV:DTC P2128 THROTTLE/PEDAL POSITION SENSOR/SWITCH “E” CIRCUIT HIGH INPUT

DTC DETECTING CONDITION:

- Immediately at fault recognition
- GENERAL DESCRIPTION <Ref. to GD(H4SO)-232, DTC P2128 THROTTLE/PEDAL POSITION SENSOR/SWITCH “E” CIRCUIT HIGH INPUT, Diagnostic Trouble Code (DTC) Detecting Criteria.>

TROUBLE SYMPTOM:

- Improper idling
- Poor driving performance

CAUTION:

After servicing or replacing faulty parts, perform Clear Memory Mode <Ref. to EN(H4SO)(diag)-51, OPERATION, Clear Memory Mode.>, and Inspection Mode <Ref. to EN(H4SO)(diag)-40, PROCEDURE, Inspection Mode.>.

WIRING DIAGRAM:

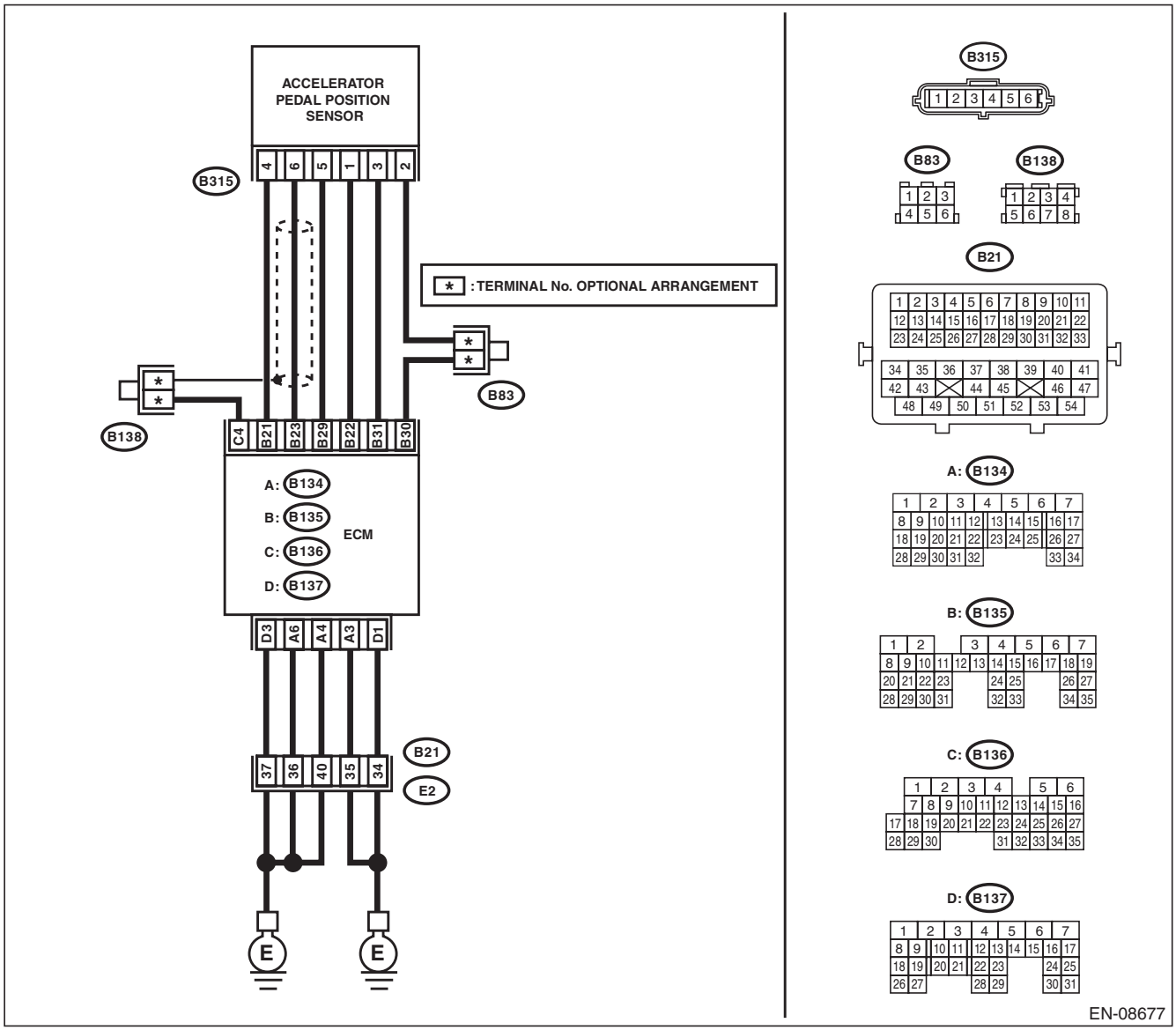

GETTHEMANUALS.org

	Step	Check	Yes	No
1	**CHECK HARNESS BETWEEN ECM AND ACCELERATOR PEDAL POSITION SENSOR CONNECTOR.** 1) Turn the ignition switch to OFF. 2) Disconnect the connectors from ECM and accelerator pedal position sensor. 3) Measure the resistance of harness between ECM and accelerator pedal position sensor connector. ***Connector & terminal*** ***(B135) No. 31 — (B315) No. 3:*** ***(B135) No. 30 — (B315) No. 2:***	Is the resistance less than 1 Ω?	Go to step **2**.	Repair the harness and connector. NOTE: In this case, repair the following item: • Open circuit in harness between ECM and accelerator pedal position sensor connector • Poor contact of joint connector
2	**CHECK HARNESS BETWEEN ECM AND ACCELERATOR PEDAL POSITION SENSOR CONNECTOR.** 1) Connect the connector to ECM. 2) Measure the resistance between accelerator pedal position sensor connector and chassis ground. ***Connector & terminal*** ***(B315) No. 2 — Chassis ground:***	Is the resistance less than 1 Ω?	Go to step **3**.	Repair the harness and connector. NOTE: In this case, repair the following item: • Open circuit of harness between ECM and engine ground • Poor contact of ECM connector • Poor contact of joint connector
3	**CHECK HARNESS BETWEEN ECM AND ACCELERATOR PEDAL POSITION SENSOR CONNECTOR.** 1) Turn the ignition switch to ON. 2) Measure the voltage between accelerator pedal position sensor connector and chassis ground. ***Connector & terminal*** ***(B315) No. 3 (+) — Chassis ground (–):***	Is the voltage 5 V or more?	Repair the short circuit to power supply in the harness between the ECM and accelerator pedal position sensor connector.	Go to step **4**.
4	**CHECK HARNESS BETWEEN ECM AND ACCELERATOR PEDAL POSITION SENSOR CONNECTOR.** 1) Turn the ignition switch to OFF. 2) Disconnect the connectors from ECM. 3) Measure the resistance between ECM connectors. ***Connector & terminal*** ***(B135) No. 22 — (B135) No. 31:***	Is the resistance 1 MΩ or more?	Repair the poor contact of accelerator pedal position sensor connector. Replace the accelerator pedal if defective. <Ref. to SP(H4SO)-4, Accelerator Pedal.>	Repair the short circuit to power supply in the harness between the ECM and accelerator pedal position sensor connector.

GETthemANUALS.org

DW:DTC P2135 THROTTLE/PEDAL POSITION SENSOR/SWITCH “A”/“B” VOLTAGE CORRELATION

DTC DETECTING CONDITION:

- Immediately at fault recognition
- GENERAL DESCRIPTION <Ref. to GD(H4SO)-234, DTC P2135 THROTTLE/PEDAL POSITION SENSOR/SWITCH “A”/“B” VOLTAGE CORRELATION, Diagnostic Trouble Code (DTC) Detecting Criteria.>

TROUBLE SYMPTOM:

- Improper idling
- Poor driving performance

CAUTION:

After servicing or replacing faulty parts, perform Clear Memory Mode <Ref. to EN(H4SO)(diag)-51, OPERATION, Clear Memory Mode.>, and Inspection Mode <Ref. to EN(H4SO)(diag)-40, PROCEDURE, Inspection Mode.>.

WIRING DIAGRAM:

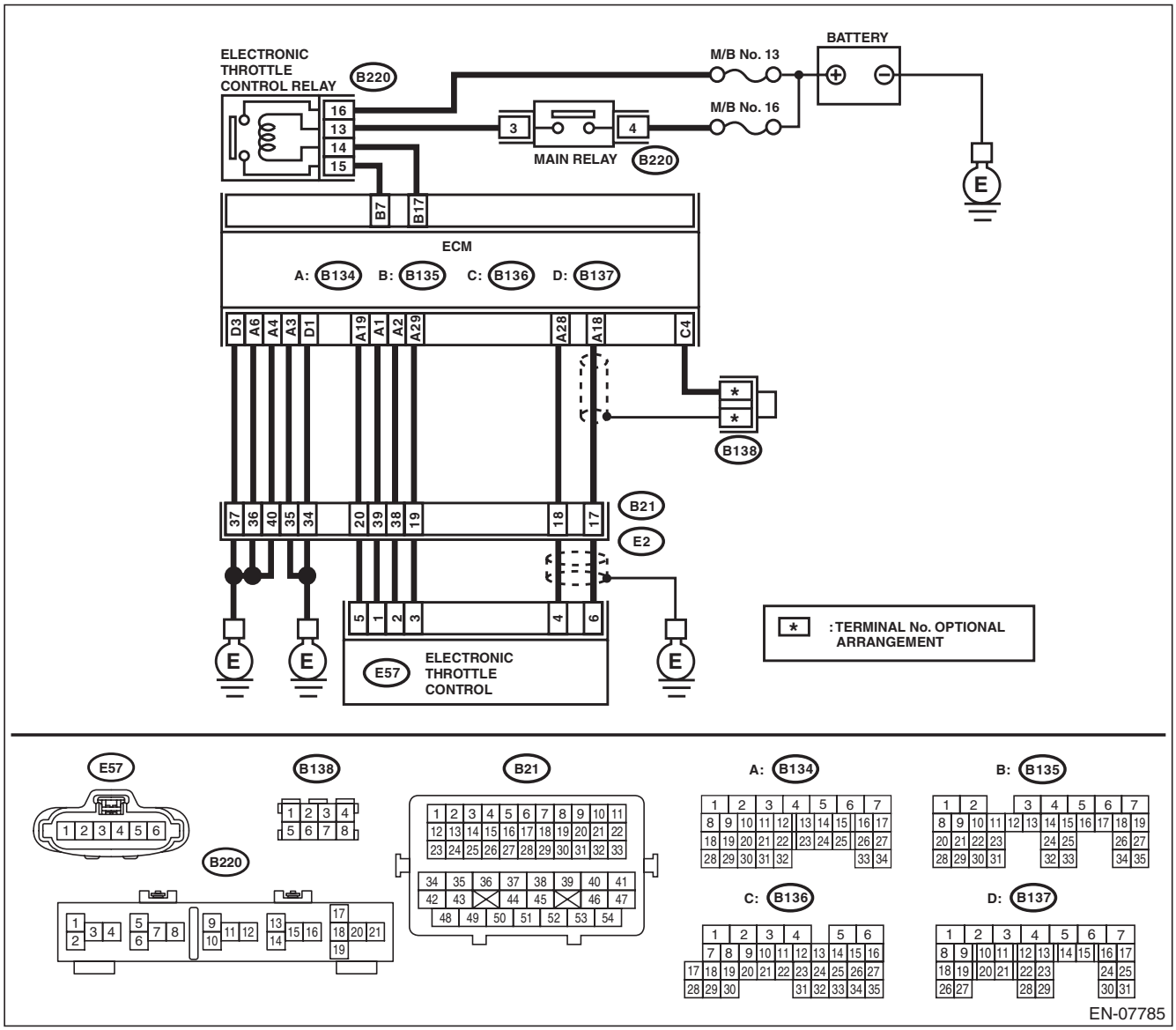

GETTHEMANUALS.org

	Step	Check	Yes	No
1	**CHECK HARNESS BETWEEN ECM AND ELECTRONIC THROTTLE CONTROL CONNECTOR.** 1) Turn the ignition switch to OFF. 2) Disconnect the connectors from ECM and electronic throttle control. 3) Measure the resistance between ECM and chassis ground. ***Connector & terminal*** ***(B134) No. 19 — Chassis ground:*** ***(B134) No. 18 — Chassis ground:*** ***(B134) No. 18 — (B136) No. 4:*** ***(B134) No. 28 — Chassis ground:***	Is the resistance 1 MΩ or more?	Go to step **2**.	Repair the short circuit to ground in harness between ECM and electronic throttle control connector.
2	**CHECK SHORT CIRCUIT INSIDE THE ECM.** 1) Connect the connector to ECM. 2) Measure the resistance between electronic throttle control connector and engine ground. ***Connector & terminal*** ***(E57) No. 6 — Engine ground:*** ***(E57) No. 4 — Engine ground:***	Is the resistance 1 MΩ or more?	Go to step **3**.	Repair the short circuit to ground in harness between ECM and electronic throttle control connector. Replace the ECM if defective. <Ref. to FU(H4SO)-46, Engine Control Module (ECM).>
3	**CHECK HARNESS BETWEEN ECM AND ELECTRONIC THROTTLE CONTROL CONNECTOR.** 1) Disconnect the connectors from ECM. 2) Measure the resistance of harness between ECM and electronic throttle control connector. ***Connector & terminal*** ***(B134) No. 18 — (E57) No. 6:*** ***(B134) No. 28 — (E57) No. 4:*** ***(B134) No. 29 — (E57) No. 3:***	Is the resistance less than 1 Ω?	Go to step **4**.	Repair the harness and connector. NOTE: In this case, repair the following item: • Open circuit in harness between ECM and electronic throttle control connector • Poor contact of coupling connector
4	**CHECK HARNESS BETWEEN ECM AND ELECTRONIC THROTTLE CONTROL CONNECTOR.** 1) Connect the connector to ECM. 2) Measure the resistance between electronic throttle control connector and engine ground. ***Connector & terminal*** ***(E57) No. 3 — Engine ground:***	Is the resistance less than 5 Ω?	Go to step **5**.	Repair the harness and connector. NOTE: In this case, repair the following item: • Open circuit of harness between ECM and engine ground • Poor contact of ECM connector • Poor contact of coupling connector
5	**CHECK HARNESS BETWEEN ECM AND ELECTRONIC THROTTLE CONTROL CONNECTOR.** 1) Turn the ignition switch to ON. 2) Measure the voltage between electronic throttle control connector and engine ground. ***Connector & terminal*** ***(E57) No. 6 (+) — Engine ground (–):*** ***(E57) No. 4 (+) — Engine ground (–):***	Is the voltage 5 V or more?	Repair the short circuit to power in harness between ECM and electronic throttle control connector.	Go to step **6**.

GETthemMANUALS.org

Step		Check	Yes	No
6	**CHECK HARNESS BETWEEN ECM AND ELECTRONIC THROTTLE CONTROL CONNECTOR.** 1) Turn the ignition switch to OFF. 2) Disconnect the connectors from ECM. 3) Measure the resistance between ECM connectors. ***Connector & terminal*** ***(B134) No. 19 — (B134) No. 18:*** ***(B134) No. 19 — (B134) No. 28:***	Is the resistance 1 MΩ or more?	Repair the poor contact of electronic throttle control connector. Replace the electronic throttle control if defective. <Ref. to FU(H4SO)-15, Throttle Body.>	Repair the short circuit to power in harness between ECM and electronic throttle control connector.

GETtheMANUALS.org

DX:DTC P2138 THROTTLE/PEDAL POSITION SENSOR/SWITCH “D”/“E” VOLTAGE CORRELATION

DTC DETECTING CONDITION:

- Immediately at fault recognition
- GENERAL DESCRIPTION <Ref. to GD(H4SO)-236, DTC P2138 THROTTLE/PEDAL POSITION SENSOR/SWITCH “D”/“E” VOLTAGE CORRELATION, Diagnostic Trouble Code (DTC) Detecting Criteria.>

TROUBLE SYMPTOM:

- Improper idling
- Poor driving performance

CAUTION:

After servicing or replacing faulty parts, perform Clear Memory Mode <Ref. to EN(H4SO)(diag)-51, OPERATION, Clear Memory Mode.>, and Inspection Mode <Ref. to EN(H4SO)(diag)-40, PROCEDURE, Inspection Mode.>.

WIRING DIAGRAM:

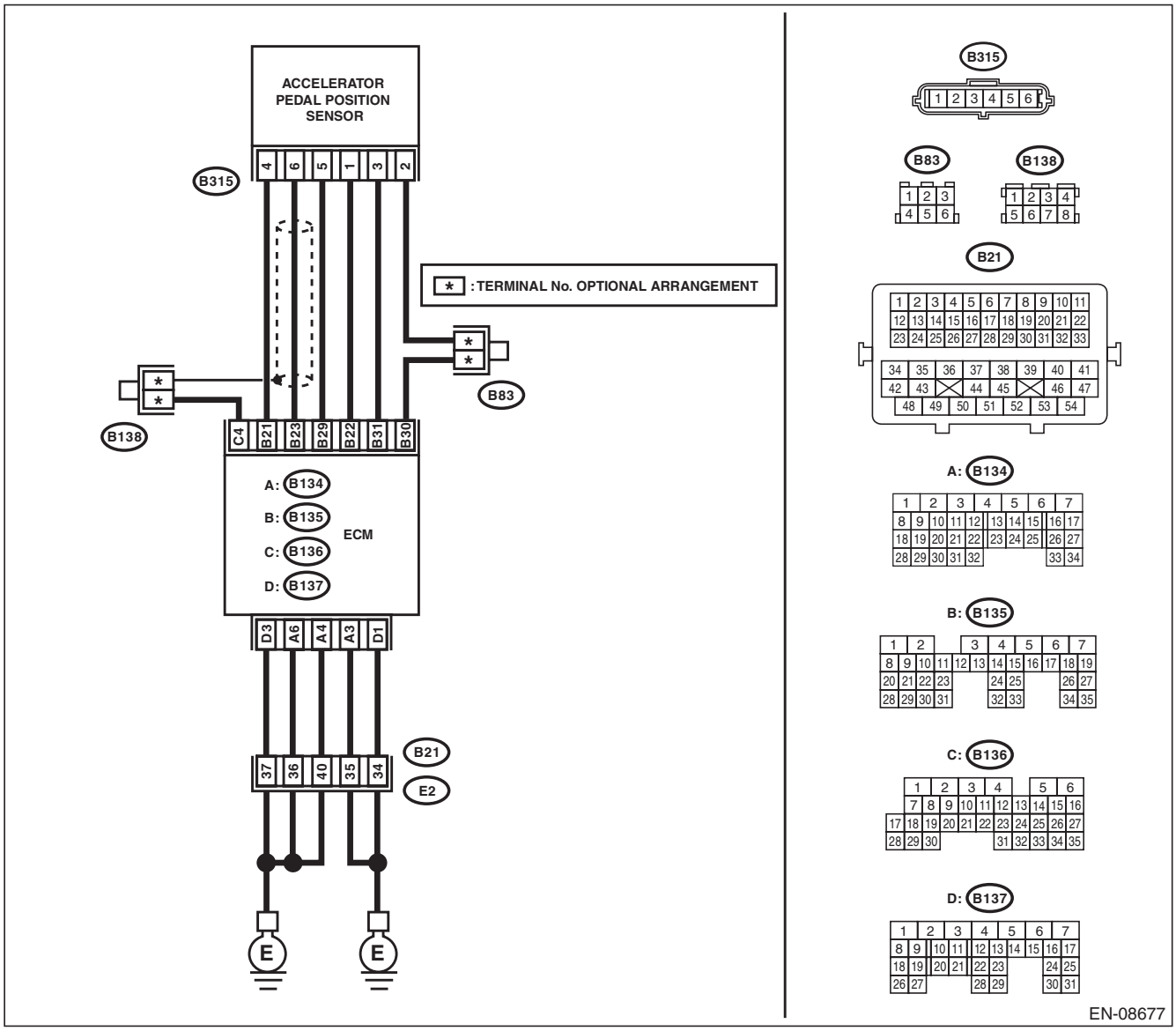

GETtheMANUALS.org

	Step	Check	Yes	No
1	**CHECK ACCELERATOR PEDAL POSITION SENSOR OUTPUT.** 1) Turn the ignition switch to ON. 2) Measure the voltage between ECM and chassis ground. ***Connector & terminal*** ***Main accelerator pedal position sensor signal*** ***(B135) No. 23 (+) — Chassis ground (–):*** ***Sub accelerator pedal position sensor signal*** ***(B135) No. 31 (+) — Chassis ground (–):***	Is the difference in measured values for the main accelerator pedal position sensor signal and the sub accelerator pedal position sensor signal 0 V?	Go to step **3**.	Go to step **2**.
2	**CHECK ACCELERATOR PEDAL POSITION SENSOR OUTPUT.** 1) Measure the voltage between accelerator pedal position sensor connector and chassis ground. ***Connector & terminal*** ***(B315) No. 6 (+) — Chassis ground (–):*** ***(B315) No. 3 (+) — Chassis ground (–):***	Is the difference in measured values for the main accelerator pedal position sensor signal and the sub accelerator pedal position sensor signal 0 V?	Replace the accelerator pedal. <Ref. to SP(H4SO)-4, Accelerator Pedal.>	Repair the harness and connector. NOTE: In this case, repair the following item: • Open circuit in harness between ECM and accelerator pedal position sensor connector • Short circuit to ground in harness between ECM and accelerator pedal position sensor connector
3	**CHECK HARNESS BETWEEN ECM AND ACCELERATOR PEDAL POSITION SENSOR CONNECTOR.** Measure the resistance of harness between the accelerator pedal position sensor connector and chassis ground. ***Connector & terminal*** ***(B315) No. 5 — Chassis ground:*** ***(B315) No. 2 — Chassis ground:***	Is the resistance less than 5 Ω?	Repair the poor contact of ECM connector.	Repair the harness and connector. NOTE: In this case, repair the following item: • Open circuit in harness between ECM and accelerator pedal position sensor connector • Open circuit of harness between ECM and engine ground • Poor contact of ECM connector • Poor contact of joint connector

GETthemANUALS.org

DY:DTC P2227 BAROMETRIC PRESSURE CIRCUIT RANGE/PERFORMANCE

DTC DETECTING CONDITION:

- Detected when two consecutive driving cycles with fault occur.
- GENERAL DESCRIPTION <Ref. to GD(H4SO)-238, DTC P2227 BAROMETRIC PRESSURE CIRCUIT RANGE/PERFORMANCE, Diagnostic Trouble Code (DTC) Detecting Criteria.>

CAUTION:

After servicing or replacing faulty parts, perform Clear Memory Mode <Ref. to EN(H4SO)(diag)-51, OPERATION, Clear Memory Mode.>, and Inspection Mode <Ref. to EN(H4SO)(diag)-40, PROCEDURE, Inspection Mode.>.

Step	Check	Yes	No
1 **CHECK FOR ANY OTHER DTC ON DISPLAY.**	Is any other DTC displayed?	Check DTC using "List of Diagnostic Trouble Code (DTC)". <Ref. to EN(H4SO)(diag)-78, List of Diagnostic Trouble Code (DTC).>	Replace the ECM. <Ref. to FU(H4SO)-46, Engine Control Module (ECM).> NOTE: The barometric pressure sensor is built into the ECM.

DZ:DTC P2228 BAROMETRIC PRESSURE CIRCUIT LOW

DTC DETECTING CONDITION:

- Immediately at fault recognition
- GENERAL DESCRIPTION <Ref. to GD(H4SO)-239, DTC P2228 BAROMETRIC PRESSURE CIRCUIT LOW, Diagnostic Trouble Code (DTC) Detecting Criteria.>

CAUTION:

After servicing or replacing faulty parts, perform Clear Memory Mode <Ref. to EN(H4SO)(diag)-51, OPERATION, Clear Memory Mode.>, and Inspection Mode <Ref. to EN(H4SO)(diag)-40, PROCEDURE, Inspection Mode.>.

Step	Check	Yes	No
1 **CHECK FOR ANY OTHER DTC ON DISPLAY.**	Is any other DTC displayed?	Check DTC using "List of Diagnostic Trouble Code (DTC)". <Ref. to EN(H4SO)(diag)-78, List of Diagnostic Trouble Code (DTC).>	Replace the ECM. <Ref. to FU(H4SO)-46, Engine Control Module (ECM).> NOTE: The barometric pressure sensor is built into the ECM.

GETthemANUALS.org

EA:DTC P2229 BAROMETRIC PRESSURE CIRCUIT HIGH

DTC DETECTING CONDITION:

- Immediately at fault recognition
- GENERAL DESCRIPTION <Ref. to GD(H4SO)-240, DTC P2229 BAROMETRIC PRESSURE CIRCUIT HIGH, Diagnostic Trouble Code (DTC) Detecting Criteria.>

CAUTION:

After servicing or replacing faulty parts, perform Clear Memory Mode <Ref. to EN(H4SO)(diag)-51, OPERATION, Clear Memory Mode.>, and Inspection Mode <Ref. to EN(H4SO)(diag)-40, PROCEDURE, Inspection Mode.>.

Step	Check	Yes	No
1 **CHECK FOR ANY OTHER DTC ON DISPLAY.**	Is any other DTC displayed?	Check DTC using "List of Diagnostic Trouble Code (DTC)". <Ref. to EN(H4SO)(diag)-78, List of Diagnostic Trouble Code (DTC).>	Replace the ECM. <Ref. to FU(H4SO)-46, Engine Control Module (ECM).> NOTE: The barometric pressure sensor is built into the ECM.

EB:DTC P2610 ECM/PCM INTERNAL ENGINE OFF TIMER PERFORMANCE

DTC DETECTING CONDITION:

- Detected when two consecutive driving cycles with fault occur.
- GENERAL DESCRIPTION <Ref. to GD(H4SO)-241, DTC P2610 ECM/PCM INTERNAL ENGINE OFF TIMER PERFORMANCE, Diagnostic Trouble Code (DTC) Detecting Criteria.>

CAUTION:

After servicing or replacing faulty parts, perform Clear Memory Mode <Ref. to EN(H4SO)(diag)-51, OPERATION, Clear Memory Mode.>, and Inspection Mode <Ref. to EN(H4SO)(diag)-40, PROCEDURE, Inspection Mode.>.

Step	Check	Yes	No
1 **CHECK FOR ANY OTHER DTC ON DISPLAY.**	Is any other DTC displayed?	Check DTC using "List of Diagnostic Trouble Code (DTC)". <Ref. to EN(H4SO)(diag)-78, List of Diagnostic Trouble Code (DTC).>	Replace the ECM. <Ref. to FU(H4SO)-46, Engine Control Module (ECM).> NOTE: The soak timer IC is built into the ECM.

GET THE MANUALS.org

EC:DTC U0073 CAN FAILURE, BUS ‘OFF’ DETECTION

NOTE:
For the diagnostic procedure, refer to LAN section. <Ref. to LAN(diag)-2, Basic Diagnostic Procedure.>

ED:DTC U0101 CAN (TCU) DATA NOT LOADED

NOTE:
For the diagnostic procedure, refer to LAN section. <Ref. to LAN(diag)-2, Basic Diagnostic Procedure.>

EE:DTC U0122 CAN (VDC) DATA NOT LOADED

NOTE:
For the diagnostic procedure, refer to LAN section. <Ref. to LAN(diag)-2, Basic Diagnostic Procedure.>

EF:DTC U0140 CAN (BCU) DATA NOT LOADED

NOTE:
For the diagnostic procedure, refer to LAN section. <Ref. to LAN(diag)-2, Basic Diagnostic Procedure.>

EG:DTC U0402 CAN (TCU) DATA ABNORMAL

NOTE:
For the diagnostic procedure, refer to LAN section. <Ref. to LAN(diag)-2, Basic Diagnostic Procedure.>

EH:DTC U0416 CAN (VDC) DATA ABNORMAL

NOTE:
For the diagnostic procedure, refer to LAN section. <Ref. to LAN(diag)-2, Basic Diagnostic Procedure.>

EI: DTC U0422 CAN (BCU) DATA ABNORMAL

NOTE:
For the diagnostic procedure, refer to LAN section. <Ref. to LAN(diag)-2, Basic Diagnostic Procedure.>

GET THE MANUALS.org

20. General Diagnostic Table

A: INSPECTION

1. ENGINE

NOTE:
Malfunction of parts other than those listed is also possible. <Ref. to ME(H4SO)-102, Engine Trouble in General.>

Symptoms	Faulty parts
1. Engine stalls during idling.	1) Manifold absolute pressure sensor 2) Mass air flow and intake air temperature sensor 3) Ignition parts (*1) 4) Engine coolant temperature sensor (*2) 5) Crankshaft position sensor (*3) 6) Camshaft position sensor (*3) 7) Fuel injection parts (*4) 8) Electronic throttle control
2. Rough idling	1) Manifold absolute pressure sensor 2) Mass air flow and intake air temperature sensor 3) Engine coolant temperature sensor (*2) 4) Ignition parts (*1) 5) Air intake system (*5) 6) Fuel injection parts (*4) 7) Electronic throttle control 8) Crankshaft position sensor (*3) 9) Camshaft position sensor (*3) 10) Oxygen sensor 11) Fuel pump and fuel pump relay 12) EGR control valve 13) Oil switching solenoid valve
3. Engine does not return to idle.	1) Engine coolant temperature sensor 2) Electronic throttle control 3) Manifold absolute pressure sensor 4) Mass air flow and intake air temperature sensor 5) EGR control valve 6) Accelerator pedal position sensor 7) Engine oil temperature sensor
4. Poor acceleration	1) Manifold absolute pressure sensor 2) Mass air flow and intake air temperature sensor 3) Electronic throttle control 4) Fuel injection parts (*4) 5) Fuel pump and fuel pump relay 6) Engine coolant temperature sensor (*2) 7) Crankshaft position sensor (*3) 8) Camshaft position sensor (*3) 9) Engine torque control signal circuit 10) Ignition parts (*1) 11) EGR control valve 12) Accelerator pedal position sensor 13) Engine oil temperature sensor 14) Oil switching solenoid valve

GETtheMANUALS.org

Symptoms	Faulty parts
5. Engine stalls, hesitates, or sputters at acceleration.	1) Manifold absolute pressure sensor 2) Mass air flow and intake air temperature sensor 3) Engine coolant temperature sensor (*2) 4) Crankshaft position sensor (*3) 5) Camshaft position sensor (*3) 6) Purge control solenoid valve 7) Fuel injection parts (*4) 8) Electronic throttle control 9) Fuel pump and fuel pump relay 10) EGR control valve
6. Surging	1) Mass air flow and intake air temperature sensor 2) Manifold absolute pressure sensor 3) Engine coolant temperature sensor (*2) 4) Crankshaft position sensor (*3) 5) Camshaft position sensor (*3) 6) Fuel injection parts (*4) 7) Electronic throttle control 8) Fuel pump and fuel pump relay 9) EGR control valve
7. Spark knock	1) Mass air flow and intake air temperature sensor 2) Manifold absolute pressure sensor 3) Engine coolant temperature sensor 4) Knock sensor 5) Fuel injection parts (*4) 6) Fuel pump and fuel pump relay 7) EGR control valve 8) Oil switching solenoid valve
8. After burning in exhaust system	1) Mass air flow and intake air temperature sensor 2) Manifold absolute pressure sensor 3) Engine coolant temperature sensor (*2) 4) Fuel injection parts (*4) 5) Fuel pump and fuel pump relay

*1: Check ignition coil and spark plug.
*2: Indicate the symptom occurring only in cold temperatures.
*3: Ensure the secure installation.
*4: Check fuel injector, fuel pressure regulator and fuel filter.
*5: Inspect air leak in air intake system.

GETtheMANUALS.org

GETtheMANUALS.org

GENERAL DESCRIPTION

GD(H4SO)

Page

1. List of Diagnostic Trouble Code (DTC) 2
2. Diagnostic Trouble Code (DTC) Detecting Criteria 9

GETtheMANUALS.org

1. List of Diagnostic Trouble Code (DTC)

A: LIST

DTC	Item	Index
P0026	Intake Valve Control Solenoid Circuit Range/Performance (Bank 1)	<Ref. to GD(H4SO)-9, DTC P0026 INTAKE VALVE CONTROL SOLENOID CIRCUIT RANGE/PERFORMANCE (BANK 1), Diagnostic Trouble Code (DTC) Detecting Criteria.>
P0028	Intake Valve Control Solenoid Circuit Range/Performance (Bank 2)	<Ref. to GD(H4SO)-10, DTC P0028 INTAKE VALVE CONTROL SOLENOID CIRCUIT RANGE/PERFORMANCE (BANK 2), Diagnostic Trouble Code (DTC) Detecting Criteria.>
P0030	HO2S Heater Control Circuit (Bank 1 Sensor 1)	<Ref. to GD(H4SO)-11, DTC P0030 HO2S HEATER CONTROL CIRCUIT (BANK 1 SENSOR 1), Diagnostic Trouble Code (DTC) Detecting Criteria.>
P0031	HO2S Heater Control Circuit Low (Bank 1 Sensor 1)	<Ref. to GD(H4SO)-13, DTC P0031 HO2S HEATER CONTROL CIRCUIT LOW (BANK 1 SENSOR 1), Diagnostic Trouble Code (DTC) Detecting Criteria.>
P0032	HO2S Heater Control Circuit High (Bank 1 Sensor 1)	<Ref. to GD(H4SO)-15, DTC P0032 HO2S HEATER CONTROL CIRCUIT HIGH (BANK 1 SENSOR 1), Diagnostic Trouble Code (DTC) Detecting Criteria.>
P0037	HO2S Heater Control Circuit Low (Bank 1 Sensor 2)	<Ref. to GD(H4SO)-17, DTC P0037 HO2S HEATER CONTROL CIRCUIT LOW (BANK 1 SENSOR 2), Diagnostic Trouble Code (DTC) Detecting Criteria.>
P0038	HO2S Heater Control Circuit High (Bank 1 Sensor 2)	<Ref. to GD(H4SO)-19, DTC P0038 HO2S HEATER CONTROL CIRCUIT HIGH (BANK 1 SENSOR 2), Diagnostic Trouble Code (DTC) Detecting Criteria.>
P0068	MAP/MAF - Throttle Position Correlation	<Ref. to GD(H4SO)-21, DTC P0068 MAP/MAF - THROTTLE POSITION CORRELATION, Diagnostic Trouble Code (DTC) Detecting Criteria.>
P0076	Intake Valve Control Solenoid Circuit Low (Bank 1)	<Ref. to GD(H4SO)-23, DTC P0076 INTAKE VALVE CONTROL SOLENOID CIRCUIT LOW (BANK 1), Diagnostic Trouble Code (DTC) Detecting Criteria.>
P0077	Intake Valve Control Solenoid Circuit High (Bank 1)	<Ref. to GD(H4SO)-24, DTC P0077 INTAKE VALVE CONTROL SOLENOID CIRCUIT HIGH (BANK 1), Diagnostic Trouble Code (DTC) Detecting Criteria.>
P0082	Intake Valve Control Solenoid Circuit Low (Bank 2)	<Ref. to GD(H4SO)-24, DTC P0082 INTAKE VALVE CONTROL SOLENOID CIRCUIT LOW (BANK 2), Diagnostic Trouble Code (DTC) Detecting Criteria.>
P0083	Intake Valve Control Solenoid Circuit High (Bank 2)	<Ref. to GD(H4SO)-24, DTC P0083 INTAKE VALVE CONTROL SOLENOID CIRCUIT HIGH (BANK 2), Diagnostic Trouble Code (DTC) Detecting Criteria.>
P0101	Mass or Volume Air Flow Circuit Range/Performance	<Ref. to GD(H4SO)-25, DTC P0101 MASS OR VOLUME AIR FLOW CIRCUIT RANGE/PERFORMANCE, Diagnostic Trouble Code (DTC) Detecting Criteria.>
P0102	Mass or Volume Air Flow Circuit Low Input	<Ref. to GD(H4SO)-28, DTC P0102 MASS OR VOLUME AIR FLOW CIRCUIT LOW INPUT, Diagnostic Trouble Code (DTC) Detecting Criteria.>
P0103	Mass or Volume Air Flow Circuit High Input	<Ref. to GD(H4SO)-30, DTC P0103 MASS OR VOLUME AIR FLOW CIRCUIT HIGH INPUT, Diagnostic Trouble Code (DTC) Detecting Criteria.>
P0107	Manifold Absolute Pressure/Barometric Pressure Circuit Low Input	<Ref. to GD(H4SO)-32, DTC P0107 MANIFOLD ABSOLUTE PRESSURE/BAROMETRIC PRESSURE CIRCUIT LOW INPUT, Diagnostic Trouble Code (DTC) Detecting Criteria.>
P0108	Manifold Absolute Pressure/Barometric Pressure Circuit High Input	<Ref. to GD(H4SO)-34, DTC P0108 MANIFOLD ABSOLUTE PRESSURE/BAROMETRIC PRESSURE CIRCUIT HIGH INPUT, Diagnostic Trouble Code (DTC) Detecting Criteria.>
P0111	Intake Air Temperature Sensor 1 Circuit Range/Performance	<Ref. to GD(H4SO)-36, DTC P0111 INTAKE AIR TEMPERATURE SENSOR 1 CIRCUIT RANGE/PERFORMANCE, Diagnostic Trouble Code (DTC) Detecting Criteria.>
P0112	Intake Air Temperature Sensor 1 Circuit Low	<Ref. to GD(H4SO)-39, DTC P0112 INTAKE AIR TEMPERATURE SENSOR 1 CIRCUIT LOW, Diagnostic Trouble Code (DTC) Detecting Criteria.>

GETtheMANUALS.org

List of Diagnostic Trouble Code (DTC)

DTC	Item	Index
P0113	Intake Air Temperature Sensor 1 Circuit High	<Ref. to GD(H4SO)-41, DTC P0113 INTAKE AIR TEMPERATURE SENSOR 1 CIRCUIT HIGH, Diagnostic Trouble Code (DTC) Detecting Criteria.>
P0117	Engine Coolant Temperature Circuit Low	<Ref. to GD(H4SO)-43, DTC P0117 ENGINE COOLANT TEMPERATURE CIRCUIT LOW, Diagnostic Trouble Code (DTC) Detecting Criteria.>
P0118	Engine Coolant Temperature Circuit High	<Ref. to GD(H4SO)-45, DTC P0118 ENGINE COOLANT TEMPERATURE CIRCUIT HIGH, Diagnostic Trouble Code (DTC) Detecting Criteria.>
P0122	Throttle/Pedal Position Sensor/ Switch “A” Circuit Low	<Ref. to GD(H4SO)-47, DTC P0122 THROTTLE/PEDAL POSITION SENSOR/SWITCH “A” CIRCUIT LOW, Diagnostic Trouble Code (DTC) Detecting Criteria.>
P0123	Throttle/Pedal Position Sensor/ Switch “A” Circuit High	<Ref. to GD(H4SO)-49, DTC P0123 THROTTLE/PEDAL POSITION SENSOR/SWITCH “A” CIRCUIT HIGH, Diagnostic Trouble Code (DTC) Detecting Criteria.>
P0125	Insufficient Coolant Temperature for Closed Loop Fuel Control	<Ref. to GD(H4SO)-51, DTC P0125 INSUFFICIENT COOLANT TEMPERATURE FOR CLOSED LOOP FUEL CONTROL, Diagnostic Trouble Code (DTC) Detecting Criteria.>
P0126	Insufficient Engine Coolant Temperature for Stable Operation	<Ref. to GD(H4SO)-53, DTC P0126 INSUFFICIENT ENGINE COOLANT TEMPERATURE FOR STABLE OPERATION, Diagnostic Trouble Code (DTC) Detecting Criteria.>
P0128	Coolant Thermostat (Engine Coolant Temperature Below Thermostat Regulating Temperature)	<Ref. to GD(H4SO)-55, DTC P0128 COOLANT THERMOSTAT (ENGINE COOLANT TEMPERATURE BELOW THERMOSTAT REGULATING TEMPERATURE), Diagnostic Trouble Code (DTC) Detecting Criteria.>
P0131	O2 Sensor Circuit Low Voltage (Bank 1 Sensor 1)	<Ref. to GD(H4SO)-59, DTC P0131 O2 SENSOR CIRCUIT LOW VOLTAGE (BANK 1 SENSOR 1), Diagnostic Trouble Code (DTC) Detecting Criteria.>
P0132	O2 Sensor Circuit High Voltage (Bank 1 Sensor 1)	<Ref. to GD(H4SO)-61, DTC P0132 O2 SENSOR CIRCUIT HIGH VOLTAGE (BANK 1 SENSOR 1), Diagnostic Trouble Code (DTC) Detecting Criteria.>
P0133	O2 Sensor Circuit Slow Response (Bank 1 Sensor 1)	<Ref. to GD(H4SO)-63, DTC P0133 O2 SENSOR CIRCUIT SLOW RESPONSE (BANK 1 SENSOR 1), Diagnostic Trouble Code (DTC) Detecting Criteria.>
P0134	O2 Sensor Circuit No Activity Detected (Bank 1 Sensor 1)	<Ref. to GD(H4SO)-66, DTC P0134 O2 SENSOR CIRCUIT NO ACTIVITY DETECTED (BANK 1 SENSOR 1), Diagnostic Trouble Code (DTC) Detecting Criteria.>
P0137	O2 Sensor Circuit Low Voltage (Bank 1 Sensor 2)	<Ref. to GD(H4SO)-68, DTC P0137 O2 SENSOR CIRCUIT LOW VOLTAGE (BANK 1 SENSOR 2), Diagnostic Trouble Code (DTC) Detecting Criteria.>
P0138	O2 Sensor Circuit High Voltage (Bank 1 Sensor 2)	<Ref. to GD(H4SO)-71, DTC P0138 O2 SENSOR CIRCUIT HIGH VOLTAGE (BANK 1 SENSOR 2), Diagnostic Trouble Code (DTC) Detecting Criteria.>
P013A	O2 Sensor Slow Response - Rich to Lean (Bank 1 Sensor 2)	<Ref. to GD(H4SO)-72, DTC P013A O2 SENSOR SLOW RESPONSE - RICH TO LEAN (BANK 1 SENSOR 2), Diagnostic Trouble Code (DTC) Detecting Criteria.>
P013B	O2 Sensor Slow Response - Lean to Rich (Bank 1 Sensor 2)	<Ref. to GD(H4SO)-74, DTC P013B O2 SENSOR SLOW RESPONSE - LEAN TO RICH (BANK 1 SENSOR 2), Diagnostic Trouble Code (DTC) Detecting Criteria.>
P013E	O2 Sensor Delayed Response - Rich to Lean (Bank 1 Sensor 2)	<Ref. to GD(H4SO)-76, DTC P013E O2 SENSOR DELAYED RESPONSE - RICH TO LEAN (BANK 1 SENSOR 2), Diagnostic Trouble Code (DTC) Detecting Criteria.>
P013F	O2 Sensor Delayed Response - Lean to Rich (Bank 1 Sensor 2)	<Ref. to GD(H4SO)-78, DTC P013F O2 SENSOR DELAYED RESPONSE - LEAN TO RICH (BANK 1 SENSOR 2), Diagnostic Trouble Code (DTC) Detecting Criteria.>
P0140	O2 Sensor Circuit No Activity Detected (Bank1 Sensor2)	<Ref. to GD(H4SO)-80, DTC P0140 O2 SENSOR CIRCUIT NO ACTIVITY DETECTED (BANK1 SENSOR2), Diagnostic Trouble Code (DTC) Detecting Criteria.>
P0141	O2 Sensor Heater Circuit (Bank1 Sensor2)	<Ref. to GD(H4SO)-82, DTC P0141 O2 SENSOR HEATER CIRCUIT (BANK1 SENSOR2), Diagnostic Trouble Code (DTC) Detecting Criteria.>
P014C	O2 Sensor Slow Response - Rich to Lean (Bank 1 Sensor 1)	<Ref. to GD(H4SO)-84, DTC P014C O2 SENSOR SLOW RESPONSE - RICH TO LEAN (BANK 1 SENSOR 1), Diagnostic Trouble Code (DTC) Detecting Criteria.>

GETtheMANUALS.org

List of Diagnostic Trouble Code (DTC)

DTC	Item	Index
P014D	O2 Sensor Slow Response - Lean to Rich (Bank 1 Sensor 1)	<Ref. to GD(H4SO)-86, DTC P014D O2 SENSOR SLOW RESPONSE - LEAN TO RICH (BANK 1 SENSOR 1), Diagnostic Trouble Code (DTC) Detecting Criteria.>
P015A	O2 Sensor Delayed Response - Rich to Lean (Bank 1 Sensor 1)	<Ref. to GD(H4SO)-87, DTC P015A O2 SENSOR DELAYED RESPONSE - RICH TO LEAN (BANK 1 SENSOR 1), Diagnostic Trouble Code (DTC) Detecting Criteria.>
P015B	O2 Sensor Delayed Response - Lean to Rich (Bank 1 Sensor 1)	<Ref. to GD(H4SO)-89, DTC P015B O2 SENSOR DELAYED RESPONSE - LEAN TO RICH (BANK 1 SENSOR 1), Diagnostic Trouble Code (DTC) Detecting Criteria.>
P0171	System Too Lean (Bank 1)	<Ref. to GD(H4SO)-90, DTC P0171 SYSTEM TOO LEAN (BANK 1), Diagnostic Trouble Code (DTC) Detecting Criteria.>
P0172	System Too Rich (Bank 1)	<Ref. to GD(H4SO)-92, DTC P0172 SYSTEM TOO RICH (BANK 1), Diagnostic Trouble Code (DTC) Detecting Criteria.>
P0181	Fuel Temperature Sensor “A” Circuit Range/Performance	<Ref. to GD(H4SO)-94, DTC P0181 FUEL TEMPERATURE SENSOR “A” CIRCUIT RANGE/PERFORMANCE, Diagnostic Trouble Code (DTC) Detecting Criteria.>
P0182	Fuel Temperature Sensor “A” Circuit Low Input	<Ref. to GD(H4SO)-97, DTC P0182 FUEL TEMPERATURE SENSOR “A” CIRCUIT LOW INPUT, Diagnostic Trouble Code (DTC) Detecting Criteria.>
P0183	Fuel Temperature Sensor “A” Circuit High Input	<Ref. to GD(H4SO)-99, DTC P0183 FUEL TEMPERATURE SENSOR “A” CIRCUIT HIGH INPUT, Diagnostic Trouble Code (DTC) Detecting Criteria.>
P0196	Engine Oil Temperature Sensor Circuit Range/Performance	<Ref. to GD(H4SO)-101, DTC P0196 ENGINE OIL TEMPERATURE SENSOR CIRCUIT RANGE/PERFORMANCE, Diagnostic Trouble Code (DTC) Detecting Criteria.>
P0197	Engine Oil Temperature Sensor Low	<Ref. to GD(H4SO)-103, DTC P0197 ENGINE OIL TEMPERATURE SENSOR LOW, Diagnostic Trouble Code (DTC) Detecting Criteria.>
P0198	Engine Oil Temperature Sensor High	<Ref. to GD(H4SO)-104, DTC P0198 ENGINE OIL TEMPERATURE SENSOR HIGH, Diagnostic Trouble Code (DTC) Detecting Criteria.>
P0201	Injector #1	<Ref. to GD(H4SO)-105, DTC P0201 INJECTOR #1, Diagnostic Trouble Code (DTC) Detecting Criteria.>
P0202	Injector #2	<Ref. to GD(H4SO)-106, DTC P0202 INJECTOR #2, Diagnostic Trouble Code (DTC) Detecting Criteria.>
P0203	Injector #3	<Ref. to GD(H4SO)-106, DTC P0203 INJECTOR #3, Diagnostic Trouble Code (DTC) Detecting Criteria.>
P0204	Injector #4	<Ref. to GD(H4SO)-106, DTC P0204 INJECTOR #4, Diagnostic Trouble Code (DTC) Detecting Criteria.>
P0222	Throttle/Pedal Position Sensor/Switch “B” Circuit Low	<Ref. to GD(H4SO)-107, DTC P0222 THROTTLE/PEDAL POSITION SENSOR/SWITCH “B” CIRCUIT LOW, Diagnostic Trouble Code (DTC) Detecting Criteria.>
P0223	Throttle/Pedal Position Sensor/Switch “B” Circuit High	<Ref. to GD(H4SO)-109, DTC P0223 THROTTLE/PEDAL POSITION SENSOR/SWITCH “B” CIRCUIT HIGH, Diagnostic Trouble Code (DTC) Detecting Criteria.>
P0301	Cylinder 1 Misfire Detected	<Ref. to GD(H4SO)-111, DTC P0301 CYLINDER 1 MISFIRE DETECTED, Diagnostic Trouble Code (DTC) Detecting Criteria.>
P0302	Cylinder 2 Misfire Detected	<Ref. to GD(H4SO)-121, DTC P0302 CYLINDER 2 MISFIRE DETECTED, Diagnostic Trouble Code (DTC) Detecting Criteria.>
P0303	Cylinder 3 Misfire Detected	<Ref. to GD(H4SO)-121, DTC P0303 CYLINDER 3 MISFIRE DETECTED, Diagnostic Trouble Code (DTC) Detecting Criteria.>
P0304	Cylinder 4 Misfire Detected	<Ref. to GD(H4SO)-121, DTC P0304 CYLINDER 4 MISFIRE DETECTED, Diagnostic Trouble Code (DTC) Detecting Criteria.>
P0327	Knock Sensor 1 Circuit Low (Bank 1 or Single Sensor)	<Ref. to GD(H4SO)-122, DTC P0327 KNOCK SENSOR 1 CIRCUIT LOW (BANK 1 OR SINGLE SENSOR), Diagnostic Trouble Code (DTC) Detecting Criteria.>
P0328	Knock Sensor 1 Circuit High (Bank 1 or Single Sensor)	<Ref. to GD(H4SO)-124, DTC P0328 KNOCK SENSOR 1 CIRCUIT HIGH (BANK 1 OR SINGLE SENSOR), Diagnostic Trouble Code (DTC) Detecting Criteria.>

GETtheMANUALS.org

List of Diagnostic Trouble Code (DTC)

DTC	Item	Index
P0335	Crankshaft Position Sensor “A” Circuit	<Ref. to GD(H4SO)-126, DTC P0335 CRANKSHAFT POSITION SENSOR “A” CIRCUIT, Diagnostic Trouble Code (DTC) Detecting Criteria.>
P0336	Crankshaft Position Sensor “A” Circuit Range/Performance	<Ref. to GD(H4SO)-128, DTC P0336 CRANKSHAFT POSITION SENSOR “A” CIRCUIT RANGE/PERFORMANCE, Diagnostic Trouble Code (DTC) Detecting Criteria.>
P0340	Camshaft Position Sensor “A” Circuit (Bank 1 or Single Sensor)	<Ref. to GD(H4SO)-130, DTC P0340 CAMSHAFT POSITION SENSOR “A” CIRCUIT (BANK 1 OR SINGLE SENSOR), Diagnostic Trouble Code (DTC) Detecting Criteria.>
P0341	Camshaft Position Sensor “A” Circuit Range/Performance (Bank 1 or Single Sensor)	<Ref. to GD(H4SO)-132, DTC P0341 CAMSHAFT POSITION SENSOR “A” CIRCUIT RANGE/PERFORMANCE (BANK 1 OR SINGLE SENSOR), Diagnostic Trouble Code (DTC) Detecting Criteria.>
P0351	Ignition Coil A Primary/Secondary Circuit	<Ref. to GD(H4SO)-134, DTC P0351 IGNITION COIL A PRIMARY/SECONDARY CIRCUIT, Diagnostic Trouble Code (DTC) Detecting Criteria.>
P0352	Ignition Coil B Primary/Secondary Circuit	<Ref. to GD(H4SO)-134, DTC P0352 IGNITION COIL B PRIMARY/SECONDARY CIRCUIT, Diagnostic Trouble Code (DTC) Detecting Criteria.>
P0353	Ignition Coil C Primary/Secondary Circuit	<Ref. to GD(H4SO)-134, DTC P0353 IGNITION COIL C PRIMARY/SECONDARY CIRCUIT, Diagnostic Trouble Code (DTC) Detecting Criteria.>
P0354	Ignition Coil D Primary/Secondary Circuit	<Ref. to GD(H4SO)-134, DTC P0354 IGNITION COIL D PRIMARY/SECONDARY CIRCUIT, Diagnostic Trouble Code (DTC) Detecting Criteria.>
P0400	Exhaust Gas Recirculation Flow	<Ref. to GD(H4SO)-135, DTC P0400 EXHAUST GAS RECIRCULATION FLOW, Diagnostic Trouble Code (DTC) Detecting Criteria.>
P0420	Catalyst System Efficiency Below Threshold (Bank 1)	<Ref. to GD(H4SO)-138, DTC P0420 CATALYST SYSTEM EFFICIENCY BELOW THRESHOLD (BANK 1), Diagnostic Trouble Code (DTC) Detecting Criteria.>
P0442	Evaporative Emission Control System Leak Detected (Small Leak)	<Ref. to GD(H4SO)-141, DTC P0442 EVAPORATIVE EMISSION CONTROL SYSTEM LEAK DETECTED (SMALL LEAK), Diagnostic Trouble Code (DTC) Detecting Criteria.>
P0447	Evaporative Emission Control System Vent Control Circuit Open	<Ref. to GD(H4SO)-155, DTC P0447 EVAPORATIVE EMISSION CONTROL SYSTEM VENT CONTROL CIRCUIT OPEN, Diagnostic Trouble Code (DTC) Detecting Criteria.>
P0448	Evaporative Emission Control System Vent Control Circuit Shorted	<Ref. to GD(H4SO)-157, DTC P0448 EVAPORATIVE EMISSION CONTROL SYSTEM VENT CONTROL CIRCUIT SHORTED, Diagnostic Trouble Code (DTC) Detecting Criteria.>
P0451	Evaporative Emission Control System Pressure Sensor	<Ref. to GD(H4SO)-159, DTC P0451 EVAPORATIVE EMISSION CONTROL SYSTEM PRESSURE SENSOR, Diagnostic Trouble Code (DTC) Detecting Criteria.>
P0452	Evaporative Emission Control System Pressure Sensor Low Input	<Ref. to GD(H4SO)-163, DTC P0452 EVAPORATIVE EMISSION CONTROL SYSTEM PRESSURE SENSOR LOW INPUT, Diagnostic Trouble Code (DTC) Detecting Criteria.>
P0453	Evaporative Emission Control System Pressure Sensor High Input	<Ref. to GD(H4SO)-165, DTC P0453 EVAPORATIVE EMISSION CONTROL SYSTEM PRESSURE SENSOR HIGH INPUT, Diagnostic Trouble Code (DTC) Detecting Criteria.>
P0456	Evaporative Emission Control System Leak Detected (Very Small Leak)	<Ref. to GD(H4SO)-166, DTC P0456 EVAPORATIVE EMISSION CONTROL SYSTEM LEAK DETECTED (VERY SMALL LEAK), Diagnostic Trouble Code (DTC) Detecting Criteria.>
P0457	Evaporative Emission Control System Leak Detected (Fuel Cap Loose/Off)	<Ref. to GD(H4SO)-166, DTC P0457 EVAPORATIVE EMISSION CONTROL SYSTEM LEAK DETECTED (FUEL CAP LOOSE/OFF), Diagnostic Trouble Code (DTC) Detecting Criteria.>
P0458	Evaporative Emission System Purge Control Valve Circuit Low	<Ref. to GD(H4SO)-167, DTC P0458 EVAPORATIVE EMISSION SYSTEM PURGE CONTROL VALVE CIRCUIT LOW, Diagnostic Trouble Code (DTC) Detecting Criteria.>
P0459	Evaporative Emission System Purge Control Valve Circuit High	<Ref. to GD(H4SO)-169, DTC P0459 EVAPORATIVE EMISSION SYSTEM PURGE CONTROL VALVE CIRCUIT HIGH, Diagnostic Trouble Code (DTC) Detecting Criteria.>

GETtheMANUALS.org

List of Diagnostic Trouble Code (DTC)

DTC	Item	Index
P0461	Fuel Level Sensor “A” Circuit Range/Performance	<Ref. to GD(H4SO)-171, DTC P0461 FUEL LEVEL SENSOR “A” CIRCUIT RANGE/PERFORMANCE, Diagnostic Trouble Code (DTC) Detecting Criteria.>
P0462	Fuel Level Sensor “A” Circuit Low	<Ref. to GD(H4SO)-173, DTC P0462 FUEL LEVEL SENSOR “A” CIRCUIT LOW, Diagnostic Trouble Code (DTC) Detecting Criteria.>
P0463	Fuel Level Sensor “A” Circuit High	<Ref. to GD(H4SO)-175, DTC P0463 FUEL LEVEL SENSOR “A” CIRCUIT HIGH, Diagnostic Trouble Code (DTC) Detecting Criteria.>
P0464	Fuel Level Sensor Circuit Intermittent	<Ref. to GD(H4SO)-177, DTC P0464 FUEL LEVEL SENSOR CIRCUIT INTERMITTENT, Diagnostic Trouble Code (DTC) Detecting Criteria.>
P0500	Vehicle Speed Sensor “A”	<Ref. to GD(H4SO)-180, DTC P0500 VEHICLE SPEED SENSOR “A”, Diagnostic Trouble Code (DTC) Detecting Criteria.>
P0506	Idle Air Control System RPM Lower Than Expected	<Ref. to GD(H4SO)-181, DTC P0506 IDLE AIR CONTROL SYSTEM RPM LOWER THAN EXPECTED, Diagnostic Trouble Code (DTC) Detecting Criteria.>
P0507	Idle Air Control System RPM Higher Than Expected	<Ref. to GD(H4SO)-182, DTC P0507 IDLE AIR CONTROL SYSTEM RPM HIGHER THAN EXPECTED, Diagnostic Trouble Code (DTC) Detecting Criteria.>
P050A	Cold Start Idle Air Control System Performance	<Ref. to GD(H4SO)-183, DTC P050A COLD START IDLE AIR CONTROL SYSTEM PERFORMANCE, Diagnostic Trouble Code (DTC) Detecting Criteria.>
P050B	Cold Start Ignition Timing Performance	<Ref. to GD(H4SO)-188, DTC P050B COLD START IGNITION TIMING PERFORMANCE, Diagnostic Trouble Code (DTC) Detecting Criteria.>
P0512	Starter Request Circuit	<Ref. to GD(H4SO)-189, DTC P0512 STARTER REQUEST CIRCUIT, Diagnostic Trouble Code (DTC) Detecting Criteria.>
P0513	Incorrect Immobilizer Key	<Ref. to GD(H4SO)-190, DTC P0513 INCORRECT IMMOBILIZER KEY, Diagnostic Trouble Code (DTC) Detecting Criteria.>
P0604	Internal Control Module Random Access Memory (RAM) Error	<Ref. to GD(H4SO)-191, DTC P0604 INTERNAL CONTROL MODULE RANDOM ACCESS MEMORY (RAM) ERROR, Diagnostic Trouble Code (DTC) Detecting Criteria.>
P0605	Internal Control Module Read Only Memory (ROM) Error	<Ref. to GD(H4SO)-192, DTC P0605 INTERNAL CONTROL MODULE READ ONLY MEMORY (ROM) ERROR, Diagnostic Trouble Code (DTC) Detecting Criteria.>
P0607	Throttle Control System Circuit Range/Performance	<Ref. to GD(H4SO)-193, DTC P0607 THROTTLE CONTROL SYSTEM CIRCUIT RANGE/PERFORMANCE, Diagnostic Trouble Code (DTC) Detecting Criteria.>
P0638	Throttle Actuator Control Range/ Performance (Bank 1)	<Ref. to GD(H4SO)-195, DTC P0638 THROTTLE ACTUATOR CONTROL RANGE/PERFORMANCE (BANK 1), Diagnostic Trouble Code (DTC) Detecting Criteria.>
P0700	Transmission Control System (MIL Request)	<Ref. to GD(H4SO)-197, DTC P0700 TRANSMISSION CONTROL SYSTEM (MIL REQUEST), Diagnostic Trouble Code (DTC) Detecting Criteria.>
P0851	Park/Neutral Switch Input Circuit Low (AT Model)	<Ref. to GD(H4SO)-198, DTC P0851 PARK/NEUTRAL SWITCH INPUT CIRCUIT LOW (AT MODEL), Diagnostic Trouble Code (DTC) Detecting Criteria.>
P0851	Neutral Switch Input Circuit Low (MT Model)	<Ref. to GD(H4SO)-199, DTC P0851 NEUTRAL SWITCH INPUT CIRCUIT LOW (MT MODEL), Diagnostic Trouble Code (DTC) Detecting Criteria.>
P0852	Park/Neutral Switch Input Circuit High (AT Model)	<Ref. to GD(H4SO)-200, DTC P0852 PARK/NEUTRAL SWITCH INPUT CIRCUIT HIGH (AT MODEL), Diagnostic Trouble Code (DTC) Detecting Criteria.>
P0852	Neutral Switch Input Circuit High (MT Model)	<Ref. to GD(H4SO)-201, DTC P0852 NEUTRAL SWITCH INPUT CIRCUIT HIGH (MT MODEL), Diagnostic Trouble Code (DTC) Detecting Criteria.>
P1152	O2 Sensor Circuit Range/Performance (Low) (Bank1 Sensor1)	<Ref. to GD(H4SO)-202, DTC P1152 O2 SENSOR CIRCUIT RANGE/PERFORMANCE (LOW) (BANK1 SENSOR1), Diagnostic Trouble Code (DTC) Detecting Criteria.>
P1153	O2 Sensor Circuit Range/Performance (High) (Bank1 Sensor1)	<Ref. to GD(H4SO)-204, DTC P1153 O2 SENSOR CIRCUIT RANGE/PERFORMANCE (HIGH) (BANK1 SENSOR1), Diagnostic Trouble Code (DTC) Detecting Criteria.>

GETtheMANUALS.org

List of Diagnostic Trouble Code (DTC)

DTC	Item	Index
P1160	Return Spring Failure	<Ref. to GD(H4SO)-206, DTC P1160 RETURN SPRING FAILURE, Diagnostic Trouble Code (DTC) Detecting Criteria.>
P1443	Vent Control Solenoid Valve Function Problem	<Ref. to GD(H4SO)-207, DTC P1443 VENT CONTROL SOLENOID VALVE FUNCTION PROBLEM, Diagnostic Trouble Code (DTC) Detecting Criteria.>
P1492	EGR Solenoid Valve Signal #1 Circuit Malfunction (Low Input)	<Ref. to GD(H4SO)-209, DTC P1492 EGR SOLENOID VALVE SIGNAL #1 CIRCUIT MALFUNCTION (LOW INPUT), Diagnostic Trouble Code (DTC) Detecting Criteria.>
P1493	EGR Solenoid Valve Signal #1 Circuit Malfunction (High Input)	<Ref. to GD(H4SO)-211, DTC P1493 EGR SOLENOID VALVE SIGNAL #1 CIRCUIT MALFUNCTION (HIGH INPUT), Diagnostic Trouble Code (DTC) Detecting Criteria.>
P1494	EGR Solenoid Valve Signal #2 Circuit Malfunction (Low Input)	<Ref. to GD(H4SO)-213, DTC P1494 EGR SOLENOID VALVE SIGNAL #2 CIRCUIT MALFUNCTION (LOW INPUT), Diagnostic Trouble Code (DTC) Detecting Criteria.>
P1495	EGR Solenoid Valve Signal #2 Circuit Malfunction (High Input)	<Ref. to GD(H4SO)-213, DTC P1495 EGR SOLENOID VALVE SIGNAL #2 CIRCUIT MALFUNCTION (HIGH INPUT), Diagnostic Trouble Code (DTC) Detecting Criteria.>
P1496	EGR Solenoid Valve Signal #3 Circuit Malfunction (Low Input)	<Ref. to GD(H4SO)-213, DTC P1496 EGR SOLENOID VALVE SIGNAL #3 CIRCUIT MALFUNCTION (LOW INPUT), Diagnostic Trouble Code (DTC) Detecting Criteria.>
P1497	EGR Solenoid Valve Signal #3 Circuit Malfunction (High Input)	<Ref. to GD(H4SO)-213, DTC P1497 EGR SOLENOID VALVE SIGNAL #3 CIRCUIT MALFUNCTION (HIGH INPUT), Diagnostic Trouble Code (DTC) Detecting Criteria.>
P1498	EGR Solenoid Valve Signal #4 Circuit Malfunction (Low Input)	<Ref. to GD(H4SO)-213, DTC P1498 EGR SOLENOID VALVE SIGNAL #4 CIRCUIT MALFUNCTION (LOW INPUT), Diagnostic Trouble Code (DTC) Detecting Criteria.>
P1499	EGR Solenoid Valve Signal #4 Circuit Malfunction (High Input)	<Ref. to GD(H4SO)-213, DTC P1499 EGR SOLENOID VALVE SIGNAL #4 CIRCUIT MALFUNCTION (HIGH INPUT), Diagnostic Trouble Code (DTC) Detecting Criteria.>
P1518	Starter Switch Circuit Low Input	<Ref. to GD(H4SO)-214, DTC P1518 STARTER SWITCH CIRCUIT LOW INPUT, Diagnostic Trouble Code (DTC) Detecting Criteria.>
P1560	Back-Up Voltage Circuit Malfunction	<Ref. to GD(H4SO)-215, DTC P1560 BACK-UP VOLTAGE CIRCUIT MALFUNCTION, Diagnostic Trouble Code (DTC) Detecting Criteria.>
P1570	Antenna	<Ref. to GD(H4SO)-216, DTC P1570 ANTENNA, Diagnostic Trouble Code (DTC) Detecting Criteria.>
P1571	Reference Code Incompatibility	<Ref. to GD(H4SO)-216, DTC P1571 REFERENCE CODE INCOMPATIBILITY, Diagnostic Trouble Code (DTC) Detecting Criteria.>
P1572	IMM Circuit Failure (Except Antenna Circuit)	<Ref. to GD(H4SO)-216, DTC P1572 IMM CIRCUIT FAILURE (EXCEPT ANTENNA CIRCUIT), Diagnostic Trouble Code (DTC) Detecting Criteria.>
P1574	Key Communication Failure	<Ref. to GD(H4SO)-216, DTC P1574 KEY COMMUNICATION FAILURE, Diagnostic Trouble Code (DTC) Detecting Criteria.>
P1576	EGI Control Module EEPROM	<Ref. to GD(H4SO)-216, DTC P1576 EGI CONTROL MODULE EEPROM, Diagnostic Trouble Code (DTC) Detecting Criteria.>
P1577	IMM Control Module EEPROM	<Ref. to GD(H4SO)-216, DTC P1577 IMM CONTROL MODULE EEPROM, Diagnostic Trouble Code (DTC) Detecting Criteria.>
P1578	Meter Failure	<Ref. to GD(H4SO)-216, DTC P1578 METER FAILURE, Diagnostic Trouble Code (DTC) Detecting Criteria.>
P2096	Post Catalyst Fuel Trim System Too Lean (Bank 1)	<Ref. to GD(H4SO)-217, DTC P2096 POST CATALYST FUEL TRIM SYSTEM TOO LEAN (BANK 1), Diagnostic Trouble Code (DTC) Detecting Criteria.>
P2097	Post Catalyst Fuel Trim System Too Rich (Bank 1)	<Ref. to GD(H4SO)-219, DTC P2097 POST CATALYST FUEL TRIM SYSTEM TOO RICH (BANK 1), Diagnostic Trouble Code (DTC) Detecting Criteria.>
P2101	Throttle Actuator Control Motor Circuit Range/Performance	<Ref. to GD(H4SO)-221, DTC P2101 THROTTLE ACTUATOR CONTROL MOTOR CIRCUIT RANGE/PERFORMANCE, Diagnostic Trouble Code (DTC) Detecting Criteria.>

GETtheMANUALS.org

List of Diagnostic Trouble Code (DTC)

DTC	Item	Index
P2102	Throttle Actuator Control Motor Circuit Low	<Ref. to GD(H4SO)-223, DTC P2102 THROTTLE ACTUATOR CONTROL MOTOR CIRCUIT LOW, Diagnostic Trouble Code (DTC) Detecting Criteria.>
P2103	Throttle Actuator Control Motor Circuit High	<Ref. to GD(H4SO)-224, DTC P2103 THROTTLE ACTUATOR CONTROL MOTOR CIRCUIT HIGH, Diagnostic Trouble Code (DTC) Detecting Criteria.>
P2109	Throttle/Pedal Position Sensor “A” Minimum Stop Performance	<Ref. to GD(H4SO)-225, DTC P2109 THROTTLE/PEDAL POSITION SENSOR “A” MINIMUM STOP PERFORMANCE, Diagnostic Trouble Code (DTC) Detecting Criteria.>
P2122	Throttle/Pedal Position Sensor/ Switch “D” Circuit Low Input	<Ref. to GD(H4SO)-226, DTC P2122 THROTTLE/PEDAL POSITION SENSOR/SWITCH “D” CIRCUIT LOW INPUT, Diagnostic Trouble Code (DTC) Detecting Criteria.>
P2123	Throttle/Pedal Position Sensor/ Switch “D” Circuit High Input	<Ref. to GD(H4SO)-228, DTC P2123 THROTTLE/PEDAL POSITION SENSOR/SWITCH “D” CIRCUIT HIGH INPUT, Diagnostic Trouble Code (DTC) Detecting Criteria.>
P2127	Throttle/Pedal Position Sensor/ Switch “E” Circuit Low Input	<Ref. to GD(H4SO)-230, DTC P2127 THROTTLE/PEDAL POSITION SENSOR/SWITCH “E” CIRCUIT LOW INPUT, Diagnostic Trouble Code (DTC) Detecting Criteria.>
P2128	Throttle/Pedal Position Sensor/ Switch “E” Circuit High Input	<Ref. to GD(H4SO)-232, DTC P2128 THROTTLE/PEDAL POSITION SENSOR/SWITCH “E” CIRCUIT HIGH INPUT, Diagnostic Trouble Code (DTC) Detecting Criteria.>
P2135	Throttle/Pedal Position Sensor/ Switch “A”/“B” Voltage Correlation	<Ref. to GD(H4SO)-234, DTC P2135 THROTTLE/PEDAL POSITION SENSOR/SWITCH “A”/“B” VOLTAGE CORRELATION, Diagnostic Trouble Code (DTC) Detecting Criteria.>
P2138	Throttle/Pedal Position Sensor/ Switch “D”/“E” Voltage Correlation	<Ref. to GD(H4SO)-236, DTC P2138 THROTTLE/PEDAL POSITION SENSOR/SWITCH “D”/“E” VOLTAGE CORRELATION, Diagnostic Trouble Code (DTC) Detecting Criteria.>
P2227	Barometric Pressure Circuit Range/Performance	<Ref. to GD(H4SO)-238, DTC P2227 BAROMETRIC PRESSURE CIRCUIT RANGE/PERFORMANCE, Diagnostic Trouble Code (DTC) Detecting Criteria.>
P2228	Barometric Pressure Circuit Low	<Ref. to GD(H4SO)-239, DTC P2228 BAROMETRIC PRESSURE CIRCUIT LOW, Diagnostic Trouble Code (DTC) Detecting Criteria.>
P2229	Barometric Pressure Circuit High	<Ref. to GD(H4SO)-240, DTC P2229 BAROMETRIC PRESSURE CIRCUIT HIGH, Diagnostic Trouble Code (DTC) Detecting Criteria.>
P2610	ECM/PCM Internal Engine Off Timer Performance	<Ref. to GD(H4SO)-241, DTC P2610 ECM/PCM INTERNAL ENGINE OFF TIMER PERFORMANCE, Diagnostic Trouble Code (DTC) Detecting Criteria.>
U0073	CAN Failure, Bus ‘Off’ Detection	<Ref. to GD(H4SO)-250, DTC U0073 CAN FAILURE, BUS ‘OFF’ DETECTION, Diagnostic Trouble Code (DTC) Detecting Criteria.>
U0101	CAN (TCU) Data Not Loaded	<Ref. to GD(H4SO)-251, DTC U0101 CAN (TCU) DATA NOT LOADED, Diagnostic Trouble Code (DTC) Detecting Criteria.>
U0122	CAN (VDC) Data Not Loaded	<Ref. to GD(H4SO)-252, DTC U0122 CAN (VDC) DATA NOT LOADED, Diagnostic Trouble Code (DTC) Detecting Criteria.>
U0140	CAN (BCU) Data Not Loaded	<Ref. to GD(H4SO)-252, DTC U0140 CAN (BCU) DATA NOT LOADED, Diagnostic Trouble Code (DTC) Detecting Criteria.>
U0402	CAN (TCU) Data Abnormal	<Ref. to GD(H4SO)-253, DTC U0402 CAN (TCU) DATA ABNORMAL, Diagnostic Trouble Code (DTC) Detecting Criteria.>
U0416	CAN (VDC) Data Abnormal	<Ref. to GD(H4SO)-254, DTC U0416 CAN (VDC) DATA ABNORMAL, Diagnostic Trouble Code (DTC) Detecting Criteria.>
U0422	CAN (BCU) Data Abnormal	<Ref. to GD(H4SO)-254, DTC U0422 CAN (BCU) DATA ABNORMAL, Diagnostic Trouble Code (DTC) Detecting Criteria.>

GETtheMANUALS.org

2. Diagnostic Trouble Code (DTC) Detecting Criteria

A: DTC P0026 INTAKE VALVE CONTROL SOLENOID CIRCUIT RANGE/PERFORMANCE (BANK 1)

1. OUTLINE OF DIAGNOSIS

Judge as NG with either Low NG or High NG.
A variable valve lift diagnosis oil pressure switch is installed for diagnosis. It is possible to determine whether the intake valve is in high mode (increase the amount of lift) or in low mode (suppressing the amount of lift) when the variable valve lift diagnosis oil pressure switch is turned ON or OFF.

- **Normal**

Oil switching solenoid valve duty	Intake valve	Variable valve lift diagnosis oil pressure switch
Large	High mode	OFF
Minimum	Low mode	ON

- **Low NG**

When the variable valve lift diagnosis oil pressure switch remains ON even though the intake valve tried to enter high mode (oil switching solenoid valve duty is large), this is judged as a Low NG.

- **High NG**

When the variable valve lift diagnosis oil pressure switch remains OFF even though the intake valve tried to enter low mode (oil switching solenoid valve duty is small), this is judged as a High NG.

2. COMPONENT DESCRIPTION

The variable valve lift system optimizes the intake valve lift by switching between the low lift cam and the high lift cam according to the engine speed. The amount of intake valve lift is varied by controlling the oil switching solenoid valve duty according to signals from the ECM.

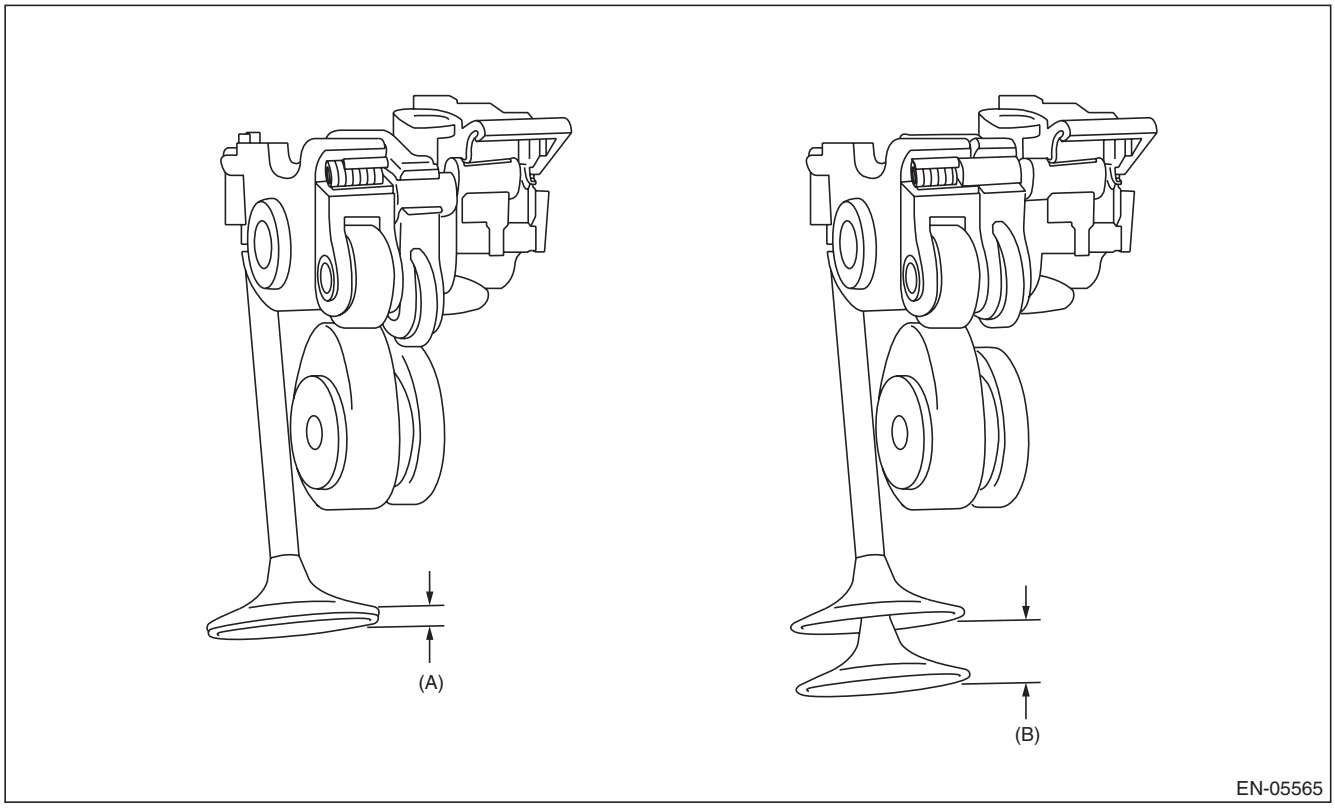

(A) Low lift (B) High lift

GETtheMANUALS.org

3. ENABLE CONDITION

Secondary Parameters	Enable Conditions
Battery voltage	≥ 10.9 V
After engine starting	≥ 6000 ms
Engine oil temperature	≥ 15 °C (59 °F)
Variable valve lift control	Operation

4. GENERAL DRIVING CYCLE

Perform the diagnosis continuously 6 seconds after engine start while variable valve lift is being controlled.

5. DIAGNOSTIC METHOD

• Abnormality Judgment

If the duration of time while the following conditions are met is longer than the time indicated, judge as NG.

Judgment Value

Malfunction Criteria	Threshold Value
Low	
Duty ratio	≥ 62 %
Variable valve lift diagnosis oil pressure switch	ON
High	
Duty ratio	< 33 %
Variable valve lift diagnosis oil pressure switch	OFF

Time Needed for Diagnosis:
Low side: 784 ms
High side: 3000 ms
Malfunction Indicator Light Illumination: Illuminates as soon as a malfunction occurs.

• Normality Judgment

Judge as OK and clear the NG if the continuous time while the following conditions are established is more than the predetermined time.

Judgment Value

Malfunction Criteria	Threshold Value
Low	
Duty ratio	≥ 62 %
Variable valve lift diagnosis oil pressure switch	OFF
High	
Duty ratio	< 33 %
Variable valve lift diagnosis oil pressure switch	ON

Time Needed for Diagnosis:
Low side: 208 ms
High side: 3000 ms

B: DTC P0028 INTAKE VALVE CONTROL SOLENOID CIRCUIT RANGE/PERFORMANCE (BANK 2)

1. OUTLINE OF DIAGNOSIS

NOTE:
For the detection standard, refer to DTC P0026. <Ref. to GD(H4SO)-9, DTC P0026 INTAKE VALVE CONTROL SOLENOID CIRCUIT RANGE/PERFORMANCE (BANK 1), Diagnostic Trouble Code (DTC) Detecting Criteria.>

GETtheMANUALS.org

C: DTC P0030 HO2S HEATER CONTROL CIRCUIT (BANK 1 SENSOR 1)

1. OUTLINE OF DIAGNOSIS

Detect functional errors of the front oxygen (A/F) sensor heater.
Judge as NG when it is determined that the front oxygen (A/F) sensor impedance is large when looking at engine status such as deceleration fuel cut.

2. COMPONENT DESCRIPTION

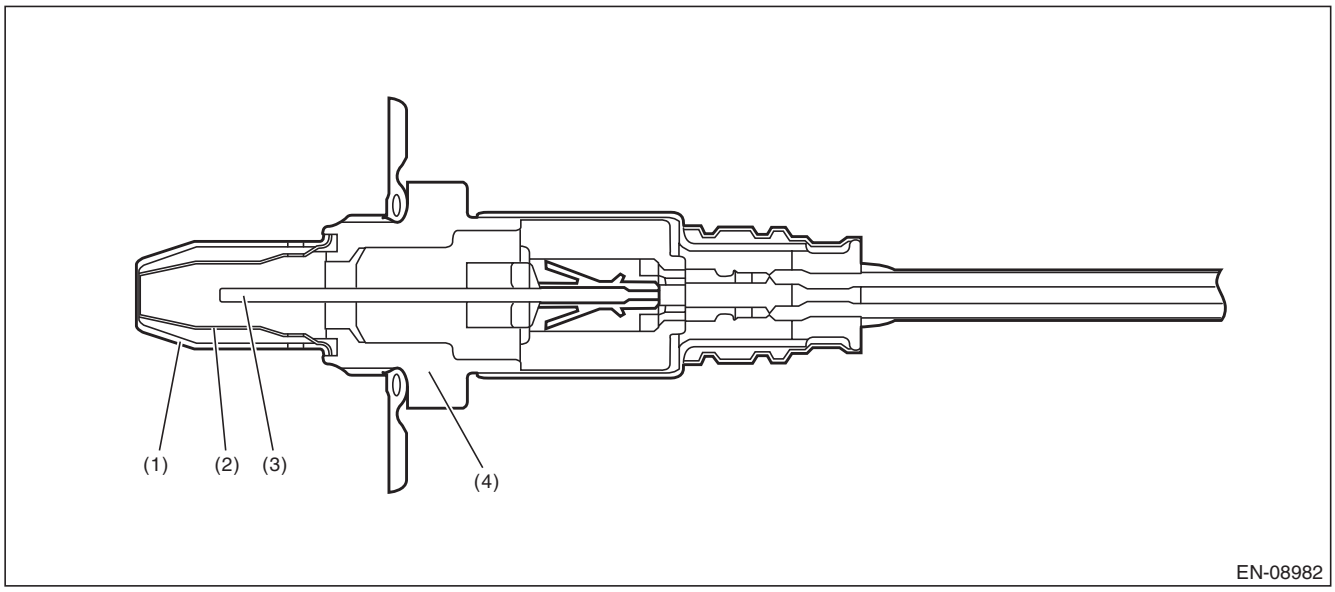

(1) Element cover (outer)
(2) Element cover (inner)
(3) Sensor element
(4) Sensor housing

3. ENABLE CONDITION

Secondary Parameters	Enable Conditions
Condition established time	≥ 42000 ms
Battery voltage	≥ 10.9 V
Heater current	Permitted
A/F sensor heater final control	Main energization status
After fuel cut	≥ 20000 ms

4. GENERAL DRIVING CYCLE

Perform the diagnosis continuously after 42000 ms or more have passed since the engine started.

GETtheMANUALS.org

5. DIAGNOSTIC METHOD

- **Abnormality Judgment**

If the duration of time while the following conditions are met is longer than the time indicated, judge as NG.

Judgment Value

Malfunction Criteria	Threshold Value
Front oxygen (A/F) sensor impedance	> 50 Ω

Time Needed for Diagnosis: 10000 ms
Malfunction Indicator Light Illumination: Illuminates when malfunction occurs in 2 continuous driving cycles.

- **Normality Judgment**

Judge as OK and clear the NG if the continuous time while the following conditions are established is more than the predetermined time.

Judgment Value

Malfunction Criteria	Threshold Value
Front oxygen (A/F) sensor impedance	≤ 50 Ω

Time Needed for Diagnosis: 10000 ms

GETtheMANUALS.org

D: DTC P0031 HO2S HEATER CONTROL CIRCUIT LOW (BANK 1 SENSOR 1)

1. OUTLINE OF DIAGNOSIS

Detect front oxygen (A/F) sensor heater open or short circuit.
The front oxygen (A/F) sensor heater performs duty control, and the output terminal voltage at ON is 0 V, and the output terminal voltage at OFF is the battery voltage.
Judge as NG when the terminal voltage remains Low.

2. COMPONENT DESCRIPTION

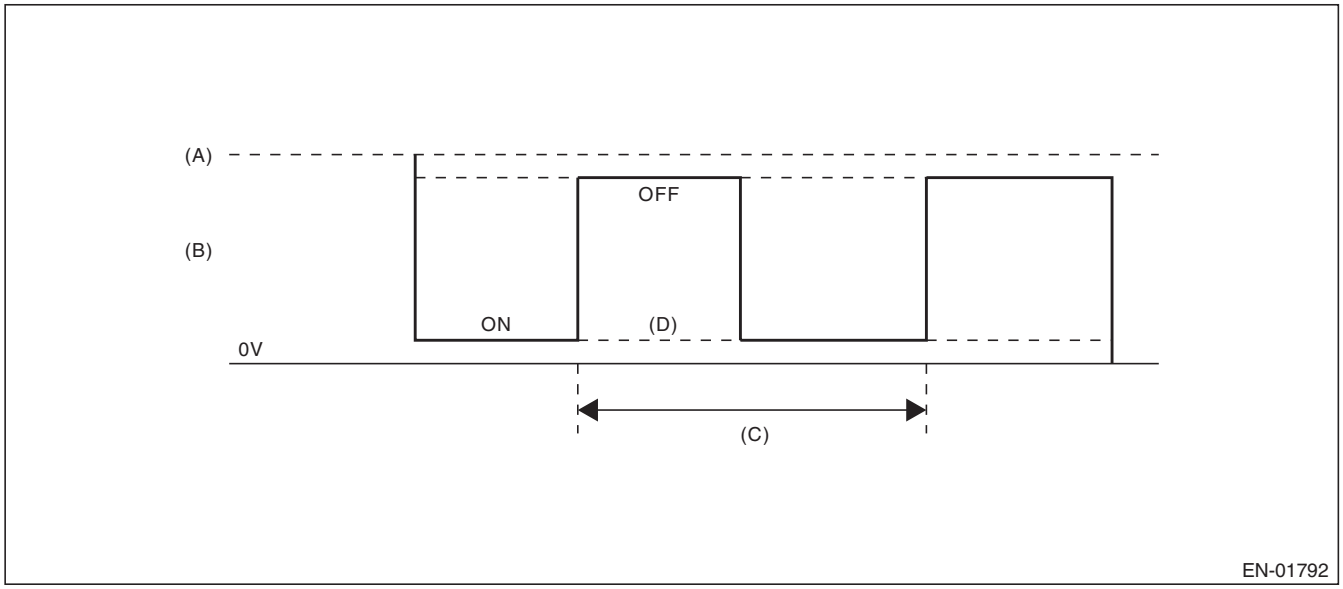

(A) Battery voltage
(B) Front oxygen (A/F) sensor heater output voltage
(C) 128 ms
(D) Low error

3. ENABLE CONDITION

Secondary Parameters	Enable Conditions
Battery voltage	≥ 10.9 V

4. GENERAL DRIVING CYCLE

Always perform the diagnosis continuously.

GETtheMANUALS.org

5. DIAGNOSTIC METHOD

- **Abnormality Judgment**

If the duration of time while the following conditions are met is longer than the time indicated, judge as NG.

Judgment Value

Malfunction Criteria	Threshold Value
Output voltage level	Low
Front oxygen (A/F) sensor heater control duty	< 87.5 %

Time Needed for Diagnosis: 4 ms × 250 time(s)
Malfunction Indicator Light Illumination: Illuminates as soon as a malfunction occurs.

- **Normality Judgment**

Judge as OK and clear the NG if the continuous time while the following conditions are established is more than the predetermined time.

Judgment Value

Malfunction Criteria	Threshold Value
Output voltage level	High

Time Needed for Diagnosis: Less than 1 second

GETthemanuals.org

E: DTC P0032 HO2S HEATER CONTROL CIRCUIT HIGH (BANK 1 SENSOR 1)

1. OUTLINE OF DIAGNOSIS

Detect front oxygen (A/F) sensor heater open or short circuit.
The front oxygen (A/F) sensor heater performs duty control, and the output terminal voltage at ON is 0 V, and the output terminal voltage at OFF is the battery voltage.
Judge as NG when the terminal voltage remains High.

2. COMPONENT DESCRIPTION

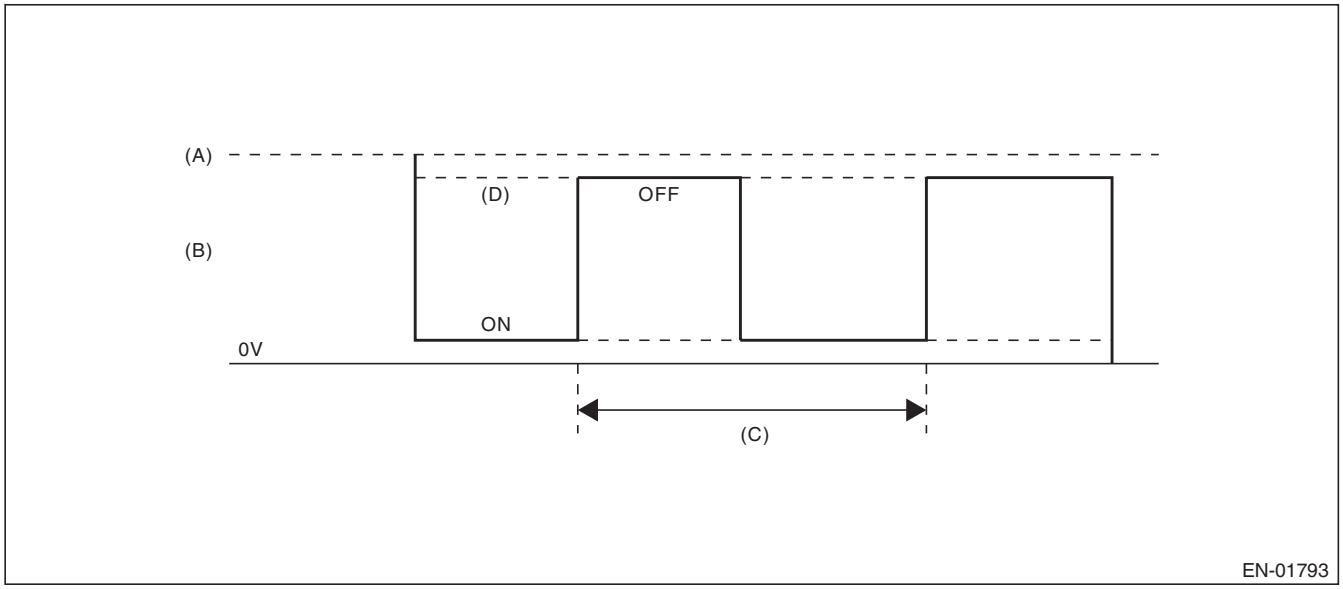

(A) Battery voltage
(B) Front oxygen (A/F) sensor heater output voltage
(C) 128 ms
(D) High error

3. ENABLE CONDITION

Secondary Parameters	Enable Conditions
Battery voltage	≥ 10.9 V

4. GENERAL DRIVING CYCLE

Always perform the diagnosis continuously.

GETthemanuals.org

5. DIAGNOSTIC METHOD

- **Abnormality Judgment**

If the duration of time while the following conditions are met is longer than the time indicated, judge as NG.

Judgment Value

Malfunction Criteria	Threshold Value
Output voltage level	High
Front oxygen (A/F) sensor heater control duty	≥ 12.5 %

Time Needed for Diagnosis: 4 ms × 500 time(s)
Malfunction Indicator Light Illumination: Illuminates as soon as a malfunction occurs.

- **Normality Judgment**

Judge as OK and clear the NG if the continuous time while the following conditions are established is more than the predetermined time.

Judgment Value

Malfunction Criteria	Threshold Value
Output voltage level	Low

Time Needed for Diagnosis: Less than 1 second

GETtheMANUALS.org

F: DTC P0037 HO2S HEATER CONTROL CIRCUIT LOW (BANK 1 SENSOR 2)

1. OUTLINE OF DIAGNOSIS

Detect the rear oxygen sensor heater open or short circuit.
The rear oxygen sensor heater performs duty control, and the output terminal voltage at ON is 0 V, and the output terminal voltage at OFF is the battery voltage.
Judge as NG when the terminal voltage remains Low.

2. COMPONENT DESCRIPTION

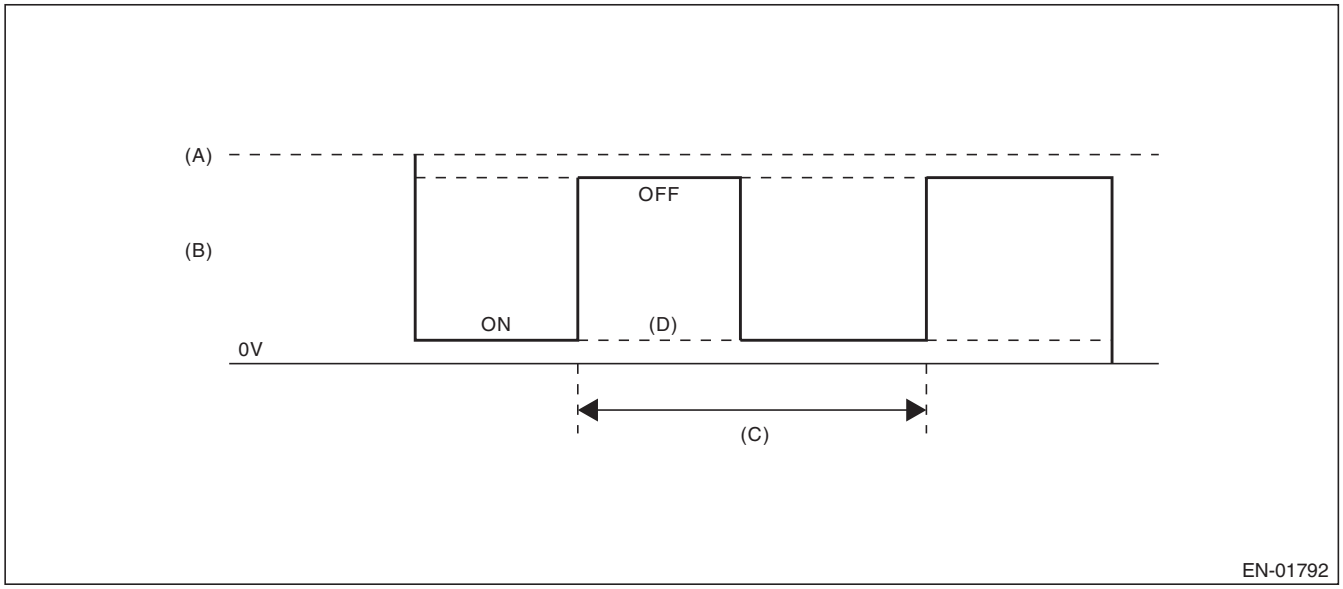

(A) Battery voltage
(B) Output voltage of the rear oxygen sensor heater
(C) 256 ms (cycle)
(D) Low error

3. ENABLE CONDITION

Secondary Parameters	Enable Conditions
Battery voltage	≥ 10.9 V
Elapsed time after starting the engine	≥ 1 second
Engine speed	< 8000 rpm

4. GENERAL DRIVING CYCLE

After starting the engine, perform the diagnosis continuously when engine is low speed.

GETtheMANUALS.org

5. DIAGNOSTIC METHOD

- **Abnormality Judgment**

If the duration of time while the following conditions are met is longer than the time indicated, judge as NG.

Judgment Value

Malfunction Criteria	Threshold Value
Output voltage level	Low
Rear oxygen sensor heater control duty	< 75 %

Time Needed for Diagnosis: 8 ms × 1250 time(s)
Malfunction Indicator Light Illumination: Illuminates when malfunction occurs in 2 continuous driving cycles.

- **Normality Judgment**

Judge as OK and clear the NG if the continuous time while the following conditions are established is more than the predetermined time.

Judgment Value

Malfunction Criteria	Threshold Value
Output voltage level	High

Time Needed for Diagnosis: Less than 1 second

GETtheMANUALS.org

G: DTC P0038 HO2S HEATER CONTROL CIRCUIT HIGH (BANK 1 SENSOR 2)

1. OUTLINE OF DIAGNOSIS

Detect the rear oxygen sensor heater open or short circuit.
The rear oxygen sensor heater performs duty control, and the output terminal voltage at ON is 0 V, and the output terminal voltage at OFF is the battery voltage.
Judge as NG when the terminal voltage remains High.

2. COMPONENT DESCRIPTION

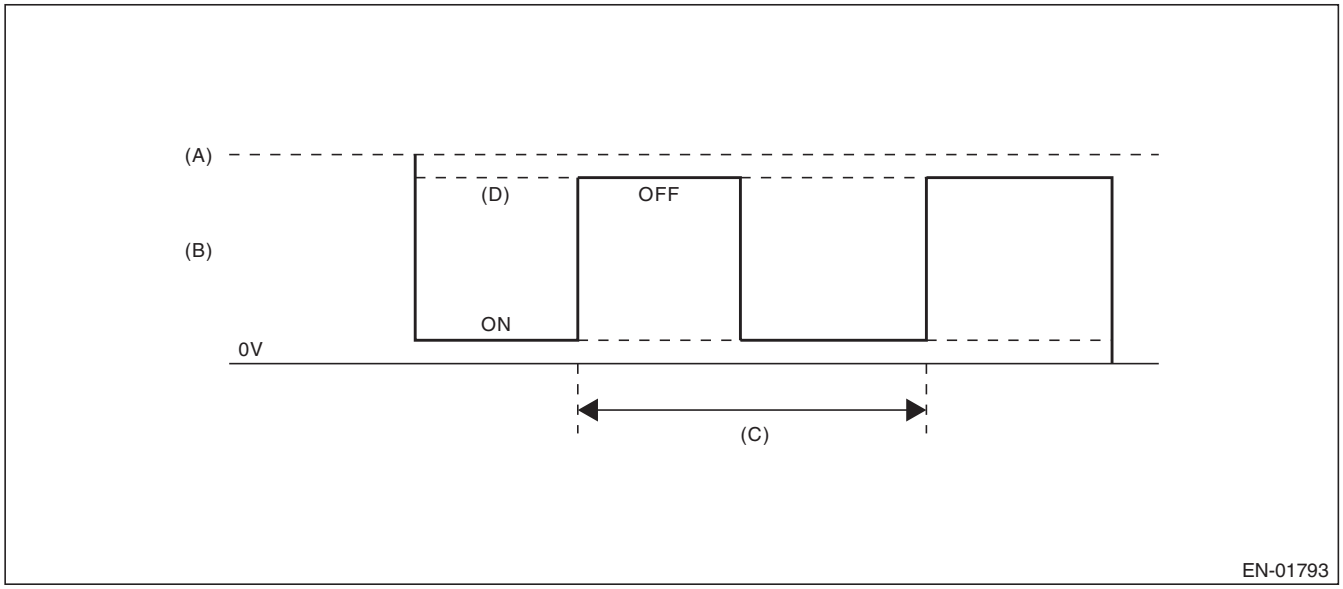

(A) Battery voltage
(B) Output voltage of the rear oxygen sensor heater
(C) 256 ms (cycle)
(D) High error

3. ENABLE CONDITION

Secondary Parameters	Enable Conditions
Battery voltage	≥ 10.9 V
Elapsed time after starting the engine	≥ 1 second
Engine speed	< 8000 rpm

4. GENERAL DRIVING CYCLE

After starting the engine, perform the diagnosis continuously when engine is low speed.

GETtheMANUALS.org

5. DIAGNOSTIC METHOD

- **Abnormality Judgment**

If the duration of time while the following conditions are met is longer than the time indicated, judge as NG.

Judgment Value

Malfunction Criteria	Threshold Value
Output voltage level	High
Rear oxygen sensor heater control duty	≥ 20 %

Time Needed for Diagnosis: 8 ms × 1250 time(s)
Malfunction Indicator Light Illumination: Illuminates when malfunction occurs in 2 continuous driving cycles.

- **Normality Judgment**

Judge as OK and clear the NG if the continuous time while the following conditions are established is more than the predetermined time.

Judgment Value

Malfunction Criteria	Threshold Value
Output voltage level	Low

Time Needed for Diagnosis: Less than 1 second

GETtheMANUALS.org

H: DTC P0068 MAP/MAF - THROTTLE POSITION CORRELATION

1. OUTLINE OF DIAGNOSIS

Detect problems in the intake manifold pressure sensor output properties.
Judge as NG when the intake air pressure AD value is Low whereas it seemed to be High from the viewpoint of engine condition, or when it is High whereas it seemed to be Low from the engine condition.

2. COMPONENT DESCRIPTION

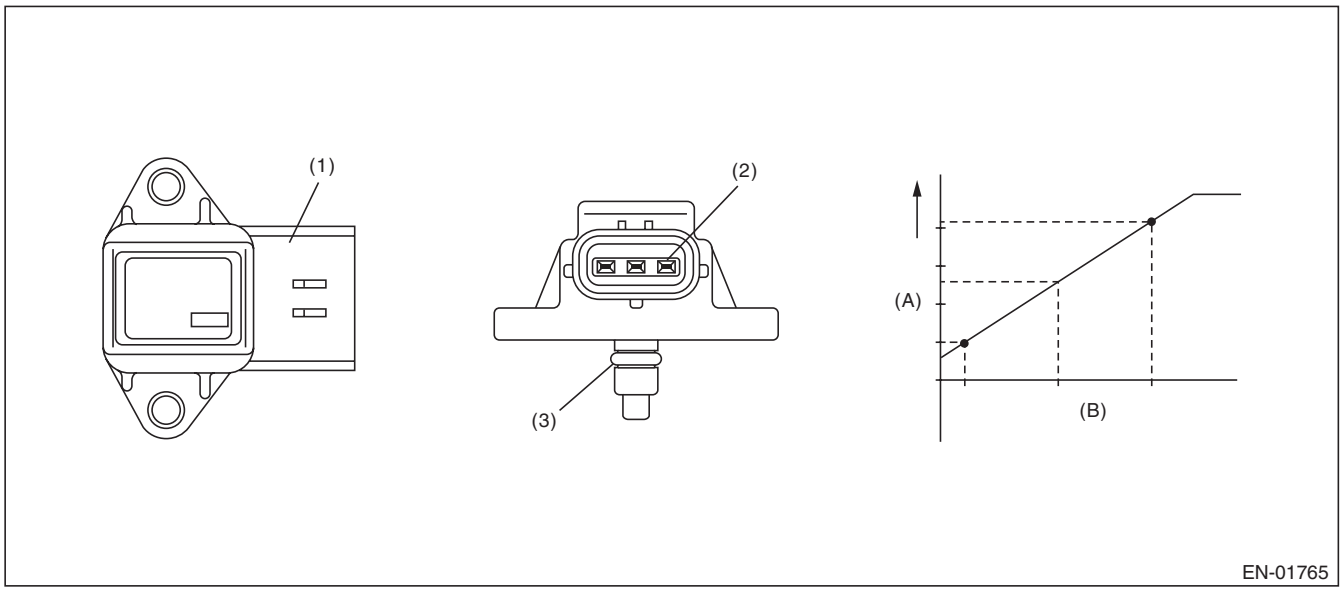

(A) Output voltage
(B) Absolute pressure

(1) Connector
(2) Terminals
(3) O-ring

3. ENABLE CONDITION

Secondary Parameters	Enable Conditions
Engine coolant temperature	≥ 60 °C (140 °F)

4. GENERAL DRIVING CYCLE

Perform the diagnosis continuously after idling.

GETtheMANUALS.org

5. DIAGNOSTIC METHOD

- **Abnormality Judgment**

Judge as NG when Low side or High side becomes NG.
If the duration of time while the following conditions are met is longer than the time indicated, judge as NG.

Judgment Value

Malfunction Criteria	Threshold Value
Low	
Engine speed	< 2500 rpm
Throttle position	≥ 12 °
Output voltage	< 1.46 V
Engine load	> 0.5 g/rev (0.02 oz/rev) (CVT model) > 0.45 g/rev (0.02 oz/rev) (MT model)
High	
Engine speed	550 rpm — 900 rpm
Throttle position	< 4.4 ° (CVT model) < 3.6 ° (MT model)
Output voltage	≥ 2.5 V
Engine load	< 0.4 g/rev (0.01 oz/rev)

Time Needed for Diagnosis:
Low side: 5000 ms
High side: 5000 ms
Malfunction Indicator Light Illumination: Illuminates when malfunction occurs in 2 continuous driving cycles.

- **Normality Judgment**

Judge as OK and clear the NG when both Low side and High side become OK.
If the duration of time while the following conditions are met is longer than the time indicated, judge as OK.

Judgment Value

Malfunction Criteria	Threshold Value
Low	
Engine speed	< 2500 rpm
Throttle position	≥ 12 °
Output voltage	≥ 1.46 V
Engine load	> 0.5 g/rev (0.02 oz/rev) (CVT model) > 0.45 g/rev (0.02 oz/rev) (MT model)
High	
Engine speed	550 rpm — 900 rpm
Throttle position	< 4.4 ° (CVT model) < 3.6 ° (MT model)
Output voltage	< 2.5 V
Engine load	< 0.4 g/rev (0.01 oz/rev)

Time Needed for Diagnosis:
Low side: Less than 1 second
High side: Less than 1 second

GETtheMANUALS.org

I: DTC P0076 INTAKE VALVE CONTROL SOLENOID CIRCUIT LOW (BANK 1)

1. OUTLINE OF DIAGNOSIS

Detect the open circuit of the oil switching solenoid valve.
Judge as NG when the current is small even though the output duty is large.

2. ENABLE CONDITION

Secondary Parameters	Enable Conditions
Battery voltage	≥ 10.9 V

3. GENERAL DRIVING CYCLE

Always perform the diagnosis continuously.

4. DIAGNOSTIC METHOD

- **Abnormality Judgment**

If the duration of time while the following conditions are met is longer than the time indicated, judge as NG.

Judgment Value

Malfunction Criteria	Threshold Value
Duty ratio	≥ 30 %
Control current	< 0.026 A

Time Needed for Diagnosis: 2000 ms
Malfunction Indicator Light Illumination: Illuminates as soon as a malfunction occurs.

- **Normality Judgment**

Judge as OK and clear the NG if the continuous time while the following conditions are established is more than the predetermined time.

Judgment Value

Malfunction Criteria	Threshold Value
|Oil switching solenoid valve target current value – Oil switching solenoid valve current value|	< 0.08 A
Target current	≥ 0.11 A

Time Needed for Diagnosis: 2000 ms

GETtheMANUALS.org

J: DTC P0077 INTAKE VALVE CONTROL SOLENOID CIRCUIT HIGH (BANK 1)

1. OUTLINE OF DIAGNOSIS

Detect short circuits of the oil switching solenoid valve.
Judge as a short NG when the current is large even though the output duty is small.

2. ENABLE CONDITION

Secondary Parameters	Enable Conditions
Battery voltage	≥ 10.9 V

3. GENERAL DRIVING CYCLE

Always perform the diagnosis continuously.

4. DIAGNOSTIC METHOD

- **Abnormality Judgment**

If the duration of time while the following conditions are met is longer than the time indicated, judge as NG.

Judgment Value

Malfunction Criteria	Threshold Value
Duty ratio	< 7 %
Control current	≥ 0.465 A

Time Needed for Diagnosis: 2000 ms
Malfunction Indicator Light Illumination: Illuminates as soon as a malfunction occurs.

- **Normality Judgment**

Judge as OK and clear the NG if the continuous time while the following conditions are established is more than the predetermined time.

Judgment Value

Malfunction Criteria	Threshold Value
|Oil switching solenoid valve target current value – Oil switching solenoid valve current value|	< 0.08 A

Time Needed for Diagnosis: 2000 ms

K: DTC P0082 INTAKE VALVE CONTROL SOLENOID CIRCUIT LOW (BANK 2)

1. OUTLINE OF DIAGNOSIS

NOTE:
For the detection standard, refer to DTC P0076. <Ref. to GD(H4SO)-23, DTC P0076 INTAKE VALVE CONTROL SOLENOID CIRCUIT LOW (BANK 1), Diagnostic Trouble Code (DTC) Detecting Criteria.>

L: DTC P0083 INTAKE VALVE CONTROL SOLENOID CIRCUIT HIGH (BANK 2)

1. OUTLINE OF DIAGNOSIS

NOTE:
For the detection standard, refer to DTC P0077. <Ref. to GD(H4SO)-24, DTC P0077 INTAKE VALVE CONTROL SOLENOID CIRCUIT HIGH (BANK 1), Diagnostic Trouble Code (DTC) Detecting Criteria.>

GETtheMANUALS.org

M: DTC P0101 MASS OR VOLUME AIR FLOW CIRCUIT RANGE/PERFORMANCE

1. OUTLINE OF DIAGNOSIS

Detect the malfunction of air flow sensor output properties.
Judge as a low side NG when the air flow voltage indicates a small value regardless of running in a state where the air flow voltage increases. Judge as a high side NG when the air flow voltage indicates a large value regardless of running in a state where the air flow voltage decreases. Judge air flow sensor property NG when the Low side or High side becomes NG.

2. COMPONENT DESCRIPTION

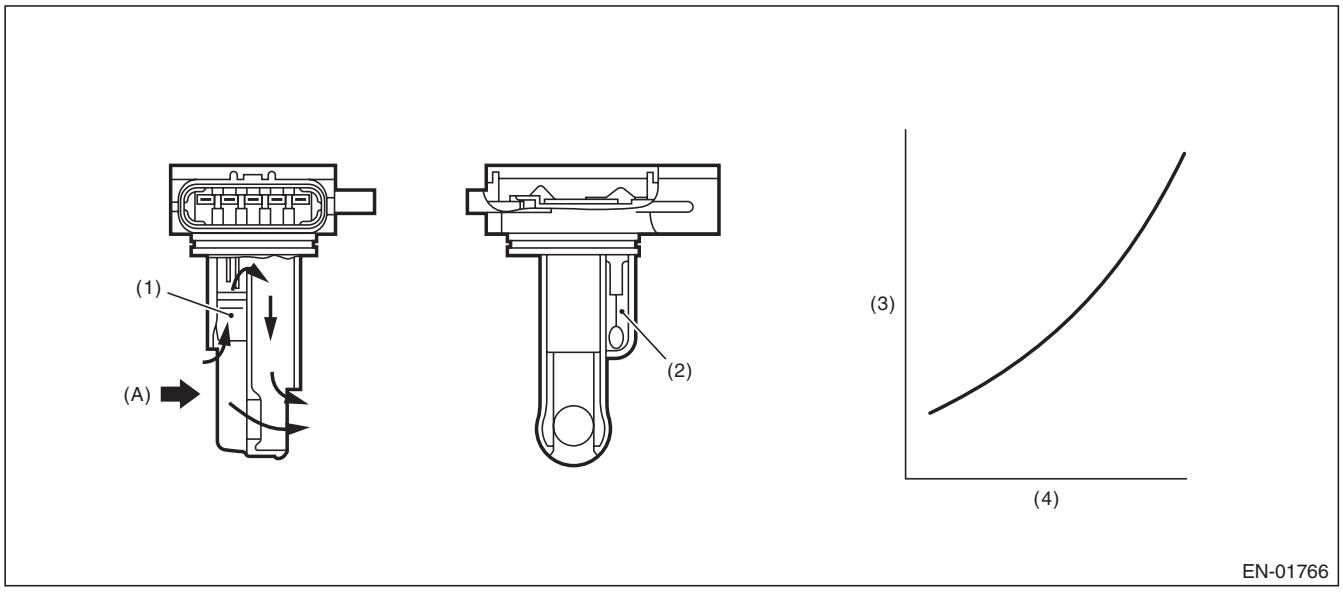

(A) Air

(1) Air flow sensor
(2) Intake air temperature sensor
(3) Voltage (V)
(4) Amount of intake air (kg (lb)/s)

3. ENABLE CONDITION

Secondary Parameters	Enable Conditions
Engine coolant temperature	≥ 60 °C (140 °F)

4. GENERAL DRIVING CYCLE

Perform the diagnosis continuously after idling.

GETtheMANUALS.org

5. DIAGNOSTIC METHOD

- **Abnormality Judgment**

Judge as NG when Low side or High side becomes NG.
If the duration of time while the following conditions are met is longer than the time indicated, judge as NG.

Judgment Value

Malfunction Criteria	Threshold Value
Low	
Output voltage	< 1.49 V (CVT model) < 1.47 V (MT model)
Engine speed	≥ 2500 rpm (CVT model) ≥ 2000 rpm (MT model)
Throttle opening angle	≥ 12 °
Intake manifold pressure	≥ 66.7 kPa (500 mmHg, 19.7 inHg)
High (1)	
Output voltage	≥ 2.66 V
Engine speed	550 rpm — 900 rpm
Throttle opening angle	< 4.4 ° (CVT model) < 3.6 ° (MT model)
Intake manifold pressure	≥ 40 kPa (300 mmHg, 11.8 inHg)
High (2)	
Output voltage	≥ 1.55 V (CVT model) ≥ 1.45 V (MT model)
Engine speed	550 rpm — 900 rpm
Throttle opening angle	< 4.4 ° (CVT model) < 3.6 ° (MT model)
Intake manifold pressure	≥ 40 kPa (300 mmHg, 11.8 inHg)
Fuel system diagnosis	Rich side malfunction

Time Needed for Diagnosis:
Low: 5000 ms
High: 5000 ms
Malfunction Indicator Light Illumination: Illuminates when malfunction occurs in 2 continuous driving cycles.

GETtheMANUALS.org

- **Normality Judgment**

Judge as OK and clear the NG when both Low side and High side become OK.
Judge as OK and clear the NG if the continuous time while the following conditions are established is more than the predetermined time.

Judgment Value

Malfunction Criteria	Threshold Value
Low	
Output voltage	≥ 1.49 V (CVT model) ≥ 1.47 V (MT model)
Engine speed	≥ 2500 rpm (CVT model) ≥ 2000 rpm (MT model)
Throttle opening angle	≥ 12 °
Intake manifold pressure	≥ 66.7 kPa (500 mmHg, 19.7 inHg)
High	
Output voltage	< 2.66 V
Engine speed	550 rpm — 900 rpm
Throttle opening angle	< 4.4 ° (CVT model) < 3.6 ° (MT model)
Intake manifold pressure	< 40 kPa (300 mmHg, 11.8 inHg)
Fuel system diagnosis	Rich side normal

Time Needed for Diagnosis:
Low: Less than 1 second
High: Less than 1 second

GETtheMANUALS.org

N: DTC P0102 MASS OR VOLUME AIR FLOW CIRCUIT LOW INPUT

1. OUTLINE OF DIAGNOSIS

Detect open or short circuits of the air flow sensor.
Judge as NG if out of specification.

2. COMPONENT DESCRIPTION

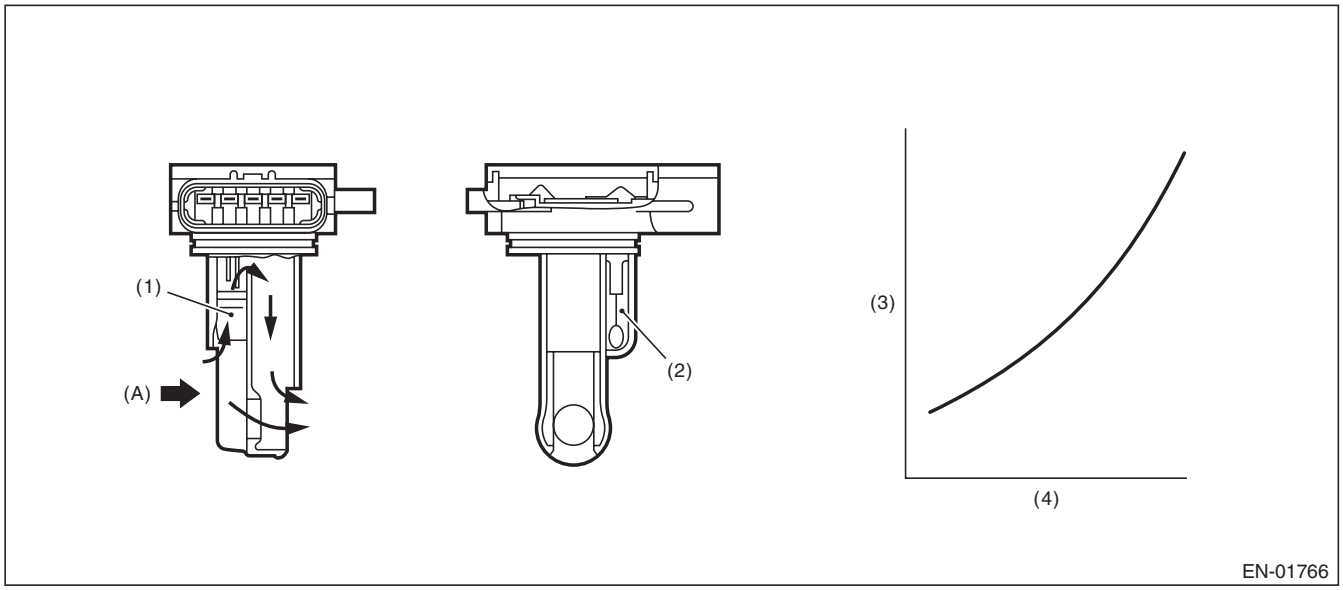

(A) Air

(1) Air flow sensor
(2) Intake air temperature sensor
(3) Voltage (V)
(4) Amount of intake air (kg (lb)/s)

3. ENABLE CONDITION

Secondary Parameters	Enable Conditions
None	

4. GENERAL DRIVING CYCLE

Always perform the diagnosis continuously.

GETtheMANUALS.org

5. DIAGNOSTIC METHOD

- **Abnormality Judgment**

If the duration of time while the following conditions are met is longer than the time indicated, judge as NG.

Judgment Value

Malfunction Criteria	Threshold Value
Output voltage	≤ 0.22 V

Time Needed for Diagnosis: 500 ms
Malfunction Indicator Light Illumination: Illuminates as soon as a malfunction occurs.

- **Normality Judgment**

Judge as OK and clear the NG if the continuous time while the following conditions are established is more than the predetermined time.

Judgment Value

Malfunction Criteria	Threshold Value
Output voltage	> 0.22 V

Time Needed for Diagnosis: Less than 1 second

GETtheMANUALS.org

O: DTC P0103 MASS OR VOLUME AIR FLOW CIRCUIT HIGH INPUT

1. OUTLINE OF DIAGNOSIS

Detect open or short circuits of the air flow sensor.
Judge as NG if out of specification.

2. COMPONENT DESCRIPTION

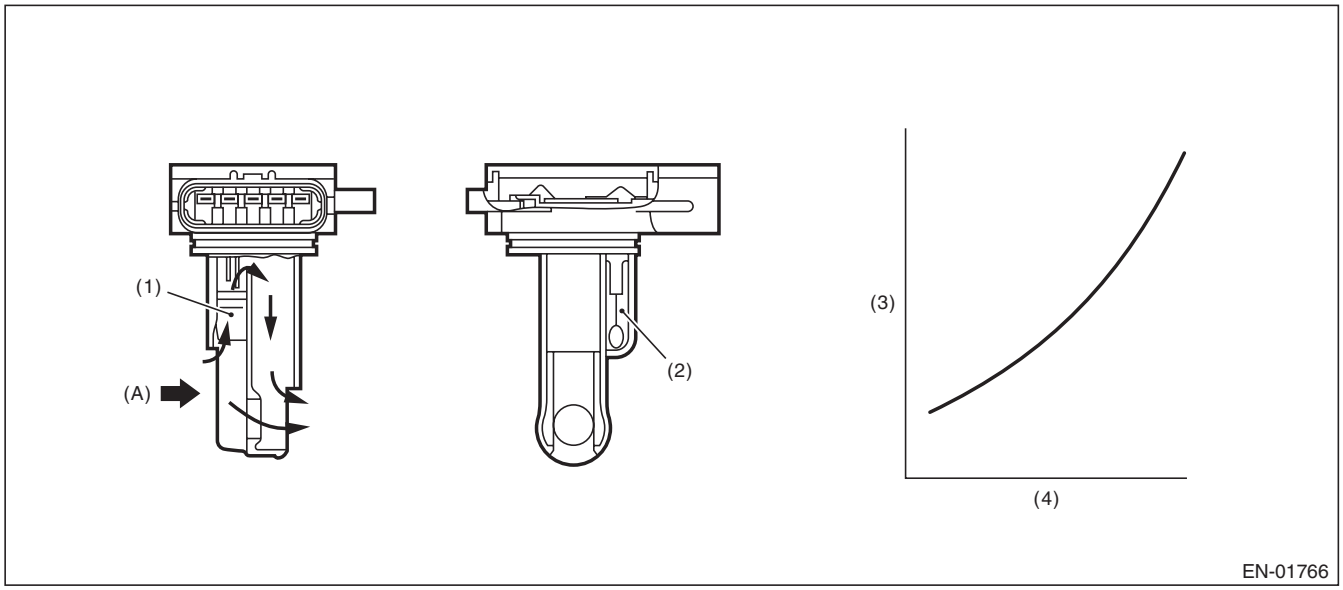

(A) Air

(1) Air flow sensor
(2) Intake air temperature sensor
(3) Voltage (V)
(4) Amount of intake air (kg (lb)/s)

3. ENABLE CONDITION

Secondary Parameters	Enable Conditions
None	

4. GENERAL DRIVING CYCLE

Always perform the diagnosis continuously.

GETtheMANUALS.org

5. DIAGNOSTIC METHOD

- **Abnormality Judgment**

If the duration of time while the following conditions are met is longer than the time indicated, judge as NG.

Judgment Value

Malfunction Criteria	Threshold Value
Output voltage	≥ 4.071 V

Time Needed for Diagnosis: 500 ms
Malfunction Indicator Light Illumination: Illuminates as soon as a malfunction occurs.

- **Normality Judgment**

Judge as OK and clear the NG if the continuous time while the following conditions are established is more than the predetermined time.

Judgment Value

Malfunction Criteria	Threshold Value
Output voltage	< 4.071 V

Time Needed for Diagnosis: Less than 1 second

GETtheMANUALS.org

P: DTC P0107 MANIFOLD ABSOLUTE PRESSURE/BAROMETRIC PRESSURE CIRCUIT LOW INPUT

1. OUTLINE OF DIAGNOSIS

Detect the open or short circuit of intake manifold pressure sensor.
Judge as NG if out of specification.

2. COMPONENT DESCRIPTION

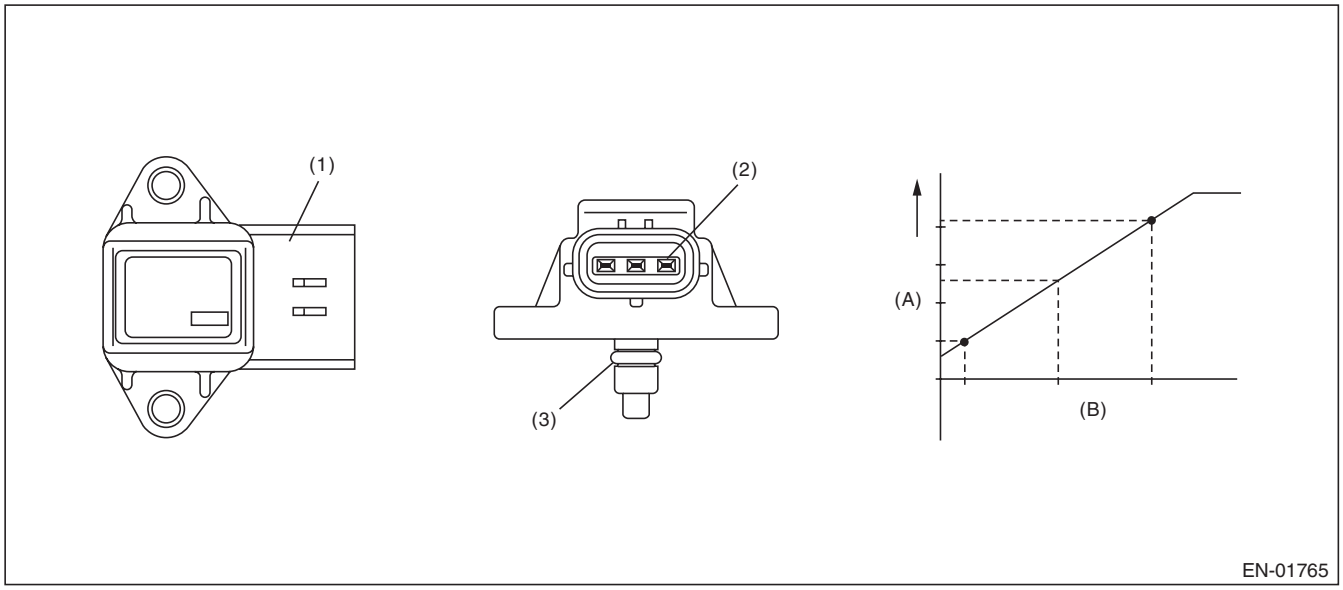

(A) Output voltage (B) Absolute pressure

(1) Connector (2) Terminals (3) O-ring

3. ENABLE CONDITION

Secondary Parameters	Enable Conditions
None	

4. GENERAL DRIVING CYCLE

Always perform the diagnosis continuously.

GETthemanuals.org

5. DIAGNOSTIC METHOD

- **Abnormality Judgment**

If the duration of time while the following conditions are met is longer than the time indicated, judge as NG.

Judgment Value

Malfunction Criteria	Threshold Value
Output voltage	≤ 0.606 V

Time Needed for Diagnosis: 500 ms
Malfunction Indicator Light Illumination: Illuminates as soon as a malfunction occurs.

- **Normality Judgment**

Judge as OK and clear the NG if the continuous time while the following conditions are established is more than the predetermined time.

Judgment Value

Malfunction Criteria	Threshold Value
Output voltage	> 0.606 V

Time Needed for Diagnosis: Less than 1 second

GETtheMANUALS.org

Q: DTC P0108 MANIFOLD ABSOLUTE PRESSURE/BAROMETRIC PRESSURE CIRCUIT HIGH INPUT

1. OUTLINE OF DIAGNOSIS

Detect the open or short circuit of intake manifold pressure sensor.
Judge as NG if out of specification.

2. COMPONENT DESCRIPTION

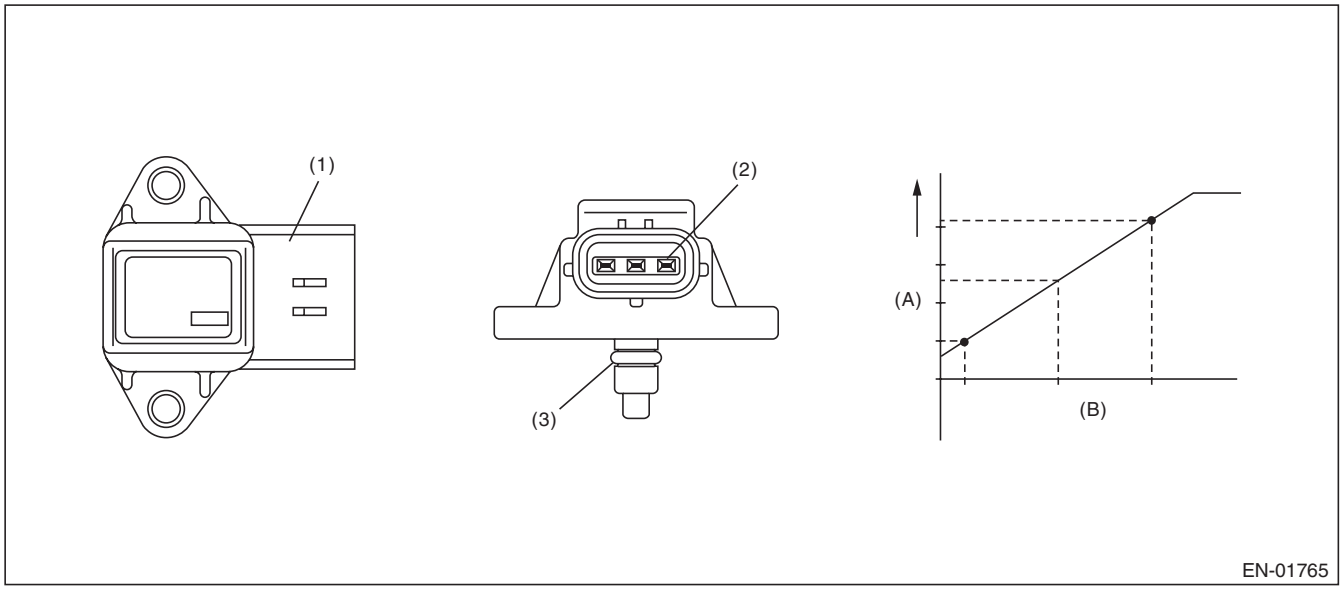

(A) Output voltage (B) Absolute pressure

(1) Connector (2) Terminals (3) O-ring

3. ENABLE CONDITION

Secondary Parameters	Enable Conditions
None	

4. GENERAL DRIVING CYCLE

Always perform the diagnosis continuously.

GETtheMANUALS.org

5. DIAGNOSTIC METHOD

- **Abnormality Judgment**

If the duration of time while the following conditions are met is longer than the time indicated, judge as NG.

Judgment Value

Malfunction Criteria	Threshold Value
Output voltage	≥ 3.906 V

Time Needed for Diagnosis: 500 ms
Malfunction Indicator Light Illumination: Illuminates as soon as a malfunction occurs.

- **Normality Judgment**

Judge as OK and clear the NG if the continuous time while the following conditions are established is more than the predetermined time.

Judgment Value

Malfunction Criteria	Threshold Value
Output voltage	< 3.906 V

Time Needed for Diagnosis: Less than 1 second

GETtheMANUALS.org

R: DTC P0111 INTAKE AIR TEMPERATURE SENSOR 1 CIRCUIT RANGE/PERFORMANCE

1. OUTLINE OF DIAGNOSIS

Detect the malfunction of intake air temperature sensor output property.
Judge as NG when the intake air temperature is not varied whereas it seemed to be varied from the viewpoint of engine condition.

2. COMPONENT DESCRIPTION

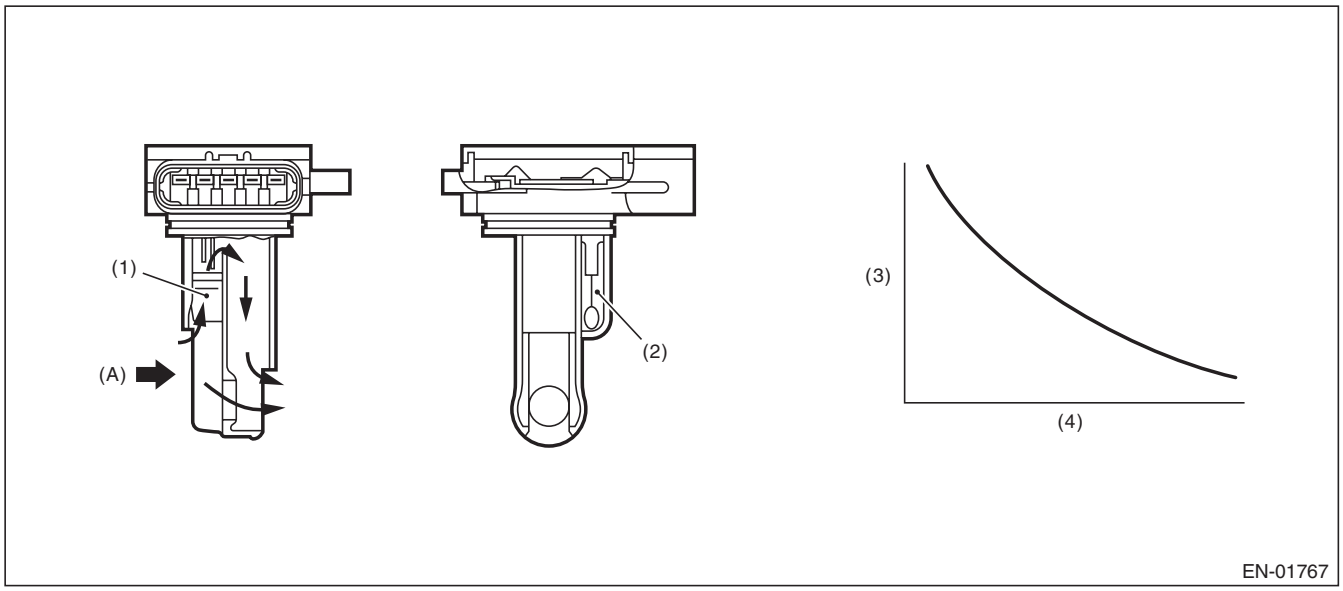

(A) Air

(1) Air flow sensor
(2) Intake air temperature sensor
(3) Resistance value (Ω)
(4) Intake air temperature °C (°F)

GETtheMANUALS.org

3. ENABLE CONDITION

Secondary Parameters	Enable Conditions
Engine coolant temperature at engine starting	< 35 °C (95 °F)
Battery voltage	≥ 10.9 V
Continuous time when the vehicle speed is less than 140 km/h (87 MPH)	≥ 600 s
Engine coolant temperature	≥ 75 °C (167 °F)
Intake air amount sum value	≥ Value of Map 1
Number of experiences under conditions below	≥ 3 time(s)
• Continuous time when vehicle speed is less than 4 km/h (2.5 MPH)	≥ Value from Map 2
• Continuous time when vehicle speed is 40 km/h (24.9 MPH) or more	≥ 15 s
and	
Establishing time of 1, 2	≥ 15 s
1. Intake air amount	≥ 10 g/s (0.35 oz/s)
2. Vehicle speed	≥ 4 km/h (2.5 MPH)

Map 1

Engine coolant temperature °C (°F)	–20 (–4)	–10 (14)	0 (32)	10 (50)	20 (68)
Intake air amount sum value (g (oz))	50000 (1763.5)	7400 (261)	6600 (232.78)	5800 (204.57)	4500 (158.72)

Map 2

Engine coolant temperature °C (°F)	–30 (–22)	0 (32)	10 (50)	20 (68)
Continuous time (s) when vehicle speed is less than 4 km/h (2.5 MPH)	250	40	32	24

4. GENERAL DRIVING CYCLE

Perform the diagnosis when the vehicle speed condition is met after warming up from a cold condition.

GETtheMANUALS.org

5. DIAGNOSTIC METHOD

- **Abnormality Judgment**

Judge as NG when the following conditions are established.

Judgment Value

Malfunction Criteria	Threshold Value
Output voltage difference between Max. and Min.	< 0.02 V(Equivalent to approximately 0.5°C (0.9°F) near 25°C)

Time Needed for Diagnosis: Less than 1 second
Malfunction Indicator Light Illumination: Illuminates when malfunction occurs in 2 continuous driving cycles.

- **Normality Judgment**

Judge as OK and clear the NG if the following conditions are established.

Judgment Value

Malfunction Criteria	Threshold Value
Output voltage difference between Max. and Min.	≥ 0.02 V

Time Needed for Diagnosis: Less than 1 second

GETtheMANUALS.org

S: DTC P0112 INTAKE AIR TEMPERATURE SENSOR 1 CIRCUIT LOW

1. OUTLINE OF DIAGNOSIS

Detect open or short circuit of the intake air temperature sensor.
Judge as NG if out of specification.

2. COMPONENT DESCRIPTION

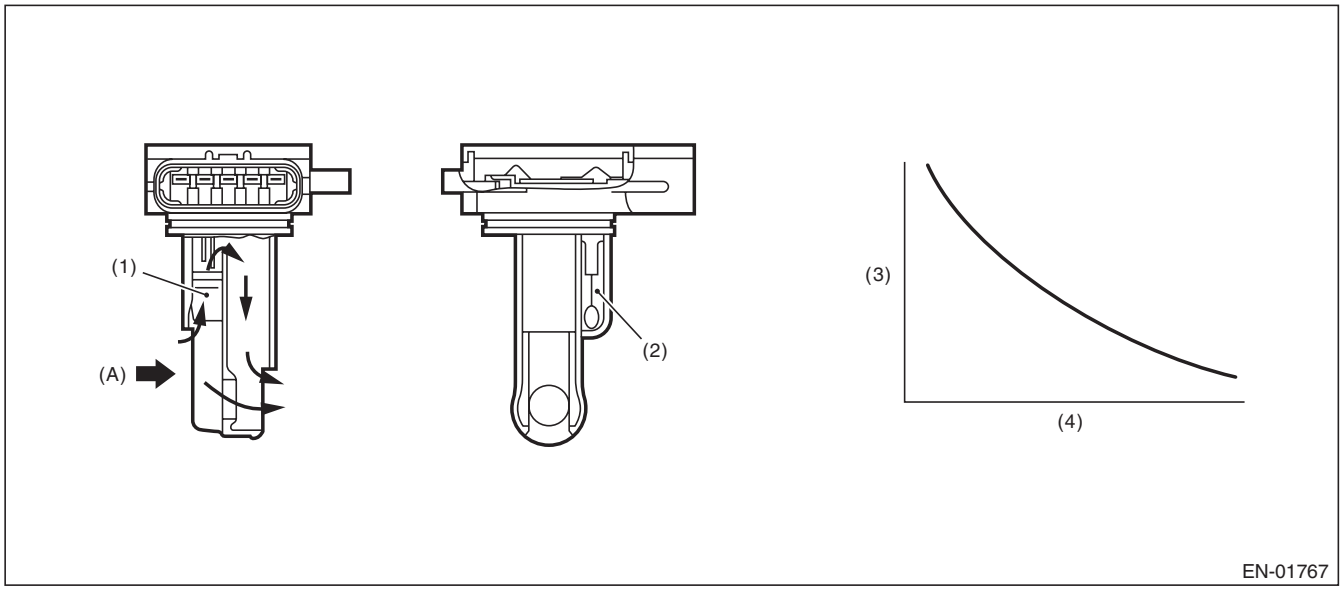

(A) Air

(1) Air flow sensor
(2) Intake air temperature sensor
(3) Resistance value (Ω)
(4) Intake air temperature °C (°F)

3. ENABLE CONDITION

Secondary Parameters	Enable Conditions
None	

4. GENERAL DRIVING CYCLE

Always perform the diagnosis continuously.

GETtheMANUALS.org

5. DIAGNOSTIC METHOD

- **Abnormality Judgment**

If the duration of time while the following conditions are met is longer than the time indicated, judge as NG.

Judgment Value

Malfunction Criteria	Threshold Value
Output voltage	< 0.395 V

Time Needed for Diagnosis: 500 ms
Malfunction Indicator Light Illumination: Illuminates as soon as a malfunction occurs.

- **Normality Judgment**

Judge as OK and clear the NG if the continuous time while the following conditions are established is more than the predetermined time.

Judgment Value

Malfunction Criteria	Threshold Value
Output voltage	≥ 0.395 V

Time Needed for Diagnosis: Less than 1 second

GETtheMANUALS.org

T: DTC P0113 INTAKE AIR TEMPERATURE SENSOR 1 CIRCUIT HIGH

1. OUTLINE OF DIAGNOSIS

Detect open or short circuit of the intake air temperature sensor.
Judge as NG if out of specification.

2. COMPONENT DESCRIPTION

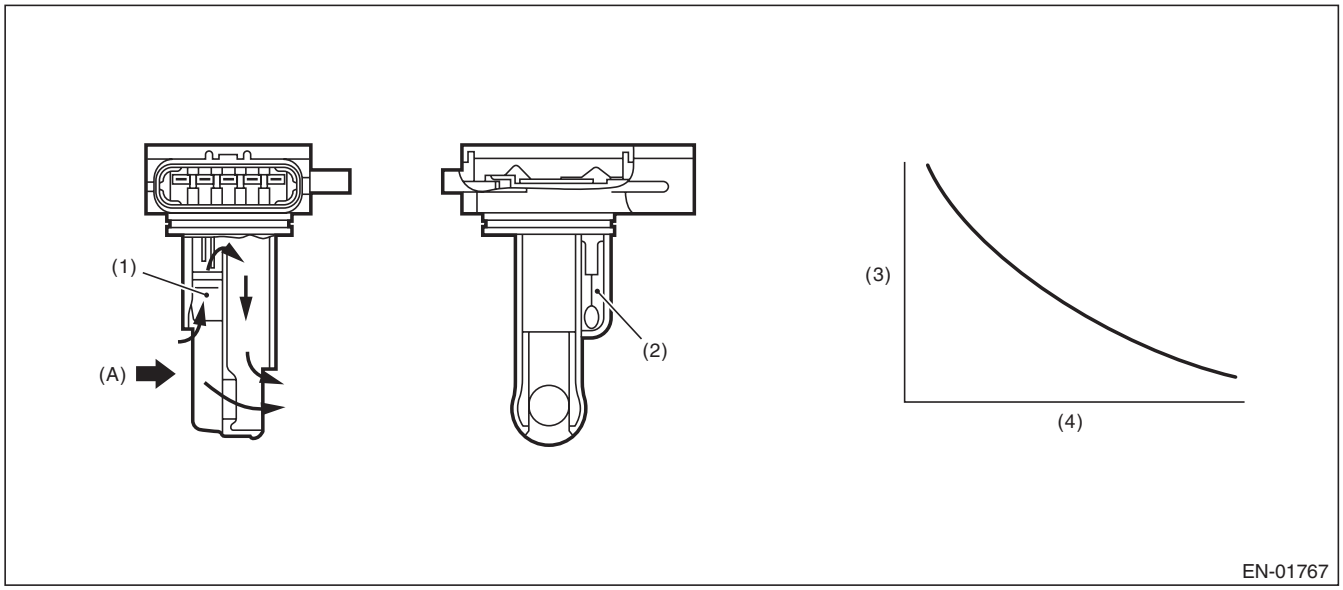

(A) Air

(1) Air flow sensor
(2) Intake air temperature sensor
(3) Resistance value (Ω)
(4) Intake air temperature °C (°F)

3. ENABLE CONDITION

Secondary Parameters	Enable Conditions
None	

4. GENERAL DRIVING CYCLE

Always perform the diagnosis continuously.

GETtheMANUALS.org

5. DIAGNOSTIC METHOD

- **Abnormality Judgment**

If the duration of time while the following conditions are met is longer than the time indicated, judge as NG.

Judgment Value

Malfunction Criteria	Threshold Value
Output voltage	≥ 4.712 V

Time Needed for Diagnosis: 500 ms
Malfunction Indicator Light Illumination: Illuminates as soon as a malfunction occurs.

- **Normality Judgment**

Judge as OK and clear the NG if the continuous time while the following conditions are established is more than the predetermined time.

Judgment Value

Malfunction Criteria	Threshold Value
Output voltage	< 4.712 V

Time Needed for Diagnosis: Less than 1 second

GETtheMANUALS.org

U: DTC P0117 ENGINE COOLANT TEMPERATURE CIRCUIT LOW

1. OUTLINE OF DIAGNOSIS

Detect the open or short circuit of the engine coolant temperature sensor.
Judge as NG if out of specification.

2. COMPONENT DESCRIPTION

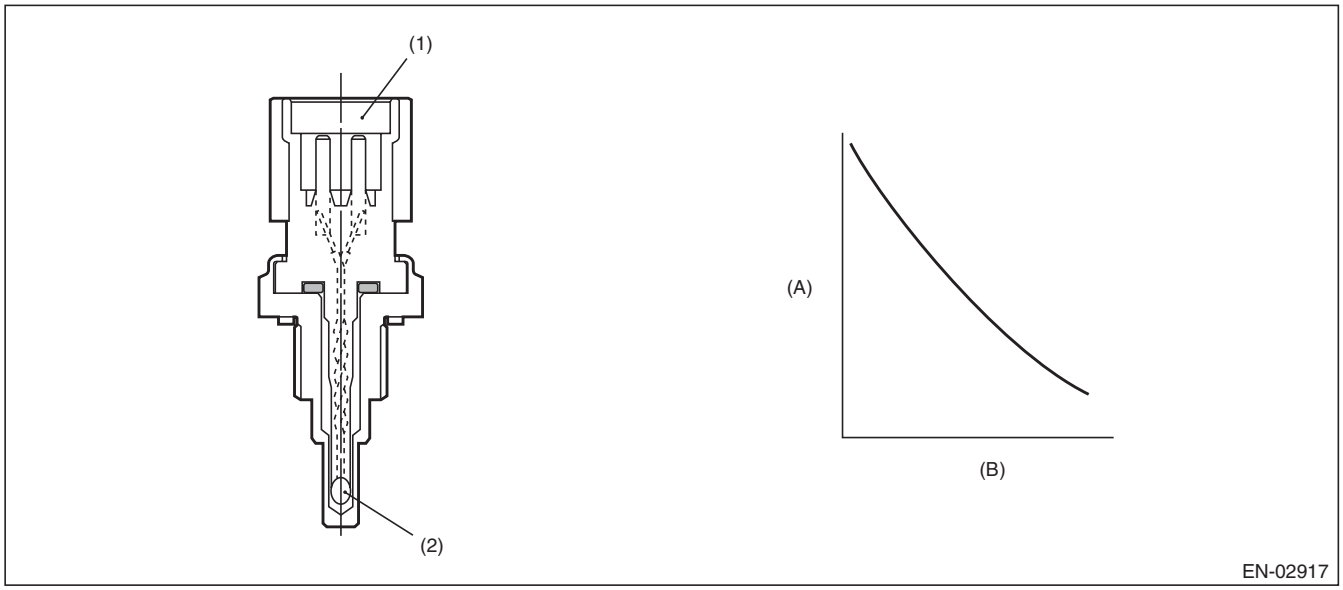

(A) Resistance value (kΩ) (B) Temperature °C (°F)

(1) Connector (2) Thermistor element

3. ENABLE CONDITION

Secondary Parameters	Enable Conditions
None	

4. GENERAL DRIVING CYCLE

Always perform the diagnosis continuously.

GETtheMANUALS.org

5. DIAGNOSTIC METHOD

- **Abnormality Judgment**

If the duration of time while the following conditions are met is longer than the time indicated, judge as NG.

Judgment Value

Malfunction Criteria	Threshold Value
Output voltage	< 0.464 V

Time Needed for Diagnosis: 500 ms
Malfunction Indicator Light Illumination: Illuminates as soon as a malfunction occurs.

- **Normality Judgment**

Judge as OK and clear the NG if the continuous time while the following conditions are established is more than the predetermined time.

Judgment Value

Malfunction Criteria	Threshold Value
Output voltage	≥ 0.464 V

Time Needed for Diagnosis: Less than 1 second

GETtheMANUALS.org

V: DTC P0118 ENGINE COOLANT TEMPERATURE CIRCUIT HIGH

1. OUTLINE OF DIAGNOSIS

Detect the open or short circuit of the engine coolant temperature sensor.
Judge as NG if out of specification.

2. COMPONENT DESCRIPTION

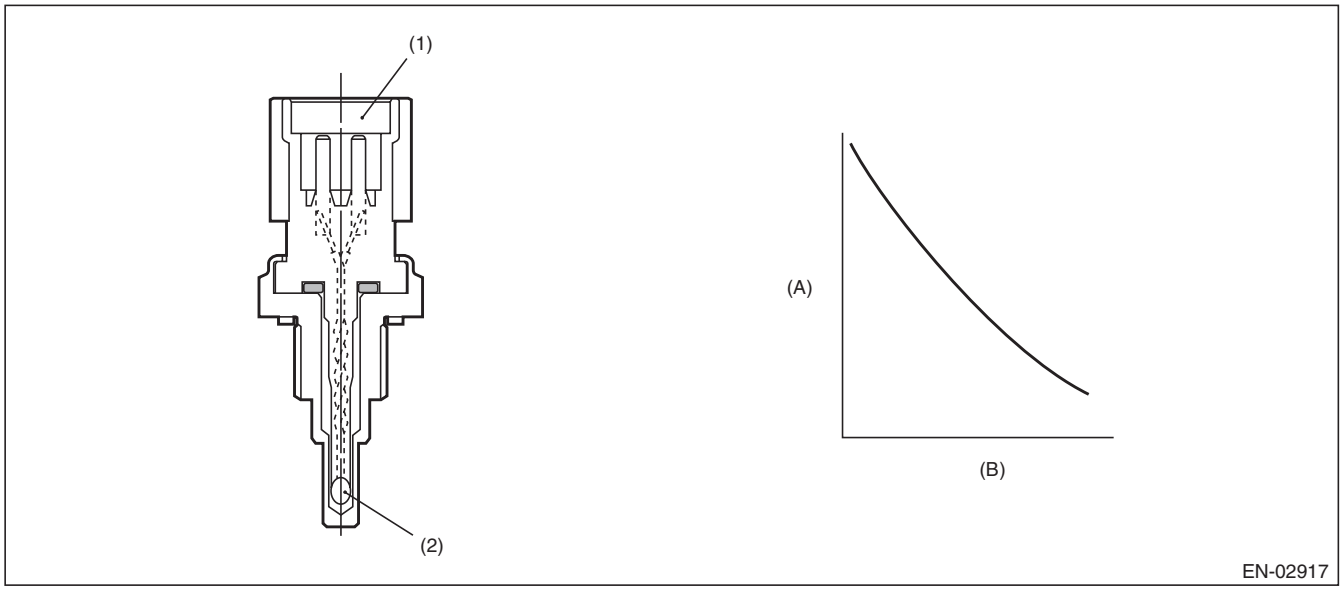

(A) Resistance value (kΩ) (B) Temperature °C (°F)

(1) Connector (2) Thermistor element

3. ENABLE CONDITION

Secondary Parameters	Enable Conditions
None	

4. GENERAL DRIVING CYCLE

Always perform the diagnosis continuously.

GETtheMANUALS.org

5. DIAGNOSTIC METHOD

- **Abnormality Judgment**

If the duration of time while the following conditions are met is longer than the time indicated, judge as NG.

Judgment Value

Malfunction Criteria	Threshold Value
Output voltage	≥ 4.702 V

Time Needed for Diagnosis: 500 ms
Malfunction Indicator Light Illumination: Illuminates as soon as a malfunction occurs.

- **Normality Judgment**

Judge as OK and clear the NG if the continuous time while the following conditions are established is more than the predetermined time.

Judgment Value

Malfunction Criteria	Threshold Value
Output voltage	< 4.702 V

Time Needed for Diagnosis: Less than 1 second

GETtheMANUALS.org

W: DTC P0122 THROTTLE/PEDAL POSITION SENSOR/SWITCH “A” CIRCUIT LOW

1. OUTLINE OF DIAGNOSIS

Detect the open or short circuit of throttle position sensor 1.
Judge as NG if out of specification.

2. COMPONENT DESCRIPTION

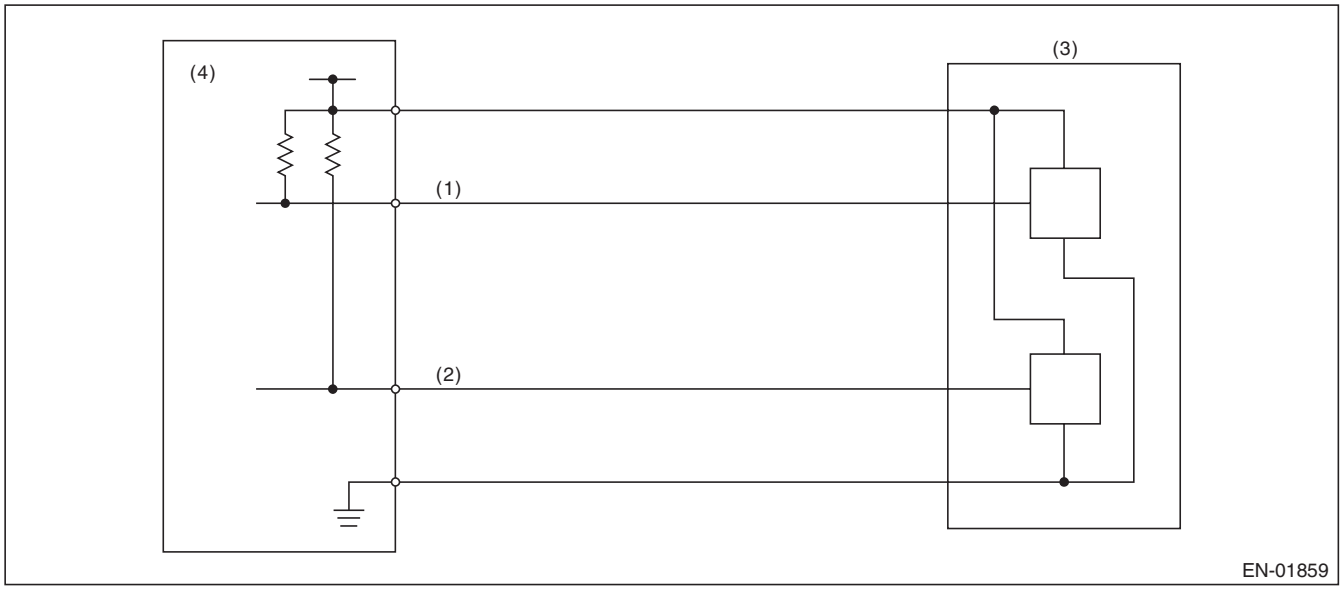

(1) Throttle position sensor 1 signal
(2) Throttle position sensor 2 signal
(3) Throttle position sensor
(4) Engine control module (ECM)

3. ENABLE CONDITION

Secondary Parameters	Enable Conditions
Ignition switch	ON
Battery voltage	≥ 6 V

4. GENERAL DRIVING CYCLE

Always perform the diagnosis continuously.

GETtheMANUALS.org

5. DIAGNOSTIC METHOD

- **Abnormality Judgment**

If the duration of time while the following conditions are met is longer than the time indicated, judge as NG.

Judgment Value

Malfunction Criteria	Threshold Value
Sensor 1 input voltage	≤ 0.23 V

Time Needed for Diagnosis: 24 ms
Malfunction Indicator Light Illumination: Illuminates as soon as a malfunction occurs.

- **Normality Judgment**

Judge as OK and clear the NG if the continuous time while the following conditions are established is more than the predetermined time.

Judgment Value

Malfunction Criteria	Threshold Value
Sensor 1 input voltage	> 0.23 V

Time Needed for Diagnosis: 24 ms

GETtheMANUALS.org

X: DTC P0123 THROTTLE/PEDAL POSITION SENSOR/SWITCH “A” CIRCUIT HIGH

1. OUTLINE OF DIAGNOSIS

Detect the open or short circuit of throttle position sensor 1.
Judge as NG if out of specification.

2. COMPONENT DESCRIPTION

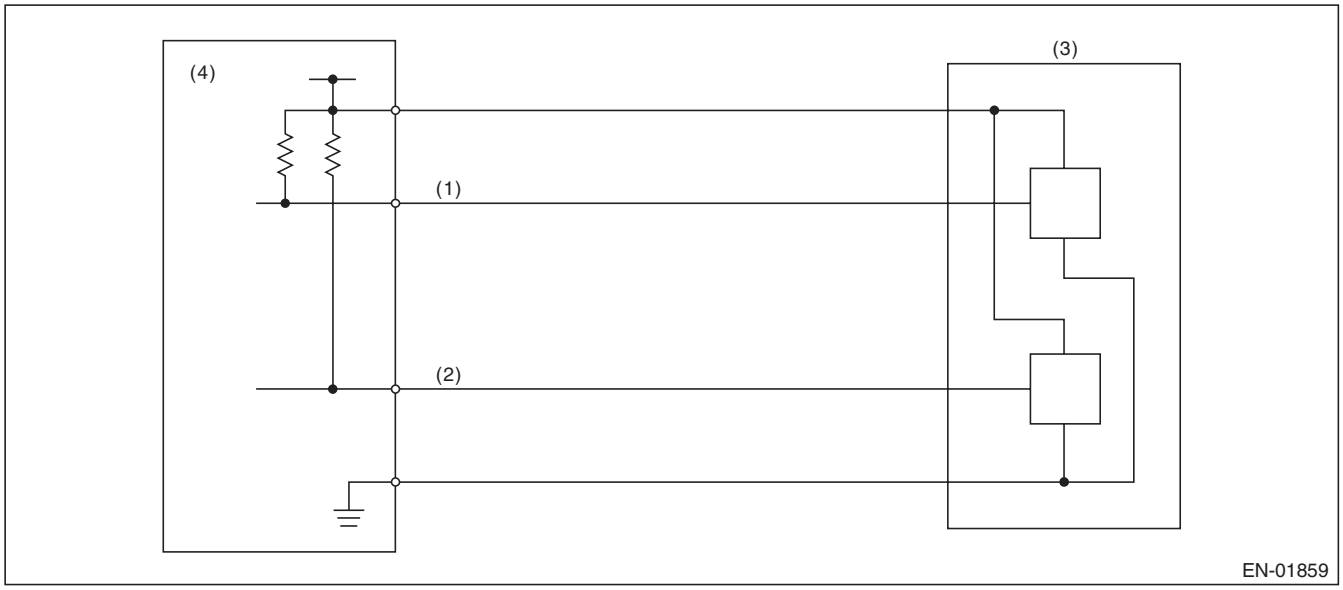

(1) Throttle position sensor 1 signal
(2) Throttle position sensor 2 signal
(3) Throttle position sensor
(4) Engine control module (ECM)

3. ENABLE CONDITION

Secondary Parameters	Enable Conditions
Ignition switch	ON
Battery voltage	≥ 6 V

4. GENERAL DRIVING CYCLE

Always perform the diagnosis continuously.

GETtheMANUALS.org

5. DIAGNOSTIC METHOD

- **Abnormality Judgment**

If the duration of time while the following conditions are met is longer than the time indicated, judge as NG.

Judgment Value

Malfunction Criteria	Threshold Value
Sensor 1 input voltage	≥ 4.858 V

Time Needed for Diagnosis: 24 ms
Malfunction Indicator Light Illumination: Illuminates as soon as a malfunction occurs.

- **Normality Judgment**

Judge as OK and clear the NG if the continuous time while the following conditions are established is more than the predetermined time.

Judgment Value

Malfunction Criteria	Threshold Value
Sensor 1 input voltage	< 4.858 V

Time Needed for Diagnosis: 24 ms

GETtheMANUALS.org

Y: DTC P0125 INSUFFICIENT COOLANT TEMPERATURE FOR CLOSED LOOP FUEL CONTROL

1. OUTLINE OF DIAGNOSIS

Detect the malfunction of engine coolant temperature output property.
Judge as NG when the engine coolant temperature does not rise in driving conditions where it should.

2. COMPONENT DESCRIPTION

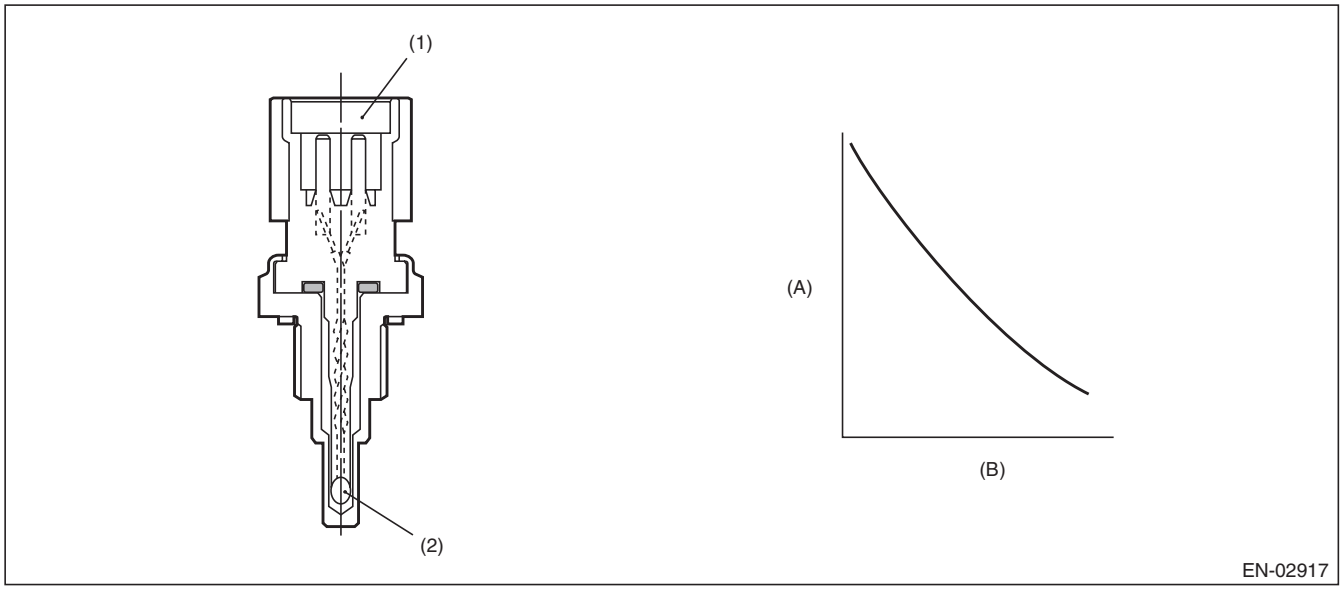

(A) Resistance value (kΩ) (B) Temperature °C (°F)

(1) Connector (2) Thermistor element

3. ENABLE CONDITION

Secondary Parameters	Enable Conditions
Engine speed	≥ Value from Map
Battery voltage	≥ 10.9 V

Map

Engine coolant temperature °C (°F)	–40 (–40)	–30 (–22)	–20 (–4)	–10 (14)	0 (32)	10 (50)	20 (68)	30 (86)
Engine speed rpm	500	500	500	500	500	500	500	500

Engine coolant temperature °C (°F)	40 (104)	50 (122)	60 (140)	70 (158)	80 (176)	90 (194)	100 (212)	110 (230)
Engine speed rpm	500	500	500	500	500	500	500	500

4. GENERAL DRIVING CYCLE

Perform the diagnosis only once after engine start.

GETtheMANUALS.org

5. DIAGNOSTIC METHOD

- **Abnormality Judgment**

Judge as NG if the criteria below are met.

Judgment Value

Malfunction Criteria	Threshold Value
Engine coolant temperature	< 20 °C (68 °F)
Timer for diagnosis after engine start	≥ Judgment value of timer after engine start

Timer for diagnosis after engine start
a. Timer stop at fuel cut
b. During the driving conditions except a) above, timer counts up as follows.
64 ms + TWCNT ms (when at 64 ms)
TWCNT is defined as follows,
TWCNT = 0 at idle switch ON,
TWCNT show on the following table at idle switch OFF.

		Vehicle speed km/h (MPH)							
		0 (0)	8 (5)	16 (9.9)	24 (14.9)	32 (19.9)	40 (24.9)	48 (29.8)	56 (34.8)
Temperature °C (°F)	–20 (–4)	0 ms	33.4152 ms	43.6878 ms	53.9604 ms	89.076 ms	124.1916 ms	163.3671 ms	202.5426 ms
	–10 (14)	0 ms	33.4152 ms	43.6878 ms	53.9604 ms	89.076 ms	124.1916 ms	163.3671 ms	202.5426 ms
	0 (32)	0 ms	21.1752 ms	30.6576 ms	40.14 ms	64.3824 ms	88.626 ms	116.544 ms	144.4632 ms
	10 (50)	0 ms	12.6416 ms	25.2832 ms	37.9264 ms	60.7056 ms	83.4832 ms	109.7168 ms	123.807 ms
	20 (68)	0 ms	10.2713 ms	20.5426 ms	30.8152 ms	49.3233 ms	67.8301 ms	89.1449 ms	99.0456 ms

Judgment value of timer after engine starting
t = 573669 ms – 33924 ms × Ti
Ti : The lowest coolant temperature after engine start
Time Needed for Diagnosis: Less than 1 second
Malfunction Indicator Light Illumination: Illuminates when malfunction occurs in 2 continuous driving cycles.

- **Normality Judgment**

Judge as OK and clear the NG when the malfunction criteria below are met.

Judgment Value

Malfunction Criteria	Threshold Value
Engine coolant temperature	≥ 20 °C (68 °F)

Time Needed for Diagnosis: Less than 1 second

GETtheMANUALS.org

Z: DTC P0126 INSUFFICIENT ENGINE COOLANT TEMPERATURE FOR STABLE OPERATION

1. OUTLINE OF DIAGNOSIS

Detect the malfunction of the engine coolant temperature sensor characteristics.
When the ignition is ON after the specified period of soaking time has elapsed, compare the engine coolant temperature with intake air temperature. Judge as NG if the difference between two temperatures is larger than the predetermined value and the engine coolant temperature becomes the specified value or more.

2. COMPONENT DESCRIPTION

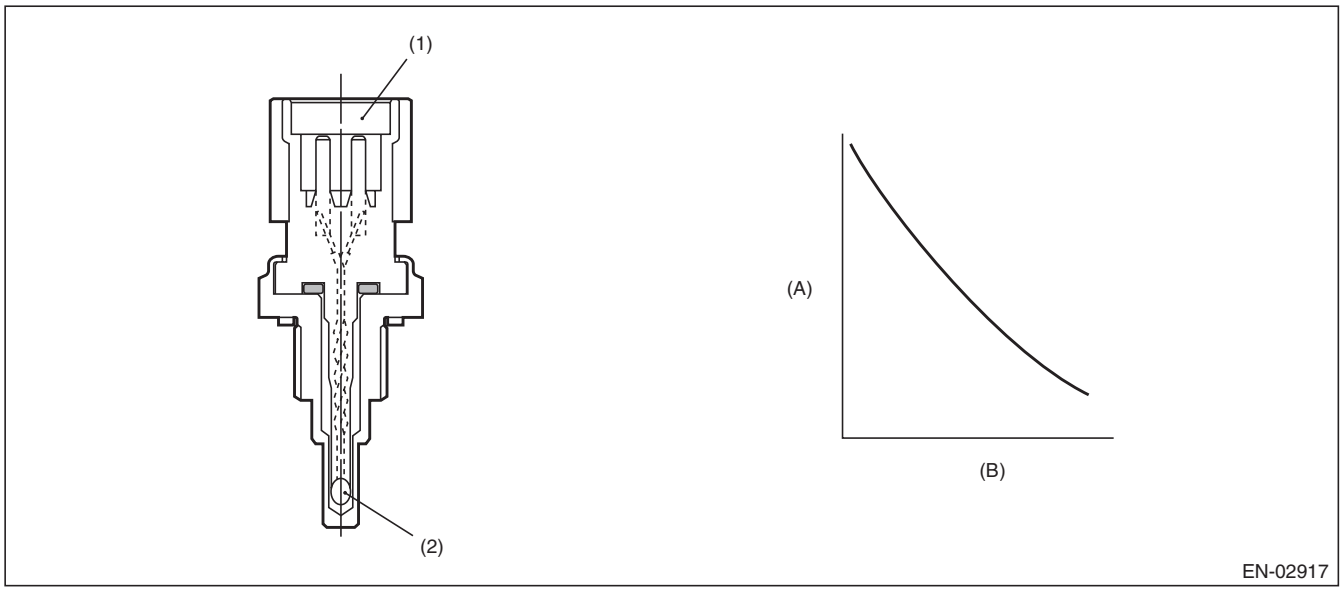

(A) Resistance value (kΩ) (B) Temperature °C (°F)

(1) Connector (2) Thermistor element

3. ENABLE CONDITION

Secondary Parameters	Enable Conditions
Battery voltage	≥ 10.9 V
Soaking time	≥ 21600 s
Engine coolant temperature at the last engine stop	≥ Value from Map

Map

Estimate ambient temperature °C (°F)	–7 (19.4)	8 (46.4)	10 (50)	25 (77)
Engine coolant temperature at the last engine stop °C (°F)	76.2 (169.2)	80.5 (176.9)	80.5 (176.9)	80.5 (176.9)

4. GENERAL DRIVING CYCLE

Perform the diagnosis only once after starting the engine.

GETtheMANUALS.org

5. DIAGNOSTIC METHOD

- **Abnormality Judgment**

If the duration of time while the following conditions are met is longer than the time indicated, judge as NG.

Judgment Value

Malfunction Criteria	Threshold Value
All of the following conditions are established.	
Engine coolant temperature – intake air temperature	> 15°C (27°F)
Engine coolant temperature	> 40 °C (104 °F)

Time Needed for Diagnosis: 512 ms
Malfunction Indicator Light Illumination: Illuminates when malfunction occurs in 2 continuous driving cycles.

- **Normality Judgment**

Judge as OK and clear the NG if the continuous time while the following conditions are established is more than the predetermined time.

Judgment Value

Malfunction Criteria	Threshold Value
When any one of the followings is established.	
Engine coolant temperature – intake air temperature	≤ 15°C (27°F)
Engine coolant temperature	≤ 40 °C (104 °F)

Time Needed for Diagnosis: Less than 1 second

GETtheMANUALS.org

AA:DTC P0128 COOLANT THERMOSTAT (ENGINE COOLANT TEMPERATURE BELOW THERMOSTAT REGULATING TEMPERATURE)

1. OUTLINE OF DIAGNOSIS

Detect malfunctions of the thermostat function.
Judge as NG when any one of the following conditions is established.

- When the actual engine coolant temperature does not reach the maximum temperature necessary to perform other OBDII diagnosis and Σ (Estimated engine coolant temperature – actual engine coolant temperature) exceeded the predetermined value. (Judgment 1)
- When the actual engine coolant temperature does not reach the range within –11°C (–19.8°F) from the regulated temperature and Σ (Estimated engine coolant temperature – actual engine coolant temperature) exceeded the predetermined value. (Judgment 2)
- When the difference between the estimated coolant temperature and the actual engine coolant temperature exceeds the predetermined value, and Σ (Estimated engine coolant temperature – actual engine coolant temperature) exceeded the predetermined value. (Judgment 3)

2. COMPONENT DESCRIPTION

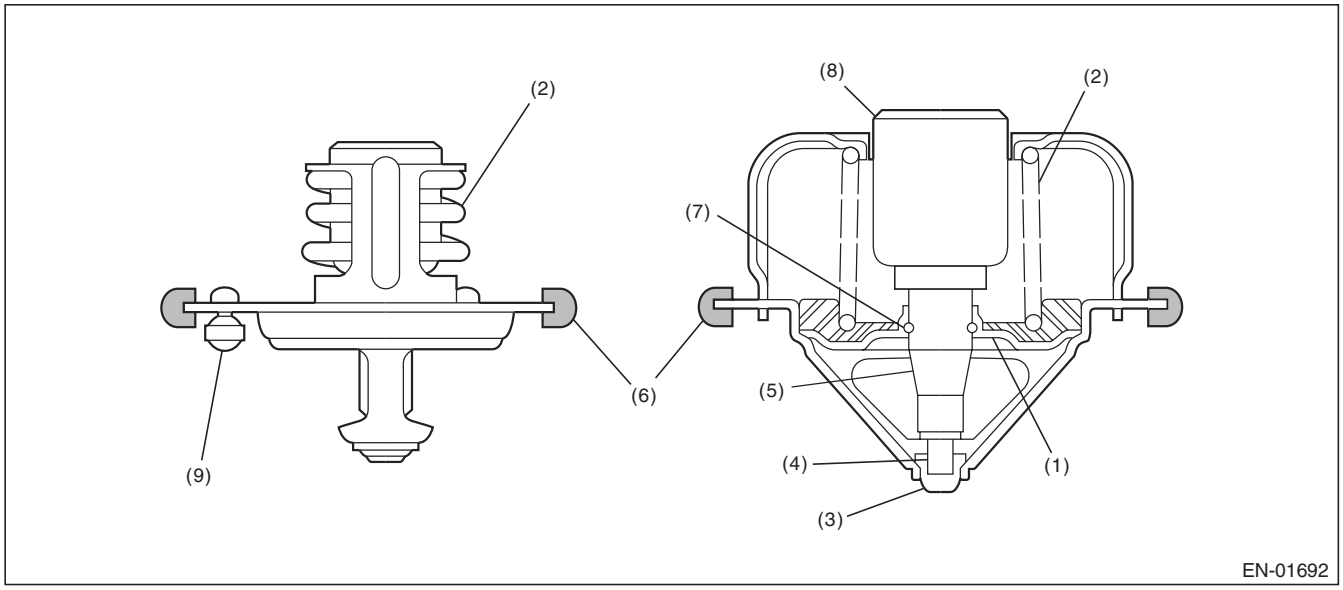

(1)	Valve	(4)	Piston	(7)	Stop ring
(2)	Spring	(5)	Guide	(8)	Wax element
(3)	Stopper	(6)	Rubber seal	(9)	Jiggle valve

GETtheMANUALS.org

3. ENABLE CONDITION

Secondary Parameters	Enable Conditions
<Judgment 1>	
Battery voltage	≥ 10.9 V
Estimate ambient temperature	≥ –7 °C (19.4 °F)
Vehicle speed	≥ 30 km/h (18.6 MPH)
Estimated coolant temperature	≥ Value of Map 1
<Judgment 2>	
Battery voltage	≥ 10.9 V
Estimate ambient temperature	≥ –7 °C (19.4 °F)
Vehicle speed	≥ 30 km/h (18.6 MPH)
Estimated coolant temperature	≥ Value from Map 2
<Judgment 3>	
Battery voltage	≥ 10.9 V
Estimate ambient temperature	≥ –7 °C (19.4 °F)
Vehicle speed	≥ 30 km/h (18.6 MPH)
Estimated coolant temperature	≥ Value from Map 3

Map 1

Engine coolant temperature at engine starting °C (°F)	–7 (19.4)	8 (46.4)	10 (50)	25 (77)
Estimated coolant temperature °C (°F)	75 (167)	75 (167)	75 (167)	75 (167)

Map 2

Engine coolant temperature at engine starting °C (°F)	–7 (19.4)	8 (46.4)	10 (50)	25 (77)
Estimated coolant temperature °C (°F)	76.2 (169.2)	80.5 (176.9)	80.5 (176.9)	80.5 (176.9)

Map 3

Engine coolant temperature at engine starting °C (°F)	–7 (19.4)	10 (50)	25 (77)	66 (150.8)
Estimated coolant temperature °C (°F)	54.9 (130.8)	60.8 (141.4)	66 (150.8)	80.5 (176.9)

4. GENERAL DRIVING CYCLE

Perform the diagnosis only once after starting the engine.

GETtheMANUALS.org

5. DIAGNOSTIC METHOD

• Abnormality Judgment

If the duration of time while the following conditions are met is longer than the time indicated, judge as NG.

Judgment Value

Malfunction Criteria	Threshold Value
When any one of the followings is established.	
<Judgment 1>	
Actual engine coolant temperature and Σ (Estimated engine coolant temperature – actual engine coolant temperature)	< Value of Map 4 > Value of Map 5
<Judgment 2>	
Actual engine coolant temperature and Σ (Estimated engine coolant temperature – actual engine coolant temperature)	< Regulated temperature – Value of Map 6 > Value of Map 7
<Judgment 3>	
Estimated engine coolant temperature – actual engine coolant temperature and Σ (Estimated engine coolant temperature – actual engine coolant temperature)	> Value of Map 8 > Value of Map 9

Map 4

Estimate ambient temperature °C (°F)	–7 (19.4)	8 (46.4)	10 (50)	25 (77)
Threshold Value °C (°F)	75 (167)	75 (167)	75 (167)	75 (167)

Map 5

Engine coolant temperature at engine starting °C (°F)	–7 (19.4)	0 (32)	8 (46.4)	10 (50)	25 (77)	35 (95)
Threshold Value °C (°F)	1731.6 (3116.9)	1731.6 (3116.9)	1731.6 (3116.9)	1731.6 (3116.9)	1731.6 (3116.9)	1200 (2160)

Map 6

Estimate ambient temperature °C (°F)	–7 (19.4)	8 (46.4)	10 (50)	25 (77)
Threshold Value °C (°F)	15.4 (27.7)	11.1 (20)	11.1 (20)	11.1 (20)

Map 7

Engine coolant temperature at engine starting °C (°F)	–7 (19.4)	0 (32)	8 (46.4)	10 (50)	25 (77)	40 (104)	45 (113)
Threshold Value °C (°F)	1731.6 (3116.9)	1731.6 (3116.9)	1731.6 (3116.9)	1731.6 (3116.9)	1731.6 (3116.9)	1731.6 (3116.9)	1500 (2700)

GETtheMANUALS.org

Map 8

Estimate ambient temperature °C (°F)	–7 (19.4)	8 (46.4)	10 (50)	25 (77)
Threshold Value °C (°F)	11.1 (20)	11.1 (20)	11.1 (20)	11.1 (20)

Map 9

Engine coolant temperature at engine starting °C (°F)	–7 (19.4)	8 (46.4)	10 (50)	25 (77)
Threshold Value °C (°F)	1731.6 (3116.9)	1731.6 (3116.9)	1731.6 (3116.9)	1731.6 (3116.9)

Time Needed for Diagnosis: 300 — 700 seconds
Malfunction Indicator Light Illumination: Illuminates when malfunction occurs in 2 continuous driving cycles.

- **Normality Judgment**

Judge as OK and clear the NG if the continuous time while the following conditions are established is more than the predetermined time.

Judgment Value

Malfunction Criteria	Threshold Value
All of the following conditions are established.	
<Judgment 1>	
Actual engine coolant temperature and Σ (Estimated engine coolant temperature – actual engine coolant temperature)	≥ Value of Map 4 ≤ Value of Map 5
<Judgment 2>	
Actual engine coolant temperature and Σ (Estimated engine coolant temperature – actual engine coolant temperature)	≥ Regulated temperature – Value of Map 6 ≤ Value of Map 7
<Judgment 3>	
Estimated engine coolant temperature – actual engine coolant temperature and Σ (Estimated engine coolant temperature – actual engine coolant temperature) and Actual engine coolant temperature	≤ Value of Map 8 ≤ Value of Map 9 ≥ Regulated temperature – Value of Map 10

Map 10

Estimate ambient temperature °C (°F)	–7 (19.4)	8 (46.4)	10 (50)	25 (77)
Threshold Value °C (°F)	15.4 (27.7)	11.1 (20)	11.1 (20)	11.1 (20)

Time Needed for Diagnosis: 300 — 700 seconds

GETtheMANUALS.org

AB:DTC P0131 O2 SENSOR CIRCUIT LOW VOLTAGE (BANK 1 SENSOR 1)

1. OUTLINE OF DIAGNOSIS

Detect the open or short circuit of sensor.
Judge as NG, when the element voltage is out of the specified range.

2. COMPONENT DESCRIPTION

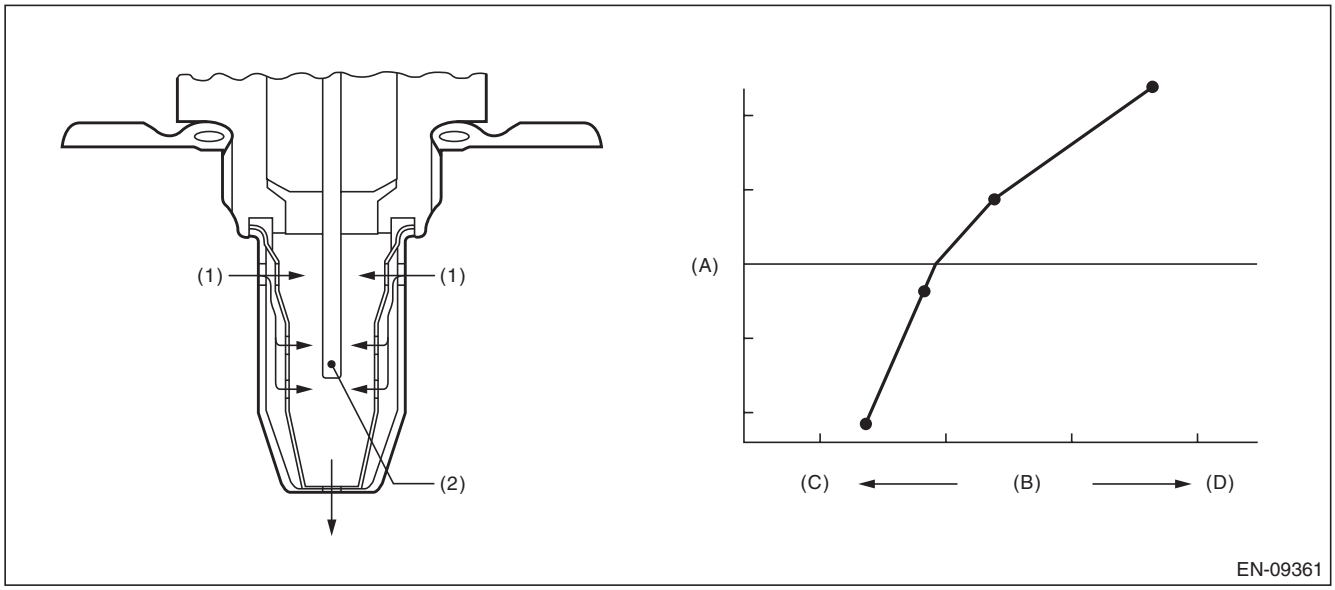

(A) Electromotive force (B) Air fuel ratio (C) Lean
(D) Rich

(1) Exhaust gas (2) ZrO_2

3. ENABLE CONDITION

Secondary Parameters	Enable Conditions
Battery voltage	≥ 10.9 V

4. GENERAL DRIVING CYCLE

Always perform the diagnosis continuously.

GETtheMANUALS.org

5. DIAGNOSTIC METHOD

- **Abnormality Judgment**

If the duration of time while the following conditions are met is longer than the time indicated, judge as NG.

Judgment Value

Malfunction Criteria	Threshold Value
Input voltage (+)	< 1.128 V
or	
Input voltage (–)	< 0.23 V
or	
|Input voltage (+) – Input voltage (–)|	< 0.644 V

Time Needed for Diagnosis:
Input voltage (+): 1000 ms
Input voltage (–): 1000 ms
|Input voltage (+) – Input voltage (–)|: 1000 ms
Malfunction Indicator Light Illumination: Illuminates as soon as a malfunction occurs.

- **Normality Judgment**

Judge as OK and clear the NG if the continuous time while the following conditions are established is more than the predetermined time.

Judgment Value

Malfunction Criteria	Threshold Value
Input voltage (+)	≥ 1.128 V
Input voltage (–)	≥ 0.23 V
|Input voltage (+) – Input voltage (–)|	≥ 0.644 V

Time Needed for Diagnosis: Less than 1 second

GETtheMANUALS.org

AC:DTC P0132 O2 SENSOR CIRCUIT HIGH VOLTAGE (BANK 1 SENSOR 1)

1. OUTLINE OF DIAGNOSIS

Detect the open or short circuit of sensor.
Judge as NG, when the element voltage is out of the specified range.

2. COMPONENT DESCRIPTION

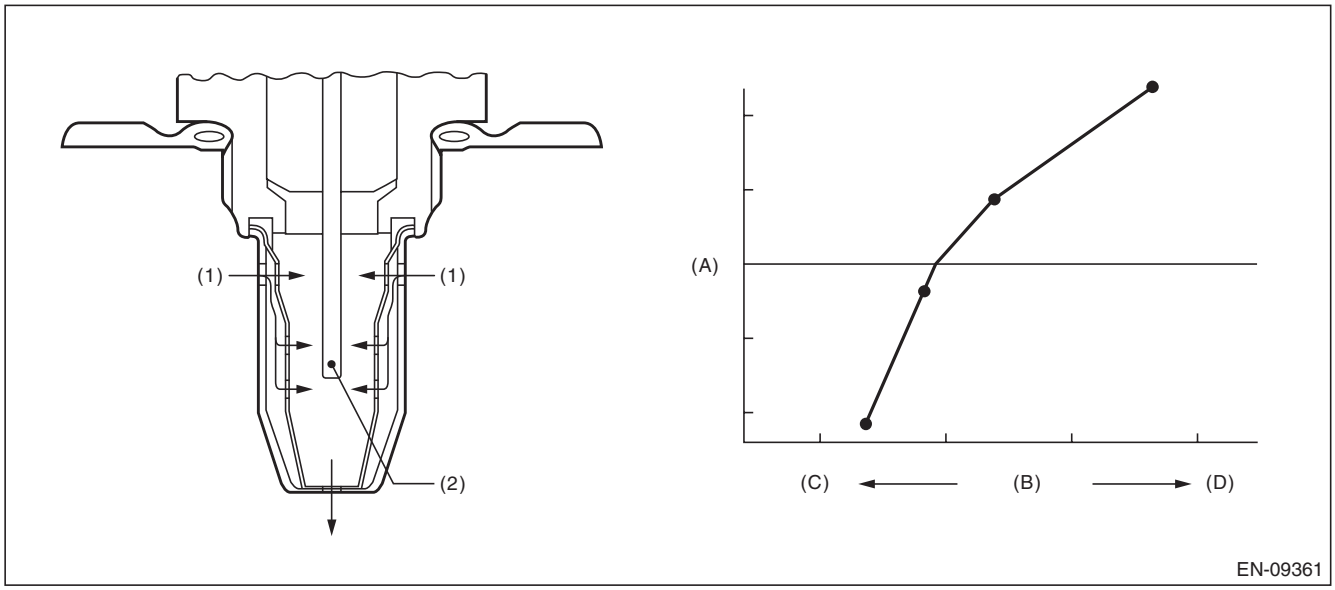

(A) Electromotive force (B) Air fuel ratio (C) Lean
(D) Rich

(1) Exhaust gas (2) ZrO_2

3. ENABLE CONDITION

Secondary Parameters	Enable Conditions
Battery voltage	≥ 10.9 V

4. GENERAL DRIVING CYCLE

Always perform the diagnosis continuously.

GETtheMANUALS.org

5. DIAGNOSTIC METHOD

- **Abnormality Judgment**

If the duration of time while the following conditions are met is longer than the time indicated, judge as NG.

Judgment Value

Malfunction Criteria	Threshold Value
Input voltage (+) or Input voltage (–)	> 3.589 V > 3.541 V

Time Needed for Diagnosis:
Input voltage (+): 1000 ms
Input voltage (–): 1000 ms
Malfunction Indicator Light Illumination: Illuminates as soon as a malfunction occurs.

- **Normality Judgment**

Judge as OK and clear the NG if the continuous time while the following conditions are established is more than the predetermined time.

Judgment Value

Malfunction Criteria	Threshold Value
Input voltage (+)	≤ 3.589 V
Input voltage (–)	≤ 3.541 V

Time Needed for Diagnosis: Less than 1 second

GETtheMANUALS.org

AD:DTC P0133 O2 SENSOR CIRCUIT SLOW RESPONSE (BANK 1 SENSOR 1)

1. OUTLINE OF DIAGNOSIS

Detect the slow response of front oxygen (A/F) sensor.
Front oxygen (A/F) sensor cover has some ventilation holes for exhaust gas. Clogged ventilation holes are diagnosed.
When the holes are clogged, the A/F output variation becomes slow comparing with the actual A/F variation because oxygen which reaches the zirconia layer is insufficient. Therefore, if the sensor cover holes are clogged, the rich to lean judgment in the ECM is delayed when the actual change from rich to lean occurs.
Judge as NG when the actual movement in comparison to the ECM control amount is slow.

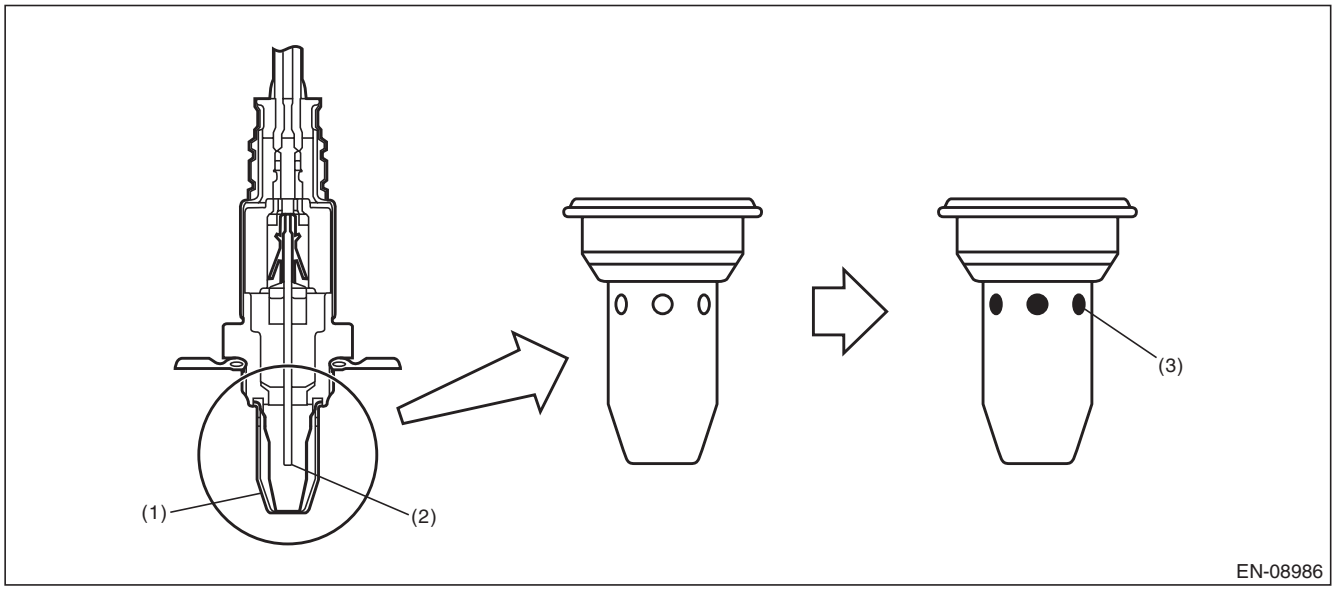

(1) Cover (2) Zirconia (3) Clogging

2. COMPONENT DESCRIPTION

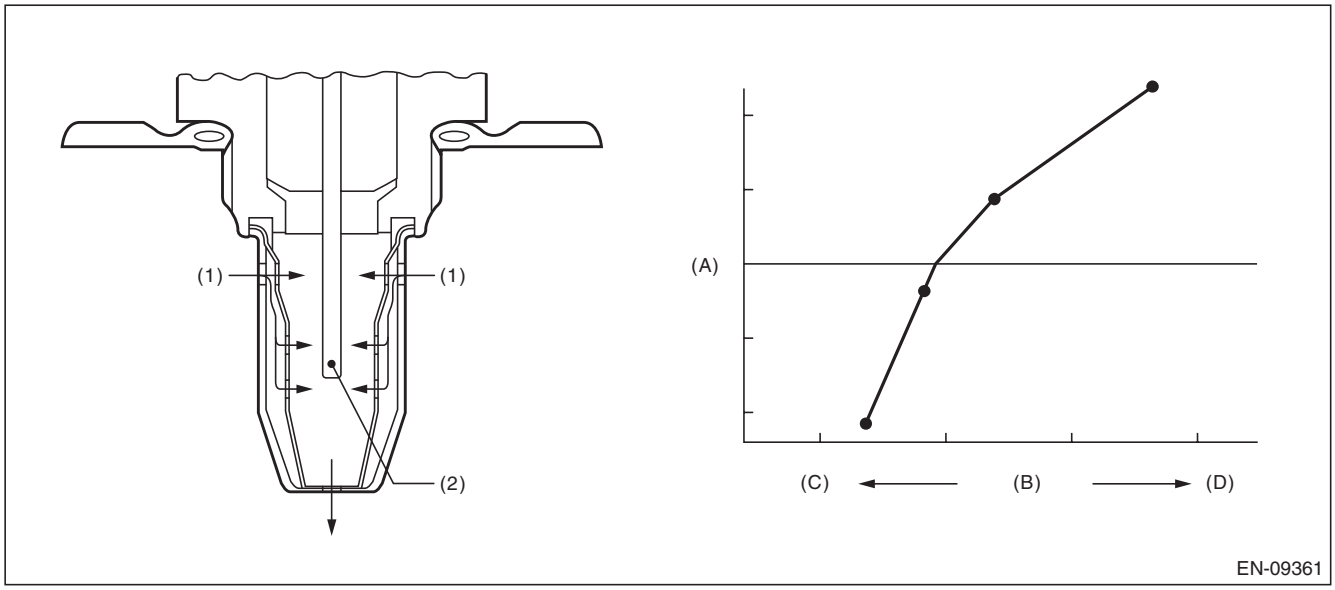

(A) Electromotive force (B) Air fuel ratio (C) Lean
(D) Rich

(1) Exhaust gas (2) ZrO_2

GETthemanuals.org

3. ENABLE CONDITION

Secondary Parameters	Enable Conditions
Time needed for all secondary parameters to be in enable conditions	≥ 1024 ms
Battery voltage	≥ 10.9 V
Barometric pressure	> 75 kPa (563 mmHg, 22.2 inHg)
Closed loop control with main feedback	Operation
Front oxygen (A/F) sensor impedance	0 Ω — 50 Ω
Elapsed time after starting the engine	≥ 120000 ms
Engine coolant temperature	≥ 75 °C (167 °F)
Engine speed	1000 rpm — 10000 rpm
Vehicle speed	10 km/h — 200 km/h (6.2 MPH — 124.3 MPH)
Amount of intake air	10 g/s — 40 g/s (0.35 oz/s — 1.41 oz/s)
Engine load	< 0.02 g/rev (0 oz/rev)
Learning value of EVAP conc. during purge	< 0.2
Total time of operating canister purge	≥ 19.9 s

4. GENERAL DRIVING CYCLE

Perform diagnosis only once at a constant speed of 10 km/h — 200 km/h (6.2 MPH — 124.3 MPH) 120000 ms or more after starting the engine.

GETtheMANUALS.org

5. DIAGNOSTIC METHOD

Calculate faf difference every 32 ms × 4 , and the λ value difference. Calculate the diagnostic value after calculating 820 time(s).

- **Abnormality Judgment**

If the duration of time while the following conditions are met is longer than the time indicated, judge as NG.

Judgment Value

Malfunction Criteria	Threshold Value
parafca = td2faf/td2lmd where, td2faf (N) = td2faf (n–1) + |d2faf (n)| td2lmd (N) = td2lmd (n–1) + |d2lmd (n)| add up to 32 ms × 4 × 820 time(s). d2faf (n) = (faf (n) – faf (n–1)) – (faf (n–1) – faf (n–2)) d2lmd (n) = (lmd (n) – lmd (n–1)) – (lmd (n–1) – lmd (n–2)) faf = main feedback compensation coefficient every 128 milliseconds lmd = output lambda every 128 milliseconds	> 0.3

Time Needed for Diagnosis: 32 ms × 4 × 820 time(s)
Malfunction Indicator Light Illumination: Illuminates when malfunction occurs in 2 continuous driving cycles.

- **Normality Judgment**

Judge as OK and clear the NG if the continuous time while the following conditions are established is more than the predetermined time.

Judgment Value

Malfunction Criteria	Threshold Value
parafca = td2faf/td2lmd where, td2faf (N) = td2faf (n–1) + |d2faf (n)| td2lmd (N) = td2lmd (n–1) + |d2lmd (n)| add up to 32 ms × 4 × 820 time(s). d2faf (n) = (faf (n) – faf (n–1)) – (faf (n–1) – faf (n–2)) d2lmd (n) = (lmd (n) – lmd (n–1)) – (lmd (n–1) – lmd (n–2)) faf = main feedback compensation coefficient every 128 milliseconds lmd = output lambda every 128 milliseconds	≤ 0.3

Time Needed for Diagnosis: 32 ms × 4 × 820 time(s)

GETtheMANUALS.org

AE:DTC P0134 O2 SENSOR CIRCUIT NO ACTIVITY DETECTED (BANK 1 SENSOR 1)

1. OUTLINE OF DIAGNOSIS

Detect open circuits of the sensor.
Judge as NG when the impedance of the element is large.

2. COMPONENT DESCRIPTION

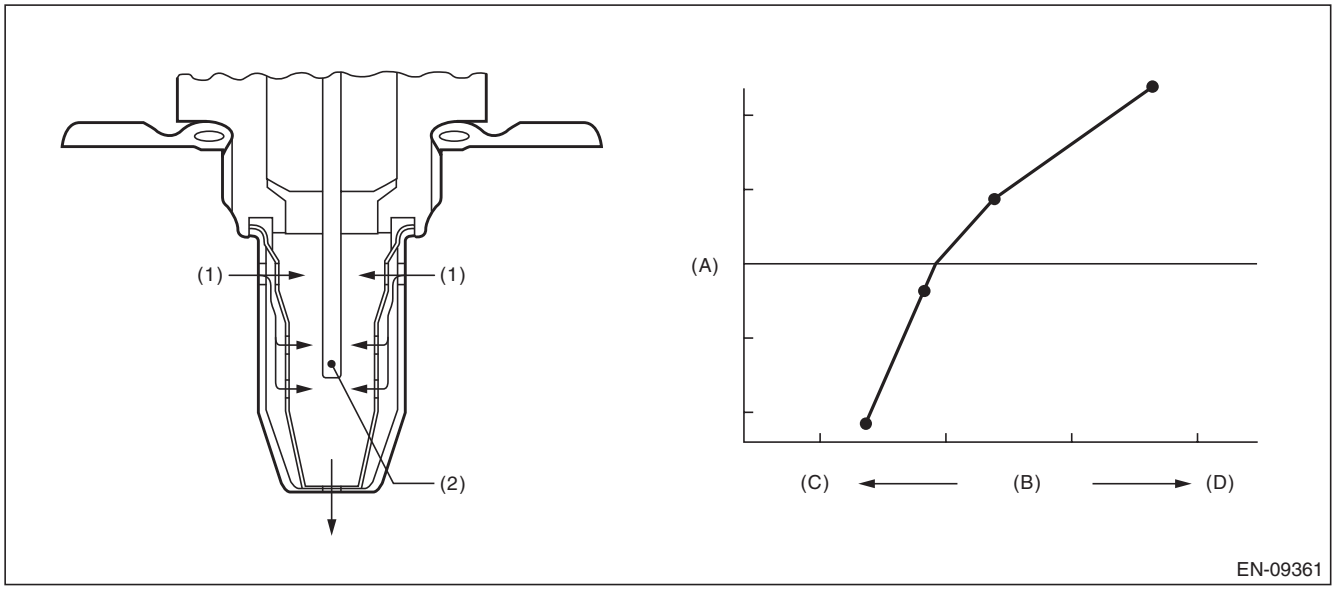

(A) Electromotive force (B) Air fuel ratio (C) Lean
(D) Rich

(1) Exhaust gas (2) ZrO_2

3. ENABLE CONDITION

Secondary Parameters	Enable Conditions
None	

4. GENERAL DRIVING CYCLE

Always perform the diagnosis continuously.

GETtheMANUALS.org

5. DIAGNOSTIC METHOD

- **Abnormality Judgment**

If the duration of time while the following conditions are met is longer than the time indicated, judge as NG.

Judgment Value

Malfunction Criteria	Threshold Value
Battery voltage	≥ 10.9 V
Time of heater control duty at 70 % or more	≥ 36000 ms
Front oxygen (A/F) sensor impedance.	> 500 Ω

Time Needed for Diagnosis: 5000 ms
Malfunction Indicator Light Illumination: Illuminates as soon as a malfunction occurs.

- **Normality Judgment**

Judge as OK and clear the NG if the continuous time while the following conditions are established is more than the predetermined time.

Judgment Value

Malfunction Criteria	Threshold Value
Battery voltage	≥ 10.9 V
Front oxygen (A/F) sensor impedance.	≤ 500 Ω

Time Needed for Diagnosis: Less than 1 second

GETtheMANUALS.org

AF:DTC P0137 O2 SENSOR CIRCUIT LOW VOLTAGE (BANK 1 SENSOR 2)

1. OUTLINE OF DIAGNOSIS

Detect continuity NG of the oxygen sensor. If the oxygen sensor voltage reading is not within the probable range considering the operating conditions, judge as NG.

2. COMPONENT DESCRIPTION

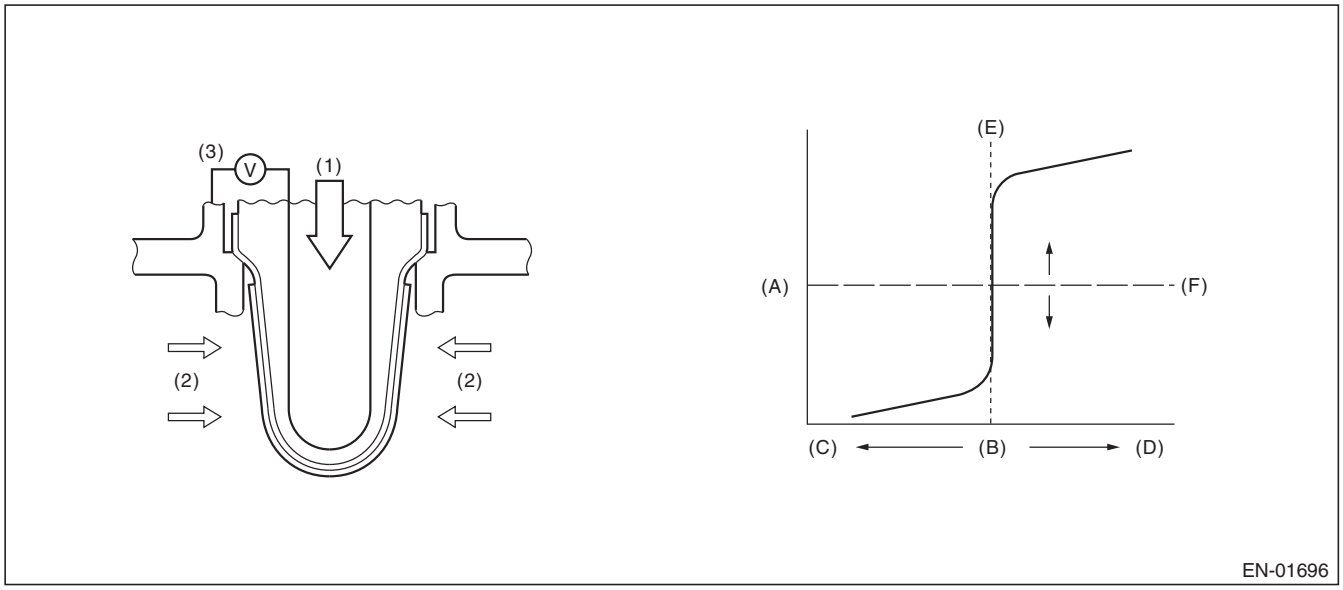

(A)	Electromotive force	(B)	Air fuel ratio	(C)	Rich
(D)	Lean	(E)	Theoretical air fuel ratio	(F)	Comparative voltage
(1)	Atmosphere	(2)	Exhaust gas	(3)	Electromotive force

GETtheMANUALS.org

3. ENABLE CONDITION

Used for abnormality judgment

Secondary Parameters	Enable Conditions
High	
Secondary air system	Not in operation
Closed loop control at the oxygen sensor	In operation
Misfire detection every 200 rotations	< 65535 time(s)
Front oxygen (A/F) sensor compensation coefficient	Not in limit value
Battery voltage	≥ 10.9 V
Engine coolant temperature	≥ 75 °C (167 °F)
Low (1)	
Secondary air system	Not in operation
Closed loop control at the oxygen sensor	In operation
Misfire detection every 200 rotations	< 65535 time(s)
Front oxygen (A/F) sensor compensation coefficient	Not in limit value
Battery voltage	≥ 10.9 V
Engine coolant temperature	≥ 75 °C (167 °F)
Amount of intake air	≥ 10 g/s (0.35 oz/s)
Low (2)	
Secondary air system	Not in operation
Closed loop control at the oxygen sensor	In operation
Misfire detection every 200 rotations	< 65535 time(s)
Front oxygen (A/F) sensor compensation coefficient	Not in limit value
Battery voltage	≥ 10.9 V
Engine coolant temperature	≥ 75 °C (167 °F)
Amount of intake air	< 10 g/s (0.35 oz/s)
Current continuation time of the rear oxygen sensor heater	≥ 30000 ms
Low (3)	
Secondary air system	Not in operation
Closed loop control at the oxygen sensor	In operation
Misfire detection every 200 rotations	< 65535 time(s)
Front oxygen (A/F) sensor compensation coefficient	Not in limit value
Battery voltage	≥ 10.9 V
Engine coolant temperature	≥ 75 °C (167 °F)
Amount of intake air	< 10 g/s (0.35 oz/s)
Current continuation time of the rear oxygen sensor heater	≥ 30000 ms
Fuel cut	Experienced

GETtheMANUALS.org

Used for normality judgment

Secondary Parameters	Enable Conditions
Secondary air system	Not in operation
Closed loop control at the oxygen sensor	In operation
Misfire detection every 200 rotations	< 65535 time(s)
Front oxygen (A/F) sensor compensation coefficient	Not in limit value
Battery voltage	≥ 10.9 V
Engine coolant temperature	≥ 75 °C (167 °F)

4. GENERAL DRIVING CYCLE

After starting the engine, continuously perform the diagnosis with the same engine condition.

5. DIAGNOSTIC METHOD

- **Abnormality Judgment**

If the duration of time while the following conditions are met is longer than the time indicated, judge as NG.

Judgment Value

Malfunction Criteria	Threshold Value	DTC
High Sensor output voltage	> 1.2 V	P0138
Low Sensor output voltage	< 0.03 V	P0137

Time Needed for Diagnosis:

High: 2500 ms
Low (1): 20000 ms
Low (2): 40000 ms
Low (3): Value from Map

Map

Fuel cut time (ms)	0	2000	10000
Time Needed for Diagnosis (ms)	40000	40000	60000

Malfunction Indicator Light Illumination: Illuminates when malfunction occurs in 2 continuous driving cycles.

- **Normality Judgment**

Judge as OK and clear the NG if the continuous time while the following conditions are established is more than the predetermined time.

Judgment Value

Malfunction Criteria	Threshold Value	DTC
High Sensor output voltage	≤ 1.2 V	P0138
Low Sensor output voltage	≥ 0.03 V	P0137

Time Needed for Diagnosis:

High: Less than 1 second
Low (1): Less than 1 second
Low (2): Less than 1 second
Low (3): Less than 1 second

GETtheMANUALS.org

AG:DTC P0138 O2 SENSOR CIRCUIT HIGH VOLTAGE (BANK 1 SENSOR 2)

1. OUTLINE OF DIAGNOSIS

NOTE:
For the detection standard, refer to DTC P0137. <Ref. to GD(H4SO)-68, DTC P0137 O2 SENSOR CIRCUIT LOW VOLTAGE (BANK 1 SENSOR 2), Diagnostic Trouble Code (DTC) Detecting Criteria.>

GETtheMANUALS.org

AH:DTC P013A O2 SENSOR SLOW RESPONSE - RICH TO LEAN (BANK 1 SENSOR 2)

1. OUTLINE OF DIAGNOSIS

Detect the slow response of rich → lean for rear oxygen sensor output.
When the deceleration fuel cut has occurred, detect the trouble by calculating the time when the rear oxygen sensor output passes through the predetermined range of voltages.
Judge as NG when the response time is larger than the threshold value.

2. COMPONENT DESCRIPTION

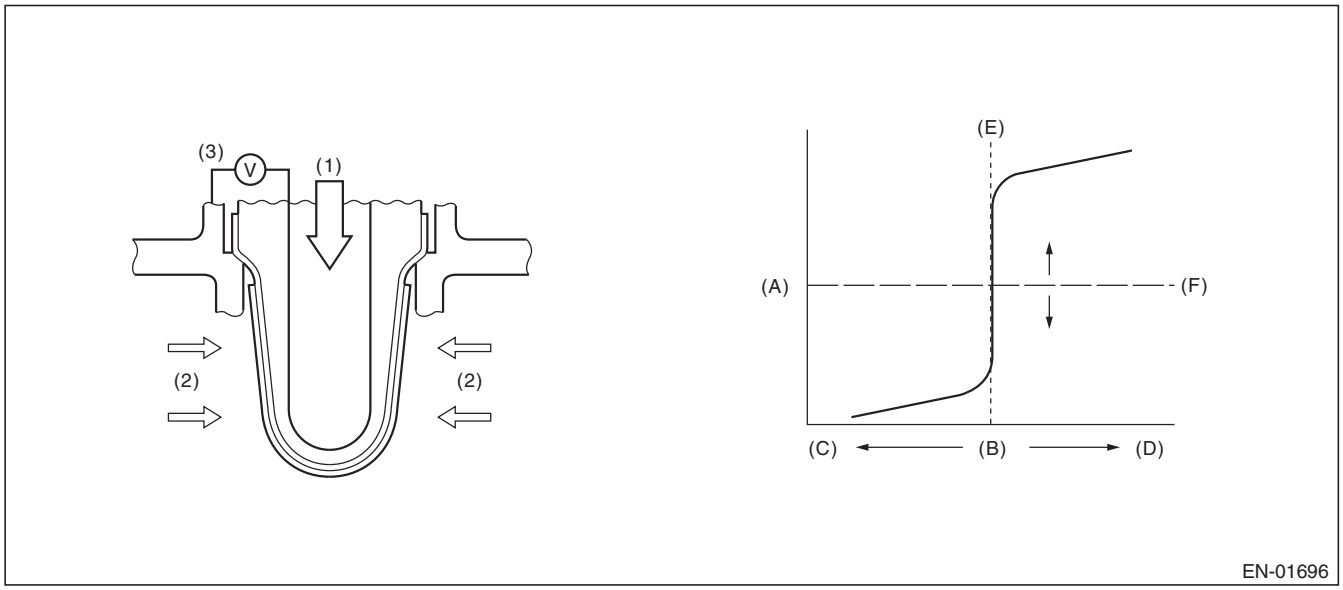

(A)	Electromotive force	(B)	Air fuel ratio	(C)	Rich
(D)	Lean	(E)	Theoretical air fuel ratio	(F)	Comparative voltage
(1)	Atmosphere	(2)	Exhaust gas	(3)	Electromotive force

3. ENABLE CONDITIONS

Secondary Parameters	Enable Conditions
Battery voltage	> 10.9 V
Rear oxygen sensor closed loop control	Operation
Current calculation time of the rear oxygen sensor heater after starting	≥ 180000 ms
Engine speed when fuel cut starts	≥ 1300 rpm
Rear oxygen sensor voltage when fuel cut starts	≥ 0.55 V
Fuel cut time	≥ 5000 ms
Engine coolant temperature when fuel cut starts	≥ 75 °C (167 °F)
Estimated temperature of rear oxygen sensor element when fuel cut starts	≥ 500 °C (932 °F)

4. GENERAL DRIVING CYCLE

Perform diagnosis once during deceleration fuel cut from a constant and high speed driving, when rear oxygen sensor is warmed up sufficiently.

GETtheMANUALS.org

5. DIAGNOSTIC METHOD

Detect the trouble by calculating the response time of the rear oxygen sensor during fuel cut.

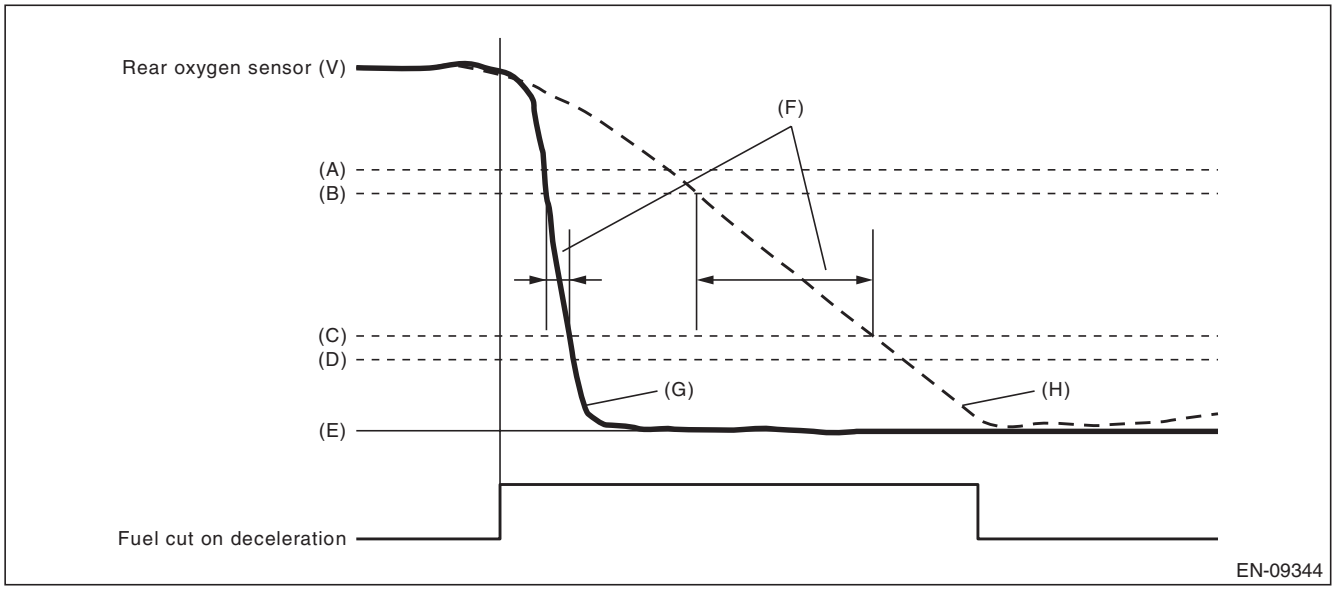

(A)	0.55 V	(B)	0.50 V	(C)	0.20 V
(D)	0.15 V	(E)	0 V	(F)	Diagnostic parameter
(G)	Normal	(H)	Malfunction		

- **Abnormality Judgment**

Judge as NG when the following conditions are established.

Judgment Value

Malfunction Criteria	Threshold Value
Time when rear oxygen sensor voltage changed from 0.5 V to 0.2 V.	> 491 ms

Time Needed for Diagnosis: 10 seconds

Malfunction Indicator Light Illumination: Illuminates when malfunction occurs in 2 continuous driving cycles.

- **Normality Judgment**

Judge as OK and clear the NG if the following conditions are established.

Judgment Value

Malfunction Criteria	Threshold Value
Time when rear oxygen sensor voltage changed from 0.5 V to 0.2 V.	≤ 491 ms

Time Needed for Diagnosis: 10 seconds

GETtheMANUALS.org

AI: DTC P013B O2 SENSOR SLOW RESPONSE - LEAN TO RICH (BANK 1 SENSOR 2)

1. OUTLINE OF DIAGNOSIS

Detect the slow response of lean → rich for rear oxygen sensor output.
After the deceleration fuel cut has occurred, detect the trouble by calculating the time when the rear oxygen sensor output passes through the predetermined range of voltages.
Judge as NG when the response time is larger than the threshold value.

2. COMPONENT DESCRIPTION

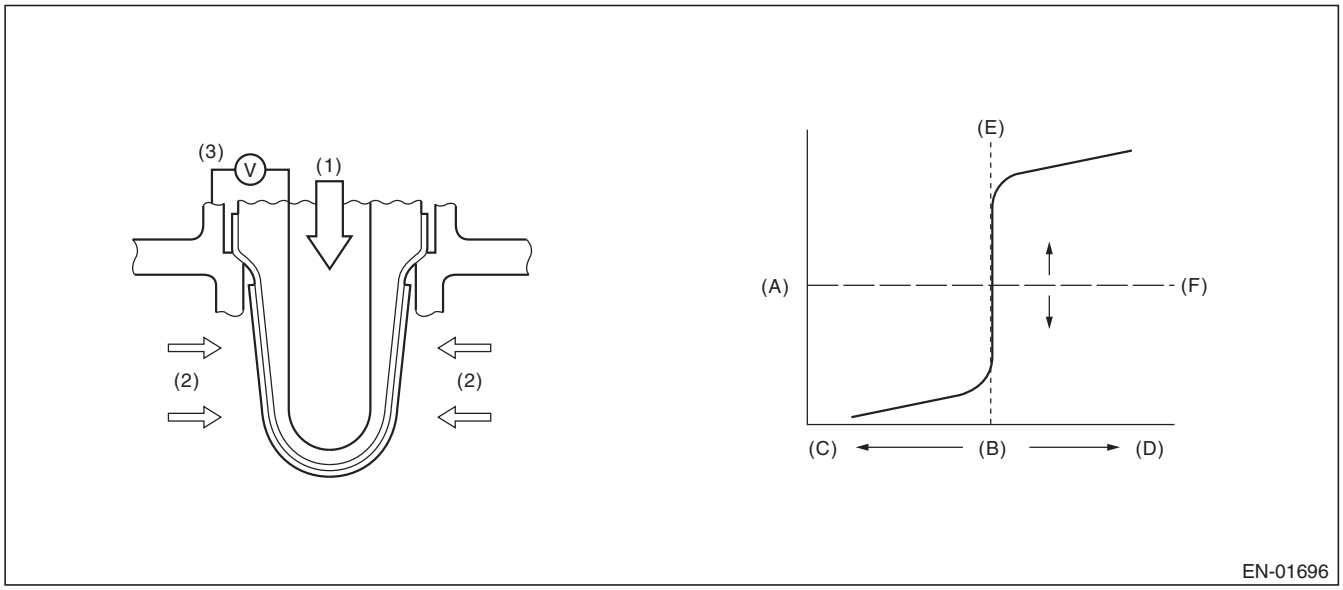

(A)	Electromotive force	(B)	Air fuel ratio	(C)	Rich
(D)	Lean	(E)	Theoretical air fuel ratio	(F)	Comparative voltage
(1)	Atmosphere	(2)	Exhaust gas	(3)	Electromotive force

3. ENABLE CONDITIONS

Secondary Parameters	Enable Conditions
Battery voltage	> 10.9 V
Rear oxygen sensor closed loop control	Operation
Fuel cut time	≥ 5000 ms

4. GENERAL DRIVING CYCLE

Perform diagnosis only once after recovering from a deceleration fuel cut continued for more than predetermined time.

GETtheMANUALS.org

5. DIAGNOSTIC METHOD

Detect the trouble by calculating the response time of the rear oxygen sensor after fuel cut.

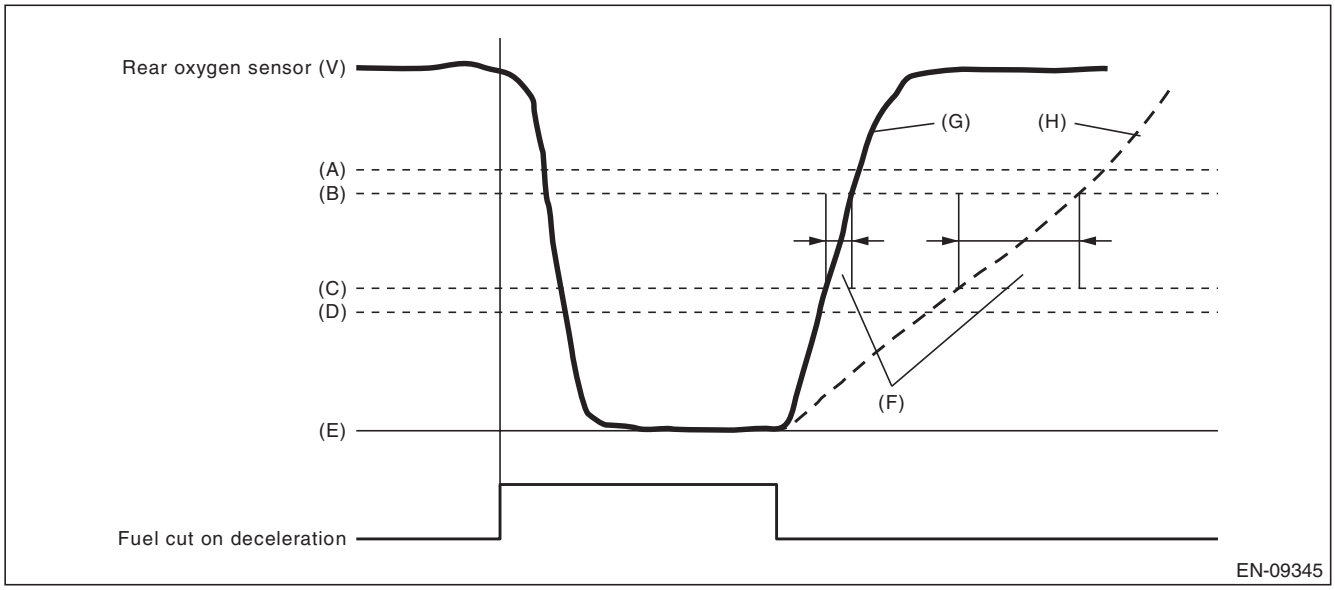

(A)	0.55 V	(B)	0.50 V	(C)	0.30 V
(D)	0.25 V	(E)	0 V	(F)	Diagnostic parameter
(G)	Normal	(H)	Malfunction		

- **Abnormality Judgment**

Judge as NG when the following conditions are established.

Judgment Value

Malfunction Criteria	Threshold Value
Time when rear oxygen sensor voltage changed from 0.3 V to 0.5 V.	> 4000 ms

Time Needed for Diagnosis: 10 seconds

Malfunction Indicator Light Illumination: Illuminates when malfunction occurs in 2 continuous driving cycles.

- **Normality Judgment**

Judge as OK and clear the NG if the following conditions are established.

Judgment Value

Malfunction Criteria	Threshold Value
Time when rear oxygen sensor voltage changed from 0.3 V to 0.5 V.	≤ 4000 ms

Time Needed for Diagnosis: 10 seconds

GETtheMANUALS.org

AJ:DTC P013E O2 SENSOR DELAYED RESPONSE - RICH TO LEAN (BANK 1 SENSOR 2)

1. OUTLINE OF DIAGNOSIS

Detect the delayed response of rear oxygen sensor output for rich → lean.
After the deceleration fuel cut has started, detect the trouble by calculating the time when the rear oxygen sensor output decreases to the predetermined voltages.
Judge as NG when the response time is larger than the threshold value.

2. COMPONENT DESCRIPTION

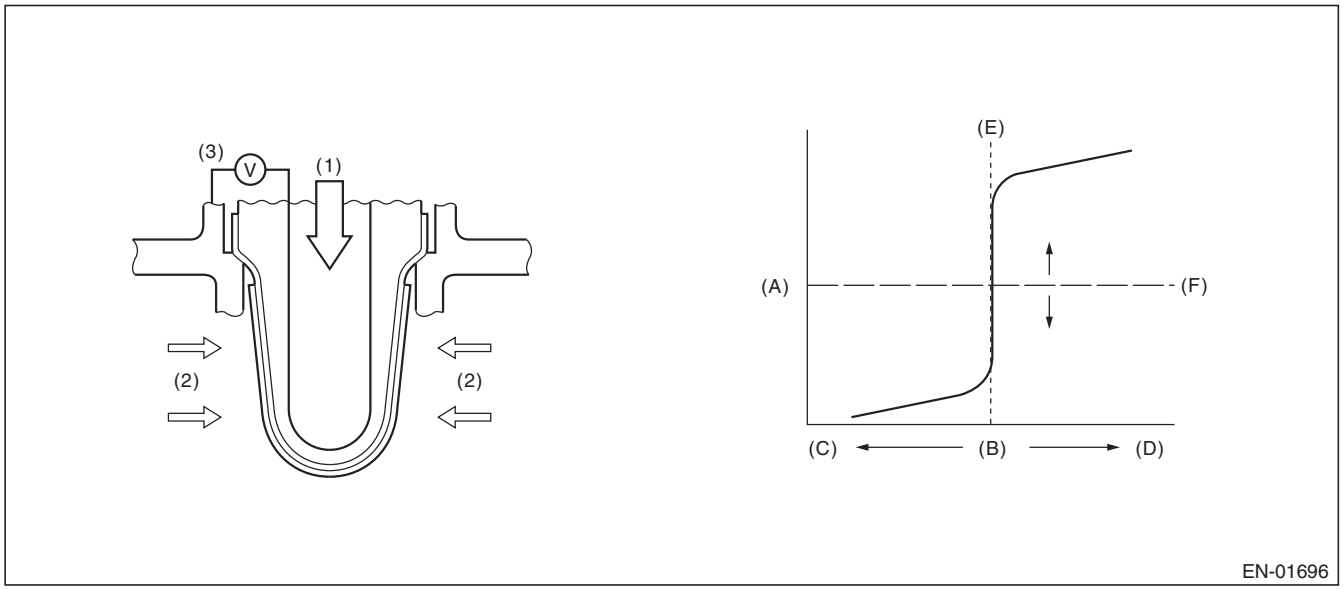

(A)	Electromotive force	(B)	Air fuel ratio	(C)	Rich
(D)	Lean	(E)	Theoretical air fuel ratio	(F)	Comparative voltage
(1)	Atmosphere	(2)	Exhaust gas	(3)	Electromotive force

3. ENABLE CONDITIONS

Secondary Parameters	Enable Conditions
Battery voltage	> 10.9 V
Rear oxygen sensor closed loop control	Operation
Engine speed when fuel cut starts	≥ 1300 rpm
Rear oxygen sensor voltage when fuel cut starts	≥ 0.55 V
Fuel cut time	≥ 5000 ms
Engine coolant temperature when fuel cut starts	≥ 75 °C (167 °F)
Estimated temperature of rear oxygen sensor element when fuel cut starts	≥ 500 °C (932 °F)

4. GENERAL DRIVING CYCLE

Perform diagnosis once during deceleration fuel cut from a constant and high speed driving, when rear oxygen sensor is warmed up sufficiently.

GETtheMANUALS.org

5. DIAGNOSTIC METHOD

Detect the trouble by calculating the time from the beginning of the fuel cut to the beginning of the rear oxygen sensor voltage starting to drop.

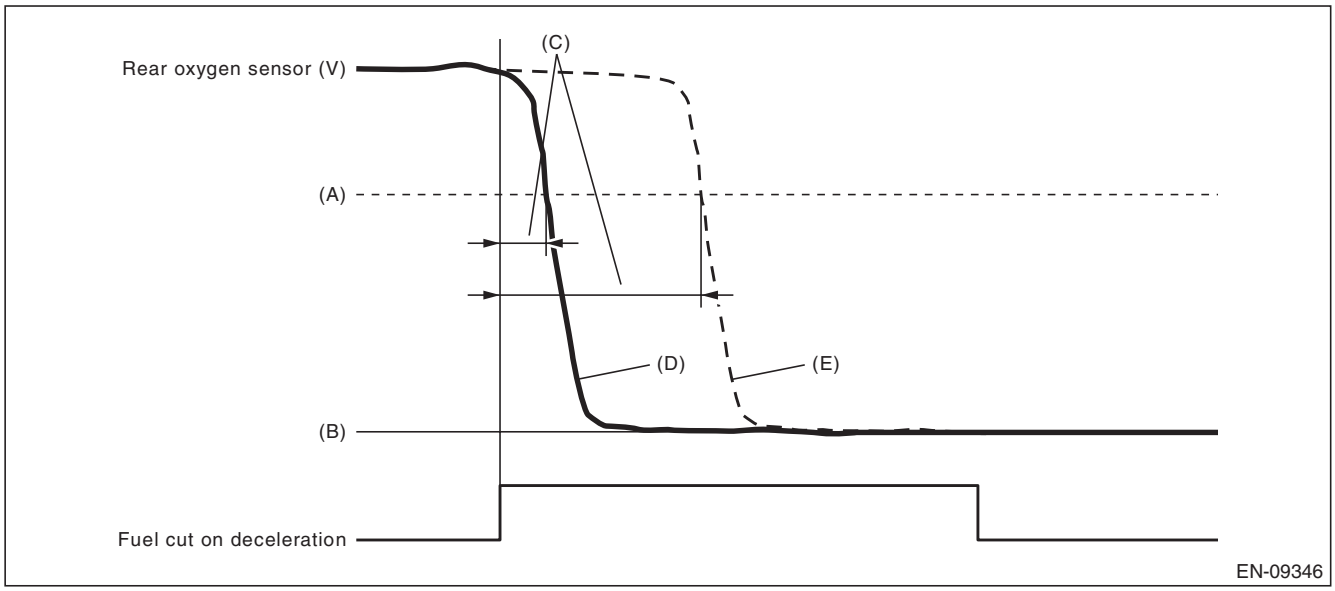

(A) 0.5 V (B) 0 V (C) Diagnostic parameter
(D) Normal (E) Malfunction

- **Abnormality Judgment**

Judge as NG when the following conditions are established.

Judgment Value

Malfunction Criteria	Threshold Value
Time when rear oxygen sensor voltage changed to 0.5 V after the fuel cut started.	> 4000 ms

Time Needed for Diagnosis: 10 seconds
Malfunction Indicator Light Illumination: Illuminates when malfunction occurs in 2 continuous driving cycles.

- **Normality Judgment**

Judge as OK and clear the NG if the following conditions are established.

Judgment Value

Malfunction Criteria	Threshold Value
Time when rear oxygen sensor voltage changed to 0.5 V after the fuel cut started.	≤ 4000 ms

Time Needed for Diagnosis: 10 seconds

GETtheMANUALS.org

AK:DTC P013F O2 SENSOR DELAYED RESPONSE - LEAN TO RICH (BANK 1 SENSOR 2)

1. OUTLINE OF DIAGNOSIS

Detect the delayed response of rear oxygen sensor output for lean → rich.
After the deceleration fuel cut has completed, detect the trouble by calculating the time when the rear oxygen sensor output increases to the predetermined voltages.
Judge as NG when the response time is larger than the threshold value.

2. COMPONENT DESCRIPTION

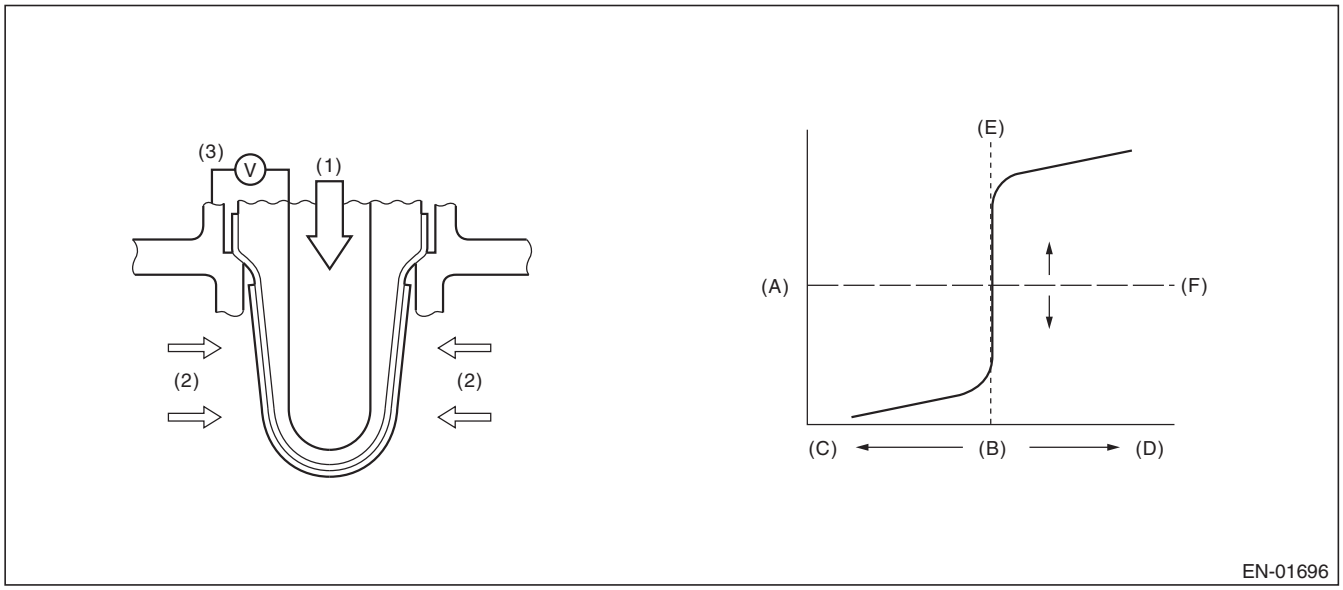

(A)	Electromotive force	(B)	Air fuel ratio	(C)	Rich
(D)	Lean	(E)	Theoretical air fuel ratio	(F)	Comparative voltage
(1)	Atmosphere	(2)	Exhaust gas	(3)	Electromotive force

3. ENABLE CONDITIONS

Secondary Parameters	Enable Conditions
Battery voltage	> 10.9 V
Rear oxygen sensor closed loop control	Operation
Engine speed	≥ 500 rpm
Rear oxygen sensor voltage when fuel cut has completed	< 0.15 V
Fuel cut time	≥ 5000 ms
Engine coolant temperature when fuel cut has completed	≥ 75 °C (167 °F)
Estimated element temperature of rear oxygen sensor when fuel cut has completed	≥ 500 °C (932 °F)

4. GENERAL DRIVING CYCLE

Perform diagnosis only once when recovering from the deceleration fuel cut continued for more than predetermined time with the rear oxygen sensor warmed up sufficiently.

GETtheMANUALS.org

5. DIAGNOSTIC METHOD

Detect the trouble by calculating the time from the completion of the fuel cut to the beginning of the rear oxygen sensor voltage starting to rise.

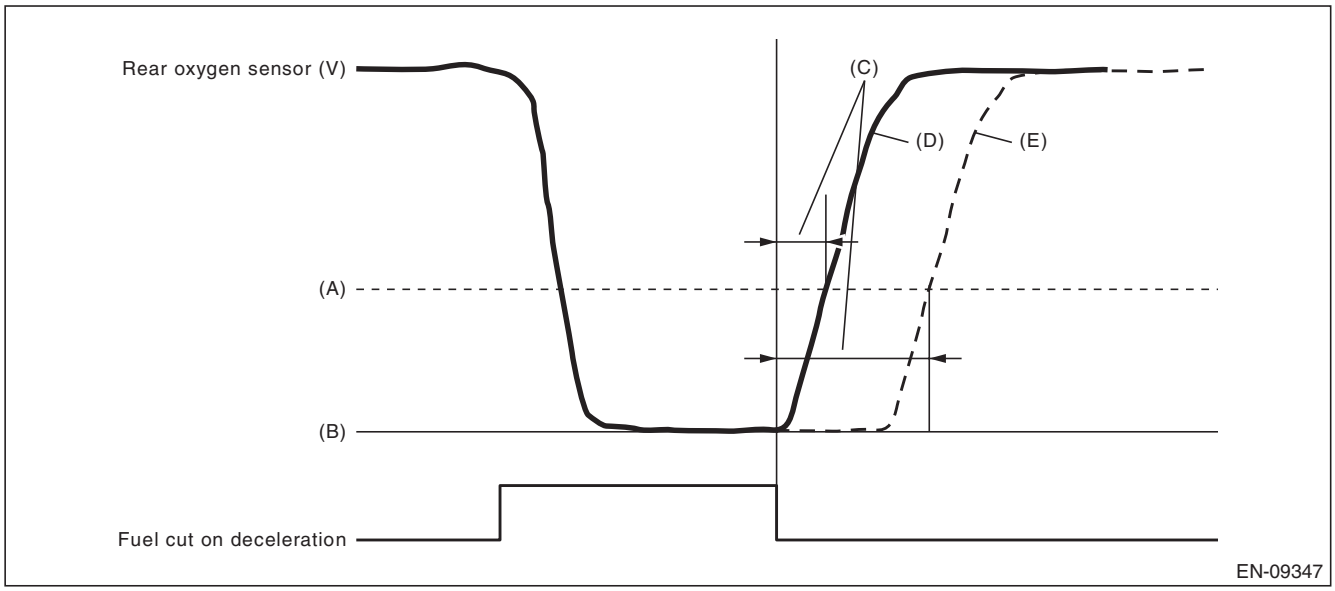

(A) 0.3 V (B) 0 V (C) Diagnostic parameter
(D) Normal (E) Malfunction

- **Abnormality Judgment**

Judge as NG when the following conditions are established.

Judgment Value

Malfunction Criteria	Threshold Value
The number of times that the rear oxygen sensor voltage changed to 0.3 V after the fuel cut has completed (time counter)	> 3750 time(s)

Time Needed for Diagnosis: 10 seconds
Malfunction Indicator Light Illumination: Illuminates when malfunction occurs in 2 continuous driving cycles.

- **Normality Judgment**

Judge as OK and clear the NG if the following conditions are established.

Judgment Value

Malfunction Criteria	Threshold Value
The number of times that the rear oxygen sensor voltage changed to 0.3 V after the fuel cut has completed (time counter)	≤ 3750 time(s)

Time Needed for Diagnosis: 10 seconds

GETtheMANUALS.org

AL:DTC P0140 O2 SENSOR CIRCUIT NO ACTIVITY DETECTED (BANK1 SENSOR2)

1. OUTLINE OF DIAGNOSIS

Detect the rear oxygen sensor open or short circuit. Judge as NG when the rear oxygen sensor voltage can be determined to be abnormal considering conditions such as intake air amount, engine coolant temperature, main feedback control and deceleration fuel cut.

2. COMPONENT DESCRIPTION

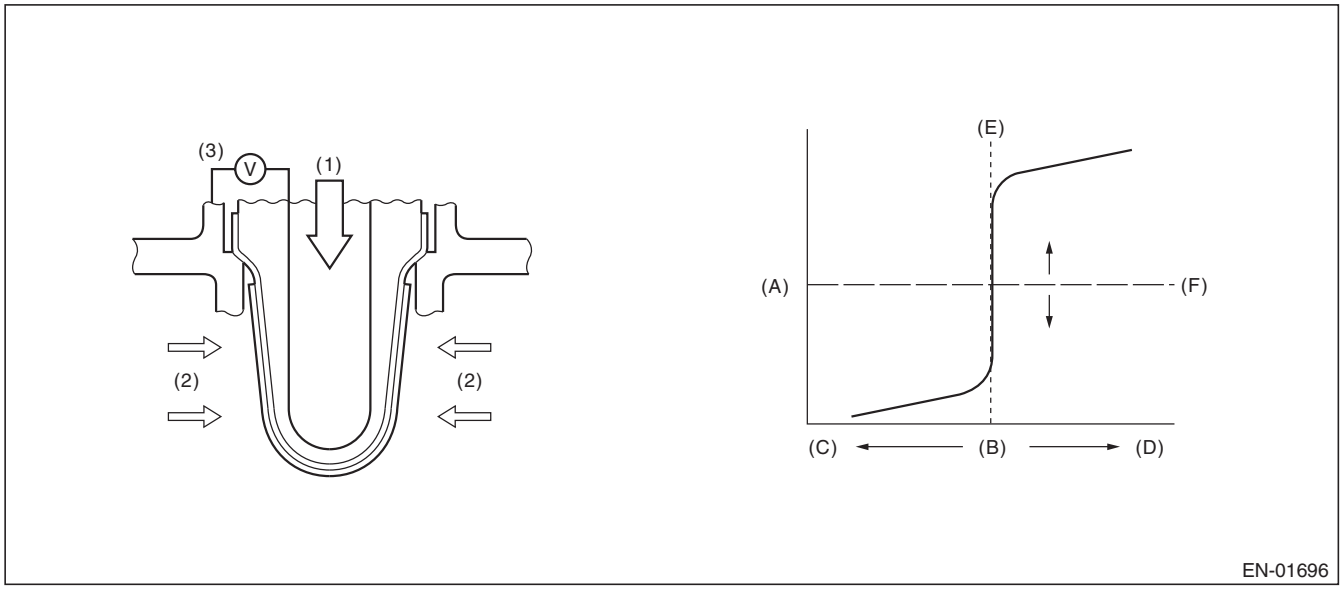

(A)	Electromotive force	(B)	Air fuel ratio	(C)	Rich
(D)	Lean	(E)	Theoretical air fuel ratio	(F)	Comparative voltage
(1)	Atmosphere	(2)	Exhaust gas	(3)	Electromotive force

3. ENABLE CONDITION (USED ONLY FOR MALFUNCTION JUDGMENT)

Secondary Parameters	Enable Conditions
Closed loop control at the rear oxygen sensor	In operation
Target output voltage of rear oxygen sensor	≥ 0.55 V + 0.05 V
Amount of intake air	≥ 10 g/s (0.35 oz/s)
Engine coolant temperature	≥ 75 °C (167 °F)
Misfire detection every 200 rotations	< 65535 time(s)
Front oxygen (A/F) sensor compensation coefficient	Not in limit value
Battery voltage	≥ 10.9 V
Deceleration fuel cut of 5000 ms or more.	Experienced

4. GENERAL DRIVING CYCLE

Perform the diagnosis once after starting the engine.

GETtheMANUALS.org

5. DIAGNOSTIC METHOD

- **Abnormality Judgment**

If the duration of time while the following conditions are met is longer than the time indicated, judge as NG.

Judgment Value

Malfunction Criteria	Threshold Value
Minimum output voltage or Maximum output voltage	> 0.15 V < 0.55 V

Time Needed for Diagnosis: 200000 ms
Malfunction Indicator Light Illumination: Illuminates when malfunction occurs in 2 continuous driving cycles.

- **Normality Judgment**

Judge as OK and clear the NG if the following conditions are established.

Judgment Value

Malfunction Criteria	Threshold Value
Diagnosis of the rear oxygen sensor voltage low side	Incomplete
Minimum output voltage	≤ 0.15 V
Maximum output voltage	≥ 0.55 V

GETtheMANUALS.org

AM:DTC P0141 O2 SENSOR HEATER CIRCUIT (BANK1 SENSOR2)

1. OUTLINE OF DIAGNOSIS

Detect the malfunction of rear oxygen sensor heater.
While observing the engine condition, judge as NG if the rear oxygen sensor impedance is great.

2. COMPONENT DESCRIPTION

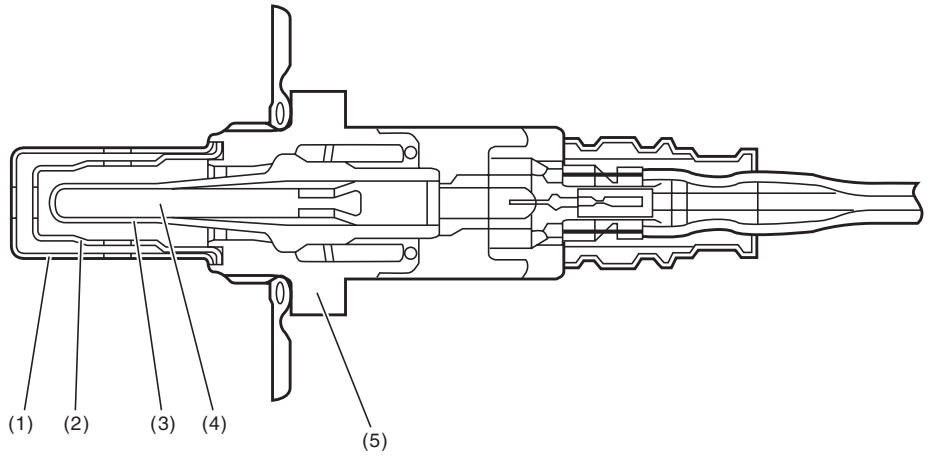

EN-08983

(1) Element cover (outer)
(2) Element cover (inner)
(3) Sensor element
(4) Ceramic heater
(5) Sensor housing

3. ENABLE CONDITIONS

Secondary Parameters	Enable Conditions
Battery voltage	≥ 10.9 V
Elapsed time after starting the engine	≥ 1000 ms
Engine coolant temperature	≥ 75 °C (167 °F)
A/F sensor element impedance	≤ 50 Ω
A/F sensor heater control duty	≤ 75 %
Rear oxygen sensor heater control duty	< 70 %

4. GENERAL DRIVING CYCLE

Perform the diagnosis continuously after 1000 ms seconds or more have passed since the engine started.

GETtheMANUALS.org

5. DIAGNOSTIC METHOD

- **Abnormality Judgment**

If the duration of time while the following conditions are met is longer than the time indicated, judge as NG.

Judgment Value

Malfunction Criteria	Threshold Value
Output terminal for heater characteristics failure detection	Low

Time Needed for Diagnosis: 4 ms × 2500 time(s)
Malfunction Indicator Light Illumination: Illuminates when malfunction occurs in 2 continuous driving cycles.

- **Normality Judgment**

Judge as OK and clear the NG if the continuous time while the following conditions are established is more than the predetermined time.

Judgment Value

Malfunction Criteria	Threshold Value
Output terminal for heater characteristics failure detection	High

Time Needed for Diagnosis: 4 ms × 2500 time(s)

GETtheMANUALS.org

AN:DTC P014C O2 SENSOR SLOW RESPONSE - RICH TO LEAN (BANK 1 SENSOR 1)

1. OUTLINE OF DIAGNOSIS

Detect the slow response of front oxygen (A/F) sensor.
For diagnosis, detect the trouble by processing the λ waveform in normal driving without forcibly changing the target air fuel ratio.

2. COMPONENT DESCRIPTION

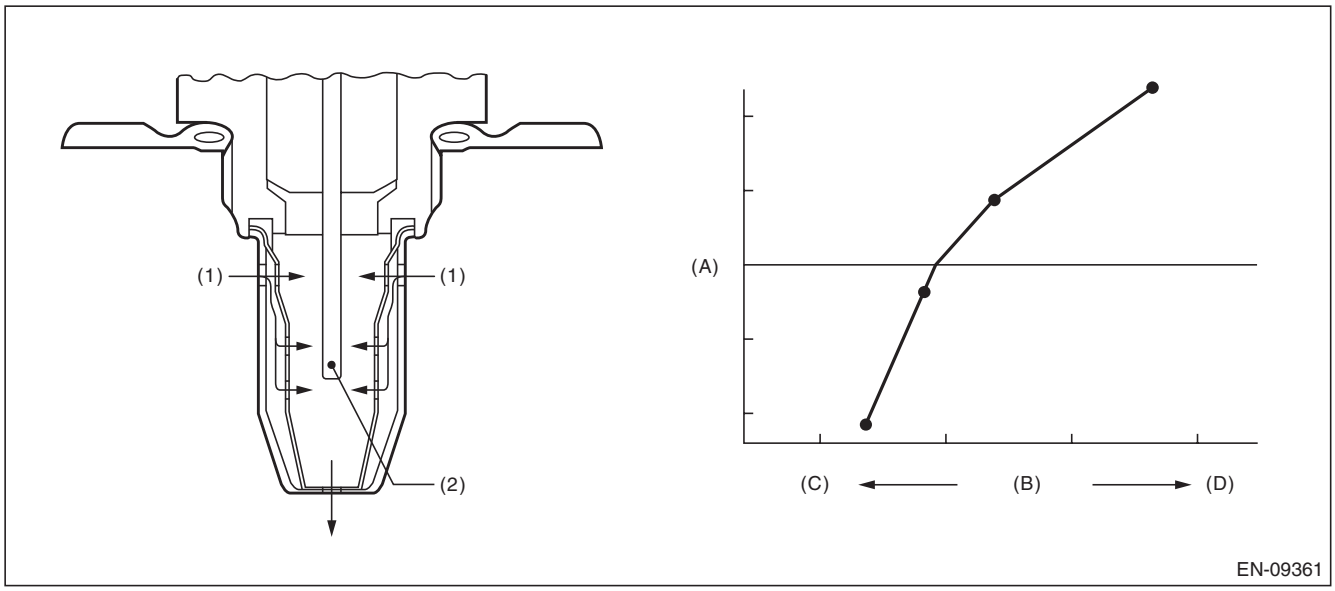

(A) Electromotive force (B) Air fuel ratio (C) Lean
(D) Rich

(1) Exhaust gas (2) ZrO_2

3. ENABLE CONDITIONS

Secondary Parameters	Enable Conditions
Battery voltage	> 10.9 V
Closed loop control with main feedback	Operation
Front oxygen (A/F) sensor impedance	≥ 0 Ω and < 50 Ω
Elapsed time after starting the engine	≥ 40000 ms
Engine coolant temperature	≥ 0 °C (32 °F)
Engine speed	≥ 1000 rpm
Amount of intake air	≥ 10 g/s (0.35 oz/s)
After fuel cut	≥ 3000 ms
Learning value of EVAP conc. during purge	< 0.2
Total time of operating canister purge	≥ 20 s
Engine load change	< 0.02 g/rev (0 oz/rev)
Idle switch	OFF

4. GENERAL DRIVING CYCLE

Perform diagnosis only once in a city driving including normal acceleration and deceleration.

GETtheMANUALS.org

5. DIAGNOSTIC METHOD 1

Detect the malfunction by checking “Cumulative value of time when λ changes from lean → rich” in comparison to “Time during which diagnosis is in progress”.

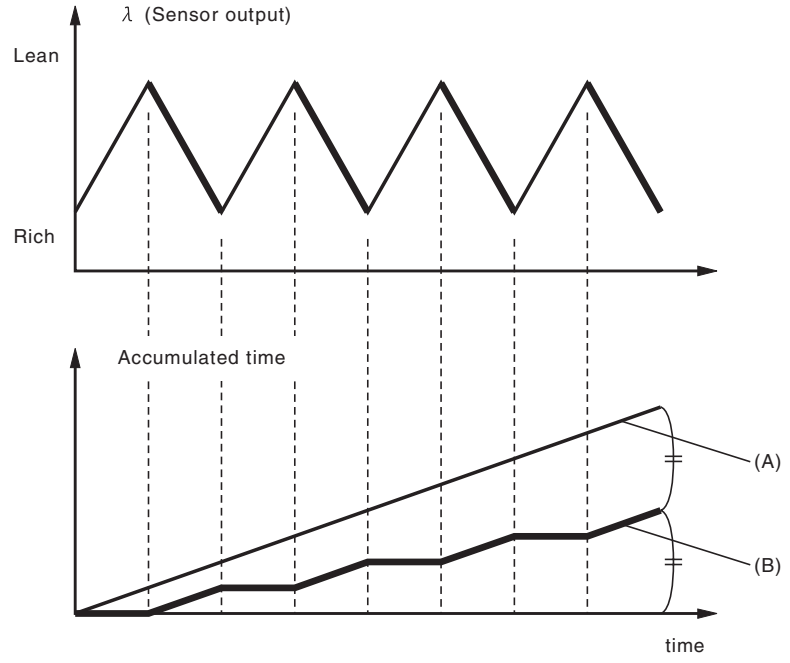

(A) Time during which diagnosis is in progress

(B) Cumulative value of time when λ changes from lean → rich

- **Abnormality Judgment**

Judge as NG when the following conditions are established.

Judgment Value

Malfunction Criteria	Threshold Value	DTC
(Cumulative value of time when λ changes from lean → rich) / (Time during which diagnosis is in progress)	< 0.39	P014C
	> 0.63	P014D

Time Needed for Diagnosis: 90 seconds

Malfunction Indicator Light Illumination: Illuminates when malfunction occurs in 2 continuous driving cycles.

- **Normality Judgment**

Judge as OK and clear the NG if the following conditions are established.

Judgment Value

Malfunction Criteria	Threshold Value	DTC
(Cumulative value of time when λ changes from lean → rich) / (Time during which diagnosis is in progress)	≥ 0.39	P014C
	≤ 0.63	P014D

Time Needed for Diagnosis: 90 seconds

GETtheMANUALS.org

6. DIAGNOSTIC METHOD 2

Detect the malfunction by the cumulative value obtained from the amount of variation in λ change.

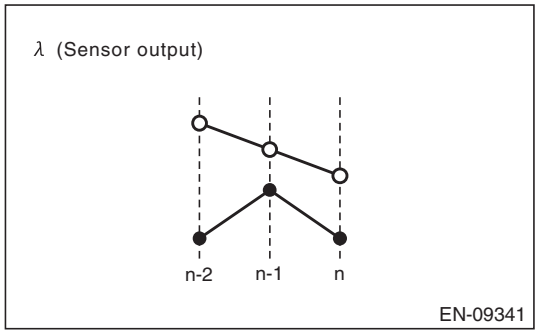

- **Abnormality Judgment**

Judge as NG when the following conditions are established.

Judgment Value

Malfunction Criteria	Threshold Value	DTC
Cumulative value obtained from the amount of variation in λ change Σ |(lambda(n) – lambda(n-1)) – (lambda(n-1) – lambda(n-2))|	< Value from Map	P014C and P014D

Map

Cumulative value obtained from the amount of variation in λ Σ |lambda(n) – lambda(n-1)|	0	2.5
Cumulative value obtained from the amount of variation in λ change	0.3	1.2

Time Needed for Diagnosis: 90 seconds
Malfunction Indicator Light Illumination: Illuminates when malfunction occurs in 2 continuous driving cycles.

- **Normality Judgment**

Judge as OK and clear the NG if the following conditions are established.

Judgment Value

Malfunction Criteria	Threshold Value	DTC
Cumulative value obtained from the amount of variation in λ change Σ |(lambda(n) – lambda(n-1)) – (lambda(n-1) – lambda(n-2))|	≥ Value from Map	P014C and P014D

Time Needed for Diagnosis: 90 seconds

AO:DTC P014D O2 SENSOR SLOW RESPONSE - LEAN TO RICH (BANK 1 SENSOR 1)

1. OUTLINE OF DIAGNOSIS

NOTE:
For the detection standard, refer to DTC P014C. <Ref. to GD(H4SO)-84, DTC P014C O2 SENSOR SLOW RESPONSE - RICH TO LEAN (BANK 1 SENSOR 1), Diagnostic Trouble Code (DTC) Detecting Criteria.>

GETtheMANUALS.org

AP:DTC P015A O2 SENSOR DELAYED RESPONSE - RICH TO LEAN (BANK 1 SENSOR 1)

1. OUTLINE OF DIAGNOSIS

Detect the slow response of front oxygen (A/F) sensor.
For diagnosis, detect the trouble by processing the λ waveform in normal driving without forcibly changing the target air fuel ratio.

2. COMPONENT DESCRIPTION

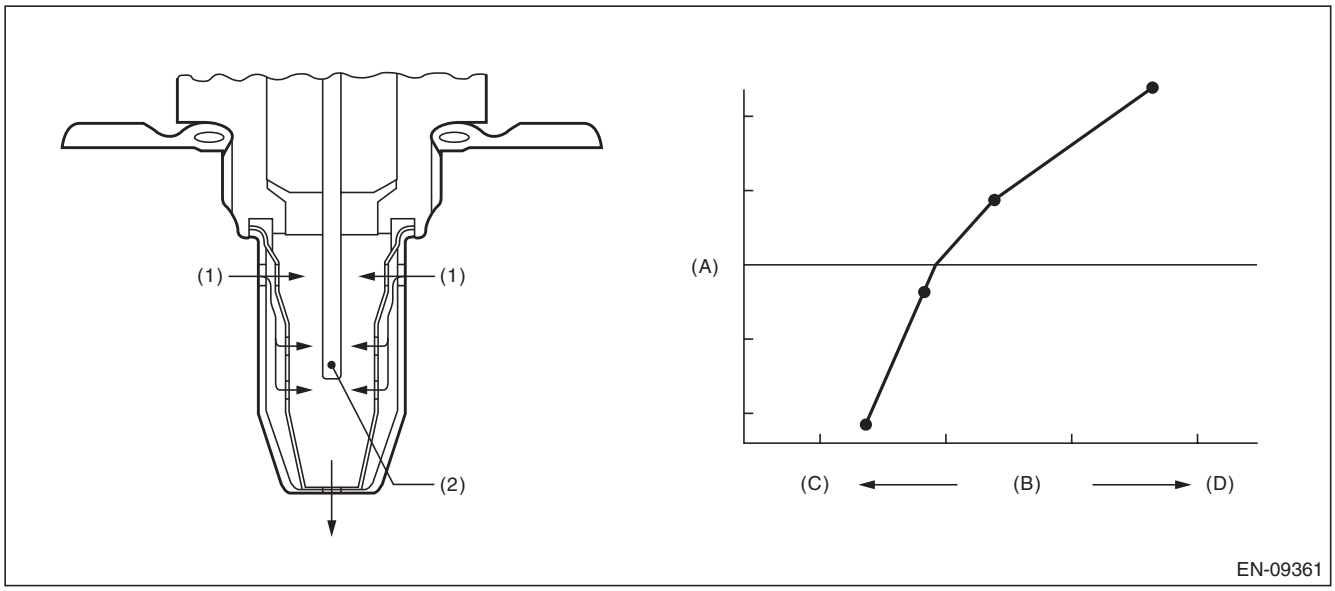

(A) Electromotive force (B) Air fuel ratio (C) Lean
(D) Rich

(1) Exhaust gas (2) ZrO_2

3. ENABLE CONDITIONS

Secondary Parameters	Enable Conditions
Battery voltage	> 10.9 V
Closed loop control with main feedback	Operation
Front oxygen (A/F) sensor impedance	≥ 0 Ω and < 50 Ω
Elapsed time after starting the engine	≥ 40000 ms
Engine coolant temperature	≥ 0 °C (32 °F)
Engine speed	≥ 1000 rpm
Amount of intake air	≥ 10 g/s (0.35 oz/s)
After fuel cut	≥ 3000 ms
Learning value of EVAP conc. during purge	< 0.2
Total time of operating canister purge	≥ 20 s
Engine load change	< 0.02 g/rev (0 oz/rev)
Idle switch	OFF

4. GENERAL DRIVING CYCLE

Perform diagnosis only once in a city driving including normal acceleration and deceleration.

GETtheMANUALS.org

5. DIAGNOSTIC METHOD 1

Detect the malfunction depending on the average value of time necessary for λ to inverse the air fuel ratio from “Lean → Rich → Lean” to “Rich → Lean → Rich”.

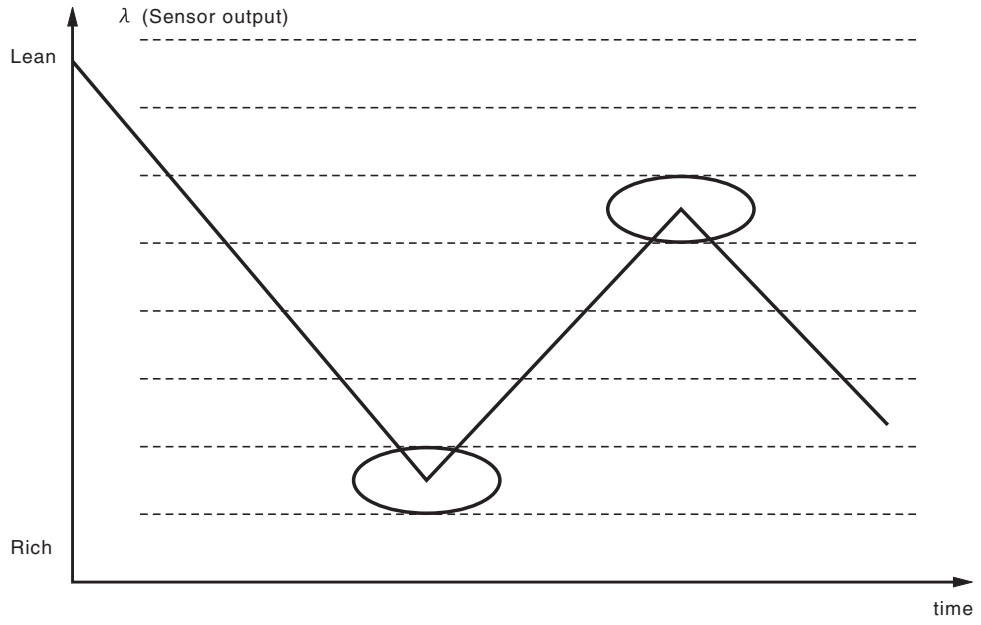

EN-09342

- **Abnormality Judgment**

Judge as NG when the following conditions are established.

Judgment Value

Malfunction Criteria	Threshold Value	DTC
Average value of time necessary for λ to inverse the air fuel ratio to Lean → Rich → Lean.	> 300 ms	P015A
Average value of time necessary for λ to inverse the air fuel ratio to Rich → Lean → Rich.	> 400 ms	P015B

Time Needed for Diagnosis: 50 times of inversion
Malfunction Indicator Light Illumination: Illuminates when malfunction occurs in 2 continuous driving cycles.

- **Normality Judgment**

Judge as OK and clear the NG if the following conditions are established.

Judgment Value

Malfunction Criteria	Threshold Value	DTC
Average value of time necessary for λ to inverse the air fuel ratio to Lean → Rich → Lean.	≤ 300 ms	P015A
Average value of time necessary for λ to inverse the air fuel ratio to Rich → Lean → Rich.	≤ 400 ms	P015B

Time Needed for Diagnosis: 50 times of inversion

GETtheMANUALS.org

6. DIAGNOSTIC METHOD 2

Detect the malfunction by calculating the average amplitude of λ.

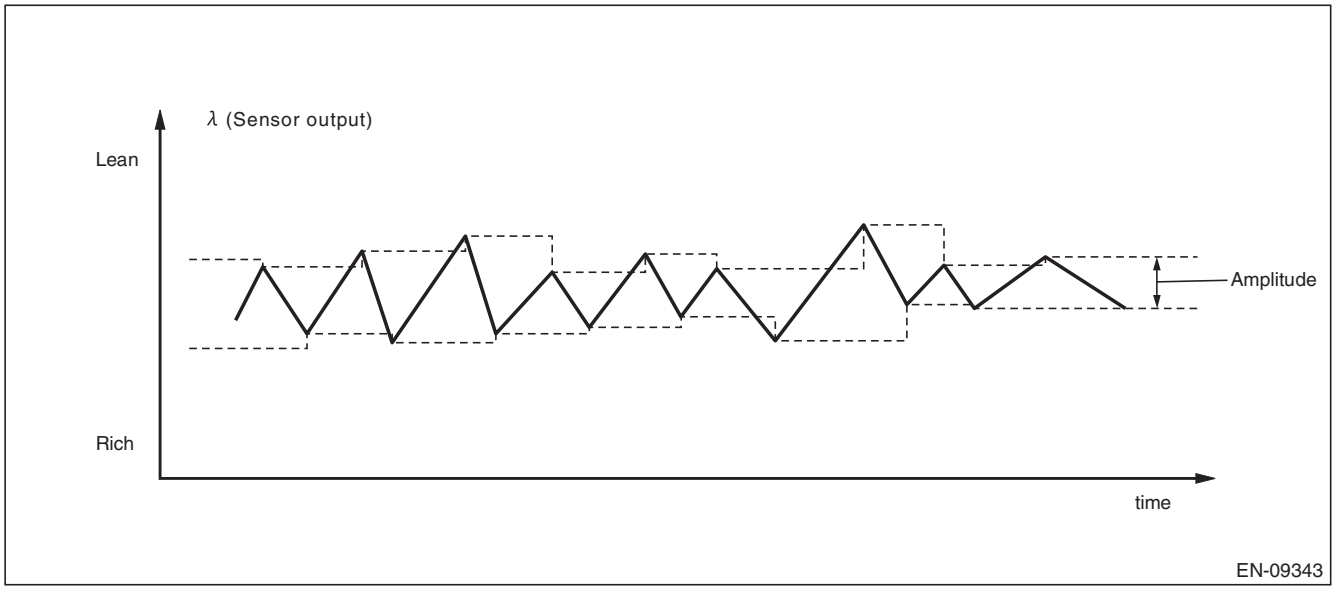

- **Abnormality Judgment**

Judge as NG when the following conditions are established.

Judgment Value

Malfunction Criteria	Threshold Value	DTC
Average value for λ amplitude	> 0.055	P015A and P015B

Time Needed for Diagnosis: 60 seconds
Malfunction Indicator Light Illumination: Illuminates when malfunction occurs in 2 continuous driving cycles.

- **Normality Judgment**

Judge as OK and clear the NG if the following conditions are established.

Judgment Value

Malfunction Criteria	Threshold Value	DTC
Average value for λ amplitude	≤ 0.055	P015A and P015B

Time Needed for Diagnosis: 60 seconds

AQ:DTC P015B O2 SENSOR DELAYED RESPONSE - LEAN TO RICH (BANK 1 SENSOR 1)

1. OUTLINE OF DIAGNOSIS

NOTE:
For the detection standard, refer to DTC P015A. <Ref. to GD(H4SO)-87, DTC P015A O2 SENSOR DELAYED RESPONSE - RICH TO LEAN (BANK 1 SENSOR 1), Diagnostic Trouble Code (DTC) Detecting Criteria.>

GETtheMANUALS.org

AR:DTC P0171 SYSTEM TOO LEAN (BANK 1)

1. OUTLINE OF DIAGNOSIS

Detect fuel system malfunction by the amount of main feedback control.

Diagnostic method

Fuel system is diagnosed by comparing the target air fuel ratio calculated by ECM with the actual air fuel ratio measured by sensor.

2. ENABLE CONDITION

Secondary Parameters	Enable Conditions
A/F main learning system	In operation
Engine coolant temperature	≥ 75 °C (167 °F)
Engine load change	< 0.02 g/rev (0 oz/rev)
Engine load	≥ Value of Map 1

Map 1

Engine speed (rpm)	Idling	650	1000	1500	2000	2500	3000	3500	4000	4500
Measured value (g (oz)/rev)	na	0.208 (0.01)	0.201 (0.01)	0.185 (0.01)	0.183 (0.01)	0.193 (0.01)	0.206 (0.01)	0.206 (0.01)	0.225 (0.01)	0.245 (0.01)

3. GENERAL DRIVING CYCLE

Perform the diagnosis continuously at idling or at a constant speed after warming up the engine.

GETtheMANUALS.org

4. DIAGNOSTIC METHOD

• Abnormality Judgment

Compare the diagnostic value (fsobd) with the threshold value, and if a condition meeting the malfunction criteria below continues for 10 s × 5 time(s) or more, judge that there is a fault in the fuel system.

Judgment Value

Malfunction Criteria	Threshold Value
fsobd = (sglmd – tglmda) + faf + flaf In this case: sglmd = measured lambda tglmda = target lambda faf = main feedback compensation coefficient (every 64 milliseconds) flaf = main feedback learning compensation coefficient	≥ Value from Map 2

Map 2

Amount of air (g (oz)/s)	0 (0)	3.2 (0.11)	6.4 (0.23)	9.6 (0.34)	12.8 (0.45)	16 (0.56)	19.2 (0.68)
fsobdL1 (%)	1.4	1.4	1.332	1.25	1.25	1.25	1.25

Time Needed for Diagnosis: 10 s × 5 time(s)
Malfunction Indicator Light Illumination: Illuminates when malfunction occurs in 2 continuous driving cycles.

• Normality Judgment

Judge as OK and clear the NG if the continuous time while the following conditions are established is more than the predetermined time.

Judgment Value

Malfunction Criteria	Threshold Value
fsobd = (sglmd – tglmda) + faf + flaf	< 1.15

Time Needed for Diagnosis: 10 s

GETtheMANUALS.org

AS:DTC P0172 SYSTEM TOO RICH (BANK 1)

1. OUTLINE OF DIAGNOSIS

Detect fuel system malfunction by the amount of main feedback control.

Diagnostic method

Fuel system is diagnosed by comparing the target air fuel ratio calculated by ECM with the actual air fuel ratio measured by sensor.

2. ENABLE CONDITION

Secondary Parameters	Enable Conditions
A/F main learning system	In operation
Engine coolant temperature	≥ 75 °C (167 °F)
Engine load change	≤ 0.02 g/rev (0 oz/rev)
Learning value of EVAP conc.	< 0.2
Cumulative time of canister purge after engine start	≥ 20 s
Continuous period after canister purge starting	≥ 5000 ms
Engine load	≥ Value of Map 1

Map 1

Engine speed (rpm)	Idling	650	1000	1500	2000	2500	3000	3500	4000	4500
Measured value (g (oz)/rev)	na	0.208 (0.01)	0.201 (0.01)	0.185 (0.01)	0.183 (0.01)	0.193 (0.01)	0.206 (0.01)	0.206 (0.01)	0.225 (0.01)	0.245 (0.01)

3. GENERAL DRIVING CYCLE

Perform the diagnosis continuously at idling or at a constant speed after warming up the engine.

GETtheMANUALS.org

4. DIAGNOSTIC METHOD

• Abnormality Judgment

Compare the diagnostic value (fsobd) with the threshold value, and if a condition meeting the malfunction criteria below continues for 10 s × 5 time(s) or more, judge that there is a fault in the fuel system.

Judgment Value

Malfunction Criteria	Threshold Value
fsobd = (sglmd – tglmda) + faf + flaf In this case: sglmd = measured lambda tglmda = target lambda faf = main feedback compensation coefficient (every 64 milliseconds) flaf = main feedback learning compensation coefficient	< Value of Map 2

Map 2

Amount of air (g (oz)/s)	0 (0)	3.2 (0.11)	6.4 (0.23)	9.6 (0.34)	12.8 (0.45)	16 (0.56)	19.2 (0.68)
fsobdL1 (%)	0.6	0.6	0.668	0.735	0.735	0.735	0.735

Time Needed for Diagnosis: 10 s × 5 time(s)
Malfunction Indicator Light Illumination: Illuminates when malfunction occurs in 2 continuous driving cycles.

• Normality Judgment

Judge as OK if the status that the criteria below are met continues for 10 seconds.

Judgment Value

Malfunction Criteria	Threshold Value
fsobd = (sglmd – tglmda) + faf + flaf	≥ 0.85

Time Needed for Diagnosis: 10 s

GETtheMANUALS.org

AT:DTC P0181 FUEL TEMPERATURE SENSOR “A” CIRCUIT RANGE/PERFORMANCE

1. OUTLINE OF DIAGNOSIS

Detect faults in the fuel temperature sensor output properties.
Diagnosis is performed in two methods (drift diagnosis and stuck diagnosis). If either is NG, judge as NG. If both are OK, Judge as OK and clear the NG.

Drift Diagnosis

Normally fuel temperature is lower than engine coolant temperature. When the fuel temperature becomes higher than the engine coolant temperature, the range is considered to be shifted, and judged as NG.

Stuck Diagnosis

As the engine warms up (cumulative amount of intake air after starting is large), if the fuel temperature which should rise does not, determine as being stuck and NG.

2. COMPONENT DESCRIPTION

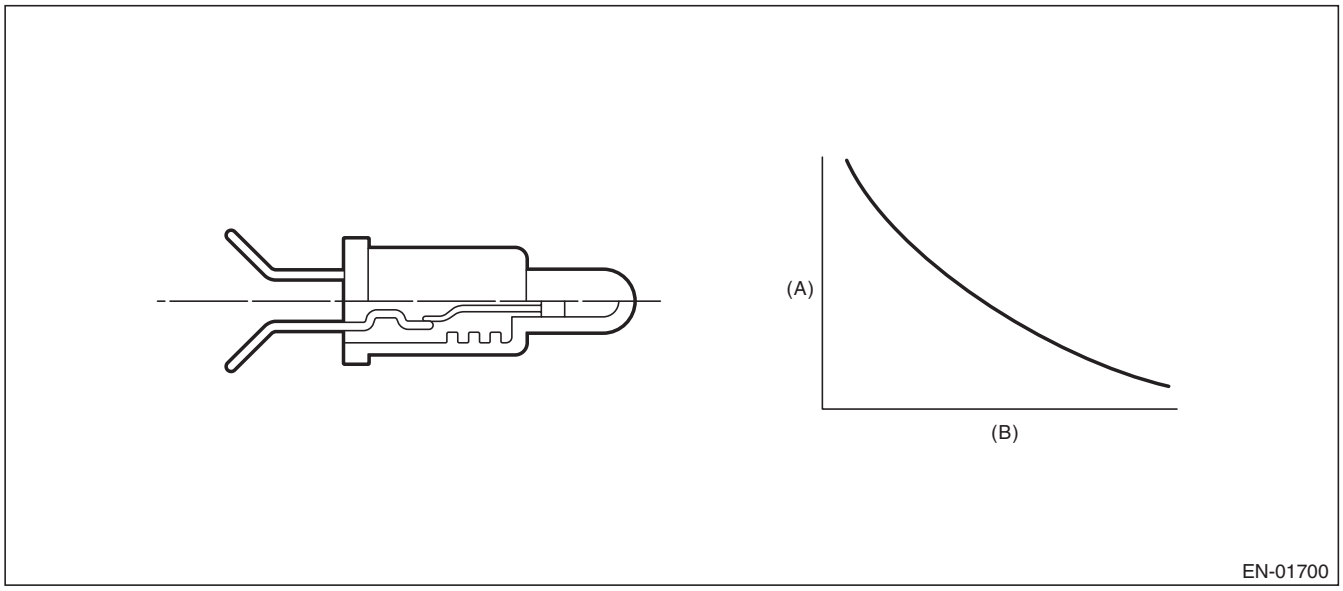

(A) Resistance value (Ω) (B) Fuel temperature °C (°F)

3. ENABLE CONDITION

DRIFT DIAGNOSIS

Secondary Parameters	Enable Conditions
None	

4. GENERAL DRIVING CYCLE

Always perform the diagnosis continuously.

GETtheMANUALS.org

5. DIAGNOSTIC METHOD

• Abnormality Judgment

If the duration of time while the following conditions are met is longer than the time indicated, judge as NG.

Judgment Value

Malfunction Criteria	Threshold Value
Fuel level	≥ 9.6 ℓ (2.54 US gal, 2.11 Imp gal)
Elapsed time after starting the engine	≥ 20 s
Engine coolant temperature – Engine coolant temperature at engine start	> 10 °C (18°F)
Fuel temperature – Engine coolant temperature	≥ 10 °C (18°F)
Battery voltage	≥ 10.9 V

Time Needed for Diagnosis: 120 s
Malfunction Indicator Light Illumination: Illuminates when malfunction occurs in 2 continuous driving cycles.

• Normality Judgment

Judge as OK and clear the NG if the continuous time while the following conditions are established is more than the predetermined time.

Judgment Value

Malfunction Criteria	Threshold Value
Fuel level	≥ 9.6 ℓ (2.54 US gal, 2.11 Imp gal)
Elapsed time after starting the engine	≥ 20 s
Engine coolant temperature – Engine coolant temperature at engine start	> 10 °C (18°F)
Fuel temperature – Engine coolant temperature	< 10 °C (18°F)
Battery voltage	≥ 10.9 V
Engine coolant temperature	< 75 °C (167 °F)

Time Needed for Diagnosis: Less than 1 second

6. ENABLE CONDITION

Stuck Diagnosis

Secondary Parameters	Enable Conditions
Elapsed time after starting the engine	≥ 20000 ms
Battery voltage	≥ 10.9 V

7. GENERAL DRIVING CYCLE

Perform the diagnosis continuously 20 seconds after starting engine.

GETtheMANUALS.org

8. DIAGNOSTIC METHOD

- **Abnormality Judgment**

Judge as NG when the following conditions are established.

Judgment Value

Malfunction Criteria	Threshold Value
Accumulated amount of intake air	≥ 551043 g (19435.29 oz)
Fuel temperature difference between Max. and Min.	< 2 °C (3.6°F)

Time Needed for Diagnosis: Less than 1 second
Malfunction Indicator Light Illumination: Illuminates when malfunction occurs in 2 continuous driving cycles.

- **Normality Judgment**

Judge as OK and clear the NG if the following conditions are established.

Judgment Value

Malfunction Criteria	Threshold Value
Fuel temperature difference between Max. and Min.	≥ 2 °C (3.6°F)

Time Needed for Diagnosis: Less than 1 second

GETtheMANUALS.org

AU:DTC P0182 FUEL TEMPERATURE SENSOR “A” CIRCUIT LOW INPUT

1. OUTLINE OF DIAGNOSIS

Detect the open or short circuit of fuel temperature sensor.
Judge as NG if out of specification.

2. COMPONENT DESCRIPTION

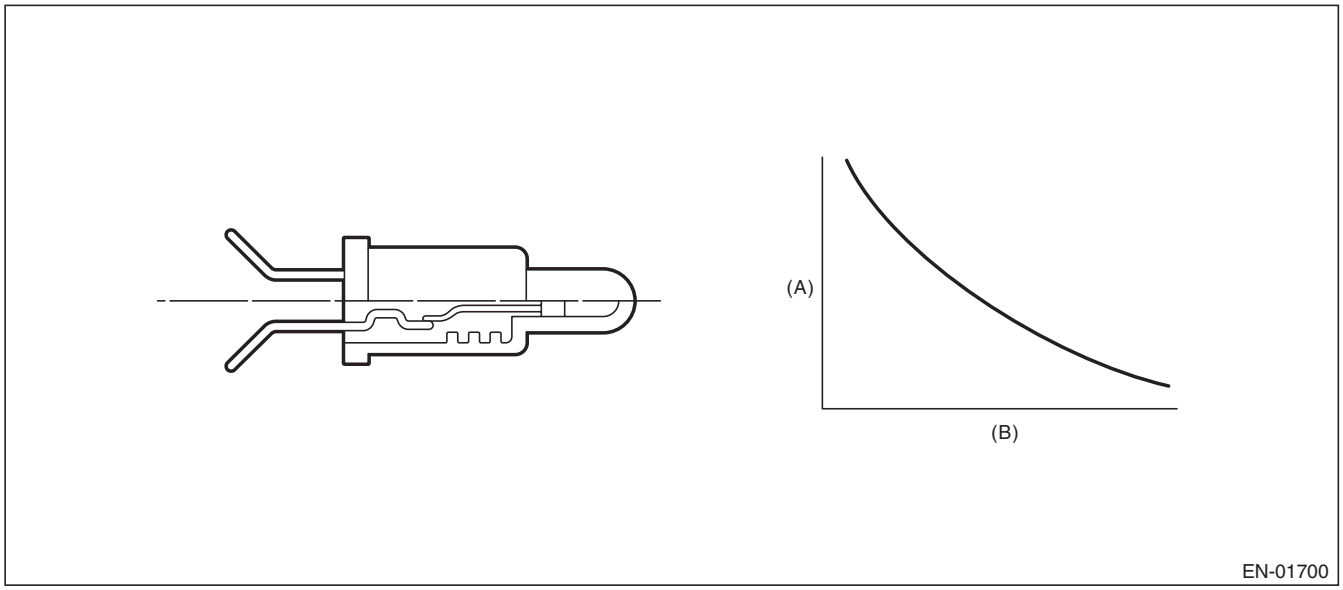

(A) Resistance value (Ω) (B) Fuel temperature °C (°F)

3. ENABLE CONDITION

Secondary Parameters	Enable Conditions
None	

4. GENERAL DRIVING CYCLE

Always perform the diagnosis continuously.

GETtheMANUALS.org

5. DIAGNOSTIC METHOD

- **Abnormality Judgment**

If the duration of time while the following conditions are met is longer than the time indicated, judge as NG.

Judgment Value

Malfunction Criteria	Threshold Value
Output voltage	< 0.748 V
Battery voltage	≥ 10.9 V

Time Needed for Diagnosis: 2500 ms
Malfunction Indicator Light Illumination: Illuminates as soon as a malfunction occurs.

- **Normality Judgment**

Judge as OK and clear the NG if the continuous time while the following conditions are established is more than the predetermined time.

Judgment Value

Malfunction Criteria	Threshold Value
Output voltage	≥ 0.748 V
Battery voltage	≥ 10.9 V

Time Needed for Diagnosis: Less than 1 second

GETtheMANUALS.org

AV:DTC P0183 FUEL TEMPERATURE SENSOR “A” CIRCUIT HIGH INPUT

1. OUTLINE OF DIAGNOSIS

Detect the open or short circuit of fuel temperature sensor.
Judge as NG if out of specification.

2. COMPONENT DESCRIPTION

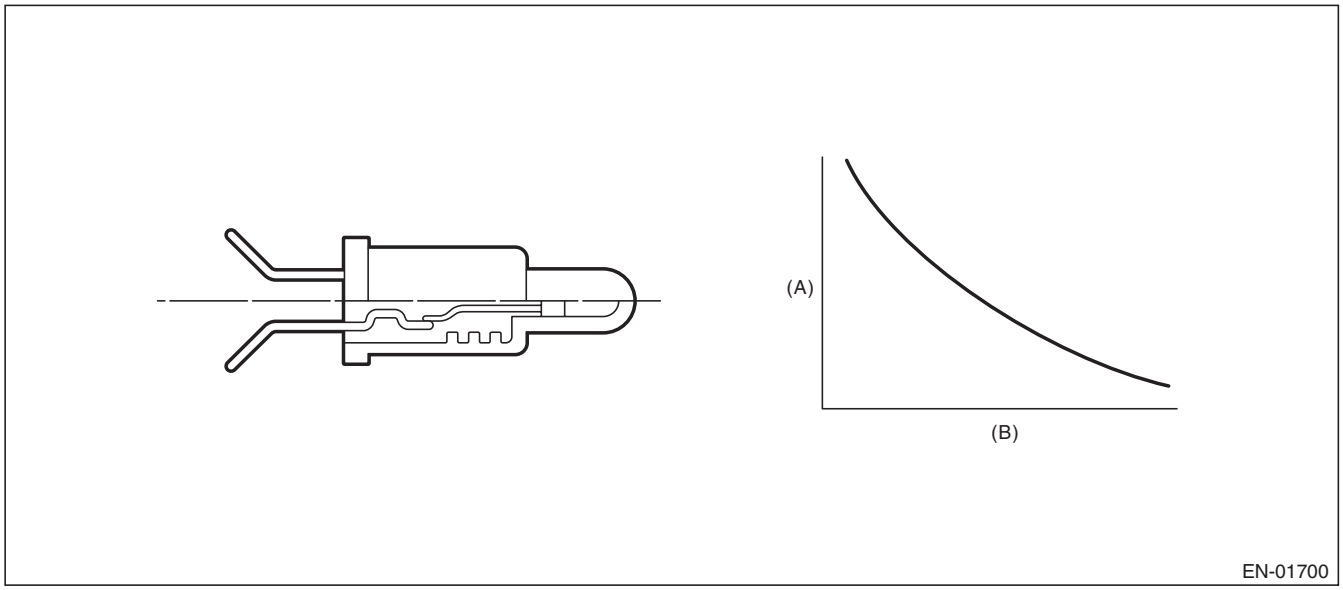

(A) Resistance value (Ω) (B) Fuel temperature °C (°F)

3. ENABLE CONDITION

Secondary Parameters	Enable Conditions
None	

4. GENERAL DRIVING CYCLE

Always perform the diagnosis continuously.

GETtheMANUALS.org

5. DIAGNOSTIC METHOD

- **Abnormality Judgment**

If the duration of time while the following conditions are met is longer than the time indicated, judge as NG.

Judgment Value

Malfunction Criteria	Threshold Value
Output voltage	≥ 4.714 V
Battery voltage	≥ 10.9 V

Time Needed for Diagnosis: 2500 ms
Malfunction Indicator Light Illumination: Illuminates as soon as a malfunction occurs.

- **Normality Judgment**

Judge as OK and clear the NG if the continuous time while the following conditions are established is more than the predetermined time.

Judgment Value

Malfunction Criteria	Threshold Value
Output voltage	< 4.714 V
Battery voltage	≥ 10.9 V

Time Needed for Diagnosis: Less than 1 second

GETtheMANUALS.org

AW:DTC P0196 ENGINE OIL TEMPERATURE SENSOR CIRCUIT RANGE/PERFORMANCE

1. OUTLINE OF DIAGNOSIS

Detect for abnormal values in the oil temperature sensor output properties.
Judge as NG when the oil temperature does not rise even though the engine is running under a condition where it should rise.

2. ENABLE CONDITION

Secondary Parameters	Enable Conditions
Battery voltage	≥ 10.9 V
Engine speed	≥ Value from Map

Map

Engine coolant temperature °C (°F)	–40 (–40)	–30 (–22)	–20 (–4)	–10 (14)	0 (32)	10 (50)	20 (68)	30 (86)
Engine speed rpm	500	500	500	500	500	500	500	500

Engine coolant temperature °C (°F)	40 (104)	50 (122)	60 (140)	70 (158)	80 (176)	90 (194)	100 (212)	110 (230)
Engine speed rpm	500	500	500	500	500	500	500	500

3. GENERAL DRIVING CYCLE

Perform the diagnosis continuously after starting the engine.

GETtheMANUALS.org

4. DIAGNOSTIC METHOD

- **Abnormality Judgment**

Judge as NG when the following conditions are established.

Judgment Value

Malfunction Criteria	Threshold Value
Engine oil temperature	< 15 °C (59 °F)
After engine start oil temperature sensor characteristic diagnosis timer.	≥ Judgment value for after engine start oil temperature sensor characteristic diagnosis timer

After engine start oil temperature sensor characteristic diagnosis timer (timer for diagnosis).
a. Timer stop at fuel cut
b. During the driving conditions except a) above, timer counts up as follows.
64 ms + TOILCNT ms (when at 64 ms)
Where, TOILCNT is determined as follows,
TOILCNT = 0 at idle switch ON
For TOILCNT at Idle switch off, refer to the following table.

		Vehicle speed km/h (MPH)							
		0 (0)	8 (5)	16 (9.9)	24 (14.9)	32 (19.9)	40 (24.9)	48 (29.8)	56 (34.8)
Temperature °C (°F)	–30 (–22)	64 ms	73.2 ms	83.9 ms	96.3 ms	113.2 ms	133.9 ms	160.2 ms	194.6 ms
	–20 (–4)	64 ms	73.3 ms	84 ms	96.6 ms	113.7 ms	135 ms	162 ms	197.4 ms
	–10 (14)	64 ms	73.4 ms	84.2 ms	96.9 ms	114.5 ms	136.4 ms	164.4 ms	201.5 ms
	0 (32)	64 ms	73.5 ms	84.5 ms	97.4 ms	115.6 ms	138.5 ms	168 ms	207.6 ms
	10 (50)	102.2 ms	114.8 ms	129.4 ms	146.7 ms	171.7 ms	203.4 ms	245.1 ms	302.1 ms

After engine start oil temperature characteristic diagnosis timer judgment value (t).
t = 1882940 ms – 43302 ms × Ti (t ≥ 2400000)
Ti = The lowest coolant temperature after starting the engine.
Time Needed for Diagnosis: Less than 1 second
Malfunction Indicator Light Illumination: Illuminates when malfunction occurs in 2 continuous driving cycles.

- **Normality Judgment**

Judge as OK and clear the NG if the following conditions are established.

Judgment Value

Malfunction Criteria	Threshold Value
Engine oil temperature	≥ 15 °C (59 °F)

Time Needed for Diagnosis: Less than 1 second

GETtheMANUALS.org

AX:DTC P0197 ENGINE OIL TEMPERATURE SENSOR LOW

1. OUTLINE OF DIAGNOSIS

Detect the open or short circuit of the oil temperature sensor.
Judge as NG when outside of the judgment value.

2. ENABLE CONDITION

Secondary Parameters	Enable Conditions
None	

3. GENERAL DRIVING CYCLE

Always perform the diagnosis continuously.

4. DIAGNOSTIC METHOD

- **Abnormality Judgment**

If the duration of time while the following conditions are met is longer than the time indicated, judge as NG.

Judgment Value

Malfunction Criteria	Threshold Value
Output voltage	< 0.197 V

Time Needed for Diagnosis: 500 ms
Malfunction Indicator Light Illumination: Illuminates as soon as a malfunction occurs.

- **Normality Judgment**

Judge as OK and clear the NG if the continuous time while the following conditions are established is more than the predetermined time.

Judgment Value

Malfunction Criteria	Threshold Value
Output voltage	≥ 0.197 V

Time Needed for Diagnosis: Less than 1 second

GETtheMANUALS.org

AY:DTC P0198 ENGINE OIL TEMPERATURE SENSOR HIGH

1. OUTLINE OF DIAGNOSIS

Detect the open or short circuit of the oil temperature sensor.
Judge as NG when outside of the judgment value.

2. ENABLE CONDITION

Secondary Parameters	Enable Conditions
None	

3. GENERAL DRIVING CYCLE

Always perform the diagnosis continuously.

4. DIAGNOSTIC METHOD

- **Abnormality Judgment**

If the duration of time while the following conditions are met is longer than the time indicated, judge as NG.

Judgment Value

Malfunction Criteria	Threshold Value
Output voltage	≥ 4.702 V

Time Needed for Diagnosis: 500 ms
Malfunction Indicator Light Illumination: Illuminates as soon as a malfunction occurs.

- **Normality Judgment**

Judge as OK and clear the NG if the continuous time while the following conditions are established is more than the predetermined time.

Judgment Value

Malfunction Criteria	Threshold Value
Output voltage	< 4.702 V

Time Needed for Diagnosis: Less than 1 second

GETtheMANUALS.org

AZ:DTC P0201 INJECTOR #1

1. OUTLINE OF DIAGNOSIS

Based on the self-diagnostic result of the injector driving IC, judge the injector driving circuit as normal or abnormal.
Injector driving IC detects the status of “fuel remains injected” or “fuel is not injected” as a malfunction.

2. ENABLE CONDITIONS

Secondary Parameters	Enable Conditions
Battery voltage	≥ 10.9 V
Elapsed time after starting the engine	> 1 s
Engine speed	> 500 rpm
Injection time	≥ 1000 μs and < 120000000/engine speed – 1000 μs
Injection status	Not during fuel cut and Not during asynchronous injection controlled by crankshaft position sensor

3. GENERAL DRIVING CYCLE

Always perform the diagnosis continuously.

4. DIAGNOSTIC METHOD

- **Abnormality Judgment**

Judge as NG when the following conditions are established.

Judgment Value

Malfunction Criteria	Threshold Value
Injector driving IC information	Malfunction

Time Needed for Diagnosis: 2500 ms
Malfunction Indicator Light Illumination: Illuminates as soon as a malfunction occurs.

- **Normality Judgment**

Judge as OK and clear the NG if the following conditions are established.

Judgment Value

Malfunction Criteria	Threshold Value
Injector driving IC information	Normal

Time Needed for Diagnosis: Less than 1 second

GETtheMANUALS.org

BA:DTC P0202 INJECTOR #2

1. OUTLINE OF DIAGNOSIS

NOTE:
For the detection standard, refer to DTC P0201. <Ref. to GD(H4SO)-105, DTC P0201 INJECTOR #1, Diagnostic Trouble Code (DTC) Detecting Criteria.>

BB:DTC P0203 INJECTOR #3

1. OUTLINE OF DIAGNOSIS

NOTE:
For the detection standard, refer to DTC P0201. <Ref. to GD(H4SO)-105, DTC P0201 INJECTOR #1, Diagnostic Trouble Code (DTC) Detecting Criteria.>

BC:DTC P0204 INJECTOR #4

1. OUTLINE OF DIAGNOSIS

NOTE:
For the detection standard, refer to DTC P0201. <Ref. to GD(H4SO)-105, DTC P0201 INJECTOR #1, Diagnostic Trouble Code (DTC) Detecting Criteria.>

GETtheMANUALS.org

BD:DTC P0222 THROTTLE/PEDAL POSITION SENSOR/SWITCH “B” CIRCUIT LOW

1. OUTLINE OF DIAGNOSIS

Detect the open or short circuit of throttle position sensor 2.
Judge as NG if out of specification.

2. COMPONENT DESCRIPTION

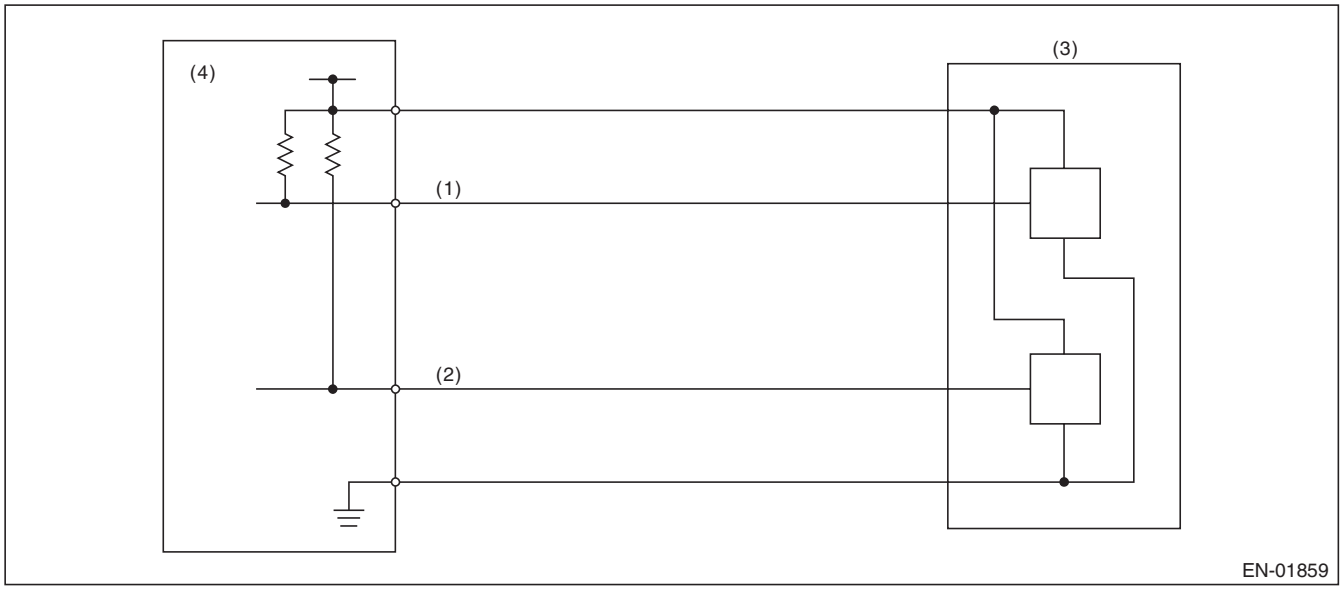

(1) Throttle position sensor 1 signal
(2) Throttle position sensor 2 signal
(3) Throttle position sensor
(4) Engine control module (ECM)

3. ENABLE CONDITION

Secondary Parameters	Enable Conditions
Ignition switch	ON
Battery voltage	≥ 6 V

4. GENERAL DRIVING CYCLE

Always perform the diagnosis continuously.

GETtheMANUALS.org

5. DIAGNOSTIC METHOD

- **Abnormality Judgment**

If the duration of time while the following conditions are met is longer than the time indicated, judge as NG.

Judgment Value

Malfunction Criteria	Threshold Value
Sensor 2 input voltage	≤ 1.07 V

Time Needed for Diagnosis: 24 ms
Malfunction Indicator Light Illumination: Illuminates as soon as a malfunction occurs.

- **Normality Judgment**

Judge as OK and clear the NG if the continuous time while the following conditions are established is more than the predetermined time.

Judgment Value

Malfunction Criteria	Threshold Value
Sensor 2 input voltage	> 1.07 V

Time Needed for Diagnosis: 24 ms

GETtheMANUALS.org

BE:DTC P0223 THROTTLE/PEDAL POSITION SENSOR/SWITCH “B” CIRCUIT HIGH

1. OUTLINE OF DIAGNOSIS

Detect the open or short circuit of throttle position sensor 2.
Judge as NG if out of specification.

2. COMPONENT DESCRIPTION

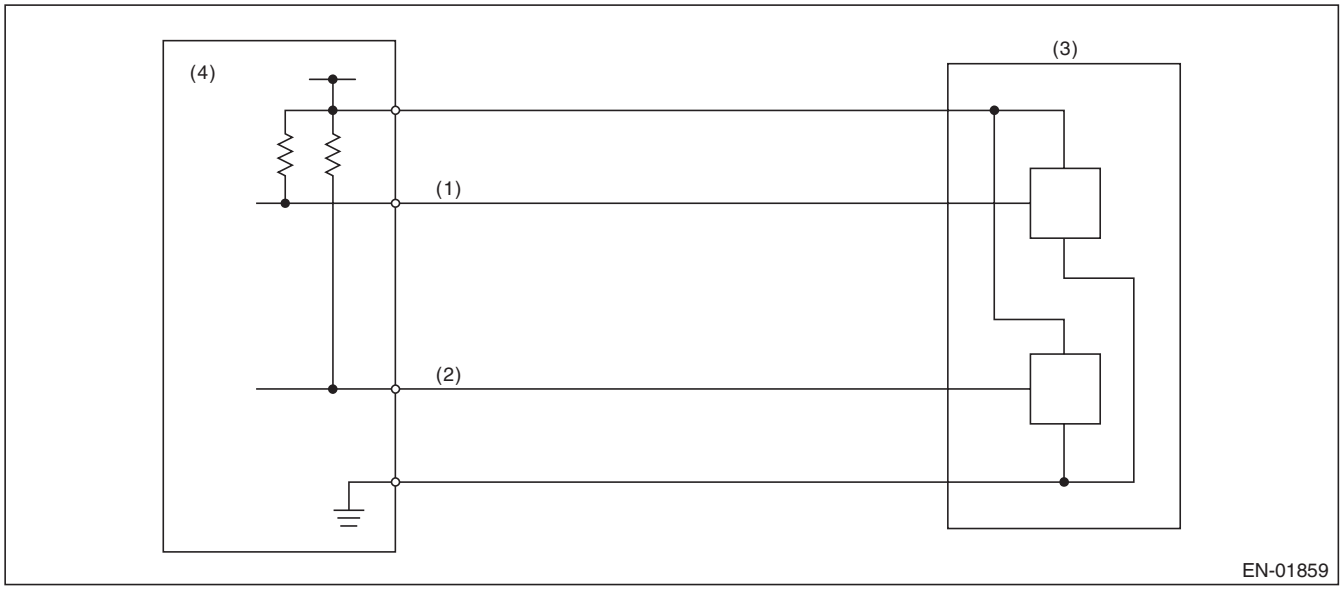

(1) Throttle position sensor 1 signal
(2) Throttle position sensor 2 signal
(3) Throttle position sensor
(4) Engine control module (ECM)

3. ENABLE CONDITION

Secondary Parameters	Enable Conditions
Ignition switch	ON
Battery voltage	≥ 6 V

4. GENERAL DRIVING CYCLE

Always perform the diagnosis continuously.

GETtheMANUALS.org

5. DIAGNOSTIC METHOD

- **Abnormality Judgment**

If the duration of time while the following conditions are met is longer than the time indicated, judge as NG.

Judgment Value

Malfunction Criteria	Threshold Value
Sensor 2 input voltage	≥ 4.858 V

Time Needed for Diagnosis: 24 ms
Malfunction Indicator Light Illumination: Illuminates as soon as a malfunction occurs.

- **Normality Judgment**

Judge as OK and clear the NG if the continuous time while the following conditions are established is more than the predetermined time.

Judgment Value

Malfunction Criteria	Threshold Value
Sensor 2 input voltage	< 4.858 V

Time Needed for Diagnosis: 24 ms

GETtheMANUALS.org

BF:DTC P0301 CYLINDER 1 MISFIRE DETECTED

1. OUTLINE OF DIAGNOSIS

Detect the presence of misfire occurrence. (Revolution fluctuation method)
Monitoring Misfire which influences exhaust deterioration (1.5 times of FTP) and catalyst damage is made obligatory by the law. Misfire affecting these two has two patterns below. :

- Intermittent misfire (The same cylinder misfires in random, or different cylinders misfire in random.): FTP 1.5 times misfire
- Every time misfire (The same cylinder misfires every time.): FTP 1.5 times misfire, Catalyst damage misfire

The following detecting methods are adopted for these detection.
1) Intermittent misfire: FTP 1.5 times misfire

- 180° Interval Difference Method (MT: 1,800 rpm or less; CVT: None)
- 360° Interval Difference Method (whole range)
- 720° Interval Difference Method (3,000 rpm or more)

2) Misfire every time: FTP 1.5 times misfire, Catalyst damage misfire

- 360° Interval Difference Method

2. ENABLE CONDITION

Secondary Parameters	Enable Conditions
All secondary parameters enable conditions	≥ 1024 ms
Intake manifold pressure change at 180°CA	< Value of Map 1
Throttle position change during 16 milliseconds	< 21 °
Fuel shut-off function	Not in operation
Fuel level	≥ 9.6 ℓ (2.54 US gal, 2.11 Imp gal)
Vehicle dynamic control or AT torque control	Not in operation
Evaporative system leak check	Not in operation
Engine speed	500 rpm — 6300 rpm
Intake manifold pressure	≥ Value from Map 2
Battery voltage	≥ 8 V
Fuel parameter determination	Not extremely low volatility
Elapsed time after starting the engine	≥ 0 ms
Engine speed change during 32 milliseconds	< 1000 rpm

Map 1

- CVT model

rpm	700	1000	1500	2000	2500	3000	3500	4000	4500	5000	5500	6000	6300
kPa (mmHg, inHg)	13.3 (100, 3.9)	13.3 (100, 3.9)	13.3 (100, 3.9)	13.3 (100, 3.9)	13.3 (100, 3.9)	13.3 (100, 3.9)	13.3 (100, 3.9)	13.3 (100, 3.9)	13.3 (100, 3.9)	13.3 (100, 3.9)	13.3 (100, 3.9)	13.3 (100, 3.9)	13.3 (100, 3.9)

- MT model

rpm	650	1000	1500	2000	2500	3000	3500	4000	4500	5000	5500	6000	6300
kPa (mmHg, inHg)	13.3 (100, 3.9)	13.3 (100, 3.9)	13.3 (100, 3.9)	13.3 (100, 3.9)	13.3 (100, 3.9)	13.3 (100, 3.9)	13.3 (100, 3.9)	13.3 (100, 3.9)	13.3 (100, 3.9)	13.3 (100, 3.9)	13.3 (100, 3.9)	13.3 (100, 3.9)	13.3 (100, 3.9)

GETtheMANUALS.org

Map 2 (PZEV CVT model)

- Normal ignition

		Barometric pressure (kPa (mmHg, inHg))						
		66.7 (500.0 , 19.7)	76.4 (573.0 , 22.6)	80 (600.0 , 23.6)	83.7 (628.0 , 24.7)	86.2 (647.0 , 25.5)	91.3 (685.0 , 27)	100.4 (753.0 , 29.6)
Engine speed (rpm)	680	21.3 (160.0 , 6.3)	21.3 (160.0 , 6.3)	22.1 (166.1 , 6.5)	22.8 (171.0 , 6.7)	24.2 (181.8 , 7.2)	25.4 (190.5 , 7.5)	27.7 (208.1 , 8.2)
	1200	19.5 (146.4 , 5.8)	19.5 (146.4 , 5.8)	20.6 (154.5 , 6.1)	22.8 (170.8 , 6.7)	21.8 (163.9 , 6.5)	23.2 (174.2 , 6.9)	24.7 (185.6 , 7.3)
	1500	18 (135.2 , 5.3)	18 (135.2 , 5.3)	18.7 (140.6 , 5.5)	21.6 (162.2 , 6.4)	19.8 (148.2 , 5.8)	21 (157.2 , 6.2)	23.1 (173.1 , 6.8)
	2000	17.9 (134.4 , 5.3)	17.9 (134.4 , 5.3)	18.4 (138.2 , 5.4)	21.6 (162.2 , 6.4)	21.8 (163.8 , 6.4)	22.8 (171.3 , 6.7)	24.1 (180.8 , 7.1)
	2500	20.3 (152.4 , 6)	20.3 (152.4 , 6)	21.4 (160.4 , 6.3)	22.1 (166.0 , 6.5)	22 (164.9 , 6.5)	23.5 (176.4 , 6.9)	24.8 (186.1 , 7.3)
	3000	21.3 (159.7 , 6.3)	21.3 (159.7 , 6.3)	22 (165.2 , 6.5)	22.4 (167.8 , 6.6)	23.1 (173.2 , 6.8)	24.1 (180.6 , 7.1)	25.2 (189.2 , 7.4)
	3500	24.5 (183.8 , 7.2)	24.5 (183.8 , 7.2)	25.6 (192.1 , 7.6)	25.7 (193.1 , 7.6)	26.2 (196.5 , 7.7)	27.7 (208.1 , 8.2)	28.5 (213.6 , 8.4)
	4000	25.3 (190.1 , 7.5)	25.3 (190.1 , 7.5)	26.5 (198.5 , 7.8)	26.3 (197.2 , 7.8)	27.1 (203.1 , 8)	28.2 (211.9 , 8.3)	28.7 (215.4 , 8.5)
	4500	27.4 (205.2 , 8.1)	27.4 (205.2 , 8.1)	28.5 (213.6 , 8.4)	28.3 (212.4 , 8.4)	29.1 (218.3 , 8.6)	30.3 (227.0 , 8.9)	30.7 (230.5 , 9.1)
	5000	29.4 (220.4 , 8.7)	29.4 (220.4 , 8.7)	30.5 (228.8 , 9)	30.3 (227.5 , 9)	31.1 (233.4 , 9.2)	32.3 (242.2 , 9.5)	32.7 (245.7 , 9.7)
	5500	31.4 (235.5 , 9.3)	31.4 (235.5 , 9.3)	32.5 (243.9 , 9.6)	32.3 (242.7 , 9.6)	33.1 (248.6 , 9.8)	34.3 (257.3 , 10.1)	34.8 (260.8 , 10.3)
	6000	33.4 (250.7 , 9.9)	33.4 (250.7 , 9.9)	34.5 (259.1 , 10.2)	34.4 (257.8 , 10.2)	35.2 (263.7 , 10.4)	36.3 (272.5 , 10.7)	36.8 (276.0 , 10.9)
	6300	34.6 (259.8 , 10.2)	34.6 (259.8 , 10.2)	35.7 (268.2 , 10.6)	35.6 (266.9 , 10.5)	36.4 (272.8 , 10.7)	37.5 (281.6 , 11.1)	38 (285.1 , 11.2)
kPa (mmHg, inHg)								

GETtheMANUALS.org

- Idling ignition

		Barometric pressure (kPa (mmHg, inHg))						
		66.7 (500.0 , 19.7)	76.4 (573.0 , 22.6)	80 (600.0 , 23.6)	83.7 (628.0 , 24.7)	86.2 (647.0 , 25.5)	91.3 (685.0 , 27)	100.4 (753.0 , 29.6)
Engine speed (rpm)	680	21.3 (160.0 , 6.3)	21.3 (160.0 , 6.3)	22.1 (166.1 , 6.5)	22.8 (171.0 , 6.7)	24.2 (181.8 , 7.2)	25.4 (190.5 , 7.5)	27.7 (208.1 , 8.2)
	1200	20.9 (156.7 , 6.2)	20.9 (156.7 , 6.2)	22 (164.8 , 6.5)	23 (172.7 , 6.8)	23.4 (175.5 , 6.9)	24.9 (186.5 , 7.3)	27.2 (204.3 , 8)
	1500	19.8 (148.2 , 5.8)	19.8 (148.2 , 5.8)	20.4 (153.1 , 6)	25.8 (193.3 , 7.6)	21.5 (161.1 , 6.3)	23 (172.9 , 6.8)	24 (180.1 , 7.1)
	2000	18.2 (136.6 , 5.4)	18.2 (136.6 , 5.4)	20 (150.3 , 5.9)	25.1 (188.5 , 7.4)	22.3 (167.3 , 6.6)	21.7 (163.0 , 6.4)	24.2 (181.9 , 7.2)
	2500	20.5 (153.8 , 6.1)	20.5 (153.8 , 6.1)	21.3 (159.7 , 6.3)	24.3 (182.4 , 7.2)	22.8 (170.7 , 6.7)	23.7 (178.1 , 7)	24.8 (185.8 , 7.3)
	3000	20.9 (156.7 , 6.2)	20.9 (156.7 , 6.2)	21.7 (163.1 , 6.4)	22.8 (170.7 , 6.7)	22.8 (170.8 , 6.7)	24.3 (181.9 , 7.2)	25.3 (190.1 , 7.5)
	3500	24.7 (185.3 , 7.3)	24.7 (185.3 , 7.3)	25.4 (190.5 , 7.5)	26 (194.8 , 7.7)	26.5 (198.7 , 7.8)	28 (209.8 , 8.3)	28.9 (216.6 , 8.5)
	4000	25.3 (189.7 , 7.5)	25.3 (189.7 , 7.5)	26.3 (197.3 , 7.8)	26.5 (199.1 , 7.8)	26.7 (200.5 , 7.9)	28.1 (211.0 , 8.3)	28.7 (215.7 , 8.5)
	4500	27.3 (204.9 , 8.1)	27.3 (204.9 , 8.1)	28.3 (212.5 , 8.4)	28.6 (214.3 , 8.4)	28.7 (215.6 , 8.5)	30.1 (226.1 , 8.9)	30.8 (230.8 , 9.1)
	5000	29.3 (220.0 , 8.7)	29.3 (220.0 , 8.7)	30.3 (227.6 , 9)	30.6 (229.4 , 9)	30.8 (230.8 , 9.1)	32.2 (241.3 , 9.5)	32.8 (246.0 , 9.7)
	5500	31.4 (235.2 , 9.3)	31.4 (235.2 , 9.3)	32.4 (242.8 , 9.6)	32.6 (244.6 , 9.6)	32.8 (246.0 , 9.7)	34.2 (256.4 , 10.1)	34.8 (261.1 , 10.3)
	6000	33.4 (250.3 , 9.9)	33.4 (250.3 , 9.9)	34.4 (257.9 , 10.2)	34.6 (259.7 , 10.2)	34.8 (261.1 , 10.3)	36.2 (271.6 , 10.7)	36.8 (276.3 , 10.9)
	6300	34.6 (259.4 , 10.2)	34.6 (259.4 , 10.2)	35.6 (267.0 , 10.5)	35.8 (268.8 , 10.6)	36 (270.2 , 10.6)	37.4 (280.7 , 11.1)	38 (285.4 , 11.2)
kPa (mmHg, inHg)								

GETtheMANUALS.org

Map 2 (PZEV MT model)

- Normal ignition

		Barometric pressure (kPa (mmHg, inHg))						
		66.7 (500.0 , 19.7)	75.8 (569.0 , 22.4)	79.4 (596.0 , 23.5)	84.2 (632.0 , 24.9)	85.7 (643.0 , 25.3)	90.9 (682.0 , 26.9)	99.3 (745.0 , 29.3)
Engine speed (rpm)	680	20.2 (151.9 , 6)	20.2 (151.9 , 6)	21.3 (159.6 , 6.3)	22.6 (169.6 , 6.7)	23.2 (173.7 , 6.8)	23.8 (178.3 , 7)	24.4 (183.2 , 7.2)
	1200	18.9 (141.8 , 5.6)	18.9 (141.8 , 5.6)	19.9 (149.1 , 5.9)	20.9 (156.7 , 6.2)	21.4 (160.5 , 6.3)	22.3 (167.4 , 6.6)	23.3 (175.0 , 6.9)
	1500	16.5 (123.9 , 4.9)	16.5 (123.9 , 4.9)	17.2 (128.9 , 5.1)	18 (134.9 , 5.3)	18.7 (140.0 , 5.5)	18.8 (141.4 , 5.6)	19.6 (147.0 , 5.8)
	2000	16.2 (121.7 , 4.8)	16.2 (121.7 , 4.8)	17.1 (128.5 , 5.1)	17.7 (132.9 , 5.2)	18.2 (136.3 , 5.4)	18.9 (142.0 , 5.6)	19.9 (149.6 , 5.9)
	2500	17.2 (128.9 , 5.1)	17.2 (128.9 , 5.1)	17.9 (134.3 , 5.3)	18.6 (139.7 , 5.5)	18.7 (140.2 , 5.5)	19.4 (145.2 , 5.7)	20.7 (155.4 , 6.1)
	3000	17.2 (128.8 , 5.1)	17.2 (128.8 , 5.1)	17.8 (133.2 , 5.2)	18.6 (139.3 , 5.5)	19.2 (144.0 , 5.7)	20.2 (151.4 , 6)	21.2 (159.2 , 6.3)
	3500	20.6 (154.5 , 6.1)	20.6 (154.5 , 6.1)	21.1 (158.1 , 6.2)	22.3 (167.1 , 6.6)	22.4 (168.4 , 6.6)	23.2 (173.7 , 6.8)	24.5 (184.0 , 7.2)
	4000	21.3 (160.0 , 6.3)	21.3 (160.0 , 6.3)	22 (165.1 , 6.5)	22.6 (169.7 , 6.7)	22.8 (171.2 , 6.7)	23.8 (178.9 , 7)	24.2 (181.5 , 7.1)
	4500	23.8 (178.5 , 7)	23.8 (178.5 , 7)	24.5 (183.9 , 7.2)	25.2 (188.8 , 7.4)	25.7 (192.7 , 7.6)	26.2 (196.6 , 7.7)	26.9 (202.2 , 8)
	5000	27.4 (205.3 , 8.1)	27.4 (205.3 , 8.1)	27.8 (208.4 , 8.2)	28.7 (215.0 , 8.5)	28.9 (216.8 , 8.5)	29.4 (220.7 , 8.7)	30.3 (227.1 , 8.9)
	5500	30.8 (230.8 , 9.1)	30.8 (230.8 , 9.1)	31.4 (235.2 , 9.3)	32 (240.2 , 9.5)	32.5 (243.8 , 9.6)	33 (247.6 , 9.7)	34.1 (256.1 , 10.1)
	6000	35.9 (269.4 , 10.6)	35.9 (269.4 , 10.6)	37.6 (282.2 , 11.1)	37.8 (283.3 , 11.2)	36.7 (275.0 , 10.8)	38.7 (290.0 , 11.4)	39.2 (294.2 , 11.6)
	6300	37.1 (278.5 , 11)	37.1 (278.5 , 11)	38.8 (291.3 , 11.5)	39 (292.4 , 11.5)	37.9 (284.1 , 11.2)	39.9 (299.1 , 11.8)	40.4 (303.3 , 11.9)
kPa (mmHg, inHg)								

GETtheMANUALS.org

- Idling ignition

		Barometric pressure (kPa (mmHg, inHg))						
		66.7 (500.0 , 19.7)	75.8 (569.0 , 22.4)	79.4 (596.0 , 23.5)	84.2 (632.0 , 24.9)	85.7 (643.0 , 25.3)	90.9 (682.0 , 26.9)	99.3 (745.0 , 29.3)
Engine speed (rpm)	680	20.8 (156.2 , 6.1)	20.8 (156.2 , 6.1)	21.3 (160.1 , 6.3)	22.9 (171.8 , 6.8)	23.4 (175.3 , 6.9)	24.2 (181.3 , 7.1)	25.1 (188.0 , 7.4)
	1200	20.7 (155.5 , 6.1)	20.7 (155.5 , 6.1)	21.4 (160.7 , 6.3)	22.4 (167.8 , 6.6)	22.9 (171.9 , 6.8)	23.9 (179.6 , 7.1)	24 (180.0 , 7.1)
	1500	19.7 (147.9 , 5.8)	19.7 (147.9 , 5.8)	20.2 (151.7 , 6)	21.3 (159.5 , 6.3)	21.3 (160.1 , 6.3)	22 (164.8 , 6.5)	23.8 (178.5 , 7)
	2000	19.6 (146.9 , 5.8)	19.6 (146.9 , 5.8)	20.5 (153.9 , 6.1)	21.4 (160.6 , 6.3)	21.6 (162.3 , 6.4)	22.3 (167.2 , 6.6)	23.9 (179.6 , 7.1)
	2500	21 (157.6 , 6.2)	21 (157.6 , 6.2)	21.7 (162.7 , 6.4)	23.1 (173.1 , 6.8)	23.2 (173.9 , 6.8)	23.7 (177.9 , 7)	25.5 (191.1 , 7.5)
	3000	22.2 (166.6 , 6.6)	22.2 (166.6 , 6.6)	23.1 (173.5 , 6.8)	24.3 (182.6 , 7.2)	24.4 (183.2 , 7.2)	25.2 (189.0 , 7.4)	26.9 (201.9 , 7.9)
	3500	25.9 (194.3 , 7.7)	25.9 (194.3 , 7.7)	26.8 (201.0 , 7.9)	27.6 (207.4 , 8.2)	29.7 (222.8 , 8.8)	28.4 (212.8 , 8.4)	30.3 (227.3 , 9)
	4000	25.3 (190.1 , 7.5)	25.3 (190.1 , 7.5)	26.1 (195.6 , 7.7)	26.8 (200.8 , 7.9)	26.9 (202.1 , 8)	27.4 (205.5 , 8.1)	28.7 (215.2 , 8.5)
	4500	27.1 (203.4 , 8)	27.1 (203.4 , 8)	27.8 (208.2 , 8.2)	28.9 (217.1 , 8.5)	28.3 (212.6 , 8.4)	28.4 (212.8 , 8.4)	29.9 (224.1 , 8.8)
	5000	28.3 (212.6 , 8.4)	28.3 (212.6 , 8.4)	28.8 (216.3 , 8.5)	29.6 (222.0 , 8.7)	29.7 (222.4 , 8.8)	29.9 (224.5 , 8.8)	31.3 (234.6 , 9.2)
	5500	31.3 (234.7 , 9.2)	31.3 (234.7 , 9.2)	32.1 (241.0 , 9.5)	32.6 (244.8 , 9.6)	32.6 (244.2 , 9.6)	33.1 (248.1 , 9.8)	34.6 (259.4 , 10.2)
	6000	36.2 (271.4 , 10.7)	36.2 (271.4 , 10.7)	35.9 (269.2 , 10.6)	37.2 (279.3 , 11)	37.1 (278.0 , 10.9)	38.8 (291.2 , 11.5)	39.6 (297.3 , 11.7)
	6300	37.4 (280.5 , 11)	37.4 (280.5 , 11)	37.1 (278.3 , 11)	38.4 (288.4 , 11.4)	38.3 (287.1 , 11.3)	40 (300.3 , 11.8)	40.8 (306.4 , 12.1)

kPa (mmHg, inHg)

GETtheMANUALS.org

Map 2 (CVT model except for PZEV)

- Normal ignition

		Barometric pressure (kPa (mmHg, inHg))	
		66.7 (500.0 , 19.7)	100.4 (753.0 , 29.6)
Engine speed (rpm)	700	27.6 (207.0 , 8.1)	27.6 (207.0 , 8.1)
	1000	25.6 (192.0 , 7.6)	25.6 (192.0 , 7.6)
	1500	22.9 (172.0 , 6.8)	22.9 (172.0 , 6.8)
	2000	23.2 (174.0 , 6.9)	23.2 (174.0 , 6.9)
	2500	23.9 (179.0 , 7)	23.9 (179.0 , 7)
	3000	23.6 (177.0 , 7)	23.6 (177.0 , 7)
	3500	26.8 (201.0 , 7.9)	26.8 (201.0 , 7.9)
	4000	29.7 (223.0 , 8.8)	29.7 (223.0 , 8.8)
	4500	32.3 (242.0 , 9.5)	32.3 (242.0 , 9.5)
	5000	34.1 (256.0 , 10.1)	34.1 (256.0 , 10.1)
	5500	36 (270.0 , 10.6)	36 (270.0 , 10.6)
	6000	37.9 (284.0 , 11.2)	37.9 (284.0 , 11.2)
	6300	40 (300.0 , 11.8)	40 (300.0 , 11.8)
			kPa (mmHg, inHg)

- Idling ignition

		Barometric pressure (kPa (mmHg, inHg))	
		66.7 (500.0 , 19.7)	100.4 (753.0 , 29.6)
Engine speed (rpm)	700	27.6 (207.0 , 8.1)	27.6 (207.0 , 8.1)
	1000	25.6 (192.0 , 7.6)	25.6 (192.0 , 7.6)
	1500	22.9 (172.0 , 6.8)	22.9 (172.0 , 6.8)
	2000	23.2 (174.0 , 6.9)	23.2 (174.0 , 6.9)
	2500	23.9 (179.0 , 7)	23.9 (179.0 , 7)
	3000	23.6 (177.0 , 7)	23.6 (177.0 , 7)
	3500	26.8 (201.0 , 7.9)	26.8 (201.0 , 7.9)
	4000	29.7 (223.0 , 8.8)	29.7 (223.0 , 8.8)
	4500	32.3 (242.0 , 9.5)	32.3 (242.0 , 9.5)
	5000	34.1 (256.0 , 10.1)	34.1 (256.0 , 10.1)
	5500	36 (270.0 , 10.6)	36 (270.0 , 10.6)
	6000	37.9 (284.0 , 11.2)	37.9 (284.0 , 11.2)
	6300	40 (300.0 , 11.8)	40 (300.0 , 11.8)
			kPa (mmHg, inHg)

GETtheMANUALS.org

Map 2 (MT model except for PZEV)

- Normal ignition

		Barometric pressure (kPa (mmHg, inHg))	
		66.7 (500.0 , 19.7)	100.4 (753.0 , 29.6)
Engine speed (rpm)	650	26.4 (198.0 , 7.8)	26.4 (198.0 , 7.8)
	1000	24.8 (186.0 , 7.3)	24.8 (186.0 , 7.3)
	1500	21.1 (158.0 , 6.2)	21.1 (158.0 , 6.2)
	2000	20.1 (151.0 , 5.9)	20.1 (151.0 , 5.9)
	2500	20.3 (152.0 , 6)	20.3 (152.0 , 6)
	3000	20.9 (157.0 , 6.2)	20.9 (157.0 , 6.2)
	3500	26.2 (196.7 , 7.7)	26.2 (196.7 , 7.7)
	4000	30.2 (226.3 , 8.9)	30.2 (226.3 , 8.9)
	4500	34.1 (256.0 , 10.1)	34.1 (256.0 , 10.1)
	5000	34.7 (260.0 , 10.2)	34.7 (260.0 , 10.2)
	5500	34.7 (260.0 , 10.2)	34.7 (260.0 , 10.2)
	6000	34.7 (260.0 , 10.2)	34.7 (260.0 , 10.2)
	6300	34.7 (260.0 , 10.2)	34.7 (260.0 , 10.2)
			kPa (mmHg, inHg)

- Idling ignition

		Barometric pressure (kPa (mmHg, inHg))	
		66.7 (500.0 , 19.7)	100.4 (753.0 , 29.6)
Engine speed (rpm)	650	26.4 (198.0 , 7.8)	26.4 (198.0 , 7.8)
	1000	24.8 (186.0 , 7.3)	24.8 (186.0 , 7.3)
	1500	21.1 (158.0 , 6.2)	21.1 (158.0 , 6.2)
	2000	20.1 (151.0 , 5.9)	20.1 (151.0 , 5.9)
	2500	20.3 (152.0 , 6)	20.3 (152.0 , 6)
	3000	20.9 (157.0 , 6.2)	20.9 (157.0 , 6.2)
	3500	26.2 (196.7 , 7.7)	26.2 (196.7 , 7.7)
	4000	30.2 (226.3 , 8.9)	30.2 (226.3 , 8.9)
	4500	34.1 (256.0 , 10.1)	34.1 (256.0 , 10.1)
	5000	34.7 (260.0 , 10.2)	34.7 (260.0 , 10.2)
	5500	34.7 (260.0 , 10.2)	34.7 (260.0 , 10.2)
	6000	34.7 (260.0 , 10.2)	34.7 (260.0 , 10.2)
	6300	34.7 (260.0 , 10.2)	34.7 (260.0 , 10.2)
			kPa (mmHg, inHg)

3. GENERAL DRIVING CYCLE

- If conditions are met, it is possible to detect the misfires from idling to high engine speed. However, to avoid excessive load or harm to the engine, perform diagnosis at idle.
- Perform the diagnosis continuously.

GETtheMANUALS.org

4. DIAGNOSTIC METHOD

When a misfire occurs, the engine speed will decrease and the crankshaft position speed will change. Calculate the interval difference value (diagnostic value) from crankshaft position speed by the following formula, and judge whether a misfire is occurring or not comparing the calculated result with judgment value. Count the number of misfires, if the misfire ratio is higher during 1000 revs. or 200 revs., judge corresponding cylinders as NG.

Diagnostic value calculation (Calculate from angle speed) →	Misfire detection every single ignition (Compare diagnostic value with judgment value) →	NG judgment (Misfire occurrence judgment required by the law) (Compare number of misfire with judgment value)
	• 180° Interval Difference Method • 360° Interval Difference Method • 720° Interval Difference Method	• FTP 1.5 times misfire NG judgment • Catalyst damage misfire NG judgment

As shown in the following figure, pick a cylinder as the standard and name it omg 0. And the former crankshaft position speed is named omg 1, the second former crankshaft position speed is named omg 2, the third is named omg 3, etc.

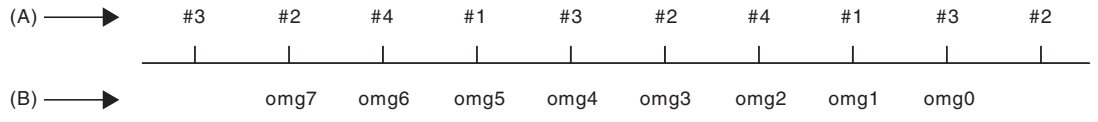

(A) Ignition order (B) Crankshaft position speed

GETtheMANUALS.org

180° Interval Difference Method

Diagnostic value	domg 180 = (omg 1 – omg 0) – (omg 5 – omg 1)/4
Judge as a misfire in the following cases. • domg 180 > judgment value of positive side • domg 180 ≤ judgment value of negative side (Diagnostic value before 180° CA)	

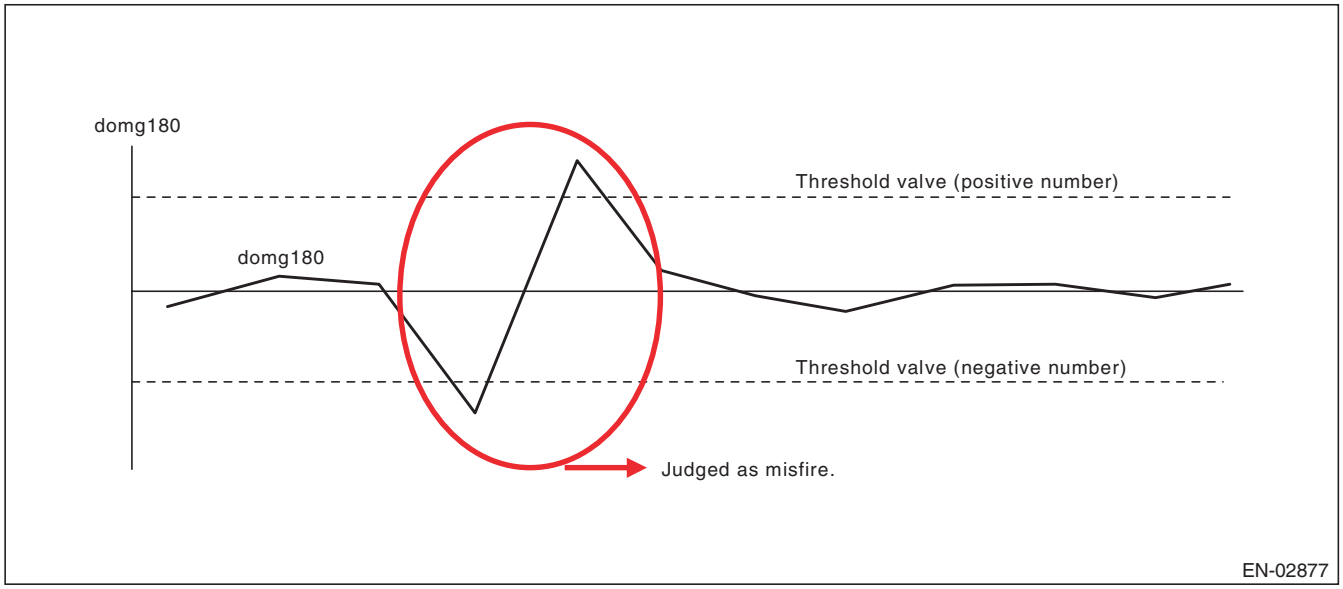

360° Interval Difference Method

Diagnostic value	domg 360 = (omg 1 – omg 0) – (omg 3 – omg 2)
Misfire judgment	domg 360 > Judgment value → Judge as misfire

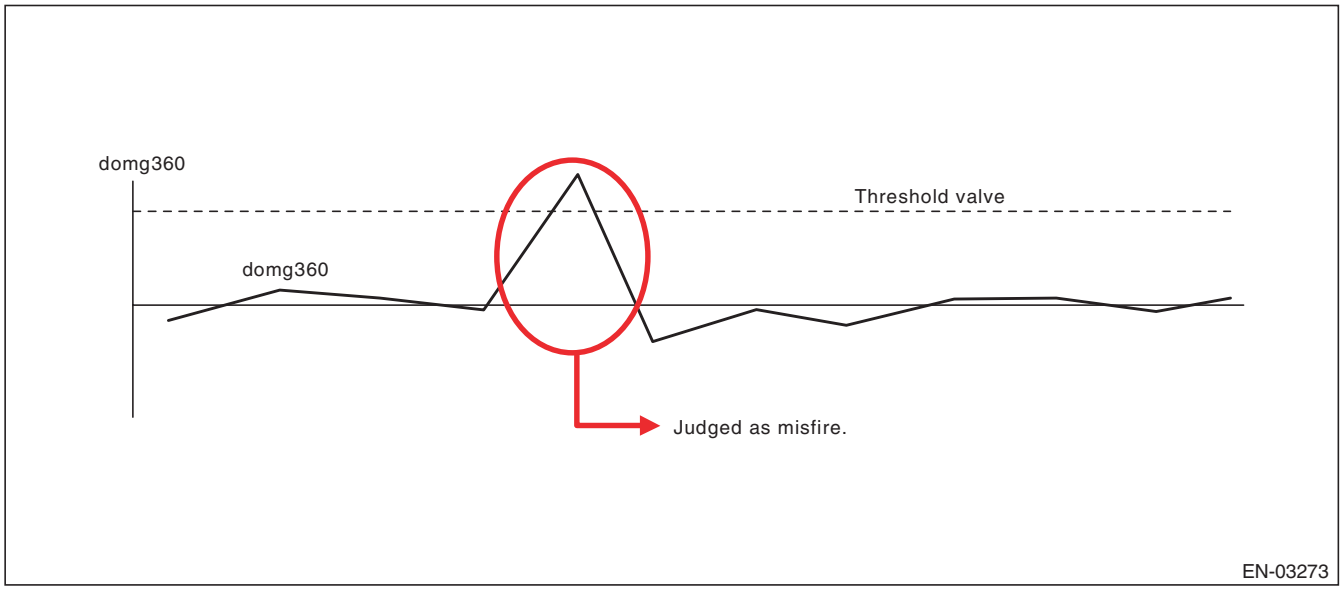

GETtheMANUALS.org

720° Interval Difference Method

Diagnostic value	domg 720 = (omg 1 – omg 0) – (omg 5 – omg 4)
Misfire judgment	domg 720 > Judgment value → Judge as misfire

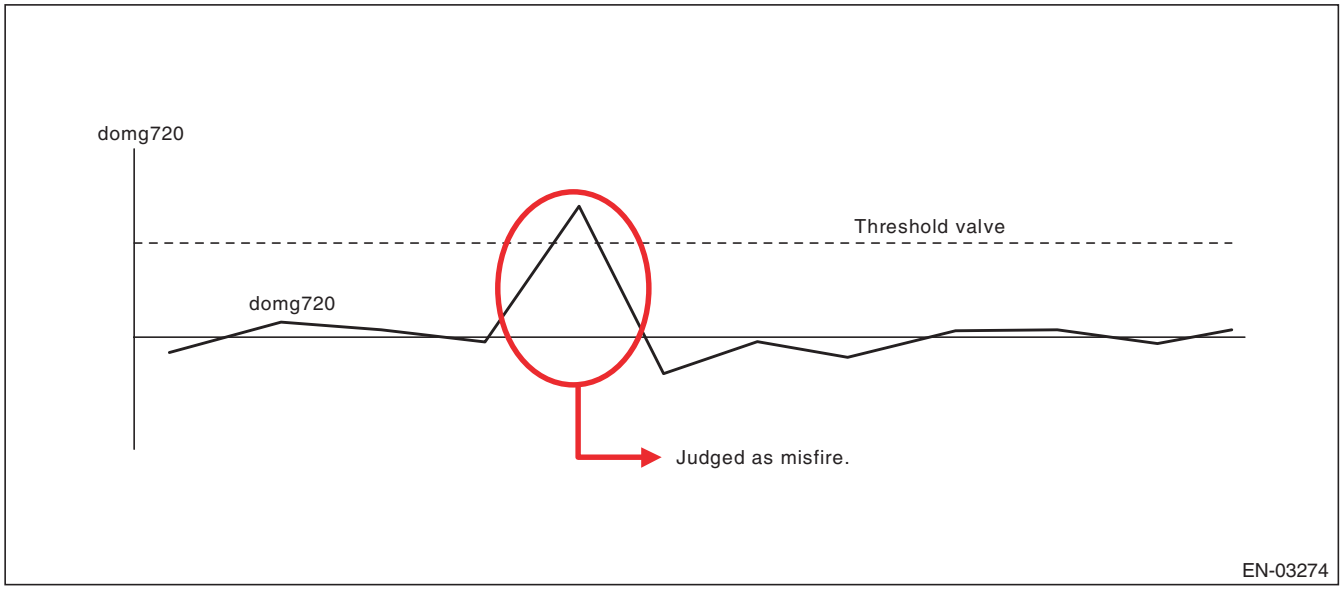

- **FTP 1.5 times misfire (Misfire occurrence level which influences exhaust gas)**
- **Abnormality Judgment**

Judgment Value (Judge that malfunction occurs when the misfire ratio is high in 1000 engine revs.)

Malfunction Criteria	Threshold Value
FTP emission diagnostic value	≥ 17 × 100/2000% in 1000 revs. (PZEV model) ≥ 30 × 100/2000% in 1000 revs. (except for PZEV model)

Time Needed for Diagnosis: 1000 engine revs.
Malfunction Indicator Light Illumination: Illuminates when malfunction occurs in 2 continuous driving cycles.

- **Normality Judgment**

Judgment Value

Malfunction Criteria	Threshold Value
FTP emission diagnostic value	< 17 × 100/2000% in 1000 revs. (PZEV model) < 30 × 100/2000% in 1000 revs. (except for PZEV model)

Time Needed for Diagnosis: 1000 engine revs.

GETtheMANUALS.org

- **Catalyst damage misfire (Misfire occurrence level damaging catalyst)**
- **Abnormality Judgment**

Judgment Value

Malfunction Criteria	Threshold Value
Catalyst damage misfire diagnostic value	≥ Value from Map 3

Map 3

		Intake air (g(oz)/rev)							
		0.16 (0.01)	0.28 (0.01)	0.4 (0.01)	0.52 (0.02)	0.64 (0.02)	0.76 (0.03)	0.92 (0.03)	1.1 (0.04)
Engine speed (rpm)	700	100	100	100	100	90	80	64	48
	1000	100	100	100	100	90	80	63	44
	1500	100	100	90	80	73	67	54	40
	2000	80	80	80	80	68	57	51	44
	2500	80	80	73	67	62	57	51	44
	3000	67	67	62	57	51	44	44	44
	3500	67	67	56	44	40	36	34	31
	4000	57	57	44	31	24	20	20	20
	4500	44	44	33	31	20	20	20	20
	5000	44	44	38	31	20	20	20	20
	5500	36	36	31	27	20	20	20	20
	6000	20	20	20	20	20	20	20	20
	6300	20	20	20	20	20	20	20	20

Time Needed for Diagnosis: 200 engine revs.
Malfunction Indicator Light Illumination: Illuminates as soon as a malfunction occurs.

- **Normality Judgment**

Judgment Value

Malfunction Criteria	Threshold Value
Catalyst damage misfire diagnostic value	< Value of Map 3

Time Needed for Diagnosis: 200 engine revs.

BG:DTC P0302 CYLINDER 2 MISFIRE DETECTED

1. OUTLINE OF DIAGNOSIS

NOTE:
For the detection standard, refer to DTC P0301. <Ref. to GD(H4SO)-111, DTC P0301 CYLINDER 1 MISFIRE DETECTED, Diagnostic Trouble Code (DTC) Detecting Criteria.>

BH:DTC P0303 CYLINDER 3 MISFIRE DETECTED

1. OUTLINE OF DIAGNOSIS

NOTE:
For the detection standard, refer to DTC P0301. <Ref. to GD(H4SO)-111, DTC P0301 CYLINDER 1 MISFIRE DETECTED, Diagnostic Trouble Code (DTC) Detecting Criteria.>

BI: DTC P0304 CYLINDER 4 MISFIRE DETECTED

1. OUTLINE OF DIAGNOSIS

NOTE:
For the detection standard, refer to DTC P0301. <Ref. to GD(H4SO)-111, DTC P0301 CYLINDER 1 MISFIRE DETECTED, Diagnostic Trouble Code (DTC) Detecting Criteria.>

GETtheMANUALS.org

BJ:DTC P0327 KNOCK SENSOR 1 CIRCUIT LOW (BANK 1 OR SINGLE SENSOR)

1. OUTLINE OF DIAGNOSIS

Detect the open or short circuit of knock sensor.
Judge as NG if out of specification.

2. COMPONENT DESCRIPTION

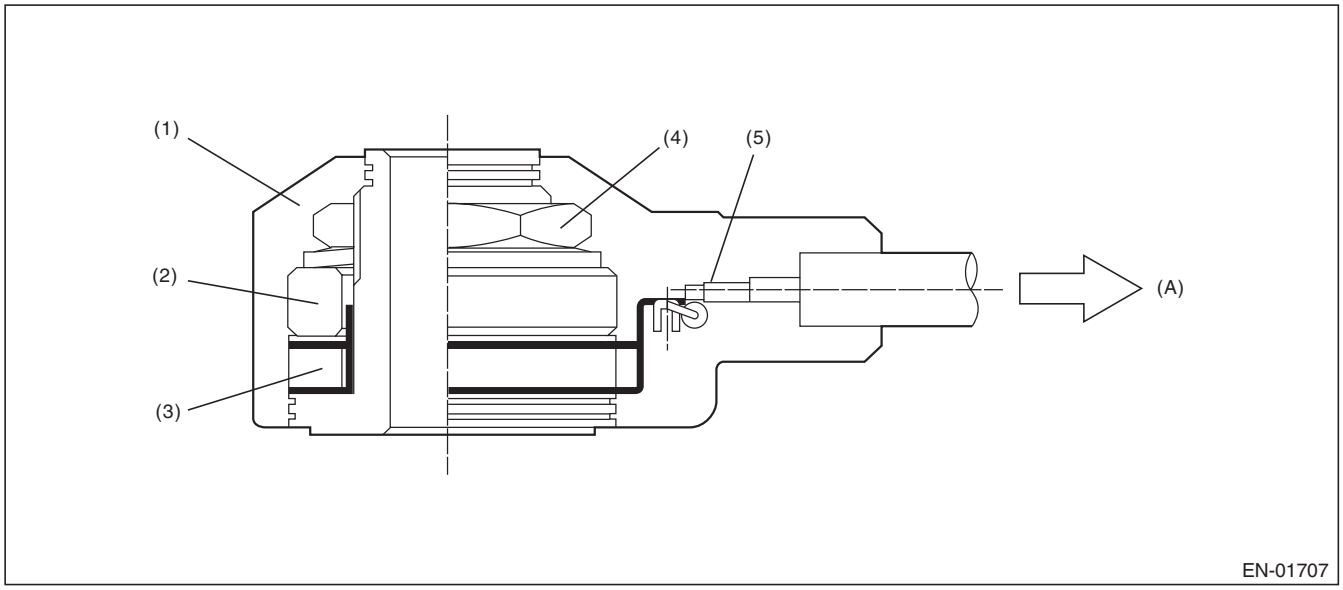

(A) To knock sensor harness

(1) Case
(2) Weight
(3) Piezoelectric element
(4) Nut
(5) Resistance

3. ENABLE CONDITION

Secondary Parameters	Enable Conditions
None	

4. GENERAL DRIVING CYCLE

Always perform the diagnosis continuously.

GETtheMANUALS.org

5. DIAGNOSTIC METHOD

- **Abnormality Judgment**

If the duration of time while the following conditions are met is longer than the time indicated, judge as NG.

Judgment Value

Malfunction Criteria	Threshold Value
Output voltage	< 0.243 V

Time Needed for Diagnosis: 1000 ms
Malfunction Indicator Light Illumination: Illuminates as soon as a malfunction occurs.

- **Normality Judgment**

Judge as OK and clear the NG if the continuous time while the following conditions are established is more than the predetermined time.

Judgment Value

Malfunction Criteria	Threshold Value
Output voltage	≥ 0.243 V

Time Needed for Diagnosis: Less than 1 second

GETtheMANUALS.org

BK:DTC P0328 KNOCK SENSOR 1 CIRCUIT HIGH (BANK 1 OR SINGLE SENSOR)

1. OUTLINE OF DIAGNOSIS

Detect the open or short circuit of knock sensor.
Judge as NG if out of specification.

2. COMPONENT DESCRIPTION

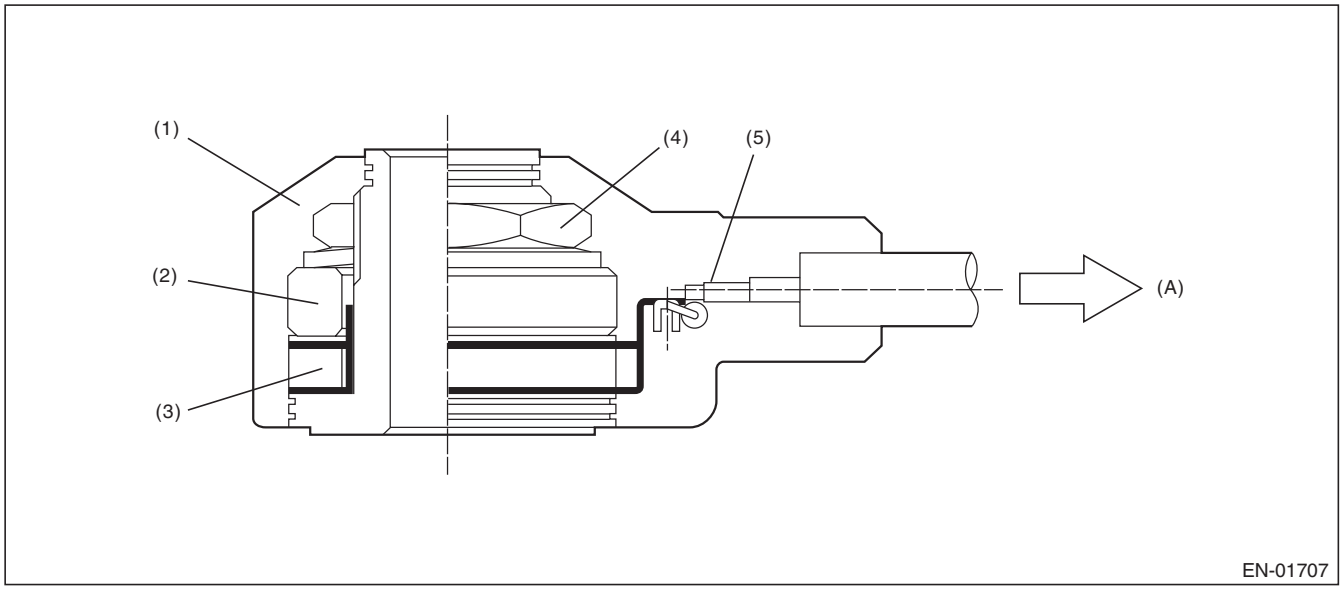

(A) To knock sensor harness

(1) Case
(2) Weight
(3) Piezoelectric element
(4) Nut
(5) Resistance

3. ENABLE CONDITION

Secondary Parameters	Enable Conditions
None	

4. GENERAL DRIVING CYCLE

Always perform the diagnosis continuously.

GETtheMANUALS.org

5. DIAGNOSTIC METHOD

- **Abnormality Judgment**

If the duration of time while the following conditions are met is longer than the time indicated, judge as NG.

Judgment Value

Malfunction Criteria	Threshold Value
Output voltage	≥ 4.709 V

Time Needed for Diagnosis: 1000 ms
Malfunction Indicator Light Illumination: Illuminates as soon as a malfunction occurs.

- **Normality Judgment**

Judge as OK and clear the NG if the continuous time while the following conditions are established is more than the predetermined time.

Judgment Value

Malfunction Criteria	Threshold Value
Output voltage	< 4.709 V

Time Needed for Diagnosis: Less than 1 second

GETtheMANUALS.org

BL:DTC P0335 CRANKSHAFT POSITION SENSOR “A” CIRCUIT

1. OUTLINE OF DIAGNOSIS

Detect the open or short circuit of the crankshaft position sensor.
Judge as NG when the crank signal is not input even though the starter was rotated.

2. COMPONENT DESCRIPTION

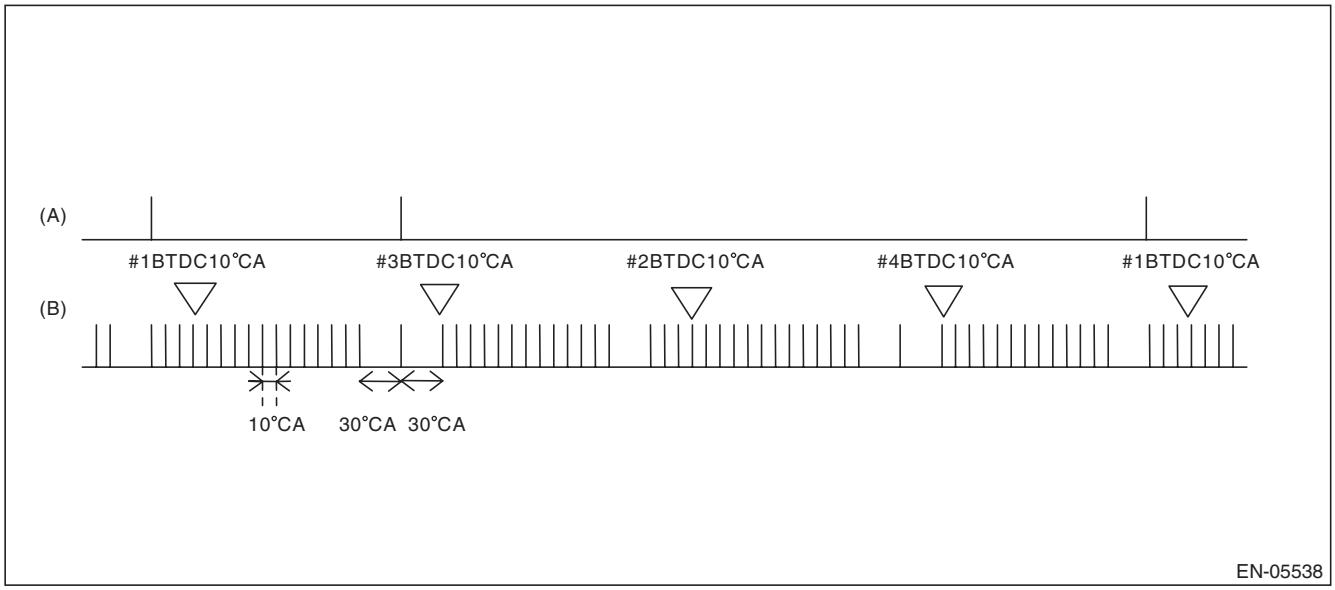

(A) Cam signal (B) Crankshaft signal

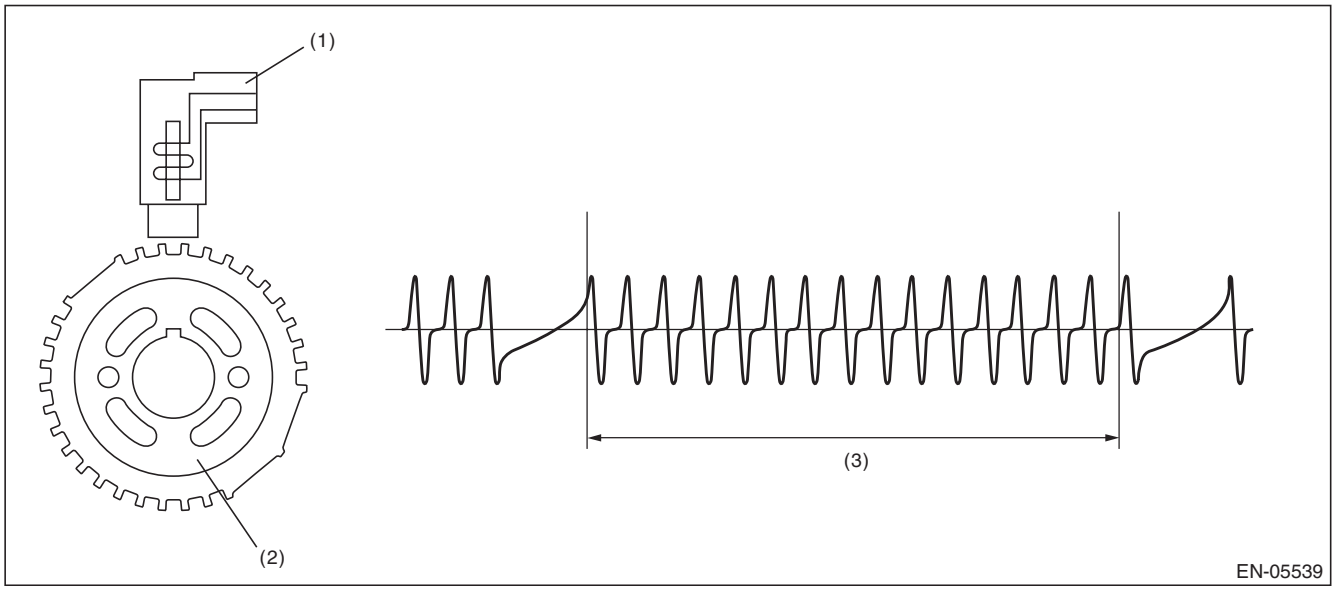

(1) Crankshaft position sensor (2) Crank sprocket (3) Crankshaft half-turn

3. ENABLE CONDITION

Secondary Parameters	Enable Conditions
None	

4. GENERAL DRIVING CYCLE

Always perform the diagnosis continuously.

GETtheMANUALS.org

5. DIAGNOSTIC METHOD

- **Abnormality Judgment**

If the duration of time while the following conditions are met is longer than the time indicated, judge as NG.

Judgment Value

Malfunction Criteria	Threshold Value
Starter switch	ON
Crankshaft position sensor signal	Not detected
Battery voltage	≥ 8 V

Time Needed for Diagnosis: 3000 ms
Malfunction Indicator Light Illumination: Illuminates as soon as a malfunction occurs.

- **Normality Judgment**

Judge as OK and clear the NG if the continuous time while the following conditions are established is more than the predetermined time.

Judgment Value

Malfunction Criteria	Threshold Value
Crankshaft position sensor signal	Input exists
Battery voltage	≥ 8 V

Time Needed for Diagnosis: Less than 1 second

GETtheMANUALS.org

BM:DTC P0336 CRANKSHAFT POSITION SENSOR “A” CIRCUIT RANGE/PERFORMANCE

1. OUTLINE OF DIAGNOSIS

Detect for faults in crankshaft position sensor output properties.
Judge as NG when there is a problem in the number of crankshaft signals for every revolution of crankshaft.

2. COMPONENT DESCRIPTION

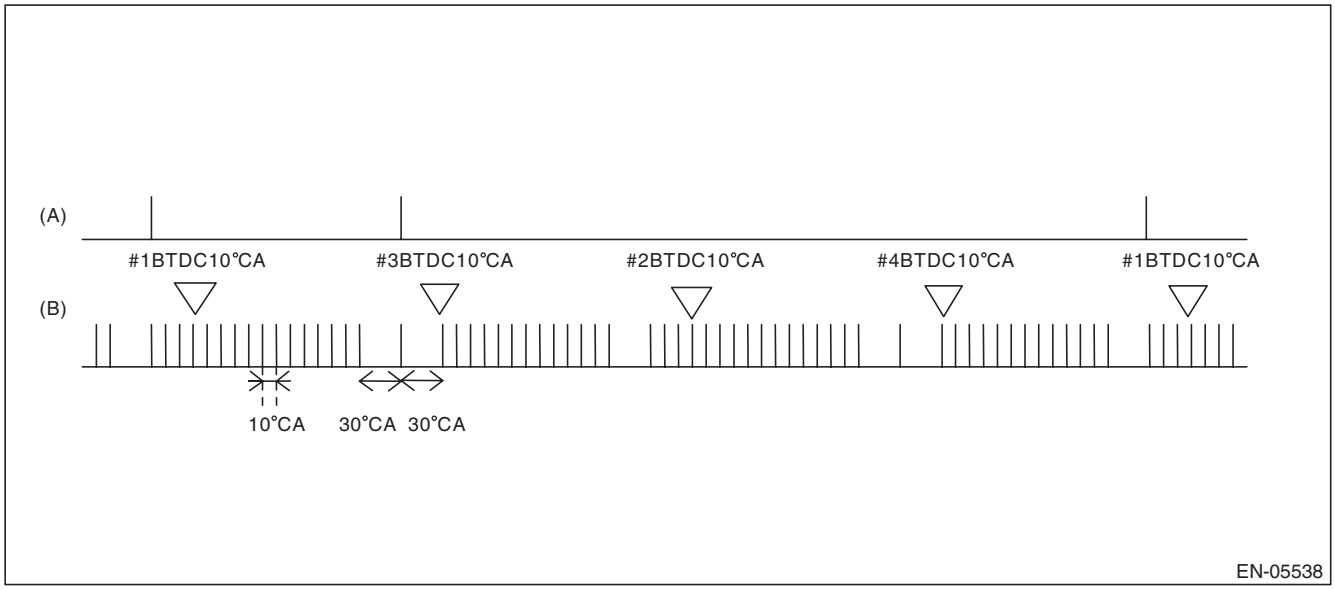

(A) Cam signal (B) Crankshaft signal

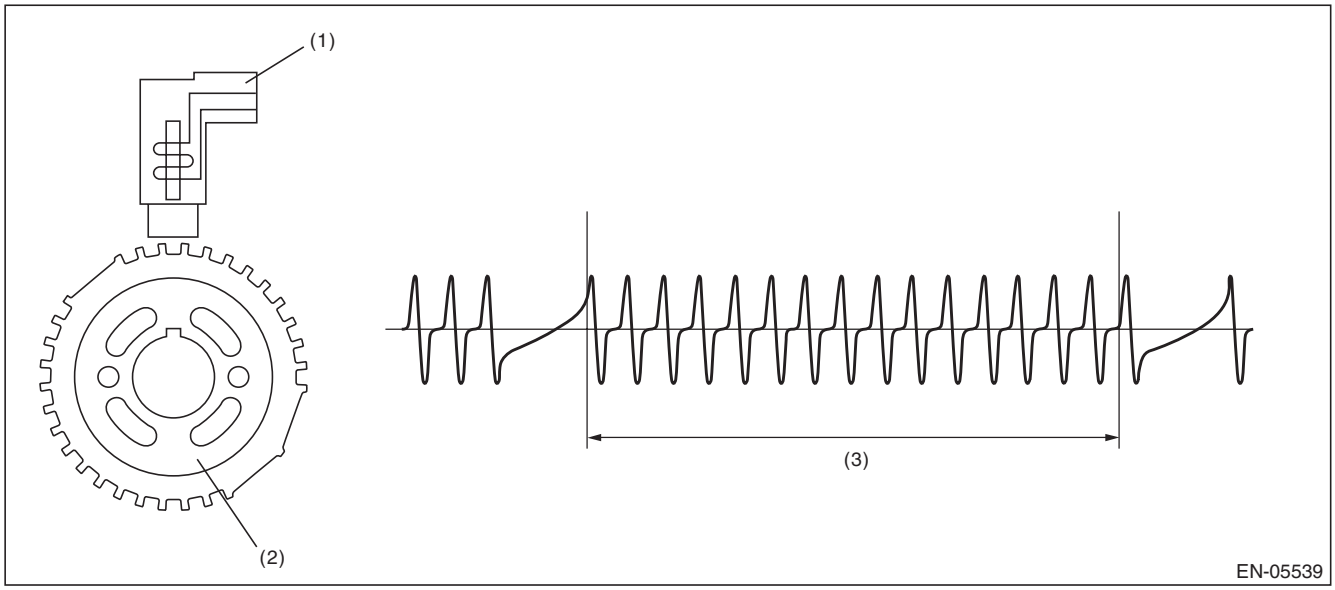

(1) Crankshaft position sensor (2) Crank sprocket (3) Crankshaft half-turn

3. ENABLE CONDITION

Secondary Parameters	Enable Conditions
Battery voltage	≥ 8 V
Engine speed	< 4000 rpm

GETtheMANUALS.org

4. GENERAL DRIVING CYCLE

Perform the diagnosis continuously under 3000 rpm engine speed.

5. DIAGNOSTIC METHOD

- **Abnormality Judgment**

Judge as NG when the following conditions are established.

Judgment Value

Malfunction Criteria	Threshold Value
Cylinder number identification	Completed
Amount of crank sensor signal during 1 rev of crankshaft.	Not = 30

Time Needed for Diagnosis: 10 engine revs.
Malfunction Indicator Light Illumination: Illuminates when malfunction occurs in 2 continuous driving cycles.

- **Normality Judgment**

Judge as OK and clear the NG if the continuous time while the following conditions are established is more than the predetermined time.

Judgment Value

Malfunction Criteria	Threshold Value
Cylinder number identification	Completed
Amount of crank sensor signal during 1 rev of crankshaft.	= 30

Time Needed for Diagnosis: Less than 1 second

GETtheMANUALS.org

BN:DTC P0340 CAMSHAFT POSITION SENSOR “A” CIRCUIT (BANK 1 OR SINGLE SENSOR)

1. OUTLINE OF DIAGNOSIS

Detect the open or short circuit of the camshaft position sensor.
Judge as NG when the number of camshaft signals remains abnormal.

2. COMPONENT DESCRIPTION

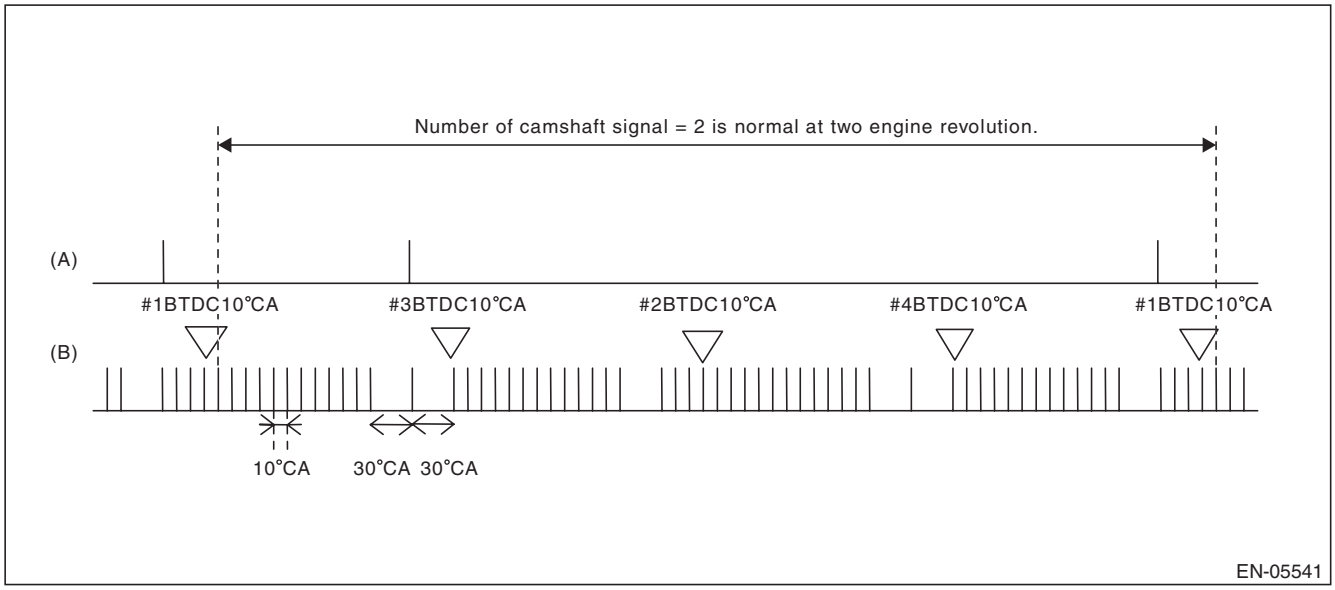

(A) Camshaft signal (B) Crankshaft signal

3. ENABLE CONDITION

Secondary Parameters	Enable Conditions
None	

4. GENERAL DRIVING CYCLE

Always perform the diagnosis continuously.

GETtheMANUALS.org

5. DIAGNOSTIC METHOD

Abnormality Judgment

If the duration of time while the following conditions are met is longer than the time indicated, judge as NG.

Judgment Value

Malfunction Criteria	Threshold Value
Battery voltage	≥ 8 V
Amount of camshaft sensor signal during 2 revs of crankshaft.	Not = 2

Time Needed for Diagnosis: Two engine revs. × 4 time(s)
Malfunction Indicator Light Illumination: Illuminates as soon as a malfunction occurs.

Normality Judgment

Judge as OK and clear the NG if the continuous time while the following conditions are established is more than the predetermined time.

Judgment Value

Malfunction Criteria	Threshold Value
Voltage	≥ 8 V
Amount of camshaft sensor signal during 2 revs.	= 2

Time Needed for Diagnosis: Two engine revs.

GETtheMANUALS.org

BO:DTC P0341 CAMSHAFT POSITION SENSOR “A” CIRCUIT RANGE/PERFORMANCE (BANK 1 OR SINGLE SENSOR)

1. OUTLINE OF DIAGNOSIS

Detect the malfunction of camshaft position sensor output property.
Judge as NG when the camshaft line signal input timing is shifted from the crankshaft signal because of timing belt tooth chip etc.

2. COMPONENT DESCRIPTION

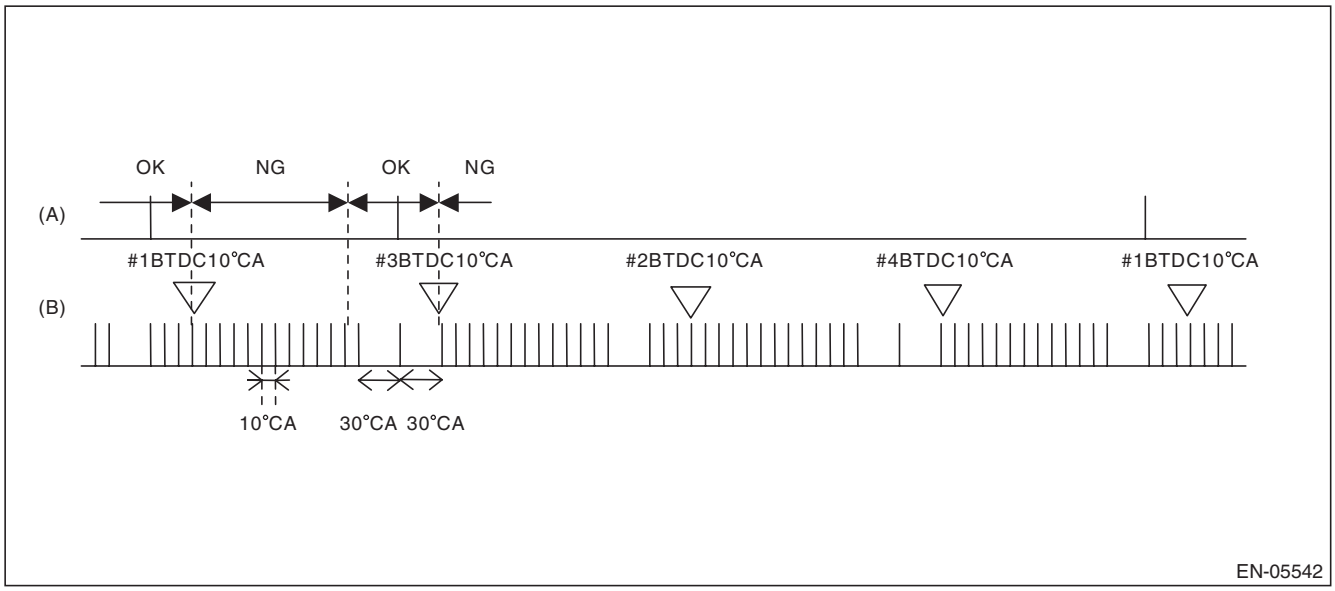

(A) Cam signal
(B) Crankshaft signal

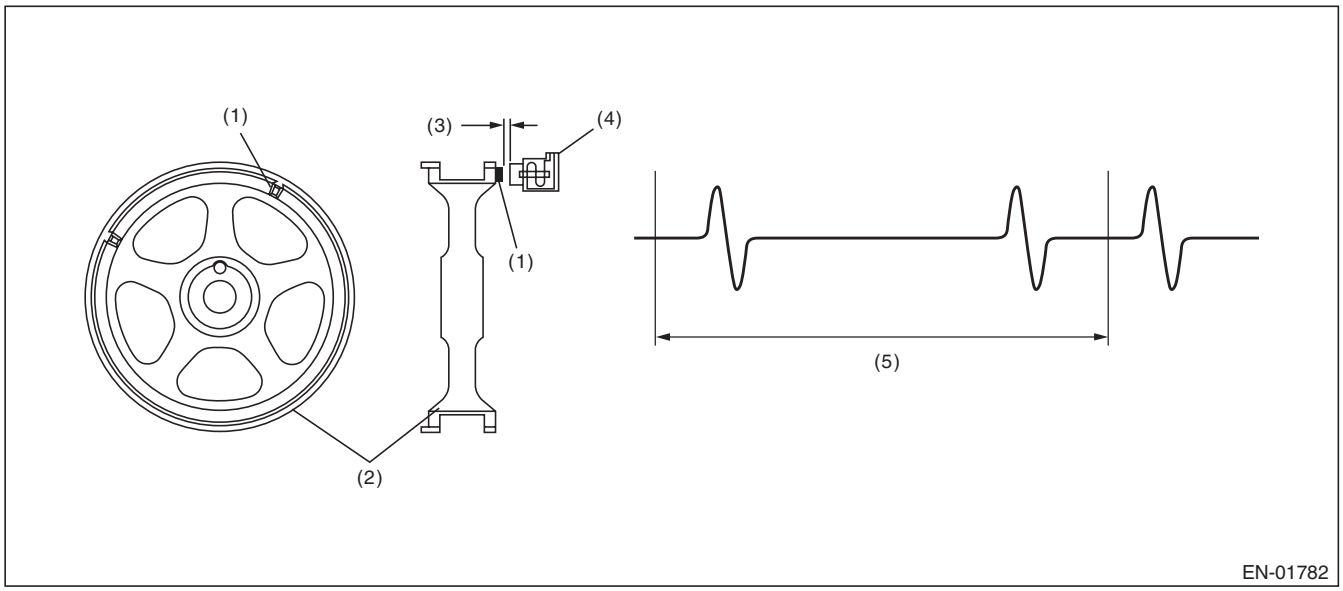

(1) Boss
(2) Cam sprocket
(3) Air gap
(4) Camshaft position sensor
(5) Camshaft one revolution (crankshaft two revolutions)

GETtheMANUALS.org

3. ENABLE CONDITION

Secondary Parameters	Enable Conditions
Cylinder number identification	Completed
Battery voltage	≥ 8 V
Engine speed	550 rpm — 1000 rpm
Engine operation	Idling
Misfire	Not detected
Engine speed variation for 4 ms	≤ 12799.8 rpm

4. GENERAL DRIVING CYCLE

Always perform the diagnosis continuously at idle speed.

5. DIAGNOSTIC METHOD

- **Abnormality Judgment**

If the duration of time while the following conditions are met is longer than the time indicated, judge as NG.

Judgment Value

Malfunction Criteria	Threshold Value
Position of camshaft position sensor signal	Not between BTDC 10°CA and BTDC 80°CA

Time Needed for Diagnosis: 10 time(s) engine revolutions
Malfunction Indicator Light Illumination: Illuminates when malfunction occurs in 2 continuous driving cycles.

- **Normality Judgment**

Judge as OK and clear the NG if the continuous time while the following conditions are established is more than the predetermined time.

Judgment Value

Malfunction Criteria	Threshold Value
Position of camshaft position sensor signal	Between BTDC10°CA and BTDC80°CA

Time Needed for Diagnosis: 2 engine revs.

GETtheMANUALS.org

BP:DTC P0351 IGNITION COIL A PRIMARY/SECONDARY CIRCUIT

1. OUTLINE OF DIAGNOSIS

Based on the self-diagnostic result of the ignition coil driving IC, judge the ignition coil driving circuit as normal or abnormal.
The ignition coil driving IC detects “no ignition” status as a malfunction.

2. ENABLE CONDITIONS

Secondary Parameters	Enable Conditions
Battery voltage	≥ 10.9 V
Elapsed time after starting the engine	> 1 s
Engine speed	> 500 rpm
Ignition energization time	> 2000 μs
Ignition status	Not during ignition cut

3. GENERAL DRIVING CYCLE

Always perform the diagnosis continuously.

4. DIAGNOSTIC METHOD

- **Abnormality Judgment**

Judge as NG when the following conditions are established.

Judgment Value

Malfunction Criteria	Threshold Value
Ignition driving IC information	Malfunction

Time Needed for Diagnosis: 2500 ms
Malfunction Indicator Light Illumination: Illuminates as soon as a malfunction occurs.

- **Normality Judgment**

Judge as OK and clear the NG if the following conditions are established.

Judgment Value

Malfunction Criteria	Threshold Value
Ignition driving IC information	Normal

Time Needed for Diagnosis: Less than 1 second

BQ:DTC P0352 IGNITION COIL B PRIMARY/SECONDARY CIRCUIT

1. OUTLINE OF DIAGNOSIS

NOTE:
For the detection standard, refer to DTC P0351. <Ref. to GD(H4SO)-134, DTC P0351 IGNITION COIL A PRIMARY/SECONDARY CIRCUIT, Diagnostic Trouble Code (DTC) Detecting Criteria.>

BR:DTC P0353 IGNITION COIL C PRIMARY/SECONDARY CIRCUIT

1. OUTLINE OF DIAGNOSIS

NOTE:
For the detection standard, refer to DTC P0351. <Ref. to GD(H4SO)-134, DTC P0351 IGNITION COIL A PRIMARY/SECONDARY CIRCUIT, Diagnostic Trouble Code (DTC) Detecting Criteria.>

BS:DTC P0354 IGNITION COIL D PRIMARY/SECONDARY CIRCUIT

1. OUTLINE OF DIAGNOSIS

NOTE:
For the detection standard, refer to DTC P0351. <Ref. to GD(H4SO)-134, DTC P0351 IGNITION COIL A PRIMARY/SECONDARY CIRCUIT, Diagnostic Trouble Code (DTC) Detecting Criteria.>

GETtheMANUALS.org

BT:DTC P0400 EXHAUST GAS RECIRCULATION FLOW

1. OUTLINE OF DIAGNOSIS

Detect EGR system malfunction.
Intake manifold pressure (negative pressure) is constant because the throttle valve is fully closed during deceleration fuel cut. At this time, when the EGR valve is opened/closed, the intake manifold pressure will change. EGR System OK/NG is judged by the range of this change.

2. COMPONENT DESCRIPTION

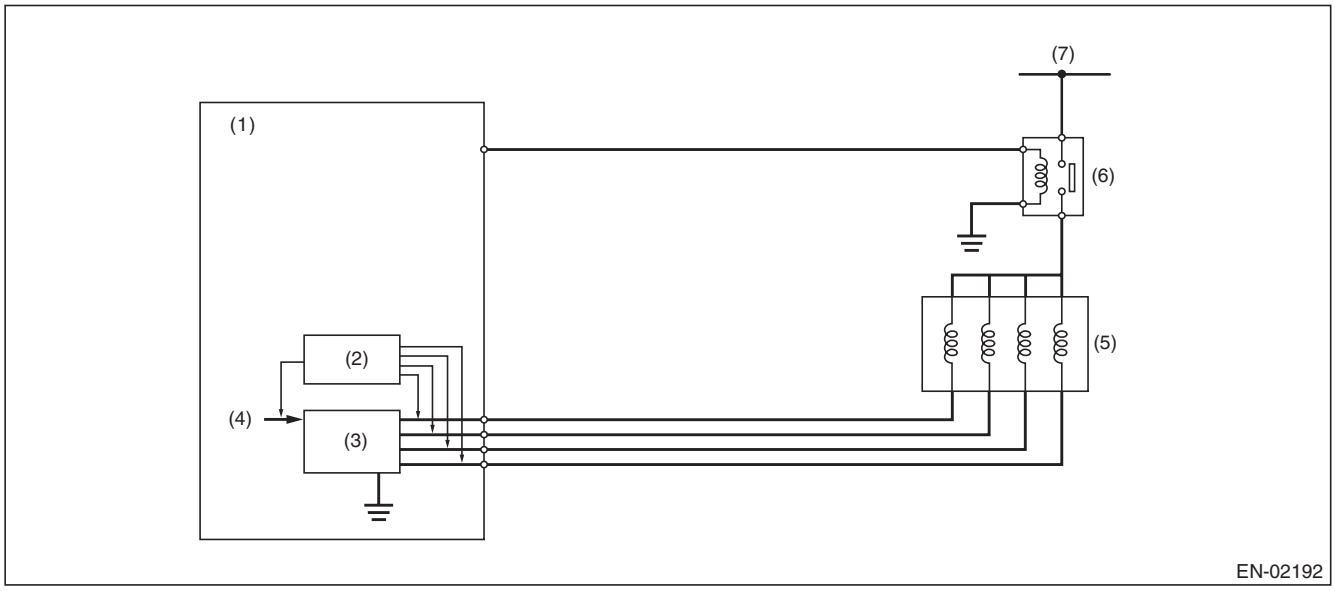

(1)	ECM	(4)	CPU	(6)	Main relay
(2)	Detecting circuit	(5)	EGR valve	(7)	Battery power supply
(3)	Switching circuit				

GETtheMANUALS.org

3. ENABLE CONDITION

Secondary Parameters	Enable Conditions
Elapsed time after starting the engine	≥ 40 s
Engine coolant temperature	≥ 75 °C(167 °F)
Engine speed	1200 rpm — 2950 rpm
Intake manifold pressure (absolute pressure)	< 44 kPa (330 mmHg, 13 inHg)
Ambient air temperature	≥ 5 °C(41 °F)
Throttle position	< 0.25 °
Battery voltage	≥ 10.9 V
Atmospheric pressure	≥ 75 kPa (563 mmHg, 22.2 inHg)
Vehicle speed	≥53 km/h (32.9 MPH)
Fuel shut-off function	In operation
Neutral switch	OFF
After neutral switch ON/OFF change	≥ Value from Map
No load change (A/C, power steering, lighting, rear defogger, heater fan and radiator fan)	≥ 5000 ms

Map

Engine coolant temperature °C (°F)	–40 (–40)	–30 (–22)	–20 (–4)	–10 (14)	0 (32)	10 (50)	20 (68)	30 (86)
After neutral switch change msec	0	0	0	0	0	0	0	0

Engine coolant temperature °C (°F)	40 (104)	50 (122)	60 (140)	70 (158)	80 (176)	90 (194)	100 (212)	110 (230)
After neutral switch change msec	0	0	0	0	0	0	0	0

4. GENERAL DRIVING CYCLE

During deceleration fuel cut from 53 km/h (approx. 33 MPH) or more, perform diagnosis once.
Be careful of vehicle speed and engine speed. (Diagnosis will not be completed if the vehicle speed and engine speed conditions become out of specification due to deceleration.)

5. DIAGNOSTIC METHOD

Measure the pressure values when the enable conditions are established, and perform diagnosis by calculating those results.
1. Label the intake manifold pressure value as PMOF1, which is observed when enable conditions are established, and set the EGR target step to 50 steps (nearly full open).
2. Label the intake manifold pressure value as PMON, which is observed after one second has passed since EGR target step was set to 50 steps (when the enable conditions were established), and set the EGR target step to 0.
3. Label the intake manifold pressure as PMOF2, which is observed after one second has passed since EGR target step was set to 0 (after two seconds have passed since the enable conditions were established).

- **Abnormality Judgment**

Judge as NG when the following conditions are established.

Judgment Value

Malfunction Criteria	Threshold Value
PMON – (PMOF1 + PMOF2)/2	< 2.5 kPa (18.63 mmHg, 0.7 inHg)

Time Needed for Diagnosis: 1 time

GETtheMANUALS.org

Malfunction Indicator Light Illumination: Illuminates when malfunction occurs in 2 continuous driving cycles.

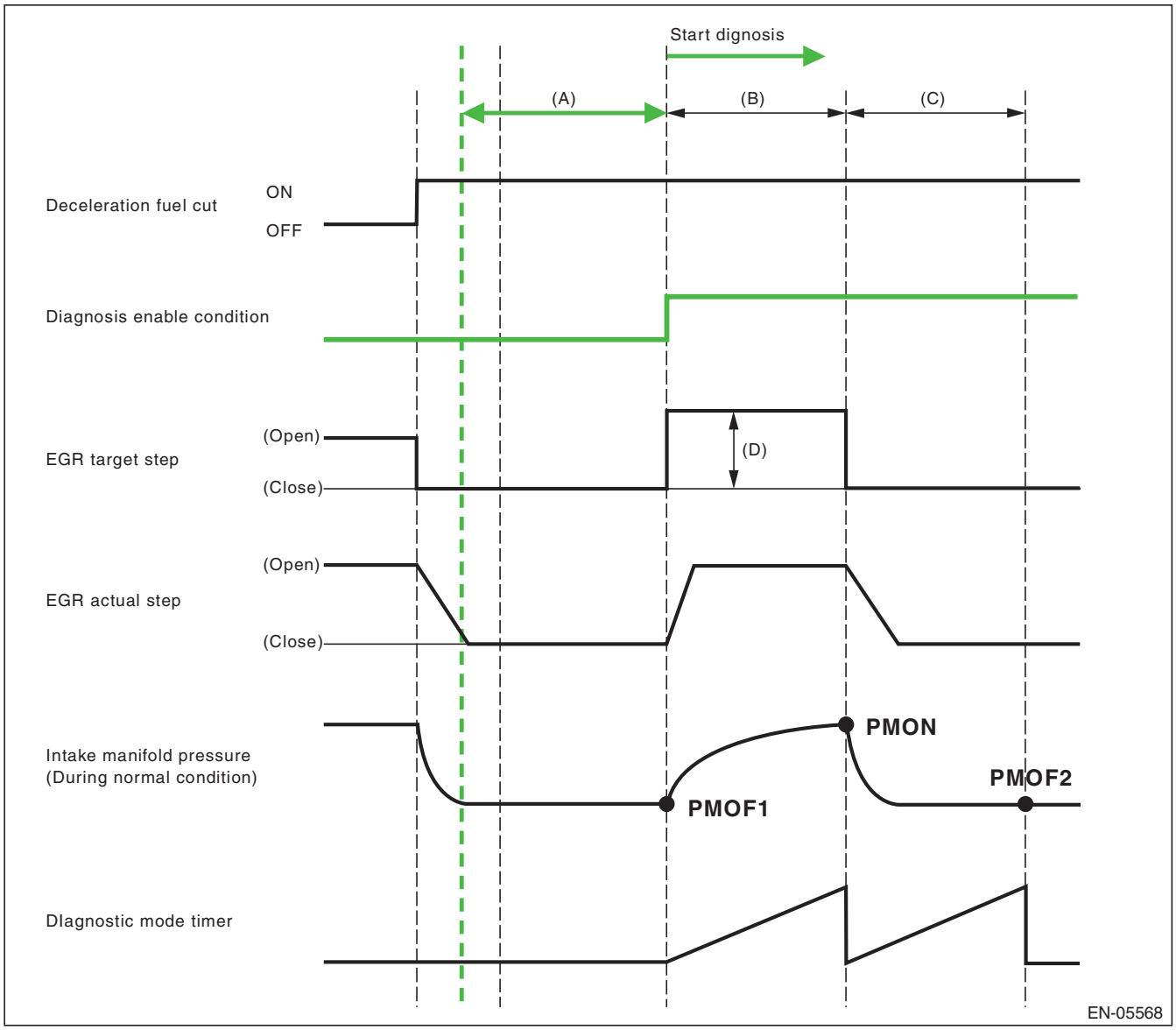

(A) 3000 ms (B) 1000 ms (C) 1000 ms
(D) 45 step(s)

- **Normality Judgment**

Judge as OK and clear the NG if the following conditions are established.

Judgment Value

Malfunction Criteria	Threshold Value
PMON – (PMOF1 + PMOF2)/2	≥ 2.5 kPa (18.63 mmHg, 0.7 inHg)

Time Needed for Diagnosis: 1 time

GETtheMANUALS.org

BU:DTC P0420 CATALYST SYSTEM EFFICIENCY BELOW THRESHOLD (BANK 1)

1. OUTLINE OF DIAGNOSIS

Detect the deterioration of the catalyst function.
Though the front oxygen sensor output would change slowly with a new catalyst, the sensor output with a deteriorated catalyst becomes high and the inversion time is shortened.
For this reason, the catalyst diagnosis is carried out by monitoring the front oxygen sensor output and comparing it with the front oxygen (A/F) sensor output.

2. COMPONENT DESCRIPTION

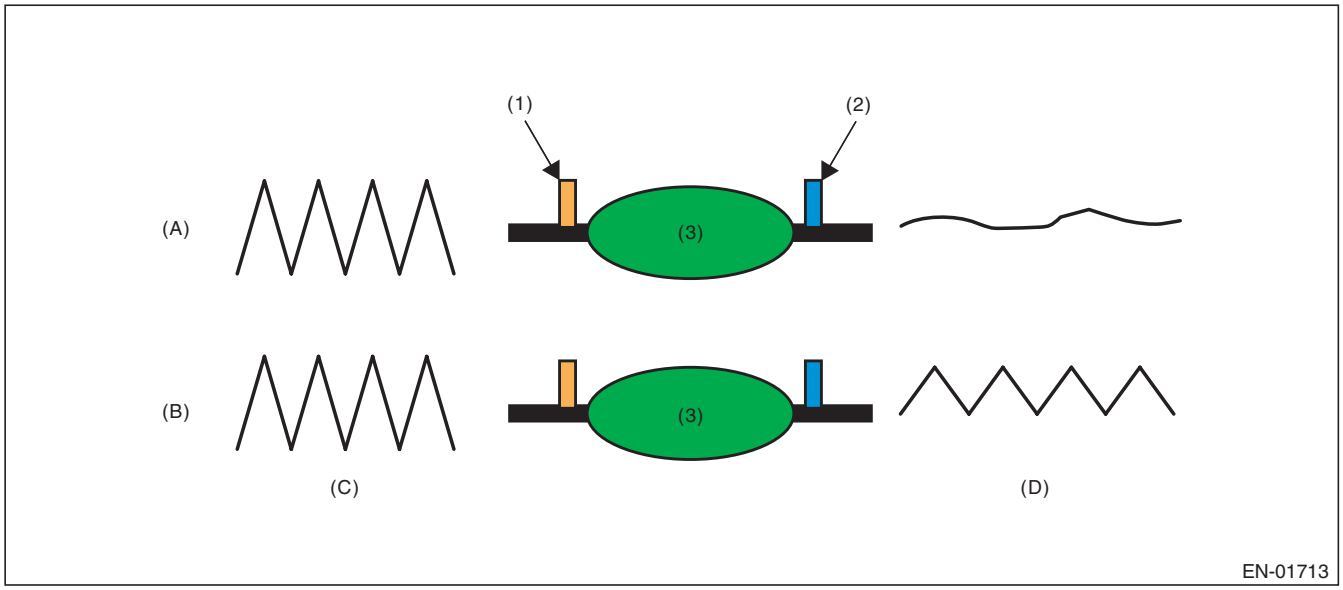

(A)	Normal	(B)	Deterioration	(C)	Output waveform from the front oxygen (A/F) sensor
(D)	Output waveform from the front oxygen sensor				
(1)	Front oxygen (A/F) sensor	(2)	Front oxygen sensor	(3)	Catalytic converter

GETtheMANUALS.org

3. ENABLE CONDITION

Secondary Parameters	Enable Conditions
Battery voltage	≥ 10.9 V
Atmospheric pressure	≥ 75 kPa (563 mmHg, 22.2 inHg)
Engine coolant temperature	≥ 75 °C (167 °F) (PZEV model) ≥ 70 °C (158 °F) (CVT model except for PZEV) ≥ 75 °C (167 °F) (MT model except for PZEV)
Estimated catalyst temperature	≥ 580 °C (1076 °F) (CVT model) ≥ 600 °C (1112 °F) (MT model)
Misfire detection every 200 rotations	< 65535 time(s)
Learning value of evaporation gas density	< 0.2
Sub feedback	In operation
Evaporative system diagnosis	Not in operation
Time of difference (< 0.10) between actual lambda and target lambda	≥ 1000 ms
Vehicle speed	> 75 km/h (46.6 MPH)
Amount of intake air	≥ 5 g/s (0.18 oz/s) (PZEV CVT model) ≥ 7 g/s (0.25 oz/s) (except for PZEV CVT model) and < 40 g/s (1.41 oz/s)
Engine load change every 0.5 engine revs.	< 0.02 g/rev (0 oz/rev)
Rear oxygen output change from 660 mV or less to 660 mV or more	Experienced after fuel cut
Elapsed time after starting the engine	≥ 225 s (PZEV model) ≥ 218 s (except for PZEV model)
Purge execution calculated time	≥ 0 s

4. GENERAL DRIVING CYCLE

Perform the diagnosis only once at a constant 75 km/h (46.6 MPH) or higher.

GETtheMANUALS.org

5. DIAGNOSTIC METHOD

After the enable conditions have been established, calculate the front oxygen (A/F) sensor lambda value deviation sum value (Σ |($sglmd_n$ – $sglmd_{n-1}$)|), and rear oxygen sensor output voltage deviation sum value (Σ |($ro2sad_n$ – $ro2sad_{n-1}$)|) in every 32 ms × 4 times. If the front oxygen (A/F) sensor lambda value deviation sum value (Σ |($sglmd_n$ – $sglmd_{n-1}$)|) is the predetermined value or more, calculate the diagnostic value.

- **Abnormality Judgment**

If the duration of time while the following conditions are met is within the time indicated, judge as NG.

Judgment Value

Malfunction Criteria	Threshold Value
Σ |($ro2sad_n$ – $ro2sad_{n-1}$)| / Σ |($sglmd_n$ – $sglmd_{n-1}$)|	> 11 (PZEV model) > 19.5 (CVT model except for PZEV) > 16 (MT model except for PZEV)

Time Needed for Diagnosis: 30 — 55 seconds
Malfunction Indicator Light Illumination: Illuminates when malfunction occurs in 2 continuous driving cycles.

- **Normality Judgment**

Judge as OK and clear the NG if the continuous time while the following conditions are established is within the predetermined time.

Judgment Value

Malfunction Criteria	Threshold Value
Σ |($ro2sad_n$ – $ro2sad_{n-1}$)| / Σ |($sglmd_n$ – $sglmd_{n-1}$)|	≤ 11 (PZEV model) ≤ 19.5 (CVT model except for PZEV) ≤ 16 (MT model except for PZEV)

Time Needed for Diagnosis: 30 — 55 seconds

GETtheMANUALS.org

BV:DTC P0442 EVAPORATIVE EMISSION CONTROL SYSTEM LEAK DETECTED (SMALL LEAK)

1. OUTLINE OF DIAGNOSIS

The evaporative system monitor detects leak up to 0.020 inch in the fuel tank and evaporative emissions system. If the fuel cap is not present or has not been correctly tightened after a refueling event, a malfunction is also detected. These malfunctions are detected by monitoring the fuel tank and system pressure during an intrusive pull-down pressure test. Pull down is accomplished via the purge valve while the engine is running. Monitors run during the first idle after engine start and while driving.
The diagnostic is classified into two monitors. The first monitor detects a 0.040 inch leak, fuel cap loose/off, and canister purge valve stuck open/close whilst the other monitor detects a 0.020 inch leak when the vehicle is moving or during the first idle. Failures, DTCs and monitor methods are as follows.

P0457	Fuel cap loose/off or CPC valve stuck open/close	Monitor 1
P0442	0.040 inch leak	Monitor 1
P0456	0.020 inch leak	Monitor 2

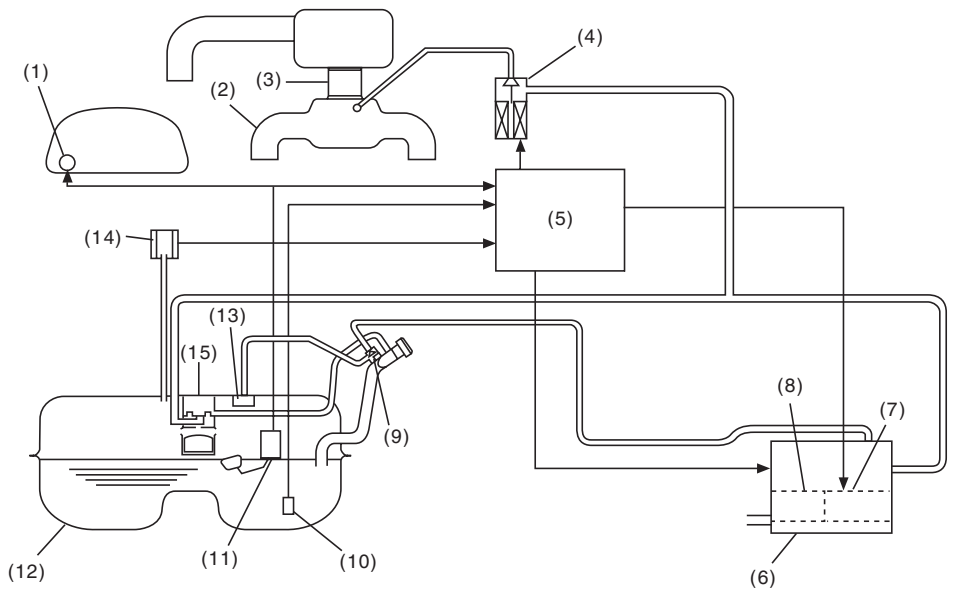

(1)	Fuel gauge	(6)	Canister	(11)	Fuel level sensor
(2)	Intake manifold	(7)	Drain valve (CCV)	(12)	Fuel tank
(3)	Throttle body	(8)	Drain filter	(13)	Fuel cut valve
(4)	Purge control solenoid valve (CPC valve)	(9)	Shut-off valve	(14)	Fuel tank pressure sensor
(5)	Engine control module (ECM)	(10)	Fuel temperature sensor	(15)	Vent valve

GETtheMANUALS.org

Monitor 1

- **P0457 Fuel cap loose/off or CPC valve stuck open/close**
- **P0442 0.040 inch leak check**

This monitor detects CPC valve stuck open/close, fuel cap loose/off, and 0.040 inch leak in the evaporative emission system by monitoring the fuel tank system pressure an intrusive pull-down pressure test. The monitor consists of Modes Z, A, B, C and D. There are three judgment times for these malfunctions. CPC valve stuck open is performed in Mode Z, CPC valve stuck closed or fuel cap loose/off is in Mode B, 0.040 inch leak is in Mode D.

Mode	Description of each mode	Required time for each mode
Mode Z (Monitoring of CPC stuck open)	CPC valve: Closed CCV: Closed The system requires 3000 ms to measure the pressure difference. (1) Pressure difference < 0.9 kPa (6.5 mmHg, 0.3 inHg) → Judged as “Fail of CPC stuck open” **[P0457]** (2) Pressure difference ≥ 0.4 kPa (3 mmHg, 0.1 inHg) → Move to Mode A	3000 ms
Mode A (Estimation of Evap. Generation)	The system requires 10000 ms to measure the pressure increase (evpp1), and then move to Mode B.	10000 ms
Mode B (Negative Pressure Introduction/ Monitoring of Fuel cap off or CPC stuck close)	CPC valve: Open Negative pressure is introduced to the fuel tank. (1) Elapsed time in Mode B ≥ 10000 ms and (Minimum tank pressure) – (Initial tank pressure) > –0.5 kPa (–4 mmHg, –0.2 inHg) → Judged as “Fail of Fuel cap off or CPC stuck close” **[P0457]** (2) Elapsed time in Mode B ≥ 10000 ms + 25000 ms → Judged as “Fail of Fuel cap off or CPC stuck close” **[P0457]** (3) Fuel tank pressure ≤ –1.4 kPa (–10.5 mmHg, –0.4 inHg) → Move to Mode C	Average: 7 s (Depends on the tank condition)
Mode C (Keeping Negative Pressure / Pass in Mode C)	CPC valve: Closed When the tank pressure comes up to the target pressure (–1.3 kPa (–9.75 mmHg, –0.4 inHg)), the monitor moves to Mode D. If the fuel tank pressure does not exceed the –1.3 kPa (–9.75 mmHg, –0.4 inHg) after 14013 ms, the system judges as “Pass in Mode C” and moves to “Final Judgment”.	Average: 7 s (Depends on the tank condition)
Mode D (Pressure Measurement / Pass Fail in Mode D)	The monitor requires 10000 ms to measure the pressure change (evpp2) and calculates the monitor value (evpp2 – 1.5 × evpp1), where Mode A (evpp1) is the generated vapor pressure. The calculated value (evpp2 – 1.5 × evpp1) is then compared to a calibrated threshold table as a function of fuel temperature and fuel level. The system judges as a “Pass/Fail in Mode D” and then moves to “Final Judgment”. (1) evpp2 – 1.5 × evpp1 > Fail Threshold (Map 1) → “Fail in Mode D” (2) evpp2 – 1.5 × evpp1 ≤ Pass Threshold (Map 1) → “Pass in Mode D”	10000 ms
Final Judgment (Pass / Fail)	The monitor is completed in the following order (1) Judged as “Fail in Mode D” → “Fail of 0.040 inch leak” **[P0442]** (2) Judged as “Pass in Mode C / Mode D” → “Pass of 0.040 inch leak”	0.128 s

GETtheMANUALS.org

Map 1 (Threshold value for 0.040 inch leak)

		Fuel temperature (°C (°F))			
		15 (59)	25 (77)	35 (95)	45 (113)
Fuel Level ℓ (US gal, Imp gal)	10.5 (2.77, 2.31)	0.3 (2.1, 0.1)	0.3 (2.1, 0.1)	0.3 (2.3, 0.1)	0.3 (2.4, 0.1)
	27 (7.13, 5.94)	0.3 (2.32, 0.1)	0.3 (2.5, 0.1)	0.4 (2.73, 0.1)	0.4 (2.88, 0.1)
	43 (11.36, 9.46)	0.4 (2.88, 0.1)	0.4 (2.97, 0.1)	0.4 (3.23, 0.1)	0.5 (3.43, 0.1)
	59.5 (15.72, 13.09)	0.5 (3.5, 0.1)	0.5 (3.5, 0.1)	0.5 (3.5, 0.1)	0.5 (3.7, 0.1)
kPa (mmHg, inHg)					

Monitor 2

P0456 0.020 inch leak check

This monitor detects a very small leak (0.020 inch) in the evaporative emissions system by monitoring the fuel tank and system pressure during an intrusive pull-down pressure test. Pull down is accomplished via the purge valve while the engine is running. The monitor runs during the first idle after engine start and also while the vehicle is running.

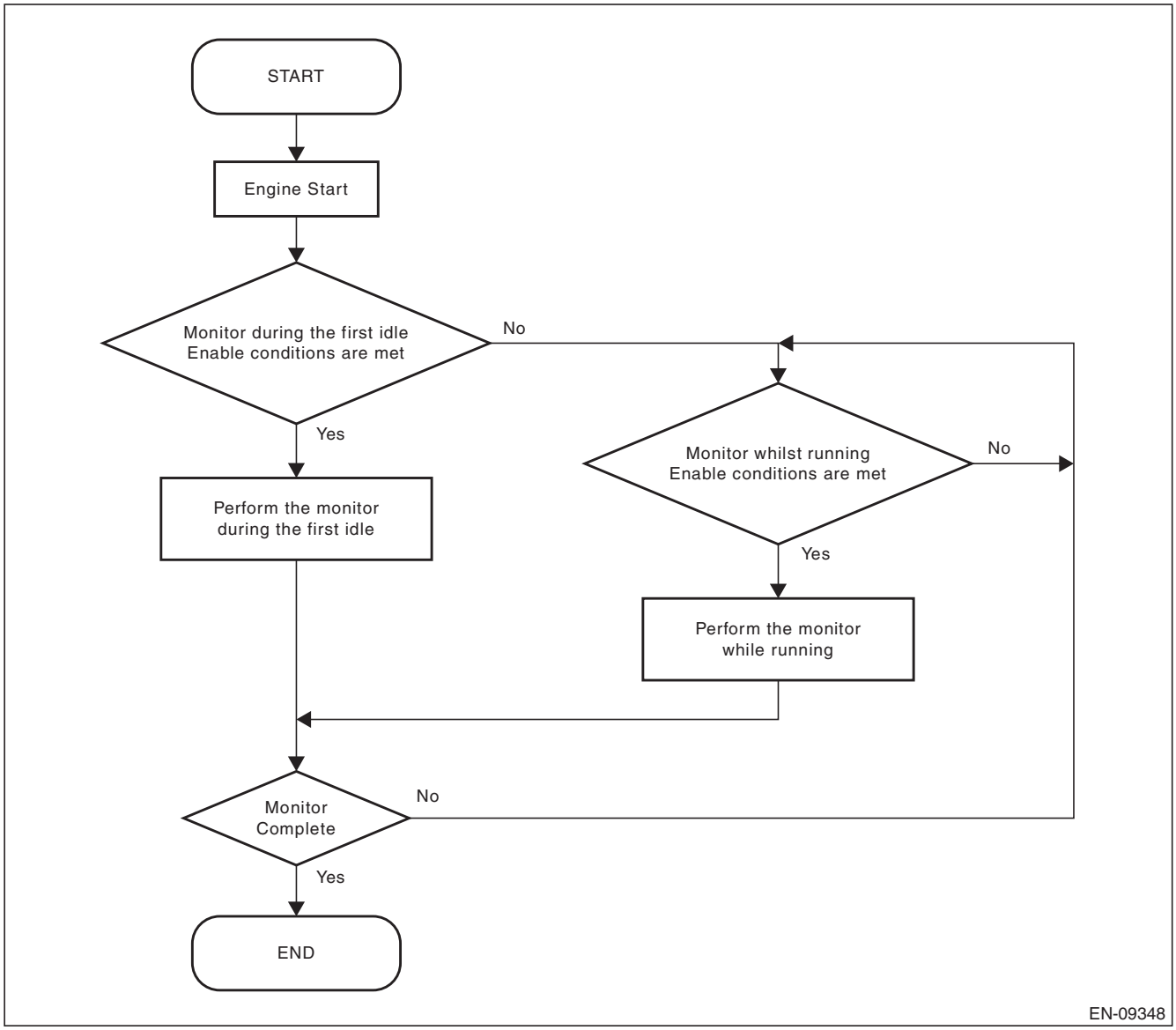

GETtheMANUALS.org

Monitor 2 (first idle condition)

Mode	Description of each mode	Required time for each mode
Mode A (Estimation of Evap. Generation)	CPC valve: Closed CCV: Closed Low vapor flag At the beginning of the monitor test when; → Fuel temperature is lower than Map 2 listed value → Intake air temperature is lower than Map 3 listed value The system sets “Low vapor flag = ON”. Low vapor flag is used in Mode A, Mode C, and Mode D. The system measures the generated vapor pressure increase (△P1) in the specific time period (*1), and then moves to Mode B. (*1) Low vapor flag OFF: 10000 ms, Low vapor flag ON: 128 ms	Low vapor flag OFF 10000 ms Low vapor flag ON 128 ms
Mode B (Negative Pressure Introduction)	CPC valve: Open Negative pressure is introduced to the fuel tank via engine manifold vacuum. When the fuel tank pressure reaches the target pressure (–1.3 kPa (–10 mmHg, –0.4 inHg)), the monitor moves to Mode C.	Average: 13 s (Depends on the tank condition)
Mode C (Keeping Negative Pressure / Pass in Mode C)	CPC valve: Closed After a calibrated time period (*2) has elapsed since the tank pressure comes up to the target pressure (–1.3 kPa (–10 mmHg, –0.4 inHg)), move to Mode D. If the fuel tank pressure does not exceed the target pressure (–1.3 kPa (–10 mmHg, –0.4 inHg)) after Map 4 (ms), the system is judged as “Pass in Mode C” and moves to “Final Judgment”. (*2) Low vapor flag OFF: 10000 ms, Low vapor flag ON: 2000 ms	Low vapor flag OFF Average: 21 s Low vapor flag ON Average: 10 s (Depends on the tank condition)
Mode D (Pressure Measurement / Fail or Pass in Mode D)	The monitor requires 10000 ms to measure the pressure change (△P2) and calculates the monitor value (△P2-△P1), where Mode A (△P1) is the generated vapor pressure. The calculated value (△P2-△P1) is then compared to a calibrated threshold table as a function of fuel temperature and fuel level. The system judges as a “Pass/Fail in Mode D” and then moves to “Final Judgment”. (1) △P2 – △P1 > Fail Threshold (*3) → “Fail in Mode D” (2) △P2 – △P1 ≤ Pass Threshold (*4) → “Pass in Mode D” (*3) Low vapor flag OFF: Map 5, Low vapor flag ON: Map 7 (*4) Low vapor flag OFF: Map 6, Low vapor flag ON: Map 8	10000 ms
Final Judgment (Pass / Fail)	The monitor is completed in the following order (1) Judged as “Fail in Mode D” → “Fail of 0.020 inch leak” **[P0456]** (2) Judged as “Pass in Mode C / Mode D” → “Pass of 0.020 inch leak”	0.128 s

Map 2 (Fuel temperature threshold for “Low vapor flag”)

Fuel Level ℓ (US gal, Imp gal)	10.5 (2.77, 2.31)	35 (9.25, 7.7)	59.5 (15.72, 13.09)
Fuel temperature threshold °C (°F)	5 (41)	10 (50)	15 (59)

Map 3 (intake air temperature threshold for “Low Vapor Flag”)

Fuel Level ℓ (US gal, Imp gal)	10.5 (2.77, 2.31)	35 (9.25, 7.7)	59.5 (15.72, 13.09)
Intake air temperature threshold °C (°F)	5 (41)	10 (50)	15 (59)

GETtheMANUALS.org

Map 4 (Period for judgment of Pass in Mode C)

Fuel Level ℓ (US gal, Imp gal)	10.5 (2.77, 2.31)	35 (9.25, 7.7)	50 (13.21, 11)	59.5 (15.72, 13.09)
Period for Pass in Mode C (ms)	23000	16000	12000	9500

Map 5 (Threshold value for 0.020 inch leak in Mode D under normal condition)

		Fuel temperature (°C (°F))									
		0 (32)	10 (50)	15 (59)	20 (68)	25 (77)	30 (86)	35 (95)	40 (104)	45 (113)	50 (122)
Fuel Level ℓ (US gal, Imp gal)	10.5 (2.77, 2.31)	0.1 (0.70, 0)	0.1 (0.70, 0)	0.1 (0.70, 0)	0.1 (0.70, 0)	0.1 (0.90, 0)	0.1 (1.10, 0)	0.1 (1.10, 0)	0.1 (1.10, 0)	0.1 (1.10, 0)	0.1 (1.10, 0)
	35 (9.25, 7.7)	0.1 (0.80, 0)	0.1 (0.80, 0)	0.1 (0.80, 0)	0.1 (0.80, 0)	0.1 (1.00, 0)	0.2 (1.20, 0)	0.2 (1.20, 0)	0.2 (1.20, 0)	0.2 (1.20, 0)	0.2 (1.20, 0)
	59.5 (15.72, 13.09)	0.1 (0.90, 0)	0.1 (0.90, 0)	0.1 (0.90, 0)	0.1 (0.90, 0)	0.1 (1.10, 0)	0.2 (1.30, 0.1)	0.2 (1.30, 0.1)	0.2 (1.30, 0.1)	0.2 (1.30, 0.1)	0.2 (1.30, 0.1)
kPa (mmHg, inHg)											

Map 6 (Threshold value for Pass in Mode D under normal conditions)

		Fuel temperature (°C (°F))									
		0 (32)	10 (50)	15 (59)	20 (68)	25 (77)	30 (86)	35 (95)	40 (104)	45 (113)	50 (122)
Fuel Level ℓ (US gal, Imp gal)	10.5 (2.77, 2.31)	0.1 (0.60, 0)	0.1 (0.60, 0)	0.1 (0.60, 0)	0.1 (0.60, 0)	0.1 (0.60, 0)	0.1 (0.60, 0)	0.1 (0.60, 0)	0.1 (0.60, 0)	0.1 (0.60, 0)	0.1 (0.60, 0)
	35 (9.25, 7.7)	0.1 (0.60, 0)	0.1 (0.60, 0)	0.1 (0.60, 0)	0.1 (0.60, 0)	0.1 (0.60, 0)	0.1 (0.60, 0)	0.1 (0.60, 0)	0.1 (0.60, 0)	0.1 (0.60, 0)	0.1 (0.60, 0)
	59.5 (15.72, 13.09)	0.1 (0.80, 0)	0.1 (0.80, 0)	0.1 (0.80, 0)	0.1 (0.80, 0)	0.1 (0.80, 0)	0.1 (0.80, 0)	0.1 (0.80, 0)	0.1 (0.80, 0)	0.1 (0.80, 0)	0.1 (0.80, 0)
kPa (mmHg, inHg)											

Map 7 (Threshold value for 0.020 inch leak in Mode D with under low vapor conditions)

		Fuel temperature (°C (°F))			
		0 (32)	10 (50)	15 (59)	20 (68)
Fuel Level ℓ (US gal, Imp gal)	10.5 (2.77, 2.31)	0.1 (0.80, 0)	0.1 (0.80, 0)	0.1 (0.80, 0)	0.1 (0.80, 0)
	35 (9.25, 7.7)	0.1 (0.90, 0)	0.1 (0.90, 0)	0.1 (0.90, 0)	0.1 (0.90, 0)
	59.5 (15.72, 13.09)	0.1 (1, 0)	0.1 (1, 0)	0.1 (1, 0)	0.1 (1, 0)
kPa (mmHg, inHg)					

Map 8 (Threshold value for Pass in Mode D with under low vapor conditions)

		Fuel temperature (°C (°F))			
		0 (32)	10 (50)	15 (59)	20 (68)
Fuel Level ℓ (US gal, Imp gal)	10.5 (2.77, 2.31)	0.1 (0.60, 0)	0.1 (0.60, 0)	0.1 (0.60, 0)	0.1 (0.60, 0)
	35 (9.25, 7.7)	0.1 (0.7, 0)	0.1 (0.7, 0)	0.1 (0.7, 0)	0.1 (0.7, 0)
	59.5 (15.72, 13.09)	0.1 (0.80, 0)	0.1 (0.80, 0)	0.1 (0.80, 0)	0.1 (0.80, 0)
kPa (mmHg, inHg)					

GETtheMANUALS.org

Monitor 2 (vehicle running condition)

Mode	Description of each mode	Required time for each mode
Mode A-1 (Zero adjust)	CPC valve: Closed Fuel tank pressure is adjusted to zero. If the fuel tank pressure is close to the ambient pressure, the system waits 5000 ms for stabilization of the tank pressure prior to moving to Mode A-2.	Average: 7 s (Depends on the tank condition)
Mode A-2 (Estimation of Evap. Generation)	CCV: Closed The system requires 30000 ms to measure the pressure increase (P1), and then move to Mode B.	30000 ms
Mode B (Negative Pressure Introduction)	CPC valve: Open Negative pressure is introduced to the fuel tank via engine manifold vacuum. When the fuel tank pressure reaches the target pressure (–2 kPa (–15 mmHg, –0.6 inHg)), the monitor moves to Mode C.	Average: 22 s (Depends on the tank condition)
Mode C (Keeping Negative Pressure)	CPC valve: Closed When the tank pressure comes up to target pressure (–2 kPa (–15 mmHg, –0.6 inHg)) or the calibrated period (Map 9) has passed, move to Mode D.	Average: 5 s (Depends on the tank condition)
Mode D (Pressure Measurement / Pass Fail in Mode D)	The system calculates the integrated pressure change (ptepap1sum) which is compensated by “P1” (the generated vapor pressure), ptepap1sum (n) = ptepap1sum (n–1) + ptepap1 – (–2 kPa (–15 mmHg, –0.6 inHg)) ptepap1 = (Fuel tank pressure) – (“P1”) / (Mode A-2 time) × (Elapsed time in Mode D) When the calibrated period (Map 10) has passed or the tank pressure reaches the Ambient pressure (0 kPa (0 mmHg, 0 inHg)), the system compares the monitor value (ptepap1sum) to a calibrated threshold table as a function of elapsed time in Mode D and fuel level. The system judges as “Pass/Fail in Mode D” and then moves to “Final Judgment”. (1) ptepap1sum > Fail Threshold (Map 11) → “Fail in Mode D” (2) ptepap1sum ≤ Pass Threshold (Map 12) → “Pass in Mode D”	Average: 134 s (Depends on the tank condition)
Final Judgment (Pass / Fail)	The monitor is completed in the following order (1) Judged as “Fail in Mode D” → Fail of 0.020 inch leak **[P0456]** (2) Judged as “Pass in Mode D” → Pass of 0.020 inch leak	0.128 s

Map 9 (Maximum time of Mode C)

Fuel Level ℓ (US gal, Imp gal)	10.5 (2.77, 2.31)	27 (7.13, 5.94)	43 (11.36, 9.46)	59.5 (15.72, 13.09)
Maximum time of Mode C (ms)	21208	19288	9742	8057

Map 10 (Maximum time of Mode D)

Fuel Level ℓ (US gal, Imp gal)	10.5 (2.77, 2.31)	35 (9.25, 7.7)	60 (15.85, 13.2)
Maximum time of Mode D (ms)	210000	153000	92000

GETtheMANUALS.org

Map 11 (Threshold value for 0.020 inch leak in Mode D)

		Elapsed time in Mode D (ms)							
		15104	30080	45056	60032	75008	89984	104960	119936
Fuel Level ℓ (US gal, Imp gal)	10.5 (2.77, 2.31)	12.9 (97 , 3.8)	46.2 (347 , 13.6)	95.8 (719 , 28.3)	160.2 (1202 , 47.3)	238.2 (1787 , 70.3)	328.5 (2464 , 97)	430.3 (3228 , 127.1)	542.9 (4073 , 160.4)
	35 (9.25, 7.7)	17.6 (132 , 5.2)	62.3 (467 , 18.4)	128.8 (966 , 38)	213.7 (1603 , 63.1)	314.8 (2361 , 93)	430.4 (3229 , 127.1)	559.3 (4196 , 165.2)	700.2 (5252 , 206.8)
	60 (15.85, 13.2)	23.9 (179 , 7.1)	85.8 (644 , 25.4)	178.4 (1338 , 52.7)	296.5 (2225 , 87.6)	436.5 (3274 , 128.9)	594.8 (4462 , 175.7)	768.5 (5766 , 227)	954.5 (7161 , 281.9)
kPa (mmHg, inHg)									

		Elapsed time in Mode D (ms)						
		135040	150016	164992	179968	194944	209920	225024
Fuel Level ℓ (US gal, Imp gal)	10.5 (2.77, 2.31)	667.3 (5006 , 197.1)	799.9 (6000.557386, 236.2)	941.4 (7062.512067, 278.1)	1091.6 (8188.783117, 322.4)	1248.9 (9368.900911, 368.9)	1413.1 (10601.09904, 417.4)	1585.2 (11891.64027, 468.2)
	35 (9.25, 7.7)	852.9 (6399 , 251.9)	1014.1 (7607.513887, 299.5)	1183.7 (8880.01467, 349.6)	1360.8 (10208.32601, 401.9)	1544.8 (11588.8928, 456.3)	1734.4 (13010.99648, 512.2)	1930.4 (14481.68432, 570.1)
	60 (15.85, 13.2)	1151.6 (8639 , 340.1)	1353.7 (10155.06483, 399.8)	1560 (11702.76626, 460.7)	1768.6 (13267.6991, 522.3)	1978.5 (14842.44065, 584.3)	2186.7 (16404.00719, 645.8)	2394.6 (17963.98126, 707.2)
kPa (mmHg, inHg)								

Map 12 (Threshold value for Pass in Mode D)

		Elapsed time in Mode D (ms)							
		15104	30080	45056	60032	75008	89984	104960	119936
Fuel Level ℓ (US gal, Imp gal)	10.5 (2.77, 2.31)	11.1 (83 , 3.3)	39.9 (300 , 11.8)	82.8 (621 , 24.5)	138.5 (1039 , 40.9)	205.8 (1544 , 60.8)	283.9 (2130 , 83.8)	371.8 (2789 , 109.8)	469.2 (3520 , 138.6)
	35 (9.25, 7.7)	15.2 (114 , 4.5)	53.8 (404 , 15.9)	111.3 (835 , 32.9)	184.7 (1385 , 54.5)	272 (2041 , 80.3)	372 (2790 , 109.9)	483.4 (3626 , 142.8)	605.1 (4539 , 178.7)
	60 (15.85, 13.2)	20.7 (155 , 6.1)	74.2 (557 , 21.9)	154.1 (1156 , 45.5)	256.3 (1922 , 75.7)	377.2 (2830 , 111.4)	514.1 (3856 , 151.8)	664.2 (4983 , 196.2)	824.9 (6188 , 243.6)
kPa (mmHg, inHg)									

		Elapsed time in Mode D (ms)						
		135040	150016	164992	179968	194944	209920	225024
Fuel Level ℓ (US gal, Imp gal)	10.5 (2.77, 2.31)	576.7 (4326 , 170.3)	691.2 (5186 , 204.2)	813.6 (6103 , 240.3)	943.3 (7077 , 278.6)	1079.3 (8097 , 318.8)	1221.2 (9161 , 360.7)	1369.9 (10277 , 404.6)
	35 (9.25, 7.7)	737.1 (5530 , 217.7)	876.4 (6574 , 258.8)	1023 (7674 , 302.1)	1176 (8822 , 347.3)	1335 (10015 , 394.3)	1498.8 (11244 , 442.7)	1668.3 (12515 , 492.7)
	60 (15.85, 13.2)	995.2 (7466 , 293.9)	1169.8 (8776 , 345.5)	1348.1 (10114 , 398.2)	1528.4 (11466 , 451.4)	1709.8 (12827 , 505)	1889.7 (14176 , 558.1)	2069.4 (15524 , 611.2)
kPa (mmHg, inHg)								

GETtheMANUALS.org

2. ENABLE CONDITION

Monitor 1

Secondary Parameters	Enable Conditions
Battery voltage	≥ 10.9 V
Ambient pressure	≥ 75 kPa (563 mmHg, 22.2 inHg)
Fuel tank pressure	≥ –4 kPa (–30 mmHg, –1.2 inHg) and < 2.7 kPa (20 mmHg, 0.8 inHg)
Elapsed time after previous EVAP monitor was finished/canceled	≥ 230000 ms
Total time of canister purge operation	≥ 120000 ms
Learning value of EVAP concentration	< 0.08
Engine speed	≥ 1050 rpm and < 4000 rpm
Intake manifold vacuum (= ambient pressure – intake manifold pressure)	≥ 13.3 kPa (100 mmHg, 3.9 inHg)
Vehicle speed	≥ 32 km/h (19.9 MPH)
Closed loop air fuel ratio control	Active
Fuel temperature	< 45 °C (113 °F)
Intake air temperature	≥ –10 °C (14 °F)
Fuel level	≥ 10.5 ℓ (2.77 US gal, 2.31 Imp gal) and < 59.5 ℓ (15.72 US gal, 13.09 Imp gal)

Monitor 2 (first idle condition)

Secondary Parameters	Enable Conditions
Battery voltage	≥ 10.9 V
Ambient pressure	≥ 75 kPa (563 mmHg, 22.2 inHg)
Soak time	≥ 18000 s
Accumulated intake air mass after engine start	≥ Map 13
Closed loop air fuel ratio control	Active
Fuel level	≥ 10.5 ℓ (2.77 US gal, 2.31 Imp gal) and < 59.5 ℓ (15.72 US gal, 13.09 Imp gal)
Fuel temperature	< 35 °C (95 °F)
Fuel tank pressure	≥ –0.7 kPa (–5.106 mmHg, –0.2 inHg) and < 0.7 kPa (5.106 mmHg, 0.2 inHg)
Adapted fuel tank pressure	≥ –0.3 kPa (–2.507 mmHg, –0.1 inHg) and < 0.3 kPa (2.507 mmHg, 0.1 inHg)
Engine speed	≥ 1000 rpm and < 2000 rpm
Intake manifold vacuum (= ambient pressure – intake manifold pressure)	≥ 13.3 kPa (100 mmHg, 3.9 inHg)
Vehicle speed	< 2 km/h (1.2 MPH)
Idle switch	ON
Intake air temperature	≥ –10 °C (14 °F)

GETtheMANUALS.org

Monitor 2 (vehicle running condition)

Secondary Parameters	Enable Conditions
Battery voltage	≥ 10.9 V
Ambient pressure	≥ 75 kPa (563 mmHg, 22.2 inHg)
Elapsed time after previous EVAP monitor was finished/canceled	≥ 60000 ms
Total time of canister purge operation	≥ 120000 ms
Fuel temperature	< 55 °C (131 °F)
Fuel level	≥ 10.5 ℓ (2.77 US gal, 2.31 Imp gal) and < 59.5 ℓ (15.72 US gal, 13.09 Imp gal)
Intake air temperature	≥ –10 °C (14 °F)
Vehicle speed	≥ 30 km/h (18.6 MPH)
All conditions below are satisfied	≥ 5000 ms
• Fuel tank pressure	≥ –0.7 kPa (–5 mmHg, –0.2 inHg) and < 0.4 kPa (2.9 mmHg, 0.1 inHg)
• Engine speed	≥ 1050 rpm and < 4000 rpm
• Intake manifold vacuum (= ambient pressure – intake manifold pressure)	≥ 8 kPa (60 mmHg, 2.4 inHg)
• Closed loop air fuel ratio control	Active
• Short term fuel trim	> 0.9
• Fuel level with large smoothing coefficient – Fuel level with small smoothing coefficient	< Map 14
• Learning value of EVAP density	< 0.08

Map 13 (Accumulated intake air mass after engine start)

Engine coolant temperature at start °C (°F)	–10 (14)	0 (32)	10 (50)	20 (68)	30 (86)	40 (104)	50 (122)	60 (140)
Accumulated intake air mass after engine start g (oz)	520 (18.34)	520 (18.34)	500 (17.64)	480 (16.93)	440 (15.52)	310 (10.93)	280 (9.88)	270 (9.52)

Map 14 (Threshold value the fuel slosh detection)

Fuel Level ℓ (US gal, Imp gal)	10 (2.64, 2.2)	20 (5.28, 4.4)	25 (6.61, 5.5)	30 (7.93, 6.6)	43 (11.36, 9.46)	45 (11.89, 9.9)	50 (13.21, 11)	60 (15.85, 13.2)
Fuel level change for detection of fuel slosh ℓ (US gal, Imp gal)	5 (1.32, 1.1)	5 (1.32, 1.1)	5 (1.32, 1.1)	5 (1.32, 1.1)	5 (1.32, 1.1)	5 (1.32, 1.1)	6 (1.59, 1.32)	8 (2.11, 1.76)

GETtheMANUALS.org

3. GENERAL DRIVING CYCLE

Monitor 1

Perform the diagnosis when the cumulative time of canister purge after engine start becomes 120 seconds or more, at a vehicle speed of 32 km/h (20 MPH) or more.
If judgment cannot be made, repeat the diagnosis after a predetermined interval has passed.

Monitor 2 (first idle condition)

Perform the diagnosis only once at the fast idle (the idling before starting to move) after soaking of 5 hours or more, in conditions that A/F feedback has been executed and catalytic converter has been warmed up (approx. 25 seconds after engine start).
If judgment cannot be made, or the diagnosis cannot be performed at fast idle, do not repeat the diagnosis in this driving cycle.

Monitor 2 (vehicle running condition)

Perform this procedure only when the diagnosis cannot be completed at fast idle.
Perform the diagnosis when the cumulative time of canister purge after engine start becomes 120 seconds or more, at a vehicle speed of 30 km/h (18.6 MPH) or more.
If judgment cannot be made, repeat the diagnosis after a predetermined interval has passed.

4. DIAGNOSTIC METHOD

- **Monitor 1**

• CPC valve stuck open

At the beginning of the Monitor 1, system performs CPC valve stuck open monitor in Mode Z. CPC valve and CCV are closed and the fuel tank pressure is monitored. The pressure transition over a calibrated time is then used to determine if the CPC valve is stuck open.

CPC valve stuck open test at Mode Z of Monitor 1

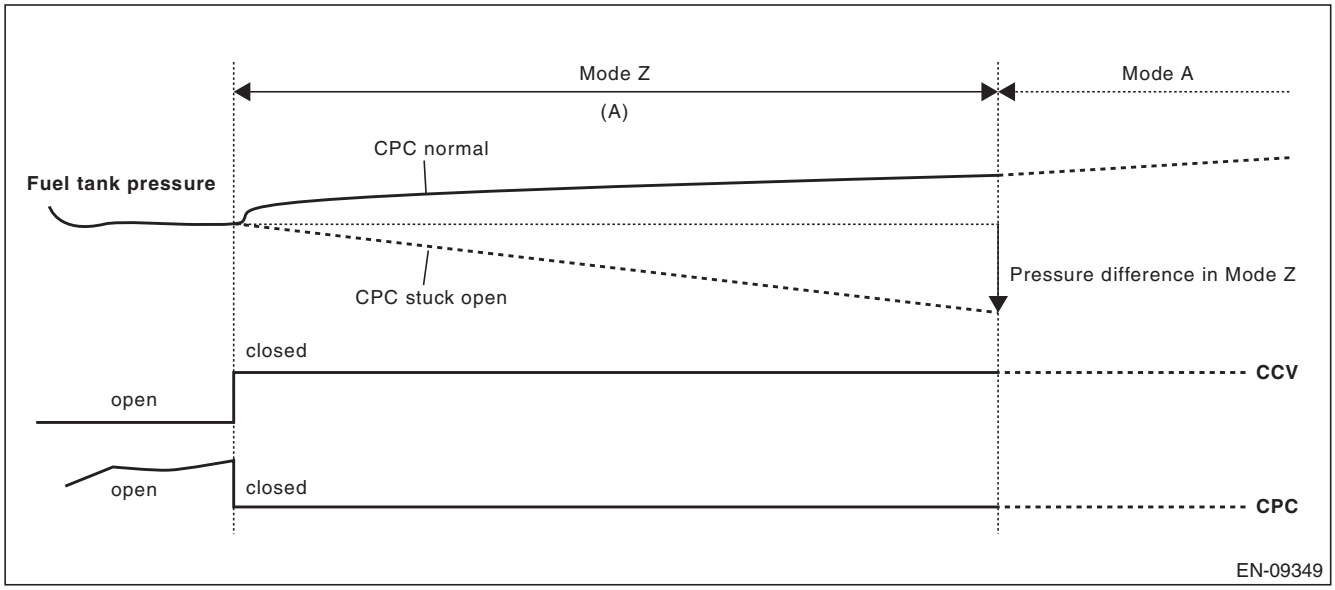

(A) 3000 ms

Judgment

- Pressure difference in Mode Z < 0.9 kPa (6.5 mmHg, 0.3 inHg) → Fail [CPC valve stuck open]: **P0457**
- Pressure difference in Mode Z ≥ 0.4 kPa (3 mmHg, 0.1 inHg) → Pass → move to **Mode A**

• Fuel cap loose/off and CPC valve stuck close

Fuel cap loose/off and CPC valve stuck close monitor is performed in Mode B of Monitor 1. The engine lowers the fuel tank pressure using intake manifold vacuum via the operation of the CPC valve. The pressure transition over a calibrated time is then used to determine if the Fuel cap loose/off or CPC valve stuck closed.

GETtheMANUALS.org

Fuel cap off or CPC stuck close at Mode B of Monitor 1

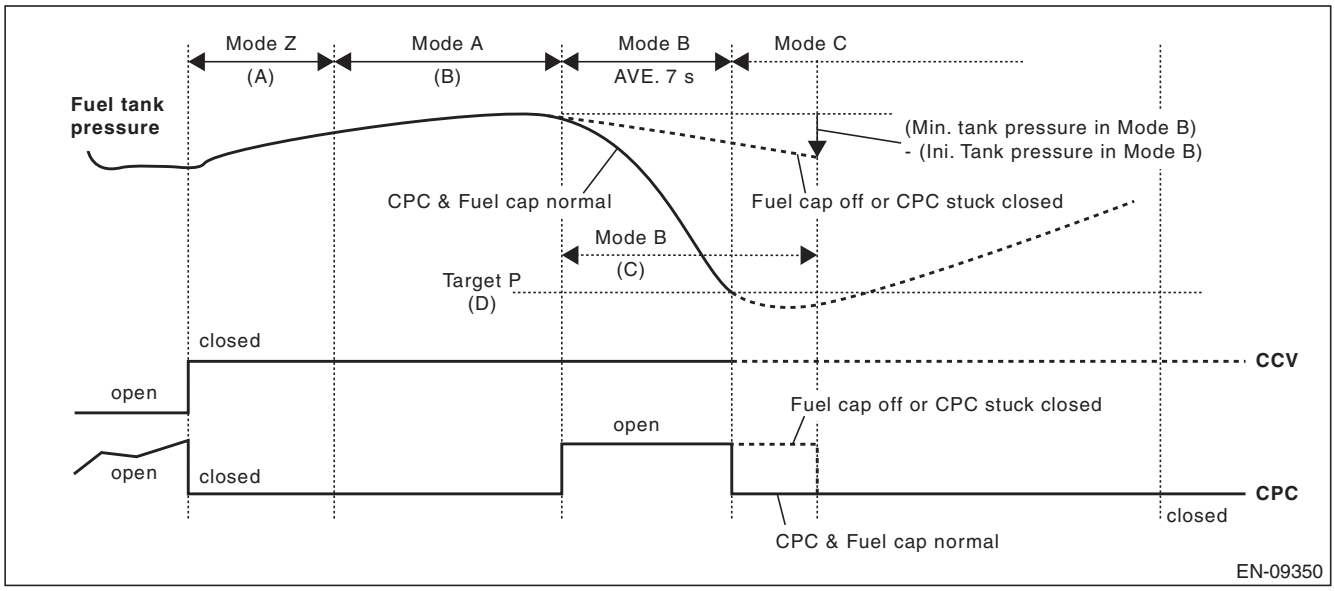

(A) 3000 ms (B) 10000 ms (C) 10000 ms
(D) –1.4 kPa (–10.5 mmHg, –0.4 inHg)

Judgment

- Elapsed time in Mode B ≥ 10000 ms and (Minimum tank pressure in Mode B) – (Initial tank pressure in Mode B) > –0.5 kPa (–4 mmHg, –0.2 inHg) → Fail [Fuel cap off or CPC valve stuck close]: **P0457**
- Fuel tank pressure ≤ –1.4 kPa (–10.5 mmHg, –0.4 inHg) → Pass → move to **Mode C**

Fuel cap loose at Mode B of Monitor 1

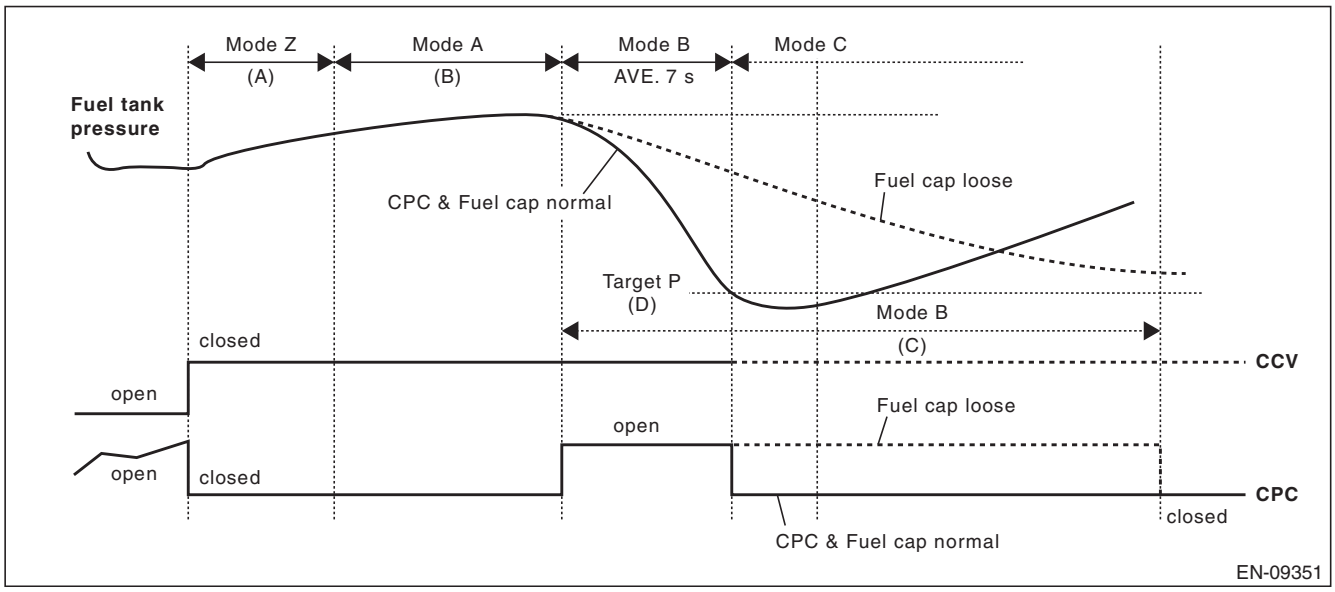

(A) 3000 ms (B) 10000 ms (C) 10000 ms + 25000 ms
(D) –1.4 kPa (–10.5 mmHg, –0.4 inHg)

GETtheMANUALS.org

Judgment

- Elapsed time in Mode B ≥ 10000 ms + 25000 ms → Fail [Fuel cap loose]: **P0457**
- Fuel tank pressure ≤ –1.4 kPa (–10.5 mmHg, –0.4 inHg) → Pass → move to **Mode C**

• 0.040 inch leak check

0.040 inch evaporative leak monitor is executed through Mode A to Mode D of Monitor 1. The engine lowers the fuel tank pressure using intake manifold vacuum via the canister purge operation during engine running. Once the tank pressure reaches a calibrated target (below atmospheric pressure) the purge valve is closed and the fuel tank pressure is monitored. The pressure transition over a calibrated time period is then used to determine if the fuel tank system has a leak.

0.040 inch EVAP monitor test

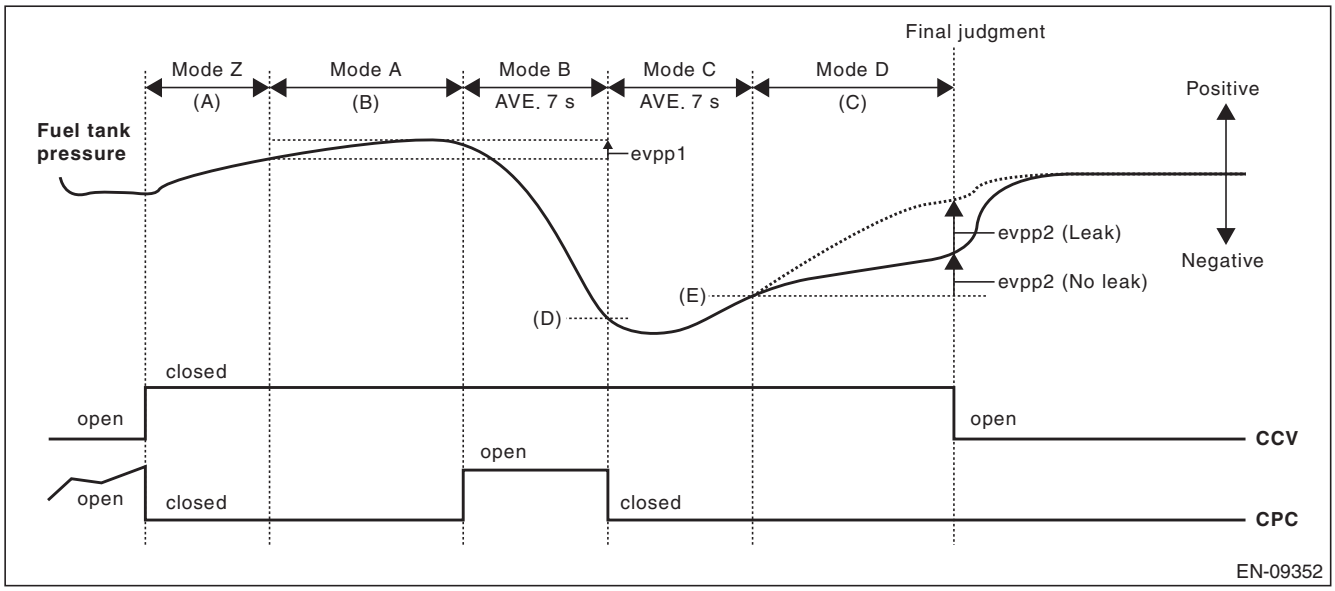

(A)	3000 ms	(B)	10000 ms	(C)	10000 ms
(D)	–1.4 kPa (–10.5 mmHg, –0.4 inHg)	(E)	–1.3 kPa (–9.75 mmHg, –0.4 inHg)		

Judgment

- evpp2 – 1.5 × evpp1 > Map 1 → Fail [0.040 inch Leak]: **P0442**
- evpp2 – 1.5 × evpp1 ≤ Map 1 → Pass [No Leak]

GETtheMANUALS.org

- **Monitor 2 (first idle condition)**

0.020 inch leak check at first idle condition

An intrusive evaporative leak monitor test is run following the first engine start after a calibrated engine off soak period. The engine lowers the fuel tank pressure using intake manifold vacuum via the purge valve operation during engine idle. Once the tank pressure reaches a calibrated target (below atmospheric pressure) the purge valve is closed and the fuel tank pressure is monitored. The pressure transition over a calibrated time period is then used to determine if the fuel tank system has a leak.

Intrusive EVAP Monitor test at first Idle

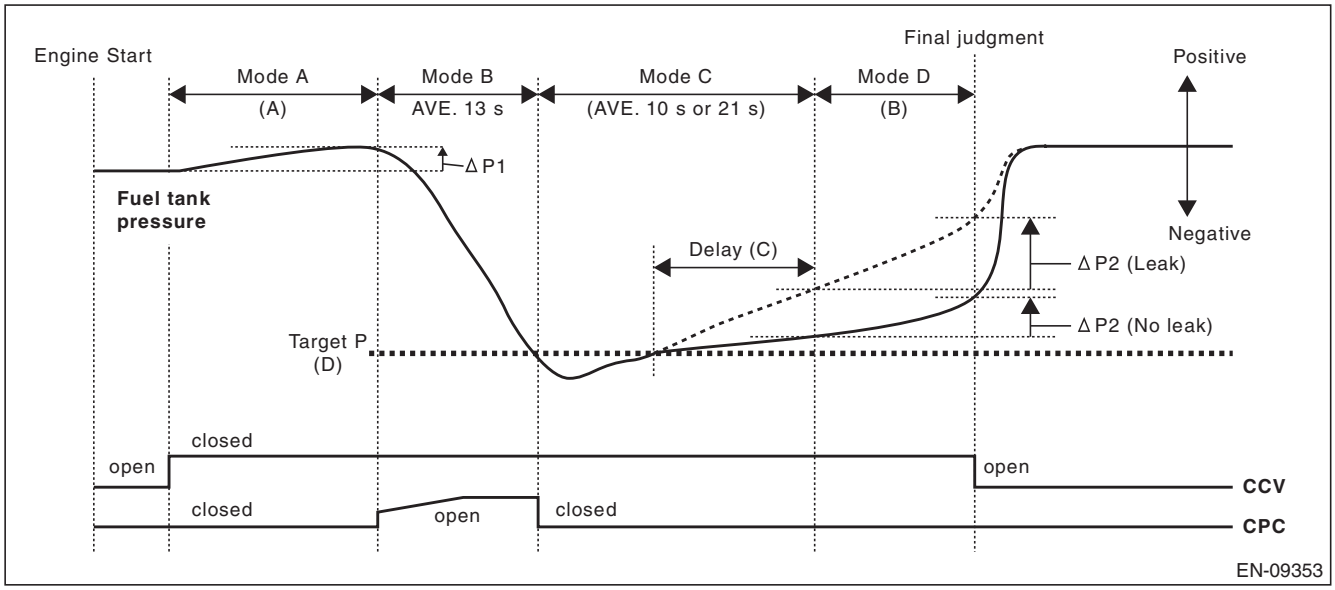

(A) 128 ms or 10000 ms (B) 10000 ms (C) 2000 ms or 10000 ms

(D) –1.3 kPa (–10 mmHg, –0.4 inHg)

Judgment

- $\triangle$P2 – $\triangle$P1 > Map 5 or Map 7 → Fail [0.020 inch Leak]: **P0456**
- $\triangle$P2 – $\triangle$P1 ≤ Map 6 or Map 8 → Pass [No Leak]

GETtheMANUALS.org

- **Monitor 2 (vehicle running condition)**

0.020 inch Monitor during Vehicle Running (moving) Conditions
While the vehicle is vehicle running, the diagnostic intrusively pulls-down the fuel tank pressure using manifold vacuum via the purge valve. Once the tank pressure reaches a calibrated target (below atmospheric pressure) the purge valve is closed and the fuel tank pressure is monitored. The pressure transition over a calibrated time period is then used to determine if the fuel tank system has a leak.
Intrusive EVAP Monitor Test (Vehicle Running)

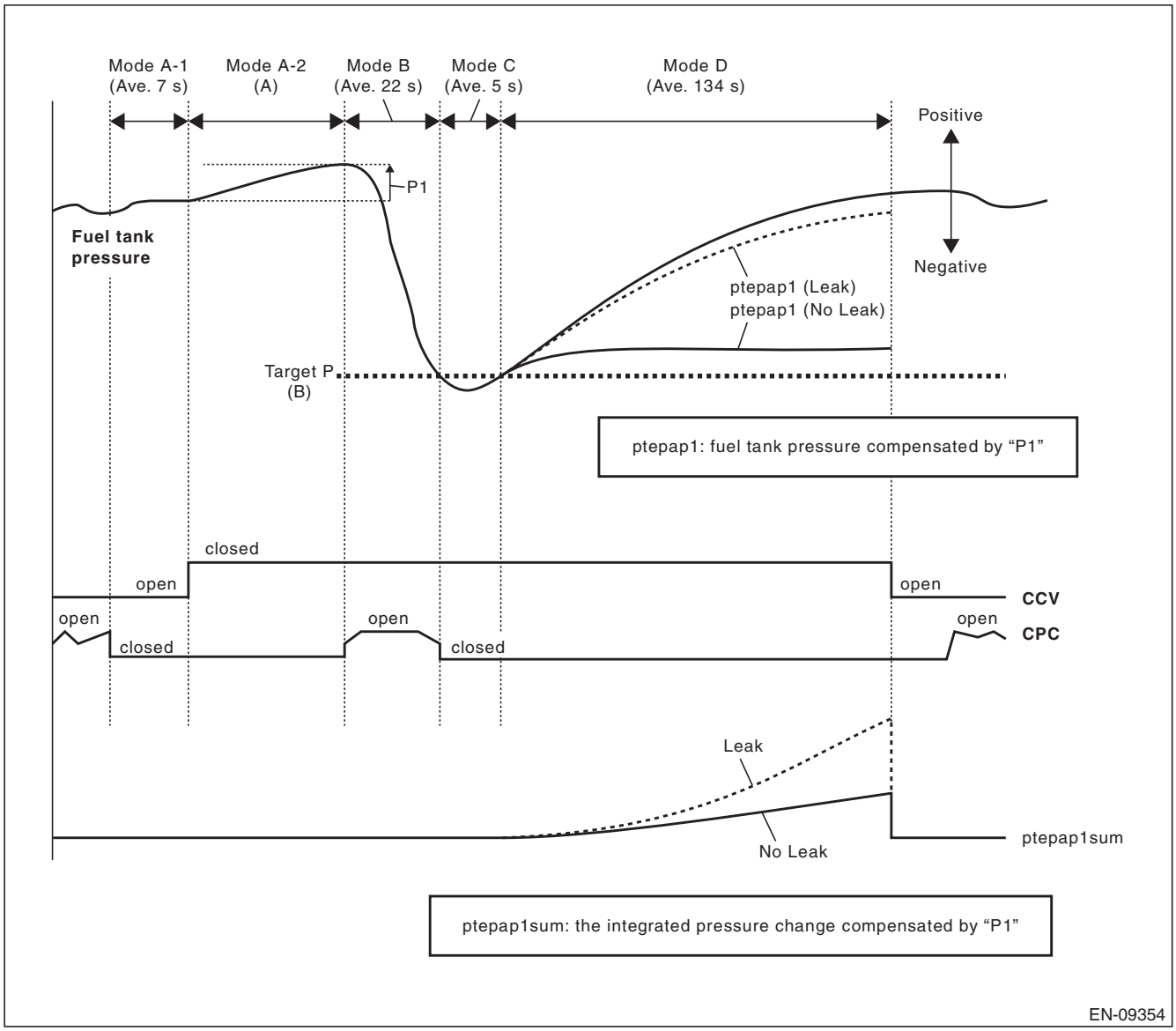

(A) 30000 ms (B) –2 kPa (–15 mmHg, –0.6 inHg)

Judgment
- ptepap1sum > Map 11 → Fail [0.020 inch Leak]: **P0456**
- ptepap1sum ≤ Map 12 → Pass [No Leak]

GETtheMANUALS.org

BW:DTC P0447 EVAPORATIVE EMISSION CONTROL SYSTEM VENT CONTROL CIRCUIT OPEN

1. OUTLINE OF DIAGNOSIS

Detect open or short circuit of the drain valve.
Judge as NG when the ECM output level differs from the actual terminal level.

2. COMPONENT DESCRIPTION

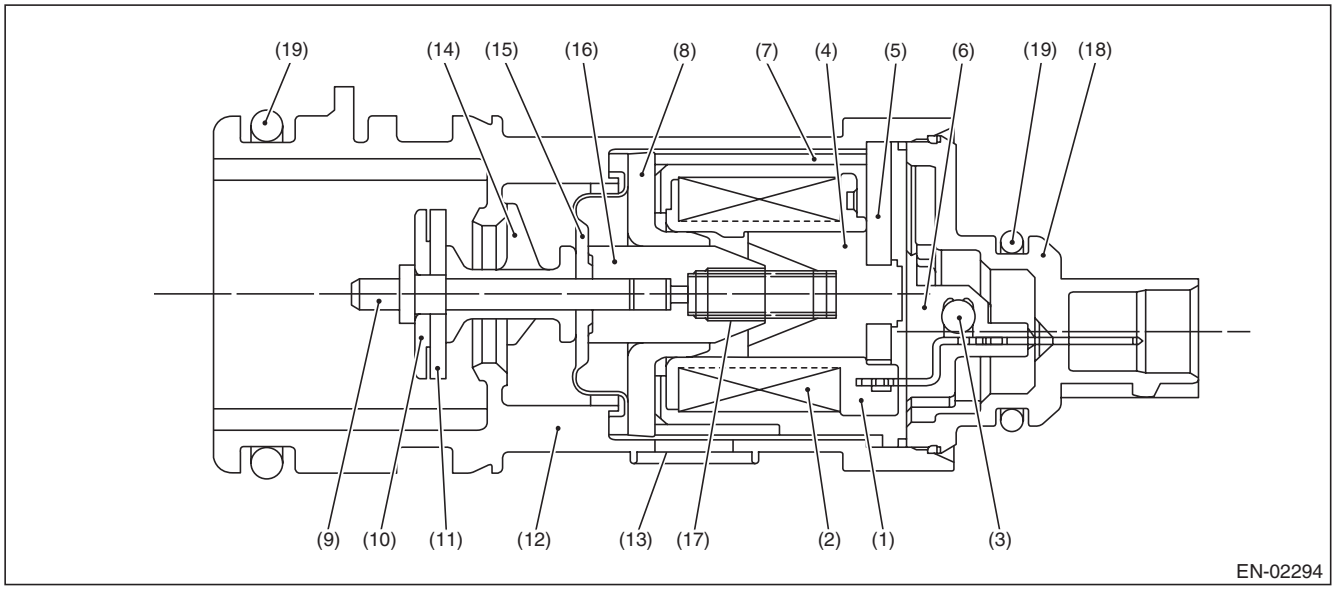

(1) Bobbin
(2) Coil
(3) Diode
(4) Stator core
(5) End plate
(6) Body
(7) Yoke
(8) Magnetic plate
(9) Shaft
(10) Plate
(11) Valve
(12) Housing
(13) Filter
(14) Retainer
(15) Diaphragm
(16) Movable core
(17) Spring
(18) Cover
(19) O-ring

3. ENABLE CONDITION

Secondary Parameters	Enable Conditions
None	

4. GENERAL DRIVING CYCLE

Always perform the diagnosis continuously.

GETtheMANUALS.org

5. DIAGNOSTIC METHOD

- **Abnormality Judgment**

If the duration of time while the following conditions are met is longer than the time indicated, judge as NG.

Judgment Value

Malfunction Criteria	Threshold Value
Battery voltage	≥ 10.9 V
Elapsed time after starting the engine	≥ 1 second
Terminal output voltage when ECM outputs OFF signal	Low

Time Needed for Diagnosis: 2500 ms
Malfunction Indicator Light Illumination: Illuminates as soon as a malfunction occurs.

- **Normality Judgment**

Judge as OK and clear the NG if the continuous time while the following conditions are established is more than the predetermined time.

Judgment Value

Malfunction Criteria	Threshold Value
Battery voltage	≥ 10.9 V
Elapsed time after starting the engine	≥ 1 second
Terminal output voltage when ECM outputs OFF signal	High

Time Needed for Diagnosis: Less than 1 second

GETtheMANUALS.org

BX:DTC P0448 EVAPORATIVE EMISSION CONTROL SYSTEM VENT CONTROL CIRCUIT SHORTED

1. OUTLINE OF DIAGNOSIS

Detect open or short circuit of the drain valve.
Judge as NG when the ECM output level differs from the actual terminal level.

2. COMPONENT DESCRIPTION

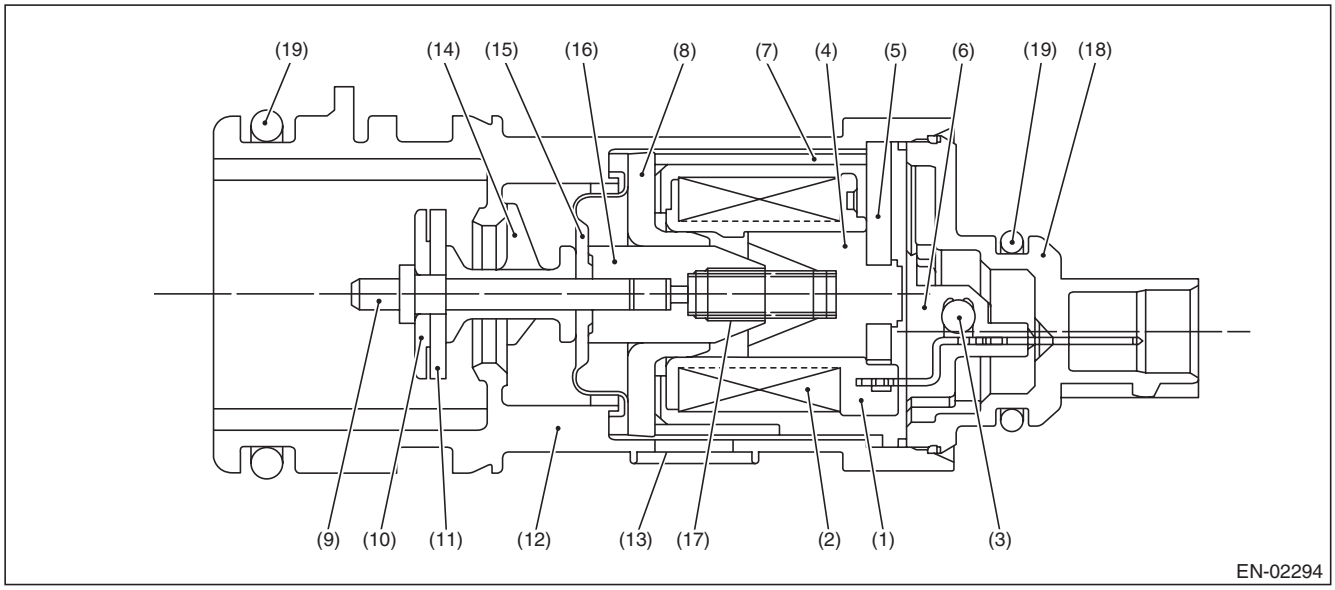

(1)	Bobbin	(8)	Magnetic plate	(15)	Diaphragm
(2)	Coil	(9)	Shaft	(16)	Movable core
(3)	Diode	(10)	Plate	(17)	Spring
(4)	Stator core	(11)	Valve	(18)	Cover
(5)	End plate	(12)	Housing	(19)	O-ring
(6)	Body	(13)	Filter		
(7)	Yoke	(14)	Retainer		

3. ENABLE CONDITION

Secondary Parameters	Enable Conditions
None	

4. GENERAL DRIVING CYCLE

Always perform the diagnosis continuously.

5. DIAGNOSTIC METHOD

- **Abnormality Judgment**

If the duration of time while the following conditions are met is longer than the time indicated, judge as NG.

Judgment Value

Malfunction Criteria	Threshold Value
Battery voltage	≥ 10.9 V
Elapsed time after starting the engine	≥ 1 second
Terminal output voltage when ECM outputs ON signal	High

Time Needed for Diagnosis: 2500 ms

GETtheMANUALS.org

Malfunction Indicator Light Illumination: Illuminates as soon as a malfunction occurs.

- **Normality Judgment**

Judge as OK and clear the NG if the continuous time while the following conditions are established is more than the predetermined time.

Judgment Value

Malfunction Criteria	Threshold Value
Battery voltage	≥ 10.9 V
Elapsed time after starting the engine	≥ 1 second
Terminal output voltage when ECM outputs ON signal	Low

Time Needed for Diagnosis: Less than 1 second

GETtheMANUALS.org

BY:DTC P0451 EVAPORATIVE EMISSION CONTROL SYSTEM PRESSURE SENSOR

1. OUTLINE OF DIAGNOSIS

Detect malfunctions of tank pressure sensor output property by the following two diagnoses.

- **DRIFT DIAGNOSIS**

To detect drift malfunction and offset malfunction of tank pressure sensor, activate ECM in the predetermined soaking time after turning the ignition switch OFF, and check that the tank pressure sensor input value is equivalent to the barometric pressure.
For vehicles equipped with pressure control valve, be sure to open the pressure control valve when performing the diagnosis, because the pressure inside the tank increases if the ambient temperature rises during soaking.

- **Stuck Diagnosis**

When there is no pressure variation, which should have occurred in the tank considering the operation status, judge as NG.

2. COMPONENT DESCRIPTION

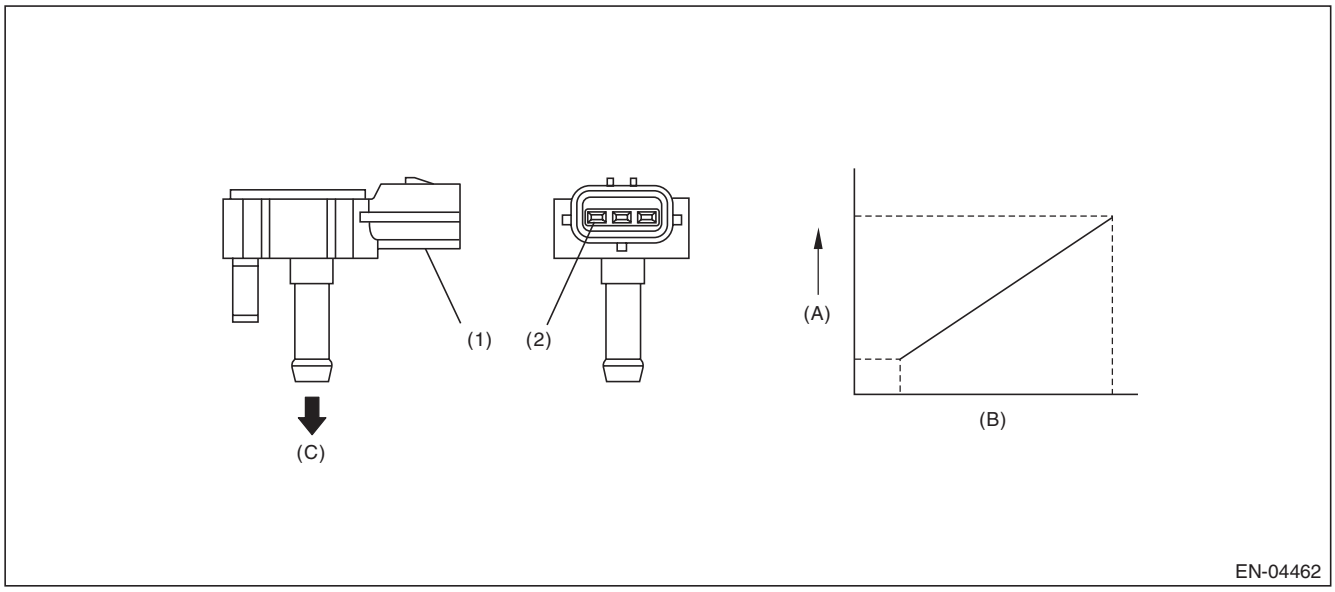

(A)	Output voltage	(B)	Input voltage	(C)	To fuel tank
(1)	Connector	(2)	Terminals		

GETtheMANUALS.org

3. ENABLE CONDITION

<DRIFT DIAGNOSIS>

Secondary Parameters	Enable Conditions
Soaking time	≥ 3600 s × 2 time(s)
Ignition switch	OFF
Battery voltage	≥ 10.9 V
Atmospheric pressure	≥ 75 kPa (563 mmHg, 22.2 inHg)
Fuel temperature	< 55 °C (131 °F)
Intake air temperature	> –10 °C (14 °F) and < 55 °C (131 °F)
Cumulative amount of purge during previous driving cycle	≥ Value from Map
Fuel level when the ignition switch is OFF	≥ 10.5 ℓ (2.77 US gal, 2.31 Imp gal) and < 59.5 ℓ (15.72 US gal, 13.09 Imp gal)

Map

Ambient air temperature °C (°F)	25 (77)	35 (95)	40 (104)	45 (113)
Cumulative amount of purge during previous driving cycle g (oz)	0 (0)	0 (0)	0 (0)	0 (0)

<Stuck Diagnosis>

Secondary Parameters	Enable Conditions
Elapsed time after starting the engine	≥ 60 s
Fuel level	≥ 9.6 ℓ (2.54 US gal, 2.11 Imp gal)
Fuel temperature	< 55 °C (131 °F)
Battery voltage	≥ 10.9 V
Atmospheric pressure	≥ 75 kPa (563 mmHg, 22.2 inHg)

4. GENERAL DRIVING CYCLE

<DRIFT DIAGNOSIS>

Perform the diagnosis only once when 3600 s × 2 time(s) has passed after the ignition switch is OFF.

<Stuck Diagnosis>

- Perform the diagnosis continuously after 60 s have passed since the engine started.
- Pay attention to the fuel level and temperature.

GETtheMANUALS.org

5. DIAGNOSTIC METHOD

<DRIFT DIAGNOSIS>

Abnormality Judgment

Judge as NG when one of the following conditions is established.

Judgment Value

Malfunction Criteria	Threshold Value
Tank pressure sensor learning value	≥ 0.7 kPa (5.106 mmHg, 0.2 inHg) or < –0.7 kPa (–5.106 mmHg, –0.2 inHg)
Tank pressure sensor measured value – Tank pressure sensor learning value	≥ 0.3 kPa (2.507 mmHg, 0.1 inHg) or < –0.3 kPa (–2.507 mmHg, –0.1 inHg)

Time Needed for Diagnosis: 10 seconds

Malfunction Indicator Light Illumination: Illuminates when malfunction occurs in 2 continuous driving cycles.

Normality Judgment

Judge as OK and clear the NG if the following conditions are established.

Judgment Value

Malfunction Criteria	Threshold Value
Tank pressure sensor learning value	< 0.7 kPa (5.106 mmHg, 0.2 inHg) and ≥ –0.7 kPa (–5.106 mmHg, –0.2 inHg)
Tank pressure sensor measured value – Tank pressure sensor learning value	< 0.3 kPa (2.507 mmHg, 0.1 inHg) and ≥ –0.3 kPa (–2.507 mmHg, –0.1 inHg)

Time Needed for Diagnosis: 10 seconds

GETtheMANUALS.org

<Stuck Diagnosis>

Abnormality Judgment

If the duration of time while the following conditions are met is longer than the time indicated, judge as NG.

Judgment Value

Malfunction Criteria	Threshold Value
Number of times that the difference between the Max. fuel level every 60 s and Min. fuel level every 60 s is 2 ℓ (0.53 US gal, 0.44 Imp gal) or more (with enable condition established)	≥ 16 time(s)
Maximum – Minimum tank pressure (with enable condition completed)	< 0 kPa (0.375 mmHg, 0 inHg)
Maximum – Minimum fuel temperature (with enable condition completed)	≥ 7 °C (12.6°F)

If the difference between the Max. fuel level every 60 s and Min. fuel level every 60 s is less than 2 ℓ (0.53 US gal, 0.44 Imp gal), extend 60 s and make judgment with the Max. and Min. values for the fuel level in 60 s × 2. If there is no difference after the extension of 60 s, extend the time (60 s × 3, 60 s × 4, 60 s × 5) and continue the judgment. If the difference between the Max. fuel level every 60 s and Min. fuel level every 60 s is 2 ℓ (0.53 US gal, 0.44 Imp gal) or more, the diagnosis counter counts up.

Time Needed for Diagnosis: 60 s × 16 time(s) or more

Malfunction Indicator Light Illumination: Illuminates when malfunction occurs in 2 continuous driving cycles.

Normality Judgment

Judge as OK and clear the NG if the continuous time while the following conditions are established is more than the predetermined time.

Judgment Value

Malfunction Criteria	Threshold Value
Maximum – Minimum tank pressure	≥ 0 kPa (0.375 mmHg, 0 inHg)

Time Needed for Diagnosis: Less than 1 second

GETtheMANUALS.org

BZ:DTC P0452 EVAPORATIVE EMISSION CONTROL SYSTEM PRESSURE SENSOR LOW INPUT

1. OUTLINE OF DIAGNOSIS

Detect the open or short circuit of the fuel tank pressure sensor.
Judge as NG if out of specification.

2. COMPONENT DESCRIPTION

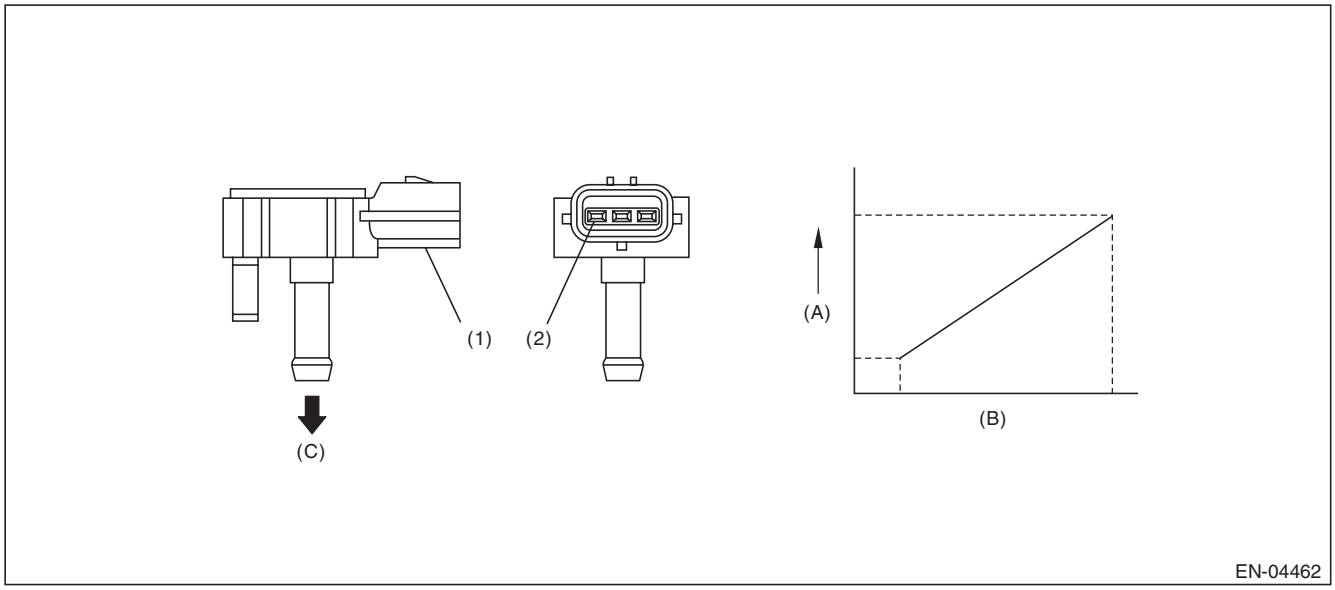

(A) Output voltage
(B) Input voltage
(C) To fuel tank
(1) Connector
(2) Terminals

3. ENABLE CONDITION

Secondary Parameters	Enable Conditions
None	

4. GENERAL DRIVING CYCLE

Always perform the diagnosis continuously.

GETtheMANUALS.org

5. DIAGNOSTIC METHOD

- **Abnormality Judgment**

If the duration of time while the following conditions are met is longer than the time indicated, judge as NG.

Judgment Value

Malfunction Criteria	Threshold Value
Fuel tank pressure	< –7.4 kPa (–55.6 mmHg, –2.2 inHg)
Battery voltage	≥ 10.9 V

Time Needed for Diagnosis: 15000 ms
Malfunction Indicator Light Illumination: Illuminates as soon as a malfunction occurs.

- **Normality Judgment**

Judge as OK and clear the NG if the continuous time while the following conditions are established is more than the predetermined time.

Judgment Value

Malfunction Criteria	Threshold Value
Fuel tank pressure	≥ –7.4 kPa (–55.6 mmHg, –2.2 inHg)
Battery voltage	≥ 10.9 V

Time Needed for Diagnosis: Less than 1 second

GETtheMANUALS.org

CA:DTC P0453 EVAPORATIVE EMISSION CONTROL SYSTEM PRESSURE SENSOR HIGH INPUT

1. OUTLINE OF DIAGNOSIS

Detect the open or short circuit of the fuel tank pressure sensor.
Judge as NG if out of specification.

2. COMPONENT DESCRIPTION

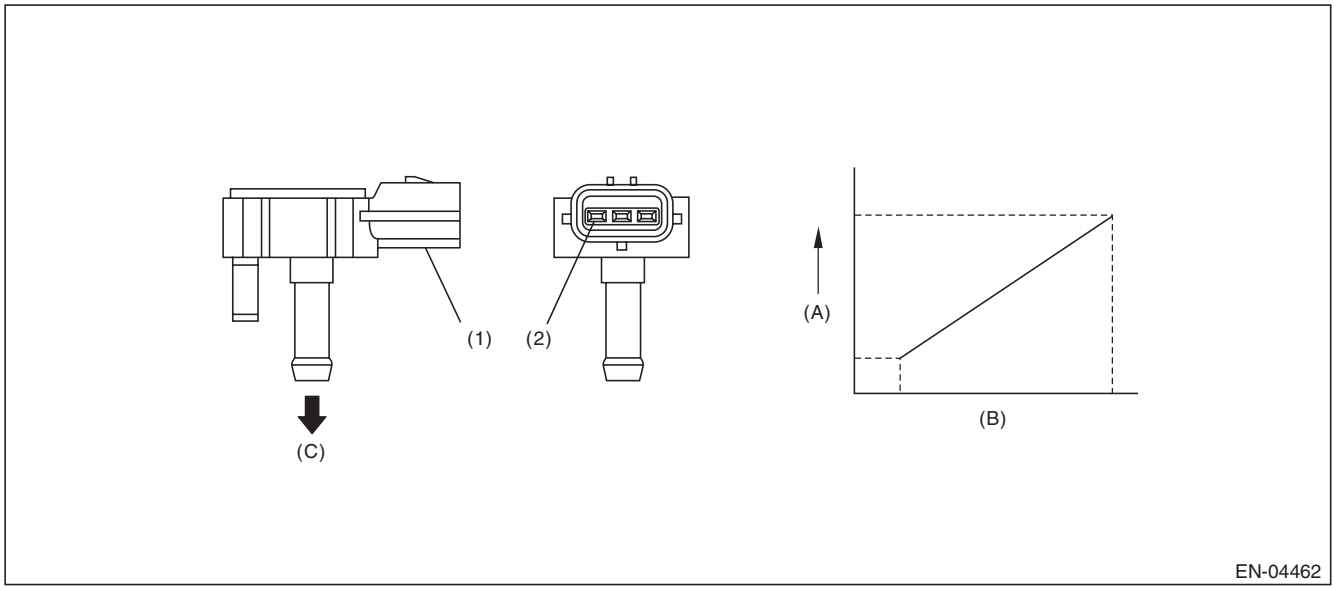

(A) Output voltage
(B) Input voltage
(C) To fuel tank
(1) Connector
(2) Terminals

3. ENABLE CONDITION

Secondary Parameters	Enable Conditions
Time needed for all secondary parameters to be in enable conditions	≥ 5000 ms
Vehicle speed	≥ 2 km/h (1.2 MPH)
All conditions of EVAP canister purge	Completed
Learning value of evaporation gas concentration (left and right)	< 0.08
Main feedback compensation coefficient (left and right)	≥ 0.9
Battery voltage	≥ 10.9 V

4. GENERAL DRIVING CYCLE

Perform the diagnosis when purging enable conditions are met without idling.

GETtheMANUALS.org

5. DIAGNOSTIC METHOD

- **Abnormality Judgment**

If the duration of time while the following conditions are met is longer than the time indicated, judge as NG.

Judgment Value

Malfunction Criteria	Threshold Value
Fuel tank pressure	≥ 7.9 kPa (59.6 mmHg, 2.3 inHg)
Fuel temperature	< 55 °C (131 °F)
Atmospheric pressure	≥ 75 kPa (563 mmHg, 22.2 inHg)

Time Needed for Diagnosis: 15000 ms
Malfunction Indicator Light Illumination: Illuminates as soon as a malfunction occurs.

- **Normality Judgment**

Judge as OK and clear the NG if the continuous time while the following conditions are established is more than the predetermined time.

Judgment Value

Malfunction Criteria	Threshold Value
Fuel tank pressure	< 7.9 kPa (59.6 mmHg, 2.3 inHg)

Time Needed for Diagnosis: Less than 1 second

CB:DTC P0456 EVAPORATIVE EMISSION CONTROL SYSTEM LEAK DETECTED (VERY SMALL LEAK)

1. OUTLINE OF DIAGNOSIS

NOTE:
For the detection standard, refer to DTC P0442. <Ref. to GD(H4SO)-141, DTC P0442 EVAPORATIVE EMISSION CONTROL SYSTEM LEAK DETECTED (SMALL LEAK), Diagnostic Trouble Code (DTC) Detecting Criteria.>

CC:DTC P0457 EVAPORATIVE EMISSION CONTROL SYSTEM LEAK DETECTED (FUEL CAP LOOSE/OFF)

1. OUTLINE OF DIAGNOSIS

NOTE:
For the detection standard, refer to DTC P0442. <Ref. to GD(H4SO)-141, DTC P0442 EVAPORATIVE EMISSION CONTROL SYSTEM LEAK DETECTED (SMALL LEAK), Diagnostic Trouble Code (DTC) Detecting Criteria.>

GETtheMANUALS.org

CD:DTC P0458 EVAPORATIVE EMISSION SYSTEM PURGE CONTROL VALVE CIRCUIT LOW

1. OUTLINE OF DIAGNOSIS

Detect open or short circuit of the purge control solenoid valve.
Judge as NG when the ECM output level differs from the actual terminal level.

2. COMPONENT DESCRIPTION

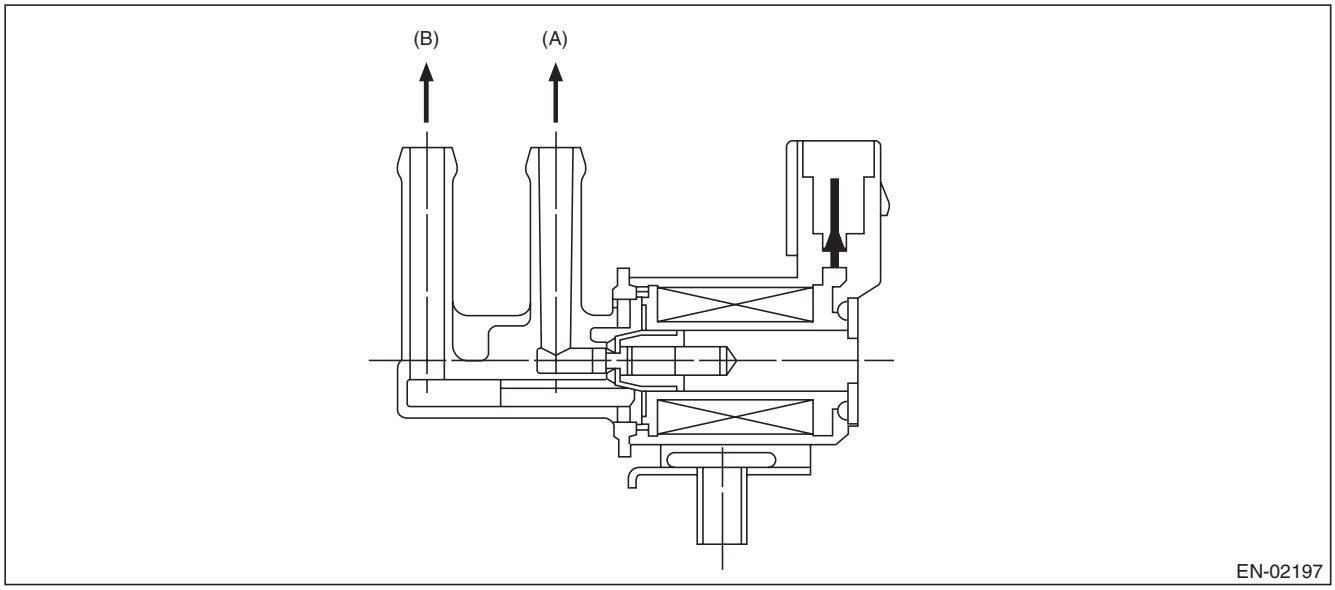

(A) To canister (B) To intake manifold

3. ENABLE CONDITION

Secondary Parameters	Enable Conditions
Battery voltage	≥ 10.9 V
Elapsed time after starting the engine	≥ 1 second

4. GENERAL DRIVING CYCLE

Always perform the diagnosis after starting the engine.

GETtheMANUALS.org

5. DIAGNOSTIC METHOD

- **Abnormality Judgment**

If the duration of time while the following conditions are met is longer than the time indicated, judge as NG.

Judgment Value

Malfunction Criteria	Threshold Value
Duty ratio of “ON”	< 0.75
Terminal output voltage	Low

Time Needed for Diagnosis: 2500 ms
Malfunction Indicator Light Illumination: Illuminates when malfunction occurs in 2 continuous driving cycles.

- **Normality Judgment**

Judge as OK and clear the NG if the continuous time while the following conditions are established is more than the predetermined time.

Judgment Value

Malfunction Criteria	Threshold Value
Terminal output voltage	High

Time Needed for Diagnosis: Less than 1 second

GETtheMANUALS.org

CE:DTC P0459 EVAPORATIVE EMISSION SYSTEM PURGE CONTROL VALVE CIRCUIT HIGH

1. OUTLINE OF DIAGNOSIS

Detect open or short circuit of the purge control solenoid valve.
Judge as NG when the ECM output level differs from the actual terminal level.

2. COMPONENT DESCRIPTION

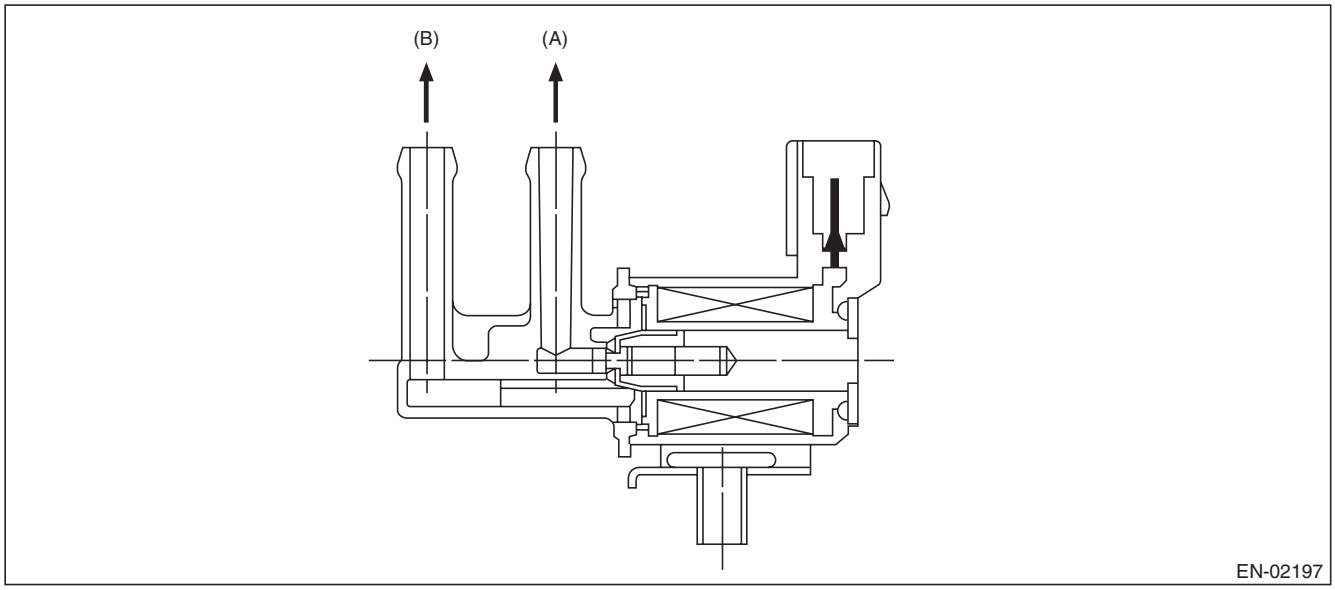

(A) To canister (B) To intake manifold

3. ENABLE CONDITION

Secondary Parameters	Enable Conditions
Battery voltage	≥ 10.9 V
Elapsed time after starting the engine	≥ 1 second

4. GENERAL DRIVING CYCLE

Always perform the diagnosis after starting the engine.

GETtheMANUALS.org

5. DIAGNOSTIC METHOD

- **Abnormality Judgment**

If the duration of time while the following conditions are met is longer than the time indicated, judge as NG.

Judgment Value

Malfunction Criteria	Threshold Value
Duty ratio of “ON”	≥ 0.25
Terminal output voltage	High

Time Needed for Diagnosis: 2500 ms
Malfunction Indicator Light Illumination: Illuminates when malfunction occurs in 2 continuous driving cycles.

- **Normality Judgment**

Judge as OK and clear the NG if the continuous time while the following conditions are established is more than the predetermined time.

Judgment Value

Malfunction Criteria	Threshold Value
Terminal output voltage	Low

Time Needed for Diagnosis: Less than 1 second

GETtheMANUALS.org

CF:DTC P0461 FUEL LEVEL SENSOR “A” CIRCUIT RANGE/PERFORMANCE

1. OUTLINE OF DIAGNOSIS

Detect malfunctions of the fuel level sensor output property.
If the fuel level does not vary in a particular driving condition / engine condition where it should, judge as NG.

2. COMPONENT DESCRIPTION

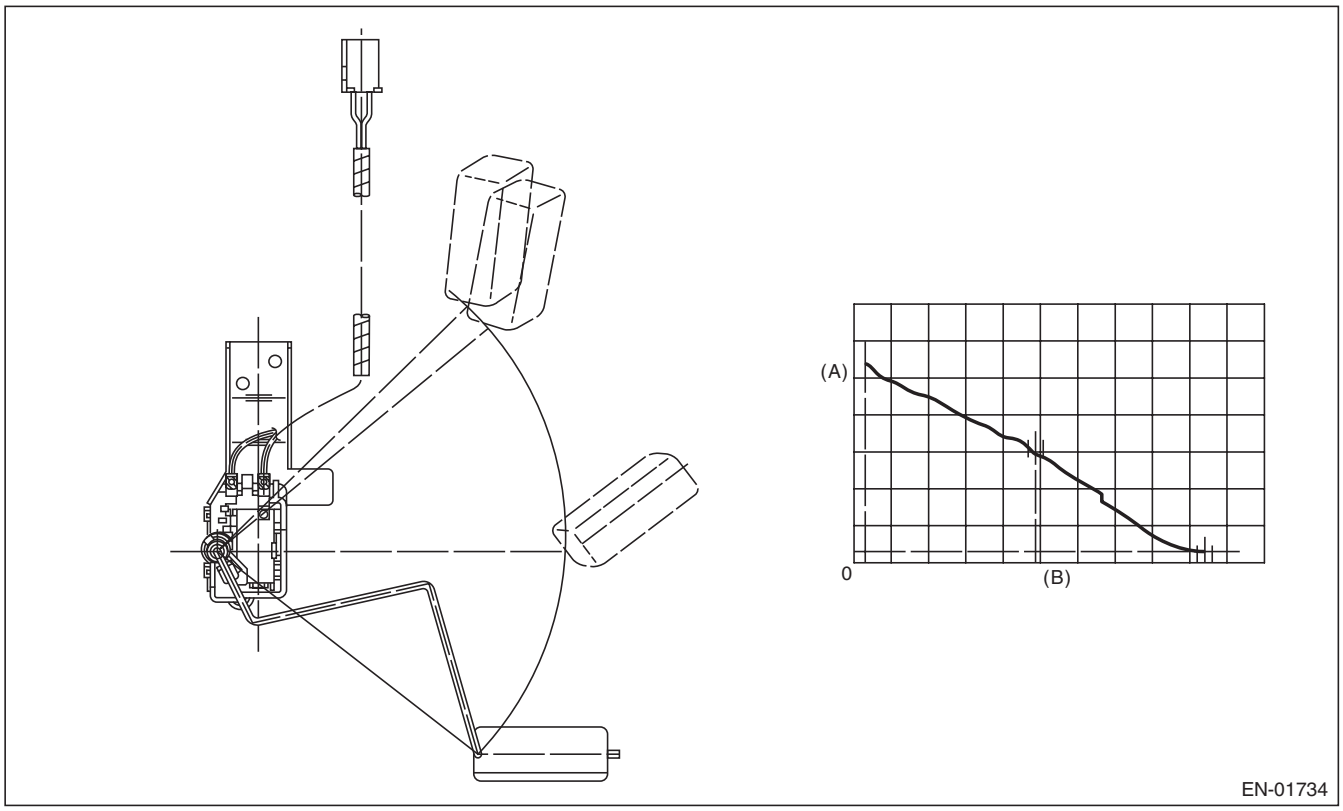

(A) Fuel level (B) Resistance

3. ENABLE CONDITION

Secondary Parameters	Enable Conditions
None	

4. GENERAL DRIVING CYCLE

Always perform the diagnosis continuously.

GETtheMANUALS.org

5. DIAGNOSTIC METHOD

- **Abnormality Judgment**

Judge as NG when the following conditions are established.

Judgment Value

Malfunction Criteria	Threshold Value
Accumulated amount of intake air	≥ 165375 g (5832.78 oz)
Max. – min. values of fuel level output	< 2.6 ℓ (0.69 US gal, 0.57 Imp gal)
Battery voltage	≥ 10.9 V
Engine speed	< 4000 rpm
Elapsed time after starting the engine	≥ 5000 ms

Time Needed for Diagnosis: Less than 1 second
Malfunction Indicator Light Illumination: Illuminates when malfunction occurs in 2 continuous driving cycles.

- **Normality Judgment**

Judge as OK and clear the NG if the following conditions are established.

Judgment Value

Malfunction Criteria	Threshold Value
Accumulated amount of intake air	≥ 165375 g (5832.78 oz)
Max. – min. values of fuel level output	≥ 2.6 ℓ (0.69 US gal, 0.57 Imp gal)
Battery voltage	≥ 10.9 V
Engine speed	< 4000 rpm
Elapsed time after starting the engine	≥ 5000 ms

Time Needed for Diagnosis: Less than 1 second

GETtheMANUALS.org

CG:DTC P0462 FUEL LEVEL SENSOR “A” CIRCUIT LOW

1. OUTLINE OF DIAGNOSIS

Detect the open or short circuit of fuel level sensor. Judge as NG if out of specification.

2. COMPONENT DESCRIPTION

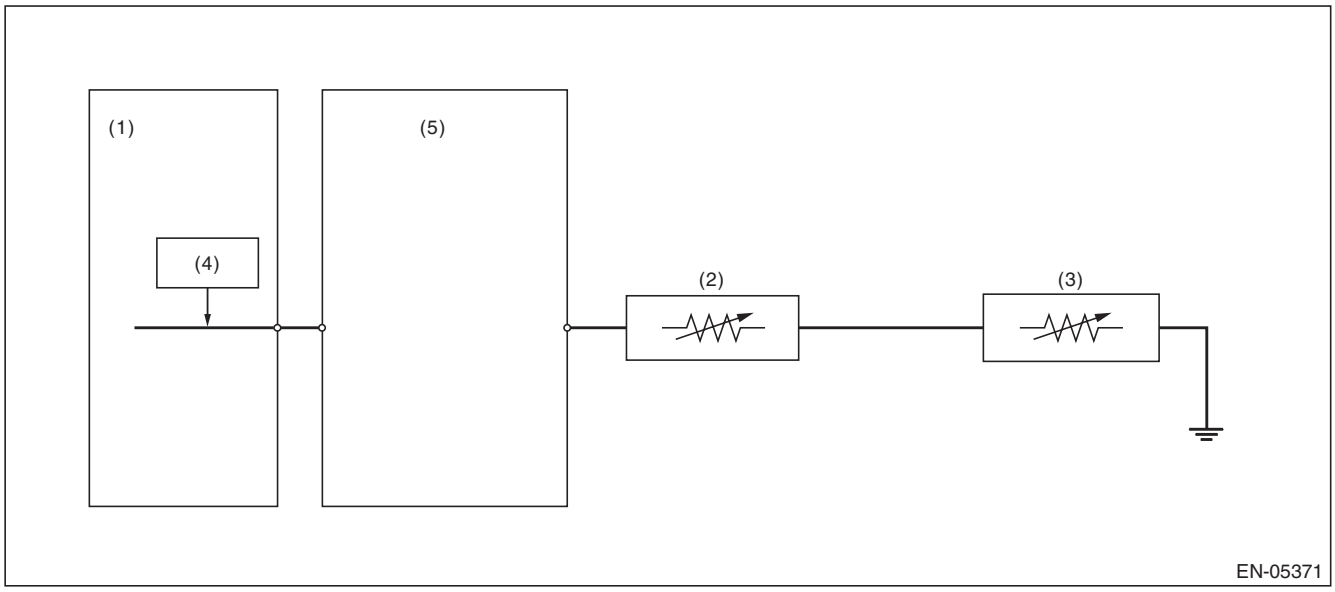

(1) Engine control module (ECM)
(2) Fuel level sensor
(3) Fuel sub level sensor
(4) Detecting circuit
(5) Body integrated unit

3. ENABLE CONDITION

Secondary Parameters	Enable Conditions
None	

4. GENERAL DRIVING CYCLE

Always perform the diagnosis continuously.

GETtheMANUALS.org

5. DIAGNOSTIC METHOD

- **Abnormality Judgment**

If the duration of time while the following conditions are met is longer than the time indicated, judge as NG.

Judgment Value

Malfunction Criteria	Threshold Value
Battery voltage	≥ 10.9 V
Elapsed time after starting the engine	≥ 3000 ms
Output voltage	< 0.173 V

Time Needed for Diagnosis: 2500 ms
Malfunction Indicator Light Illumination: Illuminates when malfunction occurs in 2 continuous driving cycles.

- **Normality Judgment**

Judge as OK and clear the NG if the continuous time while the following conditions are established is more than the predetermined time.

Judgment Value

Malfunction Criteria	Threshold Value
Battery voltage	≥ 10.9 V
Elapsed time after starting the engine	≥ 3000 ms
Output voltage	≥ 0.173 V

Time Needed for Diagnosis: Less than 1 second

GETtheMANUALS.org

CH:DTC P0463 FUEL LEVEL SENSOR “A” CIRCUIT HIGH

1. OUTLINE OF DIAGNOSIS

Detect the open or short circuit of fuel level sensor. Judge as NG if out of specification.

2. COMPONENT DESCRIPTION

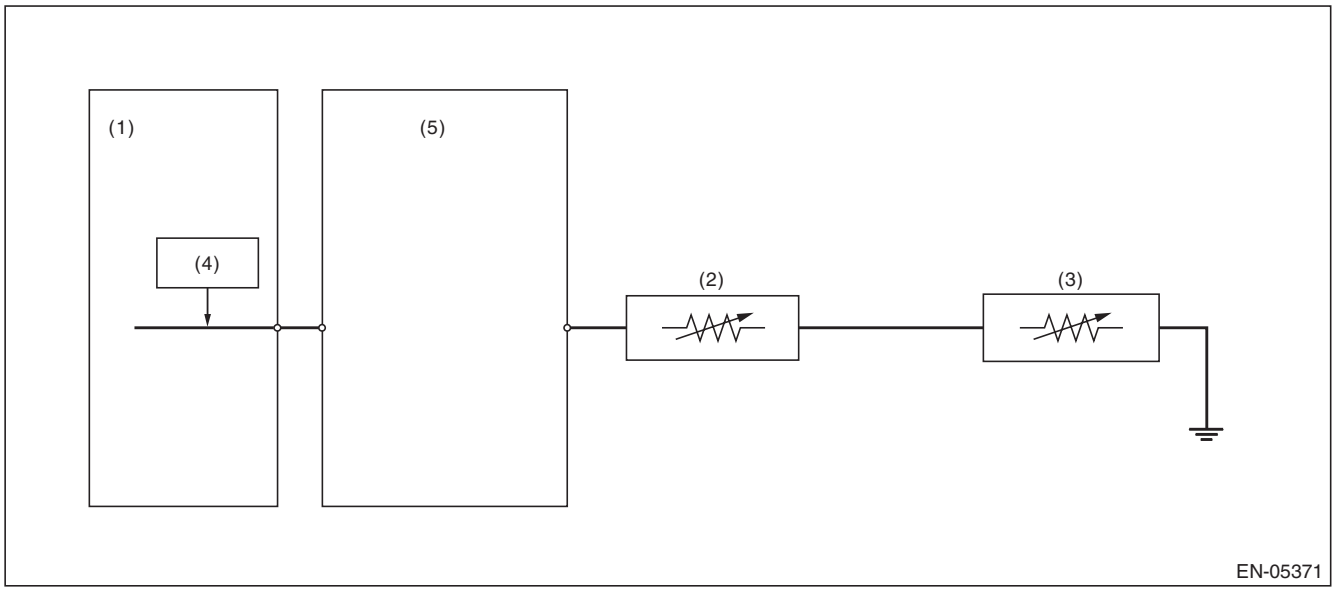

(1) Engine control module (ECM)
(2) Fuel level sensor
(3) Fuel sub level sensor
(4) Detecting circuit
(5) Body integrated unit

3. ENABLE CONDITION

Secondary Parameters	Enable Conditions
None	

4. GENERAL DRIVING CYCLE

Always perform the diagnosis continuously.

GETtheMANUALS.org

5. DIAGNOSTIC METHOD

- **Abnormality Judgment**

If the duration of time while the following conditions are met is longer than the time indicated, judge as NG.

Judgment Value

Malfunction Criteria	Threshold Value
Battery voltage	≥ 10.9 V
Elapsed time after starting the engine	≥ 3000 ms
Output voltage	≥ 7.212 V

Time Needed for Diagnosis: 1000 ms
Malfunction Indicator Light Illumination: Illuminates when malfunction occurs in 2 continuous driving cycles.

- **Normality Judgment**

Judge as OK and clear the NG if the continuous time while the following conditions are established is more than the predetermined time.

Judgment Value

Malfunction Criteria	Threshold Value
Battery voltage	≥ 10.9 V
Elapsed time after starting the engine	≥ 3000 ms
Output voltage	< 7.212 V

Time Needed for Diagnosis: Less than 1 second

GETtheMANUALS.org

CI: DTC P0464 FUEL LEVEL SENSOR CIRCUIT INTERMITTENT

1. OUTLINE OF DIAGNOSIS

Detect the unstable output faults from the fuel level sensor caused by noise. Judge as NG when the max. value and cumulative value of output voltage variation of the fuel level sensor is larger than the threshold value.

2. ENABLE CONDITION

Malfunction Criteria	Threshold Value
Engine speed	≥ 500 rpm
Elapsed time after starting the engine	≥ 1 s
Battery voltage	≥ 10.9 V
Idle switch	ON
Fuel level	≥ 10.5 ℓ (2.77 US gal, 2.31 Imp gal) and < 59.5 ℓ (15.72 US gal, 13.09 Imp gal)
Vehicle speed = 0 km/h (0 MPH)	≥ 10000 ms

3. GENERAL DRIVING CYCLE

- Always perform the diagnosis continuously at idle speed.
- Pay attention to the fuel level.

GETtheMANUALS.org

4. DIAGNOSTIC METHOD

Calculate the Max. value (DELFLMAX) and cumulative value (SUMFL) of output voltage variation of fuel level sensor during 12.2 seconds. Judge it normal when both max. and cumulative values are not over the threshold value. Otherwise, when either of them is over the threshold value, the diagnosis counter counts up. Judge as NG if the counter indicated 4 time(s).

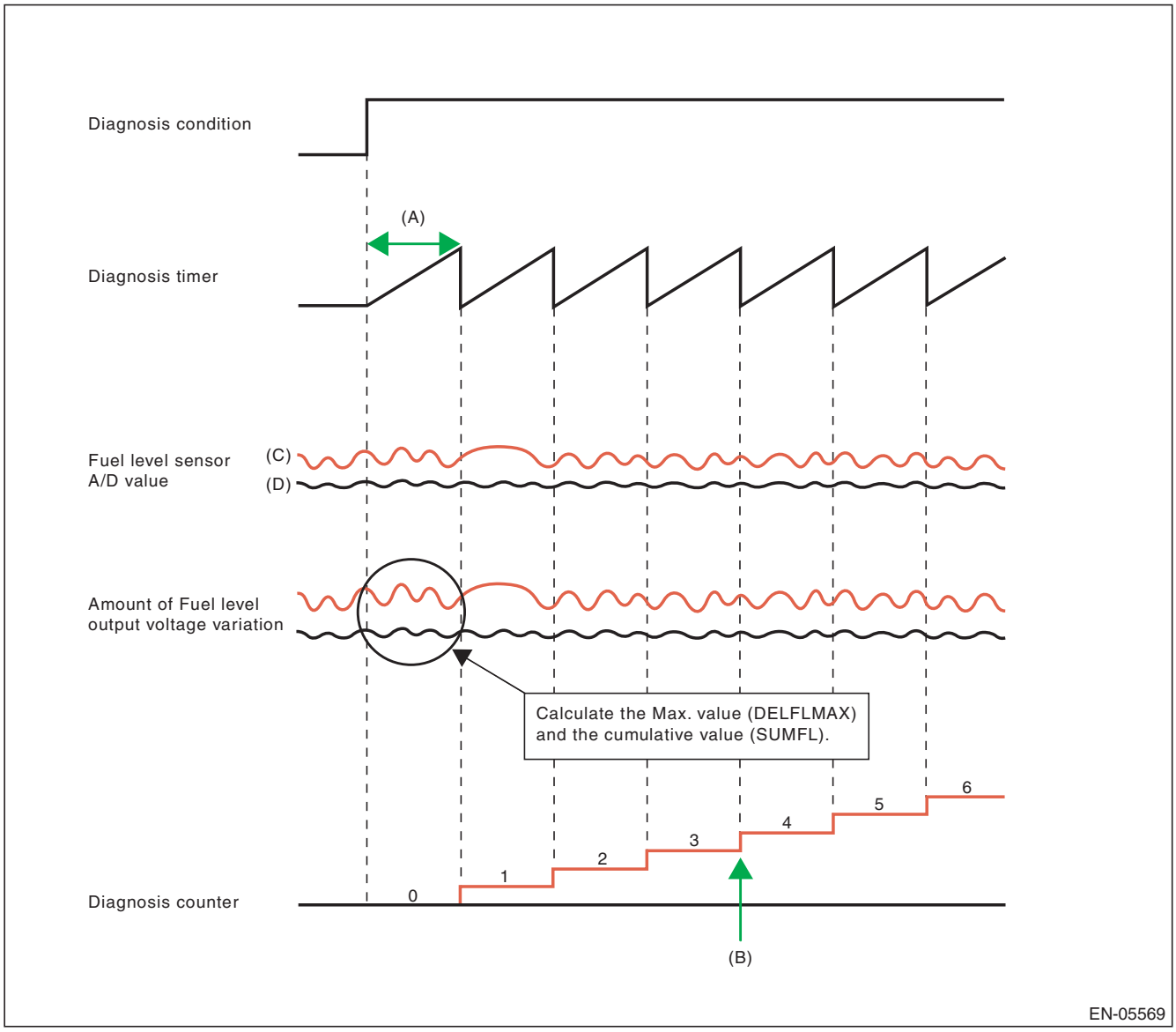

(A) 12288 ms
(B) NG at 4 time(s) counts
(C) Malfunction
(D) Normal

GETtheMANUALS.org

- **Abnormality Judgment**

If the duration of time while the following conditions are met is longer than the time indicated, judge as NG.

Judgment Value

Malfunction Criteria	Threshold Value
Integrated times of the condition reaching follows,	≥ 4 time(s)
DELFLMAX	≥ Value from Map
or	
SUMFL	≥ 23.8 V
At this time,	
DELFLMAX: Maximum difference of sensor output for 12288 ms	
SUMFL: Integrated value of the sensor output deviation for 12288 ms	

Map

Fuel level (ℓ , US gal, Imp gal)	10, 2.64, 2.2	20, 5.28, 4.4	25, 6.61, 5.5	30, 7.93, 6.6	43, 11.36, 9.46	45, 11.89, 9.9	50, 13.21, 11
Measured voltage (V)	0.248	0.519	0.796	0.6	1.025	1.069	1.402

The diagnosis counter does not count up when the following conditions are completed within 12288 ms.

Maximum value – minimum value of change of tank pressure during 12288 ms	≥ 0 kPa (0.375 mmHg, 0 inHg)
Maximum value – minimum value of battery voltage during 12288 ms	≥ 1.09 V

Time Needed for Diagnosis: 12288 ms × 4 time(s)
Malfunction Indicator Light Illumination: Illuminates when malfunction occurs in 2 continuous driving cycles.

- **Normality Judgment**

Judge as OK and clear the NG if the continuous time while the following conditions are established is more than the predetermined time.

Judgment Value

Malfunction Criteria	Threshold Value
DELFLMAX	< Value from Map
SUMFL	< 23.8 V
At this time,	
DELFLMAX: Maximum difference of sensor output for 12288 ms	
SUMFL: Integrated value of the sensor output deviation for 12288 ms	

Time Needed for Diagnosis: 12288 ms

GETtheMANUALS.org

CJ:DTC P0500 VEHICLE SPEED SENSOR “A”

1. OUTLINE OF DIAGNOSIS

Judge as NG when outside of the judgment value.
Judge NG when the received data from VDCCM&H/U is abnormal vehicle speed, and the vehicle speed data is impossible.

2. COMPONENT DESCRIPTION

Vehicle speed signals are taken in to the VDC control module and hydraulic control unit, and normal/erroneous data of the ABS wheel speed sensor is received by CAN communication from the VDC control module and hydraulic control unit.

3. ENABLE CONDITION

Secondary Parameters	Enable Conditions
Battery voltage	≥ 10.9 V
Elapsed time after starting the engine	≥ 2000 ms

4. GENERAL DRIVING CYCLE

Always perform diagnosis more than 2000 ms after starting the engine.

5. DIAGNOSTIC METHOD

- **Abnormality Judgment**

If the duration of time while the following conditions are met is longer than the time indicated, judge as NG.

Judgment Value

Malfunction Criteria	Threshold Value
Front ABS wheel speed sensor status	Malfunction
Either of the following is established	
Front left wheel speed	≥ 300 km/h (186.4 MPH)
Front right wheel speed	≥ 300 km/h (186.4 MPH)

Time Needed for Diagnosis: 2500 ms
Malfunction Indicator Light Illumination: Illuminates as soon as a malfunction occurs.

- **Normality Judgment**

Judge as OK and clear the NG if the continuous time while the following conditions are established is more than the predetermined time.

Judgment Value

Malfunction Criteria	Threshold Value
Front left wheel speed	> 0 km/h (0 MPH) and < 300 km/h (186.4 MPH)
Front right wheel speed	> 0 km/h (0 MPH) and < 300 km/h (186.4 MPH)

Time Needed for Diagnosis: 2500 ms

GETtheMANUALS.org

CK:DTC P0506 IDLE AIR CONTROL SYSTEM RPM LOWER THAN EXPECTED

1. OUTLINE OF DIAGNOSIS

Detect the malfunction that actual engine speed is not close to target engine speed during idling. Judge as NG when actual engine speed is not close to target engine speed during idling.

2. ENABLE CONDITION

Secondary Parameters	Enable Conditions
Engine coolant temperature	≥ 75 °C (167 °F)
Battery voltage	≥ 10.9 V
Atmospheric pressure	≥ 75 kPa (563 mmHg, 22.2 inHg)
Fuel level	≥ 9.6 ℓ (2.54 US gal, 2.11 Imp gal)
Elapsed time after starting the engine	≥ 10.49 s
Feedback of ISC	In operation
Lambda value (left and right)	≥ 0.81 and < 1.1
After switching air conditioner to ON/OFF	≥ 5.1 s
After intake manifold pressure changes by 4 kPa (30 mmHg, 1.2 inHg) or more.	> 5.1 s
Elapsed time after switching neutral position switch to ON/OFF	> 5.1 s
Vehicle speed	0 km/h (0 MPH)

3. GENERAL DRIVING CYCLE

Perform the diagnosis continuously at idling after warming up engine.

4. DIAGNOSTIC METHOD

- **Abnormality Judgment**

If the duration of time while the following conditions are met is longer than the time indicated, judge as NG.

Judgment Value

Malfunction Criteria	Threshold Value
Actual engine speed – Targeted engine speed	< –100 rpm
Feedback compensation for ISC	Max.

Time Needed for Diagnosis: 10 s × 3 time(s)
Malfunction Indicator Light Illumination: Illuminates when malfunction occurs in 2 continuous driving cycles.

- **Normality Judgment**

Judge as OK and clear the NG if the continuous time while the following conditions are established is more than the predetermined time.

Judgment Value

Malfunction Criteria	Threshold Value
Actual engine speed – Targeted engine speed	≥ –100 rpm

Time Needed for Diagnosis: 10 s

GETtheMANUALS.org

CL:DTC P0507 IDLE AIR CONTROL SYSTEM RPM HIGHER THAN EXPECTED

1. OUTLINE OF DIAGNOSIS

Detect the malfunction that actual engine speed is not close to target engine speed during idling. Judge as NG when actual engine speed is not close to target engine speed during idling.

2. ENABLE CONDITION

Secondary Parameters	Enable Conditions
Engine coolant temperature	≥ 75 °C (167 °F)
Battery voltage	≥ 10.9 V
Atmospheric pressure	≥ 75 kPa (563 mmHg, 22.2 inHg)
Fuel level	≥ 9.6 ℓ (2.54 US gal, 2.11 Imp gal)
Elapsed time after starting the engine	≥ 10.49 s
Feedback of ISC	In operation
Lambda value (left and right)	≥ 0.81 and < 1.1
After switching air conditioner to ON/OFF	≥ 5.1 s
After intake manifold pressure changes by 4 kPa (30 mmHg, 1.2 inHg) or more.	> 5.1 s
Elapsed time after switching neutral position switch to ON/OFF	> 5.1 s
Vehicle speed	0 km/h (0 MPH)

3. GENERAL DRIVING CYCLE

Perform the diagnosis continuously at idling after warming up engine.

4. DIAGNOSTIC METHOD

- **Abnormality Judgment**

If the duration of time while the following conditions are met is longer than the time indicated, judge as NG.

Judgment Value

Malfunction Criteria	Threshold Value
Actual – Target engine speed	≥ 200 rpm
Feedback compensation for ISC	Min.

Time Needed for Diagnosis: 10 s × 3 time(s)
Malfunction Indicator Light Illumination: Illuminates when malfunction occurs in 2 continuous driving cycles.

- **Normality Judgment**

Judge as OK and clear the NG if the continuous time while the following conditions are established is more than the predetermined time.

Judgment Value

Malfunction Criteria	Threshold Value
Actual – Target engine speed	< 200 rpm

Time Needed for Diagnosis: 10 s

GETtheMANUALS.org

CM:DTC P050A COLD START IDLE AIR CONTROL SYSTEM PERFORMANCE

1. OUTLINE OF DIAGNOSIS

- **When cold, the abnormality in the control of target engine speed increase is detected. (P050A)**

Judge as NG if the exhaust gas temperature diagnosis or idle speed diagnosis is NG.

- Exhaust gas temperature diagnosis

Judge as NG when the estimated exhausted gas temperature in 14 seconds after the cold start is below the specified value.

- Idle speed diagnosis

Judge as NG when actual engine speed is not close to target engine speed at cold start.

- **Detect malfunctions of the catalyst advanced idling retard angle control. (P050B)**

Judge as NG when ECM is not controlling the angle properly during catalyst advanced idling retard angle control.

- Final ignition timing diagnosis

Judge as NG when actual retard amount is under the specified value at cold start.

GETtheMANUALS.org

2. ENABLE CONDITIONS

Secondary Parameters	Enable Conditions
<Exhaust gas temperature diagnosis>	
Atmospheric pressure	≥ 75 kPa (563 mmHg, 22.2 inHg)
Battery voltage	> 10.9 V
Engine condition	In operation
Vehicle speed	≤ 2 km/h (1.2 MPH)
Elapsed time after gear position change (P ←→ D or N ←→ D)	≥ 3000 ms
ISC feedback	In operation
Throttle opening angle	< 0.37 °
Fuel property	Not extremely low volatility
Target retard amount	≥ 8 °CA (CVT model) ≥ 8 °CA (MT model)
<Idle speed diagnosis>	
Atmospheric pressure	≥ 75 kPa (563 mmHg, 22.2 inHg)
Battery voltage	> 10.9 V
Engine condition	In operation
Vehicle speed	≤ 2 km/h (1.2 MPH)
Engine coolant temperature	≤ 60 °C (140 °F)
Intake air amount sum value	≤ Value of Map 1
Elapsed time after gear position change (P ←→ D or N ←→ D)	≥ 3000 ms
Throttle opening angle	< 0.37 °
Fuel property	Not extremely low volatility
Elapsed time after starting the engine	≥ 2000 ms
<Final ignition timing diagnosis>	
Atmospheric pressure	≥ 75 kPa (563 mmHg, 22.2 inHg)
Battery voltage	> 10.9 V
Engine condition	In operation
Vehicle speed	≤ 2 km/h (1.2 MPH)
Engine coolant temperature	≤ 60 °C (140 °F)
Intake air amount sum value	≤ Value of Map 2
Elapsed time after gear position change (P ←→ D or N ←→ D)	≥ 3000 ms
Throttle opening angle	< 0.37 °
Fuel property	Not extremely low volatility
Target retard amount	≥ Value from Map 3

Map 1 (PZEV model)

Engine coolant temperature at engine starting °C (°F)	–40 (–40)	–30 (–22)	–20 (–4)	–10 (14)	0 (32)	10 (50)	20 (68)	30 (86)
Intake air amount sum value g (oz)	1070 (37.74)	840 (29.63)	680 (23.98)	570 (20.1)	500 (17.64)	480 (16.93)	480 (16.93)	480 (16.93)

Engine coolant temperature at engine starting °C (°F)	40 (104)	50 (122)	60 (140)	70 (158)	80 (176)	90 (194)	100 (212)	110 (230)
Intake air amount sum value g (oz)	480 (16.93)	450 (15.87)	360 (12.7)	360 (12.7)	360 (12.7)	360 (12.7)	360 (12.7)	360 (12.7)

GETtheMANUALS.org

Map 1 (except for PZEV model)

Engine coolant temperature at engine starting °C (°F)	–40 (–40)	–30 (–22)	–20 (–4)	–10 (14)	0 (32)	10 (50)	20 (68)	30 (86)
Intake air amount sum value g (oz)	1170 (41.27)	1010 (35.62)	860 (30.33)	730 (25.75)	640 (22.57)	570 (20.1)	540 (19.05)	530 (18.69)

Engine coolant temperature at engine starting °C (°F)	40 (104)	50 (122)	60 (140)	70 (158)	80 (176)	90 (194)	100 (212)	110 (230)
Intake air amount sum value g (oz)	510 (17.99)	470 (16.58)	410 (14.46)	410 (14.46)	410 (14.46)	410 (14.46)	410 (14.46)	410 (14.46)

Map 2 (PZEV model)

Engine coolant temperature at engine starting °C (°F)	–40 (–40)	–30 (–22)	–20 (–4)	–10 (14)	0 (32)	10 (50)	20 (68)	30 (86)
Intake air amount sum value g (oz)	1070 (37.74)	840 (29.63)	680 (23.98)	570 (20.1)	500 (17.64)	480 (16.93)	480 (16.93)	480 (16.93)

Engine coolant temperature at engine starting °C (°F)	40 (104)	50 (122)	60 (140)	70 (158)	80 (176)	90 (194)	100 (212)	110 (230)
Intake air amount sum value g (oz)	480 (16.93)	450 (15.87)	360 (12.7)	360 (12.7)	360 (12.7)	360 (12.7)	360 (12.7)	360 (12.7)

Map 2 (except for PZEV model)

Engine coolant temperature at engine starting °C (°F)	–40 (–40)	–30 (–22)	–20 (–4)	–10 (14)	0 (32)	10 (50)	20 (68)	30 (86)
Intake air amount sum value g (oz)	1170 (41.27)	1010 (35.62)	860 (30.33)	730 (25.75)	640 (22.57)	570 (20.1)	540 (19.05)	530 (18.69)

Engine coolant temperature at engine starting °C (°F)	40 (104)	50 (122)	60 (140)	70 (158)	80 (176)	90 (194)	100 (212)	110 (230)
Intake air amount sum value g (oz)	510 (17.99)	470 (16.58)	410 (14.46)	410 (14.46)	410 (14.46)	410 (14.46)	410 (14.46)	410 (14.46)

Map 3

Engine coolant temperature	–40 °C (–40 °F)	–30 °C (–22 °F)	–20 °C (–4 °F)	–10 °C (14 °F)	0 °C (32 °F)	10 °C (50 °F)	20 °C (68 °F)	30 °C (86 °F)	40 °C (104 °F)	50 °C (122 °F)	60 °C (140 °F)
Target retard amount	3.5 °CA	3.5 °CA	3.5 °CA	3.5 °CA	3.5 °CA	3.5 °CA	3.5 °CA	3.5 °CA	3.5 °CA	3.5 °CA	3.5 °CA

3. GENERAL DRIVING CYCLE

Perform the diagnosis at cold start.

GETtheMANUALS.org

4. DIAGNOSTIC METHOD

- **Exhaust gas temperature diagnosis**

Abnormality Judgment

Calculate the estimated exhaust gas temperature when the diagnostic enable condition is established. Judge as NG when the following conditions are established.

Judgment Value

Malfunction Criteria	Threshold Value
Estimated exhaust gas temperature	< Value of Map 4

Map 4 (PZEV model)

Engine coolant temperature at engine starting	–40 °C (–40 °F)	–30 °C (–22 °F)	–20 °C (–4 °F)	–10 °C (14 °F)	0 °C (32 °F)	10 °C (50 °F)	20 °C (68 °F)	30 °C (86 °F)	40 °C (104 °F)	50 °C (122 °F)
Threshold value (CVT model)	140 °C (284 °F)	140 °C (284 °F)	140 °C (284 °F)	140 °C (284 °F)	140 °C (284 °F)	138 °C (280.4 °F)	138 °C (280.4 °F)	138 °C (280.4 °F)	138 °C (280.4 °F)	138 °C (280.4 °F)
Threshold value (MT model)	140 °C (284 °F)	140 °C (284 °F)	140 °C (284 °F)	140 °C (284 °F)	138 °C (280.4 °F)	138 °C (280.4 °F)	138 °C (280.4 °F)	138 °C (280.4 °F)	125 °C (257 °F)	115 °C (239 °F)

Map 4 (except for PZEV model)

Engine coolant temperature at engine starting	–40 °C (–40 °F)	–30 °C (–22 °F)	–20 °C (–4 °F)	–10 °C (14 °F)	0 °C (32 °F)	10 °C (50 °F)	20 °C (68 °F)	30 °C (86 °F)	40 °C (104 °F)	50 °C (122 °F)
Threshold value (CVT model)	140 °C (284 °F)	140 °C (284 °F)	140 °C (284 °F)	140 °C (284 °F)	140 °C (284 °F)	140 °C (284 °F)	135 °C (275 °F)	130 °C (266 °F)	125 °C (257 °F)	125 °C (257 °F)
Threshold value (MT model)	140 °C (284 °F)	140 °C (284 °F)	140 °C (284 °F)	140 °C (284 °F)	140 °C (284 °F)	140 °C (284 °F)	135 °C (275 °F)	130 °C (266 °F)	120 °C (248 °F)	115 °C (239 °F)

Time Needed for Diagnosis: 14 seconds

Malfunction Indicator Light Illumination: Illuminates when malfunction occurs in 2 continuous driving cycles.

Normality Judgment

Judge as OK and clear the NG if the following conditions are established.

Judgment Value

Malfunction Criteria	Threshold Value
Estimated exhaust gas temperature	≥ Value of Map 4

Time Needed for Diagnosis: Less than 1 second

GETtheMANUALS.org

- **Idle speed diagnosis**

Abnormality Judgment
Judge as NG when the following conditions are established.
Judgment Value

Malfunction Criteria	Threshold Value
Actual engine speed – Target engine speed	< – 125 rpm

Time Needed for Diagnosis: 5000 ms
Malfunction Indicator Light Illumination: Illuminates when malfunction occurs in 2 continuous driving cycles.
Normality Judgment
Judge as OK and clear the NG if the following conditions are established.
Judgment Value

Malfunction Criteria	Threshold Value
Actual engine speed – Target engine speed	≥ – 125 rpm

Time Needed for Diagnosis: 5000 ms

- **Final ignition timing diagnosis**

Abnormality Judgment
Judge as NG when the following conditions are established.
Judgment Value

Malfunction Criteria	Threshold Value
Final ignition timing – ignition timing during CSERS* *: Ignition timing during CSERS (Cold Start Emission Reduction Strategy) = Base ignition timing – retard amount	> Value of Map 5

Map 5

Engine coolant temperature	–40 °C (–40 °F)	–30 °C (–22 °F)	–20 °C (–4 °F)	–10 °C (14 °F)	0 °C (32 °F)	10 °C (50 °F)	20 °C (68 °F)	30 °C (86 °F)	40 °C (104 °F)	50 °C (122 °F)	60 °C (140 °F)
Threshold Value	3.5 °CA	3.5 °CA	3.5 °CA	3.5 °CA	3.5 °CA	3.5 °CA	3.5 °CA	3.5 °CA	3.5 °CA	3.5 °CA	3.5 °CA

Time Needed for Diagnosis: 5000 ms
Malfunction Indicator Light Illumination: Illuminates when malfunction occurs in 2 continuous driving cycles.
Normality Judgment
Judge as OK and clear the NG if the following conditions are established.
Judgment Value

Malfunction Criteria	Threshold Value
Final ignition timing – ignition timing during CSERS* *: Ignition timing during CSERS (Cold Start Emission Reduction Strategy) = Base ignition timing – retard amount	≤ Value of Map 5

Time Needed for Diagnosis: 5000 ms

GETtheMANUALS.org

CN:DTC P050B COLD START IGNITION TIMING PERFORMANCE

1. OUTLINE OF DIAGNOSIS

NOTE:
For the detection standard, refer to DTC P050A. <Ref. to GD(H4SO)-183, DTC P050A COLD START IDLE AIR CONTROL SYSTEM PERFORMANCE, Diagnostic Trouble Code (DTC) Detecting Criteria.>

GETtheMANUALS.org

CO:DTC P0512 STARTER REQUEST CIRCUIT

1. OUTLINE OF DIAGNOSIS

Detect the open or short circuit of starter SW.
Judge as ON NG when the starter SW signal remains ON.

2. ENABLE CONDITION

Secondary Parameters	Enable Conditions
None	

3. GENERAL DRIVING CYCLE

Always perform the diagnosis continuously.

4. DIAGNOSTIC METHOD

- **Abnormality Judgment**

If the duration of time while the following conditions are met is longer than the time indicated, judge as NG.

Judgment Value

Malfunction Criteria	Threshold Value
Engine condition	After engine starting
Starter OFF signal	Not detected
Battery voltage	≥ 8 V

Time Needed for Diagnosis: 30000 ms
Malfunction Indicator Light Illumination: Illuminates when malfunction occurs in 2 continuous driving cycles.

- **Normality Judgment**

Judge as OK and clear the NG if the continuous time while the following conditions are established is more than the predetermined time.

Judgment Value

Malfunction Criteria	Threshold Value
Starter OFF signal	Detected
Battery voltage	≥ 8 V

Time Needed for Diagnosis: Less than 1 second

GETtheMANUALS.org

CP:DTC P0513 INCORRECT IMMOBILIZER KEY

1. OUTLINE OF DIAGNOSIS

DTC	Item	Outline of Diagnosis
P0513	Incorrect Immobilizer Key	Incorrect immobilizer key (Use of unregistered key in body integrated unit)
P1570	Antenna	Faulty antenna
P1571	Reference Code Incompatibility	Reference code incompatibility between body integrated unit and ECM
P1572	IMM Circuit Failure (Except Antenna Circuit)	Communication failure between body integrated unit and ECM
P1574	Key Communication Failure	Failure of body integrated unit to verify key (transponder) ID code or transponder failure
P1576	EGI Control Module EEPROM	ECM malfunctioning
P1577	IMM Control Module EEPROM	Body integrated unit malfunctioning
P1578	Meter Failure	Reference code incompatibility between body integrated unit and combination meter

2. ENABLE CONDITION

When starting the engine.

3. GENERAL DRIVING CYCLE

Perform the diagnosis only after starting the engine.

4. DIAGNOSTIC METHOD

Judge as NG when the conditions for the outline of the diagnosis of the top are established.

GETtheMANUALS.org

CQ:DTC P0604 INTERNAL CONTROL MODULE RANDOM ACCESS MEMORY (RAM) ERROR

1. OUTLINE OF DIAGNOSIS

Detect the malfunction of microcomputer (RAM).
When there is a problem in the CPU normal RAM, judge as NG.
If it is possible to write data to the whole area of RAM in the initial routine, and is possible to read the same data, it is judged as OK, and if not, NG.

2. ENABLE CONDITION

Secondary Parameters	Enable Conditions
None	

Diagnosis with the initial routine.

3. GENERAL DRIVING CYCLE

Perform the diagnosis as soon as the ignition switch is turned to ON.

4. DIAGNOSTIC METHOD

- **Abnormality Judgment**

Judge as NG when the following conditions are established.

Judgment Value

Malfunction Criteria	Threshold Value
Write the specified value into the RAM.	The written value cannot be read.

Time Needed for Diagnosis: Less than 1 second
Malfunction Indicator Light Illumination: Illuminates as soon as a malfunction occurs.

- **Normality Judgment**

Judge as OK and clear the NG if the following conditions are established.

Judgment Value

Malfunction Criteria	Threshold Value
Write the specified value into the RAM.	The written value can be read.

Time Needed for Diagnosis: Less than 1 second

GETtheMANUALS.org

CR:DTC P0605 INTERNAL CONTROL MODULE READ ONLY MEMORY (ROM) ERROR

1. OUTLINE OF DIAGNOSIS

Judge as NG when SUM value of ROM is outside the standard value.

2. ENABLE CONDITION

Secondary Parameters	Enable Conditions
Ignition switch	ON

3. GENERAL DRIVING CYCLE

Always perform the diagnosis continuously.

4. DIAGNOSTIC METHOD

Abnormality Judgment

Judge as NG if the criteria below are met.

Judgment Value

Malfunction Criteria	Threshold Value
SUM value of ROM	Standard

Time Needed for Diagnosis: Undetermined
Malfunction Indicator Light Illumination: Illuminates as soon as a malfunction occurs.

GETtheMANUALS.org

CS:DTC P0607 THROTTLE CONTROL SYSTEM CIRCUIT RANGE/PERFORMANCE

1. OUTLINE OF DIAGNOSIS

Judge as NG when any one of the followings is established.
(1) Monitoring IC operates abnormally. (Monitoring IC malfunction)
(2) Input amplifier circuit of throttle position sensor 1 operates abnormally. (fourfold amplifier malfunction)
(3) CPU operates abnormally. (Instruction/flow check)
(4) A/D converter operates abnormally. (ADC malfunction)
(5) EEPROM operates abnormally. (EEPROM malfunction)
(6) Output IC operates abnormally. (Output driver malfunction)

2. COMPONENT DESCRIPTION

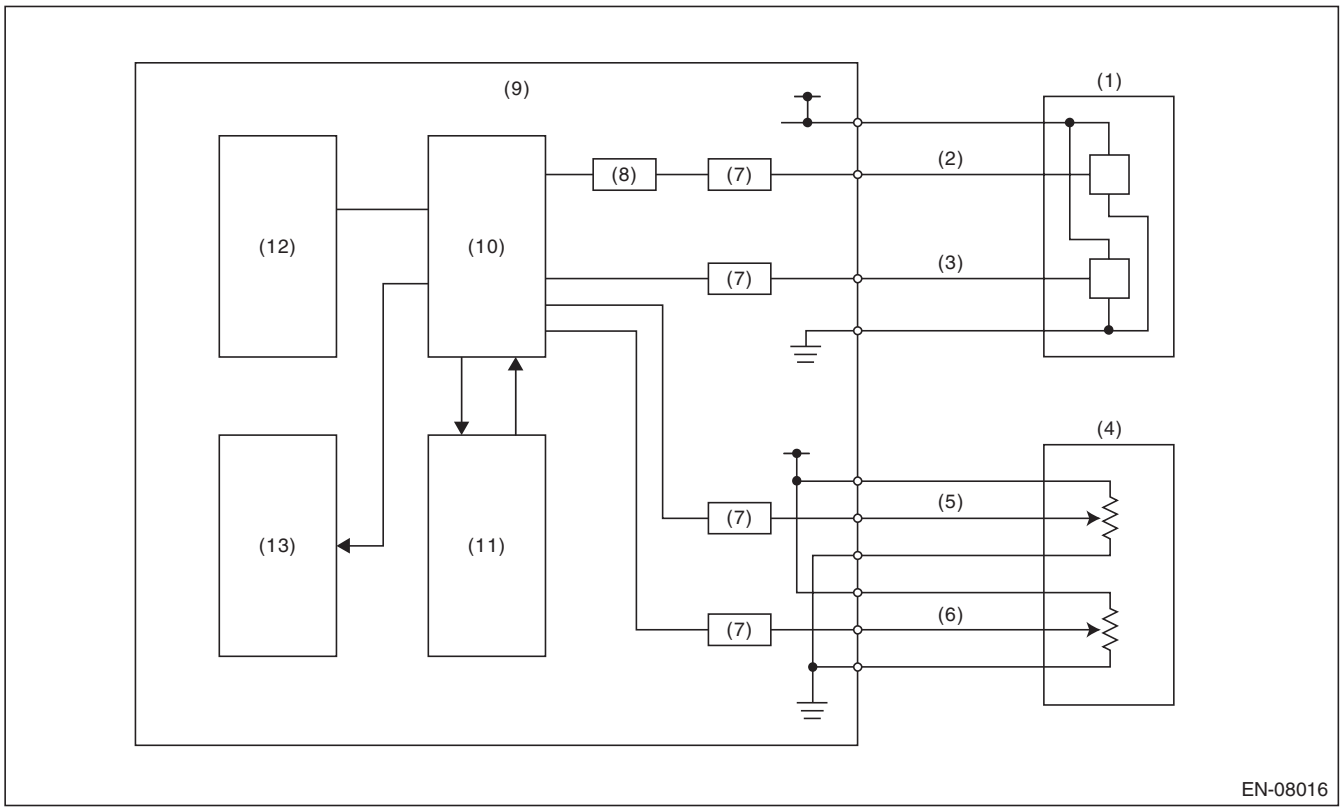

(1)	Throttle position sensor	(6)	Accelerator pedal position sensor 2	(10)	CPU
(2)	Throttle position sensor 1	(7)	I/F circuit	(11)	Monitoring IC
(3)	Throttle position sensor 2	(8)	Amplifier circuit	(12)	EEPROM
(4)	Accelerator pedal position sensor	(9)	Engine control module (ECM)	(13)	Output IC
(5)	Accelerator pedal position sensor 1				

GETtheMANUALS.org

3. ENABLE CONDITION

Secondary Parameters	Enable Conditions
(1) Battery voltage	≥ 6 V
(2) Ignition switch	ON
(2) Battery voltage	≥ 6 V
(3) Ignition switch	ON
(3) ETC control	Permitted
(4) Ignition switch	ON
(4) Battery voltage	≥ 6 V
(5) Starter switch	OFF
(5) Battery voltage	> 6 V
(6) Ignition switch	ON
(6) Battery voltage	≥ 10.9 V

4. GENERAL DRIVING CYCLE

Always perform the diagnosis continuously.

5. DIAGNOSTIC METHOD

Judge as OK and clear the NG when the malfunction criteria below are met.

Judgment Value

Malfunction Criteria	Threshold Value
(1) Monitoring IC operation	The result and estimated value match.
(2) | Throttle position sensor 1 opening angle – (Throttle position sensor 1 opening angle after passing amplifier)/4 |	< 3 °
(3) Main CPU calculation result	The result and estimated value match.
(4) | Standard voltage – Voltage reading |	< 0.078125 V
(5) EEPROM writing	Writing completed
(6) Communication with output IC	Possible to communicate

Time Needed for Diagnosis:
(1): 200 ms
(2): 24 ms
(3): 192 ms
(4): 200 ms
(5): 48 ms
(6): 2500 ms
Malfunction Indicator Light Illumination: Illuminates as soon as a malfunction occurs.

GETtheMANUALS.org

CT:DTC P0638 THROTTLE ACTUATOR CONTROL RANGE/PERFORMANCE (BANK 1)

1. OUTLINE OF DIAGNOSIS

Judge as NG when the target opening angle and actual opening angle is mismatched or the current to motor is the specified duty or more for specified time continuously.

2. COMPONENT DESCRIPTION

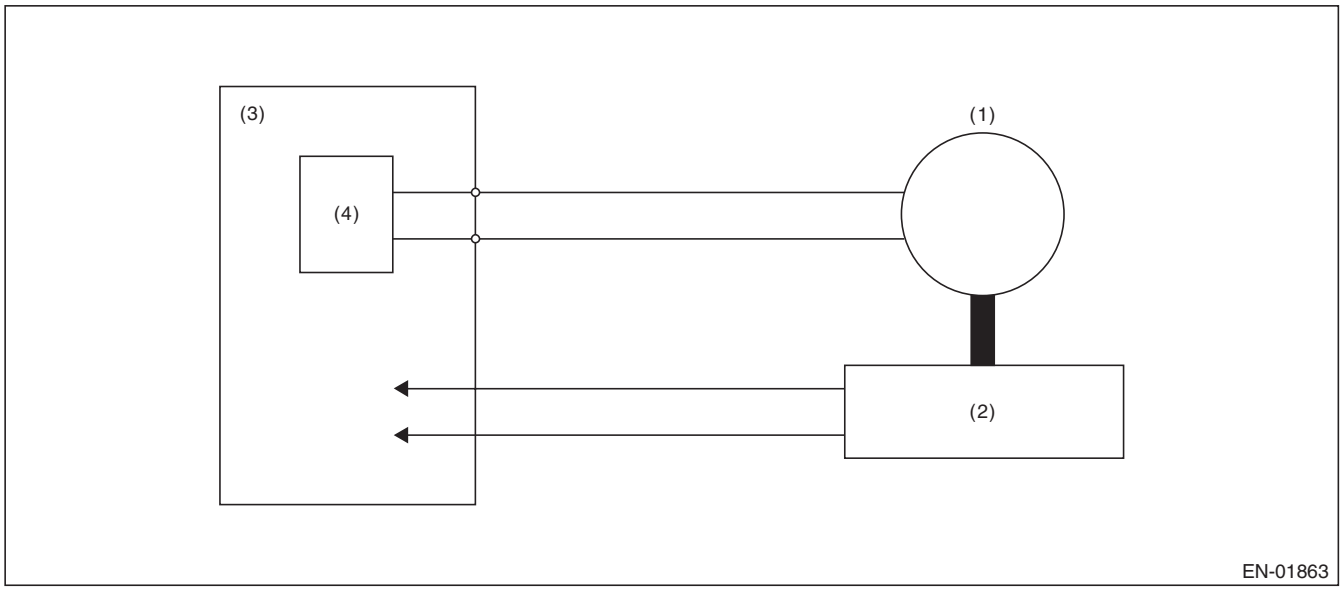

(1) Motor
(2) Throttle position sensor
(3) Engine control module (ECM)
(4) Drive circuit

3. ENABLE CONDITION

Secondary Parameters	Enable Conditions
Ignition switch	ON
Normal operation of electronic throttle control	ON

4. GENERAL DRIVING CYCLE

Always perform the diagnosis continuously when the electronic throttle control is operating.

5. DIAGNOSTIC METHOD

Judge as OK and clear the NG when the malfunction criteria below are met.

Judgment Value

Malfunction Criteria	Threshold Value
Difference between target opening angle and actual opening angle	Within the OK range of **judgment value detail**
Output duty to drive circuit	< 95 %

Time Needed for Diagnosis:

- Difference between target opening angle and actual opening angle:
  - NG judgment: Refer to the **judgment time detail**.
  - OK judgment: 2000 ms
- Output duty to drive circuit: 2000 ms

GETtheMANUALS.org

Details of Judgment Value

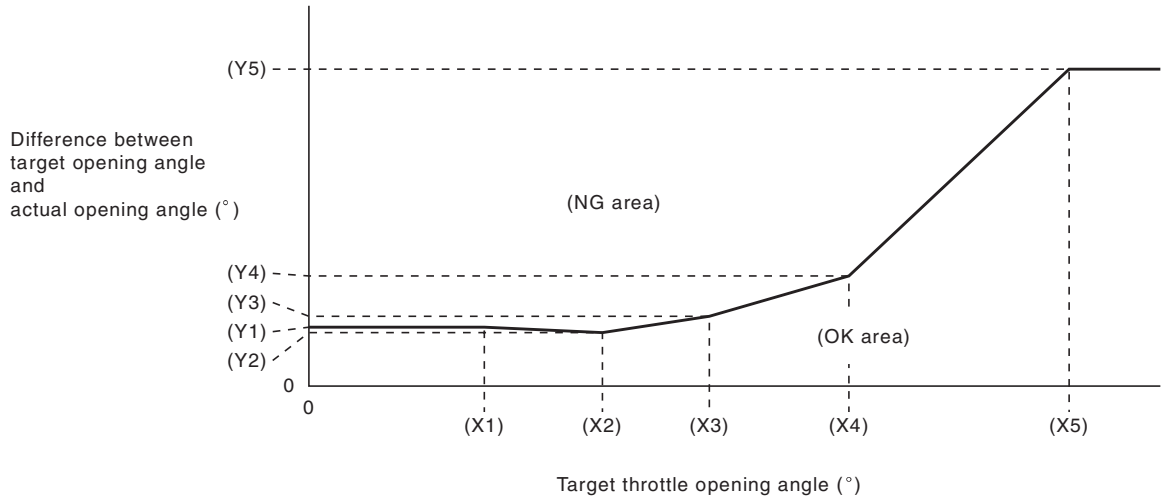

(X1)	6.915 °	(X2)	11.565 °	(X3)	15.785 °
(X4)	21.285 °	(X5)	29.965 °		
(Y1)	4.65 °	(Y2)	4.22 °	(Y3)	5.5 °
(Y4)	8.68 °	(Y5)	25 °		

Judgment time detail

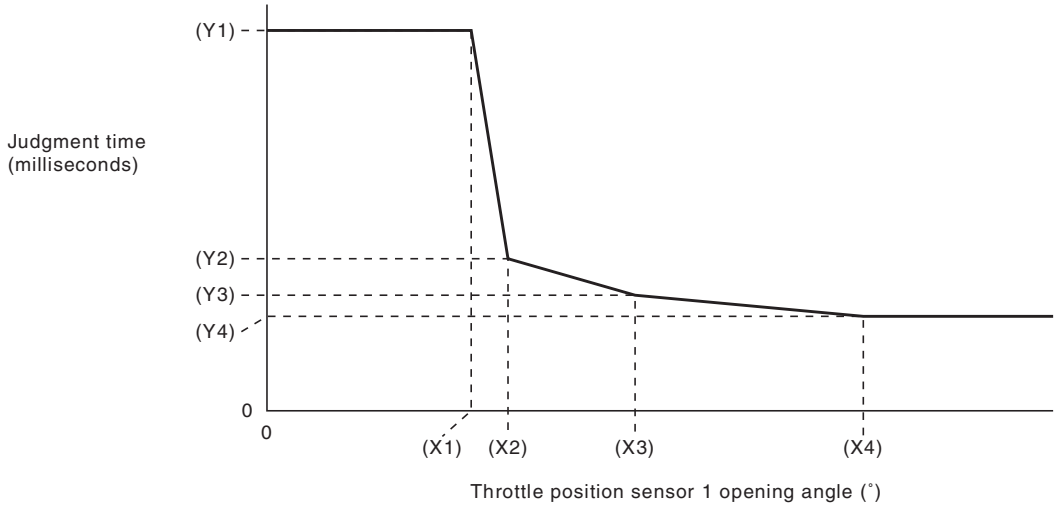

(X1)	8.049999237 °	(X2)	9.5 °	(X3)	14.5 °
(X4)	23.5 °				
(Y1)	1000 ms	(Y2)	400 ms	(Y3)	304 ms
(Y4)	248 ms				

NOTE:
Judgment time is constantly 1000 ms with Actual opening angle ≤ Target opening angle.
Malfunction Indicator Light Illumination: Illuminates as soon as a malfunction occurs.

GETtheMANUALS.org

CU:DTC P0700 TRANSMISSION CONTROL SYSTEM (MIL REQUEST)

1. OUTLINE OF DIAGNOSIS

Judge as NG when there is CAN communication with the TCM and there is a MIL lighting request.

2. ENABLE CONDITION

Secondary Parameters	Enable Conditions
None	

3. GENERAL DRIVING CYCLE

Always perform the diagnosis continuously.

4. DIAGNOSTIC METHOD

- **Abnormality Judgment**

If the duration of time while the following conditions are met is longer than the time indicated, judge as NG.

Judgment Value

Malfunction Criteria	Threshold Value
Battery voltage	≥ 10.9 V
MIL lighting request from TCM	Yes

Time Needed for Diagnosis: 2500 ms
Malfunction Indicator Light Illumination: Illuminates as soon as a malfunction occurs.

- **Normality Judgment**

If the duration of time while the following conditions are met is longer than the time indicated, judge as NG.

Judgment Value

Malfunction Criteria	Threshold Value
Battery voltage	≥ 10.9 V
MIL lighting request from TCM	None

Time Needed for Diagnosis: Less than 1 second

GETtheMANUALS.org

CV:DTC P0851 PARK/NEUTRAL SWITCH INPUT CIRCUIT LOW (AT MODEL)

1. OUTLINE OF DIAGNOSIS

Judge the open or short circuit of the neutral SW.
Judge as NG when the ECM neutral terminal input differs from the reception data from TCM.

2. ENABLE CONDITION

Secondary Parameters	Enable Conditions
Battery voltage	≥ 10.9 V
Starter relay	OFF

3. GENERAL DRIVING CYCLE

Perform the diagnosis continuously in 2 seconds after starting the engine.

4. DIAGNOSTIC METHOD

- **Abnormality Judgment**

If the duration of time while the following conditions are met is longer than the time indicated, judge as NG.

Judgment Value

Malfunction Criteria	Threshold Value
Neutral switch signal in ECM when “P”/ “N” range in TCM are “OFF” and when the other switches are “ON”	LOW (ON)

Time Needed for Diagnosis: 100 time(s)
Malfunction Indicator Light Illumination: Illuminates when malfunction occurs in 2 continuous driving cycles.

- **Normality Judgment**

Judge as OK and clear the NG if the continuous time while the following conditions are established is more than the predetermined time.

Judgment Value

Malfunction Criteria	Threshold Value
Neutral switch signal in ECM when “P”/ “N” range in TCM are “OFF” and when the other switches are “ON”	HIGH (OFF)

Time Needed for Diagnosis: Less than 1 second

GETtheMANUALS.org

CW:DTC P0851 NEUTRAL SWITCH INPUT CIRCUIT LOW (MT MODEL)

1. OUTLINE OF DIAGNOSIS

Detect the open or short circuit of neutral SW.
Judge as NG when there is no change in the neutral SW even if the driving shift was applied. (There is neutral SW ON/OFF inversion from the vehicle speed and engine speed.)

2. ENABLE CONDITION

Secondary Parameters	Enable Conditions
Battery voltage	≥ 10.9 V
Starter relay	OFF

3. GENERAL DRIVING CYCLE

Perform the diagnosis continuously in 2 seconds after starting the engine.

4. DIAGNOSTIC METHOD

- **Abnormality Judgment**

Judge NG when the malfunction criteria below are completed determined times or more after the neutral SW change.

Judgment Value

Malfunction Criteria	Threshold Value
Neutral switch signal (while changing from a to b below)	LOW (ON) continues.
Driving condition change	From a) to b)
a) Engine speed 550 rpm — 900 rpm & Vehicle speed = 0 km/h (0 MPH)	
b) Engine speed 1600 rpm — 2550 rpm & Vehicle speed ≥ 64 km/h (39.8 MPH)	

Time Needed for Diagnosis: 3 time(s)
Malfunction Indicator Light Illumination: Illuminates when malfunction occurs in 2 continuous driving cycles.

- **Normality Judgment**

Judge as OK and clear NG when there is change in the neutral SW.

Judgment Value

Malfunction Criteria	Threshold Value
Neutral switch signal (while changing from a to b below)	Changes to HIGH (OFF).
Driving condition change	From a) to b)
a) Engine speed 550 rpm — 900 rpm & Vehicle speed = 0 km/h (0 MPH)	
b) Engine speed 1600 rpm — 2550 rpm & Vehicle speed ≥ 64 km/h (39.8 MPH)	

Time Needed for Diagnosis: Less than 1 second

GETtheMANUALS.org

CX:DTC P0852 PARK/NEUTRAL SWITCH INPUT CIRCUIT HIGH (AT MODEL)

1. OUTLINE OF DIAGNOSIS

Judge the open or short circuit of the neutral SW.
Judge as NG when the ECM neutral terminal input differs from the reception data from TCM.

2. ENABLE CONDITION

Secondary Parameters	Enable Conditions
Battery voltage	≥ 10.9 V
Starter relay	OFF

3. GENERAL DRIVING CYCLE

Perform the diagnosis continuously in 2 seconds after starting the engine.

4. DIAGNOSTIC METHOD

- **Abnormality Judgment**

If the duration of time while the following conditions are met is longer than the time indicated, judge as NG.

Judgment Value

Malfunction Criteria	Threshold Value
Neutral switch signal in ECM when “P”/ “N” range in TCM are “ON” and when the other switches are “OFF”	HIGH (OFF)

Time Needed for Diagnosis: 100 time(s)
Malfunction Indicator Light Illumination: Illuminates when malfunction occurs in 2 continuous driving cycles.

- **Normality Judgment**

Judge as OK and clear the NG if the continuous time while the following conditions are established is more than the predetermined time.

Judgment Value

Malfunction Criteria	Threshold Value
Neutral switch signal in ECM when “P”/ “N” range in TCM are “ON” and when the other switches are “OFF”	LOW (ON)

Time Needed for Diagnosis: Less than 1 second

GETtheMANUALS.org

CY:DTC P0852 NEUTRAL SWITCH INPUT CIRCUIT HIGH (MT MODEL)

1. OUTLINE OF DIAGNOSIS

Detect the open or short circuit of neutral SW.
Judge as NG when there is no change in the neutral SW even if the driving shift was applied. (There is neutral SW ON/OFF inversion from the vehicle speed and engine speed.)

2. ENABLE CONDITION

Secondary Parameters	Enable Conditions
Battery voltage	≥ 10.9 V
Starter relay	OFF

3. GENERAL DRIVING CYCLE

Perform the diagnosis continuously in 2 seconds after starting the engine.

4. DIAGNOSTIC METHOD

- **Abnormality Judgment**

Judge NG when the malfunction criteria below are completed determined times or more after the neutral SW change.

Judgment Value

Malfunction Criteria	Threshold Value
Neutral switch signal (while changing from a to b below)	HIGH (OFF) continues.
Driving condition change	From a) to b)
a) Engine speed 550 rpm — 900 rpm & Vehicle speed = 0 km/h (0 MPH)	
b) Engine speed 1600 rpm — 2550 rpm & Vehicle speed ≥ 64 km/h (39.8 MPH)	

Time Needed for Diagnosis: 3 time(s)
Malfunction Indicator Light Illumination: Illuminates when malfunction occurs in 2 continuous driving cycles.

- **Normality Judgment**

Judge as OK and clear NG when there is change in the neutral SW.

Judgment Value

Malfunction Criteria	Threshold Value
Neutral switch signal (while changing from a to b below)	Changes to LOW (ON).
Driving condition change	From a) to b)
a) Engine speed 550 rpm — 900 rpm & Vehicle speed = 0 km/h (0 MPH)	
b) Engine speed 1600 rpm — 2550 rpm & Vehicle speed ≥ 64 km/h (39.8 MPH)	

Time Needed for Diagnosis: Less than 1 second

GETtheMANUALS.org

CZ:DTC P1152 O2 SENSOR CIRCUIT RANGE/PERFORMANCE (LOW) (BANK1 SENSOR1)

1. OUTLINE OF DIAGNOSIS

Detect that λ value remains low.
Judge as NG when lambda value is abnormal in accordance with λ value of front oxygen (A/F) sensor and running conditions such as vehicle speed, amount of intake air, engine coolant temperature, sub feedback control, etc.

λ value = Actual air fuel ratio/Theoretical air fuel ratio
λ > 1: Lean
λ < 1: Rich

2. COMPONENT DESCRIPTION

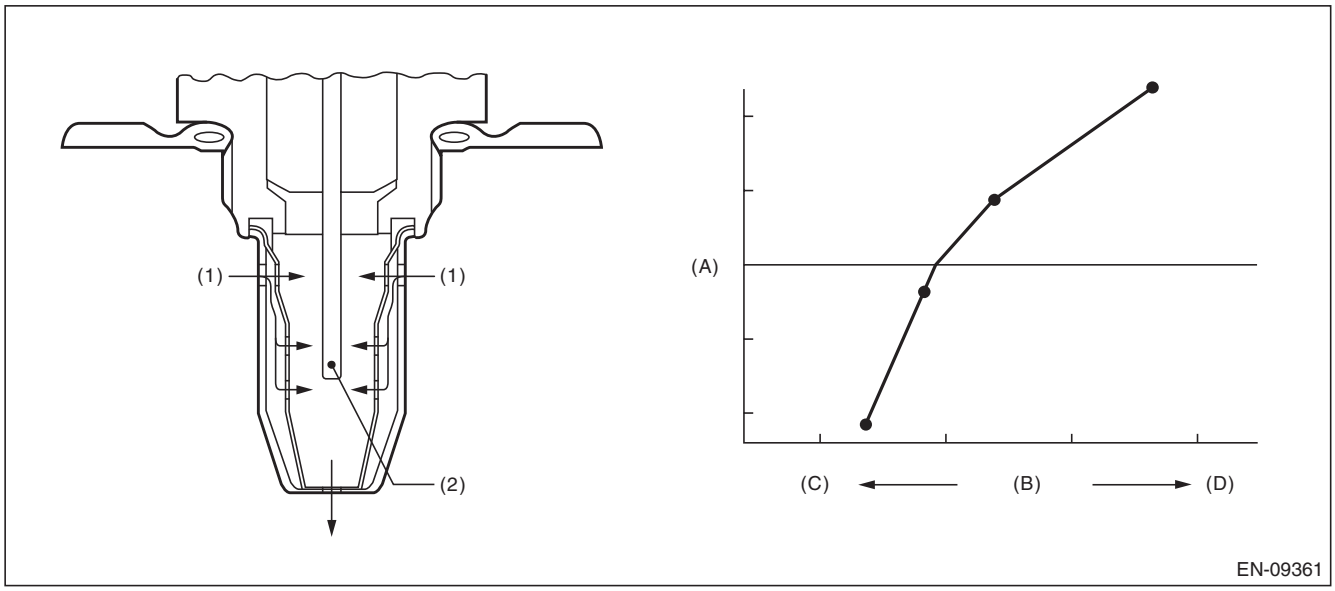

(A)	Electromotive force	(B)	Air fuel ratio	(C)	Lean
(D)	Rich				
(1)	Exhaust gas	(2)	ZrO_2		

GETtheMANUALS.org

3. ENABLE CONDITION

Secondary Parameters	Enable Conditions
Time needed for all secondary parameters to be in enable conditions	≥ 4096 ms
Battery voltage	≥ 10.9 V
Atmospheric pressure	≥ 75 kPa (563 mmHg, 22.2 inHg)
Rear oxygen sensor sub feedback	Execution
Rear oxygen sensor output voltage – Feedback target voltage	– 0.2 V — 0.1 V
or rear oxygen sensor sub feedback compensation coefficient	On Min.
or rear oxygen sensor sub feedback compensation coefficient	On Max.
Elapsed time after starting the engine	≥ 60000 ms
Engine coolant temperature	≥ 75 °C (167 °F)
Vehicle speed	≥ 20 km/h (12.4 MPH)
Amount of intake air	≥ 6 g/s (0.21 oz/s)
Load change at 180° CA	< 0.02 g/rev (0 oz/rev)
Front oxygen (A/F) sensor impedance	0 Ω — 50 Ω
Learning value of evaporation gas density	< 0.2
Total time of operating canister purge	≥ 19.9 s
Targeted lambda value load compensation coefficient	–0.03 — 0.000

4. GENERAL DRIVING CYCLE

Perform diagnosis continuously at a constant speed of 20 km/h (12.4 MPH) or more after 60000 ms have passed since the engine started.

5. DIAGNOSTIC METHOD

- **Abnormality Judgment**

If the duration of time while the following conditions are met is longer than the time indicated, judge as NG.

Judgment Value

Malfunction Criteria	Threshold Value
λ value	< 0.85

Time Needed for Diagnosis: 10000 ms
Malfunction Indicator Light Illumination: Illuminates when malfunction occurs in 2 continuous driving cycles.

- **Normality Judgment**

Judge as OK and clear the NG if the continuous time while the following conditions are established is more than the predetermined time.

Judgment Value

Malfunction Criteria	Threshold Value
λ value	≥ 0.85

Time Needed for Diagnosis: Less than 1 second

GETtheMANUALS.org

DA:DTC P1153 O2 SENSOR CIRCUIT RANGE/PERFORMANCE (HIGH) (BANK1 SENSOR1)

1. OUTLINE OF DIAGNOSIS

Detect that λ value remains high.
Judge as NG when lambda value is abnormal in accordance with λ value of front oxygen (A/F) sensor and running conditions such as vehicle speed, amount of intake air, engine coolant temperature, sub feedback control, etc.

λ value = Actual air fuel ratio/Theoretical air fuel ratio
λ > 1: Lean
λ < 1: Rich

2. COMPONENT DESCRIPTION

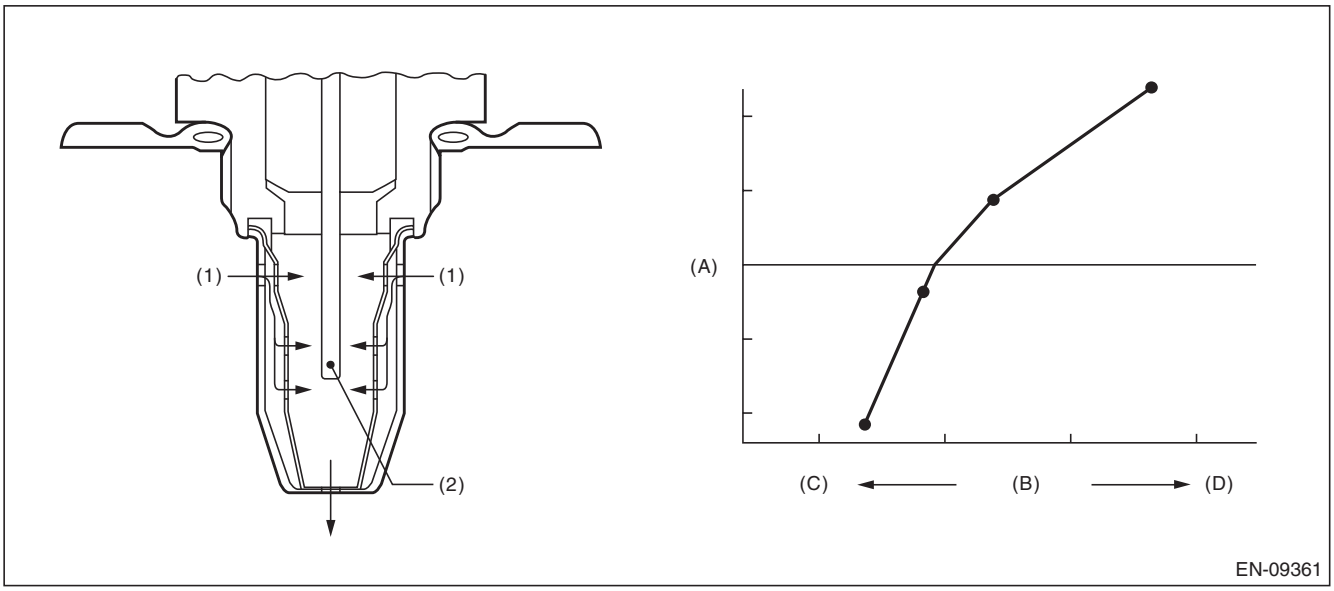

(A)	Electromotive force	(B)	Air fuel ratio	(C)	Lean
(D)	Rich				
(1)	Exhaust gas	(2)	ZrO_2		

GETtheMANUALS.org

3. ENABLE CONDITION

Secondary Parameters	Enable Conditions
Time needed for all secondary parameters to be in enable conditions	≥ 4096 ms
Battery voltage	≥ 10.9 V
Atmospheric pressure	≥ 75 kPa (563 mmHg, 22.2 inHg)
Rear oxygen sensor sub feedback	Execution
Rear oxygen sensor output voltage – Feedback target voltage	– 0.2 V — 0.1 V
or rear oxygen sensor sub feedback compensation coefficient	On Min.
or rear oxygen sensor sub feedback compensation coefficient	On Max.
Elapsed time after starting the engine	≥ 60000 ms
Engine coolant temperature	≥ 75 °C (167 °F)
Vehicle speed	≥ 20 km/h (12.4 MPH)
Amount of intake air	≥ 6 g/s (0.21 oz/s)
Load change at 180° CA	< 0.02 g/rev (0 oz/rev)
Front oxygen (A/F) sensor impedance	0 Ω — 50 Ω
Learning value of evaporation gas density	< 0.2
Total time of operating canister purge	≥ 19.9 s
Targeted lambda value load compensation coefficient	–0.03 — 0.000

4. GENERAL DRIVING CYCLE

Perform diagnosis continuously at a constant speed of 20 km/h (12.4 MPH) or more after 60000 ms have passed since the engine started.

5. DIAGNOSTIC METHOD

- **Abnormality Judgment**

If the duration of time while the following conditions are met is longer than the time indicated, judge as NG.

Judgment Value

Malfunction Criteria	Threshold Value
λ value	> 1.15

Time Needed for Diagnosis: 10000 ms
Malfunction Indicator Light Illumination: Illuminates when malfunction occurs in 2 continuous driving cycles.

- **Normality Judgment**

Judge as OK and clear the NG if the continuous time while the following conditions are established is more than the predetermined time.

Judgment Value

Malfunction Criteria	Threshold Value
λ value	≤ 1.15

Time Needed for Diagnosis: Less than 1 second

GETtheMANUALS.org

DB:DTC P1160 RETURN SPRING FAILURE

1. OUTLINE OF DIAGNOSIS

Judge as NG when the valve is opened more than the default opening angle, but does not move to the close direction with the motor power stopped.

2. COMPONENT DESCRIPTION

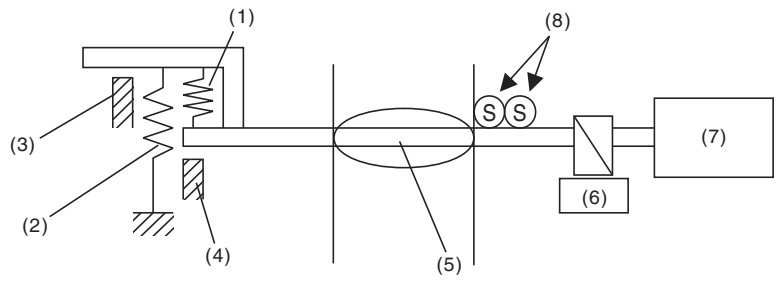

EN-01866

(1) Opener spring
(2) Return spring
(3) Intermediate stopper
(4) Full closed stopper
(5) Throttle valve
(6) Gear
(7) DC motor
(8) Main and sub throttle sensor

3. ENABLE CONDITION

Secondary Parameters	Enable Conditions
Motor continuity	OFF

4. GENERAL DRIVING CYCLE

- Ignition switch ON → OFF
- Ignition switch OFF → ON (Only after clearing memory)

5. DIAGNOSTIC METHOD

Judge as OK and clear the NG when the malfunction criteria below are met.

Judgment Value

Malfunction Criteria	Threshold Value
Opening variation after continuity is set to OFF	≥ 2°

Time Needed for Diagnosis: 1880 ms
Malfunction Indicator Light Illumination: Illuminates as soon as a malfunction occurs.

GETtheMANUALS.org

DC:DTC P1443 VENT CONTROL SOLENOID VALVE FUNCTION PROBLEM

1. OUTLINE OF DIAGNOSIS

Detect the abnormal function (stuck closed) of the drain valve.
Judge as NG when fuel tank pressure is low.

2. COMPONENT DESCRIPTION

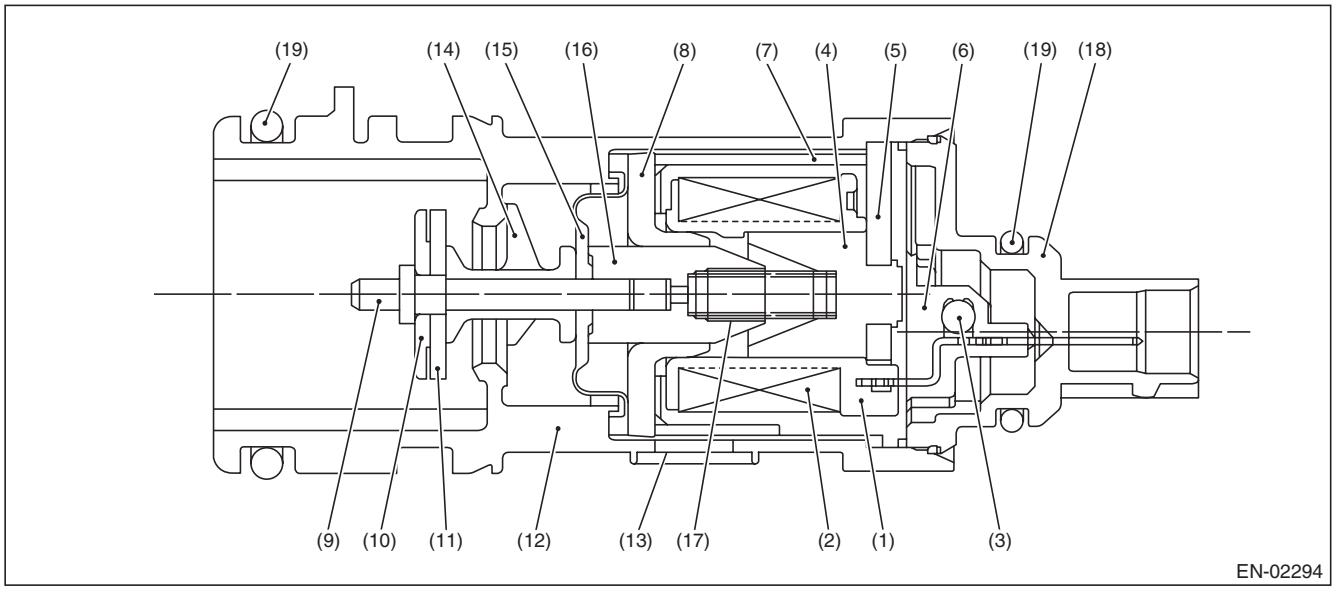

(1)	Bobbin	(8)	Magnetic plate	(14)	Retainer
(2)	Coil	(9)	Shaft	(15)	Diaphragm
(3)	Diode	(10)	Plate	(16)	Movable core
(4)	Stator core	(11)	Valve	(17)	Spring
(5)	End plate	(12)	Housing	(18)	Cover
(6)	Body	(13)	Filter	(19)	O-ring
(7)	Yoke				

3. ENABLE CONDITION

Secondary Parameters	Enable Conditions
Drain valve	Open
Battery voltage	≥ 10.9 V
Atmospheric pressure	≥ 75 kPa (563 mmHg, 22.2 inHg)
Tank pressure when starter is OFF → ON	–0.7 kPa (–5 mmHg, –0.2 inHg) and 0.4 kPa (2.9 mmHg, 0.1 inHg)

4. GENERAL DRIVING CYCLE

Always perform the diagnosis continuously.

GETtheMANUALS.org

5. DIAGNOSTIC METHOD

- **Abnormality Judgment**

If the duration of time while the following conditions are met is longer than the time indicated, judge as NG.

Judgment Value

Malfunction Criteria	Threshold Value
Fuel tank pressure	≤ –4 kPa (–30 mmHg, –1.2 inHg)

Time Needed for Diagnosis: 3000 s
Malfunction Indicator Light Illumination: Illuminates as soon as a malfunction occurs.

- **Normality Judgment**

Judge as OK and clear the NG if the continuous time while the following conditions are established is more than the predetermined time.

Judgment Value

Malfunction Criteria	Threshold Value
Fuel tank pressure	> –4 kPa (–30 mmHg, –1.2 inHg)
Cumulative time when all the malfunction criteria below are met.	≥ 30000 s
Purge control solenoid valve duty	Not = 0
Fuel temperature	–10 °C (14 °F) — 70 °C (158 °F)
Intake manifold relative pressure	≥ – 26.7 kPa (– 200 mmHg, – 7.9 inHg)

Time Needed for Diagnosis: Less than 1 second

GETtheMANUALS.org

DD:DTC P1492 EGR SOLENOID VALVE SIGNAL #1 CIRCUIT MALFUNCTION (LOW INPUT)

1. OUTLINE OF DIAGNOSIS

- Detects open or short circuit of EGR.
- Judge as NG when the ECM output level differs from the actual terminal level.

2. COMPONENT DESCRIPTION

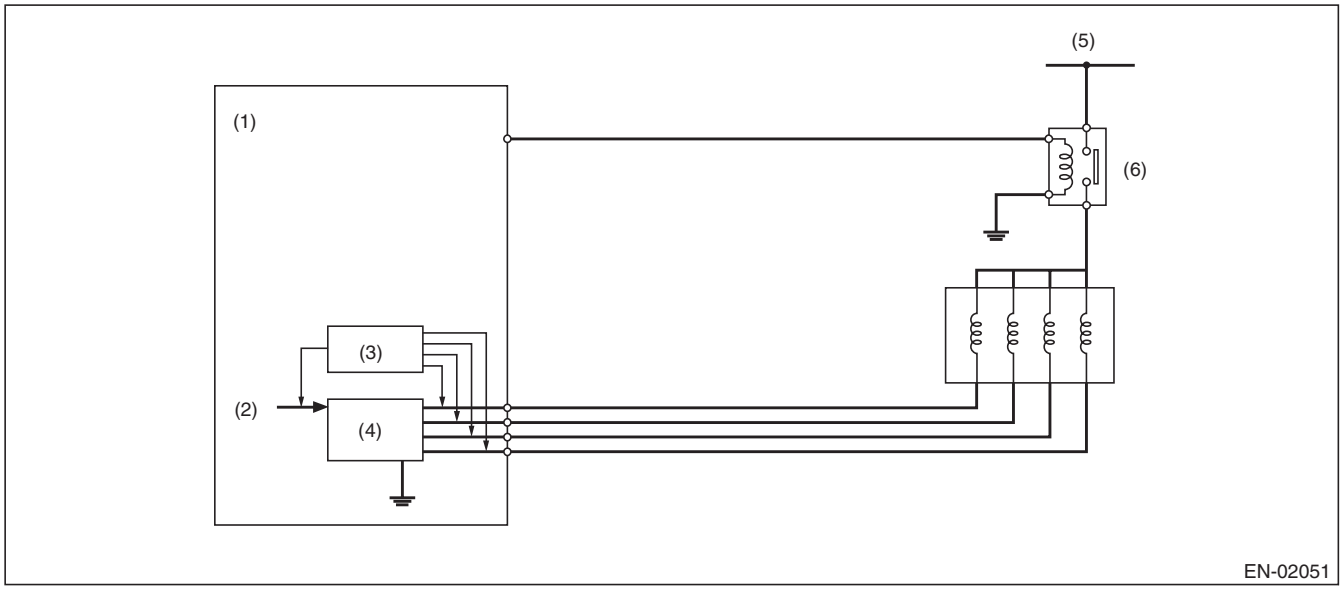

(1)	Engine control module (ECM)	(3)	Detecting circuit	(5)	Battery voltage
(2)	Computer unit (CPU)	(4)	Switch circuit	(6)	Main relay

3. ENABLE CONDITION

Secondary Parameters	Enable Conditions
Elapsed time after starting the engine	≥ 1 second
EGR valve target position	> 0 step
Battery voltage	≥ 10.9 V

4. GENERAL DRIVING CYCLE

Perform diagnosis continuously during EGR operation.

GETtheMANUALS.org

5. DIAGNOSTIC METHOD

- **Abnormality Judgment**

If the duration of time while the following conditions are met is longer than the time indicated, judge as NG.

Judgment Value

Malfunction Criteria	Threshold Value
Terminal voltage level when ECM outputs OFF signal	Low level
or	
Terminal voltage level when EGR operates	Low level

Time Needed for Diagnosis: 2500 ms
Malfunction Indicator Light: Illuminates as soon as a malfunction occurs.

- **Normality Judgment**

Judge as OK and clear the NG if the continuous time while the following conditions are established is more than the predetermined time.

Judgment Value

Malfunction Criteria	Threshold Value
Terminal voltage level when ECM outputs OFF signal	High level
Terminal voltage level when EGR operates	High level

Time Needed for Diagnosis: 256 ms

GETtheMANUALS.org

DE:DTC P1493 EGR SOLENOID VALVE SIGNAL #1 CIRCUIT MALFUNCTION (HIGH INPUT)

1. OUTLINE OF DIAGNOSIS

- Detects open or short circuit of EGR.
- Judge as NG when the ECM output level differs from the actual terminal level.

2. COMPONENT DESCRIPTION

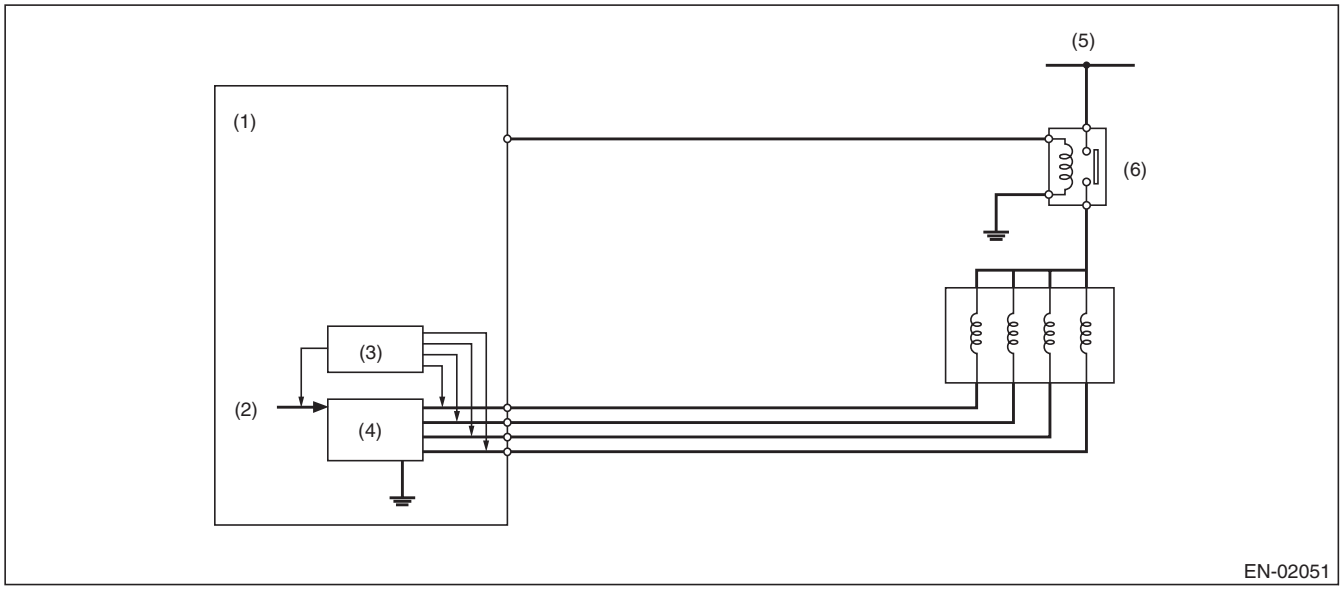

(1)	Engine control module (ECM)	(3)	Detecting circuit	(5)	Battery voltage
(2)	Computer unit (CPU)	(4)	Switch circuit	(6)	Main relay

3. ENABLE CONDITION

Secondary Parameters	Enable Conditions
Elapsed time after starting the engine	≥ 1 second
EGR valve target position	> 0 step
Battery voltage	≥ 10.9 V

4. GENERAL DRIVING CYCLE

Always perform the diagnosis continuously.

GETtheMANUALS.org

5. DIAGNOSTIC METHOD

- **Abnormality Judgment**

If the duration of time while the following conditions are met is longer than the time indicated, judge as NG.

Judgment Value

Malfunction Criteria	Threshold Value
Terminal voltage level when ECM outputs ON signal	High level
or	
Terminal voltage level when EGR operates	High level

Time Needed for Diagnosis: 2500 ms
Malfunction Indicator Light Illumination: Illuminates as soon as a malfunction occurs.

- **Normality Judgment**

Judge as OK and clear the NG if the continuous time while the following conditions are established is more than the predetermined time.

Judgment Value

Malfunction Criteria	Threshold Value
Terminal voltage level when ECM outputs ON signal	Low level
Terminal voltage level when EGR operates	Low level

Time Needed for Diagnosis: 256 ms

GETtheMANUALS.org

DF:DTC P1494 EGR SOLENOID VALVE SIGNAL #2 CIRCUIT MALFUNCTION (LOW INPUT)

1. OUTLINE OF DIAGNOSIS

NOTE:
For the detection standard, refer to DTC P1492. <Ref. to GD(H4SO)-209, DTC P1492 EGR SOLENOID VALVE SIGNAL #1 CIRCUIT MALFUNCTION (LOW INPUT), Diagnostic Trouble Code (DTC) Detecting Criteria.>

DG:DTC P1495 EGR SOLENOID VALVE SIGNAL #2 CIRCUIT MALFUNCTION (HIGH INPUT)

1. OUTLINE OF DIAGNOSIS

NOTE:
For the detection standard, refer to DTC P1493. <Ref. to GD(H4SO)-211, DTC P1493 EGR SOLENOID VALVE SIGNAL #1 CIRCUIT MALFUNCTION (HIGH INPUT), Diagnostic Trouble Code (DTC) Detecting Criteria.>

DH:DTC P1496 EGR SOLENOID VALVE SIGNAL #3 CIRCUIT MALFUNCTION (LOW INPUT)

1. OUTLINE OF DIAGNOSIS

NOTE:
For the detection standard, refer to DTC P1492. <Ref. to GD(H4SO)-209, DTC P1492 EGR SOLENOID VALVE SIGNAL #1 CIRCUIT MALFUNCTION (LOW INPUT), Diagnostic Trouble Code (DTC) Detecting Criteria.>

DI: DTC P1497 EGR SOLENOID VALVE SIGNAL #3 CIRCUIT MALFUNCTION (HIGH INPUT)

1. OUTLINE OF DIAGNOSIS

NOTE:
For the detection standard, refer to DTC P1493. <Ref. to GD(H4SO)-211, DTC P1493 EGR SOLENOID VALVE SIGNAL #1 CIRCUIT MALFUNCTION (HIGH INPUT), Diagnostic Trouble Code (DTC) Detecting Criteria.>

DJ:DTC P1498 EGR SOLENOID VALVE SIGNAL #4 CIRCUIT MALFUNCTION (LOW INPUT)

1. OUTLINE OF DIAGNOSIS

NOTE:
For the detection standard, refer to DTC P1492. <Ref. to GD(H4SO)-209, DTC P1492 EGR SOLENOID VALVE SIGNAL #1 CIRCUIT MALFUNCTION (LOW INPUT), Diagnostic Trouble Code (DTC) Detecting Criteria.>

DK:DTC P1499 EGR SOLENOID VALVE SIGNAL #4 CIRCUIT MALFUNCTION (HIGH INPUT)

1. OUTLINE OF DIAGNOSIS

NOTE:
For the detection standard, refer to DTC P1493. <Ref. to GD(H4SO)-211, DTC P1493 EGR SOLENOID VALVE SIGNAL #1 CIRCUIT MALFUNCTION (HIGH INPUT), Diagnostic Trouble Code (DTC) Detecting Criteria.>

GETtheMANUALS.org

DL:DTC P1518 STARTER SWITCH CIRCUIT LOW INPUT

1. OUTLINE OF DIAGNOSIS

Detect the open or short circuit of starter SW.
Judge as OFF NG when it becomes after engine start despite no starter ON experience.

2. ENABLE CONDITIONS

Secondary Parameters	Enable Conditions
None	

3. GENERAL DRIVING CYCLE

Always perform the diagnosis continuously.

4. DIAGNOSTIC METHOD

- **Abnormality Judgment**

Judge as OFF NG when the following conditions are established.

Judgment Value

Malfunction Criteria	Threshold Value
Vehicle speed	< 1 km/h (0.6 MPH)
Starter ON signal	Not detected
Engine condition	Change from pre-start to post-start
Battery voltage	≥ 8 V

Time Needed for Diagnosis: Less than 1 second
Malfunction Indicator Light Illumination: Illuminates when malfunction occurs in 2 continuous driving cycles.

- **Normality Judgment**

Judge as OFF OK and clear the NG if the following conditions are established.

Judgment Value

Malfunction Criteria	Threshold Value
Starter ON	Experienced
Starter ON diagnosis	No diagnosis experience
Battery voltage	≥ 8 V

Time Needed for Diagnosis: Less than 1 second

GETtheMANUALS.org

DM:DTC P1560 BACK-UP VOLTAGE CIRCUIT MALFUNCTION

1. OUTLINE OF DIAGNOSIS

Detect the open/short circuit of back-up power supply circuit.
Judge as NG when the backup power voltage is low.

2. ENABLE CONDITION

Secondary Parameters	Enable Conditions
None	

3. GENERAL DRIVING CYCLE

Always perform the diagnosis continuously.

4. DIAGNOSTIC METHOD

- **Abnormality Judgment**

If the duration of time while the following conditions are met is longer than the time indicated, judge as NG.

Judgment Value

Malfunction Criteria	Threshold Value
Voltage of back-up power supply	Low
Battery voltage	≥ 10.9 V
Engine condition	After engine starting

Time Needed for Diagnosis: 2500 ms
Malfunction Indicator Light Illumination: Illuminates as soon as a malfunction occurs.

- **Normality Judgment**

Judge as OK and clear the NG if the continuous time while the following conditions are established is more than the predetermined time.

Judgment Value

Malfunction Criteria	Threshold Value
Voltage of back-up power supply	High
Battery voltage	≥ 10.9 V
Engine condition	After engine starting

Time Needed for Diagnosis: Less than 1 second

GETtheMANUALS.org

DN:DTC P1570 ANTENNA

1. OUTLINE OF DIAGNOSIS

NOTE:
For the detection standard, refer to DTC P0513. <Ref. to GD(H4SO)-190, DTC P0513 INCORRECT IMMOBILIZER KEY, Diagnostic Trouble Code (DTC) Detecting Criteria.>

DO:DTC P1571 REFERENCE CODE INCOMPATIBILITY

1. OUTLINE OF DIAGNOSIS

NOTE:
For the detection standard, refer to DTC P0513. <Ref. to GD(H4SO)-190, DTC P0513 INCORRECT IMMOBILIZER KEY, Diagnostic Trouble Code (DTC) Detecting Criteria.>

DP:DTC P1572 IMM CIRCUIT FAILURE (EXCEPT ANTENNA CIRCUIT)

1. OUTLINE OF DIAGNOSIS

NOTE:
For the detection standard, refer to DTC P0513. <Ref. to GD(H4SO)-190, DTC P0513 INCORRECT IMMOBILIZER KEY, Diagnostic Trouble Code (DTC) Detecting Criteria.>

DQ:DTC P1574 KEY COMMUNICATION FAILURE

1. OUTLINE OF DIAGNOSIS

NOTE:
For the detection standard, refer to DTC P0513. <Ref. to GD(H4SO)-190, DTC P0513 INCORRECT IMMOBILIZER KEY, Diagnostic Trouble Code (DTC) Detecting Criteria.>

DR:DTC P1576 EGI CONTROL MODULE EEPROM

1. OUTLINE OF DIAGNOSIS

NOTE:
For the detection standard, refer to DTC P0513. <Ref. to GD(H4SO)-190, DTC P0513 INCORRECT IMMOBILIZER KEY, Diagnostic Trouble Code (DTC) Detecting Criteria.>

DS:DTC P1577 IMM CONTROL MODULE EEPROM

1. OUTLINE OF DIAGNOSIS

NOTE:
For the detection standard, refer to DTC P0513. <Ref. to GD(H4SO)-190, DTC P0513 INCORRECT IMMOBILIZER KEY, Diagnostic Trouble Code (DTC) Detecting Criteria.>

DT:DTC P1578 METER FAILURE

1. OUTLINE OF DIAGNOSIS

NOTE:
For the detection standard, refer to DTC P0513. <Ref. to GD(H4SO)-190, DTC P0513 INCORRECT IMMOBILIZER KEY, Diagnostic Trouble Code (DTC) Detecting Criteria.>

GETtheMANUALS.org

DU:DTC P2096 POST CATALYST FUEL TRIM SYSTEM TOO LEAN (BANK 1)

1. OUTLINE OF DIAGNOSIS

Detect the malfunction of fuel system from the size of the sub feedback learning value.
Control the sub feedback learning and judge as NG when the learning value is in the lean zone.

2. COMPONENT DESCRIPTION

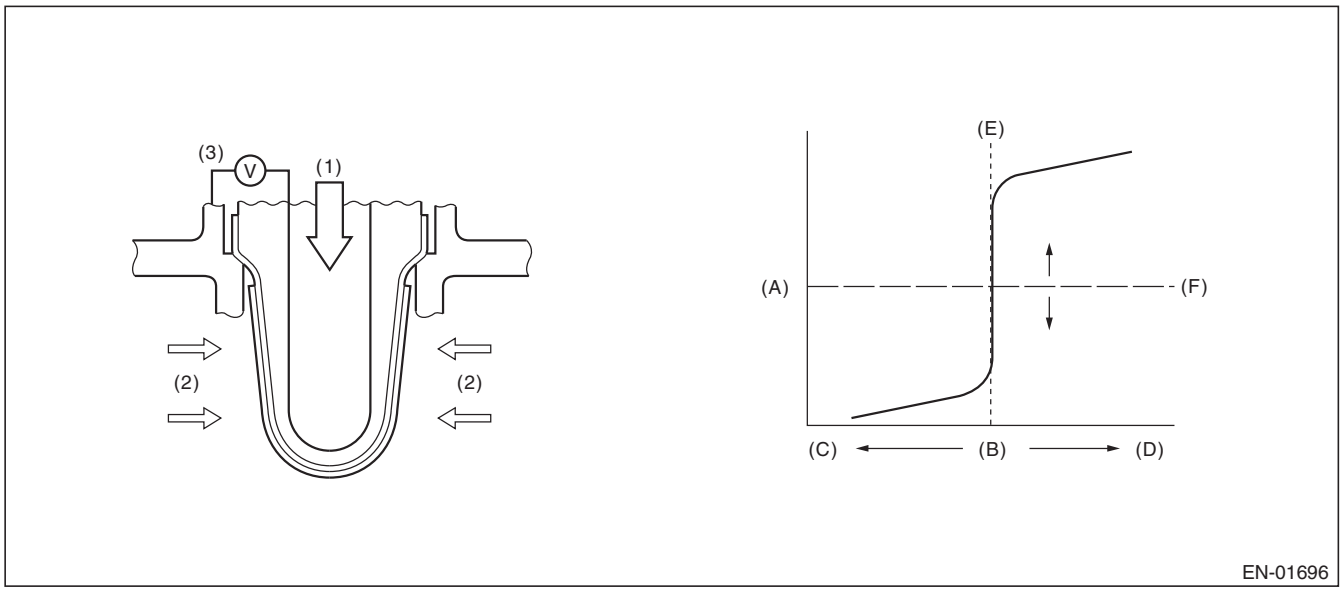

(A)	Electromotive force	(B)	Air fuel ratio	(C)	Rich
(D)	Lean	(E)	Theoretical air fuel ratio	(F)	Comparative voltage
(1)	Atmosphere	(2)	Exhaust gas	(3)	Electromotive force

3. ENABLE CONDITION

Secondary Parameters	Enable Conditions
Conditions for carrying out the sub feedback learning	Completed
Continuous time when all conditions are established.	≥ 1 s

4. GENERAL DRIVING CYCLE

Perform the diagnosis continuously when the vehicle is idling or running at a constant speed of 80 km/h (50 MPH) or more.

GETtheMANUALS.org

5. DIAGNOSTIC METHOD

- **Abnormality Judgment**

If the duration of time while the following conditions are met is longer than the time indicated, judge as NG.

Judgment Value

Malfunction Criteria	Threshold Value
Sub feedback learning value	< –0.032

Time Needed for Diagnosis: 1 s × 1 time(s)
Malfunction Indicator Light Illumination: Illuminates when malfunction occurs in 2 continuous driving cycles.

- **Normality Judgment**

Judge as OK and clear the NG if the continuous time while the following conditions are established is more than the predetermined time.

Judgment Value

Malfunction Criteria	Threshold Value
Sub feedback learning value	≥ –0.032 + 0

Time Needed for Diagnosis: 1 s

GETtheMANUALS.org

DV:DTC P2097 POST CATALYST FUEL TRIM SYSTEM TOO RICH (BANK 1)

1. OUTLINE OF DIAGNOSIS

Detect the malfunction of fuel system from the size of the sub feedback learning value.
Sub feedback learning is being performed. When the learning value goes to the rich side, judge as NG.

2. COMPONENT DESCRIPTION

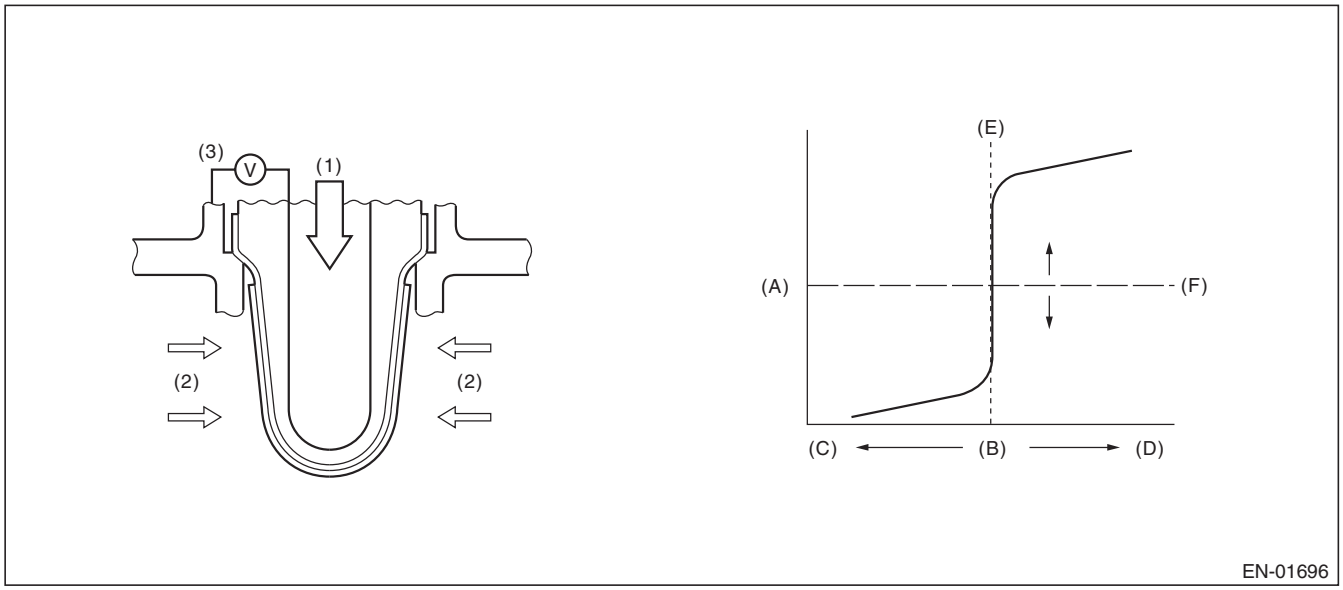

(A)	Electromotive force	(B)	Air fuel ratio	(C)	Rich
(D)	Lean	(E)	Theoretical air fuel ratio	(F)	Comparative voltage
(1)	Atmosphere	(2)	Exhaust gas	(3)	Electromotive force

3. ENABLE CONDITION

Secondary Parameters	Enable Conditions
Conditions for carrying out the sub feedback learning	Completed
Continuous time when all conditions are established.	≥ 1 s

4. GENERAL DRIVING CYCLE

Perform the diagnosis continuously when the vehicle is idling or running at a constant speed of 80 km/h (50 MPH) or more.

GETtheMANUALS.org

5. DIAGNOSTIC METHOD

- **Abnormality Judgment**

If the duration of time while the following conditions are met is longer than the time indicated, judge as NG.

Judgment Value

Malfunction Criteria	Threshold Value
Sub feedback learning value	≥ 0.032 (PZEV model) ≥ 0.02 (except for PZEV model)

Time Needed for Diagnosis: 1 s × 1 time(s)
Malfunction Indicator Light Illumination: Illuminates when malfunction occurs in 2 continuous driving cycles.

- **Normality Judgment**

Judge as OK and clear the NG if the continuous time while the following conditions are established is more than the predetermined time.

Judgment Value

Malfunction Criteria	Threshold Value
Sub feedback learning value	< 0.032 + 0 (PZEV model) < 0.02 + 0 (except for PZEV model)

Time Needed for Diagnosis: 1 s

GETtheMANUALS.org

DW:DTC P2101 THROTTLE ACTUATOR CONTROL MOTOR CIRCUIT RANGE/ PERFORMANCE

1. OUTLINE OF DIAGNOSIS

Judge as NG when the motor current becomes large or drive circuit is heated.

2. COMPONENT DESCRIPTION

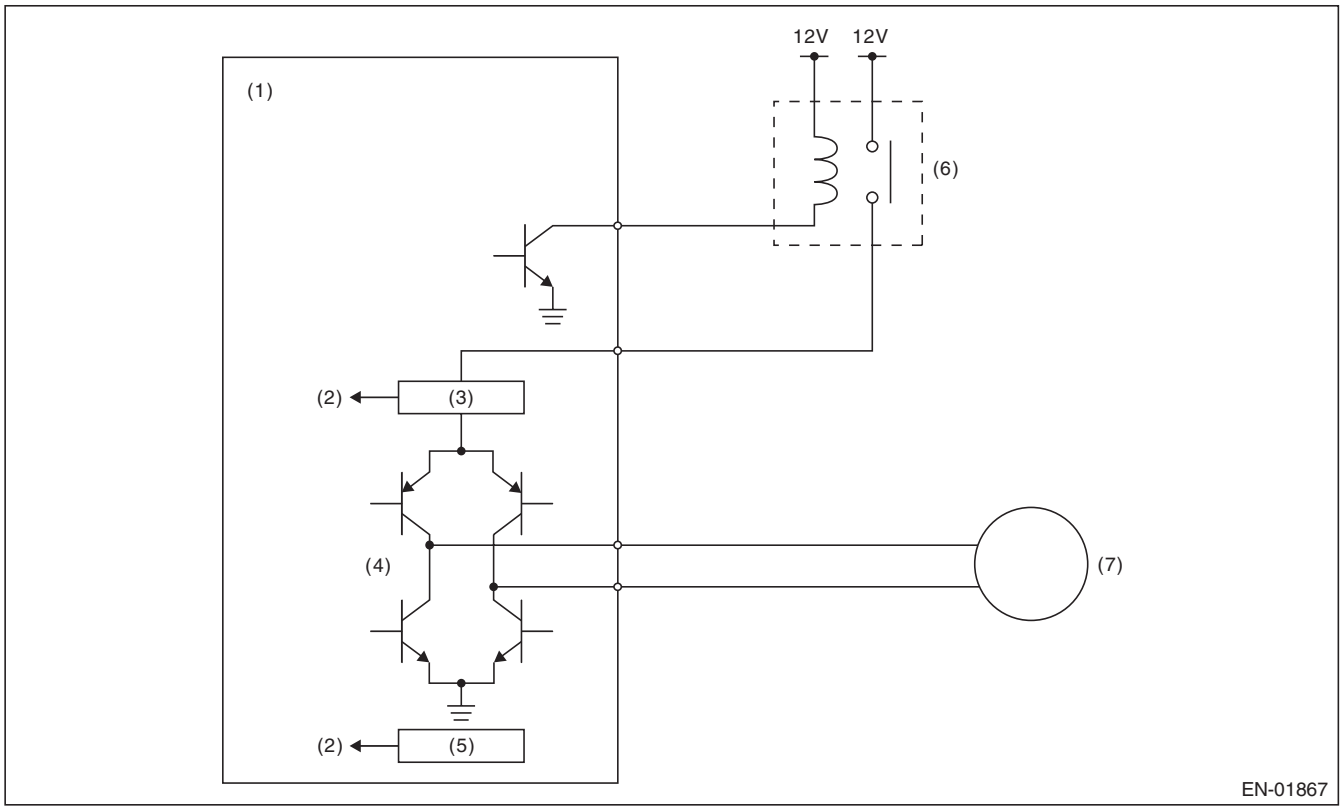

(1)	Engine control module (ECM)	(4)	Drive circuit	(6)	Electronic throttle control relay
(2)	Detecting circuit	(5)	Temperature detection circuit	(7)	Motor
(3)	Overcurrent detection circuit				

3. ENABLE CONDITION

Secondary Parameters	Enable Conditions
Under control of electronic throttle control	ON

4. GENERAL DRIVING CYCLE

Always perform the diagnosis continuously.

GETtheMANUALS.org

5. DIAGNOSTIC METHOD

Judge as OK and clear the NG when the malfunction criteria below are met.

Judgment Value

Malfunction Criteria	Threshold Value
Motor current	≤ 8 A
Drive circuit inner temperature	≤ 175°C (347°F)

Time Needed for Diagnosis:

- 500 ms (NG judgment)
- 2000 ms (OK judgment)

Malfunction Indicator Light Illumination: Illuminates as soon as a malfunction occurs.

GETtheMANUALS.org

DX:DTC P2102 THROTTLE ACTUATOR CONTROL MOTOR CIRCUIT LOW

1. OUTLINE OF DIAGNOSIS

Judge as NG when the electronic throttle control power is not supplied even when ECM sets the electronic throttle control relay to ON.

2. COMPONENT DESCRIPTION

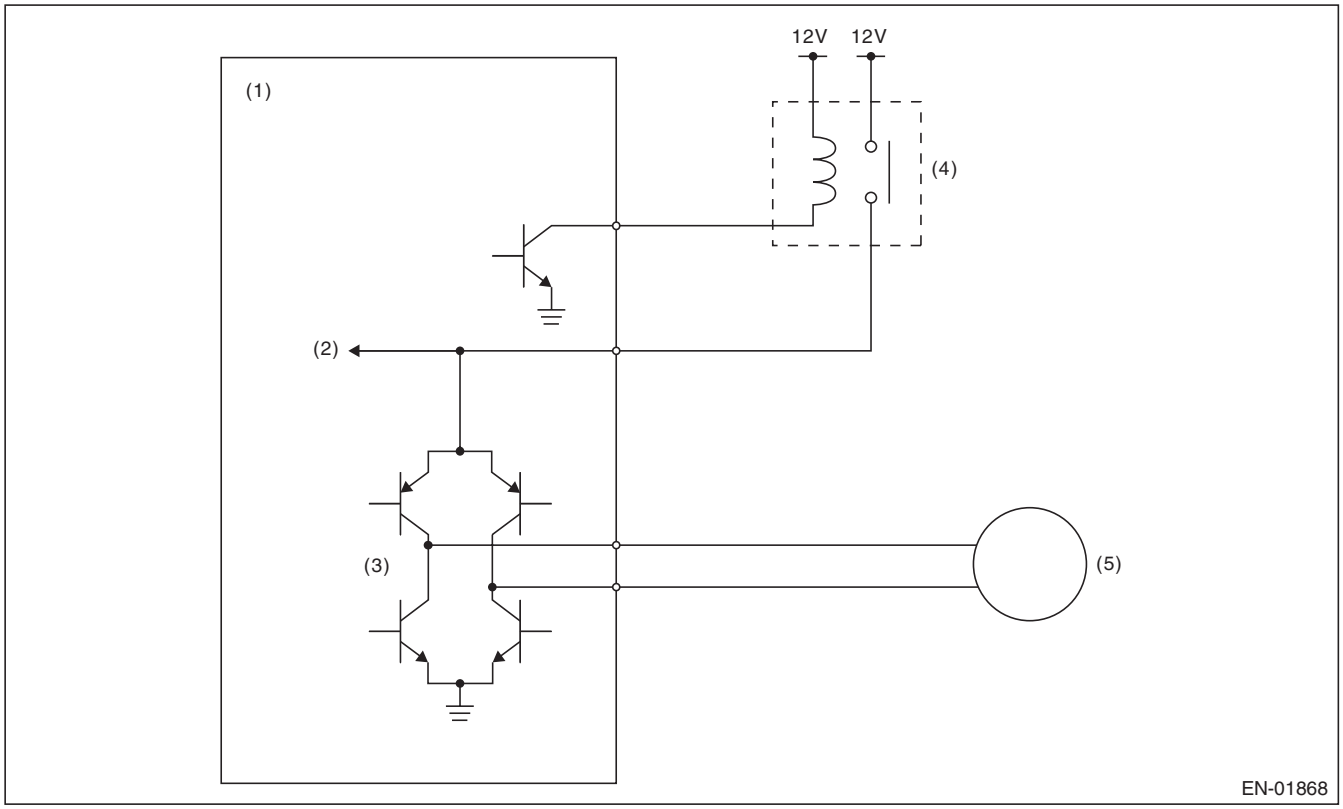

(1) Engine control module (ECM)
(2) Voltage detection circuit
(3) Drive circuit
(4) Electronic throttle control relay
(5) Motor

3. ENABLE CONDITION

Secondary Parameters	Enable Conditions
Electronic throttle control relay output	ON

4. GENERAL DRIVING CYCLE

Always perform the diagnosis continuously.

5. DIAGNOSTIC METHOD

Judge as OK and clear the NG when the malfunction criteria below are met.

Judgment Value

Malfunction Criteria	Threshold Value
Motor power voltage	≥ 5 V

Time Needed for Diagnosis:

- 400 ms (NG judgment)
- 2000 ms (OK judgment)

Malfunction Indicator Light Illumination: Illuminates as soon as a malfunction occurs.

GETtheMANUALS.org

DY:DTC P2103 THROTTLE ACTUATOR CONTROL MOTOR CIRCUIT HIGH

1. OUTLINE OF DIAGNOSIS

Judge as NG when the electronic throttle control power is supplied even when ECM sets the electronic throttle control relay to OFF.

2. COMPONENT DESCRIPTION

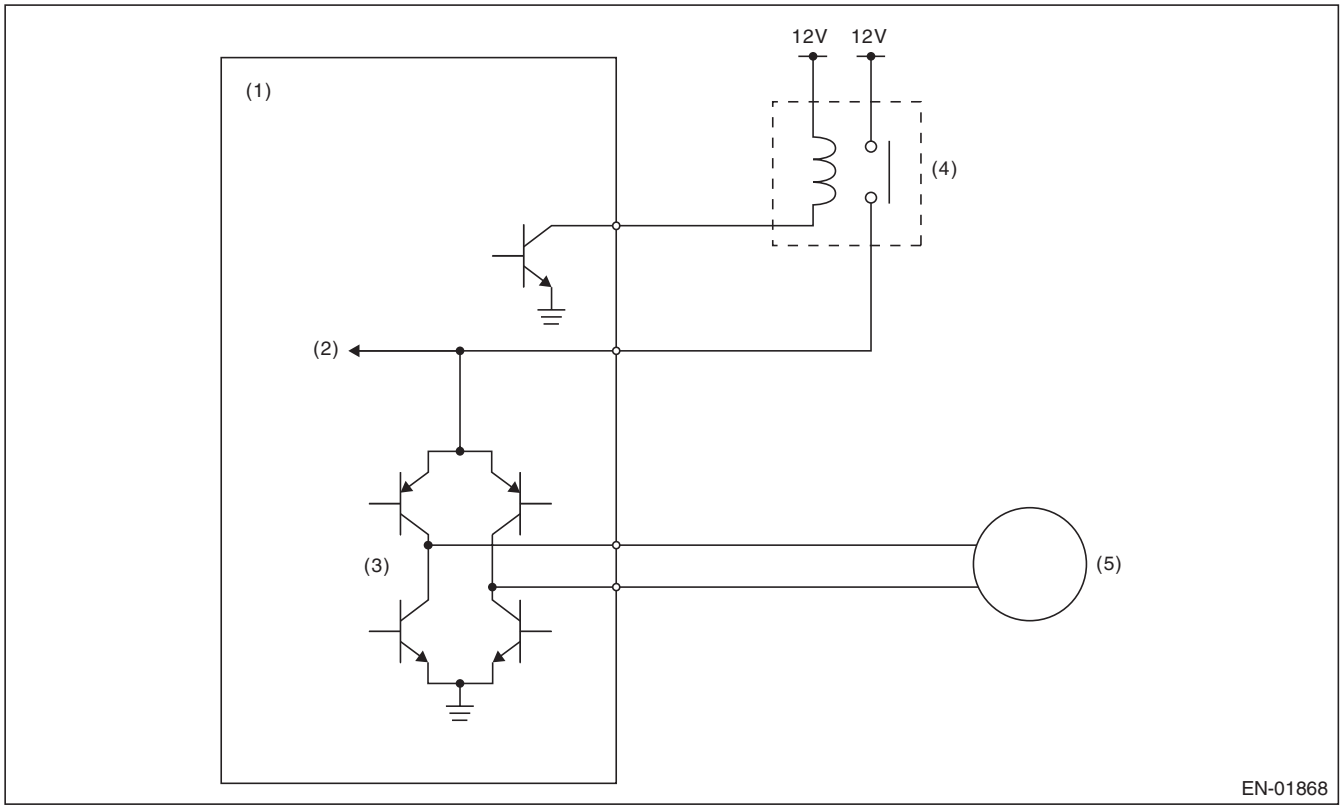

(1) Engine control module (ECM)
(2) Voltage detection circuit
(3) Drive circuit
(4) Electronic throttle control relay
(5) Motor

3. ENABLE CONDITION

Secondary Parameters	Enable Conditions
Electronic throttle control relay output	OFF

4. GENERAL DRIVING CYCLE

- When ignition switch ON → OFF
- Ignition switch OFF → ON (Only after clearing memory)

5. DIAGNOSTIC METHOD

Judge as OK and clear the NG when the malfunction criteria below are met.

Judgment Value

Malfunction Criteria	Threshold Value
Motor power voltage	≤ 5 V

Time Needed for Diagnosis:

- 600 ms (NG judgment)
- 400 ms (OK judgment)

Malfunction Indicator Light Illumination: Illuminates as soon as a malfunction occurs.

GETtheMANUALS.org

DZ:DTC P2109 THROTTLE/PEDAL POSITION SENSOR “A” MINIMUM STOP PERFORMANCE

1. OUTLINE OF DIAGNOSIS

Judge as NG when full close point learning cannot conducted or abnormal value is detected.

2. COMPONENT DESCRIPTION

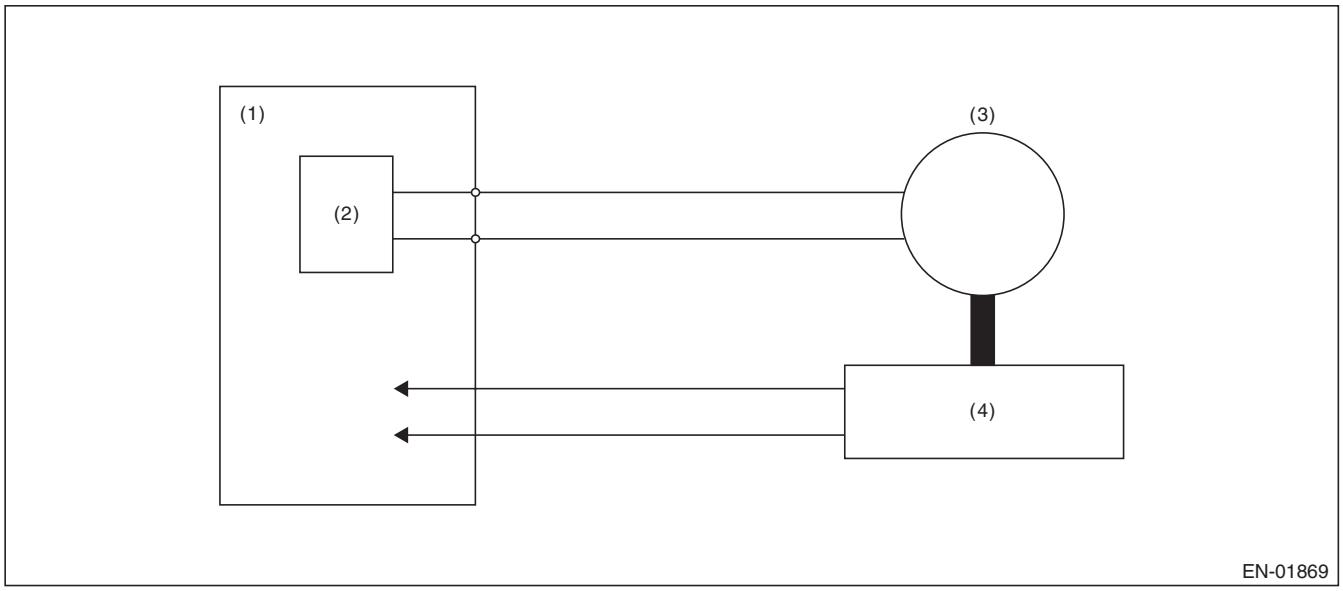

(1) Engine control module (ECM)
(2) Drive circuit
(3) Motor
(4) Throttle position sensor

3. ENABLE CONDITION

Secondary Parameters	Enable Conditions
Ignition switch	ON → OFF
Ignition switch (only after clear memory)	OFF → ON

4. GENERAL DRIVING CYCLE

Perform the diagnosis at full closed point learning.

5. DIAGNOSTIC METHOD

Judge as OK and clear the NG when the malfunction criteria below are met.

Judgment Value

Malfunction Criteria	Threshold Value
Throttle sensor opening angle at full close point learning	10.127° or more, 19.872° or less
Throttle opening angle when the ignition switch is ON – Throttle minimum stop position	≥ 1.683°

Time Needed for Diagnosis: 8 — 80 ms
Malfunction Indicator Light Illumination: Illuminates as soon as a malfunction occurs.

GETtheMANUALS.org

EA:DTC P2122 THROTTLE/PEDAL POSITION SENSOR/SWITCH “D” CIRCUIT LOW INPUT

1. OUTLINE OF DIAGNOSIS

Detect the open or short circuit of accelerator pedal position sensor 1.
Judge as NG if out of specification.

2. COMPONENT DESCRIPTION

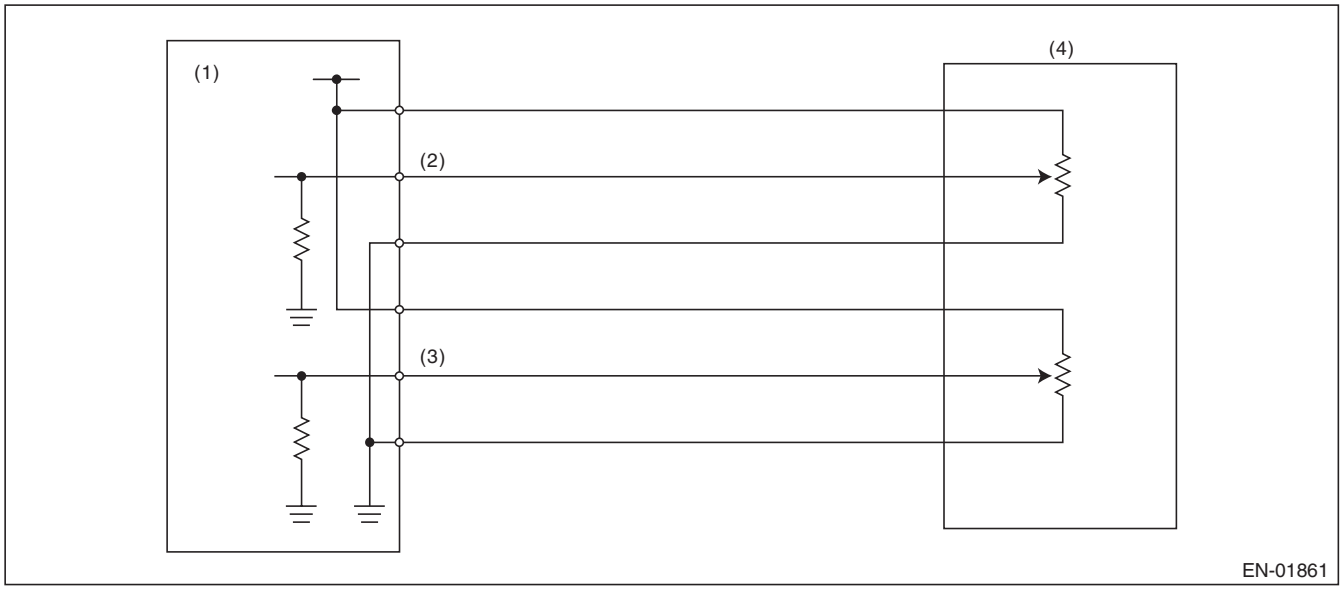

(1) Engine control module (ECM)
(2) Accelerator pedal position sensor 1 signal
(3) Accelerator pedal position sensor 2 signal
(4) Accelerator pedal position sensor

3. ENABLE CONDITION

Secondary Parameters	Enable Conditions
Ignition switch	ON
Battery voltage	≥ 6 V

4. GENERAL DRIVING CYCLE

Always perform the diagnosis continuously.

GETtheMANUALS.org

5. DIAGNOSTIC METHOD

- **Abnormality Judgment**

If the duration of time while the following conditions are met is longer than the time indicated, judge as NG.

Judgment Value

Malfunction Criteria	Threshold Value
Sensor 1 input voltage	< 0.295 V

Time Needed for Diagnosis: 100 ms
Malfunction Indicator Light Illumination: Illuminates as soon as a malfunction occurs.

- **Normality Judgment**

Judge as OK and clear the NG if the continuous time while the following conditions are established is more than the predetermined time.

Judgment Value

Malfunction Criteria	Threshold Value
Sensor 1 input voltage	≥ 0.295 V

Time Needed for Diagnosis: 100 ms

GETtheMANUALS.org

EB:DTC P2123 THROTTLE/PEDAL POSITION SENSOR/SWITCH “D” CIRCUIT HIGH INPUT

1. OUTLINE OF DIAGNOSIS

Detect the open or short circuit of accelerator pedal position sensor 1.
Judge as NG if out of specification.

2. COMPONENT DESCRIPTION

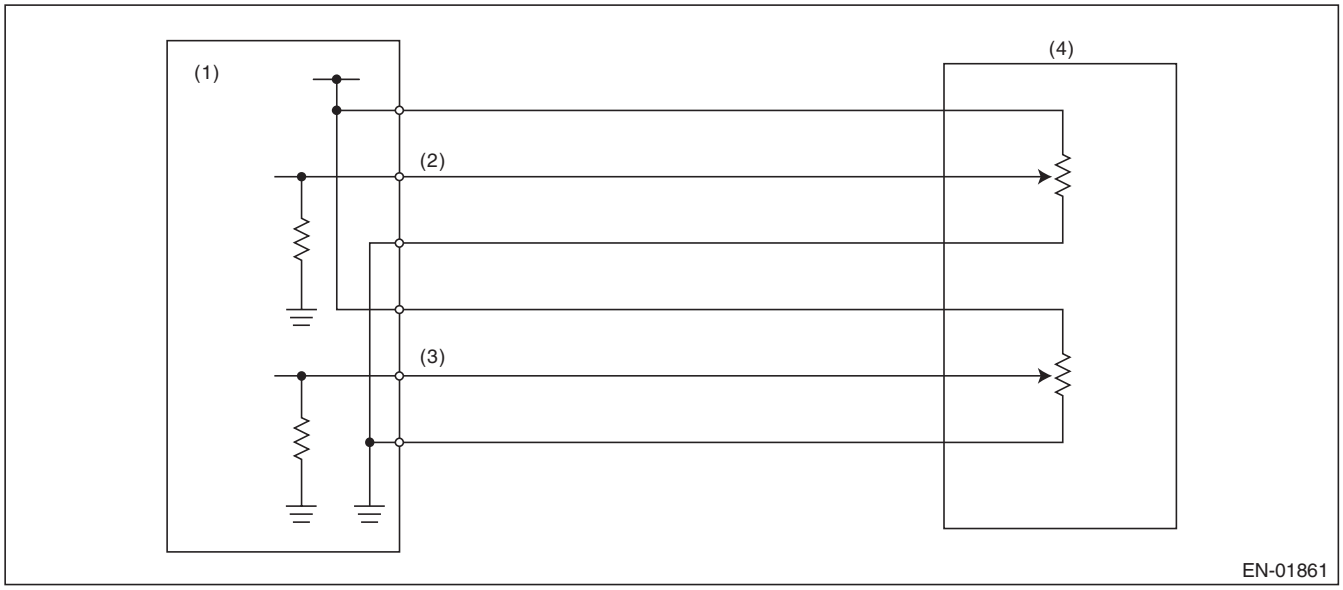

(1) Engine control module (ECM)
(2) Accelerator pedal position sensor 1 signal
(3) Accelerator pedal position sensor 2 signal
(4) Accelerator pedal position sensor

3. ENABLE CONDITION

Secondary Parameters	Enable Conditions
Ignition switch	ON
Battery voltage	≥ 6 V

4. GENERAL DRIVING CYCLE

Always perform the diagnosis continuously.

GETtheMANUALS.org

5. DIAGNOSTIC METHOD

- **Abnormality Judgment**

If the duration of time while the following conditions are met is longer than the time indicated, judge as NG.

Judgment Value

Malfunction Criteria	Threshold Value
Sensor 1 input voltage	≥ 4.783 V

Time Needed for Diagnosis: 32 ms
Malfunction Indicator Light Illumination: Illuminates as soon as a malfunction occurs.

- **Normality Judgment**

Judge as OK and clear the NG if the continuous time while the following conditions are established is more than the predetermined time.

Judgment Value

Malfunction Criteria	Threshold Value
Sensor 1 input voltage	< 4.783 V

Time Needed for Diagnosis: 32 ms

GETtheMANUALS.org

EC:DTC P2127 THROTTLE/PEDAL POSITION SENSOR/SWITCH “E” CIRCUIT LOW INPUT

1. OUTLINE OF DIAGNOSIS

Detect the open or short circuit of accelerator pedal position sensor 2.
Judge as NG if out of specification.

2. COMPONENT DESCRIPTION

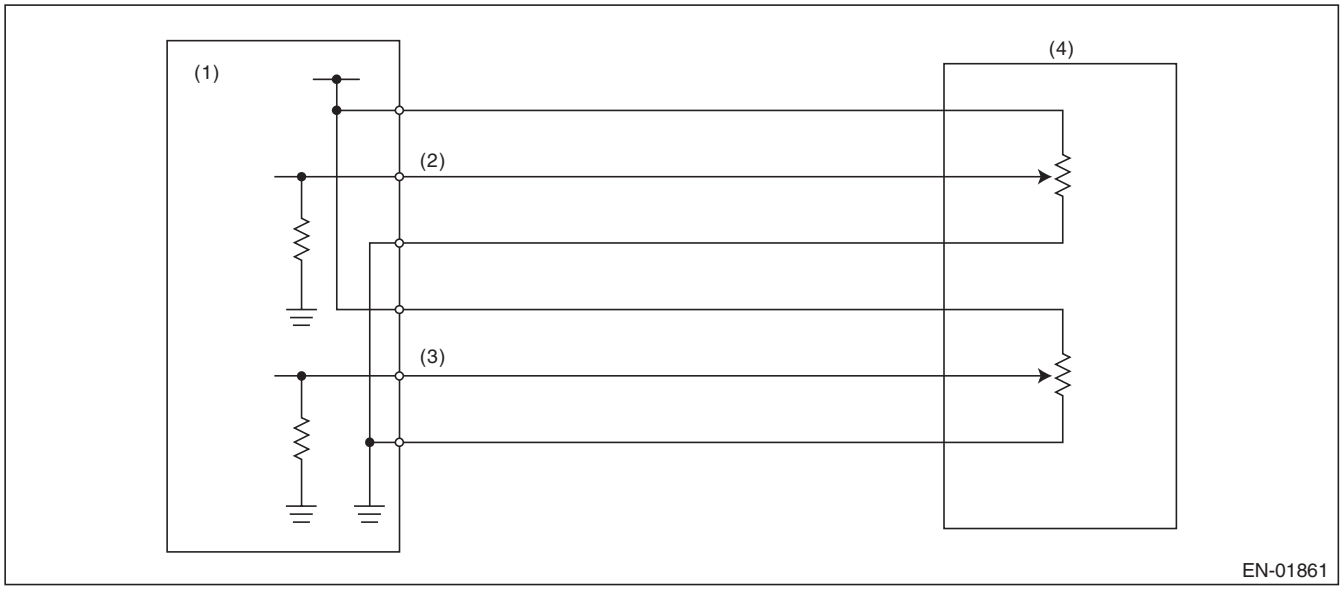

(1) Engine control module (ECM)
(2) Accelerator pedal position sensor 1 signal
(3) Accelerator pedal position sensor 2 signal
(4) Accelerator pedal position sensor

3. ENABLE CONDITION

Secondary Parameters	Enable Conditions
Ignition switch	ON
Battery voltage	≥ 6 V

4. GENERAL DRIVING CYCLE

Always perform the diagnosis continuously.

GETtheMANUALS.org

5. DIAGNOSTIC METHOD

- **Abnormality Judgment**

If the duration of time while the following conditions are met is longer than the time indicated, judge as NG.

Judgment Value

Malfunction Criteria	Threshold Value
Sensor 2 input voltage	< 0.295 V

Time Needed for Diagnosis: 100 ms
Malfunction Indicator Light Illumination: Illuminates as soon as a malfunction occurs.

- **Normality Judgment**

Judge as OK and clear the NG if the continuous time while the following conditions are established is more than the predetermined time.

Judgment Value

Malfunction Criteria	Threshold Value
Sensor 2 input voltage	≥ 0.295 V

Time Needed for Diagnosis: 100 ms

GETtheMANUALS.org

ED:DTC P2128 THROTTLE/PEDAL POSITION SENSOR/SWITCH “E” CIRCUIT HIGH INPUT

1. OUTLINE OF DIAGNOSIS

Detect the open or short circuit of accelerator pedal position sensor 2.
Judge as NG if out of specification.

2. COMPONENT DESCRIPTION

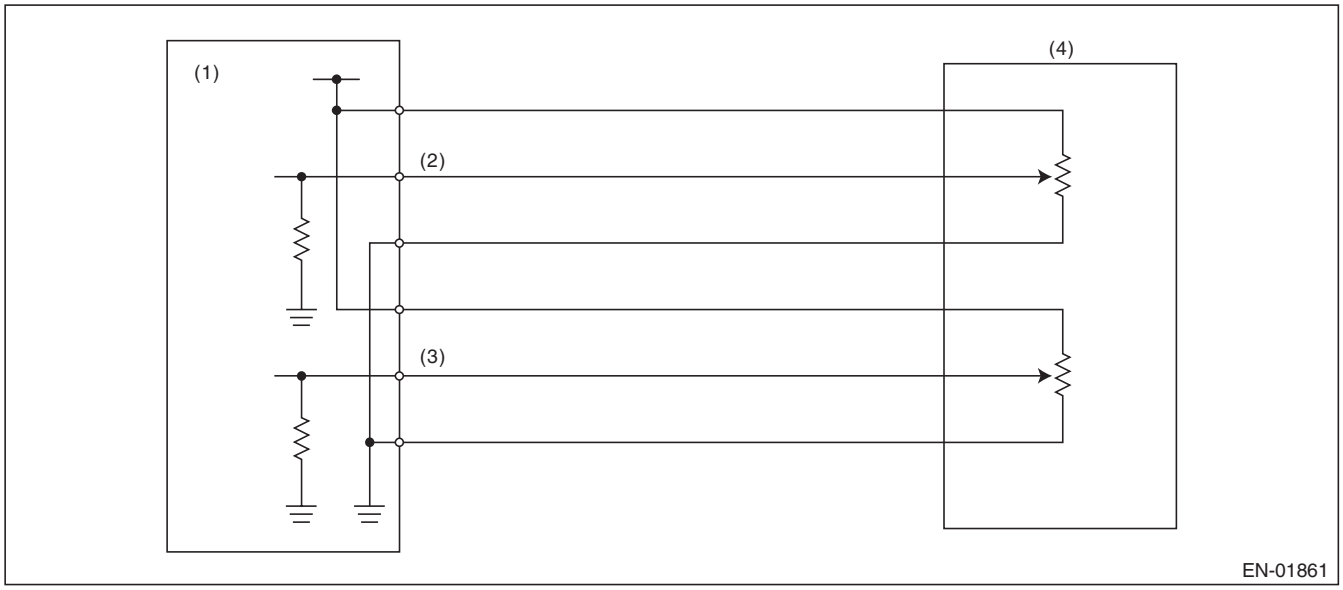

(1) Engine control module (ECM)
(2) Accelerator pedal position sensor 1 signal
(3) Accelerator pedal position sensor 2 signal
(4) Accelerator pedal position sensor

3. ENABLE CONDITION

Secondary Parameters	Enable Conditions
Ignition switch	ON
Battery voltage	≥ 6 V

4. GENERAL DRIVING CYCLE

Always perform the diagnosis continuously.

GETtheMANUALS.org

5. DIAGNOSTIC METHOD

- **Abnormality Judgment**

If the duration of time while the following conditions are met is longer than the time indicated, judge as NG.

Judgment Value

Malfunction Criteria	Threshold Value
Sensor 2 input voltage	≥ 4.783 V

Time Needed for Diagnosis: 100 ms
Malfunction Indicator Light Illumination: Illuminates as soon as a malfunction occurs.

- **Normality Judgment**

Judge as OK and clear the NG if the continuous time while the following conditions are established is more than the predetermined time.

Judgment Value

Malfunction Criteria	Threshold Value
Sensor 2 input voltage	< 4.783 V

Time Needed for Diagnosis: 100 ms

GETtheMANUALS.org

EE:DTC P2135 THROTTLE/PEDAL POSITION SENSOR/SWITCH “A”/“B” VOLTAGE CORRELATION

1. OUTLINE OF DIAGNOSIS

Judge as NG when the signal level of throttle position sensor 1 is different from the throttle position sensor 2.

2. COMPONENT DESCRIPTION

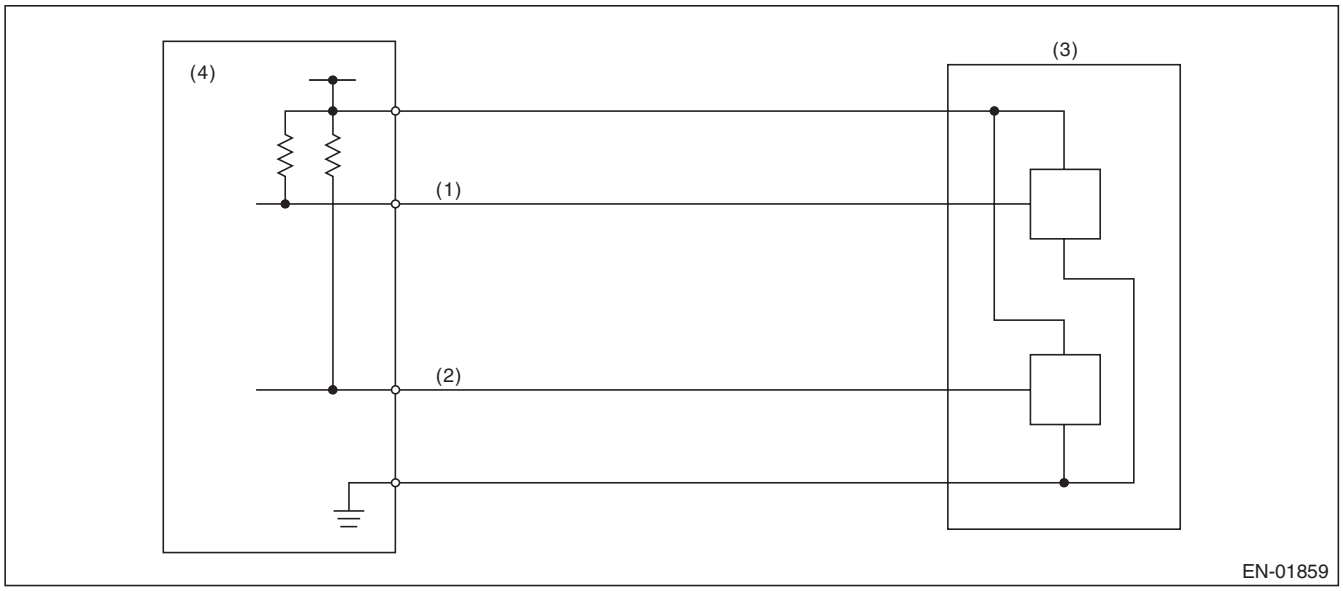

(1) Throttle position sensor 1 signal
(2) Throttle position sensor 2 signal
(3) Throttle position sensor
(4) Engine control module (ECM)

3. ENABLE CONDITION

Secondary Parameters	Enable Conditions
Ignition switch	ON
Battery voltage	≥ 6 V

4. GENERAL DRIVING CYCLE

Always perform the diagnosis continuously.

GETtheMANUALS.org

5. DIAGNOSTIC METHOD

• Abnormality Judgment

If the duration of time while the following conditions are met is longer than the time indicated, judge as NG.

Judgment Value

Malfunction Criteria	Threshold Value
Signal difference between two sensors	Within the NG range of **judgment value detail**

Details of Judgment Value

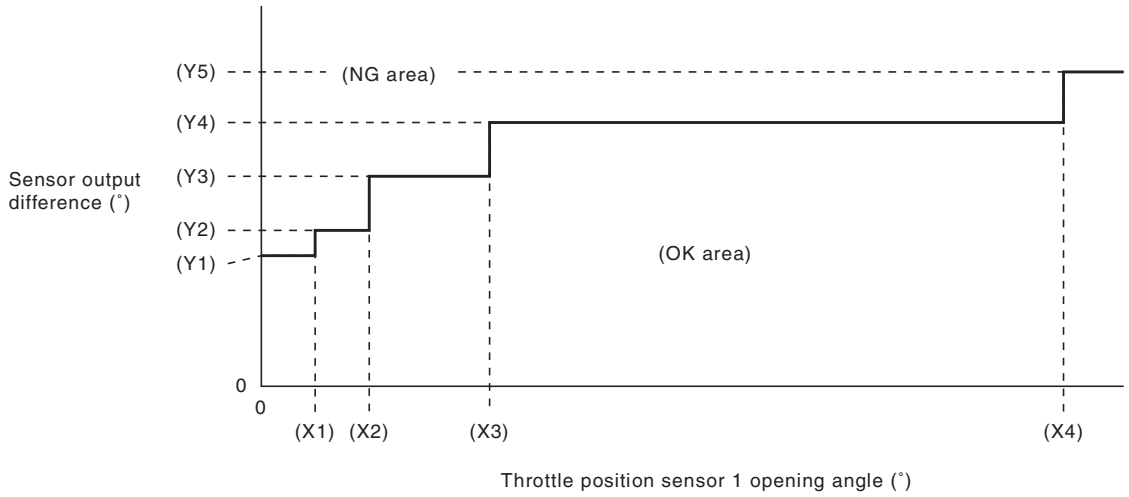

(X1)	2.125 °	(X2)	4.25 °	(X3)	9 °
(X4)	31.625 °				
(Y1)	5.15 °	(Y2)	6.15 °	(Y3)	8.28 °
(Y4)	10.4 °	(Y5)	12.4 °		

Time Needed for Diagnosis: 212 ms
Malfunction Indicator Light Illumination: Illuminates as soon as a malfunction occurs.

• Normality Judgment

Judge as OK and clear the NG if the continuous time while the following conditions are established is more than the predetermined time.

Judgment Value

Malfunction Criteria	Threshold Value
Signal difference between two sensors	Within the OK range of **judgment value detail**

Time Needed for Diagnosis: 24 ms

GETtheMANUALS.org

EF:DTC P2138 THROTTLE/PEDAL POSITION SENSOR/SWITCH “D”/“E” VOLTAGE CORRELATION

1. OUTLINE OF DIAGNOSIS

Judge as NG when the signal level of throttle position sensor 1 is different from the throttle position sensor 2.

2. COMPONENT DESCRIPTION

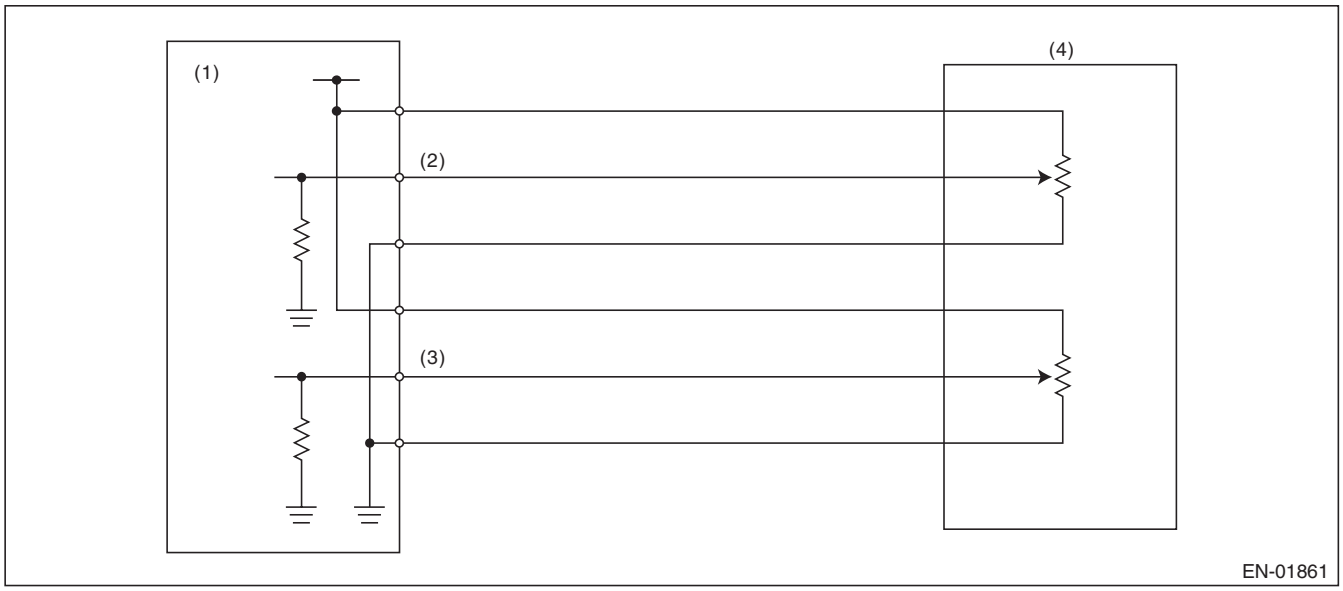

(1) Engine control module (ECM)
(2) Accelerator pedal position sensor 1 signal
(3) Accelerator pedal position sensor 2 signal
(4) Accelerator pedal position sensor

3. ENABLE CONDITION

Secondary Parameters	Enable Conditions
Ignition switch	ON
Battery voltage	≥ 6 V

4. GENERAL DRIVING CYCLE

Always perform the diagnosis continuously.

GETtheMANUALS.org

5. DIAGNOSTIC METHOD

• Abnormality Judgment

If the duration of time while the following conditions are met is longer than the time indicated, judge as NG.

Judgment Value

Malfunction Criteria	Threshold Value
Signal difference between two sensors	Within the NG range of **judgment value detail**

Details of Judgment Value

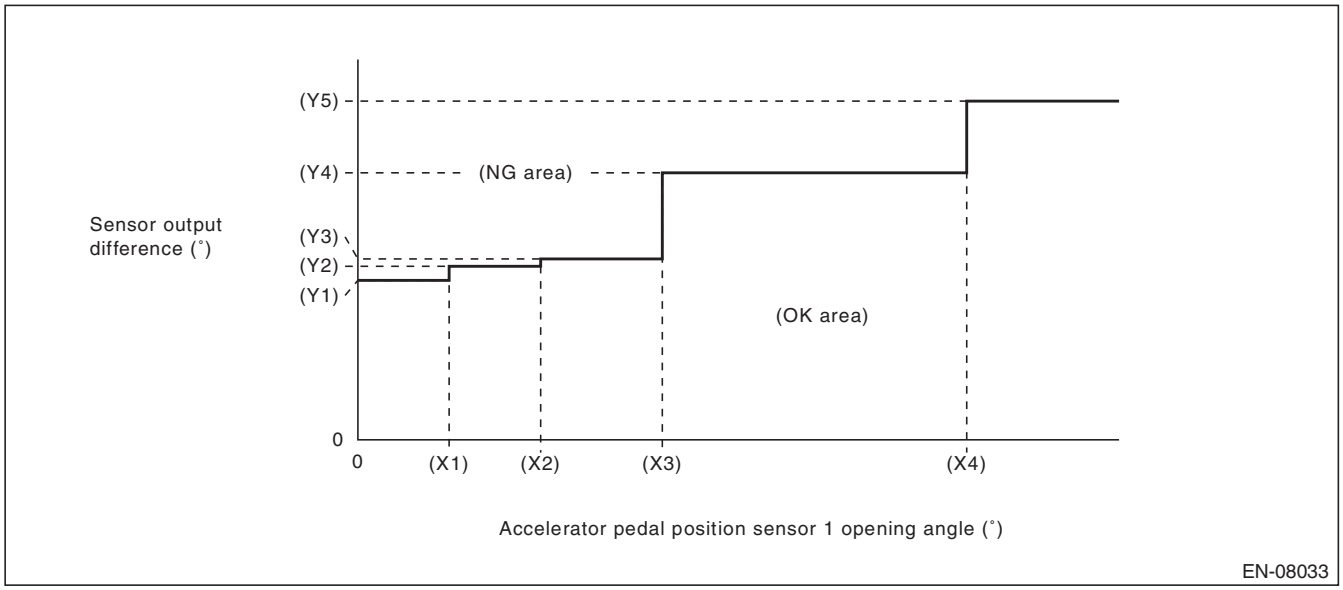

(X1)	0.6 °	(X2)	1.2 °	(X3)	2 °
(X4)	4 °				
(Y1)	1.465 °	(Y2)	1.597 °	(Y3)	1.663 °
(Y4)	2.455 °	(Y5)	3.116 °		

Time Needed for Diagnosis: 116 ms
Malfunction Indicator Light Illumination: Illuminates as soon as a malfunction occurs.

• Normality Judgment

Judge as OK and clear the NG if the continuous time while the following conditions are established is more than the predetermined time.

Judgment Value

Malfunction Criteria	Threshold Value
Signal difference between two sensors	Within the OK range of **judgment value detail**

Time Needed for Diagnosis: 116 ms

GETtheMANUALS.org

EG:DTC P2227 BAROMETRIC PRESSURE CIRCUIT RANGE/PERFORMANCE

1. OUTLINE OF DIAGNOSIS

Detect the malfunction of barometric pressure sensor output property.
Judge as NG when the barometric pressure sensor output is largely different from the intake manifold pressure at engine start.

2. COMPONENT DESCRIPTION

The barometric pressure sensor is built into the ECM.

3. ENABLE CONDITION

Secondary Parameters	Enable Conditions
Engine speed	< 300 rpm
Vehicle speed	< 1 km/h (0.6 MPH)

4. GENERAL DRIVING CYCLE

Perform the diagnosis once at ignition switch ON.

5. DIAGNOSTIC METHOD

- **Abnormality Judgment**

If the duration of time while the following conditions are met is longer than the time indicated, judge as NG.

Judgment Value

Malfunction Criteria	Threshold Value
|Barometric pressure – Intake manifold pressure|	≥ 26.7 kPa (200 mmHg, 7.9 inHg)
|Intake manifold pressure at engine start – Intake manifold pressure|	< 1.3 kPa (9.99 mmHg, 0.4 inHg)

Time Needed for Diagnosis: 328 ms
Malfunction Indicator Light Illumination: Illuminates when malfunction occurs in 2 continuous driving cycles.

- **Normality Judgment**

Judge as OK and clear the NG if the continuous time while the following conditions are established is more than the predetermined time.

Judgment Value

Malfunction Criteria	Threshold Value
|Barometric pressure – Intake manifold pressure|	< 26.7 kPa (200 mmHg, 7.9 inHg)

Time Needed for Diagnosis: 262 ms

GETtheMANUALS.org

EH:DTC P2228 BAROMETRIC PRESSURE CIRCUIT LOW

1. OUTLINE OF DIAGNOSIS

Detect the open/short circuit of the barometric pressure sensor.
Judge as NG if out of specification.

2. COMPONENT DESCRIPTION

The barometric pressure sensor is built into the ECM.

3. ENABLE CONDITION

Secondary Parameters	Enable Conditions
None	

4. GENERAL DRIVING CYCLE

Always perform the diagnosis continuously.

5. DIAGNOSTIC METHOD

- **Abnormality Judgment**

If the duration of time while the following conditions are met is longer than the time indicated, judge as NG.

Judgment Value

Malfunction Criteria	Threshold Value
Output voltage	< 2.146 V

Time Needed for Diagnosis: 500 ms
Malfunction Indicator Light Illumination: Illuminates as soon as a malfunction occurs.

- **Normality Judgment**

Judge as OK and clear the NG if the continuous time while the following conditions are established is more than the predetermined time.

Judgment Value

Malfunction Criteria	Threshold Value
Output voltage	≥ 2.146 V

Time Needed for Diagnosis: Less than 1 second

GETtheMANUALS.org

EI: DTC P2229 BAROMETRIC PRESSURE CIRCUIT HIGH

1. OUTLINE OF DIAGNOSIS

Detect the open/short circuit of the barometric pressure sensor.
Judge as NG if out of specification.

2. COMPONENT DESCRIPTION

The barometric pressure sensor is built into the ECM.

3. ENABLE CONDITION

Secondary Parameters	Enable Conditions
None	

4. GENERAL DRIVING CYCLE

Always perform the diagnosis continuously.

5. DIAGNOSTIC METHOD

- **Abnormality Judgment**

If the duration of time while the following conditions are met is longer than the time indicated, judge as NG.

Judgment Value

Malfunction Criteria	Threshold Value
Output voltage	≥ 3.875 V

Time Needed for Diagnosis: 500 ms
Malfunction Indicator Light Illumination: Illuminates as soon as a malfunction occurs.

- **Normality Judgment**

Judge as OK and clear the NG if the continuous time while the following conditions are established is more than the predetermined time.

Judgment Value

Malfunction Criteria	Threshold Value
Output voltage	< 3.875 V

Time Needed for Diagnosis: Less than 1 second

GETtheMANUALS.org

EJ:DTC P2610 ECM/PCM INTERNAL ENGINE OFF TIMER PERFORMANCE

1. OUTLINE OF DIAGNOSIS

Detect malfunction of soaking timer IC by the five diagnoses below.

Monitor Number	Explanation	Time required for diagnosis
Monitor #1 <Timer diagnosis>	Perform diagnosis of the soaking timer IC accuracy	196 ms
Monitor #2 <Full count diagnosis>	Perform diagnosis of the soaking timer IC counter function	4000 ms
Monitor #3 <Soaking timer IC setting diagnosis>	Perform diagnosis of communication between ECM and soaking timer IC	196 ms
Monitor #4 <Timer diagnosis (during soaking)>	Perform diagnosis of the soaking timer IC accuracy during soaking	3000 ms
Monitor #5 <Wake-up diagnosis>	Perform diagnosis of wake-up function	64 ms

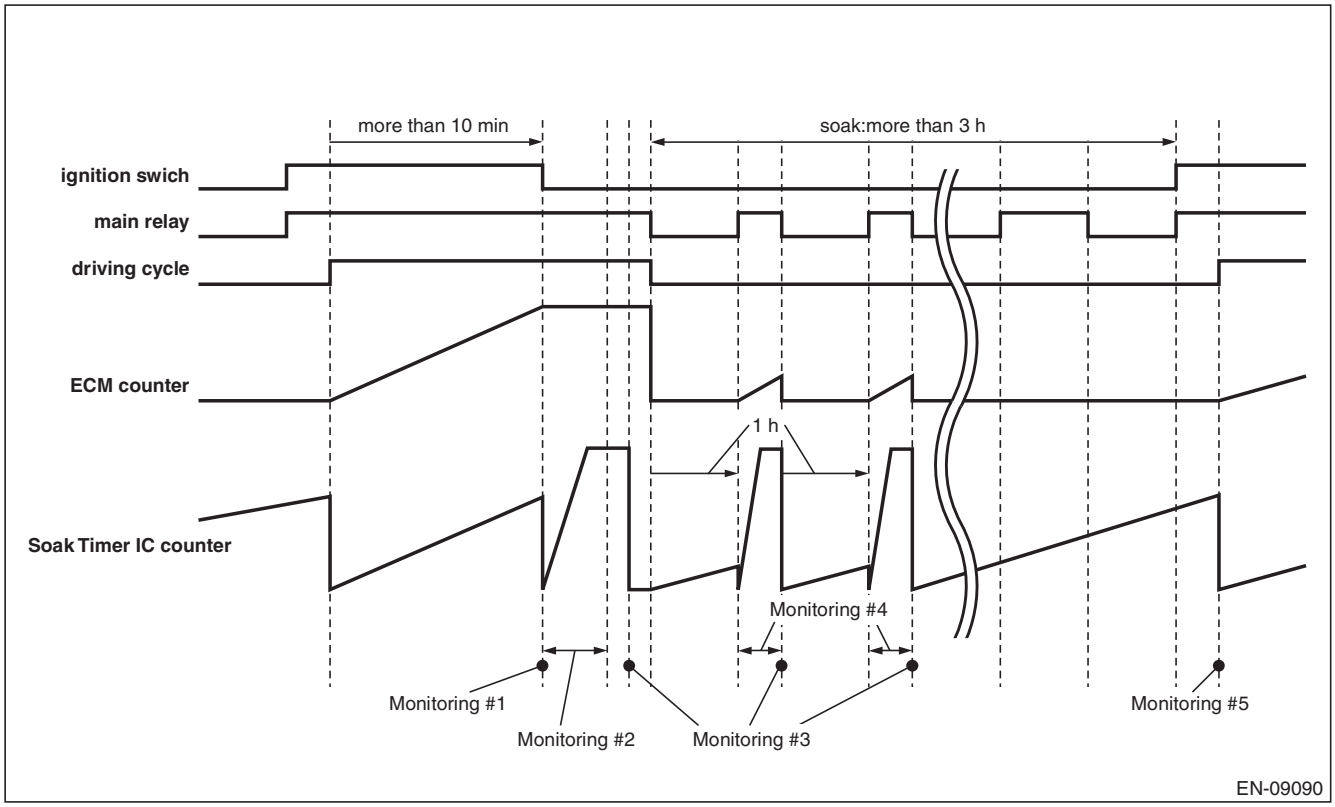

2. COMPONENT DESCRIPTION

The soaking timer IC is built into the ECM.

GETtheMANUALS.org

3. ENABLE CONDITIONS

Secondary Parameters	Enable Conditions
<Timer diagnosis>	
Battery voltage Ignition switch Elapsed time after starting the engine	≥ 10.9 V OFF > 600 s
< Full count diagnosis & soaking timer IC setting diagnosis>	
Battery voltage Ignition switch	≥ 10.9 V OFF
<Timer diagnosis (during soaking)>	
Battery voltage Ignition switch Number of wake-up	≥ 10.9 V OFF < 2 time(s)
<Wake-up diagnosis>	
Ignition switch Wake-up activation time setting Time in the soaking timer IC	ON Completed > 3600 s × 2 time(s)

4. GENERAL DRIVING CYCLE

Perform the diagnosis only once when 10 minutes have passed after the engine start and the ignition switch is OFF, and also when the ignition switch is ON after the soaking of five hours or more.

GETtheMANUALS.org

5. DIAGNOSTIC METHOD

<Timer diagnosis>

Start the count up operation of counters in ECM and in soaking timer IC when the engine is started.
Judge as timer malfunction if the difference between the counter in ECM and counter in soaking timer IC exceeds the allowable limit when the ignition switch is OFF.

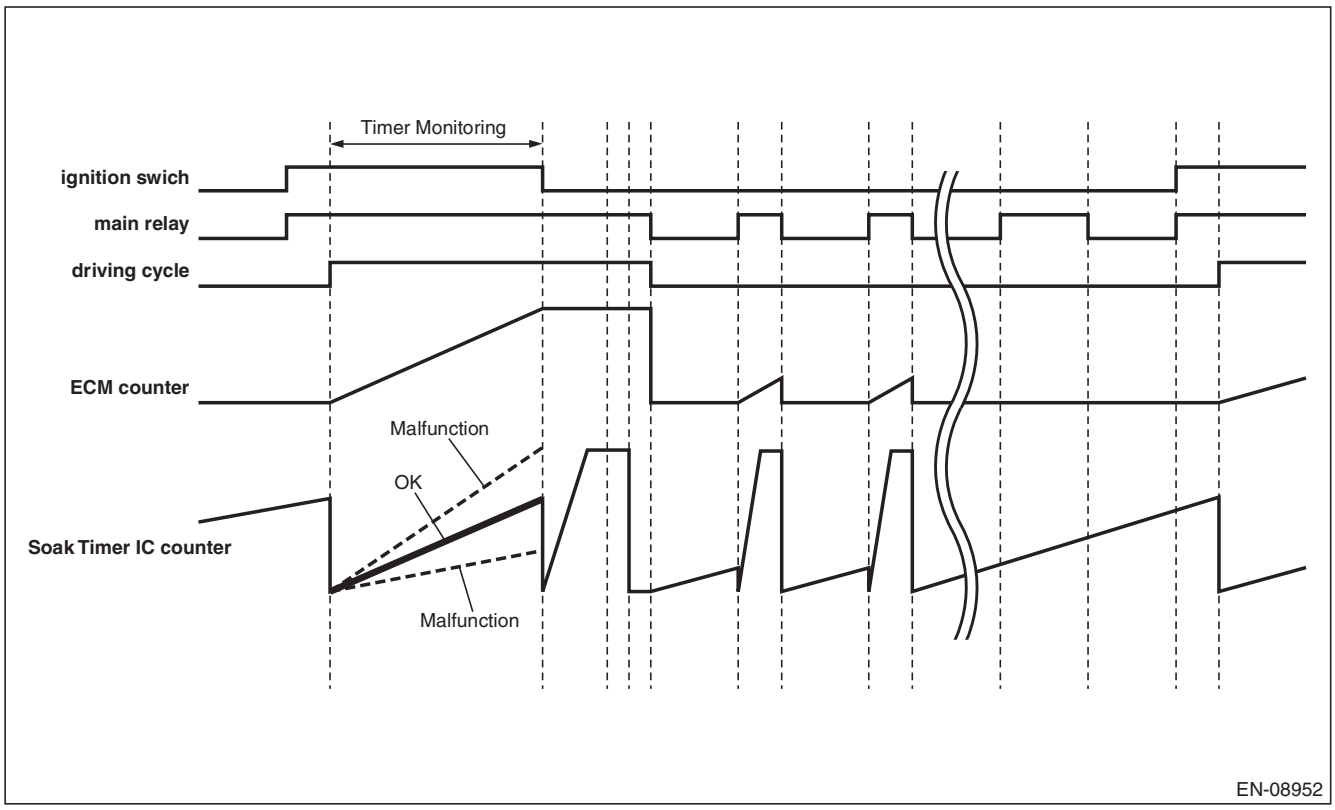

- **Abnormality Judgment**

Judge as NG when the following conditions are established.

Judgment Value

Malfunction Criteria	Threshold Value
|osoaktimcpu – osoaktimic| / osoaktimcpu osoaktimcpu = Counter in ECM osoaktimic = Counter in soaking timer IC	> 0.24

- **Normality Judgment**

Judge as OK when the following conditions are established.

Judgment Value

Malfunction Criteria	Threshold Value
|osoaktimcpu – osoaktimic| / osoaktimcpu	≤ 0.24

GETtheMANUALS.org

<Full count diagnosis>

After the timer diagnosis is completed, reset the counter in soaking timer IC and start the count up operation. Judge as full count diagnosis malfunction if counter in soaking timer IC is not $3FF (1023 count) after 4 seconds.

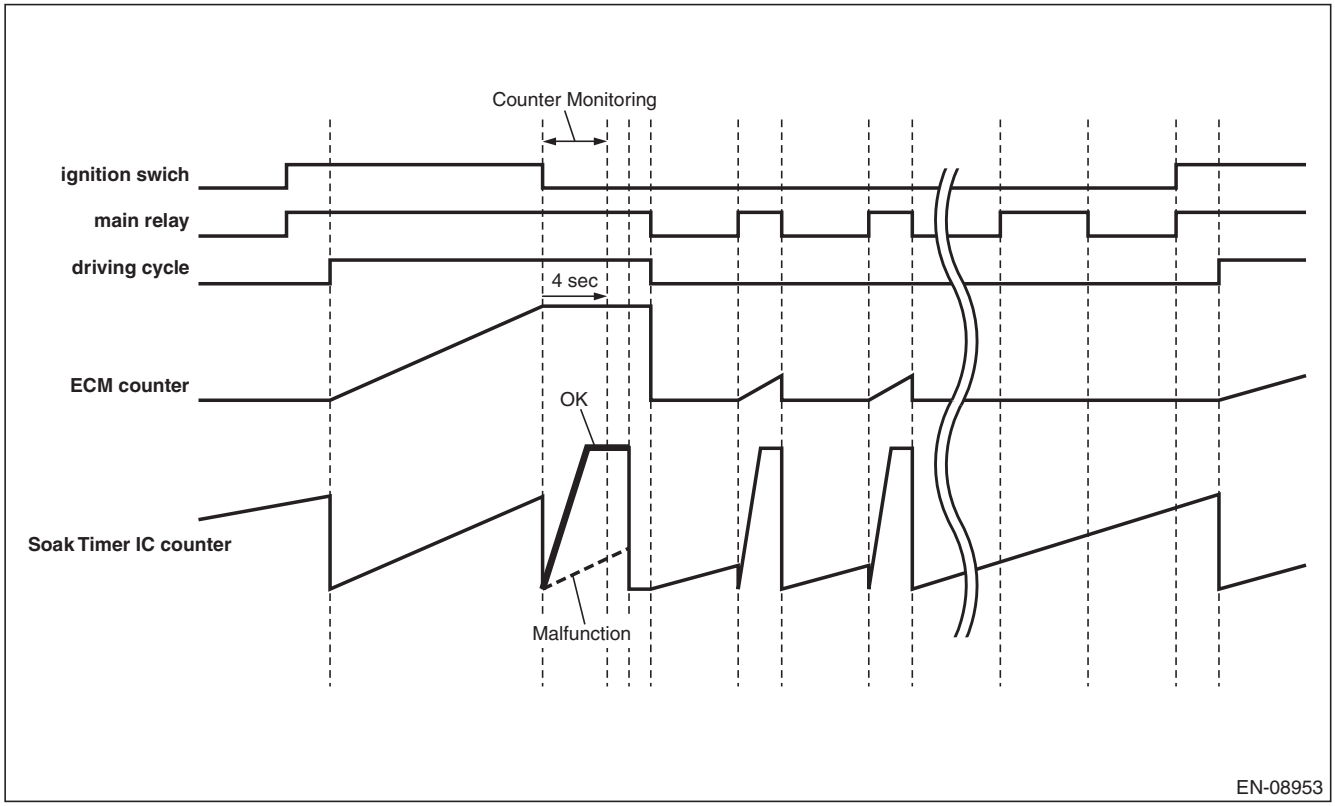

- **Abnormality Judgment**

Judge as NG when the following conditions are established.

Judgment Value

Malfunction Criteria	Threshold Value
osoakfcntic osoakfcntic = Counter in soaking timer IC	≠ $3FF (1023 count)

- **Normality Judgment**

Judge as OK when the following conditions are established.

Judgment Value

Malfunction Criteria	Threshold Value
osoakfcntic	= $3FF (1023 count)

GETtheMANUALS.org

<Soaking timer IC setting diagnosis>

When setting the activation setting time to soaking timer IC, compare the writing value to soaking timer IC with read out value. Judge as malfunction if the values do not match 3 times in a row.

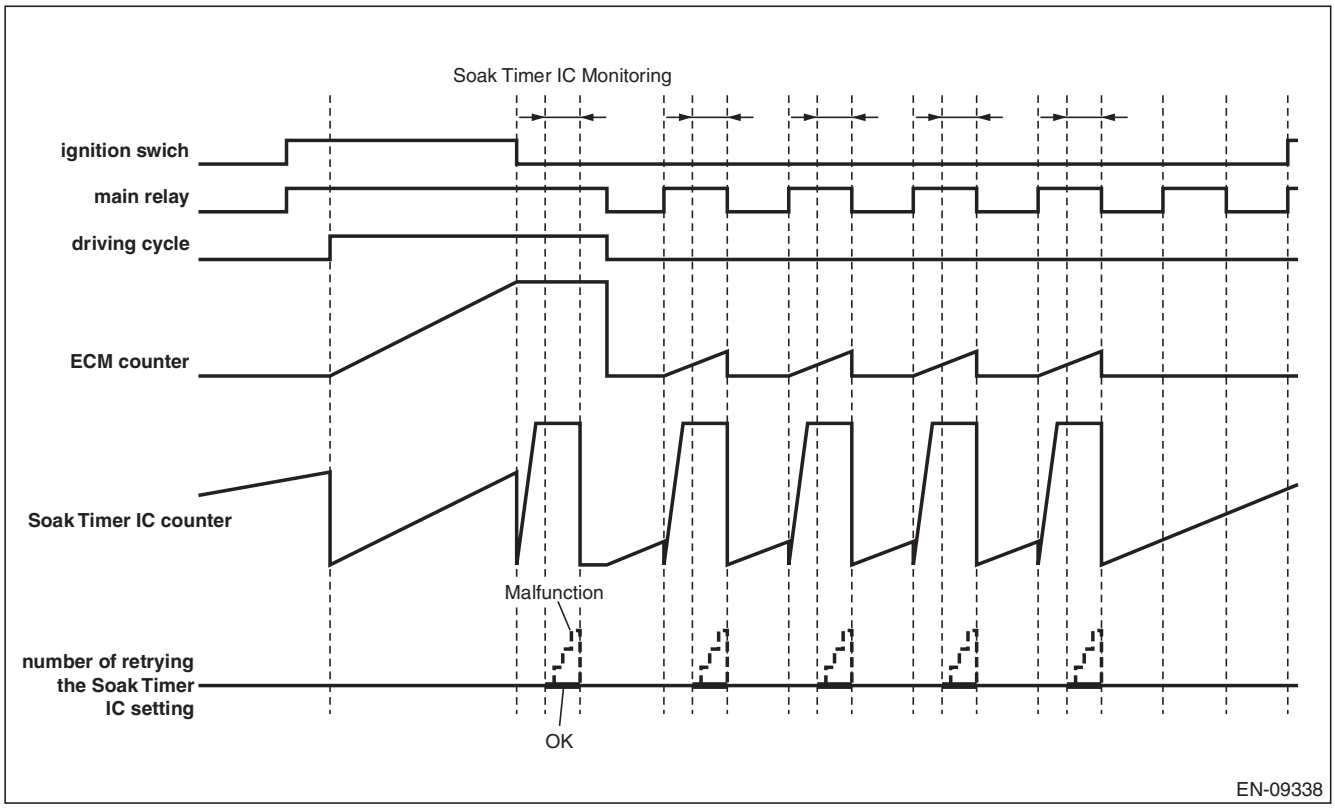

- **Abnormality Judgment**

Judge as NG when the following conditions are established.

Judgment Value

Malfunction Criteria	Threshold Value
Writing value and read out value when setting the soaking timer	Unmatch
Number of retrying the soaking timer setting	≥ 3 times

- **Normality Judgment**

Judge as OK when the following conditions are established.

Judgment Value

Malfunction Criteria	Threshold Value
Writing value and read out value when setting the soaking timer	Match

GETtheMANUALS.org

<Timer diagnosis (during soaking)>

Wake-up at the predetermined interval until five hours have passed after the ignition switch is OFF, and compare the counter in soaking timer IC with the counter in ECM.
Judge as malfunction if the counter in soaking timer IC is counted up to maximum value (1023 count) when the counter in ECM is 1637 ms, or if the counter in soaking timer IC is not counted up to maximum value (1023 count) when the counter in ECM is 2455 ms.

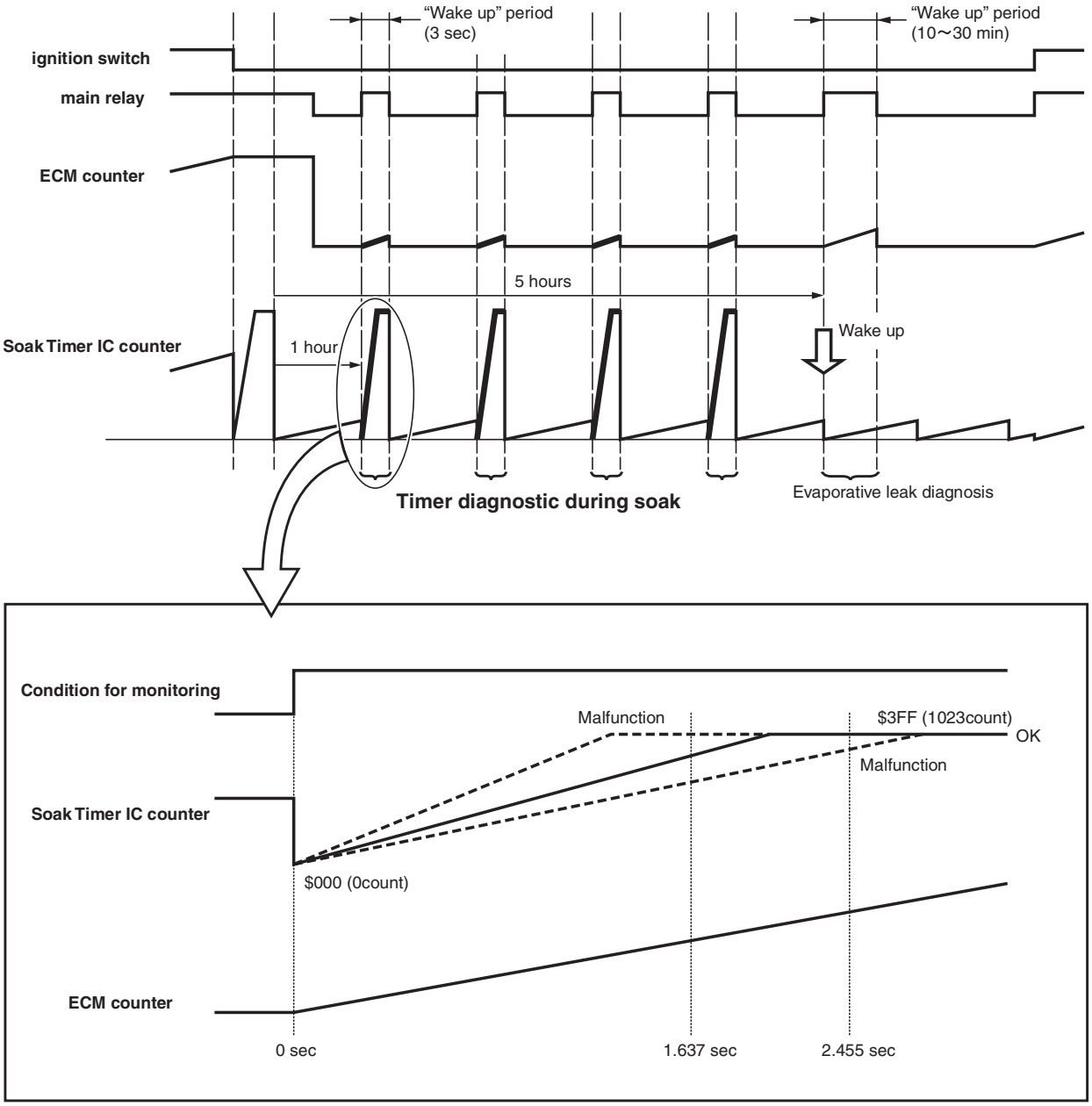

EN-08981

GETtheMANUALS.org

- **Abnormality Judgment**

Judge as NG when the following conditions are established.

Judgment Value

Malfunction Criteria	Threshold Value
When any one of the followings is established.	
• All of the following conditions are established. Counter in ECM Counter in soaking timer IC	 ≤ 1637 ms = $3FF (1023 count)
• All of the following conditions are established. Counter in ECM Counter in soaking timer IC	 ≥ 2455 ms ≠ $3FF (1023 count)

- **Normality Judgment**

Judge as OK when the following conditions are established.

Judgment Value

Malfunction Criteria	Threshold Value
Following conditions are established.	
• All of the following conditions are established. Counter in ECM Counter in soaking timer IC	 ≤ 1637 ms ≠ $3FF (1023 count)
• All of the following conditions are established. Counter in ECM Counter in soaking timer IC	 ≥ 2455 ms = $3FF (1023 count)

<Wake-up diagnosis>

Store the number of wake-up activation when the ECM wakes up by the soaking timer IC.

GETtheMANUALS.org

Next time when the ignition switch is ON, if the number of wake-up activation does not reach the predetermined value even though the counter in soaking timer IC exceeds the activation setting time, judge as wake-up malfunction.

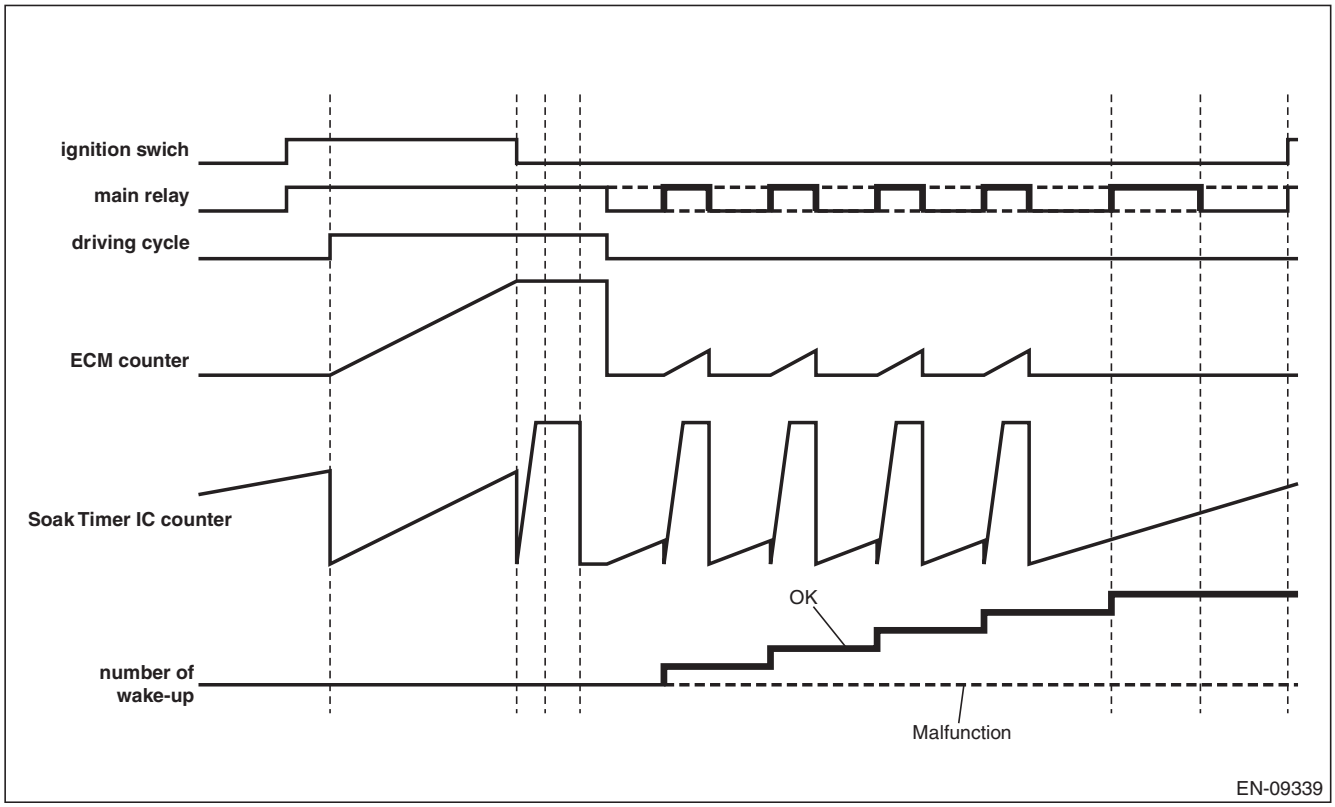

- **Abnormality Judgment**

Judge as NG when the following conditions are established.

Judgment Value

Malfunction Criteria	Threshold Value
Number of wake-up	< 2 time(s)

- **Normality Judgment**

Judge as OK when the following conditions are established.

Judgment Value

Malfunction Criteria	Threshold Value
Number of wake-up	≥ 2 time(s)

GETtheMANUALS.org

- **Abnormality Judgment**

Judge as NG when the following conditions are established.

Judgment Value

Malfunction Criteria	Threshold Value
Ignition switch	ON
Driving cycle	Completed
When any one of the followings is established.	
• Timer diagnosis	NG
• Full count diagnosis	NG
• Soaking timer IC setting diagnosis	NG
• Timer diagnosis (during soaking)	NG
• Wake-up diagnosis	NG

Time Needed for Diagnosis: 18620 s (Approx. 5 hours)
Malfunction Indicator Light Illumination: Illuminates when malfunction occurs in 2 continuous driving cycles.

- **Normality Judgment**

Judge as OK and clear the NG if the following conditions are established.

Judgment Value

Malfunction Criteria	Threshold Value
Ignition switch	ON
Driving cycle	Completed
All of the following conditions are established.	
• Timer diagnosis	OK
• Full count diagnosis	OK
• Soaking timer IC setting diagnosis	OK
• Timer diagnosis (during soaking)	OK
• Wake-up diagnosis	OK

Time Needed for Diagnosis: 18620 s (Approx. 5 hours)

GETtheMANUALS.org

EK:DTC U0073 CAN FAILURE, BUS ‘OFF’ DETECTION

1. OUTLINE OF DIAGNOSIS

Detect malfunction of CAN communication.
Judge as NG when CAN communication failure has occurred.

2. COMPONENT DESCRIPTION

(Common Specifications)
CAN Protocol 2.0 B (Active)
Frame Format: 11 Bit ID Frame (Standard Frame)
Conforms to ISO11898
Communication Speed: 500 kbps

3. ENABLE CONDITIONS

Secondary Parameters	Enable Conditions
None	

4. GENERAL DRIVING CYCLE

Perform the diagnosis continuously after starting the engine.

5. DIAGNOSTIC METHOD

- **Abnormality Judgment**

Judge as NG when the following conditions are established.

Judgment Value

Malfunction Criteria	Threshold Value
Battery voltage	> 10.9 V
Starter switch	OFF
Engine	run
bus off flag or error warning flag	set (error)

Time Needed for Diagnosis: 436 ms
Malfunction Indicator Light Illumination: Illuminates as soon as a malfunction occurs.

- **Normality Judgment**

Judge as OK and clear the NG if the continuous time while the following conditions are established is more than the predetermined time.

Judgment Value

Malfunction Criteria	Threshold Value
Engine	run
bus off flag or error warning flag	clear (No error)

Time Needed for Diagnosis: 1000 ms

GETtheMANUALS.org

EL:DTC U0101 CAN (TCU) DATA NOT LOADED

1. OUTLINE OF DIAGNOSIS

Detect malfunction of CAN communication.
Judge as NG when CAN communication failure has occurred between TCM, VDC CM and body integrated unit.

2. COMPONENT DESCRIPTION

(Common Specifications)
CAN Protocol 2.0 B (Active)
Frame Format: 11 Bit ID Frame (Standard Frame)
Conforms to ISO11898
Communication Speed: 500 kbps

3. ENABLE CONDITIONS

Secondary Parameters	Enable Conditions
None	

4. GENERAL DRIVING CYCLE

Perform the diagnosis continuously after starting the engine.

5. DIAGNOSTIC METHOD

- **Abnormality Judgment**

Judge as NG when the following conditions are established.

Judgment Value

Malfunction Criteria	Threshold Value
Battery voltage	> 10.9 V
Starter switch	OFF
Engine	run
ID received from control module connected to CAN	None during 500 milliseconds

Time Needed for Diagnosis: 500 ms
Malfunction Indicator Light Illumination: Illuminates as soon as a malfunction occurs.

- **Normality Judgment**

Judge as OK and clear the NG if the continuous time while the following conditions are established is more than the predetermined time.

Judgment Value

Malfunction Criteria	Threshold Value
Engine	run
ID received from control module connected to CAN	Yes

Time Needed for Diagnosis: 1000 ms

GETtheMANUALS.org

EM:DTC U0122 CAN (VDC) DATA NOT LOADED

1. OUTLINE OF DIAGNOSIS

NOTE:
For the detection standard, refer to DTC U0101. <Ref. to GD(H4SO)-251, DTC U0101 CAN (TCU) DATA NOT LOADED, Diagnostic Trouble Code (DTC) Detecting Criteria.>

EN:DTC U0140 CAN (BCU) DATA NOT LOADED

1. OUTLINE OF DIAGNOSIS

NOTE:
For the detection standard, refer to DTC U0101. <Ref. to GD(H4SO)-251, DTC U0101 CAN (TCU) DATA NOT LOADED, Diagnostic Trouble Code (DTC) Detecting Criteria.>

GETtheMANUALS.org

EO:DTC U0402 CAN (TCU) DATA ABNORMAL

1. OUTLINE OF DIAGNOSIS

Detect malfunction of CAN communication.
Judge as NG when data received from TCM, VDC CM and body integrated unit is not normal.

2. COMPONENT DESCRIPTION

(Common Specifications)
CAN Protocol 2.0 B (Active)
Frame Format: 11 Bit ID Frame (Standard Frame)
Conforms to ISO11898
Communication Speed: 500 kbps

3. ENABLE CONDITIONS

Secondary Parameters	Enable Conditions
None	

4. GENERAL DRIVING CYCLE

Perform the diagnosis continuously after starting the engine.

5. DIAGNOSTIC METHOD

- **Abnormality Judgment**

Judge as NG when the following conditions are established.

Judgment Value

Malfunction Criteria	Threshold Value
Battery voltage	> 10.9 V
Starter switch	OFF
Engine	run
Data updated from control module connected to CAN	None during 2000 milliseconds

Time Needed for Diagnosis: 2 seconds
Malfunction Indicator Light Illumination: Illuminates as soon as a malfunction occurs.

- **Normality Judgment**

Judge as OK and clear the NG if the continuous time while the following conditions are established is more than the predetermined time.

Judgment Value

Malfunction Criteria	Threshold Value
Engine	run
Data updated from control module connected to CAN	Yes

Time Needed for Diagnosis: 1000 ms

GETtheMANUALS.org

EP:DTC U0416 CAN (VDC) DATA ABNORMAL

1. OUTLINE OF DIAGNOSIS

NOTE:
For the detection standard, refer to DTC U0402. <Ref. to GD(H4SO)-253, DTC U0402 CAN (TCU) DATA ABNORMAL, Diagnostic Trouble Code (DTC) Detecting Criteria.>

EQ:DTC U0422 CAN (BCU) DATA ABNORMAL

1. OUTLINE OF DIAGNOSIS

NOTE:
For the detection standard, refer to DTC U0402. <Ref. to GD(H4SO)-253, DTC U0402 CAN (TCU) DATA ABNORMAL, Diagnostic Trouble Code (DTC) Detecting Criteria.>

GETtheMANUALS.org