# FUEL INJECTION SYSTEM [MFI-TURBO] 2-7b


Page

T DIAGNOSTICS AIRBAG ..... 2
1. Supplemental Restraint System "Airbag" ..... 2
2. Precautions ..... 2
3. Pre-inspection ..... 4
4. Electrical Unit Location ..... 6
5. Schematic ..... 10
6. Diagnostics Chart for On-board Diagnosis System ..... 11
7. Control Module I/O Signal ..... 17
8. Diagnostics Chart for Engine Starting Failure ..... 19
9. Diagnostics Chart with Trouble Code ..... 31
10. Diagnostics Chart with Select Monitor ..... 66
11. General Diagnostics Table ..... 80


GETtheMANUALS.org

## 1. Supplemental Restraint System "Airbag"

Airbag system wiring harness is routed near the engine control module (ECM), main relay and fuel pump relay.

**CAUTION:**

- **All Airbag system wiring harness and connectors are colored yellow. Do not use electrical test equipment on these circuit.**
- **Be careful not to damage Airbag system wiring harness when servicing the engine control module (ECM), main relay and fuel pump relay.**

## 2. Precautions

1) Never connect the battery in reverse polarity.
- The ECM will be destroyed instantly.
- The fuel injector and other part will be damaged in just a few minutes more.

2) Do not disconnect the battery terminals while the engine is running.
- A large counter electromotive force will be generated in the alternator, and this voltage may damage electronic parts such as ECM, etc.

3) Before disconnecting the connectors of each sensor and the ECM, be sure to turn OFF the ignition switch.



GETtheMANUALS.org

4) Before removing ECM from the located position, disconnect two cables on battery.
● Otherwise, the ECM may be damaged.
5) The connectors to each sensor in the engine compartment and the harness connectors on the engine side and body side are all designed to be waterproof. However, it is still necessary to take care not to allow water to get into the connectors when washing the vehicle, or when servicing the vehicle on a rainy day.
6) Every MFI-related part is a precision part. Do not drop them.
7) Observe the following cautions when installing a radio in MFI equipped models.

**CAUTION:**

**● The antenna must be kept as far apart as possible from the control unit.**
**● The antenna feeder must be placed as far apart as possible from the ECM and MFI harness.**
**● Carefully adjust the antenna for correct matching.**
**● When mounting a large power type radio, pay special attention to the three items above mentioned.**
**● Incorrect installation of the radio may affect the operation of the ECM.**

8) Before disconnecting the fuel hose, disconnect the fuel pump connector and crank the engine for more than five seconds to release pressure in the fuel system. If engine starts during this operation, run it until it stops.



GETtheMANUALS.org

## 3. Pre-inspection

Before performing diagnostics, check the following items which might affect engine problems:

### 1. POWER SUPPLY

1) Measure battery voltage and specific gravity of electrolyte.

***Standard voltage: 12 V***
***Specific gravity: Above 1.260***

2) Check the condition of the main and other fuses, and harnesses and connectors. Also check for proper grounding.

### 2. CAPS AND PLUGS

1) Check that the fuel cap is properly closed.
2) Check that the oil filler cap is properly closed.
3) Check that the oil level gauge is properly inserted.

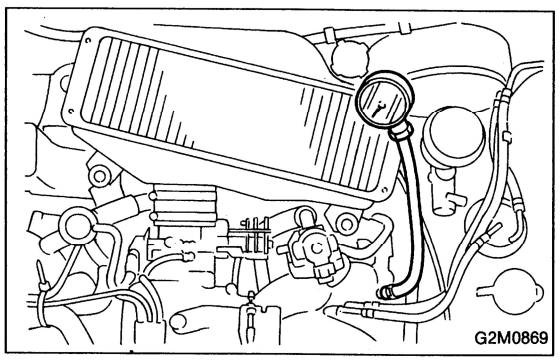
G2M0869

### 3. INTAKE MANIFOLD VACUUM PRESSURE

1) After warming-up the engine, measure intake manifold vacuum pressure while at idle.

***Standard vacuum pressure:***
***More than –69.3 kPa (–520 mmHg, –20.47 inHg)***
<Ref. to 2-2 [W5A0].>

2) Unusual vacuum pressure occurs because of air leaks, fuel or engine problems. In such a case, engine idles roughly.



GETtheMANUALS.org

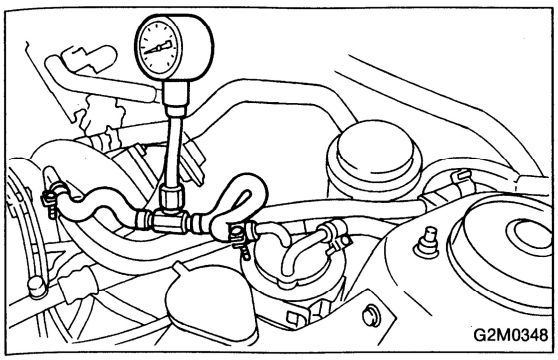


## 4. FUEL PRESSURE

1) Release fuel pressure.
<Ref. to 2-8 [W1A0].>
2) Connect fuel pressure gauge between fuel filter and hose, and measure fuel pressure at idling.
<Ref. to 2-8 [W2A0].>

***Fuel pressure:***
***177 — 206 kPa (1.8 — 2.1 kg/cm$^2$, 26 — 30 psi)***

## 5. ENGINE GROUNDING

Make sure the engine grounding terminal is properly connected to the engine.



GETtheMANUALS.org

# 4. Electrical Unit Location

## 1. SENSOR AND SOLENOID VALVE

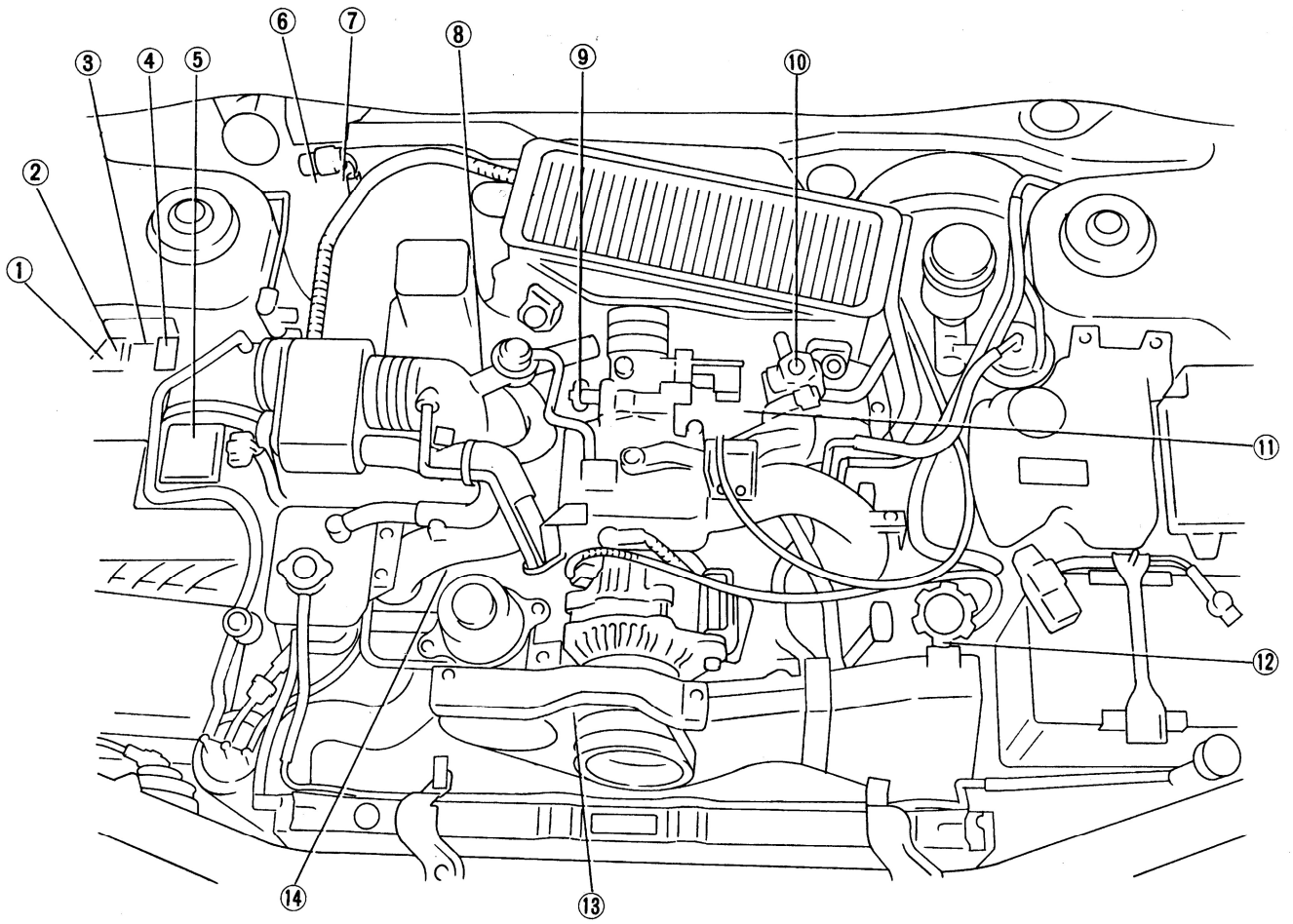


G2M0870

① Pressure sensor
② Pressure exchange solenoid valve
③ Wastegate control solenoid valve
④ Ignitor
⑤ Mass air flow sensor
⑥ Oxygen sensor
⑦ Vehicle speed sensor 2
⑧ Engine coolant temperature sensor
⑨ Throttle position sensor (with idle switch)
⑩ Idle air control solenoid valve
⑪ Knock sensor
⑫ Camshaft position sensor
⑬ Crankshaft position sensor
⑭ Purge control solenoid valve



GETtheMANUALS.org

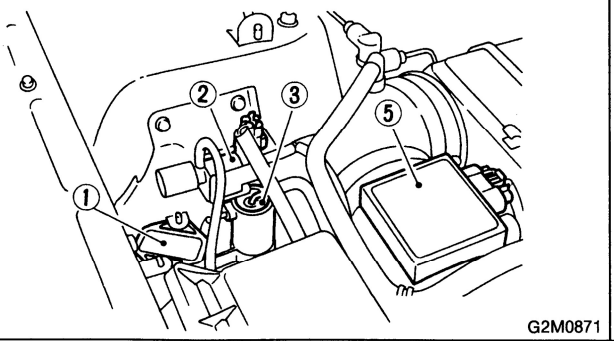

G2M0871

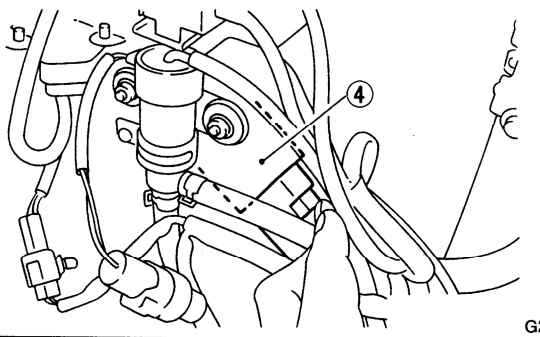

G2M0872

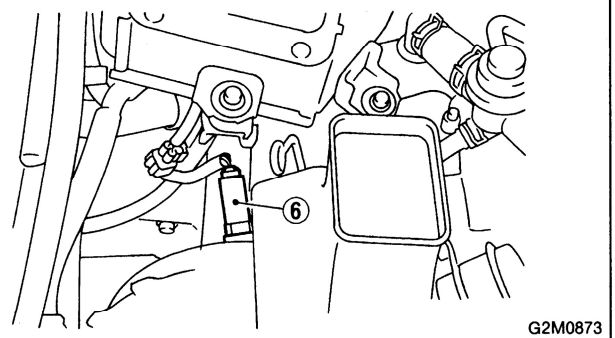

G2M0873

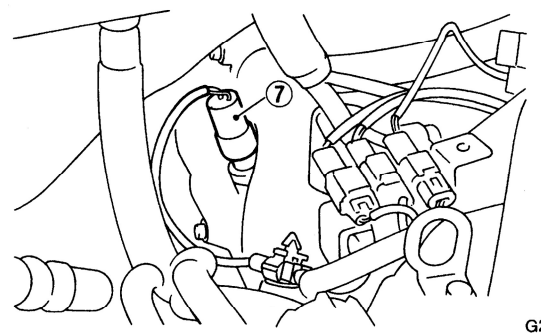

G2M0874

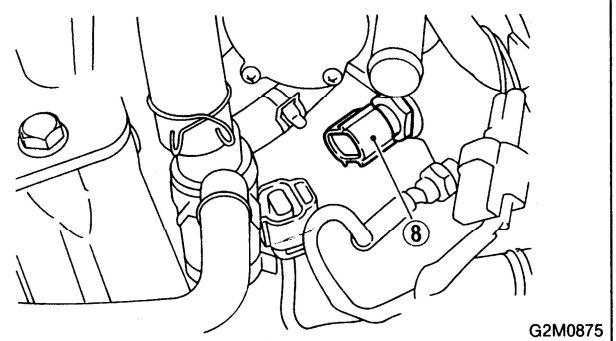

G2M0875

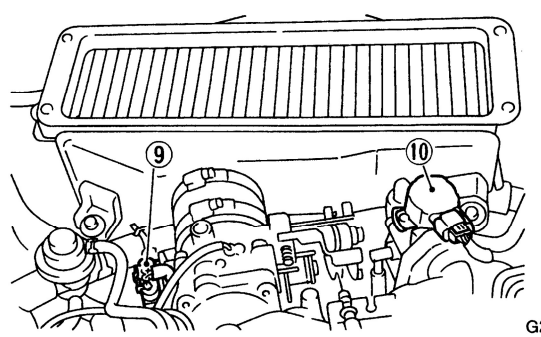

G2M0876

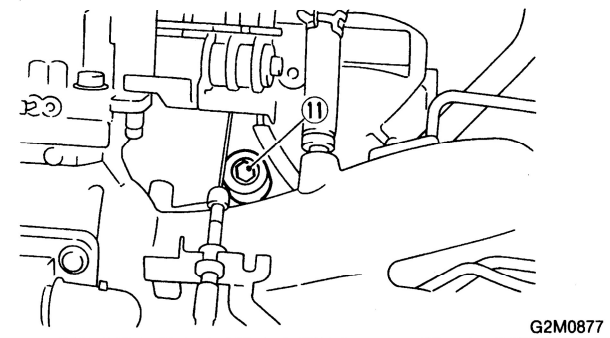

G2M0877

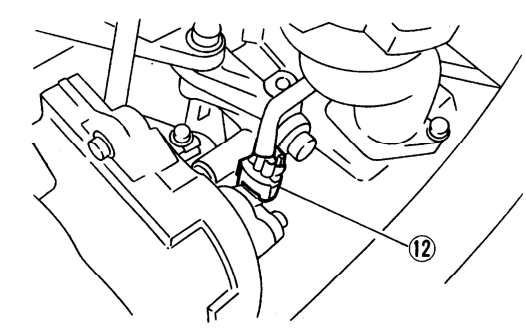

G2M0878

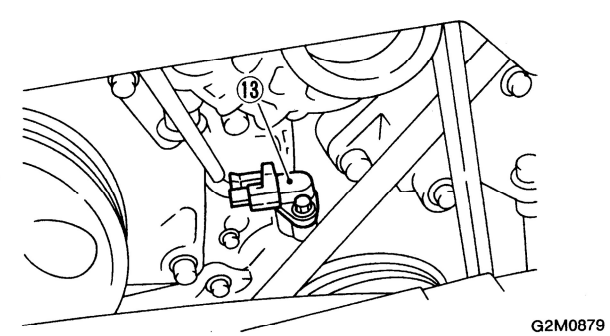

G2M0879

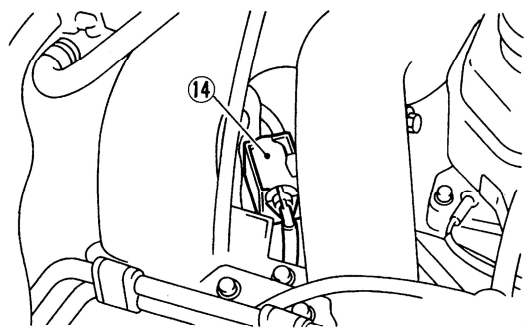

G2M0880



GETtheMANUALS.org

## 2. MODULE AND RELAY

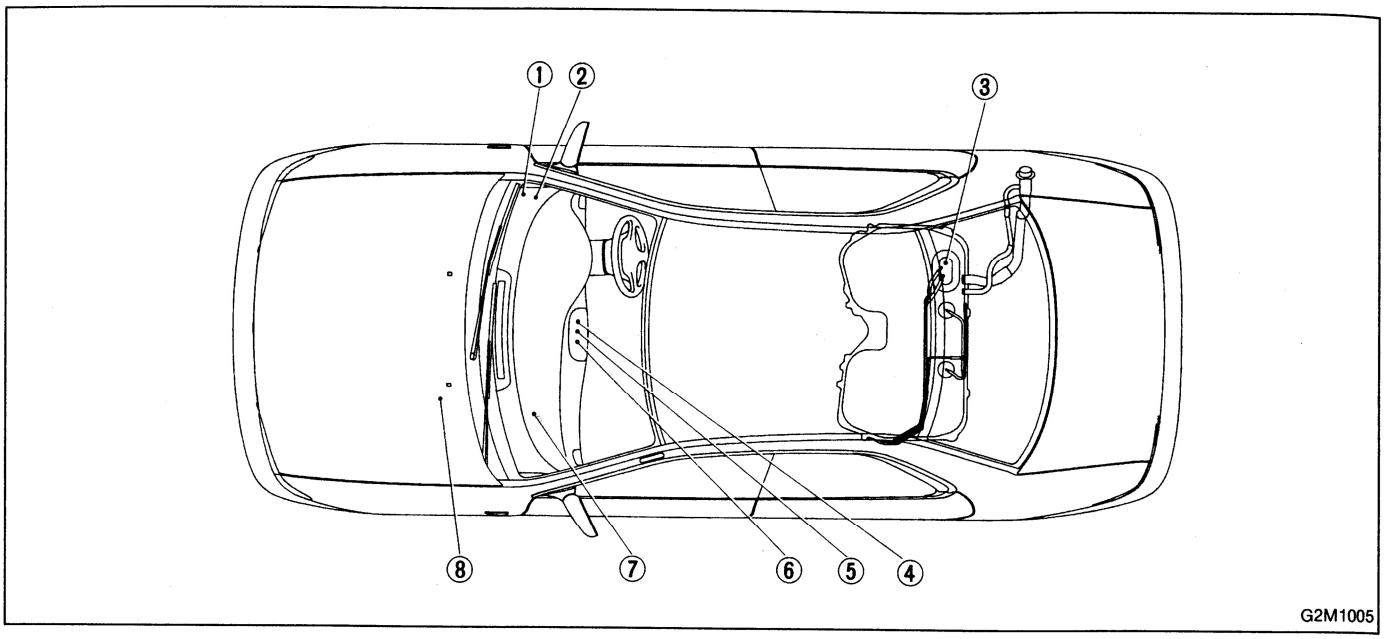


① Main relay
② Fuel pump relay
③ Fuel pump
④ Read memory connector
⑤ Test mode connector
⑥ Data link connector
⑦ ECM
⑧ Starter



GETtheMANUALS.org

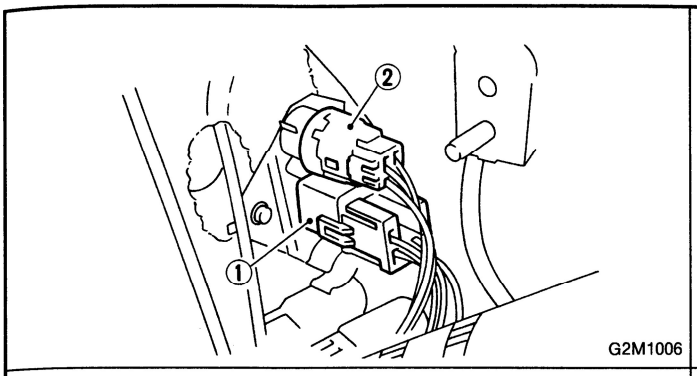

G2M1006

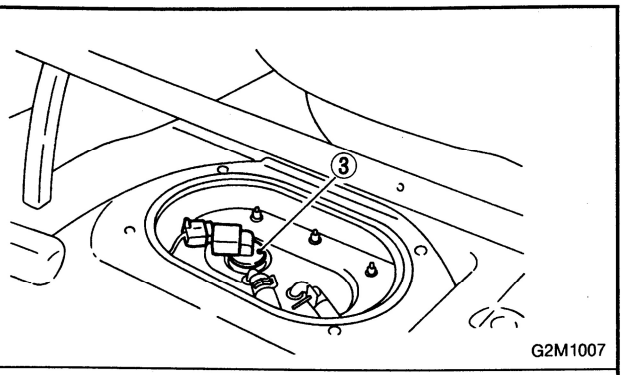

G2M1007

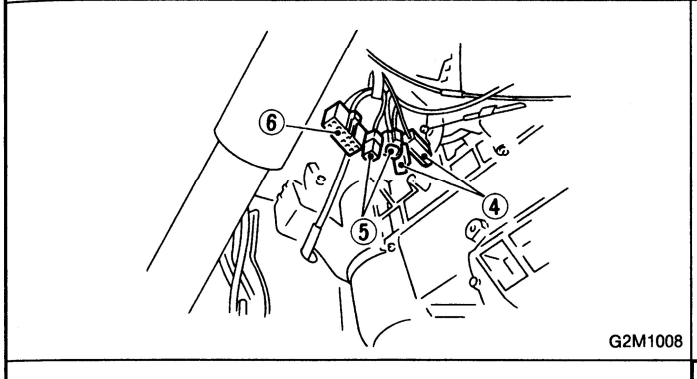

G2M1008

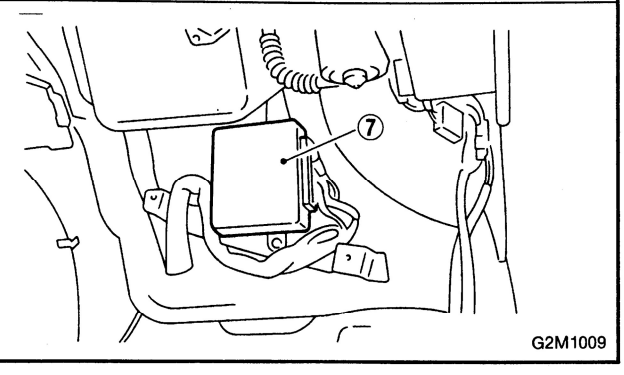

G2M1009

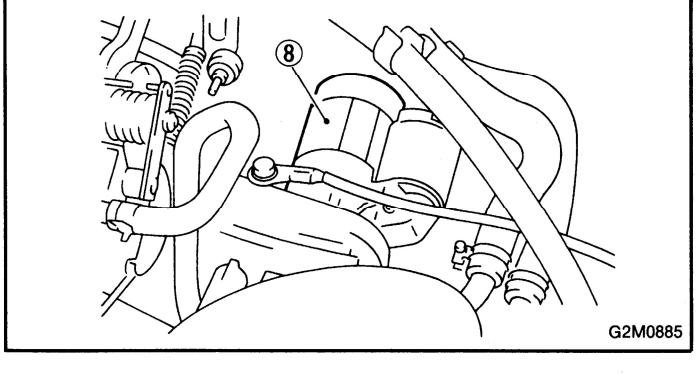

G2M0885



GETtheMANUALS.org

# 5. Schematic

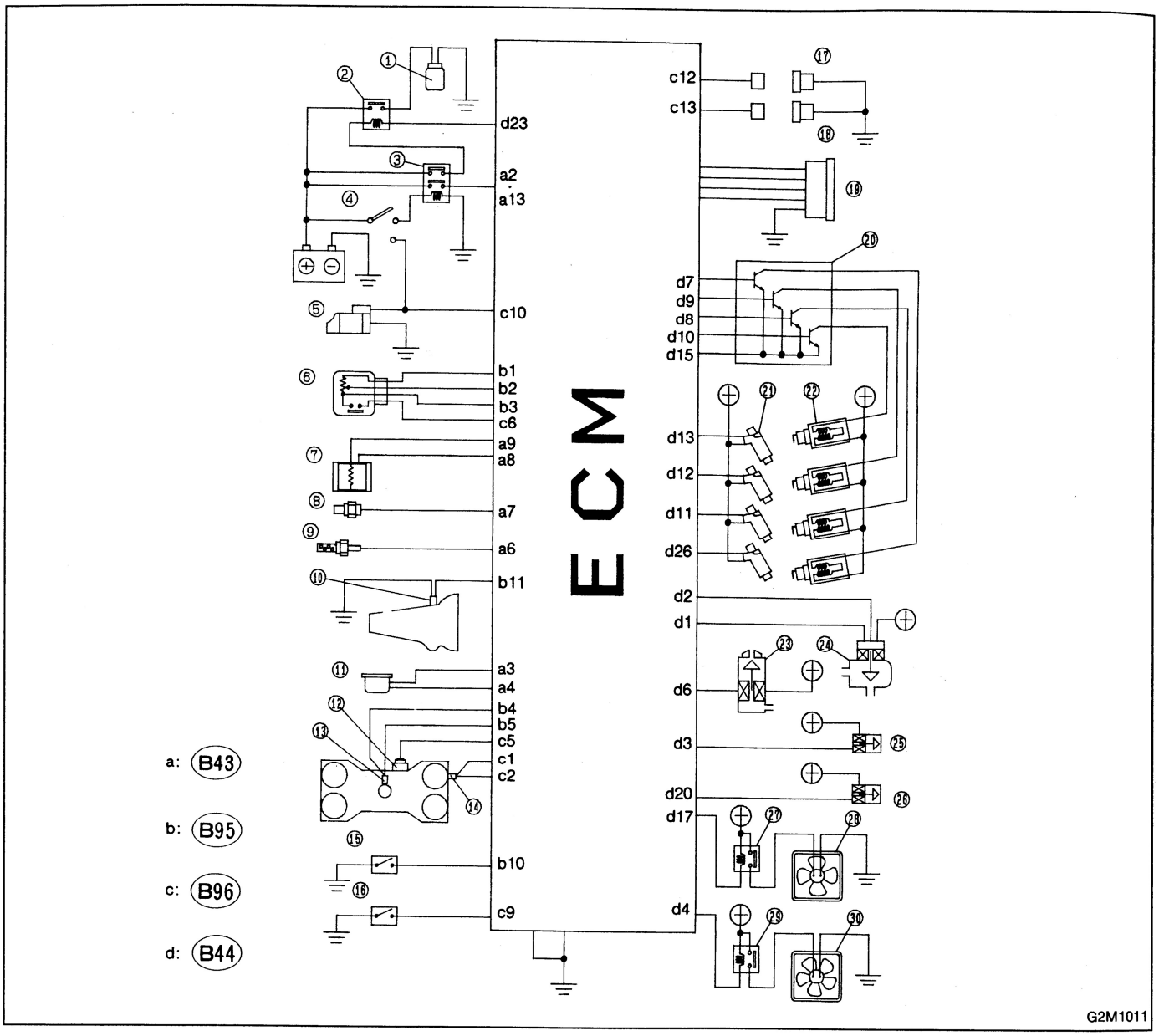


① Fuel pump
② Fuel pump relay
③ Main relay
④ Ignition switch
⑤ Starter
⑥ Throttle position sensor (with idle switch)
⑦ Mass air flow sensor
⑧ Engine coolant temperature sensor
⑨ Oxygen sensor
⑩ Vehicle speed sensor 2
⑪ Pressure sensor
⑫ Knock sensor
⑬ Crankshaft position sensor
⑭ Camshaft position sensor
⑮ Neutral position switch
⑯ A/C switch
⑰ Read memory connector
⑱ Test mode connector
⑲ Data link connector
⑳ Ignitor
㉑ Fuel injector
㉒ Ignition coil
㉓ Purge control solenoid valve
㉔ Idle air control solenoid valve
㉕ Wastegate control solenoid valve
㉖ Pressure exchange solenoid valve
㉗ Radiator main fan relay
㉘ Radiator main fan
㉙ Radiator sub fan relay
㉚ Radiator sub fan



GETtheMANUALS.org

# 6. Diagnostics Chart for On-board Diagnosis System

## A: BASIC DIAGNOSTICS PROCEDURE

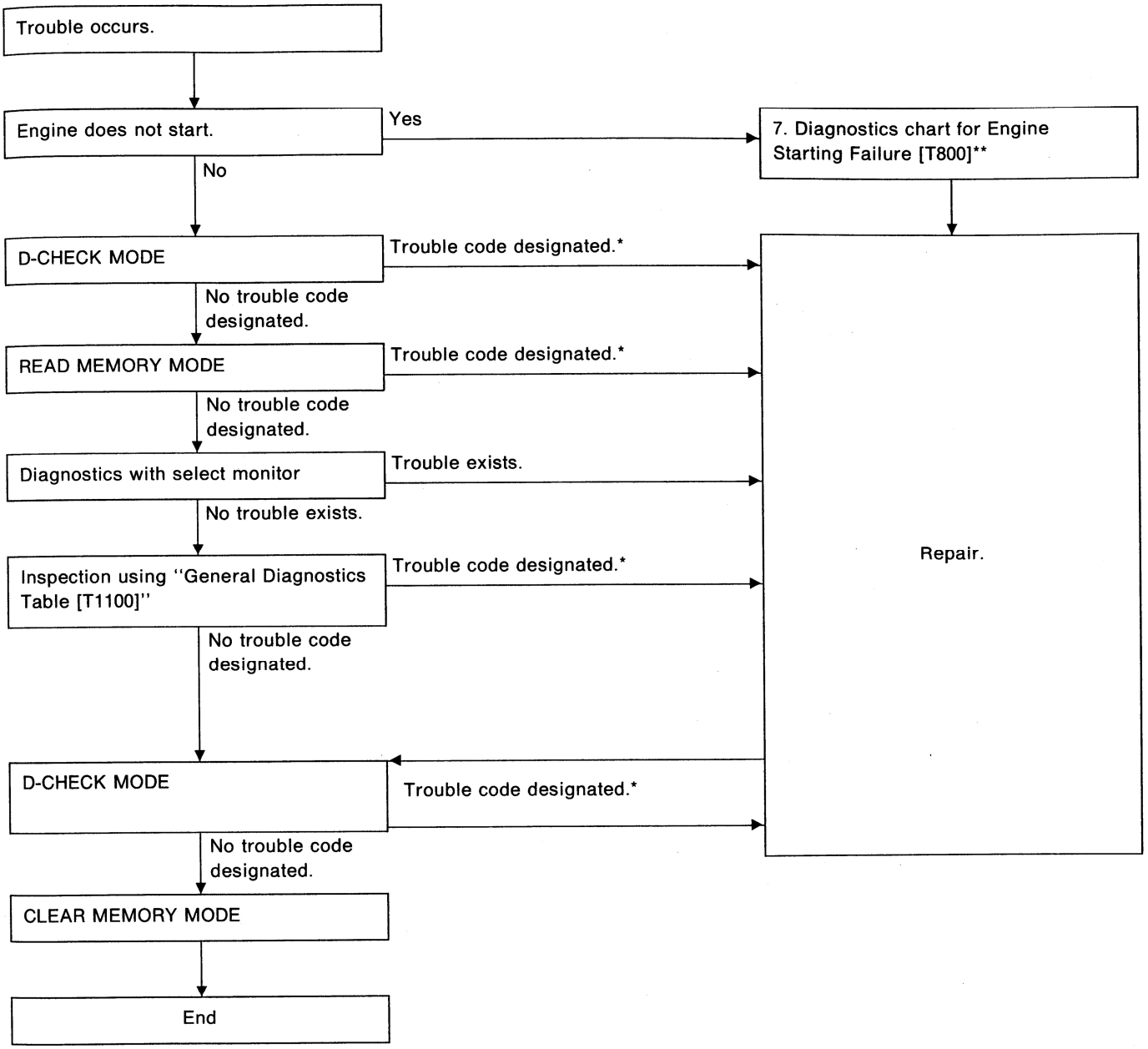


*: When more than one trouble code is out-putted, begin diagnostics with the smallest trouble code number and proceed to the next higher code.
After correcting each problem, conduct the D-CHECK and ensure that the corresponding trouble code no longer appears.
**: When a trouble code is displayed in the READ MEMORY MODE, conduct diagnostics measures which correspond with the code.

**CAUTION:**
- **Check the connector while it is connected unless specified otherwise.**
- **Be sure to check again from the beginning in order to prevent secondary trouble caused by repair work.**



GETtheMANUALS.org

## B: TROUBLE CODE

### 1. HOW TO READ TROUBLE CODE

The malfunction indicator lamp flashes the code corresponding to the faulty parts. The long segment (1.3 seconds ON) indicates a "ten", and the short segment (0.2 seconds ON) signifies "one". And middle segment (0.5 seconds ON) means OK code.

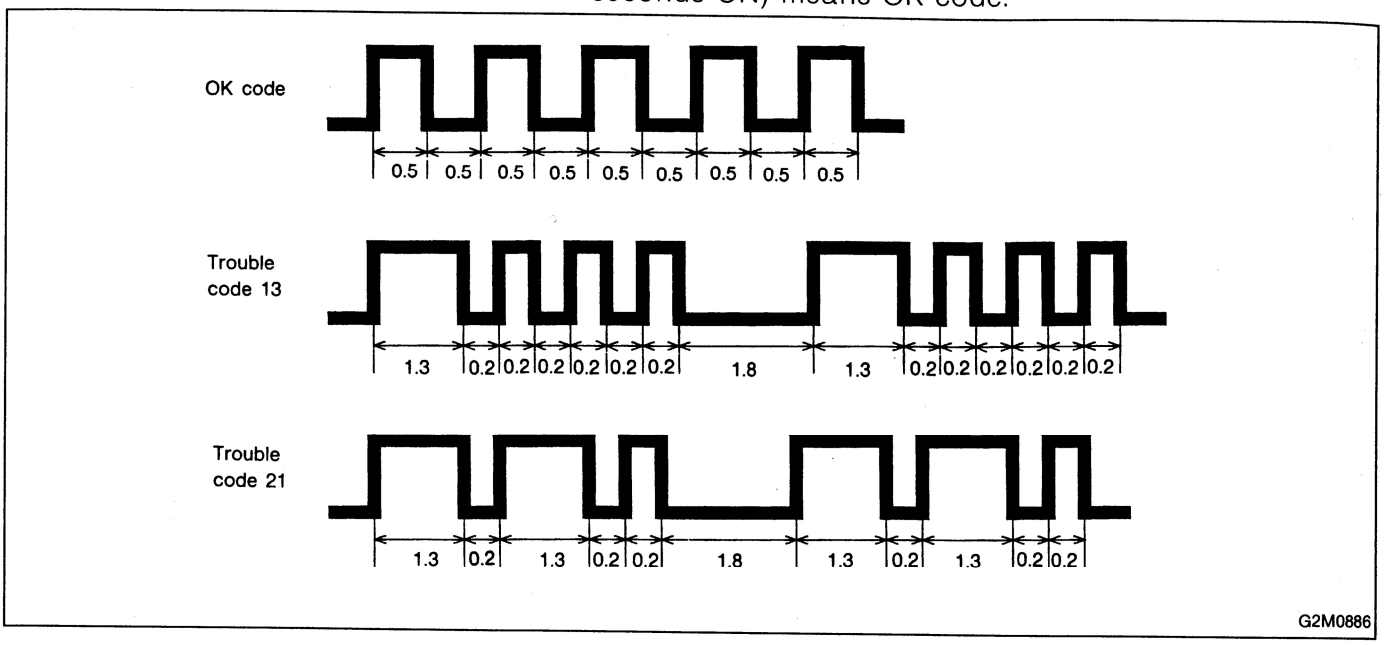




GETtheMANUALS.org

## 2. LIST OF TROUBLE CODE

| Trouble code | Item | Contents of diagnosis |
|---|---|---|
| 11 | Crankshaft position sensor | • No signal entered from crankshaft position sensor when starter switch is ON.<br>• The harness connector between ECM and crankshaft position sensor is in short or open. |
| 12 | Starter switch | • The starter switch signal is abnormal.<br>• The harness connector between ECM and starter switch is in short or open. |
| 13 | Camshaft position sensor | • No signal entered from camshaft position sensor, but signal entered from crankshaft position sensor.<br>• The harness connector between ECM and camshaft position sensor is in short or open. |
| 21 | Engine coolant temperature sensor | • The engine coolant temperature sensor signal is abnormal.<br>• The harness connector between ECM and engine coolant temperature sensor is in short or open. |
| 22 | Knock sensor | • The knock sensor signal is abnormal.<br>• The harness connector between ECM and knock sensor is in short or open. |
| 23 | Mass air flow sensor | • The mass air flow sensor signal is abnormal.<br>• The harness connector between ECM and mass air flow sensor is in short or open. |
| 24 | Idle air control solenoid valve | • The idle air control solenoid valve is not in function.<br>• The harness connector between ECM and idle air control solenoid valve is in short or open. |
| 31 | Throttle position sensor | • The throttle position sensor signal is abnormal.<br>• The throttle position sensor is installed abnormally.<br>• The harness connector between ECM and throttle position sensor is in short or open. |
| 32 | Oxygen sensor | • The oxygen sensor is not in function.<br>• The harness connector between ECM and oxygen sensor is in short or open. |
| 33 | Vehicle speed sensor 2 | • The vehicle speed sensor 2 is not in function.<br>• The harness connector between ECM and vehicle speed sensor 2 is in short or open. |
| 35 | Purge control solenoid valve | • The purge control solenoid valve is not in function.<br>• The harness connector between ECM and purge control solenoid valve is in short or open. |
| 42 | Idle switch | • The idle switch signal is abnormal.<br>• The throttle position sensor is installed abnormally.<br>• The harness connector between ECM and idle switch is in short or open. |
| 44 | Wastegate control solenoid valve | • The wastegate control solenoid valve is not in function.<br>• The harness connector between ECM and wastegate control solenoid valve is in short or open. |
| 45 | • Pressure sensor<br>• Pressure exchange solenoid valve | • The pressure sensor signal is abnormal.<br>• The pressure exchange solenoid valve is not in function.<br>• The intake manifold pressure is not transmitted to pressure sensor.<br>• The harness connector between ECM and pressure sensor, and pressure exchange solenoid valve is in short or open. |
| 51 | Neutral position switch | • The neutral position switch signal is abnormal.<br>• The harness connector between ECM and neutral position switch is in short or open. |



GETtheMANUALS.org

## C: READ MEMORY MODE

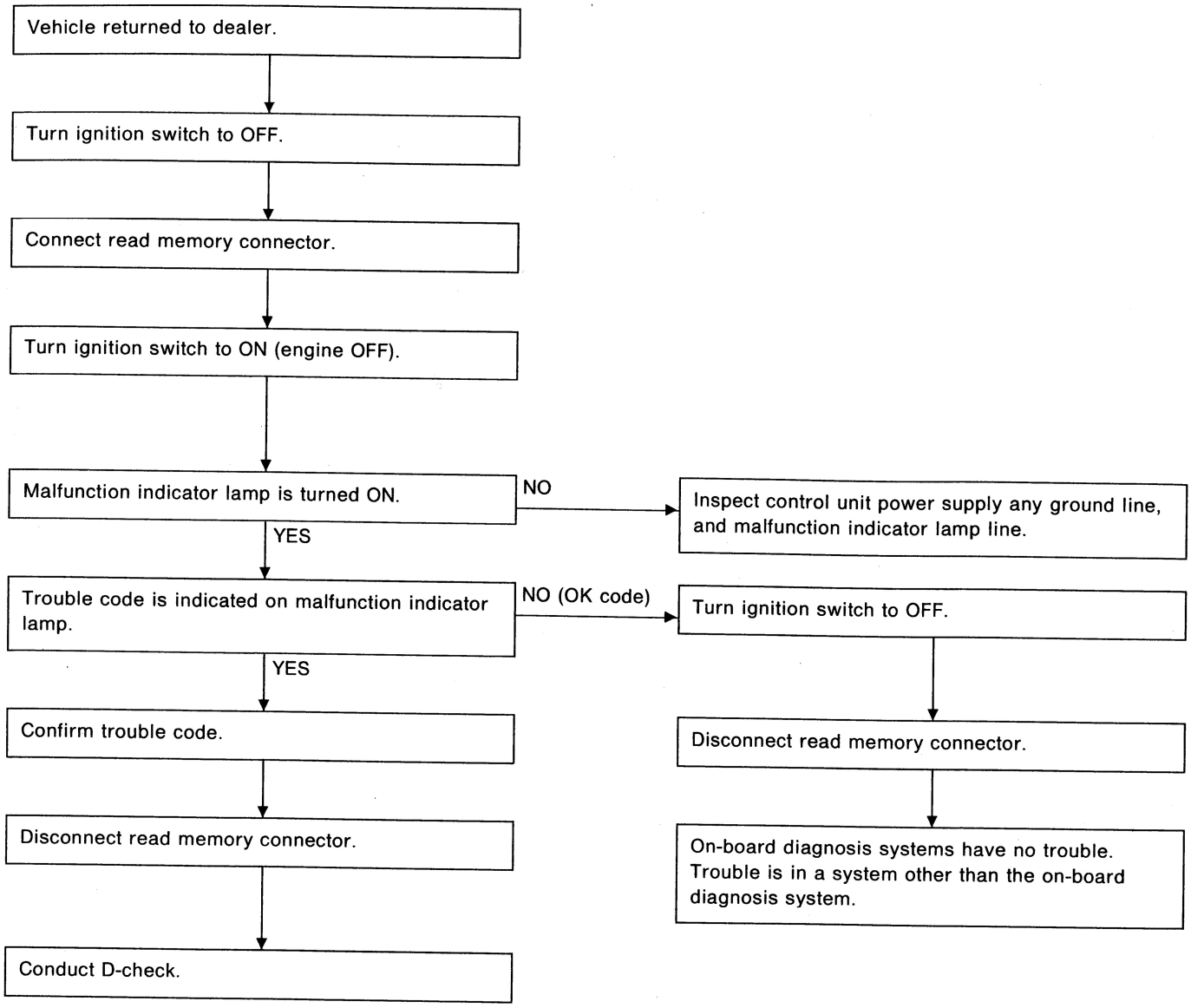




GETtheMANUALS.org

## D: D-CHECK MODE

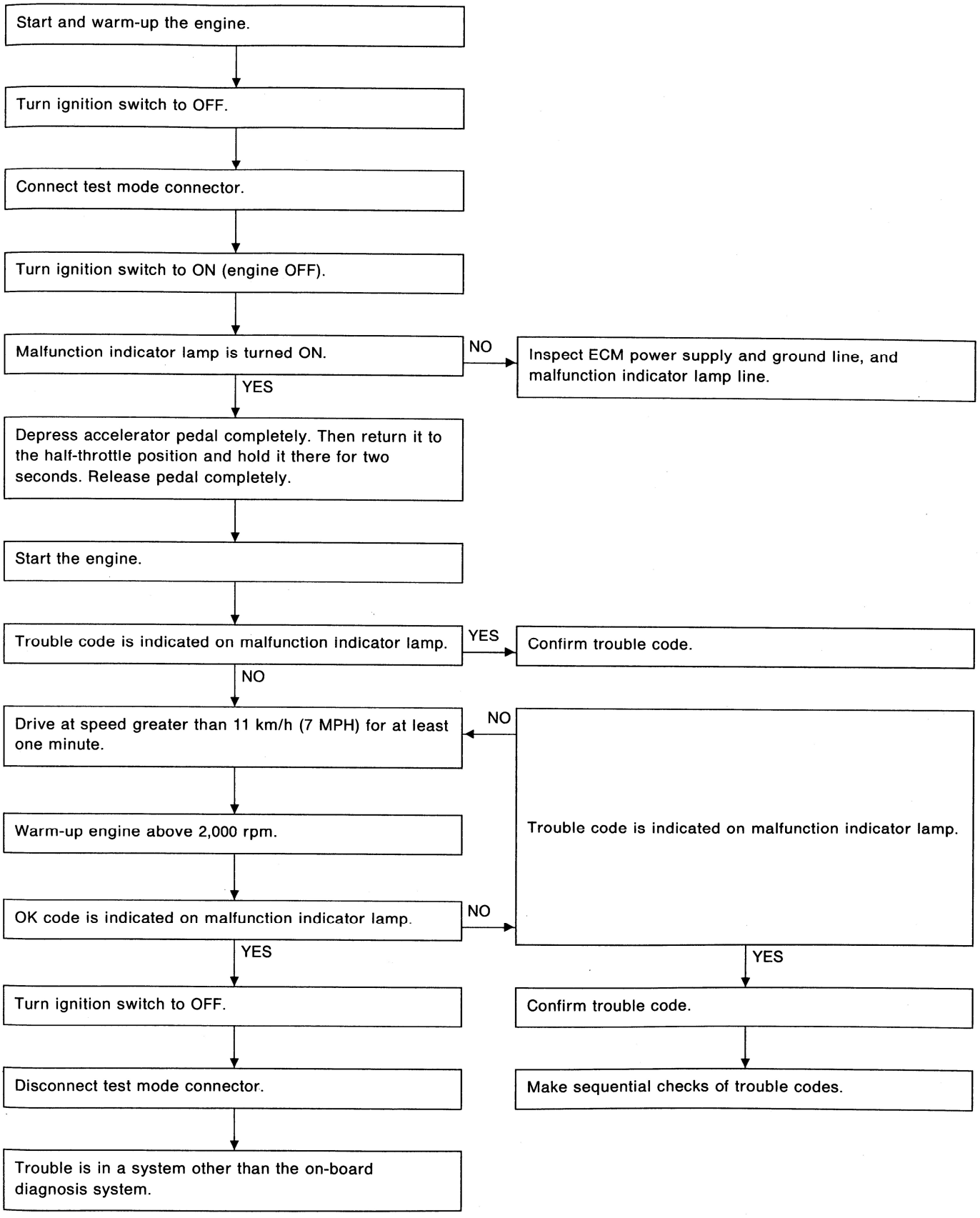




GETtheMANUALS.org

## E: CLEAR MEMORY MODE

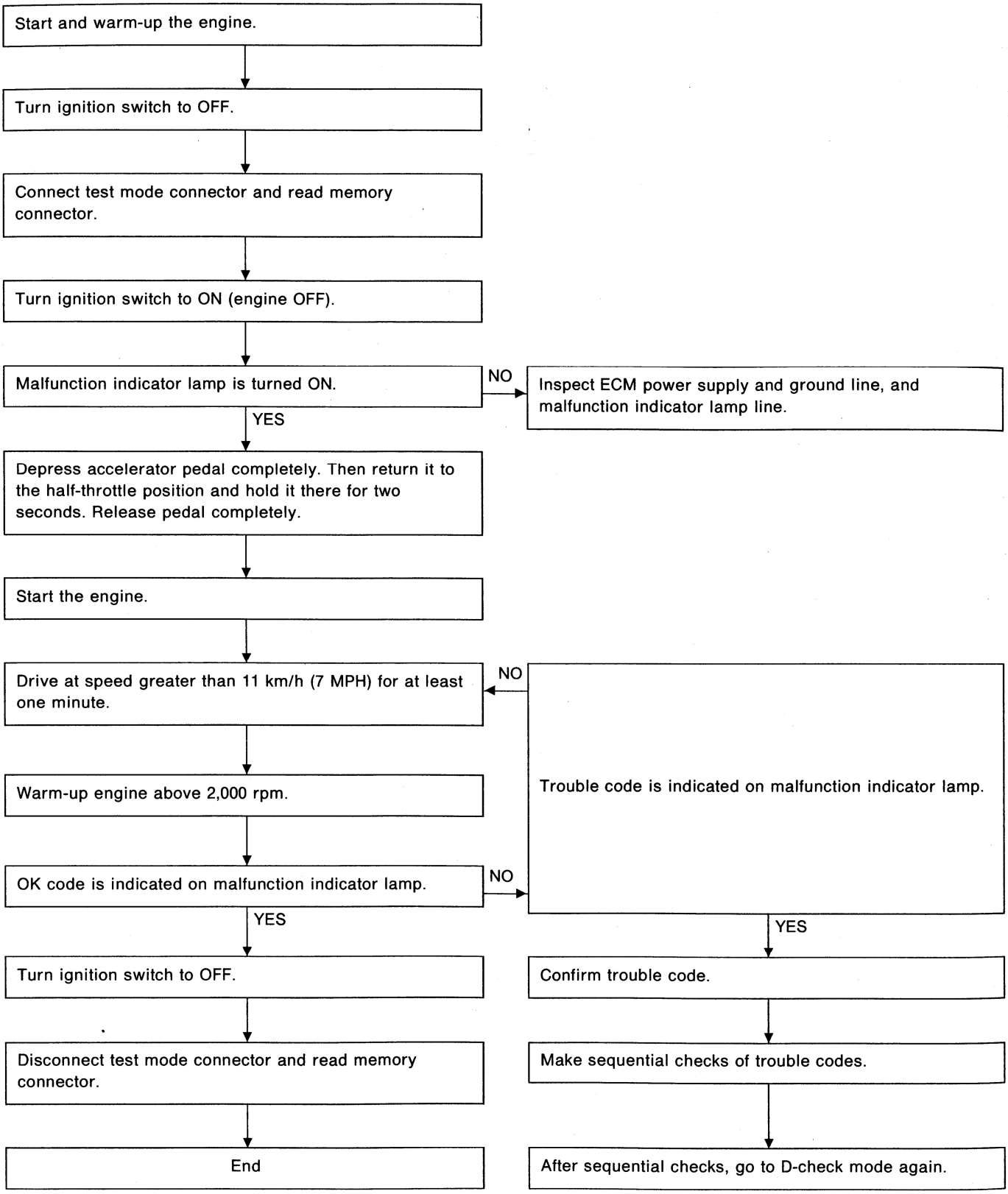




GETtheMANUALS.org

# 7. Control Module I/O Signal

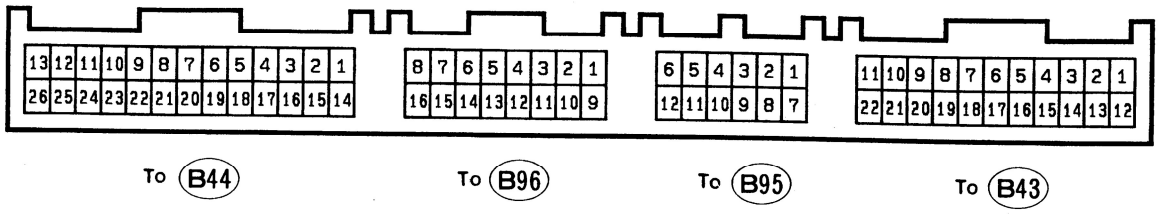


G2M1012

| Content | | Connector No. | Terminal No. | Signal (V) | | | Note |
|---|---|---|---|---|---|---|---|
| | | | | Ig SW | | Engine ON (Idling) | |
| | | | | OFF | ON (Engine OFF) | | |
| Crankshaft position sensor | Signal (+) | B95 | 4 | — | 0 | * | *Sensor output waveform |
| | Signal (–) | B95 | 5 | — | 0 | 0 | — |
| | Shield | B95 | 6 | — | 0 | 0 | — |
| Camshaft position sensor | Signal (+) | B96 | 1 | — | 0 | * | *Sensor output waveform |
| | Signal (–) | B96 | 2 | — | 0 | 0 | — |
| | Shield | B96 | 3 | — | 0 | 0 | — |
| Mass air flow sensor | Power supply | B43 | 8 | — | 10 — 13 | 13 — 14 | — |
| | Signal | B43 | 9 | — | 0 — 0.3 | 0.8 — 1.2 | — |
| | GND | B43 | 10 | — | 0 | 0 | — |
| Throttle position sensor | Signal | B95 | 2 | — | Fully closed: 4.7<br>Fully opened: 0.9 | Fully closed: 4.7<br>Fully opened: 0.9 | — |
| | Power supply | B95 | 3 | — | 5 | 5 | — |
| | GND | B95 | 1 | — | 0 | 0 | — |
| Oxygen sensor | Signal | B43 | 6 | — | 0.6 | Rich mixture: 0.7 — 1.0<br>Lean mixture: 0 — 0.2 | |
| | Shield | B43 | 17 | — | 0 | 0 | — |
| Knock sensor | Signal | B96 | 5 | — | 3 — 4 | 3 — 4 | — |
| | Shield | B96 | 4 | — | 0 | 0 | — |
| Engine coolant temperature sensor | | B43 | 7 | 0 | 0.7 — 1.5 | 0.7 — 1.5 | *After warm-up |
| Vehicle speed sensor 2 | | B95 | 11 | — | 0 or 5 | 0 or 5 | "5" and "0" are repeatedly displayed when vehicle is driven. |
| Pressure sensor | Signal | B43 | 4 | — | 2.4 ↔ 2.7 | 1.4 — 1.6 | — |
| | Power supply | B43 | 3 | — | 5 | 5 | — |
| | GND | B43 | 21 | — | 0 | 0 | — |
| Idle switch | | B96 | 6 | — | ON:0, OFF:5 | ON:0, OFF:5 | — |
| Starter switch | | B96 | 10 | — | 0 | 0 | Cranking: 10 to 14 |
| Air conditioner switch | | B96 | 9 | — | ON:10 — 13,<br>OFF:0 | ON:13 — 14,<br>OFF:0 | — |
| Ignition switch | | B95 | 12 | 0 | 10 — 13 | 13 — 14 | — |



GETtheMANUALS.org

| Content | | Connector No. | Terminal No. | Signal (V) | | | Note |
|---|---|---|---|---|---|---|---|
| | | | | Ig SW | | Engine ON (Idling) | |
| | | | | OFF | ON (Engine OFF) | | |
| Neutral position switch | | B95 | 10 | — | N Position: 7<br>Other: 0 | N Position: 7<br>Other: 0 | — |
| Test mode connector | | B96 | 13 | — | 7 | 7 | When connected: 0 |
| Read memory connector | | B96 | 12 | — | 7 | 7 | When connected: 0 |
| Back-up power supply | | B43 | 15 | 10 — 13 | 10 — 13 | 13 — 14 | — |
| Control module power supply | | B43 | 2 | 0 | 10 — 13 | 13 — 14 | |
| | | B43 | 13 | 0 | 10 —13 | 13 — 14 | — |
| Ignition control | #1 | B44 | 10 | — | 0 | — | — |
| | #2 | B44 | 9 | — | 0 | — | — |
| | #3 | B44 | 8 | — | 0 | — | — |
| | #4 | B44 | 7 | — | 0 | — | — |
| Fuel injector | #1 | B44 | 13 | 10 — 13 | 10 — 13 | 13 — 14 | — |
| | #2 | B44 | 12 | 10 — 13 | 10 — 13 | 13 — 14 | — |
| | #3 | B44 | 11 | 10 — 13 | 10 — 13 | 13 — 14 | — |
| | #4 | B44 | 26 | 10 — 13 | 10 — 13 | 13 — 14 | — |
| Idle air control solenoid valve | OPEN end | B44 | 2 | — | 8 — 9 | 9 — 10 | — |
| | CLOSE end | B44 | 1 | — | 6 — 7 | 6 — 7 | — |
| Fuel pump relay control | | B44 | 23 | — | ON: 0<br>OFF: 10 — 13 | 0 | — |
| Air conditioner cut relay control | | B44 | 22 | — | ON: 0<br>OFF: 10 — 13 | ON: 0<br>OFF: 13 — 14 | — |
| Radiator fan 1 control | | B44 | 17 | — | ON: 0<br>OFF: 10 — 13 | ON: 0<br>OFF: 13 — 14 | — |
| Radiator fan 2 control | | B44 | 4 | — | ON: 0<br>OFF: 10 — 13 | ON: 0<br>OFF: 13 — 14 | — |
| Self-shutoff control | | B44 | 5 | — | 10 — 13 | 13 — 14 | — |
| Wastegate control | | B44 | 3 | — | 10 — 13 | 13 — 14 | — |
| Malfunction indicator lamp | | B44 | 19 | — | 1, max. | — | Light "ON": 1, max.<br>Light "OFF": 10 — 14 |
| Pressure exchange solenoid valve | | B44 | 20 | — | ON: 0<br>OFF: 10 — 13 | ON: 0<br>OFF: 13 — 14 | — |
| Engine tachometer output | | B96 | 16 | — | — | — | — |
| Purge control solenoid valve | | B44 | 6 | — | ON: 0<br>OFF: 10 — 13 | ON: 0<br>OFF: 13 — 14 | — |
| GND (sensors) | | B43 | 21 | — | 0 | 0 | — |
| GND (injectors) | | B44 | 24 | — | 0 | 0 | — |
| | | B44 | 25 | — | 0 | 0 | — |
| Ignition system | | B44 | 15 | — | 0 | 0 | — |
| GND (power supply) | | B44 | 14 | — | 0 | 0 | — |
| GND (control systems) | | B43 | 11 | — | 0 | 0 | — |
| | | B43 | 22 | — | 0 | 0 | — |
| Select Monitor Signal | | B96 | 8 | — | — | — | — |
| | | B96 | 7 | — | — | — | — |



GETtheMANUALS.org

# 8. Diagnostics Chart for Engine Starting Failure

## A: BASIC DIAGNOSTICS CHART

When engine cranks but does not start, perform diagnostics in accordance with the following chart.

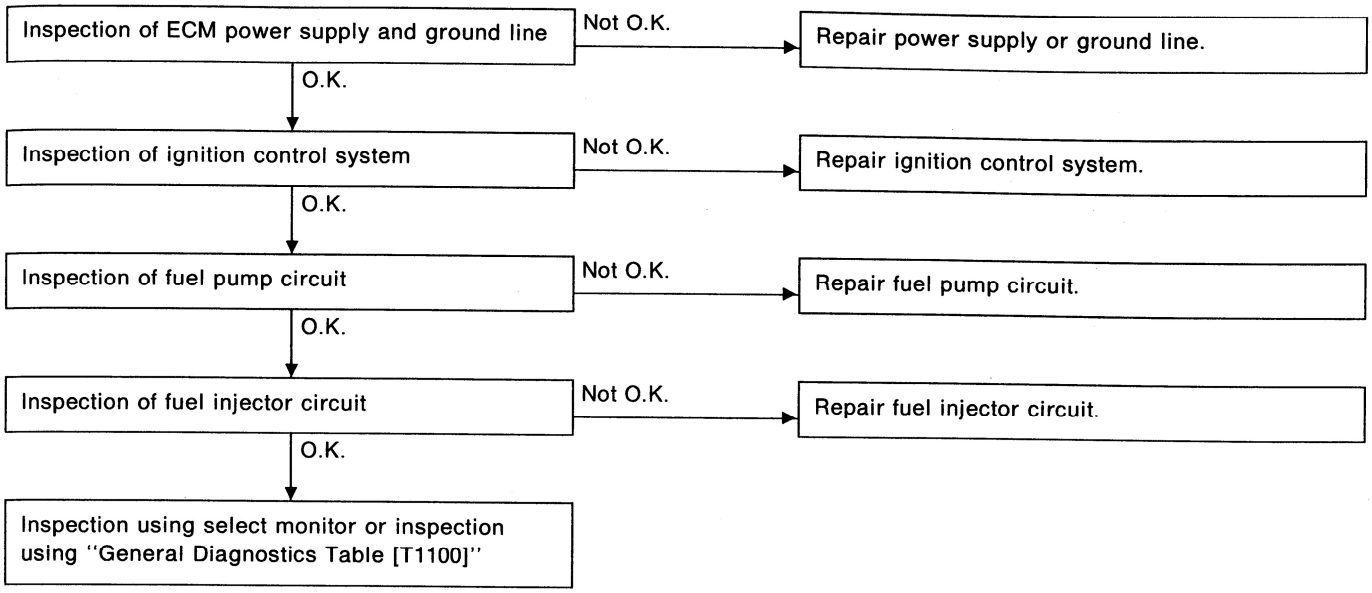




GETtheMANUALS.org

## B: CONTROL UNIT POWER SUPPLY AND GROUND LINE

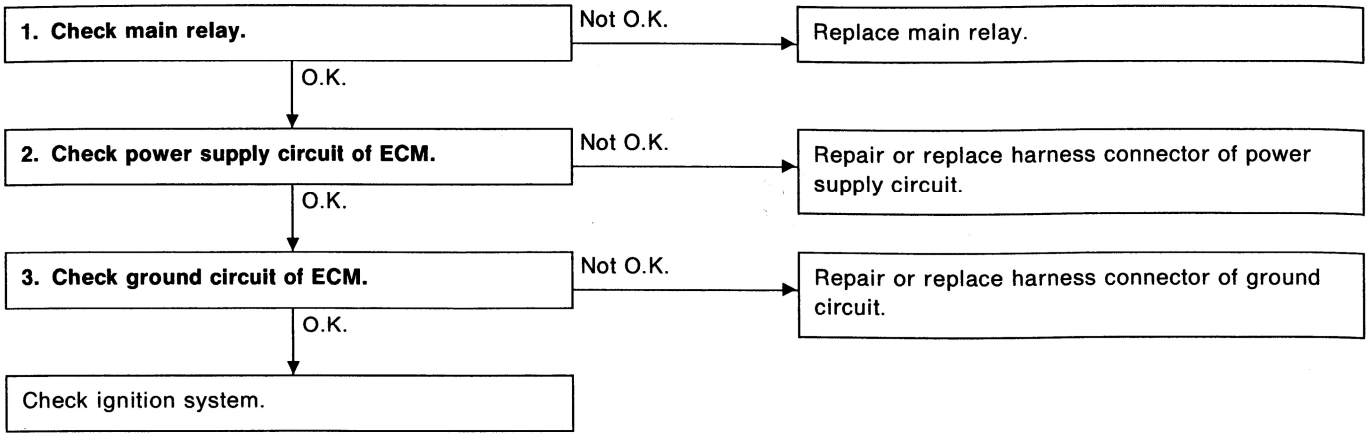




GETtheMANUALS.org

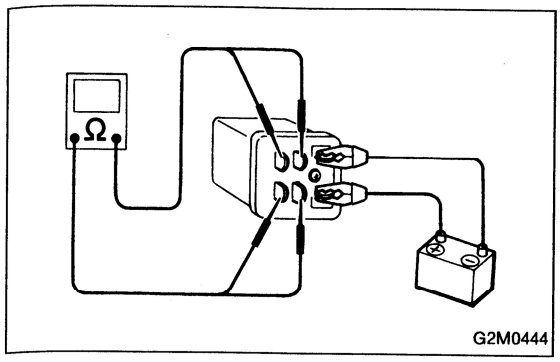


**1. CHECK MAIN RELAY.**

1) Turn the ignition switch to OFF.
2) Remove main relay.
3) Connect battery to main relay terminals No. 1 and No. 2.
4) Measure resistance between main relay terminals.

***Terminals / Specified resistance:***
***No. 3 — No. 5 / 10 Ω, max.***
***No. 4 — No. 6 / 10 Ω, max.***

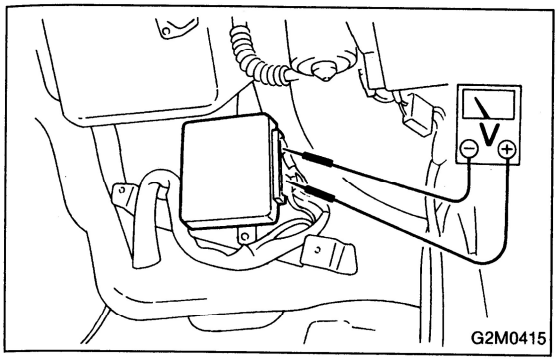


**2. CHECK POWER SUPPLY CIRCUIT OF ECM.**

1) Install main relay.
2) Turn ignition switch to ON.
3) Measure power supply voltage between ECM connector terminals and body.

***Connector & terminal / Specified voltage:***
***(B43) No. 12 — Body / 10 V, min.***
***(B43) No. 13 — Body / 10 V, min.***
***(B43) No. 15 — Body / 10 V, min.***
***(B95) No. 12 — Body / 10 V, min.***

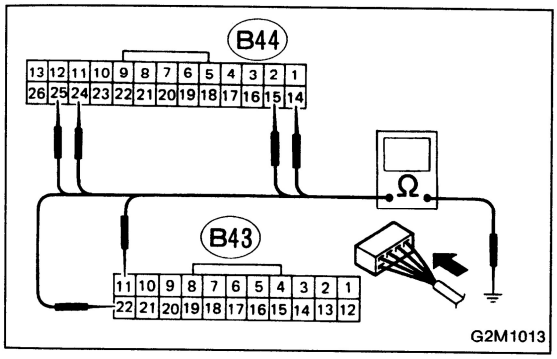


**3. CHECK GROUND CIRCUIT OF ECM.**

1) Turn ignition switch to OFF.
2) Measure resistance of harness connector between ECM and body.

***Connector & terminal / Specified resistance:***
***(B43) No. 11 — Body / 10 Ω, max.***
***(B43) No. 22 — Body / 10 Ω, max.***
***(B44) No. 14 — Body / 10 Ω, max.***
***(B44) No. 15 — Body / 10 Ω, max.***
***(B44) No. 24 — Body / 10 Ω, max.***
***(B44) No. 25 — Body / 10 Ω, max.***



GETtheMANUALS.org

## C: IGNITION CONTROL SYSTEM

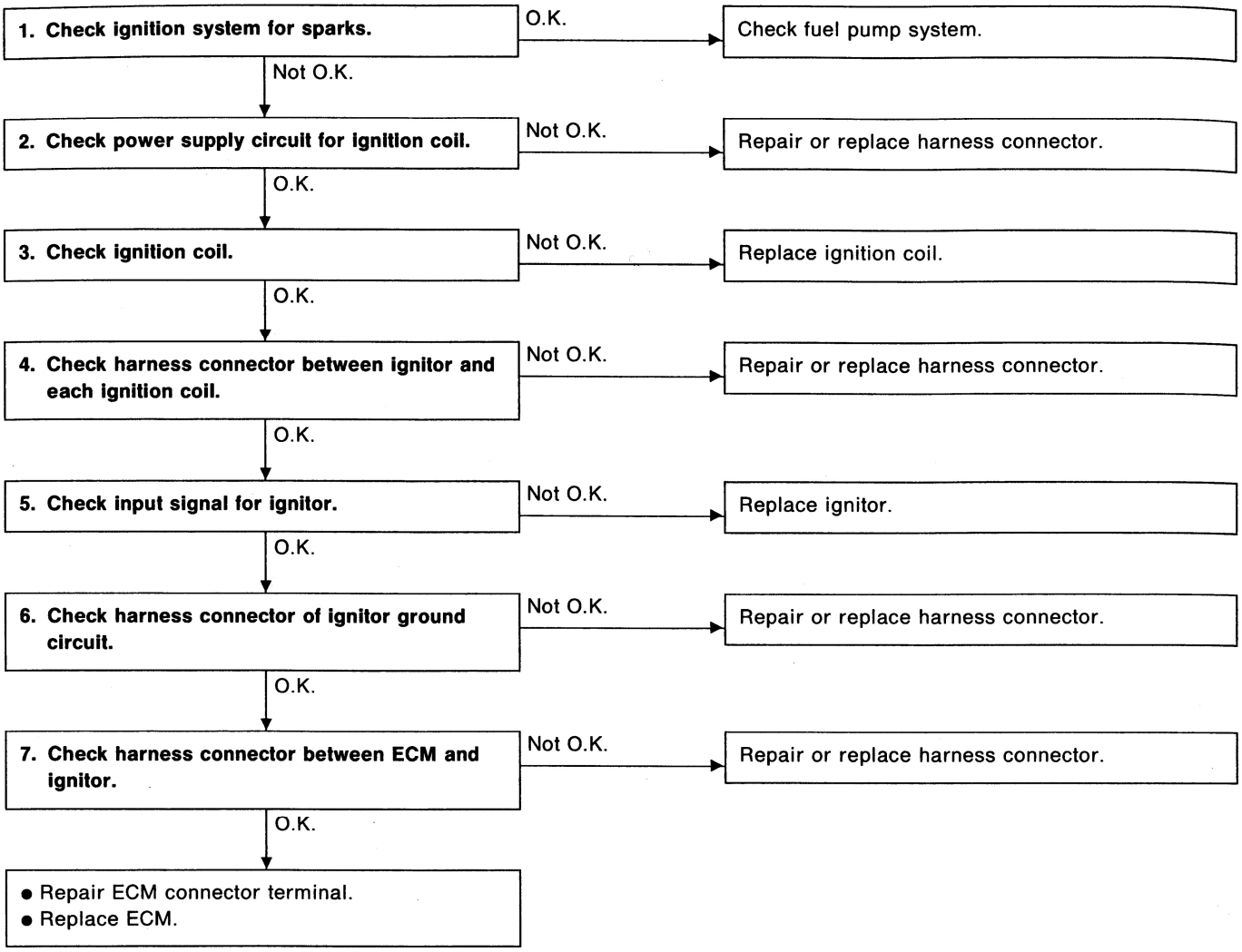




GETtheMANUALS.org

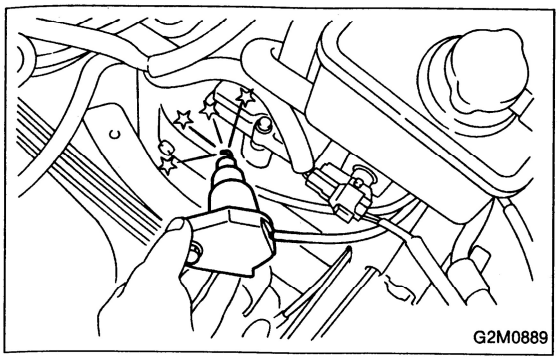
G2M0889

**1. CHECK IGNITION SYSTEM FOR SPARKS.**

1) Remove ignition coil from each spark plug.
2) Install new spark plug on ignition coil.

**CAUTION:**
**Do not remove spark plug from engine.**

3) Contact spark plug's thread portion on engine.
4) While opening throttle valve fully, crank engine to check that spark occurs at each cylinder.

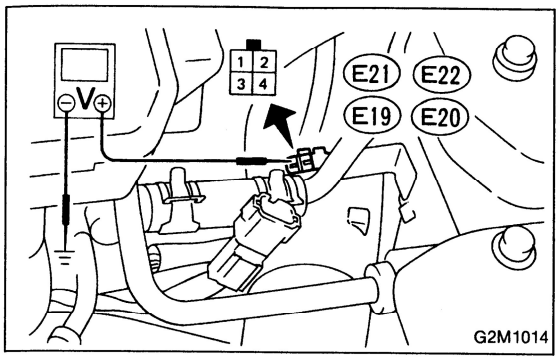

G2M1014

**2. CHECK POWER SUPPLY CIRCUIT FOR IGNITION COIL.**

1) Turn ignition switch to OFF.
2) Disconnect connector from ignition coil.
3) Turn ignition switch to ON.
4) Measure power supply voltage between each ignition coil connector terminal and body.

***Connector & terminal / Specified voltage:***
***(E21), (E19), (E22), (E20)***
***No. 1 — Body / 10 V, min.***

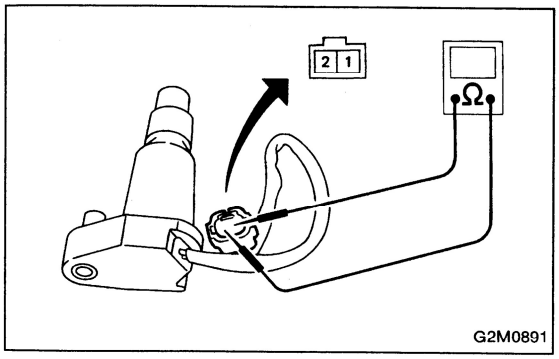

G2M0891

**3. CHECK IGNITION COIL.**

1) Remove ignition coil.
2) Measure resistance between ignition coil terminals to check primary coil.

***Terminals / Specified resistance:***
***No. 1 — No. 2 / 0.7 Ω***

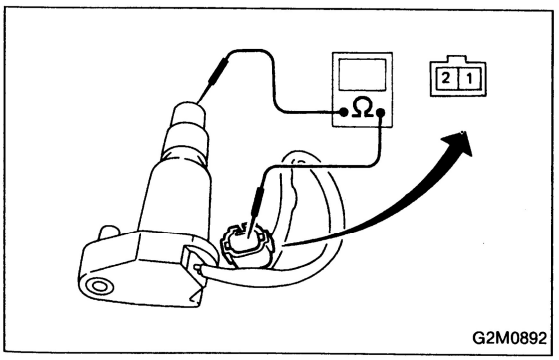

G2M0892

3) Measure resistance between spark plug contact portions to check secondary coil.

***Connector & terminal / Specified resistance:***
***No. 1 — Contact portion / 13.8 kΩ***



GETtheMANUALS.org

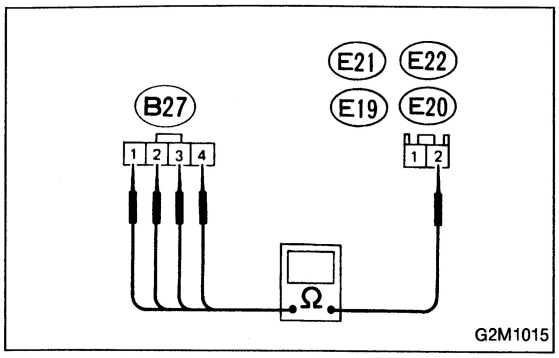


**4. CHECK HARNESS CONNECTOR BETWEEN IGNITOR AND EACH IGNITION COIL.**

1) Turn ignition switch to OFF.
2) Disconnect connector from ignitor.
3) Measure resistance of harness connector between each ignition coil and ignitor.

***Connector & terminal / Specified resistance:***
***(B27) No. 1 — (E21) No. 2 / 10 Ω, max.***
***(B27) No. 3 — (E19) No. 2 / 10 Ω, max.***
***(B27) No. 2 — (E22) No. 2 / 10 Ω, max.***
***(B27) No. 4 — (E20) No. 2 / 10 Ω, max.***

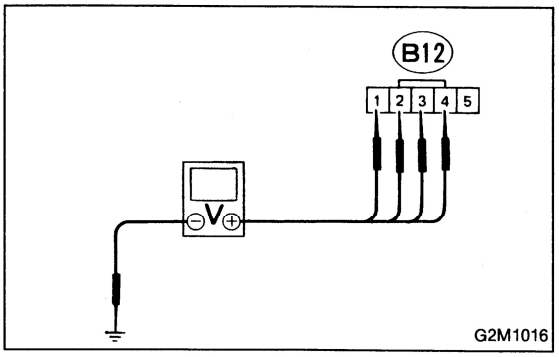


**5. CHECK INPUT SIGNAL FOR IGNITOR.**

Check if voltage varies synchronously with engine speed when cranking, while monitoring voltage between ignitor connector and body.

***Connector & terminal / Specified voltage:***
***(B12) No. 1 — Body / 0.1 V, min. — 3.4 V, max.***
***(B12) No. 2 — Body / 0.1 V, min. — 3.4 V, max.***
***(B12) No. 3 — Body / 0.1 V, min. — 3.4 V, max.***
***(B12) No. 4 — Body / 0.1 V, min. — 3.4 V, max.***

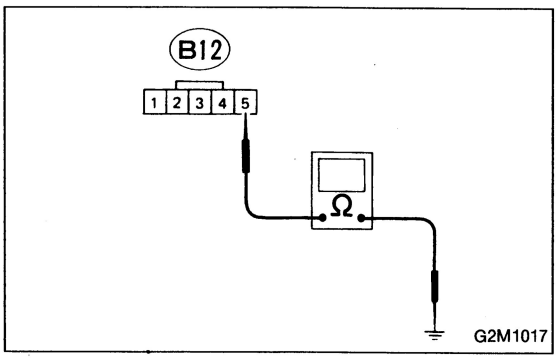


**6. CHECK HARNESS CONNECTOR OF IGNITOR GROUND CIRCUIT.**

1) Turn ignition switch to OFF.
2) Measure resistance between ignitor and body.

***Connector & terminal / Specified resistance:***
***(B12) No. 5 — Body / 10 Ω, max.***



GETtheMANUALS.org

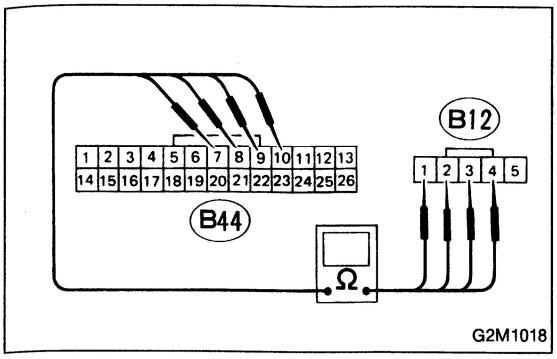


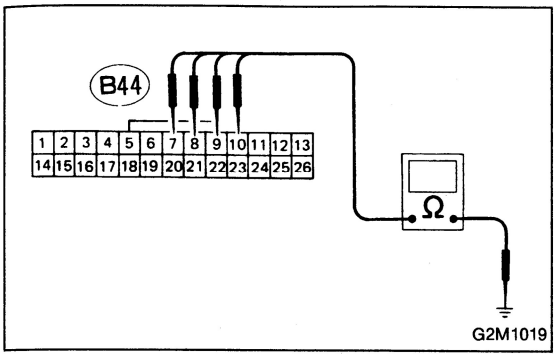


**7. CHECK HARNESS CONNECTOR BETWEEN ECM AND IGNITOR.**

1) Disconnect connector from ECM.
2) Measure resistance of harness connector between ECM and ignitor.

***Connector & terminal / Specified resistance:***
***(B44) No. 7 — (B12) No. 1 / 10 Ω, max.***
***(B44) No. 8 — (B12) No. 2 / 10 Ω, max.***
***(B44) No. 9 — (B12) No. 3 / 10 Ω, max.***
***(B44) No. 10 — (B12) No. 4 / 10 Ω, max.***

3) Measure resistance of harness connector between ECM and body to make sure that circuit does not short.

***Connector & terminal / Specified resistance:***
***(B44) No. 7 — Body / 1 MΩ, min.***
***(B44) No. 8 — Body / 1 MΩ, min.***
***(B44) No. 9 — Body / 1 MΩ, min.***
***(B44) No. 10 — Body / 1 MΩ, min.***



GETtheMANUALS.org

## D: FUEL PUMP CIRCUIT

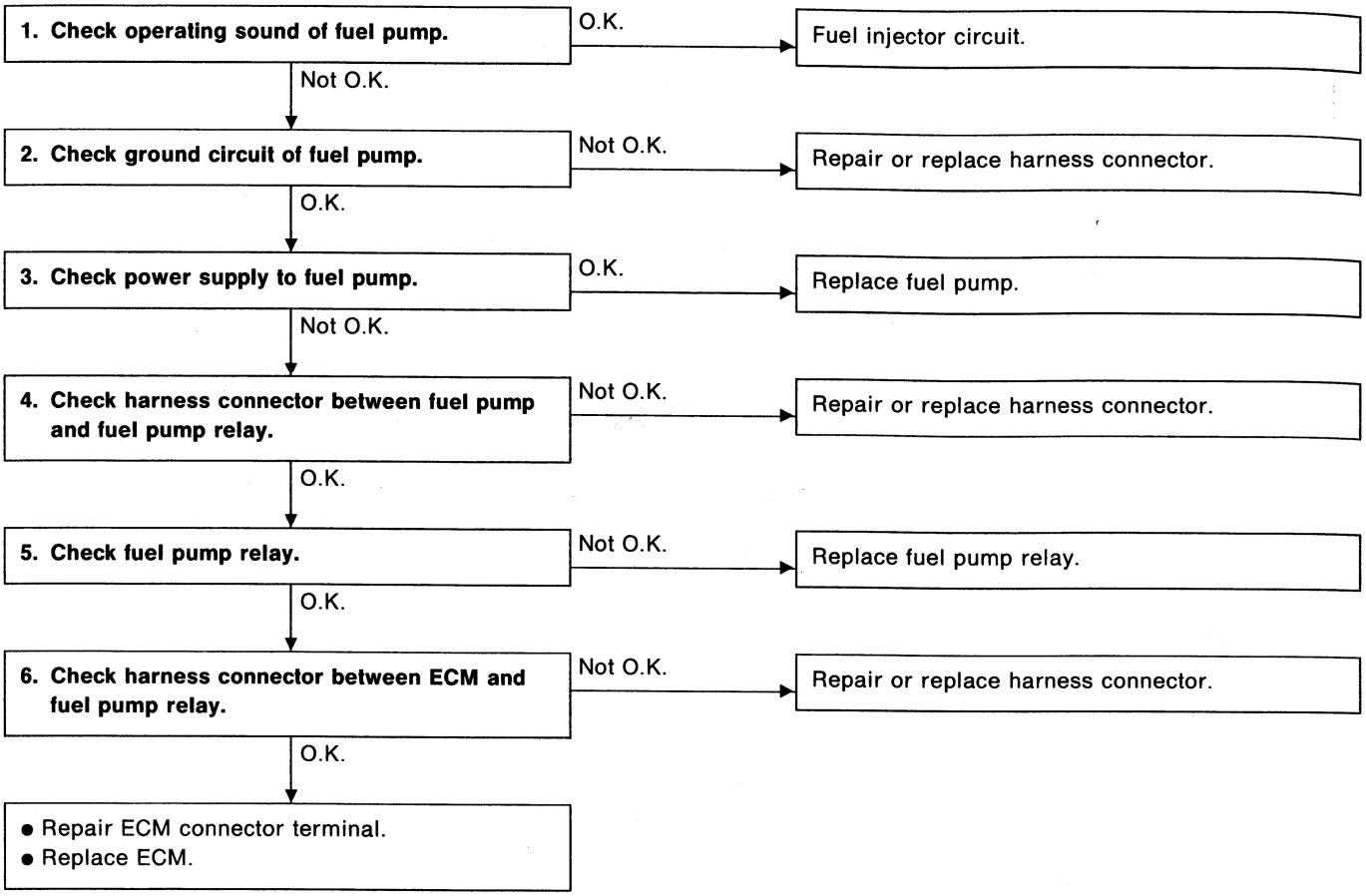


### 1. CHECK OPERATING SOUND OF FUEL PUMP.

Make sure that fuel pump is in operation for two seconds when turning ignition switch to ON.

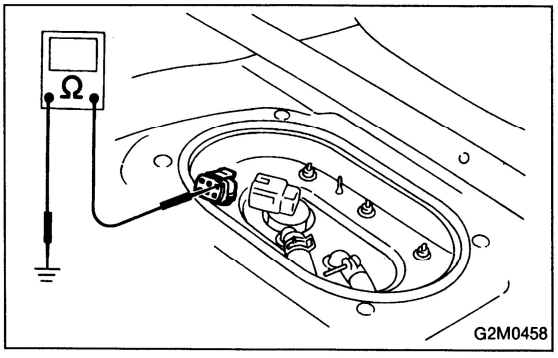


### 2. CHECK GROUND CIRCUIT OF FUEL PUMP.

1) Turn ignition switch to OFF.
2) Disconnect connector from fuel pump.
3) Measure resistance of harness connector between fuel pump and body.

***Connector & terminal / Specified resistance:***
***(R47) No. 4 — Body / 10 Ω, max.***



GETtheMANUALS.org

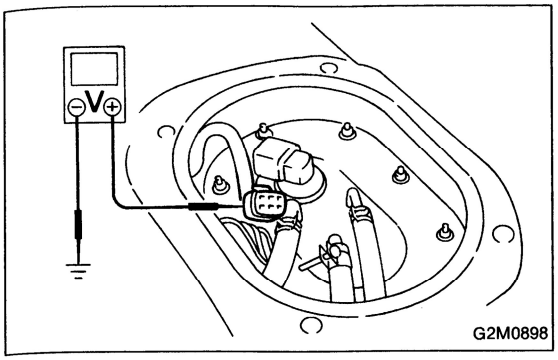


### 3. CHECK POWER SUPPLY TO FUEL PUMP.

1) Turn ignition switch to ON.
2) Measure voltage of power supply circuit between fuel pump connector and body.

***Connector & terminal / Specified voltage:***
***(R47) No. 1 — Body / 10 V, min.***

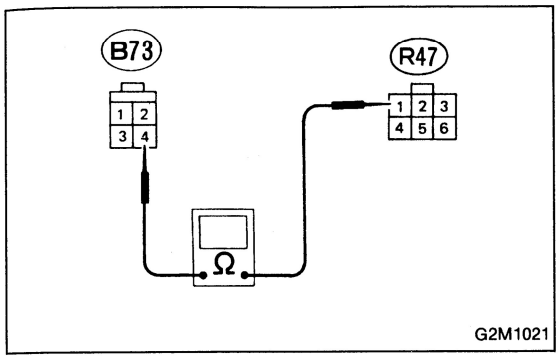


### 4. CHECK HARNESS CONNECTOR BETWEEN FUEL PUMP AND FUEL PUMP RELAY.

1) Turn ignition switch to OFF.
2) Measure resistance of harness connector between fuel pump and fuel pump relay.

***Connector & terminal / Specified resistance:***
***(R47) No. 1 — (B73) No. 4 / 10 Ω, max.***

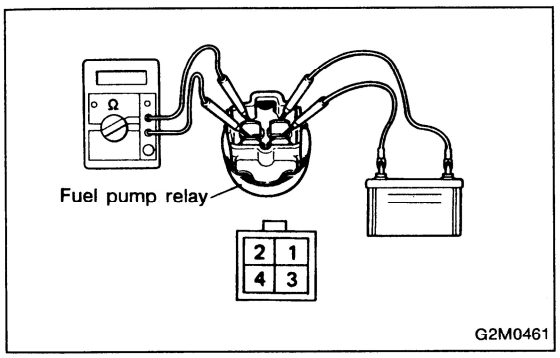


### 5. CHECK FUEL PUMP RELAY.

1) Disconnect connectors from fuel pump relay and main relay.
2) Remove fuel pump relay and main relay with bracket.
3) Connect battery to fuel pump relay connector terminals No. 1 and No. 3.
4) Measure resistance between connector terminals of fuel pump relay.

***Terminals / Specified resistance:***
***No. 2 — No. 4 / 10 Ω, max.***

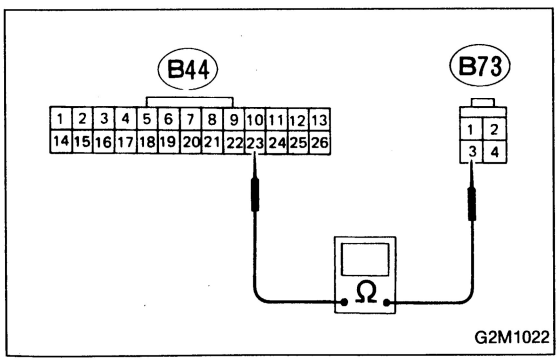


### 6. CHECK HARNESS CONNECTOR BETWEEN ECM AND FUEL PUMP RELAY.

1) Disconnect connectors from ECM.
2) Measure resistance of harness connector between ECM and fuel pump relay.

***Connector & terminal / Specified resistance:***
***(B44) No. 23 — (B73) No. 3 / 10 Ω, max.***



GETtheMANUALS.org

## E: FUEL INJECTOR CIRCUIT

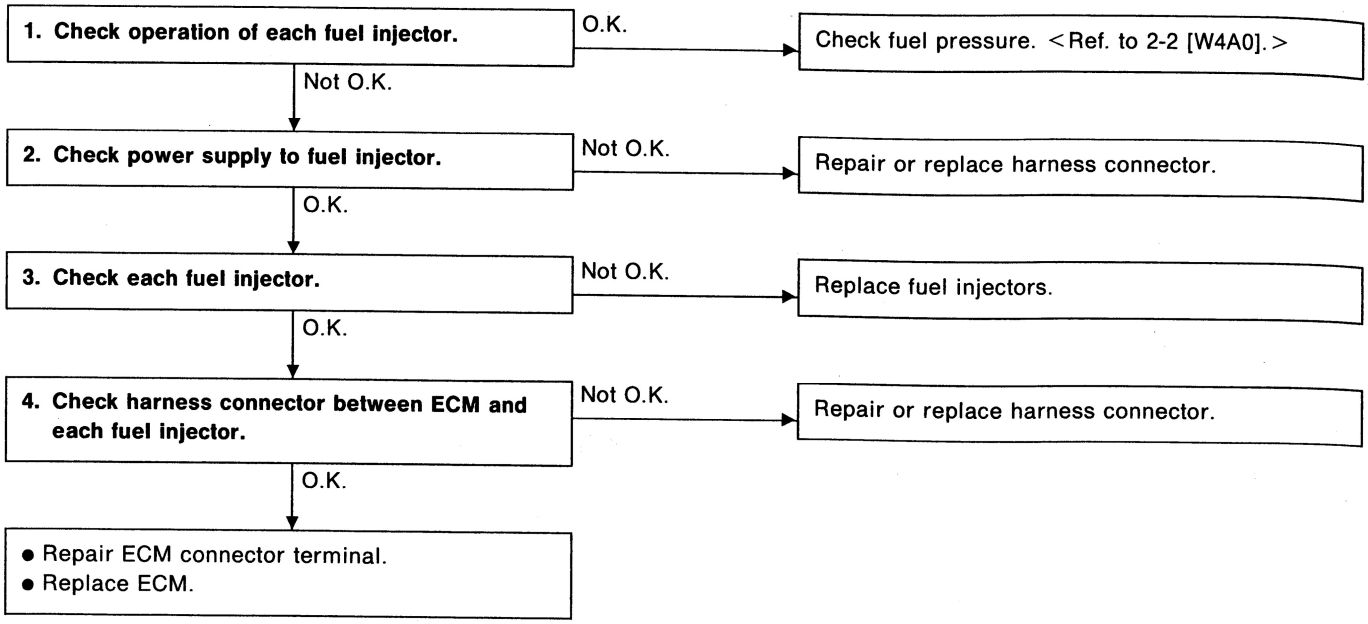




GETtheMANUALS.org

### 1. CHECK OPERATION OF EACH FUEL INJECTOR.

While cranking the engine, check that each fuel injector emits "operating" sound. Use a sound scope or attach a screwdriver to injector for this check.

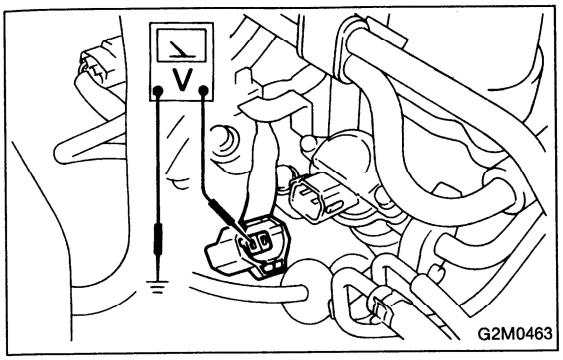


### 2. CHECK POWER SUPPLY TO FUEL INJECTOR.

1) Turn ignition switch to OFF.
2) Disconnect connector from each injector.
3) Turn ignition switch to ON.
4) Measure voltage between each fuel injector connector terminal and body.

***Connector & terminal / Specified voltage:***
***#1 (E4) No. 2 — Body / 10 V, min.***
***#2 (E13) No. 2 — Body / 10 V, min.***
***#3 (E3) No. 2 — Body / 10 V, min.***
***#4 (E14) No. 2 — Body / 10 V, min.***

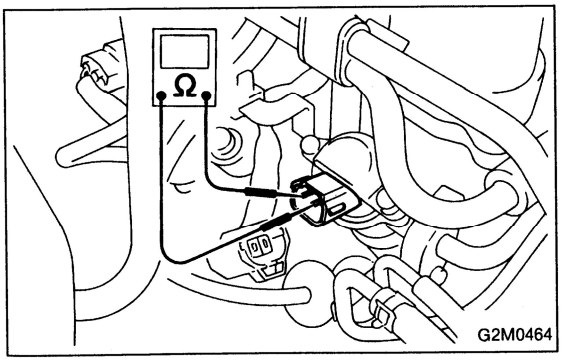


### 3. CHECK EACH FUEL INJECTOR.

Measure resistance between fuel injector terminals.

***Terminals / Specified resistance:***
***No. 1 — No. 2 / 11 — 12 Ω***

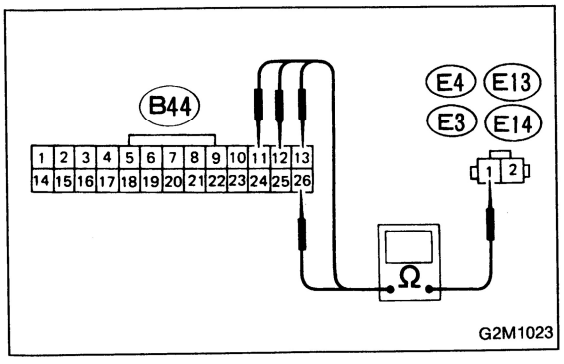


### 4. CHECK HARNESS CONNECTOR BETWEEN ECM AND EACH FUEL INJECTOR.

1) Disconnect connector from ECM.
2) Measure resistance of harness connector between ECM and each fuel injector.

***Connector & terminal / Specified resistance:***
***(B44) No. 13 — (E4) No. 1 / 10 Ω, max.***
***(B44) No. 12 — (E13) No. 1 / 10 Ω, max.***
***(B44) No. 11 — (E3) No. 1 / 10 Ω, max.***
***(B44) No. 26 — (E14) No. 1 / 10 Ω, max.***



GETtheMANUALS.org

# 9. Diagnostics Chart with Trouble Code

## A: TROUBLE CODE

| Trouble code | Item | Contents of diagnosis | Page |
|---|---|---|---|
| 11 | Crankshaft position sensor | ● No signal entered from crankshaft position sensor when starter switch is ON.<br>● The harness connector between ECM and crankshaft position sensor is in short or open. | 32 |
| 12 | Starter switch | ● The starter switch signal is abnormal.<br>● The harness connector between ECM and starter switch is in short or open. | 34 |
| 13 | Camshaft position sensor | ● No signal entered from camshaft position sensor, but signal entered from crankshaft position sensor.<br>● The harness connector between ECM and camshaft position sensor is in short or open. | 36 |
| 21 | Engine coolant temperature sensor | ● The engine coolant temperature sensor signal is abnormal.<br>● The harness connector between ECM and engine coolant temperature sensor is in short or open. | 38 |
| 22 | Knock sensor | ● The knock sensor signal is abnormal.<br>● The harness connector between ECM and knock sensor is in short or open. | 40 |
| 23 | Mass air flow sensor | ● The mass air flow sensor signal is abnormal.<br>● The harness connector between ECM and mass air flow sensor is in short or open. | 42 |
| 24 | Idle air control solenoid valve | ● The idle air control solenoid valve is not in function.<br>● The harness connector between ECM and idle air control solenoid valve is in short or open. | 44 |
| 31 | Throttle position sensor | ● The throttle position sensor signal is abnormal.<br>● The throttle position sensor is installed abnormally.<br>● The harness connector between ECM and throttle position sensor is in short or open. | 46 |
| 32 | Oxygen sensor | ● The oxygen sensor is not in function.<br>● The harness connector between ECM and oxygen sensor is in short or open. | 50 |
| 33 | Vehicle speed sensor 2 | ● The vehicle speed sensor 2 is not in function.<br>● The harness connector between ECM and vehicle speed sensor 2 is in short or open. | 52 |
| 35 | Purge control solenoid valve | ● The purge control solenoid valve is not in function.<br>● The harness connector between ECM and purge control solenoid valve is in short or open. | 54 |
| 42 | Idle switch | ● The idle switch signal is abnormal.<br>● The throttle position sensor is installed abnormally.<br>● The harness connector between ECM and idle switch is in short or open. | 56 |
| 44 | Wastegate control solenoid valve | ● The wastegate control solenoid valve is not in function.<br>● The harness connector between ECM and wastegate control solenoid valve is in short or open. | 58 |
| 45 | ● Pressure sensor<br>● Pressure exchange solenoid valve | ● The pressure sensor signal is abnormal.<br>● The pressure exchange solenoid valve is not in function.<br>● The intake manifold pressure is not transmitted to pressure sensor.<br>● The harness connector between ECM and pressure sensor, and pressure exchange solenoid valve is in short or open. | 60 |
| 51 | Neutral position switch | ● The neutral position switch signal is abnormal.<br>● The harness connector between ECM and neutral position switch is in short or open. | 64 |



GETtheMANUALS.org

## B: TROUBLE CODE (11)

## — CRANKSHAFT POSITION SENSOR —

**DIAGNOSIS:**

- No signal entered from crankshaft position sensor when starter switch is ON.
- The harness connector between ECM and crankshaft position sensor is in short or open.

**TROUBLE SYMPTOM:**

- Engine stalls.
- Restarting impossible

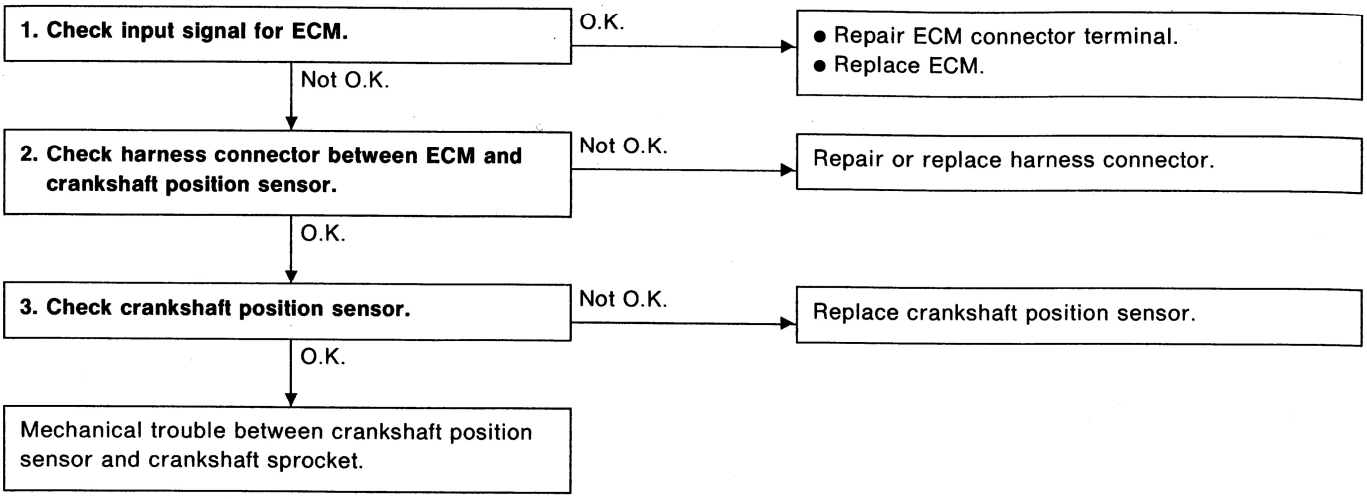




GETtheMANUALS.org

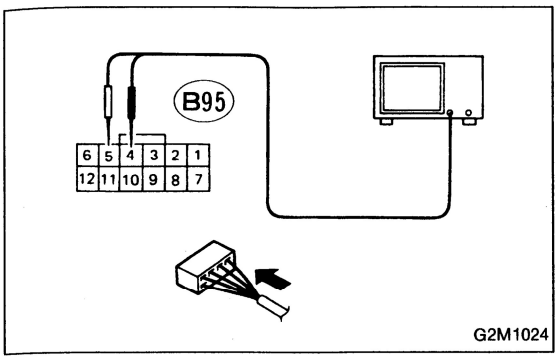


**1. CHECK INPUT SIGNAL FOR ECM.**

1) Set the positive (+) probe and earth lead of oscilloscope at ECM connector terminals.

***Connector & terminal / (B95) No. 4 — (B108) No. 5***

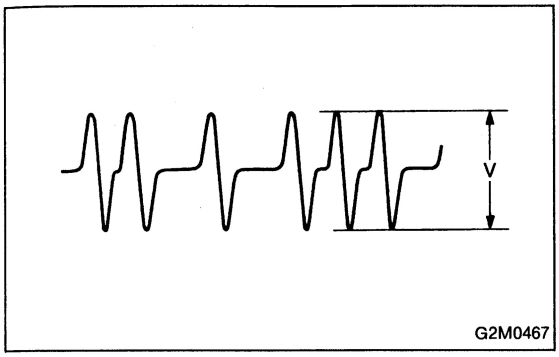


2) Measure signal voltage indicated on oscilloscope while cranking the engine.

***Specified voltage / 400 mV, min.***

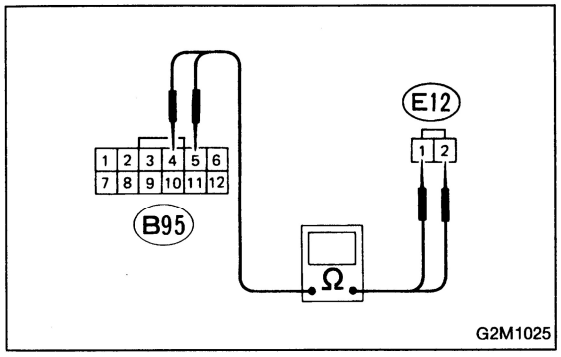


**2. CHECK HARNESS CONNECTOR BETWEEN ECM AND CRANKSHAFT POSITION SENSOR.**

1) Turn ignition switch to OFF.
2) Disconnect connectors from ECM and crankshaft position sensor.
3) Measure resistance of harness connector between ECM and crankshaft position sensor.

***Connector & terminal / Specified resistance:***
***(B95) No. 4 — (E12) No. 1 / 10 Ω, max.***
***(B95) No. 5 — (E12) No. 2 / 10 Ω, max.***

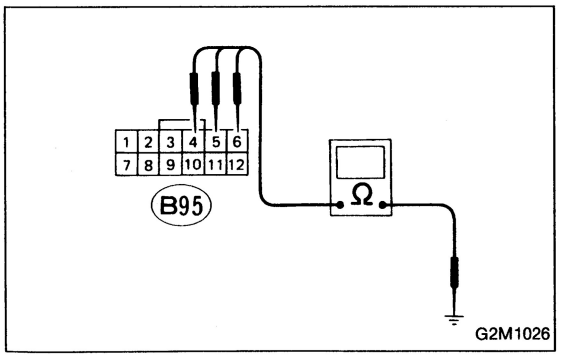


4) Measure resistance of harness connector between ECM and body to make sure that circuit does not short.

***Connector & terminal / Specified resistance:***
***(B95) No. 4 — Body / 1 MΩ, min.***
***(B95) No. 5 — Body / 1 MΩ, min.***
***(B95) No. 6 — Body / 1 MΩ, min.***

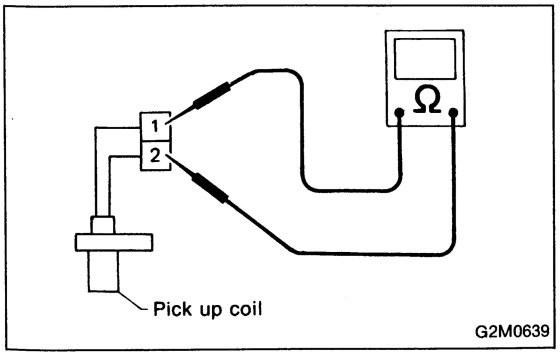


**3. CHECK CRANKSHAFT POSITION SENSOR.**

1) Remove crankshaft position sensor.
2) Measure resistance between connector terminals of crankshaft position sensor.

***Terminals / Specified resistance:***
***No. 1 — No. 2 / 950 — 1,250 Ω***



GETtheMANUALS.org

## C: TROUBLE CODE (12) — STARTER SWITCH —

**DIAGNOSIS:**

- The starter switch signal is abnormal.
- The harness connector between ECM and starter switch is in short or open.

**TROUBLE SYMPTOM:**

- Failure of engine to start.

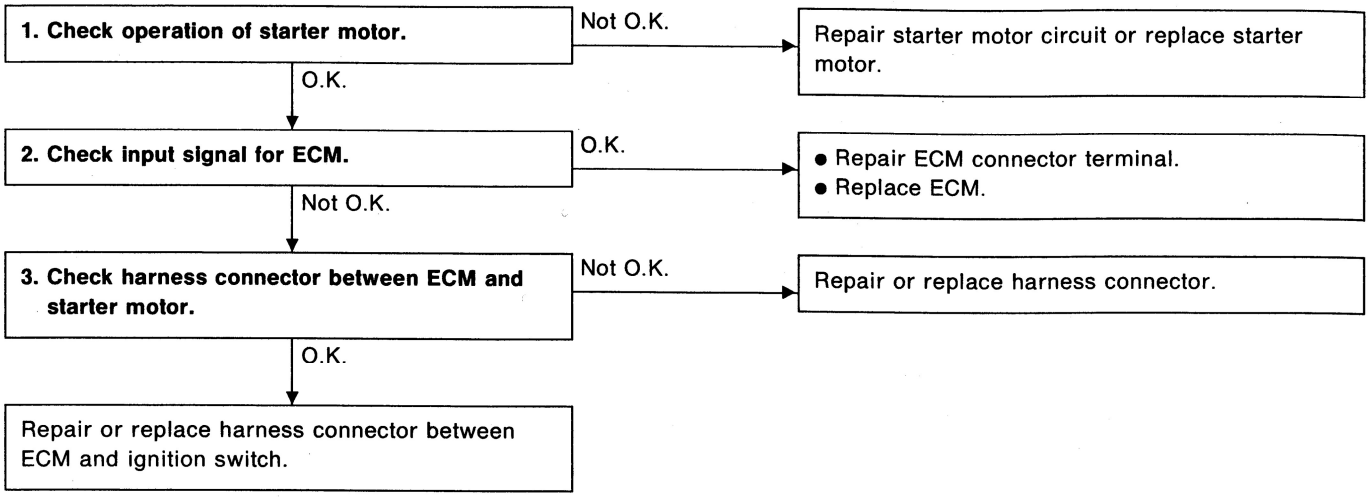




GETtheMANUALS.org

**1. CHECK OPERATION OF STARTER MOTOR.**

Turn ignition switch to "ST" to ensure that starter motor functions.

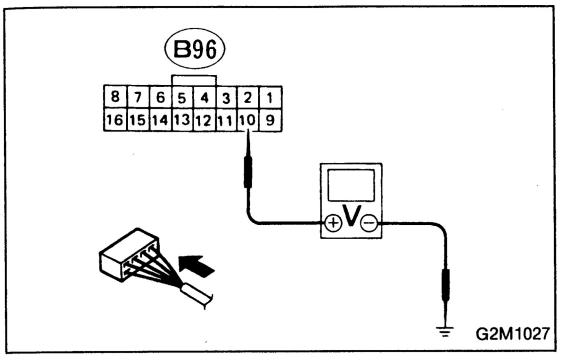


**2. CHECK INPUT SIGNAL FOR ECM.**

Measure voltage between ECM and body while cranking the engine.

***Connector & terminal / Specified voltage:***
***(B96) No. 10 — Body / 9 — 14 V***

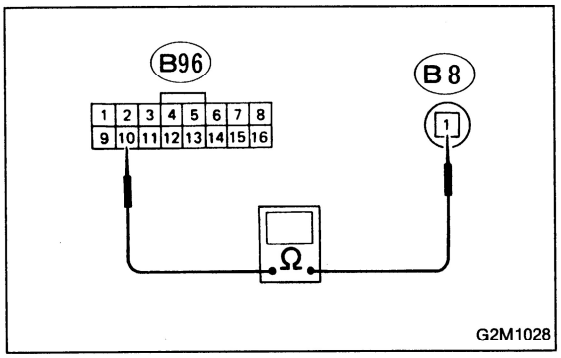


**3. CHECK HARNESS CONNECTOR BETWEEN ECM AND STARTER MOTOR.**

1) Turn ignition switch to OFF.
2) Disconnect connectors from ECM and starter motor.
3) Measure resistance of harness connector between ECM and starter motor.

***Connector & terminal / Specified resistance:***
***(B96) No. 10 — (B8) No. 1 / 0 Ω***

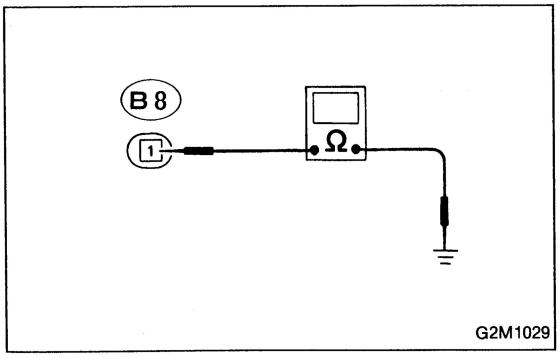


3) Measure resistance of harness connector between starter motor and body to make sure that circuit does not short.

***Connector & terminal / Specified resistance:***
***(B8) No. 1 — Body / 1 MΩ, min.***



GETtheMANUALS.org

## D: TROUBLE CODE (13) — CAMSHAFT POSITION SENSOR —

### DIAGNOSIS:

- No signal entered from camshaft position sensor, but signal entered from crankshaft position sensor.
- The harness connector between ECM and camshaft position sensor is in short or open.

### TROUBLE SYMPTOM:

- Engine stalls.
- Failure of engine to start.

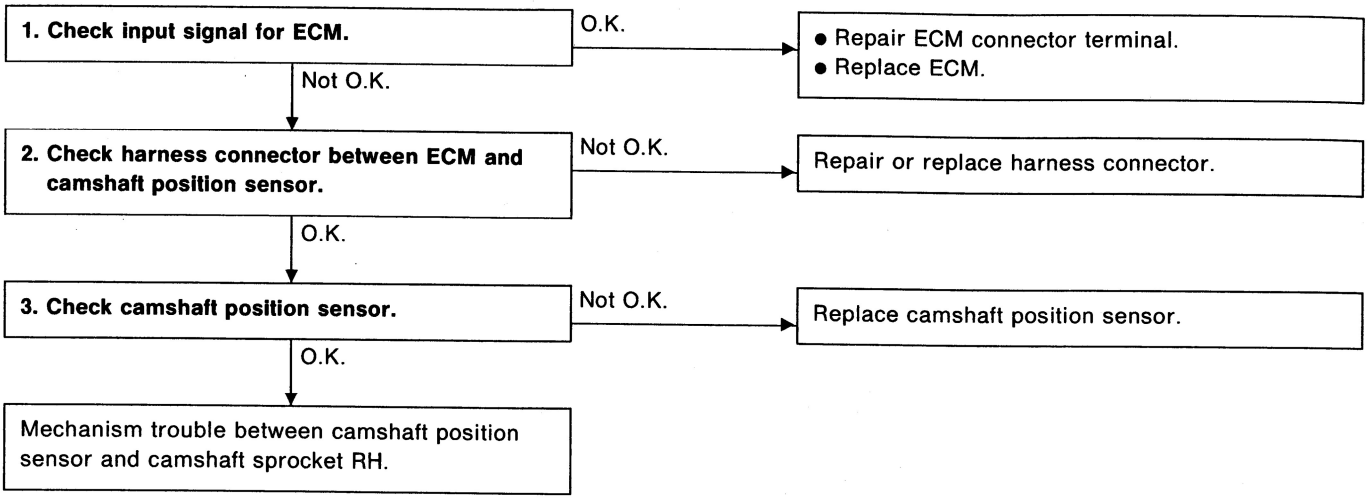


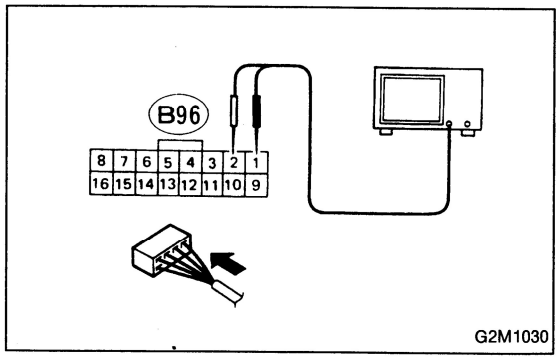


### 1. CHECK INPUT SIGNAL FOR ECM.

1) Set the positive (+) probe and earth lead of oscilloscope at ECM connector terminals.

***Connector & terminal / (B96) No. 1 — (B96) No. 2***

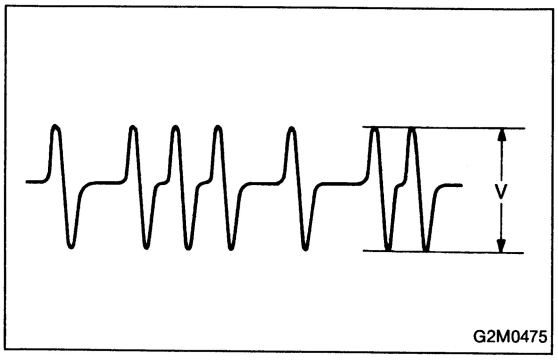


2) Measure signal voltage indicated on oscilloscope, while cranking the engine.

***Specified voltage / 400 mV, min.***



GETtheMANUALS.org

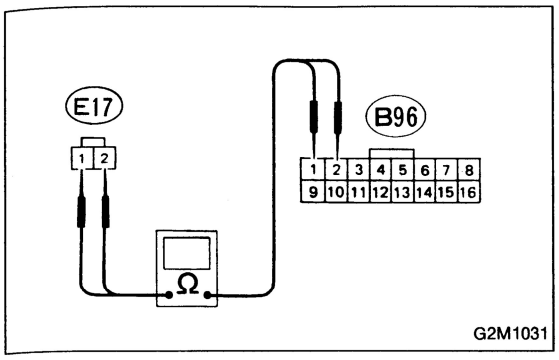


## 2. CHECK HARNESS CONNECTOR BETWEEN ECM AND CAMSHAFT POSITION SENSOR.

1) Turn ignition switch to OFF.
2) Disconnect connectors from ECM and camshaft position sensor.
3) Measure resistance of harness connector between ECM and camshaft position sensor.

***Connector & terminal / Specified resistance:***
***(B96) No. 1 — (E17) No. 1 / 10 Ω, max.***
***(B96) No. 2 — (E17) No. 2 / 10 Ω, max.***

4) Measure resistance of harness connector between ECM and body to make sure that circuit does not short.

***Connector & terminal / Specified resistance:***
***(B96) No. 1 — Body / 1 MΩ, min.***
***(B96) No. 2 — Body / 1 MΩ, min.***
***(B96) No. 3 — Body / 1 MΩ, min.***

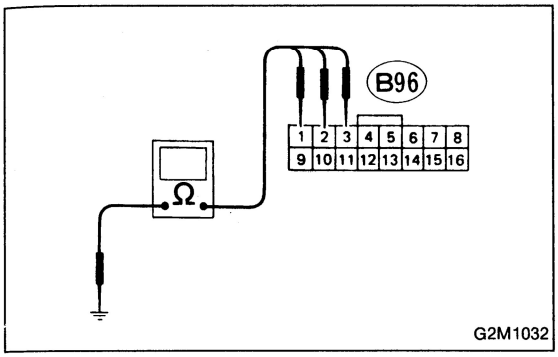


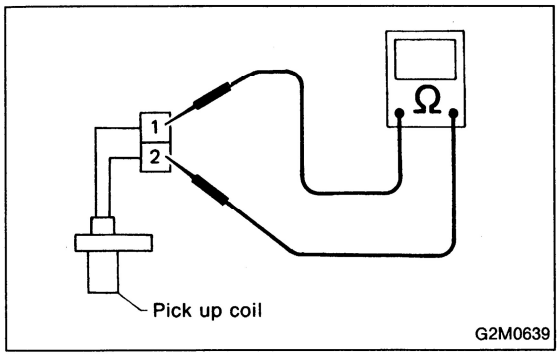


## 3. CHECK CAMSHAFT POSITION SENSOR.

1) Remove camshaft position sensor.
2) Measure resistance between connector terminals of camshaft position sensor.

***Terminals / Specified resistance:***
***No. 1 — No. 2 / 950 — 1,250 Ω***



GETtheMANUALS.org

## E: TROUBLE CODE (21) — ENGINE COOLANT TEMPERATURE SENSOR —

**DIAGNOSIS:**

- The engine coolant temperature sensor signal is abnormal.
- The harness connector between ECM and engine coolant temperature sensor is in short or open.

**TROUBLE SYMPTOM:**

- Hard to start.
- Erroneous idling
- Poor driving performance

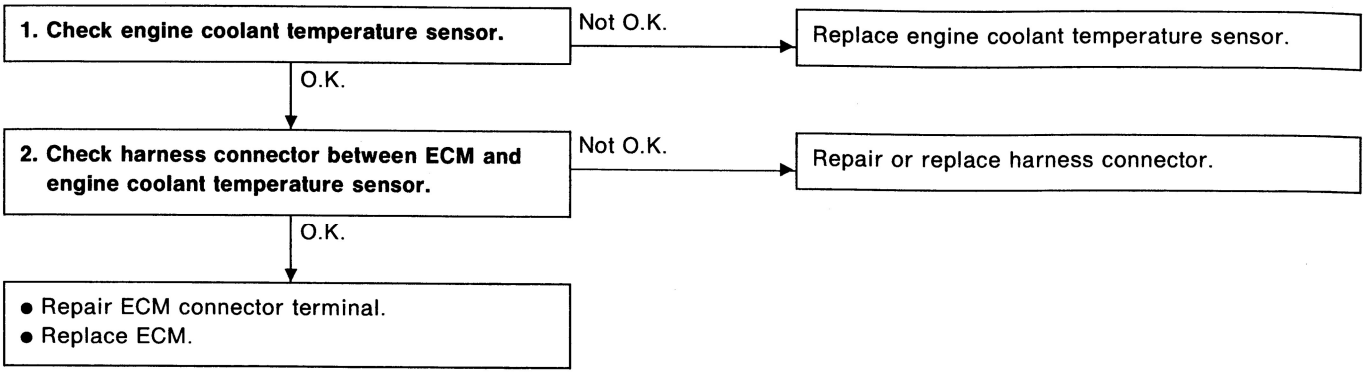




GETtheMANUALS.org

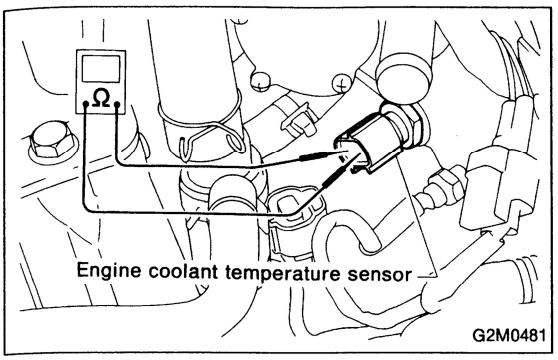


**1. CHECK ENGINE COOLANT TEMPERATURE SENSOR.**

1) Turn ignition switch to OFF.
2) Disconnect connector from engine coolant temperature sensor.
3) Measure resistance between engine coolant temperature sensor terminals.

***Terminals / Specified resistance:***
***No. 1 — No. 2 / 2.0 — 3.0 kΩ at 20°C (68°F)***
***No. 1 — No. 2 / 270 — 370 Ω at 80°C (176°F)***

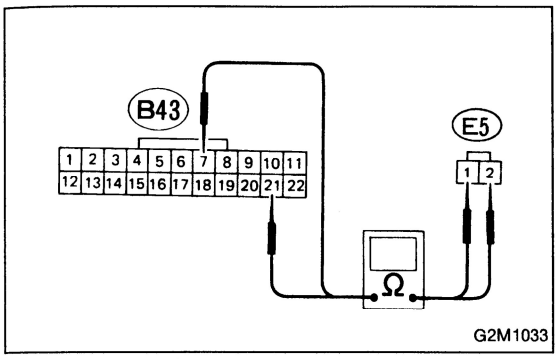


**2. CHECK HARNESS CONNECTOR BETWEEN ECM AND ENGINE COOLANT TEMPERATURE SENSOR.**

1) Disconnect connector from ECM.
2) Measure resistance of harness connector between ECM and engine coolant temperature sensor.

***Connector & terminal / Specified resistance:***
***(B43) No. 7 — (E5) No. 1 / 10 Ω, max.***
***(B43) No. 21 — (E5) No. 2 / 10 Ω, max.***

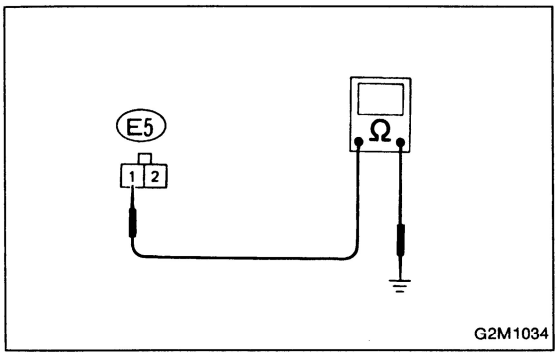


3) Measure resistance of harness connector between engine coolant temperature sensor and body to make sure that circuit does not short.

***Connector & terminal / Specified resistance:***
***(E5) No. 1 — Body / 1 MΩ, min.***



GETtheMANUALS.org

## F: TROUBLE CODE (22) — KNOCK SENSOR —

**DIAGNOSIS:**

- The knock sensor signal is abnormal.
- The harness connector between ECM and knock sensor is in short or open.

**TROUBLE SYMPTOM:**

- Poor driving performance
- Engine has the knocking on high engine speed.

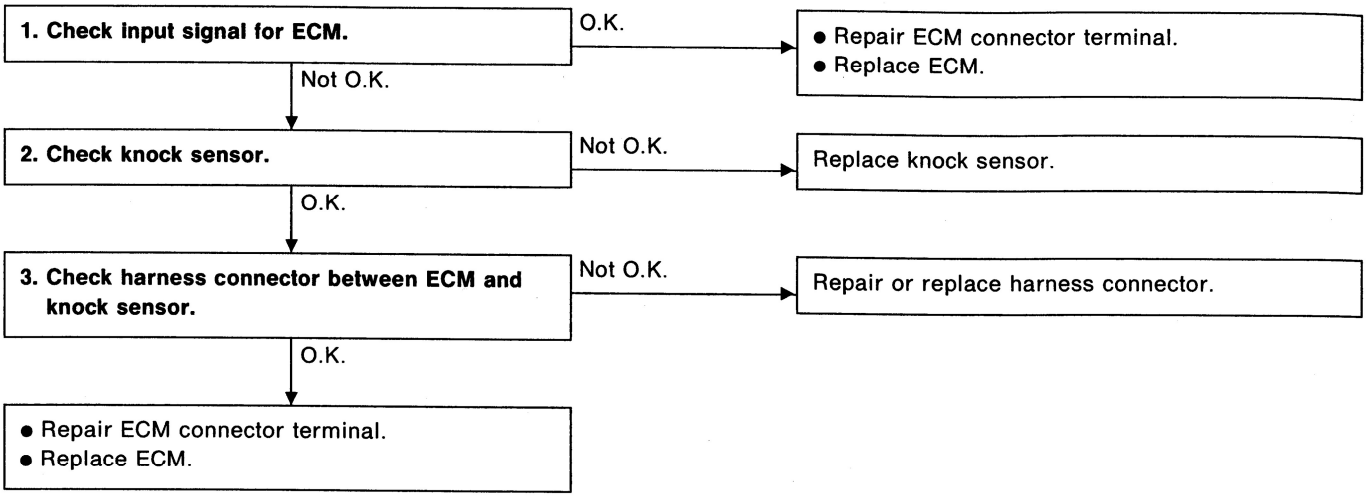




GETtheMANUALS.org

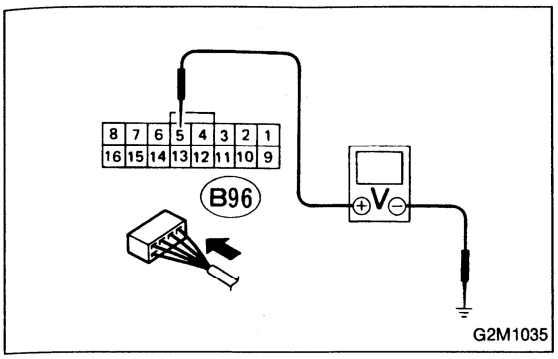


**1. CHECK INPUT SIGNAL FOR ECM.**

1) Turn ignition switch to ON.
2) Measure voltage between ECM connector terminal and body.

***Connector & terminal / Specified voltage:***
***(B96) No. 5 — Body / 3 — 4 V***

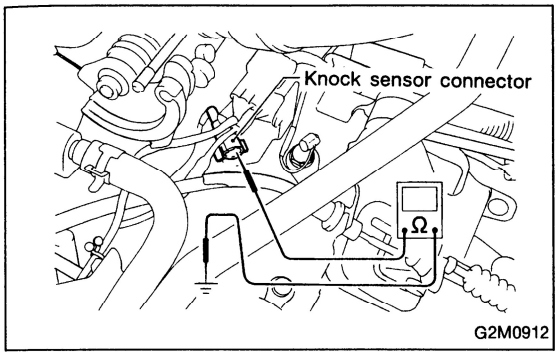


**2. CHECK KNOCK SENSOR.**

1) Turn ignition switch to OFF.
2) Disconnect connector from knock sensor.
3) Measure resistance between knock sensor terminal and body.

***Connector & terminal / Specified resistance:***
***(E18) No. 1 — Body / Approx. 560 Ω***

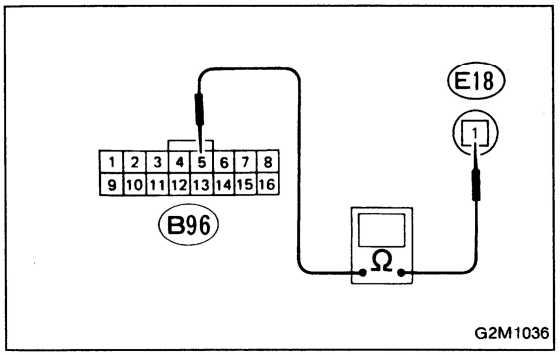


**3. CHECK HARNESS CONNECTOR BETWEEN ECM AND KNOCK SENSOR.**

1) Disconnect connectors from ECM.
2) Measure resistance of harness connector between ECM and knock sensor.

***Connector & terminal / Specified resistance:***
***(B96) No. 5 — (E18) No. 1 / 10 Ω, max.***

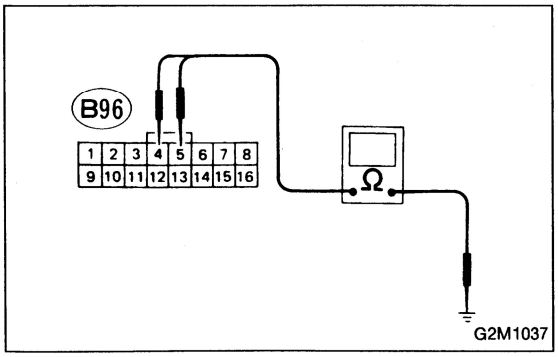


3) Measure resistance of harness connector between ECM and body to make sure that circuit does not short.

***Connector & terminal / Specified resistance:***
***(B96) No. 5 — Body / 1 MΩ, min.***
***(B96) No. 4 — Body / 1 MΩ, min.***



GETtheMANUALS.org

## G: TROUBLE CODE (23) — MASS AIR FLOW SENSOR —

**DIAGNOSIS:**

- The mass air flow sensor signal is abnormal.
- The harness connector between ECM and mass air flow sensor is in short or open.

**TROUBLE SYMPTOM:**

- Erroneous idling
- Engine stalls.
- Poor driving performance

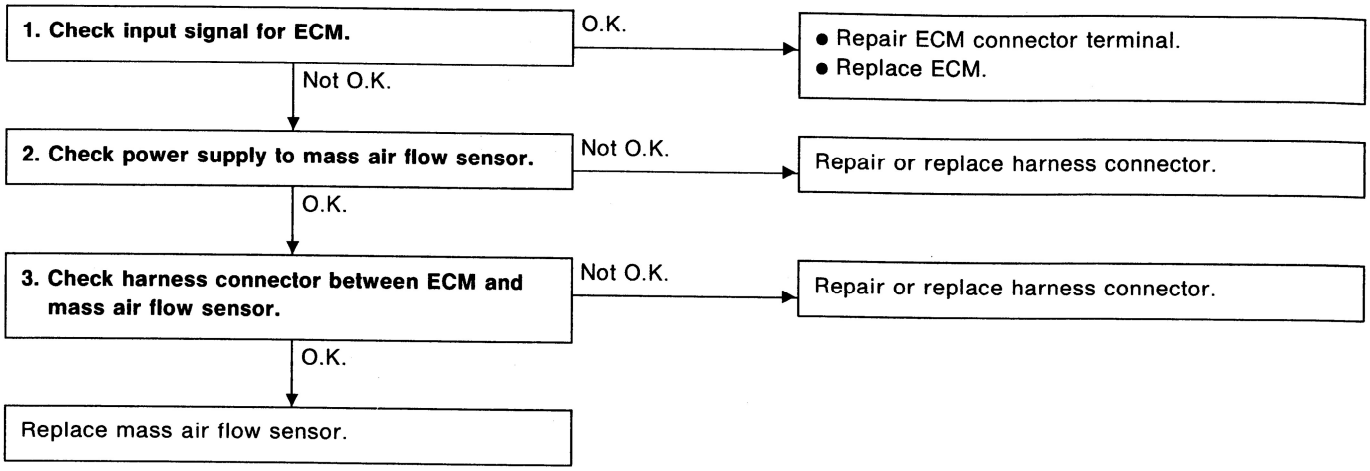




GETtheMANUALS.org

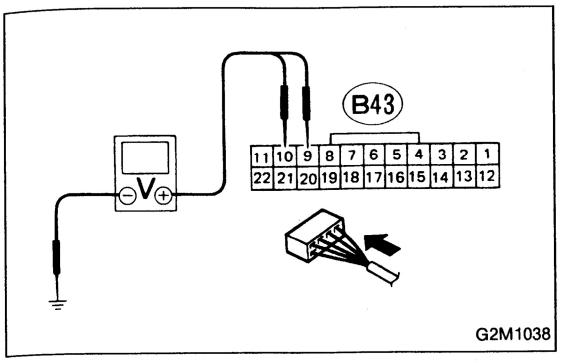


**1. CHECK INPUT SIGNAL FOR ECM.**

1) Turn ignition switch to ON.
2) Measure voltage between ECM and body.

***Connector & terminal / Specified voltage:***
***(B43) No. 10 — Body / 0 V***
***(B43) No. 9 — Body / 0 — 0.3 V***

3) Start engine, and idle it.
4) Measure voltage between ECM and body while engine is idling.

***Connector & terminal / Specified voltage:***
***(B43) No. 10 — Body / 0 V***
***(B43) No. 9 — Body / 0.8 — 1.2 V***

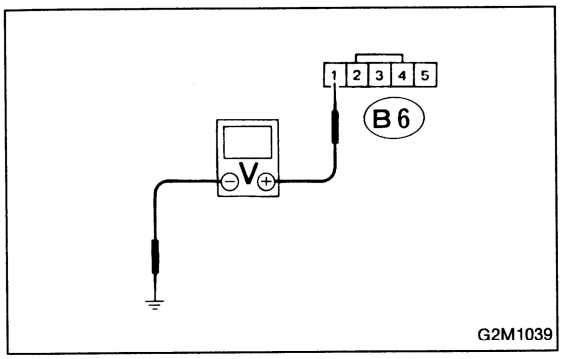


**2. CHECK POWER SUPPLY TO MASS AIR FLOW SENSOR.**

1) Turn ignition switch to OFF.
2) Disconnect connector from mass air flow sensor.
3) Turn ignition switch to ON.
4) Measure voltage between mass air flow sensor connector and body.

***Connector & terminal / Specified voltage:***
***(B6) No. 1 — Body / 10 — 14 V***

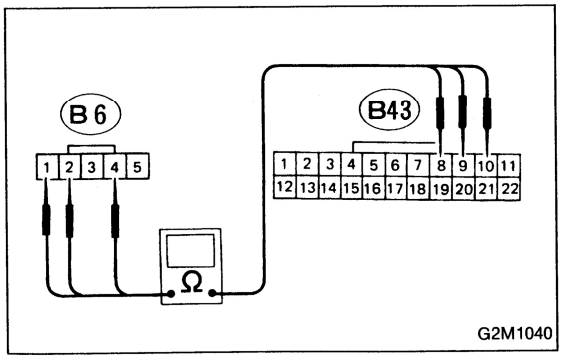


**3. CHECK HARNESS CONNECTOR BETWEEN ECM AND MASS AIR FLOW SENSOR.**

1) Turn ignition switch to OFF.
2) Disconnect connectors from ECM.
3) Measure resistance of harness connector between ECM and mass air flow sensor.

***Connector & terminal / Specified resistance:***
***(B43) No. 8 — (B6) No. 1 / 10 Ω, max.***
***(B43) No. 9 — (B6) No. 4 / 10 Ω, max.***
***(B43) No. 10 — (B6) No. 2 / 10 Ω, max.***

4) Measure resistance of harness connector between ECM and body to make sure that circuit does not short.

***Connector & terminal / Specified resistance:***
***(B43) No. 9 — Body / 1 MΩ, min.***

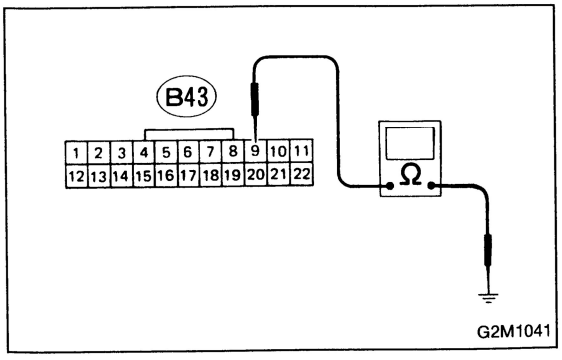




GETtheMANUALS.org

## H: TROUBLE CODE (24) — IDLE AIR CONTROL SOLENOID VALVE —

**DIAGNOSIS:**

- The idle air control solenoid valve is not in function.
- The harness connector between ECM and idle air control solenoid valve is in short or open.

**TROUBLE SYMPTOM:**

- Erroneous idling
- Engine stalls.
- Engine breathing

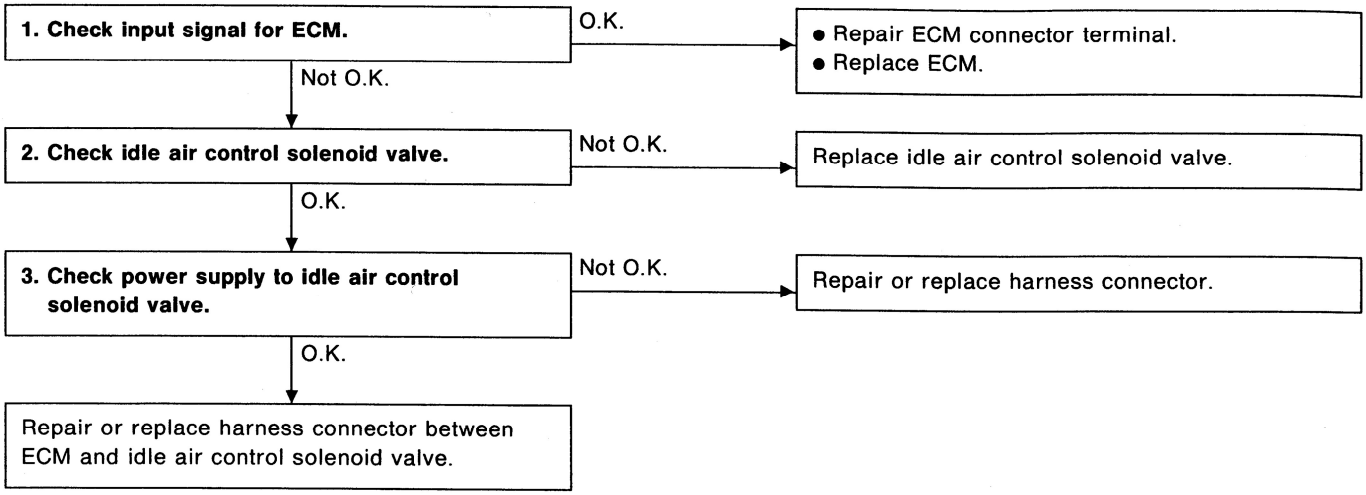




GETtheMANUALS.org

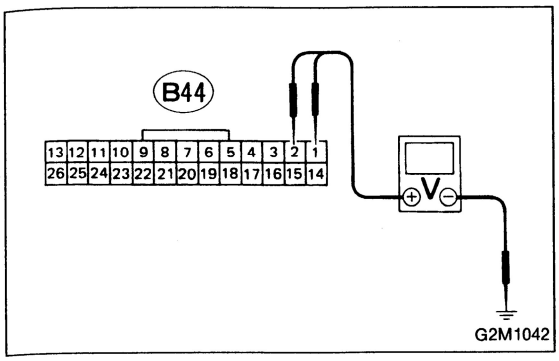


**1. CHECK INPUT SIGNAL FOR ECM.**

1) Turn ignition switch to ON.
2) Measure voltage between ECM and body.

***Connector & terminal / Specified voltage:***
***(B44) No. 2 — Body / 8 V — 9 V***
***(B44) No. 1 — Body / 6 V — 7 V***

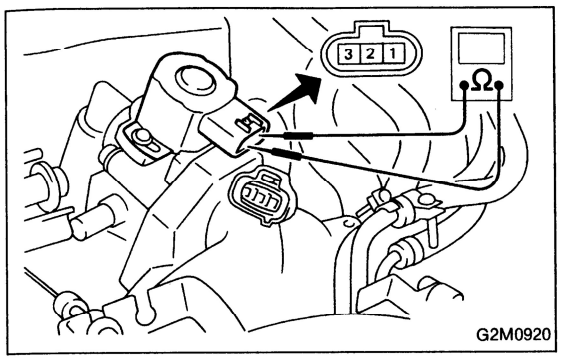


**2. CHECK IDLE AIR CONTROL SOLENOID VALVE.**

1) Turn ignition switch to OFF.
2) Disconnect connector from idle air control solenoid valve.
3) Measure resistance between solenoid valve terminals.

***Terminals / Specified resistance:***
***No. 1 — No. 2 / 8 — 11 Ω***
***No. 2 — No. 3 / 8 — 11 Ω***

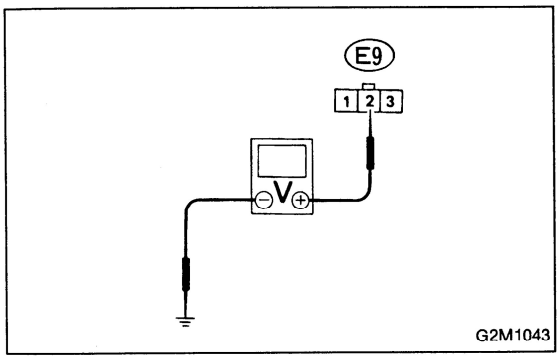


**3. CHECK POWER SUPPLY TO IDLE AIR CONTROL SOLENOID VALVE.**

1) Turn ignition switch to ON.
2) Measure voltage between harness connector of idle air control solenoid valve and body.

***Connector & terminal / Specified voltage:***
***(E9) No. 2 — Body / 10 V, min.***



GETtheMANUALS.org

## I: TROUBLE CODE (31) — THROTTLE POSITION SENSOR —

**DIAGNOSIS:**

- The throttle position sensor signal is abnormal.
- The throttle position sensor is installed abnormally.
- The harness connector between ECM and throttle position sensor is in short or open.

**TROUBLE SYMPTOM:**

- Erroneous idling
- Engine stalls.
- Poor driving performance

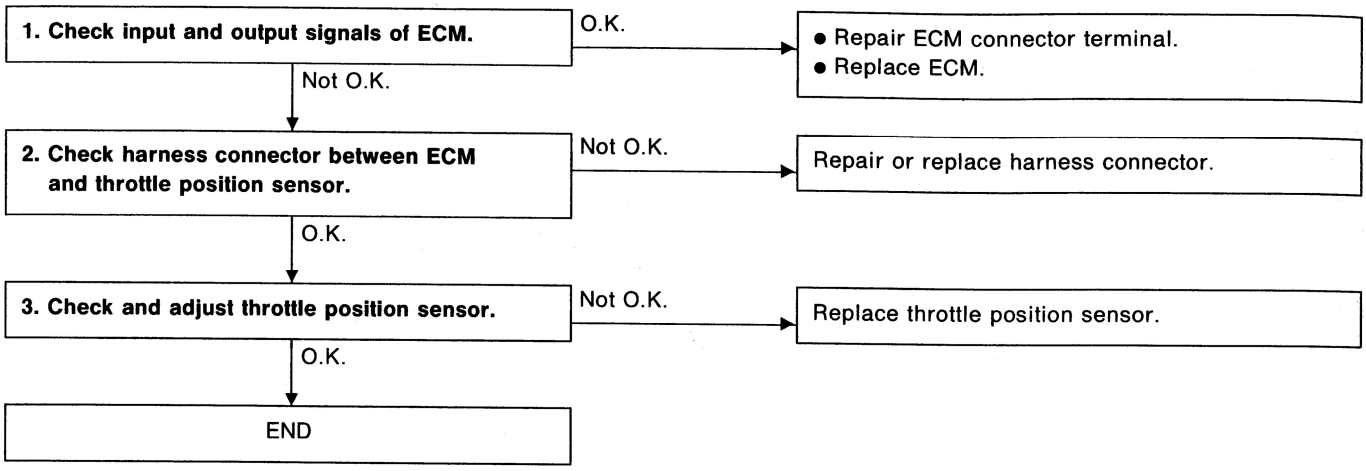




GETtheMANUALS.org

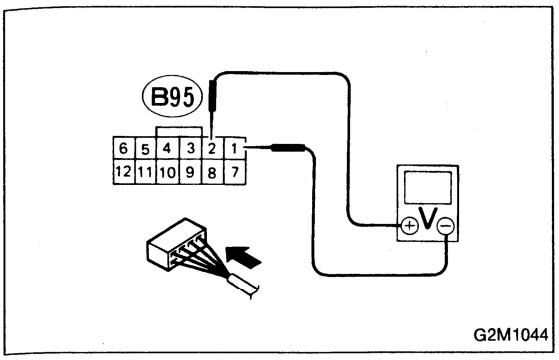


**1. CHECK INPUT AND OUTPUT SIGNALS OF ECM.**

1) Turn ignition switch to ON.
2) Measure signal voltage between ECM terminals while throttle valve is fully closed.

***Connector & terminal / Specified voltage:***
***(B95) No. 2 — (B95) No. 1 / 0.3 — 0.7 V***

3) Measure signal voltage between ECM terminals while throttle valve is fully opened.

***Connector & terminal / Specified voltage:***
***(B95) No. 2 — (B95) No. 1 / 4.5 V***

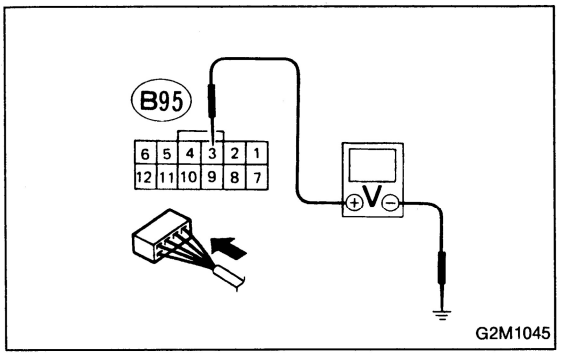


4) Measure output voltage between ECM terminal and body.

***Connector & terminal / Specified voltage:***
***(B95) No. 3 — Body / 5 V, min.***

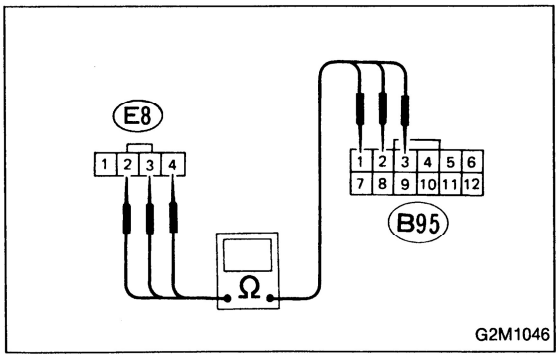


**2. CHECK HARNESS CONNECTOR BETWEEN ECM AND THROTTLE POSITION SENSOR.**

1) Turn ignition switch to OFF.
2) Disconnect connectors from ECM and throttle position sensor.
3) Measure resistance of harness connector between ECM and throttle position sensor.

***Connector & terminal / Specified resistance:***
***(B95) No. 1 — (E8) No. 2 / 10 Ω, max.***
***(B95) No. 2 — (E8) No. 4 / 10 Ω, max.***
***(B95) No. 3 — (E8) No. 3 / 10 Ω, max.***



GETtheMANUALS.org

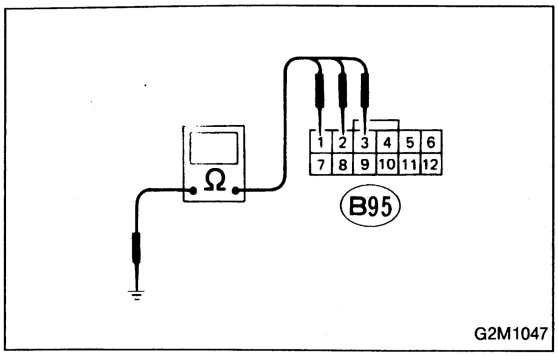


4) Measure resistance of harness connector between ECM and body to make sure that circuit does not short.

***Connector & terminal / Specified resistance:***
***(B95) No. 1 — Body / 1 MΩ, min.***
***(B95) No. 2 — Body / 1 MΩ, min.***
***(B95) No. 3 — Body / 1 MΩ, min.***

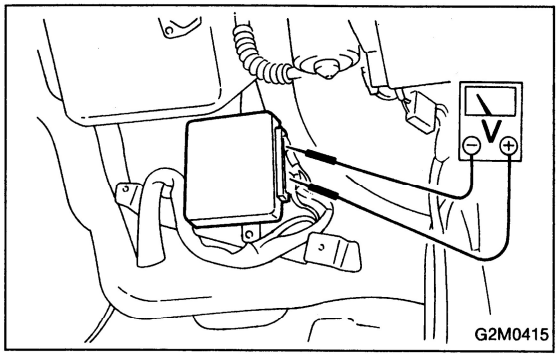


**3. CHECK AND ADJUST THROTTLE POSITION SENSOR.**

1) Connect all connectors.
2) Loosen throttle position sensor installing screws.
3) Adjust throttle position sensor while throttle valve is fully closed.

- Using voltage meter:
  (1) Turn ignition switch to ON.
  (2) Adjust throttle position sensor to specified voltage between ECM connector terminals.

***Connector & terminal / Specified voltage:***
***(B95) No. 2 — (B95) No. 1 / 4.7 V***
(3) Tighten throttle position sensor installing screws.

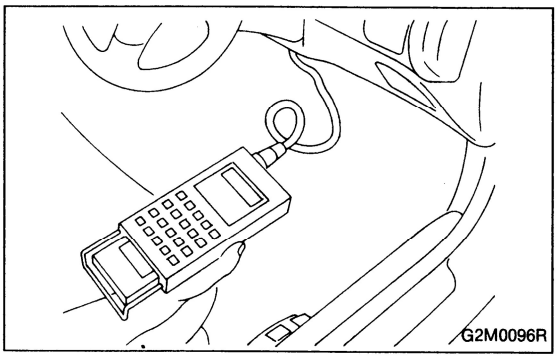


- Using select monitor:
  (1) Attach select monitor.
  (2) Turn ignition switch to ON.
  (3) Select mode "F10".
  (4) Adjust throttle position sensor to specified data.

***Conditions / Specified data:***
***Throttle valve fully closed / 4.7 V***
(5) Tighten throttle position sensor installing screws.



GETtheMANUALS.org

## J: TROUBLE CODE (32) — OXYGEN SENSOR —

**DIAGNOSIS:**

- The oxygen sensor is not in function.
- The harness connector between ECM and oxygen sensor is in short or open.

**TROUBLE SYMPTOM:**

- Failure of engine to start.
- Erroneous idling
- Poor driving performance
- Engine stalls.
- Idle mixture is out of specifications.

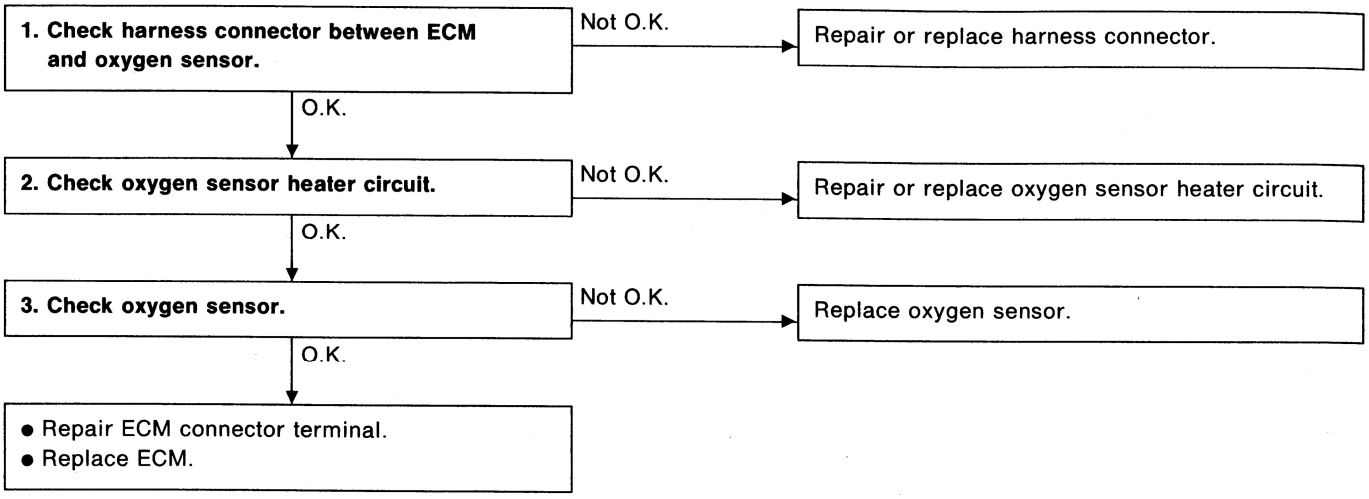




GETtheMANUALS.org

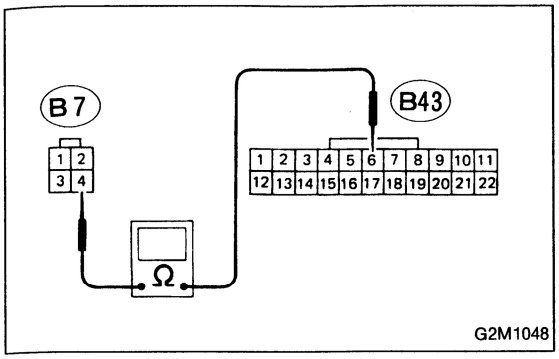


**1. CHECK HARNESS CONNECTOR BETWEEN ECM AND OXYGEN SENSOR.**

1) Disconnect connectors from ECM and oxygen sensor.
2) Measure resistance of harness connector between ECM and oxygen sensor.

***Connector & terminal / Specified resistance:***
***(B43) No. 6 — (B7) No. 4 / 0 Ω***

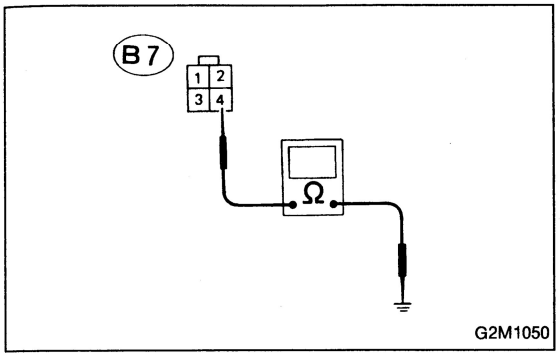


3) Measure resistance of harness connector between oxygen sensor and body to make sure that circuit does not short.

***Connector & terminal / Specified resistance:***
***(B7) No. 4 — Body / 1 MΩ, min.***

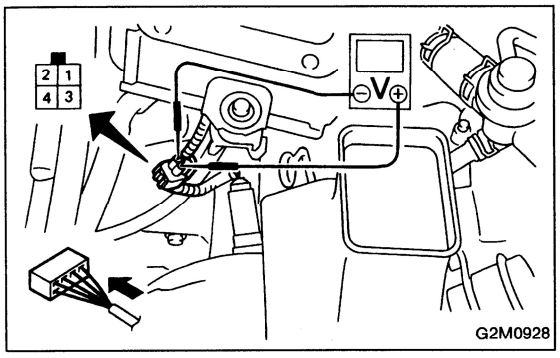


**2. CHECK OXYGEN SENSOR HEATER CIRCUIT.**

1) Connect connectors of ECM and oxygen sensor.
2) Turn ignition switch to ON.
3) Measure voltage between connector terminals of oxygen sensor.

***Connector & terminal / Specified voltage:***
***(B7) No. 1 — (B7) No. 2 / 10 — 14 V***

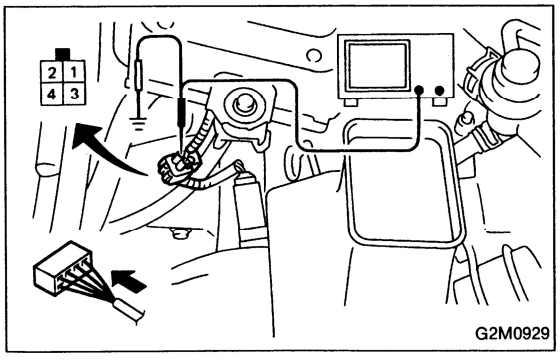


**3. CHECK OXYGEN SENSOR.**

1) Idle engine.
2) Measure voltage between oxygen sensor terminal and body by using oscilloscope.

***Connector & terminal / Specified voltage:***
***No. 4 — Body / 0.1 — 1.0 V***



GETtheMANUALS.org

## K: TROUBLE CODE (33) — VEHICLE SPEED SENSOR 2 —

**DIAGNOSIS:**

- The vehicle speed sensor 2 is not in function.
- The harness connector between ECM and vehicle speed sensor 2 is in short or open.

**TROUBLE SYMPTOM:**

- Erroneous idling
- Engine stalls.
- Poor driving performance

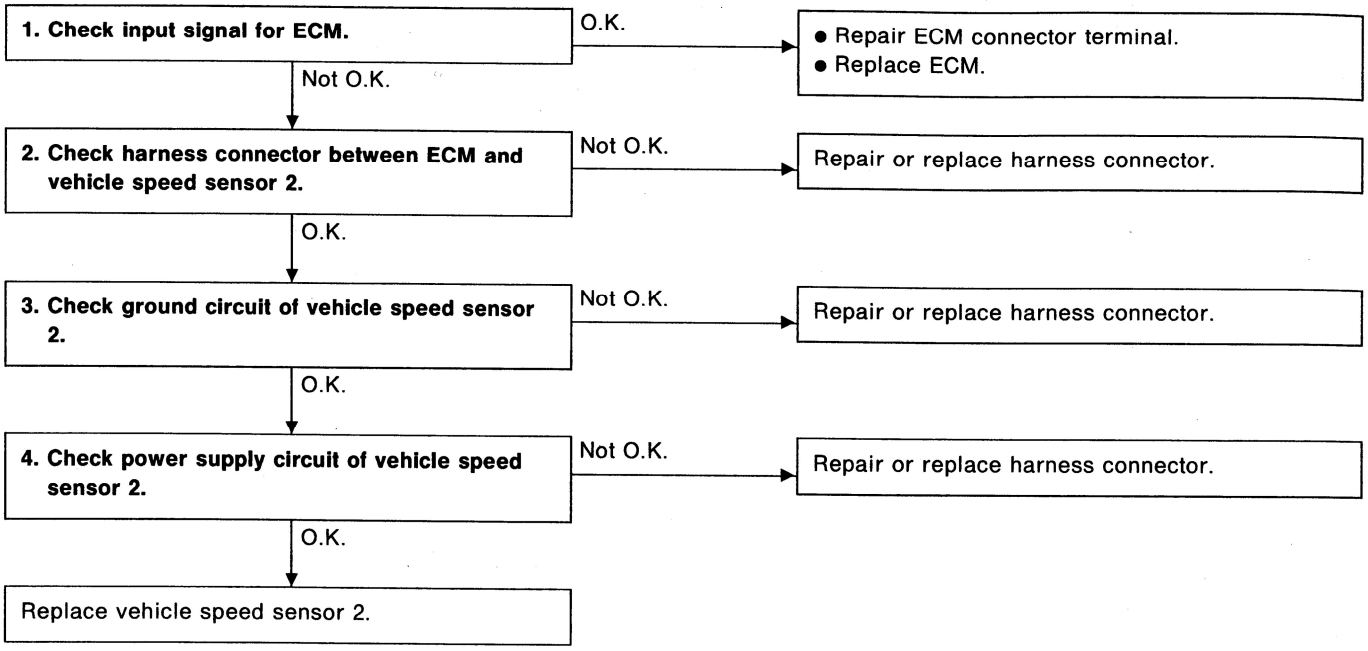


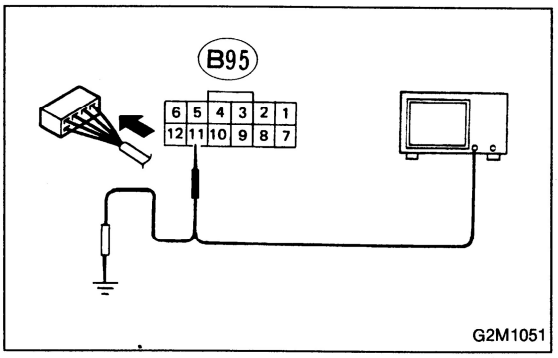


### 1. CHECK INPUT SIGNAL FOR ECM.

1) Lift-up the vehicle, or set the vehicle on free roller.
2) Set the positive (+) terminal and earth lead of oscilloscope at ECM connector terminals.

***Connector & terminal / (B95) No. 11 — Body***

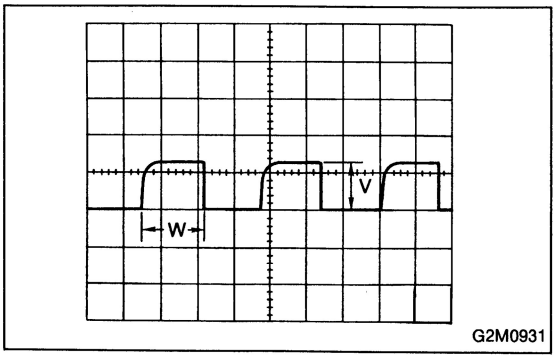


3) Start the engine.
4) Shift on the gear position, and be constant the vehicle speed.
5) Measure signal voltage indicated on oscilloscope.

***Specified voltage / 10 V, min.***

NOTE:
If vehicle speed increases, the width of amplitude (W) decreases.



GETtheMANUALS.org

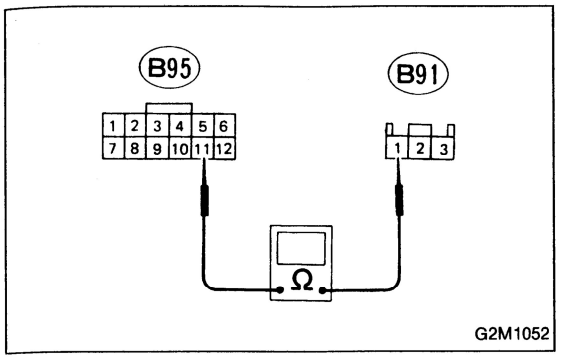


**2. CHECK HARNESS CONNECTOR BETWEEN ECM AND VEHICLE SPEED SENSOR 2.**

1) Turn ignition switch to OFF.
2) Disconnect connectors from ECM and vehicle speed sensor 2.
3) Measure resistance of harness connector between ECM and vehicle speed sensor 2.

***Connector & terminal / Specified resistance:***
***(B95) No. 11 — (B91) No. 1 / 10 Ω, max.***

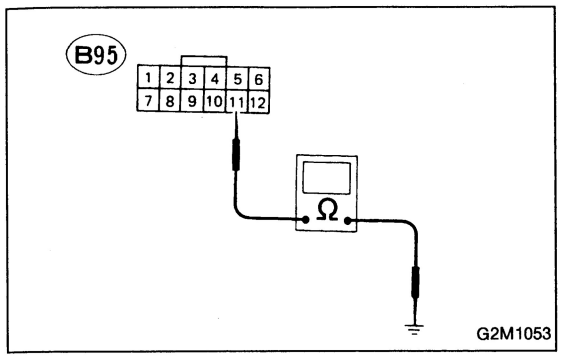


4) Measure resistance of harness connector between ECM and body to make sure that circuit does not short.

***Connector & terminal / Specified resistance:***
***(B95) No. 11 — Body / 1 MΩ, min.***

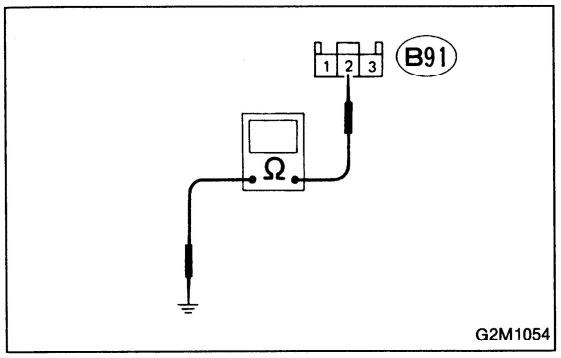


**3. CHECK GROUND CIRCUIT OF VEHICLE SPEED SENSOR 2.**

Measure resistance of harness connector between vehicle speed sensor 2 and body.

***Connector & terminal / Specified resistance:***
***(B91) No. 2 — Body / 10 Ω, max.***

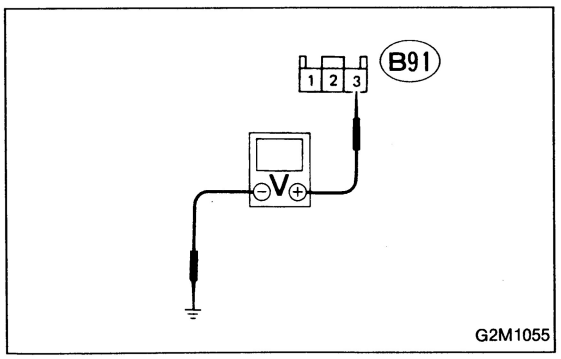


**4. CHECK POWER SUPPLY CIRCUIT OF VEHICLE SPEED SENSOR 2.**

1) Turn ignition switch to ON.
2) Measure power supply voltage to vehicle speed sensor 2.

***Connector & terminal / Specified voltage:***
***(B91) No. 3 — Body / 10 V, min.***



GETtheMANUALS.org

## L: TROUBLE CODE (35)
## — PURGE CONTROL SOLENOID VALVE —

**DIAGNOSIS:**

- The purge control solenoid valve is not in function.
- The harness connector between ECM and purge control solenoid valve is in short or open.

**TROUBLE SYMPTOM:**

- Erroneous idling

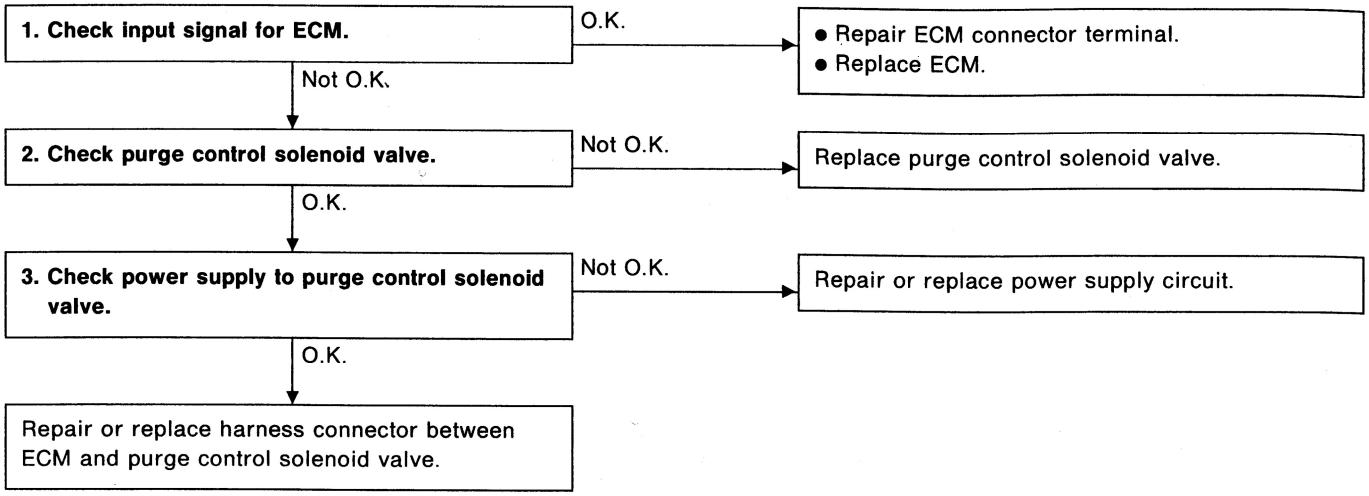




GETtheMANUALS.org

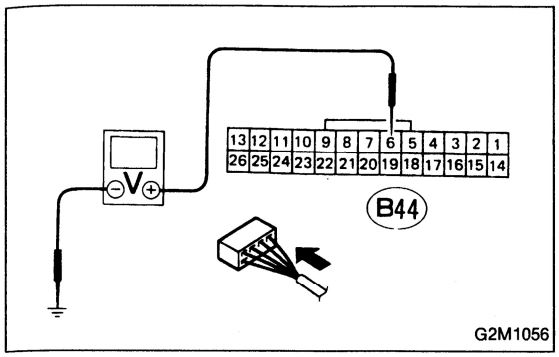


**1. CHECK INPUT SIGNAL FOR ECM.**

1) Connect test mode connector.
2) Turn ignition switch to ON.
3) Measure voltage between ECM connector terminal and body.

***Connector & terminal / Specified voltage:***
***(B44) No. 6 — Body / 0 ↔ 10 V, min.***

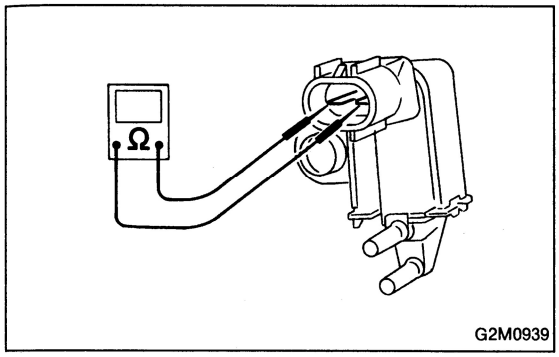


**2. CHECK PURGE CONTROL SOLENOID VALVE.**

1) Turn ignition switch to OFF.
2) Remove purge control solenoid valve.
3) Measure resistance between solenoid valve terminals.

***Terminals / Specified resistance:***
***No. 1 — No. 2 / 36 Ω [at 20°C (68°F)]***

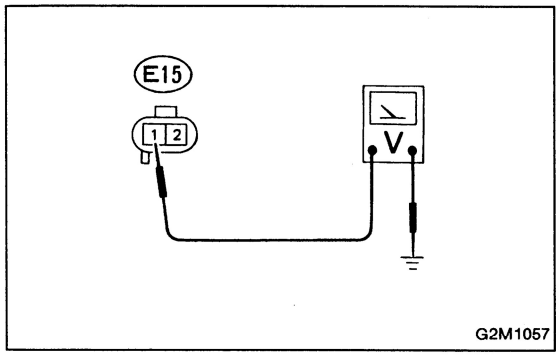


**3. CHECK POWER SUPPLY TO PURGE CONTROL SOLENOID VALVE.**

1) Turn ignition switch to ON.
2) Measure voltage between purge control solenoid valve connector and body.

***Connector & terminal / Specified voltage:***
***(E15) No. 1 — Body / 10 V, min.***



GETtheMANUALS.org

## M: TROUBLE CODE (42)
## — IDLE SWITCH —

**DIAGNOSIS:**

- The idle switch signal is abnormal.
- The throttle position sensor is installed abnormally.
- The harness connector between ECM and idle switch is in short or open.

**TROUBLE SYMPTOM:**

- Restarting impossible
- Poor driving performance

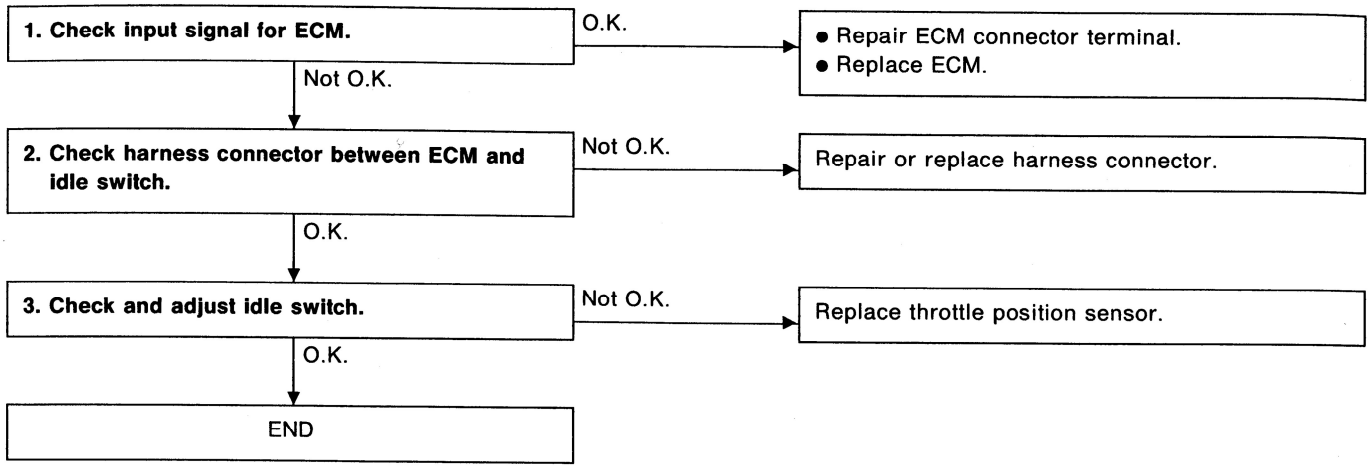




GETtheMANUALS.org

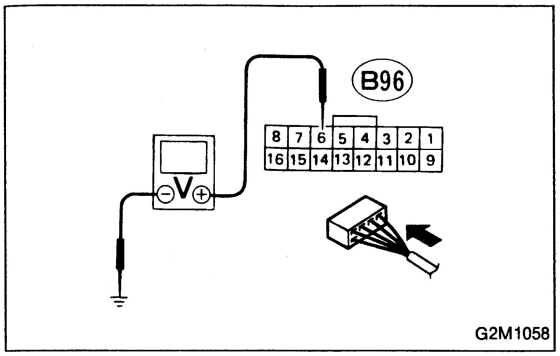


**1. CHECK INPUT SIGNAL FOR ECM.**

1) Turn ignition switch to ON.
2) Measure signal voltage between ECM and body while throttle valve is fully closed.

***Connector & terminal / Specified voltage:***
***(B96) No. 6 — Body / 0 V***

3) Measure signal voltage between ECM and body while throttle valve is fully opened.

***Connector & terminal / Specified voltage:***
***(B96) No. 6 — Body / 4.4 — 5.5 V***

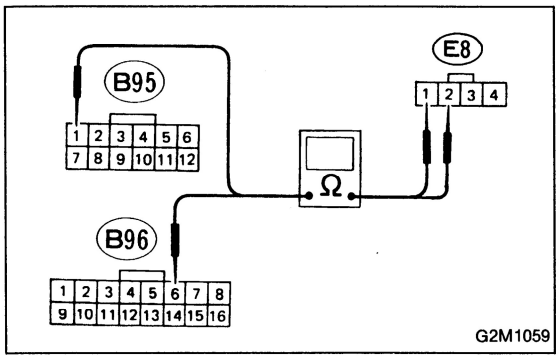


**2. CHECK HARNESS CONNECTOR BETWEEN ECM AND IDLE SWITCH.**

1) Turn ignition switch to OFF.
2) Disconnect connectors from ECM and throttle position sensor.
3) Measure resistance of harness connector between ECM and idle switch.

***Connector & terminal / Specified resistance:***
***(B96) No. 6 — (E8) No. 1 / 10 Ω, max.***
***(B95) No. 1 — (E8) No. 2 / 10 Ω, max.***

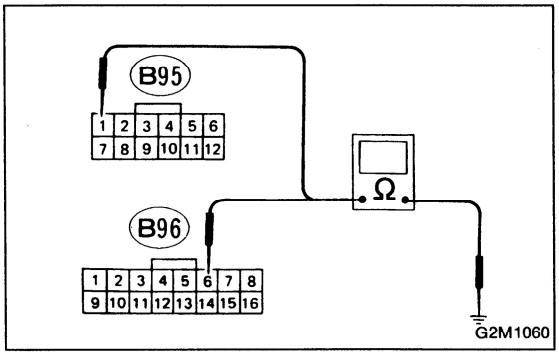


3) Measure resistance of harness connector between ECM and body to make sure that circuit does not short.

***Connector & terminal / Specified resistance:***
***(B96) No. 6 — Body / 1 MΩ, min.***
***(B95) No. 1 — Body / 1 MΩ, min.***

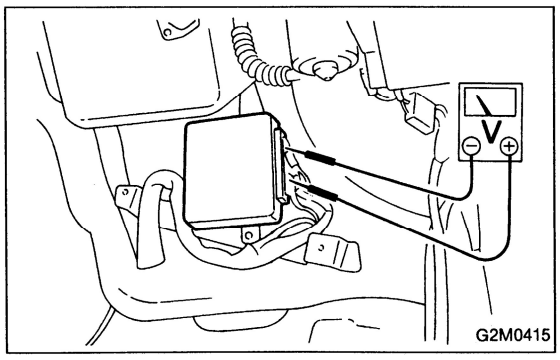


**3. CHECK AND ADJUST IDLE SWITCH.**

1) Connect all connectors.
2) Loosen throttle position sensor installing screws.
3) Adjust throttle position sensor.
   (1) Turn ignition switch to ON.
   (2) When throttle valve is fully closed, adjust throttle position sensor to specified voltage between ECM connector terminals.

***Connector & terminal / Specified voltage:***
***(B96) No. 6 — (B95) No. 1 / 0 V***

   (3) Make sure specified voltage when opening throttle valve.

***Connector & terminal / Specified voltage:***
***(B96) No. 6 — (B95) No. 1 / 4.4 — 5.5 V***

   (4) Tighten throttle position sensor installing screws.



GETtheMANUALS.org

## N: TROUBLE CODE (44) — WASTEGATE CONTROL SOLENOID VALVE —

### DIAGNOSIS:

- The wastegate control solenoid valve is not in function.
- The harness connector between ECM and wastegate control solenoid valve is in short or open.

### TROUBLE SYMPTOM:

- Poor driving performance

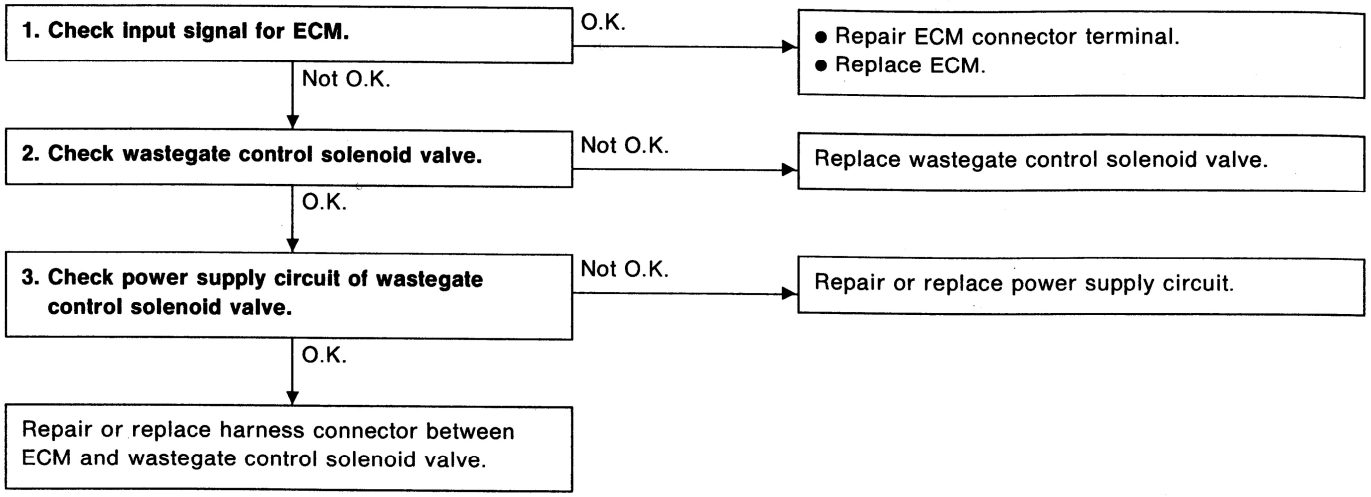




GETtheMANUALS.org

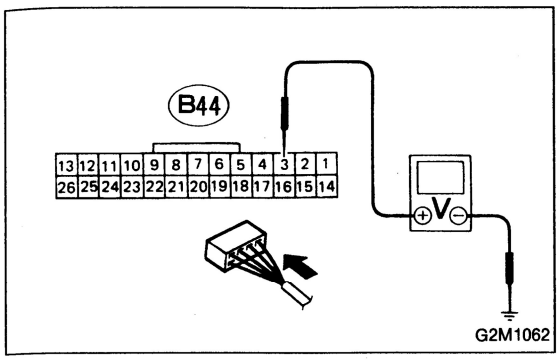


**1. CHECK INPUT SIGNAL FOR ECM.**

1) Turn ignition switch to ON.
2) Measure signal voltage between ECM and body.

***Connector & terminal / Specified voltage:***
***(B44) No. 3 — Body / 10 V, min.***

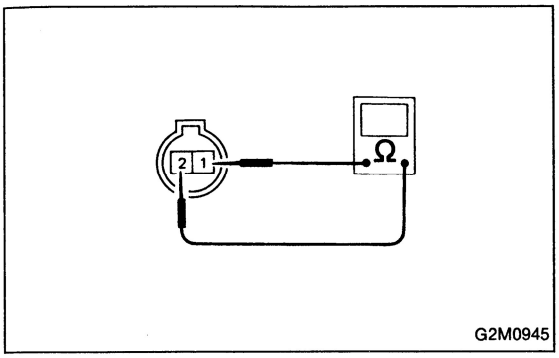


**2. CHECK WASTEGATE CONTROL SOLENOID VALVE.**

1) Turn ignition switch to OFF.
2) Disconnect connector from wastegate control solenoid valve.
3) Measure resistance between connector terminals of wastegate control solenoid valve.

***Terminals / Specified resistance:***
***No. 1 — No. 2 / 20 Ω***

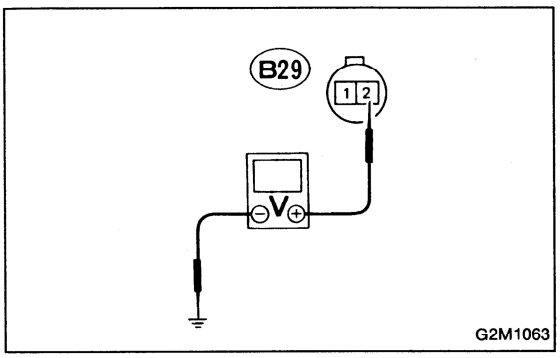


**3. CHECK POWER SUPPLY CIRCUIT OF WASTEGATE CONTROL SOLENOID VALVE.**

1) Turn ignition switch to ON.
2) Measure voltage between wastegate control solenoid valve connector and body.

***Connector & terminal / Specified voltage:***
***(B29) No. 2 — Body / 10 V, min.***



GETtheMANUALS.org

## O: TROUBLE CODE (45) — PRESSURE SENSOR, PRESSURE EXCHANGE SOLENOID VALVE —

**DIAGNOSIS:**

- The pressure sensor signal is abnormal.
- The pressure exchange solenoid valve is not in function.
- The intake manifold pressure is not transmitted to pressure sensor.
- The harness connector between ECM and pressure sensor, and pressure exchange solenoid valve is in short or open.

**TROUBLE SYMPTOM:**

- Poor driving performance

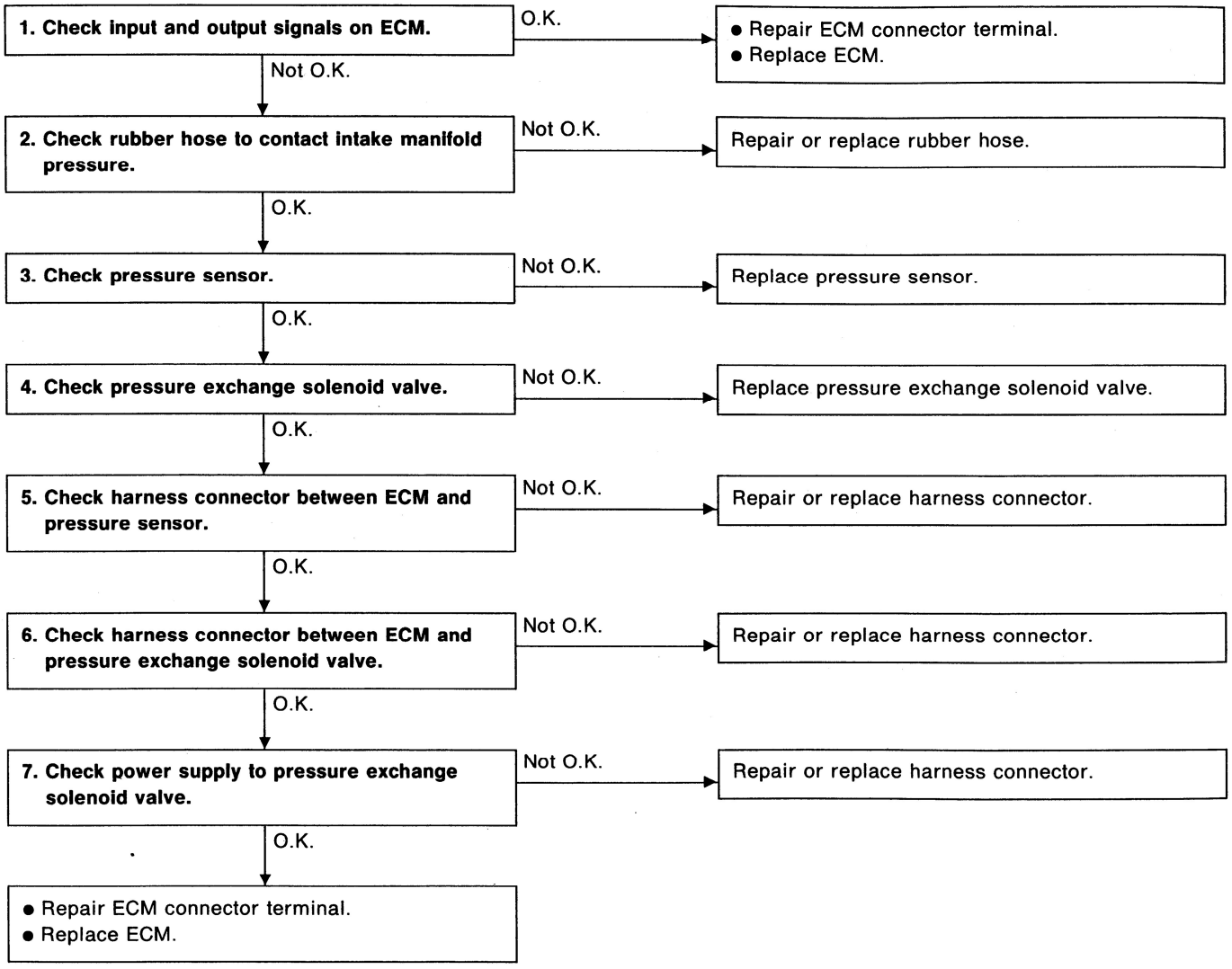




GETtheMANUALS.org

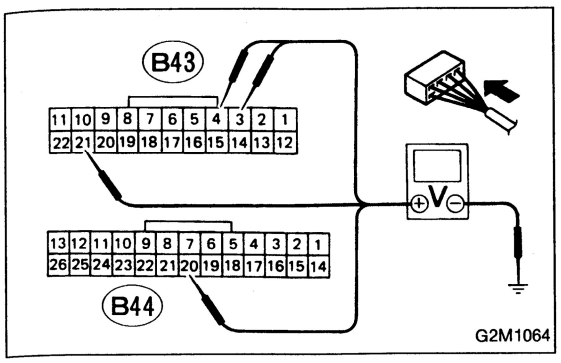


### 1. CHECK INPUT AND OUTPUT SIGNALS ON ECM.

1) Turn ignition switch to ON.
2) Measure voltage between ECM connector terminal and body.

***Connector & terminal / Specified voltage:***
***(B43) No. 3 — Body / 5 V***
***(B43) No. 4 — Body / 2.4 — 2.7 V***
***(B43) No. 21 — Body / 0 V***
***(B44) No. 20 — Body / 0 V or 10 — 13 V***

### 2. CHECK RUBBER HOSE TO CONTACT INTAKE MANIFOLD PRESSURE.

1) Visually check the connection between pressure sensor and rubber hose, between pressure exchange solenoid valve and rubber hose, and between intake manifold and rubber hose.
2) Check rubber hose for cracks and damage.

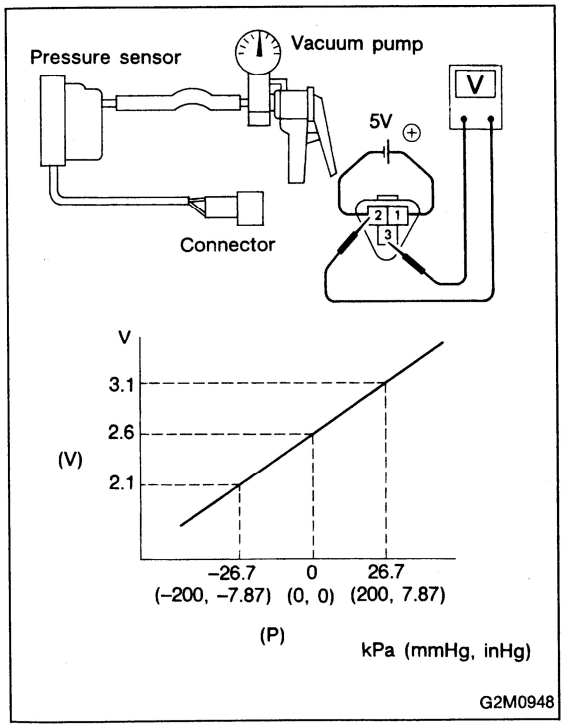


### 3. CHECK PRESSURE SENSOR.

1) Turn ignition switch to OFF.
2) Disconnect connector from pressure sensor.
3) Apply 5 volt voltage across terminals No. 1 and No. 2, then connect terminal No. 1 to positive side and terminal No. 2 to negative side.
4) Install vacuum pump to hose fitting on pressure sensor.
5) Measure voltage across terminals when pressure is applied to pressure sensor.

***Terminals / Specified voltage:***
***No. 2 — No. 3 / 3.1 V at 26.7 kPa***
***(200 mmHg, 7.87 inHg)***
***2.6 V at 0 kPa***
***(0 mmHg, 0 inHg)***
***2.1 V at –26.7 kPa***
***(–200 mmHg, –7.87 inHg)***

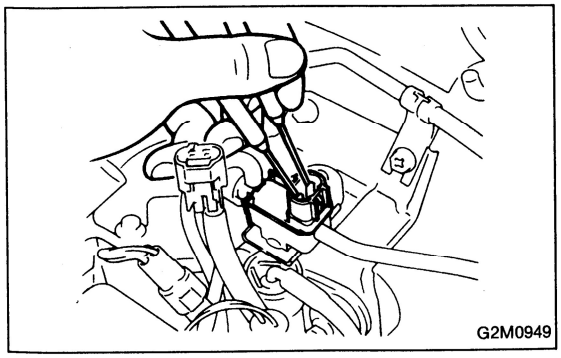


### 4. CHECK PRESSURE EXCHANGE SOLENOID VALVE.

1) Disconnect connector from pressure exchange solenoid valve.
2) Measure resistance across terminals.

***Terminals / Specified resistance:***
***No. 1 — No. 2 / 37 — 48 Ω***



GETtheMANUALS.org

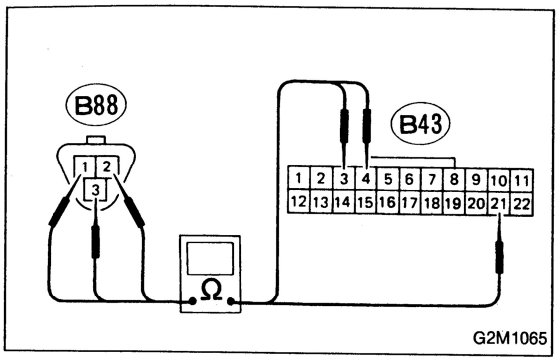


**5. CHECK HARNESS CONNECTOR BETWEEN ECM AND PRESSURE SENSOR.**

1) Disconnect connectors from ECM.
2) Measure resistance of harness connector between ECM and pressure sensor connector.

***Connector & terminal / Specified resistance:***
***(B43) No. 3 — (B88) No. 1 / 0 Ω***
***(B43) No. 4 — (B88) No. 3 / 0 Ω***
***(B43) No. 21 — (B88) No. 2 / 0 Ω***

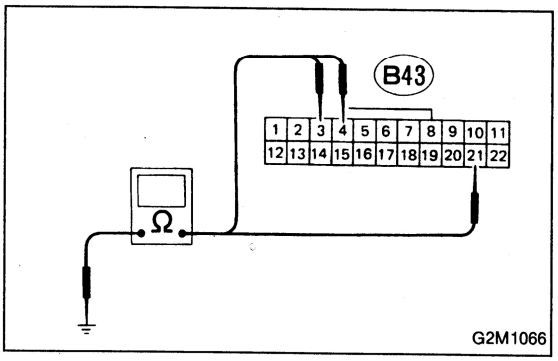


3) Measure resistance between ECM connector terminal and body to make sure that circuit does not short.

***Connector & terminal / Specified resistance:***
***(B43) No. 3 — Body / 1 MΩ, min.***
***(B43) No. 4 — Body / 1 MΩ, min.***
***(B43) No. 21 — Body / 1 MΩ, min.***

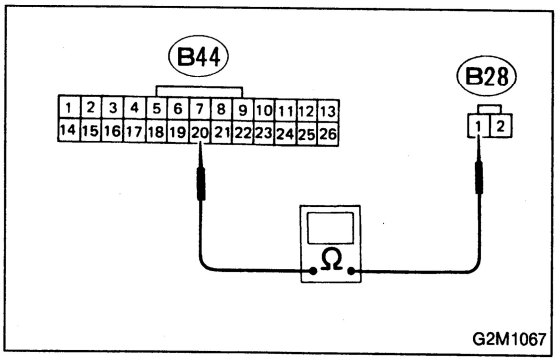


**6. CHECK HARNESS CONNECTOR BETWEEN ECM AND PRESSURE EXCHANGE SOLENOID VALVE.**

1) Measure resistance of harness connector between ECM and pressure exchange solenoid valve connector.

***Connector & terminal / Specified resistance:***
***(B44) No. 20 — (B28) No. 1 / 0 Ω***

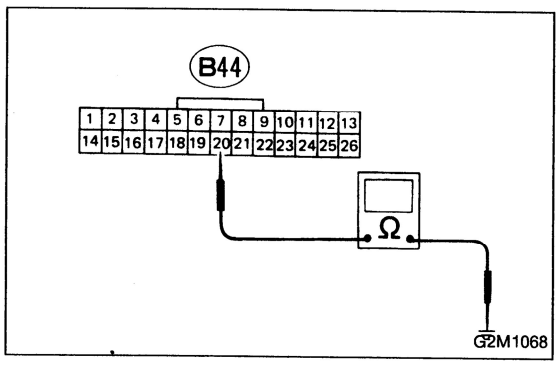


2) Measure resistance of harness connector between ECM terminal and body to make sure that circuit does not short.

***Connector & terminal / Specified resistance:***
***(B44) No. 20 — Body / 1 MΩ, min.***

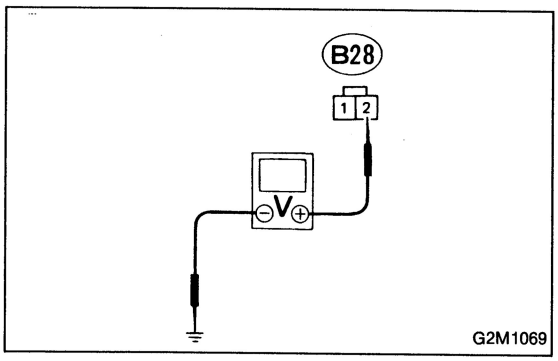


**7. CHECK POWER SUPPLY TO PRESSURE EXCHANGE SOLENOID VALVE.**

1) Turn ignition switch to ON.
2) Measure voltage between connector terminal of pressure exchange solenoid valve and body.

***Connector & terminal / Specified voltage:***
***(B28) No. 2 — body / 10 — 14 V***



GETtheMANUALS.org

## P: TROUBLE CODE (51)
## — NEUTRAL POSITION SWITCH —

**DIAGNOSIS:**

- The neutral position switch signal is abnormal.
- The harness connector between ECM and neutral position switch is in short or open.

**TROUBLE SYMPTOM:**

- Erroneous idling

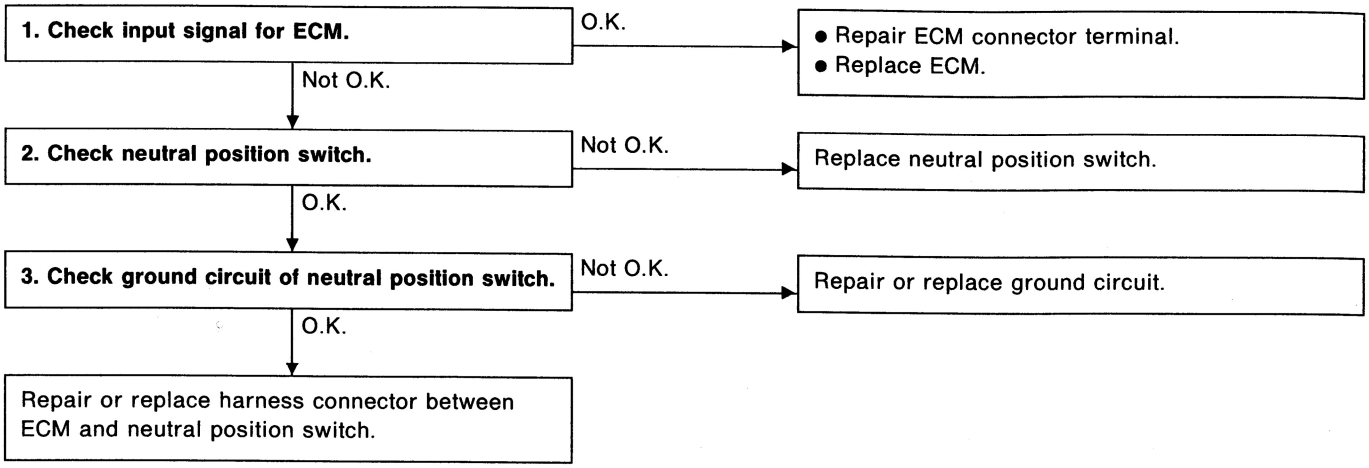




GETtheMANUALS.org

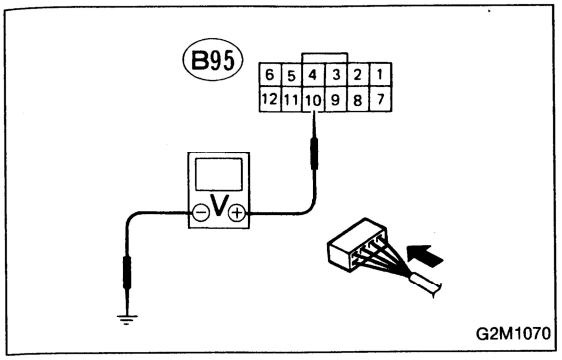


**1. CHECK INPUT SIGNAL FOR ECM.**

1) Turn ignition switch to ON.
2) Measure voltage between ECM and body.

***Connector & terminal / Specified voltage:***
***(B95) No. 10 — Body / 10 — 14 V (Neutral position)***
***0 V (Other positions)***

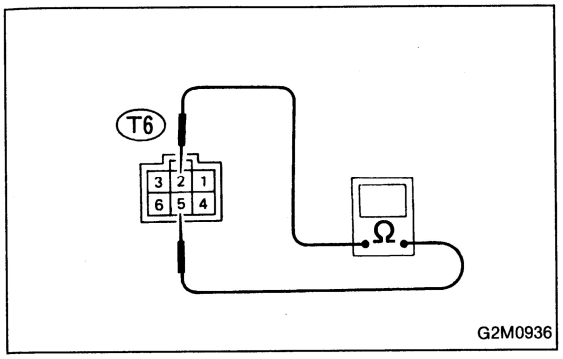


**2. CHECK NEUTRAL POSITION SWITCH.**

1) Turn ignition switch to OFF.
2) Disconnect connector from transmission harness.
3) Measure resistance between connector terminals of transmission harness.

***Connector & terminal / Specified resistance:***
***(T6) No. 2 — (T6) No. 5 / 1 MΩ, min. (Neutral position)***
***10 Ω, max. (Other positions)***

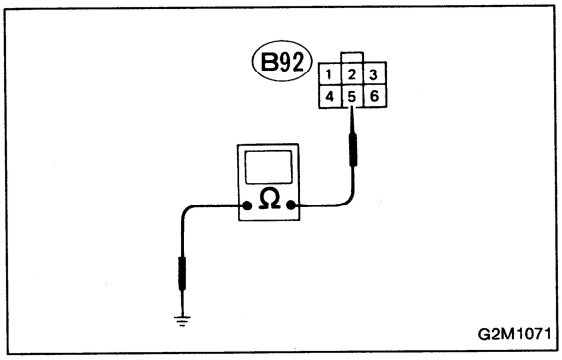


**3. CHECK GROUND CIRCUIT OF NEUTRAL POSITION SWITCH.**

1) Turn ignition switch to ON.
2) Measure resistance of harness connector for ground circuit.

***Connector & terminal / Specified resistance:***
***(B92) No. 5 — Body / 10 Ω, max.***



GETtheMANUALS.org

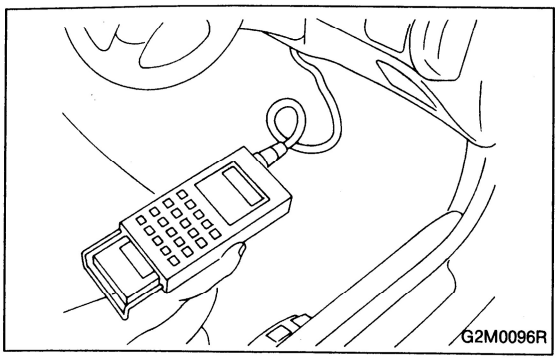


# 10. Diagnostics Chart with Select Monitor

## A: FUNCTION MODE

Applicable cartridge of select monitor: No. 498349900

| Function mode | Contents | Abbreviation | Unit of measure | Page |
|---|---|---|---|---|
| F00 | ROM ID number | YEAR | — | 67 |
| F01 | Battery voltage | VB | V | 67 |
| F02 | Vehicle speed signal | VSP | MPH | 68 |
| F03 | Vehicle speed signal | VSP | km/h | 68 |
| F04 | Engine speed signal | EREV | rpm | 68 |
| F05 | Engine coolant temperature signal | TW | deg F | 69 |
| F06 | Engine coolant temperature signal | TW | deg C | 69 |
| F07 | Ignition signal | ADVS | deg | 69 |
| F08 | Mass air flow signal | QA | V | 70 |
| F09 | Load data | LDATA | — | 70 |
| F10 | Throttle position signal | THV | V | 71 |
| F11 | Injector pulse width | TIM | mS | 72 |
| F12 | Idle air control signal | ISC | % | 73 |
| F13 | Oxygen sensor output signal | $O_2$ | V | 73 |
| F14 | Oxygen sensor MAX. output signal | $O_2$ MAX. | V | 74 |
| F15 | Oxygen sensor MIN. output signal | $O_2$ MIN. | V | 74 |
| F16 | A/F correction coefficient | ALPHA | % | 75 |
| F17 | Ignition timing correction value | RTRD | deg | 75 |
| F18 | Wastegate control signal | WGC | % | 76 |
| F19 | Atmospheric pressure | BARO. P | mmHg | 76 |
| F20 | Intake manifold pressure | MANI. P | mmHg | 77 |
| FA0 | ON ↔ OFF signal | — | — | 78 |
| FA1 | ON ↔ OFF signal | — | — | 78 |
| FA2 | ON ↔ OFF signal | — | — | 79 |
| FA3 | ON ↔ OFF signal | — | — | 79 |



GETtheMANUALS.org

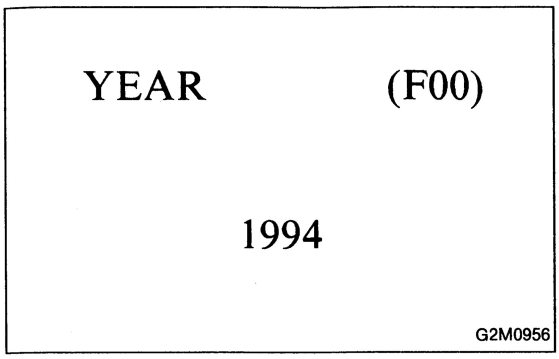


## B: MODE F00

## — ROM ID NUMBER (YEAR) —

**CONDITION:**

Ignition switch "ON"

**SPECIFIED DATA:**

Presentation display

- Probable cause (Item outside "specified data")

| | |
|---|---|
| **1. Error 1** | Check for loose or disconnected connector, and discontinued circuit, etc. |
| **2. Error 2** | Check for poor contact of cartridge, or different type cartridge. |

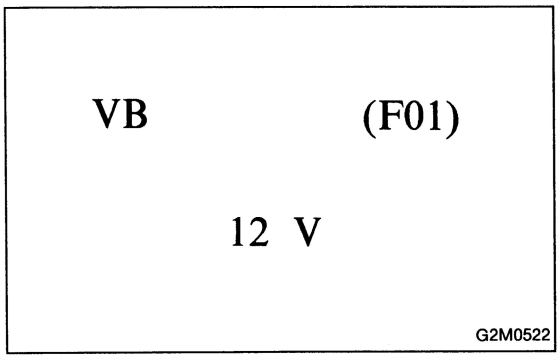


## C: MODE F01

## — BATTERY VOLTAGE (VB) —

**CONDITION:**

(1) Ignition switch "ON"
(2) Idling after warm-up.

**SPECIFIED DATA:**

(1) 10 — 13 V
(2) 11 — 14 V

- Probable cause (Item outside "specified data")

| | |
|---|---|
| **1. Battery** | Check battery voltage and electrolyte's specific gravity. |
| **2. Charging system** | • Check regulating voltage. (On no-load)<br>• Check alternator. |
| **3. Power supply line** | • Check main relay. <Ref. to 2-7 [W17B0].><br>• Check harness connector of ECM power supply line. <Ref. to 2-7 [T8B2].> |



GETtheMANUALS.org

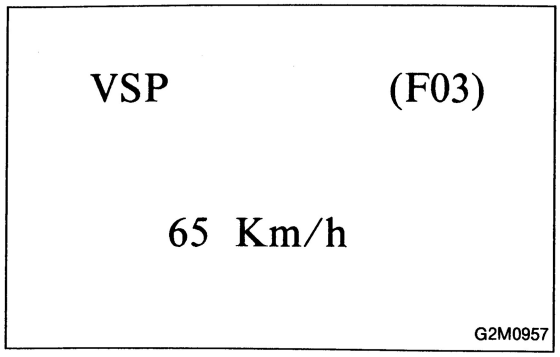


## D: MODE F02 AND F03

## — VEHICLE SPEED SIGNAL (VSP) —

**CONDITION:**

Driving at constant speed.

**SPECIFIED DATA:**

Compare speedometer with monitor indications.

- F02: Vehicle speed is indicated in mile per hour (MPH).
- F03: Vehicle speed is indicated in kilometer per hour (km/h).

- Probable cause (Item outside "specified data")

| | |
|---|---|
| **1. Vehicle speed sensor 2** | Check vehicle speed sensor 2 line. <Ref. to 2-7 [T9K0].> |

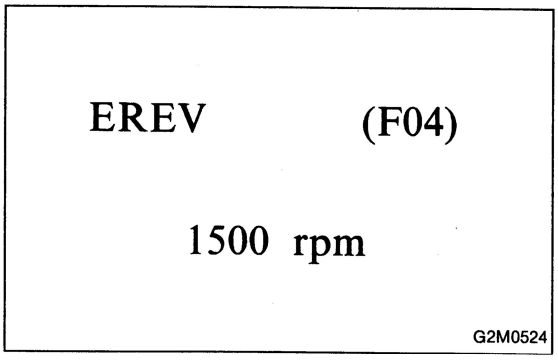


## E: MODE F04

## — ENGINE SPEED SIGNAL (EREV) —

**CONDITION:**

Operate engine at constant speed.

**SPECIFIED DATA:**

Compare engine speed indicated at tachometer.

- Probable cause (Item outside "specified data")

| | |
|---|---|
| **1. Crankshaft position sensor** | Check crankshaft position sensor line. <Ref. to 2-7 [T9B0].> |
| **2. Engine coolant temperature sensor** | Check "MODE F05" or "MODE F06". <Ref. to 2-7 [T10F0].> |
| **3. Power steering pressure switch** | Check "MODE FA0". <Ref. to 2-7 [T10U0].> |
| **4. Throttle position sensor** | Check "MODE F10". <Ref. to 2-7 [T10J0].> |
| **5. Idle air control solenoid valve** | Check "MODE F12". <Ref. to 2-7 [T10L0].> |



GETtheMANUALS.org

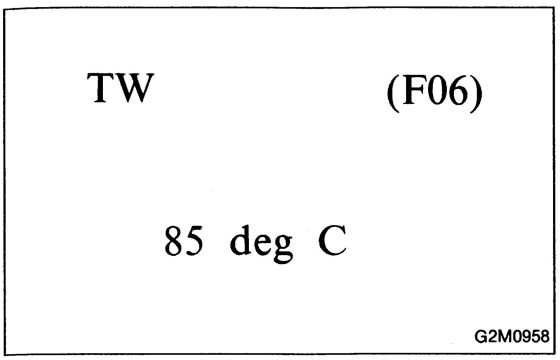


## F: MODE F05 AND F06

## — ENGINE COOLANT TEMPERATURE SIGNAL (TW) —

**CONDITION:**

Idling after warm-up.

**SPECIFIED DATA:**

F05: 176 — 203 deg F
F06: 80 — 95 deg C

- F05: Engine coolant temperature is indicated in "deg F".
- F06: Engine coolant temperature is indicated in "deg C".

- Probable cause (Item outside "specified data")

| | |
|---|---|
| **1. Cooling system** | • Check coolant level.<br>• Check thermostat. <Ref. to 2-5 [W6A0].><br>• Check operation of radiator fan. |
| **2. Engine coolant temperature sensor** | Check engine coolant temperature sensor.<br><Ref. to 2-7 [T9E0].> |

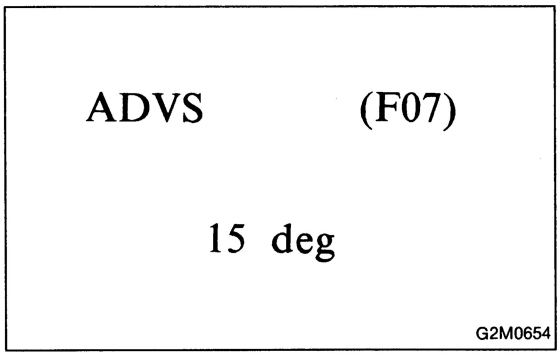


## G: MODE F07

## — IGNITION SIGNAL (ADVS) —

**CONDITION:**

- Idling after warm-up.
- Shift lever is in Neutral position on MT model.
- Selector lever is in Neutral or Parking position on AT model.

**SPECIFIED DATA:**

15 deg — 21 deg

- Probable cause (Item outside "specified data")

| | |
|---|---|
| **1. Engine under load** | Check "MODE F09".<br><Ref. to 2-7 [T10I0].> |
| **2. Mass air flow sensor** | Check "MODE F08".<br><Ref. to 2-7 [T10H0].> |
| **3. Throttle position sensor** | Check "MODE F10".<br><Ref. to 2-7 [T10J0].> |

NOTE:
The ignition timing value displayed in mode F07 is a value computed by ECM and will not always correspond with the value measured with a timing light.



GETtheMANUALS.org

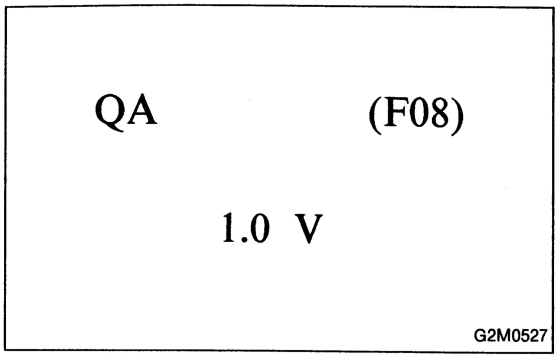


## H: MODE F08

## — MASS AIR FLOW SIGNAL (QA) —

**CONDITION:**

Idling after warm-up.

**SPECIFIED DATA:**

0.8 — 1.2 V

- Probable cause (Item outside "specified data")

| | |
|---|---|
| **1. Mass air flow sensor** | Check mass air flow sensor line. <Ref. to 2-7 [T9G0].> |

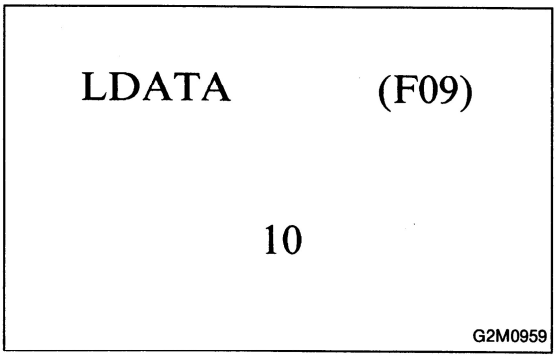


## I: MODE F09

## — LOAD DATA (LDATA) —

**CONDITION:**

Idling after warm-up.

**SPECIFIED DATA:**

5 — 20

- Probable cause (Item outside "specified data")

| | |
|---|---|
| **1. Mass air flow sensor** | Check "MODE F08". <Ref. to 2-7 [T10H0].> |
| **2. Engine speed** | Check "MODE F04". <Ref. to 2-7 [T10E0].> |
| **3. Crankshaft position sensor** | Check crankshaft position sensor line. <Ref. to 2-7 [T9B0].> |



GETtheMANUALS.org

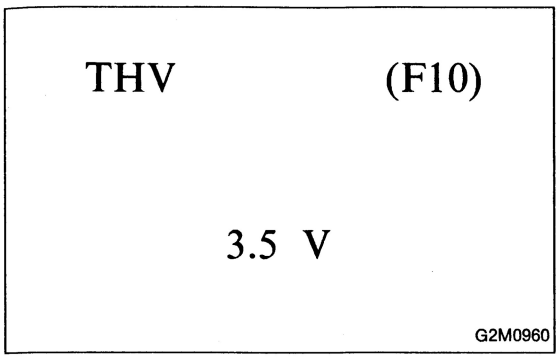


## J: MODE F10

## — THROTTLE POSITION SIGNAL (THV) —

**CONDITION:**

Throttle valve is "Fully closed" to "Fully opened".

**SPECIFIED DATA:**

4.7 V → 0.9 V

- Probable cause (Item outside "specified data")

| | |
|---|---|
| **1. Throttle position sensor** | Check throttle position sensor line. <Ref. to 2-7 [T9I0].> |



GETtheMANUALS.org

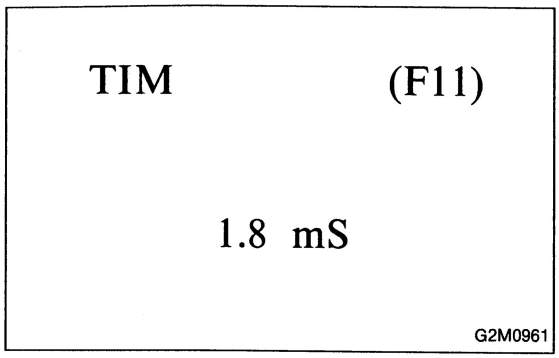


## K: MODE F11

## — INJECTOR PULSE WIDTH (TIM) —

**CONDITION:**

- Idling after warm-up.
- Electric load item and blower fan is turned OFF.
- Radiator fan is not in operation.

**SPECIFIED DATA:**

1.5 — 2.1 mS

- Probable cause (Item outside "specified data")

| | |
|---|---|
| **1. Engine under load** | Check "MODE F09". <Ref. to 2-7 [T10I0].> |
| **2. A/F correction coefficient** | Check "MODE F16". <Ref. to 2-7 [T10P0].> |
| **3. Engine coolant temperature sensor** | Check "MODE F05" or "MODE F06". <Ref. to 2-7 [T10F0].> |
| **4. Oxygen sensor** | Check "MODE F13". <Ref. to 2-7 [T10M0].> |
| **5. Vehicle speed sensor 2** | Check "MODE F02" or "MODE F03". <Ref. to 2-7 [T10D0].> |
| **6. Mass air flow sensor** | Check "MODE F08". <Ref. to 2-7 [T10H0].> |
| **7. Idle air control solenoid valve** | Check "MODE F12". <Ref. to 2-7 [T10L0].> |
| **8. Battery voltage** | Check "MODE F01". <Ref. to 2-7 [T10C0].> |



GETtheMANUALS.org

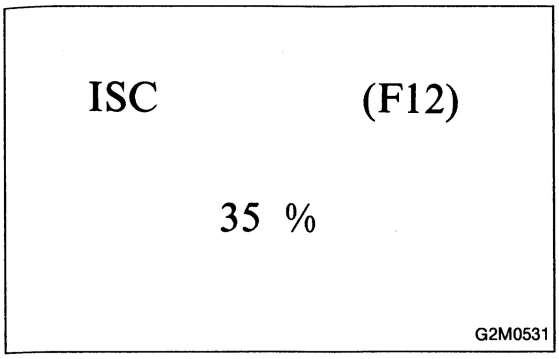


## L: MODE F12

## — IDLE AIR CONTROL SIGNAL (ISC) —

**CONDITION:**

- Idling after warm-up.
- A/C is turned OFF.
- Radiator fan is not in operation.
- Battery voltage is above 13 volts.
- Vehicle is at sea level. (Not high altitudes)

**SPECIFIED DATA:**

30 — 45 %

- Probable cause (Item outside "specified data")

| | |
|---|---|
| **1. Engine coolant temperature sensor** | Check "MODE F05" or "MODE F06". <Ref. to 2-7 [T10F0].> |
| **2. Throttle position sensor** | Check "MODE F10" <Ref. to 2-7 [T10J0].> |
| **3. Neutral position switch** | Check neutral position switch line. <Ref. to 2-7 [T9P0].> |

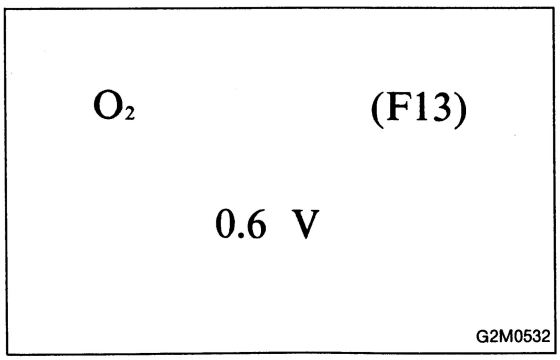


## M: MODE F13

## — OXYGEN SENSOR OUTPUT SIGNAL ($O_2$) —

**CONDITION:**

- Idling after warm-up.
- A/C is turned OFF.

**SPECIFIED DATA:**

0 — 1.0 V

- Probable cause (Item outside "specified data")

| | |
|---|---|
| **1. Injection pulse width** | Check "MODE F11". <Ref. to 2-7 [T10K0].> |
| **2. Oxygen sensor** | Check oxygen sensor line. <Ref. to 2-7 [T9J0].> |



GETtheMANUALS.org

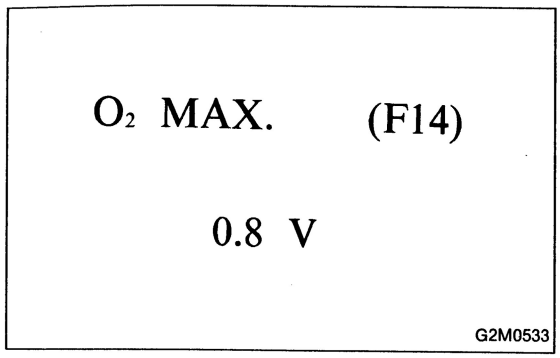


## N: MODE F14

## — OXYGEN SENSOR MAX. OUTPUT SIGNAL ($O_2$ MAX.) —

**CONDITION:**

- Idling after warm-up.
- A/C is turned OFF.

**SPECIFIED DATA:**

0.7 — 1.0 V

- Probable cause (Item outside "specified data")

| | |
|---|---|
| **1. Injection pulse width** | Check "MODE F11". <Ref. to 2-7 [T10K0].> |
| **2. Oxygen sensor** | Check oxygen sensor line. <Ref. to 2-7 [T9J0].> |

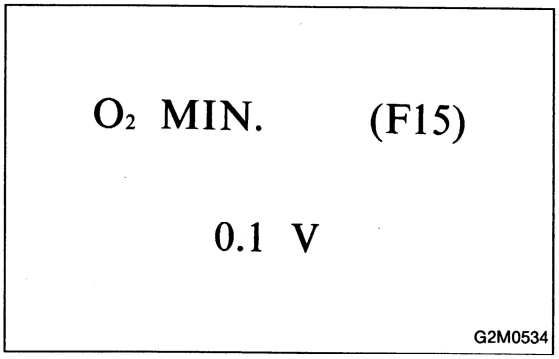


## O: MODE F15

## — OXYGEN SENSOR MIN. OUTPUT SIGNAL ($O_2$ MIN.) —

**CONDITION:**

- Idling after warm-up.
- A/C is turned OFF.

**SPECIFIED DATA:**

0 — 0.2 V

- Probable cause (Item outside "specified data")

| | |
|---|---|
| **1. Injection pulse width** | Check "MODE F11". <Ref. to 2-7 [T10K0].> |
| **2. Oxygen sensor** | Check oxygen sensor line. <Ref. to 2-7 [T9J0].> |



GETtheMANUALS.org

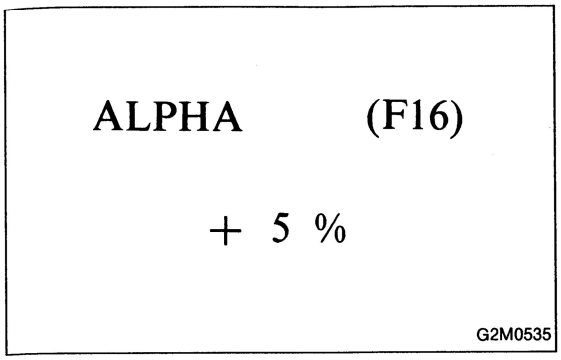


## P: MODE F16

### — A/F CORRECTION COEFFICIENT (ALPHA) —

**CONDITION:**

Idling after warm-up.

**SPECIFIED DATA:**

–7.8 to +7.8 %

- Probable cause (Item outside "specified data")

| | |
|---|---|
| **1. Injection pulse width** | Check "MODE F11". <Ref. to 2-7 [T10K0].> |
| **2. Oxygen sensor** | Check oxygen sensor line. <Ref. to 2-7 [T9J0].> |
| **3. Throttle position sensor** | Check "MODE F10". <Ref. to 2-7 [T10J0].> |

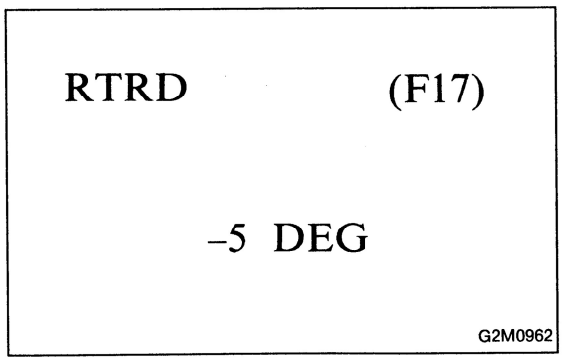


## Q: MODE F17

### — IGNITION TIMING CORRECTION VALUE (RTRD) —

**SPECIFIED DATA:**

–13 to +9 deg.

- Probable cause (Item outside "specified data")

| | |
|---|---|
| **1. Knock sensor** | Check knock sensor line. <Ref. to 2-7 [T9F0].> |



GETtheMANUALS.org

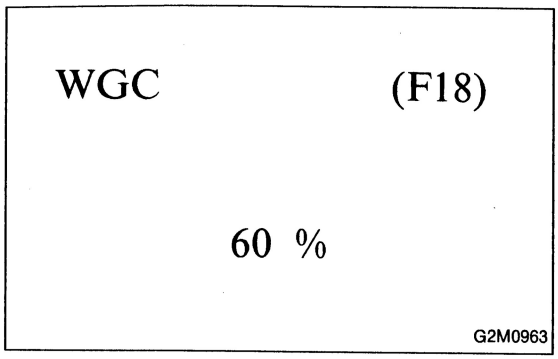


## R: MODE F18

## — WASTEGATE CONTROL SIGNAL (WGC) —

**CONDITION:**

Engine is running.

**SPECIFIED DATA:**

40 to 90 %

- Probable cause (Item outside "specified data")

| | |
|---|---|
| **1. Atmospheric pressure** | Check "MODE F19". <Ref. to 2-7 [T10S0].> |
| **2. Intake manifold pressure** | Check "MODE F20". <Ref. to 2-7 [T10T0].> |
| **3. Throttle position sensor** | Check "MODE F10". <Ref. to 2-7 [T10J0].> |

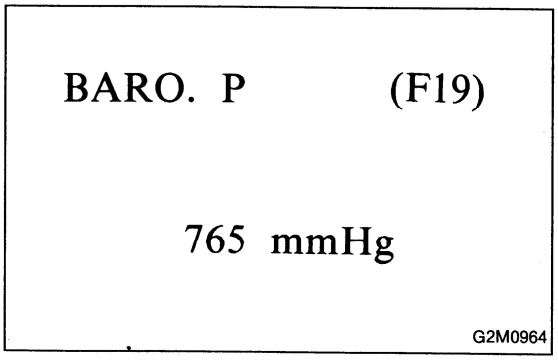


## S: MODE F19

## — ATMOSPHERIC PRESSURE (BARO. P) —

**CONDITION:**

- Ground surface (not high altitude).
- Idling after warm-up.

**SPECIFIED DATA:**

760 mmHg*

*: –9 to +10 mmHg changes at an altitude of 100 meters.

- Probable cause (Item outside "specified data")

| | |
|---|---|
| **1. Pressure sensor** | Check pressure sensor line. <Ref. to 2-7 [T9O0].> |
| **2. Pressure exchange solenoid valve** | Check pressure exchange solenoid valve line. <Ref. to 2-7 [T9O0].> |



GETtheMANUALS.org

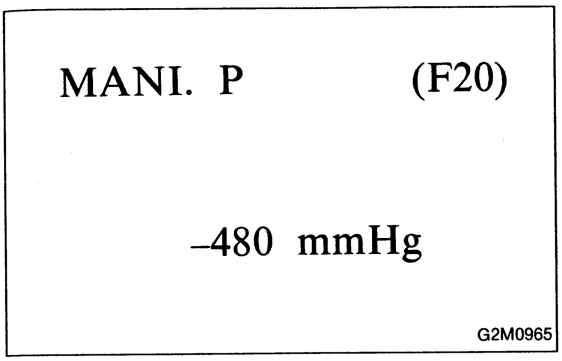


## T: MODE F20

## — INTAKE MANIFOLD PRESSURE (MANI. P) —

**CONDITION:**

Idling after warm-up.

**SPECIFIED DATA:**

–450 to –550 mmHg

- Probable cause (Item outside "specified data")

| | |
|---|---|
| **1. Pressure sensor** | Check pressure sensor line. <Ref. to 2-7 [T9O0].> |
| **2. Pressure exchange solenoid valve** | Check pressure exchange solenoid valve line. <Ref. to 2-7 [T9O0].> |



GETtheMANUALS.org

| LED No. | Signal name | Display |
|---|---|---|
| 1 | Ignition switch | IG |
| 2 | — | — |
| 3 | Test mode connector | UD |
| 4 | Read memory connector | RM |
| 5 | — | — |
| 6 | — | — |
| 7 | Neutral position switch | NT |
| 8 | — | — |
| 9 | Power steering pressure switch | SS |
| 10 | — | — |

| | | | | |
|---|---|---|---|---|
| IG | — | UD | RM | — |
| — | NT | — | SS | — |

| | | | | |
|---|---|---|---|---|
| 1 | 2 | 3 | 4 | 5 |
| 6 | 7 | 8 | 9 | 10 |

## U: MODE FA0

### — ON ↔ OFF SIGNAL —

Requirement for LED "ON".
LED No. 1 Ignition switch is turned ON.
LED No. 3 Test mode connector is connected.
LED No. 4 Read memory connector is connected.
LED No. 7 Gear position is in neutral.
LED No. 9 Steering is turned.

| LED No. | Signal name | Display |
|---|---|---|
| 1 | Idle switch | ID |
| 2 | A/C switch | AC |
| 3 | A/C relay | AR |
| 4 | Radiator fan relay 1 | R1 |
| 5 | Radiator fan relay 2 | R2 |
| 6 | — | — |
| 7 | Purge control solenoid valve | CN |
| 8 | Knock sensor | KS |
| 9 | — | — |
| 10 | — | — |

| | | | | |
|---|---|---|---|---|
| ID | AC | AR | R1 | R2 |
| — | CN | KS | — | — |

| | | | | |
|---|---|---|---|---|
| 1 | 2 | 3 | 4 | 5 |
| 6 | 7 | 8 | 9 | 10 |

## V: MODE FA1

### — ON ↔ OFF SIGNAL —

Requirement for LED "ON".
LED No. 1 Throttle valve is fully closed.
LED No. 2 A/C switch is turned ON.
LED No. 3 A/C relay is turned ON.
LED No. 4 Radiator fan relay 1 is turned ON.
LED No. 5 Radiator fan relay 2 is turned ON.
LED No. 7 Purge control solenoid valve is in function.
LED No. 8 Engine is knocking.



GETtheMANUALS.org

| LED No. | Signal name | Display |
|---|---|---|
| 1 | — | — |
| 2 | — | — |
| 3 | Pressure exchange solenoid valve | BR |
| 4 | — | — |
| 5 | — | — |
| 6 | — | — |
| 7 | — | — |
| 8 | — | — |
| 9 | — | — |
| 10 | — | — |

| | | | | |
|---|---|---|---|---|
| — | — | BR | — | — |
| — | — | — | — | — |

| | | | | |
|---|---|---|---|---|
| 1 | 2 | 3 | 4 | 5 |
| 6 | 7 | 8 | 9 | 10 |

## W: MODE FA2

## — ON ↔ OFF SIGNAL —

Requirement for LED "ON".
LED No. 3 Pressure exchange solenoid valve is in function.

| LED No. | Signal name | Display |
|---|---|---|
| 1 | — | — |
| 2 | — | — |
| 3 | — | — |
| 4 | — | — |
| 5 | — | — |
| 6 | — | — |
| 7 | — | — |
| 8 | — | — |
| 9 | — | — |
| 10 | Oxygen sensor signal | O2 |

| | | | | |
|---|---|---|---|---|
| — | — | — | — | — |
| — | — | — | — | O2 |

| | | | | |
|---|---|---|---|---|
| 1 | 2 | 3 | 4 | 5 |
| 6 | 7 | 8 | 9 | 10 |

## X: MODE FA3

## — ON ↔ OFF SIGNAL —

Requirement for LED "ON".
LED No. 10 Mixture ratio is rich.



GETtheMANUALS.org

# 11. General Diagnostics Table

| | | ECM power supply | Mass air flow sensor | Engine coolant temperature sensor | Idle switch | Throttle position sensor | Fuel pump | Pressure regulator | Fuel injector | Ignitor (power transistor) | Ignition coil | Spark plug | Knock sensor | Camshaft position sensor | Crankshaft position sensor | Idle air control valve | Oxygen sensor | Wastegate control solenoid valve |
|---|---|---|---|---|---|---|---|---|---|---|---|---|---|---|---|---|---|---|
| Failure of engine start | Initial combustion does not occur. | 1 | 10 | 11 | | | 5 | 6 | 7 | 2 | 3 | 4 | | 8 | 9 | | | |
| | Initial combustion occurs. | 1 | | 10 | | | 2 | 3 | 4 | 5 | 6 | 7 | | 8 | 9 | 11 | | |
| | Engine stalls after initial combustion. | 1 | 2 | 7 | | 8 | 4 | 5 | 6 | 11 | 12 | 13 | | 9 | 10 | 3 | | |
| Rough idling | | 1 | 3 | 12 | 8 | 7 | 4 | 5 | 6 | 9 | 10 | 11 | | 13 | 14 | 2 | 15 | 16 |
| Hard to drive at constant speed | | 1 | 4 | 6 | 8 | 7 | 3 | 2 | 9 | 12 | 13 | 14 | | 10 | 11 | | 5 | 15 |
| Poor acceleration/ deceleration | | 1 | 2 | 6 | 7 | 8 | 3 | 4 | 5 | 13 | 14 | 15 | 9 | 11 | 12 | 10 | 10 | 2 |
| Poor return to idle | | | | 3 | 2 | | | | | | | | | | | 1 | | |
| Backfire | | | | 3 | 4 | 5 | | 6 | 7 | | | | | 2 | 1 | | | |
| Knocking | | | 1 | 2 | | | | 4 | 5 | | | | 3 | | 6 | | | 7 |
| Excessive fuel consumption | | | 3 | 4 | | | | 1 | 2 | | | | | | | | | |
| Shocks while driving | | 1 | 8 | | | | | | 7 | 4 | 5 | 6 | | 2 | 3 | | | |
| Poor engine revving | | | 2 | 3 | 4 | 5 | | 1 | | | | | | | | | | |
| Remarks | | *1 | | | | | | | | | | | | | | *2 | | *2 |

*1: Including ECM grounding circuit.
*2: Check hoses.



GETtheMANUALS.org

# BODY ELECTRICAL SYSTEM 6-2


Page

T DIAGNOSTICS FOR CRUISE CONTROL AIRBAG ..... 2
1. On-board Diagnosis System ..... 2
2. Electrical Unit Location ..... 6
3. Schematic ..... 7
4. Control Module I/O Signal ..... 8
5. Diagnostics Chart for On-board Diagnosis System ..... 9
6. Diagnostics Chart for Power Line ..... 11
7. Diagnostics Chart with Select Monitor ..... 17
8. Diagnostics Chart for Actuator ..... 29


GETtheMANUALS.org

● **SUPPLEMENTAL RESTRAINT SYSTEM "AIRBAG"**

Airbag system wiring harness is routed near the cruise control sub switch.

**CAUTION:**

**● All Airbag system wiring harness and connectors are colored yellow. Do not use electrical test equipment on these circuit.**

**● Be careful not to damage Airbag system wiring harness when servicing the cruise control sub switch.**

# 1. On-board Diagnosis System

## 1. GENERAL

The on-board diagnosis function of the cruise control system uses an external select monitor. The on-board diagnosis function operates in two categories, which are used depending on the type of problems;

- Cruise cancel conditions diagnosis
- Real-time diagnosis

**Applicable cartridge No.: 498349900**

- Cruise cancel conditions diagnosis

| |
|---|
| This category of diagnosis requires actual vehicle driving in order to determine the cause, (as when cruise speed is cancelled during driving although cruise cancel condition is not entered). |

⇩

| |
|---|
| Cruise control module memory stores the cancel condition (Code No.) which occurred during driving. When there are plural cancel conditions (Code No.), they are shown in order, for 2 seconds per Code No., on the select monitor. |

**CAUTION:**

**● The cruise control memory stores not only the cruise "cancel" which occurred (although "cancel" operation is not entered by the driver), but also the "cancel" condition input by the driver.**

**● The content of memory is cleared when ignition switch or cruise main switch is turned OFF.**



GETtheMANUALS.org

● Real-time diagnosis
The real-time diagnosis function is used to determine whether or not the input of output signal system is in good order, according to signal emitted from switches, sensors, etc.

| |
|---|
| Vehicle cannot be driven at cruise speed because problems occurs in the cruise control system or its associated circuits. |

⇩

| |
|---|
| Dummy signals are manually entered from sub switch, etc. |

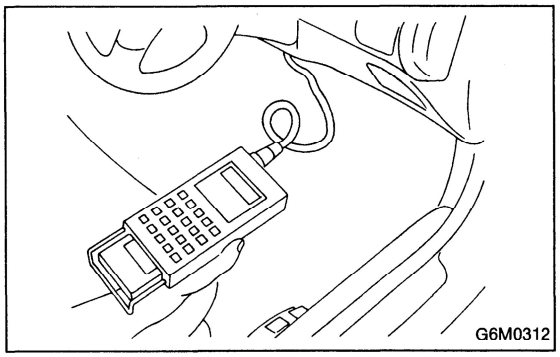
G6M0312

## 2. ON-BOARD DIAGNOSIS PROCEDURES USING SELECT MONITOR

1) Connect select monitor to data link connector.
2) Turn ignition switch to ON.
3) Turn cruise control main switch to ON.
4) Turn select monitor's power ON. All LED's will come on. Select monitor display will read after several seconds.
NOTE:
If cruise control main switch is OFF, error 1 will appear. Turn cruise control main switch to ON and repeat steps 2.
5) Press "F", "B", "0", and "ENT" in that order, and enter the desired designated code ("FB0", for example), or press scroll key to select the code.



GETtheMANUALS.org

### 3. DIAGNOSIS OF CRUISE CANCEL CONDITIONS

1) Connect select monitor.
2) Turn ignition switch and cruise control main switch to ON.
3) Set select monitor in "FB0" mode.
4) Start engine and drive vehicle at least 40 km/h (25 MPH) with cruise speed set.
5) If cruise speed is canceled itself (without doing any cancel operations), a trouble code will appear on select monitor display.

**CAUTION:**
- **A trouble code will also appear when cruise cancel is effected by driver. Do not confuse.**
- **Have a co-worker ride in vehicle to assist in diagnosis during driving.**

| Function code indication | | Item to measure | | Contents of diagnosis |
|---|---|---|---|---|
| Code No. | Abbreviation | Trouble code | Abbreviation | |
| FB0 | CANCEL | 10 | OK | Normal |
| | | 11 | BRAKE/STOP | Input signals from brake switch "OFF", stop light switch "ON" (Brake pedal is depressed.) |
| | | 12 | CLU or N | Input signals from clutch switch "OFF", inhibitor switch N position [Clutch pedal is depressed (MT model), or select lever is set to N position (AT model).] |
| | | 13 | SPEED LIM | Low-speed control limiter |
| | | 14 | SET + RESUME | Simultaneous entry of two signals (Shorted circuit) |
| | | 21 | VAC VALVE | Faulty vacuum valve or valve drive system |
| | | 22 | VENT2 VALVE | Faulty vent 2 valve or valve drive system |
| | | 23 | VENT1 VALVE | Faulty vent 1 valve or valve drive system |
| | | 24 | SP SENSOR | Faulty vehicle speed sensor 2 |
| | | 25 | CONTROL UNIT | Faulty cruise control module |

6) Trouble code will be cleared by turning ignition switch or cruise control main switch to OFF.



GETtheMANUALS.org

## 4. REAL-TIME DIAGNOSIS

1) Connect select monitor.
2) Turn ignition switch and cruise control main switch to ON.
3) Set select monitor in "FA0" mode.
4) Ensure that normal indication is displayed when controls are operated as indicated below:

- When SET/COAST switch is pressed.
- When RESUME/ACCEL switch is pressed.
- When brake pedal is depressed. (Stop and brake switch turns ON.)
- When clutch pedal is depressed (MT model).
- When select lever is set to N position (AT model).

| Function code indication | | Item to measure | Content of items to be monitored |
|---|---|---|---|
| Code No. | Abbreviation | | |
| FA0 | ST | Stop light switch | LED No.1 comes on when switch is turned ON. (Brake pedal is depressed.) |
| | BR | Brake switch | LED No. 2 comes on when brake pedal is depressed. |
| | SE | SET/COAST switch | LED No. 3 comes on when switch is turned ON. |
| | RE | RESUME/ACCEL switch | LED No. 4 comes on when switch is turned ON. |
| | IH | Clutch switch/inhibitor switch | • LED No. 5 comes on when clutch pedal is depressed (MT model).<br>• LED No. 5 comes on when select lever is set to N position (AT model). |

NOTE:
LED's come on shortly after switches are pressed.

## 5. DATA SHOWN ON SELECT MONITOR DISPLAY

| Indication of function code | | Item to measure | Content of items to be monitored |
|---|---|---|---|
| Code No. | Abbreviation | | |
| F 00 | CRUISE CONTROL | Cruise control module identification | Reads ROM ID number of cruise control module to display a possible communication state. |
| F 01 | VSP (MPH) | Vehicle speed (MPH) | Displays vehicle speed data (in miles/h) determined by cruise control module in relation to signal emitted from vehicle speed sensor 2 in combination meter. |
| F 02 | VSP (km/h) | Vehicle speed (km/h) | Displays vehicle speed data in km/h. |



GETtheMANUALS.org

## 2. Electrical Unit Location

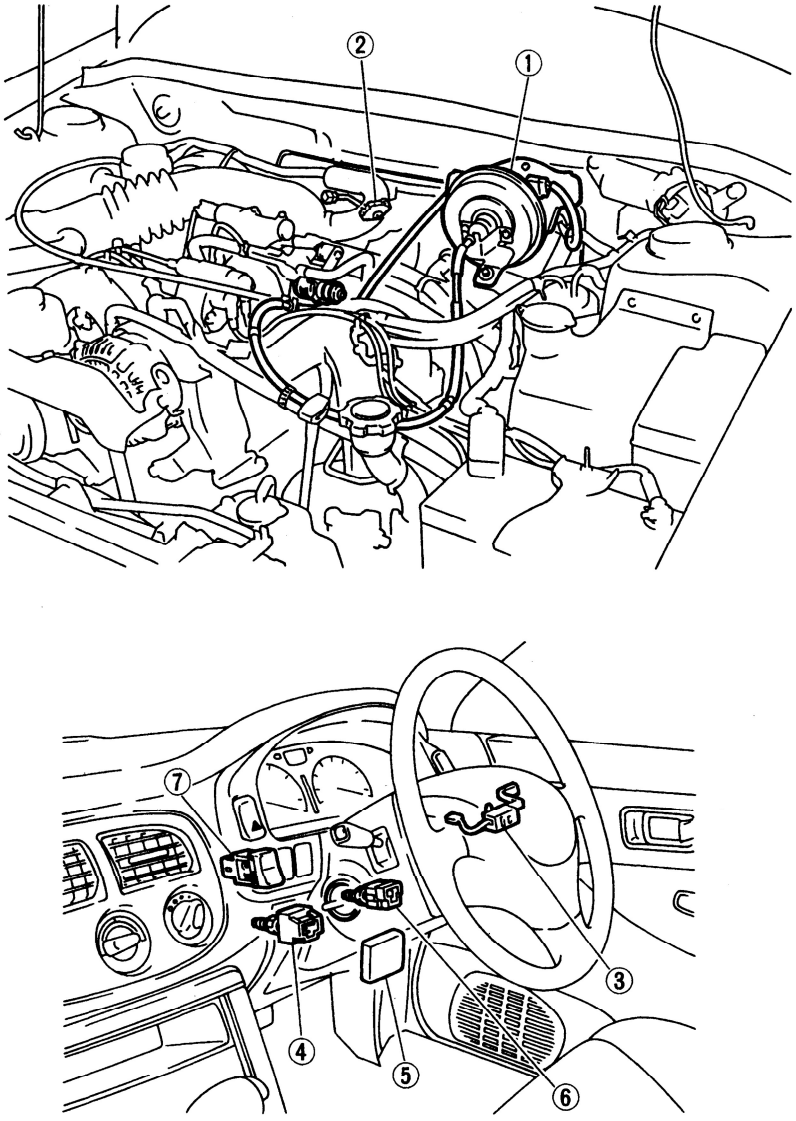


G6M0313

① Actuator
② Inhibitor switch (AT model)
③ Cruise control sub switch
④ Clutch switch (MT model)
⑤ Cruise control module
⑥ Stop and brake switch
⑦ Cruise control main switch



GETtheMANUALS.org

# 3. Schematic

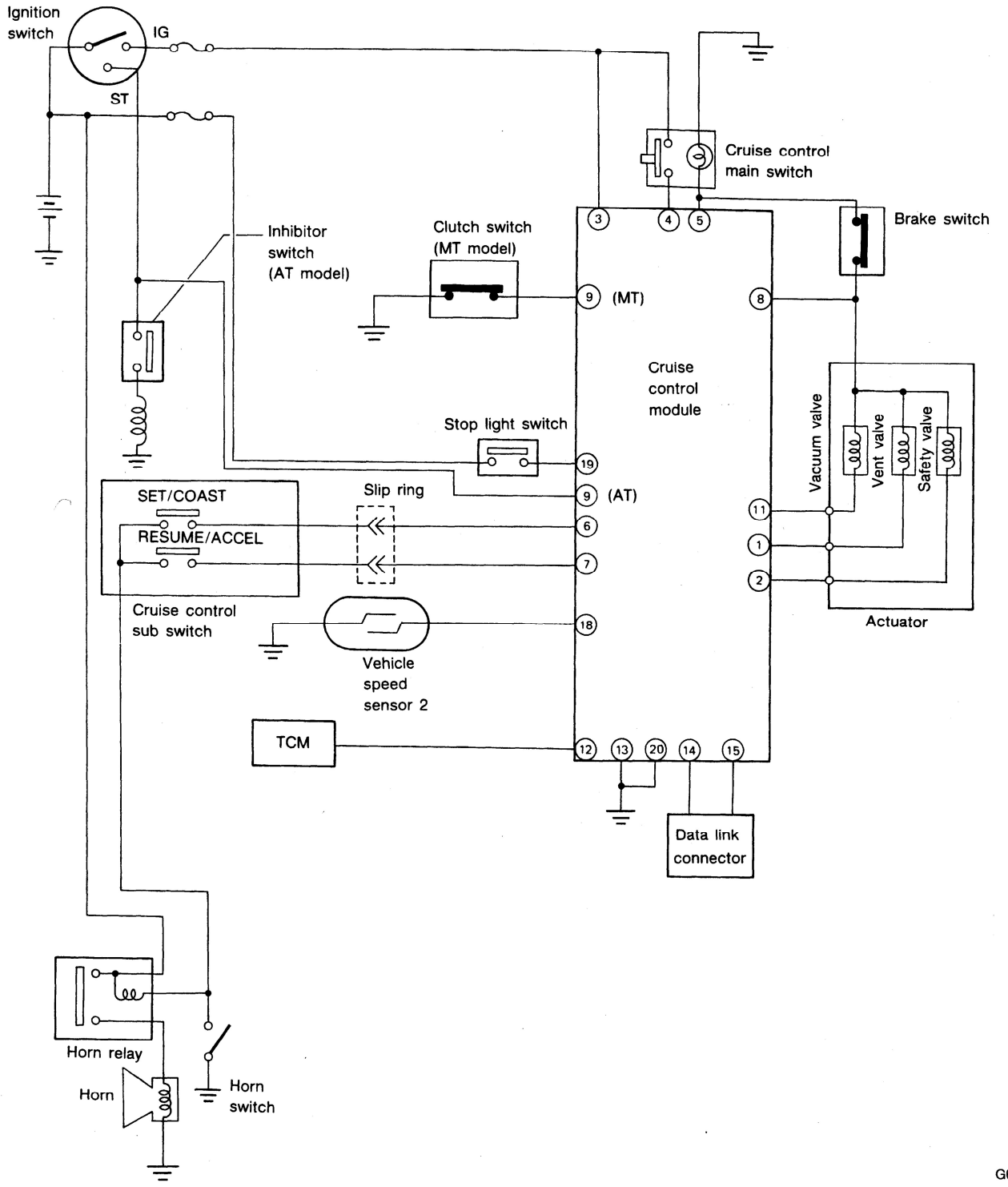




GETtheMANUALS.org

# 4. Control Module I/O Signal

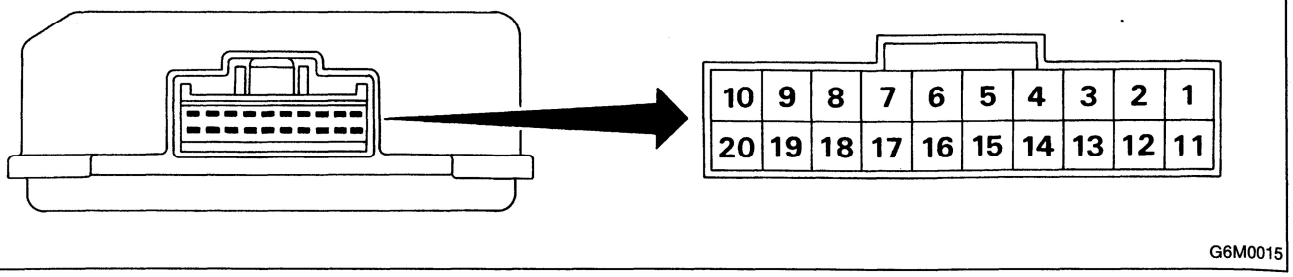


| Content | Terminal No. | Measuring conditions and I/O signals (ignition switch ON and engine idling) |
|---|---|---|
| Vent valve | 1 | • Power supply is ON when vehicle is stopped.<br>• ON-and-OFF (0 and 12 volts) operation is alternately repeated while cruise control is operating. |
| Safety valve | 2 | • Power supply is ON when vehicle is stopped.<br>• ON-and-OFF (0 and 12 volts) operation is alternately repeated while cruise control is operating. |
| Ignition switch | 3 | Battery voltage is present when switch is turned on. |
| Cruise control main switch | 4 | • When main switch is pressed, battery voltage is present.<br>• When main switch is OFF, "0" volt is present. |
| Power supply to vacuum valve, vent valve, safety valve and set indicator | 5 | When main switch is pressed, battery voltage is present. |
| SET/COAST switch | 6 | • When switch is turned ON, battery voltage is present.<br>• When switch is turned OFF, "0" volt is present. |
| RESUME/ACCEL switch | 7 | • When switch is turned ON, battery voltage is present.<br>• When switch is turned OFF, "0" volt is present. |
| Brake switch | 8 | Set select lever to any position other than "N" position (AT model)/leave clutch released (MT model), with main switch ON. Then check that:<br>• 0 volt is present when brake pedal is depressed.<br>• Battery voltage is present when brake pedal is released, or<br>• 0 volt is present when clutch pedal is depressed (MT model).<br>• Battery voltage is present when clutch pedal is released (MT model).<br>• 0 volt is present when select lever is set to "N" position (AT model).<br>• Battery voltage is present when select lever is in any position other than "N" position (AT model). |
| • Inhibitor switch (AT model)<br>• Clutch switch (MT model) | 9 | When switch is turned ON, "0" volt is present. |
| Vacuum valve | 11 | • Power supply is ON when vehicle is stopped.<br>• ON-and-OFF (0 and 12 volts) operation is alternately repeated while cruise control is operating. |
| AT control (Set signal) | 12 | TCM emits a ground-level signal while driving vehicle at least 40 km/h (25 MPH) with SET switch ON. |
| GND | 13 | — |
| Select monitor (Output) | 14 | — |
| Select monitor (Input) | 15 | — |
| Vehicle speed sensor 2 | 18 | When all four wheels are raised off ground and any wheel is rotated manually, approximately 5 and 0 volt pulse signals are alternately sent to cruise control module. |
| Stop light switch | 19 | With ignition switch ON or OFF:<br>• Depress brake pedal to check that battery voltage is present.<br>• "0" volt is present with brake pedal released. |
| GND | 20 | — |

Voltage at terminals (1, 2, 11 and 12) cannot be checked unless vehicle is driving at cruising speed.



GETtheMANUALS.org

# 5. Diagnostics Chart for On-board Diagnosis System

## A: BASIC DIAGNOSTICS PROCEDURE

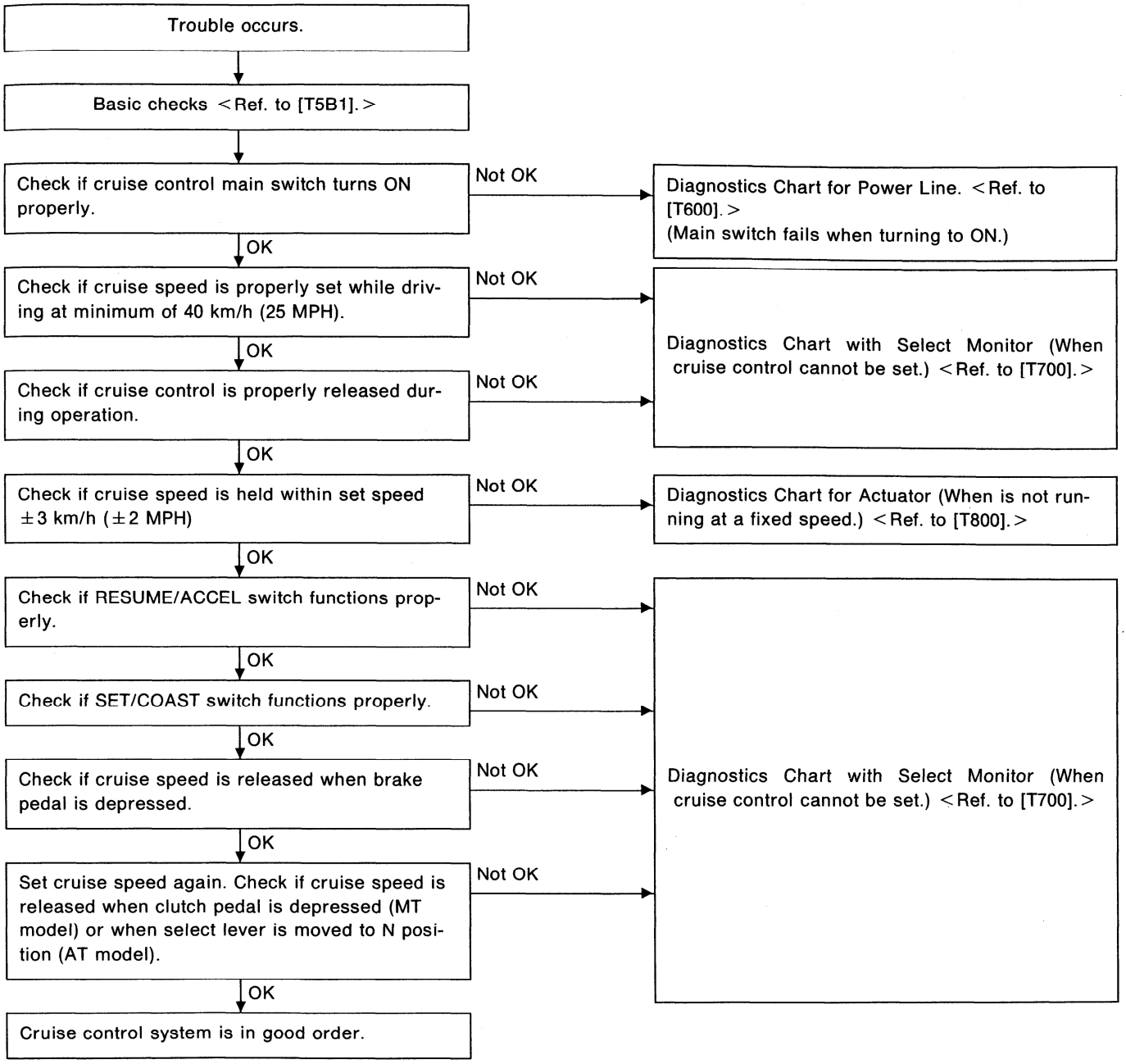




GETtheMANUALS.org

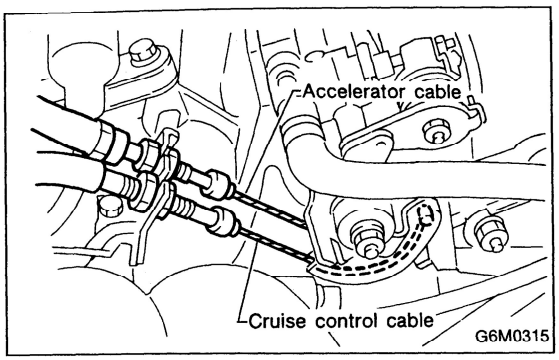


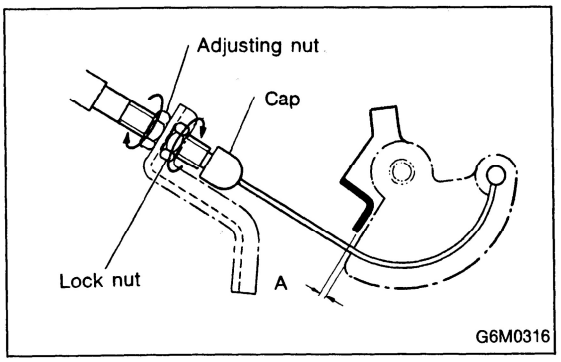


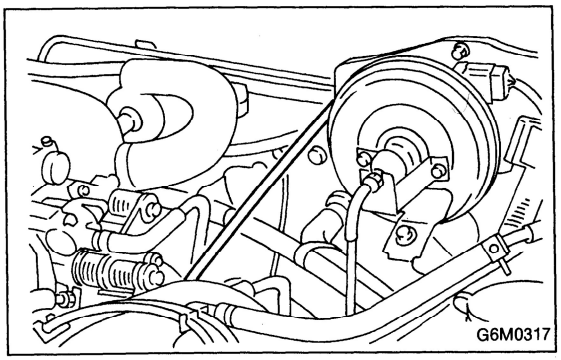


## B: BASIC CHECKS

### 1. CHECK CABLE

1) Cable installation
   (1) Ensure that cruise control cable is attached to the left of accelerator cable (on accelerator pedal side).
   (2) Ensure that accelerator cable throttle cam does not move when cruise control throttle cam is moved by hand.
   (3) Ensure that throttle cam moves smoothly.
2) Cable free play
   (1) Ensure that throttle cam-to-lever clearance is within specification.

***Free play A: 1 mm (0.04 in)***

NOTE:
If clearance is not within specification, adjust cable at its outer end.

   (2) Ensure that cap is positioned in groove.
   (3) Ensure that cable deflects within specification.

***Deflection:***
***1 — 8 mm (0.04 — 0.31 in)***

### 2. CHECK VACUUM HOSE

Check vacuum hose (which connects actuator and intake manifold) for disconnection or cracks.



GETtheMANUALS.org

# 6. Diagnostics Chart for Power Line

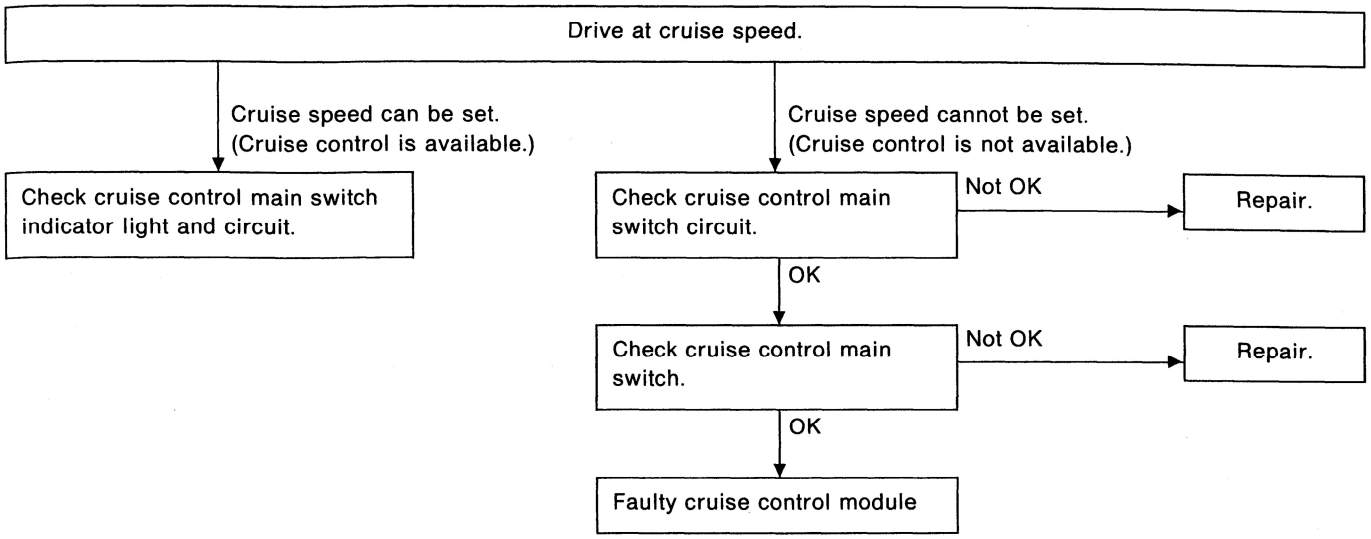




GETtheMANUALS.org

## A: CHECK CRUISE CONTROL MAIN SWITCH INDICATOR LIGHT AND CIRCUIT

**DIAGNOSIS:**

- Bulb failure or open harness of the indicator light circuit in the cruise control main switch.

**TROUBLE SYMPTOM:**

- Cruise control can be set, normally indicator light does not come on. (When main switch is pressed.)

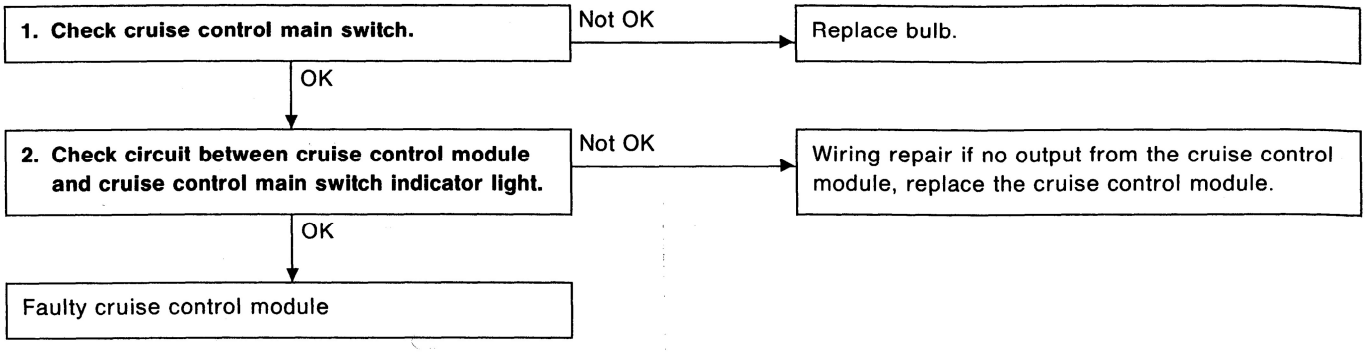




GETtheMANUALS.org

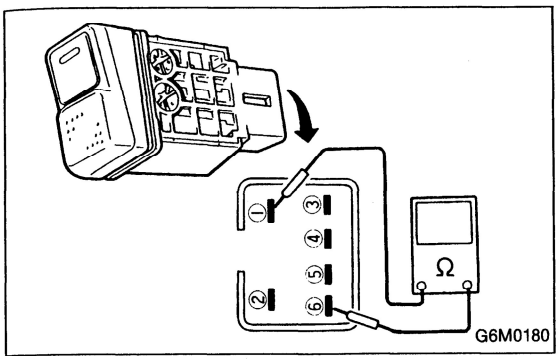


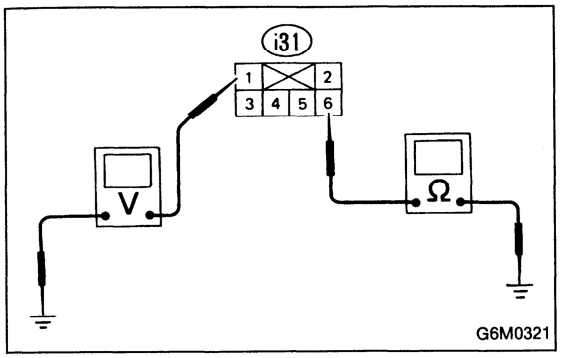


**1. CHECK CRUISE CONTROL MAIN SWITCH.**

1) Remove cruise control main switch.
Turn lower part of the housing upward to remove. If this cannot be done, insert a small screwdriver on the right hand side of the housing to remove the lock.
2) Measure resistance between cruise control main switch terminals.

***Terminal / Specified resistance:***
***No. 1 — No. 6 / Approx. 120 Ω***

**2. CHECK CIRCUIT BETWEEN CRUISE CONTROL MODULE AND CRUISE CONTROL MAIN SWITCH INDICATOR LIGHT.**

1) Turn the ignition switch to ON.
2) Turn cruise control main switch to ON.
3) Measure voltage between cruise control main switch connector and body.

***Connector & terminal / Specified voltage:***
***(i31) No. 1 — Body / 10 — 13 V***

4) Turn the ignition switch and cruise control main switch to OFF.
5) Remove the connector from the cruise control main switch.
6) Measure resistance of ground circuit between the cruise control main switch connector and the body.

***Connector & terminal / Specified resistance:***
***(i31) No. 6 — Body / 10 Ω, max.***



GETtheMANUALS.org

## B: CHECK CRUISE CONTROL MAIN SWITCH

**DIAGNOSIS:**

- Faulty cruise control main switch, or open harness.

**TROUBLE SYMPTOM:**

- Cruise control main switch is not turned to ON and cruise control cannot be set.

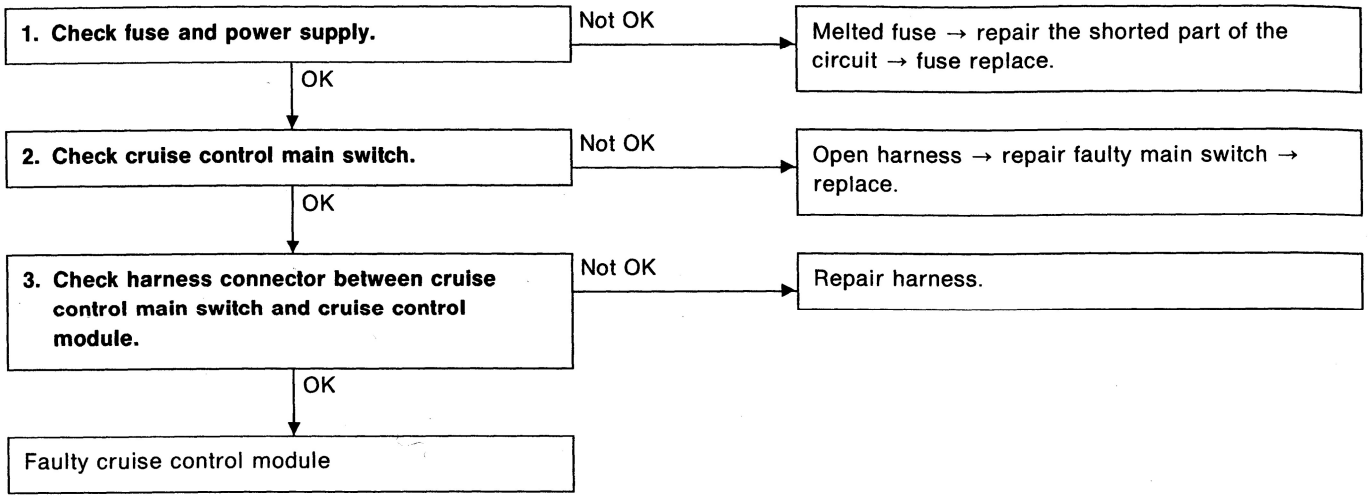




GETtheMANUALS.org

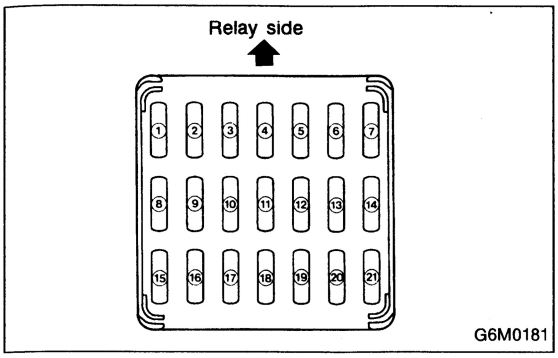


## 1. CHECK FUSE AND POWER SUPPLY.

1) Check fuse No. 18.
2) Turn ignition switch to ON.
3) Measure voltage between fuse box connector and body.

***Connector & terminal / Specified voltage:***
***(B82) No. 4 — Body / 10 — 13 V***

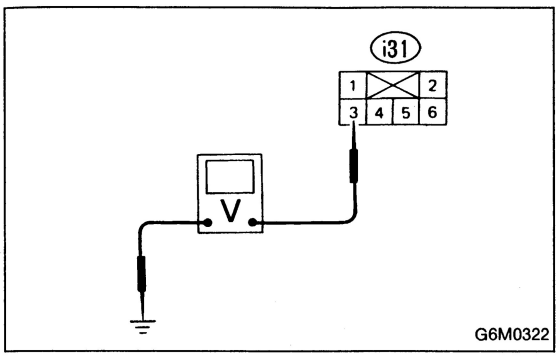


## 2. CHECK CRUISE CONTROL MAIN SWITCH.

1) Turn ignition switch to OFF.
2) Remove cruise control main switch and disconnect connector.
3) Turn ignition switch to ON.
4) Measure voltage between cruise control main switch connector and body.

***Connector & terminal / Specified voltage:***
***(i31) No. 3 — Body / 10 — 13 V***

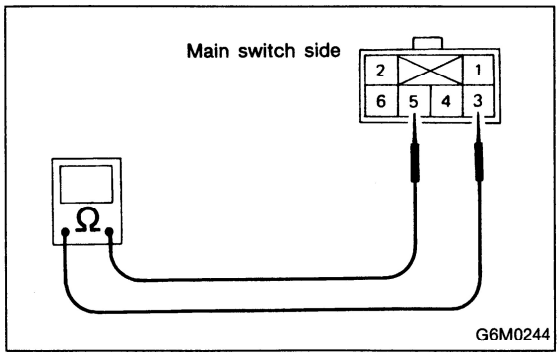


5) Measure resistance between cruise control main switch terminals.

***Terminal / Specified resistance:***
***No. 3 — No. 5 / 10 Ω, max. (ON)***
***1 MΩ, min. (OFF)***

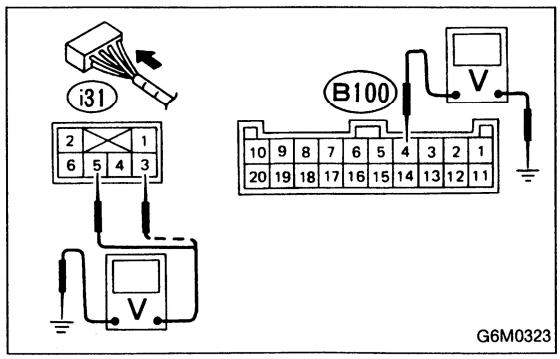


## 3. CHECK HARNESS CONNECTOR BETWEEN CRUISE CONTROL MAIN SWITCH AND CRUISE CONTROL MODULE.

1) Connect connector.
2) Turn ignition switch to ON.
3) Turn cruise control main switch to ON.
4) Measure voltage between each terminal of cruise control main switch or cruise control module and body.

***Connector & terminal / Specified voltage:***
***(i31) No. 3 — Body / 10 — 13 V***
***(i31) No. 5 — Body / 10 — 13 V***
***(B100) No. 4 — Body / 10 — 13 V***



GETtheMANUALS.org

# 7. Diagnostics Chart with Select Monitor — When cruise control cannot be set —

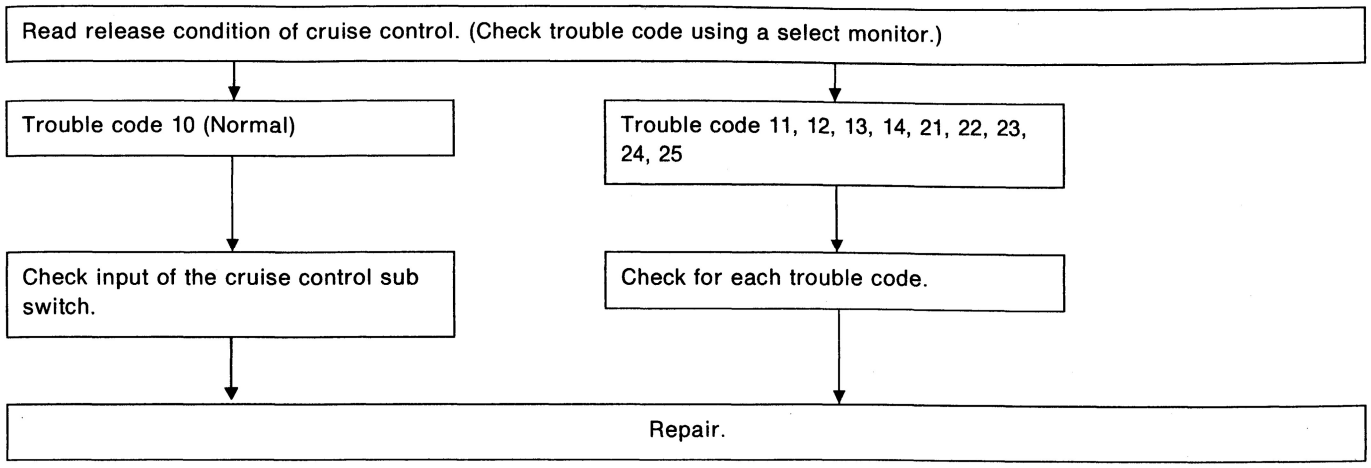


| Trouble code | Item | Contents of diagnosis | Page |
|---|---|---|---|
| 10 | OK | Normal | — |
| 11 | Brake switch, Stop light switch | Input signals from brake switch "OFF", stop light switch "ON" (Brake pedal is depressed.) | 20 |
| 12 | Clutch switch, N position | Input signals from clutch switch "OFF", inhibitor switch N position [Clutch pedal is depressed (MT model), or select lever is set to N position (AT model).] | 22 |
| 13 | Speed limiter | Low-speed control limiter | 24 |
| 14 | Set switch and resume switch | Simultaneously input signals of SET/COAST and RESUME/ACCEL switch. | 26 |
| 21 | Vacuum valve | Faulty vacuum valve or valve drive system | 27 |
| 22 | Vent 2 valve | Faulty vent 2 valve or valve drive system | 27 |
| 23 | Vent 1 valve | Faulty vent 1 valve or valve drive system | 27 |
| 24 | Vehicle speed sensor 2 | Faulty vehicle speed sensor 2 | 24 |
| 25 | Control module | Faulty cruise control module | 28 |



GETtheMANUALS.org

## A: CHECK INPUT OF CRUISE CONTROL SUB SWITCH

**DIAGNOSIS:**

- SET/COAST switch or disconnection of the wiring or short circuit.
- RESUME/ACCEL switch or disconnection of the wiring or short circuit.

**TROUBLE SYMPTOM:**

- Cruise control cannot be set, or it is cancelled immediately.
- RESUME/ACCEL cannot be operated.

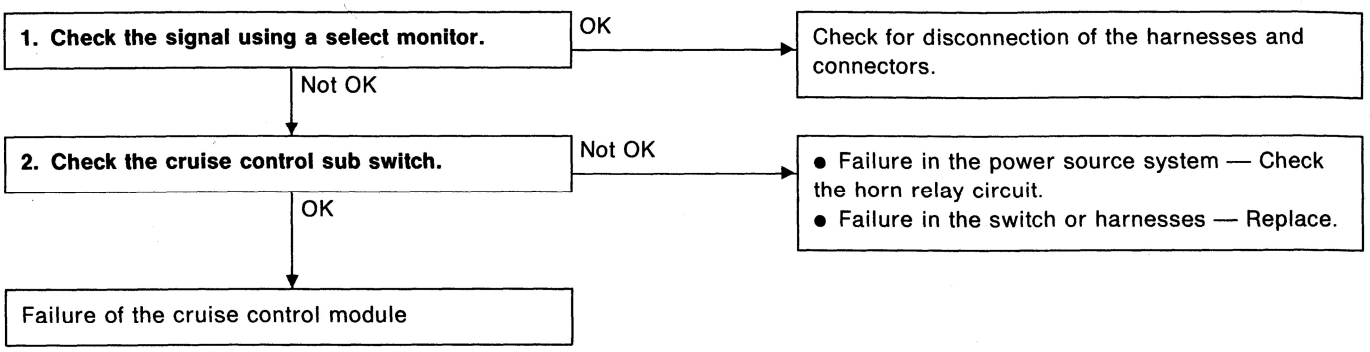




GETtheMANUALS.org

| LED No. | Signal name | Display |
|---|---|---|
| 1 | Stop light switch | ST |
| 2 | Brake switch | BR |
| 3 | SET/COAST switch | SE |
| 4 | RESUME/ACCEL switch | RE |
| 5 | • Clutch switch (MT)<br>• Inhibitor switch (AT) | IH |
| 6 | — | — |
| 7 | — | — |
| 8 | — | — |
| 9 | — | — |
| 10 | — | — |

| ST | BR | SE | RE | IH |
|---|---|---|---|---|
| — | — | — | — | — |

| | | | | |
|---|---|---|---|---|
| 1 | 2 | 3 | 4 | 5 |
| 6 | 7 | 8 | 9 | 10 |

## 1. CHECK THE SIGNAL USING A SELECT MONITOR.

1) Turn ignition switch to ON.
2) Turn cruise control main switch to ON.
3) Set select monitor in "FA0" mode.
4) Check signals for proper operation.
   (1) When pushing the SET switch: LED No. 3 goes out. — lights.
   (2) When pushing the RESUME switch: LED No. 4 goes out. — lights.

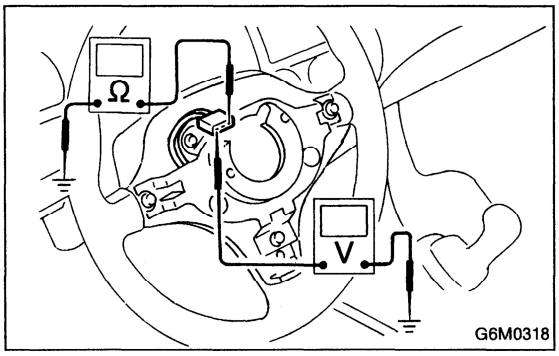


## 2. CHECK THE CRUISE CONTROL SUB SWITCH.

1) Disconnect connector from sub switch.
2) Measure voltage between sub switch connector and body.

***Terminals / Specified voltage:***
***No. 1 — Body / 10 — 13 V***

3) Check for harness short circuit between sub switch and cruise control module.

***Terminals / Specified resistance:***
***No. 2 — Body / 1 MΩ, min.***
***No. 3 — Body / 1 MΩ, min.***

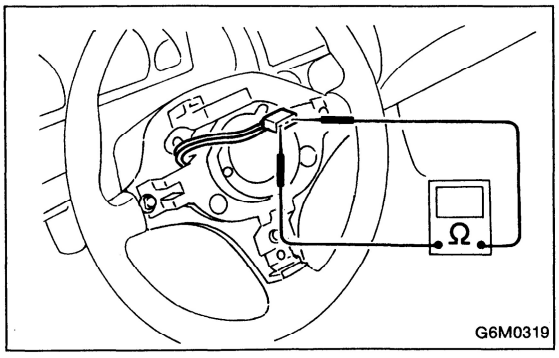


4) Measure resistance between each terminal of switch side connector to check the switch operation.

***Terminals:***
***No. 1 — 2 (SET/COAST SWITCH)***
***No. 1 — 3 (RESUME/ACCEL SWITCH)***

***Specified resistance:***
***10 Ω, max. (ON)***
***1 MΩ, min. (OFF)***



GETtheMANUALS.org

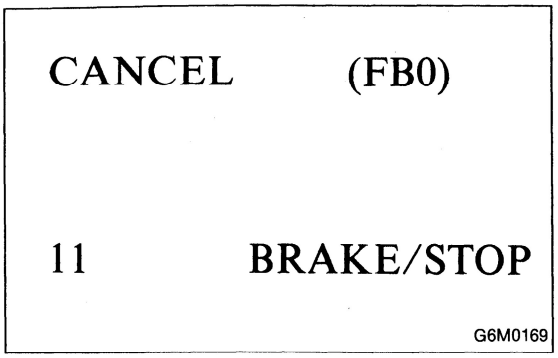


## B: TROUBLE CODE 11 — BRAKE SWITCH, STOP LIGHT SWITCH —

**DIAGNOSIS:**

- Failure or disconnection of the stop light switch and brake switch.

**TROUBLE SYMPTOM:**

- Cruise control cannot be set.

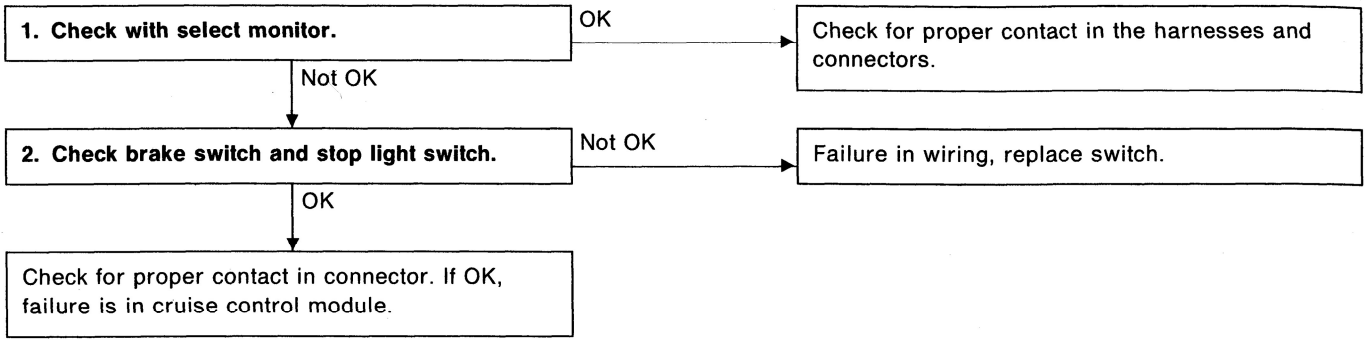




GETtheMANUALS.org

| LED No. | Signal name | Display |
|---|---|---|
| 1 | Stop light switch | ST |
| 2 | Brake switch | BR |
| 3 | SET/COAST switch | SE |
| 4 | RESUME/ACCEL switch | RE |
| 5 | • Clutch switch (MT)<br>• Inhibitor switch (AT) | IH |
| 6 | — | — |
| 7 | — | — |
| 8 | — | — |
| 9 | — | — |
| 10 | — | — |

| ST | BR | SE | RE | IH |
|---|---|---|---|---|
| — | — | — | — | — |

| | | | | |
|---|---|---|---|---|
| 1 | 2 | 3 | 4 | 5 |
| 6 | 7 | 8 | 9 | 10 |

## 1. CHECK WITH SELECT MONITOR.

1) Turn ignition switch to ON.
2) Turn cruise control main switch to ON.
3) Apply parking brake securely.
4) Set select monitor in "FA0" mode.
5) Release the clutch pedal (MT model) or set selector lever in D position (AT model).
6) Depress the brake pedal and check signals for proper operation.
   Stop light switch: LED No. 1 goes out. — lights.
   Brake switch : LED No. 2 goes out. — lights.

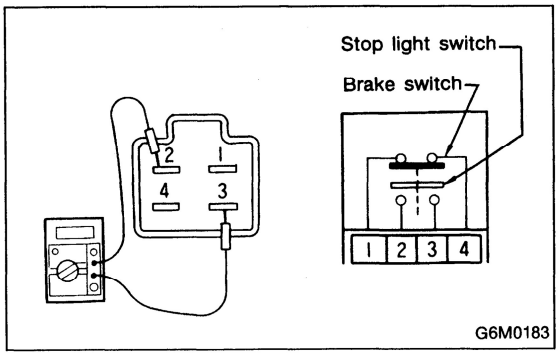


## 2. CHECK BRAKE SWITCH AND STOP LIGHT SWITCH.

1) Remove connector of stop and brake switch.
2) Check circuit between each terminal.

| Pedal operation | Brake switch between No. 1 — 4 | Stop light switch between No. 2 — 3 |
|---|---|---|
| Depressing the brake pedal. | Circuit failure | Circuit normal |
| Without depressing the brake pedal. | Circuit normal | Circuit failure |



GETtheMANUALS.org

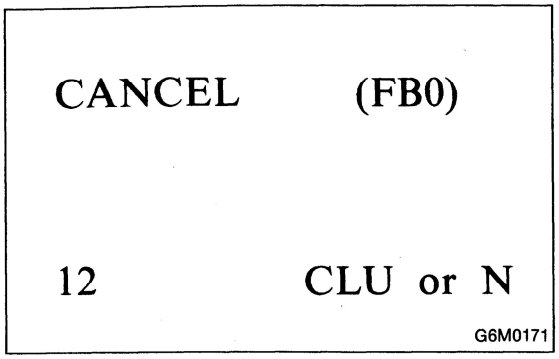


## C: TROUBLE CODE 12 — CLUTCH SWITCH, N POSITION —

**DIAGNOSIS:**

- Failure or disconnection of inhibitor switch (AT model)
- Failure or disconnection of clutch switch (MT model)

**TROUBLE SYMPTOM:**

- Cruise control cannot be set.

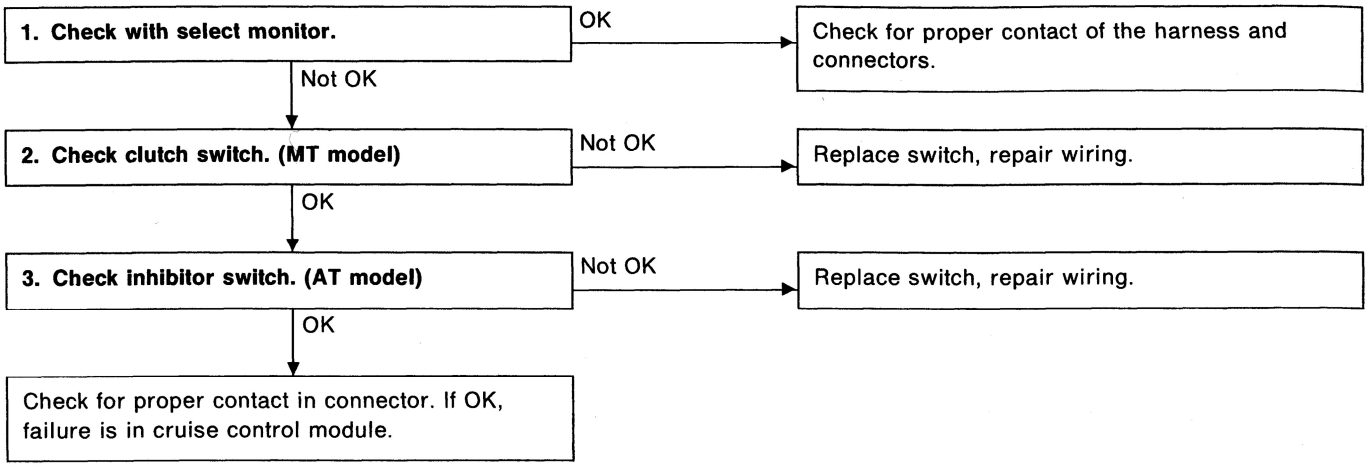




GETtheMANUALS.org

| LED No. | Signal name | Display |
|---|---|---|
| 1 | Stop light switch | ST |
| 2 | Brake switch | BR |
| 3 | SET/COAST switch | SE |
| 4 | RESUME/ACCEL switch | RE |
| 5 | • Clutch switch (MT)<br>• Inhibitor switch (AT) | IH |
| 6 | — | — |
| 7 | — | — |
| 8 | — | — |
| 9 | — | — |
| 10 | — | — |

| ST | BR | SE | RE | IH |
|---|---|---|---|---|
| — | — | — | — | — |
| 1 | 2 | 3 | 4 | 5 |
| 6 | 7 | 8 | 9 | 10 |

## 1. CHECK WITH SELECT MONITOR.

1) Turn ignition switch to ON.
2) Turn cruise control main switch to ON.
3) Set select monitor in "FA0" mode.
4) Depress the clutch pedal (MT model) or set selector lever in N position (AT model) while checking the signal for proper operation.
   LED No. 5 goes out. — lights.

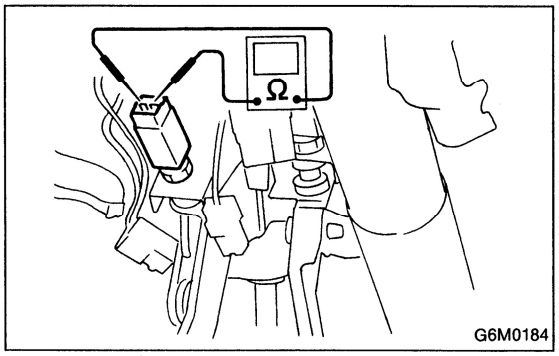


## 2. CHECK CLUTCH SWITCH. (MT MODEL)

1) Disconnect connector from clutch switch.
2) Check continuity of the clutch switch.

***Terminals / Specified resistance:***
***No. 1 — No. 2 / 10 Ω, max. (Without pedal depressing.)***
***/ 1 MΩ, min. (Pedal depressing.)***

## 3. CHECK INHIBITOR SWITCH. (AT MODEL)

1) When engine starts in the N position (the starter rotates), N position contact point of the inhibitor switch is normal.
2) Check the wiring harness.



GETtheMANUALS.org

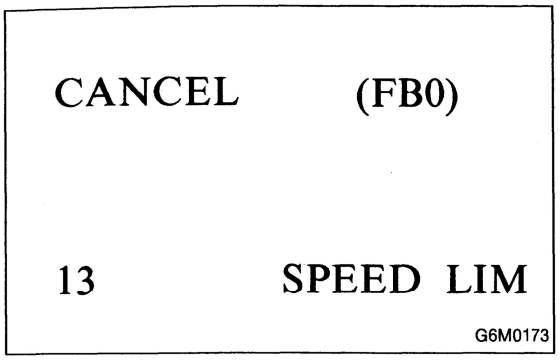


## D: TROUBLE CODE 13 AND 24 — SPEED LIMITER, VEHICLE SPEED SENSOR 2 —

**DIAGNOSIS:**

- Disconnection or short circuit of vehicle speed sensor 2.

**TROUBLE SYMPTOM:**

- Cruise control cannot be set. (Cancelled immediately.)

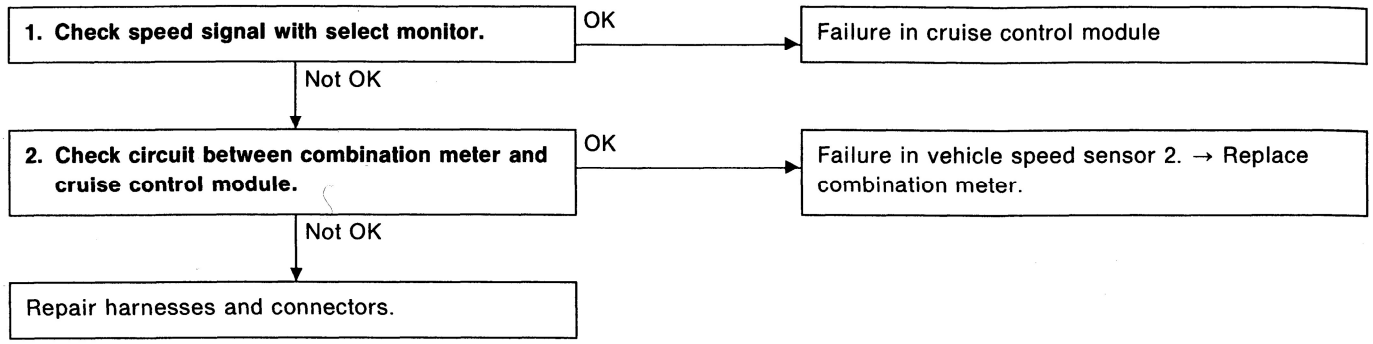




GETtheMANUALS.org

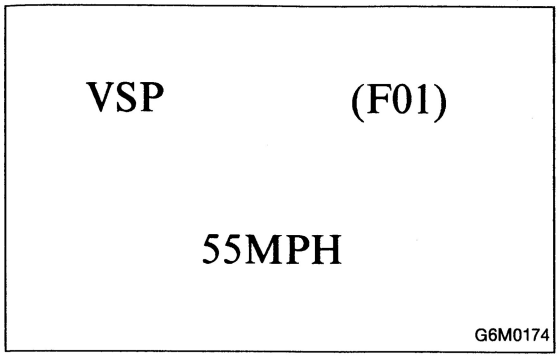


**1. CHECK SPEED SIGNAL WITH SELECT MONITOR.**

1) Turn ignition switch to ON.
2) Set select monitor in "F02" mode.
3) Drive the vehicle at speed greater than 40 km/h (25 MPH).
4) Check that vehicle speed indicates correctly.

NOTE:

- When there is a failure in the meter cable or the vehicle speed sensor 2, the indicated value of the meter will be incorrect.
- When there is a disconnection or short circuit in the harness between the meter and the cruise control module, the indicated value will be 0 — 1 km/h (0 — 0.6 MPH).

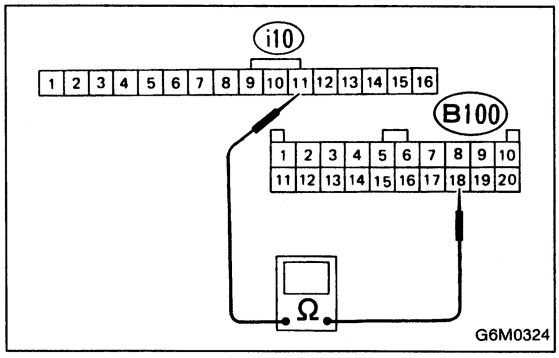


**2. CHECK CIRCUIT BETWEEN COMBINATION METER AND CRUISE CONTROL MODULE.**

1) Disconnect connectors from combination meter and cruise control module.
2) Measure resistance of harness connector between combination meter and cruise control module.

***Connector & terminal / Specified resistance:***
***(i10) No. 11 — (B100) No. 18 / 10 Ω, max.***



GETtheMANUALS.org

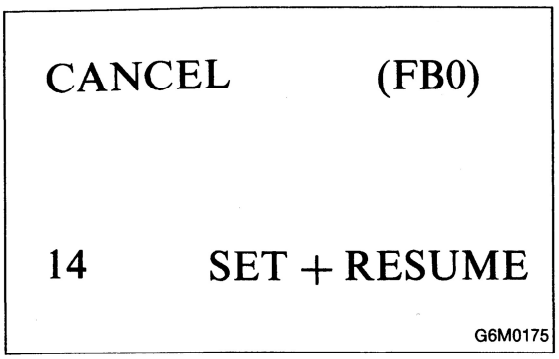


## E: TROUBLE CODE 14 — SET SWITCH AND RESUME SWITCH —

**DIAGNOSIS:**

- Short circuit inside the SET switch and RESUME switch.

**TROUBLE SYMPTOM:**

- Cruise control cannot be set. (Cancelled immediately.)

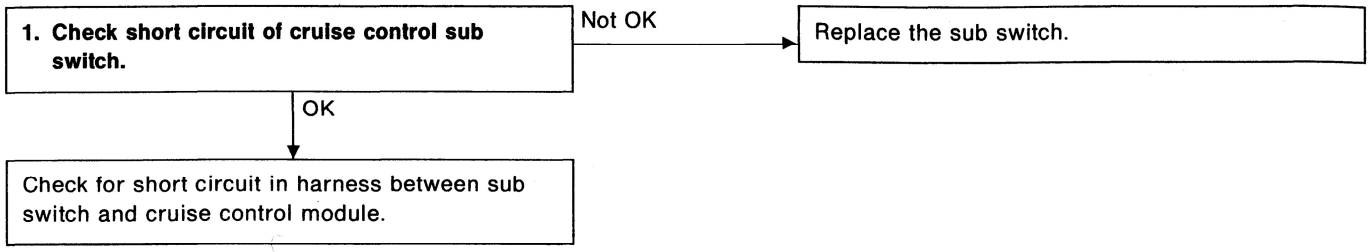


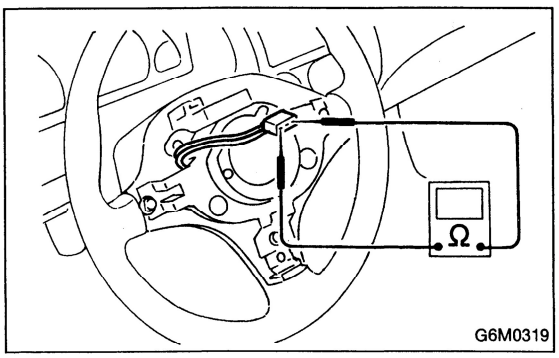


### 1. CHECK SHORT CIRCUIT OF CRUISE CONTROL SUB SWITCH.

1) Disconnect connector of cruise control sub switch.
2) Measure resistance between each terminal of cruise control sub switch.

***Terminals / Specified resistance:***
***SET switch ON: No. 1 — No. 2 / 10 Ω, max.***
***RESUME switch ON: No. 1 — No. 3 / 10 Ω, max.***



GETtheMANUALS.org

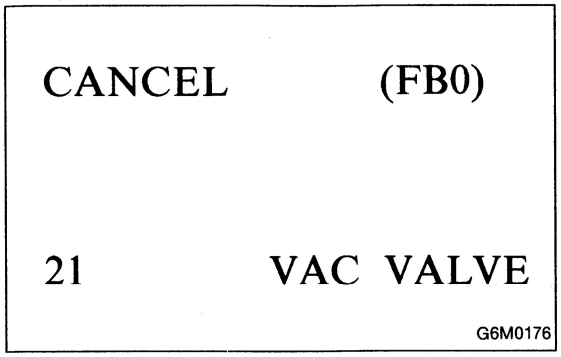


## F: TROUBLE CODE 21, 22 AND 23 — VACUUM VALVE, VENT 2 VALVE, VENT 1 VALVE —

**DIAGNOSIS:**

- Open or poor contact of vacuum valve, vent 1 valve and vent 2 valve.

**TROUBLE SYMPTOM:**

- Cruise control cannot be set. (Cancelled immediately.)

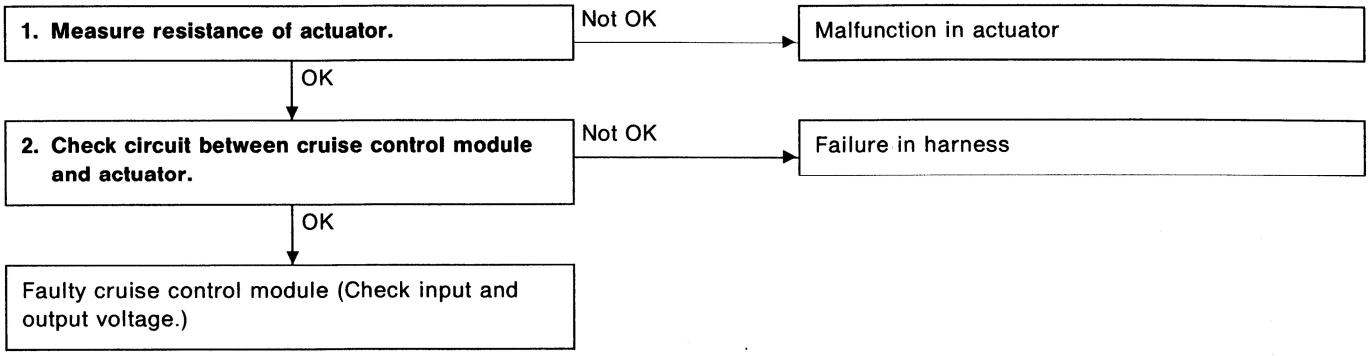


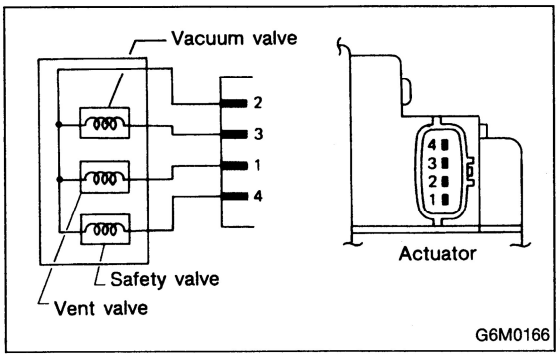


### 1. MEASURE RESISTANCE OF ACTUATOR.

1) Disconnect connector of actuator.
2) Measure resistance between each terminal of actuator.

***Terminals / Specified resistance:***

***No. 2 — No. 1 / 55 Ω***
***No. 2 — No. 3 / 22 Ω***
***No. 2 — No. 4 / 55 Ω***

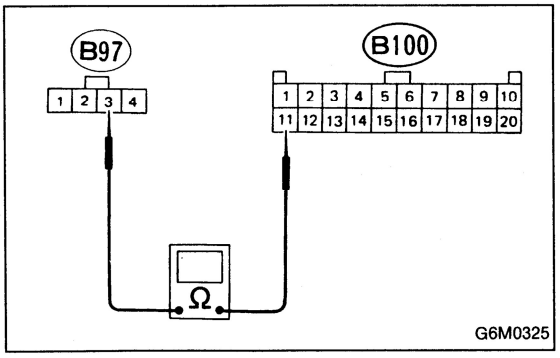


### 2. CHECK CIRCUIT BETWEEN CRUISE CONTROL MODULE AND ACTUATOR.

1) Disconnect connectors from cruise control module and actuator.
2) Measure resistance of harness connector between cruise control module and actuator.

***Connector & terminal / Specified resistance:***

***(B97) No. 1 — (B100) No. 1 / 10 Ω, max.***
***(B97) No. 2 — (B100) No. 8 / 10 Ω, max.***
***(B97) No. 3 — (B100) No. 11 / 10 Ω, max.***
***(B97) No. 4 — (B100) No. 2 / 10 Ω, max.***



GETtheMANUALS.org

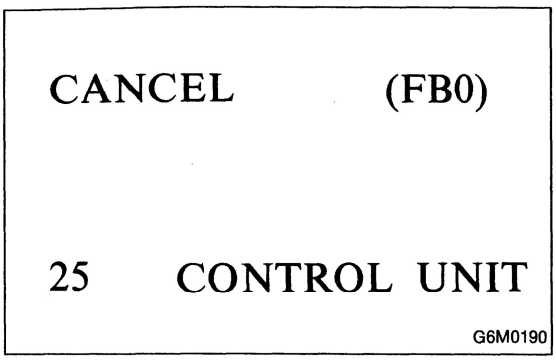


Replace cruise control module.

## G: TROUBLE CODE 25 — CONTROL MODULE —

**DIAGNOSIS:**

- Faulty cruise control module

**TROUBLE SYMPTOM:**

- Cruise control cannot be set.



GETtheMANUALS.org

# 8. Diagnostics Chart for Actuator

Check vehicle speed input signal with select monitor.

(At first, confirm that vehicle speed signal is input normally.)

Check operation of actuator.

Repair.



GETtheMANUALS.org

## A: CHECK OPERATION OF ACTUATOR

**DIAGNOSIS:**

- Sticking of air leaves of actuator, or sticking of valve and actuator diaphragm.

**TROUBLE SYMPTOM:**

- Vehicle cannot run at set speed ±3 km/h (±2 MPH).

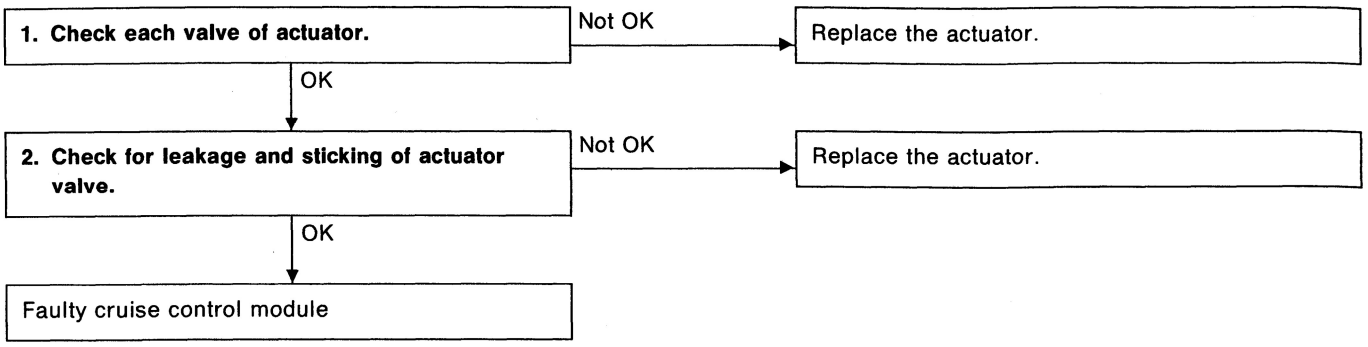




GETtheMANUALS.org

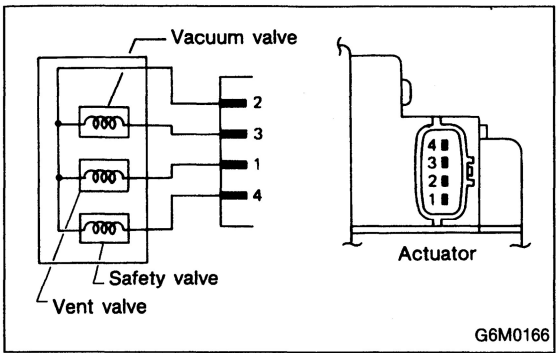


## 1. CHECK EACH VALVE OF ACTUATOR.

1) Disconnect connector of actuator.
2) Measure resistance between each terminal of actuator.

***Terminals / Specified resistance:***
***No. 2 — No. 1 / 55 Ω (Vent valve)***
***No. 2 — No. 3 / 22 Ω (Vacuum valve)***
***No. 2 — No. 4 / 55 Ω (Safety valve)***

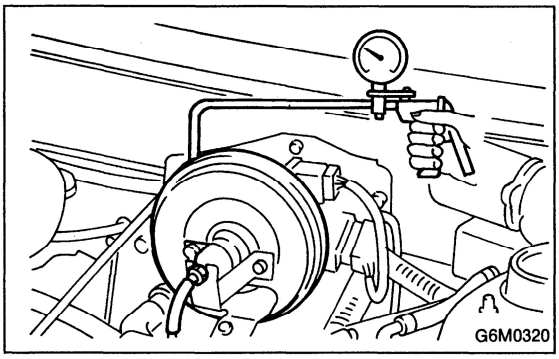


## 2. CHECK FOR LEAKAGE AND STICKING OF ACTUATOR VALVE.

1) Connect ⊕ (positive) battery cable to terminal 2 and ⊖ (negative) battery cable to terminals 1, 3 and 4.
2) Make sure cable moves smoothly when a vacuum pressure of 40.0 kPa (300 mmHg, 11.81 inHg) is applied to actuator using vacuum pump.

***Stroke: 35 mm (1.38 in)***
***Movement time: Within 3 seconds***

3) When the battery is removed from condition 2) above, make sure the cable returns to its original position smoothly.

***Movement time: Within 1.5 seconds***

4) Connect battery to each terminal and check cable movement when vacuum pressure is applied by vacuum pump.

| Vacuum pressure | Terminal No. | | | | Battery | | Operation mode |
|---|---|---|---|---|---|---|---|
| | 1 | 2 | 3 | 4 | ⊕ | ⊖ | |
| OFF | — | — | — | — | — | — | — |
| ON (Vacuum pressure applied.) | | ○ | | | ○ | | Pull |
| | | | ○ | | | ○ | |
| | ○ | | | | | ○ | |
| | | | | ○ | | ○ | |
| | | ○ | | | ○ | | Hold |
| | ○ | | | | | ○ | |
| | | | | ○ | | ○ | |
| | | ○ | | | ○ | | Release |
| | | | | ○ | | ○ | |



GETtheMANUALS.org