Table of Contents

E60 Engine Management

Subject **Page**

E60 Engine Management
Objectives 2

MS45.1
Purpose of the System 3
System Components 4
New System Component / Functions 6
Power Supply 7
Air Management 13
Fuel Management 14
Emissions Management 19
Performance Controls 30

ME 9.2
Purpose of the System 31
System Components 32

cardiagn.com

Initial Print Date: 08/03 Revision Date: 09/03

E60 Engine Management

Model: E60 - 525i, 530i, 545i

Engine Management:

- M54B25, M54B30 Engine / Siemens MS45.1
- N62B44 Engine / Bosch ME 9.2

Production: Start of Production MY 2004

Pin Connector: 134 Pins - 5 Modular Connectors

Objectives:

After completion of this module you will be able to:

- Diagnose the IBS via the ECM.
- Understand the Fuel Delivery System including service access.
- Explain the Filler Venting System.
- Diagnose the Mini HFM.
- Explain FDC influence on performance.

cardiagn.com

MS45.1

Purpose of the System

The MS45.1 system is a further enhancement of the MS45 system currently used on M54 engines and manages the following functions:

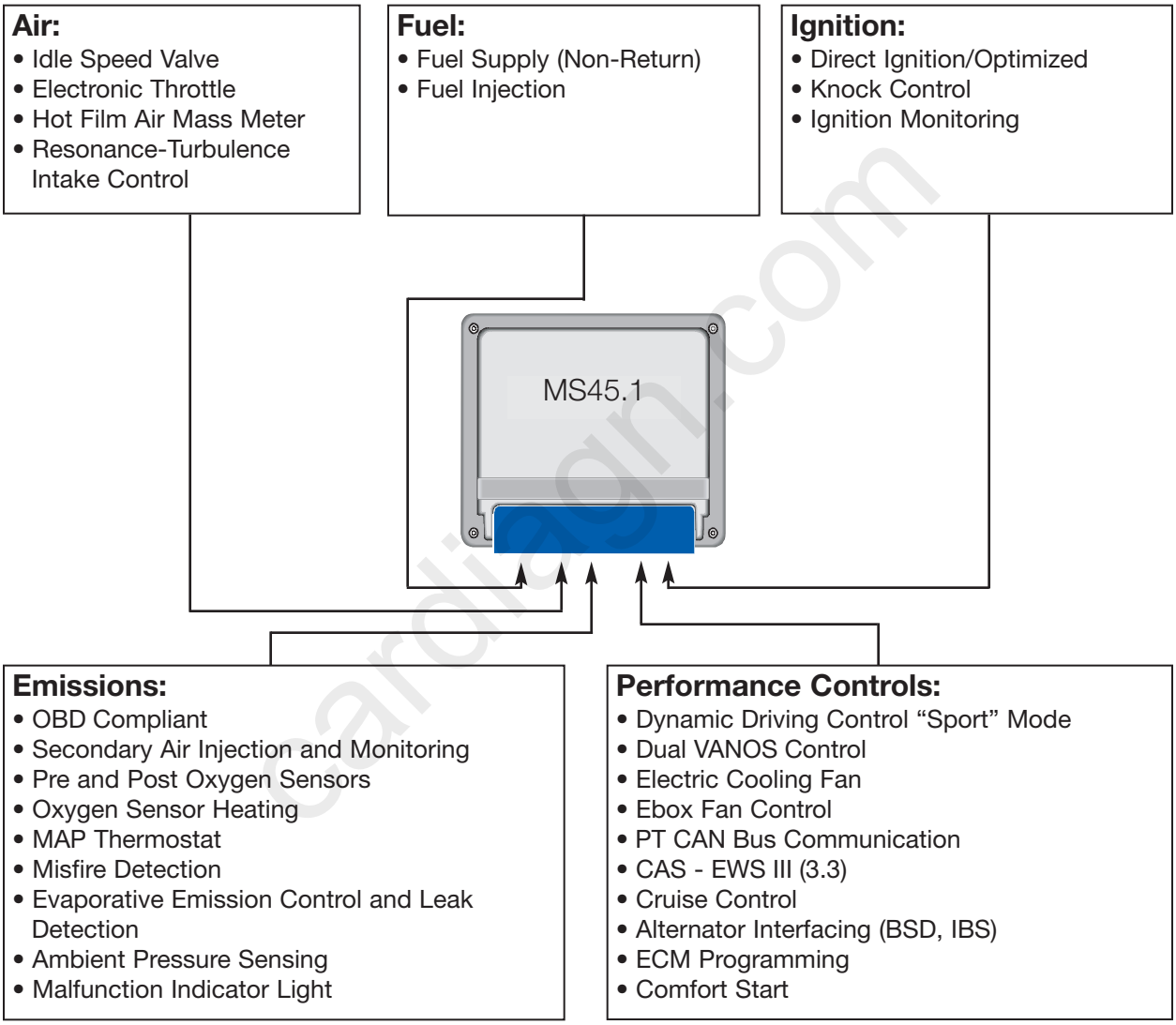

The basic engine management inputs, processes and outputs are not included in this module because they have not changed, refer to the ST055 Engine Electronics Technical Training hand out for additional detailed information. Also, refer to ST045 E85 Technical Training hand out for additional detailed information on the MS45 Engine Management System. *The following section is based on new controls / functions for MS45.1 system.*

System Components: Inputs - Processing - Outputs

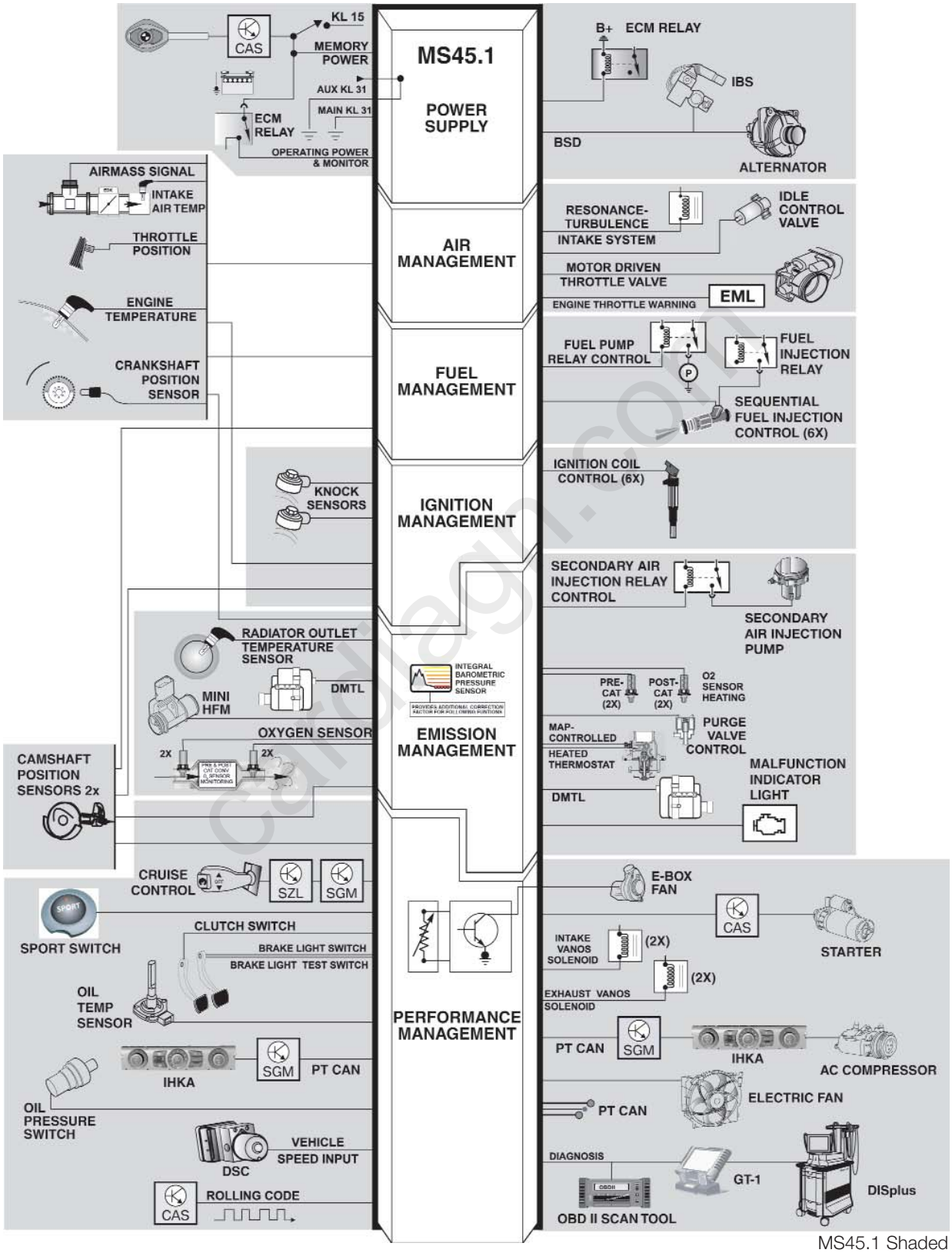

MS45.1 Shaded

System Components: Bus Overview

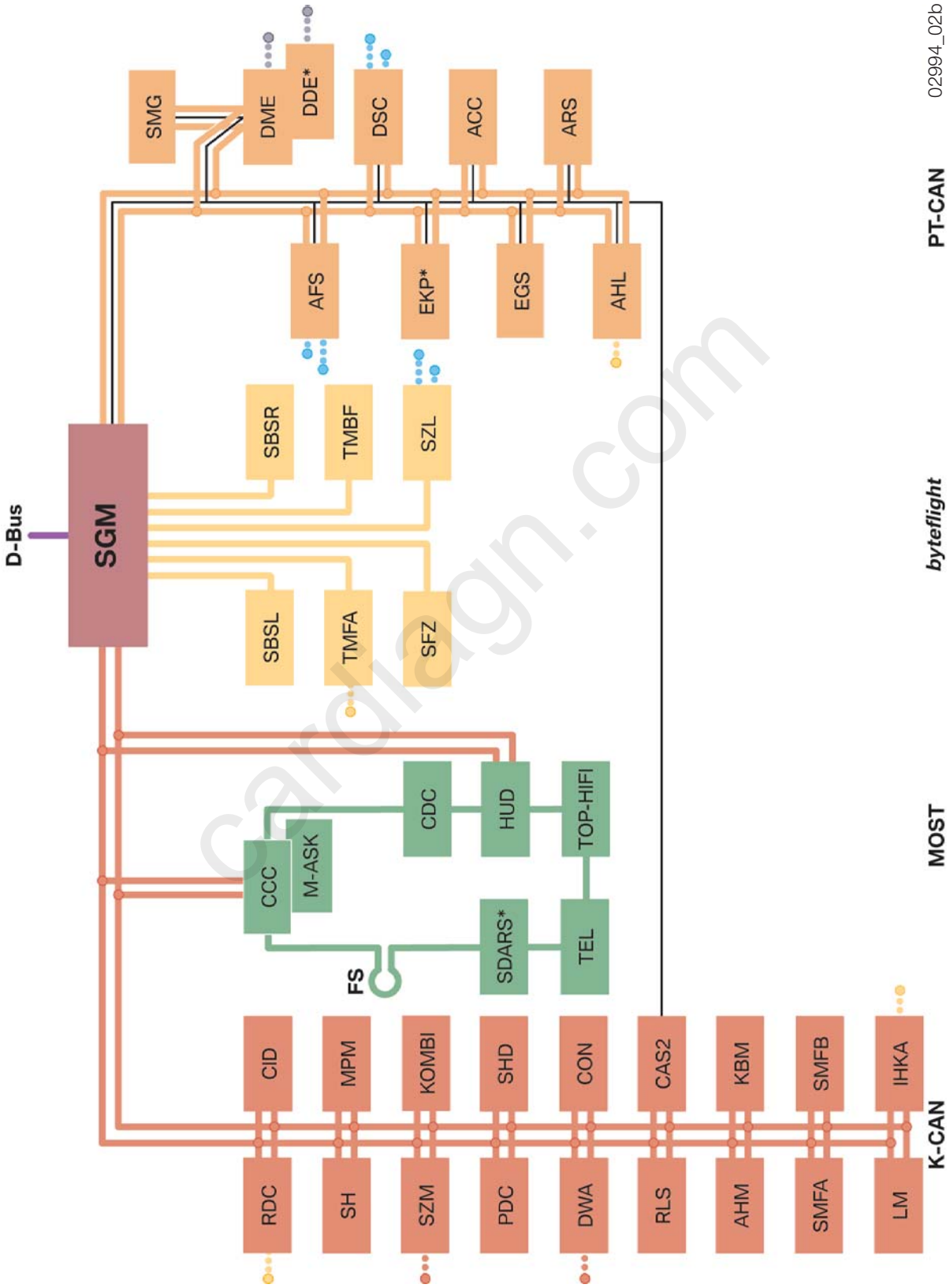

cardiagn.com

New System Components / Functions

MS45.1 Engine Control Module: The ECM is located in the under hood E box (below). The following modified controls / functions have been made to MS45.1 for use in the E60.

- New hot film air mass sensor (HFM).
- Changed data record variant (matched to E60).
- Lead to the CAS for start enable (starting relay is integrated in the CAS). (automatic/SMG transmissions only).
- The Driving Dynamics control (FDC) signal is transmitted via the PT-CAN.
- The cruise control (FGR) signal is sent from the MFL via the PT-CAN to the ECM.
- Connection of the intelligent battery sensor (IBS) to the bit-serial data interface (BSD).
- The software for power management (vehicle electrical system) is integrated in the ECM.
- The A/C compressor is activated via the PT-CAN.
- Fault diagnosis is performed through the SGM via the PT-CAN to the ECM.
- Activation of the ECM main relay (525i / 530i in E box, 545i in IVM).
- Bosch LSU 4.2 linear lambda oxygen sensors (pre-catalyst as in N62).
- Mini hot film air mass sensor (HFM) in the secondary air system.

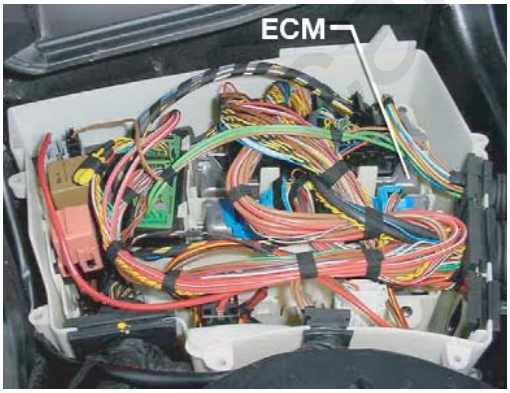

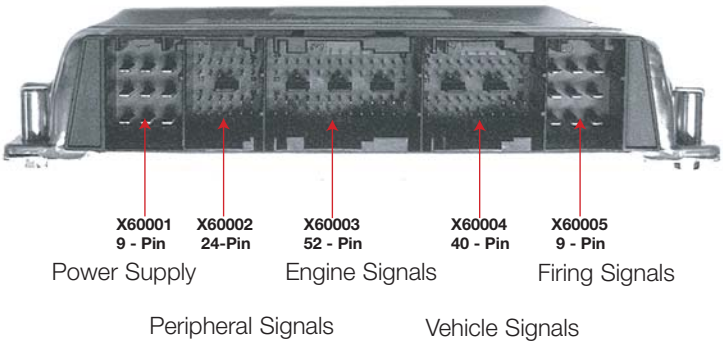

The 134 pin ECM is manufactured by Siemens to BMW specifications. The ECM is the SKE (standard shell construction) housing and uses 5 modular connectors. *For testing, use the Universal Adapter Set (break-out box) Special Tool # 90 88 6 121 300.*

Power Supply

ECM Main Relay

The ECM main relay in the E60 is supplied with power by the ECM throughout the PT-CAN bus activity. Voltage is supplied to all the output actuators (which receive power via KL 87 from the relay) throughout the PT-CAN bus activity.

The activation of main relay (525i / 530i in E box, 545i in IVM) KL 87 is necessary for the function of the bit-serial data interface (BSD). The BSD is supplied with power by the ECM via KL 87 and a pull up resistor. The following components communicate with the ECM via the bit-serial data interface:

- Alternator
- Intelligent Battery Sensor (IBS - refer to Voltage Supply and Bus Systems for more detailed information)

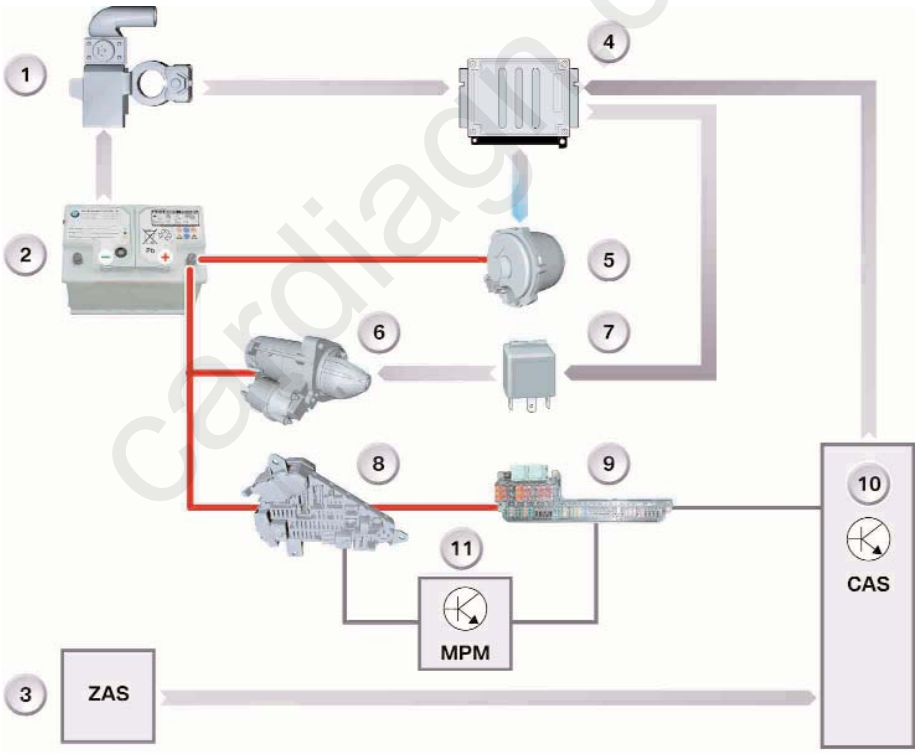

KT-11047

1. Intelligent Battery Sensor (IBS)
2. Battery
3. Ignition / Starter Switch (ZAS)
4. ECM
5. Alternator
6. Starter
7. Integral Starter Relay (525i / 530i in CAS, 545i in IVM)
8. Rear Power Distribution Box w/ Terminal 30g Relay
9. Front Power Distribution Box
10. Car Access System (CAS)
11. Micro-Power Module (MPM)

cardiagn.com

Lead to Car Access System (CAS)

A lead is installed between the ECM and the CAS for vehicles with automatic or SMG transmissions and the comfort starting function. The CAS contains the function of the electronic immobilizer (EWS - as in the E65) and the starter relay.

The ECM supplies the CAS with the signal for start enable. This facilitates the comfort starting function and prevents starter engagement while the engine is running.

Intelligent Battery Sensor (IBS)

The IBS sends the calculated battery values to the ECM via the BSD. The IBS calculates changes in battery SoC/SoH based on information received from the ECM on the battery during the period of time between engine "OFF" and deactivation of the ECM main relay. After the ECM main relay has been switched off, the IBS continues to constantly observe the SoC of the battery.

Terminal IBS Wake-up
When the key is switched off, before the ECM enters sleep mode, the ECM informs the IBS of the current SoC of the battery. The IBS monitors the SoC and when it drops below the programmed threshold, a terminal 15 wake-up signal is sent to the ECM. The ECM wakes up, obtains information on the current SoC of the battery from the IBS and requests the auxiliary electrical loads to switch off.

After one wake-up sequence the IBS is prohibited from waking the vehicle again during this key off cycle. The vehicle subsequently reassumes sleep mode.

The ECM reads the histogram after starting the vehicle. A corresponding entry is made in the ECM fault code memory if a closed-circuit current infringement is determined.

IBS Diagnosis
The IBS features a fault code memory that is read out by the ECM. Self diagnosis checks the voltage, current, temperature measurement, terminal 15 wake up as well as system errors in the IBS.

Alternator

Bosch and Valeo alternators are installed in the E60. The alternators are fitted depending on the type of engine and equipment configuration. They differ with regard to their rating of 140 A and 170 A and are aircooled.

cardiagn.com

Power Management

The power management software is contained in the ECM. When the vehicle is at rest, the IBS is partially responsible for power management. The tasks of the power management system include:

- Adaptation of the alternator charging voltage
- Idle speed boost for increasing the power output of the alternator
- Reduction of peak loads in the event of a shortfall in coverage provided by the vehicle electrical system
- Deactivation by means of bus messages of electric loads such telephone, on reaching the start capability limit of the vehicle

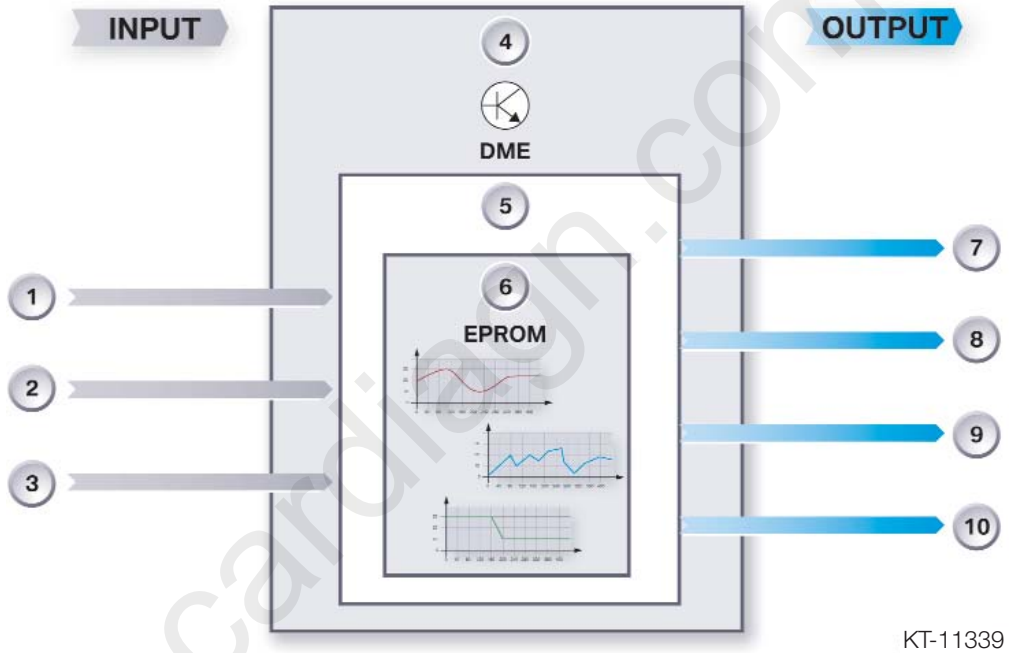

1. Battery Voltage
2. Current Input
3. Temperature Input
4. ECM
5. Power Management
6. EPROM with maps for Voltage,Current and Temp
7. Idle Speed control
8. Specified Alternator Charging Voltage
9. Deactivation of Electrical Loads
10. Peak Load Reduction

Variable Battery Charging Voltage

The variable battery charging voltage function ensures improved charging management of the battery in unfavorable driving situations. The power management controls the temperature dependent voltage for the charging voltage of the alternator via the BSD line.

cardiagn.com

Idle Speed Boost
The idle speed can be increased in situations where the battery does not cover power requirements. When the specified voltage alone is no longer sufficient, the ECM boosts the idle speed corresponding to the engine status.

Reducing Peak Loads
The peak load of the vehicle electrical system is reduced when there is still a shortfall in battery coverage despite boosting idle speed. Peak load reduction is accomplished by:

- Reducing power output, e.g. by controlling the clock cycles of the rear window defogger
- If reducing the power output is not sufficient, individual electric loads can be switched off in extreme situations

Electric Load Cutout
The electric loads in the E60 are divided into the following categories:

- Comfort loads, e.g. window defogger, seat heating, steering wheel heating

Electric loads switch off automatically after engine "OFF." These electric loads can be activated again after the vehicle has been restarted.

- Legally required auxiliary electric loads, e.g. side lights, hazard warning lights

Legally required auxiliary loads must be operational for a certain period of time after engine "OFF." These legally required electric loads are not switched off even on reaching the start capability limit of the battery.

- Auxiliary electric loads, e.g. independent heating, independent ventilation, communication components such as central information display, telephone, telematic services

Auxiliary loads can be switched on after engine "OFF." The comfort electric loads switch off automatically on reaching the start capability limit of the battery. Switch off is requested by the ECM in the form of a CAN message.

- System related afterrunning loads, e.g. electric cooling fan

System related afterrunning loads can maintain operation for a defined period of time.

cardiagn.com

Battery Charge Management
There are 2 "counters" in the ECM power management module. One counter is responsible for the battery charge and the other for the battery discharge level. The state of charge (SoC) of the battery is formed by the difference between the charge acceptance and draw level.

The power management calculates the current SoC value on restarting the vehicle. The power management receives the corresponding data from the IBS via the BSD.

Battery State of Health
The IBS measures the drop in the battery terminal voltage and the starting current of the starter when the vehicle is started. The IBS detects vehicle start based on current draw in excess of 200A. The engine running signal is made available by the ECM. Internal resistance of the battery is calculated from the current and voltage drop.

Starting current and voltage drop determined during the start phase are transferred via the BSD to the ECM. From this data, the power management calculates the battery state of health (SoH).

Data Transfer to the IBS
The following data is transferred via the BSD to the IBS before the ECM assumes sleep mode:

- Battery SoC
- Battery SoH
- Outside (ambient) temperature
- Available discharge level
- Terminal IBS wake-up enable
- Terminal IBS wake-up disable
- ECM enters sleep mode

Notes: _____

cardiagn.com

Workshop Exercise - Power Supply

1. *Where are these components located (in the vehicle) and what are the component numbers?*

	525i / 530i	(545i)
ECM Main Relay	_____	_____
Starter Relay	_____	_____
Fuel Injector Relay	_____	_____

2. *Where are the Engine Management power supply fuses located?*

   525i / 530i _____

   (545i) _____

3. *Does the 525i / 530i have Comfort Start?* _____

   If yes, what component controls this function? _____

   (545i) _____

4. *What new functions do you observe about the mechanical ignition switch (with the key)?*

   _____

   _____

   _____

   _____

   _____

5. *Disconnect the B+ power wire for the IBS (at the battery), is there a Test Plan available?*

   _____

   What Diagnosis, Operation and component selection path(s) did you select to discover if a Test Plan was available? _____

6. *Select Control Unit Functions, Diagnosis Requests. Is there a status under the "Part Functions" column for observing the "Messages and Results" of the IBS?* _____

cardiagn.com

Air Management

Hot Film Air Mass Sensor (HFM)

A new hot film air mass sensor (HFM) manufactured by Siemens is used for the M54 in the E60. The HFM is located behind the air filter housing in the intake air ducting.

KT-10819

1. Intake air temperature sensor
2. Hot film air mass sensor
3. O-ring

The HFM is inserted in the air filter housing (plug in) and secured with two screws. In this position the HFM is freely suspended in the intake air flow. The HFM is more compact in design than its predecessor and the grill is now omitted. This compact design decreases pressure loss in the intake track.

Its operation and output signals are the same as the previous HFM. The intake air temperature sensor is integrated in the HFM.

cardiagn.com

Notes:

Fuel Management

Fuel Tank

The fuel tank is made of high density polyethylene (reduced weight) layers which is manufactured to meet safety requirements.

The fuel tank has a capacity of 70 litres (18.5 gal), including a reserve capacity of 10 litres.

A mid-chassis mounted "saddle" type tank (1) is used providing a tunnel for the driveshaft but creates two separate lower chambers.

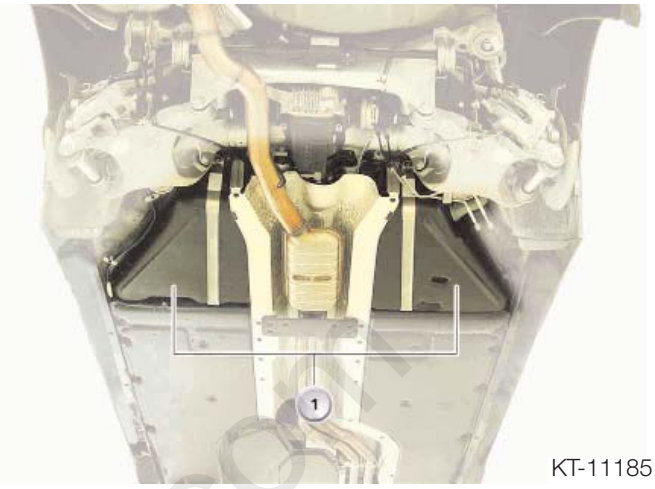

KT-11185

The E60 fuel tank design reduces the potential evaporative emissions. This design reduces the number of external connections and openings by increasing the amount of "in tank" or integral components including molding the filler pipe to the tank.

The fuel tank is held in place by 2 retaining bands. The tank is secured in the middle by a plastic lug formed into the tank. All body contact points are insulated with foam or rubber.

The service access caps are located at the top of the fuel tank. The following components can be accessed from the vehicle interior:

- Right swirl pot, fuel pump, fuel level sensor, suction-jet pump, fuel lines to left tank half and left suction-jet pump.
- Left fuel level sensor, fuel filter and fuel pressure regulator.

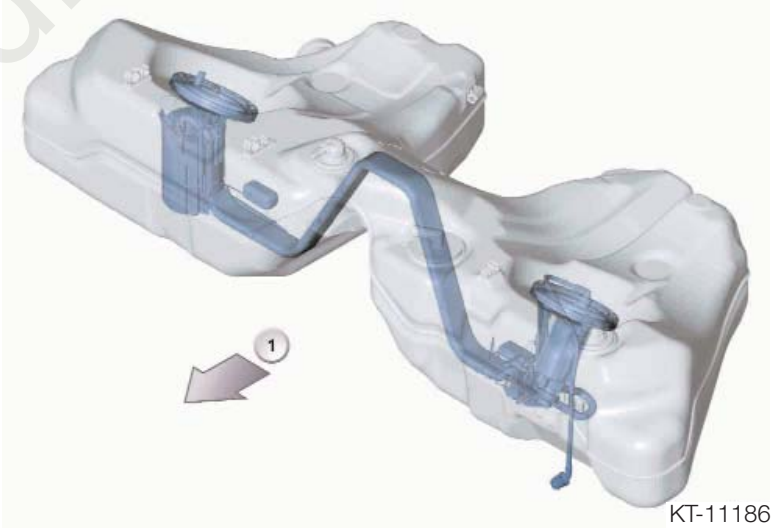

KT-11186

1. Towards front of vehicle

The six pin wiring harness connector is located on the right service cap. The six pin wiring-harness connector has 2 wires for the fuel pump power supply and 2 wires for both fuel level sensors. The fuel feed line is connected to the left service cap with a quick release coupling.

Fuel Delivery Unit

The fuel delivery unit located in the fuel tank ensures bubble free fuel delivery under all operating conditions. In case of service, the left and right fuel delivery units can be removed completely. The two fuel level sensors can be replaced individually.

1. Service access, left
2. Fuel filter
3. Fuel pressure regulator **(3.5 bar)**
4. Fuel delivery unit, left
5. Fuel delivery unit, right
6. Cross over lines
7. Swirl pot
8. Service access, right
9. Tank bottom

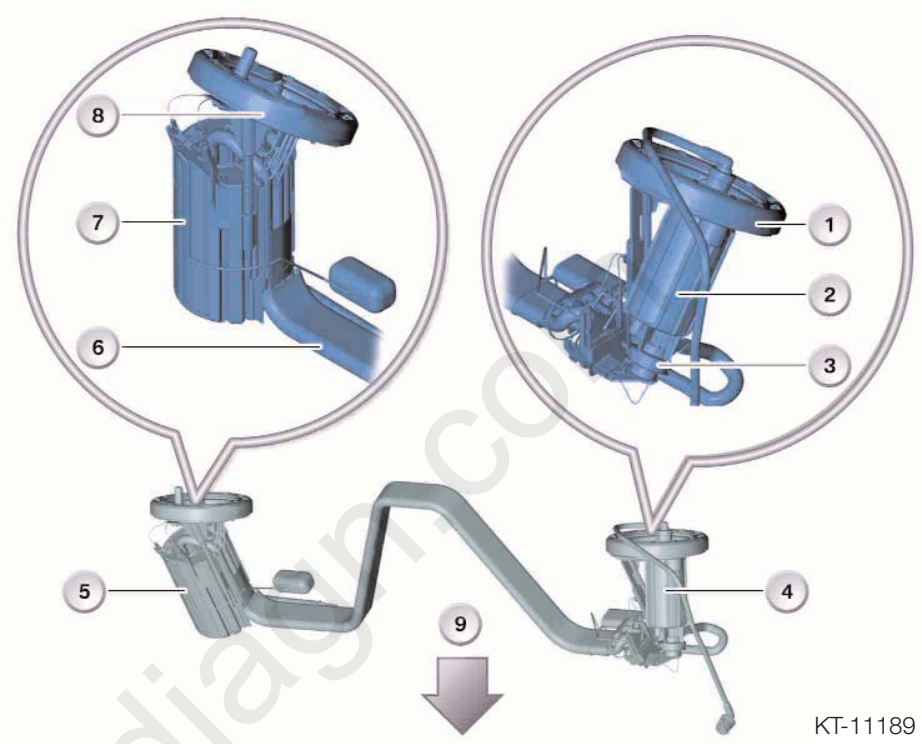

Swirl Pot

The swirl pot contains the electric fuel pump and a suction-jet pump and is open at the top. The base of the swirl pot features an outlet protection valve, which allows fuel to flow from the right tank half into the swirl pot. It prevents the fuel from flowing back into the right tank half (trap).

The swirl pot ensures that the fuel pump is always immersed in fuel so that the pump does not draw in air. Bubble free fuel delivery is very important particularly at low fuel levels and under high driving dynamics conditions when the tank is almost completely empty.

Notes: _____

Fuel System

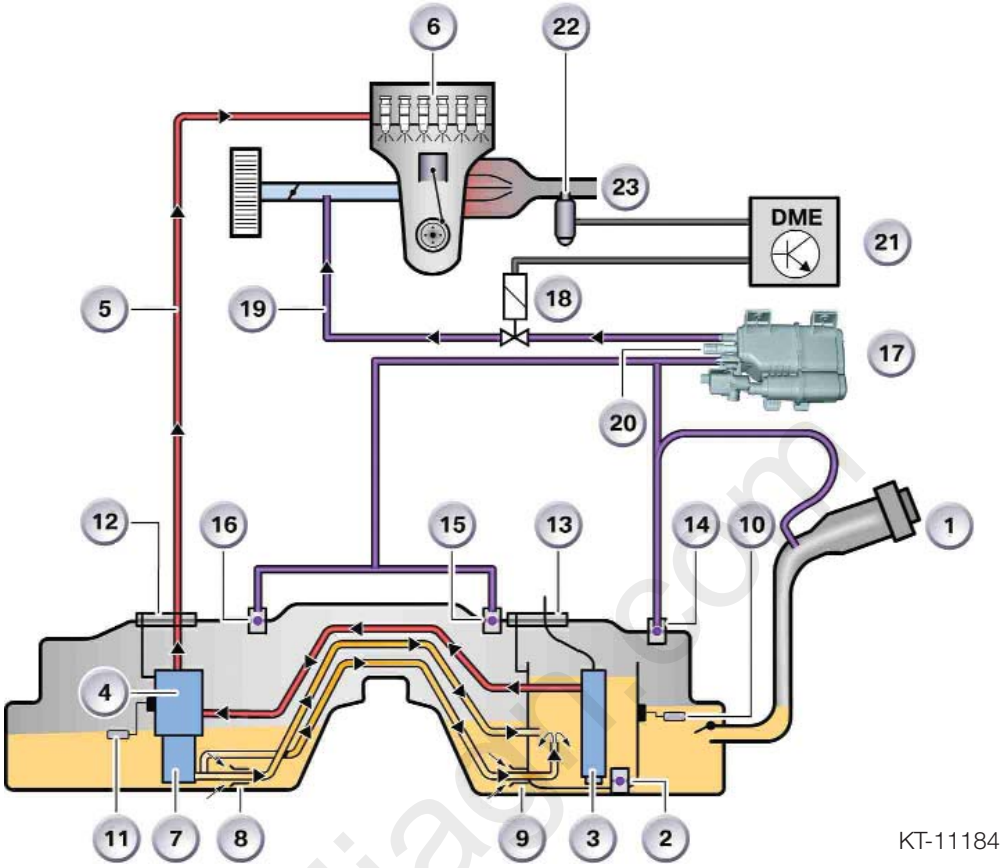

1. Filler neck
2. Outlet protection valve
3. Electric fuel pump
4. Fuel filter
5. Fuel supply line
6. Fuel injectors/rail
7. Fuel pressure regulator
8. Suction-jet pump, left
9. Suction-jet pump, right
10. Fuel level sensor, right
11. Fuel level sensor, left
12. Service access cap, left
13. Service access cap, right
14. Filling vent valve
15. Service vent valve
16. Service vent valve
17. DMTL with activated carbon canister
18. Tank vent valve (evap. purge)
19. Evaporative purge air
20. Air filter
21. ECM
22. Oxygen sensor (pre-catalyst)
23. Exhaust manifold

cardiagn.com

Fuel Delivery

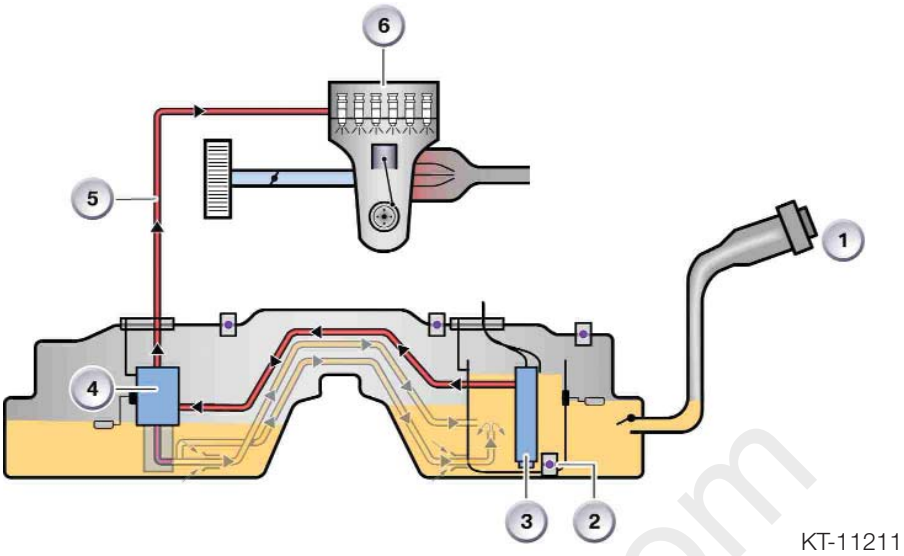

1. Filler pipe
2. Outlet protection valve
3. Electric fuel pump
4. Fuel filter
5. Feed line
6. Fuel injectors/rail

Fuel Flow: Right tank half => swirl pot => fuel pump => fuel filter => fuel rail.

The fuel is pumped into the right tank half. The swirl pot contains the electric fuel pump. Fuel passes through the valve incorporated in the base of the swirl pot into the swirl pot. When the fuel level is higher, fuel also enters the swirl pot from the top.

The electric fuel pump draws in the fuel from the swirl pot *(fuel pump relay located in glove-box)*. It pumps the fuel into the fuel filter in the left tank half. The fuel flows from the fuel filter through the feed line to the fuel rail.

Fuel Level Sensors

The fuel tank contains 2 sensors, one in each tank half. The tank sensors operate with float elements, which are attached to a pivoted arm (angle measurement). A specific angle of the sensor joint corresponds to each tank chamber fill level.

The sensor joint incorporates a potentiometer with wipers and resistor paths. Every angle has a specific resistance value. The sensor is supplied with 5 Volts by the instrument cluster and measures the voltage drop by the current resistance on which the wiper is resting.

The voltage drop measured is processed in the instrument cluster as follows:

- Conversion into a fuel level for the two chambers (on the basis of a comparison table)
- Display of the fuel level

cardiagn.com

Fuel Pressure Regulation

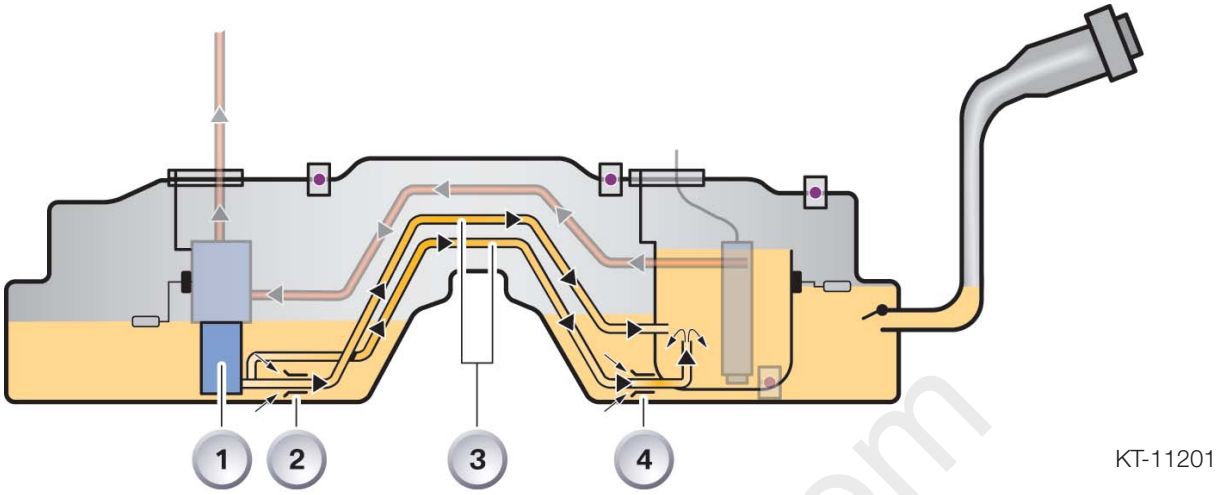

1. Fuel pressure regulator **(3.5 bar)**
2. Suction-jet pump, left
3. Return line
4. Suction-jet pump, right

Fuel Flow: From pressure regulator => suction-jet pump in left tank half and suction-jet pump in right tank half => swirl pot in right tank half.

The suction-jet pumps direct the fuel from the left and right tank halves into the swirl pot. This ensures that the electric fuel pump always has a sufficient supply of fuel available.

The fuel filter incorporates the pressure regulator. The pressure regulator is a spring loaded diaphragm regulator, which limits the pressure in the fuel feed line to *3.5 bar* (for M54).

When the pressure rises above 3.5 bar, the pressure regulator opens a discharge port. The excess fuel flows back through the discharge port into the right tank half (swirl pot) and drives the two suction-jet pumps (non-return fuel system). The fuel feed line delivers the fuel at 3.5 bar to the fuel rail.

Workshop Exercise - Fuel Management

Using the mock up cut away fuel tank assembly:

1. Remove the service access caps, fuel pump and fuel filter.

cardiagn.com

Emissions Management - M54B25 / M54B30 Ultra Low Emission Vehicle II (ULEV II)

LEV II - Amendments to Low-Emission Vehicle regulations

At its November 1998 meeting, the Air Resources Board (ARB) amended California's Low-Emission Vehicle (LEV) regulations. The new amendments, known as LEV II, will advance the state's clean air goals through improved emission reduction standards for automobiles. The ARB first adopted LEV standards in 1990. These first LEV standards run from 1994 through 2003.

LEV II regulations, running from 2004 through 2010, represent continuing progress in emission reductions. As the state's passenger vehicle fleet continues to grow and more sport utility vehicles and pickup trucks are used as passenger cars rather than work vehicles, the new, more stringent LEV II standards are necessary for California to meet federally-mandated clean air goals outlined in the 1994 State Implementation Plan (SIP).

LEV II brings the advanced emission controls of passenger cars to light trucks and sport utility vehicles;

- Near-zero evaporative emissions
- Advanced electronic engine management and on-board diagnostic systems
- More efficient catalysts
- Increased engine durability

cardiagn.com

The SIP is the state's "road map" to attain federal clean air standards by 2010 and includes among its measures strategies to further reduce air pollution from automobiles and other mobile sources. When LEV II is fully implemented in 2010, it is estimated that smog-forming emissions in the Los Angeles area will be reduced by 57 tons per day, while the statewide reduction will be 155 tons per day.

The U.S. EPA has proposed the adoption of more stringent "Tier 2" (II) exhaust emission standards to start with the 2004 model year. The current federal evaporative emission standards are very similar to the current California standards. The more stringent California LEV I and LEV II programs are necessary to attain the national and state ambient ozone standards, and to fulfill the requirements of state and federal law.

Evaporative Emissions Standards

Evaporative emissions from motor vehicles account for approximately half of the reactive organic gas (ROG) motor vehicle emission inventory in the state, and are classified into three types - running loss, hot soak and diurnal emissions.

- Running loss emissions occur when the vehicle is driven.
- Hot soak emissions occur immediately after a fully-warmed up vehicle is stationary with the engine turned off.
- Diurnal (daily, happening every day) emissions occur when a vehicle is parked and are caused by daily ambient temperature changes. Most of these emissions result during increasing ambient temperatures which cause an expansion of the vapor in the fuel tank.

Exhaust Emission Reductions

The LEV II amendments include three major interrelated elements designed to reduce to exhaust emissions:

- Restructuring the light-duty truck category so that most SUVs, mini-vans and pick-up trucks are subject to the same low-emission vehicle standards as passenger cars
- Strengthening the NOx standard for passenger car and light-duty truck LEVs and ULEVs, and changing other emission standards
- Establishing more stringent 2004 and subsequent model year phase-in requirements for passenger cars, lightduty trucks and medium-duty vehicles. They also contain various other changes, including elimination of the TLEV standard after the 2003 model year.

The LEV II Amendments

The LEV II amendments affect passenger cars, light-duty trucks, and medium-duty vehicles. The main elements are:

- Extension of passenger car emission standards to heavier sport utility vehicles and pick up trucks (with gross vehicle weight up to 8,500 pounds) which formerly had been regulated under less stringent emission standards.
- Extension and tightening of the fleet average emission standards during 2004-2010 (a fleet includes all new vehicles from an auto manufacturer)
- Creation of a new super-ultra low emission vehicle (SULEV) category for light-duty vehi cles (SULEV's will only emit a single pound of hydrocarbons during 100,000 miles of driving - about the same as spilling a pint of gasoline)

cardiagn.com

- Significantly lower oxides of nitrogen emission standards for the low and ultra-low emission vehicle categories, a reduction of 75% from the current LEV standards

- Increased emission control durability standards from 100,000 miles to 120,000 miles for passenger cars and light trucks

- Further reduction of evaporative emissions

- Creation of partial zero-emission vehicle (ZEV) credits for vehicles that achieve near zero emissions. The credits would include full ZEV credit for a stored hydrogen fuel cell vehicle, 0.7 credit for methanol reformer fuel cell vehicles, 0.4 credit for a compressed natural gas SULEV and 0.2 for a gasoline fueled SULEV

- Changes in how the smog index is calculated

- Amendments to the zero-emission and hybrid electric vehicle test procedures

- Removal of a less stringent emission standard that would have resulted in increased sales of new diesel cars, pickups, and SUVs.

cardiagn.com

E60 Evaporative Emissions

The control of the evaporative fuel vapors (Hydrocarbons) from the fuel tank is important for the overall reduction in vehicle emissions. The evaporative system has been combined with the ventilation of the fuel tank, which allows the tank to breath (equalization). The overall operation provides:

- An inlet vent, to an otherwise “sealed” fuel tank, for the the entry of air to replace the fuel consumed during engine operation.

- An outlet vent with a storage canister to “ trap and hold” fuel vapors that are produced by the expansion/evaporation of the fuel in the tank, when the vehicle is stationary.

The canister is then "purged" using the engine vacuum to draw the fuel vapors into the combustion chamber. This "cleans" the canister allowing for additional storage. Like any other form of combustible fuel, the introduction of these vapors on a running engine must be controlled.

The ECM controls the Evaporative Emission Valve which regulates purging of evaporative vapors. The evaporative system must be monitored for correct purge operation and Leak Detection.

The E60 fuel tank design reduces the potential evaporative emissions. This design reduces the number of external connections and openings by increasing the amount of “in tank” or integral components including molding the filler pipe to the tank. In addition, the plastic walls of the fuel tank are made up of several layers.

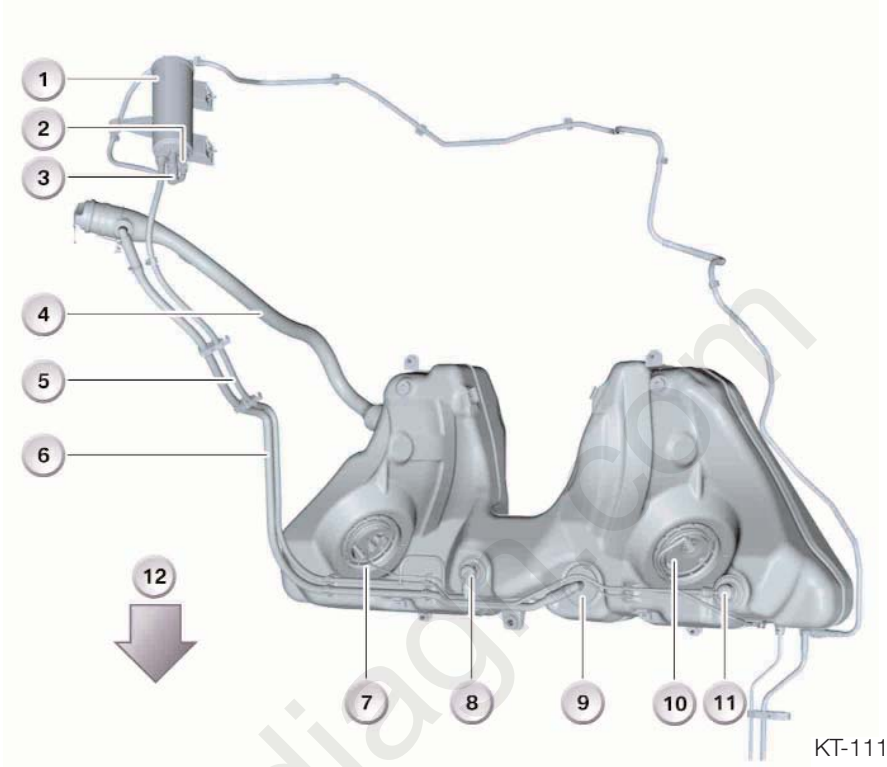

1. Activated carbon canister (with DMTL)
2. Port, purge air line
3. Fresh air filter
4. Filler neck
5. Service vent line
6. Filler vent line
7. Service access cap, right
8. Service vent valve
9. Filler vent valve
10. Service access cap, left
11. Service vent valve
12. Towards front of vehicle

Note: The distinction between the following vent gases:

- Service vent gases - service vent gases are created at high ambient temperatures by heating of the fuel.
- Filler vent gases - filler vent gases are created by the air displaced by fuel during refuelling.

cardiagn.com

Service Venting System

The service venting system is integrated in the tank system and ensures pressure compensation in the tank for the following situations:

Reduction of Excess Pressure
Excess pressure is generated by heating of fuel. The gases rising from the tank flow through the service vent valves and the vent lines to the activated carbon filter.

Compensation of Negative Pressure
Negative pressure is generated by the fuel pump pumping off the fuel. The air is routed in the opposite direction for pressure compensation. Fresh air is routed to the fuel tank via the DMTL fresh air filter on the activated carbon filter.

Valves for Ventilation and Venting

Service Vent Valves
The fuel tank incorporates 2 service vent valves with a rollover function: if the car is inclined at an angle exceeding 45º (impending or actual rollover situation), the floats in the service vent valves close off the vent apertures. This prevents any fuel from escaping through the activated carbon filter.

A compensating volume is required in the fuel tank for the service venting function. This compensating volume is the space above the fuel level when the fuel tank is completely full (approx. 6 liters). The compensating volume remains unfilled when automatic cutout of the fuel pump nozzle is triggered.

Pressure Relief Valve
Any damage to the vent lines or the activated carbon filter may result in a pressure increase in the fuel tank. To prevent such a pressure increase, the filler cap incorporates a 300 mbar pressure relief valve.

Notes: _____

cardiagn.com

Filler Venting System

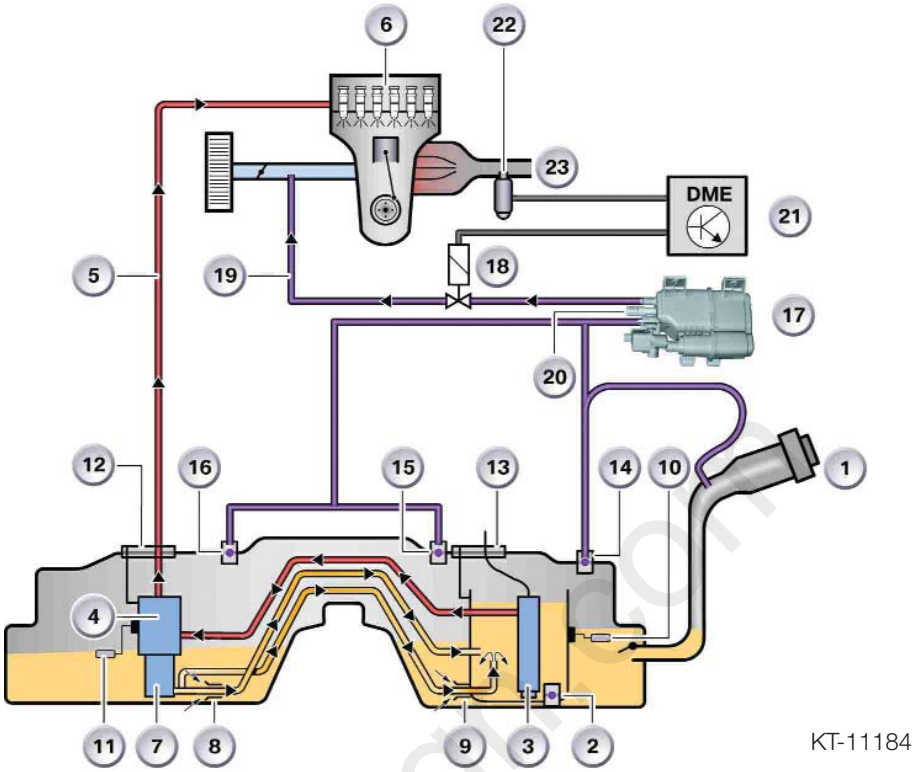

1. Filler neck
2. Outlet protection valve
3. Electric fuel pump
4. Fuel filter
5. Fuel supply line
6. Fuel injectors/rail
7. Fuel pressure regulator
8. Suction-jet pump, left
9. Suction-jet pump, right
10. Fuel level sensor, right
11. Fuel level sensor, left
12. Service access cap, left
13. Service access cap, right
14. Filling vent valve
15. Service vent valve
16. Service vent valve
17. DMTL with activated carbon canister
18. Tank vent valve (evap. purge)
19. Evaporative purge air
20. Air filter
21. ECM
22. Oxygen sensor (pre-catalyst)
23. Exhaust manifold

Refuelling

The following safety requirements are met when the tank is filled:

- Grounding - The filler neck is provided with a metal bayonet collar which accommodates the filler cap or the fuel pump nozzle. The filler neck is grounded by the cap or fuel nozzle insertion.
- Prevention of fuel sloshing back - A slosh baffle is fitted where the filler neck enters the tank. This prevents the fuel from sloshing back into the filler pipe.

cardiagn.com

On-Board Refueling Vapor Recovery (ORVR - DM TL Equipped Vehicles)
The ORVR system recovers and stores hydrocarbon fuel vapor during refueling. When refueling the E60, the pressure of the fuel entering the tank forces the hydrocarbon vapors through the Filling Vent Valve (14) and the large tank ventilation line into the Carbon Canister (17). The HC's are stored in the Carbon Canister and the system can then "breathe" through the DM TL and the fresh air filter.

Note: A small diameter connection to the filler neck is provided and is necessary for checking the filler cap/neck during Evaporative Leak Testing.

The ventilation continues until the rising fuel level lifts the float in the Filling Vent Valve (14) and closes the outlet. When the ventilation outlet is closed, a pressure cushion (vapor area) is created in the fuel tank. This creates a backup of fuel into the filler neck and the tank is full.

This leaves a vapor area of approximately 6 liters above the fuel level. This area provides integral liquid/vapor separation. The vapor condensates separate and drain back into the fuel. The remaining vapors exit the fuel tank (when sufficient pressure is present) through the Service Vent Valves (15 & 16) to the Carbon Canister.

Note: The Service Vent Valves are also equipped with protection floats in the event of an "overfill" situation.

cardiagn.com

E60 Exhaust Emissions

The combustion process of a gasoline powered engine produces Carbon Monoxide (CO), Hydrocarbons (HC) and Oxides of Nitrogen (NOx).

- Carbon Monoxide is a product of incomplete combustion under conditions of air deficiency. CO emissions are dependent on the air/fuel ratio.
- Hydrocarbon are also a product of incomplete combustion which results in unburned fuel. HC emissions are dependent on air/fuel ratio and the ignition of the mixture.
- Oxides of Nitrogen are a product of peak combustion temperature (and temperature duration). NOx emissions are dependent on internal cylinder temperature affected by the air/fuel ratio and ignition of the mixture.

Control of exhaust emissions is accomplished by the engine and engine management design as well as after-treatment.

- The ECM manages exhaust emissions by controlling the air/fuel ratio and ignition.
- The ECM controlled Secondary Air Injection further dilutes exhaust emissions leaving the engine and reduce the catalyst warm up time.
- The Catalytic Converter further reduces exhaust emissions leaving the engine.

Secondary Air Injection

Injecting ambient air into the exhaust stream after a cold engine start reduces the warm up time of the catalysts and reduces HC and CO emissions. The ECM controls and monitors the Secondary Air Injection.

An Electric Secondary Air Pump and Air Injection Valve direct fresh air through an internal channel in the cylinder head into the exhaust ports.

The Air Injection Valve is opened by air pressure (from the pump) and is closed by an internal spring.

KT-11179

1. Secondary air (injection) valve
2. Secondary air filter
3. Mini Hot film air mass sensor (HFM)
4. Intake hose
5. Secondary air pump (SLP)

The secondary air pump is equipped with an additional intake hose (4) to accommodate a secondary air filter with the mini HFM (3). The mini HFM is secured in the secondary air cleaner with two screws.

Mini Hot Film Air Mass Sensor (HFM)

A compact mini hot film air mass sensor (HFM manufactured by Siemens) is used in the secondary air system for the M54 in the E60 (US market).

The mini HFM detects the air mass supplied by the secondary-air pump. This function monitors the secondary air system for OBD compliance.

When the mini HFM detects no air mass or insufficient air mass, a fault is stored in the ECM and the Malfunction Indicator Light (MIL) is activated.

The mini HFM has a compact pipe shaped design with O-ring connections.

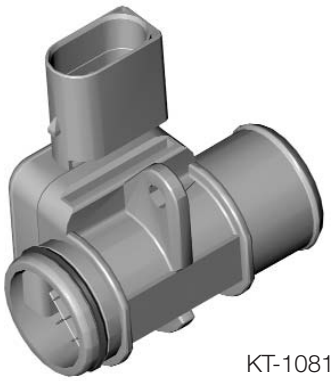
KT-10817

cardiagn.com

The “Malfunction Indicator Light” (MIL) will be illuminated under the following conditions:

- Upon the completion of the ***next consecutive driving cycle*** where the previously faulted system is monitored again and the emissions relevant fault is again present.

- Immediately if a “Catalyst Damaging” fault occurs.

KT-10888

The illumination of the light is performed in accordance with the Federal Test Procedure (FTP) which requires the lamp to be illuminated when:

- A malfunction of a component that can affect the emission performance of the vehicle occurs and causes emissions to exceed the standards required by the (FTP).

- Manufacturer-defined specifications are exceeded.

- An implausible input signal is generated.

- Catalyst deterioration causes HC-emissions to exceed the standard (FTP) limit.

- Misfire faults occur.

- A leak is detected in the evaporative system, or “purging” is defective.

- ECM fails to enter closed-loop oxygen sensor control operation within a specified time interval.

- Engine control or automatic transmission control enters a "limp home" operating mode.

- Ignition is on (KL15) position before cranking = *Bulb Check Function*.

Within the BMW system the illumination of the Malfunction Indicator Light is performed in accordance with the regulations set forth in CARB and as demonstrated via the Federal Test Procedure (FTP).

cardiagn.com

The "Malfunction Indicator Light" can be diagnosed with an aftermarket Scan Tool that allows Technicians without BMW Special Tools or Equipment to Diagnose an emission system failure.

KT-061703

With the use of a universal scan tool, connected to the *"OBD" DLC (located in the driver's side lower A-pillar area)* an SAE standardized DTC can be obtained, along with the condition associated with the illumination of the "Malfunction Indicator Light".

Using the DISplus or GT1, a fault code and the conditions associated with its setting can be obtained prior to the illumination of the "Malfunction Indicator Light".

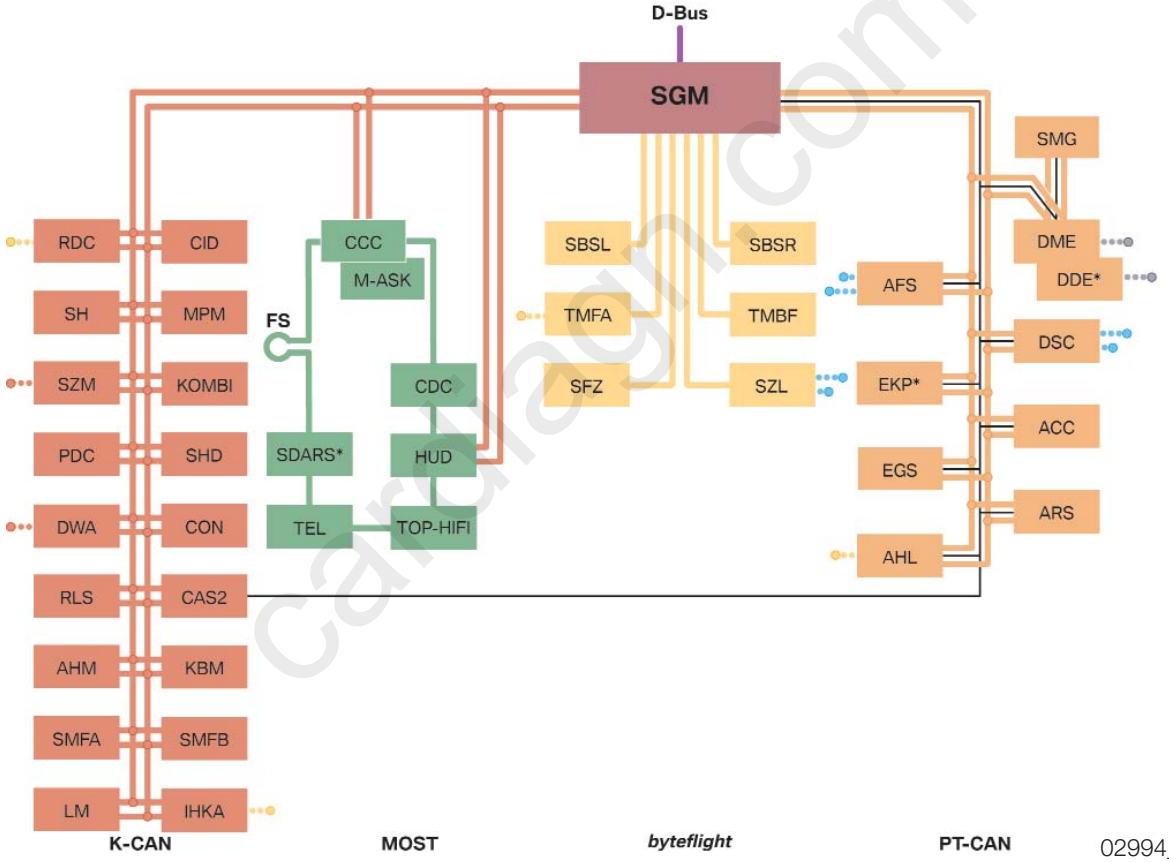

02994_02b

There is no direct connection to the OBD diagnostic connector. The ECM is connected to the SGM via the PT-CAN Bus. The OBD diagnostic connector is connected to the SGM via the Diagnosis Bus.

The hardwire shown above between the CAS2 and the PT-CAN control modules is the KL15 (w up) signal.

Workshop Exercise - Emissions Management

1. *What are the pin and connector numbers at the ECM for the Mini HFM?*

   _____

2. *Is there a Test Plan available for the mini HFM?* _____

   If so, disconnect the Mini HFM and activate the Test Plan.

   Reconnect the Mini HFM, clear fault codes and activate the Test Plan again. What do you observe? _____

   _____

3. *Select Control Unit Functions, Diagnosis Requests. Is there a status under the "Part Functions" column for observing the "Messages and Results" of the Mini HFM?* _____

4. *Is there a "Component Activation" feature for the Secondary Air Pump?* _____

   If so, install the appropriate break out box and observe voltage at the ECM on the circuit that measures the Mini HFM signal.

   With the voltmeter displayed, Component Activate the Secondary Air Pump, what voltage did you observe? _____

Note: QC1 Test Drive
With the introduction of Seimens MS45 and MS45.1 engine management systems the QC1 test drive shall now include the following procedure. This procedure needs to be performed prior to vehicle delivery to ensure all emission relevant adaptations are validated within the ECM (DME).

From a stop, accelerate moderately in 1st gear (M1 for automatic). Shift to 2nd gear (M2 for automatic) and accelerate to 4500rpm minimum. Leaving car in gear, allow vehicle to decelerate without touching brakes or accelerator pedal until 1000 rpm is seen. During the deceleration there will be a small bump (load reversal) felt at approximately 1200rpm.

These engine management systems will be in many future products so it is important to get into the habit of performing this procedure prior to new vehicle delivery. This procedure is not necessary on existing vehicles or those programmed at a Center.

cardiagn.com

Performance Controls

Driving Dynamics Control (FDC with SMG - if equipped)

The MS45.1 ECM contains two different throttle progression functions (Sport and Normal). The FDC function is selected by pressing the “SPORT” button located in the center console (1).

KT-11846

When pressed, the button provides an input signal to the center console switch center (SZM). The signal is transmitted from the SZM via the K-CAN > SGM > PT-CAN to the ECM and the power steering.

This activates the sport characteristics for the Electronic throttle control (EDK). This provides an increase in throttle opening and response time over the non-sport position.

When this function is activated, “SPORT” appears in the LC display in the instrument cluster. When the ignition is cycled, this function resets back to the non-sport function (it must be re-selected by the driver).

cardiagn.com

Workshop Exercise - Performance Controls

1. What are the pin and connector numbers at the SZM for the SPORT button?

_____

2. Is there a Test Plan available for FDC ? _____

3. Select Control Unit Functions, Diagnosis Requests. Is there a status under the “Part Functions” column for observing the “Messages and Results” for the SPORT button?

_____

If so, what status did you observe (activate and deactive function with the button)?

_____

ME 9.2

Purpose of the System

The ME 9.2 system (in the N62 equipped E60 - 545i) manages the following functions:

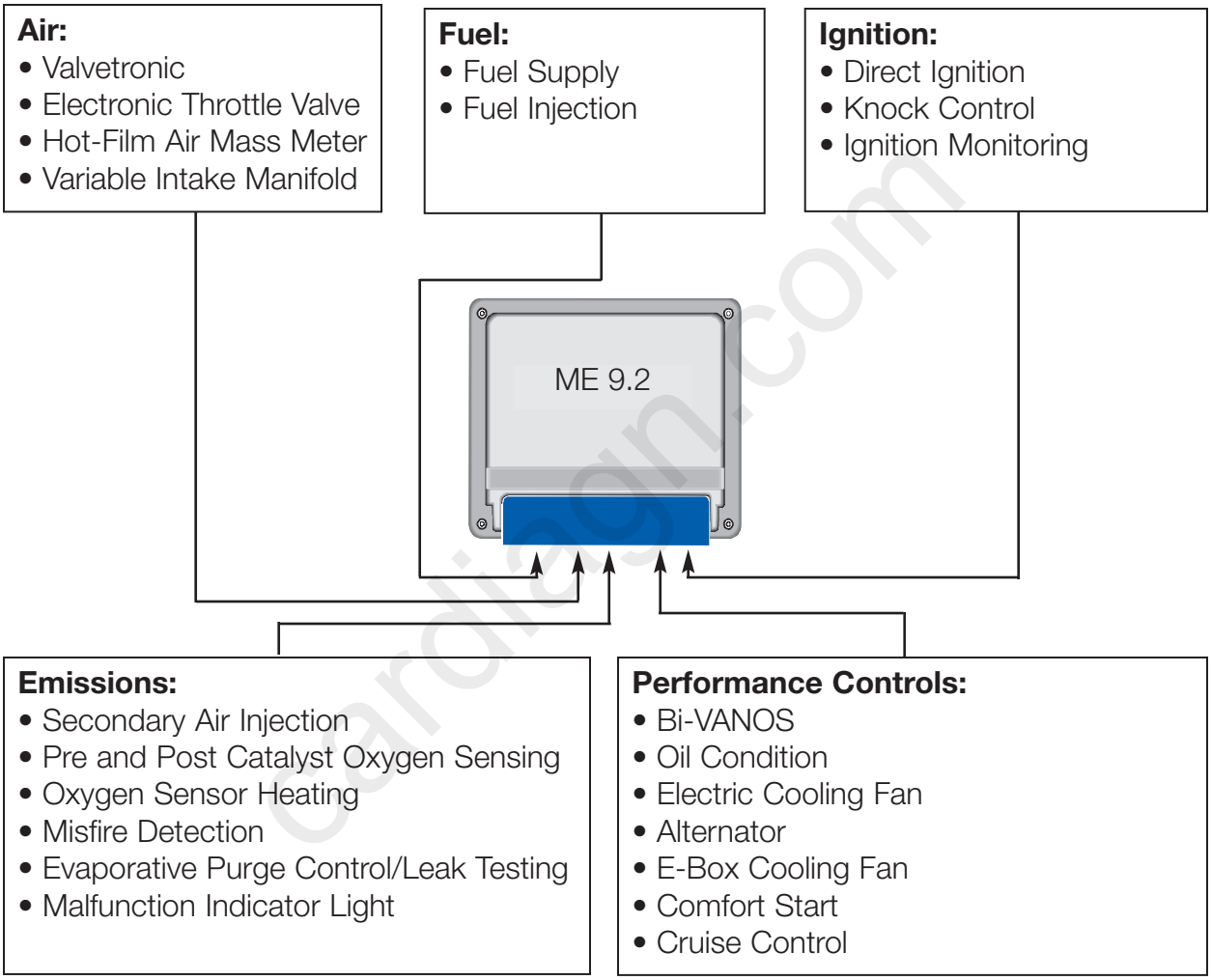

cardiagn.com

The basic engine management inputs, processes and outputs are not included in this module because they have not changed, refer to the ST055 Engine Electronics Technical Training hand out for additional detailed information. Also, refer to ST042 E65 Part 2 Technical Training hand out for additional detailed information on the ME 9.2 Engine Management System.

System Components

ME 9.2 Engine Control Module - Features: This Bosch engine management system is introduced for more stringent emission requirements as well as reducing fuel consumption and increasing driving performance. A flash EEPROM is used as the storage medium for the program data, fault code memory as well as the adaptation values. The ECM works in combination with the Valvetronic Control Module. Both Control Modules control the N62 engine:

- ME 9.2 ECM - overall engine management
- Valvetronic Control Module - intake valve lift

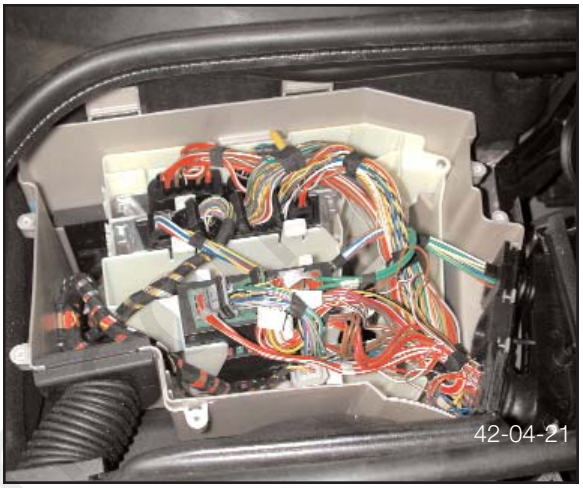
42-04-21

The ECM is located in the electronic box in the engine compartment together with the Valvetronic Control Module and the Inte-grated Voltage Supply Module.

The ECM controls an electric cooling fan in the base of the electronic box to draw in cool air from the passenger compartment.

The 134 pin ME 9.2 ECM is manufactured by Bosch to BMW specifications. The ECM is the SKE (standard shell construction) housing and uses 5 modular connectors.

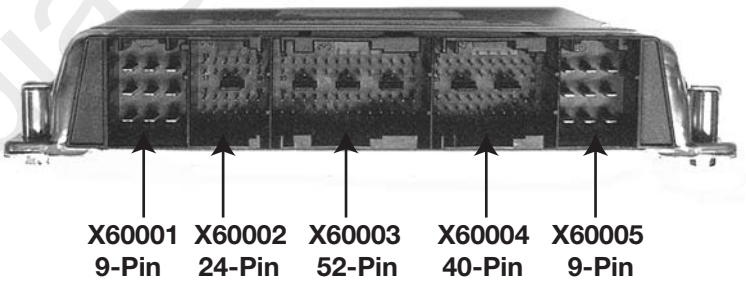

42-04-22

For testing, use the Universal Adapter Set (break-out box) Special Tool: *# 90 88 6 121 300*

Starting with the ME 9.2 system, a *Multichannel Adapter Tool* is used in conjunction with the DISplus to perform the complete N62 Engine Test (found under Service Functions).

W12 1 310

The Multichannel Adapter Tool is installed (in series) between the ECM and the engine harness connectors (1, 3 and 5). In addition, the four cables of MFK2 plug into the adapter surface.

ME 9.2 ECM Inputs - Processing - Outputs (example from E65)

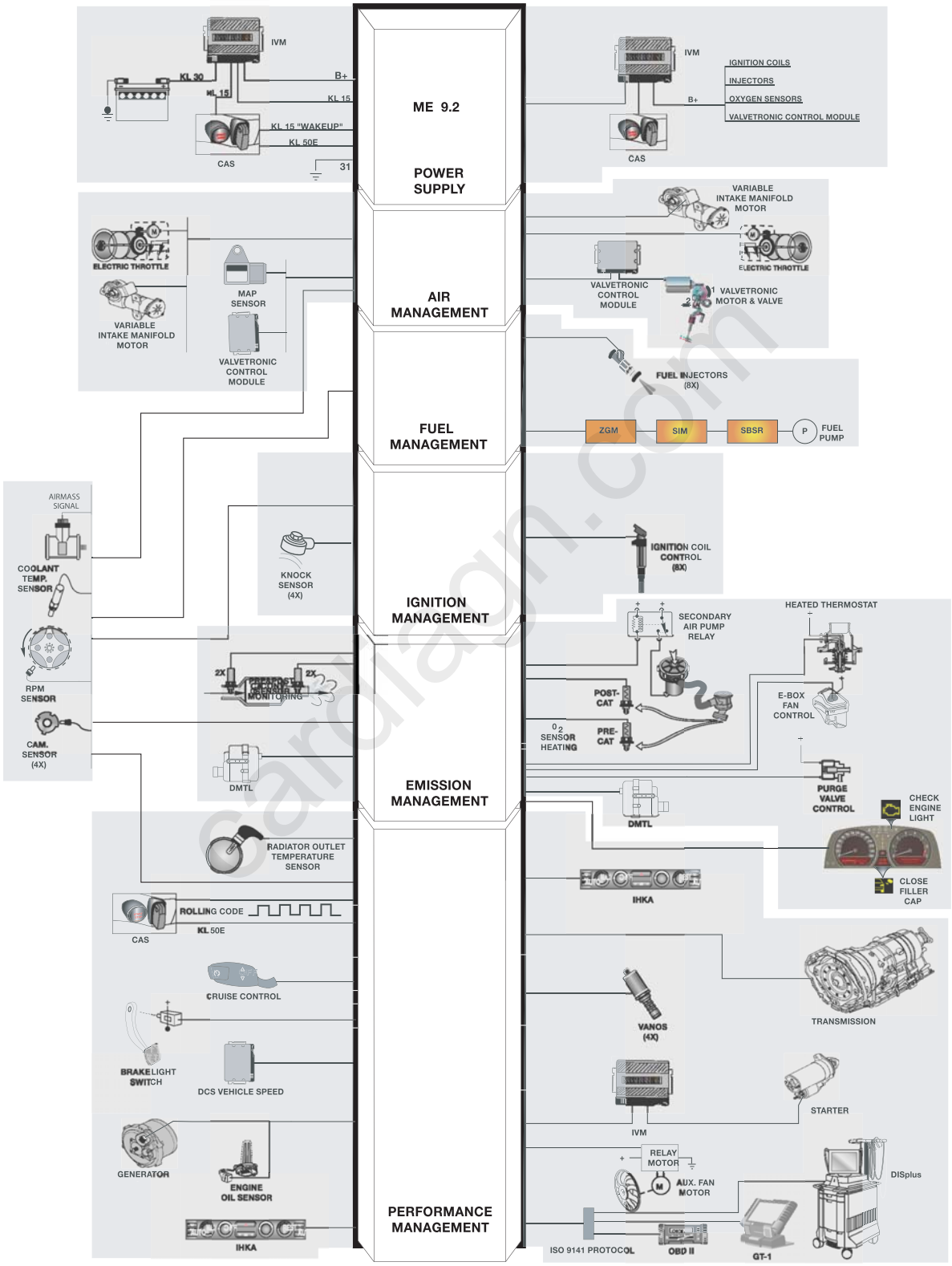

cardiagn.com