HS 250h

Hybrid
2010 Model
Emergency Response Guide

© 2009 Toyota Motor Corporation
All rights reserved. This document may not be
altered without the written permission of Toyota Motor Corporation.

10 Lexus HS250h ERG REV – (06/22/09)

Downloaded from www.Manualslib.com manuals search engine

Foreword

In July 2009, Lexus released the 2010 Lexus HS250h gasoline-electric hybrid vehicle in North America. To educate and assist emergency responders in the safe handling of the HS250h hybrid technology, Lexus published this HS250h Emergency Response Guide.

High voltage electricity powers the electric motor, generator, air conditioning compressor and inverter/converter. All other automotive electrical devices such as the headlights, radio, and gauges are powered from a separate 12 Volt auxiliary battery. Numerous safeguards have been designed into the HS250h to help ensure the high voltage, approximately 244.8 Volt, Nickel Metal Hydride (NiMH) Hybrid Vehicle (HV) battery pack is kept safe and secure in an accident.

The HS250h utilizes the following electrical systems:
- Maximum 650 Volts AC
- Nominal 244.8 Volts DC
- Nominal 12 Volts DC

HS250h Features:
- A boost converter in the inverter/converter that boosts the available voltage to the electric motor to 650 Volts.
- A high voltage Hybrid Vehicle (HV) battery pack rated at 244.8 Volts.
- A high voltage motor driven Air Conditioning (A/C) compressor rated at 244.8 Volts.
- A body electrical system rated at 12 Volts, negative chassis ground.
- Supplemental Restraint System (SRS) - dual stage frontal airbags, front knee airbags, front seat and rear seat side airbags, side curtain airbags and front and rear seat belt pretensioners.

High voltage electrical safety remains an important factor in the emergency handling of the HS250h Lexus Hybrid Drive. It is important to recognize and understand the disabling procedures and warnings throughout the guide.

Additional topics in the guide include:
- HS250h identification.
- Major Lexus Hybrid Drive component locations and descriptions.
- Extrication, fire, recovery, and additional emergency response information.
- Roadside assistance information.

2010 Model Year HS250h

This guide is intended to assist emergency responders in the safe handling of an HS250h vehicle during an incident.

NOTE:
Emergency Response Guides for Lexus hybrid vehicles may be viewed at http://techinfo.lexus.com.

Downloaded from www.Manualslib.com manuals search engine

Table of Contents

Table of Contents	Page
About the HS250h	1
HS250h Identification	2
Lexus Hybrid Drive Component Locations & Descriptions	5
Smart Key System	8
Electronic Gearshift Selector	10
Lexus Hybrid Drive Operation	11
Hybrid Vehicle (HV) Battery Pack	12
Low Voltage Battery	13
High Voltage Safety	14
SRS Airbags & Seat Belt Pretensioners	15
Emergency Response	17
Extrication	17
Fire	24
Overhaul	25
Recovering/Recycling of NiMH HV Battery Pack	25
Spills	26
First Aid	26
Submersion	27
Roadside Assistance	28

Downloaded from www.Manualslib.com manuals search engine

About the HS250h

The HS250h sedan joins the LS 600h L, RX 450h and GS 450h as a hybrid model for Lexus. Lexus Hybrid Drive means that the vehicle contains a gasoline engine and an electric motor for power. The two hybrid power sources are stored on board the vehicle:

1. Gasoline stored in the fuel tank for the gasoline engine.
2. Electricity stored in a high voltage Hybrid Vehicle (HV) battery pack for the electric motor.

The result of combining these two power sources is improved fuel economy and reduced emissions. The gasoline engine also powers an electric generator to recharge the battery pack; unlike a pure all electric vehicle, the HS250h never needs to be recharged from an external electric power source.

Depending on the driving conditions one or both sources are used to power the vehicle. The following illustration demonstrates how the HS250h operates in various driving modes.

❶ During light acceleration at low speeds, the vehicle is powered by the electric motor. The gasoline engine is shut off.

❷ During normal driving, the vehicle is powered mainly by the gasoline engine. The gasoline engine also powers the generator to recharge the battery pack.

❸ During full acceleration, such as climbing a hill, both the gasoline engine and the electric motor power the vehicle.

❹ During deceleration, such as when braking, the vehicle regenerates kinetic energy from the front wheels to produce electricity that recharges the battery pack.

❺ While the vehicle is stopped, the gasoline engine and electric moto are off, however the vehicle remains on and operational.

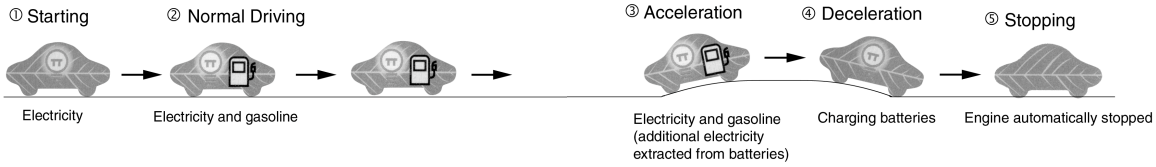

Downloaded from www.Manualslib.com manuals search engine

HS250h Identification

In appearance, the 2010 model year HS250h is a 4-door sedan. Exterior, interior, and engine compartment illustrations are provided to assist in identification.

The alphanumeric 17 character Vehicle Identification Number (VIN) is provided in the front windshield cowl and on the driver side B pillar.

Example VIN: JTHBB1BAA82020211

An HS250h is identified by the first 8 alphanumeric characters **JTHBB1BA**.

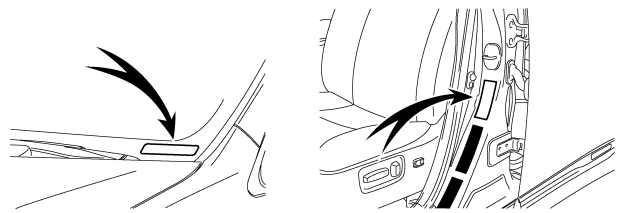

Driver Side Windshield Cowl and Driver Side B Pillar

Exterior

❶ LEXUS and HS 250h logos on the trunk door.
❷ HYBRID logos on the rear door moldings.
❸ Gasoline fuel filler door located on driver side rear quarter panel.

Exterior Driver Side View

Exterior Front and Rear View

Exterior Rear and Driver Side View

Downloaded from www.Manualslib.com manuals search engine

HS250h Identification (Continued)

Interior

❹ Instrument cluster (speedometer, power meter, **READY** light, shift position indicators, warning lights) located in the dash behind the steering wheel.

❺ In place of a tachometer, a power meter is used to show power output.

NOTE:
If the vehicle is shut off, the instrument cluster gauges will be "blacked out", not illuminated.

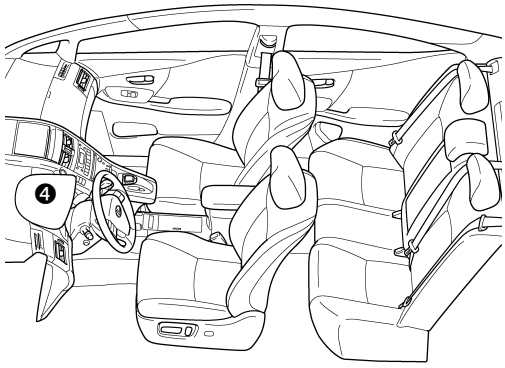

Interior View

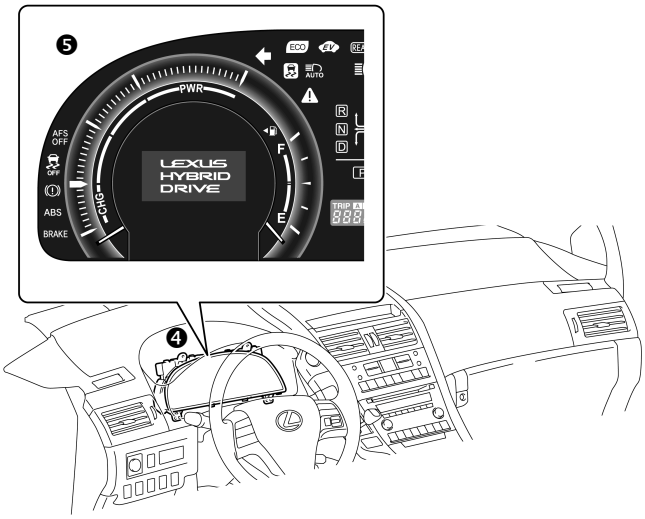

Instrument Cluster View

Downloaded from www.Manualslib.com manuals search engine

HS250h Identification (Continued)

Engine Compartment

❻ 2.4-liter aluminum alloy gasoline engine.

❼ Logo on the plastic engine cover.

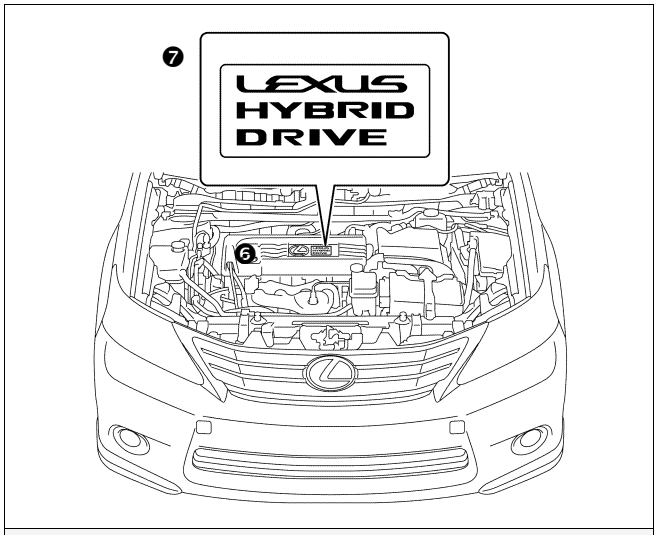

Engine Compartment View

Downloaded from www.Manualslib.com manuals search engine

Lexus Hybrid Drive Component Locations & Descriptions

Component	Location	Description
12 Volt ❶ Auxiliary Battery	Trunk Passenger Side and Behind Rear Seat	A lead-acid battery that supplies power to the low voltage devices.
Hybrid ❷ Vehicle (HV) Battery Pack	Trunk Area, Mounted to Cross Member and Behind Rear Seat	244.8 Volt Nickel Metal Hydride (NiMH) battery pack consisting of 34 low voltage (7.2 Volt) modules connected in series.
Power ❸ Cables	Undercarriage and Engine Compartment	Orange colored power cables carry high voltage Direct Current (DC) between the HV battery pack, inverter/converter, and A/C compressor. These cables also carry 3-phase Alternating Current (AC) between the inverter/converter, electric motor, and generator.
Inverter/ Converter ❹	Engine Compartment	Boosts and inverts the high voltage electricity from the HV battery pack to 3-phase AC electricity that drives the electric motor. The inverter/converter also converts AC electricity from the electric generator and electric motor (regenerative braking) to DC that recharges the HV battery pack.
Gasoline ❺ Engine	Engine Compartment	Provides two functions: 1) Powers vehicle. 2) Powers generator to recharge the HV battery pack. The engine is started and stopped under control of the vehicle computer.
Electric❻ Motor	Engine Compartment	3-phase high voltage AC permanent magnet electric motor contained in the front transaxle. It is used to power the front wheels.
Electric ❼ Generator	Engine Compartment	3-phase high voltage AC generator that is contained in the transaxle and recharges the HV battery pack.

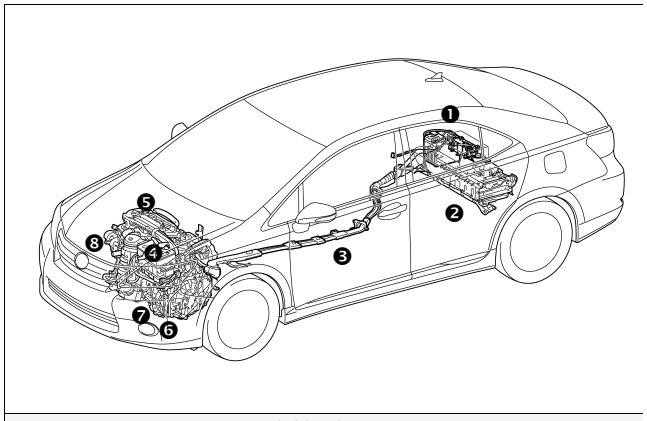

Lexus Hybrid Drive Components

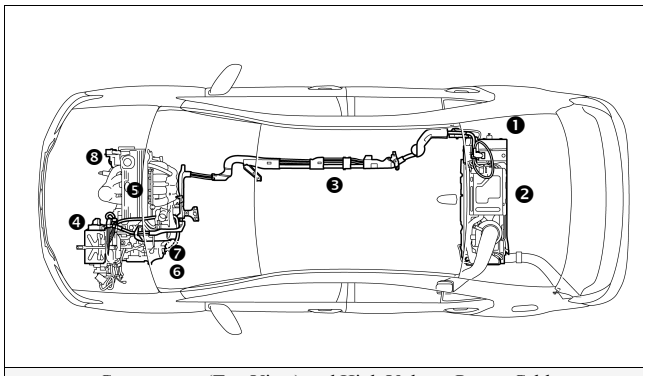

Components (Top View) and High Voltage Power Cables

Downloaded from www.Manualslib.com manuals search engine

Lexus Hybrid Drive Component Locations & Descriptions (Continued)

Component	Location	Description
A/C Compressor (with Inverter) ❽	Engine Compartment	3-phase high voltage AC electrically driven motor compressor.
Fuel Tank and Fuel Line ❾	Undercarriage and Center	The fuel tank provides gasoline via a fuel line to the engine. The fuel line is routed under the center of vehicle.

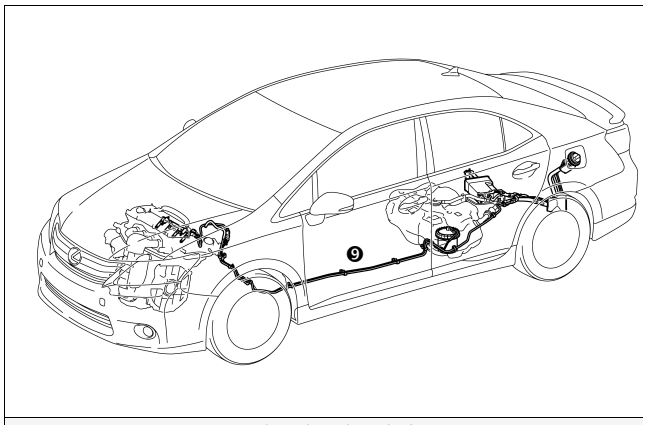

Fuel Tank and Fuel Line

Downloaded from www.Manualslib.com manuals search engine

Lexus Hybrid Drive Component Locations & Descriptions (Continued)

Key Specifications:

Gasoline Engine:	147 hp (110 kW), 2.4-liter Aluminum Alloy Engine
Electric Motor:	141 hp (105 kW), Permanent Magnet Motor
Transmission:	Automatic Only (electrically controlled continuously variable transaxle)
HV Battery:	244.8 Volt Sealed NiMH-Battery
Curb Weight:	3,770 lbs/1,710 kg
Fuel Tank:	14.5 US.gals/55.0 liters
Fuel Economy Ratings:	32/32 (City/Hwy) miles/US.gal 7.4/7.4 (City/Hwy) liters/100 km
Frame Material:	Steel Unibody
Body Material:	Steel Panels except for Aluminum Hood
Seating Capacity:	5 passenger

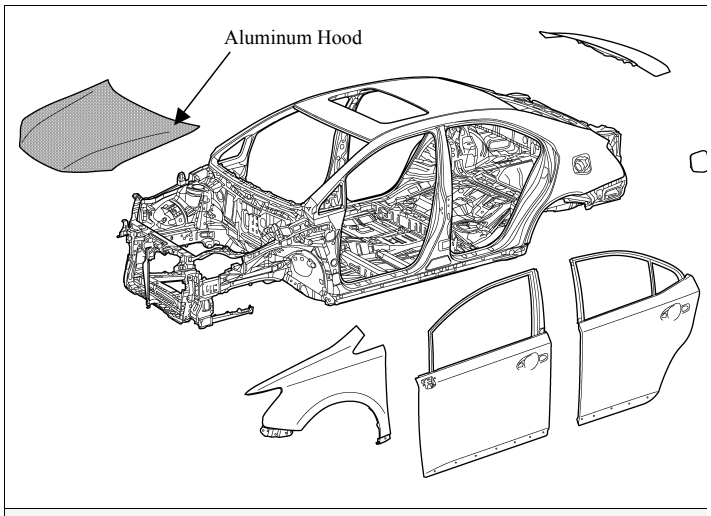

Steel Unibody

Downloaded from www.Manualslib.com manuals search engine

Smart Key System

The HS250h smart key system consists of a smart key transceiver that communicates bi-directionally, enabling the vehicle to recognize the smart key in proximity to the vehicle. Once recognized, the smart key will allow the user to lock and unlock the doors without pushing smart key buttons, and start the vehicle without inserting it into an ignition switch.

Smart key features:

- Passive (remote) function to lock/unlock the doors and start the vehicle.
- Wireless transmitter buttons to lock/unlock all 4 doors.
- Hidden metal cut key to lock/unlock the doors, trunk and glove box.

The HS250h is equipped with 2 types of smart keys:

- Smart key (fob)
- Card smart key

The card smart key is designed to be stored in a wallet and has all the same functions as the smart key (fob), except push buttons.

<u>Door (Lock/Unlock)</u>

There are several methods available to lock/unlock the doors.

- Pushing the smart key lock button will lock all doors. Pushing the smart key unlock button once unlocks the driver door, twice unlocks all doors.

- Touching the sensor on the backside of the driver door exterior handle, with the smart key in proximity to the vehicle, unlocks the driver door. Touching the sensor on the backside of the front passenger door exterior handle, with the smart key in proximity to the vehicle, unlocks all doors. Touching the lock touch sensor on either front door will lock all doors.

- Inserting the hidden metal cut key in the driver door lock and turning clockwise once unlocks the driver door, twice unlocks all doors. To lock all doors turn the key counter clockwise once. Only the driver door contains an exterior door lock for the metal cut key.

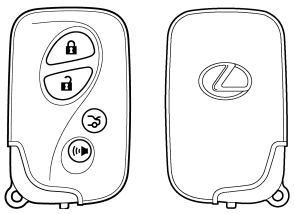

Smart Key (Fob)

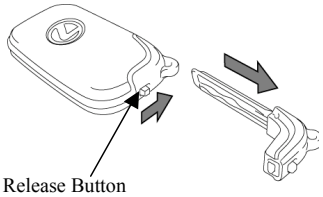

Hidden Metal Cut Key for Door Lock

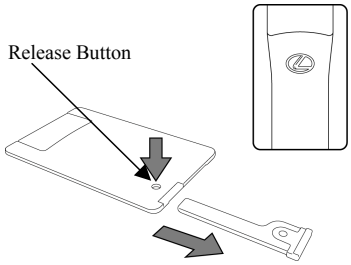

Card Smart Key and Hidden Metal Cut Key for Door Lock

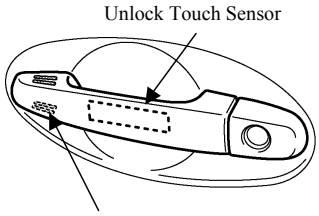

Driver Door Unlock Touch Sensor and Lock Touch Sensor

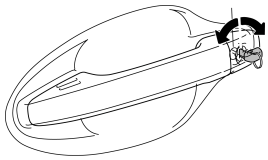

Use the Hidden Metal Cut Key

Front Driver Door Lock

Downloaded from www.Manualslib.com manuals search engine

Smart Key System (Continued)

Vehicle Starting/Stopping

The smart key has replaced the conventional metal cut key, and the power button with an integral status indicator light has replaced the ignition switch. The smart key only needs to be in proximity to the vehicle to allow the system to function.

- With the brake pedal released, the first push of the power button operates the accessory mode, the second push operates the ignition-on mode, and the third push turns the ignition off again.

Ignition Mode Sequence (brake pedal released):

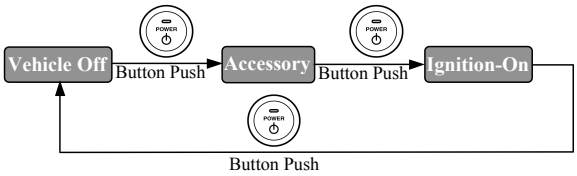

- Starting the vehicle takes priority over all other ignition modes and is accomplished by depressing the brake pedal and pushing the power button once. To verify the vehicle has started, check that the power button status indicator light is off and the **READY** light is illuminated in the instrument cluster.

- If the internal smart key battery is dead, use the following method to start the vehicle.
  1. Touch the Lexus emblem side of the smart key to the power button.
  2. Within the 10 seconds after the buzzer sounds, push the power button with the brake pedal depressed (the **READY** light will illuminate).

- Once the vehicle has started and is on and operational (**READY**-ON), the vehicle is shut off by bringing the vehicle to a complete stop and then depressing the power button once.

- To shut off the vehicle before coming to a stop in an emergency, push and hold down the power button for more than 3 seconds. This procedure may be useful at an accident scene in which the **READY** indicator is on, and the drive wheels remain in motion.

Ignition Mode	Power Button Indicator Light
Off	Off
Accessory	Amber
Ignition-On	Amber
Brake Pedal Depressed	Green
Vehicle Started (READY-ON)	Off
Malfunction	Blinking Amber

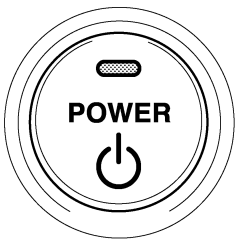

Power Button with Integral Status Indicator Light

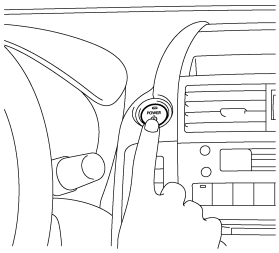

Ignition Modes (Brake Pedal Released)

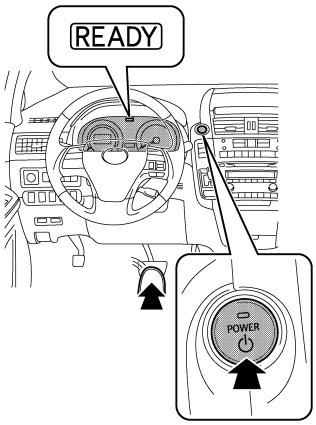

Starting Sequence
(Brake Pedal Depressed)

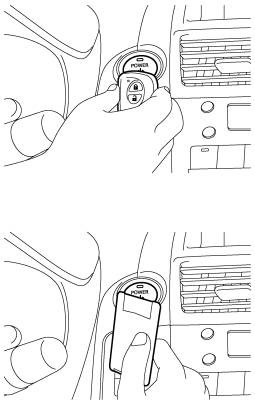

Smart Key Recognition
(When Smart Key Battery is Dead)

Downloaded from www.Manualslib.com manuals search engine

Electronic Gearshift Selector

The HS250h electronic gearshift selector is a momentary select shift-by-wire system that engages the transaxle in **R**everse, **N**eutral, **D**rive, or engine **B**rake modes.

- These modes may only be engaged while the vehicle is on and operational (READY-on), except for **N**eutral which may also be engaged while in the ignition-on mode. After selecting the gear position R, N, D, or B the transaxle remains in that position, identified on the instrument cluster, but the shift selector returns to a default position. To select **N**eutral, it is necessary to hold the shift selector in the N position for approximately 0.5 second.

- Unlike a conventional vehicle, the electronic shift selector does not contain a park position. Instead, a separate **P** position switch located below the shift selector engages the park position.

- When the vehicle is stopped, regardless of shift selector position, the electro-mechanical parking pawl is engaged to lock the transaxle into park by either depressing the **P** switch or pushing the power button to shut off the vehicle.

- Being electronic, the gearshift selector and the park lock systems depend on the low voltage 12 Volt auxiliary battery for power. If the 12 Volt auxiliary battery is discharged or disconnected, the vehicle cannot be started and cannot be shifted out of park (P position).

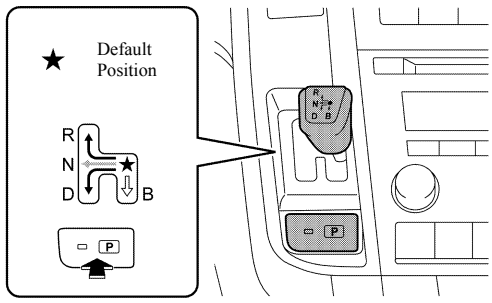

Electronic Gearshift Selector and P Position Switch

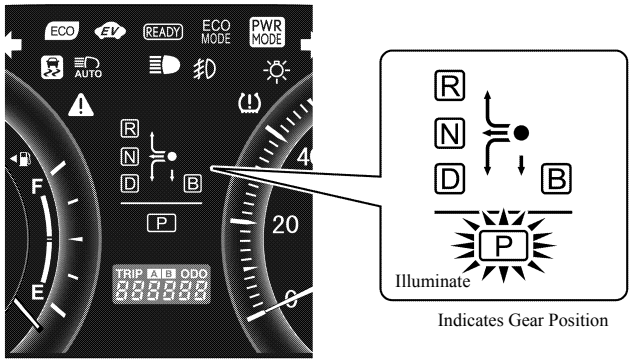

Instrument Cluster Gear Position Indicator

Downloaded from www.Manualslib.com manuals search engine

Lexus Hybrid Drive Operation

Once the **READY** indicator is illuminated in the instrument cluster, the vehicle may be driven. However, the gasoline engine does not idle like a typical automobile and will start and stop automatically. It is important to recognize and understand the **READY** indicator provided in the instrument cluster. When lit, it informs the driver that the vehicle is on and operational even though the gasoline engine may be off and the engine compartment is silent.

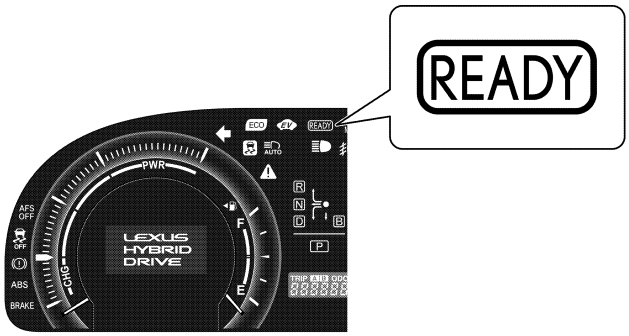

Instrument Cluster **READY** Indicator

Vehicle Operation

- With the HS250h, the gasoline engine may stop and start at any time while the **READY** indicator is on.

- Never assume that the vehicle is shut off just because the engine is off. Always look for the **READY** indicator status. The vehicle is shut off when the **READY** indicator is off.

- The vehicle may be powered by:
    1. The electric motor only.
    2. The gasoline engine only.
    3. A combination of both the electric motor and the gasoline engine.

- The vehicle computer determines the mode in which the vehicle operates in order to improve fuel economy and reduce emissions. Three features on the 2010 HS250h are EV (Electric Vehicle) mode, Power mode and ECO (Economy) mode:
    1. EV Mode: When activated, and certain conditions have been met, the vehicle operates with the electric motor powered by the HV battery.
    2. ECO Mode: When activated, this mode helps enhance fuel economy on trips that involve frequent braking and acceleration.
    3. Power Mode: When activated, power mode optimizes acceleration feel by increasing the power output more quickly at the beginning of accelerator pedal operation.

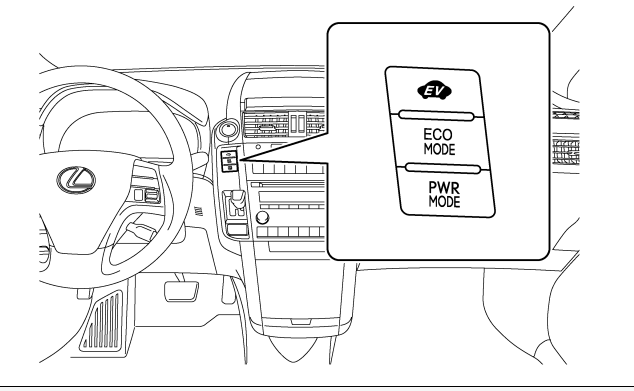

EV Drive Mode Switch/Economy Drive Mode Switch/Power Mode Switch

Downloaded from www.Manualslib.com manuals search engine

Hybrid Vehicle (HV) Battery Pack

The HS250h features a high voltage Hybrid Vehicle (HV) battery pack that contains sealed Nickel Metal Hydride (NiMH) battery modules.

HV Battery Pack

- The HV battery pack is enclosed in a metal case and is rigidly mounted to the trunk floor pan cross member behind the rear seat. The metal case is isolated from high voltage and concealed by fabric covers in the trunk.
- The HV battery pack consists of 34 low voltage (7.2 Volt) NiMH battery modules connected in series to produce approximately 244.8 Volts. Each NiMH battery module is non-spillable and in a sealed plastic case.
- The electrolyte used in the NiMH battery module is an alkaline mixture of potassium and sodium hydroxide. The electrolyte is absorbed into the battery cell plates and will not normally leak, even in a collision.

HV Battery Pack	
Battery pack voltage	244.8 V
Number of NiMH battery modules in the pack	34
NiMH battery module voltage	7.2 V
NiMH battery module dimensions	5 x 1 x 11 in (118 x 20 x 276 mm)
NiMH module weight	2.3 lbs (1.04 kg)
NiMH battery pack dimensions	19 x 40 x 14 in (471 x 1010 x 339 mm)
NiMH battery pack weight	121.2 lbs (55 kg)

Components Powered by the HV Battery Pack

- Electric Motor
- Power Cables
- Electric Generator
- Inverter/Converter
- A/C Compressor

HV Battery Pack Recycling

- The HV battery pack is recyclable. Contact the nearest Lexus dealer or:

United States: (800) 255-3987, Canada: (800) 265-3987

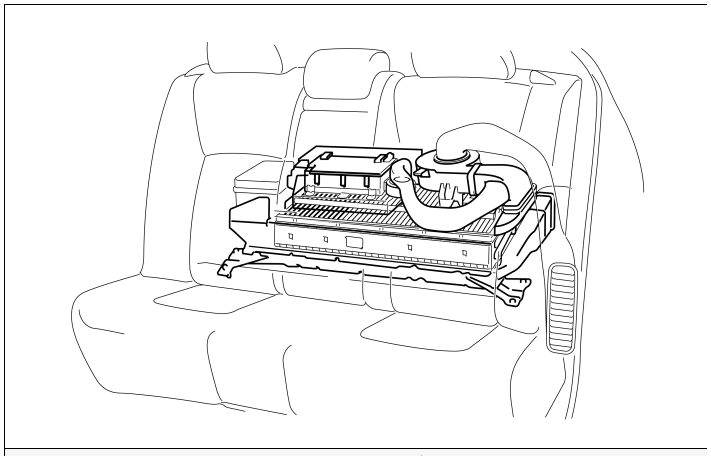

HV Battery Pack

Downloaded from www.Manualslib.com manuals search engine

Low Voltage Battery

Auxiliary Battery

- The HS250h contains a sealed lead-acid 12 Volt battery. The 12 Volt auxiliary battery powers the vehicle's electrical system similar to a conventional vehicle. As with conventional vehicles, the negative terminal of the auxiliary battery is grounded to the metal chassis of the vehicle.

- The auxiliary battery is located in the trunk. It is concealed by a fabric cover on the passenger side behind the rear seat.

  NOTE:
  An under hood label shows the location of the HV battery (traction battery) and 12 Volt auxiliary battery.

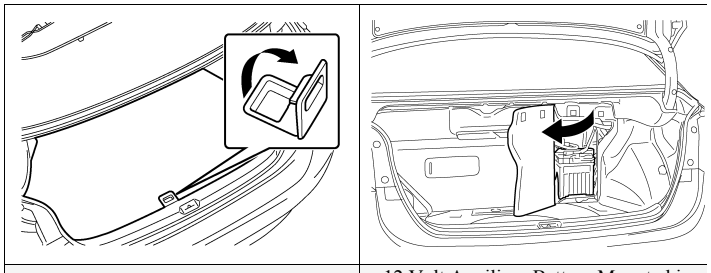

Remove the Panel

12 Volt Auxiliary Battery Mounted in Trunk

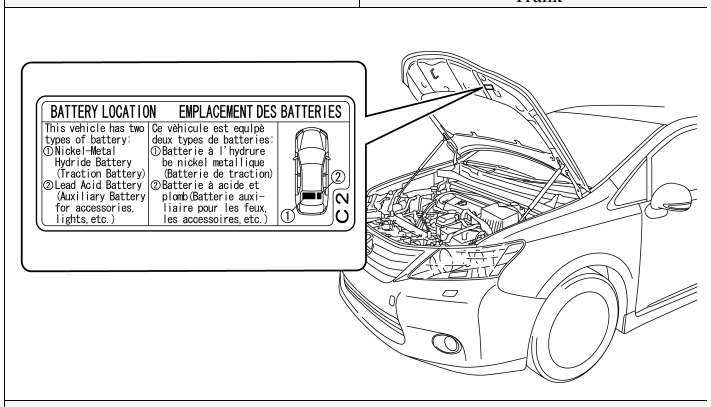

Battery Location Label

Downloaded from www.Manualslib.com manuals search engine

High Voltage Safety

The HV battery pack powers the high voltage electrical system with DC electricity. Positive and negative orange colored high voltage power cables are routed from the battery pack, under the vehicle floor pan, to the inverter/converter. The inverter/converter contains a circuit that boosts the HV battery voltage from 244.8 to 650 Volts DC. The inverter/converter creates 3-phase AC to power the motor. Power cables are routed from the inverter/converter to each high voltage motor (electric motor, electric generator, and A/C compressor). The following systems are intended to help keep occupants in the vehicle and emergency responders safe from high voltage electricity:

High Voltage Safety System

- A high voltage fuse ❶ provides short circuit protection in the HV battery pack.

- Positive and negative high voltage power cables ❷ connected to the HV battery pack are controlled by 12 Volt normally open relays ❸. When the vehicle is shut off, the relays stop electrical flow from leaving the HV battery pack.

> ⚠**WARNING:**
> *The high voltage system may remain powered for up to 10 minutes after the vehicle is shut off or disabled. To prevent serious injury or death from severe burns or electric shock, avoid touching, cutting, or breaching any orange high voltage power cable or high voltage component.*

- Both positive and negative power cables ❷ are insulated from the metal vehicle body. High voltage electricity flows through these cables and not the metal vehicle body. The metal vehicle body is safe to touch because it is insulated from the high voltage components.

- A ground fault monitor ❹ continuously monitors for high voltage leakage to the metal chassis while the vehicle is running. If a malfunction is detected, the hybrid vehicle computer ❹ will illuminate the master warning light ⚠ in the instrument cluster and indicate "Check Hybrid System" on the multi-information display.

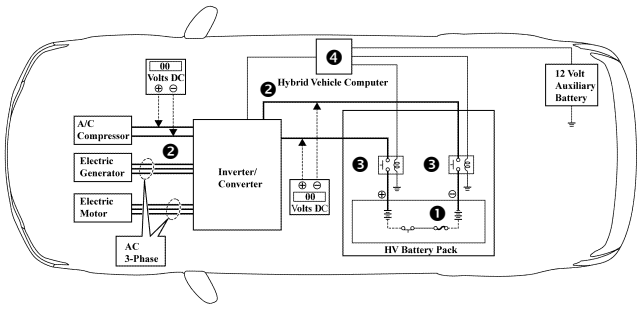

High Voltage Safety System – Vehicle Shut Off (**READY**-OFF)

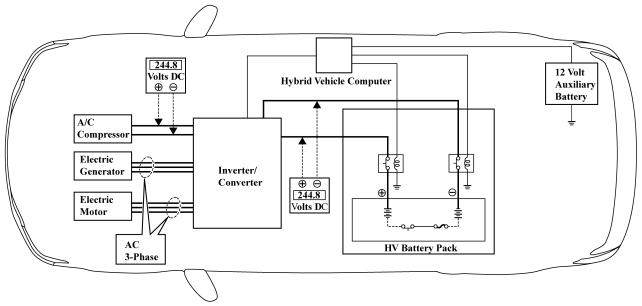

High Voltage Safety System – Vehicle On and Operational (**READY**-ON)

Downloaded from www.Manualslib.com manuals search engine

SRS Airbags & Seat Belt Pretensioners

Standard Equipment

- Electronic frontal impact sensors (2) are mounted in the engine compartment ❶ as illustrated.
- Front seat belt pretensioners are mounted near the base of the B-pillars ❷.
- A frontal dual stage driver airbag ❸ is mounted in the steering wheel hub.
- A frontal twin-chamber shaped dual stage passenger airbag ❹ is integrated into the dashboard and deploys through the top of the dashboard.
- The SRS computer ❺, which contains an impact sensor, is mounted on the floor pan underneath the instrument panel.
- Front electronic side impact sensors (2) are mounted near the base of the B-pillars. ❻
- Rear electronic side impact sensors (2) are mounted near the base of the C-pillars. ❼
- Front seat side airbags ❽ are mounted in the front seatbacks.
- Side curtain airbags ❾ are mounted along the outer edge inside the roof rails.
- Front knee airbags ❿ are mounted on the lower portion of the dash.
- Rear seat belt pretensioners are mounted near the C-pillar on the rear seatbacks. ⓫
- Rear seat side airbags ⓬ mounted in the rear seat side garnish.
- Active (mechanical, non-pyrotechnic) front seat headrests (see description on page 23).

Optional Equipment

- The optional pre-collision safety system contains a radar sensory system, occupant seat sensor, and an electric motor-pyrotechnic pretensioner system. During a pre-collision event, an electric motor in the pretensioners retracts the front seatbelts. When conditions stabilize the electric motor will reverse itself. When the airbags deploy, or as necessary, the pyrotechnic pretensioners function normally.

⚠ **WARNING:**
The SRS may remain powered for up to 90 seconds after the vehicle is shut off or disabled. To prevent serious injury or death from unintentional SRS deployment, avoid breaching the SRS components.

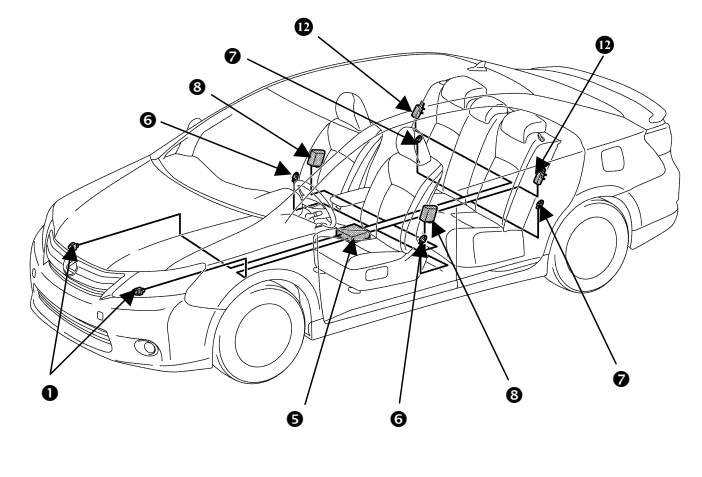

Electronic Impact Sensors and Side Airbags

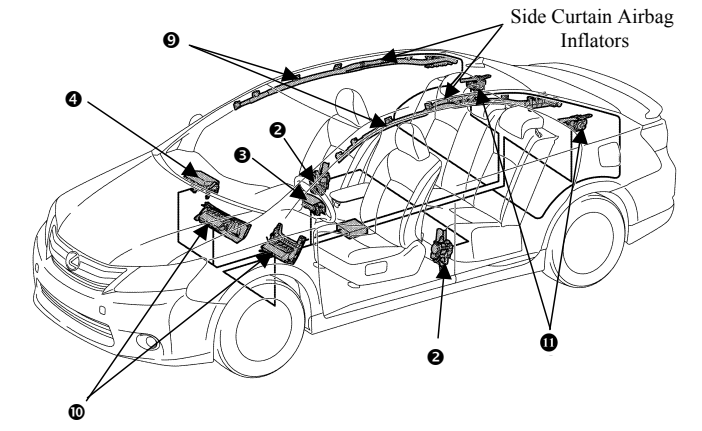

Standard Frontal Airbags, Seat Belt Pretensioners, Knee Airbag, Side Curtain Airbags

Downloaded from www.Manualslib.com manuals search engine

SRS Airbags & Seat Belt Pretensioners (Continued)

NOTE:
The front seatback mounted side airbags and the side curtain airbags may deploy independently of each other.

The knee airbags deploy simultaneously with the frontal airbags.

The HS250h is equipped with a standard front passenger occupant classification system that may prohibit the deployment of the front passenger frontal airbag, knee airbag, seatback mounted side airbag, and seat belt pretensioner. If the passenger occupant classification system prohibits deployment during an SRS event, the passenger SRS will not re-arm nor deploy.

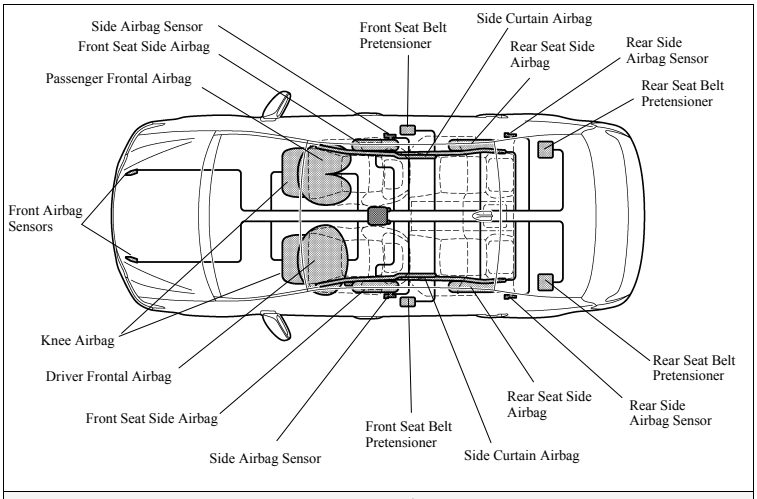

SRS System Diagram

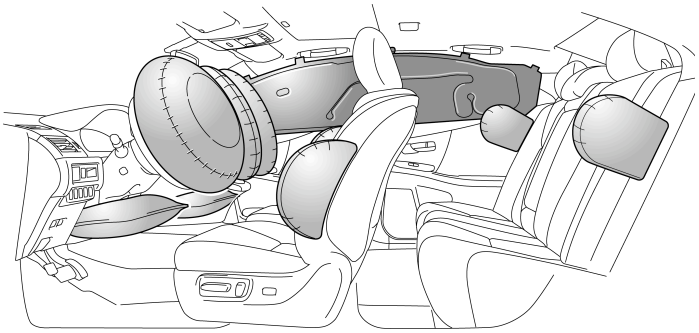

Frontal, Knee, Front and Rear Seatback Mounted Side, Side Curtain Airbags

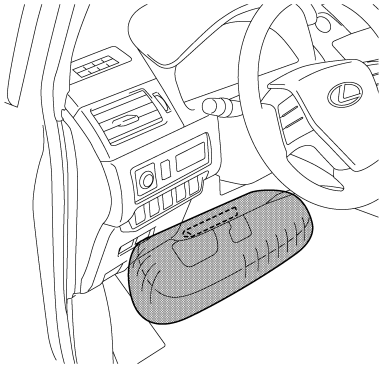

Driver Knee Airbag and Inflator

Downloaded from www.Manualslib.com manuals search engine

Emergency Response

On arrival, emergency responders should follow their standard operating procedures for vehicle incidents. Emergencies involving the HS250h may be handled like other automobiles except as noted in these guidelines for Extrication, Fire, Overhaul, Recovery, Spills, First Aid, and Submersion.

> ⚠ **WARNING:**
> - ***Never*** *assume the HS250h is shut off simply because it is silent.*
> - *Always observe the instrument cluster for the* ***READY*** *indicator status to verify whether the vehicle is on or shut off. The vehicle is shut off when the* ***READY*** *indicator is off.*
> - *Failure to shut off the vehicle before emergency response procedures are performed may result in serious injury or death from the unintentional deployment of the SRS or severe burns and electric shock from the high voltage electrical system.*

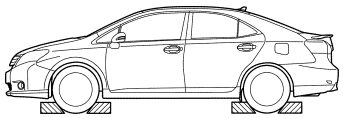

Chock Wheels

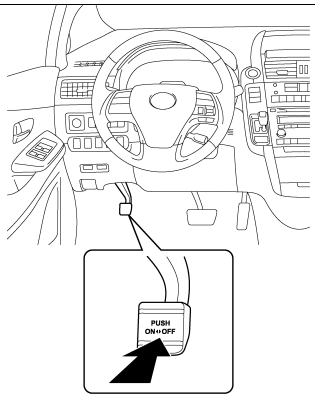

Set Parking Brake

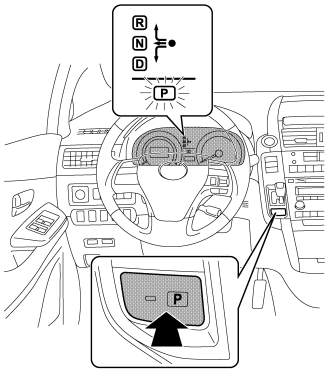

Push P Switch

Extrication

- Immobilize Vehicle

  Chock wheels and set the parking brake.
  Push the **P** position switch to engage park.

- Disable Vehicle

  Performing either of the following two procedures will shut the vehicle off and disable the HV battery pack, SRS, and gasoline fuel pump.

Downloaded from www.Manualslib.com manuals search engine

Emergency Response (Continued)

Extrication (Continued)

Procedure #1

1. Confirm the status of the **READY** indicator in the instrument cluster.
2. If the **READY** indicator is illuminated, the vehicle is on and operational. Shut off the vehicle by pushing the power button once.
3. The vehicle is already shut off if the instrument cluster lights and the **READY** indicator are not illuminated. Do **not** push the power button because the vehicle may start.
4. If the smart key is easily accessible, keep it at least 16 feet (5 meters) away from the vehicle.
5. If the smart key cannot be found, disconnect the 12 Volt auxiliary battery behind the cover in the trunk to prevent accidental restarting of the vehicle.

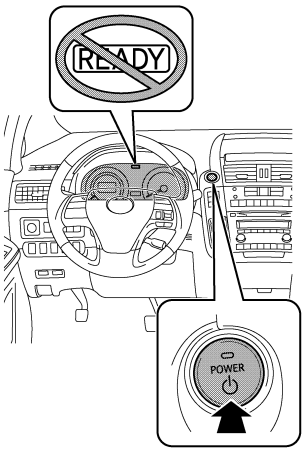

Shut Off Vehicle (**READY**-OFF)

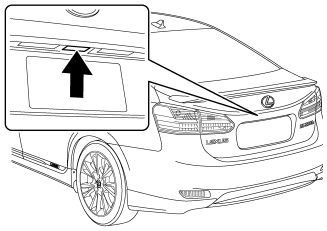

Open the Trunk

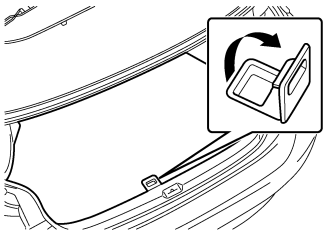

Remove the Panel

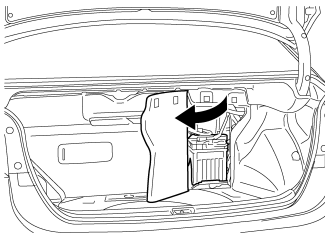

12 Volt Auxiliary Battery in Trunk

Downloaded from www.Manualslib.com manuals search engine

Emergency Response (Continued)

Extrication (Continued)

Procedure #2 (Alternate if power button is inaccessible)

1. Open the hood.
2. Remove the fuse box cover.
3. Remove the **IGCT No. 2** fuse (10A red colored) in the engine compartment fuse box (refer to illustration). If the correct fuse cannot be recognized, pull all fuses in the fuse box.
4. Disconnect the 12 Volt auxiliary battery behind the cover in the trunk.

NOTE:
Before disconnecting the 12 Volt auxiliary battery, if necessary, reposition the power seats and optional power steering wheel, lower the windows, unlock the doors, and open the fuel door as required. A manual fuel door release is located in the trunk behind a cover on the driver side (see the illustration in the Roadside Assistance section on page 29). Once the 12 Volt auxiliary battery is disconnected, power controls will not operate.

⚠ WARNING:

- *The high voltage system may remain powered for up to 10 minutes after the vehicle is shut off or disabled. To prevent serious injury or death from severe burns or electric shock, avoid touching, cutting, or breaching any orange high voltage power cable or high voltage component.*
- *The SRS may remain powered for up to 90 seconds after the vehicle is shut off or disabled. To prevent serious injury or death from unintentional SRS deployment, avoid breaching the SRS components.*
- *If none of the disabling procedures can be performed, proceed with caution as there is no assurance that the high voltage electrical system, SRS, or fuel pump are disabled.*

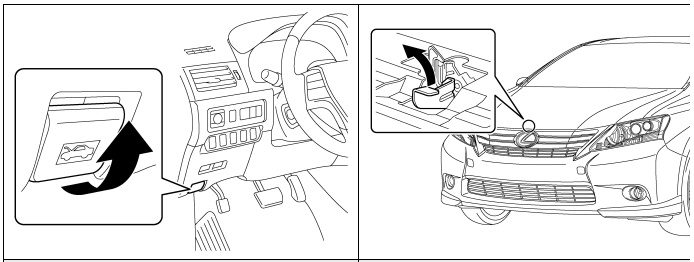

Remote Hood Release

Hood Latch Release

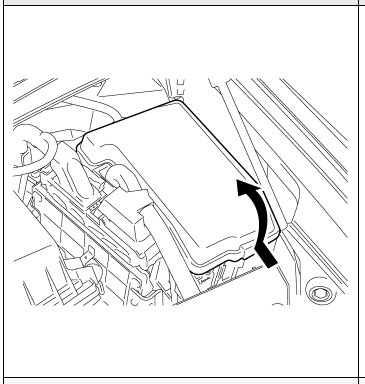

Remove Fuse Box Cover

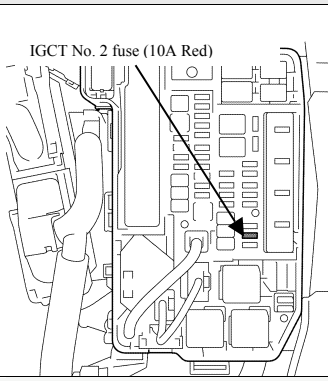

IGCT No. 2 Fuse Location in Engine Compartment Fuse Box

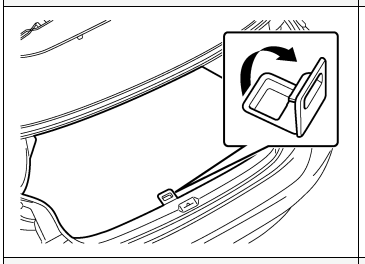

Remove the Panel

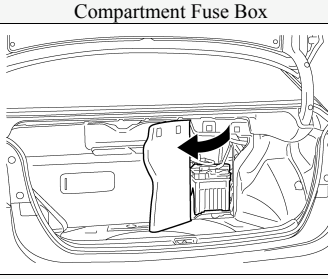

12 Volt Auxiliary Battery in Trunk

Downloaded from www.Manualslib.com manuals search engine

Emergency Response (Continued)

Extrication (Continued)

- Stabilize Vehicle

  Crib at (4) points directly under the front and rear pillars.
  Do not place cribbing under the high voltage power cables, exhaust system, or fuel system.

  NOTE:
  The HS250h is equipped with a tire pressure warning system that by design prevents pulling the metal valve stem with integral transmitter from the wheel. Snapping the valve stem with pliers or removing the valve cap and Schrader valve will release the air in the tire.

- Access Patients

  Glass Removal

  Use normal glass removal procedures as required.

  SRS Awareness

  Responders need to be cautious when working in close proximity to undeployed airbags and seat belt pretensioners. Front dual stage airbags automatically ignite both stages within a fraction of a second.

  Door Removal/Displacement

  Doors can be removed by conventional rescue tools such as hand, electric, and hydraulic tools. In certain situations, it may be easier to pry back the vehicle body to expose and unbolt the hinges.

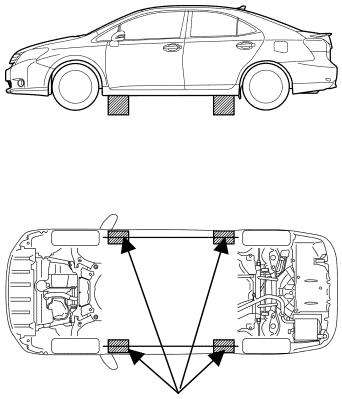

Cribbing Points

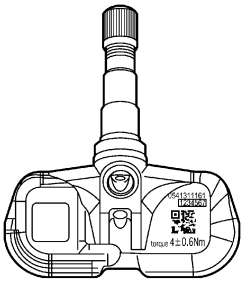

Metal Valve Stem with Integral Transmitter

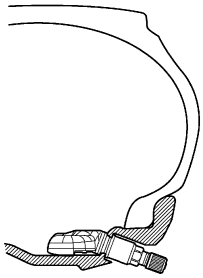

Cribbing Points

Metal Valve Stem with Integral Transmitter Installed on Wheel

Downloaded from www.Manualslib.com manuals search engine

Emergency Response (Continued)

Extrication (Continued)

Roof Removal

The HS250h is equipped with side curtain airbags.
When undeployed, total roof removal is not recommended.
Patient access through the roof can be performed by cutting the roof center section inboard of the roof rails as illustrated. This would avoid breaching the side curtain airbags, inflators, and wiring harness.

NOTE:
The side curtain airbags may be identified as illustrated on this page (additional component details on page 15).

Dash Displacement

The HS250h is equipped with side curtain airbags. When undeployed, total roof removal is not recommended to avoid breaching the side curtain airbags, inflators, and wiring harness. As an alternative, dash displacement may be performed by using a Modified Dash Roll.

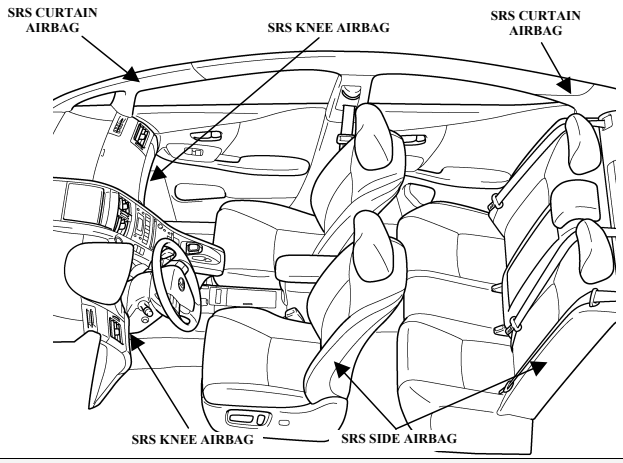

Side, Curtain, and Knee Airbag Identifiers

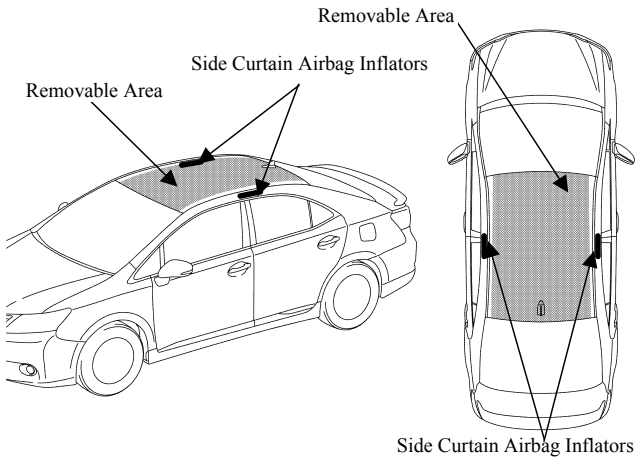

Roof Removal Area

Downloaded from www.Manualslib.com manuals search engine

Emergency Response (Continued)

Extrication (Continued)

Rescue Lift Air Bags

Responders should not place cribbing or rescue lift air bags under the high voltage power cables, exhaust system, or fuel system.

Repositioning Steering Wheel and Front Seats

Telescopic steering wheel and seat controls are shown in the illustrations.

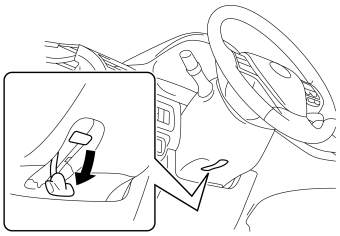

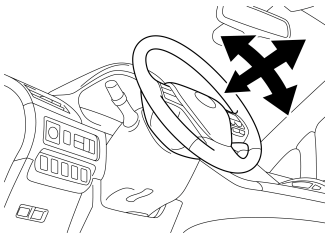

Manual Tilt and Telescoping Control

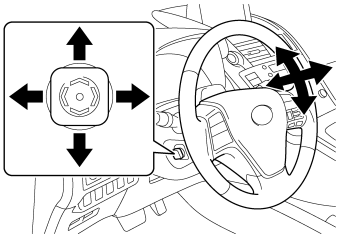

Optional Power Tilt and Telescoping Control

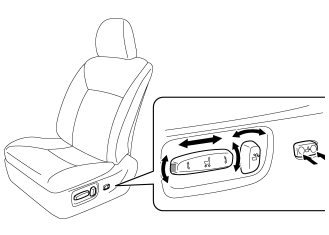

Front Power Seat Controls

Downloaded from www.Manualslib.com manuals search engine

Emergency Response (Continued)

Extrication (Continued)

Active Headrest Removal

The HS250h is equipped with active headrests, located in both front seatbacks. The active headrests are mechanical non-pyrotechnic head supports that are designed to help reduce neck injuries in the event of a rear collision.
No special methods are required to remove the headrests. Push the release button and lift to remove the headrest.

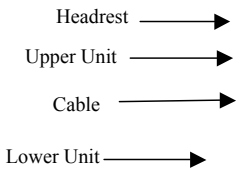

Front Active Headrest

NOTE:
The HS250h is equipped with an optional electrochromic auto dimming rear view mirror. The mirror contains a minimal amount of transparent gel sealed between two glass plates that will not normally leak.

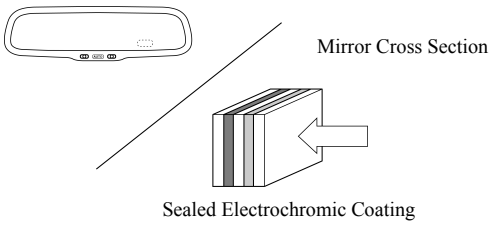

Electrochromic Auto Dimming Rear View Mirror

Downloaded from www.Manualslib.com manuals search engine

Emergency Response (Continued)

Fire

Approach and extinguish a fire using proper vehicle fire fighting practices as recommended by NFPA, IFSTA, or the National Fire Academy (USA).

- Extinguishing Agent
  Water has been proven to be a suitable extinguishing agent.

- Initial Fire Attack
  Perform a fast, aggressive fire attack.
  Divert the runoff from entering watershed areas.
  Attack teams may not be able to identify an HS250h until the fire has been knocked down and overhaul operations have commenced.

- Fire in the HV Battery Pack
  Should a fire occur in the NiMH HV battery pack, attack crews should utilize a water stream or fog pattern to extinguish any fire within the vehicle *except* for the HV battery pack.

⚠ **WARNING:**

- *The NiMH battery electrolyte is a caustic alkaline (pH 13.5) that is damaging to human tissues. To avoid injury by coming in contact with the electrolyte, wear proper personal protective equipment.*
- *The battery modules are contained within a metal case and accessibility is limited.*
- *To avoid serious injury or death from severe burns or electric shock,* ***never*** *breach or remove the high voltage battery pack cover under any circumstance including fire.*

When allowed to burn themselves out, the HS250h NiMH battery modules burn rapidly and can quickly be reduced to ashes except for the metal.

Offensive Fire Attack

Normally, flooding an NiMH HV battery pack with copious amounts of water at a safe distance will effectively control the HV battery pack fire by cooling the adjacent NiMH battery modules to a point below their ignition temperature. The remaining modules on fire, if not extinguished by the water, will burn themselves out.

However, flooding the HS250h HV battery pack is *not* recommended due to the battery case design and location preventing the responder from properly applying water through the available vent openings safely. Therefore, it is recommended that the incident commander allow the HS250h HV battery pack to burn itself out.

Defensive Fire Attack

If the decision has been made to fight the fire using a defensive attack, the fire attack crew should pull back a safe distance and allow the NiMH battery modules to burn themselves out. During this defensive operation, fire crews may utilize a water stream or fog pattern to protect exposures or to control the path of smoke.

Downloaded from www.Manualslib.com manuals search engine

Emergency Response (Continued)

Overhaul

During overhaul, immobilize and disable the vehicle if not already done. Refer to illustrations on page 17, 18 and 19. The HV battery cover should ***never*** be breached or removed under any circumstances including fire. Doing so may result in severe electrical burns, shock, or electrocution.

- Immobilize Vehicle
  Chock wheels and set the parking brake.
  Push the **P** position switch to engage park.

- Disable Vehicle
  Performing either of the following two procedures will shut the vehicle off and disable the HV battery pack, SRS, and gasoline fuel pump.

Procedure #1

1. Confirm the status of the **READY** indicator in the instrument cluster.
2. If the **READY** indicator is illuminated, the vehicle is on and operational. Shut off the vehicle by pushing the power button once.
3. The vehicle is already shut off if the instrument cluster lights and the **READY** indicator are not illuminated. Do **not** push the power button because the vehicle may start.
4. If the smart key is easily accessible, keep it at least 16 feet (5 meters) away from the vehicle.
5. If the smart key cannot be found, disconnect the 12 Volt auxiliary battery behind the cover in the trunk to prevent accidental restarting of the vehicle.

Procedure #2 (Alternate if power button is inaccessible)

1. Open the hood.
2. Remove the fuse box cover.
3. Remove the **IGCT No. 2** fuse (10A red colored) in the engine compartment fuse box as illustrated on page 19. If the correct fuse cannot be recognized, pull all fuses in the fuse box.
4. Disconnect the 12 Volt auxiliary battery behind the cover in the trunk.

NOTE:
Before disconnecting the 12 Volt auxiliary battery, if necessary, reposition the power seats and optional power steering wheel, lower the windows, unlock the doors, and open the fuel door as required. A manual fuel door release is located in the trunk behind a cover on the driver side (see the illustration in the Roadside Assistance section on page 29). Once the 12 Volt auxiliary battery is disconnected, power controls will not operate.

⚠ **WARNING:**

- *The high voltage system may remain powered for up to 10 minutes after the vehicle is shut off or disabled. To prevent serious injury or death from severe burns or electric shock, avoid touching, cutting, or breaching any orange high voltage power cable or high voltage component.*
- *The SRS may remain powered for up to 90 seconds after the vehicle is shut off or disabled. To prevent serious injury or death from unintentional SRS deployment, avoid breaching the SRS components.*
- *If none of the disabling procedures can be performed, proceed with caution as there is no assurance that the high voltage electrical system, SRS, or fuel pump are disabled.*

Recovering/Recycling of NiMH HV Battery Pack

Clean up of the HV battery pack can be accomplished by the vehicle recovery crew without further concern of runoff or spillage. For information regarding recycling of the HV battery pack, contact the nearest Lexus dealer, or:

United States: (800) 255-3987, Canada: (800) 265-3987

Downloaded from www.Manualslib.com manuals search engine

Emergency Response (Continued)

Spills

The HS250h contains the same common automotive fluids used in other non-hybrid Lexus vehicles, with the exception of the NiMH electrolyte used in the HV battery pack. The NiMH battery electrolyte is a caustic alkaline (pH 13.5) that is damaging to human tissues. The electrolyte, however, is absorbed in the cell plates and will not normally spill or leak out even if a battery module is cracked. A catastrophic crash that would breach both the metal battery pack case and a battery module would be a rare occurrence.

Similar to the use of baking soda to neutralize a lead-acid battery electrolyte spill, a dilute boric acid solution or vinegar can be used to neutralize a NiMH battery electrolyte spill.

NOTE:
Electrolyte leakage from the HV battery pack is unlikely due to its construction and the amount of available electrolyte contained within the NiMH modules. Any spillage would not warrant a declaration as a hazardous material incident. Responders should follow the recommendations as outlined in this emergency response guide.

In an emergency, manufacturer's Material Safety Data Sheets (MSDS) are available by contacting:

United States: CHEMTREC at (800) 424-9300
Canada: CANUTEC at *666 or (613) 996-6666 (collect)

- Handle NiMH electrolyte spills using the following Personal Protective Equipment (PPE):
  - Splash shield or safety goggles. Fold down helmet shields are not acceptable for acid or electrolyte spills.
  - Rubber, latex or nitrile gloves.
  - Apron suitable for alkaline.
  - Rubber boots.

- Neutralize NiMH Electrolyte
  - Use a boric acid solution or vinegar.
  - Boric acid solution - 800 grams boric acid to 20 liters water or 5.5 ounces boric acid to 1 gallon of water.

First Aid

Emergency responders may not be familiar with a NiMH electrolyte exposure when rendering aid to a patient. Exposure to the electrolyte is unlikely except in a catastrophic crash or through improper handling. Utilize the following guidelines in the event of exposure.

> ⚠ **WARNING:**
> *The NiMH battery electrolyte is a caustic alkaline (pH 13.5) that is damaging to human tissues. To avoid injury by coming in contact with the electrolyte, wear proper personal protective equipment.*

- Wear Personal Protective Equipment (PPE)
  - Splash shield or safety goggles. Fold down helmet shields are not acceptable for acid or electrolyte spills.
  - Rubber, latex or nitrile gloves.
  - Apron suitable for alkaline.
  - Rubber boots.

- Absorption
  - Perform gross decontamination by removing affected clothing and properly disposing of the garments.
  - Rinse the affected areas with water for 20 minutes.
  - Transport patients to the nearest emergency medical care facility.

- Inhalation in Non-Fire Situations
  - No toxic gases are emitted under normal conditions.

- Inhalation in Fire Situations
  - Toxic gases are given off as by-products of combustion. All responders in the Hot Zone should wear the proper PPE for fire fighting including SCBA.
  - Move a patient from the hazardous environment to a safe area and administer oxygen.
  - Transport patients to the nearest emergency medical care facility.

- Ingestion
  - Do not induce vomiting.
  - Allow the patient to drink large quantities of water to dilute the electrolyte (never give water to an unconscious person).

Emergency Response (Continued)

Downloaded from www.Manualslib.com manuals search engine

First Aid (Continued)

If vomiting occurs spontaneously, keep the patient's head lowered and forward to reduce the risk of asphyxiation.
Transport patients to the nearest emergency medical care facility.

Submersion

A submerged hybrid vehicle does not have high voltage potential on the metal vehicle body, and is safe to touch.

Access Patients

Responders can access the patient and perform normal extrication procedures. High voltage orange color coded power cables and high voltage components should never be touched, cut, or breached.

Vehicle Recovery

If a hybrid vehicle is fully or partially submerged in water, emergency responders may not be able to determine if the vehicle has been automatically disabled. The HS250h may be handled by following these recommendations:

1. Remove the vehicle from the water.
2. Drain the water from the vehicle if possible.
3. Follow the immobilizing and disabling procedures on page 17, 18 and 19.

Downloaded from www.Manualslib.com manuals search engine

Roadside Assistance

The HS250h utilizes an electronic gearshift selector and an electronic **P** position switch for park. If the 12 Volt auxiliary battery is discharged or disconnected, the vehicle cannot be started nor can it be shifted out of park. If discharged, the 12 Volt auxiliary battery can be jump started to allow vehicle starting and shifting out of park. Most other roadside assistance operations may be handled like conventional Lexus vehicles.

Lexus Roadside Assistance is available during the basic warranty period by contacting:

United States: (800) 255-3987, Canada: (800) 265-3987

Towing

The HS250h is a front wheel drive vehicle and it **must** be towed with the front wheels off the ground. Failure to do so may cause serious damage to Lexus Hybrid Drive components.

- The vehicle may be shifted out of **P**ark into **N**eutral by turning the ignition-on and READY-on modes. To select **N**eutral, it is necessary to hold the shift selector in the N position for approximately 0.5 seconds.

- If the 12 Volt auxiliary battery is discharged, the vehicle will not start and shifting out of park is not possible. There is no manual override except to jump start the vehicle, refer to the jump starting on page 31.

- If a tow truck is not available, in an emergency the vehicle may be temporarily towed using a cable or chain secured to the emergency towing eyelet or rear tow hook. This should only be attempted on hard, paved roads for short distances at below 19 mph (30 km/h). The eyelet is located with the tools in the trunk of the vehicle, refer to the illustration on page 30.

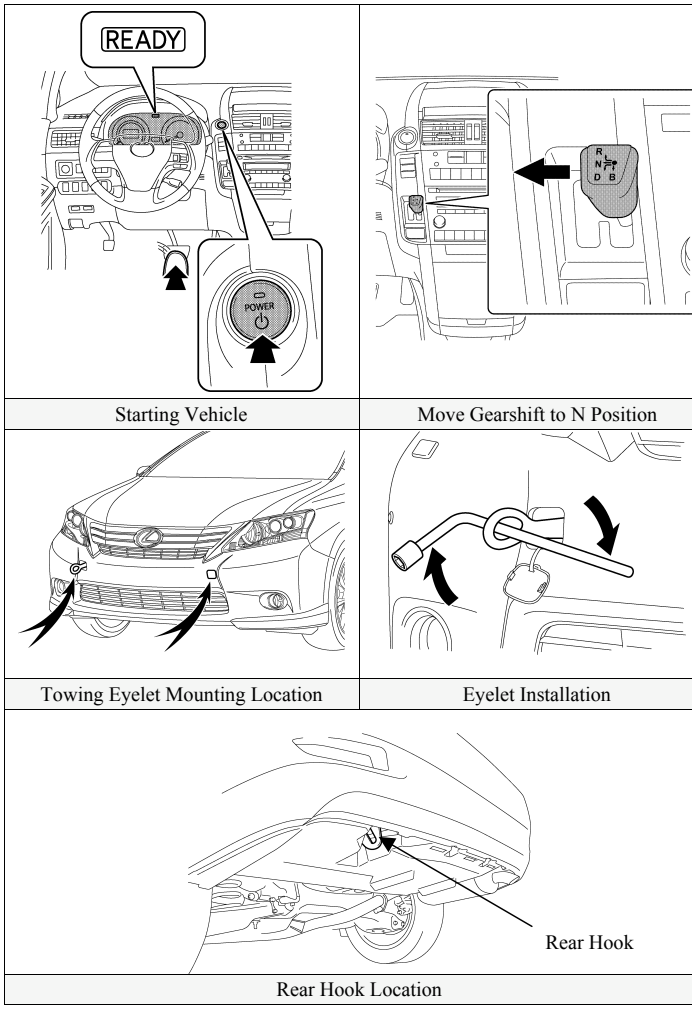

Starting Vehicle | Move Gearshift to N Position

Towing Eyelet Mounting Location | Eyelet Installation

Rear Hook Location

Downloaded from www.Manualslib.com manuals search engine

Roadside Assistance (Continued)

Electric Trunk Opener

The HS250h is equipped with an electric trunk opener. In the event of 12 Volt power loss, the trunk can be opened with the metal cut key hidden in the smart key.

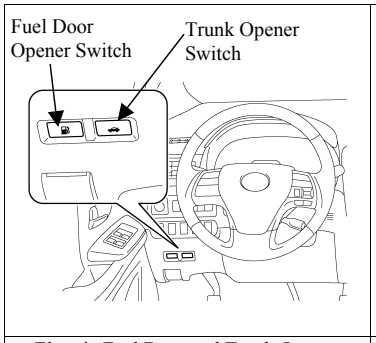

Electric Fuel Door and Trunk Opener Switches

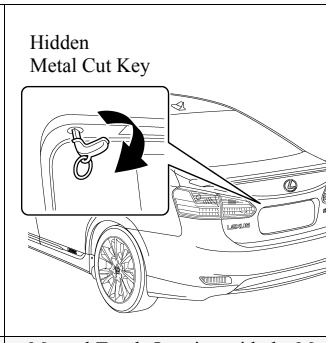

Manual Trunk Opening with the Met
Cut Key

Electric Fuel Door Opener

The HS250h is equipped with an electric fuel door opener. In the event of 12 Volt power loss, the fuel door can only be opened using the manual release located inside the trunk.

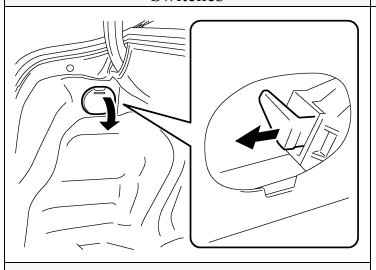

Manual Fuel Door Release

Downloaded from www.Manualslib.com manuals search engine

Roadside Assistance (Continued)

Spare Tire

The jack, tools, towing eyelet and spare tire are provided as shown.

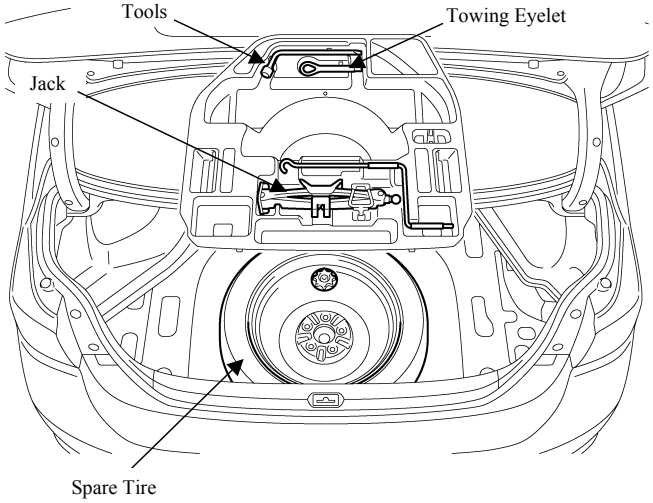

Tools, Jack, Towing Eyelet and Spare Tire in the Cargo Area

Downloaded from www.Manualslib.com manuals search engine

Roadside Assistance (Continued)

Jump Starting

The 12 Volt auxiliary battery may be jump started if the vehicle does not start and the instrument cluster gauges are dim or off after depressing the brake pedal and pushing the power button.

The 12 Volt auxiliary battery is located in the trunk. If the 12 Volt auxiliary battery is discharged, instead of using the metal cut key to open the trunk and access the auxiliary battery, it is easier to jump start the vehicle by accessing the remote positive 12 Volt auxiliary battery terminal in the engine compartment fuse box.

- Remove the fuse box cover, and open the positive terminal cover.
- Connect the positive jumper cable to the positive terminal.
- Connect the negative jumper cable to a solid ground.
- Place the smart key in proximity to the interior of the vehicle, depress the brake pedal, and push the power button.

  NOTE:
  If the vehicle does not recognize the smart key after connecting the booster battery to the vehicle, open and close the driver door when the vehicle is shut off.

  If the smart key internal battery is dead, touch the Lexus emblem side of the smart key to the power button during the start sequence. See the instructions and illustrations on page 8 for more details.

- The high voltage HV battery pack cannot be jump started.

Immobilizer & Anti-Theft Alarm

The HS250h is equipped with a standard immobilizer system and an anti-theft alarm.

- The vehicle can be started only with a registered smart key.
- To disarm the anti-theft alarm, unlock the door by using the smart key button, hidden metal cut key, or door handle touch sensor. Turning the ignition-on or starting the vehicle will also disarm the anti-theft alarm.

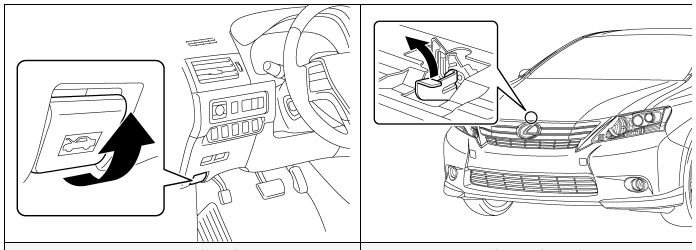

Remote Hood Release

Hood Latch Release

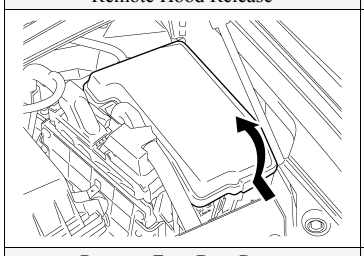

Remove Fuse Box Cover

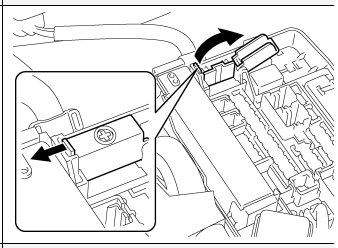

Open Positive Terminal Cover

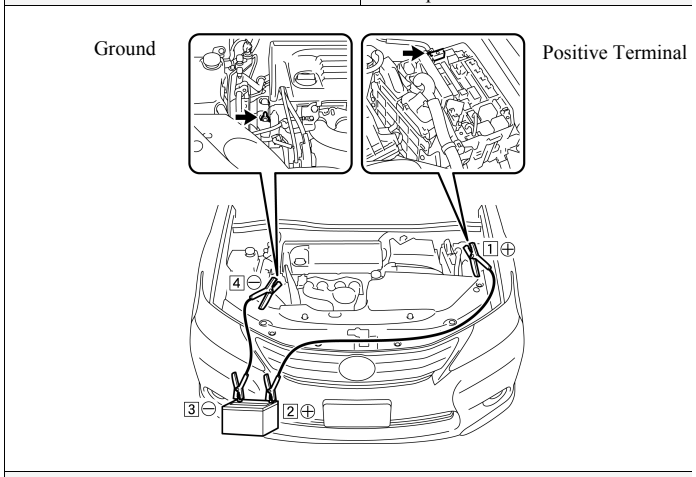

Jumper Cable Connections

Downloaded from www.Manualslib.com manuals search engine