Repair Manual

Golf 2015 ➤
Golf Variant 2015 ➤

Direct Shift Gearbox

Edition 09.2015

Protected by copyright. Copying for private or commercial purposes, in part or in whole, is not permitted unless authorised by Volkswagen AG. Volkswagen AG does not guarantee or accept any liability with respect to the correctness of information in this document. Copyright by Volkswagen AG.

List of Workshop Manual Repair Groups

Repair Group

00 - General, Technical Data
30 - Clutch
34 - Controls, Housing
35 - Gears and Shafts
39 - Final Drive, Differential

Copyright. Copying for private or commercial purposes, in part or in whole, is not permitted unless authorised by Volkswagen AG. Volkswagen AG does not guarantee or accept any liability with respect to the correctness of information in this document. Copyright by Volkswagen AG.

Technical information should always be available to the foremen and mechanics, because their careful and constant adherence to the instructions is essential to ensure vehicle road-worthiness and safety. In addition, the normal basic safety precautions for working on motor vehicles must, as a matter of course, be observed.

All rights reserved.
No reproduction without prior agreement from publisher.

Copyright © 2016 Volkswagen AG, Wolfsburg

D4B804111B4

Contents

00 - General, Technical Data . . . 1

1 **Identification** . . . 1
1.1 Transmission Identification . . . 1
2 **Safety Precautions** . . . 3
2.1 General Safety Precautions . . . 3
2.2 Start/Stop System Safety Precautions . . . 3
2.3 Safety Precautions when Tow Starting and Towing . . . 4
2.4 Safety Precautions during Road Test with Testing Equipment . . . 4
3 **Repair Information** . . . 5
3.1 General Information . . . 5
3.2 Clean Working Conditions . . . 5
3.3 General Repair Information . . . 6
3.4 Seals, Sealing Rings . . . 7
3.5 Bolts and Nuts . . . 8
4 **Technical Data** . . . 9
4.1 Transmission/Engine Allocation . . . 9
4.2 Capacities . . . 9
4.3 Gear Ratio Calculation . . . 10
5 **Electrical Components** . . . 11
5.1 Component Location Overview - Electrical Components . . . 11
6 **Special Tools** . . . 12

30 - Clutch . . . 13

1 **Clutch** . . . 13
1.1 Overview - Dual Clutch . . . 13
1.2 Clutch End Cover, Removing and Installing . . . 15
1.3 DSG® Clutch, Removing . . . 19
1.4 DSG® Clutch, Installing . . . 21
2 **Special Tools** . . . 27

34 - Controls, Housing . . . 28

1 **Mechatronic** . . . 28
1.1 Overview - Mechatronic . . . 28
1.2 Mechatronic, Removing and Installing . . . 30
2 **Selector Mechanism** . . . 47
2.1 Overview - Selector Mechanism . . . 47
2.2 Emergency Release from P . . . 50
2.3 Selector Lever Handle, Removing and Installing . . . 51
2.4 Button in Handle, Moving Into Installation Position . . . 53
2.5 Selector Mechanism, Removing and Installing . . . 55
2.6 Selector Lever Cable, Removing and Installing . . . 63
2.7 Gearshift Mechanism, Checking . . . 67
2.8 Selector Lever Cable, Checking and Adjusting . . . 68
2.9 Selector Shaft Seal, Replacing . . . 69
3 **Transmission, Removing and Installing** . . . 72
3.1 Transmission, Removing . . . 72
3.2 Transmission, Installing . . . 91
3.3 Transmission Tightening Specifications . . . 96
4 **Subframe Mount** . . . 97
4.1 Overview - Subframe Mount . . . 97
5 **Transmission, Transporting** . . . 100

Protected by copyright. Copying for private or commercial purposes, in part or in whole, is not permitted unless authorised by Volkswagen AG. Volkswagen AG does not guarantee or accept any liability with respect to the correctness of information in this document. Copyright by Volkswagen AG.

6 **Transmission, Disassembling and Assembling** 101
6.1 Overview - Transmission 101
7 **Securing on Engine and Transmission Holder** 104
8 **Transmission Fluid Circuit** 105
8.1 Transmission Fluid Cooler, Removing and Installing 105
8.2 Transmission Fluid Pump, Removing and Installing 107
8.3 Transmission Fluid Filter, Removing and Installing 110
9 **Transmission Fluid** 113
9.1 Transmission Fluid Level, Checking 113
9.2 Transmission Fluid, Draining and Filling 116
10 **Special Tools** 120

35 - Gears and Shafts 127
1 **Gears and Shafts, Disassembling and Assembling** 127

39 - Final Drive, Differential 128
1 **Seals** 128
1.1 Component Location Overview - Seals 128
1.2 Left Seal, Replacing 128
1.3 Right Seal, Replacing 131
2 **Special Tools** 135
3 **Revision History** 137

Protected by copyright. Copying for private or commercial purposes, in part or in whole, is not permitted unless authorised by Volkswagen AG. Volkswagen AG does not guarantee or accept any liability with respect to the correctness of information in this document. Copyright by Volkswagen AG.

00 – General, Technical Data

1 Identification

(Edition 09.2015)

⇒ "1.1 Transmission Identification", page 1 .

1.1 Transmission Identification

Example -arrow-:

GKF - Transmission Code

10.05.2 - 05/10/2002

14 - Plant Code

14 15 - Time

001 - Serial Number

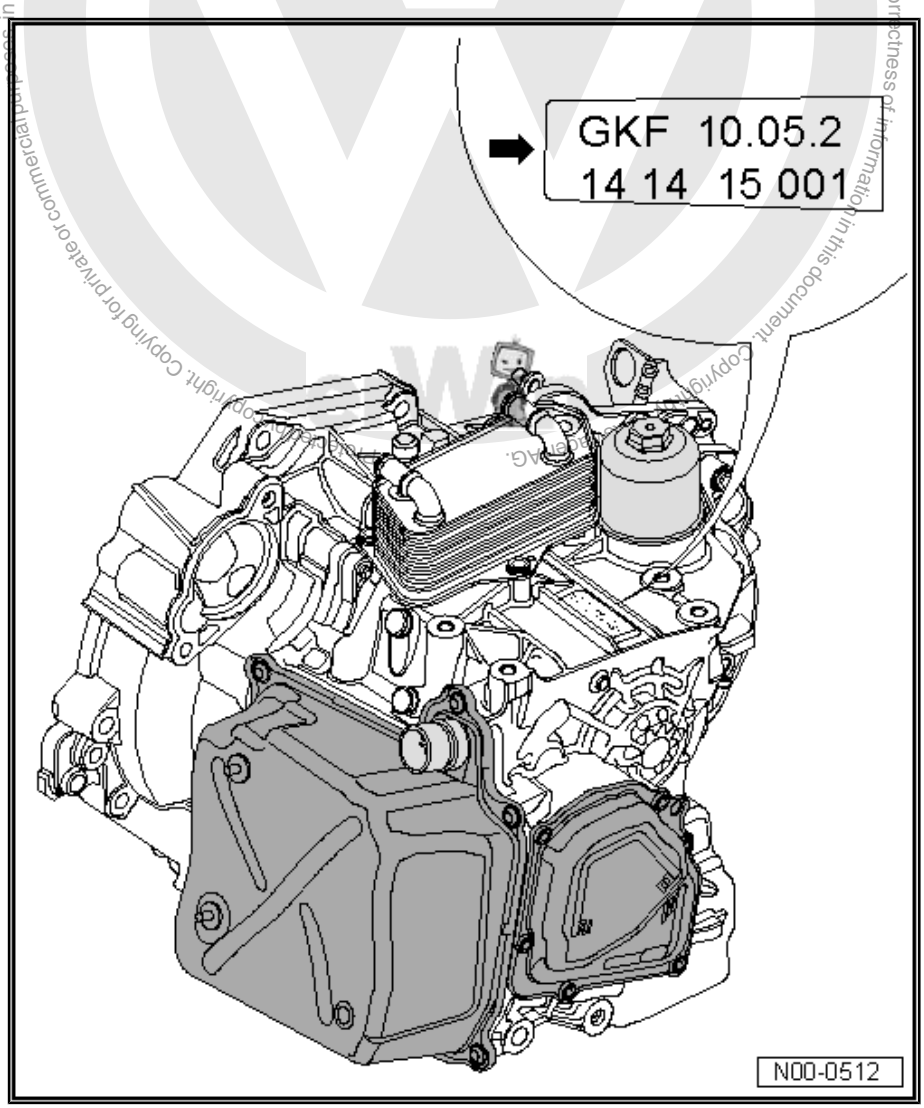

Reading the Transmission Code on the Transmission Installed

To read the transmission code letters under the console directly from the transmission, the engine and transmission must be supported. The left subframe mount transmission bracket -A- must be removed. It is important to lower the engine/transmission just enough until it is possible to slide the bracket toward the rear. Do not lower farther otherwise the pendulum support will be damaged. Transmission Bracket, Removing and Installing. Refer to ⇒ “3 Transmission, Removing and Installing”, page 72 .

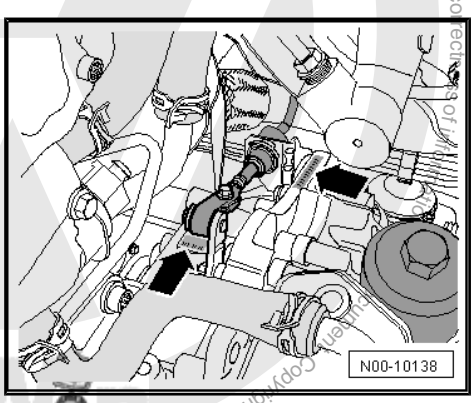

Note

- *Additionally the transmission code it on top of the transmission near the selector lever cable -arrows-.*
- *The transmission code is also listed in the vehicle data plates.*

Protected by copyright. Copying for private or commercial purposes, in part or in whole, is not permitted unless authorised by Volkswagen AG. Volkswagen AG does not guarantee or accept any liability with respect to the correctness and completeness of this technical information. Copyright by Volkswagen AG.

2 Safety Precautions

⇒ "2.1 General Safety Precautions", page 3 .

⇒ "2.2 Start/Stop System Safety Precautions", page 3 .

⇒ "2.3 Safety Precautions when Tow Starting and Towing", page 4 .

⇒ "2.4 Safety Precautions during Road Test with Testing Equipment", page 4 .

2.1 General Safety Precautions

Observe the following to Avoid Personal Injury and Vehicle Damage:

> **WARNING**
>
> *There is a risk of injury and accident from accidentally engaging a gear when the engine is running.*
>
> - *Move the selector lever into "P" and set the parking brake before working on a running engine.*

To Prevent Personal Injury and Damage to Electrical and Electronic Components, Observe the Following:

- Connect and disconnect test equipment only when the ignition is off.

> **Caution**
>
> *Risk of damaging electronic components when disconnecting the battery.*
>
> - *Complete the steps for disconnecting the battery.*
> - *Always turn off the ignition before disconnecting the battery.*

– Disconnect the battery. Refer to ⇒ Electrical Equipment; Rep. Gr. 27 ; Battery; Battery, Disconnecting and Connecting .

2.2 Start/Stop System Safety Precautions

When Working on Vehicles with Start/Stop, Note the Following:

> **WARNING**
>
> *Danger of injury through automatic motor starting with vehicles with the Start/Stop System.*
>
> - *For vehicles with an activated Start/Stop System (recognizable from a notification in the instrument cluster), the motor can be started automatically if needed.*
> - *Always make sure the Start/Stop System is disabled when working on the vehicle (turn off ignition, if needed, turn the ignition back on).*

Copyright by Volkswagen AG. Volkswagen AG does not guarantee or accept any liability with respect to the correctness of information in this document. Copyright by Volkswagen AG. Copying for private or commercial purposes, in part or in whole, is not permitted unless authorised by Volkswagen AG.

2.3 Safety Precautions when Tow Starting and Towing

Caution

Danger of causing damage to the transmission.

- ♦ *When towing the vehicle, the selector lever must be in "N" and the vehicle must not be towed further than 50 km (31 miles) and not faster than 50 km/h (31 mph).*

Note

The engine cannot be tow started, for example, if the battery is too weak or if the starter is not working.

2.4 Safety Precautions during Road Test with Testing Equipment

If Testers and Measuring Equipment Must Be Used during a Test Drive, Follow the Points Below:

WARNING

There is a risk of an accident due to distractions and improperly secured testing equipment.

The front passenger airbag poses a risk if it deploys during an accident.

- *Operating testing equipment while driving is a distraction.*
- *Testing equipment that is not secured properly increases the risk of personal injury.*
- ♦ *Always secure testing equipment on the rear seat using a strap and have a second person in the rear seat operate it.*

Protected by copyright. Copyright by Volkswagen AG. Volkswagen AG does not guarantee or accept any liability with respect to the correctness of information in this document. Copyright by Volkswagen AG.
Copyright by Volkswagen AG. Not permitted unless authorised by Volkswagen AG.
erWin

3 Repair Information

⇒ “3.1 General Information”, page 5 .

⇒ “3.2 Clean Working Conditions”, page 5 .

⇒ “3.3 General Repair Information”, page 6 .

⇒ “3.4 Seals, Sealing Rings”, page 7 .

⇒ “3.5 Bolts and Nuts”, page 8 .

3.1 General Information

Transmission

- The flywheel transfers the engine torque to the double clutch. The flywheel and the dual clutch are connected via splines. Together they assume the function of the dual-mass flywheel.
- The transmission is built like a 6-gear manual transmission. The alternating hydraulic actuation of the double clutch permits operation similar to that of an automatic transmission. This means the gears are automatically or manually shifted via the Tiptronic mode. Clutch pedal is not available.

Selector Mechanism

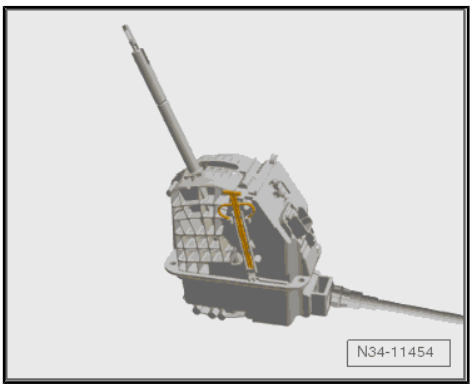

In contrast to the automatic transmission, the selector lever position is no longer transmitted mechanically to the transmission via the selector lever cable and Multi-Function Transmission Range (drive position sensor). Selector lever positions and shifts are transmitted via a separate control module in the selector mechanism to the transmission control module via the CAN-Bus. The shift occurs without a cable. The selector lever cable is mechanically brought into the park brake in the selector lever position “P”.

Shift Point Changes on Inclines and Declines

An additional gear change map automatically selects the gear changes for gradients dependent upon accelerator pedal position and driving speed.

- The gear change map for extreme uphill stretches is matched to engine output
- The gear change map for extreme downhill stretches is matched to the braking effect of the engine.
- Direct gear selection by way of the Tiptronic function permits utilization of engine braking action with a specific gear engaged, for example, on a downhill gradient with a trailer.

3.2 Clean Working Conditions

- Always clean the connection points and the area around them first, and then loosen them.
- Seal all open lines and connections immediately with clean plugs or caps from the Engine Bung Set - VAS6122- .
- Place removed parts on a clean surface and cover them so that they do not get dirty. Use foil and paper. Use a lint-free cloth.
- Always make sure that no dirt enters an “open” transmission.
- Only install clean components. Install replacement parts immediately after removing them from their packaging.
- Cover all opened components carefully if it necessary to perform a repair.

Protected by copyright. Copying for private or commercial purposes, in part or in whole, is not permitted unless authorised by Volkswagen AG. Volkswagen AG does not guarantee or accept any liability with respect to the correctness of information in this document. Copyright by Volkswagen AG.

- Protect the disconnected connectors from dirt and moisture and only connect when they are dry.

3.3 General Repair Information

Carefulness, cleanliness and the correct tools are required for transmission repairs to be successful. The usual basic safety precautions also, naturally apply when carrying out vehicle repairs.

A number of generally applicable instructions for individual repair operations, which are otherwise mentioned at various points in the Workshop Manual, are summarized here. They apply to this repair manual.

Guided Fault Finding, On Board Diagnostics (OBD) and Test Instruments

- Before starting any repairs on the transmission, determine the cause of the damage as accurately as possible. Refer to Vehicle Diagnostic Tester , `Guided Fault Finding`, `OBD` or `Test Instruments`.

Special Tools and Equipment

For a complete list of special tools used in the Repair Manual. Refer to Equipment and Special Tools.

Transmission

Always make sure that no dirt or contaminants enter an »open« transmission. Any dirt that enters can cause transmission failure, especially if the DSG Transmission Mechatronic - J743- and/or the transmission fluid pump are »open«.

- Do not run the engine and do not tow the vehicle if the transmission cover is removed or if there is no transmission fluid inside the transmission.
- Always clean the connection points and the area around them first, and then loosen them.
- When installing transmission, make sure centering sleeves are correctly seated between engine and transmission.

Circlips

- Do not overstretch the circlips.
- Replace damaged or stretched circlips.
- The circlips must fit completely inside the groove.

Transmission Fluid, Environmental and Disposal Regulations.

The quality of transmission fluid is crucial to transmission function.

- Shake the fluid containers before opening.
- Do not mix any additives in the oil. Do not fill with a different transmission fluid.
- The drained transmission fluid must not be used again.
- Dispose of drained transmission fluid correctly.
- Follow the legal environmental and disposal regulations.
- Observe the information on oil the packaging.

Protected by copyright. Copying for private or commercial purposes, in part or in whole, is not permitted unless authorised by Volkswagen AG. Volkswagen AG does not guarantee or accept any liability with respect to the correctness of information in this document. Copyright by Volkswagen AG.

Fluid Drain and Check Plug

A plastic overflow tube is located behind this screw -arrow- (with 8 mm hex socket head). Its length determines the oil level in the transmission.

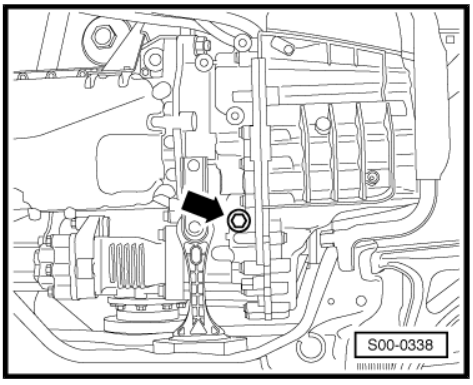

Electrical Components

Due to an electrostatic charge to the human body, a person can receive an electrostatic shock when metal objects are touched.

This charge can damage the electrical/electronic components on the transmission and the selector mechanism.

– Touch a grounded object, such as, a water pipe or a vehicle hoist, before working on electrical/electronic components. Do not touch connector or »open« electronic components directly.

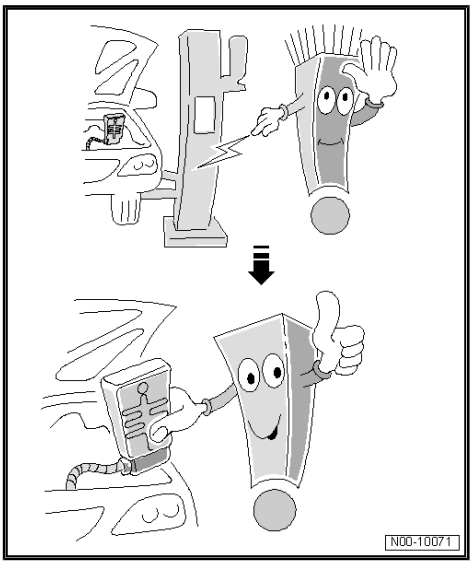

3.4 Seals, Sealing Rings

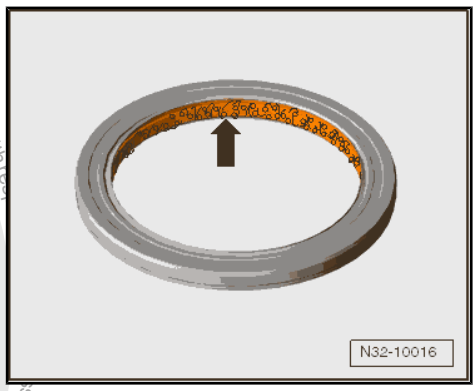

- Replace the O-rings, seals and gaskets.
- After removing seal rings and seals, always inspect the contact surfaces at housing or shaft for burrs resulting from removal, or for other signs of damage.
- Before installing the seal rings, lightly oil the outer circumference and fill the space between the sealing lips -arrow- halfway with Grease - G 052 128 A1- .
- The open side of the seals point toward the fluid to be sealed in.
- Use DSG® transmission fluid only. Other lubricants cause malfunctions.
- Coat the O-rings with DSG® transmission fluid before inserting to prevent crushing rings during installation.
- After replacing the seals, O-rings and sealing rings, check the transmission fluid level and fill if necessary. Refer to ➤ “9.1 Transmission Fluid Level, Checking”, page 113 .

Protected by copyright. Copyright by Volkswagen AG. Copyright for private or commercial purposes, in part or in whole, is not permitted unless authorised by Volkswagen AG. Volkswagen AG does not guarantee or accept any liability with respect to the correctness of information in this document.

3.5 Bolts and Nuts

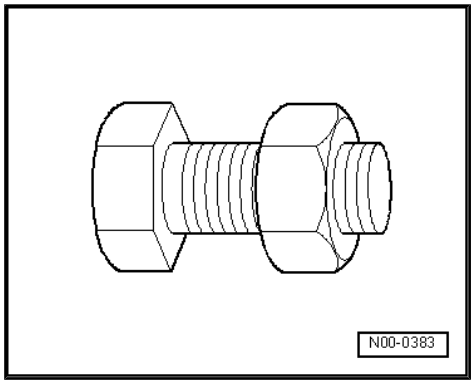

- Loosen or tighten bolts and nuts on the covers or housings diagonally.
- The tightening specifications stated apply to non-oiled nuts and bolts.
- Use a wire brush to clean the threads of bolts that were screwed in with locking compound. Install the bolts with Locking Fluid - AMV 185 101 A1- .
- Use a thread cutter to clean all threaded holes containing self-locking bolts to remove any locking compound residue. Otherwise the bolts could shear the next time they are removed.
- Please make sure that the thread pitch is correct so that the proper thread cutter is used during cleaning, and the thread does not get damaged.
- Always replace self-locking nuts and bolts.

Protected by copyright. Copying for private or commercial purposes, in part or in whole, is not permitted unless authorised by Volkswagen AG. Volkswagen AG does not guarantee or accept any liability with respect to the correctness of information in this document. Copyright by Volkswagen AG.

4 Technical Data

⇒ "4.1 Transmission/Engine Allocation", page 9

⇒ "4.2 Capacities", page 9

⇒ "4.3 Gear Ratio Calculation", page 10

4.1 Transmission/Engine Allocation

Always use refer to the transmission code letters if a repair requires original parts.

S tronic Transmission		0D9, Gasoline engines		
Transmission	Codes	PUL, PZQ, QML, QMQ, QSJ, QSQ, RHN, RVS, RVW	RVS	PUL, PZQ, QMQ, QSJ, RVS
	Engine	2.0L - 162 kW TFSI	2.0L - 169 kW TFSI	2.0L - 155 kW TFSI
Refer to the Parts Catalog for the following information. ♦ Production time period. ♦ The individual gear ratios ♦ Flange shaft allocation				

Always use refer to the transmission code letters if a repair requires original parts.

S tronic Transmission		0D9, Diesel engines		
Transmission	Codes	PZN, PUG, QMM, QSD		
	Engine	2.0L - 110 kW TDI Common Rail		
Refer to the Parts Catalog for the following information. ♦ Production time period. ♦ The individual gear ratios ♦ Flange shaft allocation				

4.2 Capacities

Capacities	DSG transmission 0D9
Refill	Refer to ⇒ Fluid Capacity Tables; Rep. Gr. 03
Change	Refer to ⇒ Fluid Capacity Tables; Rep. Gr. 03
Change after removing and installing the Mechatronic with the transmission installed	Refer to ⇒ Fluid Capacity Tables; Rep. Gr. 03
Change Interval	Refer to the ⇒ Maintenance tables .
Grease	DSG transmission fluid. Refer to the Parts Catalog.

Transmission fluid is obtainable as a replacement part. Refer to the Parts Catalog for the part number.

Protected by copyright. Copyright of privacy or commercial purposes, in part or in whole, is not permitted unless authorised by Volkswagen AG. Volkswagen AG does not guarantee or accept any liability with respect to the correctness of information in this document. Copyright by Volkswagen AG.

4.3 Gear Ratio Calculation

Example:

	6th Gear	Final Drive
Drive gear	$ZG_1 = 45$	$ZA_1 = 21$
Driven gear	$ZG_2 = 28$	$ZA_2 = 70$

$i = Z_2 : Z_1$ (Z_1 = number of teeth on the drive gear, Z_2 = number of teeth on the driven gear)

i_G = gear ratio = $ZG_2 : ZG_1 = 28 : 45 = 0.622$

i_A = axle ratio = $ZA_2 : ZA_1 = 70 : 21 = 3.333$

i_{total} = total ratio = $i_G \times i_A = 0.622 \times 3.333 = 2.073$

Protected by copyright. Copying for private or commercial purposes, in part or in whole, is not permitted unless authorised by Volkswagen AG. Volkswagen AG does not guarantee or accept any liability with respect to the correctness of information in this document. Copyright by Volkswagen AG.

5 Electrical Components

5.1 Component Location Overview - Electrical Components

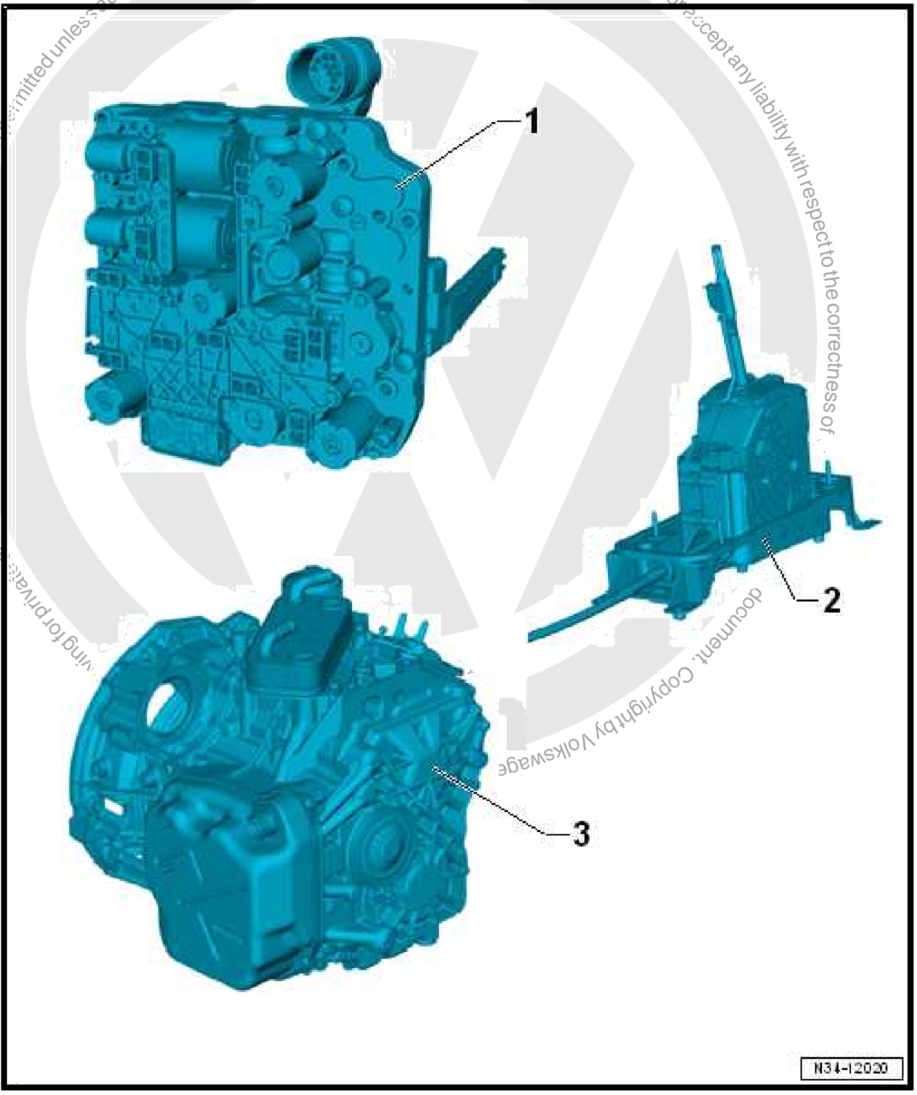

1 - DSG Transmission Mechatronic - J743-
- ❑ Installed behind the transmission cover
- ❑ Removing and Installing. Refer to ⇒ “1.2 Mechatronic, Removing and Installing”, page 30 .

2 - Selector Lever - E313-
- ❑ With Selector Lever Sensor System Control Module - J587- , Shift Lock Solenoid - N110- and Selector Lever Park Position Lock Switch - F319- .
- ❑ The components are integrated in the circuit board for the shift mechanism function unit and cannot be replaced individually.
- ❑ Checking. Refer to the Vehicle Diagnostic Tester .
- ❑ Gearshift mechanism, removing and installing. Refer to ⇒ “2.5 Selector Mechanism, Removing and Installing”, page 55

3 - Transmission

Protected by copyright. Copying for private or commercial purposes, in part or in whole, is not permitted unless authorised by Volkswagen AG. Volkswagen AG does not guarantee or accept any liability with respect to the correctness of information in this document. Copyright by Volkswagen AG.

6 Special Tools

Special tools and workshop equipment required

- Not Illustrated:
- Engine Support Bridge - 10-222A-

Protected by copyright. Copying for private or commercial purposes, in part or in whole, is not permitted unless authorised by Volkswagen AG. Volkswagen AG does not guarantee or accept any liability with respect to the correctness of information in this document. Copyright by Volkswagen AG.

30 – Clutch

1 Clutch

⇒ “1.1 Overview - Dual Clutch”, page 13

⇒ “1.2 Clutch End Cover, Removing and Installing”, page 15

⇒ “1.3 DSG® Clutch, Removing”, page 19

⇒ “1.4 DSG® Clutch, Installing”, page 21

1.1 Overview - Dual Clutch

Short Description

- The clutch contains two disc packs. The outer, larger disc pack is called “K 1” (clutch 1). The “K 1” shifts reverse gear and “1st”, “3rd” and “5th” gears. The inner, smaller “K 2” (clutch 2) shifts the gears “2”, “4” and “6”.
- Assembling the DSG® clutch requires special care, because all of the components were balanced to each other at the manufacturer. When positioning components during installation, do no rotate them from their original position, otherwise imbalances will occur, reducing the shift comfort and the life span.

Replacement Part Package

Protected by copyright. Copying for private or commercial purposes, in part or in whole is not permitted unless authorised by Volkswagen AG. Volkswagen AG does not guarantee or accept any liability with respect to the correctness of information in this document. Copyright by Volkswagen AG.

1 - Dual Clutch with Circlip

> **Caution**
>
> *The drive plate (upper section of the dual clutch) of a new clutch is not secured with the circlip, it only sits »taut« in the clutch.*
>
> *The drive plate must remain engaged between the teeth of the outer clutch plate carrier.*
>
> *If the drive plate is loosened, the clutch plates in the dual clutch can slip out of place. The dual clutch may not be correctly set during installation under certain circumstances.*

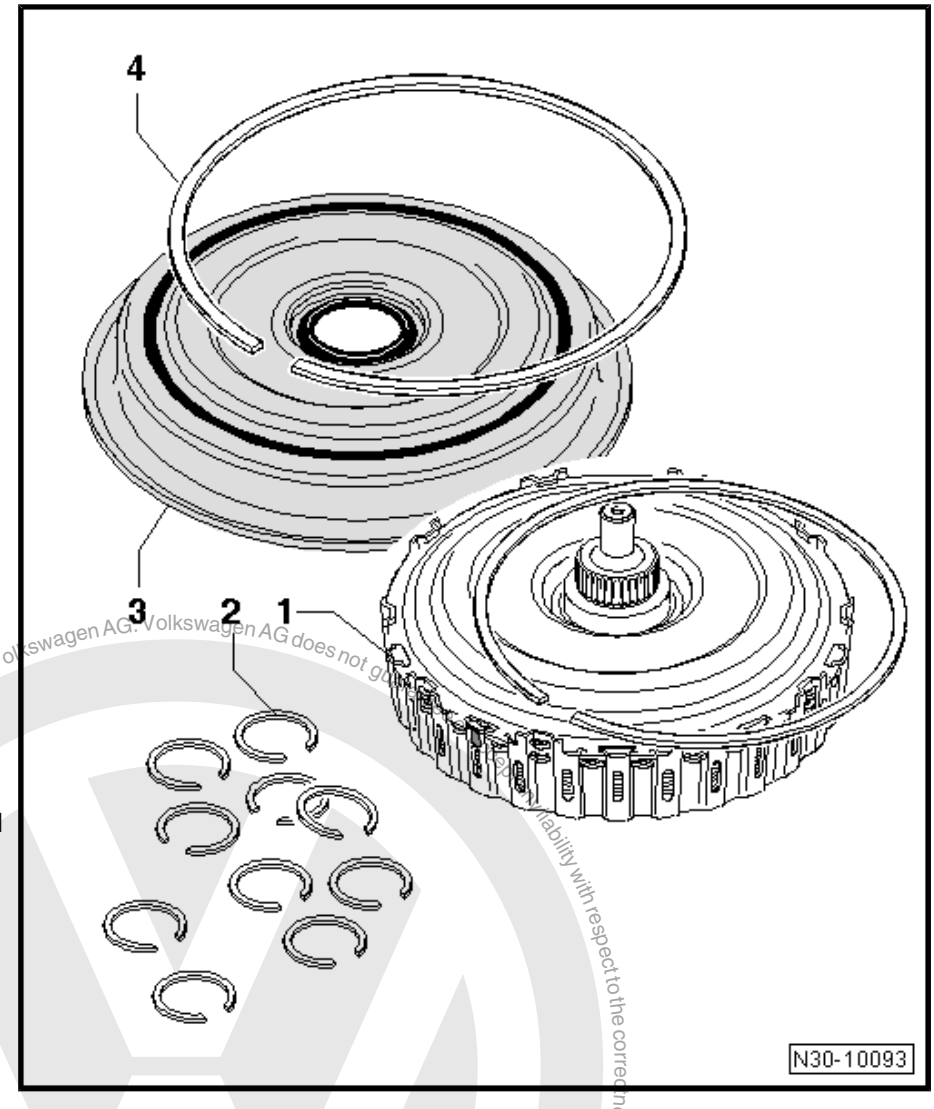

2 - Circlip

- Quantity: 10, with various thicknesses for adjustment
- When installing the dual clutch, the thickness of the circlip must be determined. Refer to ⇒ page 24

3 - Clutch End Cover

4 - Circlip

- For clutch end cover

Individual Parts of the Disassembled DSG® Clutch

> **Caution**

Protected by copyright. Copying for private or commercial purposes, in part or in whole, is not permitted unless authorised by Volkswagen AG. Volkswagen AG does not guarantee or accept any liability with respect to the correctness of information in this document. Copyright by Volkswagen AG.

...rised by Volkswagen AG. Volkswagen AG does not guarante...
...rcial purposes, in part or in whol...

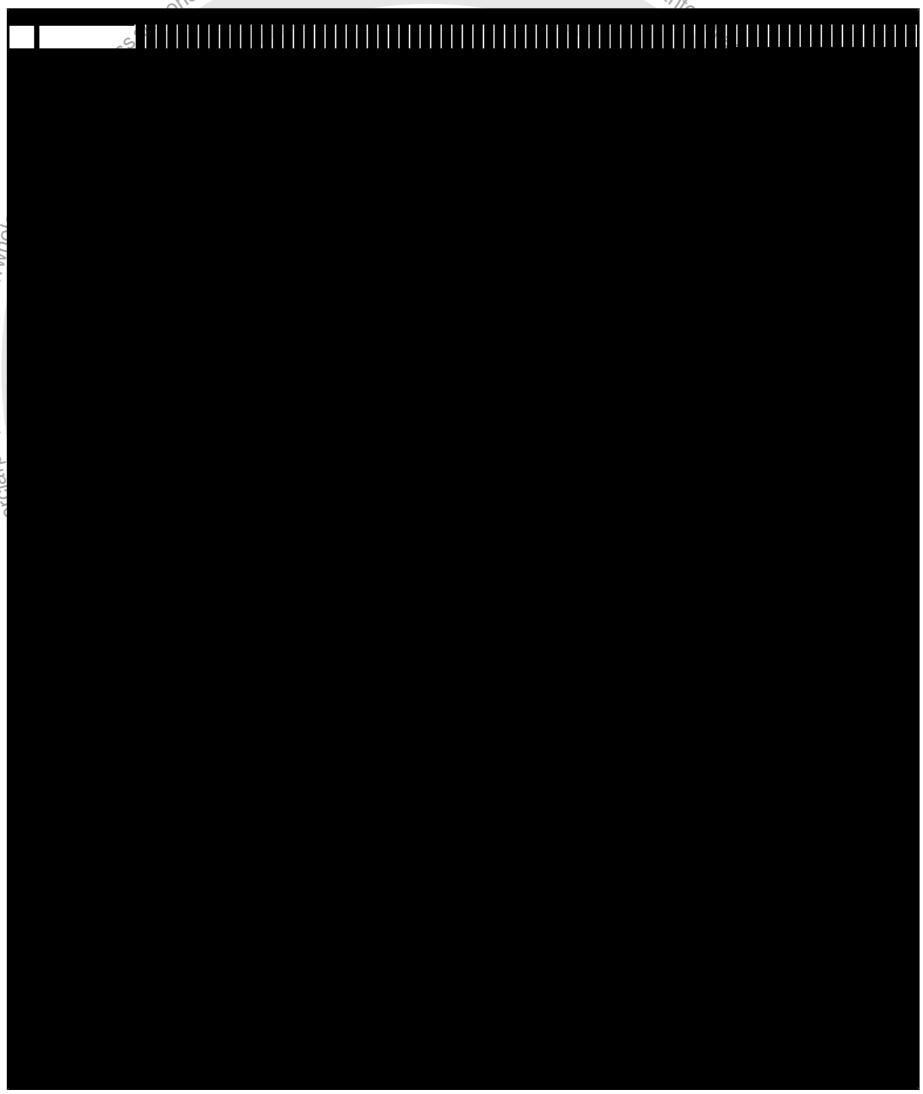

1 - DSG® Clutch/Clutch Housing

- ❑ Outer clutch pack carrier

2 - Seals

- ❑ Quantity: 4

3 - Inner Clutch Pack Carrier

- ❑ Do not remove

> **Caution**
>
> ***Do not lift or remove the inner clutch pack carrier, under any circumstances. The clutch discs could rotate themselves.***

4 - Outer Discs

- ❑ Quantity: 4

5 - Inner Discs

- ❑ Quantity: 4

6 - Thrust Washer

7 - Circlip

- ❑ In the event the securing ring was removed in order to reinsert discs, it should be replaced with a new ring of the same thickness.

8 - Circlip

- ❑ After installing a new dual clutch, redetermine the thickness. Refer to ⇒ page 24 .

9 - Drive Plate

10 - Circlip

- ❑ Replace after removing

1.2 Clutch End Cover, Removing and Installing

Special tools and workshop equipment required

- ♦ Clutch Cover Plate Guide Sleeve - T10302-

> **Caution**
>
> ***This procedure contains mandatory replaceable parts. Refer to component overview prior to starting procedure.***

Mandatory Replacement Parts

- ♦ Clutch End Cover
- ♦ Circlip - Clutch End Cover

Note

Clean the Clutch Cover Plate Guide Sleeve - T10302- before using, and do not use any scratched sleeves

Brief Description

The clutch cover seals the transmission toward the outside. It is held in place by a circlip. Remove the circlip and pry out the clutch cover. Always replace the clutch cover and the circlip. Never use a hammer to install the clutch cover and never lubricate the center seal or touch it. If this should occur, the clutch cover will certainly leak!

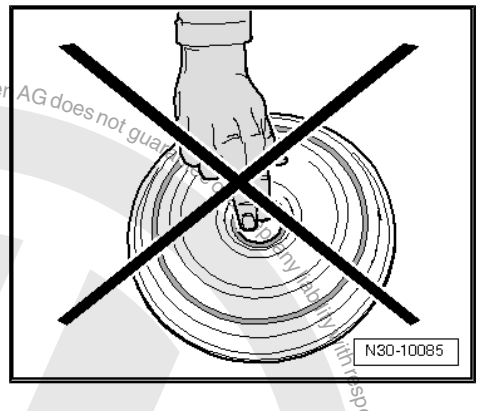

To remove and install the clutch end cover, the transmission must be secured in a vertical position on the assembly stand. Refer to ⇒ “7 Securing on Engine and Transmission Holder”, page 104 .

Removing

– Drain the transmission fluid. Refer to ⇒ “9.2 Transmission Fluid, Draining and Filling”, page 116 .

– Remove the transmission. Refer to ⇒ “3.1 Transmission, Removing”, page 72 .

– Secure the transmission on the assembly stand. Refer to ⇒ “5 Transmission, Transporting”, page 100 .

– If necessary change the transmission fluid filter. Refer to ⇒ “8.3 Transmission Fluid Filter, Removing and Installing”, page 110 .

– Pry out and remove the circlip -2- for the clutch cover with a screwdriver -1- in the direction of -arrow-.

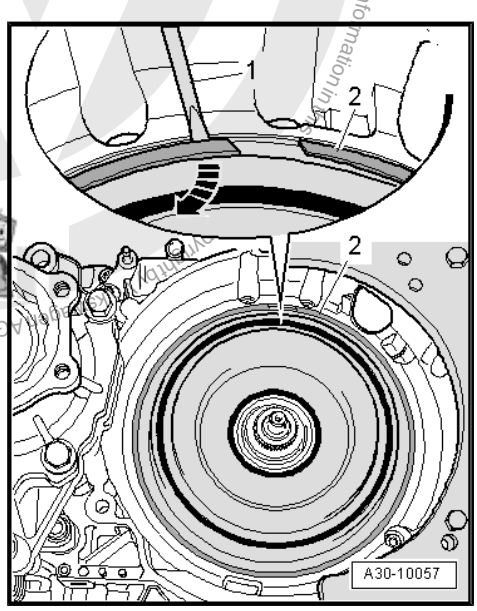

Protected by copyright. Copying for private or commercial purposes, in part or in whole, is not permitted unless authorised by Volkswagen AG. Volkswagen AG does not guarantee or accept any liability with respect to the correctness of information in this document.

– Lift the clutch cover -2- through the opening in the starter with a screwdriver -1- or a pry bar in direction of -arrow- and then remove it.

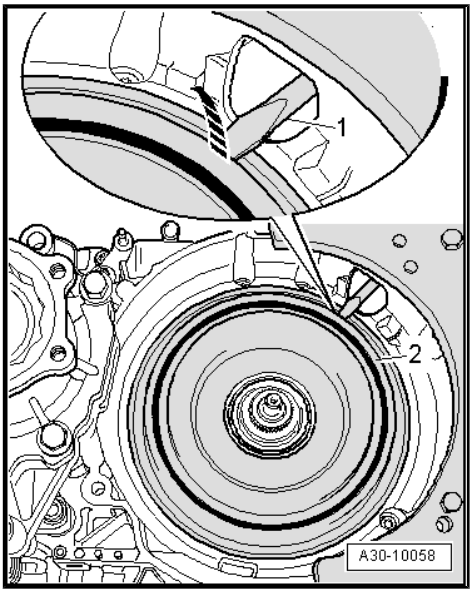

Note

The clutch end cover that was removed cannot be installed again.

Installing

Caution

Always replace the clutch end cover and the locking ring. Never use a hammer to install the clutch cover and never lubricate the center seal or touch it. Leaks will develop.

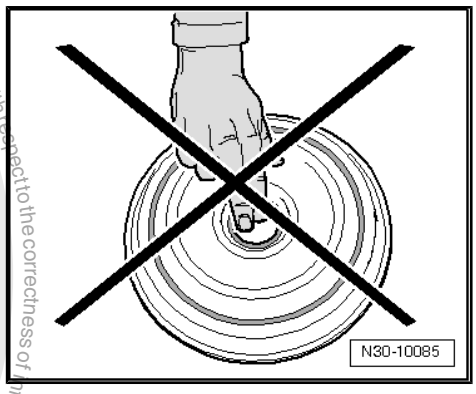

– Only hold the clutch end cover as shown in this illustration!

Note the Following Before Installing the Clutch End Cover:

The new clutch cover must not have any oil in the around the center seal and it must be dry.

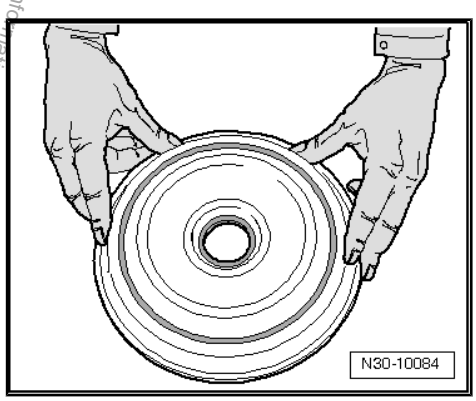

– If necessary, clean the sealing surface on the drive plate -arrow- thoroughly.

Do not apply adhesive to inside of clutch end cover.

– Carefully remove the adhesive if it has already been applied!

Only coat outer edge of seal with oil.

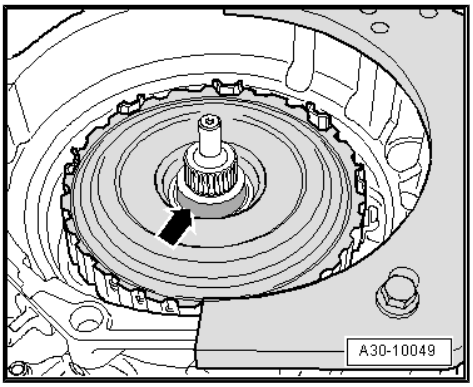

Protected by copyright. Copying for commercial purposes, in part or in whole, is not permitted unless authorised by Volkswagen AG. Volkswagen AG does not guarantee or accept any liability with respect to the correctness of information in this document. Copyright by Volkswagen AG.

Protected by copyright. Copying for private or commercial purposes, in part or in whole, is not permitted unless authorised by Volkswagen AG. Volkswagen AG does not guarantee or accept any liability with respect to the correctness of information in this document. Copyright by Volkswagen AG.

– Clean the Clutch Cover Plate Guide Sleeve - T10302- “before using, do not use any scratched sleeves”

– Place the sleeve on a level surface.

The center seal on the new clutch end cover must now be “performed”:

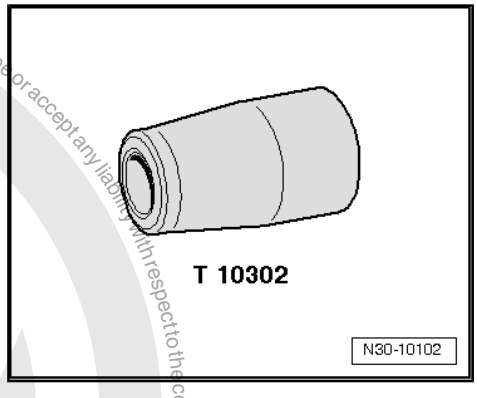

– Guide the clutch end cover horizontally and evenly over the whole sleeve in direction of -arrow-. This brings the sealing lip into its installed position.

– Remove the sleeve upward out of the clutch end cover and place it on the end of the dual clutch shaft.

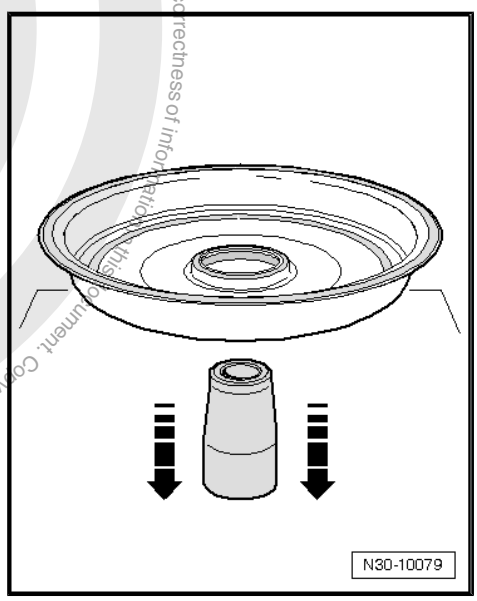

– Guide the cover horizontally over the sleeve and press it evenly onto its seat.

Caution

The clutch end cover may not be exposed to direct hammer hits. If the cover is hit in any way, leakage will definitely occur.

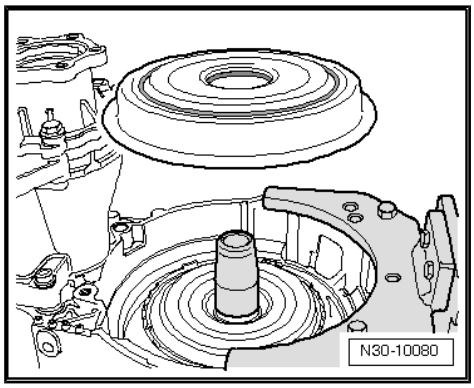

The cover can be pried out of its seat using a screwdriver to install the “new” circlip -arrow-.

– Install the new circlip.

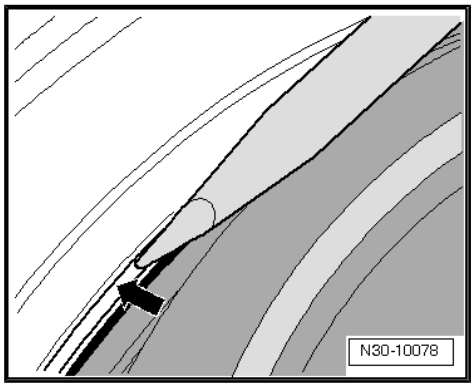

– Only remove bushing once circlip is installed.

– Install the transmission. Refer to
⇒ “3.2 Transmission, Installing”, page 91 .

– Fill with transmission fluid. Refer to
⇒ “9.2 Transmission Fluid, Draining and Filling”, page 116 .

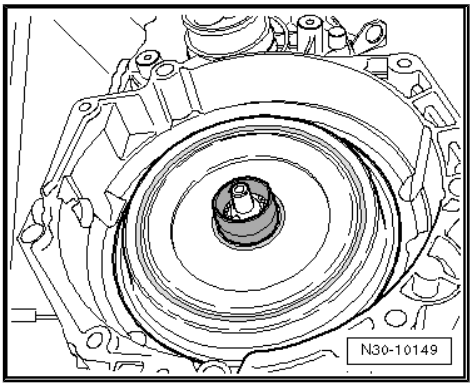

WARNING

Do not start the engine if there is no transmission fluid in the transmission.

– After installing the transmission, perform the `Basic Setting` using the `Guided Functions`. Refer to Vehicle Diagnostic Tester .

1.3 DSG® Clutch, Removing

Brief Description

- Adjust the dual clutch axial play when installing.
- Secure the transmission to the assembly stand so that it is vertical when removing and installing the dual clutch. Refer to ⇒ “7 Securing on Engine and Transmission Holder”, page 104 . This is the only position in which the dual clutch axial play can later be adjusted without error.
- The large plate carrier is inserted in all clutch plates in the dual clutch. The large plate carrier must not slide out of the lowest plate.
- Transmission fluid pump shaft is removed.
- Do not install any wavy circlips

Removing

– Remove the clutch end cover. Refer to
⇒ “1.2 Clutch End Cover, Removing and Installing”, page 15 .

Caution

A »used« clutch must not be installed again.

Removed circlips are also not installed again.

Protected by copyright. Copying for private or commercial purposes, in part or in whole, is not permitted unless authorised by Volkswagen AG. Volkswagen AG does not guarantee or accept any liability with respect to the correctness of information in this document. Copyright by Volkswagen AG.

– Remove the circlip -2- from the drive plate with a screwdriver -1- in direction of -arrow- and dispose of it.

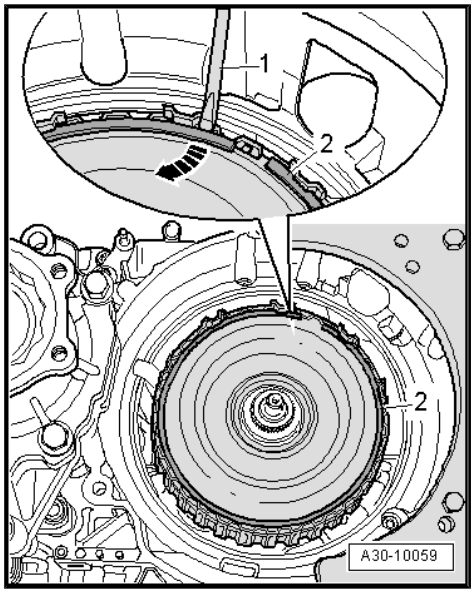

Important! Installed Position of the Drive Plate

– Verify that the protruding tab -arrow- of the drive plate is positioned between the color-marked teeth of the outer clutch pack carrier.

If no marking is available:

– Mark the location of the tab to the outer clutch pack carrier circumference with a waterproof marker as shown in the illustration.

• When installing, the drive plate tab must be placed back on this marked location.

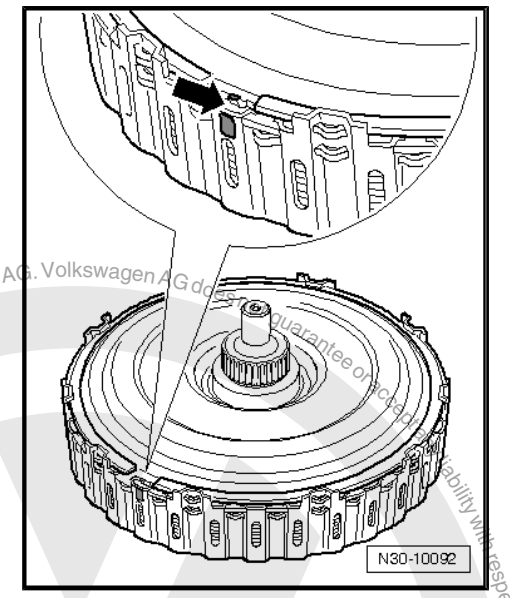

– Remove the drive plate in the direction of -arrows-.

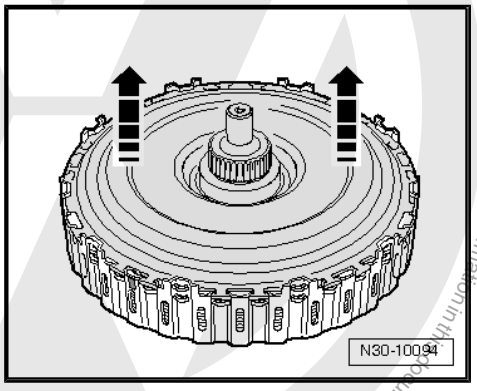

Protected by copyright. Copying for private or commercial purposes, in part or in whole, is not permitted unless authorised by Volkswagen AG. Volkswagen AG does not guarantee or accept any liability with respect to the correctness of information in this document. Copyright by Volkswagen AG.

– Remove the circlip -arrow- and dispose of it.

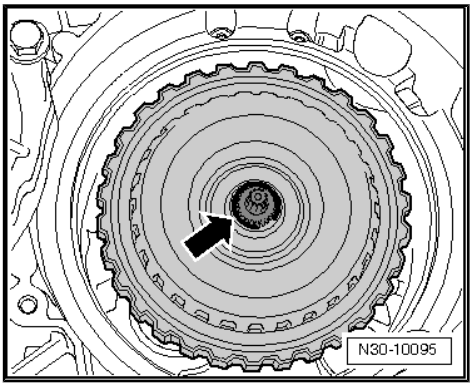

Note

This circlip must be replaced and re-measured during installation.

Caution

Carefully remove the DSG® clutch. Make sure that no other parts of the clutch fall out; for this reason, never turn over the clutch!

– Remove the DSG® clutch.

– Remove the pump shaft -A-.
– The pump shaft is inserted after installing the new dual clutch. Lay the shaft down until then.
– Install the dual clutch. Refer to ⇒ “1.4 DSG® Clutch, Installing”, page 21 .

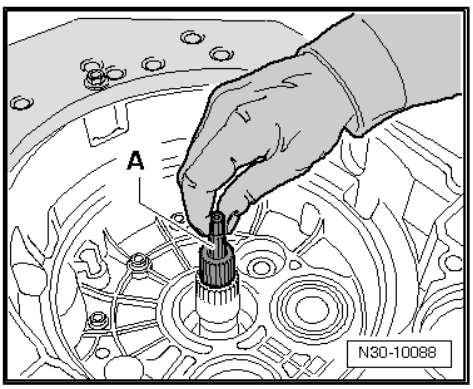

1.4 DSG® Clutch, Installing

Special tools and workshop equipment required

- Clutch Retaining Bar - T10303-
- Dial Gauge Holder - VW387-
- Dial Gauge - 0-10mm - VAS6079-

Caution

This procedure contains mandatory replaceable parts. Refer to component overview prior to starting procedure.

Mandatory Replacement Parts

- Circlip - DSG® Clutch and Circlip
- Circlip

Volkswagen AG. Volkswagen AG does not guarantee or accept any liability with respect to the correctness of information in this document. Copyright by Volkswagen AG. Copying for private or commercial purposes, in part or in whole, is not permitted unless authorised by Volkswagen AG.

Caution

- *The drive plate of a new clutch is not secured with the circlip, it only sits "taut" in the clutch.*
- *Thus, press the drive plate into the outer clutch pack carrier with both thumbs during the following steps.*
- *The drive plate must be engaged between the teeth of the exterior clutch pack.*
- *If the drive plate is loosened, the clutch discs in the DSG® clutch can slip out of place and the DSG® clutch may not be correctly set during installation under certain circumstances.*

Installing

Caution

A »used« clutch must not be installed again.

– Take the DSG® clutch out of the packaging by pressing the drive plate into the outer clutch pack carrier with both thumbs.

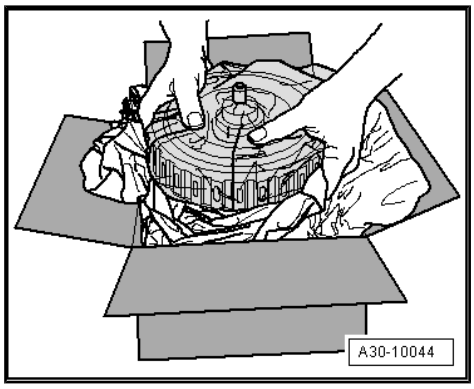

– Check the bottom side of the multi-plate clutch to see if the 4 hub sealing rings are seated correctly and engage them in one another if necessary.

• The ends of the rings should not stand over one another.

– Turn the rings one time. They must move freely and must not stick.

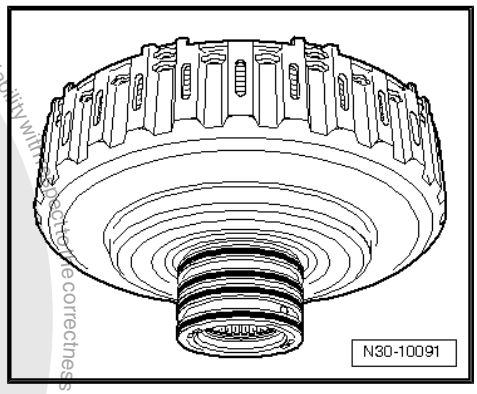

Protected by copyright. Copyright by Volkswagen AG. Copyright by Volkswagen AG. Volkswagen AG does not guarantee or accept any liability with respect to the correctness of information in this document. Copying for private or commercial purposes, in part or in whole, is not permitted unless authorised by Volkswagen AG.

Important! Installed Position of the Drive Plate

– Verify that the protruding tab -arrow- of the drive plate is positioned between the color-marked teeth of the outer clutch pack carrier.

If no marking is available:

– Mark the location of the tab to the outer clutch pack carrier circumference with a waterproof marker as shown in the illustration.

• When installing, the drive plate tab must be placed back on this marked location.

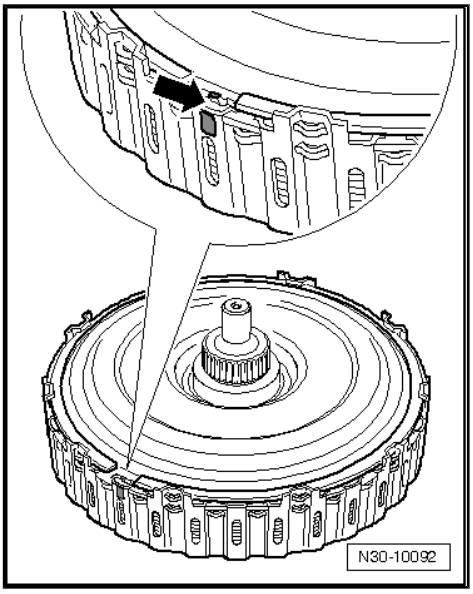

– Insert the Clutch Retaining Bar - T10303- in the positions on the clutch cover as shown in the illustration.

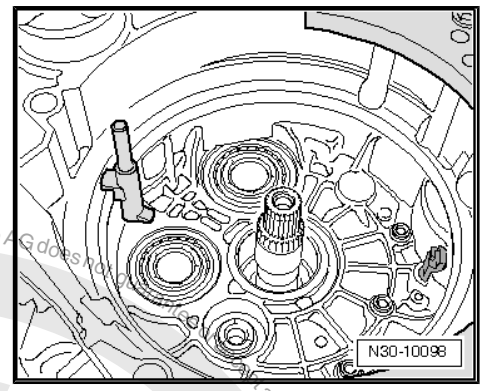

– Set the DSG® clutch using rotating and hub movements into the clutch housing, but do not let it fall in. Press the drive plate into the outer clutch pack carrier with both thumbs in the direction of -arrows- to install.

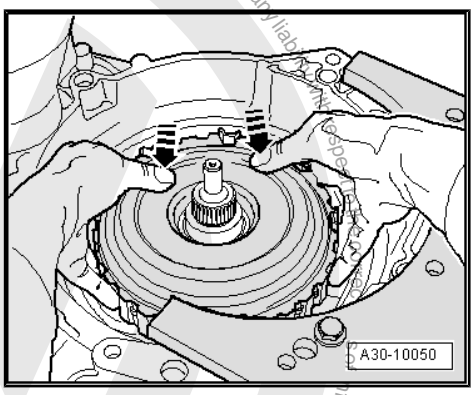

• A second technician should hold the Clutch Retaining Bar - T10303- .

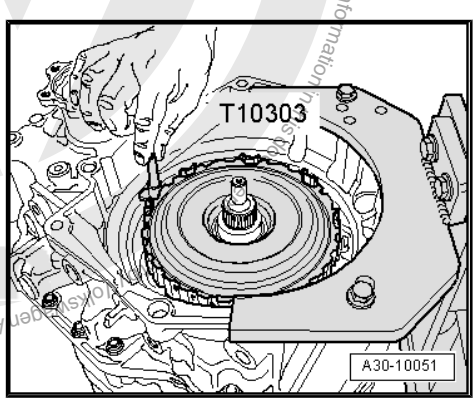

Note

♦ *The bolt remains installed until clutch end plate is installed.*

♦ *The DSG® clutch must not be turned any more now, otherwise the Clutch Retaining Bar - T10303- could be twisted in its position.*

Protected by copyright. Copying for private or commercial purposes, in part or in whole, is not permitted unless authorised by Volkswagen AG. Volkswagen AG does not guarantee or accept any liability with respect to the correctness of information in this document. Copyright by Volkswagen AG.

– Remove the drive plate from the installed clutch in the direction of -arrows-, if necessary, use a screwdriver to carefully pry it out of the teeth of the outer clutch pack carrier.

– Move the drive plate to the side.

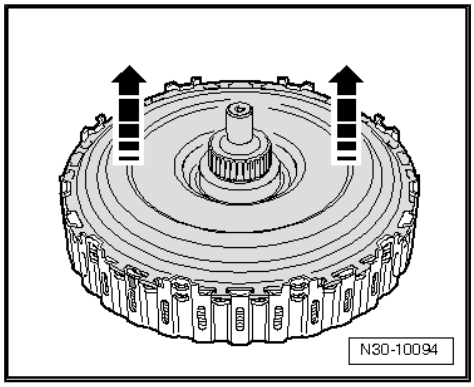

Caution

Do not remove or lift the inner clutch pack carrier, under any circumstances. The clutch discs could rotate themselves.

Identify the Circlip for the DSG® Clutch

– Select the 2 mm thick ring from the circlips delivered and install it -arrow-.

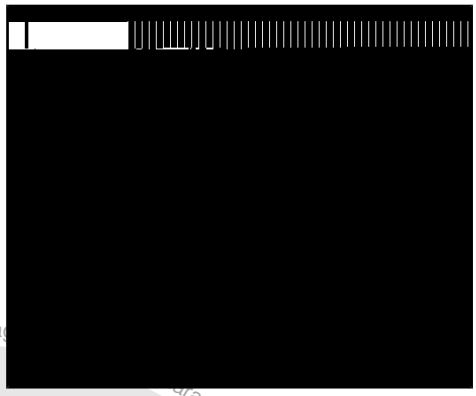

Note

This circlip is temporary installed for the measurement of the axial play.

First Measurement:

- The Clutch Retaining Bar - T10303- remains installed.

– Install the Dial Gauge Holder - VW387- on the transmission flange.

– Place the -dial gauge button- on input shaft.

– Adjust the -dial gauge- pretension to “0”.

– Raise the dual clutch up as far as the stop and note the measurement result.

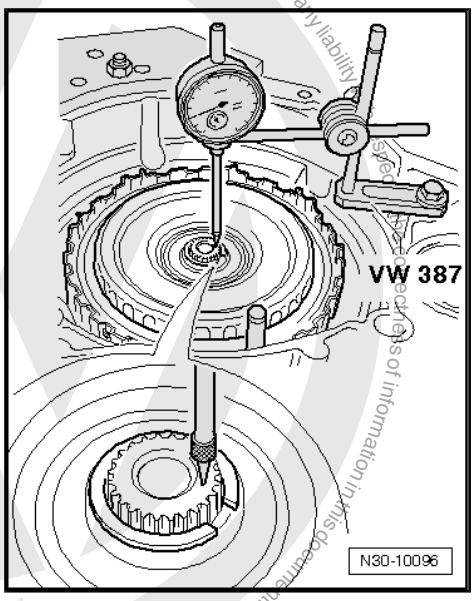

Second Measurement:

- The Clutch Retaining Bar - T10303- remains installed.

Protected by copyright. Copying for private or commercial purposes, in part or in whole, is not permitted unless authorised by Volkswagen AG. Volkswagen AG does not guarantee or accept any liability with respect to the correctness of information in this document. Copyright by Volkswagen AG.

– Place the gauge button
-on the hub of the large clutch pack carrier-.

• The tip of the dial may not be placed on the circlip.

– Adjust the -dial gauge- pretension again to »0«.

– Raise the clutch up as far as the stop again and note this measurement as well

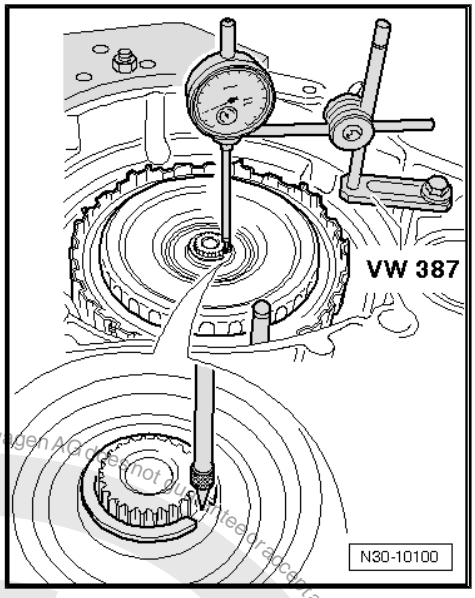

Now the Calculation Will Be Made to Determine Which of the Remaining Nine Circlips Will Be Finally Installed:

The new circlip will be determined according to the following formula:

2nd Measured value – 1st Measured value + 1.85 mm = thickness of circlip to be installed

– Write down the result.

The remaining nine circlips are staggered in 0.1 mm increments.

– Measure all the circlips and determine the one that is the closes match to the result

Determined Measurement for the New Circlip	New Circlip
2.27 mm	2.3 mm
2.24 mm	2.2 mm

– Remove the 2 mm circlip and replace it with the circlip that was measured.

– Dispose of all other rings remaining and the 2 millimeter thick ring.

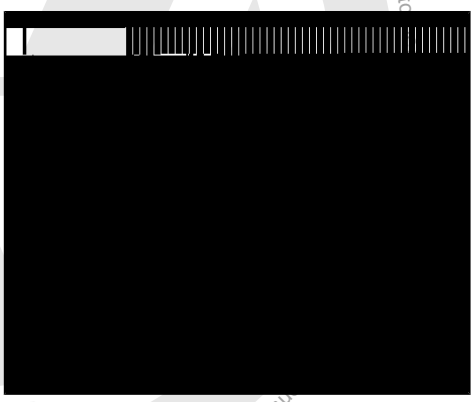

Note

Circlips must only be installed one time.

– Insert the pump shaft.

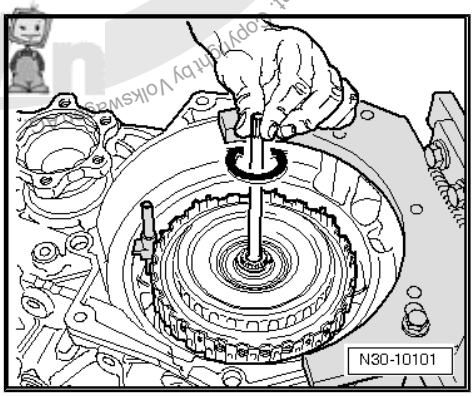

Note

The pump shaft must be slightly lifted and rotated in direction of -arrow- in order for it to completely slide into the splines.

Protected by copyright. Copying for private or commercial purposes, in part or in whole, is not permitted unless authorised by Volkswagen AG. Volkswagen AG does not guarantee or accept any liability with respect to

– Insert the drive plate into the DSG® clutch.

• The protruding tab of the drive plate must be positioned between the color-marked teeth of the outer clutch pack carrier. Make note of markings that have been changed retrospectively.

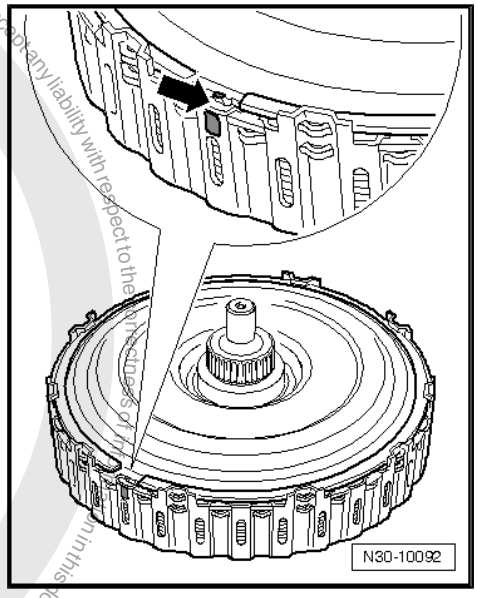

> **Caution**
>
> ***Only the circlip removed beforehand from the »new« clutch may be installed. Never install a »used« circlip.***

– Install the "new" drive plate circlip.

• The circlip must be installed so that the tab of the drive plate -arrow- and the color-marked teeth of the outer clutch pack carrier are positioned between both ends of the circlip.

• The circlip must be completely engaged.

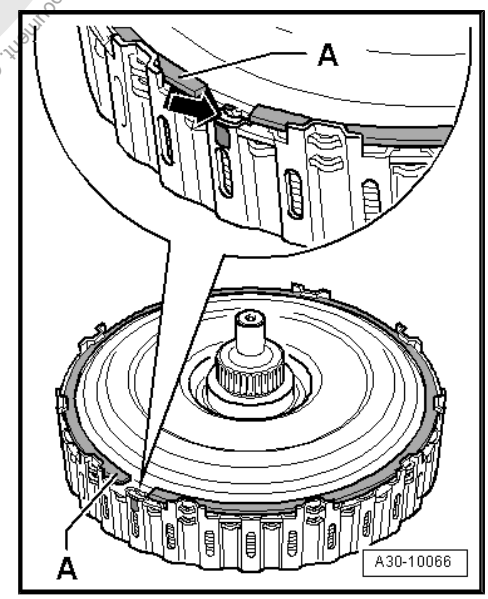

– Check the exact installation position of the circlip and that the circlip is engaged using a screwdriver.

– Now remove the Clutch Retaining Bar - T10303- between the DSG® clutch and the housing.

– Install the clutch end cover. Refer to ⇒ "1.2 Clutch End Cover, Removing and Installing", page 15 .

Copyright by Volkswagen AG. Volkswagen AG does not guarantee or accept any liability with respect to the correctness of information in this document. Copying for private or commercial purposes, in part or in whole, is not permitted unless authorised by Volkswagen AG.

2 Special Tools

Special tools and workshop equipment required

- Clutch Cover Plate Guide Sleeve - T10302-

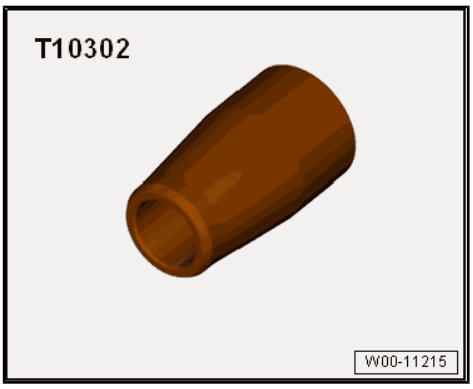

- Clutch Retaining Bar - T10303-

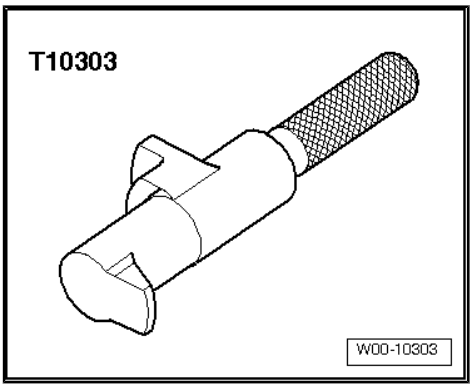

- Dial Gauge - 0-10mm - VAS6079-

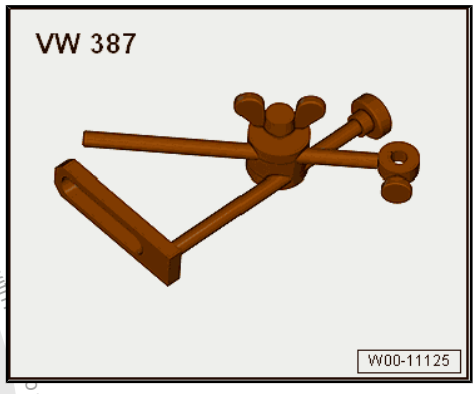

- Dial Gauge Holder - VW387-

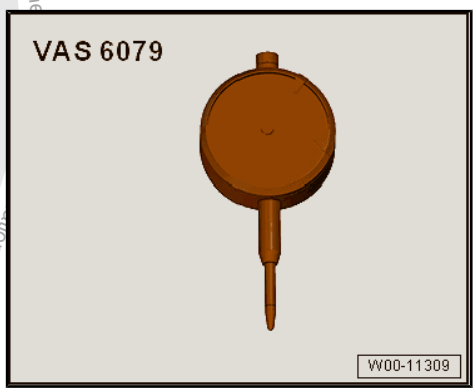

Protected by copyright. Copying for private or commercial purposes, in part or in whole, is not permitted unless authorised by Volkswagen AG. Volkswagen AG does not guarantee or accept any liability with respect to the correctness of information in this document. Copyright by Volkswagen AG.

34 – Controls, Housing

1 Mechatronic

⇒ “1.1 Overview - Mechatronic”, page 28

⇒ “1.2 Mechatronic, Removing and Installing”, page 30

1.1 Overview - Mechatronic

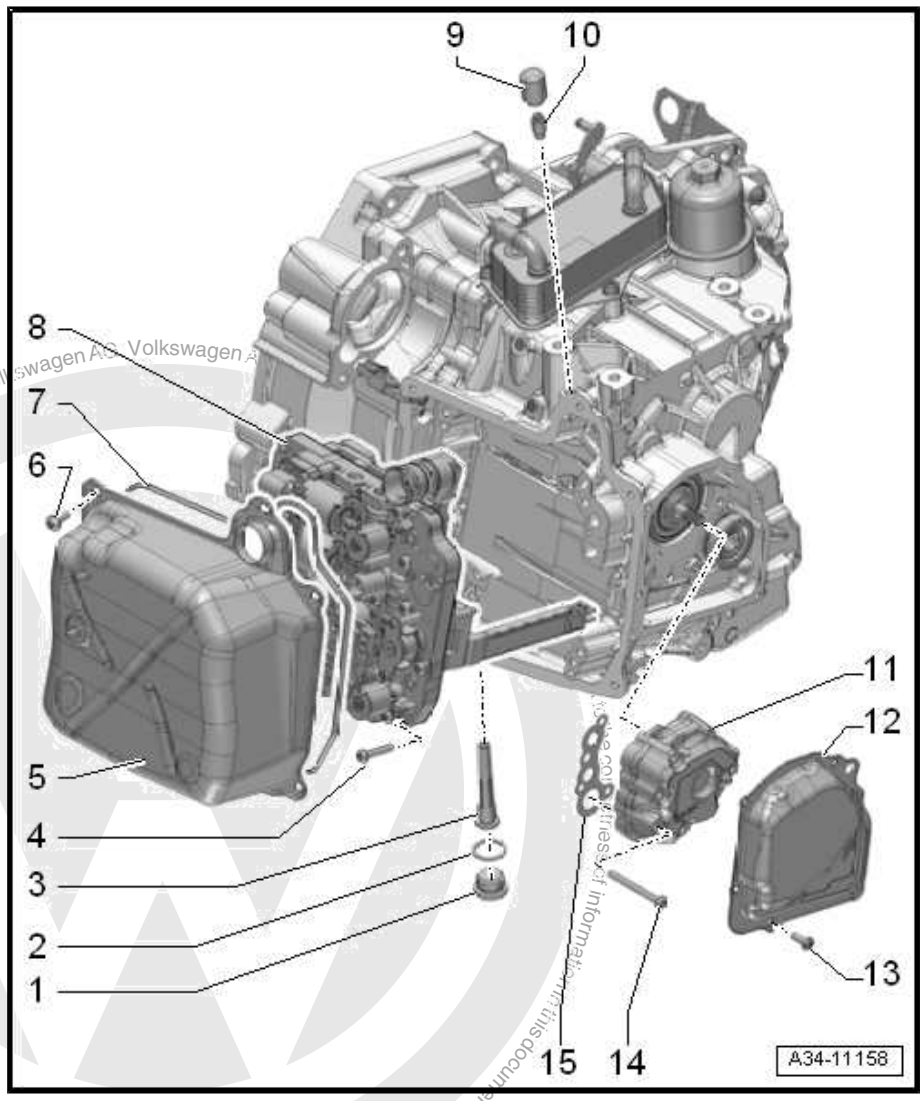

1 - Transmission Fluid Drain and Check Plug

- ❑ 45 Nm
- ❑ There is an overflow pipe with a 8 mm inner hex behind this bolt -item 3- ⇒ Item 3 (page 28)
- ❑ Drain the transmission fluid via the drain- and check plug and removed overflow pipe

2 - Seal

- ❑ Replace after removing

3 - Overflow Pipe

- ❑ 3 Nm
- ❑ Plastic
- ❑ To drain the transmission fluid, remove the drain and check plugs. Refer to -item 1- ⇒ Item 1 (page 28) , and remove the overflow pipe.
- ❑ The length of the overflow pipe determines the fluid level inside the transmission
- ❑ Allocate according to the Parts Catalog.

4 - Bolt

- ❑ Replace after removing
- ❑ Quantity: 10
- ❑ Tightening specification and sequence. Refer to ⇒ Fig. ““Tightening Specification and Sequence for DSG Transmission Mechatronic -J743- ”“ , page 30

5 - Transmission Cover

- ❑ Removing and installing. Refer to ⇒ “1.2 Mechatronic, Removing and Installing”, page 30 .

6 - Bolt

- ❑ Replace after removing
- ❑ Quantity: 5
- ❑ Tightening specification and sequence. Refer to ⇒ Fig. ““Tightening Specification and Sequence for DSG Transmission Mechatronic -J743- ”“ , page 30

Protected by copyright. Copying for private or commercial purposes, in part or in whole, is not permitted unless authorised by Volkswagen AG. Volkswagen AG

7 - Seal

- ❑ Replace after removing

8 - DSG Transmission Mechatronic - J743-

- ❑ Replace the O-ring after disassembly.
- ❑ With O-rings on connector
- ❑ Removing and installing. Refer to ⇒ “1.2 Mechatronic, Removing and Installing”, page 30 .

9 - Bleed Cap

- ❑ Placed on bleed pipe

10 - Bleed Pipe

- ❑ Replace after removing
- ❑ Pressed into transmission

11 - Transmission Fluid Pump

- ❑ Insert with new seal
- ❑ Removing and installing. Refer to ⇒ “8.2 Transmission Fluid Pump, Removing and Installing”, page 107 .

12 - Transmission Fluid Pump Cover

- ❑ Replace after removing
- ❑ With seal
- ❑ Removing and installing. Refer to ⇒ “8.2 Transmission Fluid Pump, Removing and Installing”, page 107 .

13 - Bolt

- ❑ Replace after removing
- ❑ Quantity: 4
- ❑ Tightening specification and sequence. Refer to ⇒ Fig. “Tightening Specification and Sequence of the Transmission Fluid Pump Cover -A-.”“ , page 30

14 - Bolt

- ❑ Replace after removing
- ❑ Quantity: 4
- ❑ Different versions. For the correct allocation. Refer to the Parts Catalog.
- ❑ There are different bolts for the transmission fluid pump. Refer to ⇒ page 109

15 - Seal

- ❑ Replace after removing

Tightening specification and tightening sequence of the transmission cover -A-.

– Tighten the bolts -arrows- diagonally in steps to 16 Nm.

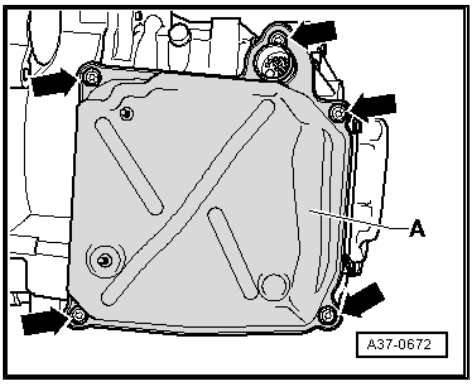

Protected by copyright. Copyright by Volkswagen AG. Volkswagen AG does not guarantee or accept any liability with respect to the correctness of information in this document. Copying for private or commercial purposes, in part or in whole, is not permitted unless authorised by Volkswagen AG.

Tightening Specification and Sequence for DSG Transmission Mechatronic - J743-

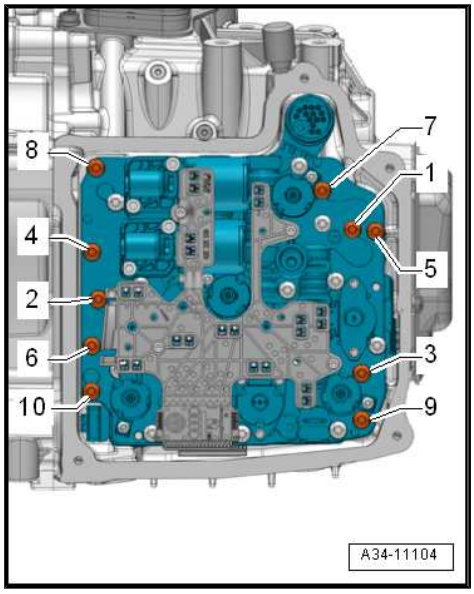

Note

Always replace bolts that were tightened with an additional turn.

– Tighten the bolts in steps in the sequence shown:

Step	Bolts	Tightening Specification/Additional Turn
1.	-1 to 10-	5 Nm
2.	-1 to 10-	Tighten 90° further.

Tightening Specification and Sequence of the Transmission Fluid Pump Cover -A-.

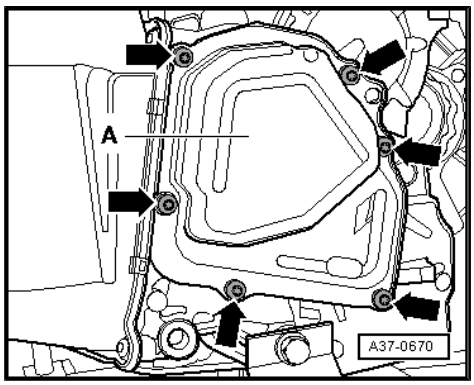

– Tighten the bolts -arrows- diagonally in steps to 8 Nm.

1.2 Mechatronic, Removing and Installing

⇒ "1.2.1 DSG Transmission Mechatronic J743 , Removing and Installing, Transmission Installed", page 30 .

⇒ "1.2.2 DSG Transmission Mechatronic J743 , Removing and Installing, Transmission Removed", page 39 .

1.2.1 DSG Transmission Mechatronic - J743- , Removing and Installing, Transmission Installed

Special tools and workshop equipment required

- Torque Wrench 5-50Nm - VAG1331-
- Used Oil Collection and Extraction Unit - SMN372500-
- Oil Filler - VAS6262A-

Caution

This procedure contains mandatory replaceable parts. Refer to component overview prior to starting procedure.

Mandatory Replacement Parts

- Bolts - DSG® Transmission Mechatronic - J743
- Bolts - Pendulum Support Bolts to Transmission

Protected by copyright. Copying for private or commercial purposes, in part or in full, is not permitted unless authorised by Volkswagen AG. Volkswagen AG does not guarantee or accept any liability with respect to the correctness of information in this document. Copyright by Volkswagen AG.

- Bolts - Transmission Fluid Pan
- Bolts - Transmission Fluid Pump Cover
- O-rings - DSG® Transmission Mechatronic - J743
- Seal - Transmission Fluid Drain and Check Plug
- Seal - Transmission Fluid Pan

Note

- *Follow the guidelines for clean working conditions. Refer to ⇒ "3.2 Clean Working Conditions", page 5 .*
- *Pay attention to the general repair information. Refer to ⇒ "3.3 General Repair Information", page 6 .*

Removing

Always make sure that no dirt enters an "open" transmission.

Dirt entering can cause a transmission malfunction especially with »open« Direct Shift Gearbox (DSG®) Mechatronic and/or transmission fluid pump.

The Mechatronic can get stuck on the alignment pins when the transmission is very warm. Let the transmission cold down.

– Move the selector lever into "P".

– Remove the noise insulation. Refer to ⇒ Body Exterior; Rep. Gr. 66 ; Noise Insulation; Overview - Noise Insulation .

If present:

– Remove the connecting hose between the charge air cooler and the charge air pipe. Refer to ⇒ Rep. Gr. 21 ; Overview - Charge Air System .

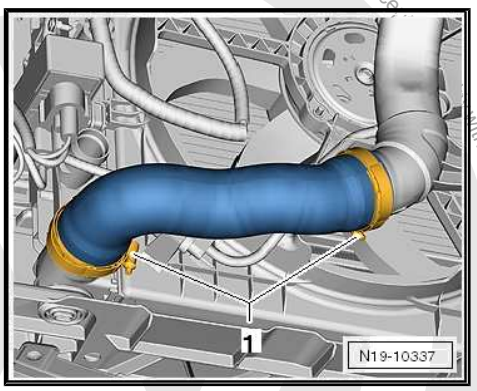

Note

It is possible that parts, which have nothing to do with the Mechatronic unit, will have to be removed. It depends on the vehicle equipment. Make source there is enough room around the Mechatronic unit.

- Depending on the vehicle, the parts could be:
- Fan mount -arrow-
- Charge or cold air pipes

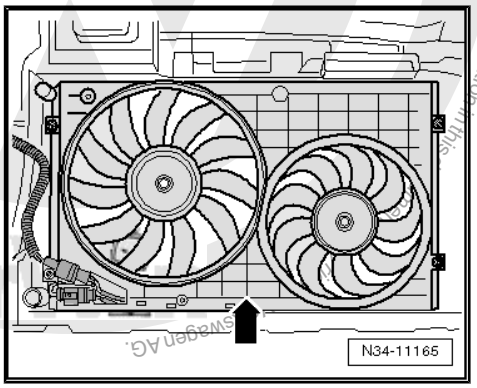

Caution

Risk of destroying Mechatronic with static discharge.

- ***Do not touch contacts in the Mechatronic connector with hands.***

– To discharge any static electricity, touch the vehicle ground with hand (without wearing a glove). Refer to ⇒ page 7 .

Protected by copyright. Copying for private or commercial purposes, in part or in whole, is not permitted unless authorised by Volkswagen AG. Volkswagen AG does not guarantee or accept any liability with respect to the correctness of information in this document.

– Release and remove the connector rotary lock -1- for the Mechatronic by turning it in the direction of the starter -A-.

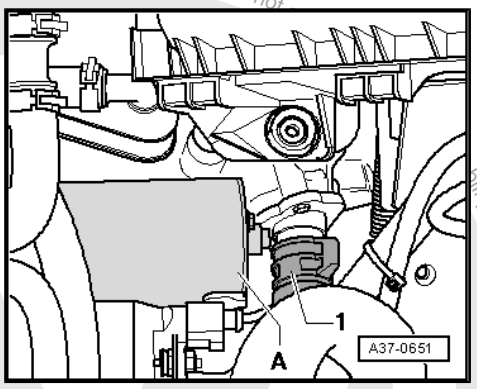

– Remove the wires and bracket from the front of the transmission cover -arrows- (two M6 nuts).

– Route the wires near the transmission cover upward and tie them up.

– Place the Used Oil Collection and Extraction Unit - SMN372500- under the transmission near the transmission cover.

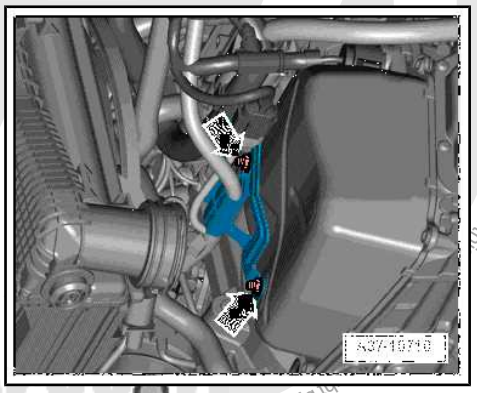

Caution

Fluid will leak out of the transmission cover when the bolts are removed. Risk of injury due to hot transmission fluid.

– Loosen the bolts -arrows- on the transmission cover -A- diagonally and then remove them. Hold down the transmission cover at the same time.

– Drain the transmission fluid and remove the cover and seal.

Approximately 3 liters (3.1 quarts) of transmission fluid will drain out.

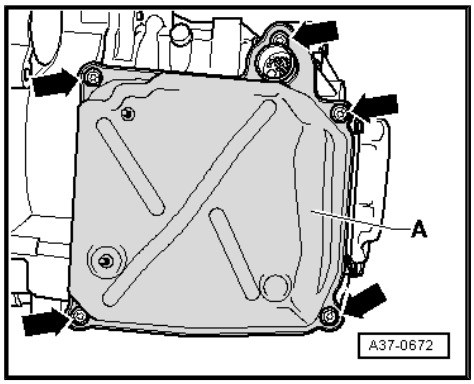

Note

Always replace the screws on the transmission fluid pan.

– If necessary change the transmission fluid filter. Refer to ⇒ “8.3 Transmission Fluid Filter, Removing and Installing”, page 110 .

– Remove the lower left front wheel housing liner. Refer to ⇒ Body Exterior; Rep. Gr. 66 ; Wheel Housing Liner; Overview - Front Wheel Housing Liner .

– Remove the bolts -arrows- from the transmission fluid pump cover and remove the cover -A-.

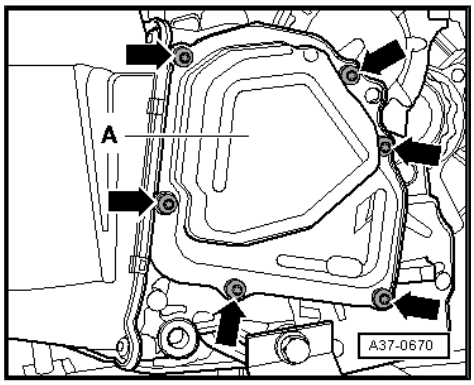

Note

Always replace the cover and the transmission fluid pump bolts.

Protected by copyright. Copying for private or commercial purposes, in part or in whole, is not permitted unless authorised by Volkswagen AG. Volkswagen AG does not guarantee or accept any liability with respect to the correctness of information in this repair manual.

– Remove the pendulum support bolts -1- from the transmission.

The transmission can now be “pressed down” slightly to remove the Mechatronic.

– Touch a grounded object again before touching the Mechatronic.

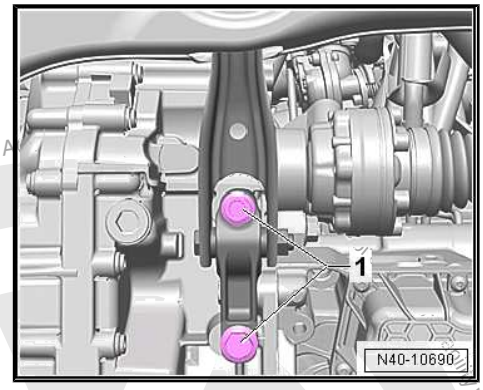

– Loosen and remove the bolts -1 through 10- in the specified sequence.

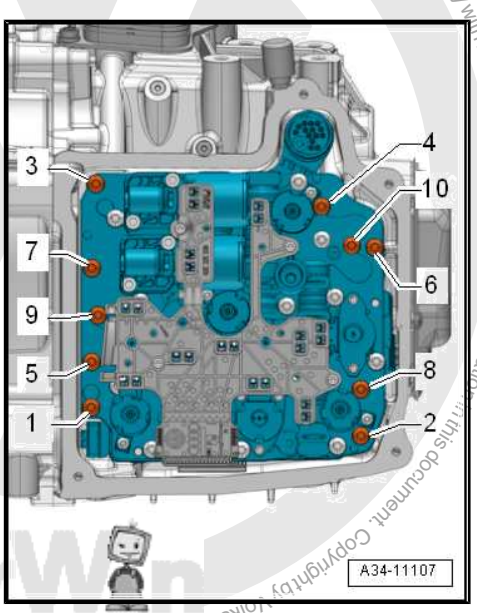

– Push the transmission rearward and pull the Mechatronic carefully from the transmission housing until the sensor arm -B- on the rear is no longer in the transmission housing.

When handling the Mechatronic, be particularly aware of the “long” sensor arm -B-.

– Carefully move the DSG Transmission Mechatronic - J743- downward.

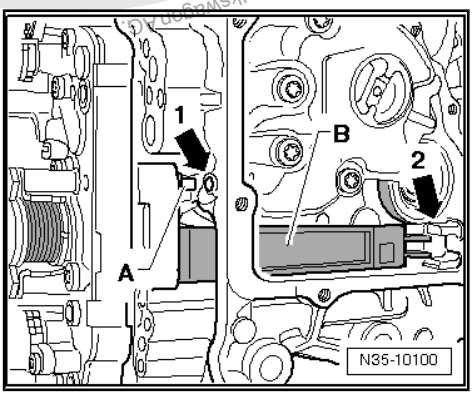

Store Mechatronic Properly

Protected by copyright. Copying for private or commercial purposes, in part or in whole, is not permitted unless authorised by Volkswagen AG. Copyright by Volkswagen AG. No liability with respect to the correctness of information in this document.

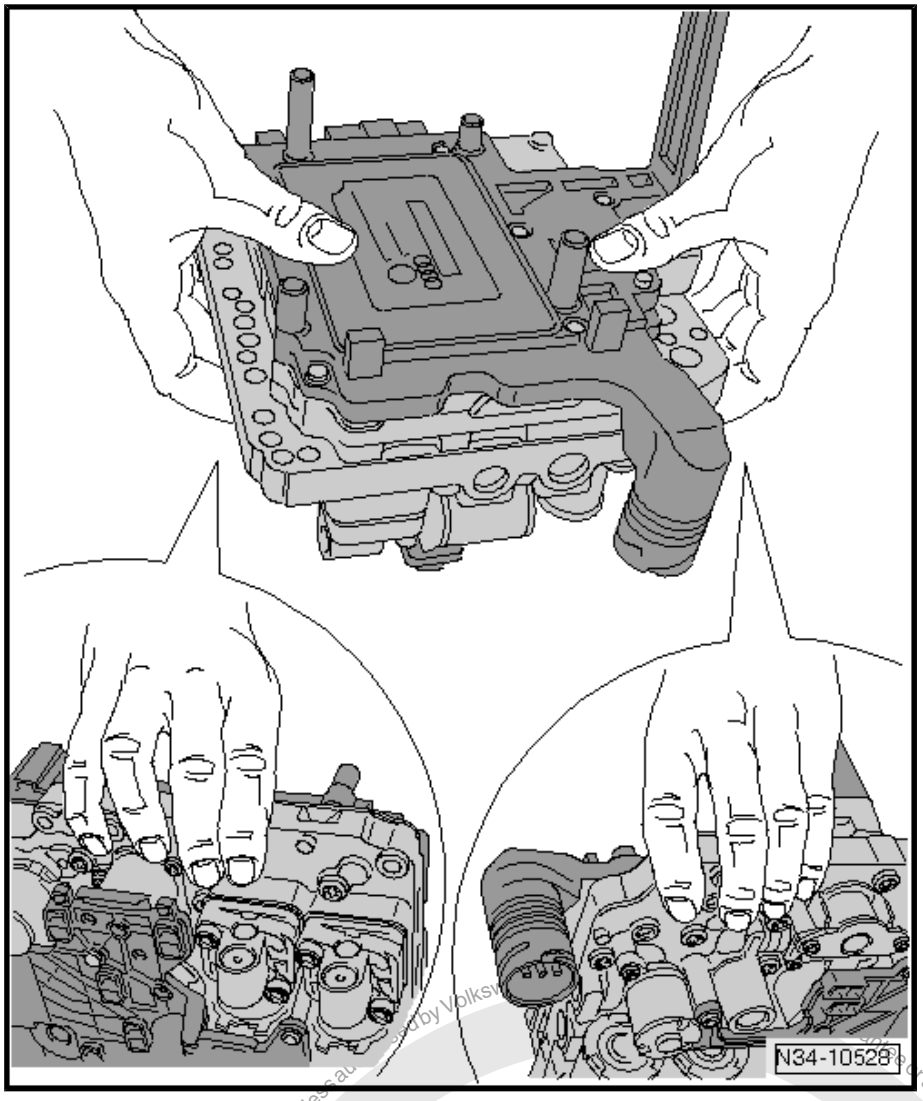

Caution

Never lift the Mechatronic by the "sensor arm" and never let it rest on the arm.

Protected by copyright. Copying for private or commercial purposes, in part or in whole, is not permitted unless authorised by Volkswagen AG. Volkswagen AG does not guarantee or accept any liability with respect to the correctness of information in this document. Copyright by Volkswagen AG.

If the “arm” is damaged, the Mechatronic must be replaced.

Installing

Touch a grounded object before touching the Mechatronic ⇒ page 7 .

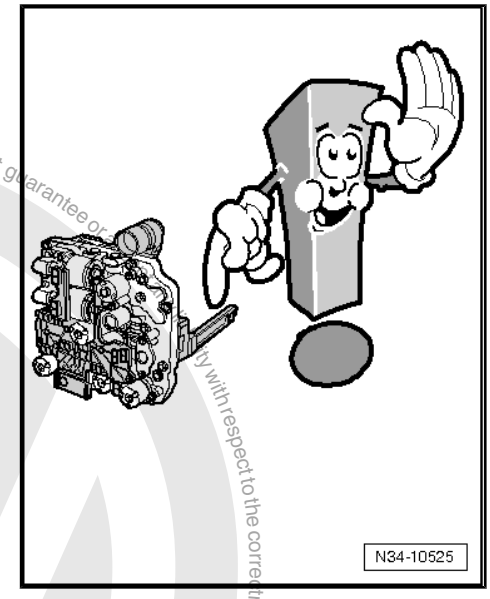

Note

The DSG Transmission Mechatronic - J743- and the transmission must be the same temperature. Otherwise the alignment pins will not “clamp” during installation.

– Carefully mount the Mechatronic onto the alignment pins -arrow-. The goal is for the “sensor arm” to be in its -installed position-.

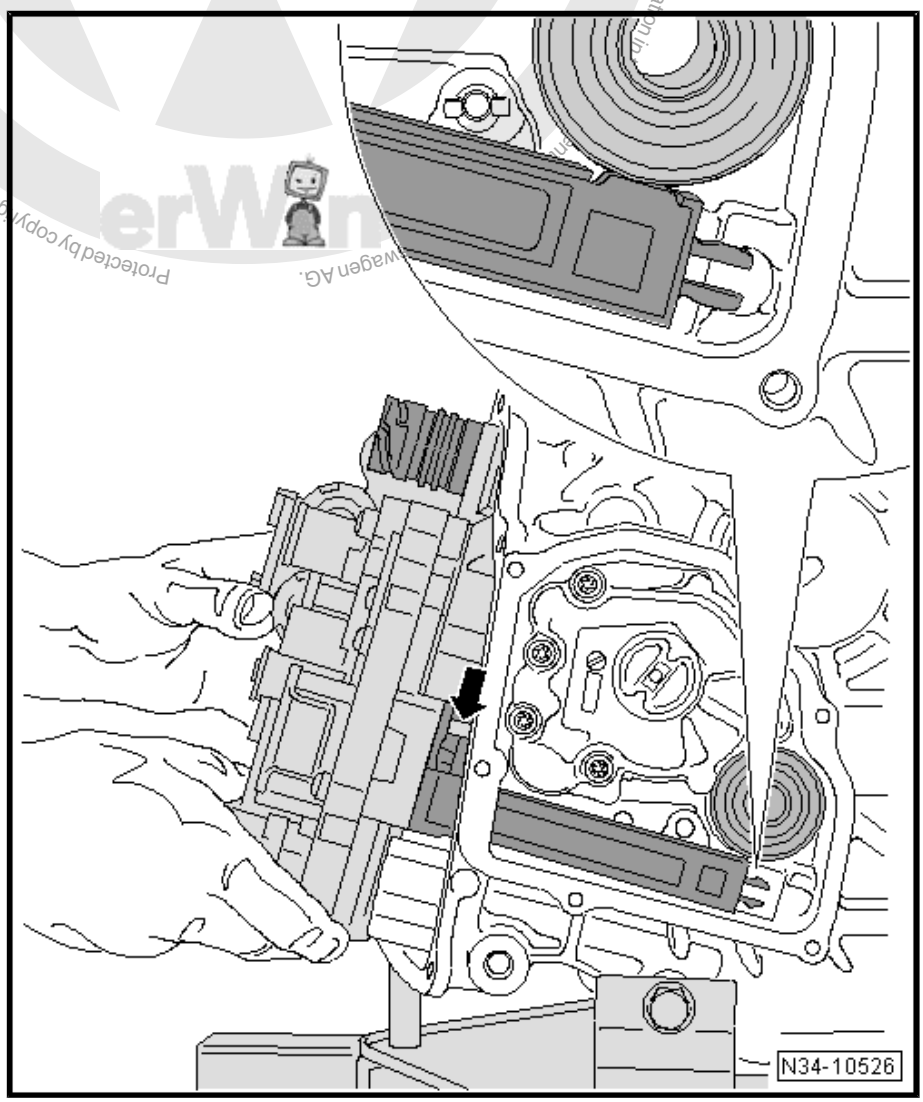

Protected by copyright. Copying for private or commercial purposes, in part or in whole, is not permitted unless authorised by Volkswagen AG. Volkswagen AG does not guarantee or accept any liability with respect to the correctness of information in this document.

– Hold the Mechatronic facing up. The sensor arm must not touch the sensor wheel.

– Make sure the Mechatronic unit is installed correctly.

– Tighten the new bolts -1 through 10- hand-tight.

– Tighten the bolts -1 to 10- in the tightening sequence provided. Tightening specification. Refer to :
⇒ Fig. ""Tightening Specification and Sequence for DSG Transmission Mechatronic -J743- "" , page 30

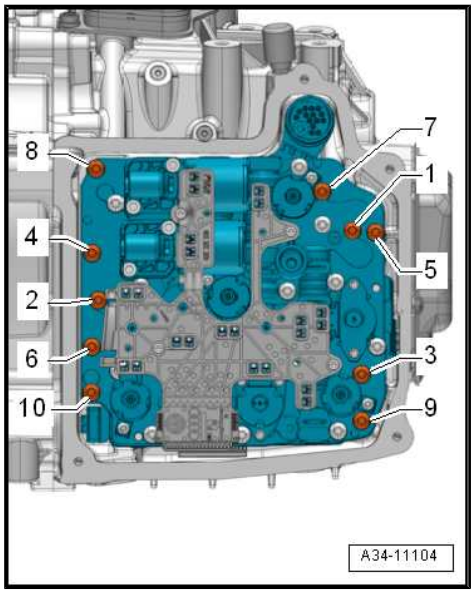

– Replace both -O-rings- if the "old" Mechatronic is being installed again.

– Coat the O-rings with DSG® transmission fluid.

A »new« Mechatronic already has »new« O-rings.

– Replace the transmission cover gasket.

– Make sure the seal fits correctly.

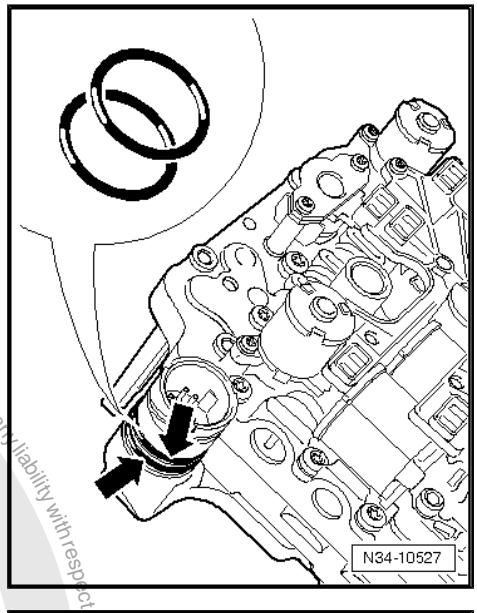

– Place the transmission fluid pan -A- over the Mechatronic. Be careful not to pinch any wires when doing this.

– Install the new bolts -arrows- and tighten in a diagonal sequence in stages.

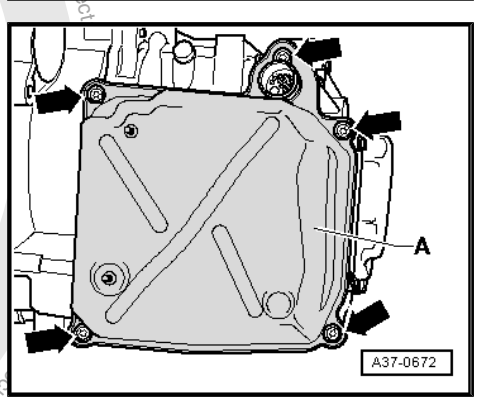

Protected by copyright. Copying for private or commercial purposes, in part or in whole, is not permitted unless authorised by Volkswagen AG. Volkswagen AG does not guarantee or accept any liability with respect to the current. Copyright by Volkswagen AG.

– Attach the cable bracket to the transmission cover -arrows- (2 M6 nuts).

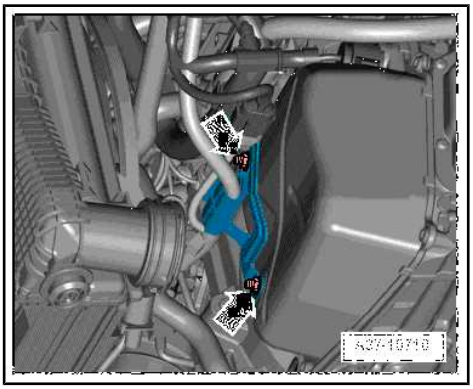

– Mount the new transmission fluid pump cover -A-. Tighten the new bolts -arrows- and tighten in a diagonal sequence in stages.

– Install the lower left front wheel housing liner. Refer to ⇒ Body Exterior; Rep. Gr. 66 ; Wheel Housing Liner; Overview - Front Wheel Housing Liner .

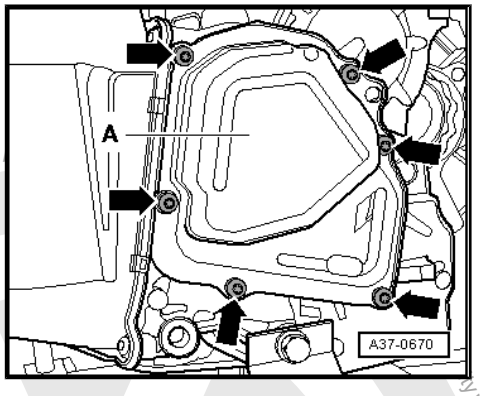

Connect the connector -A- on the DSG Transmission Mechatronic - J743- as follows:

– The arrow -D- on the DSG Transmission Mechatronic - J743- -B- must line up with the connector -A- as well as with the tab -C-.

– Connect the connector -A- carefully all the way and then turn the lock “clockwise” in direction of arrow-.

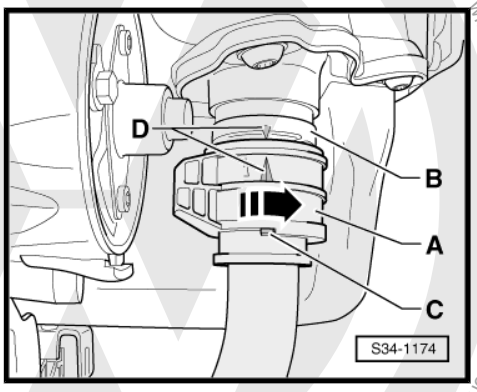

– Install the new bolts -1- for the pendulum support on the transmission. Refer to ⇒ Rep. Gr. 10 ; Subframe Mount; Overview - Subframe Mount .

– Install the air filter housing if it was removed earlier. Refer to ⇒ Engine Mechanical, Fuel Injection and Ignition; Rep. Gr. 24 ; Air Filter; Air Filter Housing, Removing and Installing .

– Do not start the engine.

– Move the Used Oil Collection and Extraction Unit - SNM372500- under the transmission near the transmission fluid drain and check plug.

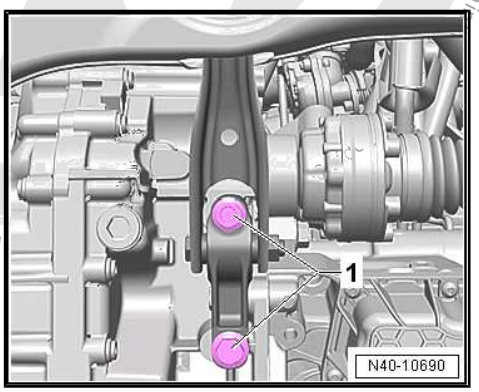

Protected by copyright. Copying for private or commercial purposes, in part or in whole, is not permitted unless authorised by Volkswagen. We do not guarantee or accept any liability with respect to the correctness of information.

– Remove the transmission fluid drain- and check plug -arrow-.

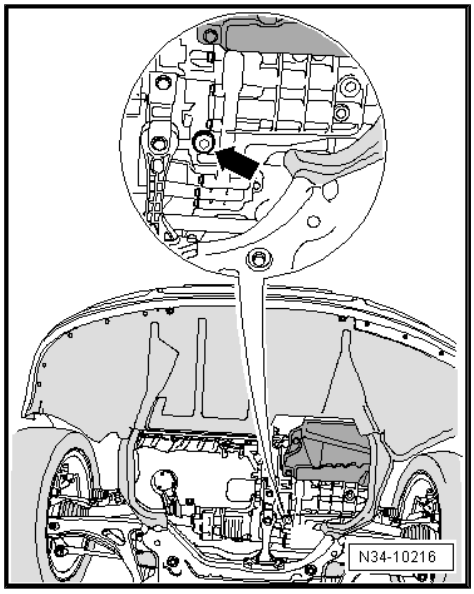

– Install the Oil Filler - VAS6262A- into the check hole hand-tight.

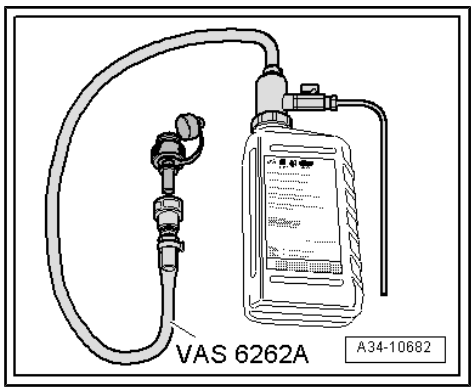

– Shake before opening.

– Attach the Oil Filler - VAS6262A- to the oil bottle. Be sure to read the instructions. Refer to ⇒ page 113 .

– Fill 3 liters (3.1 quarts) of transmission fluid.

To change containers, close the shut-off valve or hold the Oil Filler - VAS6262A- higher than the transmission.

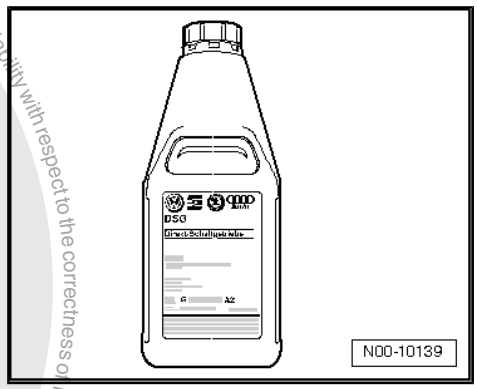

Start the engine and check the fluid level. Refer to ⇒ “9.1 Transmission Fluid Level, Checking”, page 113 . The Oil Filler - VAS6262A- remains installed.

– Install the noise insulation. Refer to ⇒ Body Exterior; Rep. Gr. 66 ; Noise Insulation; Overview - Noise Insulation .

Protected by copyright. Copying for private or commercial purposes, in part or in whole, is not permitted unless authorised by Volkswagen AG. Volkswagen AG does not guarantee or accept any liability with respect to the correctness of information in this document. Copyright by Volkswagen AG.

– Connect the Vehicle Diagnostic Tester .

– Perform a basic setting on the DSG Transmission Mechatronic - J743- .

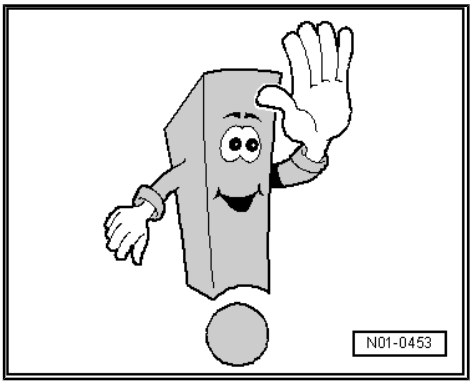

Note

After installing a "new" Mechatronic, readapt the immobilizer.

Tightening Specifications

- Refer to ⇒ "1.1 Overview - Mechatronic", page 28 .
- Cable bracket on the transmission cover. Refer to ⇒ "3.3 Transmission Tightening Specifications", page 96 .

1.2.2 DSG Transmission Mechatronic - J743- , Removing and Installing, Transmission Removed

Special tools and workshop equipment required

- Torque Wrench 5-50Nm - VAG1331-
- Used Oil Collection and Extraction Unit - SMN372500-

Caution

This procedure contains mandatory replaceable parts. Refer to component overview prior to starting procedure.

Mandatory Replacement Parts

- Bolts - DSG® Transmission Mechatronic - J743
- Bolts - Pendulum Support Bolts to Transmission
- Bolts - Transmission Fluid Pan
- Bolts - Transmission Fluid Pump Cover
- O-rings - DSG® Transmission Mechatronic - J743
- Seal - Transmission Fluid Drain and Check Plug
- Seal - Transmission Fluid Pan

Note

- *Follow the guidelines for clean working conditions. Refer to* *⇒ "3.2 Clean Working Conditions", page 5* .
- *Pay attention to the general repair information. Refer to* *⇒ "3.3 General Repair Information", page 6* .

Always make sure that no dirt enters an "open" transmission. Dirt entering can cause a transmission malfunction especially with "open" Direct Shift Gearbox (DSG®) Mechatronic and/or oil pump.

Removing

– Place the Used Oil Collection and Extraction Unit - SMN372500- or Drip Tray under the transmission.

Protected by copyright. Copying for private or commercial purposes, in part or in whole, is not permitted unless authorised by Volkswagen AG. Volkswagen AG does not guarantee or accept any liability with respect to the correctness of information in this document. Copyright by Volkswagen AG.

– Remove the Transmission fluid drain- and check plugs -arrow- and drain the transmission fluid.

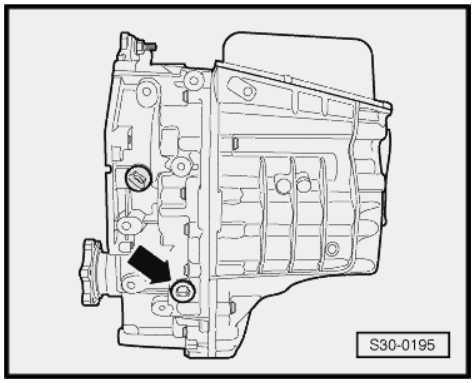

A plastic overflow tube is located in this hole (with 8 mm hex socket head, tightening specification: 3 Nm). Its length determines the oil level in the transmission.

– Remove this overflow pipe and drain the rest of the transmission fluid.

Note

Approximately 5 liters (5.28 qts) of transmission fluid will drain. Continue to have the Used Oil Collection and Extraction Unit - SMN372500- or Drip Tray under the transmission.

– Install the overflow pipe and tighten.

– If necessary change the transmission fluid filter. Refer to ⇒ "8.3 Transmission Fluid Filter, Removing and Installing", page 110.

– Loosen transmission fluid pan bolts -arrows- diagonally and remove. Remove the transmission fluid pan.

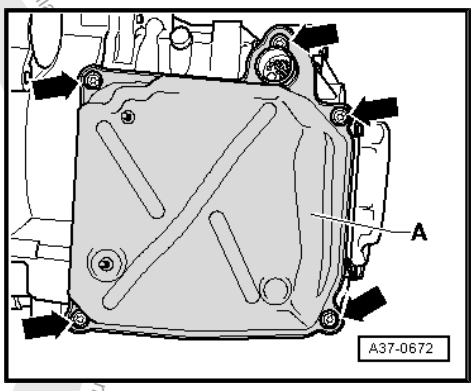

Note

Always replace the screws on the transmission cover.

– Remove the bolts -arrows- from the transmission fluid pump cover and remove the cover -A-.

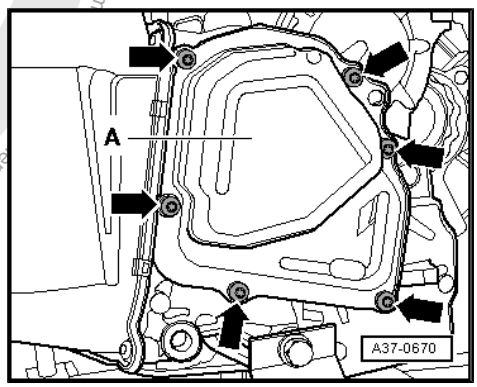

Note

Always replace the bolts for the transmission fluid pump cover and the cover.

– Touch a grounded object again before touching the Mechatronic.

– Remove the bolts -1 through 10- diagonally. Start with the bolt -1-.

Copyright by Volkswagen AG. Volkswagen AG does not guarantee or accept any liability with respect to the correctness of information in this document. Copyright by Volkswagen AG. Distributed by copyright. Copying for private or commercial purposes, in part or in whole, is not permitted unless authorised by Volkswagen AG.

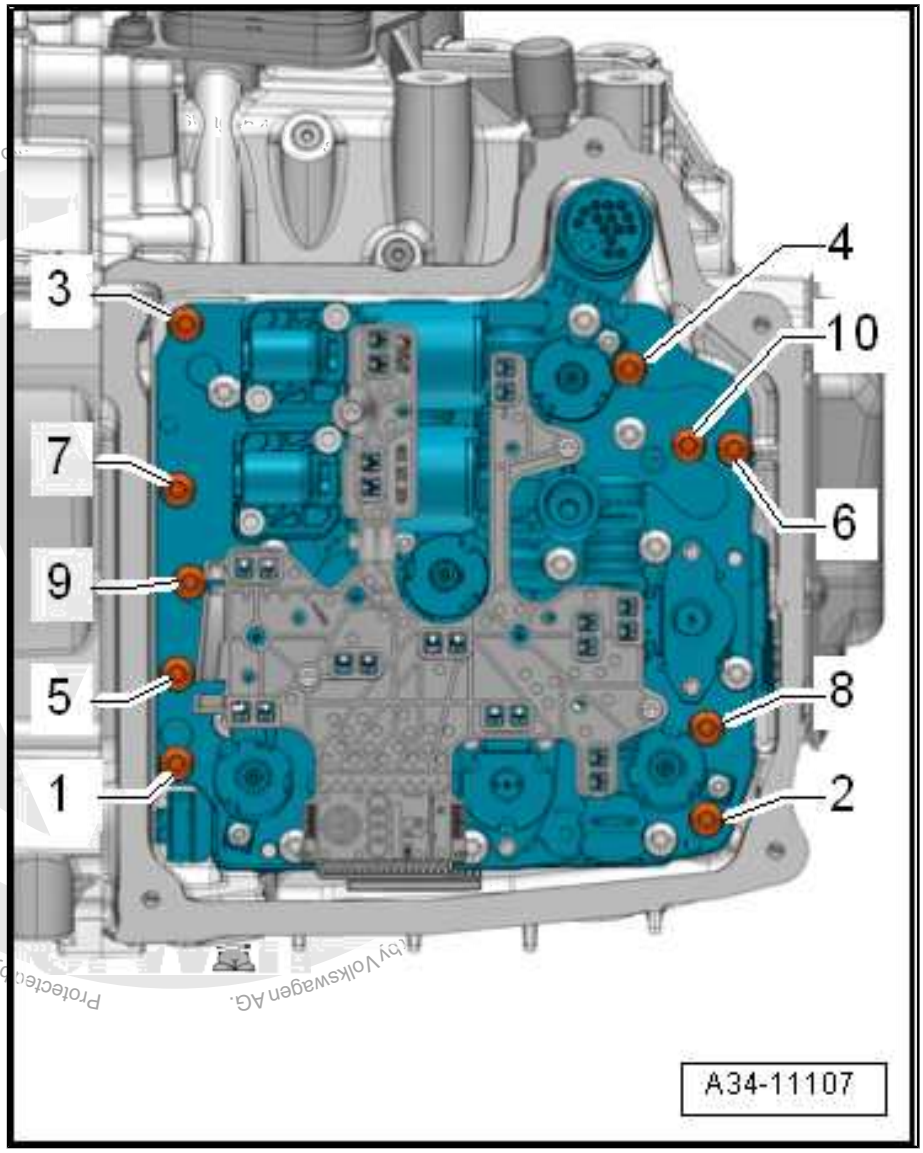

Protected by copyright. Copying for private or commercial purposes, in part or in whole, is not permitted unless authorised by Volkswagen AG.

Replace all 10 -bolts-.

– Remove the Mechatronic.

When handling the Mechatronic, be particularly aware of the “long” sensor arm.

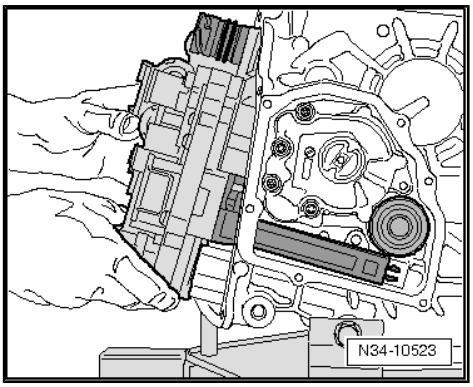

Store Mechatronic Properly

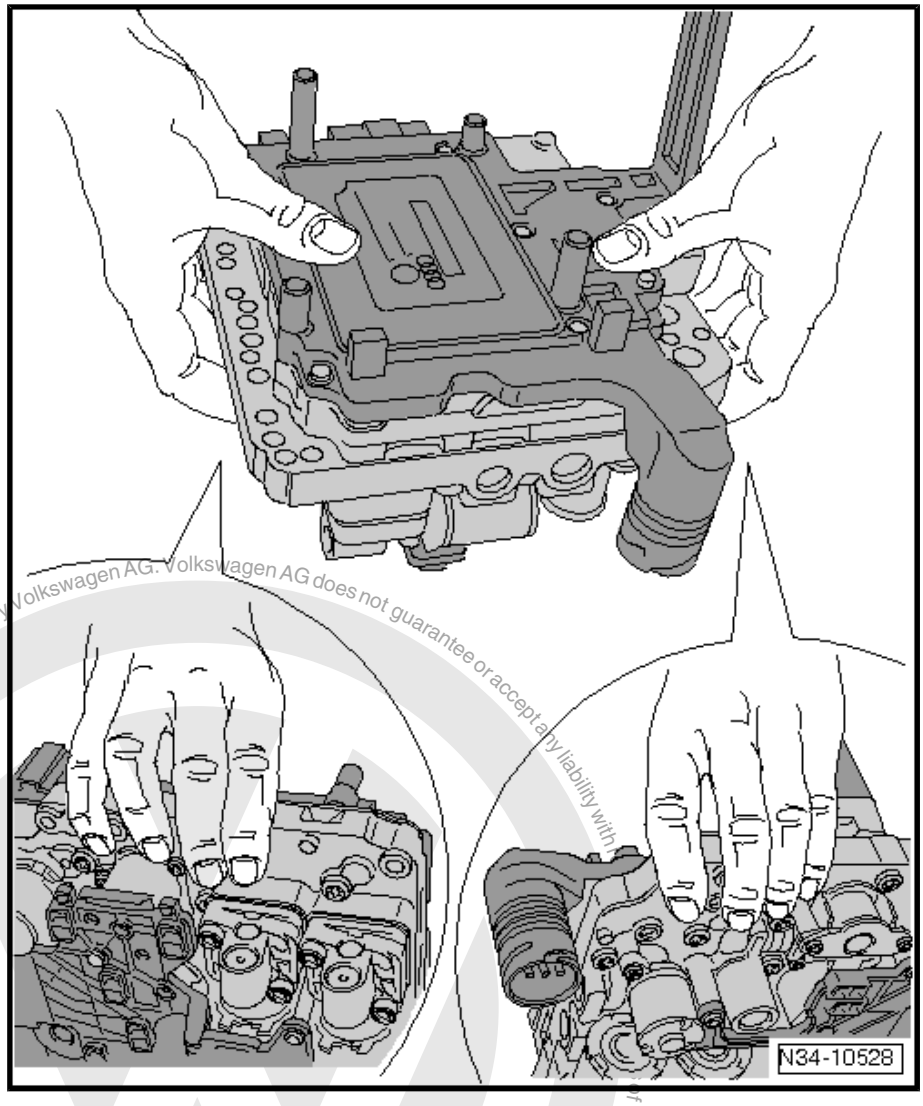

Caution

Never lift the Mechatronic by the "sensor arm" and never let it rest on the arm.

Protected by copyright. Copyright by Volkswagen AG.
Volkswagen AG does not guarantee or accept any liability with respect to the correctness of information in this document. Copyright by Volkswagen AG.
Protected by copyright. Copying for private or commercial purposes, in part or in whole, is not permitted unless authorised by Volkswagen AG.

If the “Arm” is Damaged, the Mechatronic Must Be Replaced.

Installing

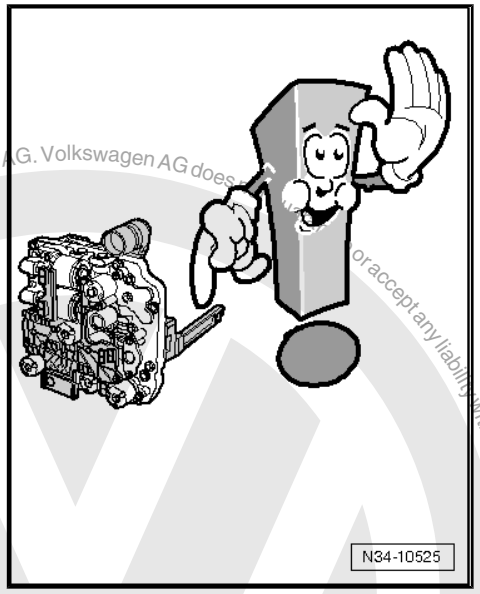

– Replace both O-rings -arrows- on the Mechatronic connection if the “old” Mechatronic is going to be installed again.

A “new” Mechatronic already has “new” rings.

– Coat the O-rings with DSG® transmission fluid.

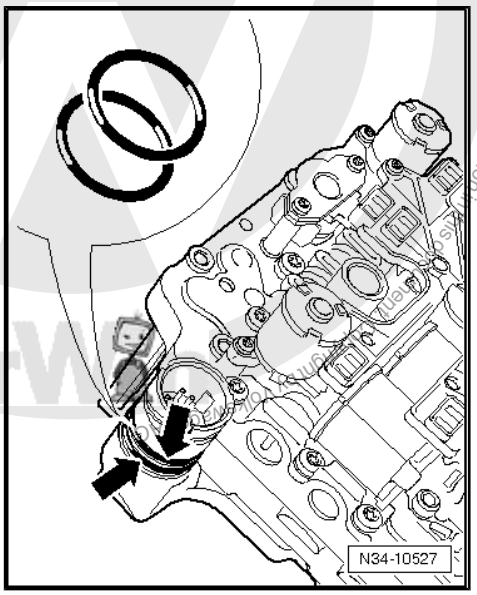

– Carefully mount the Mechatronic on the alignment pin -arrow-. The goal is for the “sensor arm” to be in its -installed position-.

Protected by copyright. Copying for private or commercial purposes, in part or in whole, is not permitted unless authorised by Volkswagen AG. Volkswagen AG does not accept any liability with respect to the correctness of information.

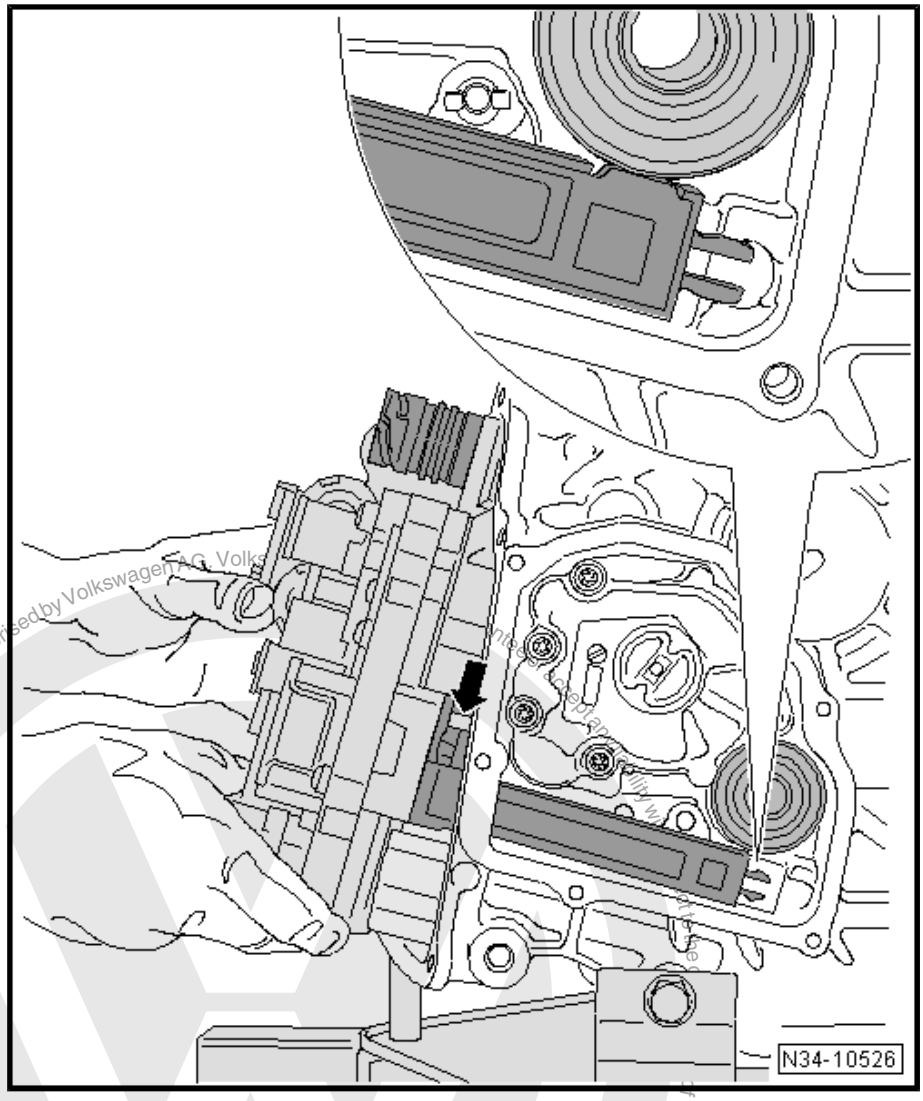

– The sensor arm must not touch the sensor wheel.

All of the bolts -1 through 10- must be replaced.

Protected by copyright. Copying for private or commercial purposes, in part or in whole, is not permitted unless authorised by Volkswagen AG. Copyright by Volkswagen AG.

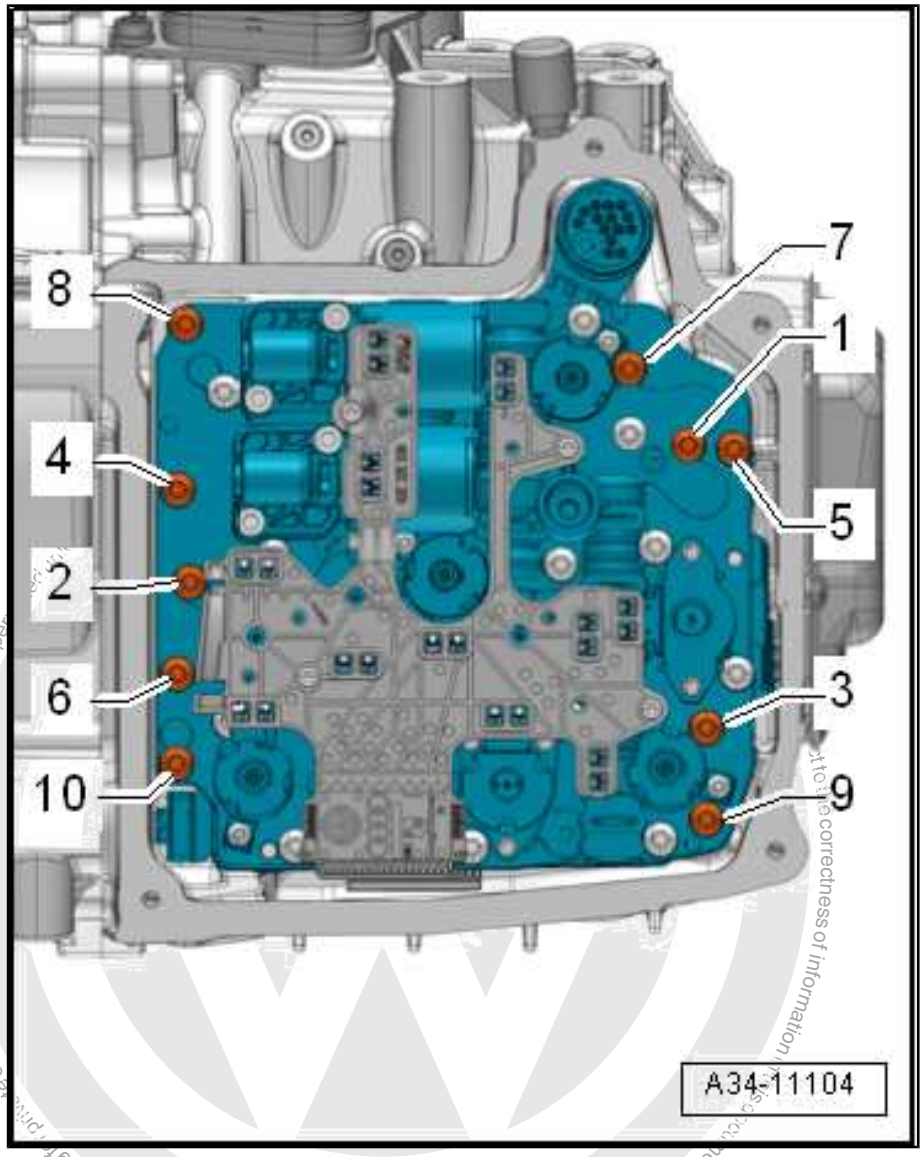

- First install all of the bolts -1 to 10- and tighten them by hand.
- Tighten all of the bolts -1 to 10- in the tightening sequence provided. Tightening specification. Refer to ⇒ Fig. ""Tightening Specification and Sequence for DSG Transmission Mechatronic -J743- "" , page 30
- Clean the transmission fluid pan gasket and transmission sealing surfaces.
- Make sure the seal fits correctly.
- Place the transmission cover -A- over the Mechatronic. Be careful not to pinch any wires when doing this.
- Install the new bolts -arrows- and tighten in a diagonal sequence in stages.

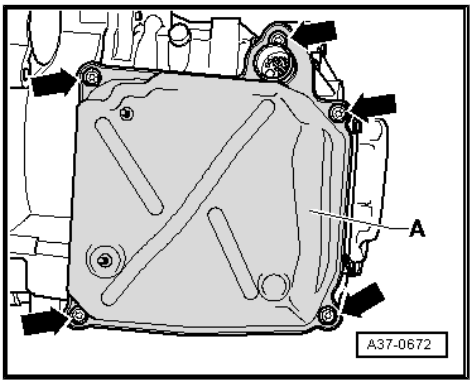

Protected by copyright. Copyright by Volkswagen AG.

– Mount the new transmission fluid pump cover -A-. Tighten the new bolts -arrows- and tighten in a diagonal sequence in stages.

– Install the transmission. Refer to ⇒ “3.2 Transmission, Installing”, page 91 .

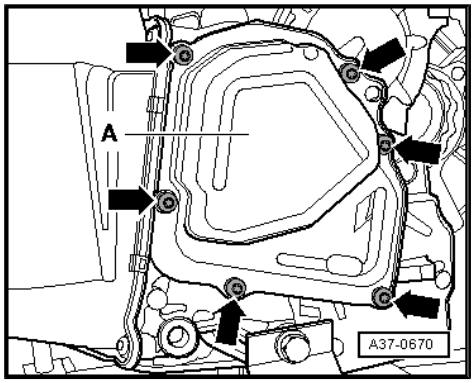

After Installing Transmission

– Fill with transmission fluid. Refer to ⇒ “9 Transmission Fluid”, page 113 .

– Connect the Vehicle Diagnostic Tester Vehicle Diagnostic Tester .

– Perform a basic setting on the DSG Transmission Mechatronic - J743- .

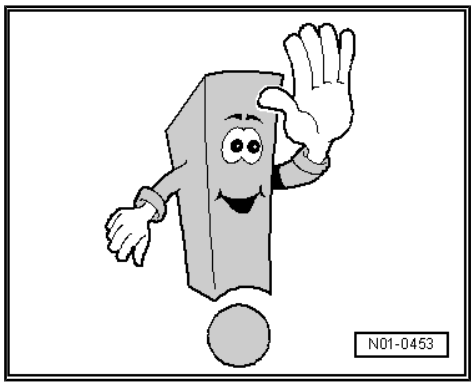

Note

After installing a “new” Mechatronic, readapt the immobilizer.

Tightening Specifications

♦ Refer to ⇒ “1.1 Overview - Mechatronic”, page 28 .

Protected by copyright. Copying for private or commercial purposes, in part or in whole, is not permitted unless authorised by Volkswagen AG. Volkswagen AG does not guarantee or accept any liability with respect to the correctness of information in this document. Copyright by Volkswagen AG.

2 Selector Mechanism

⇒ “2.1 Overview - Selector Mechanism”, page 47

⇒ “2.2 Emergency Release from P”, page 50

⇒ “2.3 Selector Lever Handle, Removing and Installing”, page 51

⇒ “2.4 Button in Handle, Moving Into Installation Position”, page 53

⇒ “2.5 Selector Mechanism, Removing and Installing”, page 55

⇒ “2.6 Selector Lever Cable, Removing and Installing”, page 63

⇒ “2.7 Gearshift Mechanism, Checking”, page 67

⇒ “2.8 Selector Lever Cable, Checking and Adjusting”, page 68

⇒ “2.9 Selector Shaft Seal, Replacing”, page 69

2.1 Overview - Selector Mechanism

⇒ “2.1.1 Overview - Selector Mechanism, ZF”, page 47 .

⇒ “2.1.2 Overview - Selector Mechanism, ECS”, page 49 .

2.1.1 Overview - Selector Mechanism, ZF

Protected by copyright. Copying for private or commercial purposes, in part or in whole, is not permitted unless authorised by Volkswagen AG. Volkswagen AG does not guarantee or accept any liability with respect to the correctness of information in this document. Copyright by Volkswagen AG.

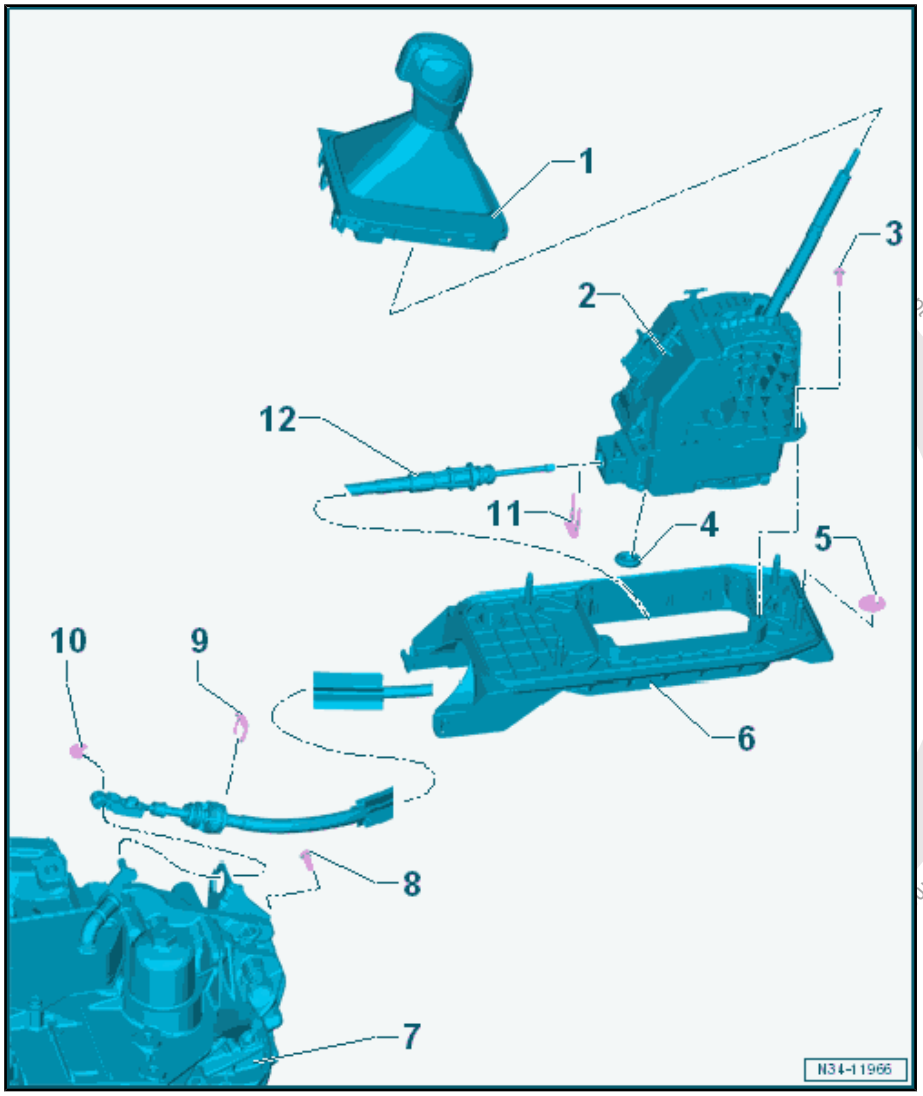

1 - Handle with Shift Cover

- ❑ Do not remove the handle unnecessarily. For emergency release, only cover must be removed. Refer to ⇒ "2.2.1 Emergency Release from P, ZF", page 50 .
- ❑ Removing and installing. Refer to ⇒ "2.3 Selector Lever Handle, Removing and Installing", page 51 .

2 - Selector Mechanism

- ❑ With integrated Selector Lever Sensor System Control Module - J587- with Selector Lever - E313- , Tiptronic Switch - F189- , Selector Lever Park Position Lock Switch - F319- and Shift Lock Solenoid - N110-
- ❑ Removing and installing. Refer to ⇒ "2.5 Selector Mechanism, Removing and Installing", page 55 .

3 - Bolt

- ❑ 8 Nm
- ❑ Quantity: 4

4 - Plugs

5 - Nut with Collar

- ❑ 8 Nm
- ❑ Quantity: 4

6 - Selector Housing

- ❑ Available only together with the selector mechanism. Refer to the Parts Catalog

7 - Transmission

8 - Bolt

- ❑ 20 Nm + 90
- ❑ Replace after removing
- ❑ Quantity: 2
- ❑ For attaching the cable bracket to the transmission

9 - Lock Washer

- ❑ Replace after removing

10 - Lock Washer

- ❑ Replace after removing
- ❑ Installed location: the offset side faces forward, toward the front of the vehicle.

11 - Lock Washer

- ❑ Replace after removing

12 - Selector Lever Cable

- ❑ Do not grease the selector lever cable.

t any liability with respect to the correctness of information in this docum

- ❑ Removing and installing. Refer to ⇒ “2.6.1 Selector Lever Cable, Removing and Installing, ZF”, page 63 .
- ❑ Checking or adjusting. Refer to ⇒ “2.8 Selector Lever Cable, Checking and Adjusting”, page 68 .

Copyright by Volkswagen AG. Volkswagen AG does not guarantee or accept any liability with respect to the correctness and completeness of this document. Unauthorized use and distribution is prohibited and may be prosecuted by law.

2.1.2 Overview - Selector Mechanism, ECS

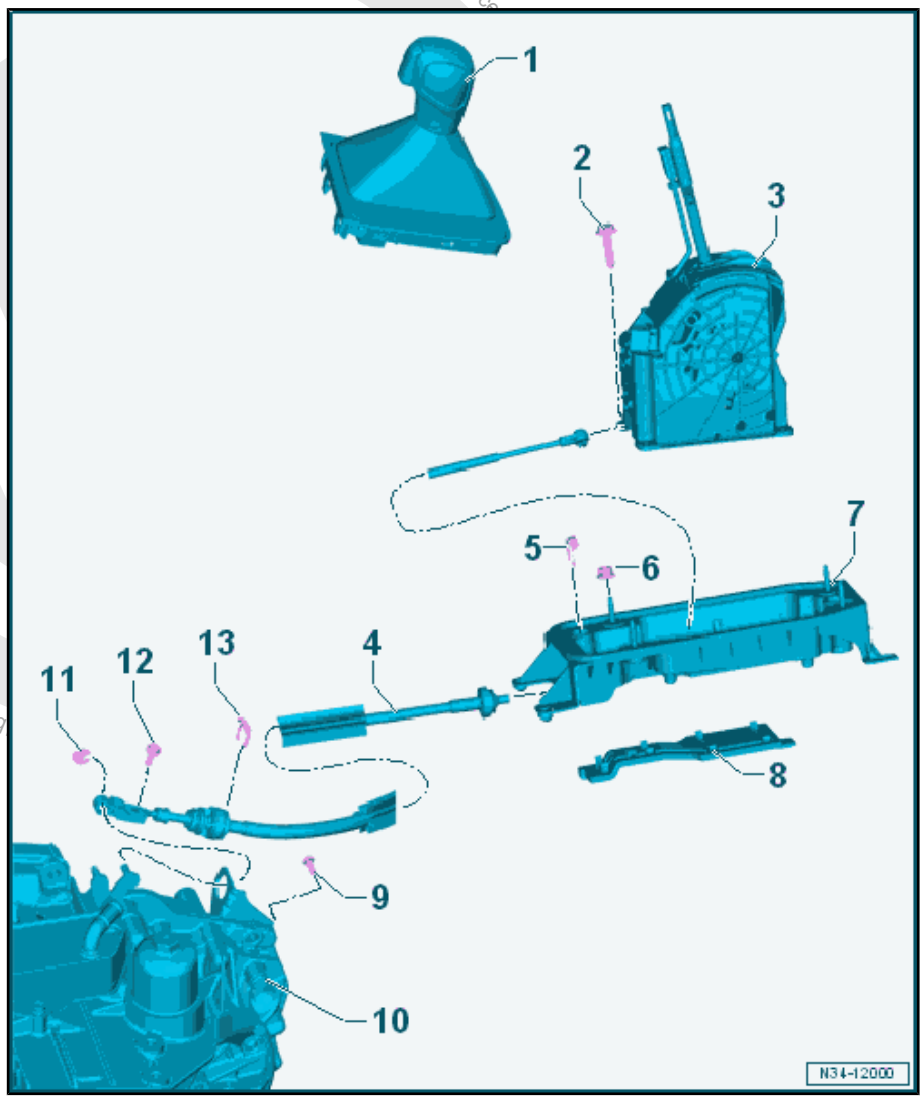

1 - Handle with Shift Cover

- ❑ Do not remove the handle unnecessarily. For emergency release, only cover must be removed. Refer to ⇒ “2.2.2 Emergency Release from P, ECS”, page 51 .
- ❑ Removing and installing. Refer to ⇒ “2.3 Selector Lever Handle, Removing and Installing”, page 51 .

2 - Bolt

- ❑ 8 Nm
- ❑ Quantity: 4

3 - Selector Mechanism

- ❑ With integrated Selector Lever Sensor System Control Module - J587- with Selector Lever - E313- , Tiptronic Switch - F189- , Selector Lever Park Position Lock Switch - F319- and Shift Lock Solenoid - N110-
- ❑ Removing and installing. Refer to ⇒ “2.5 Selector Mechanism, Removing and Installing”, page 55 .

4 - Selector Lever Cable

- ❑ Do not grease the selector lever cable.
- ❑ Removing and installing. Refer to ⇒ “2.6.2 Selector Lever Cable, Removing and Installing, ECS”, page 65 .
- ❑ Checking. Refer to ⇒ “2.8 Selector Lever Cable, Checking and Adjusting”, page 68 .
- ❑ Adjusting. Refer to ⇒ “2.8 Selector Lever Cable, Checking and Adjusting”, page 68 .

5 - Lock Washer

- ❑ Replace after removing

6 - Nut with Collar

- ❑ 8 Nm
- ❑ Quantity: 4

7 - Selector Housing

- ❑ Available only together with the selector mechanism. Refer to the Parts Catalog

8 - Cover

- ❑ Replace after removing

9 - Bolt

- ❑ 20 Nm + 90
- ❑ Replace after removing
- ❑ Quantity: 2
- ❑ For attaching the cable bracket to the transmission

10 - Transmission

11 - Lock Washer

- ❑ Replace after removing
- ❑ Installed location: the offset side faces forward, toward the front of the vehicle.

12 - Bolt

- ❑ 13 Nm
- ❑ Selector lever cable adjusting screw

13 - Lock Washer

- ❑ Replace after removing

2.2 Emergency Release from P

⇒ "2.2.1 Emergency Release from P, ZF", page 50 .

⇒ "2.2.2 Emergency Release from P, ECS", page 51 .

2.2.1 Emergency Release from P, ZF

Do Not Remove the Handle

– Press the brake or set the parking brake.

– Open the storage compartment door.

– Grab and under the shift cover by hand and by pulling upward unclip the cover.

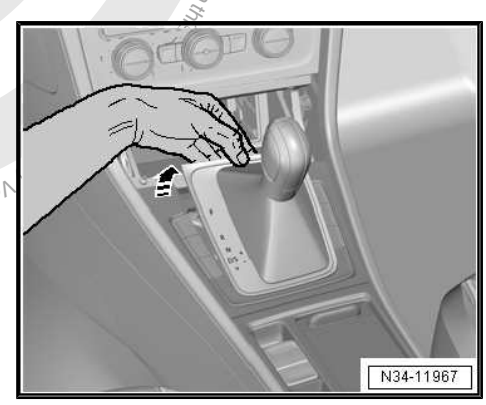

Protected by copyright. Copying for private or commercial purposes, in part or in whole, is not permitted unless authorised by Volkswagen AG. Volkswagen AG does not guarantee or accept any liability with respect to the correctness of information in this document. Copyright by Volkswagen AG.

– Hold the shift cover to the side and from above push the yellow plastic part and hold it in this position.

The selector lever can now be moved out of “P”.

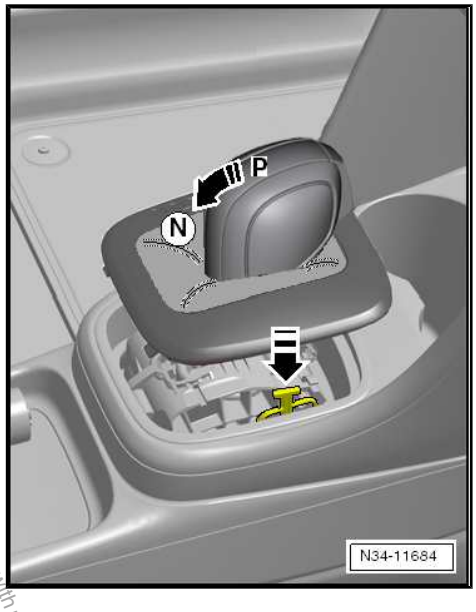

Note

If the selector lever is not moved back into “P”, the solenoid for the shift block will be automatically locked in the position “P”. The solenoid must be released again.

Protected by copyright. Copying for private or commercial purposes, in part or in whole, is not permitted unless authorised by Volkswagen AG. Volkswagen AG does not guarantee or accept any liability with respect to the correctn on in this document. Copyright by Volkswagen AG.

2.2.2 Emergency Release from P, ECS

Do Not Remove the Handle

– Press the brake or set the parking brake.

– Open the storage compartment door.

– Grab and under the shift cover by hand and pulling upward unclip the cover.

– Unclip the shift cover and hold it to the side.

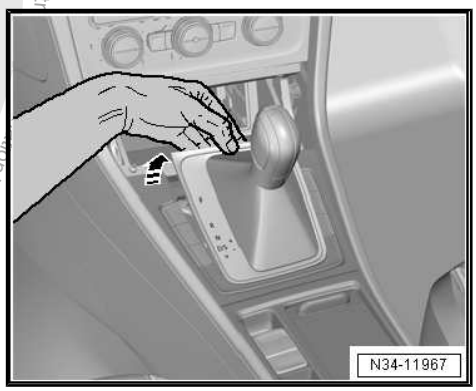

– With a screwdriver push the plastic part on the side from the right and hold it in this position

The selector lever can now be moved out of “P”.

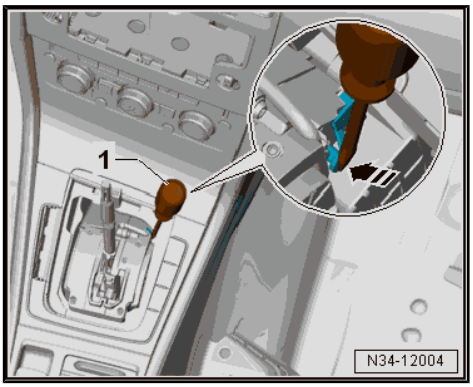

Note

If the selector lever is not moved back into “P”, the solenoid for the shift block will be automatically locked in the position “P”. The solenoid must be released again.

2.3 Selector Lever Handle, Removing and Installing

Special tools and workshop equipment required

♦ Hose Clip Pliers - VAG1275A-

Caution

This procedure contains mandatory replaceable parts. Refer to component overview prior to starting procedure.

Copyright. Copying for private or commercial purposes, in part or in whole, is not permitted unless authorised by Volkswagen AG. Volkswagen AG does not guarantee or accept any liability with respect to the correctness of information in this document.

Mandatory Replacement Parts

- Clamp - Shift Handle

Short Description:

The handle is removed together with the shift cover.

Removing

– Move the selector lever into “D”.

It is not necessary to pull out the button -arrow- manually. The push button locks in the installation position by itself when the handle is removed.

– Open the storage compartment door.

– Grab and under the shift cover by hand and pulling upward unclip the cover.

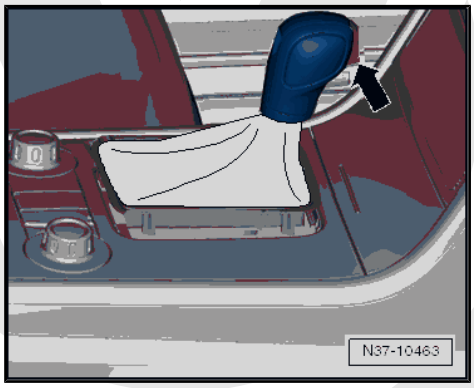

– Disconnect the connector.

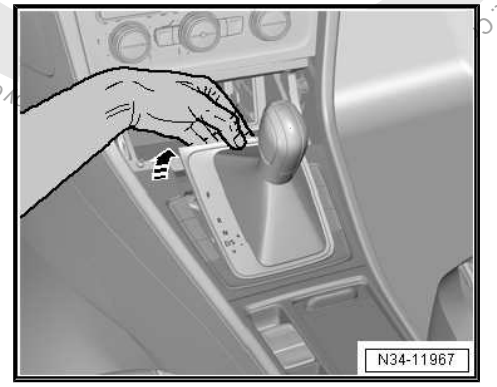

– Cut the clamp under the boot -arrow- with a side cutter.

– Pull the handle up without pressing the button.

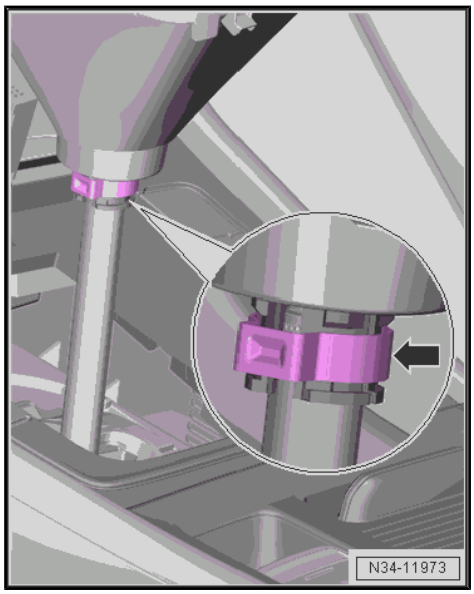

Note

Do not push the button once the handle has been removed otherwise it will not be possible to remove the handle again.

Installing

Install in reverse order of removal. Note the following:

- The selector lever is in the “D” position.

Protected by copyright. Copying for private or commercial purposes, in part or in whole, is not permitted unless authorised by Volkswagen AG. Volkswagen AG does not guarantee or accept any liability with respect to the correctness of information in this document.

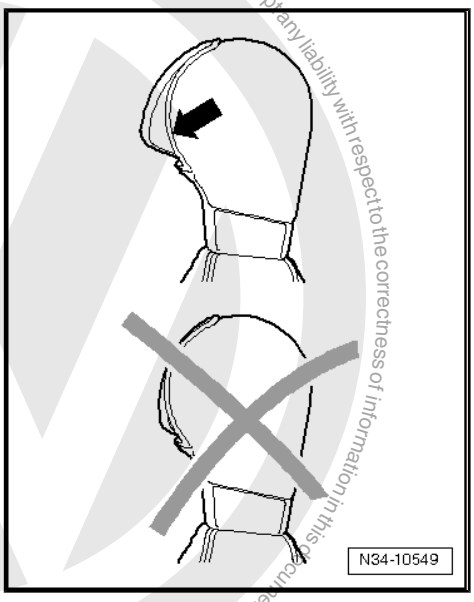

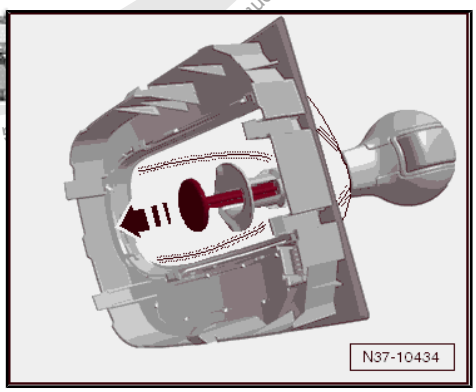

Note

- *There is the possibility that the button can be pressed into the handle. Never install the handle when the button is pressed in.*
- *Move the button in the installation position. Refer to* *⇒ "2.4 Button in Handle, Moving Into Installation Position", page 53* .
- *A new handle is delivered with an assembly fastener. Pull out the safety catch in direction of -arrow- just before installing the new handle.*

– Install the handle with a new clamp -arrow-. Do not clamp the clamp yet.

– Press the button after installing it.

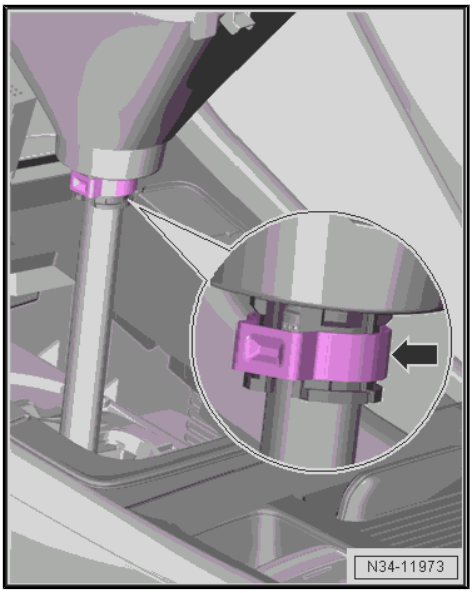

Note

If the button stays in the handle after being pressed, this means it was installed incorrectly. If this happens, remove the handle again and move the button in the installation position again. Refer to *⇒ "2.4 Button in Handle, Moving Into Installation Position", page 53* . *Install the handle again.*

– If the button after being pressed return to its starting position, the clamp can be clamp off using Hose Clamp Pliers - VAG1275A- .

– Connect the connector.

– Clip on the cover.

2.4 Button in Handle, Moving Into Installation Position

If the button was pushed in by mistake, the installed position can be set again.

There are two ways to move the button into the installation position, “with” or “without” assembly fastener. The following describes both ways.

Moving the Handle “with” an Assembly Fastener into the Installation Position:

Make sure the assembly fastener has an eye -arrow- at the front. Other assembly fasteners cannot be used.

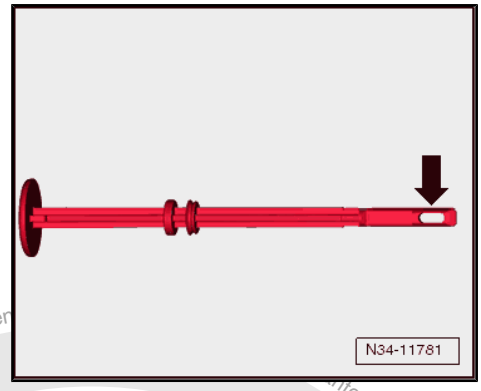

– Press the button and push the assembly fastener (with the eye) -arrow- all the way in until it latches into place. Then release the button. The button locks into the installation position when the assembly fastener is pulled out.

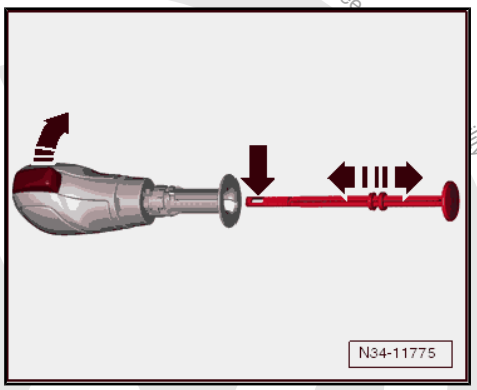

Moving the Handle “without” an Assembly Fastener into the Installation Position:

– Remove the trim -A- from the handle.

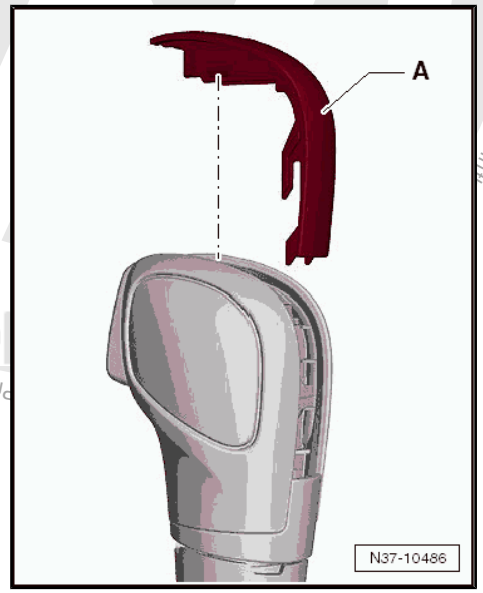

Protected by copyright. Copying for private or commercial purposes, in part or in whole, is not permitted unless authorised by Volkswagen ... ity with respect to the correctness of information in

– Push the small lever -1- into the groove -2- with a screwdriver. This pushes the button -3- into the installation position.

  -I- the button is in the pressed position

  -II- the button is in the installation position

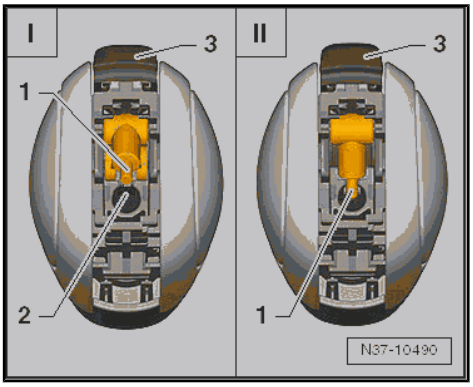

Note

- *Push the lever into the groove and no further.*
- *Install the trim back onto the selector mechanism only after the handle is installed. This way it is possible to see if the small lever fits into the pull rod when the button is pushed.*

2.5 Selector Mechanism, Removing and Installing

⇒ "2.5.1 Shift Mechanism with Selector Lever Cable, Removing and Installing", page 55

⇒ "2.5.2 Gearshift Mechanism without Selector Lever Cable, Removing and Installing, ZF", page 57

⇒ "2.5.3 Shift Lever Mechanism without Selector Lever Cable, Removing and Installing, ECS", page 60

2.5.1 Shift Mechanism with Selector Lever Cable, Removing and Installing

Short Description

Remove the center console inside the passenger compartment.

It is necessary to remove the heat shield under the vehicle.

Removing

– Remove the selector lever handle. Refer to ⇒ "2.3 Selector Lever Handle, Removing and Installing", page 51 .

– Remove the center console. Refer to ⇒ Body Interior; Rep. Gr. 68 ; Center Console; Center Console, Removing and Installing .

– Remove the air guide channel from the center console. Refer to ⇒ Heating, Ventilation and Air Conditioning; Rep. Gr. 87 ; Air Routing; Overview - Air Routing and Air Distribution in Passenger Compartment .

– Remove left and right bolts -1- and bracket -2-.

– Disconnect the connector from the selector mechanism to the vehicle wiring harness.

– Remove the air filter housing:

- Gasoline engine. Refer to ⇒ Engine Mechanical, Fuel Injection and Ignition; Rep. Gr. 24 ; Air Filter; Air Filter Housing, Removing and Installing .
- Diesel engine. Refer to ⇒ Rep. Gr. 23 ; Air Filter; Air Filter Housing, Removing and Installing .

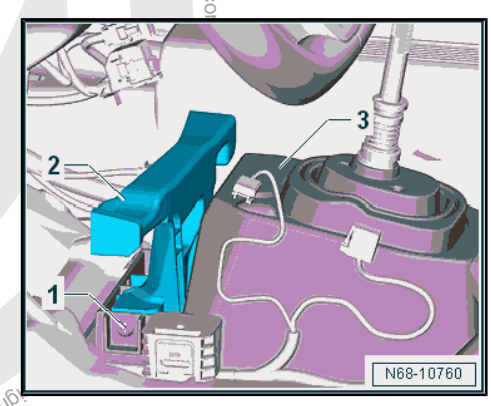

Protected by copyright. Copying for private or commercial purposes, in part or whole, is not permitted unless authorised by Volkswagen AG. Volkswagen AG does not guarantee or accept any liability with respect to the co

Loosen the adjusting screw -arrow-.

– Remove the lock washers -A and B-. The lock washers must later be replaced when adjusting selector lever cable.

Use pliers to remove the lock washer -B-. Do not use a sharp-edged lever. Otherwise the selector lever cable could get damaged.

– Remove the center tunnel heat shield under the gearshift mechanism. Refer to ⇒ Body Exterior; Rep. Gr. 66 ; Molding/Trim/Extensions/Trim Panels; Floor Heat Shield, Removing and Installing .

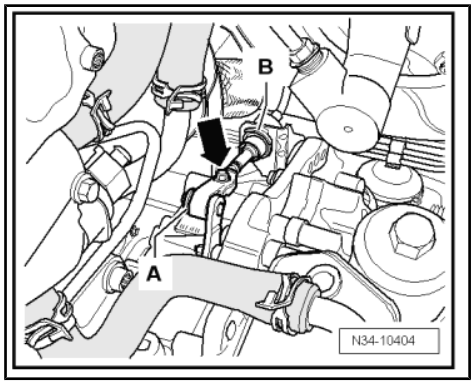

– Remove the bracket -A-, if equipped.

– Remove the nuts -arrows- in the vehicle interior.

– Remove the selector mechanism -B- with the selector lever cable and selector housing downward.

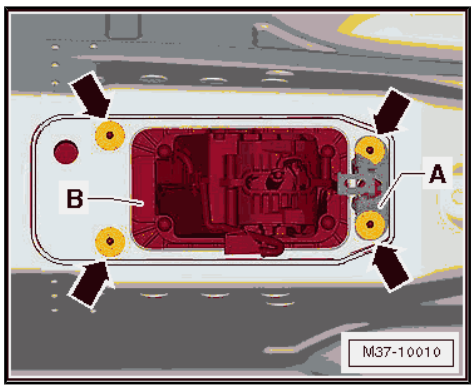

Installing

Install in reverse order of removal. Note the following:

Note

- *Do not bend or kink the selector lever cable.*
- *Do not lubricate the selector lever cable.*
- *After installation, the selector lever cable movement must be checked and adjusted.*

– Install the heat shield under the gearshift mechanism. Refer to ⇒ Body Exterior; Rep. Gr. 66 ; Molding/Trim/Extensions/Trim Panels; Floor Heat Shield, Removing and Installing .

Protected by copyright. Copying for private or commercial purposes, in part or in whole, is not permitted unless authorised by Volkswagen AG. Volkswagen AG does not guarantee or accept any liability with respect to the correctness of information in this document. Copyright by Volkswagen AG.

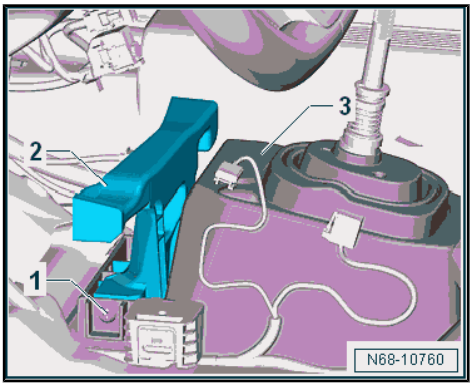

– Install the bracket -2-. Refer to ⇒ Body Interior; Rep. Gr. 68 ; Center Console; Center Console, Removing and Installing .

– Install the air guide channel from the center console. Refer to ⇒ Heating, Ventilation and Air Conditioning; Rep. Gr. 87 ; Air Routing; Overview - Air Routing and Air Distribution in Passenger Compartment .

– Install the center console. Refer to ⇒ Body Interior; Rep. Gr. 68 ; Center Console; Center Console, Removing and Installing .

– Install the selector lever handle. Refer to ⇒ "2.3 Selector Lever Handle, Removing and Installing", page 51 .

– Adjust the selector lever cable. Refer to ⇒ "2.8 Selector Lever Cable, Checking and Adjusting", page 68 .

– Check the selector mechanism. Refer to ⇒ "2.7 Gearshift Mechanism, Checking", page 67 .

– Install the air filter housing:

♦ Gasoline engine. Refer to ⇒ Engine Mechanical, Fuel Injection and Ignition; Rep. Gr. 24 ; Air Filter; Air Filter Housing, Removing and Installing .

♦ Diesel engine. Refer to ⇒ Rep. Gr. 23 ; Air Filter; Air Filter Housing, Removing and Installing .

Tightening Specifications

♦ Selector mechanism to the body. Refer to ⇒ "2.1 Overview - Selector Mechanism", page 47 .

2.5.2 Gearshift Mechanism without Selector Lever Cable, Removing and Installing, ZF

Caution

This procedure contains mandatory replaceable parts. Refer to component overview prior to starting procedure.

Mandatory Replacement Parts

♦ Lock Washer - Locking Mechanism

Short Description

Remove the center console inside the passenger compartment.

It is necessary to remove the heat shield under the vehicle.

Removing

– Remove the selector lever handle. Refer to ⇒ "2.3 Selector Lever Handle, Removing and Installing", page 51 .

– Remove the center console. Refer to ⇒ Body Interior; Rep. Gr. 68 ; Center Console; Center Console, Removing and Installing .

– Remove the air guide channel from the center console. Refer to ⇒ Heating, Ventilation and Air Conditioning; Rep. Gr. 87 ; Air Routing; Overview - Air Routing and Air Distribution in Passenger Compartment .

Protected by copyright. Copying for private or commercial purposes, in part or in whole, is not permitted unless authorised by Volkswagen AG. Volkswagen AG does not guarantee or accept any liability with respect to the correctness of information in this document. Copyright by Volkswagen AG.

– Remove the bracket -2-, to do this remove the left and right bolts -1-.

– Disconnect the connector from the selector mechanism to the vehicle wiring harness.

– Position the selector lever on the selector mechanism in the “N” position. The cable can only be loosened in this position.

– Remove the center tunnel heat shield under the gearshift mechanism. Refer to ⇒ Body Exterior; Rep. Gr. 66 ; Molding/ Trim/Extensions/Trim Panels; Floor Heat Shield, Removing and Installing .

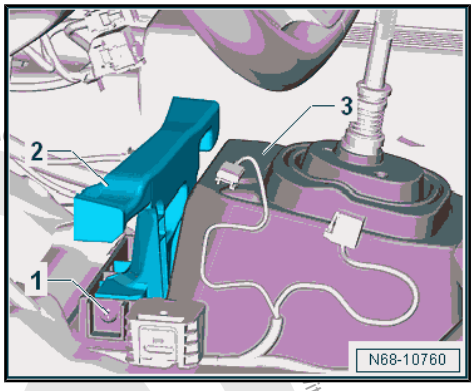

– Remove the plugs, and remove the lock washer -arrow-.

Always replace the lock washer.

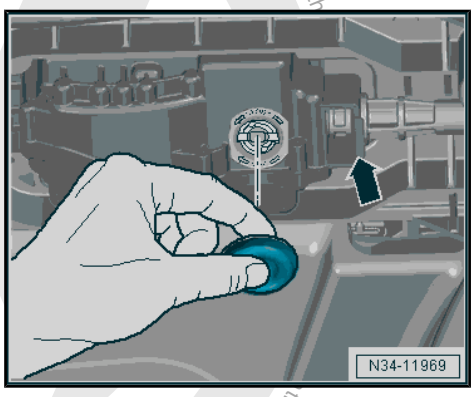

– Insert a large screwdriver into the grooves on the locking mechanism and turn 90° in the direction of the -arrow-.

– Remove the cable from the selector mechanism.

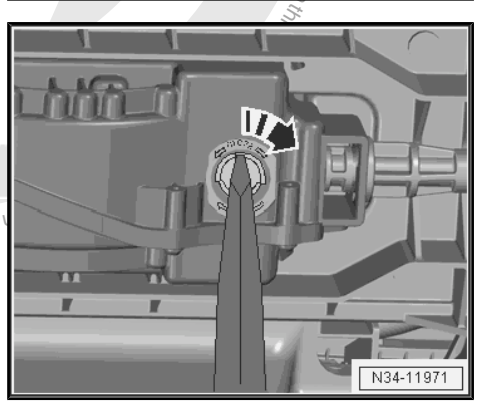

– Remove the bracket -A-, if equipped.

– Remove the nuts -arrows- in the vehicle interior.

– Remove the selector mechanism -B- with the gearshift housing downward.

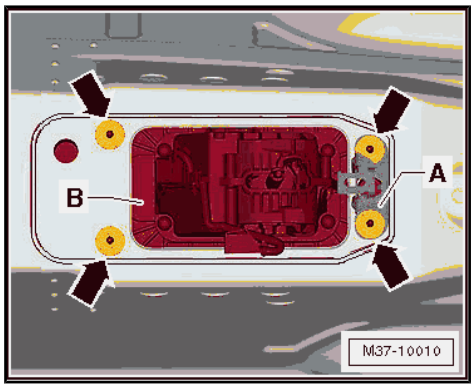

Installing

Install in reverse order of removal. Note the following:

Note

- *Do not bend or kink the selector lever cable.*
- *Do not lubricate the selector lever cable.*
- *After installation, the selector lever cable movement must be checked and adjusted.*

- The selector lever for the gearshift mechanism is in the “N” position. The cable can only be locked in this position.

Protected by copyright. Copying for private or commercial purposes, in part or in whole, is not permitted unless authorized by Volkswagen AG. Volkswagen A

– Guide the cable into the selector mechanism in direction of -arrow- until the locking mechanism -arrow- is visible.

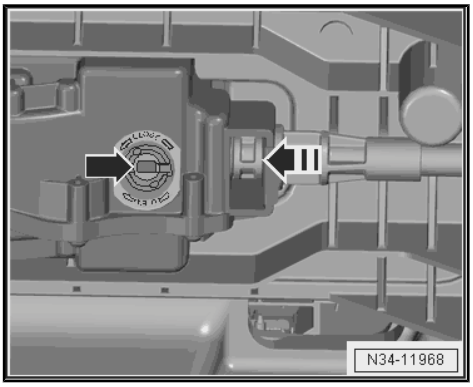

– Turn the locking mechanism 90° in the direction of the -arrow- with a large screwdriver.

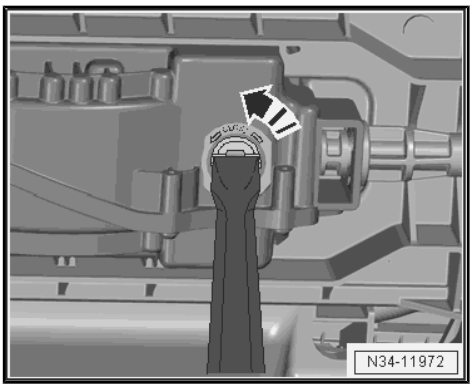

– The cable is correctly locked when the grooves on the locking mechanism are at a right angle to the cable.

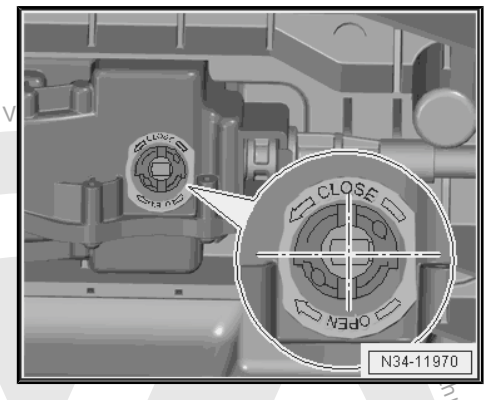

– Install new lock washer -arrow- and replace the plugs.

– Install the heat shield under the shift lever mechanism. Refer to ⇒ Body Exterior; Rep. Gr. 66 ; Molding/Trim/Extensions/ Trim Panels; Floor Heat Shield; Removing and Installing .

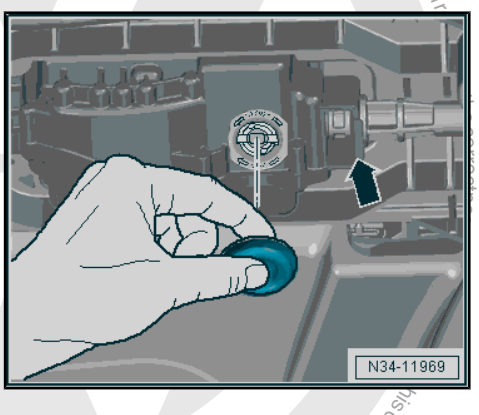

Protected by copyright. Copying for private or commercial purposes, in part or whole, is not permitted unless authorised by Volkswagen AG. V
This document. Copyright by Volkswagen AG.

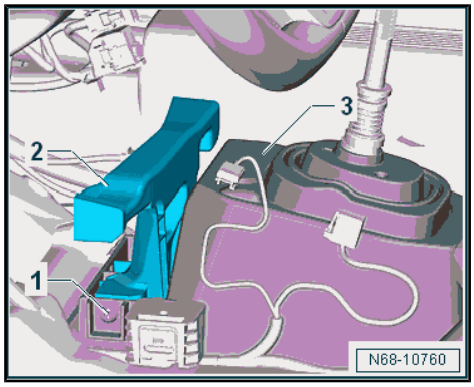

– Install the bracket -2-. Refer to ⇒ Body Interior; Rep. Gr. 68 ; Center Console; Center Console, Removing and Installing .

– Install the air guide channel from the center console. Refer to ⇒ Heating, Ventilation and Air Conditioning; Rep. Gr. 87 ; Air Routing; Overview - Air Routing and Air Distribution in Passenger Compartment .

– Install the center console. Refer to ⇒ Body Interior; Rep. Gr. 68 ; Center Console; Center Console, Removing and Installing .

– Install the selector lever handle. Refer to ⇒ “2.3 Selector Lever Handle, Removing and Installing”, page 51 .

– Adjust the selector lever cable. Refer to ⇒ “2.8 Selector Lever Cable, Checking and Adjusting”, page 68 .

– Check the selector mechanism. Refer to ⇒ “2.7 Gearshift Mechanism, Checking”, page 67 .

Tightening Specifications

♦ Selector mechanism to the body. Refer to ⇒ “2.1 Overview - Selector Mechanism”, page 47 .

2.5.3 Shift Lever Mechanism without Selector Lever Cable, Removing and Installing, ECS

Caution

This procedure contains mandatory replaceable parts. Refer to component overview prior to starting procedure.

Mandatory Replacement Parts

♦ Lock Washer - Selector Housing

♦ Cover - Selector Housing

Short Description

Remove the center console inside the passenger compartment.

It is necessary to remove the heat shield under the vehicle.

Removing

– Remove the selector lever handle. Refer to ⇒ “2.3 Selector Lever Handle, Removing and Installing”, page 51 .

– Remove the center console. Refer to ⇒ Body Interior; Rep. Gr. 68 ; Center Console; Center Console, Removing and Installing .

– Remove the air guide channel from the center console. Refer to ⇒ Heating, Ventilation and Air Conditioning; Rep. Gr. 87 ; Air Routing; Overview - Air Routing and Air Distribution in Passenger Compartment .

Protected by copyright. Copying for private or commercial purposes, in part or in whole, is not permitted unless authorised by Volkswagen AG. Volkswagen AG does not guarantee or accept any liability with respect to the correctness of information in this document. Copyright by Volkswagen AG.

– Remove the bracket -2-, to do this remove the left and right bolts -1-.

– Disconnect the connector from the selector mechanism to the vehicle wiring harness.

– Position the selector lever on the selector mechanism in the “N” position.

– Remove the center tunnel heat shield under the gearshift mechanism. Refer to ⇒ Body Exterior; Rep. Gr. 66 ; Molding/ Trim/Extensions/Trim Panels; Floor Heat Shield, Removing and Installing .

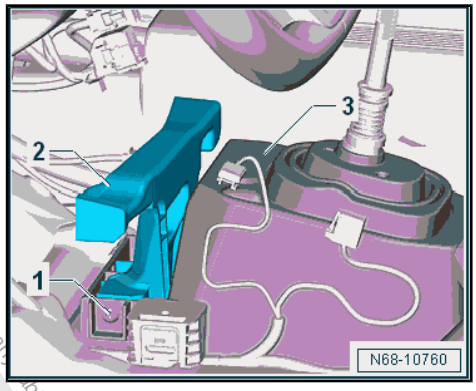

– Pry up the lower cover from the selector mechanism in the direction of -arrow- and remove.

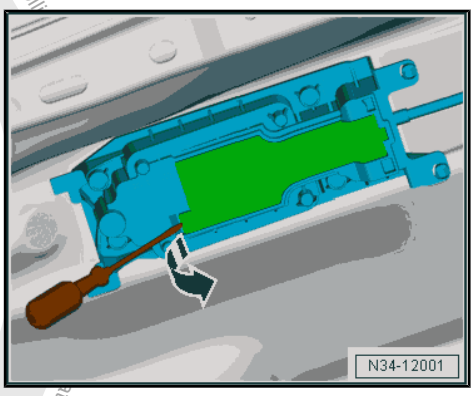

Note

Do not reuse the cover. Always replace after removing.

– Release the cable as shown with a screwdriver and remove from the selector lever in the direction of -arrows-.

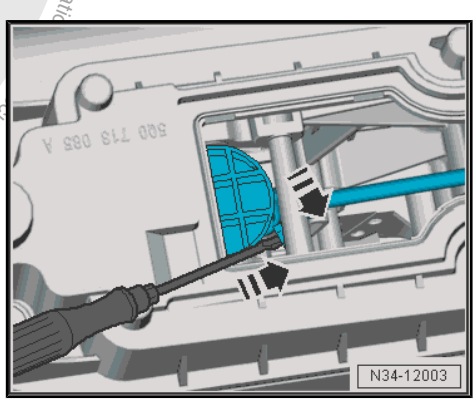

– Remove the lock washer in the direction of -arrow-.

Always replace the lock washer.

– Remove the cable from the selector mechanism.

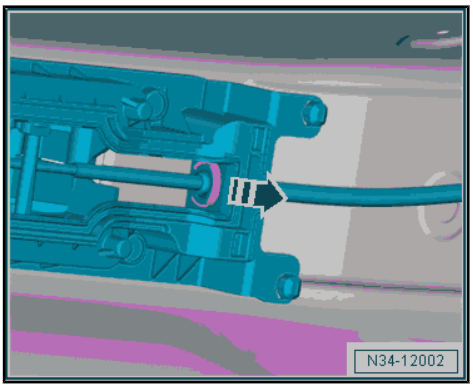

Protected by copyright. Copyright by Volkswagen AG.

Protected by copyright. Copyright by Volkswagen AG. Volkswagen AG does not guarantee or accept any liability with respect to the correctness of information in this document. Copyright by Volkswagen AG.

– Remove the bracket -A-, if equipped.

– Remove the nuts -arrows- in the vehicle interior.

– Remove the selector mechanism -B- with the gearshift housing downward.

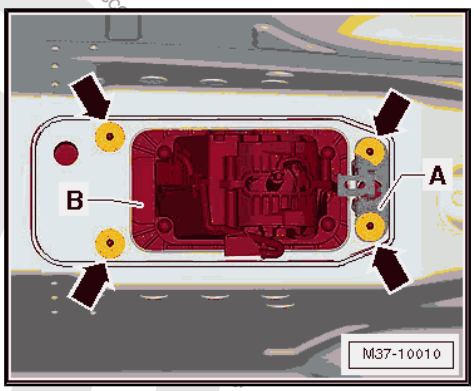

Installing

Install in reverse order of removal. Note the following:

Note

- *Do not bend or kink the selector lever cable.*
- *Do not lubricate the selector lever cable.*
- *After installation, the selector lever cable movement must be checked and adjusted.*

• The selector mechanism selector lever is in the “N” position.

– Guide the cable on the selector mechanism, inset in the selector lever and install new lock washer.

– Install the heat shield under the gearshift mechanism. Refer to ⇒ Body Exterior; Rep. Gr. 66 ; Molding/Trim/Extensions/ Trim Panels; Floor Heat Shield, Removing and Installing .

– Install the bracket -2-. Refer to ⇒ Body Interior; Rep. Gr. 68 ; Center Console; Center Console, Removing and Installing .

– Install the air guide channel from the center console. Refer to ⇒ Heating, Ventilation and Air Conditioning; Rep. Gr. 87 ; Air Routing; Overview - Air Routing and Air Distribution in Passenger Compartment .

– Install the center console. Refer to ⇒ Body Interior; Rep. Gr. 68 ; Center Console; Center Console, Removing and Installing .

– Install the selector lever handle. Refer to ⇒ “2.3 Selector Lever Handle, Removing and Installing”, page 51 .

– Adjust the selector lever cable. Refer to ⇒ “2.8 Selector Lever Cable, Checking and Adjusting”, page 68 .

– Check the selector mechanism. Refer to ⇒ “2.7 Gearshift Mechanism, Checking”, page 67 .

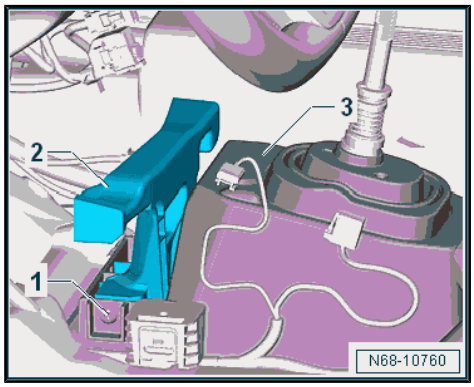

Tightening Specifications

- Selector mechanism to the body. Refer to ⇒ “2.1 Overview - Selector Mechanism”, page 47 .

2.6 Selector Lever Cable, Removing and Installing

⇒ “2.6.1 Selector Lever Cable, Removing and Installing, ZF”, page 63 .

⇒ “2.6.2 Selector Lever Cable, Removing and Installing, ECS”, page 65 .

2.6.1 Selector Lever Cable, Removing and Installing, ZF

Caution

This procedure contains mandatory replaceable parts. Refer to component overview prior to starting procedure.

Mandatory Replacement Parts

- Lock Washers - Selector Lever Cable

Removing

– Remove the air filter housing. Refer to ⇒ Engine Mechanical, Fuel Injection and Ignition; Rep. Gr. 24 ; Air Filter; Air Filter Housing, Removing and Installing or ⇒ Rep. Gr. 23 ; Air Filter; Air Filter Housing, Removing and Installing

Loosen the adjusting screw -arrow-.

– Remove the lock washers -A and B-. The lock washers must later be replaced when adjusting selector lever cable.

Use pliers to remove the lock washer -B-. Do not use a sharp-edged lever. Otherwise the selector lever cable could get damaged.

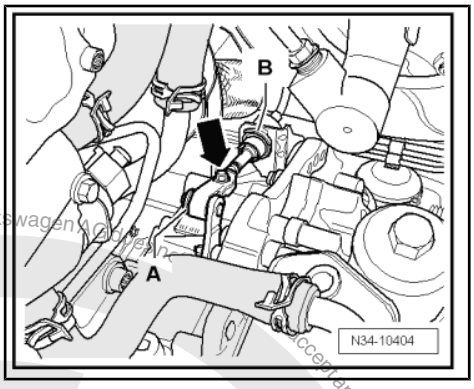

– Position the selector lever on the selector mechanism in the “N” position. The cable can only be loosened in this position.

– Remove the center tunnel heat shield under the gearshift mechanism. Refer to ⇒ Body Exterior; Rep. Gr. 66 ; Molding/Trim/Extensions/Trim Panels; Floor Heat Shield, Removing and Installing .

– Remove the plugs, and remove the lock washer -arrow-.

Always replace the lock washer.

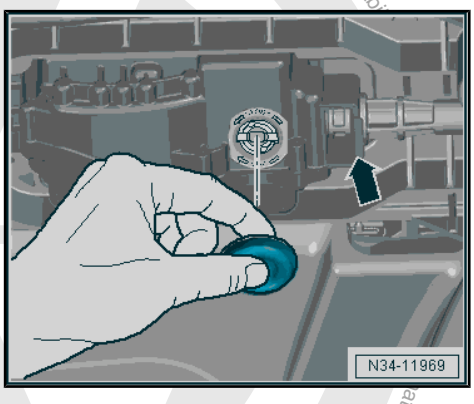

Protected by copyright. Copying for private or commercial purposes, in part or in whole, is not permitted unless authorised by Volkswagen AG. Volkswagen AG does not accept any liability in this document. Copyright by Volkswagen AG.

– Insert a large screwdriver into the grooves on the locking mechanism and turn 90° in the direction of the -arrow-.

– Pull the cable from the selector mechanism and remove.

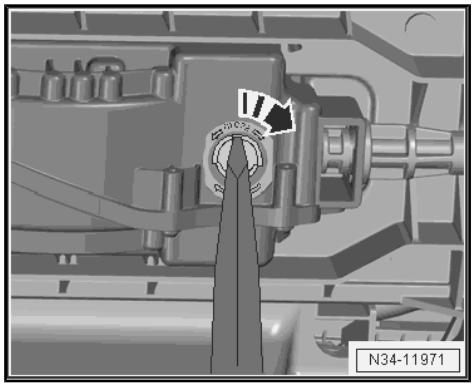

Installing

Note

- ♦ *Do not bend or kink the selector lever cable.*
- ♦ *Do not lubricate the selector lever cable.*
- ♦ *After installing check the selector lever cable for ease of movement.*

- The selector lever for the gearshift mechanism is in the “N” position. The cable can only be locked in this position.

– Guide the cable in the selector mechanism in direction of -arrow- until the locking mechanism -arrow- is visible.

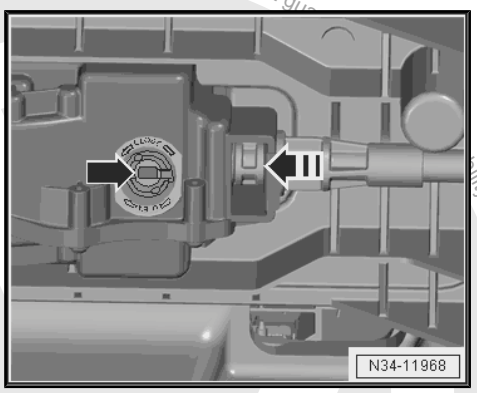

– Turn the locking mechanism 90° in the direction of the -arrow- with a large screwdriver.

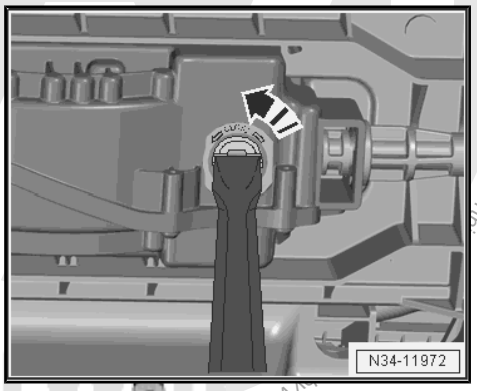

– The cable is correctly locked when the grooves on the locking mechanism are at a right angle to the cable.

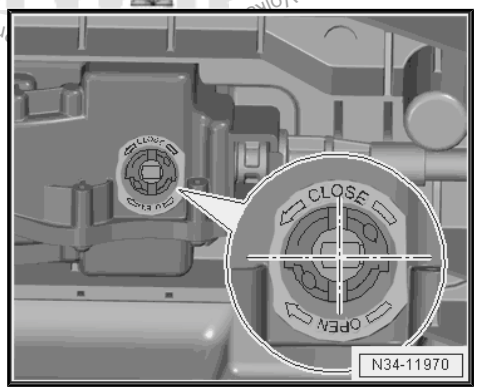

Protected by copyright. Copying for private or commercial purposes, in part or in whole, is not permitted unless authorised by Volkswagen AG. Volkswagen AG does not guarantee or accept any liability with respect to the correctness of information in this

– Install new lock washer -arrow- and replace the plugs.

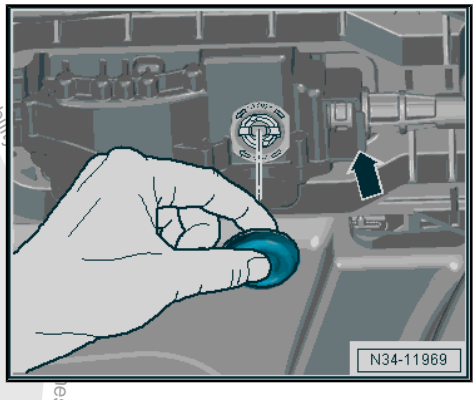

– Remove the cable from the transmission and secure using a new lock washer -B-. Do not install the lock washer -A- yet. It will be installed after the cable is checked and adjusted.

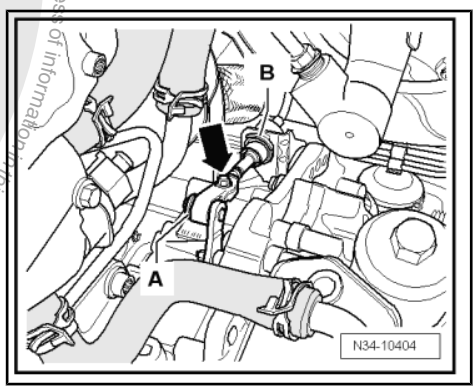

– Install the heat shield under the gearshift mechanism. Refer to ⇒ Body Exterior; Rep. Gr. 66 ; Molding/Trim/Extensions/ Trim Panels; Floor Heat Shield, Removing and Installing .

– Adjust the selector lever cable. Refer to ⇒ "2.8 Selector Lever Cable, Checking and Adjusting", page 68.

– Check the selector mechanism. Refer to ⇒ "2.7 Gearshift Mechanism, Checking", page 67.

– Install the air filter housing. Refer to ⇒ Engine Mechanical, Fuel Injection and Ignition; Rep. Gr. 24 ; Air Filter; Air Filter Housing, Removing and Installing or ⇒ Rep. Gr. 23 ; Air Filter; Air Filter Housing, Removing and Installing

2.6.2 Selector Lever Cable, Removing and Installing, ECS

Caution

This procedure contains mandatory replaceable parts. Refer to component overview prior to starting procedure.

Mandatory Replacement Parts

- Lock Washers - Selector Lever Cable
- Cover - Selector Mechanism

Removing

– Remove the air filter housing:

- Gasoline engine. Refer to ⇒ Engine Mechanical, Fuel Injection and Ignition; Rep. Gr. 24 ; Air Filter; Air Filter Housing, Removing and Installing .
- Diesel engine. Refer to ⇒ Rep. Gr. 23 ; Air Filter; Air Filter Housing, Removing and Installing .

Copyright by Volkswagen AG. Volkswagen AG does not guarantee or accept any liability with respect to the correctness of information in this document. Copyright by Volkswagen AG. Protected by copyright. Copying for private or commercial purposes, in part or in whole, is not permitted unless authorised by Volkswagen AG.

Loosen the adjusting screw -arrow-.

– Remove the lock washers -A and B-. The lock washers must later be replaced when adjusting selector lever cable.

Use pliers to remove the lock washer -B-. Do not use a sharp-edged lever. Otherwise the selector lever cable could get damaged.

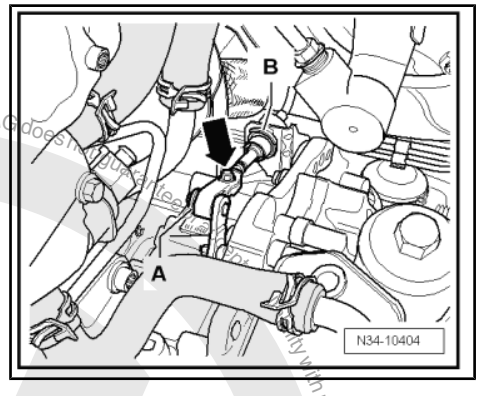

– Position the selector lever on the selector mechanism in the “N” position. The cable can only be loosened in this position.

– Remove the center tunnel heat shield under the gearshift mechanism. Refer to ⇒ Body Exterior; Rep. Gr. 66 ; Molding/Trim/Extensions/Trim Panels; Floor Heat Shield, Removing and Installing .

– Pry up the lower cover from the selector mechanism in the direction of -arrow- and remove.

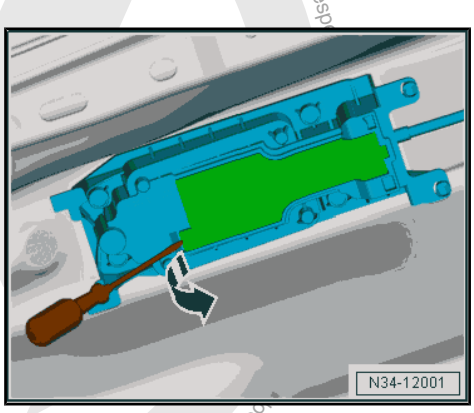

Note

Do not reuse the cover. Always replace after removing.

– Release the cable as shown with a screwdriver and remove from the selector lever in the direction of -arrows-.

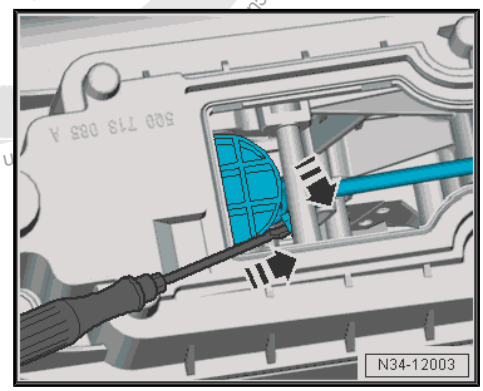

– Remove the lock washer in the direction of -arrow-.

Always replace the lock washer.

– Pull the cable from the selector mechanism and remove.

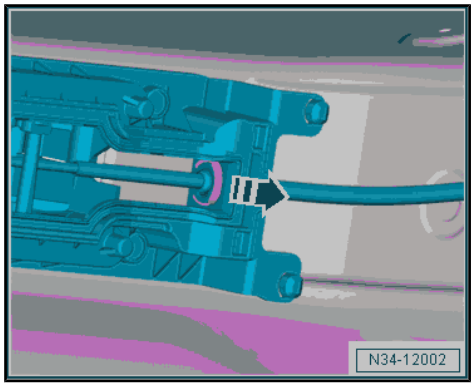

Installing

Install in reverse order of removal. Note the following:

Note

- ♦ *Do not bend or kink the selector lever cable.*
- ♦ *Do not lubricate the selector lever cable.*
- ♦ *After installation, the selector lever cable movement must be checked and adjusted.*

- The selector mechanism selector lever is in the “N” position.

– Guide the cable on the selector mechanism, inset in the selector lever and install new lock washer.

Protected by copyright. Copyright by Volkswagen AG. Volkswagen AG does not guarantee or accept any liability with respect to the correctness and completeness of this document. This document, or any part thereof, may not be reproduced or transmitted in any form or by any means, electronic or mechanical, for any purpose, unless the express written permission of Volkswagen AG is given. Only authorised OEM workshops are permitted access to this document. Use of this document by unauthorised persons or for private or commercial purposes, in part or in whole, is strictly prohibited and may be prosecuted.

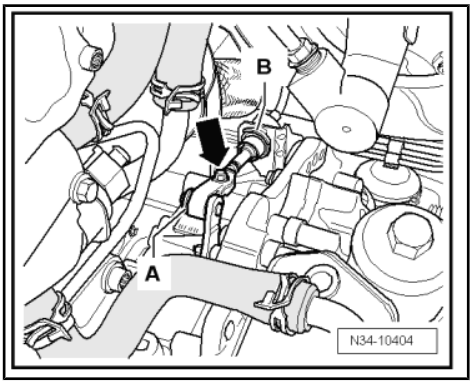

– Remove the cable from the transmission and secure using a new lock washer -B-. Do not install the lock washer -A- yet. It will be installed after the cable is checked and adjusted.

– Install the heat shield under the gearshift mechanism. Refer to ⇒ Body Exterior; Rep. Gr. 66 ; Molding/Trim/Extensions/ Trim Panels; Floor Heat Shield, Removing and Installing .

– Adjust the selector lever cable. Refer to ⇒ “2.8 Selector Lever Cable, Checking and Adjusting”, page 68 .

– Check the selector mechanism. Refer to ⇒ “2.7 Gearshift Mechanism, Checking”, page 67 .

– Install the air filter housing:

♦ Gasoline engine. Refer to ⇒ Engine Mechanical, Fuel Injection and Ignition; Rep. Gr. 24 ; Air Filter; Air Filter Housing, Removing and Installing .

♦ Diesel engine. Refer to ⇒ Rep. Gr. 23 ; Air Filter; Air Filter Housing, Removing and Installing .

2.7 Gearshift Mechanism, Checking

The starter does not work when the selector lever is in “R”, “D” and “S” or in the tiptronic gate.

Over 5 km/h:

The shift lock solenoid must not block the selector lever when the lever is in “N”. The selector lever can be moved back into a another gear.

Below 5 km/h:

The shift lock solenoid will block the selector lever approximately 1 second after the lever is moved into “N”. The selector lever can be moved out of “N” only when the brake pedal is pressed.

Selector Lever in “P” and the Ignition Turned on

- If the brake pedal is not depressed:

The selector lever is locked and cannot be moved out of “P” when the locking button is pressed. The shift lock solenoid blocks the selector lever.

- If the brake pedal is depressed:

The shift lock solenoid releases the selector lever. It is possible to shift into a gear. Slowly move the selector lever slowly from “P” through “S”; while doing this, check whether display of selector lever position in instrument panel insert matches actual selector lever position.

The Selector Lever is in “N” and the Ignition is Turned On:

- If the brake pedal is not depressed:

The selector lever is locked and cannot be moved out of “N” when the button is pressed. The shift lock solenoid blocks the selector lever.

- If the brake pedal is depressed:

The shift lock solenoid releases the selector lever. It is possible to shift into a gear.

Selector Level in the “Tiptronic” Position

- Move selector lever into Tiptronic gate:

Protected by copyright. Copying for private or commercial purposes, in part or in whole, is not permitted unless authorised by Volkswagen AG. Volkswagen AG does not guarantee or accept any liability with respect to the correctness of information in this document. Copyright by Volkswagen AG.

The illuminated “D” in the cover must turn off. The “+” and “-” must turn on.

The transmission range display in the instrument cluster must change from “P R N D S” to “6 5 4 3 2 1” when the selector lever is moved into the Tiptronic gate.

Ignition and Lights Switched On

The appropriate symbol is being lit up in shift mechanism cover.

Transmission Range Display

Simultaneous lighting of all segments of transmission range selector lever display indicates transmission is in emergency running mode.

2.8 Selector Lever Cable, Checking and Adjusting

Special tools and workshop equipment required

- Torque Wrench 5-50Nm - VAG1331-

Short Description

The selector lever cable must be disconnected from the transmission in order to check it for ease of movement. Lay the removed end down so that it does not touch anything.

Then selector lever is moved and installed again on the transmission.

After that, selector lever cable must be adjusted.

Do not lubricate the cable connections.

After that, the selector lever cable must be adjusted.

Always Adjust the Selector Lever Cable If:

- The selector lever cable was removed from the transmission.
- The engine and/or transmission were removed and installed.
- Parts of subframe mount were removed and installed.
- The cable itself or the selector mechanism was removed and installed.
- Engine/transmission positions changes, for example, were installed free of tension.

Checking

– Move the selector lever into “P”.

– Remove the air filter housing:

- Gasoline engine. Refer to ⇒ Engine Mechanical, Fuel Injection and Ignition; Rep. Gr. 24 ; Air Filter; Air Filter Housing, Removing and Installing .
- Diesel engine. Refer to ⇒ Rep. Gr. 23 ; Air Filter; Air Filter Housing, Removing and Installing .

– Remove the selector lever cable from the transmission.

– Move the selector lever from “P” through “S” and back to “P” several times.

• The selector lever must move easily.

– Adjust the selector lever cable.

Adjusting

– Move the selector lever into “P”.

Protected by copyright. Copying for private or commercial purposes, in part or in whole is not permitted unless authorised by Volkswagen AG. Volkswagen AG does not guarantee or accept any liability with respect to the correctness of information in this document. Copyright by Volkswagen AG.

Gearshift Lever, Moving into “P”

The transmission gearshift lever must be pushed “all the way back”.

– Pull the transmission gearshift lever forward.

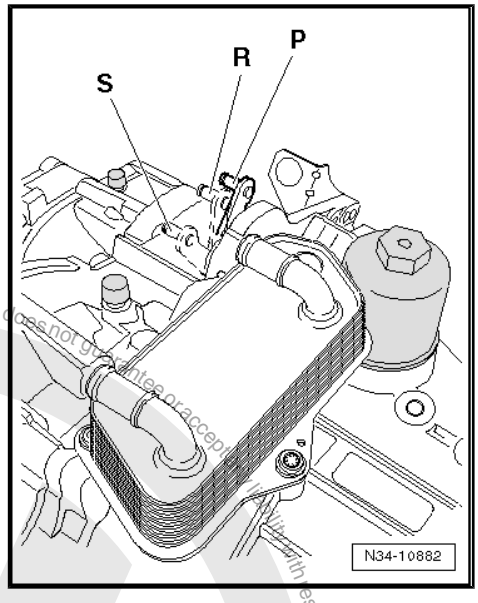

– Push the transmission gearshift lever “to the rear” -arrow-.

“P” is in the Second Detent.

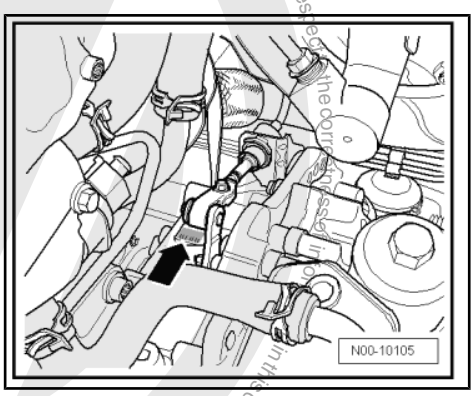

Note

- *Make sure the transmission is in “P” (parking lock is engaged) if raising the vehicle. It must not be possible to turn the front wheels.*
- *The transmission is also in “P” if the vehicle does not move with wheels spinning freely.*

– Install the cable with the loose adjusting screw -arrow- and the new lock washer -A and B-, if they were removed earlier.

– Tap the handle on the selector lever back and forth gently but do not move it out of “P” under any circumstances.

– Tighten the adjusting screw -arrow-.

This ends the adjustment.

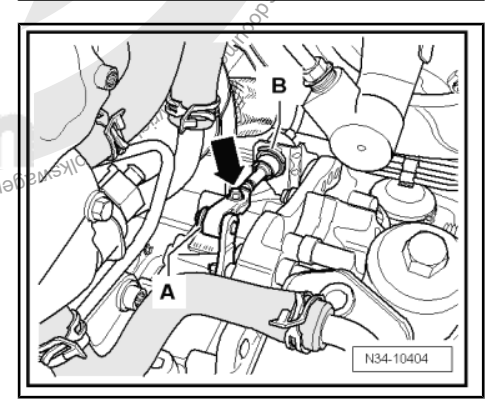

Tightening Specifications

Component	Nm
Selector lever cable adjusting bolt	13

2.9 Selector Shaft Seal, Replacing

Short Description:

The seal can be replaced only when the transmission is removed.

Caution

This procedure contains mandatory replaceable parts. Refer to component overview prior to starting procedure.

Mandatory Replacement Parts

- Nut - Gearshift Lever

Protected by copyright. Copying for private or commercial purposes, in part or in whole, is not permitted unless authorised by Volkswagen AG. Volkswagen AG does not guarantee or accept any liability with respect to the correctness of information in this document. Copyright by Volkswagen AG.

Special tools and workshop equipment required

- Press Piece - Shift Rod/Alternator - VW423-
- Puller - Crankshaft/Power Steering Seal - T20143-
- Torque Wrench 5-50Nm - VAG1331-
- Sealing Grease - G 052 128 A1-

– Remove the transmission. Refer to ⇒ “3.1 Transmission, Removing”, page 72 .

– Remove the selector lever cable from the transmission. Refer to ⇒ “2.5 Selector Mechanism, Removing and Installing”, page 55 .

– Remove nut -arrow- and remove transmission gearshift lever -A- from the gearshift shaft.

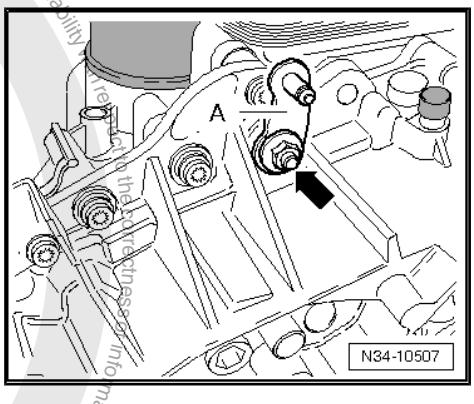

– Pry out the seal in direction of -arrow-.

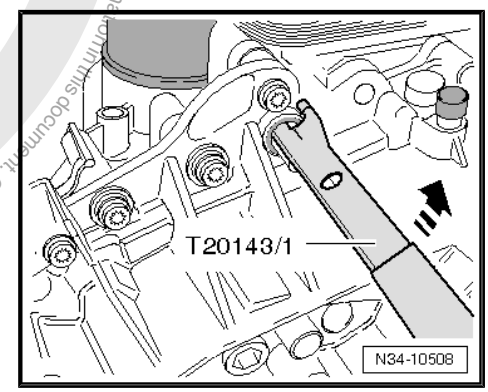

– Lightly oil the new gasket on the outer edge.

– Fill the space between the sealing and dust lip -arrow- halfway with Sealing Grease - G 052 128 A1- .

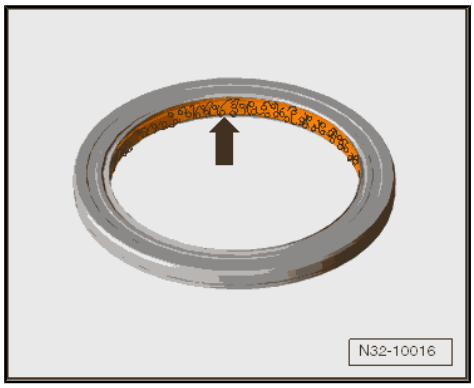

Protected by copyright. Copying for private or commercial purposes, in part or in whole, is not permitted unless authorised by Volkswagen AG. Volkswagen AG does not guarantee or accept any liability with respect to the correctness of information in this document. Copyright by Volkswagen AG.

- The closed side of the gasket -arrow- points to the Press Piece - Shift Rod/Alternator - VW423- .

– Install the new seal all the way. Do not tilt the gasket when installing it.

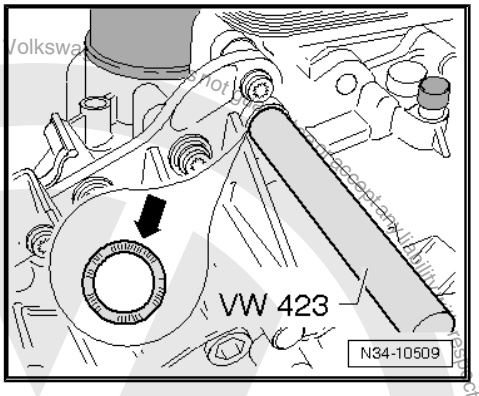

– Position the gearshift lever -A- and tighten the new nut -arrow-.

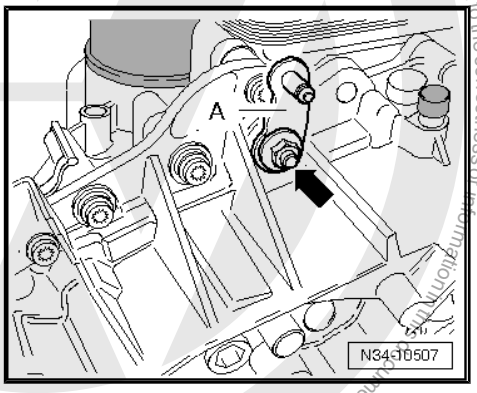

The Gearshift Lever Only Fits to the Splines in One Position.

– Install the transmission. Refer to ⇒ “3.2 Transmission, Installing”, page 91 .

– Attach the selector lever cable to the transmission. Refer to ⇒ “2.8 Selector Lever Cable, Checking and Adjusting”, page 68 .

Tightening Specifications

♦ Transmission selector lever to selector shaft. Refer to ⇒ “6.1 Overview - Transmission”, page 101 .

Protected by copyright. Copyright by Volkswagen AG.

Protected by copyright. Copyright for private or commercial purposes, in part or in whole, is not permitted unless authorised by Volkswagen AG. Volkswagen AG does not guarantee or accept any liability with respect to the correctness of information in this document. Copyright by Volkswagen AG.

3 Transmission, Removing and Installing

⇒ “3.1 Transmission, Removing”, page 72 .

⇒ “3.2 Transmission, Installing”, page 91 .

⇒ “3.3 Transmission Tightening Specifications”, page 96 .

3.1 Transmission, Removing

⇒ “3.1.1 Transmission, Removing, Vehicles with Gasoline Engine”, page 72

⇒ “3.1.2 Transmission, Removing, Vehicles with Turbo Diesel Engine”, page 81

3.1.1 Transmission, Removing, Vehicles with Gasoline Engine

Brief description

The transmission is removed downward separately.

»From above«:

The battery, air filter and starter are removed. Engine and transmission are supported before the left subframe mount is removed.

»From underneath«:

The -subframe- is removed together with the -pendulum support- and -both control arms-. The -steering gear- remains in the vehicle.

Both driveshafts are disconnected from the transmission and remain inside the wheel bearing housings. Occasionally they will be moved to the side, but they still remain on the vehicle.

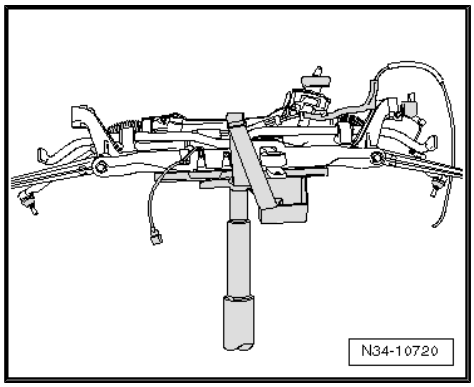

Special tools and workshop equipment required

- Engine Support Bridge - 10-222A-
- Engine Support Bridge - Gearbox Adapter - 10-222A/29-
- Engine Support Bridge - Engine Support 18 - 10-222A/18-
- Engine/Gearbox Support Shackle (2 pc.) - 10-222A/12- (quantity 2)
- Transmission Support - Pins 29 - 3282/29-
- Transmission Support - 3282-
- Engine and Gearbox Jack - VAS6931-
- Transmission Support - Mounting Plate 42A - 3282/42A-
- Hose Clamps - Up To 25 mm - 3094-
- Tensioning Strap - T10038-
- Engine Bung Set - VAS6122-
- Insert Tool - 18mm - T10179-
- Socket - Xzn 14 - T10061-

- Engine Support - Basic Set Square Pipe - T40091/1- (quantity 2)
- Engine Support - Basic Set Movable Joint - T40091/3- (quantity 2)
- Engine Support - Supplement Kit Spindle - T40093/3- (quantity 2) from the Engine Support - Supplement Kit - T40093A-
- Engine Support Brackets - T40093/3-6- (quantity 2)

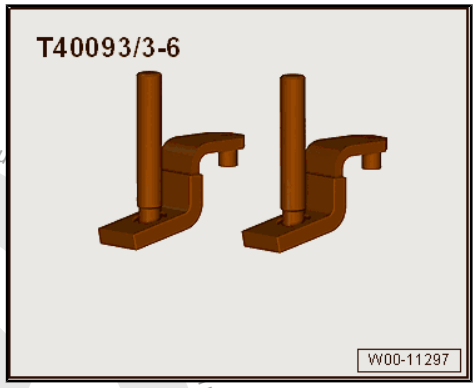

Removing

– Lift the vehicle, all four mounts from lifting platform at the same height.

– Move the selector lever into »P«.

– Remove the engine cover. Refer to ⇒ Rep. Gr. 10 ; Engine Cover; Engine Cover, Removing and Installing .

– Remove the air filter housing. Refer to ⇒ Rep. Gr. 24 ; Air Filter; Air Filter Housing, Removing and Installing .

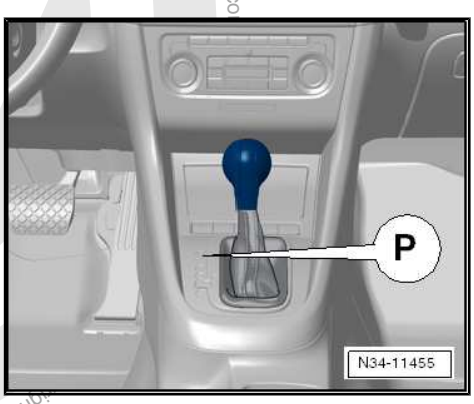

– Remove the battery and the battery tray -1- -arrows-. Refer to ⇒ Electrical Equipment; Rep. Gr. 27 ; Battery, Removing and Installing .

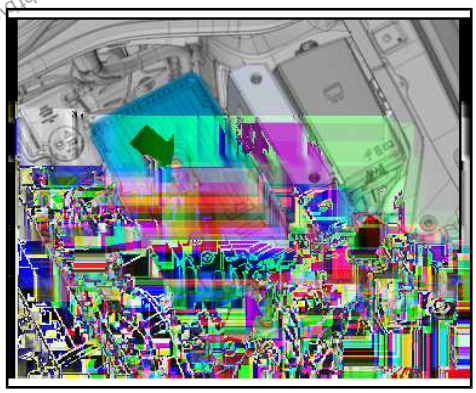

Copyright. Copying for private or commercial purposes in part or in whole, is not permitted unless authorised by Volkswagen AG. Volkswagen AG does not guarantee the

– Remove the selector lever cable from the transmission -arrows-.

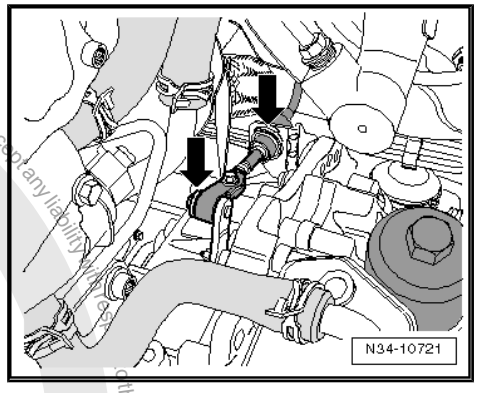

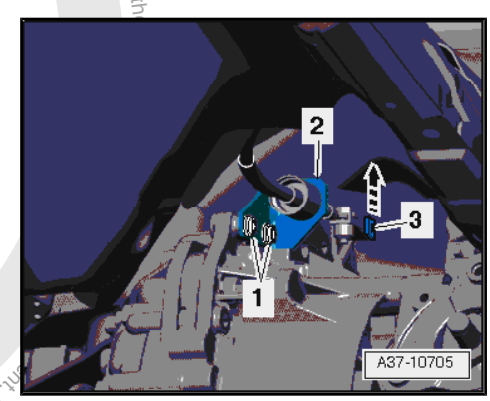

Note

- *Use pliers to remove the lock washer from the cable bracket. Do not use a sharp-edged lever. Otherwise the selector lever cable could get damaged.*
- *Remove the cable bracket -2- from the transmission, if necessary. Remove the bolts -1- and the lock washer -3-.*
- *Replace the bolts -1- and the lock washers.*
- *Bolt tightening specification -1- 20 Nm +90°.*

Caution

Risk of damaging the selector lever cable.

- ***Remove the selector level cable from the cable bracket when lowering transmission.***
- ***Do not bend or kink the selector lever cable.***

– Remove the charge air pipe. Refer to ⇒ Rep. Gr. 21 ; Overview - Charge Air System .

– Place a lint-free cloth on to transmission fluid cooler and transmission to absorb escaping coolant.

WARNING

Risk of scalding due to hot steam and hot coolant.

- ***The cooling system is under pressure when the engine is warm.***
- ***Reduce the pressure by covering the coolant reservoir cap with cloths and carefully opening.***

Copyright by Volkswagen AG. Copying for private or commercial purposes, in part or in whole, is not permitted unless authorised by Volkswagen AG. Volkswagen AG does not guarantee or accept any liability with respect to the correctness and completeness of this document.

– Clamp the coolant hose with the Hose Clamps - Up To 25mm - 3094- .

– Loosen the hose clamps -arrows- and remove the coolant hoses from the transmission fluid cooler.

– Remove the bolts -1- and move the Transmission Coolant Valve - N488- to the side. Tightening specification. Refer to ⇒ “3.3 Transmission Tightening Specifications”, page 96 .

– Seal the transmission fluid cooler connections with plugs taken from Engine Bung Set - VAS6122- .

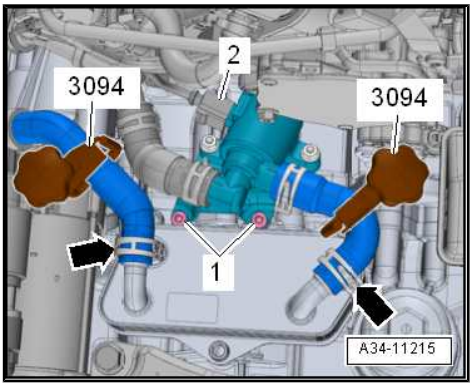

– Remove the starter -A-. Refer to ⇒ Electrical Equipment; Rep. Gr. 27 ; Starter; Starter, Removing and Installing .

Remove the »lower« bolt first.

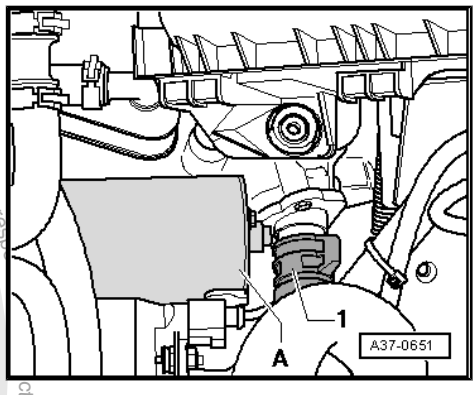

> **Caution**
>
> *There is a risk of damaging the DSG Transmission Mechatronic - J743- with static electricity.*
>
> ♦ *Do not touch contacts in DSG Transmission Mechatronic - J743- connector with hands.*

– To discharge any static electricity, touch the vehicle ground with hand (without wearing a glove). Refer to ⇒ page 7 .

– Release the Mechatronic connector twist lock -1- by turning it »counter-clockwise« and remove the connector.

– Remove all upper engine/transmission connecting bolts.

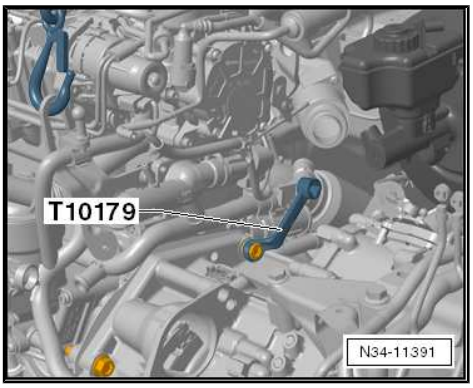

These tools are suitable for this.

Protected by copyright. Copying for private or commercial purposes, in part or in whole, is not permitted unless authorised by Volkswagen AG. Volkswagen AG does not guarantee or accept any liability with respect to the correctness of information in this document. Copyright by Volkswagen AG.

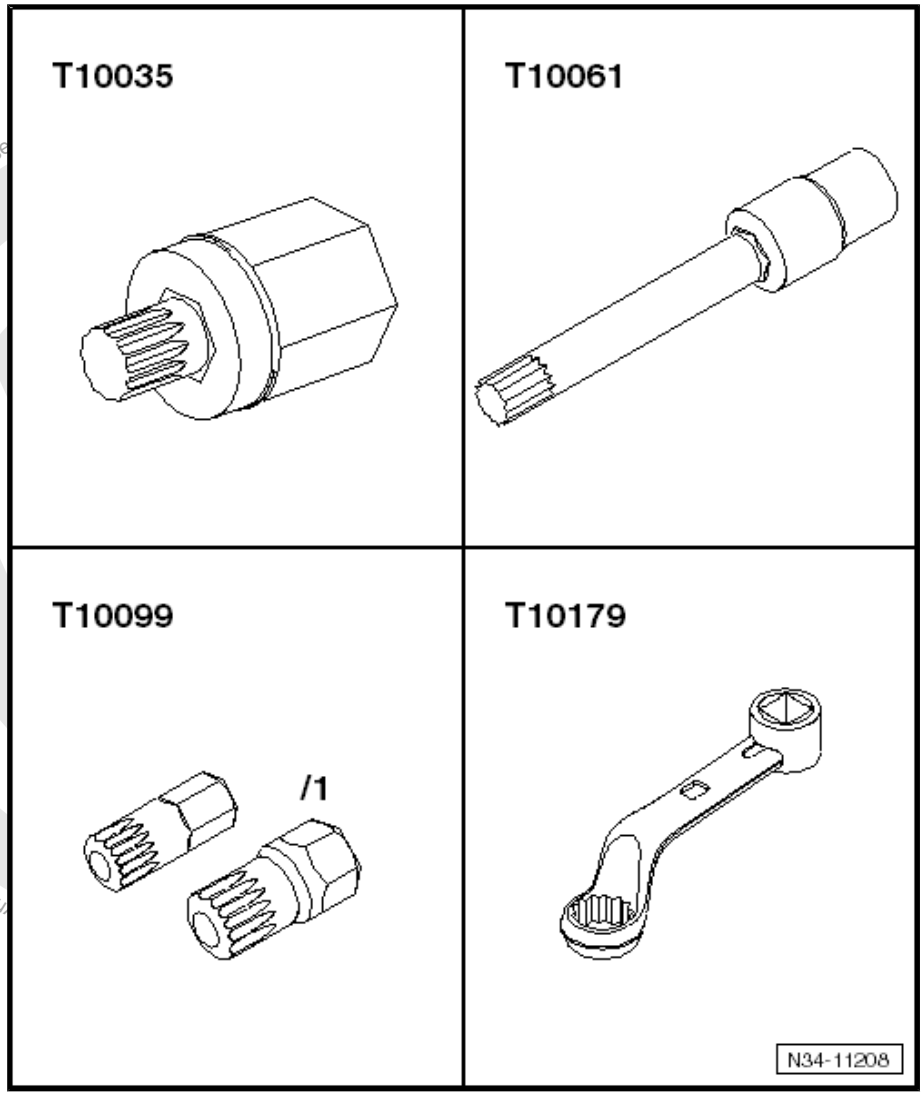

Copyright. Copying for private or commercial purposes, in part or in whole, is not permitted unless authorised

One bolt is located inside the hole for the starter -arrow-. Use Socket - Xzn 14 - T10061- to remove the bolt.

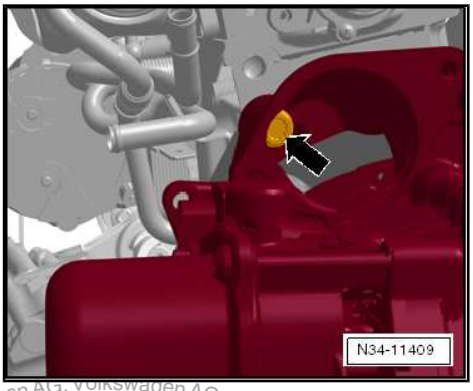

– If there are hose and cable connections located near the engine lifting eyes for the Engine Support Bridge - 10-222A- , these must now be removed.

– Attach the Engine Support Bridge - 10-222A- as follows:

The following are needed:

- ♦ Engine Support Bridge - Engine Support 18 - 10-222A/18-
- ♦ Engine/Gearbox Support Shackle (2 pc.) - 10-222A/12- (quantity: 2) (are needed if the Spindles from the Engine Support Bridge cannot be engaged in the engine lifting eyes).
- ♦ Engine Support Bridge - Engine Support 29 - 10-222A/29- (quantity 2)
- ♦ Engine Support - Basic Set Square Pipe - T40091/1- (quantity 2)
- ♦ Engine Support - Basic Set Movable Joint - T40091/3- (quantity 2)
- ♦ Engine Support - Supplement Kit - Spindle - T40093/3- (quantity: 2)
- ♦ Engine Support Brackets - T40093/3-6- (quantity 2)

– Insert the Engine Support Bridge - Engine Support 29 - 10-222A/29- between the fender bolting edge and the fender bolting plate underneath it on both sides of the vehicle.

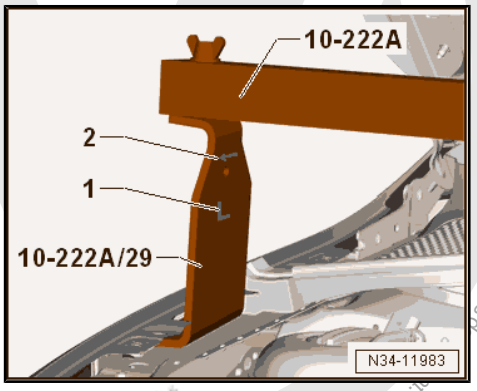

- ♦ Installation position:

“L” = -1- Adapter is installed on the “right” side of the vehicle (Adapter locks in the hole on the fender).

“R” (not illustrated here), Adapter is installed on the “left” side of the vehicle.

The arrow -2- always points in driving direction

– Slide the Engine Support Bridge - Engine Support 18 - 10-222A/18- and two Engine Support - Basic Set Movable Joint - T40091/3- onto the Engine Support Bridge - 10-222A-

– Tighten the Engine Support Bridge - 10-222A- on the Engine Support Bridge - Engine Support 29 - 10-222A/29- .

-A- = Engine Support Brackets - T40093/3-6- (⇒ next illustration).

– Remove the filler tube for the windshield washer system washer fluid reservoir. Refer to ⇒ Electrical Equipment; Rep. Gr. 92 ; Windshield Washer System; Windshield Washer Fluid Reservoir, Removing and Installing .

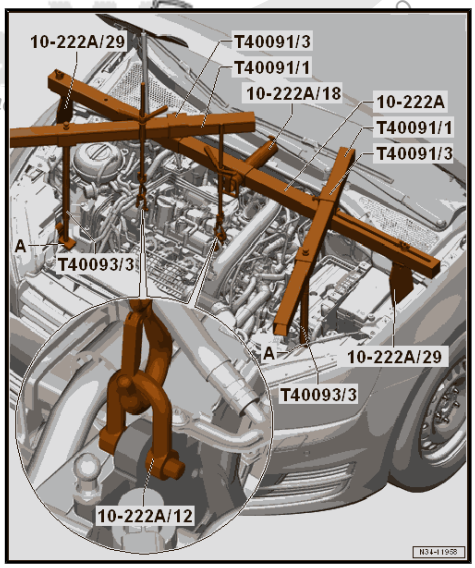

Protected by copyright. Copying for private or commercial purposes, in part or in whole, is not permitted unless authorised by Volkswagen AG. Volkswagen AG does not guarantee or accept any liability with respect to the correctness of information in this

– If present, remove wires from the front area of both longitudinal members -arrow-. Do not disconnect line system.

– Place the Engine Support Brackets - T40093/3-6- on both longitudinal members (the right longitudinal member is illustrated here).

– If necessary, carefully unclip the A/C system pipe in the front area. Do not disconnect the line system. Refer to ⇒ Heating, Ventilation and Air Conditioning; Rep. Gr. 87 ; Coolant Circuit; Component Location Overview - Coolant Circuit .

• The Engine Support Brackets - T40093/3-6- locks respectively with the pins -A- behind the tab on the longitudinal member -arrow-.

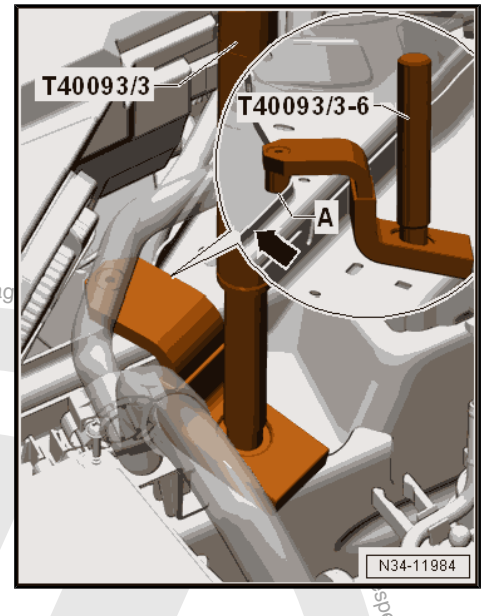

– Install the Engine Support - Supplement Kit - Spindle - T40093/3- .

– Connect the Engine Support - Supplement Kit - Spindle - T40093/3- to the Engine Support Bridge - 10-222A- using the Engine Support - Basic Set Square Pipe - T40091/1- and tension it (⇒ previous illustration).

– Then engage the spindles in the lifting eyes.

– Pretension the engine/transmission assembly and Engine Support Bridge via the Spindles .

– Remove the noise insulation. Refer to ⇒ Body Exterior; Rep. Gr. 66 ; Noise Insulation; Overview - Noise Insulation .

– Remove the lower section of the left front wheel housing liner. Refer to ⇒ Body Exterior; Rep. Gr. 66 ; Wheel Housing Liner; Overview - Front Wheel Housing Liner .

– Remove the wires and bracket from the front of the transmission cover -arrows- (two M6 nuts).

– Route the wires near the transmission cover upward and tie them up.

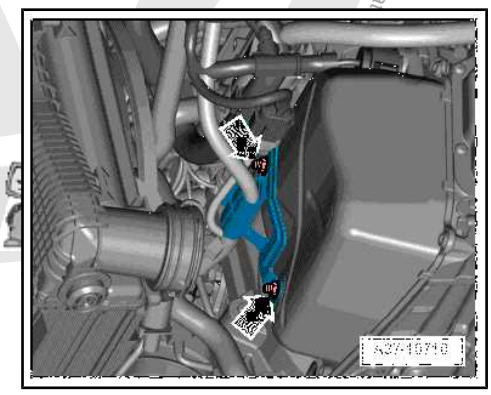

– If equipped, disconnect the connector -1- from the Oil Level Thermal Sensor - G266- .

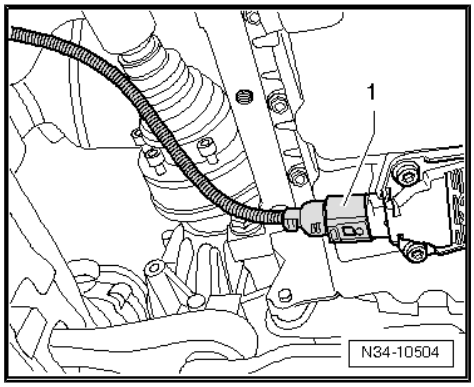

Protected by copyright. Copying for private or commercial purposes, in whole or in part, is not permitted unless authorised by Volkswagen AG. Volkswagen AG does not guarantee or accept any liability with respect to the correctness of information.

– Remove the bolts -11- and then remove the pendulum support from the transmission.

– Secure the subframe before removing. Refer to ⇒ Suspension, Wheels, Steering; Rep. Gr. 40 ; Subframe; Subframe, Securing .

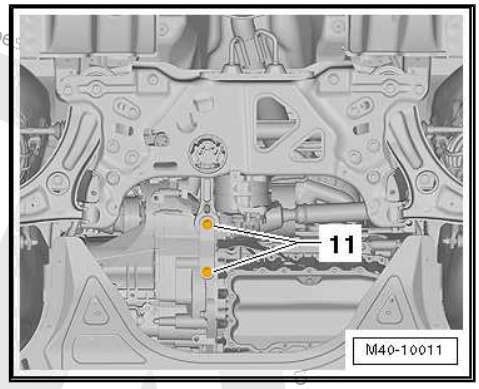

Note

If the subframe is not secured, a vehicle alignment must be performed later.

– Remove the subframe without the steering gear. Refer to ⇒ Suspension, Wheels, Steering; Rep. Gr. 40 ; Subframe; Subframe without Steering Gear, Removing and Installing .

– Remove both driveshafts from the transmission. Refer to ⇒ Suspension, Wheels, Steering; Rep. Gr. 40 ; Driveshaft, Removing and Installing .

– Secure the driveshafts to the suspension strut using a Tensioning Strap - T10038- .

Do not damage the surface of the shafts.

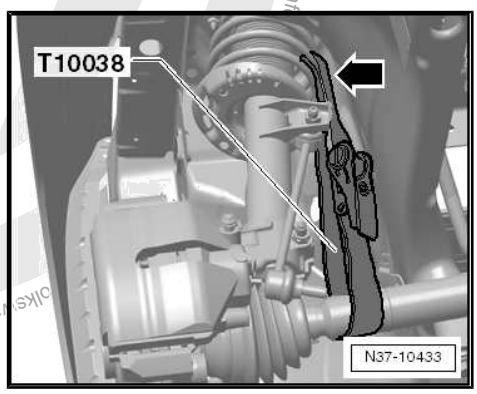

– Remove the bolts -1 and 2- from the transmission bracket -A-.

Always replace the bolts.

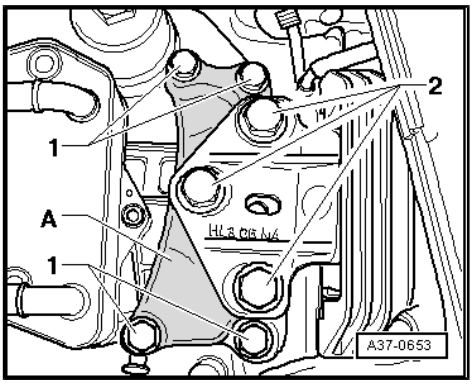

– Lower the engine/transmission approximately to the dimension -a- using the spindles on the Engine Support Bridge - 10-222A- .

Dimension -a- = approximately 50 mm

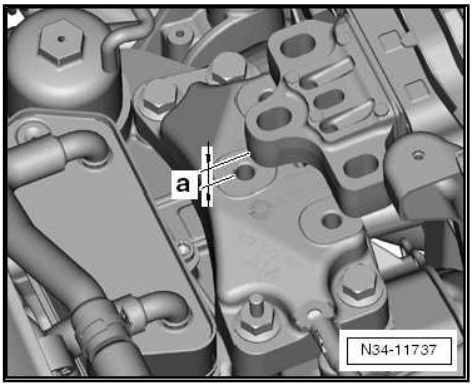

Protected by copyright. Copying for private or commercial purposes, in part or in whole, is not permitted unless authorised by Volkswagen AG. Volkswagen AG does not guarantee or accept any liability with respect to the correctness of information in this document. Copyright by Volkswagen AG.

– Remove the transmission bracket in direction of -arrow-.

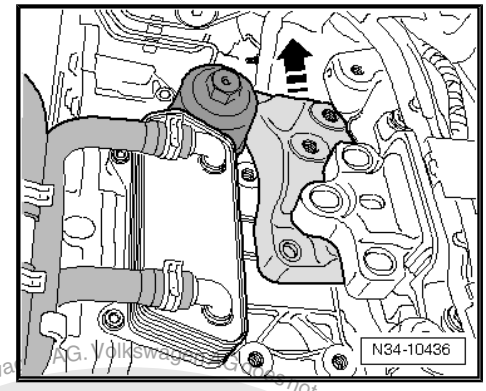

To remove the transmission “0D9”, the Transmission Support - 3282- is equipped with the Transmission Support - Mounting Plate - 3282/42A- and positioned on the Engine and Gearbox Jack - VAS6931- .

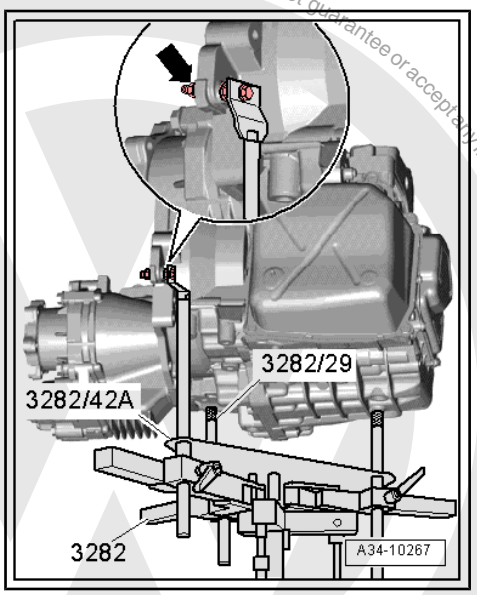

– Align the arms of the Transmission Support so that they match up with the holes in the Transmission Support - Mounting Plate 42A - 3282/42A- .

– Install the mounting element as illustrated on the Transmission Support - Mounting Plate 42A - 3282/42A- .

– Place the Engine and Gearbox Jack - VAS6931- under the vehicle.

• The arrow symbol on the Transmission Support - Mounting Plate 42A - 3282/42A- points in the direction of travel.

– Align the Transmission Support - 3282- so that it is parallel to the transmission.

– Install the Transmission Support - Pins 29 - 3282/29- in the transmission.

– Secure both the other support elements to the transmission as shown.

Note

♦ *Contrary to the illustration of the Adjusting Plate , the front support element is shown attached to the transmission with an M10 x 50 mm bolt -arrow-. Install a M12 bolt between the mount and the transmission housing.*

♦ *DSG transmission 02E “AWD” is shown in the illustration. The support elements on the “0D9” “FWD” transmission are identical.*

– Support the transmission by lifting it from underneath using the Engine and Gearbox Jack - VAS6931- .

The transmission is disconnected from the engine in this position.

– Remove the remaining engine/transmission connecting bolts.

– Remove the transmission from the engine (alignment sleeves), and »also pay attention to the selector lever cable«. Tilt the transmission to the left by adjusting the spindle for the Transmission Support - 3282- .

Protected by copyright. Copying for private or commercial purposes, in part or in whole, is not permitted unless authorized by Volkswagen AG. Volkswagen AG does not guarantee or accept any liability with respect to the correctness of information in this document. Copyright by Volkswagen AG.

– Slightly turn and lower the transmission. Make sure that the right flange shaft -1- is guided past when lowering the intermediate plate -arrow-.

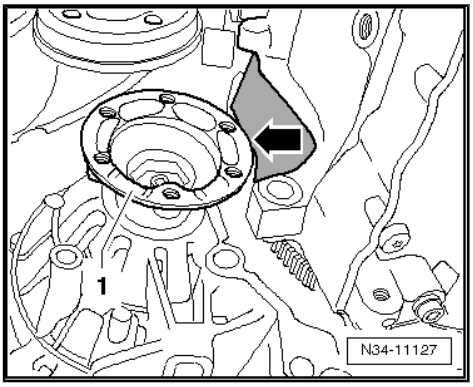

Note

Pay attention to all of the lines when lowering the transmission.

Transmission, transporting. Refer to
⇒ “5 Transmission, Transporting”, page 100 .

Secure the transmission on the assembly stand. Refer to
⇒ “7 Securing on Engine and Transmission Holder”, page 104 .

Install the transmission. Refer to
⇒ “3.2 Transmission, Installing”, page 91 .

3.1.2 Transmission, Removing, Vehicles with Turbo Diesel Engine

Brief Description

The transmission is removed downward separately.

»From above«:

The battery, air filter and starter are removed. Engine and transmission are supported before the left subframe mount is removed.

»From underneath«:

The -subframe- is removed together with the -pendulum support- and -both control arms-. The -steering gear- remains in the vehicle.

Both driveshafts are disconnected from the transmission and remain inside the wheel bearing housings. Occasionally they will be moved to the side, but they still remain on the vehicle.

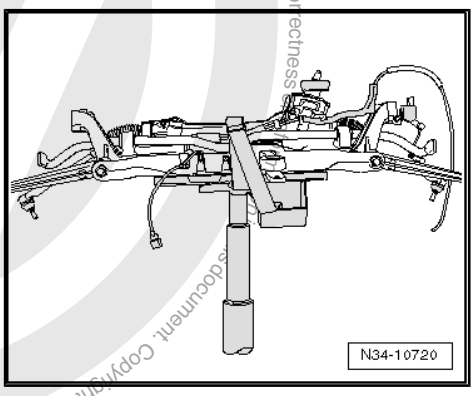

Protected by copyright. Copying for private or commercial purposes, in part or in whole, is not permitted unless authorised by Volkswagen AG. Volkswagen AG does not guarantee or accept any liability with respect to the correctness of this document. Copyright by Volkswagen AG.

Special tools and workshop equipment required

- Transmission Support - 3282-
- Transmission Support - Mounting Plate 42A - 3282/42A-
- Support Elements for transmission (determine when mounting the Mounting Plate on the Transmission Support)
- Transmission Support - Pins 29 - 3282/29-
- Torque Wrench 1331 5-50Nm - VAG1331-
- Torque Wrench 1332 40-200Nm - VAG1332-
- Engine and Gearbox Jack - VAS6931-
- Engine Support Bridge - 10-222A-
- Hose Clamps - Up To 25mm - 3094- or Hose Clamps - Up To 40mm - 3093-
- Tensioning Strap - T10038-
- Engine Support - Basic Set - T40091-

- Engine Support - Supplement Kit - T40093A-
- Engine Bung Set - VAS 6122-

Removing

– Move the selector lever into »P«.

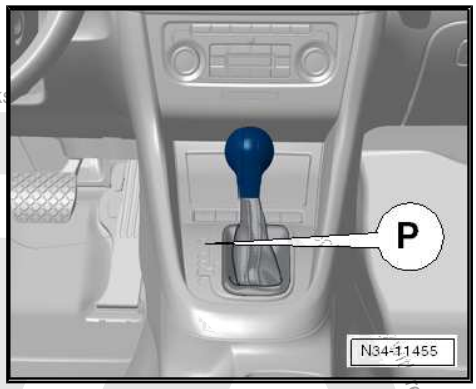

– Disconnect the battery ground cable. Refer to ⇒ Electrical Equipment; Rep. Gr. 27 ; Battery; Battery, Disconnecting and Connecting .

– Remove the engine cover. Refer to ⇒ Rep. Gr. 10 ; Engine Cover; Engine Cover, Removing and Installing .

– Remove the air filter housing. Refer to ⇒ Rep. Gr. 23 ; Air Filter; Air Filter Housing, Removing and Installing .

– Remove the battery and the battery tray -1- -arrows-. Refer to ⇒ Electrical Equipment; Rep. Gr. 27 ; Battery, Removing and Installing .

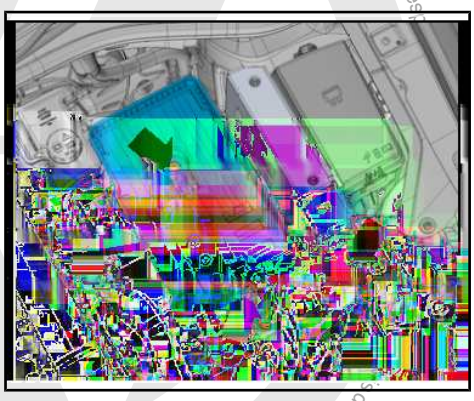

– Remove the selector lever cable from the transmission -arrows-.

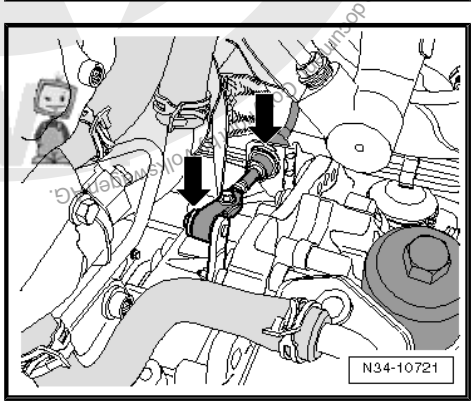

Protected by copyright. Copying for private or commercial purposes, in part or whole, is not permitted unless authorised by Volkswagen AG. Volkswagen AG

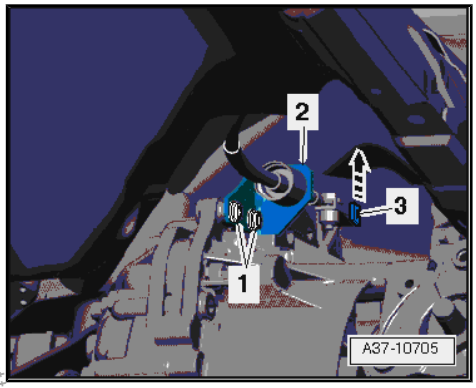

Note

- *Use pliers to remove the lock washer from the cable bracket. Do not use a sharp-edged lever. Otherwise the selector lever cable could get damaged.*
- *Remove the cable bracket -2- from the transmission, if necessary. Remove the bolts -1- and the lock washer -3-.*
- *Replace the bolts -1- and the lock washers.*
- *Bolt tightening specification -1- 20 Nm +90°.*

Caution

Risk of damaging the selector lever cable.

- ***Remove the selector level cable from the cable bracket when lowering transmission.***
- ***Do not bend or kink the selector lever cable.***

– Place a lint-free cloth on to transmission fluid cooler and transmission to absorb escaping coolant.

WARNING

Risk of scalding due to hot steam and hot coolant.

- ***The cooling system is under pressure when the engine is warm.***
- ***Reduce the pressure by covering the coolant reservoir cap with cloths and carefully opening.***

– Clamp the coolant hose with the Hose Clamps - Up To 25mm - 3094- .

– Loosen the hose clamps -arrows- and remove the coolant hoses from the transmission fluid cooler.

– If equipped, remove the bolts -1- and move the Transmission Coolant Valve - N488- to the side. Tightening specification. Refer to
⇒ “3.3 Transmission Tightening Specifications”, page 96 .

– Seal the transmission fluid cooler connections with plugs taken from Engine Bung Set - VAS 6122- .

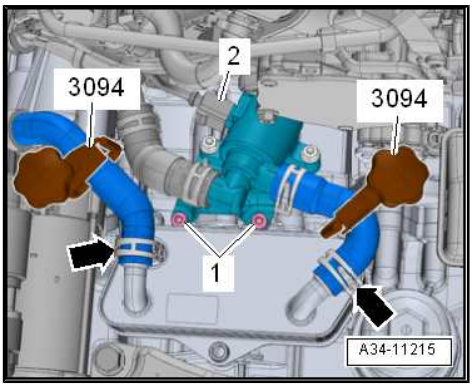

Copyright by Volkswagen AG. Volkswagen AG does not guarantee or accept any liability with respect to the correctness of information in this document. Copyright by Volkswagen AG. Protected by copyright. Copying for private or commercial purposes, in part or in whole, is not permitted unless authorised by Volkswagen AG.

– Remove the starter -A-. Refer to ⇒ Electrical Equipment; Rep. Gr. 27 ; Starter; Starter, Removing and Installing .

Remove the »lower« bolt first.

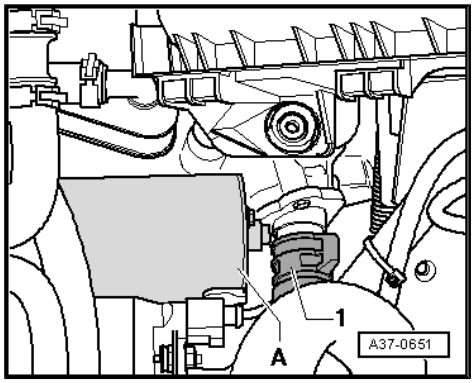

> **Caution**
>
> *There is a risk of damaging the DSG Transmission Mechatronic - J743- with static electricity.*
>
> ♦ *Do not touch contacts in DSG Transmission Mechatronic - J743- connector with hands.*

– To discharge any static electricity, touch the vehicle ground with hand (without wearing a glove). Refer to ⇒ page 7 .

– Release the Mechatronic connector twist lock -1- by turning it »counter-clockwise« and remove the connector.

– Remove all upper engine/transmission connecting bolts.

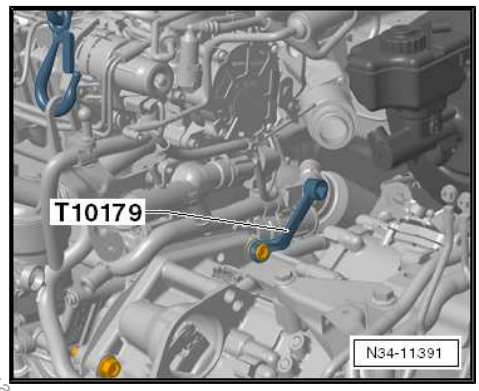

These tools are suitable for this.

Protected by copyright. Copyright for private or commercial purposes, in part or in whole, is not permitted unless authorised by Volkswagen AG. Volkswagen AG does not guarantee or accept any liability with respect to the correctness of information in this document. Copyright by Volkswagen AG.

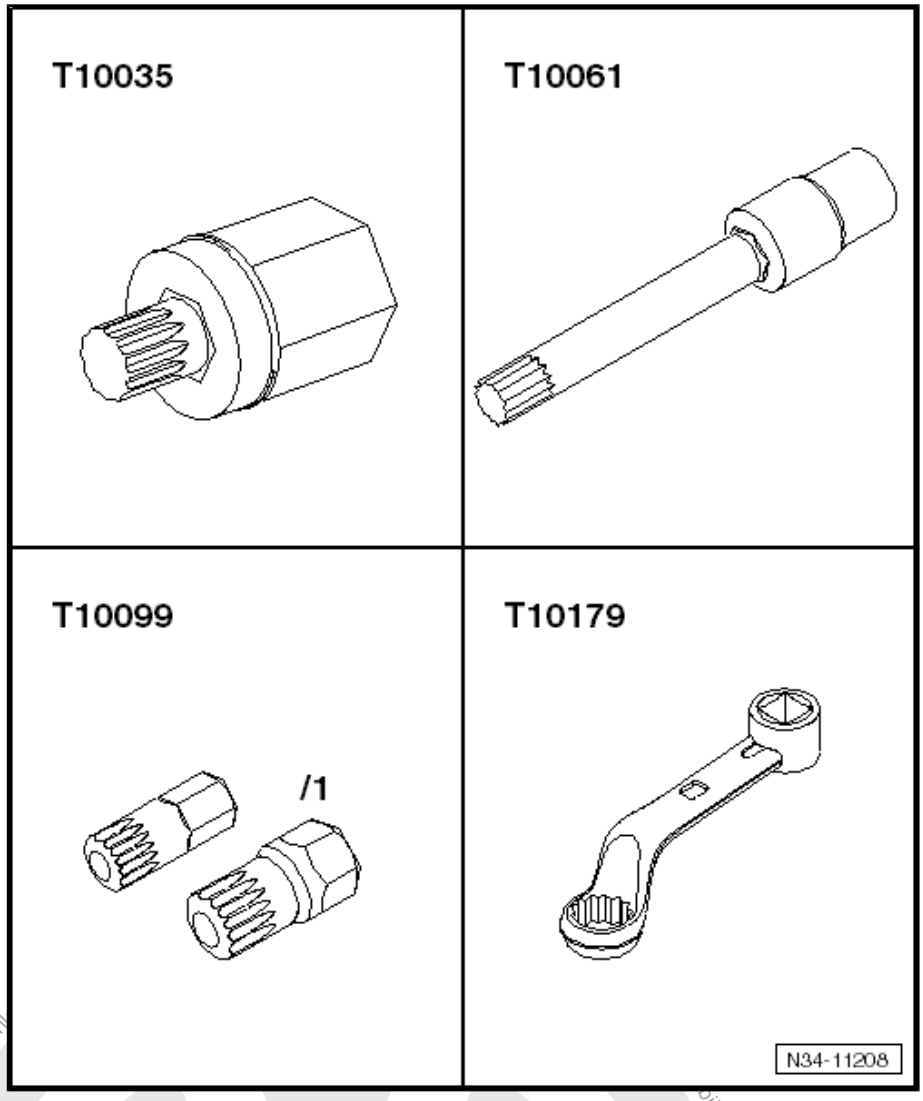

One bolt is located inside the hole for the starter -arrow-. Use Socket - Xzn 14 - T10061- to remove the bolt.

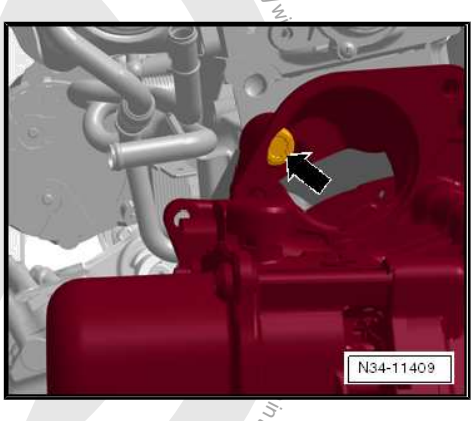

- Remove windshield wiper arms. Refer to ⇒ Electrical Equipment; Rep. Gr. 92 ; Windshield Wiper System; Windshield Wiper Arms, Removing and Installing .
- Remove the plenum chamber cover. Refer to ⇒ Body Exterior; Rep. Gr. 50 ; Bulkhead; Plenum Chamber Cover, Removing and Installing .
- If there are hose and cable connections located near the engine lifting eyes for the Engine Support Bridge - 10-222A- , these must now be removed.

Protected by copyright. Copying for private or commercial purposes, in part or in whole, is not permitted unless authorised by Volkswagen AG. Copyright by Volkswagen AG.

– Attach the Engine Support Bridge - 10-222A- as follows:

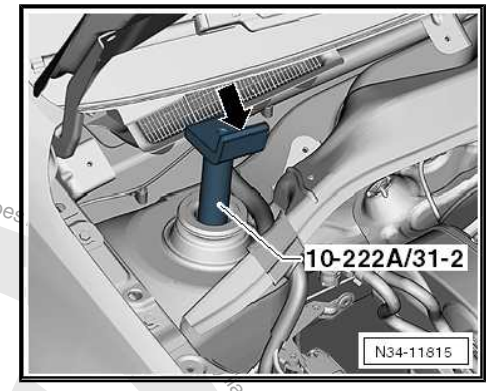

The following are needed:

- Engine Support Bridge - Engine Support 31 - Adapter 1 - 10-222A/31-1-
- Engine Support Bridge - Engine Support 31 - Adapter 2 - 10-222A/31-2-
- Engine Support - Basic Set - Square Pipe - T40091/1-
- Engine Support - Basic Set Movable Joint - T40091/3-
- Engine Support - Supplement Kit Spindle - T40093/3-
- Engine Support Brackets - T40093/3-6-
- Engine/Gearbox Support Shackle (2 pc.) - 10-222A/12-

– Remove the caps over the suspension strut threaded connections.

– Place the Engine Support Bridge - Engine Support 31 Adapter 1 - 10-222A/31-1- and Engine Support Bridge - Engine Support 31 Adapter 2 - 10-222A/31-2- on the suspension strut mounts.

The tabs -arrow- face the engine compartment.

– Slide the Engine Support - Supplement Kit Adapter 3 - T40091/3- onto the Engine Support Bridge - 10-222A- .

– Fasten the Engine Support Bridge - 10-222A- on the Engine Support Bridge - Engine Support 31 Adapter 1 - 10-222A/31-1- and on the Engine Support Bridge - Engine Support 31 Adapter 2 - 10-222A/31-2- .

-A- = Engine Support Brackets - T40093/3-6- (⇒ next illustration)

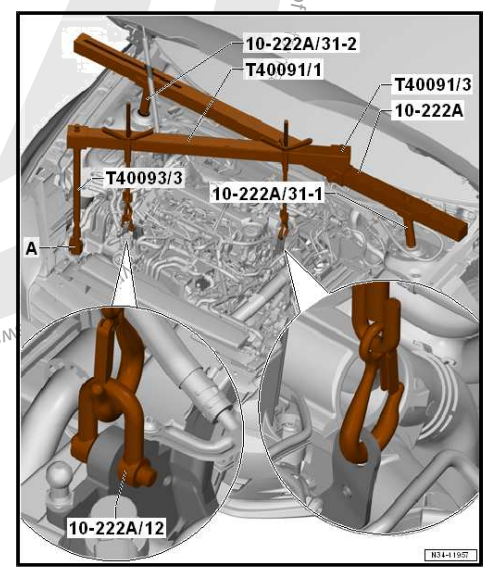

Protected by copyright. Copying for private or commercial purposes, in part or in whole, is not permitted unless authorised by Volkswagen AG. Volkswagen AG does not guarantee or accept any liability with respect to the correctness of information in this repair manual.

– Remove fuel filter and set off to the side. Do not open the line system. Refer to ⇒ Rep. Gr. 20 ; Overview - Fuel Filter .

– If present, remove wires from the front area of the tab on the longitudinal member -arrow-. Do not disconnect line system.

– Position the Engine Support Brackets - T40093/3-6- on the right longitudinal member.

– If necessary, carefully unclip the A/C system pipe in the front area. Do not disconnect the line system. Refer to ⇒ Heating, Ventilation and Air Conditioning; Rep. Gr. 87 ; System Overview - Refrigerant Circuit .

• The Engine Support Brackets - T40093/3-6- locks with the pins -A- behind the tab on the longitudinal member -arrow-.

– Install the Engine Support - Supplement Kit Spindle - T40093/3- .

– Connect the Engine Support - Supplement Kit Spindle - T40093/3- over the Engine Support - Basic Set Square Pipe - T40091/1- with the Engine Support Bridge - 10-222A- and tension it (⇒ previous illustration).

• The Engine Support - Basic Set Square Pipe - T40091/1- must be flush with the Engine Support - Basic Set Movable Joint - T40091/3- and the Engine Support - Supplement Kit Spindle - T40093/3- (⇒ previous illustration).

– Then engage the Spindles in the lifting eyes, as shown.

– Pretension the engine/transmission assembly and Engine Support Bridge - 10-222A- via the Spindles .

– Loosen left and right front wheel bolts.

– Lift the vehicle, all four mounts from lifting platform at the same height.

– Remove the front wheels.

– Remove the noise insulation. Refer to ⇒ Body Exterior; Rep. Gr. 66 ; Noise Insulation; Overview - Noise Insulation .

– Remove the lower section of the left front wheel housing liner. Refer to ⇒ Body Exterior; Rep. Gr. 66 ; Wheel Housing Liner; Overview - Front Wheel Housing Liner .

– Remove the wires and bracket from the front of the transmission cover -arrows- (two M6 nuts).

– Route the wires near the transmission cover upward and tie them up.

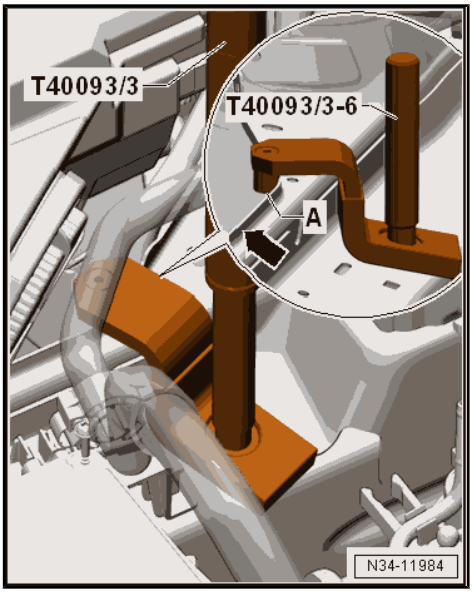

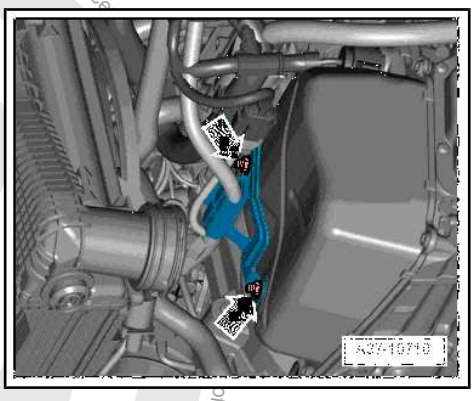

Protected by copyright. Copying for private or commercial purposes, in part or in whole, is not permitted unless authorised by Volkswagen AG. Volkswagen AG does not guarantee or accept any liability with respect to the correctness of information in this document. Copyright by Volkswagen AG.

– If equipped, disconnect the connector -1- from the Oil Level Thermal Sensor - G266- .

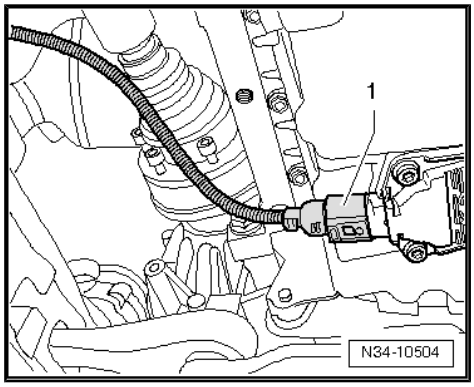

Caution

Risk of damaging the decoupling element.

- *Do not bend the decoupling element more than 10°.*
- *Do not load the decoupling element.*
- *Do not damage the wire mesh on the decoupling element.*

– Disconnect the exhaust system at the clamping sleeve and remove the exhaust system bracket from the subframe -arrows-. Refer to ⇒ Rep. Gr. 26 ; Exhaust Pipe/Muffler; Overview - Muffler .

– Tie up the front exhaust pipe.

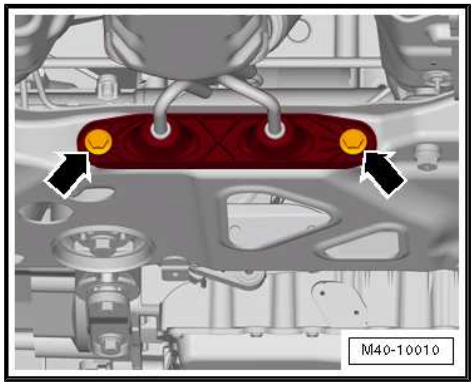

– Remove the bolts -11- and then remove the pendulum support from the transmission.

– Secure the subframe before removing. Refer to ⇒ Suspension, Wheels, Steering; Rep. Gr. 40 ; Subframe; Subframe, Securing .

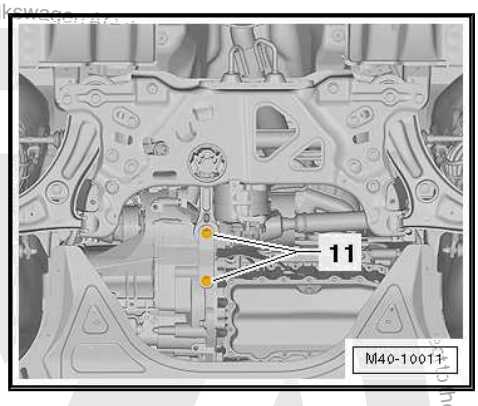

Note

If the subframe is not secured, a vehicle alignment must be performed later.

– Remove the subframe without the steering gear. Refer to ⇒ Suspension, Wheels, Steering; Rep. Gr. 40 ; Subframe; Subframe without Steering Gear, Removing and Installing .

– If equipped, remove the heat shield above the right driveshaft -arrows-.

– Remove both driveshafts from the transmission. Refer to ⇒ Suspension, Wheels, Steering; Rep. Gr. 40 ; Driveshaft, Removing and Installing .

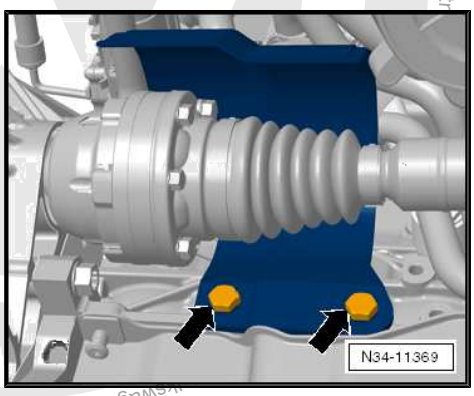

Protected by copyright. Copying for private or commercial purposes, in part or in whole is not permitted unless authorised by Volkswagen AG. Volkswagen AG

– Secure the driveshafts to the suspension strut using a Tensioning Strap - T10038- .

Do not damage the surface of the shafts.

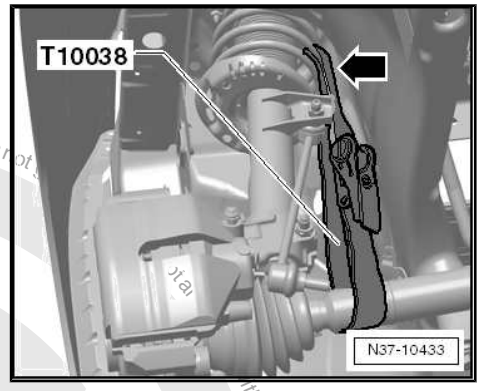

– Remove the bolts -1 and 2- from the transmission bracket -A-.

Always replace the bolts.

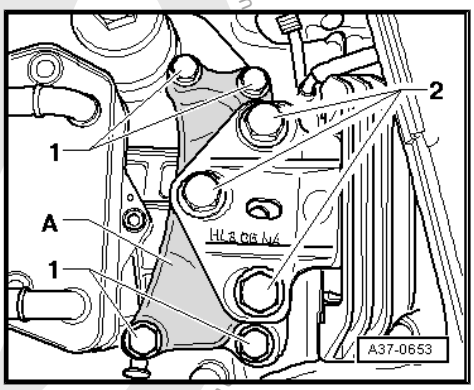

– Lower the engine/transmission approximately to the dimension -a- using the spindles on the Engine Support Bridge - 10-222A- .

Dimension -a- = approximately 50 mm

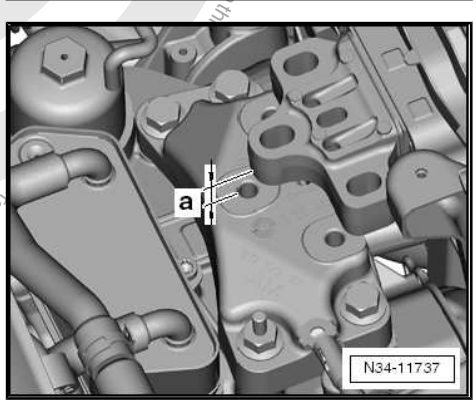

– Remove the transmission bracket in direction of -arrow-.

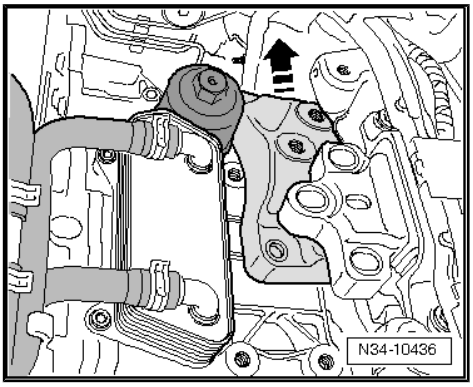

Protected by copyright. Copying for private or commercial purposes, in part or in whole, is not permitted unless authorised by Volkswagen AG. Volkswagen AG does not

To remove the transmission “0D9”, the Transmission Support - 3282- is equipped with the Transmission Support - Mounting Plate - 3282/42A- and positioned on the Engine and Gearbox Jack - VAS6931- .

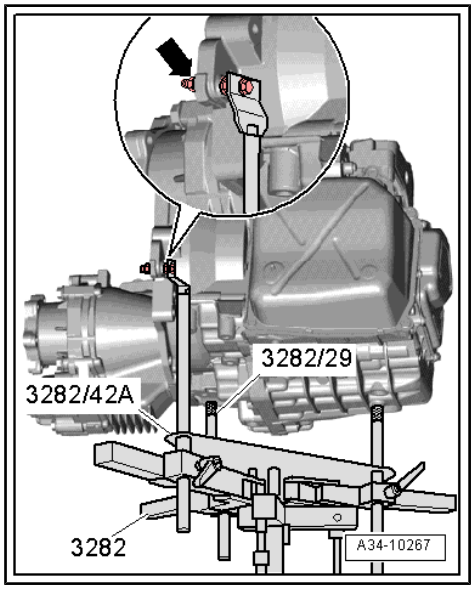

– Align the arms of the Transmission Support so that they match up with the holes in the Transmission Support - Mounting Plate 42A - 3282/42A- .

– Install the mounting element as illustrated on the Transmission Support - Mounting Plate 42A - 3282/42 A- .

– Place the Engine and Gearbox Jack - VAS6931- under the vehicle.

• The arrow symbol on the Transmission Support - Mounting Plate 42A - 3282/42A- points in the direction of travel.

– Align the Transmission Support - 3282- so that it is parallel to the transmission.

– Install the Transmission Support - Pins 29 - 3282/29- in the transmission.

– Secure both the other support elements to the transmission as shown.

Note

♦ *Contrary to the illustration of the Adjusting Plate , the front support element is shown attached to the transmission with an M10 x 50 mm bolt -arrow-. Install a M12 bolt between the mount and the transmission housing.*

♦ *DSG transmission 02E “AWD” is shown in the illustration. The support elements on the “0D9” “FWD” transmission are identical.*

– Support the transmission by lifting it from underneath using the Engine and Gearbox Jack - VAS6931- .

The transmission is disconnected from the engine in this position.

– Remove the remaining engine/transmission connecting bolts.

– Remove the transmission from the engine (alignment sleeves), and »also pay attention to the selector lever cable«. Tilt the transmission to the left by adjusting the spindle for the Transmission Support - 3282- .

– Slightly turn and lower the transmission. Make sure that the right flange shaft -1- is guided past when lowering the intermediate plate -arrow-.

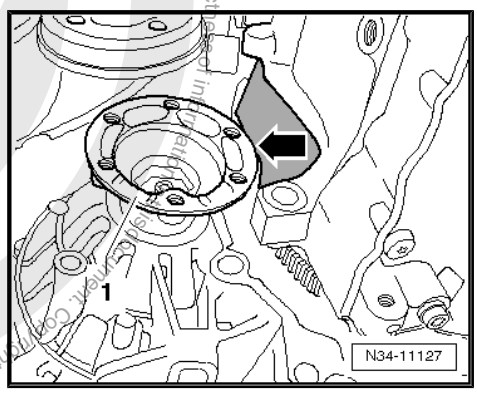

Note

Pay attention to all of the lines when lowering the transmission.

Transmission, transporting. Refer to
⇒ “5 Transmission, Transporting”, page 100 .

Secure the transmission on the assembly stand. Refer to
⇒ “7 Securing on Engine and Transmission Holder”, page 104

Install the transmission. Refer to
⇒ “3.2 Transmission, Installing”, page 91 .

Protected by Volkswagen AG. Volkswagen AG does not guarantee or accept any liability with respect to the correctness of information. Copyright by Volkswagen AG.

3.2 Transmission, Installing

Caution

This procedure contains mandatory replaceable parts. Refer to component overview prior to starting procedure.

Mandatory Replacement Parts

- Bolts - Engine to Transmission Connecting
- Bolts - Subframe Mount
- Lockwashers - Selector Mechanism Cable

Install in reverse order of removal. Note the following:

Note

- *Refer to "Transmission, Removing" ⇒ "3.1 Transmission, Removing", page 72 for a list of the special tools needed.*
- *After installing a »new« transmission, reprogram the immobilizer.*

Note

- *Always replace the needle bearing -arrow- after separating the engine and transmission.*
- *If the needle bearing in the crankshaft is damaged, the gears will no longer shift correctly.*

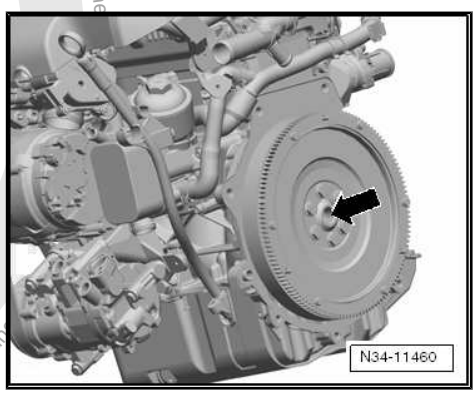

– Replace the needle bearing in the crankshaft. Refer to ⇒ Rep. Gr. 13 ; Crankshaft; Needle Bearing in Crankshaft, Replacing .

– Transmission pins (not splines) must also be lightly lubricated.

– Make sure both alignment sleeves between the engine and the transmission are correctly seated.

– Make sure the intermediate plate fits correctly.

Protected by copyright. Copyright by Volkswagen AG. Volkswagen AG does not guarantee or accept any liability with respect to the ... unless authorised by Volkswagen AG. Copyright by Volkswagen AG.

Protected by copyright. Copying for private or commercial purposes, in part or in whole, is not permitted unless authorised by Volkswagen AG. Volkswagen AG does not guarantee or accept any liability with respect to the correctness of information in this document. Copyright by Volkswagen AG.

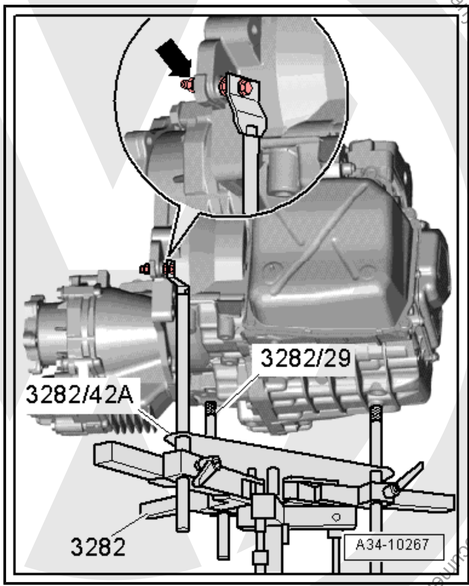

– Place the transmission with the Transmission Support - 3282- on the Engine and Gearbox Jack - VAS 6931- .

– Place the Engine and Gearbox Jack - VAS6931- under the vehicle. The arrow symbol on the Transmission Support - Mounting Plate 42A - 3282/42A- points in the direction of travel of the vehicle.

– Tilt the transmission to the left by adjusting the spindles on the Transmission Support - 3282- . The lift the transmission.

Pay attention to the selector lever cable when lifting the transmission. Guide the cable into the cable bracket as early as possible.

The cable is not lubricated.

– Align the transmission to the engine and position on the cylinder block.

Guide the engine and transmission together by hand until the entire surface of both flanges come into contact with one another.

– Adjust the transmission mount until the engine and transmission “are aligned”.

– Turn the crankshaft slightly if necessary.

Be careful not to get any lines caught when installing the transmission.

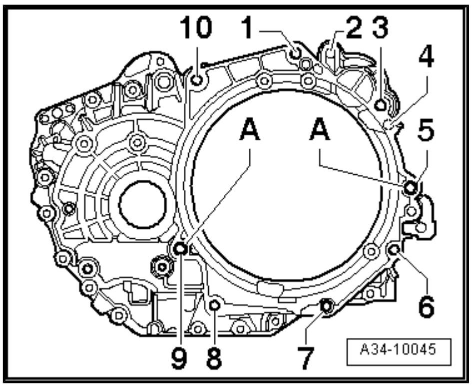

– Tighten the bolts -5 through 9- to the tightening specification.

– After transmission was bolted to engine at bottom, remove the Transmission Support - 3282- from transmission.

– Tighten the upper engine/transmission bolts -1, 3 and 10- to the tightening specification using the Insert Tool - 18mm - T10179- .

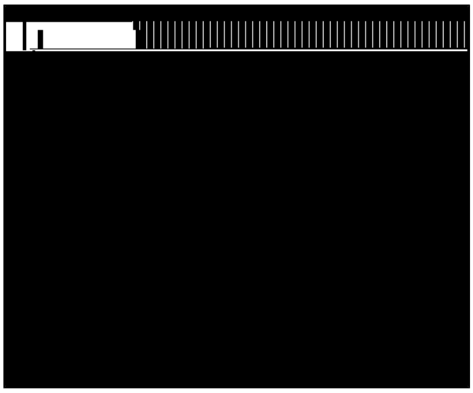

The bolt -3- is located in the starter hole. Use the Socket - Xzn 14 - T10061- for this bolt.

– Align the engine/transmission assembly free of tension. Refer to ⇒ Engine Mechanical, Fuel Injection and Ignition; Rep. Gr. 10 ; Subframe Mount; Subframe Mount, Adjusting .

Install the left subframe mount as follows:

– Replace all the bolts -1 and 2-.
– Install the new bolt first hand-tight.
– Install the bolts -1- in the transmission bracket -A-.
– The align the engine/transmission in its installation position. Lift until the transmission bracket is touching the transmission mount completely.

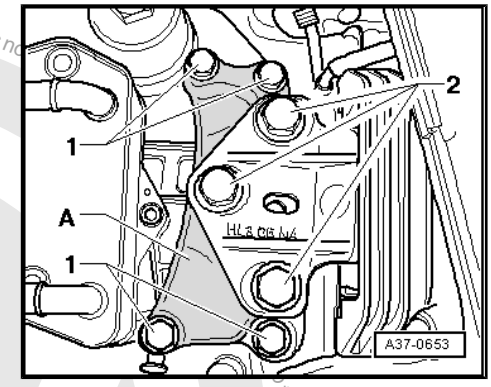

Caution

There is a risk of damaging the threads in transmission bracket by inserting the bolts at an angle.

- *Before installing the bolts -2-, the transmission bracket and transmission mount support arm must be absolutely parallel to each other. If necessary, lift the back of the transmission using the Engine and Gearbox Jack .*

– Pry the transmission bracket -A- into the seat using a screwdriver while tightening the bolts -2-.

WARNING

Remove the Engine Support Bridge - 10-222A- only when the bolts for the left and right subframe mount have been tightened to the specification.

– Remove the Engine Support Bridge - 10-222A- .
– Install the starter. Refer to ⇒ Electrical Equipment; Rep. Gr. 27 ; Starter; Starter, Removing and Installing .

Connect the connector -A- on the DSG Transmission Mechatronic - J743- as follows:

– The arrow -D- on the DSG Transmission Mechatronic - J743- -B- must line up with the connector -A- as well as with the tab -C-.
– Connect the connector -A- carefully all the way and then turn the lock “clockwise” in direction of -arrow-.
– Attach the drive axles to the transmission. Refer to ⇒ Suspension, Wheels, Steering; Rep. Gr. 40 ; Drive Axle; Drive Axle, Removing and Installing .

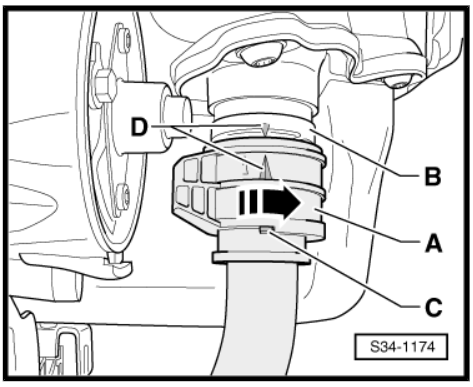

– Install the heat shield over the right drive axle, if equipped. Refer to ⇒ Suspension, Wheels, Steering; Rep. Gr. 40 ; Drive Axle; Drive Axle, Removing and Installing .
– Install the subframe. Refer to ⇒ Suspension, Wheels, Steering; Rep. Gr. 40 ; Subframe; Subframe with Steering Gear, Removing and Installing .

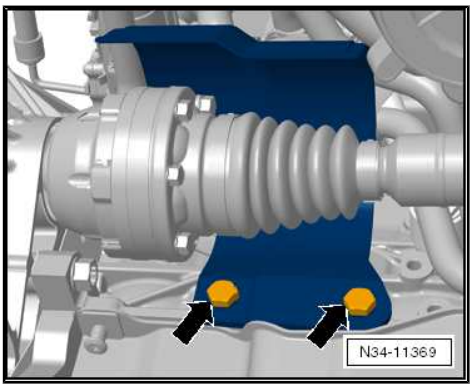

Protected by copyright. Copying for private or commercial purposes, in whole or in part, is not permitted unless authorised by Volkswagen AG. Volkswagen AG does not guarantee or accept any liability with respect to the correctness of information in this document. Copyright by Volkswagen AG.

– Attach the pendulum support to the transmission by tightening the bolts -11-. Refer to ⇒ Rep. Gr. 10 ; Subframe Mount; Overview - Subframe Mount .

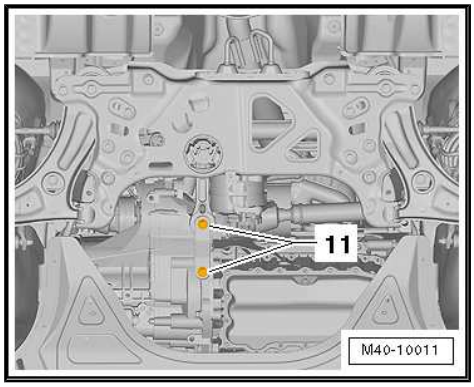

Protected by copyright. Copying for private or commercial purposes, in part or in whole, is not permitted unless authorised by Volkswagen AG. Volkswagen AG does not guarantee or accept any liability with respect to the correctness of information in this document. Copyright by Volkswagen AG.

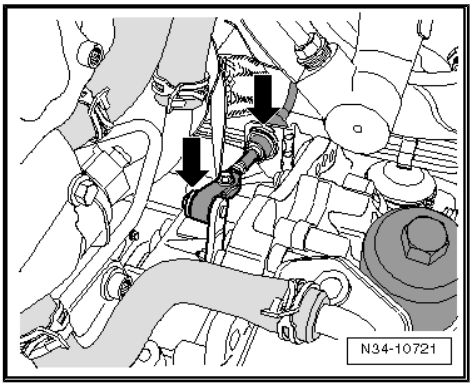

- Selector lever cable lock washers -arrows- must be replaced.
- Adjust the selector lever cable. Refer to ⇒ “2.8 Selector Lever Cable, Checking and Adjusting”, page 68 .
- Install the charge air pipe. Refer to ⇒ Engine Mechanical, Fuel Injection and Ignition; Rep. Gr. 21 ; Charge Air System; Overview - Charge Air System .
- Install the coolant hoses on the transmission fluid cooler.
- Attach the cable bracket to the transmission cover.
- Install the battery tray and the battery. Refer to ⇒ Electrical Equipment; Rep. Gr. 27 ; Battery; Battery, Disconnecting and Connecting .
- Install the air filter housing:

♦ Gasoline engine. Refer to ⇒ Rep. Gr. 24 ; Air Filter; Air Filter Housing, Removing and Installing .

♦ Diesel engine. Refer to ⇒ Rep. Gr. 23 ; Air Filter; Air Filter Housing, Removing and Installing .

- Install the engine cover. Refer to ⇒ Rep. Gr. 10 ; Engine Cover; Engine Cover, Removing and Installing .
- Check the coolant level and fill if necessary. Refer to ⇒ Engine Mechanical, Fuel Injection and Ignition; Rep. Gr. 19 ; Cooling System/Coolant; Coolant, Draining and Filling .
- Check the fluid level and fill if necessary. Refer to ⇒ “9.1 Transmission Fluid Level, Checking”, page 113 .
- Install the lower section of the left front wheel housing liner. Refer to ⇒ Body Exterior; Rep. Gr. 66 ; Wheel Housing Liner; Overview - Front Wheel Housing Liner .
- Install the noise insulation. Refer to ⇒ Body Exterior; Rep. Gr. 66 ; Noise Insulation; Overview - Noise Insulation .
- Attach the front wheels. Refer to ⇒ Suspension, Wheels, Steering; Rep. Gr. 44 ; Wheels, Tires; Wheel Bolts, Tightening Specifications .

Tightening Specifications

♦ Transmission to engine. Refer to ⇒ “3.3 Transmission Tightening Specifications”, page 96 .

♦ Transmission bracket to transmission. Refer to ⇒ “4 Subframe Mount”, page 97 .

♦ Cable bracket on the transmission cover. Refer to ⇒ “3.3 Transmission Tightening Specifications”, page 96 .

♦ Subframe mount to transmission bracket. Refer to ⇒ “4.1 Overview - Subframe Mount”, page 97 .

Protected by copyright. Copying for private or commercial purposes, in part or in whole, is not permitted unless authorised by Volkswagen AG. Volkswagen AG does not guarantee or accept any liability with respect to the correctness of information in this document. Copyright by Volkswagen AG.

3.3 Transmission Tightening Specifications

Transmission to Engine

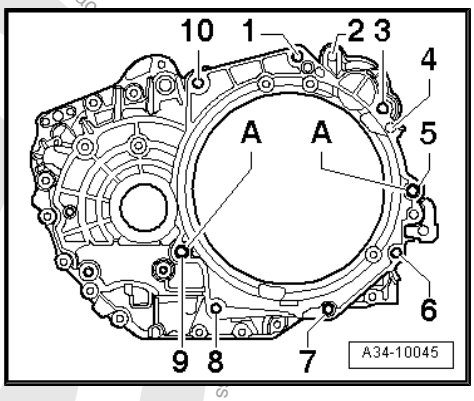

Item	Bolt	Nm
1	M12 x 55	80 • With Insert Tool - 18mm T10179: “65 Nm”
2	M10 x 45 ◆ Starter to transmission	40
3	M12 x 55 ◆ Is accessible only through the opening in the removed starter	80
4	M10 x 45 or M10 x 40 ◆ Starter to transmission	40
5	M12 x 65 or M12 x 70	80
6	M10 x 50	40
7	M10 x 50	40
8	M10 x 50	40
9	M12 x 65 or M12 x 70 or M12 x 80	80
10	M12 x 55	80 • With Insert Tool - 18mm T10179: “65 Nm”
A	Alignment sleeve for centering	

Component	Tightening Specification
Cable bracket on the transmission cover	10 Nm
Transmission Coolant Valve - N488- bolts	9 Nm

Protected by copyright. Copying for private or commercial purposes, in part or in whole, is not permitted unless authorised by Volkswagen AG. Volkswagen AG does not guarantee or accept any liability with respect to the correctness and completeness of information in this document. Copyright by Volkswagen AG.

4 Subframe Mount

⇒ “4.1 Overview - Subframe Mount”, page 97 .

4.1 Overview - Subframe Mount

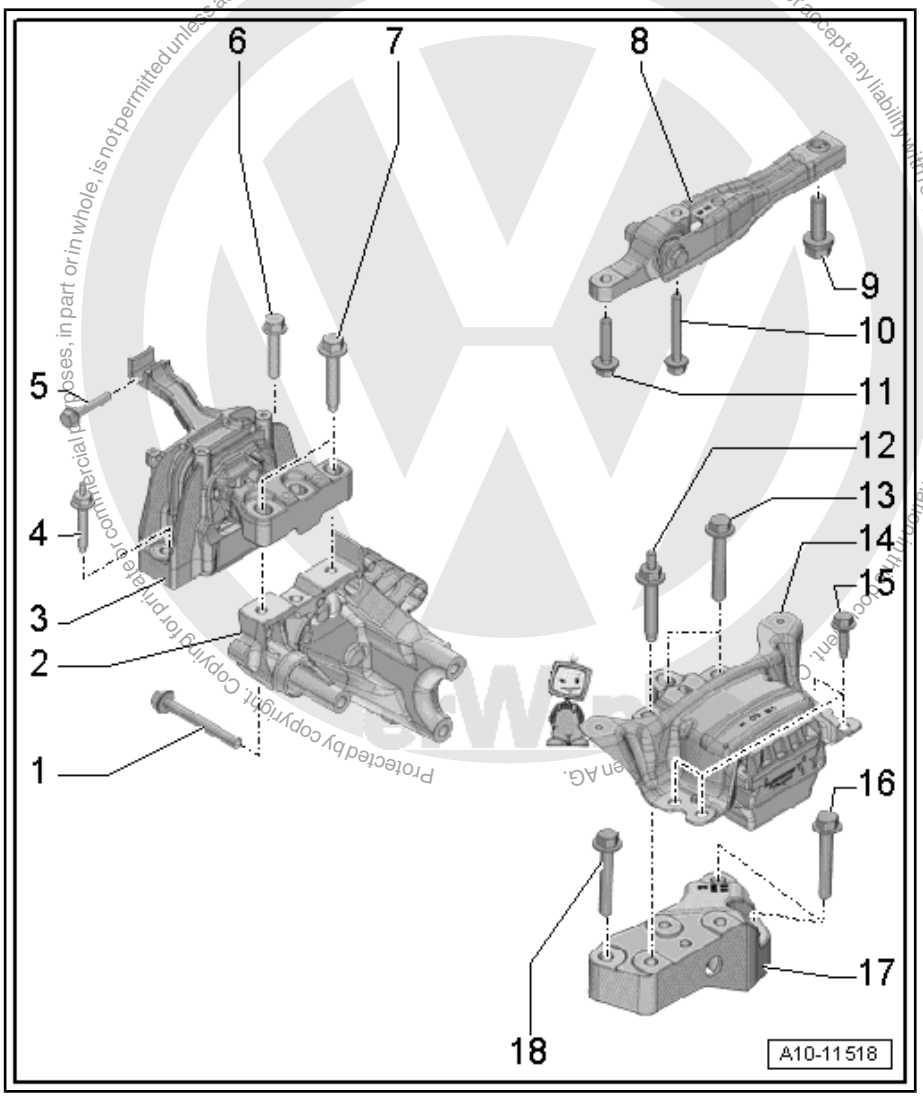

1 - Bolt

- ❑ For the tightening specification. Refer to ⇒ Engine Mechanical, Fuel Injection and Ignition; Rep. Gr. 10 ; Subframe Mount; Overview - Subframe Mount .

2 - Engine Support

- ❑ Refer to ⇒ Engine Mechanical, Fuel Injection and Ignition; Rep. Gr. 10 ; Subframe Mount; Overview - Subframe Mount .

3 - Engine Mount

- ❑ Refer to ⇒ Engine Mechanical, Fuel Injection and Ignition; Rep. Gr. 10 ; Subframe Mount; Overview - Subframe Mount .

4 - Bolt

- ❑ For the tightening specification. Refer to ⇒ Engine Mechanical, Fuel Injection and Ignition; Rep. Gr. 10 ; Subframe Mount; Overview - Subframe Mount .

5 - Bolt

- ❑ For the tightening specification. Refer to ⇒ Engine Mechanical, Fuel Injection and Ignition; Rep. Gr. 10 ; Subframe Mount; Overview - Subframe Mount .

6 - Bolt

- ❑ For the tightening specification. Refer to ⇒ Engine Mechanical, Fuel Injection and Ignition; Rep. Gr. 10 ; Subframe Mount; Overview - Subframe Mount .

7 - Bolt

- ❑ For the tightening specification. Refer to ⇒ Engine Mechanical, Fuel Injection and Ignition; Rep. Gr. 10 ; Subframe Mount; Overview - Subframe Mount .

8 - Pendulum Support

9 - Bolt

- ❑ For pendulum support to subframe
- ❑ For the tightening specification. Refer to ⇒ Engine Mechanical, Fuel Injection and Ignition; Rep. Gr. 10 ; Subframe Mount; Overview - Subframe Mount .

10 - Bolt

- ❑ For pendulum support to transmission

Protected by copyright. Copying for private or commercial purposes, in part or in whole, is not permitted unless authorised by Volkswagen AG. Volkswagen AG does not guarantee or accept any liability with respect to the correctness of information in this document. Copyright by Volkswagen AG.

- ❑ Transmission with threaded insert. Refer to ⇒ Fig. ""Transmission with Threaded Insert (for Example Heli Coil) for Attaching the Pendulum Support"" , page 99
- ❑ For the tightening specification. Refer to ⇒ Engine Mechanical, Fuel Injection and Ignition; Rep. Gr. 10 ; Subframe Mount; Overview - Subframe Mount .

11 - Bolt

- ❑ For pendulum support to transmission
- ❑ Transmission with threaded insert. Refer to ⇒ Fig. ""Transmission with Threaded Insert (for Example Heli Coil) for Attaching the Pendulum Support"" , page 99
- ❑ For the tightening specification. Refer to ⇒ Engine Mechanical, Fuel Injection and Ignition; Rep. Gr. 10 ; Subframe Mount; Overview - Subframe Mount .

12 - Bolt

- ❑ 60 Nm + 90°
- ❑ Replace after removing
- ❑ For transmission mount to transmission bracket
- ❑ Tightening sequence. Refer to ⇒ page 99 .

13 - Bolt

- ❑ 60 Nm + 90°
- ❑ Replace after removing
- ❑ Quantity: 2
- ❑ For transmission mount to transmission bracket
- ❑ Tightening sequence. Refer to ⇒ page 99 .

14 - Transmission Mount

- ❑ Check the adjustment. Refer to ⇒ Engine Mechanical, Fuel Injection and Ignition; Rep. Gr. 10 ; Subframe Mount; Subframe Mount, Checking Adjustment
- ❑ Adjusting. Refer to ⇒ Engine Mechanical, Fuel Injection and Ignition; Rep. Gr. 10 ; Subframe Mount; Subframe Mount, Adjusting

15 - Bolt

- ❑ Transmission mount to chassis
- ❑ For the tightening specification. Refer to ⇒ Engine Mechanical, Fuel Injection and Ignition; Rep. Gr. 10 ; Subframe Mount; Subframe Mount, Adjusting .

16 - Bolt

- ❑ 40 Nm + 90°
- ❑ Replace after removing
- ❑ For transmission bracket to transmission
- ❑ Tightening sequence. Refer to ⇒ page 99 .

17 - Transmission Bracket

- ❑ Illustration does not correspond to version in vehicle

18 - Bolt

- ❑ 40 Nm 90°
- ❑ Replace after removing
- ❑ For transmission bracket to transmission
- ❑ Tightening sequence. Refer to ⇒ page 99 .

Protected by copyright. Copying for private or commercial purposes in part or in whole, is not permitted unless authorised by Volkswagen AG. Volkswagen AG does not guarantee or accept any liability with respect to the correctness of information in this document. Copyright by Volkswagen AG.

Transmission with Threaded Insert (for Example “Heli Coil”) for Attaching the Pendulum Support

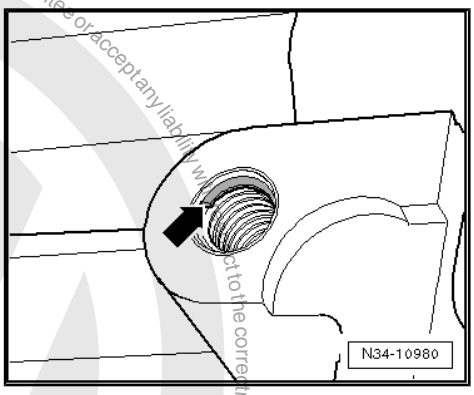

Note

- *There are threaded inserts (for example “Heli Coil”) in the pendulum support fastening holes.*
- *Identified by: collar on the first thread -arrow-.*
- *Make sure to use the appropriate bolts and observe the tightening specification. Refer to ⇒ Engine Mechanical, Fuel Injection and Ignition; Rep. Gr. 10 ; Subframe Mount; Overview - Subframe Mount ..*

Install the Left Subframe Mount as Follows:

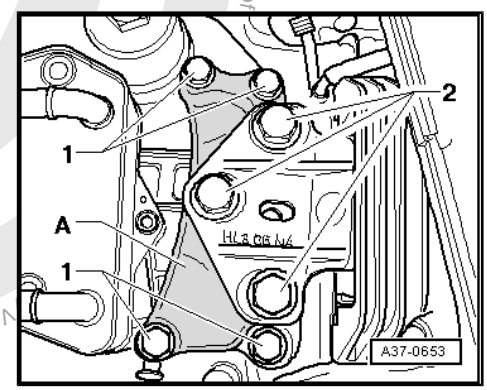

– Replace all the bolts -1 and 2-.
– Install the new bolt first hand-tight.
– Install the bolts -1- in the transmission bracket -A-.
– Pry the transmission bracket -A- into the seat using a screwdriver while tightening the bolts -2-.

Protected by copyright. Copying for private or commercial purposes, in whole or in part, is not permitted unless authorised by Volkswagen AG. Volkswagen AG does not guarantee or accept any liability with respect to the correctness of information in this repair manual.

5 Transmission, Transporting

Special tools and workshop equipment required

- Engine Sling - 2024A-
- Transmission Support Jig - 3336-
- Shop Crane - VAS6100-

Always secure heaving parts when transporting them.

Remember there is oil in the transmission. Do not turn the transmission with the vents facing downward when transporting or when it is on the assembly stand. The oil will leak out.

Note

Remove the bleed cap if necessary and use oil-tight plugs.

Transmission, Transporting

– Install the Engine Sling - 2024A- on the transmission and secure with the clamp.

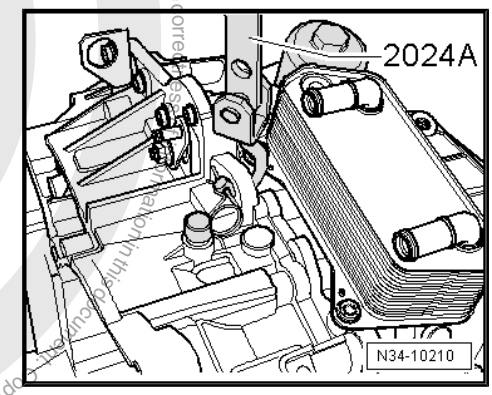

The transmission can also be lifted using the Transmission Support Jig - 3336- .

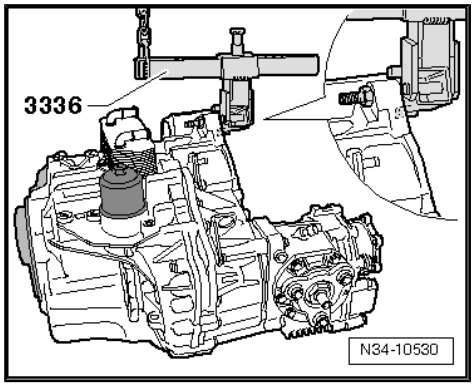

Protected by copyright. Copying for private or commercial purposes, in part or in whole, is not permitted unless authorised by Volkswagen AG. Volkswagen AG does not guarantee or accept any liability with respect to the correctness of information in this document. Copyright by Volkswagen AG.

6 Transmission, Disassembling and Assembling

⇒ “6.1 Overview - Transmission”, page 101 .

6.1 Overview - Transmission

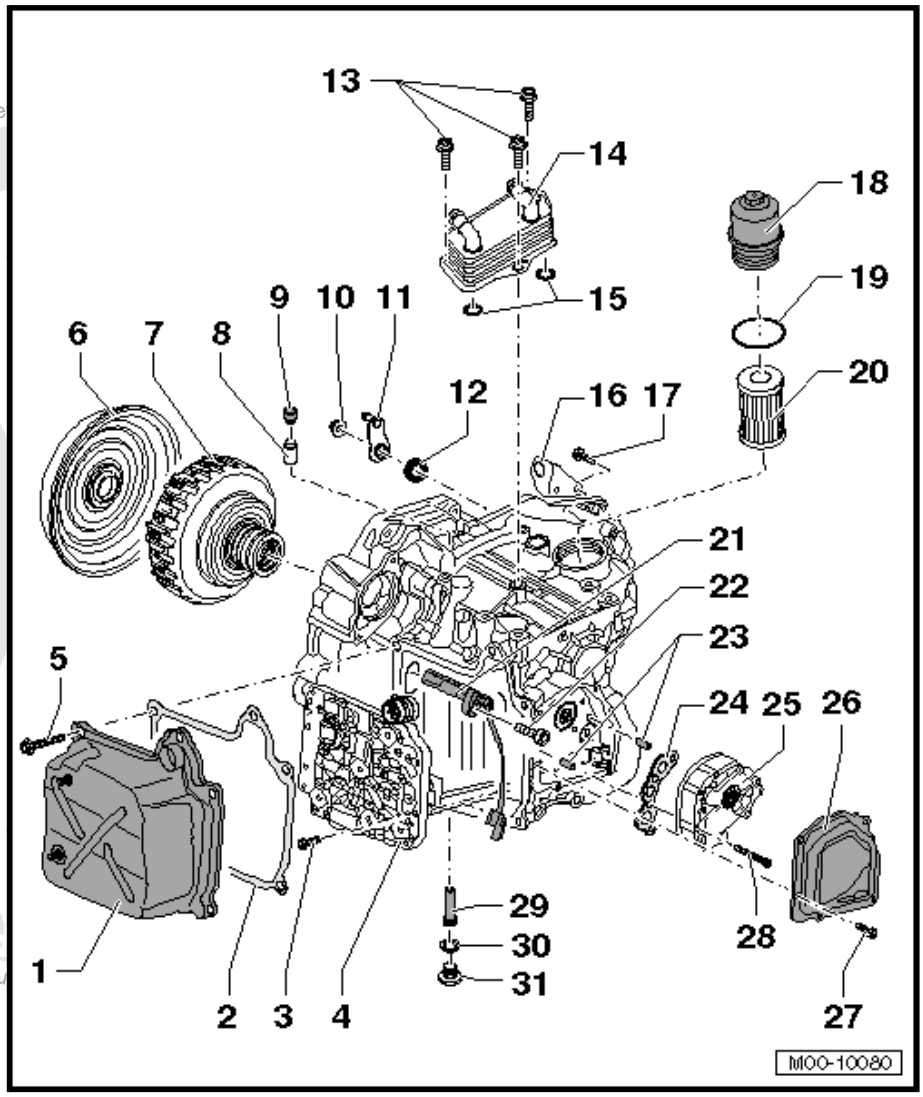

1 - Transmission Cover

- ❑ Removing and installing. Refer to ⇒ “1.2 Mechatronic, Removing and Installing”, page 30 .

2 - Seal

- ❑ Replace after removing

3 - Bolt

- ❑ Replace after removing
- ❑ For attaching the DSG Transmission Mechatronic - J743- to the transmission housing
- ❑ Tightening specification and sequence. Refer to ⇒ Fig. ““Tightening Specification and Sequence for DSG Transmission Mechatronic - J743- ”“ , page 30
- ❑ Quantity: 10

4 - DSG Transmission Mechatronic - J743-

- ❑ Allocate using the transmission code letters. Refer to the Parts Catalog
- ❑ Removing and Installing with transmission installed. Refer to ⇒ “1.2 Mechatronic, Removing and Installing”, page 30 .
- ❑ Removing and installing with transmission removed. Refer to ⇒ “1.2.2 DSG Transmission Mechatronic J743 , Removing and Installing, Transmission Removed”, page 39

5 - Bolt

- ❑ Replace after removing
- ❑ Tightening specification and sequence. Refer to ⇒ Fig. ““Tightening Specification and Sequence for DSG Transmission Mechatronic -J743- ”“ , page 30
- ❑ For attaching the transmission cover with seal to the transmission housing
- ❑ Quantity: 5

6 - Clutch End Cover

- ❑ For the dual clutch -7-.
- ❑ Removing and installing. Refer to ⇒ “1.2 Clutch End Cover, Removing and Installing”, page 15 .

Protected by copyright. Copying for private or commercial purposes, in part or in whole, is not permitted unless authorised by Volkswagen AG.

7 - Dual Clutch

- ❑ Removing. Refer to ⇒ “1.3 DSG® Clutch, Removing”, page 19 .
- ❑ Installing. Refer to ⇒ “1.4 DSG® Clutch, Installing”, page 21 .

8 - Bleed Pipe

- ❑ Pressed into the transmission housing
- ❑ Replace after removing

9 - Bleed Cap

- ❑ Placed on bleed pipe -8-.

10 - Nut

- ❑ 20 Nm
- ❑ Replace after removing

11 - Selector Lever

- ❑ Insert so that master spline aligns with shift rod

12 - Seal

- ❑ For the selector shaft
- ❑ Replacing. Refer to ⇒ “2.9 Selector Shaft Seal, Replacing”, page 69 .

13 - Bolt

- ❑ 20 Nm + 90°
- ❑ Replace after removing

14 - Transmission Oil Cooler

- ❑ Removing and installing. Refer to ⇒ “8.1 Transmission Fluid Cooler, Removing and Installing”, page 105 .

15 - O-Rings

- ❑ Replace after removing

16 - Cable Mounting Bracket

- ❑ For selector lever cable

17 - Bolt

- ❑ 20 Nm + 90°
- ❑ Replace after removing
- ❑ Quantity: 2

18 - Filter Housing

- ❑ 20 Nm

19 - O-Ring

- ❑ Replace after removing

20 - Transmission Fluid Filter

- ❑ Information on changing filter ⇒ “8.3 Transmission Fluid Filter, Removing and Installing”, page 110
- ❑ Replacing. Refer to ⇒ “9 Transmission Fluid”, page 113 .

21 - Ignore, discontinued

22 - Ignore, discontinued

23 - Alignment Pin

- ❑ Quantity: 2
- ❑ For centering the transmission fluid pump to the transmission housing

24 - Seal

- ❑ Replace after removing

Protected by copyright. Copying for private or commercial purposes, in part or in whole, is not permitted unless authorised by Volkswagen AG. Volkswagen AG does not guarantee or accept any liability with respect to the correctness of information in this document. Copyright by Volkswagen AG.

25 - Transmission Oil Pump

- ❑ Removing and installing. Refer to
  ⇒ “8.2 Transmission Fluid Pump, Removing and Installing”, page 107 .

26 - Transmission Fluid Pump Cover

- ❑ Replace after removing
- ❑ With seal
- ❑ Removing and installing. Refer to
  ⇒ “8.2 Transmission Fluid Pump, Removing and Installing”, page 107 .

27 - Bolt

- ❑ Replace after removing
- ❑ Tightening specification and sequence. Refer to
  ⇒ Fig. ““Tightening Specification and Sequence of the Transmission Fluid Pump Cover -A-.”“ , page 30

28 - Bolt

- ❑ Replace after removing
- ❑ There are different bolts for the transmission fluid pump. Refer to ⇒ page 109
- ❑ Quantity: 4

29 - Overflow Pipe

- ❑ 3 Nm
- ❑ Plastic
- ❑ To drain the transmission fluid, remove the drain and check plugs. Refer to -item 31-
  ⇒ Item 31 (page 103) , and remove the overflow pipe.
- ❑ The length of the overflow pipe determines the fluid level inside the transmission
- ❑ Allocate according to the Parts Catalog.

30 - Seal

- ❑ Replace after removing

31 - Transmission Fluid Drain- and Check Plug

- ❑ 45 Nm
- ❑ There is an overflow pipe with a 8 mm inner hex behind this bolt -item 29- ⇒ Item 29 (page 103)
- ❑ Drain the transmission fluid via the drain- and check plug and removed overflow pipe

Volkswagen AG. Volkswagen AG does not guarantee or accept any liability with respect to the correctness of information in this document. Copyright by Volkswagen AG. Volkswagen AG, in part or in whole is not permitted unless authorized by Volkswagen AG. Volkswagen AG. Protected by copyright. Printed copies and electronic publications are for internal use only and may not be made available to third parties.

7 Securing on Engine and Transmission Holder

Special tools and workshop equipment required

- Holding Plate - VW309-
- or Holding Plate - VW309A-
- Transmission Support - VW353-
- Engine and Gearbox Bracket - VAS6095A-

Remember there is oil in the transmission. Do not turn the transmission with the vents facing downward when transporting or when it is on the assembly stand. The fluid will leak out.

Note

Remove the bleed cap if necessary and seal using suitable oil-tight plugs.

Secure the transmission on the Transmission Support - VW353- .

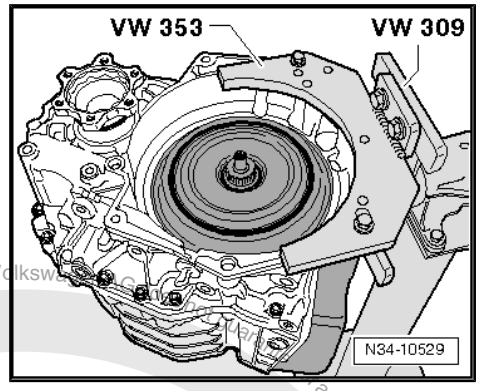

Protected by copyright. Copying for private or commercial purposes, in part or in whole, is not permitted unless authorised by Volkswagen AG. Volkswagen AG does not guarantee or accept any liability with respect to the correctness of information in this document. Copyright by Volkswagen AG.

8 Transmission Fluid Circuit

⇒ “8.1 Transmission Fluid Cooler, Removing and Installing”, page 105

⇒ “8.2 Transmission Fluid Pump, Removing and Installing”, page 107

⇒ “8.3 Transmission Fluid Filter, Removing and Installing”, page 110

8.1 Transmission Fluid Cooler, Removing and Installing

Special tools and workshop equipment required

- Hose Clamps - Up To 25mm - 3094-
- Torque Wrench 5-50Nm - VAG1331-
- Engine Bung Set - VAS6122-

Caution

This procedure contains mandatory replaceable parts. Refer to component overview prior to starting procedure.

Mandatory Replacement Parts

- Bolts - Transmission Fluid Cooler
- O-rings - Transmission Fluid Cooler

Removing

– Move the selector lever into “P”.

– Remove the air filter housing:

- Gasoline engine. Refer to ⇒ Engine Mechanical, Fuel Injection and Ignition; Rep. Gr. 24 ; Air Filter; Air Filter Housing, Removing and Installing .
- Diesel engine. Refer to ⇒ Rep. Gr. 23 ; Air Filter; Air Filter Housing, Removing and Installing .

– Remove the battery and the battery tray if necessary. Refer to ⇒ Electrical Equipment; Rep. Gr. 27 ; Battery; Battery, Disconnecting and Connecting .

– Place lint-free cloth on to transmission fluid cooler and transmission to absorb exiting coolant.

WARNING

Risk of burning due to hot steam and hot coolant.

- *When engine is warm, the cooling system is under pressure.*
- *Reduce pressure by cover coolant expansion tank cap with cloths and carefully opening.*

Protected by copyright. Copying for private or commercial purposes, in part or in whole, is not permitted unless authorised by Volkswagen AG. Volkswagen AG does not guarantee or accept any liability with respect to the correctness of information in this document. Copyright by Volkswagen AG.

– Disconnect the coolant hoses with Hose Clamps - Up To 25mm - 3094- and remove from the transmission fluid cooler.

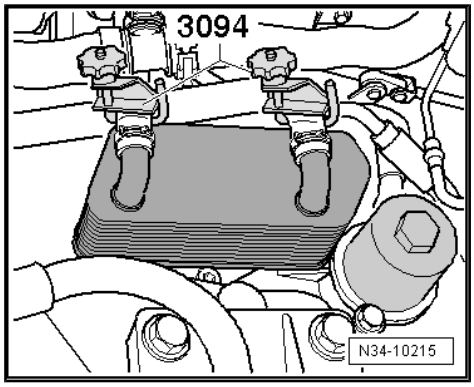

– Remove the bolts -A- and the transmission fluid cooler -B-.

> **Caution**
>
> *Coolant must not drip into transmission!*

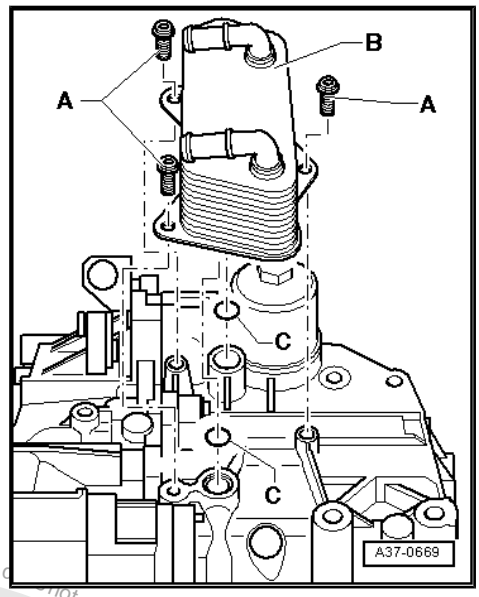

Installing

– Replace the O-rings -C- on the transmission fluid cooler -B-.

– Mount the transmission fluid cooler -B-, while doing this, pay attention to the O-rings -C-.

– Install and tighten the new bolts -arrows-.

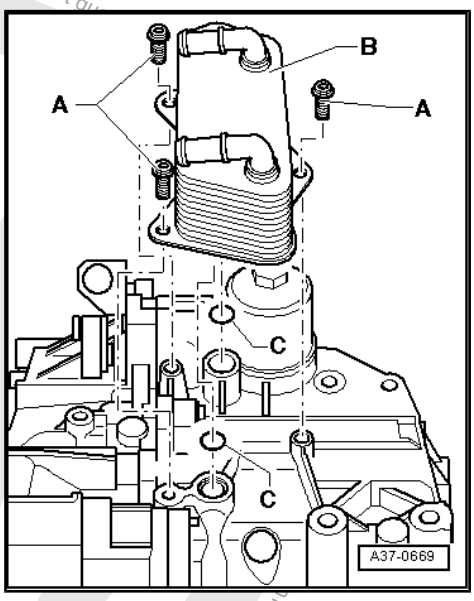

Protected by copyright. Copying for private or commercial purposes, in part or in whole, is not permitted unless authorised by Volkswagen AG. Volkswagen AG does not guarantee or accept any liability with respect to the correctness of information in this document. Copyright by Volkswagen AG.

Protected by copyright. Copying for private or commercial purposes, in part or in whole, is not permitted unless authorised by Volkswagen AG. Volkswagen AG does not guarantee or accept any liability with respect to the correctness of information in this document. Copyright by Volkswagen AG.

– Attach the coolant hoses to the transmission fluid cooler and remove the Hose Clamps - Up To 25mm - 3094- .

– Install the battery and the battery tray if they were removed earlier. Refer to ⇒ Electrical Equipment; Rep. Gr. 27 ; Battery; Battery, Disconnecting and Connecting .

– Install the air filter housing:

♦ Gasoline engine. Refer to ⇒ Engine Mechanical, Fuel Injection and Ignition; Rep. Gr. 24 ; Air Filter; Air Filter Housing, Removing and Installing .

♦ Diesel engine. Refer to ⇒ Rep. Gr. 23 ; Air Filter; Air Filter Housing, Removing and Installing .

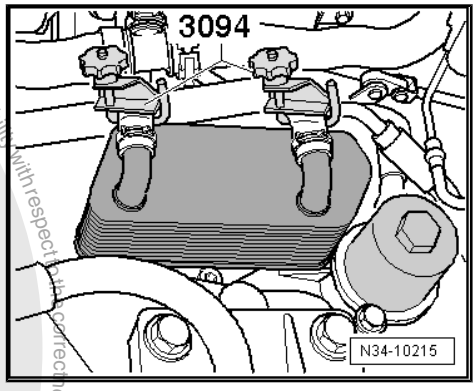

– Check the coolant level and add if necessary. Refer to ⇒ Engine Mechanical, Fuel Injection and Ignition; Rep. Gr. 19 ; Cooling System/Coolant; Coolant, Draining and Filling .

– After repairing, check the transmission fluid level and fill. Refer to ⇒ “9.1 Transmission Fluid Level, Checking”, page 113 .

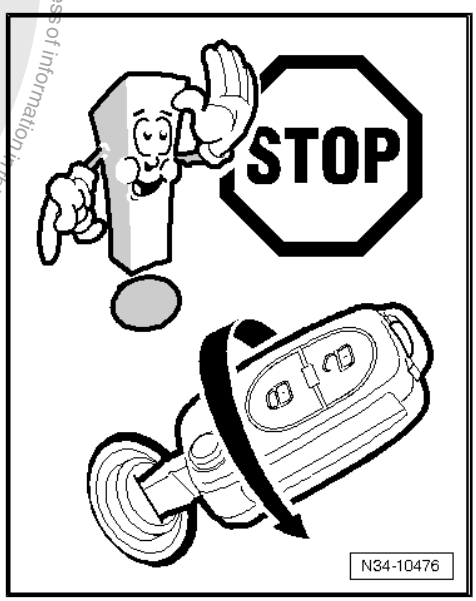

Caution

Do not start engine during coolant level test if the transmission fluid has not been filled yet.

Tightening Specifications

♦ Transmission fluid cooler at transmission. Refer to ⇒ “6.1 Overview - Transmission”, page 101 .

8.2 Transmission Fluid Pump, Removing and Installing

Special tools and workshop equipment required

♦ Wrench - Pump/Injector Long Reach - T10054-

♦ Torque Wrench 1331 5-50Nm - VAG1331-

♦ Used Oil Collection and Extraction Unit - SMN372500-

Brief Description

Transmission fluid pump can be replaced without removing transmission. The vehicle must be raised and any covers installed on bottom of front end must be removed. The control arm to suspension strut connection does not need to be separated. The driveshaft also does not have to be removed. It is not necessary to perform a “basic setting”. Only the dual-clutch transmission fluid and transmission fluid pump cover have to be replaced.

Removing

– Loosen the left front wheel bolts.

– Raise the vehicle and remove the left front wheel.

– Remove the noise insulation. Refer to ⇒ Body Exterior; Rep. Gr. 66 ; Noise Insulation; Overview - Noise Insulation .

– Remove the left front wheel housing liner. Refer to ⇒ Body Exterior; Rep. Gr. 66 ; Wheel Housing Liner; Front Wheel Housing Liner, Removing and Installing .

– Place the Used Oil Collection and Extraction Unit - SMN372500- or Drip Tray under the transmission.

– Remove the Transmission fluid drain- and check plugs -arrow- and drain the transmission fluid.

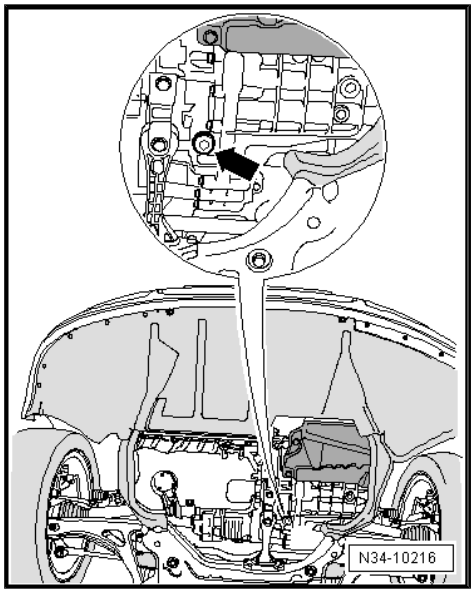

Caution

Do not start the engine if there is no transmission fluid in the transmission.

A plastic overflow pipe is located in this hole (with 8 mm hex socket head). Its length determines the fluid level in the transmission.

– Remove this overflow pipe and drain the remaining transmission fluid.

– Reinstall the overflow pipe.

– Replace the bolt seal -arrow-.

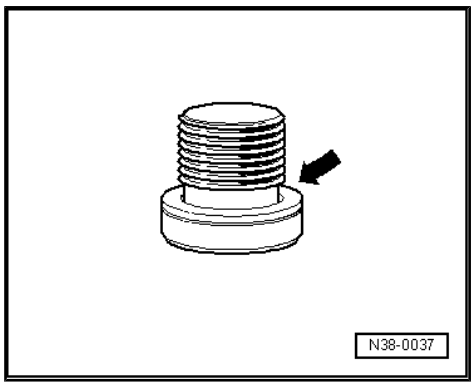

In regard to »contaminated fluid«, also read the information on changing the oil filter. Refer to
⇒ “8.3 Transmission Fluid Filter, Removing and Installing”, page 110 .

– The Used Oil Collection and Extraction Unit - SMN372500- or a Drip Tray remains under the transmission.

Caution

Fluid will leak out of the cover when the bolts are removed. Risk of injury due to hot transmission fluid.

– The bolts -arrows- and remove the transmission fluid pump cover -A-.

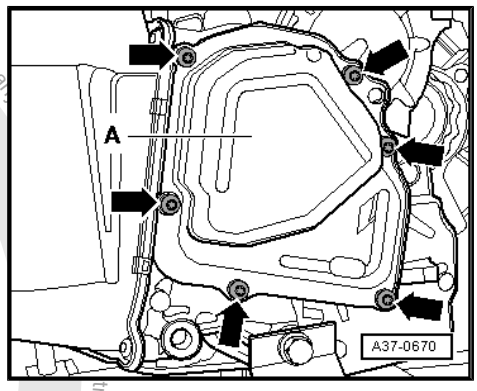

Note

Always replace the cover and the transmission fluid pump bolts after removing.

Protected by copyright. Copying for private or commercial purposes, in part or in whole, is not permitted unless authorised by Volkswagen AG. Volkswagen AG does not guarantee or accept any liability with respect to the correctness of information in this document. Copyright by Volkswagen AG.

– Remove the bolts -arrows-. Remove the transmission fluid pump -1- from the alignment pin and the input shaft.

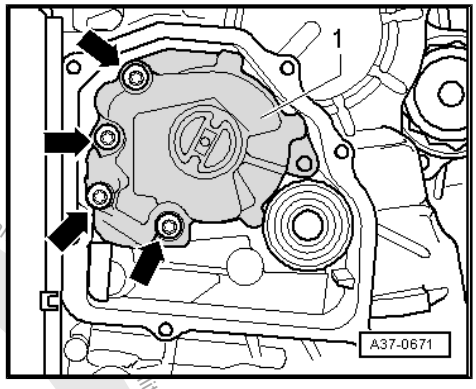

Remove the top bolt with the Wrench - Pump/Injector Long Reach - T10054- .

Installing

– Install the transmission fluid pump input shaft -A- all the way into the transmission. Turn the input shaft while doing this.

– Always use a new metal seal -B-.

• The two alignment pins -C- must be inside the transmission housing.

– When positioning the transmission fluid pump, pay attention to the driveshaft splines -A- and the correct seating on the alignment pins -C-.

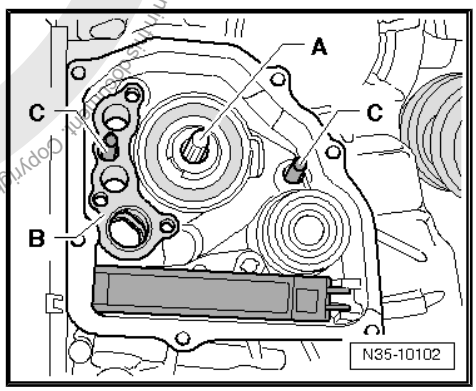

Different Transmission Fluid Pump Bolts -1-

All Four Bolts -arrows- with Flat Heads

Replace the bolts after removing them.

Tightening Specification

♦ 5 Nm + +90° ($^1/_4$ turn)

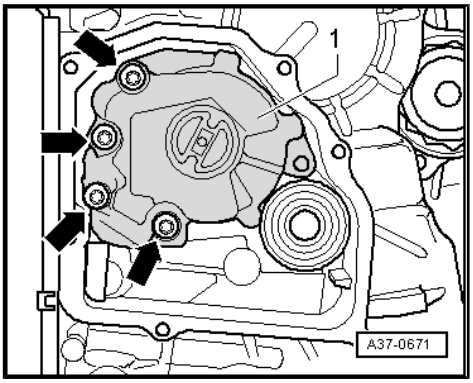

Copyright by Volkswagen AG. Volkswagen AG does not guarantee the accuracy and completeness of this document. Copyright by Volkswagen AG. Protected by copyright. Copying for private or commercial purposes, in part or in whole, is not permitted unless authorised by Volkswagen AG.

3 Bolts with Flat Head, Top Bolt -arrow- with Countersunk Head

Replace the bolts after removing them.

Tightening Specification

- Countersunk head bolt: 8 Nm without tightening angle (tighten with the Wrench - Pump/Injector Long Reach - T10054-)
- Flat head screws: 8 Nm + 90° ($^1/_4$ turn)

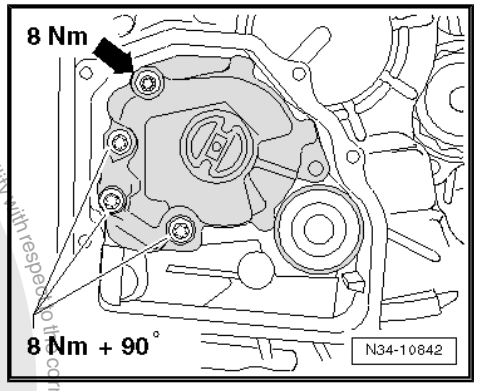

– Mount the new transmission fluid pump cover -A-. Install the new bolts -arrows- and tighten in a diagonal sequence in stages.

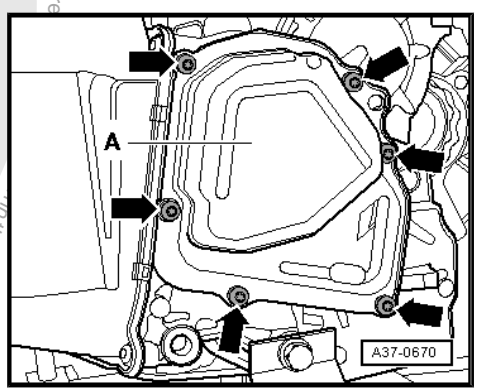

Transmission does not have oil. »New« oil must now be added and adjust to the correct oil level. Refer to
⇒ "9 Transmission Fluid", page 113 .

– Install the left front wheel housing liner. Refer to ⇒ Body Exterior; Rep. Gr. 66 ; Wheel Housing Liner; Overview - Front Wheel Housing Liner .

– Install the noise insulation. Refer to ⇒ Body Exterior; Rep. Gr. 66 ; Noise Insulation; Overview - Noise Insulation .

– Install the wheel. Refer to ⇒ Suspension, Wheels, Steering; Rep. Gr. 44 ; Wheels, Tires; Wheel Bolts, Tightening Specifications .

Tightening Specifications

- Refer to ⇒ "1.1 Overview - Mechatronic", page 28
- Transmission fluid pump to the transmission housing. Refer to ⇒ page 109 .
- Transmission fluid pump cover to transmission housing. Refer to
⇒ Fig. ""Tightening Specification and Sequence of the Transmission Fluid Pump Cover -A-."" , page 30 .

8.3 Transmission Fluid Filter, Removing and Installing

When to Change Transmission Fluid Filter

The transmission fluid filter does not need to be changed in every case.

Do Not Replace the Filter If:

- The transmission fluid cooler or its O-rings were replaced and no coolants has gotten into the transmission fluid.
- The selector shaft sealing ring was replaced.
- The flange seal was replaced.
- Leaking Mechatronic covers, DSG® clutch or transmission fluid pump were replaced.

The Filter Must be Replaced If:

- The 60,000 km maintenance interval was reached.
- Coolant has entered the fluid.
- Metal shavings were found in the fluid.

- The clutch is burned or has a mechanical fault.

Note

General repair instructions. Refer to
⇒ "3 Repair Information", page 5 .

Caution

This procedure contains mandatory replaceable parts. Refer to component overview prior to starting procedure.

Mandatory Replacement Parts

- Filter - Transmission Fluid Filter
- O-ring - Filter Housing

Removing

– Move the selector lever into "P".

– Remove the complete air filter housing:

- Vehicles with a gasoline engine. Refer to ⇒ Engine Mechanical, Fuel Injection and Ignition; Rep. Gr. 24 ; Air Filter; Air Filter Housing, Removing and Installing
- Vehicles with a diesel engine. Refer to ⇒ Rep. Gr. 23 ; Air Filter; Air Filter Housing, Removing and Installing

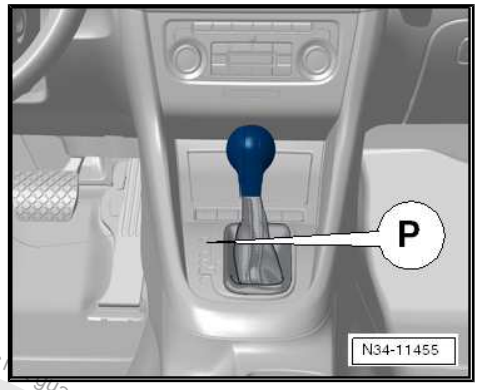

– Remove the battery with the battery tray. Refer to ⇒ Electrical Equipment; Rep. Gr. 27 ; Battery; Battery Tray, Removing and Installing .

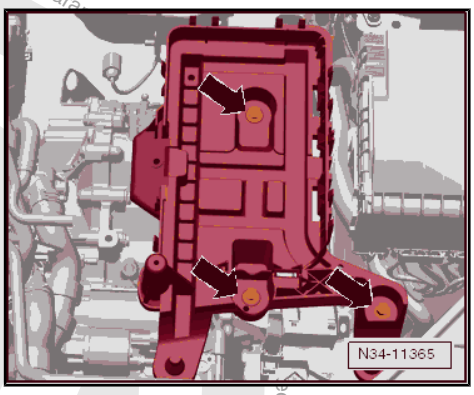

Note

- *A little bit of fluid remains inside the filter. This will drain out once the filter is removed.*
- *Lay some cloths down near the filter before removing it.*

Protected by copyright. Copying for private or commercial purposes, in part or in whole is not permitted unless authorised by Volkswagen AG. Volkswagen AG does not guarantee the correctness of information in this document. Copyright by Volkswagen AG.

– Loosen the filter housing -arrow- approximately seven turns.

– Wait 10 seconds.

This way the fluid can flow from the filter housing back into the transmission.

– Remove the filter housing and filter.

– Remove O-ring from filter housing.

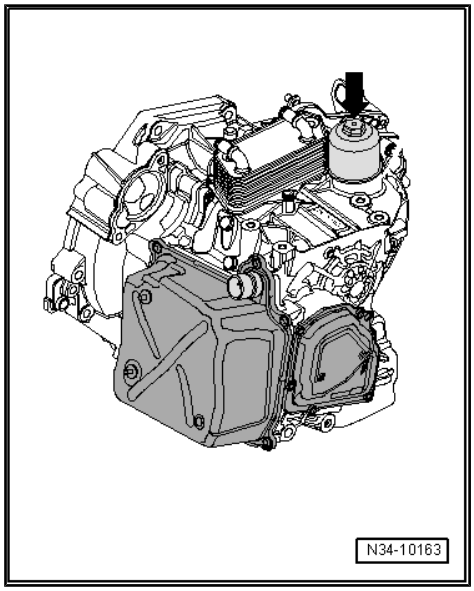

Installing

Install in the reverse order of removal while noting the following:

– Clean thoroughly any areas on the transmission that get stained with transmission fluid.

– Install the transmission fluid filter with the collar on the bottom -arrow-.

– Install new O-ring on filter housing.

– Install and tighten the filter housing.

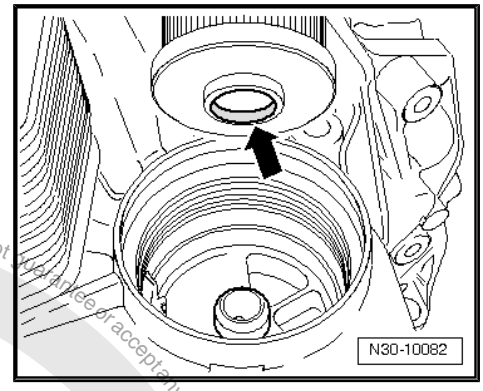

Install in reverse order of removal.

– Check the fluid level and fill if necessary. Refer to ⇒ “9.1 Transmission Fluid Level, Checking”, page 113 .

– Install the battery tray and the battery. Refer to ⇒ Electrical Equipment; Rep. Gr. 27 ; Battery; Battery, Removing and Installing .

– Install the complete air filter housing:

♦ Gasoline engine: Refer to ⇒ Rep. Gr. 24 ; Air Filter; Air Filter Housing, Removing and Installing .

♦ Diesel engine: Refer to ⇒ Rep. Gr. 23 ; Air Filter; Air Filter Housing, Removing and Installing .

Tightening Specifications

♦ Filter housing. Refer to ⇒ “6.1 Overview - Transmission”, page 101 .

Protected by copyright. Copying for private or commercial purposes, in part or in whole, is not permitted unless authorised by Volkswagen AG. Volkswagen AG does not guarantee or accept any liability with respect to the correctness of information in this document. Copyright by Volkswagen AG.

9 Transmission Fluid

⇒ "9.1 Transmission Fluid Level, Checking", page 113

⇒ "9.2 Transmission Fluid, Draining and Filling", page 116

9.1 Transmission Fluid Level, Checking

Special tools and workshop equipment required

- Torque Wrench 5-50Nm - VAG1331-
- Used Oil Collection and Extraction Unit - SMN372500-
- Vehicle Diagnostic Tester
- Shop Crane - Drip Tray - VAS6208-
- Oil Filler - VAS6262A-
- Brake Line Tool Kit - Pipe Cutter - VAS6056/2-
- Also for some fluid containers Oil Filler - Adapter 6 - VAS6262/6-
- Vehicle Diagnostic Tester

Caution

This procedure contains mandatory replaceable parts. Refer to component overview prior to starting procedure.

Mandatory Replacement Parts

- Seal - Transmission Fluid Drain - and Check Plug

Note the Following Information:

- Use the ATF available as a replacement part. Refer to the Parts Catalog.
- It is necessary to use the Oil Filler - Adapter 6 - VAS6262/6- on some fluid containers.
- It may be necessary to shorten the bleed pipe on the Adapter For Oil Filling - VAS6262A- . Refer to ⇒ page 114 .

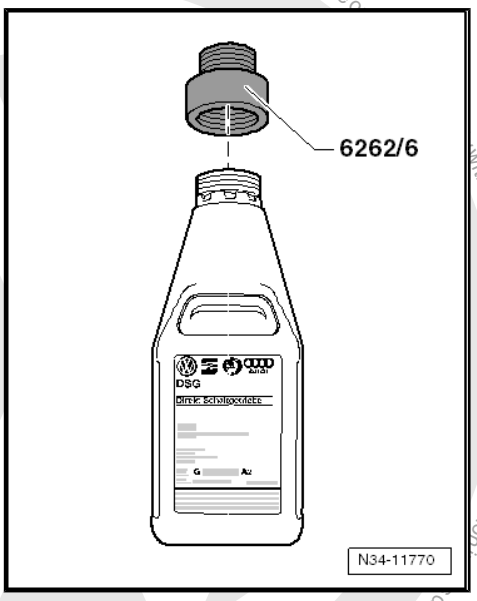

Protected by copyright. Copying for private or commercial purposes, in part or in whole, is not permitted unless authorised by Volkswagen AG. Volkswagen AG does not guarantee or accept any liability with respect to the correctness of information in this document. Copyright by Volkswagen AG.

Shorten the Bleed Pipe on the Adapter For Oil Filling - VAS6262A- as Follows:

– Shorten the pipe to dimension -a-. This assures the pipe on the Adapter For Oil Filling - VAS6262A- will not touch the bottom on some fluid containers.

Dimension -a- = 210 mm

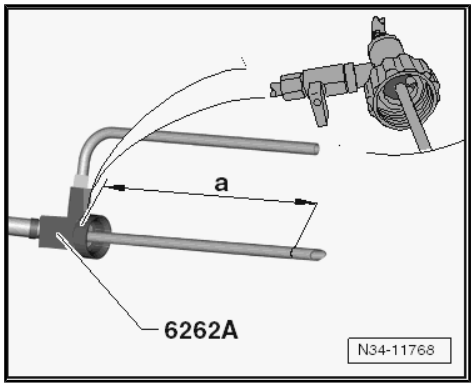

Note

Dimension -a- is measured starting from the shaft (the green surface) on the Adapter For Oil Filling - VAS6262A- .

If dimension -a- is greater than 210 mm:

– Make a mark on the bleed pipe, dimension -a-, and cut it, with for example the Brake Line Tool Kit - Pipe Cutter - VAS6056/2- .

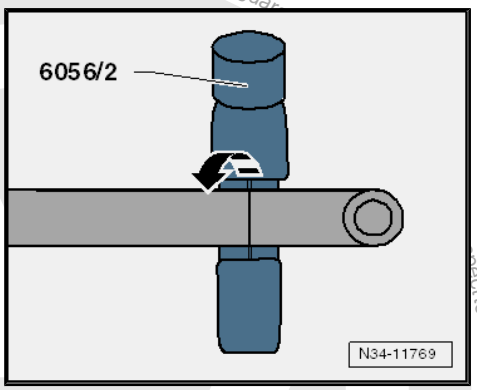

Requirements

- The vehicle is level and all hoist supports are the same height.
- Noise insulation is removed. Refer to ⇒ Body Exterior; Rep. Gr. 66 ; Noise Insulation; Overview - Noise Insulation .
- Vehicle Diagnostic Tester is connected
- To begin working, the fluid temperature should not be higher than 45 °C (113 °F).
- Test temperature: 35 ° to 45 °C (95 ° to 113 °F).

Checking

– Vehicle Diagnostic Tester Connect and identify the vehicle in `Guided Functions`.

– Select `DSG transmission`.

– Select `Check Fluid Level`.

Note

Let the transmission cool down if the fluid temperature is higher than 45 °C (113 °F).

The engine is idling in neutral and the selector lever is in “P”.

– Move the Used Oil Collection and Extraction Unit - SMN372500- or a Drip Tray under the transmission near the transmission fluid drain and check plug.

Protected by copyright. Copying for private or commercial purposes, in part or in whole, is not permitted unless authorised by Volkswagen AG. Volkswagen AG does not guarantee or accept any liability with respect to the correctness of information in this document. Copyright by Volkswagen AG.

– Remove the transmission fluid drain- and check plug -arrow-.

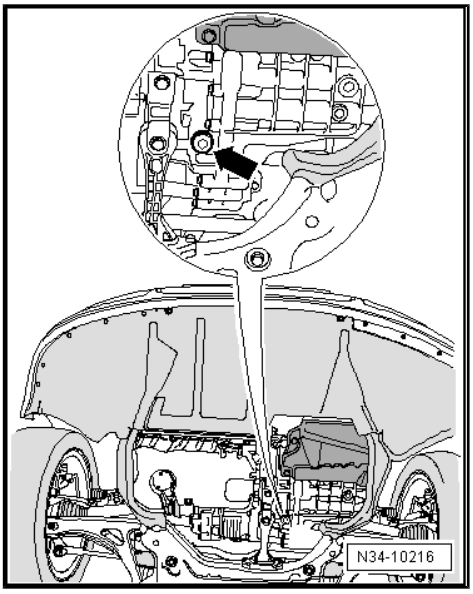

– Always replace the seal for the drain plug -arrow-.

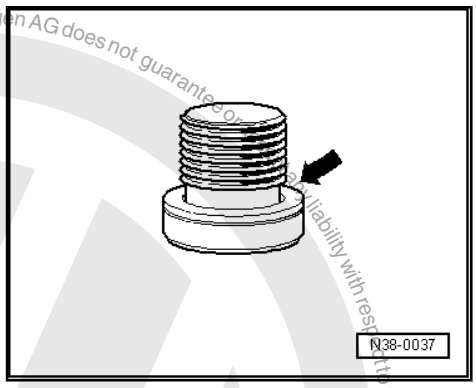

Note

Even if the level of transmission fluid is too low, first a small amount of transmission fluid will flow out of the overflow tube, because it fills during operation.

– Let the excess fluid drain.

– Install the drain plug with a new seal as soon as all the fluid has drained out (it starts to drip).

– If no transmission fluid comes out, then fill.

Adding

Protected by copyright. Copying for private or commercial purposes, in part or in whole, is not permitted unless authorised by Volkswagen AG. Volkswagen AG does not guarantee or assume any liability with respect to the correctness of information in this document. Copyright by Volkswagen AG.

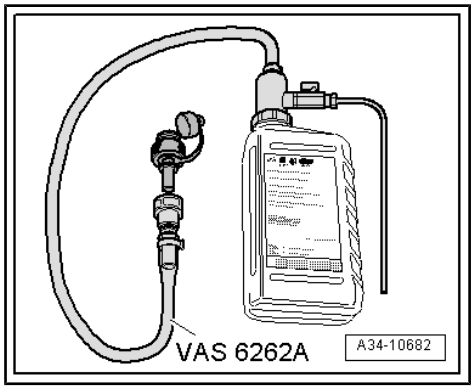

– Install the Oil Filler - VAS6262A- into the check hole hand-tight.
– Shake before opening.
– Attach the Oil Filler - VAS6262A- to the oil bottle. Be sure to read the instructions. Refer to ⇒ page 113 .
– Fill 1.0 liters (1.05 quarts) of transmission fluid.
– Remove the Adapter for Oil Filling - VAS6262A- at the quick-release coupling and check it.

If ATF Flows Out of Adapter Hole:

Oil must not be topped off.

– Let the excess oil drain.
– As soon as the oil has run out (it begins to drip), remove the Oil Filler - VAS6262A- and install screw with new seal.

If No Oil Flows Out of Hole:

– Add another liter of transmission fluid.

> **WARNING**
>
> *Too little or too much ATF will impair the transmission.*

Insert the fluid drain plug and check plug with a new seal and tighten them.

Tightening Specifications

♦ Transmission fluid drain- and check plug. Refer to ⇒ “6.1 Overview - Transmission”, page 101 .

9.2 Transmission Fluid, Draining and Filling

Use the ATF available as a replacement part. Refer to the Parts Catalog.

Short Description

First, oil temperature is read out. If it is higher than 45 °C (113 °F), then let the transmission to cool down.

Turn off the engine, remove the overflow pipe and drain any ATF. Install the overflow pipe and “overfill” the ATF.

Start the engine and drain any excess oil until the oil level has reached the overflow tube.

Special tools and workshop equipment required

♦ Torque Wrench 5-50Nm - VAG1331-
♦ Used Oil Collection and Extraction Unit - SMN372500-
♦ Vehicle Diagnostic Tester
♦ Shop Crane - Drip Tray - VAS6208-
♦ Oil Filler - VAS6262A-
♦ Oil Filler - Adapter 6 - VAS6262/6-

Requirements

♦ The engine is off.
♦ The vehicle is level and all hoist supports are the same height.

Protected by copyright. Copyright by Volkswagen AG. Volkswagen AG does not guarantee or accept any liability with respect to the correctness of information in this document.

Protected by copyright. Copying for private or commercial purposes, in part or in whole, is not permitted unless authorised by Volkswagen AG. Volkswagen AG does not guarantee or accept any liability with respect to the correctness of information in this document. Copyright by Volkswagen AG.

- Noise insulation is removed. Refer to ⇒ Body Exterior; Rep. Gr. 66 ; Noise Insulation; Overview - Noise Insulation .
- The selector level is in “P.”
- Vehicle Diagnostic Tester is connected
- To begin working, the oil temperature should not be higher than 45 °C (113 °F).

Procedure

– Follow the rules for clean working conditions when working on the transmission.

– Only use the ATF for the DSG® transmission available as a replacement part. Other oils can cause malfunctions or transmission failure.

WARNING

Risk of injury due to hot transmission fluid.

– Vehicle Diagnostic Tester connect and identify the vehicle in `Guided Functions`.

– Select `DSG Transmission`.

– Select `Check Fluid Level`.

Note

Let the transmission cool down if the oil temperature is higher than 45 °C (113 °F).

WARNING

Do not start the engine if there is no transmission fluid in the transmission.

– Engine off - do not start!

• The Used Oil Collection and Extraction Unit - SMN372500- or Drip Tray is placed under the transmission.

– Remove the transmission fluid drain- and check plug -arrow-.

A “black plastic overflow tube” is located in this hole (with 8 mm hex socket head). Its length determines the oil level in the transmission.

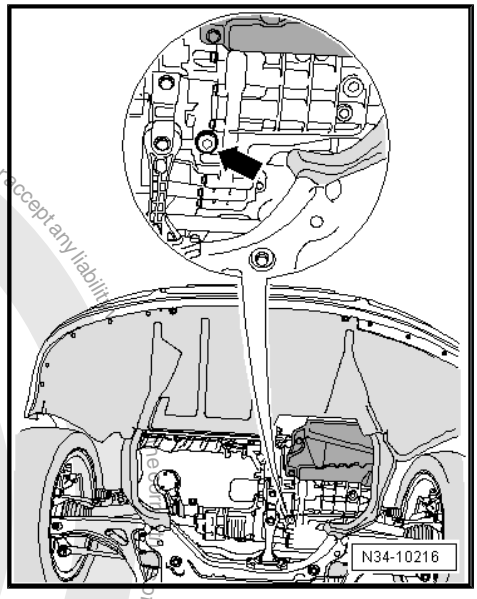

– Remove the overflow pipe -arrow- and let the ATF drain.

About 5 liters (5.28 qt) of oil will drain.

– Install the overflow pipe and tighten it to the tightening specification.

– If necessary change the transmission fluid filter. Refer to ⇒ “8.3 Transmission Fluid Filter, Removing and Installing”, page 110 .

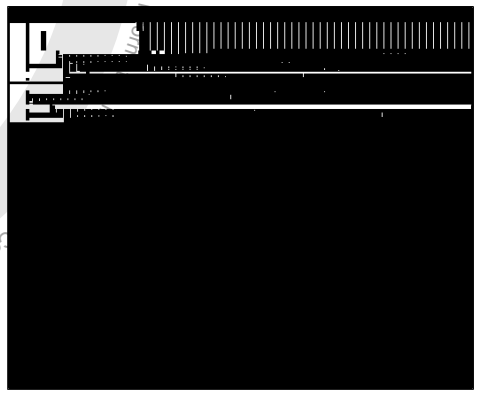

– Install the Oil Filler - VAS6262A- into the check hole hand-tight.

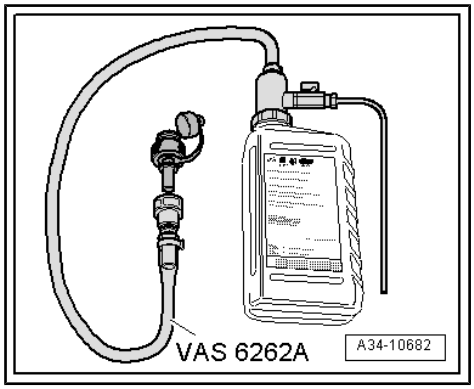

– Shake before opening.

– Attach the Oil Filler - VAS6262A- to the oil bottle. Be sure to read the instructions. Refer to ⇒ page 113 .

– Fill 5.5 liters (5.8 qts) of transmission fluid.

– To change containers, close the shut-off valve or hold the Oil Filler - VAS6262A- higher than the transmission.

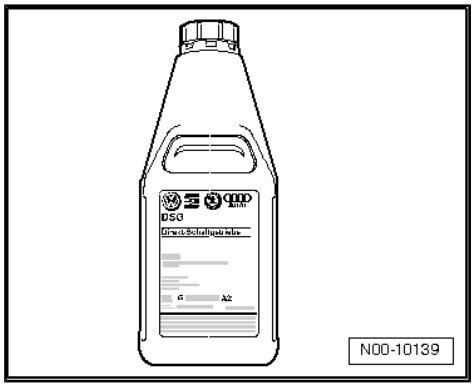

Protected by copyright. Copying for private or commercial purposes, in part or in whole, is not permitted unless authorised by Volkswagen AG. Copyright by Volkswagen AG.

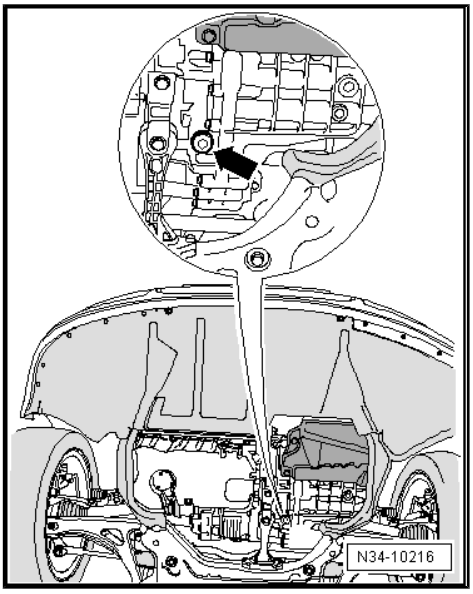

- Tighten the transmission fluid drain and check plug -arrow- hand-tight only.
- Start the engine.
- Press the brake pedal and move the selector lever through each gear for approximately 3 seconds. Then move the selector lever back into “P”.
- Do not turn off the engine.
- Check the ATF level and fill if necessary. Refer to ⇒ “9.1 Transmission Fluid Level, Checking”, page 113 .

Tightening Specifications

♦ Overflow Pipe. Refer to ⇒ “6.1 Overview - Transmission”, page 101 .

Protected by copyright. Copying for private or commercial purposes, in part or in whole, is not permitted unless authorised by Volkswagen AG. Volkswagen AG does not guarantee or accept any liability with respect to the correctness of information in this document. Copyright by Volkswagen AG.

10 Special Tools

Special tools and workshop equipment required

- Engine Support Bridge - 10-222A-
- Engine Support Bridge - Engine Support 29 - 10-222A/29-
- Engine Support Bridge - Engine Support 18 - 10-222A/18-
- Engine/Gearbox Support Shackle (2 pc.) - 10-222A/12- (quantity 2)
- Transmission Support - Pins 29 - 3282/29-
- Transmission Support - 3282-

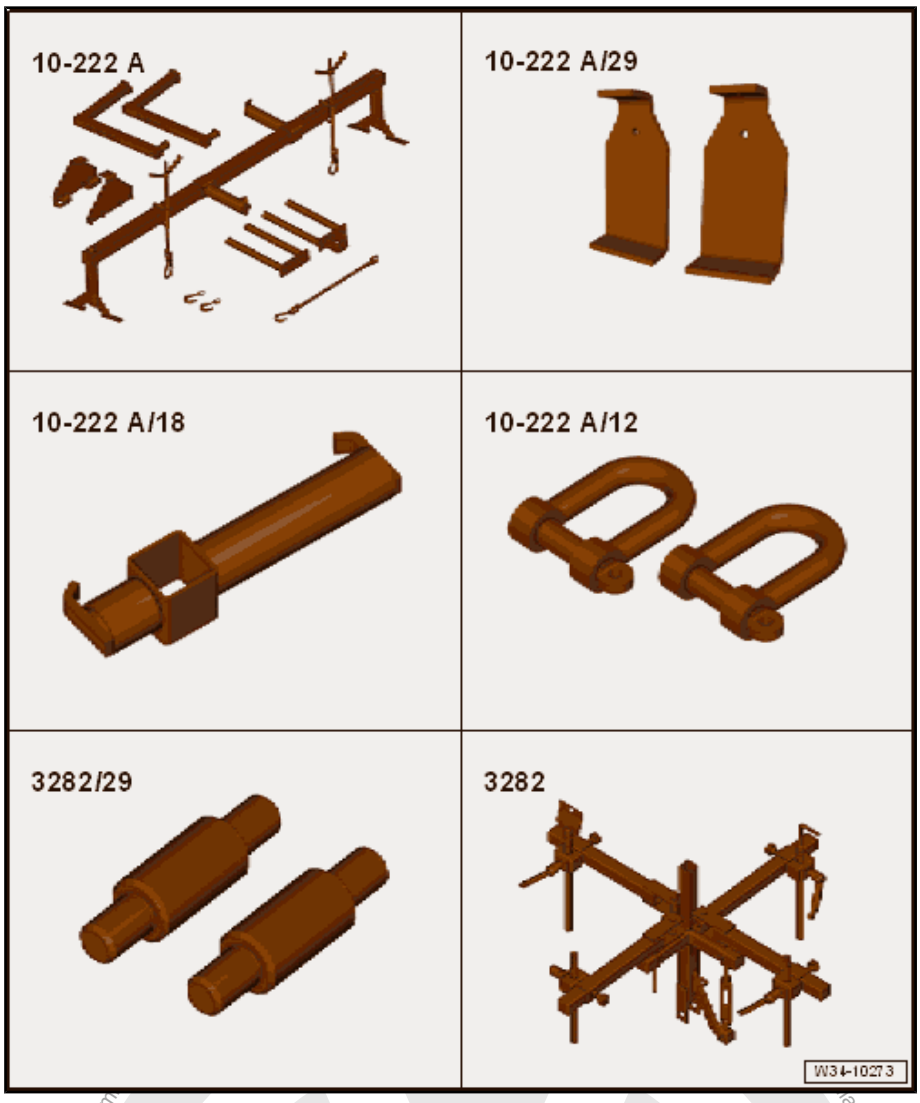

Protected by copyright. Copying for private or commercial purposes, in part or in whole, is not permitted. Copyright by Volkswagen AG. No liability with respect to the correctness of information in this document.

- Engine and Gearbox Jack - VAS6931-
- Transmission Support - Mounting Plate 42A - 3282/42A-
- Hose Clamps - Up To 25mm - 3094-
- Tensioning Strap - T10038-
- Engine Bung Set - VAS6122-
- Insert Tool - 18mm - T10179-

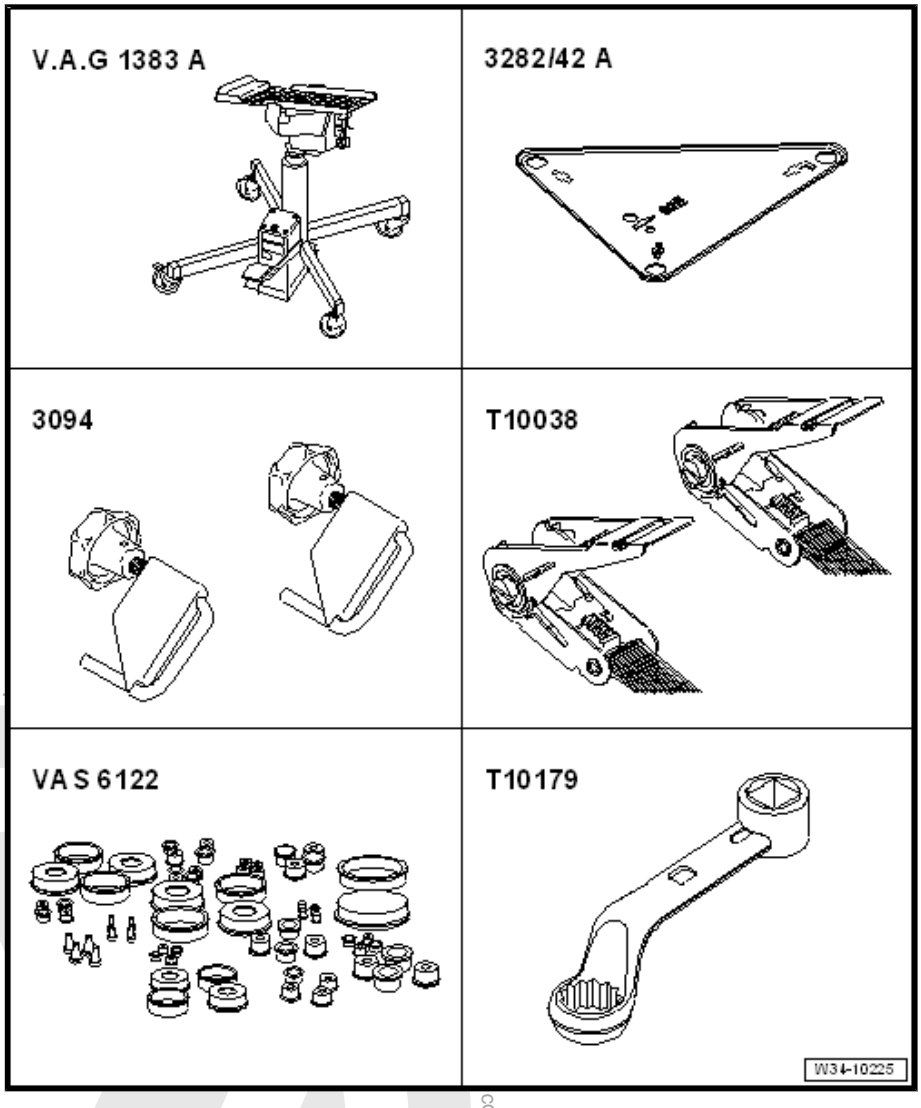

Protected by copyright. Copying for private or commercial purposes, in part or in whole, is not permitted unless authorised by Volkswagen AG. Copyright by Volkswagen AG. correctness of information in this document.

- Torque Wrench 5-50Nm - VAG1331-
- Used Oil Collection and Extraction Unit - SMN372500-
- Vehicle Diagnostic Tester
- Shop Crane - Drip Tray - VAS6208-
- Oil Filler - VAS6262A-
- Oil Filler - Adapter 2 - VAS6262/2-

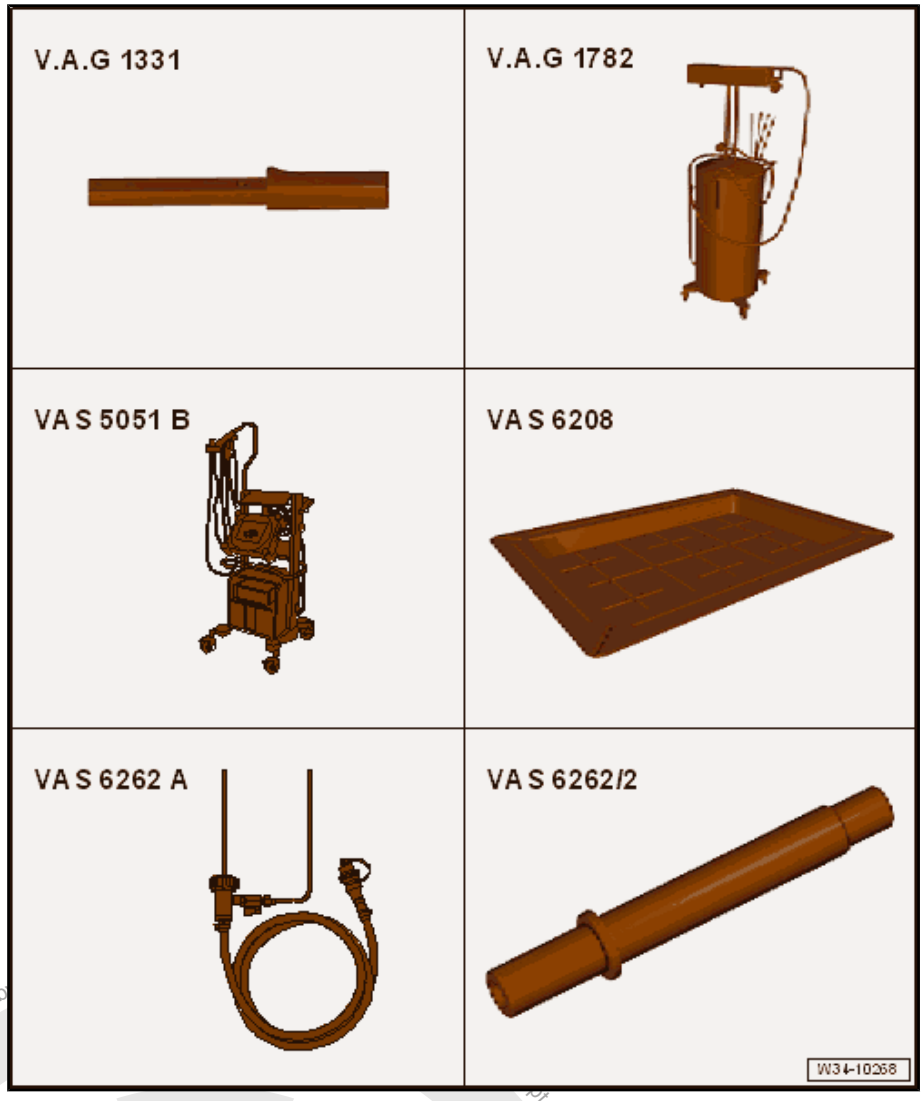

- Wrench - Pump/Injector Long Reach - T10054-

Protected by copyright. Copying for private or commercial purposes, in part or in whole, is not permitted unless authorised by Volkswagen AG. Copyright by Volkswagen AG. No liability for any information in this document.

- Socket - Xzn 14 - T10061-

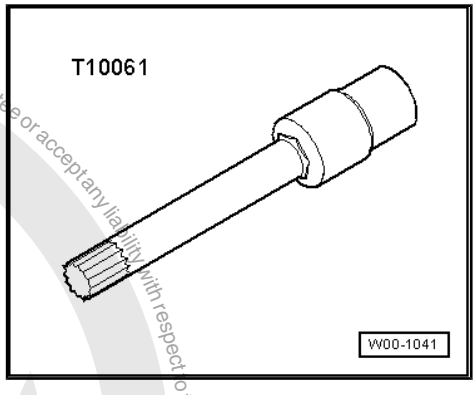

- Puller - Crankshaft/Power Steering Seal - T20143-

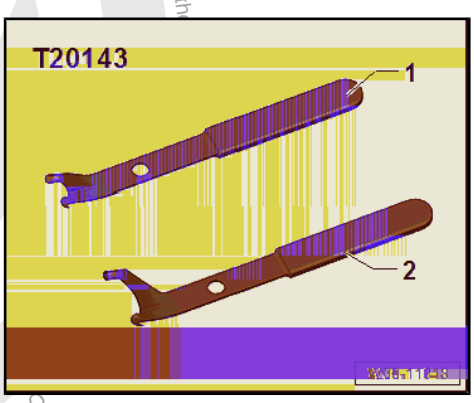

- Engine Support - Basic Set Square Pipe - T40091/1- (quantity 2)

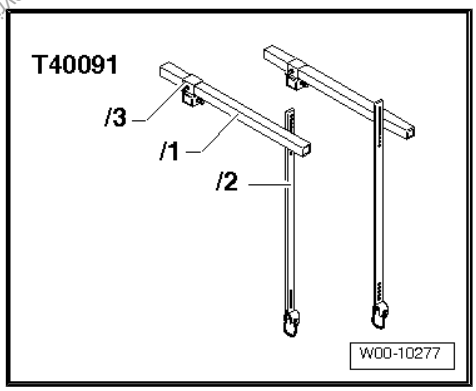

- Engine Support - Basic Set Movable Joint - T40091/3- (quantity 2)
- Engine Support - Supplement Kit Spindle - T40093/3- (quantity: 2) from the Engine Support - Supplement Kit - T40093A-

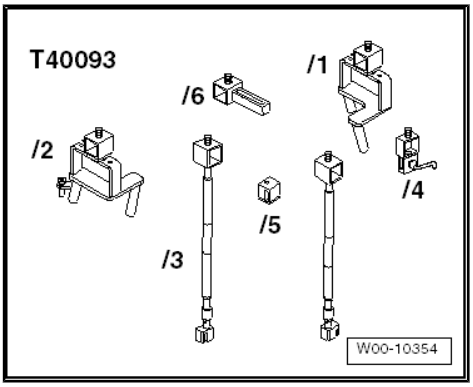

Protected by copyright. Copying for private or commercial purposes, in part or in whole, is not permitted unless authorised by Volkswagen AG. Volkswagen AG does not guarantee or accept any liability with respect to the
Copyright by Volkswagen AG.

- Engine Support Brackets - T40093/3-6- (quantity 2)

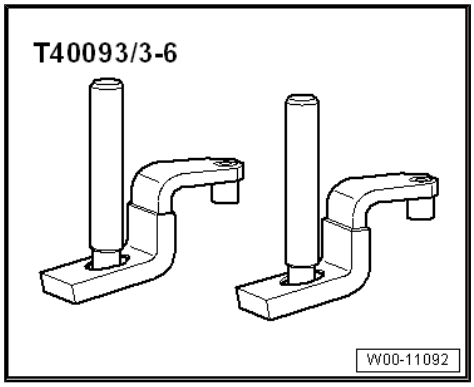

- Hose Clip Pliers - VAG1275A-

- Engine And Transmission Holder - VAS6095-

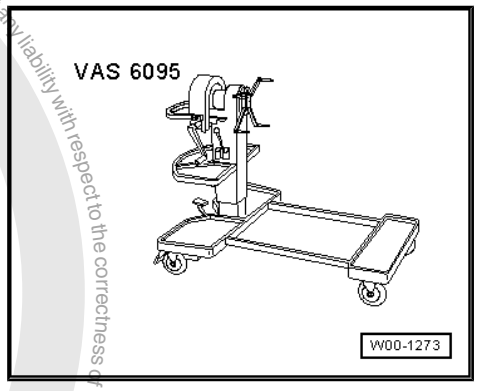

- Shop Crane - VAS6100-

Protected by copyright. Copying for private or commercial purposes, in part or in whole, is not permitted unless authorised by Volkswagen AG. Volkswagen AG does not guarantee or accept any liability with respect to the correctness of information. Copyright by Volkswagen AG.

- Also for some oil containers Oil Filler - Adapter 6 - VAS6262/6-

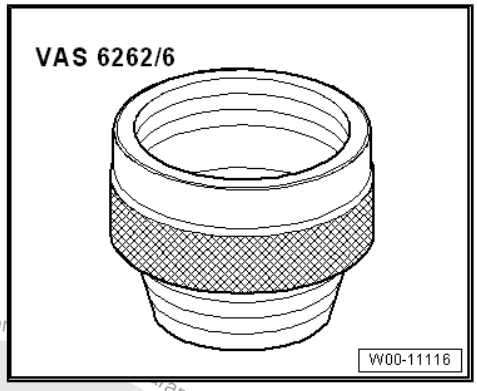

- Holding Plate - VW309A-

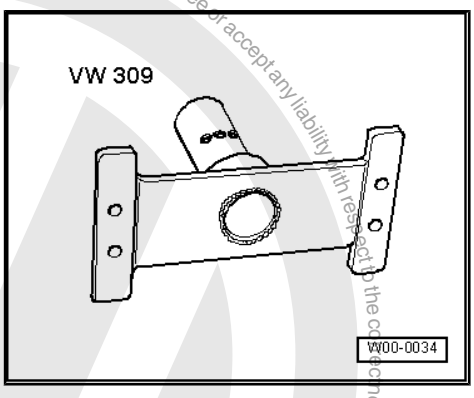

- Transmission Support - VW353-

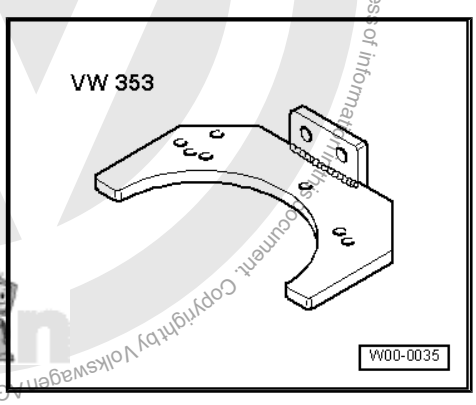

- Press Piece - Shift Rod/Alternator - VW423-

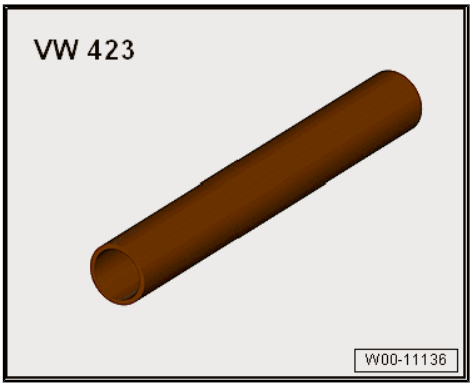

Protected by copyright. Copying for private or commercial purposes, in part or in whole, is not permitted unless authorised by Volkswagen AG. Volkswagen AG does not guarantee or accept any liability with respect to the correctness of information in this document. Copyright by Volkswagen AG.

- Engine Sling - 2024A-

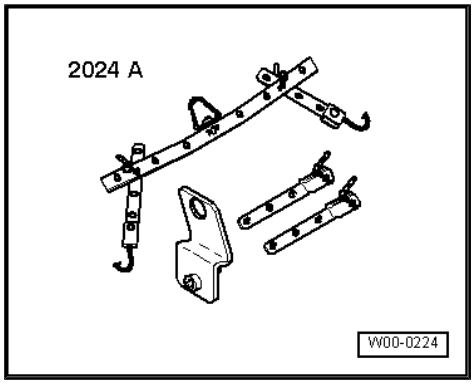

- Transmission Support Jig - 3336-

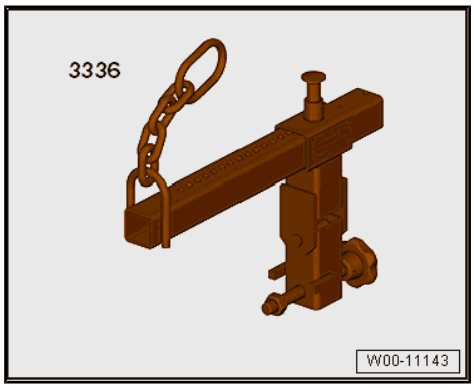

Protected by copyright. Copying for private or commercial purposes, in part or in whole, is not permitted unless authorised by Volkswagen AG. Volkswagen AG does not guarantee or accept any liability with respect to the correctness of information in this document. Copyright by Volkswagen AG.

35 – Gears and Shafts

1 Gears and Shafts, Disassembling and Assembling

No Repairs to Gears and Shafts

Protected by copyright. Copying for private or commercial purposes, in part or in whole, is not permitted unless authorised by Volkswagen AG. Volkswagen AG does not guarantee or accept any liability with respect to the correctness of information in this document. Copyright by Volkswagen AG.

39 – Final Drive, Differential

1 Seals

⇒ “1.1 Component Location Overview - Seals”, page 128 .

⇒ “1.2 Left Seal, Replacing”, page 128 .

⇒ “1.3 Right Seal, Replacing”, page 131 .

1.1 Component Location Overview - Seals

Note

Do not remove all the bolts in the left and right flange shafts at the same time. If the differential bevel gears inside the differential rotate, it will be difficult to install the bolts.

1 - Seal
- ❑ For the right flange shaft
- ❑ Replacing. Refer to ⇒ “1.3 Right Seal, Replacing”, page 131 .

2 - Right Flange Shaft

3 - Bolt
- ❑ 30 Nm

4 - Nut
- ❑ Replace after removing
- ❑ Tightening specification. Refer to ⇒ “6.1 Overview - Transmission”, page 101 .

5 - Selector Lever

6 - Gearshift Shaft Seal
- ❑ Replacing. Refer to ⇒ “2.9 Selector Shaft Seal, Replacing”, page 69 .

7 - Seal
- ❑ For the left flange shaft
- ❑ Replacing. Refer to ⇒ “1.2 Left Seal, Replacing”, page 128 .

8 - Left Flange Shaft

9 - Bolt
- ❑ 30 Nm

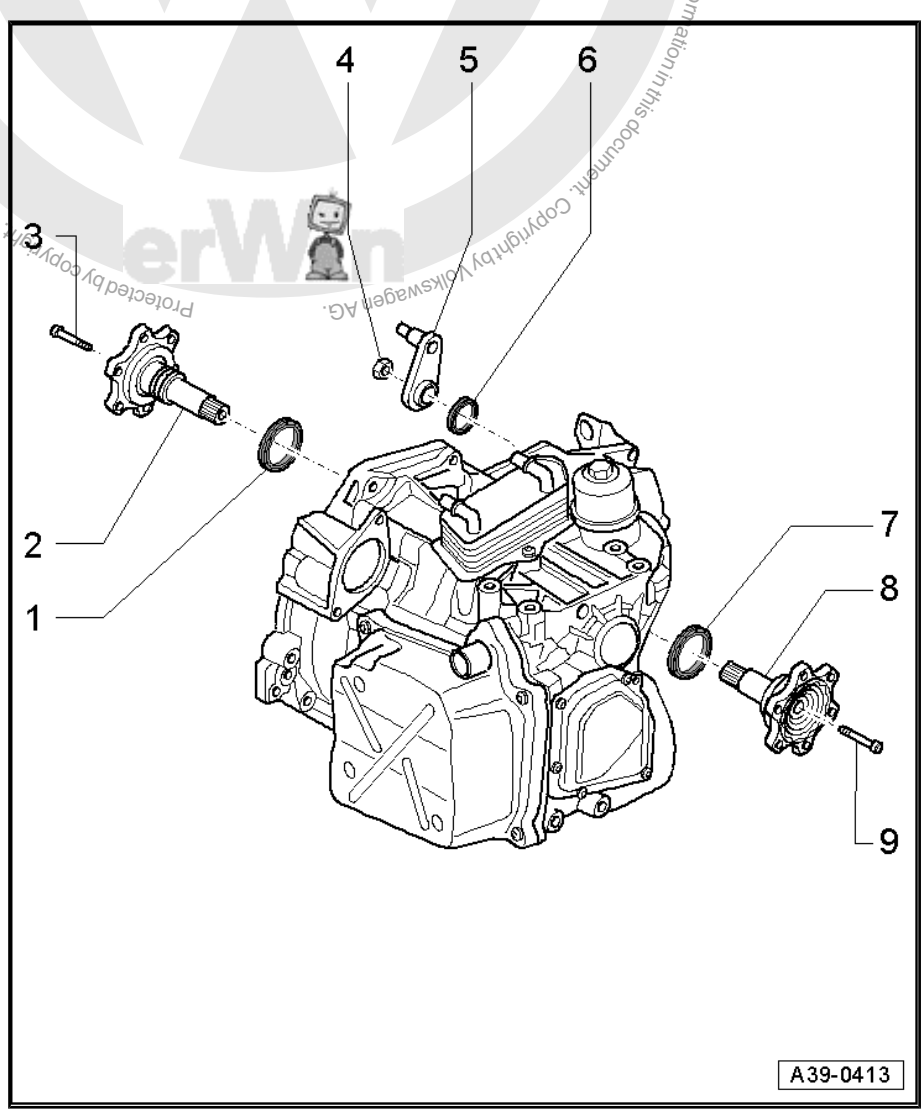

1.2 Left Seal, Replacing

Special tools and workshop equipment required

- ♦ Slide Hammer Set - VW771-

- Seal Installer - Flange Shaft - 3305-
- Socket And Extended Bit - T10107A- or
- Long Hex Socket - VAG1669-
- Used Oil Collection and Extraction Unit - SMN372500-
- Slide Hammer Set - Hook - VW771/37-
- Sealing Grease - G 052 128-

Removing

- Transmission installed

Note

Observe. Refer to *⇒ "3 Repair Information", page 5* *.*

– Lift the vehicle, all four take-up points of lifting platform at same height.

– Move the selector lever into "P".

Note

Do not lower the vehicle onto the floor after loosening central bolt.

– Press the brake and remove the bolt from the left driveshaft -arrow- (second technician).

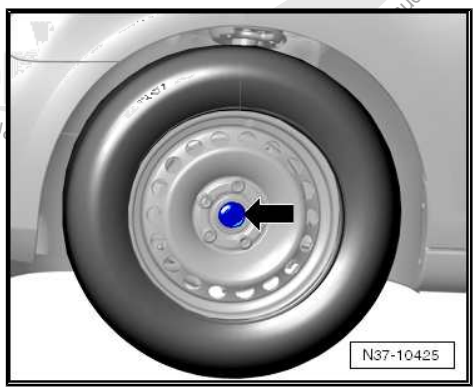

– Remove the left front wheel.

– Remove the noise insulation. Refer to ⇒ Body Exterior; Rep. Gr. 66 ; Noise Insulation; Overview - Noise Insulation .

– Remove the lower section of the left front wheel housing liner. Refer to ⇒ Body Exterior; Rep. Gr. 66 ; Wheel Housing Liner; Overview - Front Wheel Housing Liner .

– Remove the left drive axle. Refer to ⇒ Suspension, Wheels, Steering; Rep. Gr. 40 ; Drive Axle; Drive Axle, Removing and Installing .

– Remove the left transmission flange shaft using the Socket And Extended Bit - T10107A- .

The bolt has a 6 mm inner hex socket. The bolt can also be removed and installed using Long Hex Socket - VAG1669- .

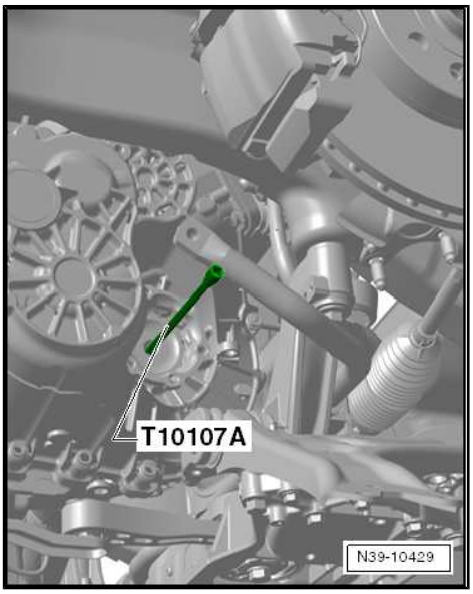

Protected by copyright. Copying for private or commercial purposes, in part or in whole, is not permitted unless authorised by Volkswagen AG. Volkswagen AG does not guarantee or accept any liability with respect to the correctness of information in this document.

Copyright by Volkswagen AG. Volkswagen AG does not guarantee or accept any liability with respect to the correctness of information in this document. Copying for private or commercial purposes, in part or in whole, is not permitted unless authorised by Volkswagen AG.

– To remove and install the flange shaft, install 2 bolts into the flange and counterhold it using a pry bar.
– Remove the flange shaft.
– Place the Used Oil Collection and Extraction Unit - SMN372500- or Drip Tray under the transmission.

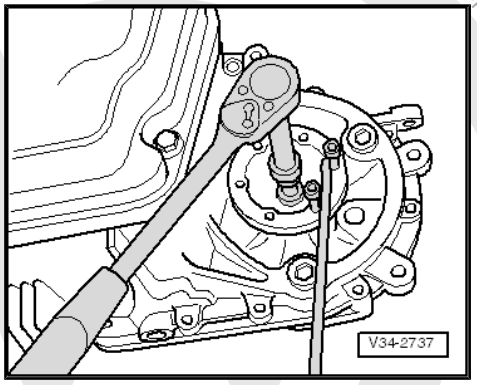

– Remove seal with Slide Hammer Set - VW771- and Slide Hammer Set - Hook - VW771/37- .

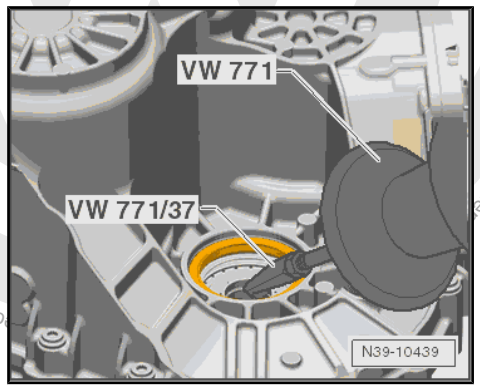

Installing

Install in reverse order of removal. Note the following:

– Lightly oil new seal on outer circumference.

– Fill the space between the sealing and dust lip -arrow- halfway with Sealing Grease - G 052 128- .

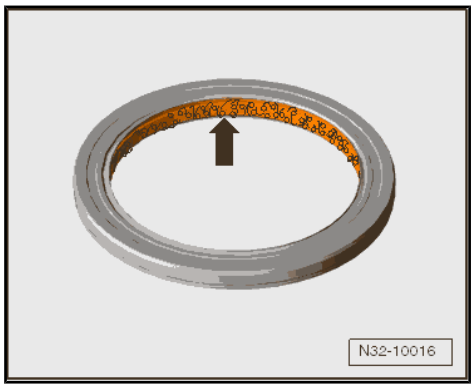

– Install the seal all the way in without tilting it.

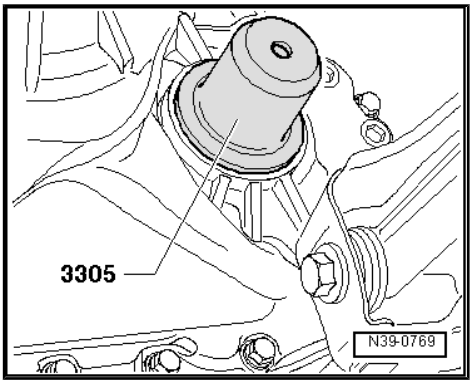

Note

Press the flange shaft against the transmission so that the bolt in the threaded piece of the differential touches.

– Insert the flange shaft and secure it with bolts.

– Install the left drive axle. Refer to ⇒ Suspension, Wheels, Steering; Rep. Gr. 40 ; Drive Axle; Drive Axle, Removing and Installing .

– Install the left front wheel housing liner. Refer to ⇒ Body Exterior; Rep. Gr. 66 ; Wheel Housing Liner; Overview - Front Wheel Housing Liner .

– Attach the left front wheel. Refer to ⇒ Suspension, Wheels, Steering; Rep. Gr. 44 ; Wheels and Tires; Wheel, Changing .

– Check the fluid level and fill if necessary. Refer to ⇒ "9.1 Transmission Fluid Level, Checking", page 113 .

– Install the noise insulation. Refer to ⇒ Body Exterior; Rep. Gr. 66 ; Noise Insulation; Overview - Noise Insulation .

Tightening Specifications

♦ Flange shaft to transmission. Refer to ⇒ "1.1 Component Location Overview - Seals", page 128 .

1.3 Right Seal, Replacing

Special tools and workshop equipment required

♦ Seal Installer - Axle Flange - 3158-

♦ Socket And Extended Bit - T10107A-

♦ Long Hex Socket - VAG1669-

♦ Tensioning Strap - T10038-

♦ Used Oil Collection and Extraction Unit - SMN372500-

♦ Sealing Grease - G 052 128-

Removing

• Transmission installed

Note

General repair instructions. Refer to *⇒ "3 Repair Information", page 5* .

– Remove the noise insulation. Refer to ⇒ Body Exterior; Rep. Gr. 66 ; Noise Insulation; Overview - Noise Insulation .

Protected by copyright. Copying for private or commercial purposes, in part or in whole, is not permitted unless authorised by Volkswagen AG. Volkswagen AG does not guarantee or accept any liability with respect to the correctness of information in this document. Copyright by Volkswagen AG.

– Disconnect the connector -1- from the Oil Level Thermal Sensor - G266- , if equipped.

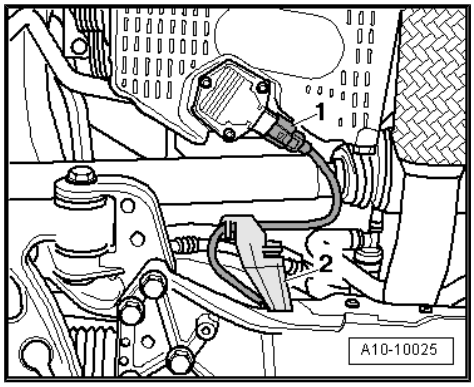

– If equipped, remove the heat shield above the right drive axle -arrows-.

– Remove the right drive axle from the transmission. Refer to ⇒ Suspension, Wheels, Steering; Rep. Gr. 40 ; Drive Axle; Drive Axle, Removing and Installing .

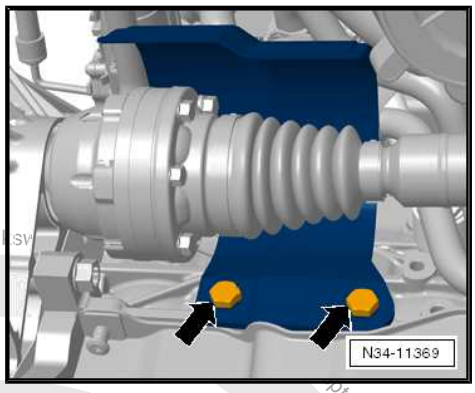

– Remove the nuts -arrows- on the right ball joint.

– Remove the nut from the bracket for the Right Front Level Control Sensor - G289- if equipped.

– Disengage the right ball joint from the control arm.

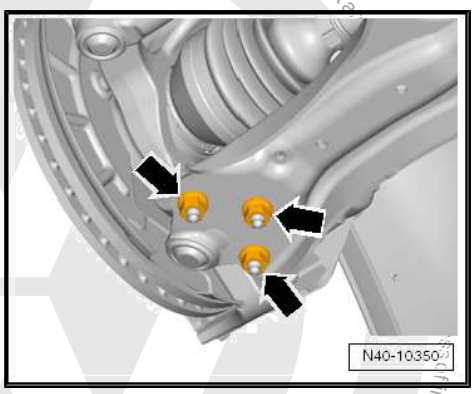

– Fasten the right ball joint -2- on the control arm -1- with a nut -arrow-, as shown in the illustration.

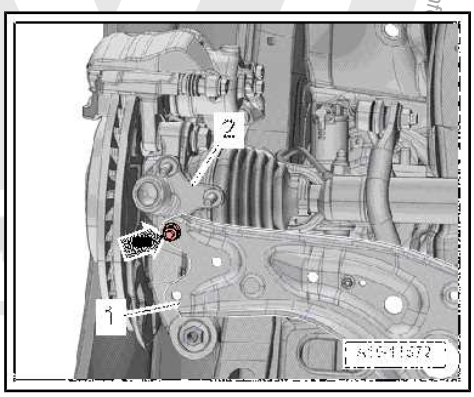

Protected by copyright. Copying for private or commercial purposes, in part or in whole, is not permitted unless authorised by Volkswagen AG. Volkswagen

– Secure the right drive axle to the suspension strut using a Tensioning Strap - T10038- .

Do not damage the surface of the shaft.

– Place the Used Oil Collection and Extraction Unit - SMN372500- or Drip Tray under the transmission.

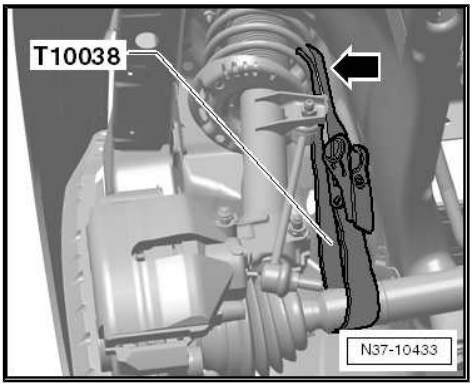

– Remove the right transmission flange shaft using the Socket And Extended Bit - T10107A- .

The bolt has a 6 mm inner hex socket. The bolt can also be removed and installed using Long Hex Socket - VAG1669- .

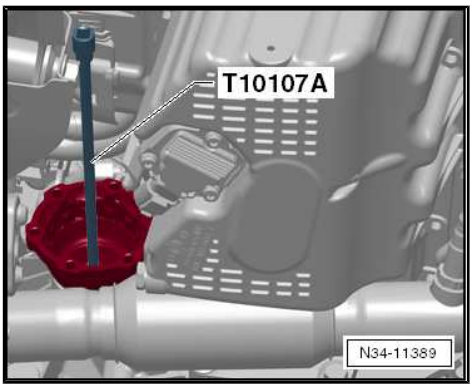

– To remove and install the flange shaft, install 2 bolts into the flange and counterhold it using a pry bar.

– Remove the flange shaft.

– Pry out the sealing ring.

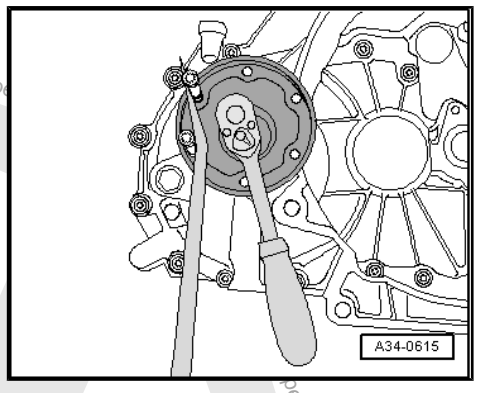

Installing

Install in reverse order of removal. Note the following:

– Lightly oil new seal on outer circumference.

– Fill the space between the sealing and dust lip -arrow- halfway with Sealing Grease - G 052 128- .

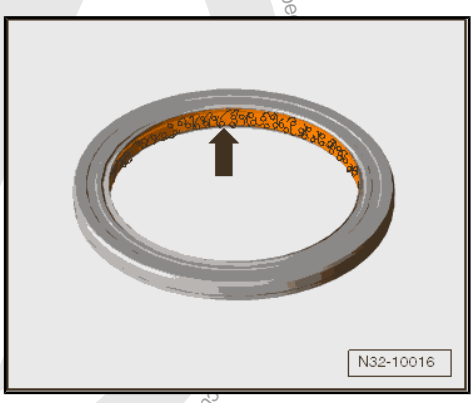

Protected by copyright. Copying for private or commercial purposes, in part or whole, is not permitted unless authorised by Volkswagen AG. Volkswagen AG does not guarantee the accuracy and completeness of this document. Copyright by Volkswagen AG.

– Install the seal all the way in without tilting it.

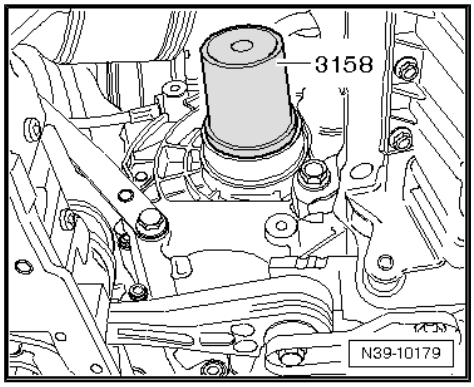

Note

Press the flange shaft against the transmission so that the bolt in the threaded piece of the differential touches.

– Insert the flange shaft and secure it with bolts.

– Install the ball joint. Refer to ⇒ Suspension, Wheels, Steering; Rep. Gr. 40 ; Lower Control Arm and Ball Joint; Overview - Lower Control Arm and Ball Joint .

– Fasten the drive axle to the flange shaft. Refer to ⇒ Suspension, Wheels, Steering; Rep. Gr. 40 ; Drive Axle; Drive Axle, Removing and Installing .

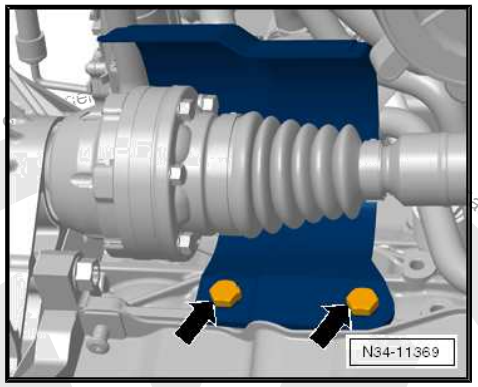

– Install the heat shield over the right drive axle, if equipped. Refer to ⇒ Suspension, Wheels, Steering; Rep. Gr. 40 ; Drive Axle; Drive Axle, Removing and Installing .

– Check the fluid level and fill if necessary. Refer to ⇒ “9.1 Transmission Fluid Level, Checking”, page 113 .

– Install the noise insulation. Refer to ⇒ Body Exterior; Rep. Gr. 66 ; Noise Insulation; Overview - Noise Insulation .

Tightening Specifications

♦ Flange shaft to transmission. Refer to ⇒ “1.1 Component Location Overview - Seals”, page 128 .

Protected by copyright. Copying for private or commercial purposes, in part or in whole, is not permitted unless authorised by Volkswagen AG. Copyright by Volkswagen AG. accept any liability with respect to the correctness of information in this document.

2 Special Tools

Special tools and workshop equipment required

- Used Oil Collection and Extraction Unit - SMN372500-

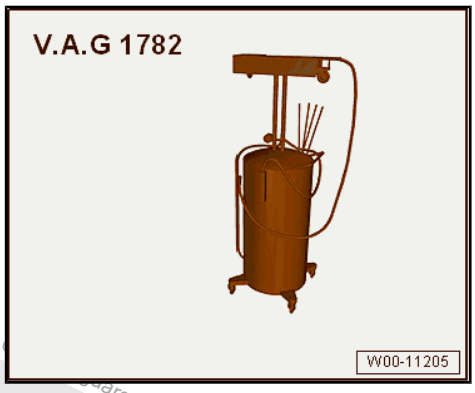

- Tensioning Strap - T10038-

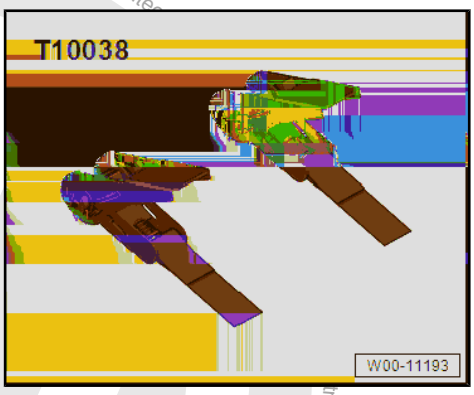

- Socket And Extended Bit - T10107A-

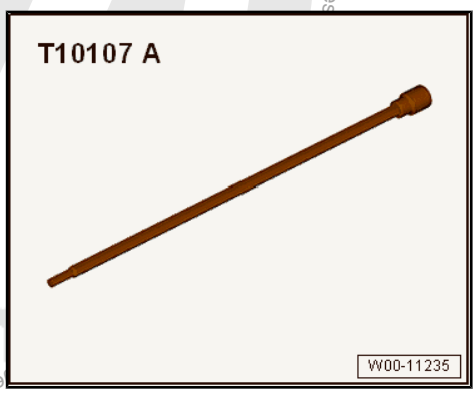

- Slide Hammer Set - VW771-

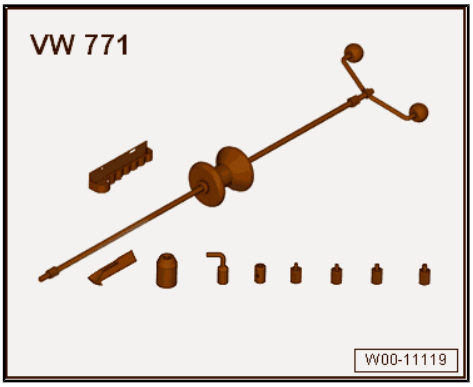

Protected by copyright. Copying for private or commercial purposes, in part or in whole, is not permitted unless authorised by Volkswagen AG. Volkswagen AG

- Seal Installer - Axle Flange - 3158-

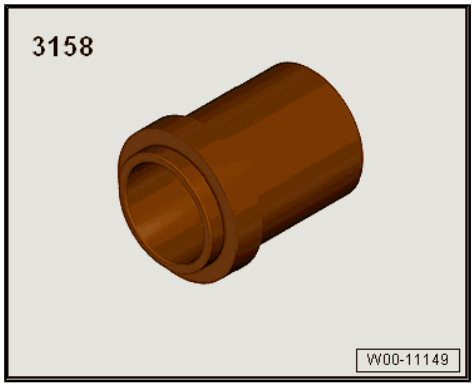

- Seal Installer - Flange Shaft - 3305-

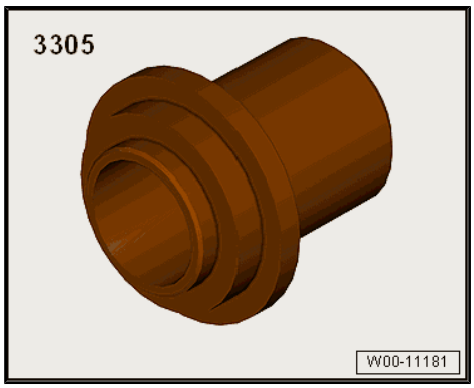

Protected by copyright. Copying for private or commercial purposes, in part or in whole, is not permitted unless authorised by Volkswagen AG. Volkswagen AG does not guarantee or accept any liability with respect to the correctness of information in this document. Copyright by Volkswagen AG.

3 Revision History

DRUCK NUMBER: K0059240321

Factory Edition	Edit Edition	Job Type	Feedback	Notes	Quality Checked By
09.2015	10/13/2015	Factory Update	N/A		Eric P.
11.2014	08/14/2015	Major Edit	N/A		Eric P.
11.2014	08/14/2015	Local Feedback	1116701		Eric P.
11.2014	02/13/2015	Link Checking	N/A	updated ext-rl tags	Eric P.
11.2014	11/25/2014	Factory Update		Added model code and chagnes	Jim H.
05.2014	5/1/2014	Factory New	N/A	Launch for AU1 Golf	Jim H.

Protected by copyright. Copying for private or commercial purposes, in part or in whole, is not permitted unless authorised by Volkswagen AG. Volkswagen AG does not guarantee or accept any liability with respect to the correctness of information in this document. Copyright by Volkswagen AG.

Cautions & Warnings

Please read these WARNINGS and CAUTIONS before proceeding with maintenance and repair work. You must answer that you have read and you understand these WARNINGS and CAUTIONS before you will be allowed to view this information.

- If you lack the skills, tools and equipment, or a suitable workshop for any procedure described in this manual, we suggest you leave such repairs to an authorized Volkswagen retailer or other qualified shop. We especially urge you to consult an authorized Volkswagen retailer before beginning repairs on any vehicle that may still be covered wholly or in part by any of the extensive warranties issued by Volkswagen.

- Disconnect the battery negative terminal (ground strap) whenever you work on the fuel system or the electrical system. Do not smoke or work near heaters or other fire hazards. Keep an approved fire extinguisher handy.

- Volkswagen is constantly improving its vehicles and sometimes these changes, both in parts and specifications, are made applicable to earlier models. Therefore, part numbers listed in this manual are for reference only. Always check with your authorized Volkswagen retailer parts department for the latest information.

- Any time the battery has been disconnected on an automatic transmission vehicle, it will be necessary to reestablish Transmission Control Module (TCM) basic settings using the VAG 1551 Scan Tool (ST).

- Never work under a lifted vehicle unless it is solidly supported on stands designed for the purpose. Do not support a vehicle on cinder blocks, hollow tiles or other props that may crumble under continuous load. Never work under a vehicle that is supported solely by a jack. Never work under the vehicle while the engine is running.

- For vehicles equipped with an anti-theft radio, be sure of the correct radio activation code before disconnecting the battery or removing the radio. If the wrong code is entered when the power is restored, the radio may lock up and become inoperable, even if the correct code is used in a later attempt.

- If you are going to work under a vehicle on the ground, make sure that the ground is level. Block the wheels to keep the vehicle from rolling. Disconnect the battery negative terminal (ground strap) to prevent others from starting the vehicle while you are under it.

- Do not attempt to work on your vehicle if you do not feel well. You increase the danger of injury to yourself and others if you are tired, upset or have taken medicine or any other substances that may impair you or keep you from being fully alert.

- Never run the engine unless the work area is well ventilated. Carbon monoxide (CO) kills.

- Always observe good workshop practices. Wear goggles when you operate machine tools or work with acid. Wear goggles, gloves and other protective clothing whenever the job requires working with harmful substances.

- Tie long hair behind your head. Do not wear a necktie, a scarf, loose clothing, or a necklace when you work near machine tools or running engines. If your hair, clothing, or jewelry were to get caught in the machinery, severe injury could result.

- Do not re-use any fasteners that are worn or deformed in normal use. Some fasteners are designed to be used only once and are unreliable and may fail if used a second time. This includes, but is not limited to, nuts, bolts, washers, circlips and cotter pins. Always follow the recommendations in this manual - replace these fasteners with new parts where indicated, and any other time it is deemed necessary by inspection.

next

© 2002 Volkswagen of America, Inc.
All rights reserved. Information contained in this document is based on the latest information available at the time of printing and is subject to the copyright and other intellectual property rights of Volkswagen of America, Inc., its affiliated companies and its licensors. All rights are reserved to make changes at any time without notice. No part of this document may be reproduced, stored in a retrieval system, or transmitted in any form or by any means, electronic, mechanical, photocopying, recording, or otherwise, nor may these materials be modified or reposted to other sites, without the prior expressed written permission of the publisher.
Version 1.0

Cautions & Warnings

- Illuminate the work area adequately but safely. Use a portable safety light for working inside or under the vehicle. Make sure the bulb is enclosed by a wire cage. The hot filament of an accidentally broken bulb can ignite spilled fuel or oil.

- Friction materials such as brake pads and clutch discs may contain asbestos fibers. Do not create dust by grinding, sanding, or by cleaning with compressed air. Avoid breathing asbestos fibers and asbestos dust. Breathing asbestos can cause serious diseases such as asbestosis or cancer, and may result in death.

- Finger rings should be removed so that they cannot cause electrical shorts, get caught in running machinery, or be crushed by heavy parts.

- Before starting a job, make certain that you have all the necessary tools and parts on hand. Read all the instructions thoroughly; do not attempt shortcuts. Use tools that are appropriate to the work and use only replacement parts meeting Volkswagen specifications. Makeshift tools, parts and procedures will not make good repairs.

- Catch draining fuel, oil or brake fluid in suitable containers. Do not use empty food or beverage containers that might mislead someone into drinking from them. Store flammable fluids away from fire hazards. Wipe up spills at once, but do not store the oily rags, which can ignite and burn spontaneously.

- Use pneumatic and electric tools only to loosen threaded parts and fasteners. Never use these tools to tighten fasteners, especially on light alloy parts. Always use a torque wrench to tighten fasteners to the tightening torque listed.

- Keep sparks, lighted matches, and open flame away from the top of the battery. If escaping hydrogen gas is ignited, it will ignite gas trapped in the cells and cause the battery to explode.

- Be mindful of the environment and ecology. Before you drain the crankcase, find out the proper way to dispose of the oil. Do not pour oil onto the ground, down a drain, or into a stream, pond, or lake. Consult local ordinances that govern the disposal of wastes.

- The air-conditioning (A/C) system is filled with a chemical refrigerant that is hazardous. The A/C system should be serviced only by trained automotive service technicians using approved refrigerant recovery/recycling equipment, trained in related safety precautions, and familiar with regulations governing the discharging and disposal of automotive chemical refrigerants.

- Before doing any electrical welding on vehicles equipped with anti-lock brakes (ABS), disconnect the battery negative terminal (ground strap) and the ABS control module connector.

- Do not expose any part of the A/C system to high temperatures such as open flame. Excessive heat will increase system pressure and may cause the system to burst.

- When boost-charging the battery, first remove the fuses for the Engine Control Module (ECM), the Transmission Control Module (TCM), the ABS control module, and the trip computer. In cases where one or more of these components is not separately fused, disconnect the control module connector(s).

- Some of the vehicles covered by this manual are equipped with a supplemental restraint system (SRS), that automatically deploys an airbag in the event of a frontal impact. The airbag is operated by an explosive device. Handled improperly or without adequate safeguards, it can be accidentally activated and cause serious personal injury. To guard against personal injury or airbag system failure, only trained Volkswagen Service technicians should test, disassemble or service the airbag system.

© 2002 Volkswagen of America, Inc.
All rights reserved. Information contained in this document is based on the latest information available at the time of printing and is subject to the copyright and other intellectual property rights of Volkswagen of America, Inc., its affiliated companies and its licensors. All rights are reserved to make changes at any time without notice. No part of this document may be reproduced, stored in a retrieval system, or transmitted in any form or by any means, electronic, mechanical, photocopying, recording, or otherwise, nor may these materials be modified or reposted to other sites, without the prior expressed written permission of the publisher.
Version 1.0

Cautions & Warnings

- Do not quick-charge the battery (for boost starting) for longer than one minute, and do not exceed 16.5 volts at the battery with the boosting cables attached. Wait at least one minute before boosting the battery a second time.

- Never use a test light to conduct electrical tests of the airbag system. The system must only be tested by trained Volkswagen Service technicians using the VAG 1551 Scan Tool (ST) or an approved equivalent. The airbag unit must never be electrically tested while it is not installed in the vehicle.

- Some aerosol tire inflators are highly flammable. Be extremely cautious when repairing a tire that may have been inflated using an aerosol tire inflator. Keep sparks, open flame or other sources of ignition away from the tire repair area. Inflate and deflate the tire at least four times before breaking the bead from the rim. Completely remove the tire from the rim before attempting any repair.

- When driving or riding in an airbag-equipped vehicle, never hold test equipment in your hands or lap while the vehicle is in motion. Objects between you and the airbag can increase the risk of injury in an accident.

I have read and I understand these Cautions and Warnings.

back OK

Protected by copyright. Copying for private or commercial purposes, in part or in whole, is not permitted unless authorised by Volkswagen AG does not guarantee or accept any liability with respect to the correctness of information in this document. Copyright by Volkswagen AG.

© 2002 Volkswagen of America, Inc.
All rights reserved. Information contained in this document is based on the latest information available at the time of printing and is subject to the copyright and other intellectual property rights of Volkswagen of America, Inc., its affiliated companies and its licensors. All rights are reserved to make changes at any time without notice. No part of this document may be reproduced, stored in a retrieval system, or transmitted in any form or by any means, electronic, mechanical, photocopying, recording, or otherwise, nor may these materials be modified or reposted to other sites, without the prior expressed written permission of the publisher.
Version 1.0