SA000A1-E

This Owners Manual should be considered a part of the car and remain with it when it is sold for the use of the next owner.

OWNER I.D.

ORIGINAL: NAME: _____

ADDRESS: STREET: _____

TOWN: _____

COUNTY: _____

P.CODE: _____

DATE OF SALE: _____

SUBSEQUENT: NAME: _____

ADDRESS: STREET: _____

TOWN: _____

COUNTY: _____

P.CODE: _____

TRANSFER DATE: _____

HYUNDAI

Coupe

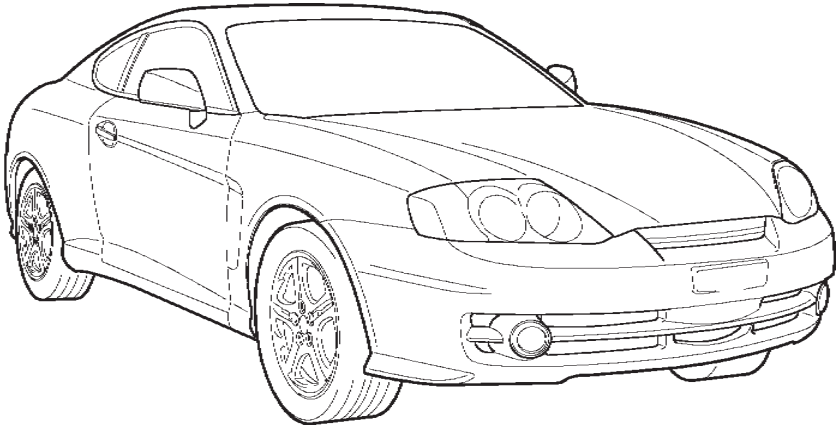

HGK037-D

SA010A1-E

OWNER'S MANUAL

Operation

Maintenance

Specifications

The information in this Owner's Manual is current at the time of publication. However, the right to amend specifications without notice or obligation to incorporate such amendments into vehicles already produced is reserved.

This manual applies to all markets and includes descriptions and explanations of optional as well as standard equipment. As a result, some of the equipment operating descriptions referred to may not apply to the particular vehicle with which this manual is supplied.

Please refer to the nearest franchised Hyundai dealer for information regarding current standard and optional equipment levels.

SA020A1-E

Responsibilty For Maintenance

It is the responsibility of the vehicle owner/driver to ensure that all routine maintenance services are undertaken in line with the recommendations specified in Section 5 of this manual. In addition, in order to ensure continued validity of the new vehicle warranty and safe operation of the vehicle, non scheduled maintenance/running repairs should be undertaken at the earliest available opportunity. Under severe operating conditions, more frequent maintenance is required. Details of the maintenance schedule for such conditions are also given in section 5.

It is recommended that all maintenance operations and repairs are entrusted to a franchised Hyundai dealer to ensure that the latest repair methods, specialized tooling and genuine Hyundai parts are used to ensure the continued reliability and safety of the vehicle.

SA030A1-E

FOREWORD

Hyundai Motor Company wish to take this opportunity to thank you for purchasing a Hyundai product and to welcome you to the ever increasing number of discriminating motorists who drive Hyundai vehicles. The advanced engineering and construction methods employed during both design and production of the Hyundai marque are something of which we are proud, and this commitment to providing a high quality product is supported by a comprehensive after sales and warranty service of which we are equally proud.

This owners manual will introduce the operating and maintenance requirements for the vehicle and it is recommended that it is carefully read to ensure that the maximum performance and durability along with safe and satisfactory operation are obtained. The recommended routine maintenance servicing along with any running repairs that may be required should be entrusted to a franchised Hyundai dealer to ensure that only the latest methods and genuine Hyundai replacement parts are used for the continued reliability, safety and performance of the vehicle.

Should any question or query exist regarding any aspect of your Hyundai please contact the nearest Hyundai dealer who will be only too pleased to assist wherever possible.

Note: This owners manual should be considered as part of the vehicle and should be kept in the vehicle at all times for ease of reference.

In the event of the vehicle being sold please ensure that this manual is left in the vehicle for the reference of the new owner.

CAUTION: Severe engine and transaxle damage may result from the use of poor quality fuels and lubricants that do not meet Hyundai specifications. You must always use high quality fuels and lubricants that meet the specifications listed on Page 9-3 in the Vehicle Specifications section of the Owner's Manual.

Copyright 2002 Hyundai Motor Company. All rights reserved. No part of this publication may be reproduced, stored in any retrieval system or transmitted in any form or by any means without the prior written permission of Hyundai Motor Company.

SA040A1-E

CAUTION: MODIFICATIONS TO ORIGINAL VEHICLE SPECIFICATION

Modification to the original vehicle specification may invalidate the manufacturers warranty and may adversely affect the safety and durability of the vehicle. Components which are subject to modification or are added to the original vehicle specification without the express approval of the manufacturer and result in consequential loss or damage are not covered by the vehicle manufacturers warranty.

SA050A1-E

TWO WAY RADIO INSTALLATION

This vehicle is fitted with electronically controlled fuel injection or other micro processor controlled equipment.
It is possible for incorrectly installed two way radio equipment including mobile telephones to adversely affect these systems.
Before radio equipment of this kind is installed, please contact your Hyundai dealer for recommendation regarding the suitability of the particular radio equipment concerned and the recommended method of installation and equipment location. Incorrectly installed or unsuitable equipment which gives rise to incorrect functioning of or damage to electronic vehicle components will not fall within the scope of the vehicle manufacturers warranty.

SA070A1-F

SAFETY AND VEHICLE DAMAGE WARNING

This manual includes information titled as WARNING, CAUTION and NOTE.
These titles indicate the following:

WARNING:

This indicates that a condition may result in harm or injury to you or other persons if the warning is not heeded. Follow the advice provided with the warning.

CAUTION:

This indicates that a condition may result in damage to your vehicle or its equipment if the caution is not heeded. Follow the advice provided with the caution.

NOTE:

This indicates that interesting or helpful information is being provided.

SA060A1-E

TABLE OF CONTENTS

SECTION	PAGE
1. CONTROLS AND EQUIPMENT	1-1
2. DRIVING YOUR HYUNDAI	2-1
3. IN CASE OF EMERGENCY	3-1
4. APPEARANCE CARE	4-1
5. VEHICLE MAINTENANCE REQUIREMENTS	5-1
6. OWNER MAINTENANCE	6-1
7. EMISSION CONTROL SYSTEM	7-1
8. CONSUMER INFORMATION	8-1
9. VEHICLE SPECIFICATIONS	9-1
10. INDEX	10-1

A100A01L-GAT

GUIDE TO HYUNDAI GENUINE PARTS

1. What are Hyundai Genuine Parts?

Hyundai Genuine Parts are the same parts used by Hyundai Motor Company to manufacture vehicles. They are designed and tested for the optimum safety, performance, and reliability to our customers.

2. Why should you use genuine parts?

Hyundai Genuine Parts are engineered and built to meet rigid original manufacturing requirements. Using imitation, counterfeit or used salvage parts is not covered under the Hyundai New Vehicle Limited Warranty or any other Hyundai warranty. In addition, any damage to or failure of Genuine Hyundai Parts caused by the installation or failure of an imitation, counterfeit or used salvage part is not covered by Hyundai Motor Company.

3. How can you tell if you are purchasing Hyundai Genuine Parts?

Look for the Hyundai Genuine Parts Logo on the package (see below).

The export specifications are written in English only.

Hyundai Genuine Parts are only sold through authorized Hyundai Dealerships.

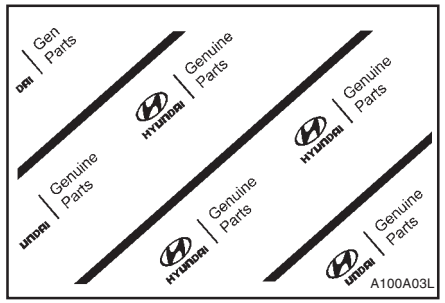

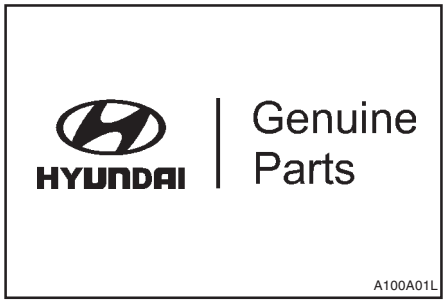

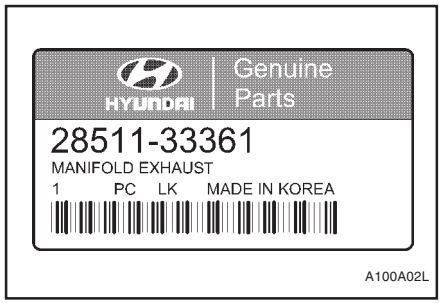

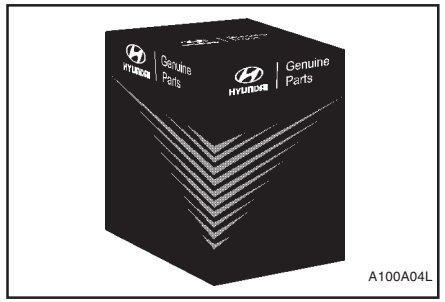

1. CONTROLS AND EQUIPMENT

SB010A1-E

FUEL RECOMMENDATIONS

THIS VEHICLE MUST ONLY BE OPERATED WITH UNLEADED FUEL.
SERIOUS DAMAGE WILL RESULT FROM THE USE OF LEADED FUEL.

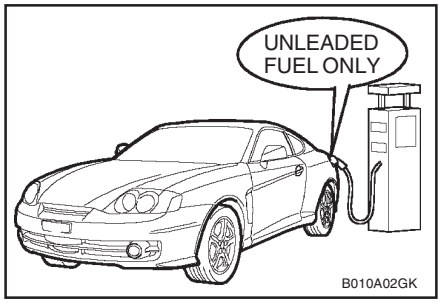

Unleaded fuel with a Reasearch Octane Number (RON) of 91 or higher must be used in this vehicle.
To prevent accidental charging of the fuel tank with leaded fuel, a small diameter filler neck along with a restrictor flap are fitted to ensure that only unleaded fuel pump nozzles may enter the filler neck. However, care must be exercised when charging the vehicle tank from jerry cans or by means of a funnel that the fuel being used is unleaded.

The use of leaded fuel in this vehicle will result in irreversible pollution of the catalyst element. Such pollution will prevent correct operation of the catalyst and give rise to increased operating temperatures leading to the catalyst element melting and restricting the exhaust flow along with an increase in exhaust emission levels.

CAUTION:

The vehicle warranty will not extend to damage arising from the use of incorrect fuels.

Overseas Operation:

When the vehicle is to be operated overseas, the vehicle operator should establish that a suitable fuel for satisfactory operation of the vehicle is available.

SB010E1-E

PETROLS FOR CLEANER AIR

To help contribute to cleaner air, Hyundai recommends that you use petrols treated with detergent additives, which help to prevent deposit formation in the engine. These petrols will help the engines run cleaner and the Emission Control System performance.

SB020A1-E

RUNNING IN

The longevity and performance of the vehicle are greatly affected by the care exercised during the first 1000 miles of motoring. Because of modern manufacturing techniques, rigid guidelines regarding maximum road speeds have become unnecessary. However, certain precautions should be observed in order to obtain the best possible performance and useful life from the vehicle.

1) Do not race the engine without a load (i.e revving the engine in neutral).
2) During the first 500 miles the maximum engine speed should be restricted to 3000 rpm and gradually increased thereafter.
3) Avoid prolonged constant speed operation. The internal components of the engine will become more quickly run in if the operation speed is varied during the running in period.
4) Never allow the engine to labour. Use the gearbox freely and avoid large throttle openings when the engine speed is below 1500 rpm.
5) Avoid rapid acceleration and maximum throttle openings.
6) Avoid harsh braking during the first 100 miles of urban motoring or 1000 miles of motorway driving to allow the friction facings of the brake pads and shoes to bed against the discs and drums properly.
7) Avoid trailer towing during the running in period.

B880A01A-GAT

IMMOBILIZER SYSTEM

The immobilizer system is an anti-theft device, designed to deter automobile theft.

B880B03A-GAT

Keys

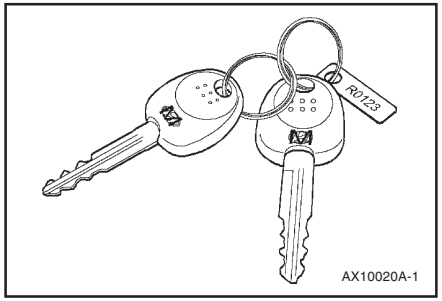

All of the locks fitted to the vehicle are operated by the same key. However, since it is possible to lock the doors without the use of the key, care should be exercised to ensure that the key does not become locked inside the vehicle by mistake.

NOTE:

If you make your own duplicate key, you will not be able to cancel the system or start the engine.

B880C02A-GAT

Key Numbers

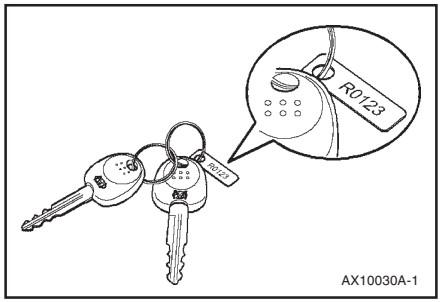

The vehicle key number is recorded upon a metal tag attached to the keys when the vehicle is first delivered to you.

The key number should be recorded and kept in a safe place in case the need to order further keys arises. New keys are available from any Hyundai dealer by quoting the relevant key number.

In the interest of security, the metal tag attached to the keys which bears the key number should be removed from the key ring after you receive your new vehicle. In addition, key numbers cannot be provided by Hyundai for security reasons. If you need additional keys or if you should lose your keys, your authorized Hyundai dealer can make new keys.

SB040A1-F

DOOR LOCKS

WARNING:

- **Unlocked doors can be dangerous. Before you drive away-especially if there are children in the car-be sure that all the doors are securely closed and locked, the doors cannot be opened from inside. This helps assure that doors will not be opened accidentally. Also, when combined with the proper use of seat belts, locking the doors helps keep occupants from being ejected from the car in case of an accident.**
- **Before opening the door, always look for and avoid oncoming traffic.**

SB040B1-F

Locking, unlocking front doors with a key

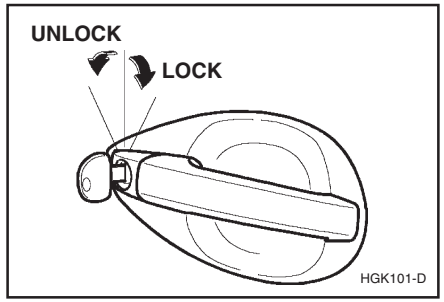

- o The door can be locked or unlocked with a key.
- o Lock the door by turning the key toward the front of the vehicle and unlock it by turning the key toward the rear.

B040C01S-AAT

Locking From the Outside

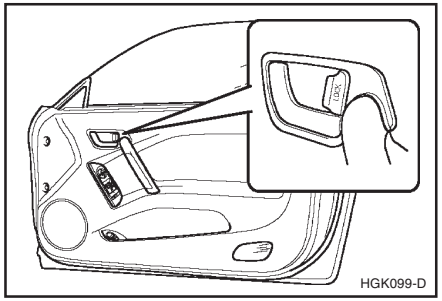

The doors can be locked without a key.
To lock the doors from the outside, first push the inside lock switch to the "LOCK" position, so that the red mark on the switch is not visible, then close the door.

NOTE:

- o **When locking the door this way, be careful not to lock the door with the ignition key left in the vehicle.**
- o **To protect against theft, always remove the ignition key, close all windows, and lock all doors when leaving your vehicle unattended.**

B040D01S-AAT

Locking From the Inside

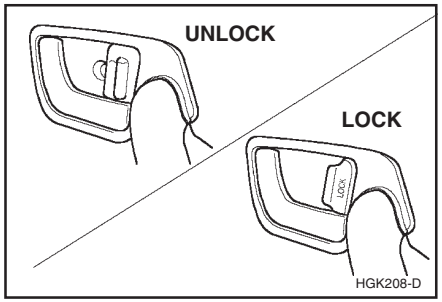

To lock the doors from the inside, simply close the door and push the lock switch to the "LOCK" position. When this is done, neither the outside nor the inside door handle can be used.

NOTE:

When the door is locked, the red mark on the switch is not visible.

B040G01GK-GAT

Central Door Lock

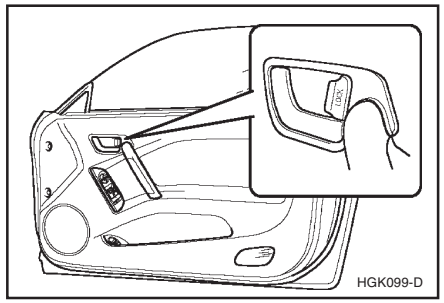

The central door locking is operated by pushing the driver's door lock switch toward the front or rear of the vehicle. If the passenger door is open when the switch is pushed, the door will remain locked when closed.

NOTE:

- **When pushing the switch toward the rear, all doors will unlock.**
  When pushing the switch toward the front, all doors will lock.
- **When the door is unlocked, the red mark on the switch is visible.**
- **The central door locking is operated by turning the key (driver's door only) toward the front or rear of the vehicle.**

B070A01A-AAT

THEFT-ALARM SYSTEM

(Not all models)

This system is designed to provide protection from unauthorized entry into the car. This system is operated in three stages: the first is the "Armed" stage, the second is the "Alarm" stage, and the third is the "Disarmed" stage. If triggered, the system provides an audible alarm with blinking of the turn signal light.

B070B01GK-EAT

Armed Stage

Park the car and stop the engine. Arm the system as described below.

1) Remove the ignition key from the ignition switch.
2) Make sure that the engine bonnet and hatchabck door are locked.
3) Lock the doors using the transmitter of the keyless entry system.

After completion of the steps above, the turn signal lamp will blink once to indicate that the system is armed.

NOTE:

1) **If any door, hatchabck door or engine bonnet remains open, the system will not be armed.**
2) **If this happens, rearm the system as described above.**
3) **Once the system is armed, only the hatchabck door may be unlocked using the key without disarming the system.**
4) **If you don't open any doors within 30 seconds after locked the all doors by the key or the transmitter, the system is armed automatically.**

CAUTION:

Do not arm the system until all passengers have left the car. If the system is armed while a passenger(s) remains in the car, the alarm may be activated when the remaining passenger(s) leaves the car.

B070C01GK-EAT

Alarm Stage

The alarm will be activated if any of the following occur while the car is parked and the system is armed.

1) A front door is opened without using the key or the transmitter.
2) The hatchabck door is opened without using the key.
3) The engine bonnet is opened.

The siren will sound and the turn signal lamp will blink continuously for 30 seconds. To turn off the system, unlock the door with the transmitter.

CAUTION:

Avoid trying to start the engine while the system is armed.

B070D01GK-AAT

Disarmed Stage

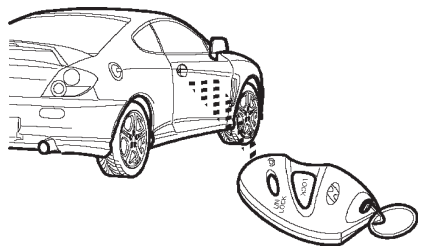

The system will be disarmed when either of the following steps are taken:

1) The driver's or passenger's door is unlocked by depressing the "UNLOCK" button on the transmitter.
2) In the middle of arming or after armed, it keeps for 30 seconds with the key is turned to the "ON" position.

After completing steps above, the turn signal lamp will blink twice to indicate that the system is disarmed.

NOTE:

Once the system has been disarmed, it can not be rearmed except by repeating the arming procedures.

B070E01GK-GAT

Replacing the battery

When the transmitter's battery begins to get weak, it may take several pushes on the button to lock or unlock the doors, and the LED will not light. Replace the battery as soon as possible.

Battery type : CR2032

Replacement instructions:

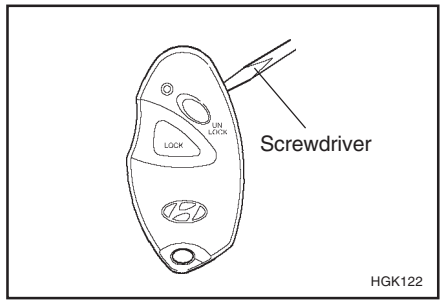

1. Seperate the case with a blade screwdriver as shown in the illustration.

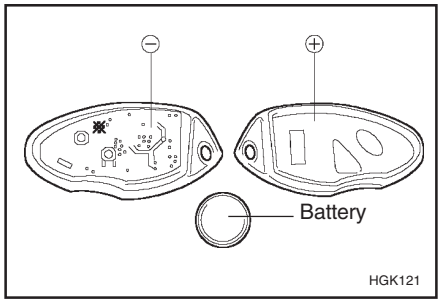

2. Remove the old battery from the case and note the polarity. Make sure the polarity of the new battery is the same(+side facing down), then insert it in the transmitter.

NOTE:

Replace a new battery within 30 seconds after remove the old one, if you replace a new battery after 30 seconds, take the following steps.

1) Turn the ignition key to the "ACC" position.
2) Make sure that the turn signal lamp blink once by pushing the "LOCK" or "UNLOCK" button on the transmitter.

B050A01GK-AAT

DOOR WINDOWS

Power window (Not all models)

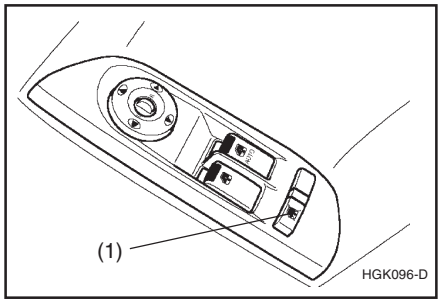

The power windows operate only when the ignition key is in the "ON" position. The main switches are located on the driver's arm rest and control the front windows on the respective sides of the vehicle. The windows may be opened by depressing the front portion of the switch. To stop at the desired opening, release the switch. The window may be closed by pulling the front portion of the switch. In order to prevent operation of the passenger front window by passenger, a window lock switch (1) is provided on the arm rest of the driver's door. To disable the passenger's power window, push the window lock switch. To revert to normal operation, push in on the window lock switch again.

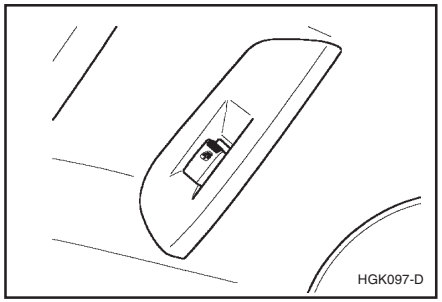

CAUTION:

Never try to operate the main switch and sub-switch in opposing directions at the same time. If this is done, the window will stop and cannot be opened or closed.

Auto-Down Window (Driver's Side) (Not all models)

The Auto-Down window is moved to its fully open position by pushing the switch, and to stop at the desired position push in on the switch again.

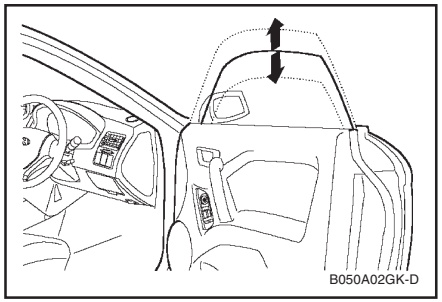

WARNING:

- **Be careful that head, hands and body are not trapped by a closing window.**
- **If passengers remain in the car when you leave, especially if a child remains alone, always remove the ignition key for their safety.**

SB070A1-E

FRONT SEAT ADJUSTMENT

WARNING:

Front seat adjustments must not be undertaken whilst the vehicle is in motion. Loss of control of the vehicle may result if seat adjustments are made whilst the vehicle is in motion.

SB070B1-E

Front seat rake adjustment

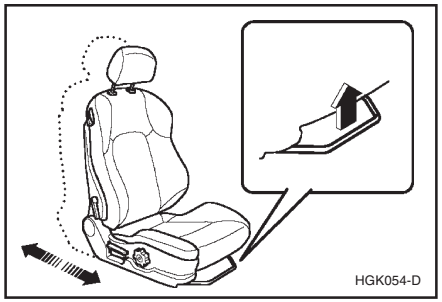

The front seat rake adjustment is performed by raising the lever at the front of the seat base and sliding the seat to the desired position. At this position the lever should be released and the seat rocked to and fro to ensure that the mechanism has locked.

SB070C1-E

Front seat recline adjustment

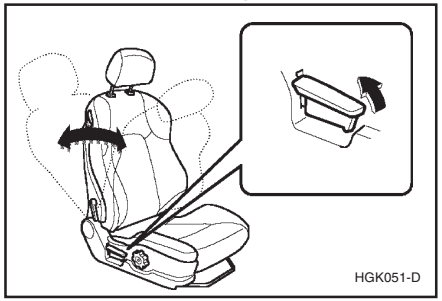

The front seat back recline angle may be adjusted by leaning forward slightly and raising the recline adjustment lever at the side of the seat. When the seatback is at the desired angle, the lever should be released. Ensure that the seatback is locked before driving the vehicle.

SB070D1-E

Head restraint adjustment

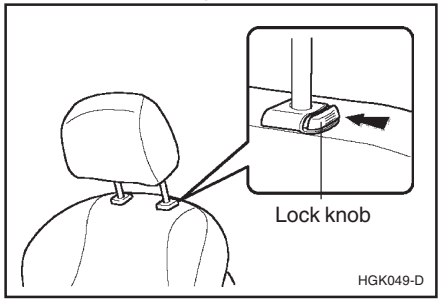

To raise the head restraint, pull it up. To lower it, push the head restraint down. For maximum effectiveness in the event of an accident, the restraint must be adjusted so that the restraint is approximately at the level of the seat occupant's ears. The restraint must never be so adjusted that it is centred about the level of the seat occupant's neck.

WARNING:

Do not operate the vehicle with the restraints removed. The restraints provide protection against neck injury when installed and correctly adjusted.

SB070E1-E

Lumbar support adjustment (Not all models)

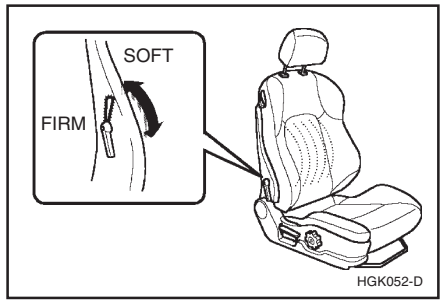

Some models are fitted with adjustable driver seat lumbar support which may be used to increase the amount of lumbar support offered by the seat back. Adjustment is performed by moving the handle at the side of the backrest in a forward direction to increase the support.

FB070F1-F

Seat Cushion Height Adjustment (Driver's seat only) (Not all models)

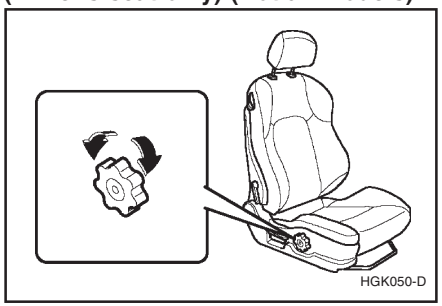

To raise or lower the front part of the seat cushion, turn the knob forward or rearward.

B100A01Y-AAT

SEAT WARMER (Not all models)

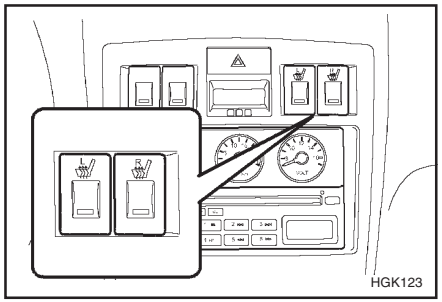

The seat warmer is provided to warm the front seats during cold weather. With the ignition key in the "ON" position, push either of the switches to warm the driver's seat or the passenger's seat. During mild weather or under conditions where the operation of the seat warmer is not needed, keep the switches in the "OFF" position.

B129A01F-AAT

REAR SEAT POSITIONS

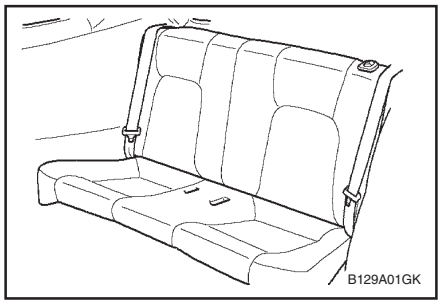

WARNING:

This vehicle contains two rear seating positions only and a seat belt for each seating position. Thus, never permit more than two occupants to ride in the rear seat because an unrestrained occupant could be seriously injured or killed in the event of a vehicle crash.

B130A01GK-DAT

REAR SEAT ENTRY (Walk in device)

The driver and front passenger's seatback should be tilted to enter the rear seat.

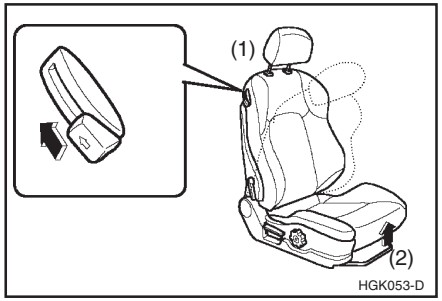

By pulling up the walk in device lever (1) at the right-up side of the driver side seatback, the seatback will tilt forward. And then pull the lock release lever (2) up with moving the seat forward.

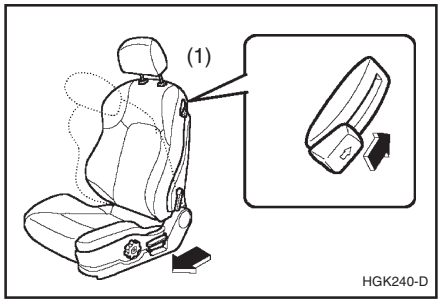

By pulling up the walk in device lever (1) at the left-up side of the passenger side seatback, the seatback will tilt forward. And then push the seat forward to enter the occupants.

Recliner Memory

By pulling up the walk in device lever (1) seatback is reclined and return to the memorized original position.

WARNING:

Don't drive with reclining of the passenger side seatback. It is dangerous to move it. Be sure the seatback is fix firmly or not before driving.

B099A01F-AAT

BEFORE FOLDING THE REAR SEATS

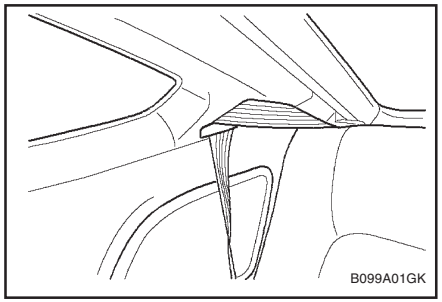

In order to prevent the shoulder belt from being damaged, the shoulder belt must be passed through the hanger. And then fold the rear seat downwards.

CAUTION:

Seat belt must be removed from the hanger when seat belt is in use.

SB480A1-E

FOLDING REAR SEAT (Not all models)

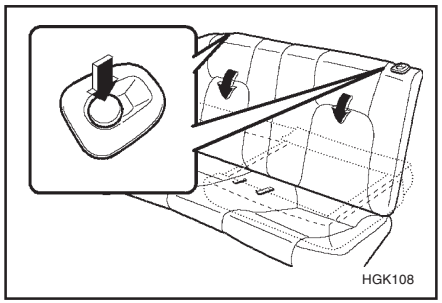

The rear seatbacks may be folded to facilitate the carriage of long items or to increase the luggage capacity of the vehicle.

- o To unlock the seatback, release the catch by operating the lock knob, pull the seatback forward and lower to the folded position.
- o When the seatback is returned to the upright position, ensure that the latching mechanism has engaged and that the seat may not move unintentionally.
- o Luggage which is carried within the passenger compartment must be securely restrained in order to prevent injury in the event of sudden deceleration.

WARNING:

The folding rear seats are intended to allow the carriage of longer objects than could otherwise be accommodated. Do not allow passengers to sit on top of the folded-down seatback whilst the car is in motion since the folded seat does not provide a suitable sitting facility and no seat belts are available for use. Objects carried on the folded seatback should not extend higher than the top of the front seats and must be securely restrained to prevent injury or damage during sudden deceleration.

SB090A1-E

SEAT BELT PRECAUTIONS

Seat belts should be worn at all times by all occupants front and rear. The possibility of injury or the severity of injuries suffered in the event of an accident will be greatly reduced by the wearing of seat belts.
In addition the following recommendations should be observed.

SB090B1-E

Babies/Small Children

Babies and small children must be restrained using a restraint system specifically designed for this purpose. Under no circumstances should a child be carried in the vehicle without the use of a suitable restraint which meets the regulations in force in the country where the vehicle is in operation.

SB090C1-E

Larger Children

Larger children should occupy the rear seat and be restrained at all times. The restraint may take the form of a special safety belt or the original factory fitted seat belt used in conjunction with an approved booster cushion depending upon the size and weight of the child. Under no circumstances should children be allowed to travel standing, kneeling or lying on the seat.
Never allow children to ride in the front passenger seat.

SB090O1-E

Pregnant Women

The use of a seat belt is recommended for pregnant women. The seat belt should be worn as low and snugly as possible across the hips, not across the abdomen. A qualified Medical Practitioner should be consulted for further information.

SB090E1-E

Injured Persons

A seat belt should be used when an injured person is being transported. For specific recommendations, the advice of a qualified Medical Practioner should be sought.

SB090F1-E

Seat Belt Occupancy

The seat belts are designed to be used by one seat occupant only. The use of a seat belt by more than one person increases the levels of injury which may be sustained in the event of an accident.

SE090G1-E

Do Not Lie Down

To ensure that the maximum level of protection may be afforded by the seat belt system, all passengers should be sitting in an upright position throughout the journey. The seat belt will be unable to afford maximum protection if the front seats are at or near the fully reclined position.

SB090H1-E

CARE OF SEAT BELTS

Seat belt assemblies must never be disassembled or modified in any way. In addition, care should be exercised to ensure that the belt assemblies do not become damaged by being trapped in seat mechanisms, door shuts etc.

SB090I-E

Periodic Inspection

It is recommended that all seat belts be inspected periodically for wear or damage of any kind. Parts of the system that are damaged should be replaced as soon as possible. Under no circumstances must any part of the seat belt assemblies be dismantled or repaired.

SB090J1-E

Keep Belts Clean and Dry

Seat belts should be kept clean and dry. If belts become dirty, they can be cleaned using a mild soap solution and warm water. Bleach, dye, strong detergents or abrasives should not be used since the fabric may become damaged and weakened.

SB090K1-E

Replacement of Seat Belts

The entire seat belt assembly or assemblies should be replaced if the vehicle has been involved in an accident even if no damage is evident. Additional questions concerning seat belt operation should be directed to a Hyundai Dealer.

SB090O1-F

FRONT SEATBELT PIVOT HEIGHT ADJUSTMENT (Not all models)

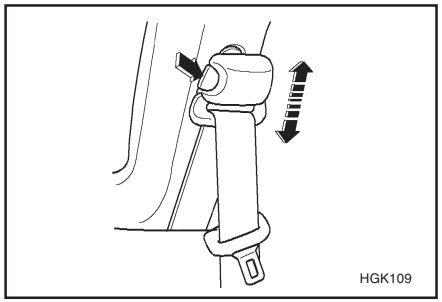

The location of the upper anchorage point can be set (for greater belt comfort and security) to any one of five preset positions. To adjust the seat belt pivot push the knob upward or downward to the required setting, ensuring that it engages one of the preset positions (on releasing the knob).
The height adjuster must always be locked into position while the vehicle is stationary. Do not attempt to adjust the height of the upper anchorage point while the vehicle is moving.
If you are any doubt as to the method of adjustment or the optimum height position for your front seat belt always contact your nearest Hyundai Dealer.

WARNING:

- **The height adjuster must be in the locked position when the vehicle is moving.**
- **The misadjustment of height of the shoulder belt could reduce the effectiveness of the seat belt in a crash.**

SB090P1-E

SEAT BELTS (3-Point Type)

To Fasten The Seat Belt

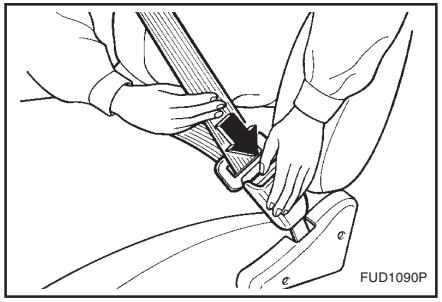

The seat belts are fastened by pulling the belt buckle towards the seat belt stalk and inserting the metal tongue of the buckle into the stalk. The buckle should be firmly pressed into the stalk until locked which will be indicated by an audible "click".

The length of the seat belt webbing will be automatically adjusted by the seat belt mechanism to allow the wearer maximum freedom of movement whilst the belt is being worn. However, in the event of rapid deceleration or impact, the belt mechanism will automatically lock.

The mechanism will also lock if the seat belt webbing is withdrawn too quickly when the belt is being fastened or if attempts are made to withdraw the webbing whilst the vehicle is not on level ground. Should the seat belt lock under these conditions, it will be possible to release the mechanism by allowing a small amount of webbing to be retracted and the belt withdrawn again.

SB090Q1-F

Adjusting Your seat Belt

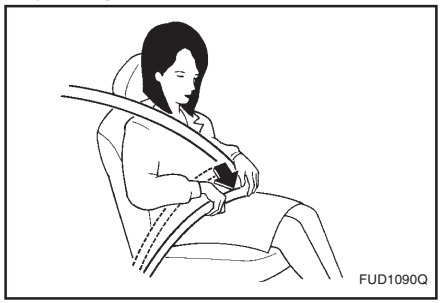

You should place the belt as low as possible on your hips, not on your waist. If the belt is located too high on your body, you could slide under it in case of accident or a sudden stop. This could result of death, serious injury or property damage. Both arms should not be under or over the belt. Rather, one should be over and the other under, as shown in the illustration.

SB090R1-F

To Release the Seat Belt

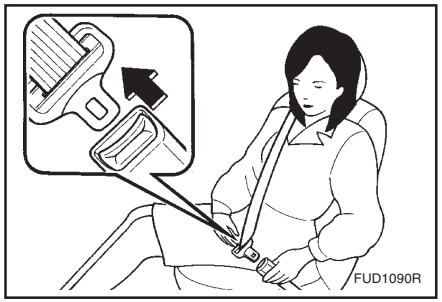

The seat belt is released by pressing the release button in the locking buckle.

When it is released, the belt should automatically draw back into the retractor.

If this does not happen, check the belt to be sure it is not twisted, then try again.

B230A02GK-EAT

CHILD RESTRAINT SYSTEM

Children riding in the car should sit in the rear seat and must always be properly restrained to minimize the risk of injury in an accident, sudden stop or sudden maneuver. According to accident statistics, children are safer when properly restrained in the rear seats than in the front seat. Larger children should use one of the seat belts provided.

You are required by law to use safety restraints for children. If small children ride in your vehicle you must put them in a child restraint system (safety seat).

Children could be injured or killed in a crash if their restraints are not properly secured. For small children and babies, a child seat or infant seat must be used. Before buying a particular child restraint system, make sure it fits your car seat and seat belts, and fits your child. Follow all the instructions provided by the manufacturer when installing the child restraint system.

WARNING:

- **A child restraint system must be placed in the rear seat. Never install a child or infant seat on the front passenger's seat. Should an accident occur and cause the passenger side airbag to deploy, it could severely injure or kill an infant or child seated in an infant or child seat. Thus, only use a child restraint in the rear seat of your vehicle.**
- **Since a safety belt or child restraint system can become very hot if it is left in a closed vehicle, be sure to check the seat cover and buckles before placing a child there.**
- **When the child restraint system is not in use, store it in the boot or fasten it with a safety belt so that it will not be thrown forward in the case of a sudden stop or an accident.**
- **Children who are too large to be in a child restraint should sit in the rear seat and be restrained with the available lap/shoulder belts. Never allow children to ride in the front passenger seat.**
- **Always make sure that the shoulder belt portion of the outboard lap/shoulder belt is positioned midway over the shoulder, never across the neck or behind the back. Moving the child closer to the center of the vehicle may help provide a good shoulder belt fit. The lap belt portion of the lap/shoulder belt must always be positioned as low as possible on the child's hips and as snug as possible.**
- **If the seat belt will not properly fit the child, we recommend the use of an approved booster seat in the rear seat in order to raise the child's seating height so that the seat belt will properly fit the child.**
- **Never allow a child to stand up or kneel on the seat.**
- **Never use an infant carrier or child safety seat that "hooks" over a seatback; it may not provide adequate security in an accident.**
- **Never allow a child to be held in a person's arms while they are in a moving vehicle, as this could result in serious injury to the child in the event of an accident or a sudden stop. Holding a child in a moving vehicle does not provide the child with any means of protection during an accident, even if the person holding the child is wearing a seat belt.**
- **If the safety seat is not anchored properly, the risk of a child being seriously injured or killed in a collision greatly increases.**

B230G01A-GAT

Installation on the Outboard Rear Seats

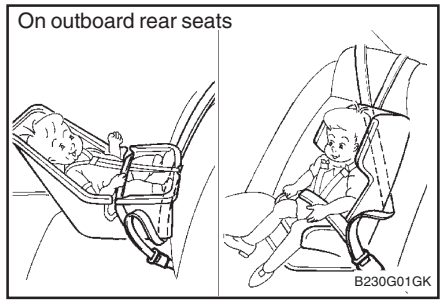

To install a child restraint system in the outboard rear seats, extend the shoulder/lap belt from its retractor. Install the child restraint system, buckle the seat belt and allow the seat belt to take up any slack. Make sure that the lap portion of the belt is tight around the child restraint system and the shoulder portion of the belt is positioned so that it cannot interfere with the child's head or neck. After installation of the child restraint system, try to move it in all directions to be sure the child restraint system is securely installed.
If you need to tighten the belt, pull more webbing toward the retractor. When you unbuckle the seat belt and allow it to retract, the retractor will automatically revert back to its normal seated passenger emergency locking usage condition.

NOTE:

- **Before installing the child restraint system, read the instructions supplied by the child restraint system manufacturer.**
- **If the seat belt does not operate as described, have the system checked immediately by your authorized Hyundai dealer.**

WARNING:

Do not install any child restraint system in the front passenger seat. Should an accident occur and cause the passenger side airbag to deploy, it could severely injure or kill an infant or child seated in an infant or child seat. Therefore, only use a child restraint system in the rear seat of your vehicle.

B230B02GK-GAT

Using a Child Restraint System with "Tether Anchorage" System

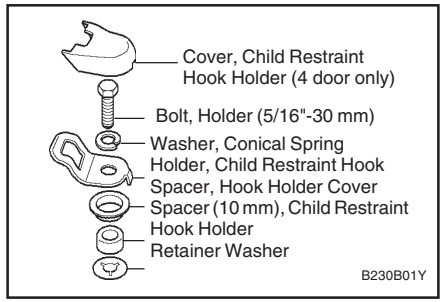

For small children and babies, the use of a child seat or infant seat is strongly recommended. This child seat or infant seat should be of appropriate size for the child and should be installed in accordance with the manufacturer's instructions. It is further recommended that the seat be placed in the vehicle's rear seat since this can make an important contribution to safety. Your vehicle is provided with two child restraint hook holders for installing the child seat or infant seat.

B230C03A-GAT

Securing a Child Restraint System with "Tether Anchorage" System

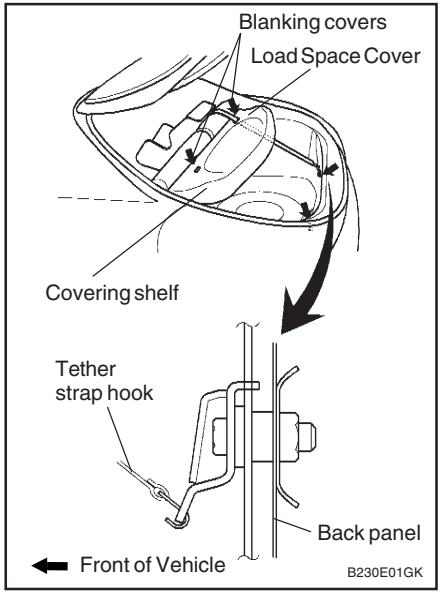

Two child restraint hook holders are located on the vertical back panel.
To install the child restraint seat, remove the blanking covers on the covering shelf.

1. Route the child restraint seat strap over the seatback.
   For vehicles with adjustable headrest, route the tether strap under the headrest and between the headrest posts, otherwise route the tether strap over the top of the seatback.
2. Remove the load space cover.
3. Connect the tether strap hook to the child restraint hook holder and tighten to secure the seat.

B230C04A-GAT

Securing a Child Restraint System with "ISOFIX" System and "Tether Anchorage" System

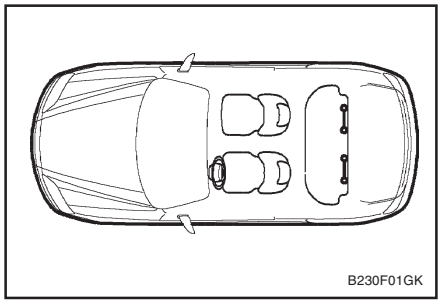

ISOFIX is a standardised method of fitting child seats that eliminates the need to use the standard adult seat belt to secure the seat in the vehicle. This enables a much more secure and positive location with the added benefit of easier and quicker installation.

An ISOFIX-seat can only be installed if it has vehicle-specific approval in accordance with the requirements of ECE-R44. For your Hyundai, the Hyundai ISOFIX GR1 / Hyundai Duo / Römer ISOFIX GR1 and the Römer Duo ISOFIX / Britax Duo ISOFIX is approved according to the requirement ECE-R44. This seat has been tested extensively by Hyundai and is recommended for your Hyundai.

NOTE:
At present, this seat is the only one complying with that provision. In case that other manufacturers will furnish proof of a respective certification, Hyundai is going to evaluate this seat carefully and will give a recommendation provided that seat complies to the law. Please ask your Hyundai dealer in this respect.

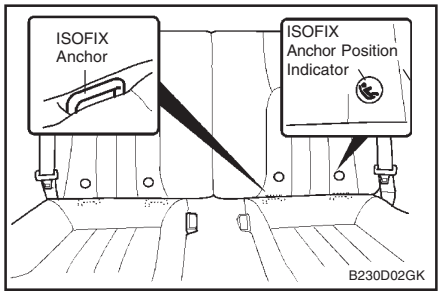

On each side of the rear seat, between the cushion and backrest, are located a pair of ISOFIX anchorage points together with a top tether mounting on the luggage compartment. During the installing, the seat has to be engaged at the anchorage-points in a way you can hear it clicking (check by pulling!) and has to be fixed with the Top Tether-belt on the belonging point in the luggage-compartment. The installing and the use of a child-seat has to be done according to the installing-manual, which is added to the ISOFIX-seat.

NOTE:
An ISOFIX-child-seat can only be installed if the seat has a vehicle-specific approval according to ECE-R44. Before using the ISOFIX-child-seat, which was bought for another car, ask your Hyundai-dealer whether this seat-type is approved and recommended for your Hyundai.

To secure the child restraint seat

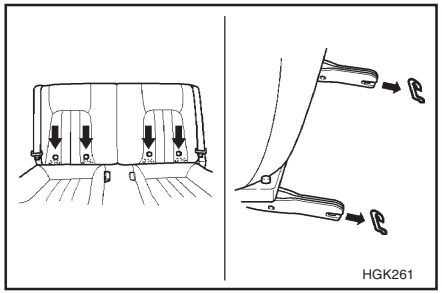

1. To engage the child restraint seat to the ISOFIX anchor, insert the child restraint seat latch into the ISOFIX anchor. Listen for the audible "click" sound.
2. Connect the tether strap hook to the child restraint hook holder and tighten to secure the seat. Refer to "Securing a Child Restraint System with the Tether Anchorage System" on page 1-15.

WARNING:
- **There is no rear centre seating position.**
- **Do not install a child restraint seat at the center of the rear seat using the vehicle's ISOFIX anchors. The ISOFIX anchors are only provided for the left and right outboard rear seating positions. Do not misuse the ISOFIX anchors by attempting to attach a child restraint seat in the middle of the rear seat to the ISOFIX anchors. In a crash, the child restraint seat ISOFIX attachments may not be strong enough to secure the child restraint seat properly in the center of the rear seat and may break, causing serious injury or death.**
- **Do not mount more than one child restraint to a child restraint lower anchorage point. The improper increased load may cause the anchorage points or tether anchor to break, causing serious injury or death.**
- **Attach the ISOFIX or ISOFIX-compatible child restraint seat only to the appropriate locations shown in the illustration.**
- **Always follow the installation and use instructions provided by the manufacturer of the child restraint.**

B230H03GK-GAT

Child Seat Restraint Suitability For Seat Position

Use child safety seats that have been officially approved and are appropriate for your children.

Age Group	Seating Position	
	1st Passenger	Rear Outboard
0 : Up to 10 kg (0 ~ 9 months)	X	X
0+ : Up to 13 kg (0 ~ 2 years)	X	X
I : 9kg to 18kg (9 months ~ 4 years)	X	L1
II & III : 15kg to 36kg (4 ~ 12 years)	X	X

L1: Suitable for "Römer ISOFIX GR1" approved for use in this mass group (Approval No: E1 R44-03301133)

X : Seat position not suitable for children in this mass group

NOTE:

This vehicle is equipped with thether anchorage and ISOFIX system to supply most suitable safety. we recommend to buy a child restraint system to use thether anchorage and ISOFIX system.

B180B01GK-GAT

Pre-tensioner Seat Belt (Not all models)

Your Hyundai vehicle is equipped with driver's and front passenger's pre-tensioner seat belts. The purpose of the pre-tensioner is to make sure that the seat belts fit tightly against the occupant's body in certain frontal collisions.

The pre-tensioner seat belts can be activated alone or, where the frontal collision is severe enough, together with the airbags.

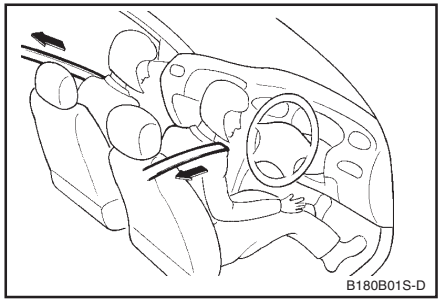

The pre-tensioner seat belt operates in the same way as an Emergency Locking Retractor (ELR) type of seat belt. When the vehicle stops suddenly, or if the occupant tries to lean forward too quickly, the seat belt retractor will lock into position. However, in certain frontal collisions, the pre-tensioner will activate and pull the seat belt into tighter contact against the occupant's body.

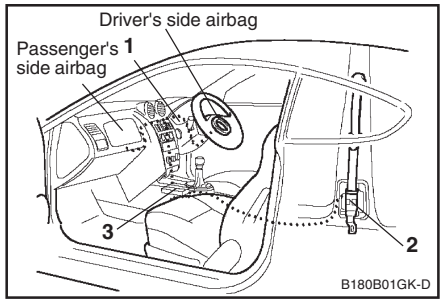

The seat belt pre-tensioner system consists mainly of the following components.

Their locations are shown in the illustration.

1. SRS airbag warning light
2. Seat belt pre-tensioner assembly
3. SRS control module

WARNING:

To obtain maximum benefit from a pre-tensioner seat belt:

1. **The seat belt must be worn correctly.**
2. **The seat belt must be adjusted to the correct position.**

NOTE:

- **Both the driver's and front passenger's pre-tensioner seat belts will be activated in certain frontal collisions. The pre-tensioner seat belts can be activated alone or, where the frontal collision is severe enough, together with the airbags.**
- **When the pre-tensioner seat belts are activated, a loud noise may be heard and fine dust, which may appear to be smoke, may be visible in the passenger compartment. These are normal operating conditions and are not hazardous.**
- **Although it is harmless, the fine dust may cause skin irritation and should not be breathed for prolonged periods. Wash your hands and face thoroughly after an accident in which the pre-tensioner seat belts were activated.**

CAUTION:

- **The control module that activates the SRS airbag controls the pre-tensioner seat belt also.**
- **If there is some malfunction in the pre-tensioner seat belt circuit, the warning light will illuminate even if there is no malfunction in the SRS airbag system. If the SRS airbag warning light does not illuminate or illuminates continuously when the ignition key is turned to "ON", or if it remains illuminated after blinking for approximately 6 seconds, or if it illuminates while the vehicle is being driven, please have an authorized Hyundai dealer inspect the pre-tensioner seat belt or SRS airbag system as soon as possible.**

WARNING:

- **Pre-tensioners are designed to operate only one time. After activation, pre-tensioner seat belts must be replaced. All seat belts, of any type, should always be replaced after they have been worn during a collision.**
- **The pre-tensioner seat belt assembly mechanisms become hot during activation. Do not touch the pre-tensioner seat belt assemblies for several minutes after they have been activated.**
- **Do not attempt to inspect or replace the pre-tensioner seat belts yourself. This must be done by an authorized Hyundai dealer.**
- **Do not strike the pre-tensioner seat belt assemblies.**
- **Do not attempt to service or repair the pre-tensioner seat belt system in any manner.**
- **Improper handling of the pre-tensioner seat belt assemblies, and failure to heed the warnings to not strike, modify, inspect, replace, service or repair the pre-tensioner seat belt assemblies may lead to improper operation or inadvertent activation and serious injury.**
- **Always wear the seat belts when driving or riding in a motor vehicle.**

B240A01GK-GAT

SUPPLEMENTAL RESTRAINT (AIRBAG) SYSTEM (SRS) (Not all models)

Driver's Side Airbag

B240A01GK

Your Hyundai is equipped with a Supplemental Restraint (Airbag) System. The indications of the system's presence are the letters "SRS AIR BAG" embossed on the ornament in the steering wheel and the passenger's side front panel pad above the glove box.

The Hyundai SRS consists of airbags installed under the pad covers in the center of the steering wheel and the passenger's side front panel above the glove box. The purpose of the SRS is to provide the vehicle's driver and/or the front passenger with additional protection than that offered by the seat belt system alone, in case of a frontal impact of sufficient severity.

NOTE:
Be sure to read information about the SRS on the labels provided on the backside of the sun visor and in the glove box.

WARNING:

- **As its name implies, the SRS is designed to work with, and be supplemental to, the driver's and the passenger's three point seat belt systems and is not a substitute for them. Therefore your seat belts must be worn at all times while the vehicle is in motion. In addition, the airbags deploy only in certain frontal impact conditions severe enough to cause significant injury to the vehicle occupants.**
- **The SRS is designed to deploy the airbags only when an impact is sufficiently severe and when the impact angle is less than 30° from the forward longitudinal axis of the vehicle and will not deploy in side, rear or rollover impacts. Additionally, the airbags will only deploy once. Thus, seat belts must be worn at all times.**
- **Front airbags are not intended deploy in light collisions in which protection can be provided by the seat belt.**
- **Front airbags are not intended to deploy in side-impact, rear-impact or rollover crashes. In addition, airbags will not deploy in frontal crashes below the deployment threshold speed.**

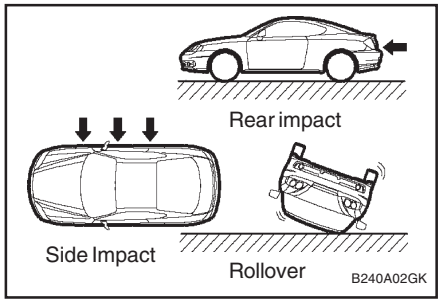

- **The driver should sit back as far as possible while still maintaining control of the vehicle. If you are sitting too close to the airbag, it can cause death or serious injury when it inflates.**
- **No objects should be placed over or near the airbag modules on the steering wheel, instrument panel, and the front passenger's panel above the glove box, because any such object could cause harm if the vehicle is in a crash severe enough to cause the airbags to inflate.**
- **If the airbags inflate, they must be replaced by an authorized Hyundai dealer.**
- **Do not tamper with or disconnect SRS wiring, or other components of the SRS system. Doing so could result in injury, due to accidental firing of the airbags or by rendering the SRS inoperative.**
- **Do not install a child restraint system in the front passenger seat position. A child restraint system must never be placed in the front seat. The infant or child could be severely injured or killed by an airbag deployment in case of an accident.**
- **Do not allow children to ride in the front passenger seat. If older children (teenages and older) must ride in the front seat, make sure they are always properly belted and that the seat is moved back as far as possible.**
- **For maximum safety protection in all types of crashes, all occupants including the driver should always wear their seat belts whether or not an airbag is also provided at their seating position to minimize the risk of severe injury or death in the event of a crash. Do not sit or lean unnecessarily close to the airbag while the vehicle is in motion.**
- **The SRS airbag system must deploy very rapidly to provide protection in a crash. If an occupant is out of position because of not wearing a seat belt, the airbag may forcefully contact the occupant causing serious or fatal injuries.**

B240B01GK-AAT

SRS Components and Functions

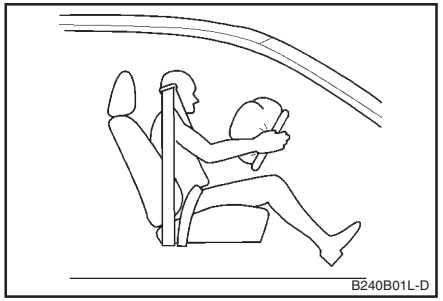

The SRS consists of the following components:

- Driver's Side Airbag Module
- Passenger's Side Airbag Module
- SRS Service Reminder Indicator (SRI)
- SRS Control Module (SRSCM)

The SRSCM continually monitors all elements while the ignition is "ON" to determine if a frontal or near-frontal impact is severe enough to require airbag deployment.

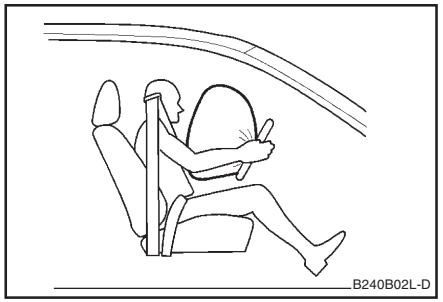

The SRS service reminder indicator (SRI) on the instrument panel will blink for about 6 seconds after the ignition key is turned to the "ON" position or after the engine is started, after which the SRI should go out.

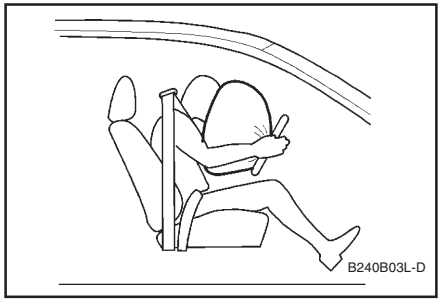

The airbag modules are located both in the centre of the steering wheel and in the front passenger's panel above the glove box. When the SRSCM detects a considerable impact to the front of the vehicle, it will automatically deploy the airbags.

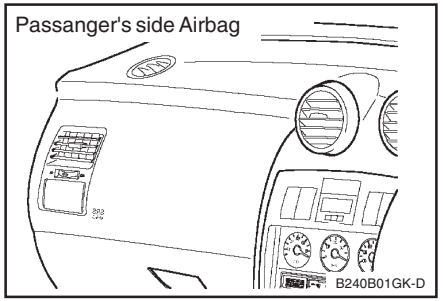

CAUTION:

Do not install or place any accessories (drink holder, cassette holder, sticker, etc) on the front passenger's panel above the glove box in the vehicle with passenger's side air bag. Such objects may become dangerous projectiles and cause injury if the passenger's side air bag inflates.

Upon deployment, tear seams molded directly into the pad covers will separate under pressure from the expansion of the airbags. Further opening of the covers then allows full inflation of the airbags.

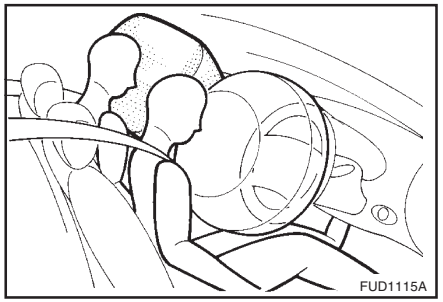

A fully inflated airbag in combination with a properly worn seat belt slows the driver's or the passenger's forward motion, thus reducing the risk of head and chest injury.
After complete inflation, the airbag immediately starts deflating, enabling the driver to maintain forward visibility.

CAUTION:

When installing a container of liquid air freshener inside a vehicle, do not place it near the instrument cluster nor on the instrument panel pad surface. If there is any leakage from the air freshener onto these areas (instrument cluster, instrument panel pad or air ventilator), it may damage these parts. If the liquid from the air freshener does leak onto these areas, wash them with water immediately.

WARNING:

- **When the SRS is activated, there may be a loud noise and fine dust will be released throughout the vehicle. These conditions are normal and are not hazardous. However, the fine dust generated during airbag deployment may cause skin irritation. Be sure to wash your hands and face thoroughly with lukewarm water and a mild soap after an accident in which the airbags were deployed.**
- **The SRS can function only when the ignition key is in the "ON" position. If the SRS SRI does not come on or illuminates continuously when the ignition key is turned to "ON", or continuously remains on after flashing for about 6 seconds when the ignition key is turned to the "ON" position, or after the engine is started, or comes on while driving, the SRS is not working properly. If this occurs, have your vehicle immediately inspected by your Hyundai dealer.**
- **Before you replace a fuse or disconnect a battery terminal, turn the ignition key to the "LOCK" position or remove the ignition key. Never remove or replace the air bag related fuse(s) when the ignition key is in the "ON" position. Failure to heed this warning will cause the SRS SRI to illuminate.**

B990B02Y-AAT

Side Airbag (Not all models)

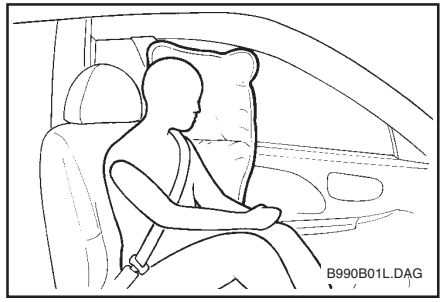

Your Hyundai is equipped with a side airbag in each front seat. The purpose of the airbag is to provide the vehicle's driver and/or the front passenger with additional protection than that offered by the seatbelt alone. The side impact airbags are designed to deploy only during certain side-impact collisions, depending on the crash severity, angle, speed and point of impact. The air bags are not designed to deploy in all side impact situations.

WARNING:

- **For best protection from the side airbag system and to avoid being injured by the deploying side airbag, both front seat occupants should sit in an upright position with the seat belt properly fastened. The driver's hands should be placed on the steering wheel at the 9:00 and 3:00 o'clock positions. The passenger's arms and hands should be placed in their laps.**
- **Do not use any accessory seat covers.**
- **Use of seat covers could prevent or reduce the effectiveness of the system.**
- **Do not install any accessories on the side or near the side airbag.**
- **Do not use excessive force on the side of the seat.**
- **Do not place any objects over the airbag or between the airbag and yourself.**
- **Do not place any objects (an umbrella, bag, etc.) between the front door and the front seat. Such objects may become dangerous projectiles and cause injury if the supplemental side air bag inflates.**
- **To prevent unexpected deployment of the side air bag that may result in personal injury,avoid impact to the side airbag sensor when the ignition key is on.**

FB110C2-F

SRS Care

The SRS is virtually maintenance-free and so there are no parts you can safely service by yourself. The entire SRS system must be inspected by an authorized Hyundai dealer 10 years after the date that the vehicle was manufactured.

Any work on the SRS system, such as removing, installing, repairing, or any work on the steering wheel must be performed by a qualified Hyundai technician.
Improper handling of the SRS system may result in serious personal injury.

WARNING:

- **Extreme Hazard! Do not use a rearward facing child restraint on a seat protected by an airbag in front of it!**
- **Modification to SRS components or wir-ing, including the addition of any kind of badges to the pad cover or modifications to the body structure, can adversely affect SRS performance and lead to possible injury.**
- **For cleaning the horn pad, use only a soft, dry cloth or one which has been moistened with plain water. Solvents or cleaners could adversely affect the airbag cover and proper deployment of the system.**
- **No objects should be placed over or near the airbag module on the steering wheel, because any such object could cause harm if the vehicle is in a crash severe enough to cause the airbag to inflate.**
- **If the airbag inflates, it must be replaced by an authorized Hyundai dealer.**
- **Do not tamper with or disconnect SRS wiring, or other components of the SRS system. Doing so could result in injury, due to accidental firing of the airbag or by rendering the SRS inoperative.**
- **If components of the airbag system must be discarded, or if the vehicle must be scrapped, certain safety precautions must be observed. Your Hyundai dealer knows these precautions and can give you the necessary information. Failure to follow these precautions and procedures could increase the risk of personal injury.**

- **If you sell your vehicle, be sure to inform the new owner of these important points and make certain that this manual is transferred to the new owner together with the vehicle.**
- **If your car was flooded and has soaked carpeting or water on flooring, you shouldn't try to start engine; have car towed to authorized Hyundai dealer.**

B250A01GK-EAT

INSTRUMENTS AND CONTROLS

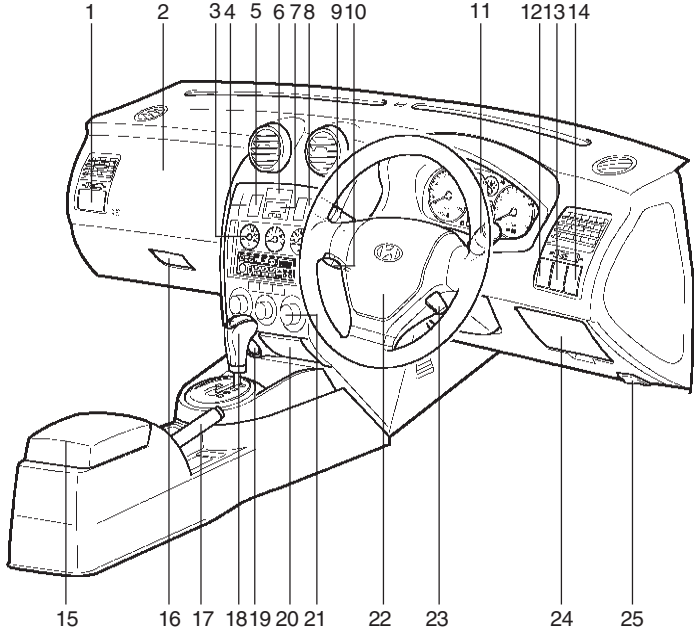

1. Passenger's side Drink Holder
2. Passenger's Side Air Bag (Not all models)
3. Multi Guage (Not all models)
4. Front Fog Light Switch (Not all models)
5. Rear fog Light Switch
6. Hazard Warning Switch
7. Digital Clock
8. Front Seat warmer (Not all models)
9. Windscreen Wiper/Washer Switch
10. Steering Wheel Tilt Lever (Not all models)
11. Multi-Function Light
12. Panel Brightness Control Knob (Rheostat Switch) (Not all models)
13. Traction Control System (Not all models)
14. HeadLight Leveling Device
15. Centre Console
16. Glove Box
17. Parking Brake Lever
18. Shift Lever
19. Cigarette Lighter
20. Ashtray
21. Heating and Cooling Controls
22. Horn and Driver Side Airbag
23. Cruise Control Switch (Not all models)
24. Fuse Box Relay
25. Boot Release Lever

CAUTION:

When installing a container of liquid air freshener inside a vehicle, do not place it near the instrument cluster nor on the instrument panel pad surface. If there is any leakage from the air freshener onto these areas (Instrument cluster, instrument panel pad or air ventilator), it may damage these parts. If the liquid from the air freshener does leak onto these areas, wash them with water immediately.

B260A01GK-EAT

INSTRUMENT CLUSTER AND INDICATOR LIGHTS

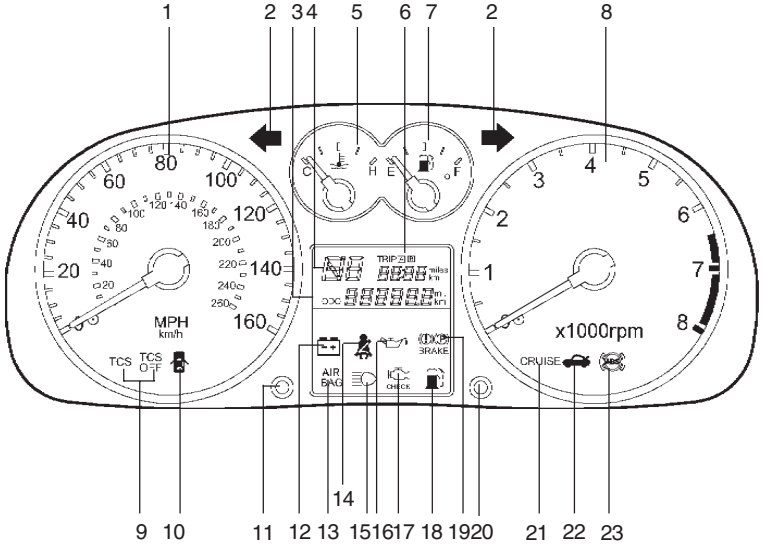

HGK026B

1. Speedometer
2. Turn Signal Indicator Light
3. Odometer/Trip Odometer
4. Automatic Transaxle Position Indicator Light (Not all models)
5. Coolant Temperature Gauge
6. Trip Computer
7. Fuel Gauge
8. Tachometer
9. Traction Control Indicator Light (Not all models)
10. Door Ajar Warning Light
11. Odometer/Trip Odometer Reset Knob
12. Charging System Warning Light
13. SRS (Airbag) Warning Light
14. Seat Belt Warning Light
15. High Beam Indicator Light
16. Oil Pressure Warning Light
17. Malfuction Indicator Light (Not all models)
18. Low Fuel Warning Light
19. Parking Brake/Brake Fluide Level Warning Light
20. Trip Computer Reset Knob
21. Cruise Indicator (Not all models)
22. Hatchback door Open Warning Light
23. Anti-Lock Brake Warning Light (Not all models)

B260B01GK-GAT

SRS (AIRBAG) SERVICE REMINDER INDICATOR (SRI)

The SRS service reminder indicator (SRI) comes on and flashes for about 6 seconds after the ignition key is turned to the "ON" position or after the engine is started, after which it will go out.

This light also comes on when the SRS is not working properly. If the SRI does not come on or illuminates continuously when the ignition key is turned to "ON", or continuously remains on after flashing for about 6 seconds when you turned the ignition key to the "ON" position or started the engine, or if it comes on while driving, have the SRS inspected by an authorized Hyundai Dealer.

260P02Y-EAT

ABS SERVICE REMINDER INDICATOR (Not all models)

When the key is turned to the "ON" position, the Anti-Lock Brake System SRI will come on and then go off in a few seconds. If the ABS SRI remains on, comes on while driving, or does not come on when the key is turned to the "ON" position, this indicates that there may be a problem with the ABS.
If this occurs, have your vehicle checked by your Hyundai dealer as soon as possible. The normal braking system will still be operational, but without the assistance of the anti-lock brake system.

CAUTION:
If the both ABS SRI and Parking Brake/Brake fluid level warning lights remain "ON" or come on while driving, there may be a problem with E.B.D (Electronic brake force distribution).
If this occurs, avoid sudden stops and have your vehicle checked by your Hyundai dealer as soon as possible.

SB210G1-E

TURN SIGNAL INDICATOR LAMPS

Operation of a turn signal is indicated by the warning lamp located in the instrument cluster. If the lamp fails to illuminate or does not flash, a malfunction within the turn signal system is indicated.

SB210J1-E

HIGH BEAM INDICATOR LAMP

The high beam indicator lamp will illuminate whenever the headlamps are switched to high beam of flash position.

SB210K1-E

OIL PRESSURE WARNING LAMP

CAUTION:
If the oil pressure lamp illuminates when the engine is running, an insufficient oil pressure level for continued safe operation of the engine exists. Continued operation of the engine in this condition may result in serious engine damage.

Under normal circumstances, the lamp will illuminate when the ignition is turned "on" and will be extinguished when the engine is started.
If the oil pressure warning lamp illuminates whilst the engine is running, stop the engine immediately and check the engine oil level. If the level is insufficient, add the required amount of oil as indicated by the engine oil dipstick. If the lamp fails to extinguish when the engine is restarted, do not continue to operate the vehicle.
If the oil pressure lamp illuminates during normal operation and the cause is not an insufficient oil level, or the lamp fails to illuminate when the ignition is turned "on", contact the nearest Hyundai dealer before further operating the vehicle.

B260H01GK-EAT

PARKING BRAKE/BRAKE FLUID LEVEL WARNING LAMP

WARNING:

In the event of problems being suspected with the braking system, the advice of the nearest Hyundai dealer must be sought before the vehicle is driven. Driving the vehicle with either an electrical or hydraulic braking system defect may be dangerous, resulting in accident or personal injury.

Warning lamp operation

The parking brake/brake fluid level warning lamp will be illuminated whenever the ignition switch is turned to the "ON" or "START" position when the parking brake is applied and must be extinguished in a three seconds after the engine starts.

If the warning lamp fails to extinguish or illuminates at any other time, the vehicle must be brought to rest in a safe location and the level of brake fluid in the reservoir checked. If the fluid level is incorrect, fluid conforming to DOT 3 or DOT 4 specifications should be added. If, after correcting the brake fluid level, the warning lamp continues to be illuminated, the advice of the nearest Hyundai dealer must be sought before the vehicle is driven again.

The Hyundai Lantra is equipped with a diagonally split dual braking system which will ensure that in the event of one of the brake circuits becoming defective, approximately fifty per cent of the normal braking performance will be available.

If failure of one of the circuits occurs, the required amount of pedal effort, pedal travel and stopping distance will be increased. Use of the gearbox is recommended to assist in bringing the vehicle to rest. The vehicle must not be driven once brake failure has occurred until the system has been repaired and is functioning normally.

The braking system employs a vacuum servo in order that the pedal efforts are reduced. Power for the servo is derived from the engine and therefore, in the event of the engine stopping or the vehicle being towed, pedal efforts will be substantially increased.

SB210M1-E

CHARGING SYSTEM WARNING LAMP

The charging system warning lamp should illuminate when the ignition switch is turned to the "ON" position and should be extinguished when the engine is started. If the lamp fails to illuminate when the ignition is turned "ON" or fails to extinguish after starting the engine, the nearest Hyundai dealer should be contacted. If the lamp illuminates whilst the vehicle is being driven, stop the vehicle as soon as it is safe to do so and check the condition of the generator drive belt. If the belt is in place and the tension is satisfactory, the advice of a Hyundai dealer should be sought.

CAUTION:

If the drive belt (generator belt) is loosen, broken, or missing while the vehicle is driving, there may be a serious malfunction, engine could overheat because this belt also drives the water pump.

SB210N2-E

HATCHBACK DOOR OPEN WARNING LAMP

The hatchback door warning lamp indicates when the hatchback door is open or is not fully closed. Ensure that the lamp has extinguished prior to driving the vehicle.

SB2100I-E

DOOR AJAR WARNING LAMP

The door ajar warning lamp indicates that a door is not correctly closed. Ensure that the lamp is extinguished prior to driving the vehicle.

SB210P1-E

LOW FUEL LEVEL WARNING LAMP

The low fuel warning lamp serves to warn the driver that the remaining fuel quantity is approximately 9 litres and that the vehicle should be refuelled. If the vehicle is driven for an extended period with the low fuel warning lamp illuminated there exists a possibility that misfiring due to fuel

shortage may occur. This situation must be avoided to prevent damage to the catalyst occurring.

B260C01GK-GAT

TRACTION CONTROL INDICATOR LIGHTS (Not all models)

The traction control indicators change operation according to the ignition switch position and whether the system is in operation or not.
They will illuminate when the ignition key is turned to the "ON" position, but should go out after three seconds. If the TCS-OFF indicator blinks or stays on, take your car to your authorized Hyundai dealer and have the system checked. See section 2 for more information about the TCS system.

B260N01GK-EAT

MALFUNCTION INDICATOR LAMP

This lamp illuminates when there is a malfunction of an exhaust gas related component, and the system is not functioning properly so that the exhaust gas regulation values are not satisfied. This lamp will also illuminate when the ignition key is turned to the "ON" position, and will go out after engine starting. If it illuminates while driving, or does not illuminate when the ignition key is turned to the "ON" position, take your car to your nearest authorized Hyundai dealer and have the system checked.

B260E01HP-GAT

SEAT BELT WARNING LIGHT (Not all models)

The seat belt warning light blinks for about 6 seconds when the ignition key is turned from the "OFF" position to "ON" or "START".

B260Q01E-GAT

CRUISE INDICATOR (Not all models)

The cruise indicator light in the instrument cluster is illuminated when the cruise control main switch on the end of the barrel is pushed.
The indicator light does not illuminate when the cruise control main switch is pushed a second time.
Information about the use of cruise control is beginning on page 1-48.

SB210S1-E

BRAKE PAD WEAR INDICATOR

The front brake disc pads are fitted with an audible wear indicator which will cause a high pitched noise to be emitted when the remaining amount of friction lining is below the specified value. When the wear indicator is heard, the brake pads should be replaced without delay to avoid damage occurring to the brake discs and a severe reduction in braking efficiency.

SB215A1-E

FUEL GAUGE

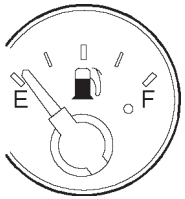

HGK133

The fuel gauge indicates the quantity of fuel remaining in the fuel tank.

NOTE:
The fuel gauge is not intended to give other than an approximate indication of the fuel level and is unsuitable for the purposes of calculating fuel consumption figures.

SB215B1-E

ENGINE COOLANT TEMPERATURE GAUGE

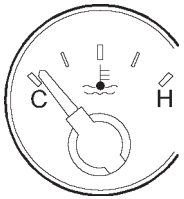

HGK132

The engine coolant temperature gauge indicates the engine coolant temperature and will, under normal circumstances, give an indication in the "Normal" or centre portion of the scale. Should the indication move into the upper or "Hot" portion of the scale, engine overheating is indicated. Under these circumstances, the vehicle should be brought to rest as soon as is safe to do so and the engine turned off. Once the engine has cooled somewhat, the coolant level and the condition of the generator/water pump drive belt should be checked. If the cause of the overheating cannot be readily established, the assistance of a Hyundai dealer should be sought.

WARNING:

The engine cooling system is pressurized and removal of the radiator cap when the engine is hot may cause hot water and steam to be ejected from the radiator resulting in burns and scalding. The radiator cap must only be removed when the engine has cooled. Do not add cold water to a hot engine to avoid the possibility of engine damage. The use of plain water in the cooling system is not recommended since the aluminium components of the cooling system require the use of a corrosion inhibitor found in the recommended Ethylene Glycol type anti freeze solutions.

SB215C1-E

SPEEDOMETER

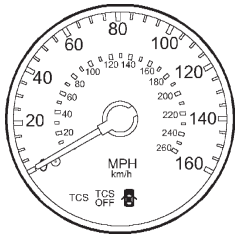

HGK130B

The speedometer indicates the vehicle speed in both miles and kilometres per hour.

SB215F1-E

TACHOMETER

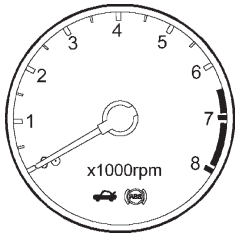

HGK131

The tachometer registers the speed of the engine in revolutions per minute (R.P.M.).

CAUTION:

The maximum safe engine operating speed is indicated by the white zone of the tachometer scale. The engine should not be operated beyond the beginning of this zone or serious engine damage may result.

B310B01GK-EAT

ODOMETER/TRIP ODOMETER

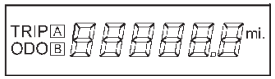

HGK028C

Function of digital odometer/trip odometer

Pushing in the reset switch on the right side of speedometer when the ignition switch is turned "ON" will display the following sequence:

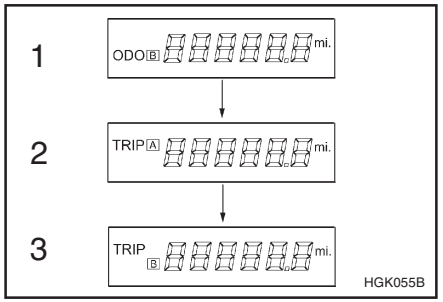

HGK055B

1. Odometer

The odometer records the total driving distance in miles, and is useful for keeping a record for maintenance intervals.

NOTE:
Any alteration of the odometer may void your warranty coverage.

2,3 Trip odometer

Records the distance of 2 trips in miles.
TRIP A: First distance you have traveled from your origination point to a first destination.
TRIP B: Second distance from the first destination to the final destination.

To shift from TRIP A to TRIP B, press the reset switch. When pressed for 1 second, it will reset to 0.

B400B01GK-EAT

TRIP COMPUTER

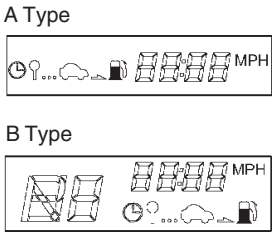

HGK095B

The trip computer is a microcomputer-controlled driver information system that displays information related to driving, such as distance to empty, average speed and drive time on the LCD.

RESET SWITCH

- o The reset switch is used to zero the multi-functional display mode.
- o Pushing in the reset switch on the left side of tacometer changes the display as follows;

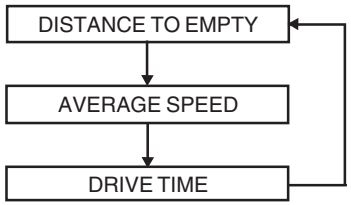

1. DISTANCE TO EMPTY

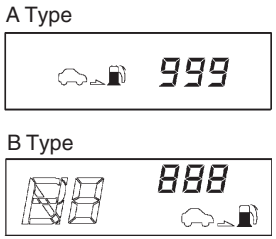

HGK056

- o This mode indicates the estimated distance to empty from the current fuel in the fuel tank and distance to empty symbol.
- o When refueling with more than 6 liters, the trip computer will recognize refueling.
- o When the battery has been reinstalled after being discharged or disconnected, drive more than 20 miles for an accurate distance to empty.

NOTE:

- **o If the distance to empty is indicated "- -", have the trip computer system checked by your authorized Hyundai dealer.**
- **o The distance to empty can differ from the actual tripmeter according to driving conditions.**
- **o The distance to empty can vary according to the driving conditions, driving pattern or vehicle speed.**

2. AVERAGE SPEED

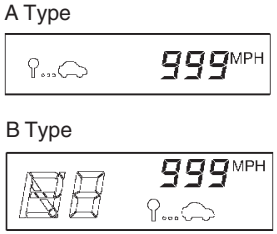

HGK057B

- o This mode indicates the average speed travelled since the last average speed reset.
- o Pressing the reset switch for more than 1 second, when the average speed is being displayed, clears the average speed to zero.

3. DRIVE TIME

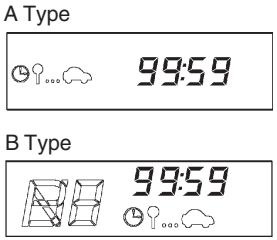

HGK058

- o This mode indicates the drive time travelled since the last drive time reset.
- o Pressing the reset switch for more than 1 second, when the drive time is being displayed, clears the drive time to zero.

B330C01GK-GAT

MULTI GAUGE (Not all models)

Multi gauge is consists of torque gauge, instantaneous fuel consumption gauge and volt gauge.

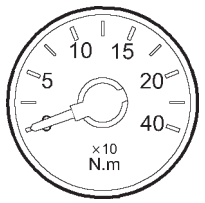

HGK229A

Torque gauge

It shows instantaneous change of the torque by rpm.

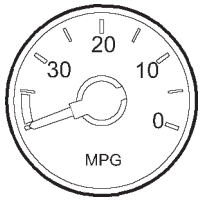

HGK230A

Instantaneous Fuel Consumption gauge

It shows instantaneous fuel consumption according to the driving condition. The more indicated figure is low, the more it indicates efficient driving situation.

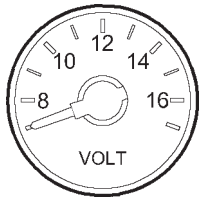

HGK231

Volt gauge

It shows moment volt change and makes for diver correspond to low volt situation.

SB220A1-E

MULTI FUNCTION SWITCH

Turn Signal Operation

To signal an intention to turn right, the switch lever should be pressed down. To signal an intention to turn left, the switch lever should be pushed upwards. In both instances, the turn signal lamps on one side of the car will flash and the warning lamp located in the instrument cluster will flash in sympathy. Upon completion of the manoeuvre, the lever will, under normal circumstances, return to the "Off" position. However, if the manoeuvre involved only a small movement of the steering wheel, the signal may need to be cancelled manually. If either turn signal indicator flashes more rapidly than normal or refuses to flash at all, a malfunction of the turn signal system may exist.

SB220B1-E

Lane Change Signal

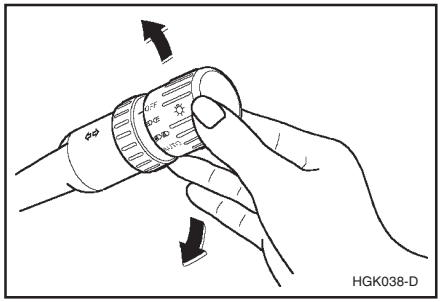

HGK038-D

To indicate an intention to change lanes, moving the lever slightly towards the direction of the relevant turn signal will cause the turn signal lamps to flash. When the lever is released, it will return to the "off" position.

SB220C2-E

LIGHTING SWITCH

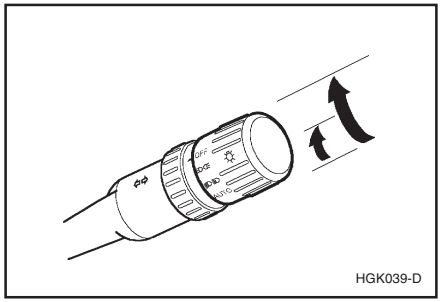

HGK039-D

The vehicle sidelamps and headlamps are operated by rotating the end of the turn signal switch barrel. To operate the parking lamps, rotating the switch to the first detent with ignition switch at the "OFF" position will cause the lamps to illuminate. To operate the headlamps, the turn signal switch barrel should be rotated to the second detent. The headlamps will only operate when the ignition switch is at the "On" position. If the ignition switch is turned to the "Off" position, only the parking lamps will function.

SB220D1-E

HIGH AND LOW BEAM

To turn on the headlight high beams, push the lever forward (away from you). For low beams, pull the lever back (toward you). The appropriate headlight beam indicator light will come on at the same time.

B340F01L-GAT

Auto Light (Not all models)

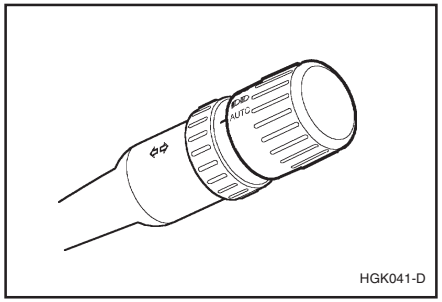

HGK041-D

To operate the auto light, turn the barrel on the end of the multi-function switch. If you set the multi-function switch to "AUTO", the tail lights and headlights will be turned automatically on or off according to external illumination.

SB220E1-E

HEADLAMP FLASH

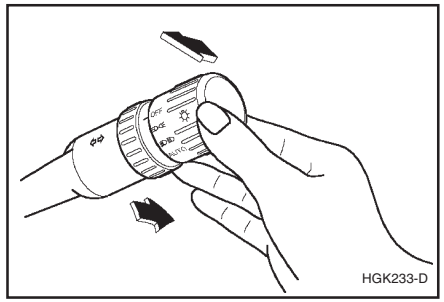

HGK233-D

The headlamps may be flashed by pulling the turn signal switch lever towards the steering wheel. The headlamps will be extinguished when the switch is released.

B350A01GK-EAT

WINDSCREEN WIPER/WASHER SWITCH

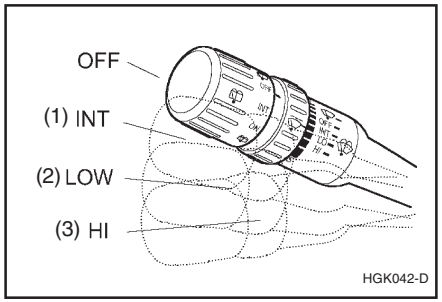

The windscreen wiper switch, dependent upon model, has three operating positions.
1. Intermittent wiper operation. (Not all models)
2. Low speed operation.
3. High speed operation.

NOTE:

To prevent damage to the wiper system, do not attempt to wipe away heavy accumulations of snow or ice.
Accumulated snow and ice should be removed manually. If there is only a light layer of snow or ice, operate the heater in the defrost mode to melt the snow or ice before using the wiper.

Mist Wiper Operation

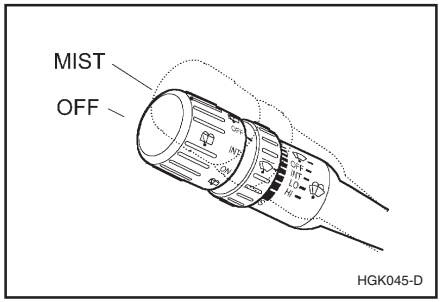

If a single wipe is desired in mist, move the windscreen wiper and washer control lever up.

SB230B1-E

VARIABLE INTERMITTENT WIPE FACILITY (Not all models)

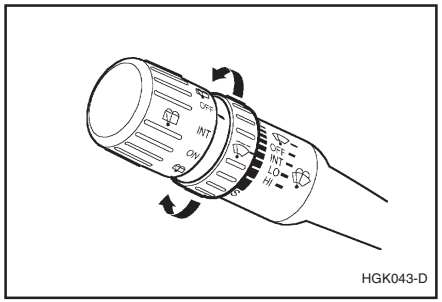

The variable intermittent wipe facility is operated by moving the windscreen wiper switch to the first position. The time period between wipes is adjusted by moving the rotary control on the windscreen wiper switch barrel.

SB230C1-E

WINDSCREEN WASHER OPERATION

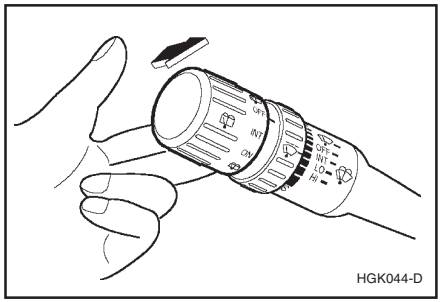

To use the windscreen washer, pull the wiper/washer lever toward the steering wheel. When the washers are operated, the wipers automatically make two passes across the windscreen. The washers continue to operate for as long as the lever is held at the washer position.

NOTE:

- **Do not operate the washers for more than 15 seconds continuously or when the fluid reservoir is empty.**

- **In icy or snowy weather, ensure that the wiper blades are not frozen to the glass prior to operating the wipers.**

B350A01O-EAT

Hatchback door Wiper And Washer Switch

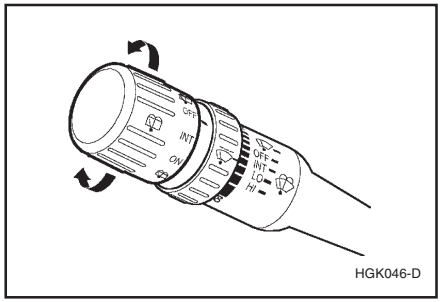

HGK046-D

1. :The washer fluid will be sprayed onto the rear window and the wiper operates while the rear window wiper barrel is placed in this position.
2. OFF
3. INT :To use the intermittent wiper feature, place the rear window wiper barrel in the "INT" position.
4. ON :When the point indicates the "ON", the rear window wiper operates continuously.

SB240A1-E

HAZARD WARNING SYSTEM

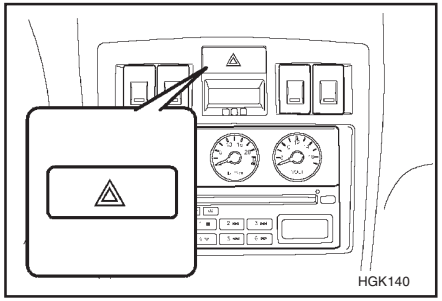
HGK140

The hazard warning system should be used whenever it becomes necessary to stop the car in a hazardous location. The hazard warning system is operated by depressing the switch at which time all turn signal lamps will flash simultaneously and the turn signal warning lamps located within the instrument cluster will flash simultaneously.
The hazard warning system may be turned off by depressing the switch again.

SB250A1-E

HEATED REAR WINDOW

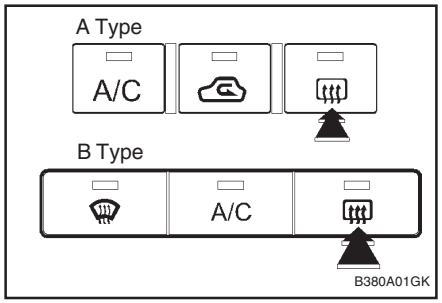

B380A01GK

To operate the heated rear window depress the switch shown. The heated rear window will automatically turn off after 15 minutes or when the ignition is turned off.
The system may be turned off manually by depressing the switch again.

CAUTION:

The inside of the rear windscreen should never be cleaned with a hard or sharp implement since damage to the heating element may occur. The glass should only be cleaned with a soft cloth or chamois leather with the use only of a mild detergent or proprietary glass cleaner where necessary. Only horizontal movement of the cloth should be made when cleaning the glass and care should be exercised to ensure that the heating elements are not damaged by rings or jewellery whilst the glass is being cleaned.

NOTE:
The engine must be running for the heated rear window to operate.

ZB190A1-A
DIGITAL CLOCK

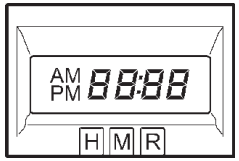

HGK143A

There are three control buttons for the digital clock. Their functions are:

HOUR - Push "H" to advance the hour indicated.
MIN - Push "M" to advance the minute indicated.
RESET - Push "R" to reset minutes to ":00" to facilitate resetting the clock to the correct time. When this is done:

Pressing "R" between 10 : 30 and 11 : 29 changes the readout to 11 : 00 Pressing "R" between 11 : 30 and 12 : 29 changes the readout to 12 : 00.

SB280A1-E
INSTRUMENT PANEL ILLUMINATION CONTROL

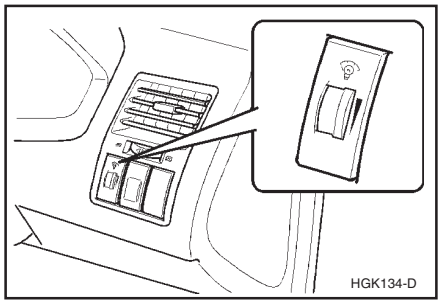
HGK134-D

The level of illumination intensity of the instrument panel may be varied by turning the control shown. The instrument panel will be illuminated when the side or head lamps are in operation.

SB290A1-F
CIGAR LIGHTER

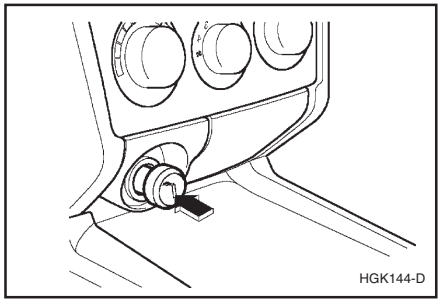
HGK144-D

For the cigar lighter to work, the key must be in the "ACC" or the "ON" position.
To use the cigar lighter, push the lighter all the way into its socket. When the element is heated, the lighter will pop out into the "ready" position.
Do not hold the cigar lighter at the depressed position which may result in damage to the vehicle wiring or an electrical fire.
If it is necessary to replace the cigarette lighter, use only a genuine Hyundai replacement part.

NOTE:
Do not use electric accessories or equipment other than the Hyundai genuine parts in the socket.

B430A01GK-AAT

FRONT ASHTRAY

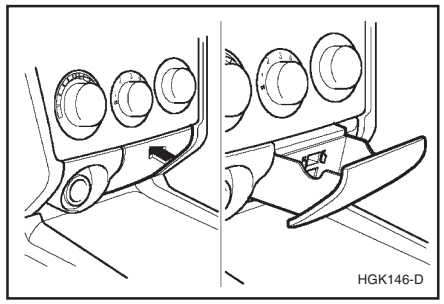

The front ashtray may be opened by pushing and releasing the ashtray door at its top edge.
To remove the ashtray in order to clean it, the metal ash receptacle should be lifted out from the ashtray door. Do not attempt to remove the entire ashtray door assembly or damage will result. To reinstall it, place it in the proper position and press it down in the ashtray door. The ashtray lamp will only illuminate when the exterior body lights are switched on.

B450A01GK-GAT

DRINK HOLDER (Not all models)

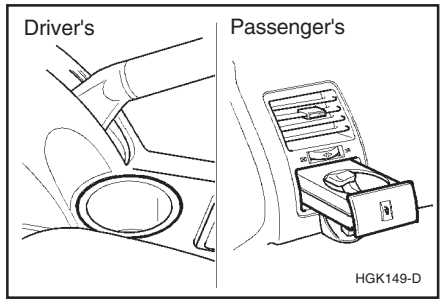

The drink holder is used for holding cups or cans. To use the passenger's drink holder, push the drink holder.

WARNING:

Do not place objects other than cups or cans in the drink holder. Such objects can be thrown out in the event of a sudden stop or an accident, possibly injuring the passengers in the vehicle.

SB320A2-F

HEADLIGHT LEVELING DEVICE SYSTEM

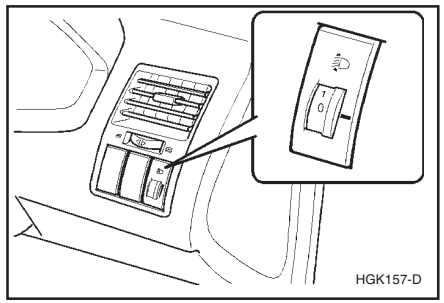

To adjust the headlight beam level according to the number of the passengers and the loading weight in the luggage area, turn the beam leveling switch.
The higher the number of the switch position, the lower the headlight beam level.
Always keep the headlight beam at the proper leveling position, or headlights may dazzle other road users.
Listed below are the examples of recommended switch settings.
For loading conditions other than those listed below, adjust the switch position so that the beam level may be the nearest as the condition obtained according to the list.

Loading condition	Switch position
Driver only	0
Driver + front passenger	0
Full passengers (including driver)	1
Full passengers (including driver) + full boot loading (or light trailer loading)	2
Driver + full boot loading (or maximum trailer loading)	3

FB330A1-E

SUNROOF (Not all models)

The electrically operated sunroof may be used only whilst the ignition switch is at the "ON" position.
When the sunroof is opened, the wind deflector will automatically rise to the upper position and will automatically retract when the sunroof is closed.

B460A01Y-AAT

Sun shade

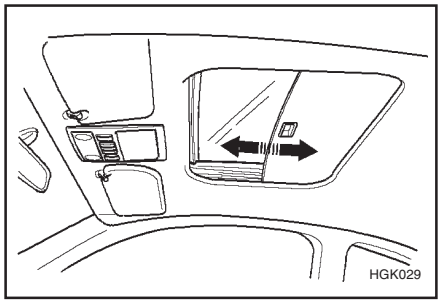

Your HYUNDAI is equipped with a sliding sun-shade which you can manually adjust to let in light with the sunroof closed, or to block sunlight.

WARNING:

Never adjust the sunshade while driving.

B460B01GK-GAT

Opening the Sunroof System

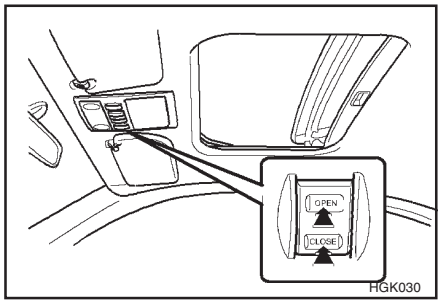

The sunroof can be electrically opened or closed with the ignition key in the "ON" position. The sunroof is moved to its fully open position by pushing the "OPEN" switch, and to stop at the desired position, push in any switches (Open, Close, Up, Down). To close, press and hold the "CLOSE" button.
Release the button when the sunroof reaches the desired position.

WARNING:

- **Do not close a sunroof if anyone's hands, arms or body are between the sliding glass and the sunroof sash, as this could result in injury.**
- **Do not place your head or arms out of the sunroof opening at any time.**

CAUTION:

- **Do not open the sunroof in severely cold temperature or when it is covered with ice or snow.**
- **Periodically remove any dirt that may have accumulated on the guide rails.**

B460C01GK-GAT

Tilting the Sunroof System

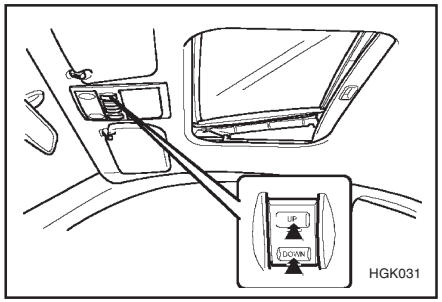

The sunroof is moved to its fully tilt up position by pushing the "UP" switch, and to stop at the desired position, push in any switches (Open, Close, Up, Down).
To tilt down, press and hold the "DOWN" button. Release the button when the sunroof reaches the desired position.

NOTE:

After washing the car or after there is rain, be sure to wipe off any water that is on the sunroof before operating it.

B460D02GK-AAT

Manual Operation of Sunroof

If the sunroof does not electrically operate:

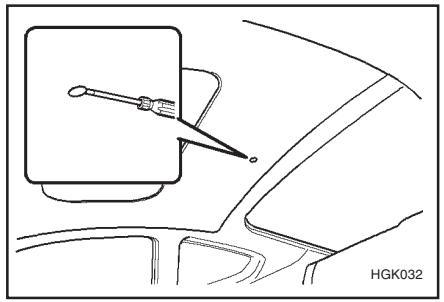

1. Remove the cap located in the rear roof panel by using a coin or driver.

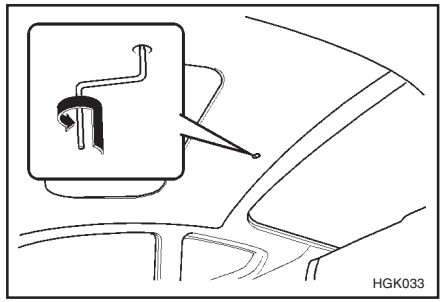

2. Insert the hexagonal head wrench provided with the vehicle into the socket. This wrench can be found in the vehicle's boot or glove box.
3. Push and turn the wrench counterclockwise to open or clockwise to close the sunroof.

B460E02GK-GAT

Resetting the Sunroof System

If the battery has been recharged, disconnected or if the sunroof is operated with the hexagonal head wrench manually, you may need to reset the sunroof.

To do this;

1. Turn the ignition switch "OFF".
2. With pressing "open" "up" button at the same time, turn the ignition switch "ON".

   The resetting is failed when the ignition key to the "OFF" within 1.5 seconds.

3. If the sunroof is set like this, the sunroof is reset with tilting up/down automatically once for all.

CAUTION:

If the sunroof is not reset, it may not be operated properly.

B480A01GK-GAT

MAP LIGHT

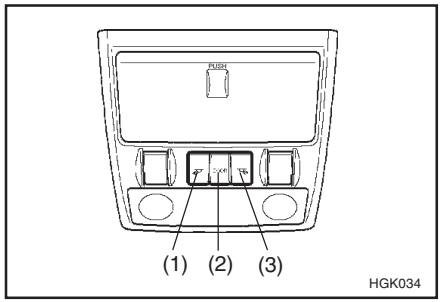

(1) Push in the map light switch to turn the driver side light.
(2) In the "DOOR" position, the interior courtesy light comes on when any door is opened regardless of the ignition key position. The light goes out gradually 6 seconds after the door is closed.
(3) Push in the map light switch to turn the passenger side light.

FB340B1-F

SPECTACLE CASE (Not all models)

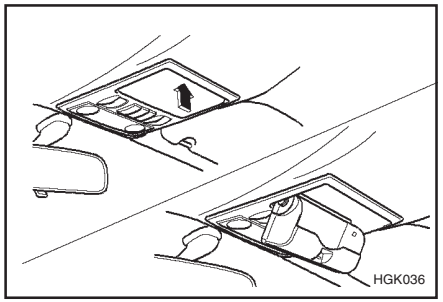

The spectacle case is located on the front overhead console.
Push the end of cover to open or close the spectacle case.

WARNING:

Do not open the spectacle case while the vehicle is moving.
The rear view mirror of the vehicle can be blocked.

B500A01A-EAT

GLOVE BOX

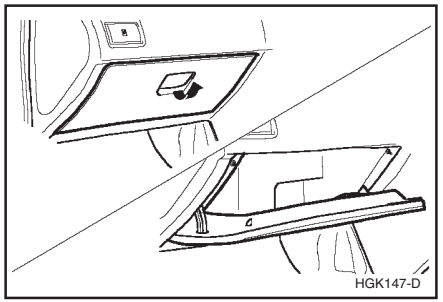

WARNING:

To avoid the possibility of injury, the glove box lid must be kept closed whilst the vehicle is in motion.

o To open the glove box, pull the glove box release lever.

YB270B2-A

EXTERIOR REAR VIEW MIRROR

Electric Type

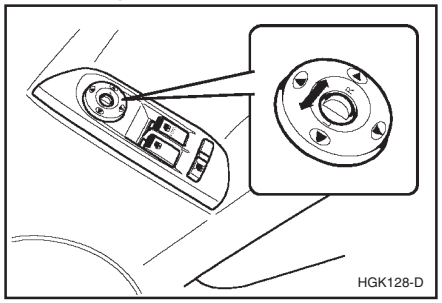

The outside rear view mirror can be adjusted in any direction to give the maximum rear view vision.

The remote control out side rear view mirror switch controls the adjustments for both right and left door mirror.

To adjust the position of either mirror:

1. Move the selecting switch to the right or left to activate the adjustable mechanism for the corresponding door mirror.
2. Now, adjust mirror angle by depressing the appropriate perimeter switch as illustrated.

CAUTION:

- **Do not operate the switch continuously for an unnecessary length of time.**
- **Scraping ice from the mirror face could cause permanent damage. To remove any ice, use a sponge, soft cloth or approved de-icer.**

WARNING:

Be careful when judging the size or distance of any object seen in the passenger side rear view mirror. It is a convex mirror with a curved surface. Any objects seen in this mirror are closer than they appear.

B510D01Y-EAT

OUTSIDE REARVIEW MIRROR HEATER (Not all models)

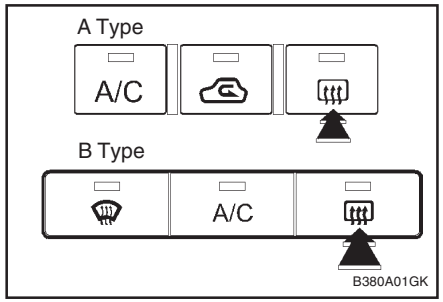

The outside rearview mirror heater is actuated in connection with the rear window defroster. To heat the outside rearview mirror glass, push in the switch for the rear window defroster. The rearview mirror glass will be heated for defrosting or defogging and will give you improved rear vision in inclement weather conditions. Push the switch again to turn the heater off. The outside rearview mirror heater automatically turns itself off after 15 minutes.

SB360C1-F

FOLDING THE OUTSIDE REAR VIEW MIRRORS

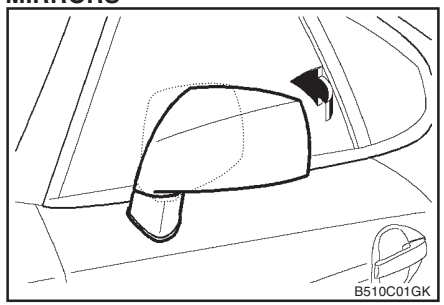

To fold the outside rear view mirrors, push them towards the rear.

The outside rear view mirrors can be folded rearward for parking in restricted areas.

WARNING:

Do not adjust or fold the outside rear view mirrors while the vehicle is moving. This could result in loss of control, and an accident causing death, serious injury or property damage.

SB370A1-E

INTERIOR REAR VIEW MIRROR

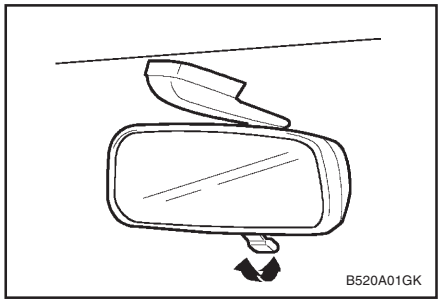

The interior mirror is of the day/night type to enable the glare of headlamps from following vehicles to be eliminated during night time driving.
The tab located at the bottom of the mirror should be set to the position nearest the windscreen for normal day time driving, and flipped towards the rear of the vehicle to eliminate glare during night time driving. To adjust the field of vision, the mirror may be moved by hand upon the mounting.

NOTE:

The mirror should always be adjusted prior to setting the vehicle in motion.

B520B01O-GAT

DAY/NIGHT REAR VIEW MIRROR (Electric type) (Not all models)

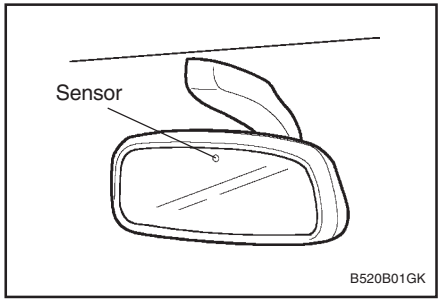

The electric type day/night inside rearview mirror automatically controls the glare of headlights of the car behind you. Adjust the rearview mirror to the desired position.

SB380A1-E

PARKING BRAKE

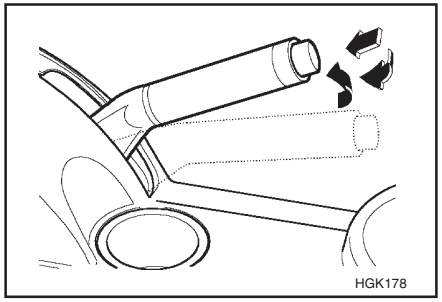

The parking brake must always be set when the vehicle is to be left unattended. When the parking brake is applied, and the ignition key is at the "ON" position, the parking brake warning lamp will be illuminated. Before driving the vehicle, the parking brake must be fully released and the warning lamp extinguished.

- o To set the parking brake, apply the foot brake and pull the parking brake lever up with the button depressed. Release the button when the brake is fully applied.
- o To release the parking brake, apply the foot brake and pull up the parking brake lever slightly. Depress the button and lower the lever.

YB800A2-A

FRONT FOG LIGHT SWITCH (Not all models)

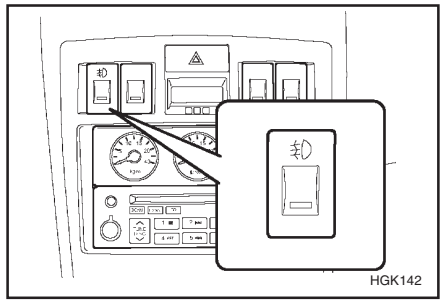

To turn on the front fog lights, push the switch. They will come on when the headlights are turned on.

B360B01GK-GAT

REAR FOG LIGHT SWITCH (Not all models)

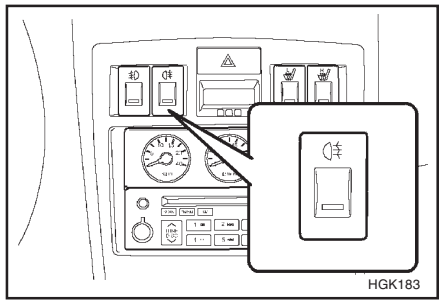

To turn on the rear fog lights, push the switch. They will come on when the headlights are turned on.

B550A02S-DAT

HIGH-MOUNTED REAR STOPLIGHT

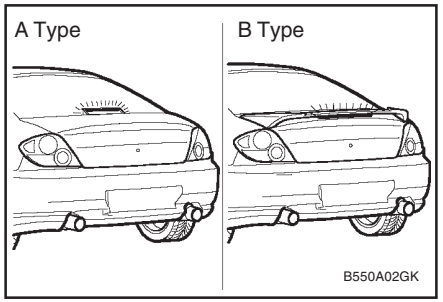

In addition to the lower-mounted rear stoplights on either side of the car, the high mounted rear stoplight in the centre of the rear window or inserted in the rear spoiler also comes on when the brakes are applied.

SB410A1-E

FRONT DOOR EDGE WARNING LAMP

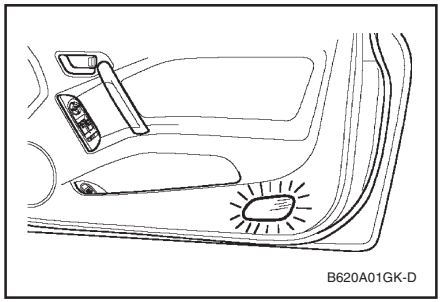

The red door edge warning lamp which serves to indicate an open door to following traffic in conditions of darkness illuminates whenever the door is open.

B570A01GK-EAT

BONNET RELEASE

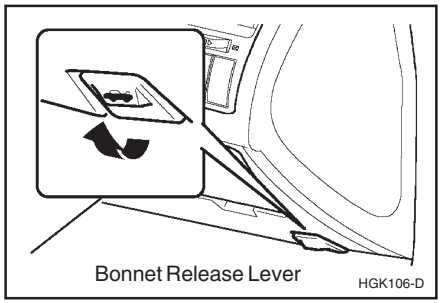

1. Pull the release knob to unlatch the bonnet.
2. Press the safety hook lever up and lift the bonnet.
3. Raise the bonnet by hand.

When closing the bonnet, slowly close the bonnet and make sure it locks into place.

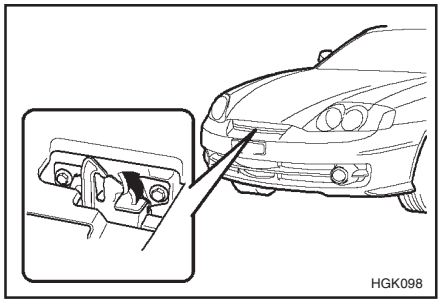

WARNING:

- **Always double check to be sure that the bonnet is firmly latched before driving away. If it is not latched, the bonnet could fly open while the vehicle is being driven, causing a total loss of visibility, which might result in an accident.**
- **Do not move the vehicle with the bonnet in the raised position, as vision is obstructed and the bonnet could fall or be damaged.**

SB440A1-E

REMOTE FUEL FILLER LID RELEASE (Not all models)

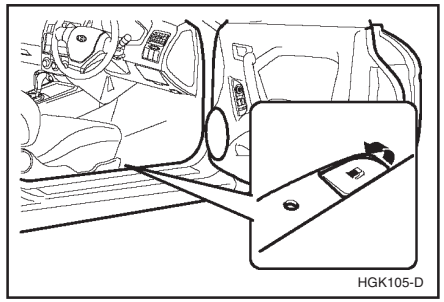

The fuel filler lid may be opened from inside the vehicle by pulling up on the fuel filler lid release.

NOTE:

If the fuel filler lid will not open because ice has formed around it, tap lightly or push on the lid to break the ice and release the lid. Do not pry on the lid. If necessary, spray around the lid with an approved de-icer fluid (do not use radiator anti-freeze) or move the vehicle to a warm place and allow the ice to melt.

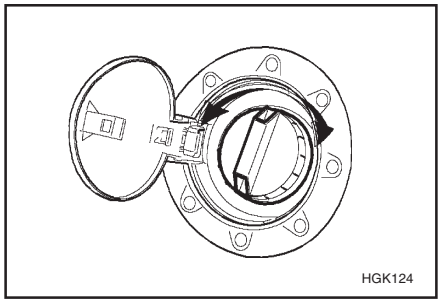

WARNING:

Fuel vapours are dangerous. Before refuelling, turn off the engine and never allow sparks, lit cigarettes or open flames near the filler area. When releasing the filler cap, a small amount of residual pressure may generate a slight hissing sound which is not indicative of an abnormality. In the event of the fuel filler cap requiring replacement, only a Genuine Hyundai replacement part should be used to prevent fuel leakage.

SB450A2-E

HATCHBACK DOOR

Remote Hatchback door Release

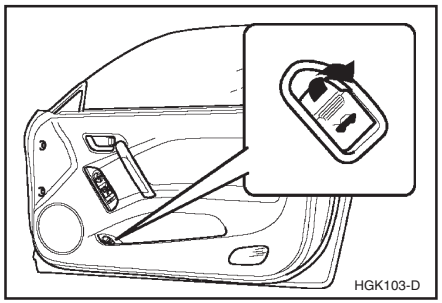

The hatchback door may be opened by pulling the lever to release the lock. The hatchback door should be closed by depressing the lid firmly until the latch engages. Ensure that hatchback door is securely latched before setting the vehicle in motion.

WARNING:

The hatchback door should always be closed whilst the vehicle is in motion to prevent exhaust gases from being drawn into the passenger compartment.

SB450C2-E

To Unlock Using the Key

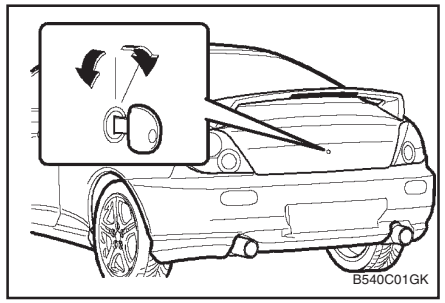

To open the hatchback door using the ignition key, insert the key into the lock barrel and turn clockwise to release the latch. The hatchback door compartment lamp will illuminate whenever the hatchback door is opened.

B540D01GK-GAT

When you close the hatchback door

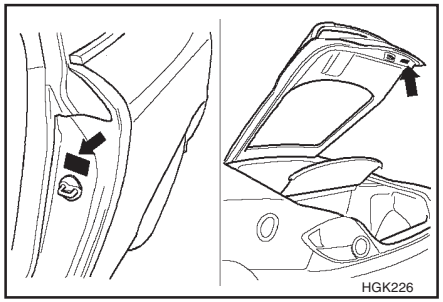

WARNING:

<u>Do not</u> close an open hatchback door while a person(s) is sitting upright on the rear seat. The hatchback door or hatchback door glass may contact the head of a person sitting upright on the rear seat. Closing the hatchback door onto a person's head may cause serious injuries, including death.

SB500A1-E

REAR PARCEL SHELF

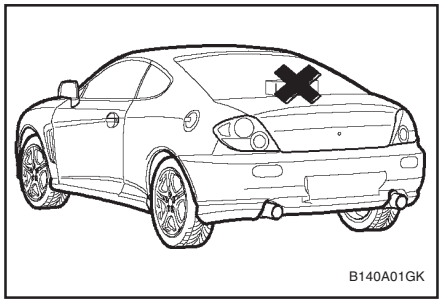

Large or heavy items must not be placed upon the rear parcel shelf to prevent the possibility of injury arising from such items in the event of impact.

SB510A1-E

SUNVISOR

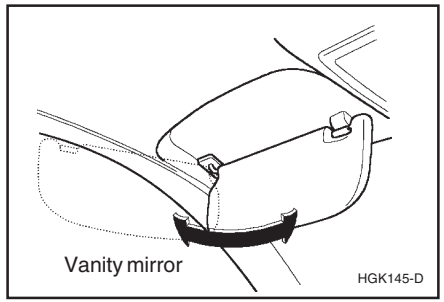

Sun visors are fitted to both the driver and passenger side of the vehicle. Certain derivatives are equipped with a vanity mirror which is located on the back of the passenger visor. The visor may be lowered to reduce the amount of glare from directly ahead, or may be moved towards the side window to reduce glare from the side of the vehicle, once the inner pivot has been unclipped from the bracket.

WARNING:

Do not place the sunvisor in such a manner that it obscures visibility of the roadway, traffic or the objects.

B600A01HP-AAT

STEERING WHEEL TILT LEVER (Not all models)

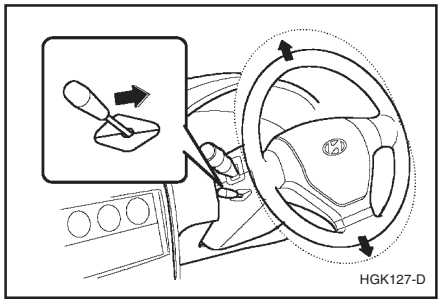

To adjust the steering wheel:

1. Pull the lever toward you and hold it to unlock.
2. Raise or lower the steering wheel to the desired position.
3. After adjustment, release the lever.

WARNING:

Do not attempt to adjust the steering wheel while driving as this may result in loss of control of the vehicle and serious injury or death.

SB530B1-F

HORN

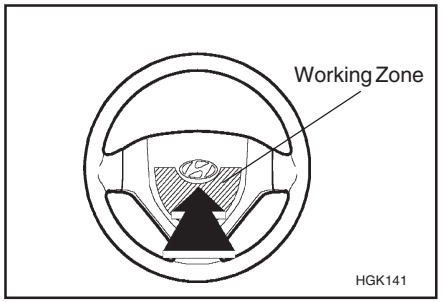

Press the pad on the steering wheel to sound the horn.

B540D01GK-GAT

LUGGAGE NET (Not all models)

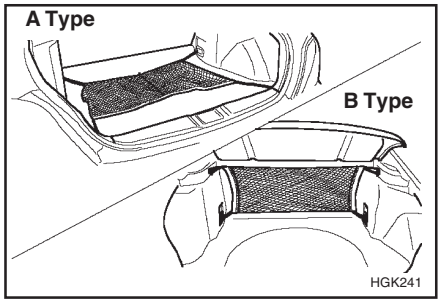

Some objects can be kept in the net at the luggage compartment.
Use the luggage net on the floor(Not all models) or at the back of the luggage compartment to prevent the objects from slipping.

WARNING:
To avoid eye injury. DO NOT overstretch. ALWAYS keep face and body out of recoil path. DO NOT use when strap has visible signs of wear or damage.

SB700A1-E

CRUISE CONTROL (Not all models)

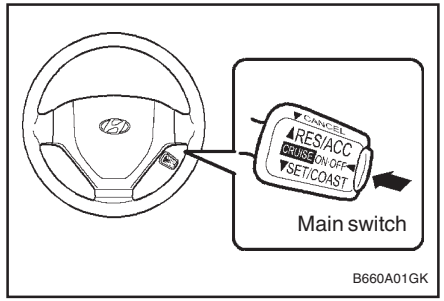

The cruise control system provides automatic speed control for your comfort when driving on freeways, tollroads, or other noncongested highways.
This is designed to function above approximately 25 mph (40 km/h).

B660B01E-AAT

To Set the Cruise Speed

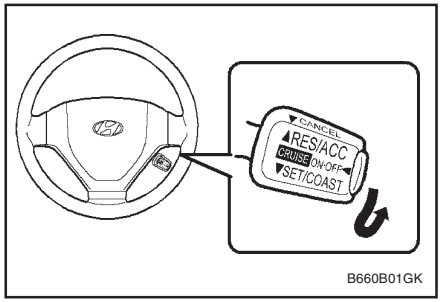

1. Push in the cruise control main switch on the end of the barrel. The "CRUISE" indicator light in the instrument cluster will be illuminated. This turns the system on.
2. Accelerate to the desired cruising speed above 25 mph (40 km/h).
3. Push the control switch downward to "SET (COAST)" and release it.
4. Remove your foot from the accelerator pedal and the desired speed will automatically be maintained.
5. To increase speed, depress the accelerator pedal enough for the vehicle to exceed the preset speed. When you remove your foot from the accelerator pedal, the vehicle will return to the speed you have set.

WARNING:
To avoid accidental cruise control engagement, keep the cruise control main switch off when not using the cruise control

B660C01E-AAT

To Cancel the Cruise Speed

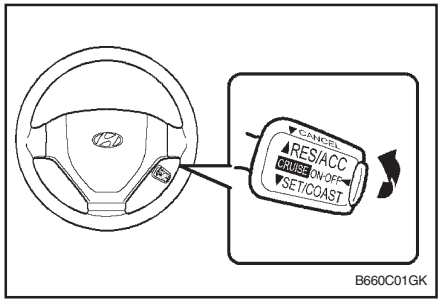

Do one of the followings:

- o Pull the control switch toward steering wheel to "CANCEL" position.
- o Depress the brake pedal.
- o Depress the clutch pedal (Manual transaxle).
- o Shift the selector lever in "N" position (Automatic transaxle).
- o Decrease the vehicle speed lower than memorized speed by 12 mph (20 km/h).
- o Decrease the vehicle speed approximately to less than 25 mph (40 km/h).
- o Release the main switch.

B660D01E-AAT

To Resume the Preset Speed

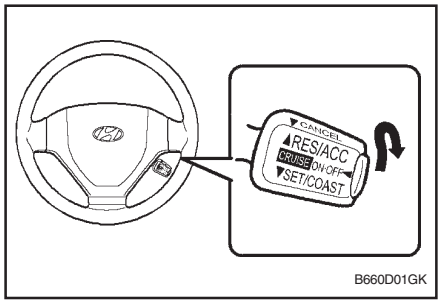

The vehicle will automatically resume the speed set prior to cancellation when you push the control switch upward to "RESUME (ACCEL)" position and release it to return providing the vehicle speed is above 25 mph (40 km/h).

B660E01E-AAT

To Reset at a Faster Speed

1. Push the control switch upward to "RESUME (ACCEL)" position and hold it.
2. Accelerate to desired speed and release the control switch. While the control switch is held, the vehicle will gradually gain speed.

B660F01E-AAT

To Reset at a Slower Speed

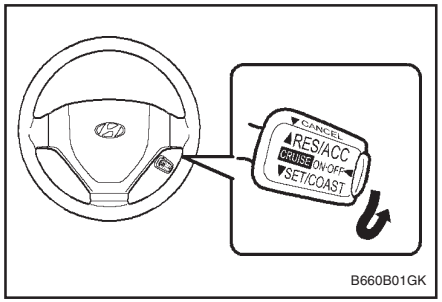

1. Push the control switch downward to "SET (COAST)" position and hold it. The vehicle will decelerate.
2. When the desired speed is obtained, release the control switch. While the control switch is pushed, the vehicle speed will gradually decrease.

WARNING:

- **Keep the main switch off when not using the cruise control.**
- **Do not use the cruise control when it may not be safe to keep the car at a constant speed, for instance, driving in heavy or varying traffic, or on slippery (rainy, icy or snow-covered) or winding roads or over 6% up-hill or down-hill roads.**
- **Pay particular attention to the driving conditions whenever using the cruise control system.**
- **During cruise-control driving with a manual transaxle vehicle, do not shift into neutral without depressing the clutch pedal, or the engine will be overrevved. If this happens, depress the clutch pedal or release the main switch.**
- **With the cruise control engaged, when the brake pedal is applied, it is normal to hear the cruise control system deactivate. This is an indication of normal system operation.**
- **During normal cruise control operation, when the "SET(COAST)" is activated or reactivated after applying the brakes, the cruise control will energize after approximately 3 seconds. This delay is normal.**

B710A01GK-EAT

HEATING AND COOLING CONTROL

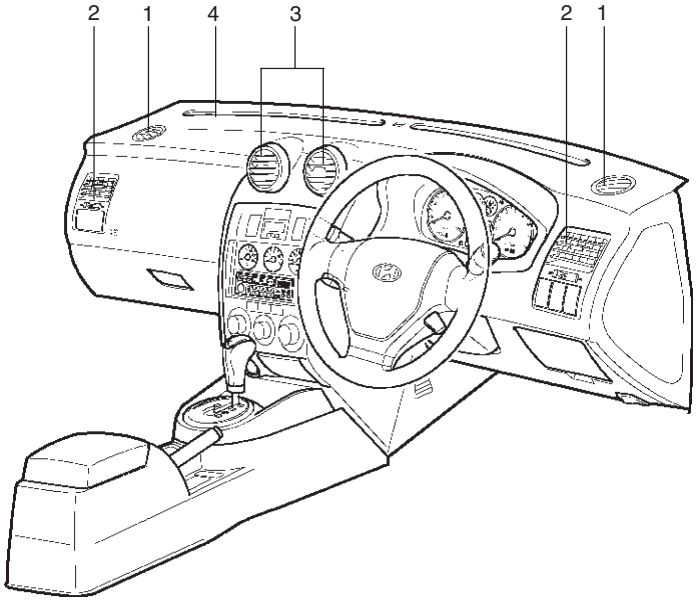

HGK001A-D

1. Side defrost nozzle
2. Side Ventilator
3. Centre Ventilator
4. WindScreen Defrost Ventilator

B710A01S-AAT

VENTILATION

To operate the ventilation system:

- o Set the air intake control on "Fresh" mode ( ).
- o To direct all intake air to the dashboard vents, set the airflow control to "Face".
- o Adjust the fan speed control to the desired speed.
- o Set the temperature control between "Cool" and "Warm".

B710B01S-DAT

CENTRE VENTILATOR

The centre ventilators are located in the middle of the dashboard. The direction of air flow from the vents in the centre of the dashboard is adjustable.
To control the direction of the air flow, move the knob in the centre of the vent up-and-down and side-to-side.

B710C01S-AAT

SIDE VENTILATOR

The side ventilators are located on each side of dashboard. To change the direction of the air flow, move the knob in the center of the vent up-and-down and side-to-side. The side vent knobs control the amount of outside air entering the vehicle through the side vents. The vents are opened when the vent knob is moved to the up position. The vents are closed when the vent knob is moved to the down position. Keep these vents clear of leaves and other debris.

B670A01GK-GAT

ROTARY TYPE (Not all models)

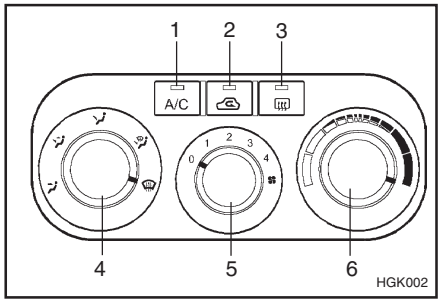

1. Air Conditioning switch
2. Air intake control switch
3. Rear window defroster switch
4. Air flow control switch
5. Fan speed control switch
6. Temperature control switch

B670B01A-AAT

Fan Speed Control (Blower Control)

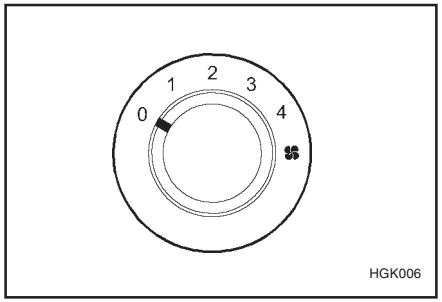

This is used to turn the blower fan on or off and to select the fan speed.
This blower fan speed, and therefore the volume of air delivered from the system, may be controlled manually by setting the blower control between the "1" and "4" positions.

B670E01A-AAT

Temperature Control

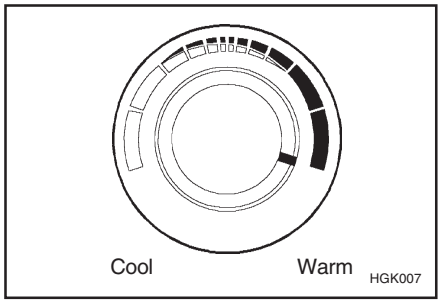

This is used to turn the heating system on and off and to select the degree of heating desired.

B670C01FC-EAT

Air Intake Control

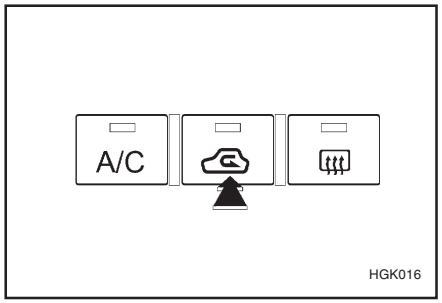

This is used to select fresh outside air or recirculation inside air.
To change the air intake control mode, (Fresh mode, Recirculation mode) push the control button.

FRESH MODE ( ) : The indicator light on the button goes off when the air intake control is fresh mode.

RECIRCULATION MODE ( ): The indicator light on the button is illuminated when the air intake control is recirculation mode.

With the "Fresh" mode selected, air enters the vehicle from the outside and is heated or cooled according to the function selected.

With the "Recirculation" mode selected, air from within the passenger compartment will be drawn through the heating system and heated or cooled according to the function selected.

NOTE:

- **It should be noted that prolonged operation of the heating in "Recirculation" mode will give rise to fogging of the windscreen and side windows and the air within the passenger compartment will become stale. In addition, prolonged use of the air conditioning with the "Recirculation" mode selected may result in the air within the passenger compartment becoming excessively dry.**
- **When the ignition switch is turned "ON" the air intake control will change to "Recirculation" mode (regardless of switch position). It is normal operation.**

B670D01GK-EAT

Air Flow Control

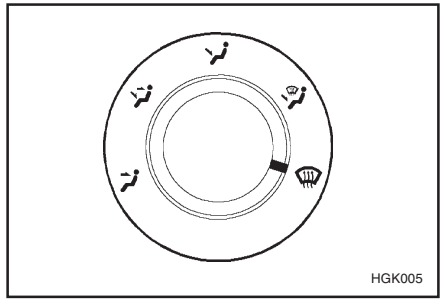

This is used to direct the flow of air. Air can be directed to the floor, dashboard outlets, or windscreen. Five symbols are used to represent Face, Bi-Level, Floor, Floor-Defrost and Defrost air position.

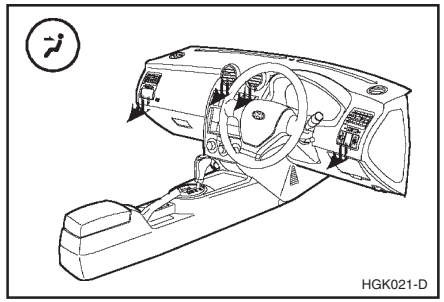

Face-Level

Selecting the "Face" mode will cause air to be discharged through the face level vents.

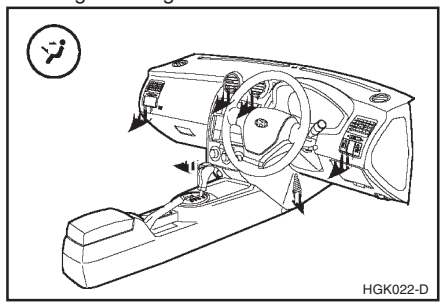

Bi-Level

Air is discharged through the face vents and the floor vents. This makes it possible to have cooler air from the dashboard vents and warmer air from the floor outlets at the same time.

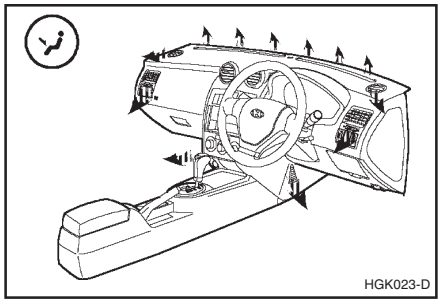

Floor-Level

Air is discharged through the floor vents, windscreen defroster nozzle, side defroster nozzle, side ventilator.

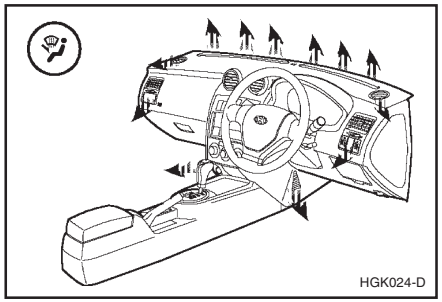

Floor-Defrost Level

Air is discharged through the windscreen defrost nozzle, the floor vents, side defroster nozzle, side ventilator.

If the "Floor-Defrost" mode is selected, the A/C will be on automatically and it will be changed to "Fresh" mode.

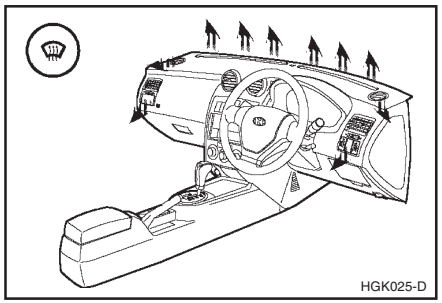

Defrost-Level

Air is discharged through the windscreen defrost nozzle, side defroster nozzle, side ventilator. If the "Defrost" mode is selected, the A/C will be on automatically and it will be changed to "Fresh" mode.

B740A01S-AAT

AIR CONDITIONING SYSTEM (Not all models)

Air Conditioning Switch

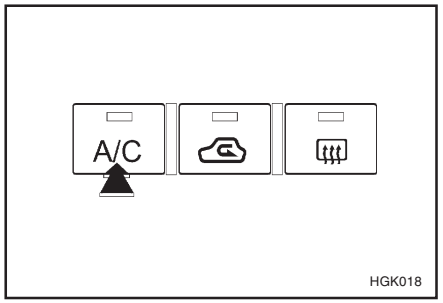

The air conditioning is turned on or off by pushing the A/C button on the heating/air conditioning control panel.

B740B01S-AAT

Air Conditioning Operation

Cooling

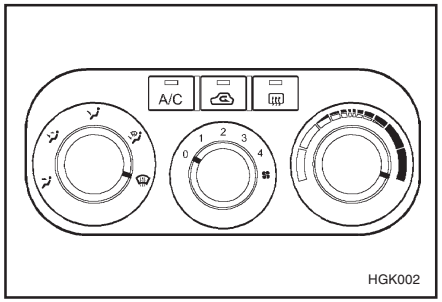

To use the air conditioning to cool the interior:

- o Set the side vent control to "OFF", to shut off outside air entry.
- o Turn on the fan control switch.
- o Turn on the air conditioning switch by pushing in on the switch. The air conditioning indicator light should come on at the same time.
- o Set the air intake control to "Fresh" mode ( ).
- o Set the temperature control to "Cool". ("Cool" provides maximum cooling. The temperature may be moderated by moving the control toward "Warm".)
- o Adjust the fan control to the desired speed. For greater cooling, turn the fan control to one of the higher speeds or temporarily select the "Recirculation" position on the air intake control.

B690A01S-AAT

HEATING CONTROLS

For normal heating operation, set the air intake control to the "Fresh" position and the air flow control to "Floor".

For faster heating, the air intake control should be in the "Recirculation" position.

If the windows fog up, move the air flow control to the "Def" (defroster) position. (The A/C will be on automatically and it will be changed to "Fresh" mode.)

For maximum heat, move the temperature control to "Warm".

B740C01S-AAT

Dehumidified Heating

For dehumidified heating:

- o Turn on the fan control switch.
- o Turn on the air conditioning switch. The air conditioning indicator light should come on at the same time.
- o Set the air intake control to "Fresh" mode ( ).
- o Set the air flow control to "Face".
- o Adjust the fan control to the desired speed.
- o For more rapid action, set the fan at one of the higher speeds.
- o Adjust the temperature control to provide the desired amount of warmth.

B720A01FC-EAT

DEFROSTING/DEFOGGING

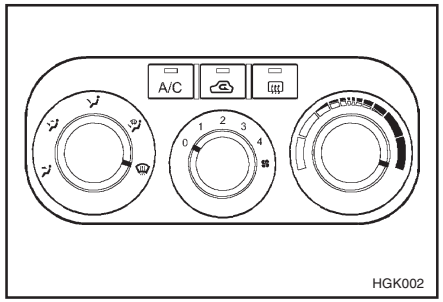

Use the heating/ventilation system to defrost or defog the windscreen:

To remove the interior fog on the windscreen;

- o Set the air flow control to the defrost ( ) position. (The A/C will be on automatically and it will be changed to "Fresh" mode.)
- o Set the temperature control at the desired position.
- o Set the fan speed control between "1" and "4" position.

To remove the frost or exterior fog on the windscreen;

- o Set the air flow control to the defrost ( ) position. (The A/C will be on automatically and it will be changed to "Fresh" mode.)
- o Set the temperature control to the warm.
- o Set the fan speed control to position "3" or "4".

NOTE:

When the A/C is operated continuously on the floor-defrost level ( ) or defrost level ( ), it may cause fog to form on the exterior windscreen by the temperature differential. At this time set the air flow control to the face level position ( )and fan speed control to the low position.

B730A01FC-EAT

Operation Tips

- o To keep dust or unpleasant fumes from entering the car through the ventilation system, temporarily set the air intake control at "Recirculation". Be sure to return the control to "Fresh" when the irritation has passed to keep fresh air in the vehicle. This will help keep the driver alert and comfortable.
- o Air for the heating/cooling system is drawn in through the grilles just ahead of the windscreen. Care should be taken that these are not blocked by leaves, snow, ice or other obstructions.
- o To prevent interior fog on the windscreen, set the air intake control to the fresh air ( ) position and fan speed to the desi-red position.

B970A01Y-EAT

AUTOMATIC HEATING AND COOLING CONTROL SYSTEM (Not all models)

Your Hyundai is equipped with an automatic heating and cooling control system controlled by simply setting the desired temperature.

B970B01GK-EAT

Heating and Cooling Controls

TYPE A (Without Air Quality System)

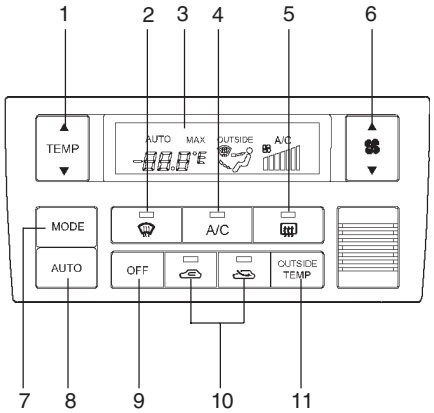

HGK003

TYPE B (With Air Quality System)

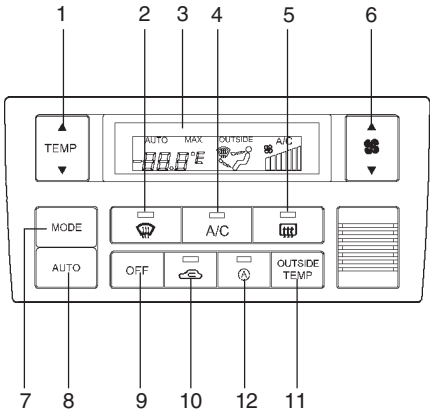

HGK004

1. Temperature Control Button
2. Defroster Switch
3. Display Window
4. Air Conditioning Switch
5. Rear Window Defroster Switch
6. Fan Speed Control Switch
7. Air Flow Control Switch
8. AUTO (Automatic Control)Switch
9. OFF Switch
10. Air Intake Control Switch
11. Ambient Switch
12. Air Quality System Switch (Not all models)

B970C02E-AAT

Automatic Operation

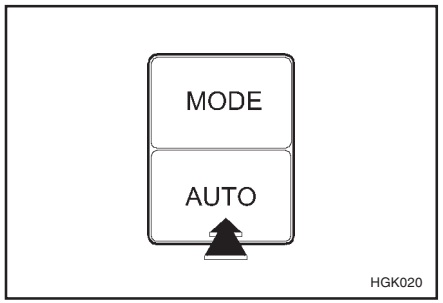

The FATC (Full Automatic Temperature Control) system automatically controls heating and cooling as follows:

1. Push the "AUTO" switch. The indicator light will come on confirming that the Face, Floor and/or Bi-Level modes as well as the blower speed and, air conditioner will be controlled automatically.

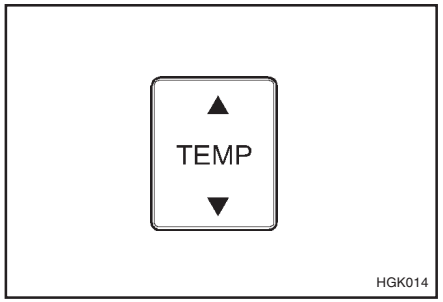

2. Push the "TEMP" button to set the desired temperature.
   The temperature will increase to the maximum 90°F(32°C) by pushing on the ▲ button. Each push of the button will cause the temperature to increase by 1°F(0.5°C).
   The temperature will decrease to the minimum 62°F(17°C) by pushing on the ▼ button. Each push of the button will cause the temperature to decrease by 1°F(0.5°C).

NOTE:
If the battery has been discharged or disconnected, the temperature mode will reset as centigrade degrees.
This is a normal condition and you can change the temperature mode from centigrade to farenheit as follows;
Press the TEMP button down 3 seconds or more with the OUTSIDE TEMP button held down. The display shows that the unit of temperature is adjusted to contigrade or fahrenheit.
(°C →°F or °F →°C)

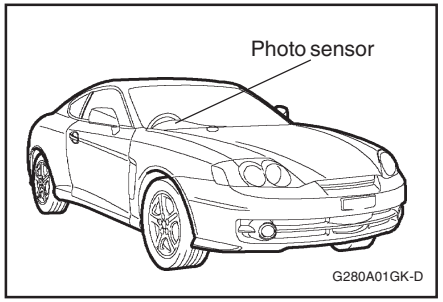

NOTE:
Never place anything over the sensor which is located on the instrument panel to ensure better control of the heating and cooling system.

B995A01Y-GAT

AMBIENT SWITCH

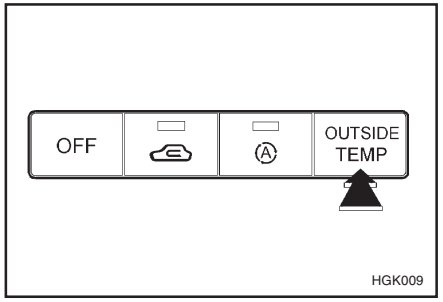

Pressing the OUTSIDE TEMP button displays the ambient temperature on the LCD.

B980A01Y-AAT

MANUAL OPERATION

The heating and cooling system can be controlled manually as well by pushing buttons other than the "AUTO" button. In this state, the system sequentially works according to the order of buttons selected.
The function of the buttons which are not selected will be controlled automatically.
Press the "AUTO" button in order to convert to automatic control of the system.

B980B01Y-AAT

Fan Speed Control Switch

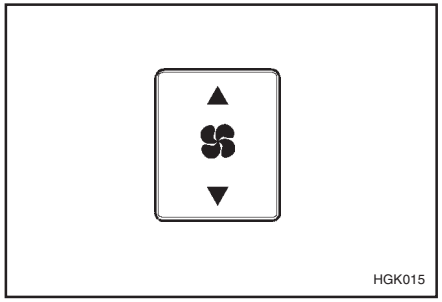

The fan speed can be set to the desired speed by pressing the appropriate fan speed control button. The higher the fan speed is, the more air is delivered. Pressing the "OFF" button turns off the fan.

B670C01GK-EAT

Air Intake Control Switch (Without A.Q.S)

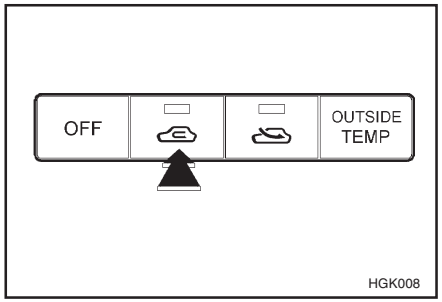

This is used to select fresh outside air or recirculation inside air.
To change the air intake control mode, (Fresh mode, Recirculation mode) push the control button.

FRESH MODE ( ) : The indicator light on the button goes on when the air intake control is fresh mode.

RECIRCULATION MODE ( ) : The indicator light on the button is illuminated when the air intake control is recirculation mode.

With the "Fresh" mode selected, air enters the vehicle from the outside and is heated or cooled according to the function selected.

With the "Recirculation" mode selected, and air from within the passenger compartment will be drawn through the heating system and heated or cooled according to the function selected.

NOTE:

- **It should be noted that prolonged operation of the heating system in "recirculation" mode will give rise to fogging of the windscreen and side windows and the air within the passenger compartment will become stale. In addition, prolonged use of the air conditioning with the "Recirculation" mode selected may result in the air within the passenger compartment becoming excessively dry.**
- **When the ignition switch is turned "ON" the air intake control will change to "" mode (regardless of switch position). It is normal operation. The air intake control is operated in "AUTO" mode when turning the ignition to the ON position if the "AUTO" mode was used before shutting off the engine.**

B980C01GK-EAT

Air Intake Control Switch (With A.Q.S) (Not all models)

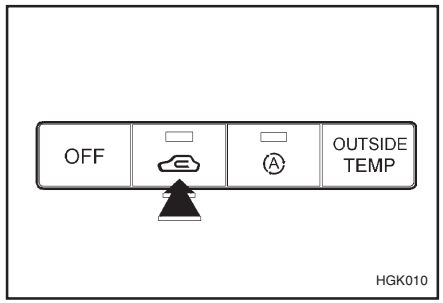

This is used to select fresh outside air or recirculate inside air automatically.

▭ : **OFF**
▬ : **ON**

Fresh mode :
Air enters the vehicle from the outside and is heated or cooled according to the function selected.

Recirculation mode :
Air from within the passenger compartment will be drawn through the heating system and heated or cooled according to the function selected.

Exhaust gas cutoff mode :
Air enters the vehicle from the outside.
But if exhaust gas enters the vehicle from the outside, the exhaust gas cutoff mode ( ) is automatically converted to the mode, to prevent exhaust gas from entering the vehicle.

NOTE:

- **It should be noted that prolonged operation of the heating system in recirculation mode ( ) will give rise to mis-ting of the windscreen and side windows and the air within the passenger compartment will become stale. In addition, prolonged use of the air conditioning with the recirculation mode ( ) selected may result in the air within the passenger compartment becoming excessively dry.**
- **When the ignition switch is turned "ON" the air intake control will change to "Fresh" mode (regardless of switch position). It is normal operation. The air intake control is operated in "AUTO" mode when turning the ignition to the ON position if the "AUTO" mode was used before shutting off the engine.**

CAUTION:

If the windows fog up with the Recirculation or A.Q.S mode selected, set the air intake control to the Fresh air position or A.Q.S control to "OFF".

B980D01Y-AAT

Heating and Cooling System Off

Press the "OFF" button to stop the operation of the heating and cooling system.

B980E01GK-EAT

Air Flow Control

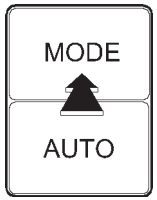

HGK019

This is used to direct the flow of air. Air can be directed to the floor, dashboard outlets, or windscreen. Four symbols are used to represent Face, Bi-Level, Floor and Floor-Defrost air position.

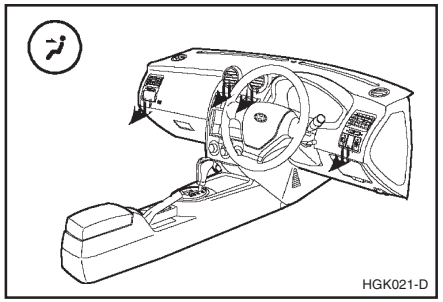

HGK021-D

Face-Level

When selecting the "Face" mode, the indicator light will come on, causing air to be discharged through the face level vents.

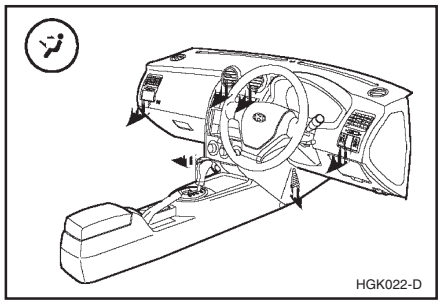

HGK022-D

Bi-Level

When selecting the "Bi-Level" mode, the indicator light will come on and the air will be discharged through the face vents and the floor vents. This makes it possible to have cooler air from the dashboard vents and warmer air from the floor outlets at the same time.

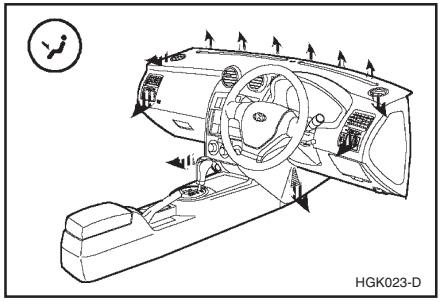

HGK023-D

Floor-Level

When selecting the "Floor-Level" mode, the indicator light will come on and the air will be discharged through the floor vents, windscreen defroster nozzle, side defroster nozzle, side ventilator.

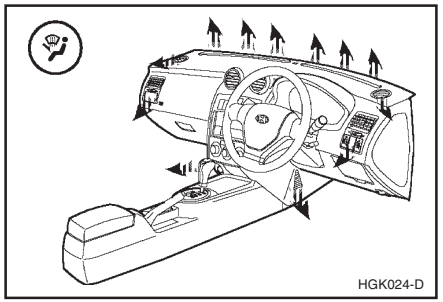

HGK024-D

Floor-Defrost Level

When selecting the "Floor-Defrost" mode, the indicator light will come on and the air will be discharged through the windscreen defrost nozzle, the floor vents, side defroster nozzle, side ventilator.

B980F01E-EAT

Defrost Switch

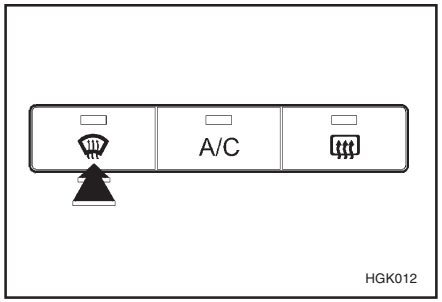

When the "Defrost" button is pressed, the "" mode will be automatically selected and the air will be discharged through the windscreen defrost vents. To assist in defrosting, the air conditioning will operate if ambient temperature is higher than 38.3°F(3.5°C) and automatically turns off if the ambient temperature drops below 38.3°F(3.5°C).

B760A02GK-EAT

AIR FILTER (IN FRONT OF BLOWER UNIT)

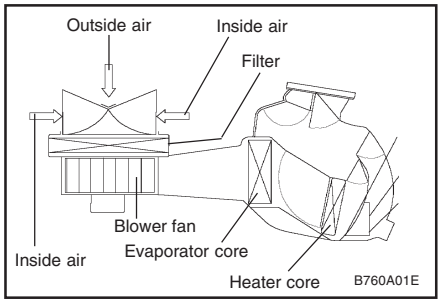

The air filter is located in front of the blower uniit behind the glove box.
It operates to decrease pollutants from entering the car and to filter the air.

B750A02A-AAT

STEREO SOUND SYSTEM

How Car Audio Works

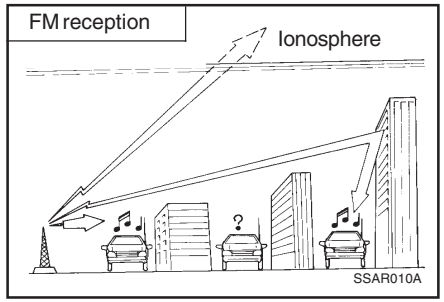

AM and FM radio signals are broadcast from transmitter towers located around your city. They are intercepted by the radio antenna on your car. This signal is then received by the radio and sent to your car speakers.

When a strong radio signal has reached your vehicle, the precise engineering of your audio system ensures high quality reproduction. However, in some cases the signal coming to your vehicle is not strong and clear. This can be due to factors such as the distance from the radio station, closeness of other strong radio stations or the presence of buildings, bridges or other large obstructions in the area.

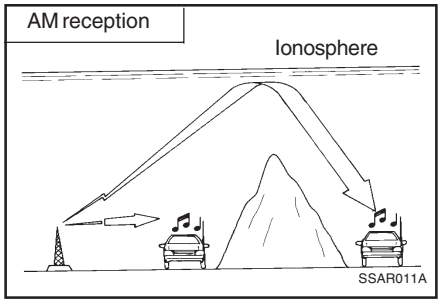

AM broadcasts can be received at greater distances than FM broadcasts. This is because AM radio waves are transmitted at low frequency. These long, low frequency radio waves can follow the curvature of the earth rather than travelling straight out into the atmosphere. In addition, they curve around obstructions so that they can provide better signal coverage.

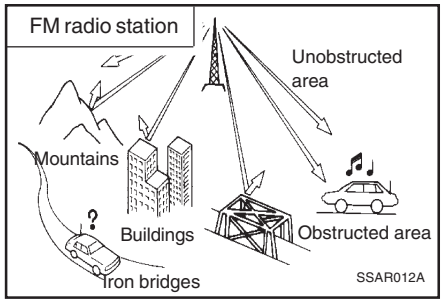

FM broadcasts are transmitted at high frequency and do not bend to follow the earth's surface. Because of this, FM broadcasts generally begin to fade at short distances from the station. Also, FM signals are easily affected by buildings, mountains, or other obstructions. These can result in certain listening conditions which might lead you to believe a problem exists with your radio. The following conditions are normal and do not indicate radio trouble:

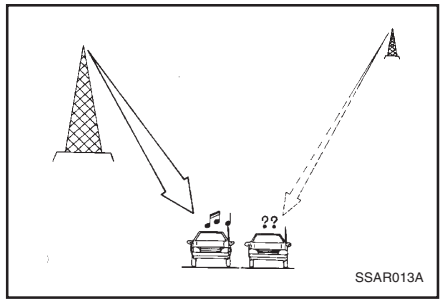

- Fading - As your car moves away from the radio station, the signal will weaken and sound will begin to fade. When this occurs, we suggest that you select another stronger station.
- Flutter/Static - Weak FM signals or large obstructions between the transmitter and your radio can disturb the signal causing static or fluttering noises to occur. Reducing the treble level may lessen this effect until the disturbance clears.

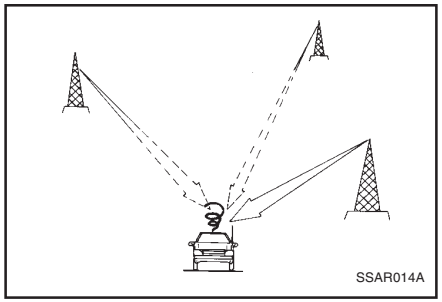

- Station Swapping - As a FM signal weakens, another more powerful signal near the same frequency may begin to play. This is because your radio is designed to lock onto the clearest signal. If this occurs, select another station with a stronger signal.
- Multi-Path Cancellation - Radio signals being received from several directions can cause distortion or fluttering. This can be caused by a direct and reflected signal from the same station, or by signals from two stations with close frequencies. If this occurs, select another station until the condition has passed.

B750B02Y-AAT

Using a cellular phone or a two-way radio

When a cellular phone is used inside the vehicle, noise may be produced from the audio equipment. This does not mean that something is wrong with the audio equipment. In such a case, use the cellular phone at a place as far as possible from the audio equipment.

CAUTION:

When using a communication system such a cellular phone or a radio set inside the vehicle, a separate external antenna must be fitted. When a cellular phone or a radio set is used by using an internal antenna alone, it may interfere with the vehicle's electrical system and adversely affect safe operation of the vehicle.

WARNING:

Don't use a cellular phone when you are driving, you must stop at a safe place to use a cellular phone.

JB580B1-A

CARE OF DISC

Proper Handling

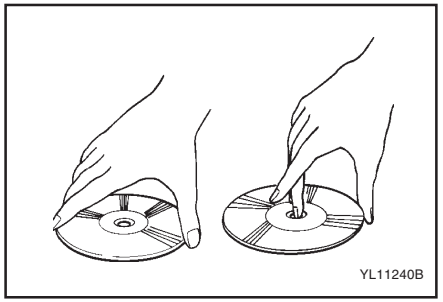

Handle your disc as shown. Do not drop the disc. Hold the disc so you will not leave fingerprints on the surface. If the surface is scratched, it may cause the pickup to skip signal tracks. Do not affix tape, paper, or gummed labels on the disc. Do not write on the disc.

Damaged Disc

Do not attempt to play damaged, warped or cracked discs. It could severely damage the playback mechanism.

Storage

When not in use, place your discs in their individual case and store them in a cool place away from the sun, heat, and dust.

Do not grip or pull out the disc with your hand while the disc is being pulled into the unit by the Self Loading mechanism.
Do not pull the unit from the dash immediately after a disc is inserted or the Eject Switch has been pressed. If the unit is pulled out before an operation is completed, the disc will be unstable in the unit and may be damaged.
Do not attempt to insert a disc into the unit when the unit is out of the dash or the power is off.

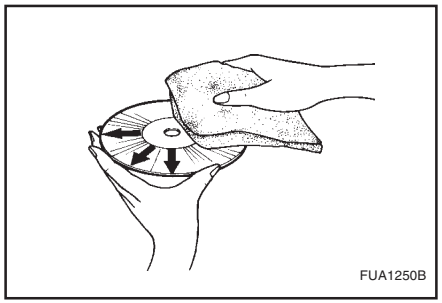

Keep Your Discs Clean

Fingerprints, dust, or soil on the surface could cause the pickup to skip signal tracks. Wipe the surface clean with a clean soft cloth. If the surface is heavily soiled, dampen a clean soft cloth in a solution of mild neutral detergent to wipe it clean. See drawing.

SR040B1-F

Care of Cassette Tapes

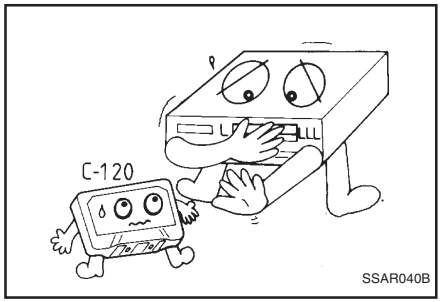

Proper care of your cassette tapes will extend the tape life and increase your listening enjoyment. Always protect your tapes and cassette cases from direct sunlight, severe cold and dusty conditions. When not in use, cassettes should always be stored in the protective cassette case in which they were originally supplied. When the vehicle is very hot or cold, allow the interior temperature to become more comfortable before listening to your cassettes.

- o Never leave a cassette inserted in the player when not being played. This could damage the tape player unit and the cassette tape.
- o We strongly recommend against the use of tapes longer than C-60 (60 minutes total). Tapes such as C-120 or C-180 are very thin and do not perform as well in the automotive environment.

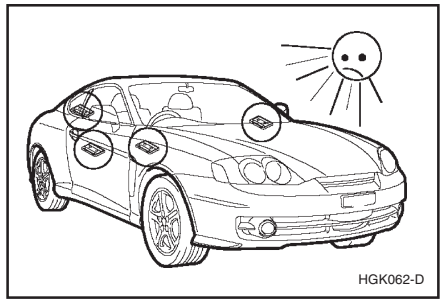

- Be sure that the cassette label is not loose or peeling off or tape ejection may be difficult.
- Never touch or soil the actual audio tape surfaces.
- Keep all magnetized objects, such as electric motors, speakers or transformers away from your cassette tapes and tape player unit.
- Store cassettes in a cool, dry place with the open side facing down to prevent dust from setting in the cassette body.
- Avoid repeated fast reverse usage to replay one given tune or tape section. This can cause poor tape winding to occur, and eventually cause excessive internal drag and poor audio quality in the cassette. If this occurs, it can sometimes be corrected by fast winding the tape from end to end several times. If this does not correct the problem, do not continue to use the tape in your vehicle.

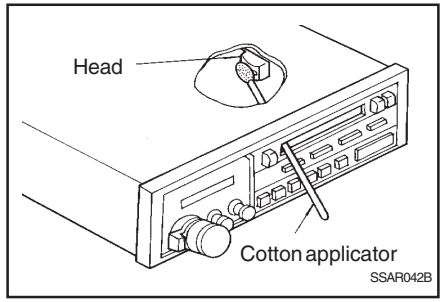

- The playback head, capstan and pinch rollers will develop a coating of tape residue that can result in deterioration of sound quality, such as a wavering sound. They should be cleaned monthly using a commercially available head cleaning tape or special solution available from audio specialty shops. Follow the supplier's directions carefully and never oil any part of the tape player unit.
- Always be sure that the tape is tightly wound on its reel before inserting in the player. Rotate a pencil in the drive sprockets to wind up any slack.

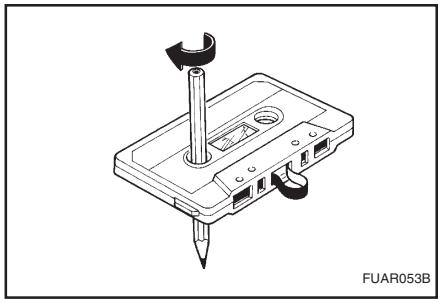

NOTE:

Look at a tape before you insert it.
If the tape is loose, tighten it by turning one of the hubs with a pencil or your finger.
If the label is peeling off, do not put it in the player. It may cause the tape jam in the drive mechanism when you try to eject it.
Do not leave tape sitting where they are exposed to hot warm or, high humidity, such as on top of the dashboard or in the player.
If a tape is exposed to extreme heat or cold, let it reach a moderate temperature before putting it in the player.

B870A01A-GAT

ANTENNA

Fixed Rod Antenna

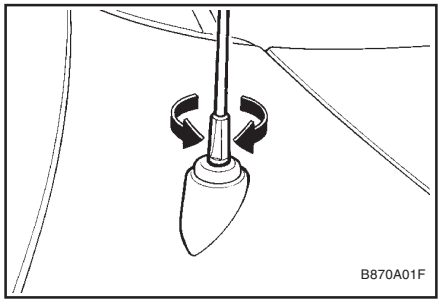

Your car uses a fixed rod antenna to receive both AM and FM broadcast signals.
This antenna is a removable type. To remove the antenna, turn the antenna counterclockwise. To install the antenna, turn the antenna clockwise.

CAUTION:
Be sure to remove the antenna before washing the car in an automatic car wash or the antenna may be damaged.

SC000A1-E

2. DRIVING YOUR HYUNDAI

C010A01O-EAT

WARNING: ENGINE EXHAUST CAN BE DANGEROUS!

Engine exhaust gases are potentially lethal. If at any time engine exhaust gas is detected within the passenger compartment, move the vehicle to an open area and open all windows.

o Never inhale exhaust gas.
Exhaust gases contain Carbon Monoxide which is colourless and odourless. Carbon Monoxide is poisonous and can cause unconsciousness and death by asphyxiation.

o Exhaust System Maintenance.
Ensure that the exhaust system is maintained in good condition and is free from excessive corrosion and damage which may result in leakage. If the vehicle is driven over an object which strikes the exhaust system, ensure that the exhaust system is inspected at the first available opportunity to ensure that no leakage exists.

o Confined Areas.
Do not run the engine in confined spaces, allowing the engine to idle in a garage, even when the doors are open is dangerous practice. Only start the engine immediately prior to moving the vehicle out of the garage.

o Prolonged Idling.
If it is necessary to allow the vehicle to idle for prolonged periods, ensure that the heating system air intake control is set to the "Fresh" position, the blower is set to high speed operation and that the vehicle is standing in an open area.

o Load Carrying.
If it is necessary to carry long objects which do not permit the hatchback door to be fully closed, the side windows must remain closed and the heating air intake control set to the "Fresh" position with the blower running at the highest speed setting.

To ensure correct operation of the heater system, the air intake grilles at the base of the windscreen must not be obstructed by snow leaves etc..

SC030A1-E

BEFORE STARTING THE ENGINE

Before you start the engine, you should always:

1. Look around the vehicle to be sure there are no flat tires, puddles of oil or water or other indications of possible trouble.
2. After entering the car, check to be sure the parking brake is engaged.
3. Check that all windows, and lights are clean.
4. Check that the interior and exterior mirrors are clean and in position.
5. Check your seat, seatback and head restraint to be sure they are in their proper positions.
6. Lock all the doors.
7. Fasten your seat belt and be sure that all other occupants have fastened theirs.
8. Turn off all lights and accessories that are not needed.
9. When you turn the ignition switch to "ON' check that all appropriate warning lights are operating and that you have sufficient fuel.
10. Check the operation of warning lights and all bulbs when key is in the "ON" position.

SC040A1-F

COMBINATION IGNITION SWITCH AND STEERING LOCK

To Start the Engine

- o If your Hyundai is equipped with a manual transaxle, place the shift lever in neutral and depress the clutch pedal fully.
- o If your Hyundai has an automatic transaxle, place the shift lever in "P" (park).
- o To start the engine, insert the ignition key and turn it to the "START" position. Release it as soon as the engine starts. Do not hold the key in the "START" position for more that 15 seconds.

NOTE:

For safety, the engine will not start if the shift lever is not in "P" or "N" Position (Auto T/A).

SC050A2-E

KEY POSITIONS

WARNING:

The engine must never be turned off and the key removed from the ignition key cylinder whilst the vehicle is in motion since the steering lock will operate and control of the vehicle will be lost.

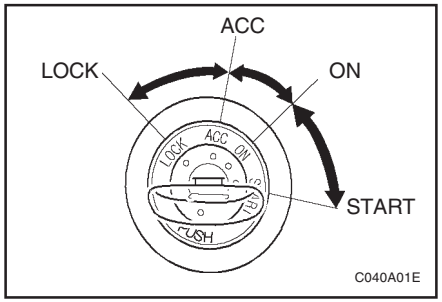

"START"

The engine is started in this position. It will crank until you release the key.

NOTE:

Do not hold the key in the "START" position for more than 15 seconds.

"ON"

When the key is at the "ON" position, the ignition and all accessories are available for use. If the engine is not running, the key should not be left at this position since the battery will become discharged and damage to the ignition system may also result. For information regarding engine starting, refer to "STARTING THE ENGINE".

"ACC"

When the ignition key is at the "ACC" position, the radio and other accessories may be used.

"LOCK"

The ignition key may only be inserted or removed at this position.

SB050B1-E

STEERING WHEEL LOCK

When the key is removed, the steering column lock will be activated and will engage when the steering wheel is turned to the appropriate position. It is not necessary to turn the wheel until locked each time the key is removed since in the event of any unauthorized attempt at removal, the lock will become effective as soon as the steering wheel is turned. To unlock the steering, insert the key and turn to the "ACC" position. If the steering is locked, it may be necessary to rock the steering wheel slightly to facilitate turning the key. Under no circumstances should the key be forced since breakage of the key will occur.

SC060A1-E

STARTING THE ENGINE

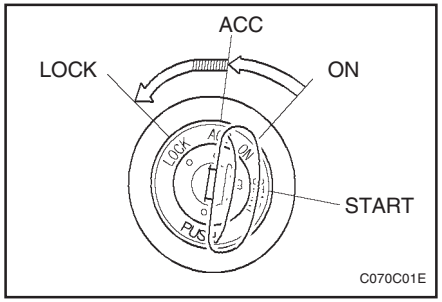

1. Ensure that the transmission is in neutral and that the clutch pedal is held depressed (manual transmission) or the transmission selector is at the "P" position (automatic transmission vehicle).
2. Turn the ignition key to and hold at the "Start" position until the engine starts. When the engine has started, release the key.

NOTE:

Do not operate the starter for more than 15 seconds continuously or continue to operate the starter after the engine has started to avoid damaging the starter motor. If the engine makes a false start, allow it and the starter motor to come to rest before attempting to start the engine again. Never attempt to start the engine with the transmission in gear. Do not depress the accelerator pedal whilst starting the engine. Allow the engine to idle for 20 seconds or so before driving the vehicle.

CAUTION:

Do not leave the vehicle unattended whilst idling. Never allow the vehicle to idle or warm up in a confined space (ie garage) longer than is necessary to move the vehicle into an open area.

SC060B1-E

FUEL ECONOMY

The following suggestions are made to assist in achieving the greatest degree of fuel economy.

- o Maintaining a constant check on fuel consumption will enable the most economical use pattern and driving style to be adopted.
- o Avoid using the vehicle for very short journeys if possible, particularly when a cold start is involved.
- o Ensure that tyre pressures are maintained at the correct level.
- o Use only the recommended grade of fuel.
- o Avoid carrying unnecessary weight, and if a roof rack is in use, remove it as soon as possible after use.
- o Anticipate the road and conditions ahead to enable adjustments in speed to be made smoothly. Avoid heavy acceleration and sharp braking.
- o Avoid cruising at unnecessary high speeds.
- o Always ensure that the periodic maintenance services are performed by a Hyundai dealer at the time and/or mileage intervals specified.
- o Use the air conditioning only when necessary.

SC090D1-F

To Remove the Ignition Key

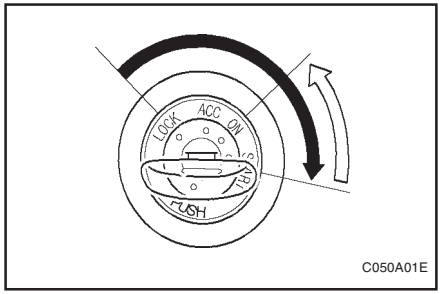

C050A01E

1. Turn the ignition key to the "ACC" position.
2. Simultaneously push and turn the ignition key counterclockwise from the "ACC" position to the "LOCK" position.
3. The key can be removed in the "LOCK" position.

C070A02GK-EAT

MANUAL TRANSMISSION

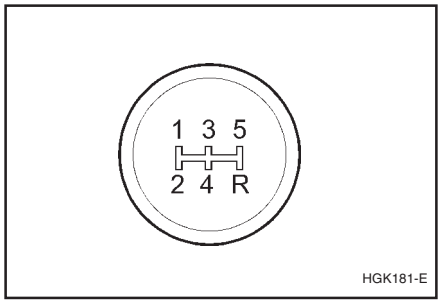

HGK181-E

The five speed fully synchronized transmission is controlled by a floor mounted shift lever upon which the shift pattern is indicated. It is important that when changing gear, the clutch pedal is fully depressed to avoid transmission damage.

CAUTION:

- **Do not attempt to engage reverse gear when the car is in motion.**
- **To avoid damaging the selector mechanism, do not use the gear shift lever as a hand rest. Release the lever immediately the shift is completed.**
- **To avoid premature clutch wear, do not use the clutch pedal as a foot rest, and do not hold the vehicle on a gradient using the clutch.**
- **Ensure that the engine is not over-revved by upshifting before the tachometer needle enters the red zone.**
- **Do not coast with the shift lever at the neutral position.**
- **When descending long gradients, make use of the engine braking to assist the footbrake to avoid brake fade or overheating.**
- **When slippery conditions are encountered, increased caution should be exercised when gear changing, braking or accelerating. Abrupt changes in speed may cause a loss of traction or control of the vehicle.**
- **The starter motor will not operate unless the clutch pedal is depressed whilst the engine is being started.**

NOTE:

- **During cold weather, shifting may be difficult until the transaxle lubricant has warmed up. This is normal and not harmful to the transaxle.**
- **If you 've come to a complete stop and it's hard to shift into 1st or R(Reverse), put the shift lever in N(Neutral) position and let up on the clutch. Press the clutch pedal back down, and then shift into 1st or R(Reverse) gear position.**
- **Do not use the shift lever as a handrest during driving, as this can result in premature wear of the transaxle shift forks.**

SC090B1-F

Using the Clutch

The clutch should be pressed all the way to the floor before shifting, then released slowly. Do not rest your foot on the clutch pedal while driving.
This can cause unnecessary wear.
Do not partially engage the clutch to hold the car on an incline. This causes unnecessary wear.
Use the parking brake to hold the car on an incline. Do not operate the clutch pedal rapidly and repeatedly.

C070E02GK-AAT

RECOMMENDED SHIFT POINTS

The shift points as shown below are recommended for optimum fuel economy and performance.

Shift from-to	Recommended
1-2	15 mph (20 km/h)
2-3	25 mph (40 km/h)
3-4	35 mph (55 km/h)
4-5	45 mph (75 km/h)

C090A04Y-GAT

AUTOMATIC TRANSAXLE

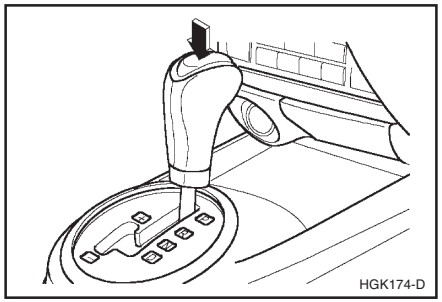

The highly efficient Hyundai automatic transaxle has four forwards speeds and one reverse speed. The individual speeds are selected automatically, depending on the position of the speed selector lever. The selector lever has 2 gates; the main gate and the manual gate.

NOTE:

For information on manual gate operation, refer to "Sports Mode".

In the main gate, the selector lever has 4 positions, and is equipped with a button to avoid inadvertent wrong selection.

NOTE:

- **Depress the brake pedal and push the button when shifting.**
- **Push the button when shifting.**
- **The selector lever can be shifted freely.**

The first few shifts on a new vehicle, or if the battery has been disconnected, may be somewhat abrupt. This is a normal condition, and the shifting sequence will adjust after shifts are cycled a few times by the T.C.M (Transmission Control Module).

CAUTION:

Never shift into "R" or "P" position while the vehicle is moving.

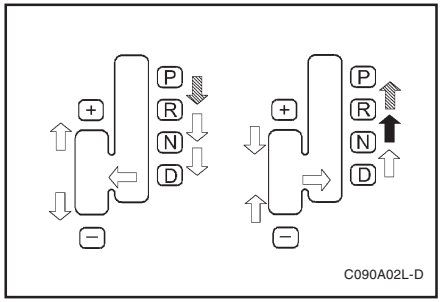

The indicator lights in the instrument cluster indicate the selector lever position when the ignition is switched "ON". During "D" or sports mode operation, the gear currently in use displays in the numeral indicator.

C090B01A-AAT

The function of each position is as follows:

o P (Park):

Use to hold the vehicle in place when parked or while starting the engine; shift the selector lever to the "P" (Park) position. Whenever parking the car, apply the parking brake and shift the selector lever to the "P" (Park) position.

CAUTION:

Never place the selector lever in the "P" (Park) position unless the vehicle is fully stopped. Failure to observe this caution will cause severe damage to the transaxle.

C090C01A-AAT

o R(Reverse):

Use for backing up the vehicle. Bring the car to a complete stop before shifting the selector lever to "R" position.

C090D02O-AAT

o N (Neutral):

In the "N" position, the transaxle is in neutral, which means that no gears are engaged. The engine can be started with the shift lever in "N" position, although this is not recommended except if the engine stalls while the car is moving.

C090E01O-AAT

o D(Drive):

Use for normal driving. The transaxle will automatically shift through a four gear sequence.

C090F01GK-GAT

Sports Mode

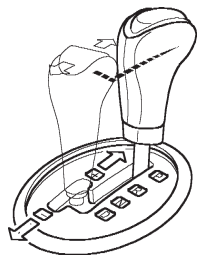

Whether the vehicle is stationary or in motion, sports mode is selected by pushing the selector lever from the "D" position into the manual gate. To return to "D" range operation, push the selector lever back into the main gate.

In sports mode, moving the selector lever backwards and forwards can make rapid gearshifts simple. In contrast to a manual transaxle, the sports mode allows gearshifts with the accelerator pedal depressed.

UP (+) : Push the lever forward once to shift up one gear.

DOWN (-) : Pull the lever backwards once to shift down one gear.

SKIP : By rapidly moving the selector forwards or backwards twice, it is possible to skip one gear, i.e. 1st to 3rd or 3rd to 1st .

CAUTION:

- **In sports mode, the driver must execute upward shifts in accordance with prevailing road conditions, taking care to keep the engine speed below the red zone.**
- **For engine protection, upward shifts are made automatically when the engine rpm reaches the red zone.**
- **By rapidly moving the selector lever backwards (-) twice it is possible to skip one gear by using the sports mode. Since sudden engine braking and/or rapid acceleration can cause a loss of traction, however, downshifts must be made carefully in accordance with the vehicle's speed.**

NOTE:

- **In sports mode, only the four forward gears can be selected. To reverse or park the vehicle, move the selector lever to the "R" or "P" position as required.**
- **In sports mode, downward shifts are made automatically when the vehicle slows down. When the vehicle stops, 1st gear is automatically selected.**
- **To maintain the required levels of vehicle performance and safety, the system may not execute certain gearshifts when the selector lever is operated.**
- **Before driving away from a stop on a slippery road, push the selector lever forward into the +(UP) position. This causes the transaxle to shift into 2nd gear which is better for smooth driving away on a slippery road. Push the selector lever to the -(DOWN) side to shift back to 1st gear.**

C090H01L-GAT

NOTE:

- **For smooth and safe operation, depress the brake pedal when shifting from "Neutral" position or "Park" position to a forward or reverse gear.**
- **The ignition key must be in the "ON" position and the brake pedal fully depressed in order to move the shift lever from the "P" (Park) position to any of the other positions.**
- **It is always possible to shift from "R", "N", "D" position to "P" position. The vehicle must be fully stopped to avoid transaxle damage.**

C090I01L-GAT

CAUTION:

- **Shift into "R" and "P" position only when the vehicle has completely stopped.**
- **Do not accelerate the engine in reverse or any of the forward positions with the brakes applied.**
- **Always apply the footbrake when shifting from "P" or "N", to "R", "D"position.**
- **Do not use the "P" (Park) position in place of the parking brake. Always set the parking brake, shift the transaxle into "P" (Park) position and turn off the ignition when you leave the vehicle, even momentarily. Never leave the vehicle unattended while the engine is running.**
- **Check the automatic transaxle fluid level regularly, and add fluid as necessary.**

C090N01O-AAT

Good Driving Practices

- Never move the gear selector lever from "P" or "N" to any other position with the accelerator pedal depressed.
- Never move the gear selector lever into "P" when the vehicle is in motion.
- Be sure the car is completely stopped before you attempt to shift into "R".
- Never take the car out of gear and coast down a hill. This may be extremely hazardous. Always leave the car in gear when moving.
- Do not "ride" the brakes. This can cause them to overheat and malfunction. Instead,

when you are driving down a long hill, slow down and shift to a lower gear. When you do this, engine braking will help slow the car.
- o Slow down before shifting to a lower gear. Otherwise, the lower gear may not be engaged.
- o Always use the parking brake. Do not depend on placing the transaxle in "P" to keep the car from moving.
- o Exercise extreme caution when driving on a slippery surface. Be especially careful when braking, accelerating or shifting gears. On a slippery surface, an abrupt change in vehicle speed can cause the drive wheels to lose traction and the vehicle to go out of control.

WARNING:
- **o Avoid high cornering speeds.**
- **o Do not make quick steering wheel movements, such as sharp lane changes or fast, sharp turns.**
- **o Always wear your seat belts.**
- **o The risk of rollover is greatly increased if you lose control of your vehicle at highway speeds.**
- **o Loss of control often occurs if two or more wheels drop off the roadway and the driver oversteers to reenter the roadway.**
- **o In the event your vehicle leaves the roadway, do not steer sharply. Instead, slow down before pulling back into the travel lanes.**
- **o In a collision crash, un unbelted person is significantly more likely to die than a person wearing a seatbelt.**

SC140A1-E

EFFECTIVE BRAKING

Braking system performance and friction material life are greatly affected by the driving style adopted. The following suggestions are made to assist in achieving the best results from the braking system.

- o Anticipate the road and conditions ahead in order that heavy braking may be avoided.
- o When descending long gradients, use the engine to assist in retarding the vehicle to minimize the possibility of brake fade occurring.
- o When trailer towing, ensure that the trailer brakes function correctly and use engine braking to assist the vehicle braking system.
- o Use only genuine Hyundai replacement brake pads and shoes to ensure consistent friction characteristics and wear rates.
- o After driving through deep water (e.g. fording), the brakes may become wet and performance reduced. Always check brake efficiency after emerging from the water and dry the brakes by lightly depressing the brake pedal several times whilst driving slowly.
- o Apply the parking brake only when the vehicle is at rest.
- o Since the power assistance provided by the brake servo is derived from the engine, coasting with the engine turned off or towing of the vehicle with the engine turned off will result in greatly increased pedal pressures being required to stop the vehicle.
- o Do not hold the vehicle on the upgrade with the accelerator pedal. This can cause the transmission to overheat. Always use the brake pedal or parking brake.

SC140B1-E

ANTI-LOCK BRAKE SYSTEM (Not all models)

The Anti-Lock Brake System (ABS) is designed to prevent wheel lock-up during sudden braking or on hazardous road surfaces. The ABS control module monitors the wheel speed and controls the pressure applied to each brake. Thus, in emergency situations or on slick roads, ABS will increase vehicle control during braking.

NOTE:
During ABS operation, a slight pulsation may be felt in the brake pedal when the brakes are applied. Also, a noise may be heard in the engine compartment while braking. These conditions are normal and indicate that the anti-lock brake system is functioning properly.

WARNING:
ABS will not prevent accidents due to improper or dangerous driving manoeuvres. Even though vehicle control is improved during emergency braking, always maintain a safe distance between you and objects ahead. Vehicle speeds should always be reduced during extreme road conditions.
The braking distance for cars equipped with an anti-lock braking system may be longer than for those without it in the following road conditions.

- **Driving on rough, gravel or snow-covered roads.**
- **Driving with tire chains installed.**
- **Driving on roads where the road surface is pitted or has different surface height.**

These roads should be driven at reduced speeds. The safety features of an ABS equipped vehicle should not be tested by high speed driving or cornering. This could endanger the safety of yourself or others.

C300A03Y-EAT

TRACTION CONTROL SYSTEM (TCS) (Not all models)

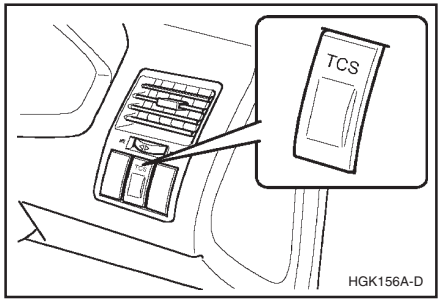

On slippery road surfaces, the traction control system (TCS) limits the drive wheels from spinning excessively, thus helping the car to accelerate. It also provides sufficient driving force and steering performance as the car turns at accelerated speeds.

SLIP Control

Limits the drive wheels from spinning excessively during starting or while making accelerated turns on slippery roads to avoid losing the driving force of the front wheels.

Driving hints

TCS does not actively apply brakes. Be sure to decelerate the car sufficiently before entering curves.

CAUTION:
When the TCS indicator blinks, SLIP control has been activated. It also means that the road is slippery or your car is accelerating excessively. In this situation, release foot pressure from the accelerator pedal and maintain moderate speed.

WARNING:
Traction control is only a driving aid; all normal precautions for driving in inclement weather and on slippery road surfaces should be observed.

C300B01GK-GAT

TCS ON/OFF Mode

In the TCS ON mode, the indicator in the instrument cluster will not be illuminated.
To switch the TCS OFF mode, press the TCS switch . To switch the TCS mode, press the TCS switch again. In the TCS OFF mode, the SLIP control will be deactivated and the TCS-OFF indicator in the instrument cluster will be illuminated.

NOTE:
1) **Turn off the engine. Then restart the engine, and the TCS mode will automatically turn ON.**
2) **When the traction control is operating properly, you can feel a slight pulsation in the vehicle. This is only the effect of brake control and indicates nothing unusual.**

3) When the engine starts, a click is heard from the engine compartment; however, this is only the sound of traction control being checked.
4) When moving out of the mud or fresh snow, pressing the accelerator pedal may not cause the engine speed to increase.

C300D01GK-GAT

Indicator and Warning

The indicator should illuminate when the ignition key is turned to ON or START but should go out after three seconds.
If the indicator does not illuminate, or the TCS indicator does not go out after 3 seconds, have it checked by an authorized dealer.

Should there be any unusual conditions in the device, TCS-OFF either illuminates or blinks as a warning.
If TCS-OFF illuminates or blinks, pull your car to a safe place and stop the engine.
Then, start the engine again to check if the TCS-OFF indicator goes out.

If the indicator remains lit even after the engine has been started, have your car checked by an authorized Hyundai dealer.

NOTE:

1) When TCS-OFF illuminates or blinks, traction control is automatically deactivated for safety.
2) This warning function is not provided when the driver choose the TCS-OFF mode.

SC150A1-F

DRIVING FOR ECONOMY

You can save fuel and get more miles from your car if you follow these suggestions:

- Drive smoothly. Accelerate at a moderate rate. Don't make "jack-rabbit" starts or full-throttle shifts and maintain a steady cruising speed. Don't race between stoplights. Try to adjust your speed to that of the other traffic so you don't have to change speeds unnecessarily.
  Avoid heavy traffic whenever possible. Always maintain a safe distance from other vehicles so you can avoid unnecessary braking. This also reduces brake wear.
- Drive at a moderate speed. The faster you drive, the more fuel your car uses. Driving at a moderate speed, especially on the highway, is one of the most effective ways to reduce fuel consumption.
- Don't "ride" the brake or clutch pedal. This can increase fuel consumption and also increase wear on these components. In addition, driving with your foot resting on the brake pedal may cause the brakes to overheat, which reduces their effectiveness and may lead to more serious consequences.
- Take care of your tires. Keep them inflated to the recommended pressure. Incorrect inflation, either too much or too little, results in unnecessary tire wear. Check the tire pressures at least once a month.
- Be sure that the wheels are aligned correctly. Improper alignment can result from hitting curbs or driving too fast over irregular surfaces. Poor alignment causes faster tire wear and may also result in other problems as well as greater fuel consumption.
- Keep your car in good condition. For better fuel economy and reduced maintenance costs, maintain your car in accordance with the maintenance schedule in Section 5. If you drive your car in severe conditions, more frequent maintenance is required (see Section 5 for details).
- Keep your car clean. For maximum service, your car should be kept clean and free of corrosive materials. It is especially important that mud, dirt, ice, etc. not be allowed to accumulate on the underside of the car. This extra weight can result in increased fuel consumption and also contribute to corrosion.
- Travel lightly. Don't carry unnecessary weight in your car. Weight is an enemy of good fuel economy.
- Don't let the engine idle longer than necessary. If you are waiting (and not in traffic), turn off your engine and restart only when you're ready to go.

- o Remember, your car does not require extended warm-up. As soon as the engine is running smoothly, you can drive away. In very cold weather, however, give your engine a slightly longer warm-up period.
- o Don't "lug" or "over-rev" the engine. Lugging is driving too slowly in too high a gear resulting in the engine bucking. If this happens to you, shift to a lower gear.
  Over-revving is racing the engine beyond its safe limit. This can be avoided by shifting at the recommended speeds.
- o Use your air conditioning sparingly. The air conditioning system is operated by the engine power so your fuel economy is reduced when you use it.

SC160A1-F

SMOOTH CORNERING

Avoid braking or gear changing in corners, especially when roads are wet. Ideally, corners should always be taken under gentle acceleration. If you follow these suggestions, tire wear will be held to a minimum.

SC170A1-E

WINTER MOTORING

The onset of winter conditions subject motor vehicles to greater operating demands. Therefore, the following suggestions will assist in maintaining peak performance and reliability during these periods:

ZC170B1-E

Electrical System

Winter conditions impose severe demands upon vehicle electrical systems, particularly the charging circuit. The battery condition and performance along with the alternator performance and drive belt condition should be checked prior to the onset of winter.

ZC170C1-E

Anti-freeze/Corrosion inhibitor

The cooling system must always contain an Ethylene-Glycol based anti-freeze solution. The system is filled during manufacture with solution of the correct strength which should be checked before the onset of winter and adjusted or changed as required.

NOTE:

The anti-freeze solution contains a corrosion inhibitor to prevent degradation of the aluminum castings contained within the engine. Therefore, never, drain the system and refill with water only.

In addition, anti-freeze solution must ALWAYS be used in vehicles fitted with air conditioning, to prevent the heater matrix from freezing and subsequently bursting with the refrigeration system in use.

ZC170D1-E

Door Locks

Should the door lock mechanism become frozen, a proprietary lock de-icer should be used. Alternatively, warming the door key may thaw the door lock. However, the key should be handled carefully to avoid burning the fingers. Never attempt to thaw a frozen door lock using hot water, since the water will eventually freeze and compound the problem.

NOTE:

The proper temperature for using the immobilizer key is from -40°F (-40°C) to 176°F (80°C). If you heat the immobilizer key over 176°F (80°C) to open the frozen lock, it may cause damage to the transponder in its head.

SC170E1-E

Windscreen Washers and Wipers

The windscreen washer bottle should be filled with a solution of water and a proprietary winter screen wash additive. The windscreen wipers should not be used if the blades are frozen to the windscreen or if they are covered with snow, before this is removed.

NOTE:

Never allow undiluted screen washer fluid additive to spill upon the paintwork or use engine coolant anti-freeze since damage to the paintwork may result.

- When driving in extreme conditions, the windscreen wiper blades may fail to clear the screen properly due to the formation of ice upon the blade edge. It will therefore be necessary to periodically remove such ice to restore their efficiency.
- If the power operated door mirrors become frozen, attempts to adjust these may damage the mechanism.
- The formation of snow or ice built up inside the wheel arches may interfere with the road wheels or steering mechanism. In such instances, unusual noises or an increase in steering effort may result. Therefore, ensure that the wheel arches are checked periodically and any accumulated snow or ice removed.
- It is advisable to carry emergency equipment including, torch, shovel, tow rope, blankets etc., if a journey is to be undertaken into areas of severe road conditions.

SC200A1-E

TRAILER AND CARAVAN TOWING

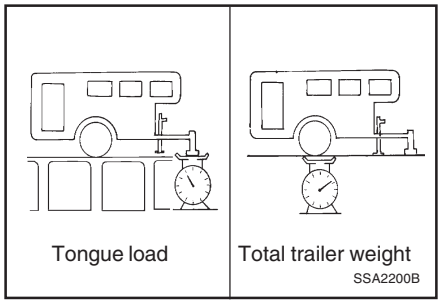

WARNING:

It is not recommended that the vehicle be used for towing until the first 1000 miles of Running In has been completed. All Hyundai coupe models are suited to towing trailers and caravans up to the limits indicated below. Coupe models fitted with automatic transmission have a transmission oil cooler and further transmission cooling should not be required.

C190E01GK-EAT

TOWING ATTACHMENTS

It is strongly recommended that only an Hyundai Approved towing attachment is used to ensure that the loads placed upon the body structure are correctly distributed. The use of a non approved attachment will result in the invalidation of the vehicle warranty. Hyundai towing attachments are designed and constructed to ensure maximum towing performance and ease of fitment. A range of accessories including electrical kits and mirrors are available through the Hyundai dealer network.

It is of the utmost importance that those areas of the vehicle which are subjected to greater stress during towing are maintained in accordance with the recommendations given at the end of this book. In addition, the daily operating checks relating to engine oil, transmission oil and tyres must be performed at each refuelling to ensure maximum reliability and safety.
The use of a proprietary stabiliser will assist in achieving an inherently stable outfit but whilst the use of such equipment will improve the characteristics of a balanced outfit, it will not compensate for a badly loaded and therefore unstable outfit.

The tyres and braking equipment fitted to the trailer or caravan must be maintained in accordance with the recommendations of the manufacturer. Special attention should be paid to tyres which deteriorate through time and expo-

sure rather than as a result of the distances towed. The inside walls of the tyres should be inspected along with the outside walls for cracking and damage. The trailer wheel nut torque must be checked on a regular basis, preferably before each towing session.

The trailer hitch and the safety catch mechanism must be maintained in good working order. The trailer break away cable or chain should be inspected for damage and should be attached to the vehicle towing attachment each and every time the trailer is hitched to the vehicle.

Whilst towing, the performance of the vehicle will be reduced in terms of acceleration, braking and handling due to the increased loads placed upon the vehicle. The driver should anticipate the change in characteristics and adjust the driving style in keeping with these changes. Care should be exercised when cornering and braking to prevent the outfit becoming uncontrollable by reducing cornering speeds and allowing increased braking distances.

The driver should exercise care to ensure that when pulling away from rest particularly on uphill gradients the clutch unit is not subjected to excessive slippage which will reduce the useful life of this component. Use of the "Overdrive Off" "2" and "L" positions when driving vehicles with automatic transmission will assist with braking performance when long down hill gradients are encountered. Improved acceleration performance will be available by selecting "Overdrive Off","2", or "1" depending upon road speed if it is found that the transmission unit makes an undesirable upshift whilst hill climbing or overtaking. The transmission unit should be operated in "D" with the Overdrive "On" under normal circumstances to enhance fuel economy and reduce noise and engine wear.

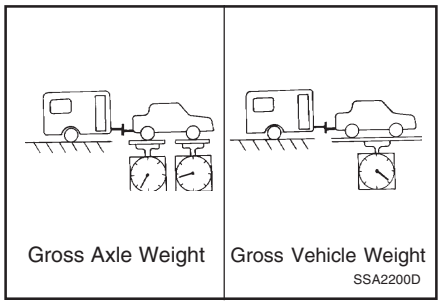

CAUTION:

The use of a badly loaded or overloaded trailer may result in instability.

This following specifications are recommended when towing a trailer. The loaded trailer weight or the Gross Train Weight must not exceed the values in the chart below.

Lbs.(kg)

		Maximum Towable Weight Trailer
Without Brake Type		1,212(550)
With Brake Type	1.6 L	2,645(1,200)
	2.0/2.7 L	3,086(1,400)

NOTE:

- **The total gross vehicle weight with trailer must not exceed the Gross Vehicle Weight Rating (GVWR) shown on the vehicle identification plate (see page 8-1). The total gross vehicle weight is the combined weight of the vehicle, driver, all passengers and their luggage, cargo, hitch, trailer tongue load and other optional equipment.**
- **The front or rear axle weight must not exceed the Gross Axle Weight Rating (GAWR) shown on the vehicle identification plate (see page 8-1). it is possible that your towing package does not exceed the GVWR but exceeds the GAWR. Improper trailer loading and/or too much luggage in the boot can overload the rear axle. Redistribute the load and check the axle weight again.**

- **The maximum permissible static vertical load on the coupling device :**

Lbs.(kg)

1.6 L	110(50)
2.0/2.7 L	132(60)

- **The maximum permissible overhang of the coupling point : 38.98 in.(990 mm)**

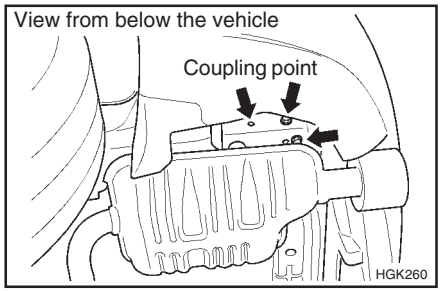

YC200E1-E

Trailer or Vehicle Towing Tips

1. Before towing, check hitch and safety chain connections as well as proper operation of the trailer running lights, brake lights, and turn signals.
2. Always drive your vehicle at a moderate speed (Less than 60mph).
3. Trailer towing requires more fuel than normal conditions.
4. To maintain engine braking efficiency and electrical charging performance, do not use fifth gear (manual transmission) or overdrive (automatic transmission).
5. Always secure items in the trailer to prevent load shift while driving.
6. Check the condition and air pressure of all tires on the trailer and your car. Low tire pressure can seriously affect the handling. Also check the spare tire.
7. The vehicle/trailer combination is more affected by crosswind and buffeting.
   When being passed by a large vehicle, keep a constant speed and steer straight ahead. If there is too much wind buffeting slow down to get out of the other vehicle's air turbulence.
8. When parking your car and trailer, especially on a hill, be sure to follow all the normal precautions. Turn your front wheel into the curb, set the parking brake firmly, and put the transmission in 1st or Reverse (manual) or Park (automatic). In addition, place wheel chocks at each of the trailer's tires.
9. If the trailer has electric brakes, start your vehicle and trailer moving, and then apply the trailer brake controller by hand to be sure the brakes are working. This lets you check your electrical connection at the same time.
10. During your trip, check occasionally to be sure that the load is secure, and that the lights and any trailer brakes are still working.
11. Avoid jerky starts, sudden acceleration or sudden stops.
12. Avoid sharp turns and rapid lane changes.
13. Avoid holding the brake pedal down too long or too frequently. This could cause the brakes to overheat, resulting in reduced braking efficiency.
14. When going down a hill, shift into a lower gear and use the engine braking effect.
    When ascending a long grade, downshift the transmission to a lower gear and reduce speed to reduce chances of engine overloading and/or overheating.
15. If you have to stop while going uphill, do not hold the vehicle in place by pressing on the accelerator. This can cause the automatic transmission to overheat. Use the parking brake or footbrake.
16. The maximum permissible overhang of the coupling point : 38.98 in.(990 mm).

NOTE:

When towing check transaxle fluid more frequently.

CAUTION:

If overheating should occur when towing, (temperature gauge reads near red zone), taking the following action may reduce or eliminate the problem.

1. Turn off the air conditioner.
2. Reduce highway speed.
3. Select a lower gear when going uphill.
4. While in stop and go traffic, place the gear selection in park or neutral and idle the engine at a higher speed.

SD000A1-E

3. IN CASE OF EMERGENCY

SD020A1-E

IF THE ENGINE WILL NOT START

Seek assistance from the nearest Hyundai dealer with regard to the method of ignition and fuel system diagnosis.

CAUTION:

If the engine refuses to start, no attempt should be made to push or tow start the vehicle. Vehicles with automatic transmission or fuel injection will not be able to be started in this manner since no drive is transmitted through the automatic transmission whilst the engine is not running, and in the case of fuel injected derivatives, the fuel pump will not operate under tow start conditions. In addition, if the vehicle is equipped with an exhaust catalyst, damage to the catalyst may result if the vehicle is tow started.

SD020B1-E

IF THE ENGINE CANNOT BE CRANKED

1. If the vehicle is fitted with manual transmission, ensure that the clutch pedal is depressed whilst cranking the engine. If the vehicle is fitted with automatic transmission, ensure that the transmission selector is at the "P" or"N" position.
2. Check the battery terminals and connections to ensure that these are clean and also tight.
3. If the ignition warning lamps dim when the engine is cranked and the battery terminals have been checked, a discharged battery is indicated.
4. Do not attempt to push or tow start the vehicle, refer to "Jump Starting" for information regarding engine starting when the battery is discharged.

SD020C1-F

If Engine Turns Over Normally but Does Not Start

1. Check fuel Level
2. Check all connectors at ignition coil and spark plugs.
   Replace any that may be disconnected or loose.
3. Check fuel line in the engine room.
4. If engine still refuses to start, call a Hyundai dealer or seek other qualified assistance.

AD020D1-A

If Engine Stalls While Driving

1. Reduce your speed gradually, keeping a straight line. Move cautionsly off the road to a safe place.
2. Turn on your emergency flashers.
3. Try starting the engine again. If your vehicle will not start, see "IF THE ENGINE WILL NOT START".

SD030A1-E

JUMP STARTING

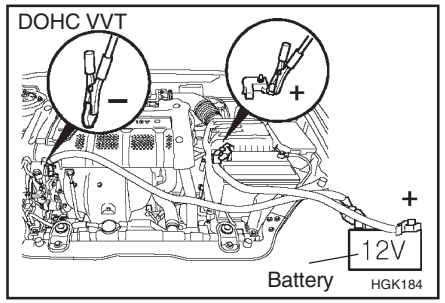

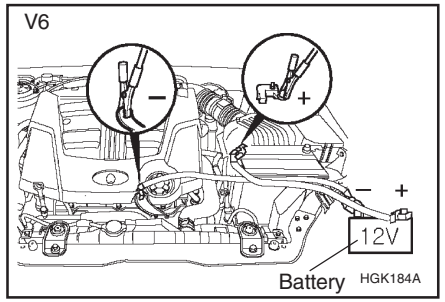

CAUTION:

Personal injury and damage to the vehicle may occur if jump starting is not performed correctly. If any doubt exists as to how this operation should be performed, seek assistance from qualified personnel.

WARNING:
Motor vehicle batteries contain sulphuric acid and emit hydrogen gas. Protective clothing should be worn and care exercised to prevent the acid from coming into contact with skin or clothing and the vehicle. Naked lights should not be permitted in the vicinity of the battery. Care should be exercised to prevent sparks occurring during connection. If acid accidentally comes into contact with skin or eyes, the affected area should immediately be flushed with copious amounts of water and medical assistance sought.

1. Ensure that the booster battery is 12 volt type. If the booster battery is installed in another vehicle, ensure that the two vehicles are not touching.
2. Turn off all unnecessary electrical equipment in both vehicles.
3. Ensure that the engine of the vehicle providing the jump start is running prior to connection of the jump cables.
4. Connect the red jump cable to the positive (+) terminal of the booster battery and the other end to the positive (+) terminal of the discharged battery.
5. Attach the black jump cable to the negative (-) terminal of the booster battery, and the other end to a ground point within the engine compartment of the vehicle with the flat battery. Do not connect to the negative battery terminal of the flat battery since sparks may be generated with the subsequent risk of explosion.
6. Raise the booster vehicle engine speed to 2,000 r.p.m. and start the engine of the vehicle with the flat battery.
7. Remove jump cables in the reverse order of installation (black cable first).

CAUTION:
If the jump cable is incorrectly installed, damage to the vehicle electrical system may occur, in particular the electronic components such as the Fuel Injection system computer and the Automatic Transmission computer. The battery must never be disconnected whilst the engine is running.

SD040A1-E

IF THE ENGINE OVERHEATS

If the temperature gauge indicates overheating:

1. Pull off the road and stop as soon as it is safe to do so.
2. Place the gear selector lever in "P" (automatic), or neutral (manual transaxle) and set the parking brake. If the air conditioning is on, turn it off.
3. If coolant is running out under the car or steam is coming out from under the bonnet stop the engine. Do not open the bonnet until the cool-ant has stopped running or the steaming has stopped. If there is no visible loss of coolant and no steam, leave the engine running and check to be sure the engine cooling fan is operating.
   If the fan is not running, turn the engine off.
4. Check to see if the water pump drive belt is missing. If it is not missing, check to see that it is tight. If the drive belt seems to be satisfactory, check for coolant leaking from the radiator, hoses or under the car. (If the air conditioning had been in use, it is normal for cold water to be draining from it).

WARNING:
Whilst the engine is running, keep hands and clothing away from moving parts such as the fan and drive belts to prevent injury.

5. If the water pump drive belt is broken or coolant is leaking out, stop the engine immediately and call the nearest Hyundai dealer for assistance.

WARNING:
Do not remove the radiator cap when the engine is hot since steam and boiling water may be ejected from the radiator resulting in burns or scalding.

6. If the cause of the overheating cannot be found, wait until the engine temperature has returned to normal. Then, if coolant has been lost, carefully remove the radiator cap and add water to bring the fluid level in the reservoir up to the base of the radiator fill opening. Fill the coolant expansion tank to the halfway mark.

7. Proceed with caution until it is established that the engine is operating normally. If the engine overheats repeatedly, the advice of a Hyundai dealer should be sought.

CAUTION:
Serious loss of coolant indicates there is a leak in the cooling system and this should be checked as soon as possible by a Hyundai dealer.

D040A01GK-EAT

TEMPORARY SPARE TYRE

The following instructions for the temporary spare tyre should be observed:

1. Check inflation pressure as soon as practical after installing the spare tyre, and adjust to the specified pressure. The tyre pressure should be periodically checked and maintained at the specified pressure while the tyre is stored.
2. The spare tyre should only be used temporarily and should be returned to the luggage compartment as soon as the original tyre can be repaired or replaced.
3. Continuous use at speeds of over 50 mph (80 km/h) is not recommended.
4. As the temporary spare tyre is specifically designed for your car, it should not be used on any other vehicle.
5. The temporary spare tyre should not be used on any other wheels, nor should standard tyre, snow tyre, wheel covers or trim rings be used with the temporary spare wheel. If such use is attempted, damage to these items or other car components may occur.
6. The temporary spare tyre pressure should be checked once a month while the tyre is stored.

Spare Tyre Pressure

Type Size	T125/70 R16
Inflation Pressure	420 kPa (60 psi)

CAUTION:
- **Do not use snow chains with your temporary spare tyre.**
- **Do not use more than one temporary spare tyre at a time.**

SD060A1-E

IN THE EVENT OF A PUNCTURE

If a puncture occurs whilst driving the vehicle:

1. Bring the car to rest as soon as it is safe to do so and with the minimum amount of braking required which will assist in maintaining the maximum amount of control. The vehicle should be parked wherever possible upon firm level ground to facilitate wheel changing.
2. If the vehicle is creating a hazard and the road conditions do not permit the wheel to be changed safely, assistance should be sought.
3. Passengers must not be allowed to remain inside the vehicle during wheel changing. If a puncture occurs whilst the vehicle is on a motorway, the passengers should take refuge on the motorway embankment to avoid the possibility of injury occurring should the vehicle be struck by other motorway traffic.
4. Wheel changing should be performed according to the following instructions.

SD070A1-E

CHANGING A FLAT TYRE

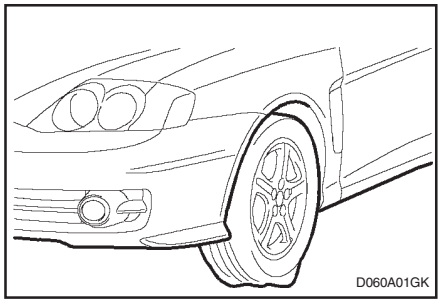

It is of the utmost importance that care is exercised when changing road wheels. Ensure that the parking brake is set and that the gear shift lever is in reverse (P, if the vehicle has automatic transmission).

D060K01FC-EAT

Wheel Cap (Not all models)

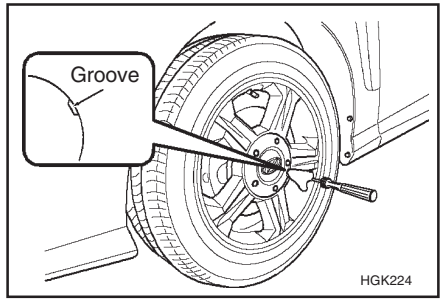

1. Wrap a piece of cloth around the tip of the driver to avoid scratching.
2. Insert a driver into the groove of the wheel cap and pry gently to remove the wheel cap.
3. Change the flat tyre.

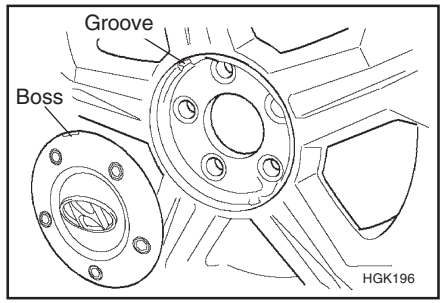

4. Reinstall the wheel cap by fitting the boss of the wheel cap in the groove of the wheel, hitting the centre of the wheel cap with hand.

D060A01GK-EAT

1. Obtain Spare Tyre and Tool

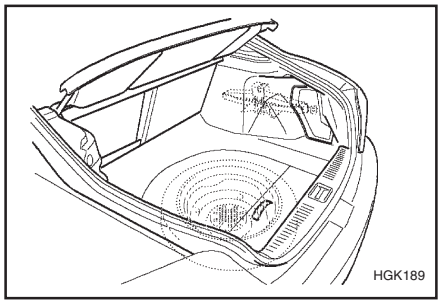

Remove the spare wheel, jack and tool bag from the boot.

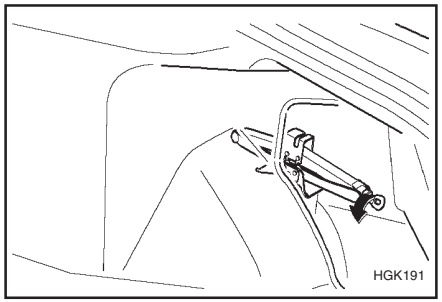

The jack is located in the right side of luggage trim. Remove the jack cover with screwing the bolts. Turn the jack at the end counterclockwise to low the jack height by using driver or wrench bar and take out it from the bracket.

SD070D1-E

2. Block the Wheel

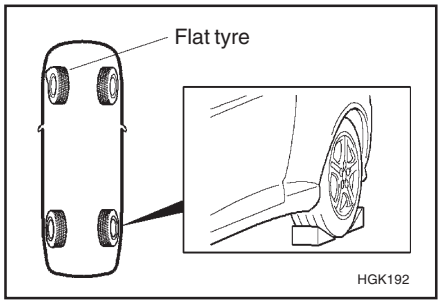

Block the wheel that is diagonally opposite from the flat tyre to prevent the vehicle from rolling when the car is raised on the jack.

SD070E1-E

3. Loosen Wheel Nuts

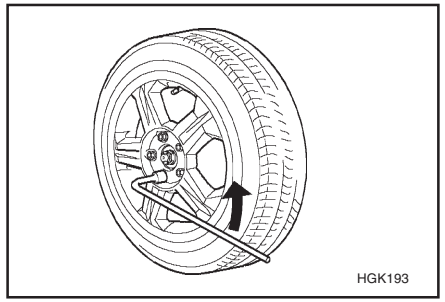

The wheel nuts should be loosened slightly before raising the car. To loosen the nuts, turn the wheel brace counterclockwise. Ensure that the wheel brace socket is seated properly on the nut and that it cannot slip. Do not remove the nuts at this stage.

SD070F1-F

4. Put the Jack in Place

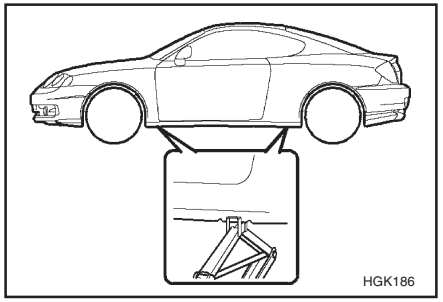

The base of the jack should be placed on firm, level ground. The jack should be positioned as shown in the drawing.

D060F02E-EAT

5. Raising the Car

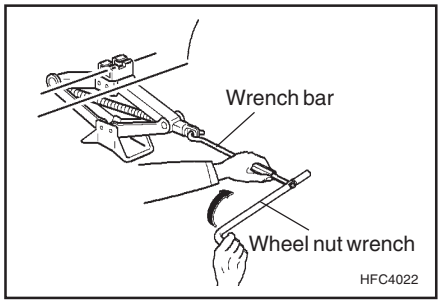

After inserting a bar into the wheel nut wrench, install the bar into the jack as shown in the drawing. To raise the vehicle, turn the wheel nut wrench clockwise. As the jack begins to raise the vehicle, double check that it is properly positioned and will not slip. If the jack is on soft ground or sand, place a board, brick, flat stone or other object under the base of the jack to keep it from sinking.
Raise the car high enough so that the fully inflated spare tire can be installed. To do this, you will need more ground clearance than is required to remove the flat tyre.

WARNING:

Do not get under the car when it is supported by the jack! This is very dangerous as the jack could fall and cause serious injury or death. No one should stay in the car while the jack is being used.

D060G02Y-EAT

6. Changing Wheels

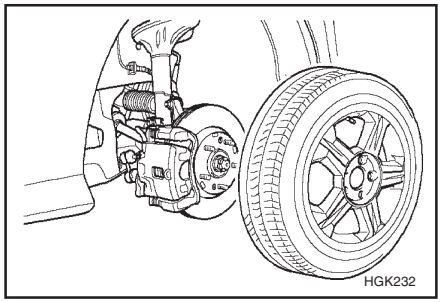

Loosen the wheel nuts and remove them with your fingers. Slide the wheel off the studs and lay it flat so it cannot roll away. To put the wheel on the hub, pick up the spare tyre, line up the holes with the studs and slide the wheel onto them. If this is difficult, tip the wheel slightly and get the top hole in the wheel lined up with the top stud. Then jiggle the wheel back and forth until the wheel can be slid over the other studs.

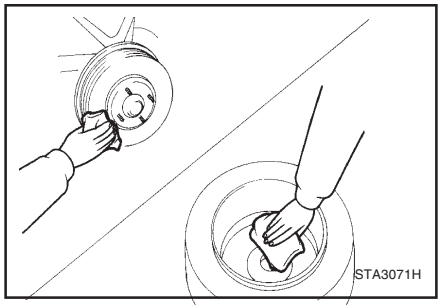

WARNING:

Wheels and wheel cover may have sharp edges. Handle them carefully to avoid possible severe injury.

Before putting the wheel into place, be sure that there is nothing on the hub or wheel (such as mud, tar, gravel, etc.) that interferes with the wheel from fitting solidly against the hub. If there is, remove it. If there is not good contact on the mounting surface between the wheel and hub, the wheel nuts could come loose and cause the loss of a wheel. Loss of a wheel may result in loss of control of the vehicle. This may cause serious injury or death.

D060H02Y-EAT

7. Reinstall Wheel Nuts

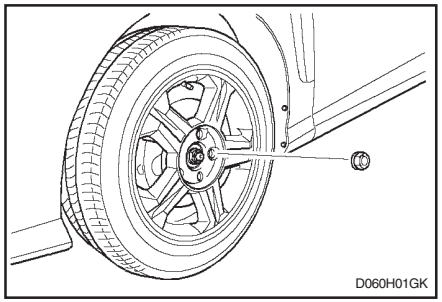

To reinstall the wheel hold it on the studs put the wheel nuts on the studs and tighten them finger tight. The nuts should be installed with their small diameter ends directed inward. Jiggle the tyre to be sure it is completely seated, then tighten the nuts as much as possible with your fingers again.

SD070J1-E

8. Lower Vehicle and Tighten Nuts

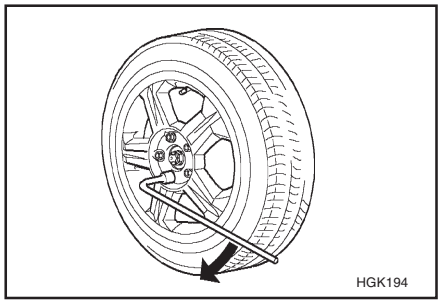

Lower the car to the ground turning the wheel nut wrench counterclockwise. When the vehicle is firmly on the ground, remove the jack and tighten the wheel nuts securely. At the first available opportunity, the wheel nut torque should be checked with a suitable torque wrench.

Wheel nut tightening torque
Steel wheel & aluminium alloy wheel:
900-1,100 kg.cm (65-80 lb.ft)

SD070K1-E

AFTER CHANGING WHEELS

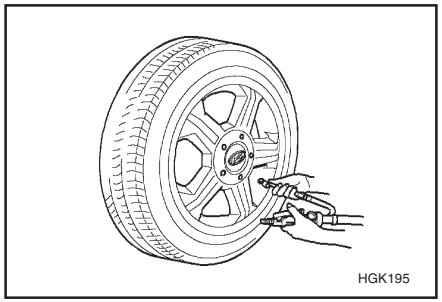

The pressure of the spare tyre should be checked at the first available opportunity. If any doubt exists as to the tyre pressure, the vehicle should be driven slowly to the nearest service station and the tyre pressure checked and adjusted as required.
If the valve cap is lost from any of the valves, a replacement should be obtained and fitted at the first available opportunity. The valve cap prevents the ingress of dirt which may cause the valve to stick and therefore leak and is part of the valve sealing function.

Ensure that the spare wheel, jack and wheel nut wrench as well tools are correctly located in the boot of the vehicle to prevent damage and noise.

SD080A1-E

VEHICLE TOWING OR RECOVERY

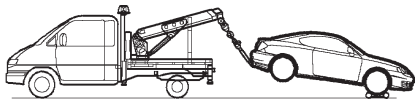

o OK FOR AUTOMATIC OR MANUAL TRANSAXLE EQUIPPED VEHICLE

CAUTION:
An incorrect tow or recovery could result in serious damage to the vehicle. If any damage to the suspension, steering or transmission is apparent or suspected, a towing ambulance must be used.

SD090A1-E

Manual Transmission Vehicle

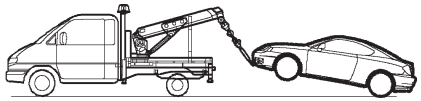

HGK199

o OK FOR AUTOMATIC OR MANUAL TRANSAXLE EQUIPPED VEHICLE WITH NO DAMAGE

The vehicle may be towed by the conventional method using the towing eye at the front of the vehicle as an attachment point. In addition, a suspended tow with or without an ambulance may be used with either the front or the rear wheels being suspended, provided the above caution is observed.

In addition, the following points must be noted:

- o If towing by conventional means, the ignition key must be at the "ACC" position, otherwise the steering lock will be activated.
- o Because the brake system and steering system power assistance is derived from the engine, the amount of effort required to stop or steer the vehicle will be greater than normal.
- o If a suspended tow is being given to the rear, the ignition key must be at the "ACC" position since the steering lock is not designed to withstand the force required to hold the front wheels straight during the tow.
- o The vehicle must not be towed with the front wheels on the ground for more than thirty miles.

SD100A2-E

Automatic Transmission Vehicle

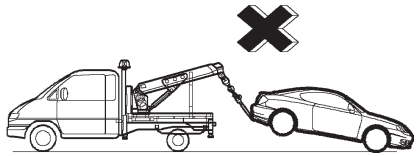

HGK200

o NOT OK FOR AUTOMATIC TRANSAXLE QUIPPED VEHICLE
o OK FOR MANUAL TRANSAXLE

The vehicle may be towed by the conventional method using the towing eye at the front of the vehicle as an attachment point.
In addition, a suspended tow may be given to the front of the vehicle without an ambulance. In the event of a suspended tow being given to the rear of the vehicle, the use of an ambulance is imperative.

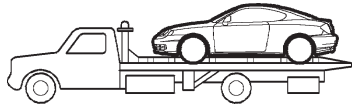

D080C01GK

o OK FOR AUTOMATIC OR MANUAL TRANSAXLE EQUIPPED VEHICLE

CAUTION:
The following restriction must be observed in order to avoid serious damage to the transmission.
The vehicle must never be towed from the rear with the front wheels on the ground.
The vehicle must not be towed until transmission fluid has been added to bring the level up to the "HOT" marking on the dipstick. (The level will need to be reduced again after towing).
The vehicle must not be towed at speeds faster than 25 mph. or distances greater than fifty miles. The general points regarding the steering lock etc. described in the preceding section (Manual transmission vehicle) should be observed.

D120A01A-EAT

IF YOU LOSE YOUR KEYS

Information about the key of immobilizer system will be found on page 1-2.

SE000A1-E

4. APPEARANCE CARE

SE020A1-E

PROTECTING YOUR HYUNDAI FROM CORROSION

By using the most advanced design and construction practices, every Hyundai is built to retain the original factory finish for many years. However, long term durability is also greatly dependant upon maintaining the various protection systems and coatings used in manufacture since constant, exposure to the elements will result in a breakdown and loss of effectiveness. The following suggestions are made to assist in the maintenance of the vehicle bodywork.

SE030A1-E

UNDERBODY COATINGS

Every Hyundai passenger car receives a full underbody and cavity injection treatment during production. In order that this treatment may retain maximum effectiveness it is recommended that the underbody receives a power wash and a thorough inspection after each winter season. In so doing any accumulations of mud, which act as moisture traps and combine with road salts to accelerate corrosion will be removed. In order to maintain the Anti Perforation Warranty, the requirements regarding the retreatment programme must be observed in accordance with the Terms and Conditions outlined in the separate Anti Perforation Warranty Booklet.

NOTE:

The underbody should never be steam cleaned since the underbody coating may be removed by this process.

During the interim period between power washing the underbody, the more vulnerable areas such as wheel arches should be hosed off particularly during the winter season to prevent prolonged contact with road salts.

Ensure that the various drain points located at the bottom of the door panels and sills are kept clear to prevent water from becoming trapped within the cavities. Wherever possible, the parking of the vehicle in a confined, poorly ventilated location (a garage for example) should be avoided when the vehicle is wet or is covered with snow or ice. Under these conditions, the internal cavities of the vehicle will remain damp for prolonged periods of time which will encourage corrosion. Parking the vehicle where good ventilation exists (outside for example) is preferable.

E030A01GK-AAT

VALETING

Regular cleaning of the exterior paintwork serves two important functions. Firstly, the removal of abrasive dirt and contaminants will maintain the lustre of the paintwork and will prevent discolouration and dulling due to prolonged contact.

Secondly, the presence of damage through impact or abrasion will be apparent allowing early rectification to be made thus preventing corrosion from becoming established and spreading beneath the paint film. To avoid "water spotting" the vehicle should not be washed in direct sunlight particularly in the case of vehicles having dark body colours. The heat from the sun rays is absorbed by the paint film increasing the surface temperature. This action causes water used for washing to evaporate quickly leaving behind the deposits from the water and the shampoo used.

Use only a shampoo intended for the purpose and ensure that the body work is thoroughly wetted to soften the dirt film prior to attempting to remove this.

After removing the dirt film with a soft sponge, the body work should be thoroughly rinsed and then dried with a good quality chamois leather to prevent streaking or spotting of the paint work.

Household detergents, solvents and abrasive cleaning materials should not be used in order to avoid damaging the paint film.

High pressure car washes may cause water to enter your vehicle.

Plastic wheel covers should be cleaned using a sponge and water. Cast alloy wheels should be cleaned using a mild soap or neutral detergent.

Abrasive compounds must not be used since in the event of these damaging the lacquer coating,

oxidization of the aluminium wheel will occur, spoiling the appearance.
The use of an a toothbrush will facilitate cleaning between the wheel "spokes".

SE040B1-E
STAIN/SPOT REMOVAL
Should tree sap, dead insects or tar prove to be difficult to remove from the paint film, turpentine or a proprietary paint cutting compound may be used. Ensure that the area to be cleaned is not rubbed intensively to prevent breaking through the colour coat and exposing the under coat.

SE040C1-E
POLISHING
The exterior paint work should be polished with a proprietary wax polish when water no longer collects in bead form on the paint work. The instructions of the product manufacturer should be adhered to.

SE040E1-E
BUMPER MAINTENANCE
The special material from which the bumpers are manufactured warrants special attention to preserve the appearance of the bumpers. Avoid contact with battery electrolyte or brake fluid and ensure that accidental spillages are immediately flushed with water.
Do not use abrasive cleaning materials which may damage the bumpers.
Avoid subjecting the bumpers to high temperatures such as may be encountered in high bake paint ovens.

SE040F1-E
ACCIDENT REPAIRS
In the event of the body work sustaining damage, the following points should be noted prior to repairs being undertaken.
If body panels are replaced or repaired, anti corrosion treatment must be applied to the repair area. The product used must be compatible with those used in manufacture. It is recommended that repairs are entrusted to a Hyundai dealer to ensure that replacement parts used are of the same high quality as those used in manufacture of the vehicle and that the correct repair methods and materials will ensure adequate levels of corrosion protection and the continued validity of the Anti Perforation Warranty.

SE050A1-E
INTERIOR
During the winter period, it is possible that the passenger compartment flooring may become wet from damp footwear or quantities of snow adhering to footwear. The carpet should not be allowed to remain in this condition since the carpet may begin to create musty smells and will promote corrosion of the floor pan in addition to the carpet and under felt beginning to rot.

SE050C1-E
INTERIOR VALETING
The soft trim and carpets should be maintained with the regular use of a vacuum cleaner. Heavy soiling should be removed with a dry cleaning agent recommended for this purpose following the instructions of the product manufacturer. Paint thinner, solvents or other such cleaning materials should not be used since damage to the upholstery may result.

SE050D1-E
SEAT BELTS
Seat belts should be cleaned only with a mild soap solution. Strong detergents, solvens or bleaches may damage the belt webbing and therefore reduce the effectiveness of the belt. Belts which display signs of fraying, wear of cut should be replaced.

SE050E1-E
WINDOWS
A proprietary glass cleaner should be used to clean the inside of the windows. However, the rear heated windscreen must only be cleaned using a light horizontal cleaning action. Care should be exercised to avoid the use of abrasive cleaners or contact with items of jewellery which may damage the heating elements.

SF000A1-E

5. VEHICLE MAINTENANCE REQUIREMENTS

SF020A1-E

MAINTENANCE AND SERVICING REQUIREMENTS

To ensure the continued reliability and safety of the vehicle, certain routine maintenance operations are required at specific mileage or time intervals.

It is the responsibility of the vehicle owner to ensure that the maintenance schedules shown in both this Owners Manual and the Warranty and Service Passport are adhered to.

The new vehicle warranty may be invalidated if the routine maintenance operations are not performed in line with the recommendations outlined and the safety and durability of the vehicle adversely affected.

It is recommended that all maintenance operations with the exception of the daily operating checks are entrusted to a Hyundai dealer to ensure that the latest repair and maintenance procedures and specialized servicing tools are employed. In addition, the use of genuine Hyundai replacement parts will ensure that the vehicle safety and performance will not be compromised.

NOTE:

The inspection and testing of certain electronic fuel injection/engine management and automatic transmission control systems require specialised electronic equipment specifically designed for Hyundai vehicles. The use of general purpose electrical test equipment may result in damage to the control unit microprocessors.

SF020C1-E

Specified Scheduled Procedures

The Specified scheduled procedures are listed in the maintenance charts beginning at page 5-2. The operations specified must be performed at the time or mileage intervals shown irrespective of whether the mileage interval has been reached before the specified time interval.

Certain lubricants and components degrade with both time and mileage (e.g. engine oil and brake fluid) and therefore it is not permissable to base the maintenance schedule upon mileage alone. It is strongly recommended that the maintenance operations are performed by the factory-trained or distributor-trained technicians at your Hyundai dealer because of the need for specialized knowledge and tooling and to ensure that no possibility of invalidating the manufacturers warranty exists.

The maintenance schedules relate to vehicles operated under normal conditions, vehicles which are operated under adverse conditions will require more frequent maintenance which is described at page 5-4.

SF030B1-E

SERVICE HISTORY

It is important that all scheduled maintenance services are recorded in the warranty and service passport to ensure that proof of maintenance is available when warranty service is required.

SF040A3-E

SCHEDULED MAINTENANCE

In order to ensure the continued safety, reliability and longevity of the vehicle, the following maintenance service operations should be performed at the time or mileage intervals specified.
It is recommended that all routine maintenance services are entrusted to a Hyundai dealer to ensure that the manufacturers recommended procedures are employed and that only genuine Hyundai replacement parts are used. Incorrect maintenance techniques or the use of non genuine replacement parts may invalidate the vehicle warranty.

F030B01GK-EAT

R : REPLACE I : INSPECT AND, AFTER INSPECTION, CLEAN, ADJUST, REPAIR OR REPLACE IF NECESSARY

NO.	DESCRIPTION		MILES X 1000	10	20	30	40	50	60
			MONTHS	12	24	36	48	60	72
	ENGINE CONTROL SYSTEM MAINTENANCE								
1	ENGINE OIL & FILTER(SG OR ABOVE)		See Note (1) (3)	R	R	R	R	R	R
2	DRIVE BELT	2.0 DOHC VVT (ALT, W/PUMP, P/STR'G)			I		I		I
		2.7 V6 (AUTO-TENSIONER, ALT, P/STR'G, A/CON)				I			I
3	FUEL FILTER(MFI TYPE)						R		
4	FLUID LEAKS			I	I	I	I	I	I
5	TIMING BELT					I			R
6	VENTILATION HOSE							I	
7	AIR CLEANER FILTER			I	R	I	R	I	R
8	SPARK PLUG(1.6/2.0L)				R		R		R
	SPARK PLUGS(2.7L)								R
9	VALVE CLEARENCE (2.0 DOHC)			See Note (1)					

Note :
(1) SF OR LOWER: EVERY 6,000 MILES OR 6 MONTHS: "R"
(2) FOR EVERY 60,000 MILES OR 48 MONTHS, WHICHEVER OCCURS FIRST : "I"
(3) FOR 2.0 L DOHC VVT : SH (API), GF-1 (ILSAC) ABOVE

VEHICLE MAINTENANCE REQUIREMENTS

F030C02GK-EAT

R : REPLACE I : INSPECT AND, AFTER INSPECTION, CLEAN, ADJUST, REPAIR OR REPLACE IF NECESSARY

NO.	DESCRIPTION	MILES X 1000	10	20	30	40	10	60
		MONTHS	12	24	36	48	12	72
	GENERAL MAINTENANCE							
1	COOLING SYSTEM		I	I	I	I	I	I
2	COOLANT			R		R		R
3	COOLANT SPECIFIC GRAVITY		I	I	I	I	I	I
4	MANUAL TRANSAXLE OIL		I	I	I	I	I	I
5	AUTOMATIC TRANSAXLE FLUID		I	I	I	I	I	R
6	BRAKE PIPES, HOSES, AND CONNECTIONS		I	I	I	I	I	I
7	BRAKE FLUID		I	R	I	R	I	R
8	CLUTCH FLUID		I	R	I	R	I	R
9	REAR BRAKE LININGS AND CYLINDERS			I		I		I
10	BRAKE PADS		I	I	I	I	I	I
11	SUSPENSION AND STEERING SYSTEM		I	I	I	I	I	I
12	FRONT SUSPENSION BALL JOINTS		I	I	I	I	I	I
13	POLLEN FILTER (For Blower unit)		R	R	R	R	R	R
14	REAR WHEEL BEARINGS		I	I	I	I	I	I
15	TYRE CONDITION AND PRESSURE (incl. Spare)		I	I	I	I	I	I
16	LUBRICATE LOCKS AND HINGES		I	I	I	I	I	I
17	CHECK ALL ELECTRICAL SYSTEMS		I	I	I	I	I	I
18	ROAD TEST		I	I	I	I	I	I
19	CHECK ALL SYSTEMS WITH HI-SCAN		I	I	I	I	I	I
20	CHECK 4 GAS		I	I	I	I	I	I
21	DRIVE SHAFT & BOOT		I	I	I	I	I	I

F040A02GK-EAT

MAINTENANCE UNDER SEVERE USAGE CONDITIONS

The following items must be serviced more frequently on cars normally used under severe driving conditions. Refer to the chart below for the appropriate maintenance intervals.

R : Replace I : Inspect and, after inspection, clean, adjust, repair or replace if necessary

MAINTENANCE ITEM	MAINTENANCE OPERATION	MAINTENANCE INTERVALS	DRIVING CONDITION
ENGINE OIL AND FILTER	R	EVERY 3,000MILES OR 6 MONTHS	A, B, C, F, H
AIR CLEANER FILTER	R	MORE FREQUENTLY	C, E
SPARK PLUGS	R	MORE FREQUENTLY	B, H
TIMING BELT	R	EVERY 37,000MILES OR 48MONTHS	D, E, F, G
BRAKE PADS, CALIPERS AND ROTORS	I	MORE FREQUENTLY	C, D, G, H
REAR BRAKE DRUMS/LININGS, PARKING BRAKE	I	MORE FREQUENTLY	C, D, G, H
STEERING GEAR BOX, LINKAGE & BOOTS/ LOWER ARM BALL JOINT	I	MORE FREQUENTLY	C,D,E,F
DRIVESHAFTS & BOOTS	I	EVERY 9,000MILES OR 12 MONTHS	C, D, E, F, G
MANUAL TRANSAXLE OIL	R	EVERY 60,000MILES	A, C, D, E, F, G, H, I, J
AUTOMATIC TRANSAXLE FLUID	R	EVERY 27,000MILES	A, C, E, F, G, H, I
POLLEN FILTER(FOR BLOWER UNIT)	R	MORE FREQUENTLY	C, E

SEVERE DRIVING CONDITIONS

A - Repeated short distance driving
B - Extensive idling
C - Driving in dusty, rough roads
D - Driving in areas using salt or other corrosive materials or in very cold weather
E - Driving in sandy areas
F - More than 50% driving in heavy city traffic during hot weather above 90°F (32°C)
G - Driving in mountainous areas
H - Towing a trailer
I - Driving for rental car, taxi, commercial car or vehicle towing
J - Continuous driving over 100 MPH

6ZF060A1-A

EXPLANATION OF SCHEDULED MAINTENANCE ITEMS

6ZF060M1-A

o Engine oil and filter

The engine oil and filter should be changed at the intervals specified in the maintenance schedule. If the car is being driven in severe conditions, more frequent oil and filter changes are required.

6ZF060B2-A

o Drive belts

Inspect all drive belts for evidence of cuts, cracks, excessive wear or oil saturation and replace if necessary. Drive belts should be checked periodically for proper tension and adjusted as necessary.

6ZF060C1-A

o Fuel filter

A clogged filter can limit the speed at which the vehicle may be driven, damage the emission system and cause hard starting. If an excessive amount of foreign matter accumulates in the fuel tank, the filter may require replacement more frequently.
After installing a new filter, run the engine for several minutes, and check for leaks at the connections.

6ZF060D1-A

o Fuel lines, fuel hoses and connections

Check the fuel lines, fuel hoses and connections for leakage and damage. Replace any damaged or leaking parts immediately.

6ZF060E1-A

o Timing belt

Inspect all parts related to the timing belt for damage and deformation. Replace any damaged parts immediately.

6ZF060G1-A

o Vapour hose and fuel filler cap

The vapor hose and fuel filler cap should be inspected at those intervals specified in the maintenance schedule. Make sure that a new vapour hose or fuel filler cap is correctly replaced.

6ZF060F1-A

o Vacuum, crankcase ventilation hoses

Inspect the surface of hoses for evidence of heat and/or mechanical damage. Hard and brittle rubber, cracking, tears, cuts, abrasions, and excessive swelling indicate deterioration. Particular attention should be paid to examining those hose surfaces nearest to high heat sources, such as the exhaust manifold.
Inspect the hose routing to assure that the hoses do not come in contact with any heat source, sharp edges or moving component which might cause heat damage or mechanical wear. Inspect all hose connections, such as clamps and couplings, to make sure they are secure, and that no leaks are present. Hoses should be replaced immediately if there is any evidence of deterioration or damage.

6ZF060H1-A

o Air cleaner filter

A Genuine Hyundai air cleaner filter is recommended when filter is replaced.

6ZF060J1-A

o Spark plugs

Make sure to install new spark plugs of the correct heat range.

F060N02E-EAT

o Valve Clearance

Inspect excessive valve noise and/or engine vibration and adjust if necessary. A qualified technician should perform the operation.

6ZF070B1-A

o Cooling system

Check the cooling system part, such as radiator, coolant reservoir, hoses and connections for leakage and damage. Replace any damaged parts.

6ZF070C1-A

o Coolant

The coolant should be changed at the intervals specified in the maintenance schedule.

6ZF070D1-A

o Manual transaxle oil

Inspect the manual transaxle oil according to the maintenance schedule.

NOTE:

If the oil level is low, check for possible leaks before adding oil. Do not overfill.

F070E03A-AAT

o Automatic transaxle fluid

The fluid level should be in the "HOT" range of the dipstick, after engine and transaxle are at normal operating temperature. Check the Automatic Transaxle Fluid level with the engine running and the transaxle in neutral, with the parking brake properly applied. Use DIAMOND ATF SP-III, SK ATF SP- III when adding or changing fluid.

6ZF070F1-A

o Brake hoses and lines

Visually check for proper installation, chafing, cracks, deterioration and any leakage. Replace any deteriorated or damaged parts immediately.

6ZF070G2-A

o Brake fluid

Check brake fluid level in the brake fluid reservoir. The level should be between "MIN" and "MAX" marks on the side of the reservoir. Use only hydraulic brake fluid conforming to DOT 3 or DOT 4.

6ZF070H1-A

o Rear brake drums and linings/ parking brake

Check the rear brake drums and linings for scoring, burning, leaking fluid, broken parts, and excessive wear. Inspect the parking brake system including the parking brake lever and cables. For detailed service procedures, refer to the Shop Manual.

6ZF070J1-A

o Brake pads, calipers and rotors

Check the pads for excessive wear, discs for run out and wear, and calipers for fluid leakage.

6ZF070K1-A

o Exhaust pipe and muffler

Visually inspect the exhaust pipes, muffler and hangers for cracks, deterioration, or damage. Start the engine and listen carefully for any exhaust gas leakage. Tighten connections or replace parts as necessary.

6ZF070L1-A

o Suspension mounting bolts

Check the suspension connections for looseness or damage. Retighten to the specified torque.

6ZF070M1-A

o Steering gear box, linkage & boots/ lower arm ball joint

With the vehicle stopped and engine off, check for excessive freeplay in the steering wheel.
Check the linkage for bends or damage. Check the dust boots and ball joints for deterioration, cracks, or damage. Replace any damaged parts.

6ZF070N1-A

o Power steering pump, belt and hoses

Check the power steering pump and hoses for leakage and damage. Replace any damaged or leaking parts immediately. Inspect the power steering belt for evidence of cuts, cracks, excessive wear, oiliness and proper tension. Replace or adjust it if necessary.

6ZF070P1-A

o Driveshafts and boots

Check the drive shafts, boots and clamps for cracks, deterioration, or damage. Replace any damaged parts and, if necessary, repack the grease.

6ZF070Q1-A

o Air conditioning refrigerant

Check the air conditioning lines and connections for leakage and damage. Check air conditioning performance according to the relevant shop manual if necessary.

SG000A1-E

6. OWNER MAINTENANCE

G010A01GK-EAT

ENGINE COMPARTMENT (1.6 DOHC)

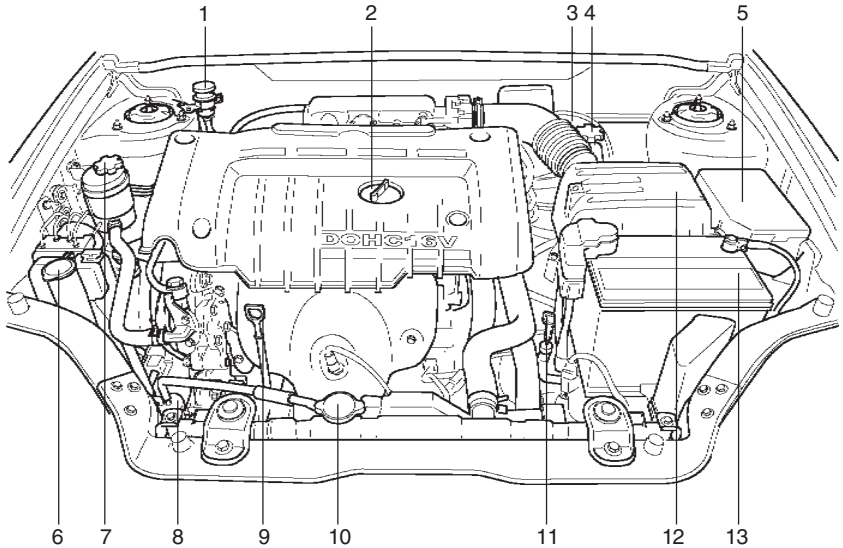

CAUTION:
When inspecting or servicing the engine, you should handle tools and other heavy objects carefully so that the plastic rocker cover of the engine is not damaged.

HGK238-D

1. Clutch fluid reservoir (Not all models)
2. Engine oil filler cap
3. Brake Booster
4. Brake fluid reservoir
5. Relay box
6. Windscreen washer fluid reservoir cap
7. Power steering fluid reservoir
8. Engine coolant reservoir
9. Engine oil level dipstick
10. Radiator cap
11. Automatic transaxle fluid level dipstick (Not all models)
12. Air cleaner
13. Battery

G010A01GK-EAT

ENGINE COMPARTMENT (2.0 DOHC VVT)

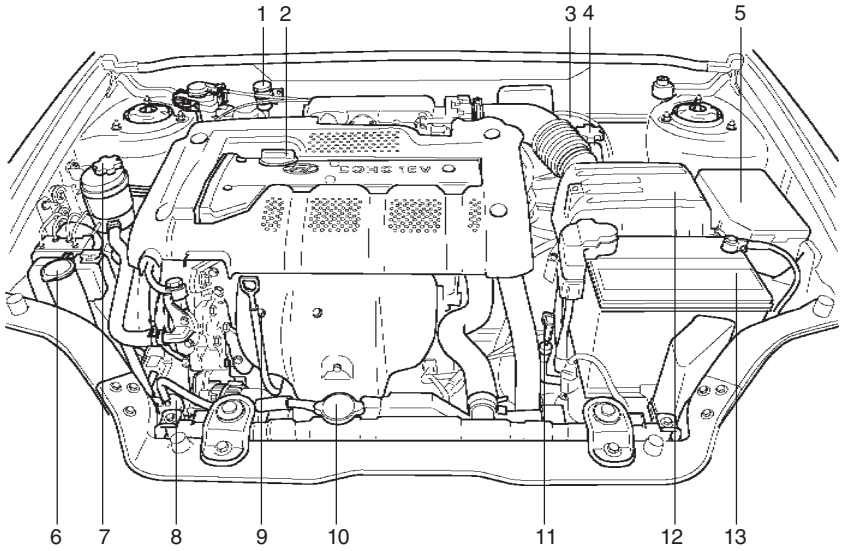

CAUTION:
When inspecting or servicing the engine, you should handle tools and other heavy objects carefully so that the plastic rocker cover of the engine is not damaged.

HGK059-D

1. Clutch fluid reservoir (Not all models)
2. Engine oil filler cap
3. Brake Booster
4. Brake fluid reservoir
5. Relay box
6. Windscreen washer fluid reservoir cap
7. Power steering fluid reservoir
8. Engine coolant reservoir
9. Engine oil level dipstick
10. Radiator cap
11. Automatic transaxle fluid level dipstick (Not all models)
12. Air cleaner
13. Battery

G010B01GK-EAT

ENGINE COMPARTMENT (2.7 V6)

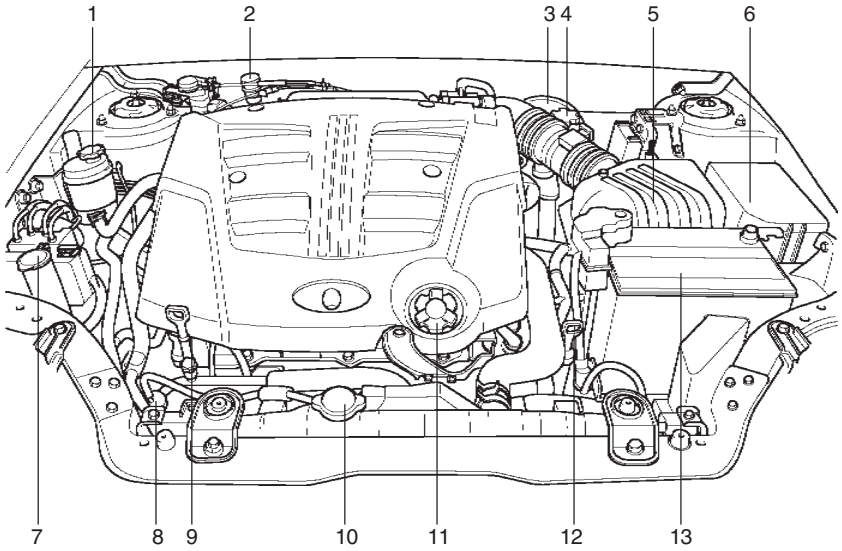

CAUTION:
When inspecting or servicing the engine, you should handle tools and other heavy objects carefully so that the plastic rocker cover of the engine is not damaged.

HGK209-D

1. Power steering fluid reservoir
2. Clutch fluid reservoir (Not all models)
3. Brake Booster
4. Brake fluid reservoir
5. Air filter element
6. Relay box
7. Windscreen washer fluid reservoir cap
8. Engine coolant reservoir
9. Engine oil level dipstick
10. Radiator cap
11. Engine oil filler cap
12. Automatic transaxle fluid level dipstick (Not all medels)
13. Battery

SG020B1-E

DAILY OPERATING CHECKS

The following items should be checked on a daily basis or whenever the vehicle is refuelled, whichever occurs sooner.

- o Engine oil level.
- o Engine coolant level.
- o Power steering fluid level.
- o Brake fluid level.
- o Windscreen washer fluid level.
- o Battery condition.
- o Tyre condition and pressures.
- o Operation and cleanliness of all lighting equipment.
- o Windscreen wiper and washer operation.
- o Horn operation.
- o Warning lamp operation.
- o Adjustment and cleanliness of mirrors.
- o Seat and seat belt adjustment and operation.
- o Fluid leakage.

The vehicle must not be driven if the daily operating checks indicate that any item of equipment related to the safety or roadworthiness of the vehicle is not functioning correctly.

SG030A1-E

ENGINE OIL

The correct engine oil level is of paramount importance. An excessively high or low oil level may result in irreparable damage being sustained by the engine. The engine oil level must be checked on a daily basis or whenever the vehicle is refuelled, whichever occurs sooner.
In addition, it is imperative that only an approved grade and specification of oil is used to avoid the possibility of serious engine damage and premature wear. The use of "budget price" oil is a false economy that must be avoided if the maximum reliability and useful life is to be obtained from the vehicle.

SG030B02GK-E

Recommended Oil

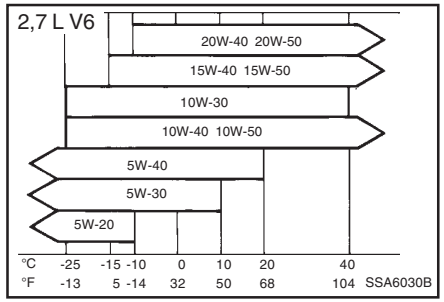

A multi grade oil having a specification which meets A.P.I. specification of SH, SG or above is recommended. The oil viscosity should be selected according to the operating environment of the engine by means of the table shown below. The engine oil recommendations are complete in themselves and the use of additives is neither required nor recommended. The use of engine oil additives may result in invalidation of the vehicle warranty.

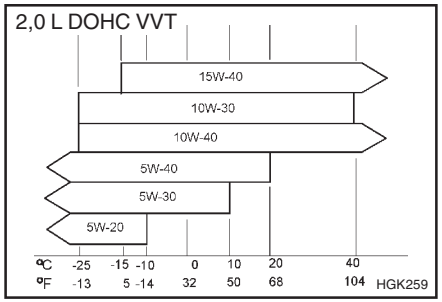

See the lubrication chart on the page 9-3.

NOTE:

- **The use of a 5W-20 multi grade oil is not recommended for sustained high speed use.**
- **When replacing or adding the oil, below SAE 10W-30 is recommended.**
  Using a high viscosity oil of SAE 15W-40 and over makes malfunction of VVT engine when the engine is cool.

SG030C1-E

Engine Oil Level

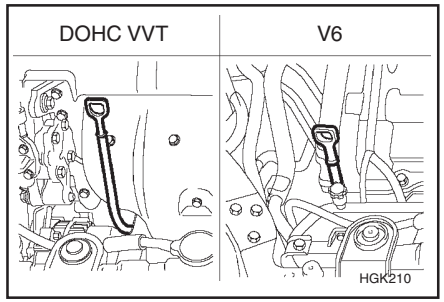

The engine oil level should be checked with the engine at normal operating temperature and the vehicle parked upon level ground.
Prior to checking the level, the vehicle should be allowed to stand for several minutes after the engine has been switched off to allow the oil to drain back to the sump.
Withdraw the dipstick and wipe it with a clean rag. Replace the dipstick fully and withdraw again when the oil level may be read from the stick.
Normal oil level is indicated when the oil is present between the two marks on the stick. It is not necessary to add oil if the level is above the lower mark and in any case, oil must not be added to the degree that the level exceeds the upper mark. Replace the dipstick fully after checking the level.

SG030D1-E

ENGINE OIL REPLENISHMENT

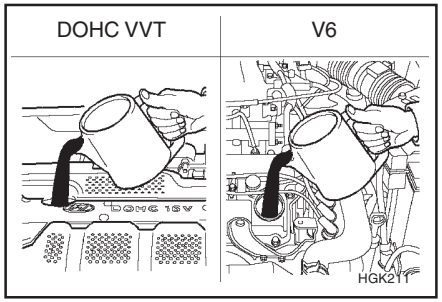

If the indicated oil level is at or below the lower mark of the dipstick, oil should be added until the level is at or below the upper mark.
To add oil to the engine, remove the filler cap by rotating in an counterclockwise direction and pour engine oil into the engine. Before checking the level again, allow several minutes for the oil to drain into the sump. Replace the oil filler cap rotating it in a clockwise direction until tight.
The quantity of oil required to raise the level from the minimum to maximum level is approximately 1 litre.

ZG030E1-A

ENGINE OIL CONSUMPTION

Function of engine oil

Engine oil has the primary function of lubricating and cooling the inside of the engine.

Engine oil consumption

It is normal that an engine should consume some engine oil while normal driving. The cause of oil consumption in a normal engine are as follows;

- o Engine oil is used to lubricate pistons, piston rings and cylinders.
  A thin film of oil is left on the cylinder wall when a piston moves downwards in the cylinder. High negative pressure generated during engine operation sucks some of the oil into the combustion chamber.
  This oil with some oil of the cylinder wall is burned by the high temperature combustion gases during the combustion process.
- o The engine oil consumption is strongly effected by the viscosity and quality of oil, engine rpm and driving condition etc.
  The engine oil is more consumed under severe driving conditions such as high speeds and frequent acceleration and deceleration than normal driving condition.

G040A02GK-EAT

ENGINE OIL AND FILTER REPLACEMENT

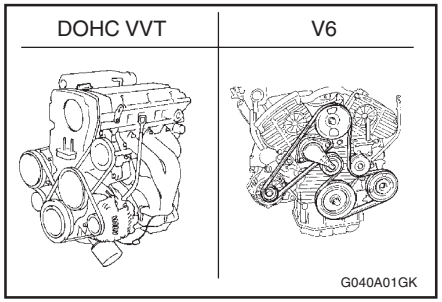

The engine oil and filter must be changed at the time or mileage interval specified in the maintenance schedule. If the vehicle is operated under severe or adverse conditions, the oil and filter must be replaced more frequently.
To replace the oil and filter, proceed as follows:

1. Ensure that the engine is at normal operating temperature and park the vehicle on level ground with the parking brake securely applied and the engine turned off.
2. Open the bonnet and remove the oil filler cap.
3. Prepare a suitable receptacle to collect the displaced oil and remove the drain plug from the sump.

CAUTION:
The oil being drained from the engine will be hot. Care should be exercised to prevent scalding.

4. When the oil has drained from the sump, replace the drain plug using a new washer ensuring that the plug is not over tightened.

   Tightening torque:
   4.5 ~ 4.0 kgf.m (1.6/2.0L)
   4.5 ~ 3.5 kgf.m (2.7L)
5. Remove the oil filter by rotating counterclockwise, using a proprietary oil filter removal tool if necessary. Note that the oil filter will contain approximately 0.5 litres of oil and this should be collected in a suitable receptacle.
6. Install a new oil filter having smeared the sealing ring with clean oil and rotating clockwise until the filter contacts the mounting and then a further one half turn. Do not overtighten.

   Tightening torque: 1.2 ~ 1.6 kgf.m.
7. Pour the specified quantity of the recommended oil into the engine and replace the filler cap. Start the engine and ensure that no oil leaks exist. Turn off the engine and after a couple minutes, recheck the oil level.

WARNING:
Prolonged and repeated contact with used engine oils may result in serious skin disorders including dermatitis and cancer. Avoid contact with skin as far as possible and al-

ways wash thoroughly after any contact. Keep used oils out of reach of children. It is illegal to pollute drains, water courses and soil. Use only authorized waste collection facilities including civic amenity sites and garages for the disposal of used oil and oil filters. If in doubt, contact the local authority for disposal instructions.

SG050A1-E

ENGINE COOLANT CHECKING AND REPLACING

WARNING:

Do not remove the radiator cap when the engine is hot, since the system is pressurized and coolant may be ejected from the radiator resulting in scalding.

SG050B1-E

Coolant recommendations

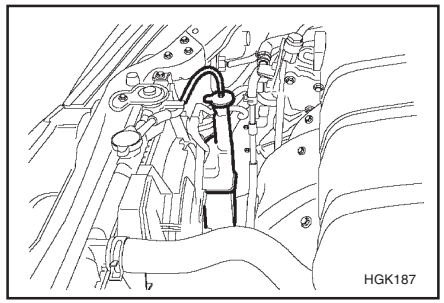

Only ethylene glycol based coolant with a corrosion inhibitor suited to aluminium alloy engine components should be used in the cooling system. No further additives or inhibitors should be used. The coolant specific gravity should be checked as prescribed in the maintenance schedule to ensure adequate frost and corrosion protection. In addition, the engine coolant must be replaced at the specified interval since the corrosion inhibitor properties deteriorate with time.
It is important to note that whilst an increase in the concentration of anti freeze gives an increase in the level of frost protection, a solution which is in excess of 65% anti freeze will result in reduced frost protection and engine overheating. Therefore the recommended concentration of 50% should not be exceeded for general use.
The use of methanol based anti freeze compounds may result in engine overheating and will invalidate the vehicle warranty.

NOTE:

It is imperative that vehicles fitted with an air conditioning system have a coolant concentration of the recommended strength at all times. The use of the air conditioning system when the cooling system is filled with water only will result in the heater matrix freezing and subsequently bursting.

SG050C1-E

Engine Coolant Level

The engine coolant level may be observed through the side of the plastic coolant reservoir (expansion tank) when the engine is cold. If the level is below the "LOW" mark, add coolant of the correct concentration until the level is between the "LOW" and "Full" marks. If the level falls below the "LOW" mark on a regular basis despite being topped up, consult a Hyundai dealer.

SG050D1-E

To Change the Engine Coolant

The engine coolant should be changed at those intervals specified in the vehicle maintenance schedule in Section 5.

NOTE:

Care should be taken to ensure that coolant is not allowed to spill onto the paintwork since the finish may become damaged. If coolant spillage occurs, the affected area should be rinsed thoroughly with water.

1. Park the vehicle on level ground and ensure that the parking brake is firmly applied, and the engine allowed to cool.
   DO NOT ATTEMPT THIS OPERATION WHILST THE ENGINE IS HOT SINCE BURN-ING OR SCALDING MAY RESULT.
2. Prepare a suitable receptacle to collect the displaced coolant and position this under the radiator drain tap.

3. With the heater temperature control set to the "HOT" position, remove the radiator cap and open the radiator drain tap.
4. When the engine coolant has drained completely, close the drain tap ensuring that this is not over tightened.
5. Prepare a suitable quantity of new engine coolant (refer to section 9) and pour this into the radiator.
6. Start the engine with the radiator cap still removed and continue to add coolant as the level decreases as air is expelled from the system. When the level remains constant, replace the radiator cap and replenish the coolant reservoir.
7. When the engine is hot, check to ensure that no coolant leaks are present.

WARNING:
The cooling fan is controlled by engine coolant temperature and may sometimes operate even when the engine is not running. Use extreme caution when working near the blades of the cooling fan so that you are not injured by a rotating fan blade. As the engine coolant temperature decreases, the fan will automatically shut off. This is a normal condition.

G060B02GK-EAT

SPARKING PLUG REPLACEMENT

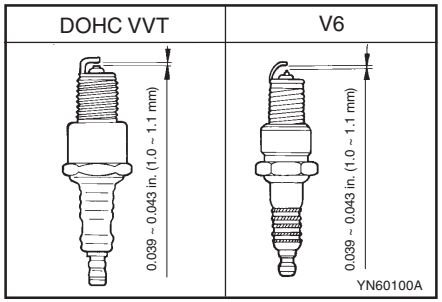

This operation should only be performed when the engine is cold.

1. Remove the engine rocker cover.

NOTE:
It is recommended that the spark plug for Engine 2.7L should be changed by an authorized Hyundai dealer.

2. Remove plug lead from the sparking plug to be replaced, pulling the lead by the rubber cap. (Pulling the lead may damage the carbon conductor).
3. Clean around the base of the plug to be removed, and install the plug socket ensuring that the ceramic insulator does not become damaged. Turn the socket counterclockwise to remove the plug.

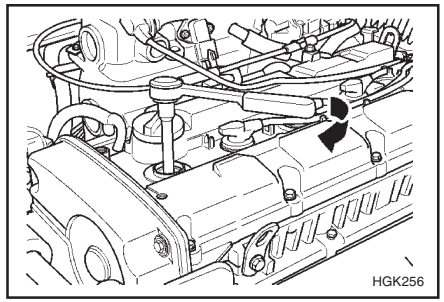

CAUTION:
Sparking plugs must only be cleaned using purpose designed equipment. Wire brushing may damage the centre electrodeinsulator causing mis-firing to occur. Only the correct grade of sparking plug should be used. Use of an incorrect grade may result in serious engine damage.

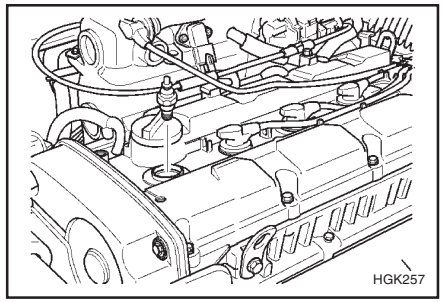

Prior to installing a sparking plug, the gap between the centre and outer electrodes must be checked and adjusted as necessary.
Adjustment is facilitated by bending the outer electrode towards or away from the centre electrode. Under no circumstances should attempts be made to adjust the position of the centre electrode.

4. Insert the sparking plug into the cylinder head and screw by the wrench and until the plug contacts the seating area. Tighten the plug with the socket by a further 1/2 to 3/4 of a turn only.

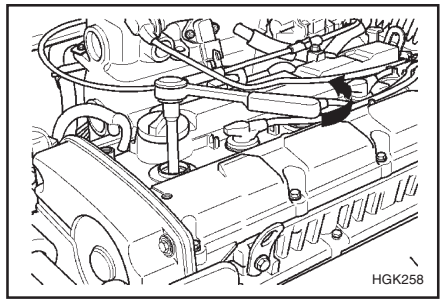

5. Replace the plug lead ensuring that the cap is pushed firmly into place. Confirm that the cap is correctly seated by lightly pulling upon it.

Recommended Spark Plugs

RC10YC4(CHAMPION) BKR5ES-11(NGK)	1.6/2.0L
RC10PYPB4(CHAMPION) PFR5N-11(NGK)	2.7L*

* Platimun coated.

NOTE:

When replacing the spark plug, always use the genuine parts recommended.

SG070A1-E

AIR CLEANER ELEMENT REPLACEMENT

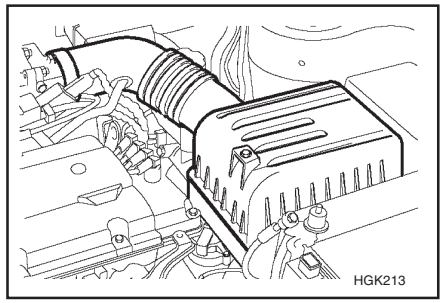

To replace the air cleaner element, remove the air intake ducting from the air flow sensor body and unfasten the spring clips holding the air flow sensor top to the body. Lift out the air flow sensor followed by the air cleaner element. Replacement of the element is the reverse of the above.

CAUTION:

The air flow sensor is a precision engineered electronic measuring device and therefore care should be exercised that the air flow sensor is not damaged during replacement of the element.

To ensure maximum filtration performance and continued engine performance, only genuine Hyundai replacements should be used.

SG080A2-E

WINDSCREEN WIPER BLADES

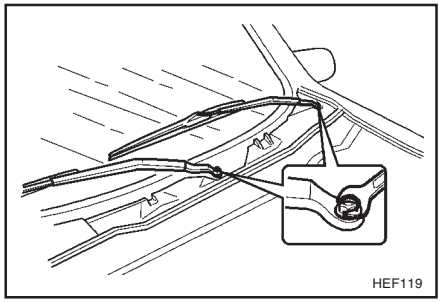

The wiper blades should be carefully inspected from time to time and cleaned to remove accumulations of road film or other debris. To clean the wiper blades and arms, use a clean sponge or cloth with a mild soap or detergent and water. If the wipers continue to streak or smear the glass, replace them with genuine Hyundai replacement.

CAUTION:

- **Do not operate the wipers on dry glass since rapid wear and damage to the windscreen glass may result.**
- **Keep the blade rubber out of contact with petroleum products such as engine oil, petrol etc.**

SG090A1-E

WINDSCREEN WASHER RESERVOIR REPLENISHMENT

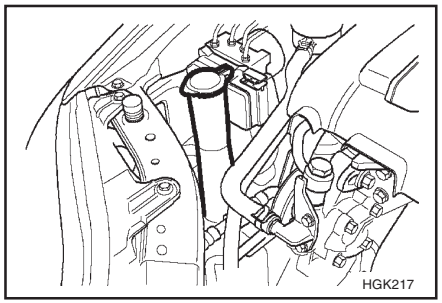

The level of windscreen washer fluid available should be checked on a daily basis. The level of fluid will be visible through the side of the reservoir. When the fluid is to be replenished, only a proprietary screen wash additive should be used and in the concentration recommended by the manufacturer. The windscreen washer reservoir has a total capacity of 3 litres.

CAUTION:

Engine coolant anti freeze must not be used in the windscreen washer system since damage to the paintwork may result.
Undiluted windscreen washer additive must not be allowed to come into contact with the paintwork. If spillage occurs, flush the affected area immediately with water. Do not operate the windscreen washer for more than 15 seconds continuously or when the reservoir is empty since damage to the washer pump will result.

SG100A1-E

MANUAL TRANSMISSION LUBRICANT

The manual transmission lubricant must be checked and/or changed at the intervals specified in the maintenance schedule. Only those lubricants specified below should be used in order to prevent gear shifting difficulties or transmission damage.

WARNING:

The transmission lubricant level should only be checked when the engine is cold to preclude the possibility of personal injury by contact with hot components.

Recommended Oil

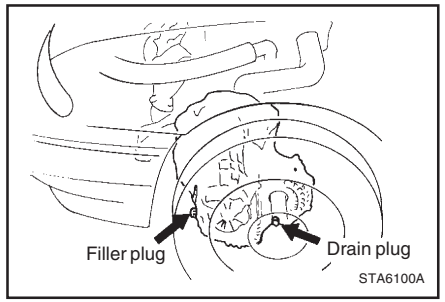

Use only the approved transmission lubricant. The recommended lubricants are complete in themselves and the use of additives is neither required nor recommended. The use of additives may invalidate the vehicle warranty.

Transmission Lubricant Level Checking

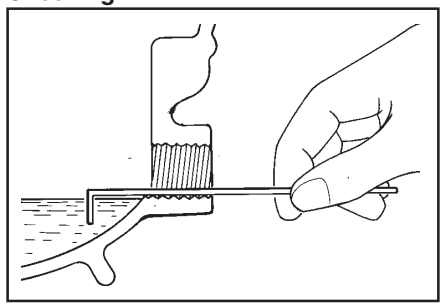

Ensure that the vehicle is parked on level ground with the parking brake firmly applied and the engine cool. Remove the level plug from the transmission when lubricant should begin to drip from the level hole. If the level is low and no lubricant is seen to drip, add the required quantity of lubricant and replace the plug.

SG110A1-E

AUTOMATIC TRANSMISSION FLUID

The automatic transmission fluid level should be checked and changed at those intervals prescribed in the maintenance schedule. It is of paramount importance that only the specified fluid is used when replenishing or changing the fluid. The use of other fluids may irreparably damage the transmission and invalidate the manufacturers warranty. In addition the ingress of dirt or lint may prevent correct functioning of the transmission and care must be exercised to prevent the ingress of such matter.

CAUTION:

The transmission fluid level must be checked with the engine running and at normal operating temperature and therefore care must be exercised to prevent injury occurring through contact with rotating or hot parts of the engine.

G110B03A-AAT

Recommended Fluid

Your Hyundai automatic transaxle is specially designed to operate with DIAMOND ATF SP-III, SK ATF SP- III.

Damage caused by a nonspecified fluid is not covered by your new vehicle limited warranty.

G110D02GK-EAT

Transmission fluid level checking

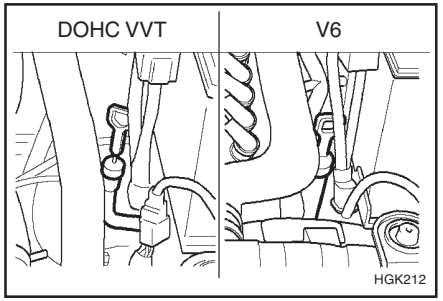

The vehicle must be parked on level ground with the parking brake firmly applied and the engine at normal operating temperature. (Normal operating temperature will only be achieved when the vehicle has been driven for 6 miles or more).

With the engine idling and the footbrake applied, the transmission selector should be moved from the "P" position through to the "L" position and back to the "N" or "P" position.

Open the bonnet and remove the transmission dipstick, remembering that care must be exercised to prevent injury occurring through contact with hot or rotating parts of the engine.

Wipe the dipstick, replace it fully and promptly remove it again. The fluid level should be between the upper and lower marks. Fluid need only be added if the level is at or below the lower mark and must never be increased above the

higher mark. If additional fluid is required, this should be poured into the transmission through the dipstick tube with the aid of a suitable funnel.

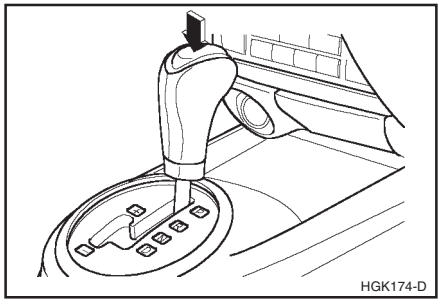

WARNING:
The cooling fan is controlled by engine coolant temperature and may sometimes operate even when the engine is not running. Use extreme caution when working near the blades of the cooling fan so that you are not injured by a rotating fan blade. As the engine coolant temperature decreases, the fan will automatically shut off. This is a normal condition.

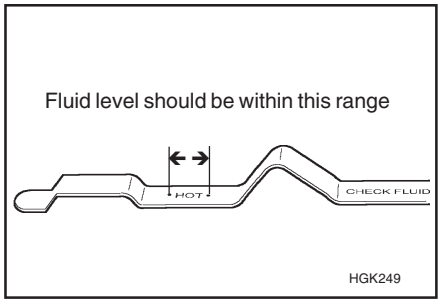

CAUTION:
The automatic transmission unit is a precision engineered assembly and correct operation is dependant upon the exclusion of dirt and lint from the unit. Therefore, it is imperative that only lint free cloth (eg nylon) is used for wiping the dipstick and that the area around the dipstick is thoroughly clean prior to level checking or adding fluid.

Fluid Capacity

The total fluid capacity of the transmission unit is 7.8 litres.

SG120A1-E

BRAKE SYSTEM CHECKING

CAUTION:
Correct operation of the braking system is essential to the safe operation of the vehicle and therefore, any maintenance operations other than those listed below should be entrusted to a Hyundai dealer.

SG120C2-E

Brake Fluid Recommendations

Only brake fluid conforming to DOT 3 or DOT 4 specifications or higher may be used in the braking system. Care should be taken to observe the instructions and precautions printed upon the container.

SG120D1-E

Brake Fluid Level

The fluid level in the brake fluid reservoir should be checked periodically. The level should be between the "MIN" and "MAX" marks on the side of the reservoir. If the level is at or below the "MIN" mark, fluid should be added having carefully cleaned the area surrounding the reservoir cap to ensure that dirt is not allowed to enter the system. It should be borne in mind that the brake fluid level will decrease slightly as the friction linings of the pads and shoes become worn and that this is a normal condition.

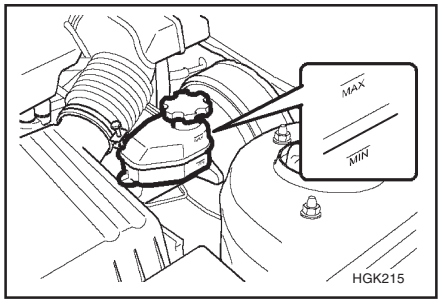

WARNING:
Brake fluid is hygroscopic and should never be stored in an unsealed container. The presence of water in the braking system will cause vapour locks and increase the possibility of brake fade along with promoting corrosion within the braking system. The brake fluid must be changed at the specified time or mileage interval to ensure continued safe operation of the system. Brake fluid will cause rapid and serious damage to paintwork. If accidental spillage occurs, the affected area must be rinsed with water immediately. Do not allow brake fluid to come into contact with the eyes or to be ingested and ensure that fluid is safely stored away form the reach of children.

SG130A1-C

CHECKING THE CLUTCH FLUID (Not all models)

To Check the Clutch Fluid

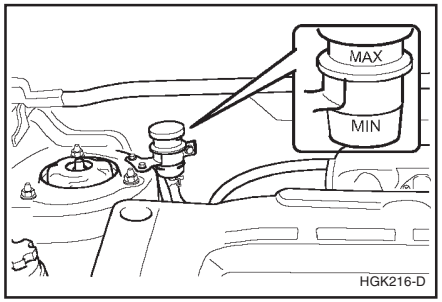

The clutch fluid level in the master cylinder should be checked when performing other under bonnet checks. The system should be checked for leakage at the same time.
Ensure that the clutch fluid level is always between the "MAX" and "MIN" level markings on the fluid reservoir. Fill as required. Fluid loss indicates a leak in the clutch system which should be inspected and repaired immediately.

SG130B2-E

Adding Fluid

Recommended brake fluid conforming to DOT 3 or DOT 4 should be used. The reservoir cap must be fully tightened to avoid contamination from foreign matter or moisture.

CAUTION:
Brake fluid is hygroscopic and should never be stored in an unsealed container. Do not allow petroleum base fluid to contaminate the brake fluid since damage to the rubber seals of the system may result.

WARNING:
Brake fluid will cause rapid and serious damage to paintwork. If accidental spillage occurs, the affected area must be rinsed with water immediately. Do not allow brake fluid to come into contact with the eyes or to be ingested and ensure that fluid is safely stored away form the reach of children.

SG140A1-E

AIR CONDITIONING SYSTEM MAINTENANCE

Condenser

Ensure that the condenser is periodically inspected and that accumulations of dirt, dead insects and leaves etc, are removed to ensure that the efficiency of the system is not impaired. Care must be exercised to ensure that the condenser fins are not damaged during cleaning.

SG140B1-E

Compressor Drive Belt

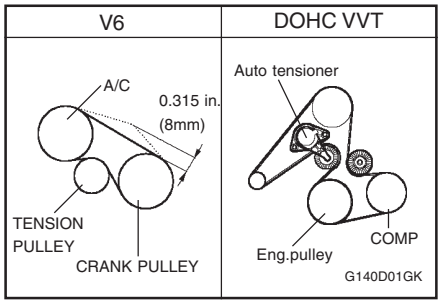

The air conditioning compressor drive belt should be checked to ensure freedom from damage or excessive wear and correct tension. The belt tension is correct when the belt deflects by about 0.3 inches (8 mm) when a force of 98 N is applied to the belt halfway between the compressor and crankshaft pulleys. Adjustment of the belt should be entrusted to a Hyundai dealer.

SG140C1-E

Checking the Refrigerant

1. Start the engine and run at idle for several minutes with the refrigeration system running at the coldest setting.
2. Open the bonnet and inspect the sight glass on the top of the receiver dryer.
3. If the refrigerant charge is insufficient, a flow of bubbles will be observed through the sight glass.
4. If the refrigerant charge is satisfactory, no bubbles will be observed through the sight glass.

CAUTION:

Running the air conditioning system with a low refrigerant level may damage the compressor.

SG140D1-E

Off Season Maintenance

The air conditioning must be run for ten minutes or so weekly during periods when the system would not normally be used to ensure that the compressor and seals are lubricated. If this precaution is not observed the compressor seals may become stuck to the compressor shaft and damaged when the system is next used resulting in a loss of refrigerant and damage to the compressor.

B760B01GK-GAT

Replacement of air filter:

1. Remove the taping screws on the downside of the glove box.

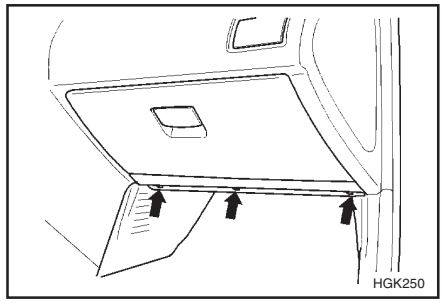

2. Open the glove box and remove the taping screws on the upside of the glove box.

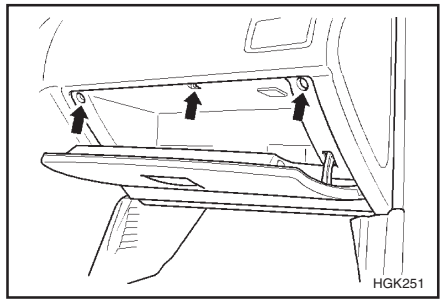

3. Remove the filter cover and replace the filter.

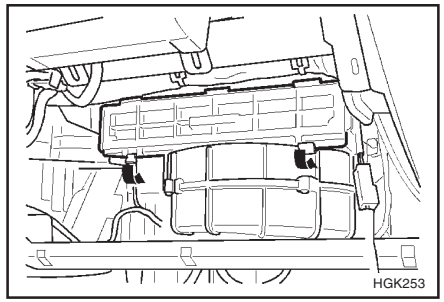

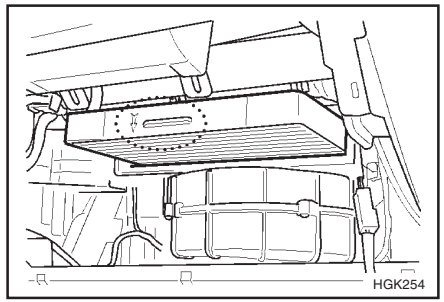

4. Installation is the reverse order of disassembly.

CAUTION:

- **Replace the filter every 10,000 miles or once a year. If the car is being driven in severe conditions such as dusty, rough roads, more frequent air filter inspections and changes are required.**
- **When the air flow rate is suddenly decreased, it must be checked at an authorized dealer.**

SG150A1-E

STEERING WHEEL FREEPLAY

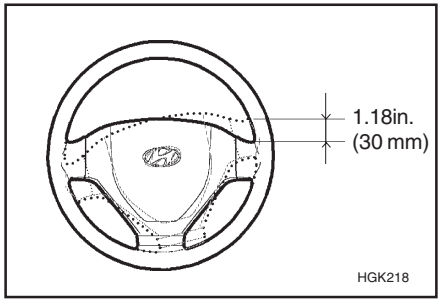

Steering wheel freeplay should be checked to ensure that the specified value is not exceeded.

SG160A1-E

CLUTCH PEDAL FREEPLAY

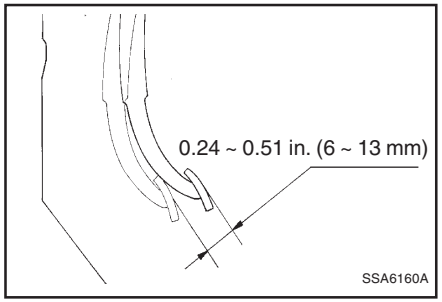

The clutch pedal freeplay should be checked against the specified value. If the freeplay is not correct, the clutch should be adjusted by a Hyundai dealer.

SG170A1-E

BRAKE PEDAL FREEPLAY

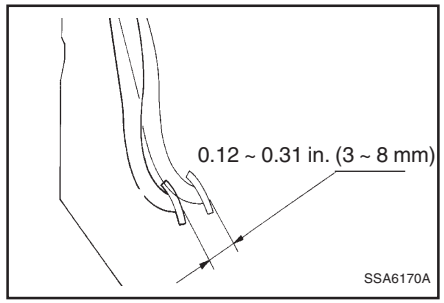

The brake pedal freeplay should be checked with the engine turned off. The pedal to floor clearance should be checked with the engine running and a load of 490 N applied to the pedal. If either value is incorrect, the necessary adjustment should be performed by a Hyundai dealer. Pedal to floor clearance: 1.97 in. (50 mm)

SG190A1-E

DRIVE BELTS

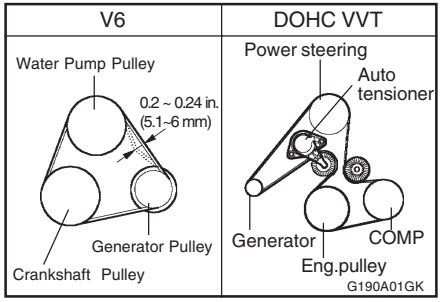

The various engine drive belts must be checked for condition, tension and freedom from damage and excessive wear. The tension of a new belt must be checked after thirty minutes running following fitment of the new belt to allow for the initial belt stretch.

SG200A1-E

FUSIBLE LINKS

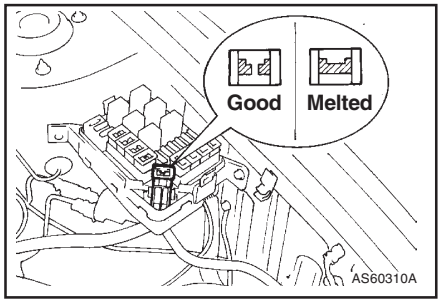

The fusible link prevents damage to the wiring harness in the event of an electrical system malfunction. Failure of a fusiblelink is indicative of a serious overload condition having occurred and therefore the electrical system should be checked by a Hyundai dealer before a replacement link is fitted.

WARNING:

Under no circumstances should a fusible link be replaced with anything other than a new link of the same rating. The use of higher rated links or other means of connecting the circuit will create a potential fire hazard.

SG200B2-E

INDIVIDUAL CIRCUIT FUSES

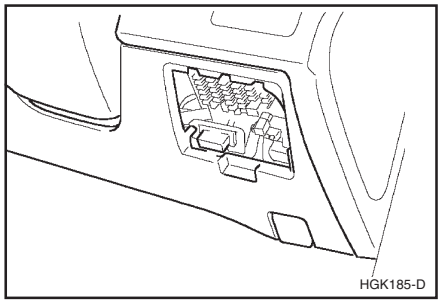

The fuse box containing the individual circuit fuses is located on the lower portion of the dashboard adjacent to the bonnet release. The fuse box cover is removed by pushing lightly and then releasing the lid. A fuse rating grid will be found on the reverse side of the cover. In the event of fuse failure, the fuse should be replaced with one of equivalent rating. A fuse removal tool is provided within the fuse box to facilitate replacement.

In the event of a replacement fuse failing shortly after installation a malfunction within the circuit protected by that fuse is indicated. The circuit should be checked by a Hyundai dealer at the first available opportunity.

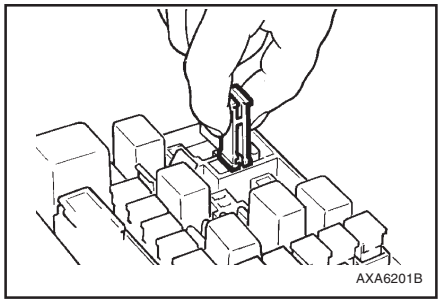

WARNING:

The use of replacement fuses having a higher rating than specified or other means of connecting the circuit will create a potential fire hazard.

NOTE:

See page 6-20 for the fuse panel descriptions.

SG210A1-E

BATTERY MAINTENANCE

WARNING:

Motor vehicle batteries contain sulphuric acid which is corrosive and poisonous. Hydrogen gas is emitted from the battery which is explosive when combined with oxygen. The following precautions must be strictly observed to avoid personal injury or damage to the vehicle.

- o If battery electrolyte is spilled onto skin or into eyes, the effected area must be flushed with copious amounts of water and medical assistance sought.
- o If battery electrolyte is ingested, copious amounts of water or milk followed by an antacid (raw egg or milk of magnesia) must be drunk. Vomiting should not be induced and medical assistance must be sought.
- o Batteries must only be charged in well ventilated areas from which naked lights or sources of sparks are excluded.
- o Ensure that children, pets or other unauthorized persons are kept away from batteries.
- o Do not allow anything to bridge the positive (+) and negative (-) terminals of the battery.
- o Never invert the battery.

The battery fitted during production is of the "Maintenance Free" type.

SG220A1-E

ELECTRIC COOLING FANS

WARNING:

The cooling fan is controlled by engine coolant temperature and may sometimes operate even when the engine is not running. Use extreme caution when working near the blades of the cooling fan so that you are not injured by a rotating fan blade. As the engine coolant temperature decreases, the fan will automatically shut off. This is a normal condition.

The engine cooling fan should operate before the temperature gauge reaches the upper portion of the scale and the condenser fan should operate whenever the air conditioning is in use.

SG230A1-E

POWER STEERING FLUID LEVEL

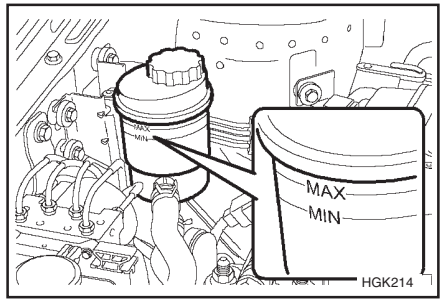

The power steering fluid level should be checked daily.

To check the power steering fluid level, be sure the ignition is "OFF", then check to make certain that the power steering fluid level is between the "MAX" and "MIN" level markings on the fluid reservoir.

NOTE:

Grinding noise from power steering pump may be heard immediately after the engine is started in extremely cold condition (below -20°C). In this case, if the noise stops during warm up, there is no abnormal function in the system. This is due to a power steering fluid characteristic in extremely cold conditions.

FLUID RECOMMENDATION

Only automatic transmission fluid meeting the specification of PSF-3 should be used in the power steering system.

SG230B1-E

POWER STEERING HOSES

Power steering hoses should be checked for damage, deterioration and leakage at each service.

SG250A2-E

REPLACING HEADLIGHT BULBS

In the event of bulb failure being experienced, ensure that the relative lighting circuit is turned off prior to attempting to replace the bulb. The illustrations on the following pharagraph will assist in locating and removing the headlight bulbs. Ensure that the replacement bulb has the same cap configuration and wattage as the original.

G270A02A-GAT

HEADLIGHT BULB

Replacement instructions:

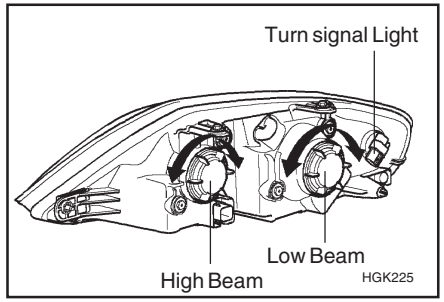

1. Allow the bulb to cool. Wear eye protection.
2. Always grasp the bulb by its plastic base, avoid touching the glass.
3. Disconnect the power cord from the bulb base in the back of the headlight.
4. Remove the dust cover.
5. Push the bulb spring for removing the headlight bulb.
6. Remove the protective cap from the replacement bulb and install the new bulb by matching the plastic base with the headlight hole. Install the dust cover after retightening the bulb spring and reconnect the power cord.
7. Use the protective cap and carton to dispose of the old bulb.
8. Check for proper headlight aim.

WARNING:
The halogen bulb contains gas under pressure and if impacted could shatter, resulting in flying fragments. Always wear eye protection when servicing the bulb. Protect the bulb against abrasions or scratches and against liquids when lighted. Turn on the bulb only when installed in a headlight. Replace the headlight if damaged or cracked. Keep the bulb out of the reach of children and dispose of the used bulb with care.

G290A01GK-EAT

HEADLIGHT AIMING ADJUSTMENT

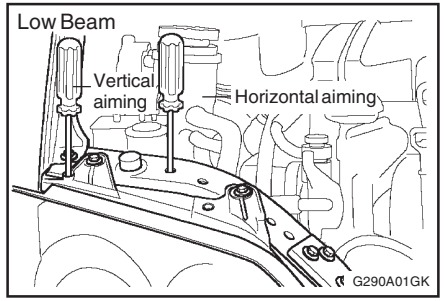

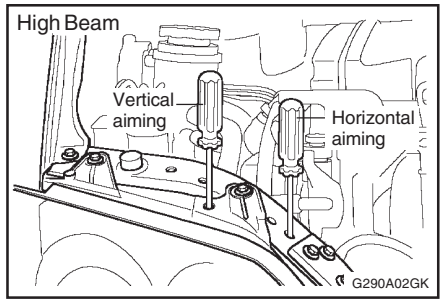

Before performing aiming adjustment, make sure of the following.

1. Keep all tyres inflated to the correct pressure.
2. Place the vehicle on level ground and press the front bumper & rear bumper down several times. Place vehicle at a distance of 118.1 in. (3m) from the test wall.
3. See that the vehicle is unloaded (except for full levels of coolant, engine oil and fuel, and spare tyres, jack, and tools).
4. Clean the head lights lens and turn on the headlight.
5. Open the boot.
6. Draw the vertical line (through the centre of each headlight beam pattern) and the horizontal line (through the centre of each headlight beam pattern) on the aiming screen. And then, draw the parallel line at 1.18 in. (30 mm) under the horizontal line.
7. Adjust each cut-off line of the low beam to the parallel line with a phillips screwdriver - VERTICAL AIMING.
8. Adjust each cut-off line of the low beam to the each vertical line with a phillips screwdriver - HORIZONTAL AIMING.

G290B01GK-EAT

Adjustment After Headlight Assembly Replacement

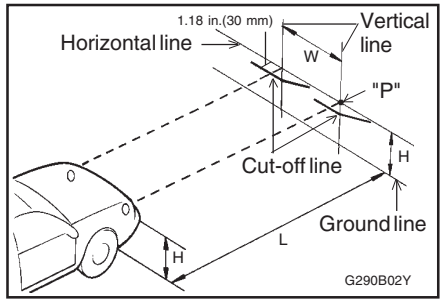

If the vehicle has had front body repair and the headlight assembly has been replaced, the headlight aiming should be checked using the aiming screen as shown in the illustration. Turn on the headlight switch.

1. Adjust headlights so that main axis of light is parallel to centre line of the body and is aligned with point "P" shown in the illustration.
2. Dotted lines in the illustration show centre of headlights.

SPECIFICATION:

"H"
Horizontal centre line of headlights from ground:
Low Beam: 26.7 in. (679mm)
High Beam: 26.5 in. (672mm)

"W"
Distance between each headlight centre : Low Beam: 47.3 in. (1,202mm)
High Beam: 38.0 in. (966mm)

"L"
Distance between the headlights and the wall that the lights are tested against : 118.11 in. (3,000 mm)

G280A02GK-EAT

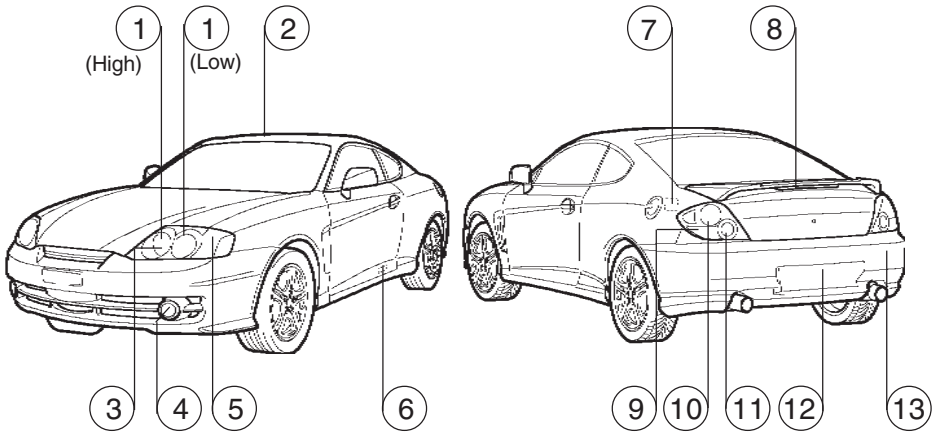

HGK035A

No.	Part Name	Wattage	No.	Part Name		Wattage
1	Head Light (High/Low)	55/55	8	High Mounted Stop LIght	Without spoiler	2.4W (LED)
2	Map Light	10			With spoiler	3.5W (LED)
3	Front Position Light	5	9	Rear Combination	Turn Signal Light	21
4	Front Fog Light (Not all models)	51	10		Stop/Tail Light	21/5
5	Front Turn Signal Light	21	11		Back-up Light	21
6	Front Door Edge Warning Light	5	12	License Plate Light		5
7	Luggage Compartment Light	5	13	Rear Fog Light (Not all models)		21

G200C01GK-GAT

FUSE PANEL DESCRIPTION

Engine Compartment

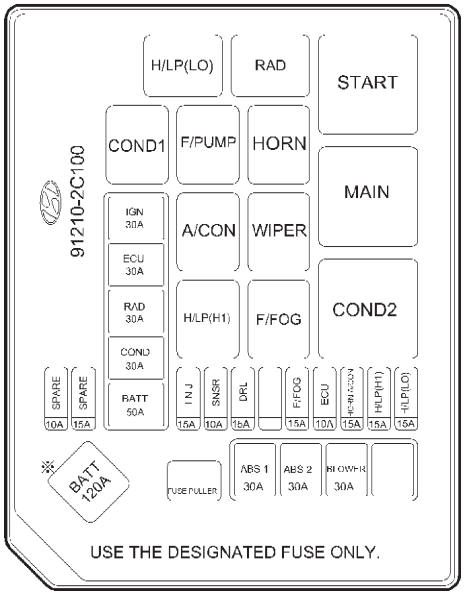

※ Not all models

HGK205-E

DESCRIPTION	FUSE RATING	PROTECTED COMPONENTS
BATT	100A	Generator
BATT	50A	Generator
COND	30A	Condenser Fan
RAD	30A	Radiator Fan
ECU	30A	Engine Control, ECM. ATM Control
IGN	30A	Ignition, Start Relay
ABS 1	30A	ABS
ABS 2	30A	ABS
BLOWER	30A	Blower
INJ	15A	Injector
SNSR	10A	O_2 Sensor, ECM
DRL	15A	DRL
F/FOG	15A	Front fog Light
ECU	10A	TCM, ECM
HORN,A/CON	15A	Horn. A/conditioner
H/LP (H1)	15A	Head Light (High)
H/LP (LO)	15A	Head Light (LOW)

NOTE:

Not all fuse panel descriptions in this manual may be applicable to your vehicle. It is accurate at the time of printing. When you inspect the fuse box on your vehicle, refer to the fuse box label.

G200D01GK-GAT

Inner Panel

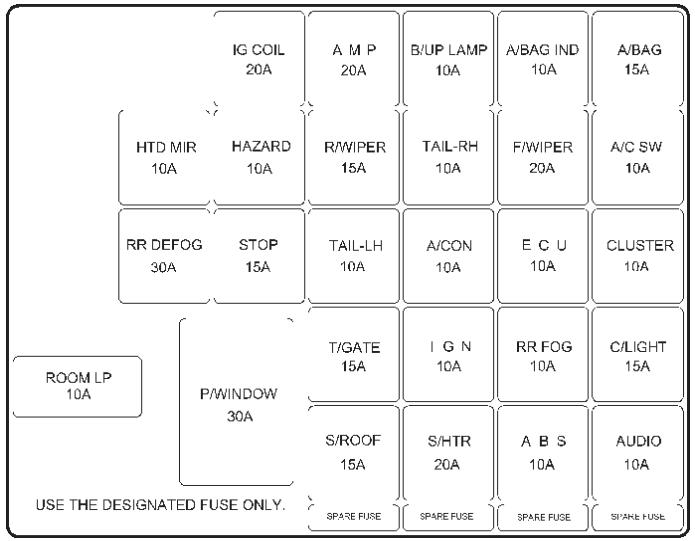

HGK204-E

DESCRIPTION	FUSERATING	PROTECTED COMPONENTS
IG COIL	20A	Ignition Coil, ECM
AMP	20A	AMP. Multi Gauge Unit
B/UP LAMP	10A	B/Up Lamp
A/BAG IND	10A	Air Bag Indicator
A/BAG	15A	Air Bag
HTD MIR	10A	Outside Mirror Defroster
HAZARD	10A	Hazard Warning Light
R/WIPER	15A	Rear Window Wiper
TAIL-RH	10A	Taillight
F/WIPER	20A	Front Window Wiper
A/C SW	10A	A/Conditioner
RR DEFOG	30A	Rear Window Defroster
STOP	15A	Stop Light
TAIL-LH	10A	Tail light
A/CON	10A	A/Conditioner
ECU	10A	ECM, Multi Gauge Unit, TCM
CLUSTER	10A	Cluster
ROOM LP	10A	Map Light, Clock, Audio
P/WINDOW	30A	Power Window
T/GATE	15A	Hatchback door Open
IGN	10A	A/Con, A.Q.S Sensor
RR FOG	10A	Rear Fog
C/LIGHT	15A	C/Lighter, Outside Mirror
S/ROOF	15A	Sunroof
S/HTR	20A	Seat Warmer
ABS	10A	ABS. TCS
AUDIO	10A	Audio, Clock

SH000A1-E

7. EMISSION CONTROL SYSTEM

SH010A1-E

EMISSION CONTROL SYSTEMS (Not all models)

Depending upon the market for which the vehicle is destined, the emission control system will comprise one or more of the following emission control devices.

(1) Crankcase emission control system
(2) Evaporative emission control system
(3) Exhaust emission control system

In order that the proper functioning of the emission control systems may be ensured, it is recommended that the vehicle is inspected and maintained by an authorized Hyundai dealer in accordance with the maintenance schedule in this manual.

SH010B1-E

1. CRANKCASE EMISSION CONTROL SYSTEM

The positive crankcase ventilation system is employed to prevent air pollution caused by blow-by gases being emitted from the crankcase by introducing fresh air to the crankcase through the air cleaner where this mixes with blow-by gases and then passes through the PCV valve into the intake manifold from where it subsequently enters the combustion chamber and is burned.

SH010C1-E

2. EVAPORATIVE EMISSION CONTROL SYSTEM

The Evaporative Emission Control System is designed to prevent fuel vapours from escaping into the atmosphere through the fuel tank ventilation system.
Whilst the engine is not running, fuel vapours generated inside the fuel tank are absorbed and stored in a charcoal canister. When the engine is started, the vapours stored in the canister are drawn into the induction system through the purge control solenoid valve and are subsequently burned.
The purge control solenoid valve is controlled by the ECU; when the engine coolant temperature is low or the engine is idling, the purge control valve is closed and fuel vapours remain stored in the canister. Under normal running conditions when the engine is warm, the valve opens and the vapours are drawn into the inlet tract and subsequently burned in the combustion chamber.

SH010D1-E

3. EXHAUST EMISSION CONTROL SYSTEM

The exhaust emission control system is a highly effective system which controls exhaust emission while maintaining good vehicle performance.

SH020A1-E

CATALYTIC CONVERTOR OPERATING PRECAUTIONS

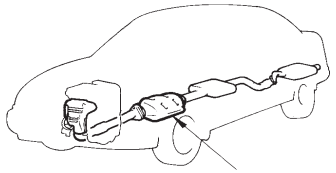

JN70010A

Hyundai Coupe models are fitted with catalytic convertors which require special operating considerations. The catalytic convertor serves to oxidize certain noxious elements of the exhaust gases leaving the engine to reduce the level of pollutants emitted from the vehicle and, provided that care is exercised to prevent damage, the catalyst will operate efficiently for the life of the vehicle.
It is of the utmost importance that the following information is read and understood by the ve-

hicle operator in order to prevent operational problems arising from damage to the catalyst.
Damage to the catalyst will result if contamination occurs through the use of leaded fuel. Whilst the vehicle is fitted with a reduced diameter filler neck to prevent charging of the fuel tank with a leaded fuel pump nozzle, it is possible that the use of funnels or jerry cans will permit leaded fuel to be introduced into the fuel tank.
The catalyst is intolerant of unburnt fuel and therefore if an engine misfire condition exists, damage to the catalyst will occur. It is imperative that if a misfire condition develops, the vehicle is immediately presented to a Hyundai dealer for rectification. Similarly, the practice of certain ignition system diagnosis procedures which involve inducing a misfire (cylinder power balance tests for example) may result in catalyst damage.
For these reasons, it is advisable that the exhaust gas emission be tested at each routine service with a gas analyzer having a Hydrocarbon measuring facility to ensure continued reliability of the catalyst.
Push or tow starting of the vehicle is to be avoided since unburnt fuel may be enter the catalyst and result in damage. (Note, it is impossible to push or tow start a Hyundai model equipped with fuel injection since the fuel pump safety interlock will prevent the pump from operating under these conditions).
Operation of the catalyst involves extremely high temperatures being attained within the catalytic convertor, and although the convertor is fitted with heat shields, it is important that the vehicle is not parked over combustible or volatile material which may result in fire.
If the above precautions are not adhered to and the catalyst becomes inoperative, the resultant increase in core temperature will result in a "melt down" where the catalyst core will melt and subsequently may block the exhaust system.
Due to the fragile nature of the catalyst element, it is important that damage does not occur when the vehicle is raised by means of a garage jack. Care must also be exercised to avoid driving over road hazards or debris which may cause damage to the catalyst element.

SI000A1-E

8. CONSUMER INFORMATION

SI010A1-E

VEHICLE IDENTIFICATION NUMBER (VIN)

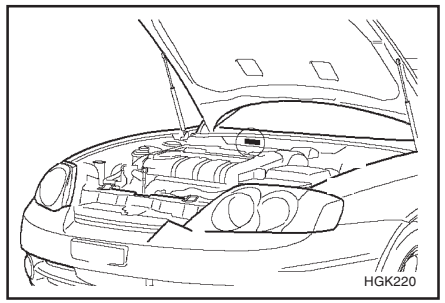

The vehicle identification number (VIN) is unique to each individual vehicle and is the number (sometimes referred to as chassis number) used upon the vehicle registration document to identify the vehicle.
The VIN will be found stamped upon a plate attached to the engine bulkhead.

SI010B1-E

Engine Number

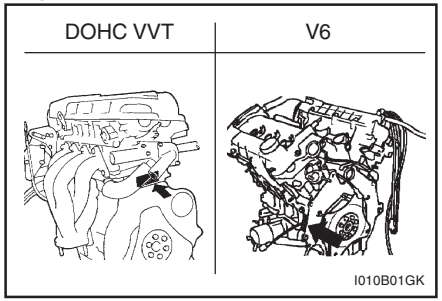

The engine number is stamped on the engine block as shown in the drawing.

I030A01GK-EAT

TYRE PRESSURES

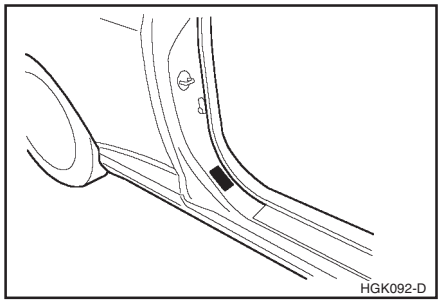

In modern high-speed motoring, correct tyre pressures are vitally important. Incorrect tyre pressures can affect vehicle safety by causing reduced adhesion, steering response and tyre failure through overheating. The tyre pressure must only be checked when the tyres are cold. The correct tyre pressures are indicated on the label affixed to the drivers door pillar and below.

RIM SIZE	TIRE SIZE	PRESSURE, kPa (PSI)			
		UP TO 2 PERSONS		UP TO MAX. LOAD	
		FRONT	REAR	FRONT	REAR
6.0Jx15	195/65R15	210(30)	210(30)	210(30)	210(30)
6.5Jx16	205/55R16	210(30)	210(30)	230(33)	230(33)
7.0Jx17	215/45R17	220(32)	210(30)	240(35)	230(33)
4Tx16	T125/70R16	420(60)	420(60)	420(60)	420(60)

Tyre pressures should be increased by 3 psi when the vehicle is driven fully laden or under conditions of sustained high speed motoring.

SI030A2-E

SNOW TYRES

If it is desired to fit snow tyres to the vehicle, it must be ascertained that the original size and load carrying capacity are met by the replacement tyres. When using snow tyres, the vehicle should not be driven at speeds in excess of 60 MPH.

I050A01GK-EAT

TYRE CHAINS

Tyre chains should be installed on the front wheels. Be sure that the chains are the proper size and that they are installed in accordance with the manufacturer's instructions. Refer to the following information.

Tire size	Snow Chain Thickness
195/65 R 15	Max. 15 mm
205/55 R 16	Max. 10 mm
215/45 R 17	Max. 10 mm

To minimize tyre and chain wear, do not continue to use tyre chains when they are no longer needed.

WARNING:

- **When driving on roads covered with snow or ice, drive at less than 30 km/h (20 mph).**
- **Use a tyre chains less than 10mm to "16, "17 tyre.**
- **Avoid sudden stop and turn.**
- **Tighten firmly not to hear contact sound, if it still sounds, remove the chains for damage protection.**

I060A01GK-EAT

TYRE ROTATION

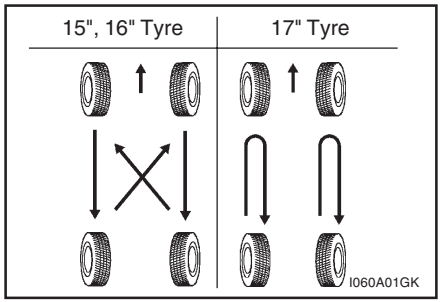

The tyre wear characteristics will vary between each tyre dependant upon the conditions of use. It is normal for the front tyres to wear more rapidly than those fitted to the rear of the vehicle and therefore tyre rotation will provide a means of helping to ensure an even wear rate across the tyre set. For vehicles fitted with radial ply tyres, rotation should be confined to front to rear tyre alternation. It is not recommended that radial ply tyres be rotated from side to side.

NOTE:

Aluminium wheels which are not supplied as Original Equipment should not be mixed on the same vehicle with the original steel wheels.

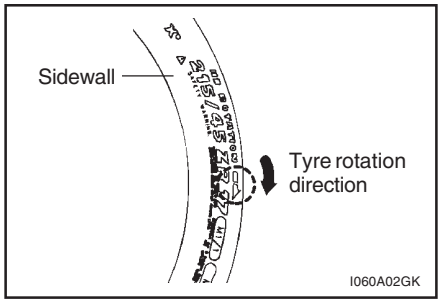

WARNING:

When rotating the 215/45 R17 tyres, ensure to follow the"ROTATION" direction marked on the sidewall of tyres.
When rotating the tyres of the left and right, separate the wheel from the tyre and then reassemble them. However, it is acceptable that the steel spare wheel be used in conjunction with Original Equipment aluminium wheels since the offset of both wheels is compatible. Radial and cross ply tyres should not be mixed on the same vehicle.

SI060A1-E

TYRE BALANCING

Incorrect tyre balance will cause steering vibration and uneven tyre wear. The vehicle tyres are balanced during production but may need further balancing throughout the life of the tyres.
It is recommended that the tyres be balanced on the car for best results and that the tyres are balanced whenever they have been removed from the wheel for repair.

SI060B1-E

TYRE REPLACEMENT

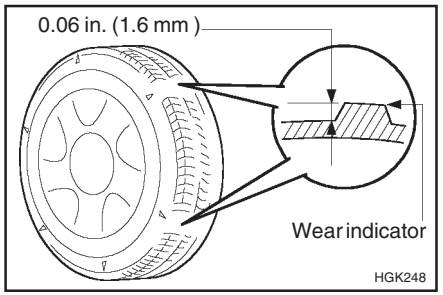

Tyres must be replaced when the wear indicators appear as a solid bar across the tyre tread. At this point, the remaining tread depth will be approximately 1.6 mm. In addition to this, the tyre must be replaced if any portion of the tread has become bald or if there are any lumps, bulges or deep cuts in the sidewalls or tread.

Replacement tyres must be of the recommended size and rating and should be of the same manufacture and tread pattern on each axle.

SI060D1-E

WHEEL REPLACEMENT

The original wheels may only be replaced with Hyundai Approved Wheels.

WARNING:

Driving on worn or defective tyres is dangerous. Worn tyres may cause loss of steering control and a serious deterioration of braking efficiency. Defective tyres may cause vibration and loss of control through blow outs.

Tyres of different size, construction or tread pattern should not be intermixed on the same axle. Radial and cross ply tyres should not be used on the same vehicle.
The use of tyres and wheels of non approved sizes can be dangerous.

SJ000A1-F

9. VEHICLE SPECIFICATIONS

J010A01GK-AAT

MEASUREMENT

in. (mm)

Overall length		173(4395)
Overall width		69.3(1760)
Overall height (unladen)		52.4(1330)
Wheel base		99.6(2530)
Wheel tread	Front	58.7(1490)
	Rear	58.7(1490)

J020A01GK-AAT

POWER STEERING

Type	Rack and pinion
Wheel free play	0 ~ 1.18 in. (0 ~ 30 mm)
Rack stroke	5.20 in. (132 mm)
Oil pump type	Vane type

SJ030A1-E

FUEL SYSTEM

Fuel tank capacity	Litre	US.gal	Imp.gal
	55	14.5	12

J030A01GK-DAT

TYPE

Standard	195/65 R15
Option	205/55 R16, 215/45 R17

J035A01GK-DAT

SPARE TYRE

Standard	T125/70R 16 (Temporary)

J040A02GK-GAT

ELECTRICAL

Item	1.6L	2.0L	2.7L
Battery	MF 60AH	MF 68AH	MF 68AH
Alternator	90A	90A	95A

J050A01GK-GAT

BRAKE

Type	Dual hydraulic with brake booster
Front brake type	Ventilated disc
Rear brake type	Solid Disk
Parking brake	Cable

J070A03GK-EAT

ENGINE

ITEMS		SPECIFICATION				
		1.6 L	2.0 L			2.7 L
Engine Type		4-Cyl., In-line DOHC				2.7 6 Cylinder V6 DOHC
Bore x Stroke		76.5 x 87	82 x 93.5			86.7 x 75
Displacement (cc)		1,599	1,975			2,656
Firing order		1 - 3 - 4 - 2	1 - 3 - 4 - 2			1 - 2 - 3 - 4 - 5 - 6
Valve clearance		AUTO LASH	For adjusting	In.	0.0067 ~ 0.0091 in. (0.17 ~ 0.23 mm)	AUTO LASH
				Ex.	0.0098 ~ 0.0122 in. (0.25 ~ 0.31 mm)	
			For checking	In.	0.0047 ~ 0.011 in. (0.12 ~ 0.28 mm)	
				Ex.	0.0079 ~ 0.015 in. (0.2 ~ 0.38 mm)	
Spark plug	NGK	BKR5ES-11	←			PFR5N-11
	CHAMPION	RC10YC4	←			RC10YPB4
Spark plug gap		0.039 ~ 0.043 in. (1.0 ~ 1.1 mm)				
Idle speed (RPM)		700 ± 100	700 ± 100			750 ± 100
Ignition timing (Base)		BTDC 5° ± 5°	BTDC 8° ± 5°			BTDC 12° ± 10°

J080A03GK-EAT

LUBRICATION CHART

Item		Oil & Grease Standard		Q'ty (Imp.qts.) (litre, us.qts.)
Engine Oil		API SG or ABOVE	SAE 20W-40, 20W-50 (ABOVE -10°C)	Engine Oil: 1.6L : 3.3 (3.8, 4) 2.0 L : 3.4 (3.85, 4) 2.7L : 4.0 (4.0, 4.5) Oil Pan: 3.12 (3.55, 3.75)(MAX) 3.3 (2.6, 2.7) (MIN) Oil Filter : 0.26 (0.3, 0.32)
			SAE 15W-40, 15W-50 (ABOVE -15°C)	
			SAE 10W-30 (-25°C ~ 40°C)	
			SAE 10W-40, 10W-50 (ABOVE -25°C)	
			SAE 5W-20 *1, *2 (BELOW -10°C)	
			SAE 5W-30 *1 (BELOW 10°C)	
			SAE 5W-40 *1 (BELOW 20°C)	
		*1. Restricted to driving condition and dealing area		
		*2. Not recommended for sustained high speed vehicle operation		
Engine Oil Consumption		Normal driving condition		MAX. 1L / 1500 Km
		Severe driving condition		MAX. 1L / 1000 Km
Transaxle	Manual	HYUNDAI GENUINE PARTS MTF 75W/90 (API GL-4)		1.86 (2.15, 2.3)
	Auto	DIAMOND ATF SP-III or SK ATF SP-III		6.9 (7.8, 8.2)
Power Steering		PSF-3		As required
Brake Fluid		DOT 3 or DOT 4 equivalent		As required
Coolant		Ethylene glycol base for aluminum radiator		1.6L/2.0L : 6.2 (7.0, 7.4) 2.7L : 7.0 (8.0, 8.5)

JK000A2-EAT

10. INDEX

A

AIR BAG 1-18
AIR CONDITIONING SWITCH 1-54
AIR CONDITIONING SYSTEM MAINTENANCE 6-13
AIR CLEANER ELEMENT REPLACEMENT 6-9
AIR FILTER 1-61
ANTENNA 1-66
ANTI-LOCK BRAKE SYSTEM 2-8
AUTOMATIC TRANSMISSION FLUID 6-11
AUTOMATIC TRANSMISSION 2-5

B

BATTERY MAINTENANCE 6-17
BEFORE FOLDING THE REAR SEATS 1-9
BEFORE STARTING THE ENGINE 2-2
BONNET RELEASE 1-44
BRAKE PEDAL FREEPLAY 6-16
BRAKE SYSTEM CHECKING 6-12

C

CARE OF CASSETTE TAPE 1-64
CARE OF DISC 1-64
CARE OF SEAT BELTS 1-11
CATALYTIC CONVERTOR OPERATING PRECAUTIONS ..... 7-1~7-2
CENTRAL DOOR LOCK 1-4
CHANGING A FLAT TYPE 3-3
CHECKING THE CLUTCH FLUID 6-13
CHILD RESTRAINT SYSTEM 1-13
CIGAR LIGHTER 1-36
CLUTCH PEDAL FREEPLAY 6-15
COMBINATION IGNITION SWITCH AND STEERING LOCK 2-2
CRUISE CONTROL 1-48

D

DAILY OPERATING CHECKS 6-4
DEFROSTING/DEMISTING 1-55
DIGITAL CLOCK 1-36
DOOR LOCKS 1-2
DOOR WINDOWS 1-6
DRINK HOLDER 1-37
DRIVE BELTS 6-16
DRIVING FOR ECONOMY 2-10

INDEX

E

EFFECTIVE BRAKING 2-8
ELECTRIC COOLING FANS 6-17
EMISSION CONTROL SYSTEMS 7-1
ENGINE COMPARTMENT 6-1
ENGINE COOLANT CHECKING AND REPLACING 6-7
ENGINE COOLANT TEMPERATURE GUAGE 1-29
ENGINE OIL AND FILTER REPLACEMENT 6-6
ENGINE OIL CONSUMPTION 6-6
ENGINE OIL REPLENISHMENT 6-5
ENGINE OIL 6-4
EXTERIOR REAR VIEW MIRROR 1-41

F

FOLDING REAR SEAT 1-10
FRONT ASHTRAY 1-37
FRONT DOOR EDGE WARNING LAMP 1-44
FRONT FOG LIGHT SWITCH 1-43
FRONT SEAT ADJUSTMENT 1-7
FRONT SEAT BELT PIVOT HEIGHT ADJUSTMENT 1-11
FUEL ECONOMY 2-3
FUEL GAUGE 1-28
FUEL RECOMMENDATIONS 1-1
FUSE PANEL DESCRIPTION 6-22
FUSIBLE LINKS 6-16

G

GLOVE BOX 1-39

H

HATCHBACK DOOR 1-45
HATCHBACK DOOR WIPER AND WASHER 1-35
HAZARD WARNING SYSTEM 1-35
HEADLIGHT BULB 6-18
HEADLIGHT AIMING ADJUSTMENT 6-18
HEADLIGHT LEVELING DEVICE SYSTEM 1-37
HEAD RESTRAINT ADJUSTMENT 1-7
HEATED REAR WINDOW 1-35
HEATING AND COOLING CONTROL 1-50
ROTARY TYPE ..... 1-51 ~ 1-54
AUTOMATIC TYPE ..... 1-56 ~ 1-61
HORN 1-47

I

IF THE ENGINE CANNOT BE CRANKED 3-1
IF THE ENGINE OVERHEATS 3-2
IF THE ENGINE WILL NOT START 3-1
IF THE EVENT OF A PUNCTURE 3-3
IMMOBILIZER SYSTEM 1-2
INDIVIDUAL CIRCUIT FUSES 6-17
INSTRUMENT CLUSTER AND INDICATORS 1-25

INDEX

INSTRUMENT PANEL ILLUMINATION CONTROL 1-36
INSTRUMENTS AND CONTROLS 1-24
INTERIOR REAR VIEW MIRROR 1-42

J
JUMP STARTING 3-1

K
KEY POSITIONS 2-2
KEYS 1-2

L
LIGHTING SWITCH 1-33
LUGGAGE NET 1-47
LUMBAR SUPPORT ADJUSTMENT 1-8

M
MAINTENANCE AND SERVICING REQUIREMENTS 5-1
MAINTENANCE UNDER SEVERE USAGE CONDITIONS 5-4
MANUAL TRANSMISSION LUBRICANT 6-10
MANUAL TRANSMISSION 2-4
MAP LIGHT 1-40
MULTI FUNCTION SWITCH 1-32
MULTI GAUGE 1-32

O
ODOMETER 1-30
OUTSIDE REARVIEW MIRROR HEATER 1-41

P
PARKING BRAKE 1-42
POWER STEERING FLUID LEVEL 6-18
POWER STEERING HOSES 6-18
PRE-TENSIONER SEAT BELT ..... 1-17 ~ 1-18
PROTECTING YOUR HYUNDAI FROM CORROSION 4-1

R
REAR FOG LIGHT SWITCH 1-43
REAR PARCEL SHELF 1-46
REAR SEAT ENTRY 1-9
REAR SEAT POSITIONS 1-8
RECOMMENDED SHIFT POINTS 2-5
REMOTE FUEL FILLER LID RELEASE 1-45
REPLACING LIGHT BULBS 6-18
RUNNING IN 1-1

S
SCHEDULED MAINTENANCE 5-2
SEAT BELT PRECAUTIONS 1-10
SEAT BELTS (3-Point Type) 1-12

INDEX

SEAT CUSHION HEIGHT ADJUSTMENT 1-8
SEAT WARMER 1-8
SERVICE HISTORY 5-1
SMOOTH CORNERING 2-11
SNOW TYRES 8-1
SPARE TYRE 3-3
SPARKING PLUG REPLACEMENT 6-8
SPECTACLE CASE 1-40
SPEEDOMETER 1-29
STARTING THE ENGINE 2-3
STEERING WHEEL FREEPLAY 6-15
STEERING WHEEL TILT LEVER 1-47
STEREO SOUND SYSTEM 1-62
SUN VISOR 1-47
SUNROOF 1-38
SUPPLEMENTAL RESTRAINT (AIRBAG) SYSTEM 1-18

T

TACHOMETER 1-29
THEFT-ALARM SYSTEM 1-4
TOWING ATTACHMENTS 2-12
TRACTION CONTROL SYSTEM 2-9
TRAILER AND CARAVAN TOWING 2-12
TRIP COMPUTER 1-30
TRIP ODOMETER 1-30
TYRE PRESSURES 8-1
TYRE BALANCING 8-3
TYRE CHAINS 8-2
TYRE REPLACEMENT 8-3
TYRE ROTATION 8-2

V

VARIABLE INTERMITTENT WIPE FACILITY 1-34
VEHICLE IDENTIFICATION NUMBER 8-1
VEHICLE TOWING OR RECOVERY 3-7

W

WHEEL REPLACEMENT 8-3
WINDSCREEN WASHER RESERVOIR REPLENISHMENT 6-10
WINDSCREEN WIPER BLADES 6-10
WINDSCREEN WASHER OPERATION 1-34
WINDSCREEN WIPER/WASHER SWITCH 1-34
WINTER MOTORING 2-11