2022

3.0L Duramax Diesel Engine Supplement

Contents

Introduction 1
Instruments and Controls 3
Driving and Operating 7
Vehicle Care 24
Service and Maintenance 41
Technical Data 49
Index 52

Introduction

The names, logos, emblems, slogans, vehicle model names, and vehicle body designs appearing in this manual including, but not limited to, GM, the GM logo, CADILLAC, the CADILLAC Emblem, ESCALADE, and Duramax are trademarks and/or service marks of General Motors LLC, its subsidiaries, affiliates, or licensors.

For vehicles first sold in Canada, substitute the name “General Motors of Canada Company” for Cadillac Motor Car Division wherever they appear in this manual.

This manual describes features that may or may not be on the vehicle because of optional equipment that was not purchased on the vehicle, model variants, country specifications, features/applications that may not be available in your region, or changes subsequent to the printing of this owner’s manual, including changes in standard or optional content.

Refer to the purchase documentation relating to your specific vehicle to confirm the features.

This manual contains information that pertains to the operation of the diesel engine. It also contains the Diesel Maintenance Schedule. The sections in this manual correspond to the sections in the owner’s manual. This manual, along with the owner’s manual, will assist you in the proper use and maintenance of the vehicle.

Keep this manual in the vehicle for quick reference.

Canadian Vehicle Owners

A French language manual can be obtained from your dealer, at www.helminc.com, or from:

Propriétaires Canadiens

On peut obtenir un exemplaire de ce guide en français auprès du concessionnaire ou à l'adresse suivante:

Litho in U.S.A.
Part No. 84793866 B Second Printing

©2021 General Motors LLC. All Rights Reserved.

Helm, Incorporated
Attention: Customer Service
47911 Halyard Drive
Plymouth, MI 48170
USA

Using this Supplement

This supplement contains information specific to the unique components of the vehicle. It does not explain everything you need to know about the vehicle. Read this supplement along with the owner's manual to learn about the vehicle's features and controls.

Index

A good place to look for what you need is the Index in the back of this supplement. It is an alphabetical list of what is in the supplement, and the page number where you will find it.

Instruments and Controls

Warning Lights, Gauges, and Indicators

Malfunction Indicator Lamp (Check Engine Light) 3
Wait-to-Start Light 4
Diesel Exhaust Fluid (DEF) Warning Light 5

Information Displays

Driver Information Center (DIC) ... 5

Warning Lights, Gauges, and Indicators

Malfunction Indicator Lamp (Check Engine Light)

This light is part of the vehicle's emission control on-board diagnostic system. If this light is on while the engine is running, a malfunction has been detected and the vehicle may require service. The light should come on to show that it is working when the ignition is on with the engine not running. See "Ignition Positions" in the owner's manual.

This light may also come on when the system has detected a problem with the Diesel Exhaust Fluid (DEF) management system. See *Diesel Exhaust Fluid* ⇨ *12*.

Malfunctions are often indicated by the system before any problem is noticeable. Being aware of the light and seeking service promptly when it comes on may prevent damage.

Caution

If the vehicle is driven continually with this light on, the emission control system may not work as well, the fuel economy may be lower, and the vehicle may not run smoothly. This could lead to costly repairs that might not be covered by the vehicle warranty.

Caution

Modifications to the engine, transmission, exhaust, intake, or fuel system, or the use of replacement tires that do not meet the original tire specifications, can cause this light to come on. This could lead to costly repairs not covered by the vehicle warranty. This could also affect the vehicle's

(Continued)

Caution (Continued)

ability to pass an Emissions Inspection/Maintenance test. See *Accessories and Modifications* ⇨ *24*.

When the light is on, a malfunction has been detected. Diagnosis and service may be required.

Poor fuel quality can cause inefficient engine operation and poor driveability, which may go away once the engine is warmed up. If this occurs, change the fuel brand. It may require at least one full tank of the proper fuel to turn the light off. See *Fuel for Diesel Engines* ⇨ *15*.

If the light remains on, see your dealer.

Emissions Inspection and Maintenance Programs

If the vehicle requires an Emissions Inspection/Maintenance test, the test equipment will likely connect to the vehicle's Data Link Connector (DLC).

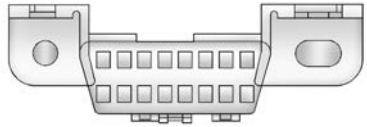

The DLC is under the instrument panel to the left of the steering wheel. Connecting devices that are not used to perform an Emissions Inspection/ Maintenance test or to service the vehicle may affect vehicle operation. See “Add-On Electrical Equipment” in the owner’s manual. See your dealer if assistance is needed.

The vehicle may not pass inspection if:

- The light is on when the engine is running.
- The light does not come on when the ignition is on with the engine not running.
- Critical emission control systems have not been completely diagnosed. If this happens, the vehicle would not be ready for inspection and might require several days of routine driving before the system is ready for inspection. This can happen if the 12-volt battery has recently been replaced or run down, or if the vehicle has recently been serviced.

See your dealer if the vehicle will not pass or cannot be made ready for the test.

Wait-to-Start Light

This light comes on briefly while starting the engine, as a check to show the light is working.

If the wait-to-start light comes on, the glow plug system is required and operating. Wait until the light turns off before starting the engine. This light may not come on in warm temperatures.

See *Starting the Diesel Engine* ⇨ *7*.

Diesel Exhaust Fluid (DEF) Warning Light

This light, a Driver Information Center (DIC) message, and a chime come on when there is an issue with the Diesel Exhaust Fluid (DEF).

If the DEF issue has not been corrected, the light will continue to flash when the vehicle is started. The vehicle's speed may also be limited.

Also see *Diesel Exhaust Fluid* ⇨ *12*.

Information Displays

Driver Information Center (DIC)

The DIC is in the instrument cluster. The DIC comes on when the ignition is on.

All of the diesel-specific information can be displayed in Zone 2 of the instrument cluster.

A Duramax diesel vehicle may have the following additional DIC menu items:

DEF : Displays the Diesel Exhaust Fluid (DEF) level as a bar graph with individual segments that illuminate from Empty (E) to Full (F). When LOW appears on the display and the segments turn red, add DEF as soon as possible. For a guide on how much DEF to add, see *Diesel Exhaust Fluid* ⇨ *12*.

Fuel Filter Life Remaining : This display shows an estimate of the fuel filter's remaining useful life.
If 90% Fuel Filter Life Remaining is displayed, it means 90% of the current fuel filter life remains. The fuel filter life system will alert when to change the fuel filter on a schedule consistent with your driving conditions.

When the remaining fuel filter life is low, the CHANGE FUEL FILTER message will appear on the display. Change the fuel filter as soon as possible.

Fuel Filter Life Reset : Reset the Fuel Filter Life Remaining display after each fuel filter change. It will not reset itself. Also, be careful not to reset the display at any time other than when the fuel filter has just been changed because it cannot be reset accurately until the next fuel filter change. The fuel filter life will change to 100% when the system has been reset. To reset the system, touch and hold reset while the Fuel Filter Life Remaining vehicle information screen is displayed.

Engine Air Filter Life : Displays an estimate of the engine air filter’s remaining useful life and the state of the system. Engine Air Filter Life 95% means 95% of the current air filter life remains. Messages will display based on the engine air filter life and the state of the system. When the REPLACE AT NEXT OIL CHANGE message displays, the engine air filter

should be replaced at the time of the next oil change. When the REPLACE SOON message displays, the engine air filter should be replaced at the earliest convenience. The Air Filter Life display must be reset after the engine air filter replacement. To reset, see *Engine Air Filter Life System* ⇨ *29*.

Driving and Operating

Starting and Operating
Starting the Diesel Engine 7
Engine Heater 9
Extended Parking 10

Diesel Particulate Filter
Diesel Particulate Filter 10

Diesel Exhaust Fluid
Diesel Exhaust Fluid 12

Brakes
Exhaust Brake 15

Fuel
Top Tier Fuel 15
Fuel Additives 15
Fuel for Diesel Engines 15
Biodiesel 17
Cold Weather Operation 17
Water in Fuel 18
Running Out of Fuel 20
Fuel Filter Replacement 20
Filling the Tank 21
Filling a Portable Fuel Container 23

Trailer Towing
Trailer Towing 23

Starting and Operating

Starting the Diesel Engine

The diesel engine starts differently than a gasoline engine.

Place the vehicle in P (Park) or N (Neutral). To restart the engine when the vehicle is already moving, use N (Neutral) only.

Caution

Do not try to shift to P (Park) if the vehicle is moving. If you do, you could damage the transmission. Shift to P (Park) only when the vehicle is stopped.

Starting the Engine

1. Place your foot on the brake and press ENGINE START/STOP.

   Observe the wait-to-start light. See *Wait-to-Start Light* ⇨ *4*. This light may not come on if the engine is warm.

2. The wait-to-start light may be illuminated, depending on temperature conditions. There will be a delay in engine cranking after

pressing ENGINE START/STOP based on temperature conditions. In extremely cold temperatures the delay will be longer. At the end of the delay the engine will begin to crank and will continue to crank until the engine starts.

Caution

If the wait-to-start light stays on after starting the vehicle, the vehicle may not run properly. Have the vehicle serviced right away.

3. If the engine does not start after 15 seconds of cranking, turn the ignition off. Wait one minute for the cranking motor to cool, then try the same steps again.

If you are trying to start the engine after you have run out of fuel, follow the steps in *Running Out of Fuel* ⇨ *20*.

When the engine is cold, let it run for a few minutes before driving. This lets oil pressure build up. The engine will sound louder when it is cold.

For turbo protection, engine power at speeds above idle may be limited if the engine is cold. This protection can last up to a maximum of 40 seconds at extreme cold coolant and ambient temperatures.

Cold Weather Starting

Use the recommended engine oil when the outside temperature drops below freezing. See *Engine Oil* ⇨ *27*. When the outside temperature drops below –18 °C (0 °F), use of the engine coolant heater is recommended.

If you experience longer cranking times, notice an unusual amount of exhaust smoke, or are at higher elevations (over 2 135 m or 7,000 ft), you may use the engine heater. See “Engine Heater” in the owner’s manual.

See *Fuel for Diesel Engines* ⇨ *15* for information on what fuel to use in cold weather.

If the Diesel Engine Will Not Start

If the vehicle runs out of fuel, see *Running Out of Fuel* ⇨ *20*.

If the vehicle is not out of fuel, and the engine will not start, place your foot on the brake and press ENGINE START/STOP.

- If the wait-to-start light does not go off, wait a few seconds, then try starting the engine again. See your dealer as soon as possible for a starting system check.
- If the wait-to-start light comes on and then goes off and you know the battery is charged, but the engine still will not start, the vehicle needs service.
- If the wait-to-start light does not come on when the engine is cold, the vehicle needs service.
- If the battery does not have enough charge to start the engine, see “Battery” in the owner’s manual.
- Check that the correct engine oil has been used and changed at appropriate intervals. If the wrong oil is used, the engine may be harder to start.
- Be sure to use the proper fuel for existing weather conditions. See *Fuel for Diesel Engines* ⇨ *15*.

- If the engine starts, runs a short time, then stops, the vehicle needs service.

⚠ Warning

Do not use gasoline or starting aids, such as ether, in the air intake. They could damage the engine, which may not be covered by the vehicle warranty. They could also cause a fire, which could cause serious personal injury.

Engine Idle Variations

Under certain conditions the engine idle speed can vary or be elevated. Change in idle speed is normal and does not indicate a problem. Normal conditions that can raise idle speed are low voltage, DPF regeneration, air conditioning compressor loads, and engine warmup. These speeds can range from approximately 600 to 1000 rpm.

Engine Heater

The engine heater can provide easier starting and better fuel economy during engine warm-up in cold weather conditions at or below –18 °C (0 °F). Vehicles with an engine heater should be plugged in at least four hours before starting.

⚠ Warning

Do not plug in the engine block heater while the vehicle is parked in a garage or under a carport. Property damage or personal injury may result. Always park the vehicle in a clear open area away from buildings or structures.

To Use the Engine Heater

1. Turn off the engine.
2. Check the heater cord for damage. If it is damaged, do not use it. See your dealer for a replacement. Inspect the cord for damage at each use.

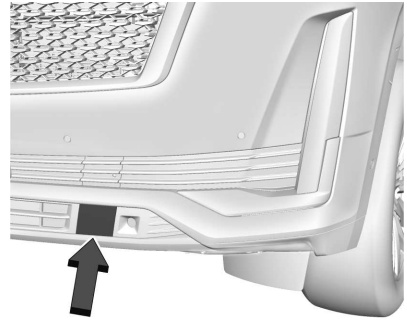

3. Remove the engine heater connector cover by gently prying with a flat blade tool.
4. Plug the heater cord into the connector in the front fascia.
5. Plug the cord into a grounded 110-volt AC outlet that is protected by a ground fault detection function.

⚠ Warning

Improper use of the heater cord or an extension cord can damage the cord and may result in overheating and fire.

- Plug the cord into a three-prong electrical utility receptacle that is protected by a ground fault detection function. An ungrounded outlet could cause an electric shock.
- Use a weatherproof, heavy-duty, 15 amp-rated extension cord if needed. Failure to use the recommended extension cord in good operating condition, or using a damaged heater or extension cord, could make it overheat and cause a fire, property damage, electric shock, and injury.

(Continued)

Warning (Continued)

- Do not operate the vehicle with the heater cord permanently attached to the vehicle. Possible heater cord and thermostat damage could occur.
- While in use, do not let the heater cord touch vehicle parts or sharp edges. Never close the hood on the heater cord.
- Before starting the vehicle, unplug the cord, reattach the cover to the plug, and securely fasten the cord. Keep the cord away from any moving parts.

6. Before starting the engine, be sure to unplug and store the cord.

The length of time the heater should remain plugged in depends on several factors. Ask a dealer in the area where you will be parking the vehicle for the best advice on this.

Extended Parking

This vehicle is not equipped with an automatic engine shutdown feature.

Diesel Particulate Filter

The exhaust system has a Diesel Particulate Filter (DPF) to reduce vehicle emissions. On some exhaust systems with a DPF, the exhaust cooler mixes air with the exhaust to lower the temperature before it leaves the tailpipe.

The DPF, the tailpipe, and other exhaust system components must not be altered. Inspect regularly and clean any mud or dirt from the exhaust cooler, especially where the exhaust cooler connects to the tailpipe and the openings where fresh air enters the cooler.

The DPF will clean itself as part of normal operation. Several factors including fuel consumed, hours of engine operation, and miles driven are monitored by the Engine Control Module (ECM). The self-cleaning occurs approximately once per tank of fuel.

Vehicles with the DPF have specific fuel and engine oil requirements. See *Fuel for Diesel Engines* ⇨ *15* and *Engine Oil* ⇨ *27*.

Caution

Damage can occur to the DPF components if the required Ultra Low Sulfur Diesel (15 ppm sulfur maximum) fuel and engine oil specified in the Recommended Fluids and Lubricants section of this manual are not used. This damage would not be covered by the vehicle warranty.

Under certain conditions, such as idling or very short trips, the self-cleaning process has less efficiency and cannot be completed.

To resolve this, continue driving safely at a steady speed as close to the posted speed limit as possible, preferably without stopping, until the message turns off. This can take up to 30 minutes.

⚠ Warning

During DPF self cleaning or during extended idling in P (Park), the exhaust system and exhaust gases are very hot. Things that burn could touch hot exhaust parts under the vehicle and ignite. You or others could be burned. Do not park, or idle for an extended period of time, near or over papers, leaves, dry grass, or other things that can burn. Keep the exhaust area clear of material that could ignite or burn. See “Parking over Things That Burn” in the owner’s manual.

Caution

Avoid extended idling because the DPF system is not capable of self-cleaning at idle. During extended idling, monitor the instrument cluster lights and DIC for messages and take appropriate action. Continued idling with the warning light/message on could cause damage to the DPF requiring

(Continued)

Caution (Continued)

repair and possible replacement that might not be covered by the vehicle warranty.

During self-cleaning there will be a change in the exhaust sound and engine idle speed. Along with this, a burning smell and reduction in fuel economy may be noticed. This is normal.

If the vehicle is idled or driven on very short trips with the DPF warning message on and the exhaust filter is not cleaned as required, the malfunction indicator lamp and a DIC message will display. See your dealer. Also see *Malfunction Indicator Lamp (Check Engine Light)* ⇨ *3*.

See *Accessories and Modifications* ⇨ *24* if you are adding accessories or modifying the vehicle.

Diesel Exhaust Fluid

⚠ Warning

Avoid getting Diesel Exhaust Fluid (DEF) on your skin or in your eyes as it could cause irritation. For more safety, handling, and storage information, see the Diesel Exhaust Fluid container label.

Caution

Use only DEF that is GM approved, or fluid containing the API certified or ISO 22241 label. The use of other fluids could damage the system, requiring costly repairs that will not be covered by the vehicle warranty.

Caution

Do not mix fuel with DEF, and do not put DEF in the fuel tank. This could lead to costly repairs that might not be covered by the vehicle warranty.

Diesel Exhaust Fluid (DEF) is used with diesel engines to reduce the amount of regulated emissions produced. Products such as AdBlue are types of DEF. The fluid level in the DEF tank must be maintained for the vehicle to run properly. DEF is not a fuel additive. DEF freezes when exposed to temperatures below –11 °C (12 °F). For DEF tank capacity see *Capacities and Specifications* ⇨ *50*.

It is normal to hear the DEF system purge fluid back into the tank after the vehicle is shut off.

Locating Diesel Exhaust Fluid

DEF can be purchased at your authorized dealers. Additionally, some diesel truck fueling stations or retailers may have DEF for purchase. For vehicles with an active OnStar or connected services plan, OnStar can help to locate a DEF retailer. See “Customer Assistance Offices” in the owner’s manual for phone numbers to assist in contacting a GM dealer. See *Recommended Fluids and Lubricants* ⇨ *46*.

Filling the DEF Tank

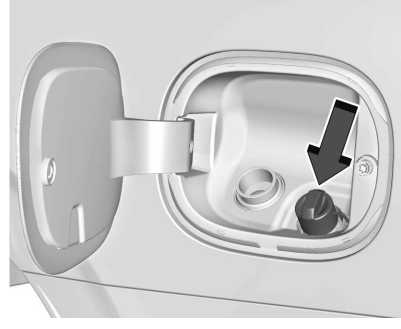

The blue DEF cap is behind the fuel/DEF door. Do not remove the fuel and DEF caps at the same time. Fill diesel fuel and DEF independently. Turn the DEF cap counterclockwise to remove.

In cold conditions DEF can freeze in the DEF fill pipe opening. If this prevents the filling of the DEF tank, place the vehicle in a warm garage overnight.

DEF Gauge Indication	Approximate minimum volume of DEF that can be added *
F	0 L (0 gal)
	1.5 L (0.5 gal)
	3.5 L (1 gal)
	6 L (1.5 gal)
	8 L (2 gal)
	10.5 L (2.5 gal)
	12.5 L (3 gal)
E	15 L (4 gal)

* Final gauge reading after fill may not illuminate all segments

Fill the DEF tank on level ground and with the vehicle off. When adding DEF, it is recommended to fully fill the DEF tank. For DEF tank capacity see *Capacities and Specifications* ⇨ *50*.

When adding DEF to an empty or very low tank, always add at least 7.5L (2 gal) of fluid to release the vehicle from speed limitation.

When fluid reaches the top of the DEF fill pipe, stop filling. Do not top off the DEF tank. If using a bottle or jug to refill DEF, follow the instructions on the container label and use a dedicated fill aid.

Caution

Do not overfill the DEF tank and do not allow DEF to contact the finished surfaces of the vehicle, as it could damage the vehicle finish. If DEF is spilled during filling, wipe any affected surface with a damp cloth.

When replacing the DEF cap, turn it clockwise until it clicks. Make sure the cap is fully installed.

Push the fuel/DEF door closed.

DEF Low

As the DEF level drops, warnings will automatically be displayed in the Driver Information Center (DIC). Select Vehicle Information in the DIC to view DEF level status. See *Driver Information Center (DIC)* ⇨ *5*.

Refill the DEF tank at the first opportunity after a low warning indication to avoid vehicle speed limitations.

It may take some time while driving for the vehicle to detect that DEF has been added. If there was a vehicle speed limitation, it will be removed gradually and it may take several kilometers/miles for the DIC message to update.

If DEF is added below –11 °C (12 °F), additional driving time may be required to remove speed limitations.

The DEF range DIC message first displays at approximately 1 600 km (1,000 mi). This message appears again at approximately 500 km (300 mi) of remaining range before the exhaust fluid tank becomes empty.

As the fluid level nears empty, these messages appear every time the vehicle is started.

If the DEF low warnings are ignored and the DEF tank becomes empty, the DIC will display messages that describe the action needed and distance until vehicle speed is limited.

For the DEF warning light symbol, see *Diesel Exhaust Fluid (DEF) Warning Light* ⇨ *5*.

DEF Quality Poor

Use only DEF that is GM approved, or fluid containing the API certified or ISO 22241 label.

DEF has an expiration date. If the system detects poor quality, or contaminated or diluted DEF, a DIC message will display along with distance until vehicle speed is limited.

The speed limitation will occur in a series of steps with the final speed limitation being 8 km/h (5 mph) along with a flashing warning light and chimes.

Adding fresh DEF to the system may resolve the problem after several kilometers/miles of driving, depending on several factors. If the DIC message persists, see your dealer or additional DIC messages may display.

Service DEF System

If a problem occurs with the DEF system, a DIC message displays along with distance until vehicle speed is limited.

The speed limitation will occur in a series of steps with the final speed limitation being 8 km/h (5 mph) along with a flashing warning light and chimes.

In some cases, this message will clear itself, indicating that the DEF system was able to correct the condition. If the DIC message persists, see your dealer or additional DIC messages may display.

Service Emission System

If a problem occurs with the vehicle emission system, a DIC message displays along with distance until vehicle speed is limited. The speed limitation will occur in a series of steps with the final speed limitation of 88 km/h (55 mph) and chimes. In some cases, this message will clear itself, indicating that the emission system was able to correct the

condition. If the DIC message persists, see your dealer or additional DIC messages may display.

Brakes

Exhaust Brake

Exhaust braking is automatically activated when Tow/Haul Mode is selected. It maintains the vehicle's speed by automatically implementing a shift pattern that uses the engine and the transmission to slow the vehicle. The system will command downshifts and use the turbocharger on the engine to reduce the vehicle's speed when the brake is applied. The normal tow/haul shift pattern will return once the vehicle is on a low grade or when the accelerator pedal is pressed.

While in the Electronic Range Select (ERS) Mode, grade braking is deactivated, allowing the driver to select a range and limiting the highest gear available. See "Manual Mode" in the owner's manual.

Fuel

Top Tier Fuel

GM recommends the use of TOP TIER Diesel Fuel to keep the engine clean, reduce engine deposits, and maintain optimal vehicle performance. Look for the TOP TIER Logo or see www.toptiergas.com for a list of TOP TIER Diesel Fuel marketers and applicable countries.

Fuel Additives

TOP TIER Detergent Diesel is highly recommended for use with your vehicle. If your area does not have TOP TIER Detergent Diesel, GM recommends the use of ACDelco Diesel Fuel Conditioner. This will help maintain optimal engine performance. GM does not recommend other aftermarket diesel additives.

If low-quality diesel is used for refueling, GM recommends adding ACDelco Fuel System Treatment Plus-Diesel to help clean engine deposits. This is available at your GM dealer.

Fuel for Diesel Engines

The selection of a high-quality fuel is important for maintaining optimum vehicle performance. Diesel fuel should meet or exceed the minimum requirements in the most current versions of the local fuel standards.

Use Ultra Low Sulfur Fuel, which refers to fuel with less than 15 ppm sulfur.

Do not use a diesel blend containing more than 20% biodiesel by volume.

Caution

Use of fuel that does not comply with the required technical standards can lead to engine power loss, increased wear, or engine damage and may void your warranty.

Some improper fuels are:

- Diesel fuel with the addition of gasoline.
- Diesel fuel mixed with engine oil or automatic transmission fluid.
- Triglyceride fuels, such as raw vegetable oil or animal fat, in any form, including with blends of diesel or biodiesel.
- Marine diesel fuel and fuel oils.
- Diesel-water emulsions, such as Aquazole.
- Aftermarket diesel fuel additives, which contain alcohols, organo-metallic additives, or water emulsifiers.

Caution

If the vehicle is accidentally refueled with gasoline, do not continue driving the vehicle. Driving the vehicle will damage the fuel system. Have the vehicle towed to a qualified technician to have the gasoline removed from the tank and fuel system. Refuel with Ultra Low Sulfur Diesel fuel. It is also recommended to have the fuel system flushed with Ultra Low Sulfur Diesel, to ensure all gasoline is removed.

Some conditions, such as dirty fuel, may decrease fuel filter life and a CHANGE FUEL FILTER message may come on in the Driver Information Center (DIC).

Climate Grade Diesel Fuels

At temperatures below 0 °C (32 °F), avoid using biodiesel blends above 5% by volume. Using such a fuel may cause fuel filter plugging, system gelling, and freezing, which may adversely impact vehicle starting.

Severe winter grade diesel fuel, such as 1-D diesel fuel or Arctic grade diesel fuel, can be used in extreme cold temperatures (below –18 °C or 0 °F); however, doing so will reduce power and fuel economy. Avoid using severe winter grade fuel in warm or hot climates. It can result in stalling, poor starting, and damage to the fuel injection system.

Fuels improperly blended for cold temperature operation may result in restricted fuel filters. The vehicle is equipped with a fuel heating system to prevent gelling or waxing of conventional diesel fuel and biodiesel blends, but may not prevent all cases.

In case of severe winter conditions, the fuel filter may become clogged by wax naturally present in the fuel. To unclog it, move the vehicle to a warm garage area and allow the filter to warm up. The fuel filter may need to be replaced. See *Fuel Filter Replacement* ➪ *20*.

Biodiesel

Biodiesel is a renewable fuel produced from vegetable oils or animal fats that have been chemically modified to make it compatible with diesel fuel.

Caution

Do not use home-made biodiesel or home test kits because the quality cannot be verified by approved scientific methods. Do not use raw vegetable oil or other unmodified bio-oils, fats, or blends of vegetable oil with diesel. They could damage the fuel system and engine, and damages would not be covered by the vehicle warranty.

Biodiesel Blends

Fuels with a biodiesel content up to 20% by volume may be used (e.g., named B20). Only use biodiesel blends up to 20% by volume that comply with your country's or region's fuel standards.

Caution

Do not use blends containing more than 20% biodiesel. Any engine, fuel system, or exhaust after-treatment system damage would not be covered by the vehicle warranty.

As a renewable fuel, biodiesel provides some environmental benefits. However, biodiesel has unique properties and needs to be handled differently than diesel fuel. Its use presents additional risks and may not be appropriate in all situations. Certain vehicle operating modes increase these risks and should be avoided.

Biodiesel fuel quality degrades with time and exposure to high temperature quicker than Ultra Low Sulfur Diesel fuel. More frequent refueling provides the best opportunity to have a supply of fresh fuel. Storage at hot ambient temperatures will accelerate biodiesel degradation.

If the vehicle is not driven often and uses little fuel, or if it is stored for extended periods of time, avoid the use of biodiesel blended fuels above 5% by volume. When the vehicle is stored for longer than one month, it should be run out of biodiesel to below one-quarter tank, refueled with biodiesel-free fuel, and driven several kilometers (miles) before storage.

Cold Weather Operation

In cold weather, the fuel filter may become clogged by wax naturally present in the fuel. To unclog it, move the vehicle to a warm garage area and allow the filter to warm up. The fuel filter may need to be replaced. See *Fuel Filter Replacement* ⇨ *20*.

At temperatures below 0 °C (32 °F), it is recommended to avoid using biodiesel blends above 5% blend. This blend may cause fuel filter plugging, system gelling, and freezing that may affect vehicle starting. You may need to turn the ignition on and off a few times before the vehicle will start. Also, idle the vehicle for a couple of minutes before accelerating.

It is recommended to use Ultra Low Sulfur No. 1-D diesel fuel or a blend of No. 1-D and No. 2-D diesel fuel to enhance vehicle operation in cold weather at temperatures below 0 °C (32 °F). Use of No. 1-D diesel fuel may lower the fuel economy. For additional information for better cold weather operation, see *Engine Heater* ⇨ *9*.

Water in Fuel

Improper fuel tank inspection or cleaning, or contaminated fuel from suppliers, can cause water to be pumped into the fuel tank along with the diesel fuel. If a WATER IN FUEL SERVICE REQUIRED message displays, the water must be drained immediately.

⚠ Warning

Diesel fuel containing water is still combustible. You or others could be burned. If the fuel needs to be drained, keep sparks, flames, and smoking materials away from the mixture.

Caution

Water in the diesel fuel can corrode internal components of the fuel system and lead to severe damage. It can also support fungus or bacteria growth, which can damage the fuel system. Even with a diesel fuel biocide, the fuel system may still need to be cleaned. Your dealer can advise of the appropriate solution.

If the fuel tank needs to be purged to remove water, see your dealer or a qualified technician. Improper purging can damage the fuel system.

Water in Fuel Troubleshooting

If the WATER IN FUEL SERVICE REQUIRED message comes on:

Problem	Recommended Action
Message displays but goes off during the ignition cycle.	The fuel filter is partially filled with water. Drain the water as soon as possible. See "Removing Water from the Fuel Filter" following.
Message displays and stays on.	Drain the fuel filter immediately. If no water can be drained, and the temperature is below freezing, then water may be frozen in the filter. Move the vehicle to a warm location to thaw the water, then drain the fuel. If water still does not drain, see your dealer.

Problem	Recommended Action
Immediately after refueling, message displays and stays on.	A large amount of water is in the fuel tank. Drain the fuel filter immediately. If the message stays on or comes back on without refueling, then fuel tank purging is required. See your dealer. If the message displays and the engine stalls or runs rough, do not drive until the water contaminated fuel is drained.

Caution

Driving with this message on can damage the fuel injection system and the engine. If the message comes on right after a refuel, water was pumped into the fuel tank. Turn off the engine and drain the water immediately.

Removing Water from the Fuel Filter

To drain water:

1. Turn the engine off and apply the parking brake.

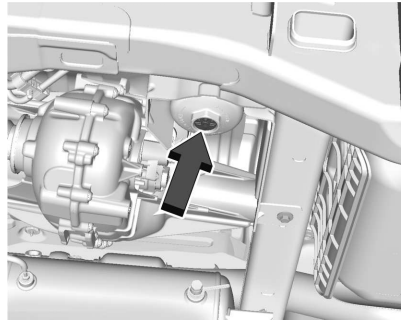

2. Place a container under the filter drain valve. The filter drain valve is on the bottom of the fuel filter. The filter drain valve is under the vehicle on the driver side, inside the frame rail.
3. Open the drain valve by turning it counterclockwise. Allow the filter to drain until all of the water has been removed. Close the valve.
4. Properly dispose of the water contaminated fuel.
5. Start the engine and let it run for a few minutes. During the draining process, air may have entered the fuel system. If the engine stalls, the fuel system may need to be primed. See “Fuel Priming” following.

Fuel Priming

For the fuel system to work properly, the fuel lines must be full of fuel. If air gets in, the fuel lines need to be primed before operating the vehicle.

If air is present, the following may have happened:

- The vehicle ran out of fuel.
- The fuel filter was removed.

- The fuel lines were removed or disconnected.
- The fuel filter water drain valve was opened while the engine was running.

Priming the Fuel System

There is an electric priming pump that will bring fuel to the engine and eliminate air in the fuel lines. To prime the engine:

1. Correct any condition that caused the loss of prime.
2. Turn the ignition on for 30 seconds. Do not start the engine. The fuel pump will start priming.
3. Turn the ignition off, then back on, and crank the engine for 15 seconds.
4. If the engine does not start, repeat Steps 2 and 3 until the engine starts.

   If the engine does not start after repeating Steps 2 and 3 three times, turn the ignition off for 60 seconds.
5. Repeat the above steps until the engine starts.
6. If the engine starts, but does not run smoothly, increase the engine speed slightly.
7. If the engine starts and runs but stalls again, turn the ignition off for 60 seconds.
8. When the engine starts, let it idle for a few minutes and check the filter for any leaks.

Running Out of Fuel

⚠ Warning

Diesel fuel is combustible. It could start a fire if it gets on hot engine parts. You could be burned. Catch any fuel from the air bleed valve, and wipe up any spilled fuel with a cloth.

If the engine has stalled due to running out of fuel, try the following steps to restart it:

1. If parked on a level surface, add at least 7.6 L (2 gal) of fuel. Up to 18.9 L (5 gal) may be needed if parked on a slope.
2. Follow the fuel priming procedure earlier in this section to prime the fuel filter.
3. Turn the ignition to START for 10 to 15 seconds at a time until the engine starts. If the engine tries to run, but does not run smoothly, increase the rpm slightly by using the accelerator pedal. This will help force air through the system.
4. Return to Step 2 if the engine stalls and will not restart.
5. After a few attempts, if the engine still does not start, see your dealer.

Fuel Filter Replacement

⚠ Warning

Diesel fuel is flammable. It could start a fire if something ignites it, and people could be burned. Do not let it get on hot engine parts, and keep matches or other ignition sources away.

The fuel filter is on the driver side, inside the frame rail.

To replace the fuel filter:

1. Drain any water from the filter. See "Removing Water from the Fuel Filter" in *Water in Fuel* ⇨ *18*.

   Keep the engine off until the procedure is completed.
2. Apply the parking brake.

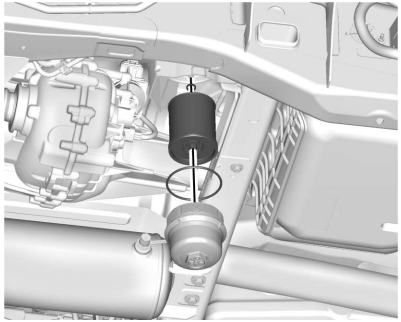

3. Remove the filter element cap by turning it counterclockwise.
4. Remove the filter element. If there is any dirt on the filter sealing surface, clean it off.
5. Install the new filter element and o-ring.
6. Reinstall and tighten the filter cap to the housing.
7. Use the fuel filter priming procedure to prime the fuel filter. See "Fuel Priming" in *Water in Fuel* ⇨ *18*.
8. Start the engine and let it idle for five minutes. Check the fuel filter and air bleed valve for leaks.
9. Reset the fuel filter monitor. See *Driver Information Center (DIC)* ⇨ *5*.

Filling the Tank

An arrow on the fuel gauge indicates which side of the vehicle the fuel door is on. See "Fuel Gauge" in the Owner's Manual. Do not refill the diesel fuel and Diesel Exhaust Fluid (DEF) at the same time.

⚠ Warning

Fuel vapors and fuel fires burn violently and can cause injury or death.

Follow these guidelines to help avoid injuries to you and others:

(Continued)

Warning (Continued)

- Read and follow all the instructions on the fuel pump island.
- Turn off the engine when refueling.
- Keep sparks, flames, and smoking materials away from fuel.
- Do not leave the fuel pump unattended.
- Avoid using electronic devices while refueling.
- Do not re-enter the vehicle while pumping fuel.
- Keep children away from the fuel pump and never let children pump fuel.
- Before touching the fill nozzle, touch a metallic object to discharge static electricity from your body.
- Fuel can spray out if the fill nozzle is inserted too quickly. This spray can happen if the

(Continued)

Warning (Continued)

tank is nearly full, and is more likely in hot weather. Insert the fill nozzle slowly and wait for any hiss noise to stop before beginning to flow fuel.

To open the fuel door, push and release the rearward center edge of the door. The capless refueling system does not have a fuel cap. Fully insert and latch the fill nozzle, then begin fueling.

⚠ Warning

Overfilling the fuel tank by more than three clicks of a standard fill nozzle may cause:

- Vehicle performance issues, including engine stalling and damage to the fuel system.
- Fuel spills.
- Under certain conditions, fuel fires.

Diesel fuel can foam when filling the tank. The automatic pump nozzle may shut off, even if the tank is not full. Wait for the foaming to stop, and then fill the tank more slowly. Be careful not to spill fuel. Wait five seconds after pumping before removing the fill nozzle. Clean fuel from painted surfaces as soon as possible. See “Exterior Care” under Vehicle Care in the Owner’s Manual. Push the fuel door closed.

⚠ Warning

If a fire starts while you are refueling, do not remove the fill nozzle. Shut off the flow of fuel by shutting off the pump or by notifying the station attendant. Leave the area immediately.

Accidental Refueling with Gasoline

Caution

If the vehicle is accidentally refueled with gasoline, do not continue driving the vehicle except to get to a location where it can be stopped safely. Driving the vehicle will damage the engine. Tow the vehicle for service. Have the gasoline removed from the tank and fuel system.

Filling the Tank with a Portable Gas Can

If the vehicle runs out of fuel and must be filled from a portable gas can:

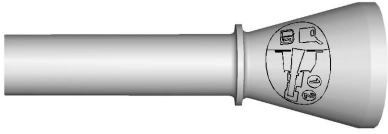

1. Locate the capless funnel adapter.
2. Insert and latch the funnel into the capless fuel system.

⚠ Warning

Attempting to refuel from a portable fuel container without using the funnel adapter may cause fuel spillage and damage the capless fuel system. This could cause a fire. You or others could be badly burned and the vehicle could be damaged.

3. Remove and clean the funnel adapter and return it to the storage location.

Filling a Portable Fuel Container

⚠ Warning

Never fill a portable fuel container while it is in the vehicle. Static electricity discharge from the container can ignite the fuel vapor. You or others could be badly burned and the vehicle could be damaged. To help avoid injury to you and others:

- Dispense fuel only into approved containers.
- Do not fill a container while it is inside a vehicle, in a vehicle's trunk, in a pickup bed, or on any surface other than the ground.
- Bring the fill nozzle in contact with the inside of the fill opening before operating the nozzle. Maintain contact until filling is complete.

(Continued)

Warning (Continued)

- Keep sparks, flames, and smoking materials away from fuel.
- Avoid using electronic devices while pumping fuel.

Trailer Towing

When towing at high elevation on steep uphill grades, consider the following:

Engine coolant at higher elevation will boil at a lower temperature than at or near sea level. If the engine is turned off immediately after towing at high elevation on steep uphill grades, the vehicle may show signs similar to engine overheating. To avoid this, let the engine run while parked (preferably on level ground) with the transmission in P (Park) and the parking brake applied for at least five minutes before turning the engine off. If the overheat warning comes on, see *Engine Overheating* ⇨ *36*.

Vehicle Care

General Information

Accessories and Modifications 24

Vehicle Checks

Engine Compartment Overview ... 26
Engine Oil 27
Engine Oil Life System 29
Automatic Transmission Fluid 29
Engine Air Filter Life System 29
Engine Air Cleaner/Filter 30
Cooling System (Engine) 31
Cooling System (Charge Air Cooling System) 34
Engine Overheating 36
Engine Fan 37

Jump Starting

Jump Starting - North America ... 37

General Information

Accessories and Modifications

Adding non-dealer accessories or making modifications to the vehicle can affect vehicle performance and safety, including such things as airbags, braking, stability, ride and handling, emissions systems, aerodynamics, durability, and electronic systems like antilock brakes, traction control, and stability control. These accessories or modifications could even cause malfunction or damage not covered by the vehicle warranty.

Damage to vehicle components resulting from modifications or the installation or use of non-GM certified parts, including control module or software modifications, is not covered under the terms of the vehicle warranty and may affect remaining warranty coverage for affected parts.

GM Accessories are designed to complement and function with other systems on the vehicle. See your dealer to accessorize the vehicle using genuine GM Accessories installed by a dealer technician.

See the warranty manual.

Aftermarket Engine Performance Enhancement Products and Modifications

Some aftermarket engine performance products and modifications promise a way to increase the horsepower and torque levels of the vehicle's powertrain. You should be aware that these products could have harmful effects on the performance and life of the engine, exhaust emission system, transmission, and drivetrain. The engines, transmissions, and drivetrains have been designed and built to offer industry leading durability and performance in the most demanding applications. Engine power enhancement products may enable the engine to operate at horsepower and torque levels that could damage, create failure, or reduce the life of the engine, engine emission system, transmission, and drivetrain.

Damage, failure, or reduced life of the engine, transmission, emission system, drivetrain, or other vehicle components caused by aftermarket engine performance enhancement products or modifications might not be covered under the vehicle warranty.

Vehicle Checks

Engine Compartment Overview

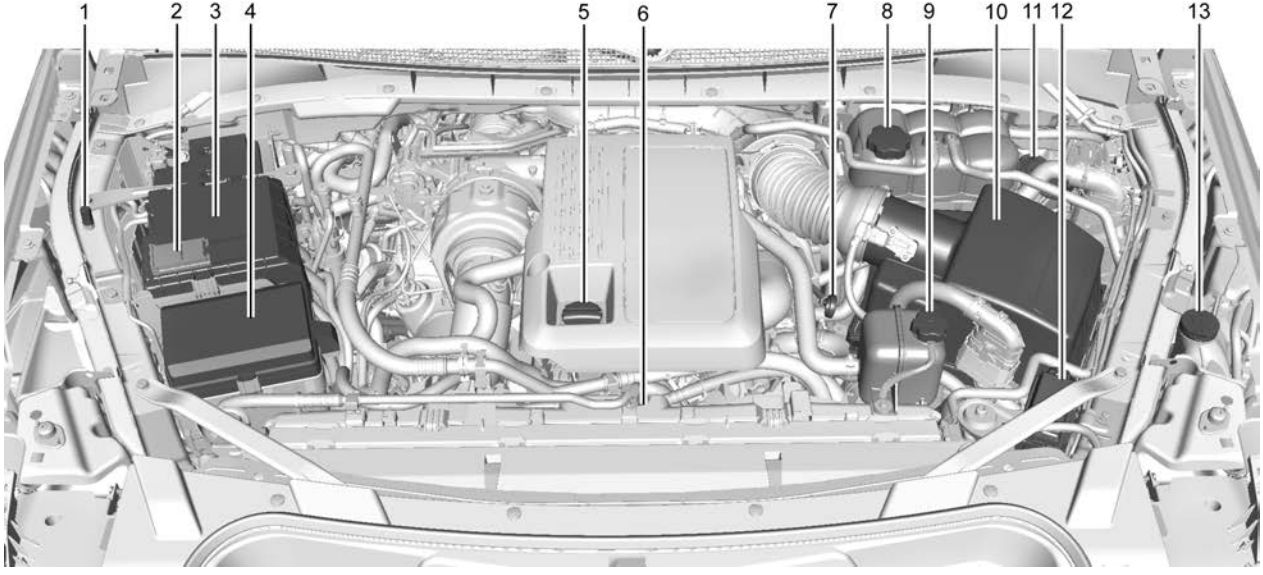

1. Remote Negative (-) Ground Terminal
2. Positive (+) Terminal
3. Battery
4. Engine Compartment Fuse Block
5. Engine Oil Fill Cap
6. Engine Fan (Out of View)
7. Engine Oil Dipstick
8. Engine Coolant Surge Tank and Pressure Cap
9. Charge Air Coolant Surge Tank and Pressure Cap
10. Engine Air Cleaner/Filter
11. Brake Fluid Reservoir
12. Auxiliary Fuse Block
13. Windshield Washer Fluid Reservoir

Engine Oil

To ensure proper engine performance and long life, careful attention must be paid to engine oil. Following these simple, but important steps will help protect your investment:

- Use engine oil approved to the proper specification and of the proper viscosity grade. See "Selecting the Right Engine Oil" in this section.
- Check the engine oil level regularly and maintain the proper oil level. See "Checking Engine Oil" and "When to Add Engine Oil" in this section.
- Change the engine oil at the appropriate time. See "Engine Oil Life System" in the owner's manual.
- Always dispose of engine oil properly. See "What to Do with Used Oil" in this section.

Checking Engine Oil

Check the engine oil level regularly, every 650 km (400 mi), especially prior to a long trip. The engine oil dipstick handle is a loop. See *Engine Compartment Overview* ⇨ *26* for the location.

⚠ Warning

The engine oil dipstick handle may be hot; it could burn you. Use a towel or glove to touch the dipstick handle.

If a low oil Driver Information Center (DIC) message displays, check the oil level.

Follow these guidelines:

- To get an accurate reading, park the vehicle on level ground. Check the engine oil level after the engine has been off for at least two hours. Checking the engine oil level on steep grades or too soon after engine shutoff can result in incorrect readings. Accuracy improves when checking a cold engine prior to starting. Remove the dipstick and check the level.
- If unable to wait two hours, the engine must be off for at least 15 minutes if the engine is warm, or at least 30 minutes if the engine is not warm. Pull out the dipstick, wipe it with a clean paper towel or

cloth, then push it back in all the way. Remove it again, keeping the tip down, and check the level.

When to Add Engine Oil

If the oil is below the cross-hatched area at the tip of the dipstick and the engine has been off for at least 15 minutes, add 1 L (1 qt) of the recommended oil and then recheck the level. See "Selecting the Right Engine Oil" later in this section for an explanation of what kind of oil to use. For engine oil crankcase capacity, see *Capacities and Specifications* ⇨ *50*.

Caution

Do not add too much oil. Oil levels above or below the acceptable operating range shown on the dipstick are harmful to the engine. If the oil level is above the

(Continued)

Caution (Continued)

operating range (i.e., the engine has so much oil that the oil level gets above the cross-hatched area that shows the proper operating range), the engine could be damaged. Drain the excess oil or limit driving of the vehicle, and seek a service professional to remove the excess oil.

See *Engine Compartment Overview* ⇨ *26* for the location of the engine oil fill cap.

Be sure to add enough oil to put the level somewhere in the proper operating range. Push the dipstick all the way back in when through.

Selecting the Right Engine Oil

Selecting the right engine oil depends on both the proper oil specification and viscosity grade. See *Recommended Fluids and Lubricants* ⇨ *46*.

Specification

Use engine oils that meet the dexosD specification. Engine oils that have been approved by GM as meeting the dexosD specification are marked with the dexosD approved logo. See www.gmdexos.com.

Caution

Failure to use the recommended engine oil or equivalent can result in engine damage not covered by the vehicle warranty.

Viscosity Grade

Use SAE 0W-20 viscosity grade engine oil.

When selecting an oil of the appropriate viscosity grade, it is recommended to select an oil of the correct specification. See "Specification" earlier in this section.

Engine Oil Additives/Engine Oil Flushes

Do not add anything to the oil. The recommended oils meeting the dexos specification are all that is needed for good performance and engine protection.

Engine oil system flushes are not recommended and could cause engine damage not covered by the vehicle warranty.

What to Do with Used Oil

Used engine oil contains certain elements that can be unhealthy for your skin and could even cause cancer. Do not let used oil stay on your skin for very long. Clean your skin and nails with soap and water, or a good hand cleaner. Wash or properly dispose of clothing or rags containing used engine oil. See the manufacturer's warnings about the use and disposal of oil products.

Used oil can be a threat to the environment. If you change your own oil, be sure to drain all the oil from the filter before disposal. Never dispose of oil by putting it in the trash or pouring it on the ground, into sewers, or into streams or bodies of water. Recycle it by taking it to a place that collects used oil.

Engine Oil Life System

The engine oil life system calculates engine oil life based on vehicle use and displays the CHANGE ENGINE OIL SOON message when it is time to change the engine oil and filter. The oil life system should be reset to 100% only following an oil change. See "Engine Oil Life System" in the owner's manual.

Automatic Transmission Fluid

When to Check and Change

It is not necessary to check the transmission fluid level.
A transmission fluid leak is the only reason for fluid loss. If a leak occurs, take the vehicle to your dealer and have it repaired as soon as possible.

There is a special procedure for checking and changing the transmission fluid. Because this procedure is difficult, this should be done at your dealer. Contact your dealer for additional information.

Caution

Use of the incorrect automatic transmission fluid may damage the vehicle, and the damage may not be covered by the vehicle warranty. Always use the correct automatic transmission fluid. See *Recommended Fluids and Lubricants* ⇨ *46*.

Change the fluid and filter at the intervals listed in *Maintenance Schedule* ⇨ *42*, and be sure to use the fluid listed in *Recommended Fluids and Lubricants* ⇨ *46*.

Engine Air Filter Life System

If equipped, this feature provides the engine air filter's remaining life and best timing for a change. The timing to change an engine air filter depends on driving and environmental conditions.

When to Change the Engine Air Filter

When the Driver Information Center (DIC) displays a message to replace the engine air filter at the next oil change, follow this timing.

When the DIC displays a message to replace the engine air filter soon, replace the engine air filter at the earliest convenience.

The system must be reset after the engine air filter is changed.

If the DIC displays a message to check the engine air filter system, see your dealer.

How to Reset the Engine Air Filter Life System

To reset:

1. Place the vehicle in P (Park).
2. Display the Air Filter Life on the DIC. See *Driver Information Center (DIC)* ⇨ *5*.
3. Press > on the steering wheel, or press the trip odometer reset stem if the vehicle does not have DIC controls, to move to the Reset/Disable display area. Select Reset, then press the thumbwheel or press the reset stem for several seconds.
4. Press the thumbwheel or the reset stem to confirm the reset.

Engine Air Cleaner/Filter

The engine air cleaner/filter is located in the engine compartment on the driver side of the vehicle. See *Engine Compartment Overview* ⇨ *26* for more information on location.

When to Inspect the Engine Air Cleaner/Filter

If the vehicle is not equipped with the engine air filter life system, see *Maintenance Schedule* ⇨ *42* for intervals on inspecting and replacing the engine air cleaner/filter.

How to Inspect/Replace the Engine Air Cleaner/Filter

Do not start the engine or have the engine running with the engine air cleaner/filter housing open. Before removing the engine air cleaner/filter, make sure that the engine air cleaner/filter housing and nearby components are free of dirt and debris. Remove the engine air cleaner/filter. Lightly tap and shake the engine air cleaner/filter (away from the vehicle), to release loose dust and dirt. Inspect the engine air cleaner/filter for damage, and replace if damaged. Do not clean the engine air cleaner/filter or components with water or compressed air.

To inspect or replace the air cleaner/filter:

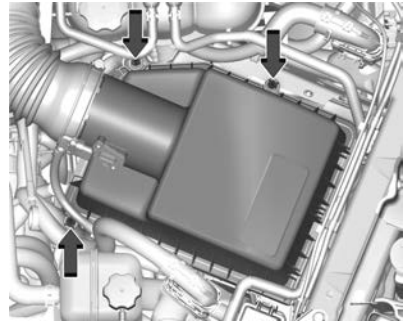

1. Remove the three screws, tilt the cover, and slide it out of the assembly.

⚠ Warning

If part replacement is necessary, the part must be replaced with one of the same part number or with an equivalent part. Use of a replacement part without the same fit, form, and function may result in personal injury or damage to the vehicle.

2. Inspect or replace the engine air cleaner/filter.
3. Lower the cover, slide it into the assembly, then secure with the three screws.
4. If equipped, reset the engine air filter life system after replacing the engine air filter. See *Engine Air Filter Life System* ➪ *29*.

⚠ Warning

Operating the engine with the air cleaner/filter off can cause you or others to be burned. Use caution when working on the engine. Do not start the engine or drive the

(Continued)

Warning (Continued)

vehicle with the air cleaner/filter off, as flames may be present if the engine backfires.

Caution

If the air cleaner/filter is off, dirt can easily get into the engine, which could damage it. Always have the air cleaner/filter in place when driving.

Cooling System (Engine)

The cooling system allows the engine to maintain the correct working temperature.

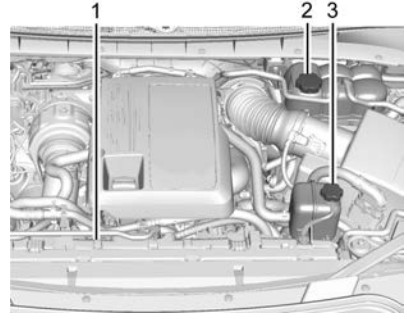

1. Engine Cooling Fan (Out of View)
2. Engine Coolant Surge Tank and Pressure Cap
3. Charge Air Coolant Surge Tank and Pressure Cap

⚠ Warning

An underhood electric fan can start up even when the engine is not running and can cause injury. Keep hands, clothing, and tools away from any underhood electric fan.

⚠ Warning

Do not touch heater or radiator hoses, or other engine parts. They can be very hot and can burn you. Do not run the engine if there is a leak; all coolant could leak out. That could cause an engine fire and can burn you. Fix any leak before driving the vehicle.

Engine Coolant

The cooling system in the vehicle is filled with DEX-COOL engine coolant mixture. See *Recommended Fluids and Lubricants* ⇨ *46* and *Maintenance Schedule* ⇨ *42*.

The following explains the cooling system and how to add coolant when it is low. If there is a problem with engine overheating, see *Engine Overheating* ⇨ *36*.

A 50/50 mixture of clean, drinkable water and DEX-COOL coolant will:

- Give freezing protection down to –37 °C (–34 °F).
- Give boiling protection up to 129 °C (265 °F).
- Protect against rust and corrosion.
- Help keep the proper engine temperature.
- Let the warning lights and gauges work as they should.

What to Use

⚠ Warning

Plain water, or other liquids such as alcohol, can boil before the proper coolant mixture will. With plain water or the wrong mixture, the engine could get too hot but there would not be an overheat warning. The engine could catch fire and you or others could be burned.

Use a 50/50 mixture of clean, drinkable water and DEX-COOL coolant which will not damage aluminum parts. If using this mixture, nothing else needs to be added.

If coolant has to be added more than four times a year, have your dealer check the vehicle cooling system.

Caution

Do not use anything other than a mix of DEX-COOL coolant that meets GM Standard GMW3420 and clean, drinkable water. Anything else can cause damage to the engine cooling system and the vehicle, which would not be covered by the vehicle warranty.

Never dispose of engine coolant by putting it in the trash, or by pouring it on the ground or into sewers, streams, or bodies of water. Have the coolant changed by an authorized service center, familiar with legal requirements regarding used coolant disposal. This will help protect the environment and your health.

Checking Coolant

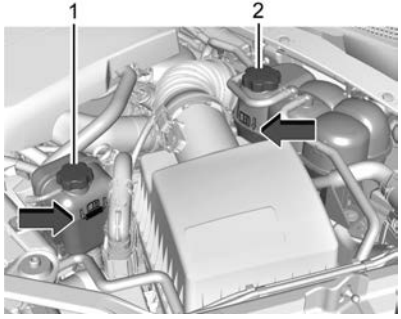

The engine coolant surge tank (2) is in the engine compartment on the driver side of the vehicle. See *Engine Compartment Overview* ⇨ *26* for location.

The vehicle must be on a level surface. When the engine is cold, the coolant level should be at the indicated mark.

Adding Coolant

Caution

If coolant is changed or added, always add enough to fill the system completely or engine damage may occur.

If more coolant is needed, add the proper DEX-COOL coolant mixture at the surge tank, but be careful not to spill it.

⚠ Warning

Spilling coolant on hot engine parts can burn you. Coolant contains ethylene glycol and it will burn if the engine parts are hot enough.

⚠ Warning

Steam and scalding liquids from a hot cooling system are under pressure. Turning the pressure cap, even a little, can cause them to come out at high speed and you could be burned. Never turn the cap

(Continued)

Warning (Continued)

when the cooling system, including the pressure cap, is hot. Wait for the cooling system and pressure cap to cool.

Caution

If the pressure cap is not tightly installed, coolant loss and engine damage may occur. Be sure the cap is properly and tightly secured.

Automatic Coolant Fill and Air Removal

This feature assists in filling and removing air from the cooling system after service of components or when coolant is added after being too low.

To activate the fill and air removal process:

1. With a cold system, add coolant to the indicated mark on the surge tank. Leave the pressure cap off until Step 8.
2. Set the ignition to Service Mode. See “Ignition Positions” under “Starting and Operating” in the owner’s manual.
3. Turn off the air conditioning.
4. Set the parking brake.
5. At the same time, press the accelerator and the brake for two seconds, then release.
6. Start the vehicle within five to 10 seconds.
7. Run the engine at 1200 Revolutions Per Minute (RPM) for four minutes while adding coolant as the level drops below the indicated mark on the surge tank.
8. Replace the cap and run the engine as follows while watching the coolant temperature gauge to be sure the temperature is rising but is not overheating. If the surge tank empties during the 3500 rpm portions below, stop the procedure, allow the engine to completely cool down, fill to the indicated mark on the surge tank, and start the procedure over.

   – 3500 RPM for four minutes

   – 1200 RPM for four minutes

   – 3500 RPM for four minutes

   Allow the engine to completely cool down and add coolant to the indicated mark on the surge tank. Repeats Steps 2 – 8. Process is complete.
9. If the engine coolant temperature does not rise or is overheating during Step 8, return to idle and shut off the engine. Allow the engine to completely cool down and add coolant to the indicated mark on the surge tank. Repeat Steps 2 – 8.

Cooling System (Charge Air Cooling System)

The cooling system allows the Charge Air Cooling System to maintain the correct working temperature.

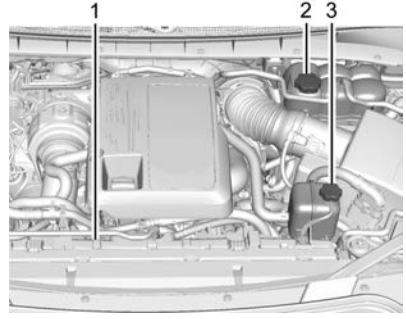

1. Engine Cooling Fan (Out of View)
2. Engine Coolant Surge Tank and Pressure Cap
3. Charge Air Coolant Surge Tank and Pressure Cap

⚠ Warning

An underhood electric fan can start up even when the engine is not running and can cause injury. Keep hands, clothing, and tools away from any underhood electric fan.

⚠ Warning

Do not touch heater or radiator hoses, or other engine parts. They can be very hot and can burn you. Do not run the engine if there is a leak; all coolant could leak out. That could cause an engine fire and can burn you. Fix any leak before driving the vehicle.

Charge Air Coolant

The charge air cooling system in the vehicle is filled with DEX-COOL engine coolant mixture. See *Recommended Fluids and Lubricants* ⇨ *46* and *Maintenance Schedule* ⇨ *42*.

The following explains the cooling system and how to add coolant when it is low. If there is a problem with engine overheating, see *Engine Overheating* ⇨ *36*.

A 50/50 mixture of clean, drinkable water and DEX-COOL coolant will:

- Give freezing protection down to –37 °C (–34 °F).
- Give boiling protection up to 129 °C (265 °F).
- Protect against rust and corrosion.
- Help keep the proper engine temperature.
- Let the warning lights and gauges work as they should.

What to Use

⚠ Warning

Plain water, or other liquids such as alcohol, can boil before the proper coolant mixture will. With plain water or the wrong mixture, the engine could get too hot but there would not be an overheat warning. The engine could catch fire and you or others could be burned.

Use a 50/50 mixture of clean, drinkable water and DEX-COOL coolant which will not damage aluminum parts. If using this mixture, nothing else needs to be added.

If coolant has to be added more than four times a year, have your dealer check the vehicle charge air cooling system.

Caution

Do not use anything other than a mix of DEX-COOL coolant that meets GM Standard GMW3420 and clean, drinkable water. Anything else can cause damage to the engine cooling system and the vehicle, which would not be covered by the vehicle warranty.

Never dispose of engine coolant by putting it in the trash, or by pouring it on the ground or into sewers, streams, or bodies of water. Have the coolant changed by an authorized service center, familiar with legal requirements regarding used coolant disposal. This will help protect the environment and your health.

Checking Coolant

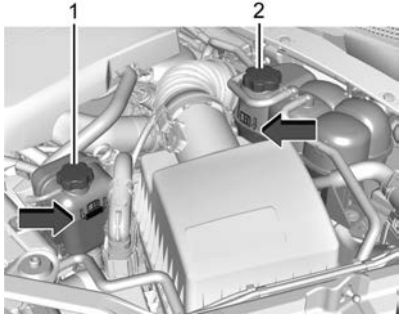

The charge air coolant surge tank (1) is in the engine compartment on the driver side of the vehicle. See *Engine Compartment Overview* ⇨ *26* for location.

The vehicle must be on a level surface. When the engine is cold, the coolant level should be at the indicated mark.

Adding Coolant

If no coolant is visible in the charge air cooling system surge tank, add coolant as follows:

1. Remove the charge air coolant surge tank pressure cap when the cooling system is cold. Turn the pressure cap slowly clockwise about one-half turn. If a hiss is heard, wait for that to stop. A hiss means there is still some pressure left.
2. Keep turning the pressure cap slowly, then remove it.
3. Slowly fill the coolant surge tank. Do not let the coolant level go above the indicated mark on the tank.
4. Activate the Automatic Coolant Fill and Air Removal process:
   - 4.1. Set the ignition to Service Mode. See “Ignition Positions” under “Starting and Operating” in the owner’s manual.
   - 4.2. Turn off the air conditioning.
   - 4.3. Set the parking brake.
   - 4.4. At the same time, press the accelerator and the brake for two seconds, then release.
   - 4.5. Start the engine within five to 10 seconds.
   - 4.6. Idle the engine for 15 minutes while adding fluid as the level drops below the indicated mark on the surge tank.
5. Replace charge air cooling system surge tank pressure cap.

Engine Overheating

There is an engine coolant temperature gauge on the instrument cluster. See the owner’s manual.

If Steam Is Coming from the Engine Compartment

⚠ Warning

Steam and scalding liquids from a hot cooling system are under pressure. Turning the pressure cap, even a little, can cause them to come out at high speed and you could be burned. Never turn the cap when the cooling system, including the pressure cap, is hot. Wait for the cooling system and pressure cap to cool.

Caution

Do not run the engine if there is a leak in the engine cooling system. This can cause a loss of all coolant and can damage the system and vehicle. Have any leaks fixed right away.

If No Steam Is Coming from the Engine Compartment

A Driver Information Center (DIC) message, along with a low coolant condition, can indicate a serious problem.

If there is an engine overheat warning and the vehicle does not have a low coolant condition, and no steam is heard or seen, the problem may not be too serious. Sometimes the engine can get a little too hot when the vehicle:

- Climbs a long hill on a hot day.
- Stops after high-speed driving.
- Idles for long periods in traffic.
- Tows a trailer. See “Driving on Grades” under “Driving Characteristics and Towing Tips” in the owner’s manual.

If the DIC message comes on with no sign of steam, try this for a minute or so:

1. In heavy traffic, let the engine idle in N (Neutral) while stopped. If it is safe to do so, pull off the road, shift to P (Park) or N (Neutral), and let the engine idle.
2. Turn on the heater to full hot at the highest fan speed and open the window as necessary.

If the vehicle no longer has the overheat warning, the vehicle can be driven. Just to be safe, drive slower for about 10 minutes. If the warning does not come back on, drive normally and have the cooling system checked for proper fill and function.

If the warning continues, pull over, stop, and park the vehicle right away.

Engine Fan

The vehicle has electric cooling fan(s). The fans may be heard spinning at low speed during most everyday driving. The fans may turn off if no cooling is required. Under heavy vehicle loading, trailer towing, high outside temperatures, or operation of the air conditioning system, the fans may change to high speed and an increase in fan noise may be heard. This is normal and indicates that the cooling system is functioning properly. The fans will change to low speed when additional cooling is no longer required.

The electric engine cooling fans may run after the engine has been turned off. This is normal and no service is required.

Jump Starting

Jump Starting - North America

If the battery has run down, try to use another vehicle and some jumper cables to start your vehicle. Be sure to use the following steps to do it safely.

⚠ Warning

WARNING: Battery posts, terminals and related accessories can expose you to chemicals including lead and lead compounds,

(Continued)

Warning (Continued)

which are known to the State of California to cause cancer and birth defects or other reproductive harm. Wash hands after handling. For more information go to www.P65Warnings.ca.gov.

See the warning on the back cover.

⚠ Warning

Batteries can hurt you. They can be dangerous because:

- They contain acid that can burn you.
- They contain gas that can explode or ignite.
- They contain enough electricity to burn you.

If you do not follow these steps exactly, some or all of these things can hurt you.

Caution

Ignoring these steps could result in costly damage to the vehicle that would not be covered by the vehicle warranty. Trying to start the vehicle by pushing or pulling it will not work, and it could damage the vehicle.

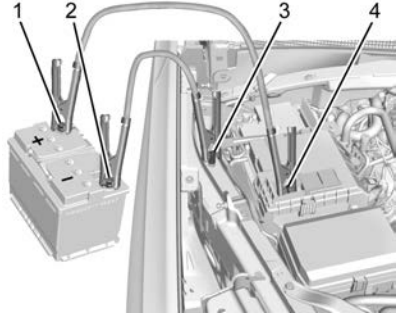

1. Good Battery Positive (+) Terminal
2. Good Battery Negative (–) Terminal
3. Discharged Battery Negative (–) Grounding Point
4. Discharged Battery Positive (+) Terminal

The good battery positive (+) terminal and the good battery negative (–) and negative terminal are on the battery of the vehicle providing the jump start.

The discharged battery positive (+) terminal and the discharged battery negative (–) grounding point are on the passenger side of the vehicle.

The discharged battery positive (+) terminal is under a trim cover. Open the cover to expose the terminal.

1. Check the other vehicle. It must have a 12-volt battery with a negative ground system.

Caution

If the other vehicle does not have a 12-volt system with a negative ground, both vehicles can be damaged. Only use a vehicle that has a 12-volt system with a negative ground for jump starting.

2. Position the two vehicles so that they are not touching.

3. Set the parking brake firmly and put the shift lever in P (Park) with an automatic transmission, or N (Neutral) with a manual transmission.

Caution

If any accessories are left on or plugged in during the jump starting procedure, they could be damaged. The repairs would not be covered by the vehicle warranty. Whenever possible, turn off or unplug all accessories on either vehicle when jump starting.

4. Turn the ignition off. Turn off all lights and accessories in both vehicles, except the hazard warning flashers if needed.

⚠ Warning

An electric fan can start up even when the engine is not running and can injure you. Keep hands, clothing, and tools away from any underhood electric fan.

⚠ Warning

Using a match near a battery can cause battery gas to explode. People have been hurt doing this, and some have been blinded. Use a flashlight if you need more light.

Battery fluid contains acid that can burn you. Do not get it on you. If you accidentally get it in your eyes or on your skin, flush the place with water and get medical help immediately.

⚠ Warning

Fans or other moving engine parts can injure you badly. Keep your hands away from moving parts once the engine is running.

5. Connect one end of the red positive (+) cable to the discharged battery positive (+) terminal.
6. Connect the other end of the red positive (+) cable to the good battery positive (+) terminal.
7. Connect one end of the black negative (–) cable to the good battery negative (–) terminal.
8. Connect the other end of the black negative (–) cable to the discharged battery negative (–) grounding point.
9. Start the engine in the vehicle with the good battery and run the engine at idle speed for at least four minutes.
10. Try to start the vehicle that had the dead battery. If it will not start after a few tries, it probably needs service.

Caution

If the jumper cables are connected or removed in the wrong order, electrical shorting may occur and damage the vehicle. The repairs would not be covered by the vehicle warranty. Always connect and remove the jumper cables in the correct order, making sure that the cables do not touch each other or other metal.

Jumper Cable Removal

Reverse the sequence exactly when removing the jumper cables.

After starting the disabled vehicle and removing the jumper cables, allow it to idle for several minutes.

Service and Maintenance

General Information
General Information 41

Maintenance Schedule
Maintenance Schedule 42

Recommended Fluids, Lubricants, and Parts
Recommended Fluids and Lubricants 46
Maintenance Replacement Parts 47

Maintenance Records
Maintenance Records 48

General Information

This maintenance section applies to vehicles with a diesel engine. For gasoline engine vehicles, see the maintenance schedule section in the owner's manual.

Your vehicle is an important investment. This section describes the required maintenance for the vehicle. Follow this schedule to help protect against major repair expenses resulting from neglect or inadequate maintenance. It may also help to maintain the value of the vehicle if it is sold. It is the responsibility of the owner to have all required maintenance performed.

Your dealer has trained technicians who can perform required maintenance using genuine replacement parts. They have up-to-date tools and equipment for fast and accurate diagnostics. Many dealers have extended evening and Saturday hours, courtesy transportation, and online scheduling to assist with service needs.

Your dealer recognizes the importance of providing competitively priced maintenance and repair services. With trained technicians, your dealer is the place for routine maintenance such as oil changes and tire rotations and additional maintenance items like tires, brakes, batteries, and wiper blades.

Caution

Damage caused by improper maintenance can lead to costly repairs and may not be covered by the vehicle warranty. Maintenance intervals, checks, inspections, recommended fluids, and lubricants are important to keep the vehicle in good working condition.

Do not have chemical flushes that are not approved by GM performed on the vehicle. The use of flushes, solvents, cleaners, or lubricants that are not approved by GM could damage the vehicle, requiring expensive repairs that are not covered by the vehicle warranty.

The Tire Rotation and Required Services are the responsibility of the vehicle owner. It is recommended to have your dealer perform these services every 12 000 km/7,500 mi. Proper vehicle maintenance helps to keep the vehicle in good working condition, improves fuel economy, and reduces vehicle emissions.

Because of the way people use vehicles, maintenance needs vary. There may need to be more frequent checks and services. The Additional Required Services - Normal are for vehicles that:

- Carry passengers and cargo within recommended limits on the Tire and Loading Information label. See "Vehicle Load Limits" in the owner's manual.
- Are driven on reasonable road surfaces within legal driving limits.
- Use the recommended fuel. See *Fuel for Diesel Engines* ⇨ *15*.

Refer to the information in the Maintenance Schedule Additional Required Services - Normal chart.

The Additional Required Services - Severe are for vehicles that are:

- Mainly driven in heavy city traffic in hot weather.
- Mainly driven in hilly or mountainous terrain.
- Frequently towing a trailer.
- Used for high speed or competitive driving.
- Used for taxi, police, or delivery service.

Refer to the information in the Maintenance Schedule Additional Required Services - Severe chart.

⚠ Warning

Performing maintenance work can be dangerous and can cause serious injury. Perform maintenance work only if the required information, proper tools, and equipment are available. If they are not, see your dealer to have a trained technician do the work. See "Doing Your Own Service Work" in the owner's manual.

Maintenance Schedule

See the owner's manual for other services and intervals that may be required.

Owner Checks and Services

Check the engine oil level. See *Engine Oil* ⇨ *27*.

Engine Oil Change

When the CHANGE ENGINE OIL SOON message displays, have the engine oil and filter changed within the next 1 000 km/600 mi. If driven under the best conditions, the engine oil life system may not indicate the need for vehicle service for up to a year. The engine oil and filter must be changed at least once a year and the oil life system must be reset. Your trained dealer technician can perform this work. If the engine oil life system is reset accidentally, service the vehicle within 5 000 km/3,000 mi since the last service. Reset the oil life system when the oil is changed. See *Engine Oil Life System* ⇨ *29*.

Engine Air Filter Change

When the REPLACE AT NEXT OIL CHANGE message displays, the engine air filter should be replaced at the next engine oil change. When the REPLACE ENGINE AIR FILTER SOON message displays, the engine air filter should be replaced at the earliest convenience. Reset the engine air filter life system after the engine air filter is replaced. See *Engine Air Filter Life System* ⇨ *29*.

Extended Idle Use

When the vehicle is used in a way that requires extended idle time, one hour of use shall be deemed the same as 53 km (33 mi). See "Engine Hours (Hourmeter)" if equipped, under "Driver Information Center (DIC)" in the owner's manual.

Required Services Every 12 000 km/7,500 mi

- Check engine oil level and oil life percentage. If needed, change engine oil and filter, and reset oil life system. See *Engine Oil* ⇨ *27* and *Engine Oil Life System* ⇨ *29*.
- If equipped with the engine air filter life system, check the air filter life percentage. If necessary, replace the engine air filter and reset the engine air filter life system. See *Engine Air Filter Life System* ⇨ *29*. If the vehicle is not equipped with the engine air filter life system, inspect the engine air cleaner filter. See *Engine Air Cleaner/Filter* ⇨ *30*.
- Check engine coolant level. See *Cooling System (Charge Air Cooling System)* ⇨ *34* or *Cooling System (Engine)* ⇨ *31*.
- Visually check for fluid leaks.
- Visually inspect the fuel system including the evaporative (EVAP) system for damage or leaks. Visually check all fuel pipes, vapor lines, and hoses for proper attachment, connection, routing, and condition.
- Visually inspect exhaust system and nearby heat shields for loose or damaged parts.

Maintenance Schedule Additional Required Services - Normal	12 000 km/7,500 mi	24 000 km/15,000 mi	36 000 km/22,500 mi	48 000 km/30,000 mi	60 000 km/37,500 mi	72 000 km/45,000 mi	84 000 km/52,500 mi	96 000 km/60,000 mi	108 000 km/67,500 mi	120 000 km/75,000 mi	132 000 km/82,500 mi	144 000 km/90,000 mi	156 000 km/97,500 mi	168 000 km/105,000 mi	180 000 km/112,500 mi	192 000 km/120,000 mi	204 000 km/127,500 mi	216 000 km/135,000 mi	228 000 km/142,500 mi	240 000 km/150,000 mi
Perform Required Services. Check engine oil level and oil life percentage. Change engine oil and filter, if needed. Check engine air filter life percentage and status. Change engine air filter, if needed.	✓	✓	✓	✓	✓	✓	✓	✓	✓	✓	✓	✓	✓	✓	✓	✓	✓	✓	✓	✓
Drain and fill engine cooling system. (1)																				✓
Visually inspect accessory drive belts. (2)																				✓
Replace timing/oil pump belt. (4)																				✓
Replace fuel filter. (4)				✓				✓				✓				✓				✓

Footnotes — Maintenance Schedule Additional Required Services - Normal

(1) Or every five years, whichever comes first. See *Cooling System (Charge Air Cooling System)* ⇨ *34* or *Cooling System (Engine)* ⇨ *31*.

(2) Or every 10 years, whichever comes first. Inspect for fraying, excessive cracking, or damage; replace, if needed.

(3) Or every 15 years, whichever comes first.

(4) Or every two years, or when the CHANGE FUEL FILTER message in the Driver Information Center (DIC) comes on, whichever comes first. The fuel filter may need to be replaced more often based on biodiesel usage, driving in climates with severe dust, off-road driving, or towing a trailer for extended periods.

Maintenance Schedule Additional Required Services - Severe	12 000 km/7,500 mi	24 000 km/15,000 mi	36 000 km/22,500 mi	48 000 km/30,000 mi	60 000 km/37,500 mi	72 000 km/45,000 mi	84 000 km/52,500 mi	96 000 km/60,000 mi	108 000 km/67,500 mi	120 000 km/75,000 mi	132 000 km/82,500 mi	144 000 km/90,000 mi	156 000 km/97,500 mi	168 000 km/105,000 mi	180 000 km/112,500 mi	192 000 km/120,000 mi	204 000 km/127,500 mi	216 000 km/135,000 mi	228 000 km/142,500 mi	240 000 km/150,000 mi
Perform Required Services. Check engine oil level and oil life percentage. Change engine oil and filter, if needed. Check engine air filter life percentage and status. Change engine air filter, if needed.	✓	✓	✓	✓	✓	✓	✓	✓	✓	✓	✓	✓	✓	✓	✓	✓	✓	✓	✓	✓
Change automatic transmission fluid and filter.						✓						✓						✓		
Drain and fill engine cooling system. (1)																				✓
Visually inspect accessory drive belts. (2)																				✓
Replace timing/oil pump belt. (4)																				✓
Replace fuel filter. (4)				✓				✓				✓				✓				✓

Footnotes — Maintenance Schedule Additional Required Services - Severe

(1) Or every five years, whichever comes first. See *Cooling System (Charge Air Cooling System)* ⇨ *34* or *Cooling System (Engine)* ⇨ *31*.

(2) Or every 10 years, whichever comes first. Inspect for fraying, excessive cracking, or damage; replace, if needed.

(3) Or every 15 years, whichever comes first.

(4) Or every two years, or when the CHANGE FUEL FILTER message in the Driver Information Center (DIC) comes on, whichever comes first. The fuel filter may need to be replaced more often based on biodiesel usage, when driving in climates with excessive dust, or when off-road driving or towing a trailer for extended periods.

Recommended Fluids, Lubricants, and Parts

Recommended Fluids and Lubricants

The following fluids apply to vehicles with a Duramax diesel engine. For other fluids not listed here, see “Recommended Fluids and Lubricants” in the owner’s manual.

Fluids and lubricants identified below by name or specification, including fluids or lubricants not listed here, can be obtained from your dealer.

Usage	Fluid/Lubricant
Automatic Transmission	DEXRON ULV Automatic Transmission Fluid.
Diesel Exhaust Aftertreatment System	Diesel Exhaust Fluid that meets ISO 22241 or displays the API Diesel Exhaust Fluid Certification Mark.
Engine Coolant	50/50 mixture of clean, drinkable water and use only DEX-COOL coolant. See *Cooling System (Charge Air Cooling System)* ⇨ *34* or *Cooling System (Engine)* ⇨ *31*.
Engine Oil	Engine oil meeting the dexosD specification of the proper SAE viscosity grade. ACDelco dexosD is recommended. See *Engine Oil* ⇨ *27*.

Maintenance Replacement Parts

Replacement parts identified below by name, part number, or specification can be obtained from your dealer.

Part	GM Part Number	ACDelco Part Number
Engine Air Cleaner/Filter	84121219	A3244C
Fuel Filter	23304096	TP1015
Engine Oil Filter	55495105	PF66
Use only the specified filters.		

Maintenance Records

After the scheduled services are performed, record the date, odometer reading, who performed the service, and the type of services performed in the boxes provided. Retain all maintenance receipts.

Date	Odometer Reading	Serviced By	Services Performed

Technical Data

Vehicle Data

Capacities and Specifications 50
Engine Drive Belt Routing 51

Vehicle Data

Capacities and Specifications

The following approximate capacities are given in metric and English conversions. See *Recommended Fluids and Lubricants* ⇨ *46*.

Application	Capacities	
	Metric	English
Engine Cooling System*	20.7 L	21.9 qt
Diesel Exhaust Fluid (DEF) Tank**	20.5 L	5.4 gal
Engine Oil with Filter	6.6 L	7.0 qt
*Engine cooling system capacity values are based on the entire cooling system and its components.		
**Do not overfill the DEF tank. See *Diesel Exhaust Fluid* ⇨ *12*.		
All quantities are approximate. When adding, be sure to fill to the appropriate level, as recommended in this manual. Recheck fluid level after filling.		

Engine Specifications

Engine	VIN Code	Type
3.0L L6 Turbo Diesel (LM2) Engine	T	Inline 6-Cylinder

Engine Drive Belt Routing

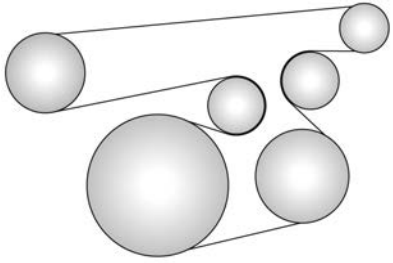

Index

A

Accessories and Modifications 24
Air Cleaner/Filter, Engine 30
Air Filter
  Life System 29
Automatic
  Transmission Fluid 29

B

Battery - North America 37
Biodiesel 17
Brake
  Exhaust 15

C

California Proposition
  65 Warning 37
Canadian Vehicle Owners 1
Capacities and Specifications 50
Check
  Engine Light (Malfunction
    Indicator) 3
Cold Weather Operation 17
Cooling System 31, 34

D

Diesel
  Starting Your Engine 7
Diesel Exhaust Fluid 12
Diesel Exhaust Fluid (DEF)
  Warning Light 5
Diesel Particulate Filter 10
Drive Belt Routing, Engine 51
Driver Information Center (DIC) 5

E

Engine
  Air Cleaner/Filter 30
  Check Light (Malfunction
    Indicator) 3
  Compartment Overview 26
  Cooling System 31, 34
  Drive Belt Routing 51
  Fan 37
  Heater 9
  Oil Life System 29
  Overheating 36
  Starting Your Diesel 7
Engine Air Filter Life System 29
Engines
  Diesel Fuel 15
Exhaust Brake 15

Exhaust Fluid
Diesel 12
Extended Parking 10

F

Fan
Engine 37
Filter 10
Replacement (Fuel) 20
Filter,
Engine Air Cleaner 30
Fluid
Automatic Transmission 29
Fuel
Additives 15
Biodiesel 17
Cold Weather Operation 17
Diesel Engines 15
Filling a Portable Fuel
Container 23
Filling the Tank 21
Filter Replacement 20
Running out of Fuel 20
Top Tier 15
Water in Fuel 18
Fuel for Diesel Engines 15

G

General Information
Service and Maintenance 41

H

Heater
Engine 9

I

Introduction 1

J

Jump Starting - North America 37

L

Lamps
Malfunction Indicator (Check
Engine) 3
Lights
Check Engine (Malfunction
Indicator) 3
Diesel Exhaust Fluid (DEF) 5
Wait to Start 4

M

Maintenance
Records 48
Maintenance Schedule 42
Maintenance Schedule (cont'd)
Recommended Fluids and
Lubricants 46
Malfunction Indicator Lamp 3

O

Oil
Engine 27
Engine Oil Life System 29
Overheating, Engine 36

P

Parking
Extended 10
Proposition 65 Warning,
California 37

R

Recommended Fluids and
Lubricants 46
Records
Maintenance 48
Replacement Parts
Maintenance 47
Routing, Engine Drive Belt 51
Running out of Fuel 20

S

Service
Accessories and Modifications 24

Service (cont'd)
Maintenance Records 48
Maintenance, General
Information 41
Specifications and Capacities 50
Starting the Diesel Engine 7
Supplement
Using 2
System
Engine Air Filter Life 29

T

Top Tier Fuel 15
Towing
Trailer 23
Trailer
Towing 23
Transmission
Fluid, Automatic 29

U

Using This Supplement 2

V

Vehicle
Canadian Owners 1

W

Wait to Start Light 4
Water in Fuel 18

Certified Service

84793866 B