2001 Montana

PONTIAC

DRIVING EXCITEMENT

Downloaded from www.Manualslib.com manuals search engine

24-hour Roadside Assistance

Every 2001 Montana under warranty is backed with the following services:

Courtesy Transportation

1-800-762-3743

(For vehicles purchased in Canada, call 1-800-268-6800)

that provides in an emergency:

- **Free** lockout assistance
- **Free** dead-battery assistance
- **Free** out-of-fuel assistance
- **Free** flat-tire change
- **Emergency** towing

Downloaded from www.Manualslib.com manuals search engine

2001 Pontiac Montana
Owner's Manual

Litho in U.S.A.
Part Number 10423825 A First Edition

© Copyright General Motors Corporation 2000
All Rights Reserved

Downloaded from www.Manualslib.com manuals search engine

Table of Contents

Section 1

Seats and Restraint Systems

- Seats and Seat Controls
- Safety Belts
- Air Bag Systems
- Restraint Systems for Children

Section 2

Features and Controls

- Windows
- Keys and Door Locks
- Remote Keyless Entry System
- Automatic Transaxle
- Parking Brake
- Tilt Wheel
- Turn Signal/Multifunction Lever
- Windshield Wipers
- Cruise Control (Option)
- Exterior and Interior Lamps
- Mirrors
- Storage Compartments
- Convenience Net (Option)
- Accessory Power Outlets
- OnStar® System (If Equipped)
- HomeLink® Transmitter (Option)
- Instrument Panel, Warning Lights and Gages
- Driver Information Center (Option)
- Rear Parking Assist (Option)

Downloaded from www.Manualslib.com manuals search engine

Table of Contents (cont'd)

Section 3

Comfort Controls and Audio Systems

- Heating and Air Conditioning
- Setting the Radio Clock
- Radio/Cassette Player/CD Player
- Radio Theft-Deterrent Feature
- Steering Wheel Controls (If Equipped)

Section 4

Your Driving and the Road

- Defensive Driving
- Drunken Driving
- Control of a Vehicle
- Braking
- Steering
- Driving Tips for Various Road Conditions
- Recreational Vehicle Towing
- Loading Your Vehicle
- Towing a Trailer

Section 5

Problems on the Road

- Hazard Warning Flashers
- Jump Starting
- Towing Your Vehicle
- Engine Overheating
- Changing a Flat Tire
- If You're Stuck

Downloaded from www.Manualslib.com manuals search engine

Table of Contents (cont'd)

Section 6

Service and Appearance Care

- Fuel
- Checking Fluids and Lubricants
- GM Oil Life System™
- Engine Air Cleaner/Filter
- Passenger Compartment Air Filter
- Brakes
- Bulb Replacement
- Windshield Wiper Blade Replacement
- Tires and Wheels
- Appearance Care
- Electrical System/Fuses and Circuit Breakers
- Capacities and Specifications
- Normal Maintenance Replacement Parts

Section 7

Maintenance Schedule

- Scheduled Maintenance
- Owners Checks and Services
- Periodic Maintenance Inspections
- Recommended Fluids and Lubricants
- Maintenance Records

Downloaded from www.Manualslib.com manuals search engine

Table of Contents (cont'd)

Section 8

Customer Assistance Information

- Customer Satisfaction Procedures
- Customer Assistance Offices
- Roadside Assistance and Courtesy Transportation
- Warranty Information
- Reporting Safety Defects on page 8-12
- Service Publications

Please refer to the last page of this manual for your ***Service Station Guide***

Downloaded from www.Manualslib.com manuals search engine

GENERAL MOTORS, GM, the GM Emblem, PONTIAC, the PONTIAC Emblem and the name MONTANA are registered trademarks of General Motors Corporation.

This manual includes the latest information at the time it was printed. We reserve the right to make changes after that time without further notice. For vehicles first sold in Canada, substitute the name “General Motors of Canada Limited” for Pontiac Division whenever it appears in this manual.

Please keep this manual in your vehicle, so it will be there if you ever need it when you’re on the road. If you sell the vehicle, please leave this manual in it so the new owner can use it.

WE SUPPORT VOLUNTARY TECHNICIAN CERTIFICATION THROUGH

National Institute for AUTOMOTIVE SERVICE EXCELLENCE

We support voluntary technician certification.

For Canadian Owners Who Prefer a French Language Manual:

Aux propriétaires canadiens: Vous pouvez vous procurer un exemplaire de ce guide en français chez votre concessionaire ou au:

Helm, Incorporated
P.O. Box 07130
Detroit, MI 48207

Downloaded from www.Manualslib.com manuals search engine

How to Use this Manual

Many people read their owner's manual from beginning to end when they first receive their new vehicle. If you do this, it will help you learn about the features and controls for your vehicle. In this manual, you'll find that pictures and words work together to explain things quickly.

Safety Warnings and Symbols

You will find a number of safety cautions in this book. We use a box and the word CAUTION to tell you about things that could hurt you if you were to ignore the warning.

⚠ CAUTION:

These mean there is something that could hurt you or other people.

In the caution area, we tell you what the hazard is. Then we tell you what to do to help avoid or reduce the hazard. Please read these cautions. If you don't, you or others could be hurt.

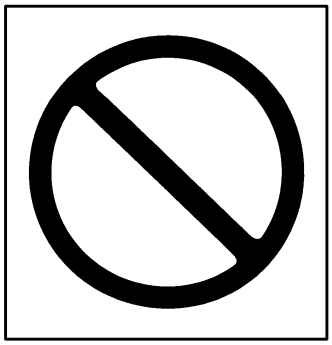

You will also find a circle with a slash through it in this book. This safety symbol means "Don't," "Don't do this" or "Don't let this happen."

Downloaded from www.Manualslib.com manuals search engine

Vehicle Damage Warnings

Also, in this book you will find these notices:

NOTICE:
These mean there is something that could damage your vehicle.

In the notice area, we tell you about something that can damage your vehicle. Many times, this damage would not be covered by your warranty, and it could be costly. But the notice will tell you what to do to help avoid the damage.

When you read other manuals, you might see CAUTION and NOTICE warnings in different colors or in different words.

You'll also see warning labels on your vehicle. They use the same words, CAUTION or NOTICE.

Downloaded from www.Manualslib.com manuals search engine

Vehicle Symbols

These are some of the symbols you may find on your vehicle. Also see “Warning Lights and Gages” in the Index.

For example, these symbols are used on an original battery:

CAUTION POSSIBLE INJURY

PROTECT EYES BY SHIELDING

CAUSTIC BATTERY ACID COULD CAUSE BURNS

AVOID SPARKS OR FLAMES

SPARK OR FLAME COULD EXPLODE BATTERY

These symbols are important for you and your passengers whenever your vehicle is driven:

CHILD RESTRAINT TOP STRAP ANCHOR

DOOR LOCK UNLOCK

FASTEN SEAT BELTS

POWER WINDOW

AIR BAG

These symbols have to do with your lamps:

MASTER LIGHTING SWITCH

TURN SIGNALS

PARKING LAMPS

HAZARD WARNING FLASHER

DAYTIME RUNNING LAMPS

FOG LAMPS

These symbols are on some of your controls:

WINDSHIELD WIPER

WINDSHIELD WASHER

WINDSHIELD DEFROSTER

REAR WINDOW DEFOGGER

VENTILATING FAN

These symbols are used on warning and indicator lights:

ENGINE COOLANT TEMP

BATTERY CHARGING SYSTEM

BRAKE

COOLANT

ENGINE OIL PRESSURE

ANTI-LOCK BRAKES

Here are some other symbols you may see:

FUSE

LIGHTER

HORN

FUEL

OWNER'S MANUAL

SERVICE MANUAL

Downloaded from www.Manualslib.com manuals search engine

Service Station Guide

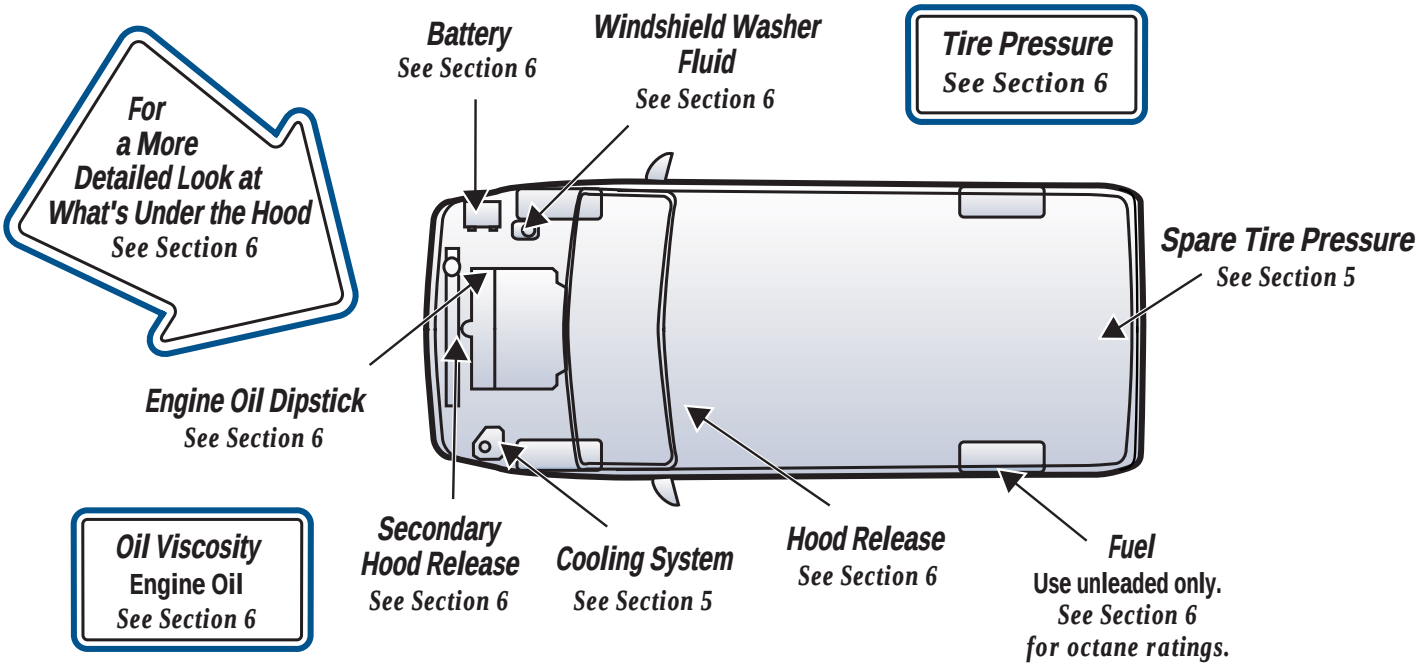

Downloaded from www.Manualslib.com manuals search engine

Section 1 Seats and Restraint Systems

Here you'll find information about the seats in your vehicle and how to use your safety belts properly. You can also learn about some things you should *not* do with air bags and safety belts.

1-2 Seats and Seat Controls
1-6 Rear Seats
1-27 Safety Belts: They're for Everyone
1-31 Here Are Questions Many People Ask About Safety Belts -- and the Answers
1-32 How to Wear Safety Belts Properly
1-32 Driver Position
1-41 Safety Belt Use During Pregnancy
1-42 Right Front Passenger Position
1-43 Supplemental Restraint Systems (SRS)
1-50 Safety Belt Pretensioners
1-50 Rear Seat Passengers
1-55 Rear Safety Belt Comfort Guides for Children and Small Adults
1-57 Center Passenger Position (Bench Seat)
1-59 Center Passenger Position (Bucket Seat)
1-60 Children
1-64 Built-in Child Restraint (Option)
1-75 Restraint Systems for Children
1-96 Older Children
1-99 Safety Belt Extender
1-100 Checking Your Restraint Systems
1-100 Replacing Restraint System Parts After a Crash

Downloaded from www.Manualslib.com manuals search engine

Seats and Seat Controls

This section tells you about the seats -- how to adjust them, take them out, put them back in, fold and unfold them.

Driver's 4-Way Manual Seat

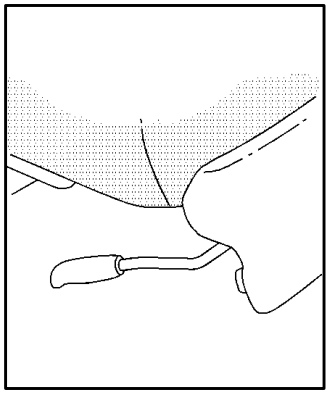

Use the lever located on the front left side of the seat to adjust the seat forward or rearward. Pull up the lever to unlock the seat. Slide the seat to where you want it and release the lever.

To make sure the seat is locked into place, try to move the seat back and forth with your body.

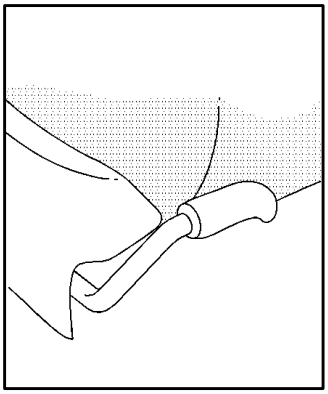

To raise the seat, pull up on the lever located on the front right side of the seat. To lower the seat, push the lever down. Adjust the seat and release the lever.

⚠ CAUTION:

You can lose control of the vehicle if you try to adjust a manual driver's seat while the vehicle is moving. The sudden movement could startle and confuse you, or make you push a pedal when you don't want to. Adjust the driver's seat only when the vehicle is not moving.

Downloaded from www.Manualslib.com manuals search engine

Manual Front Passenger Seats

To move the seat, pull up the lever located on the front of the seat to unlock it.

Slide the seat to where you want it and release the lever. To make sure the seat is locked into place, try to move the seat back and forth with your body.

6-Way Power Seat (Option)

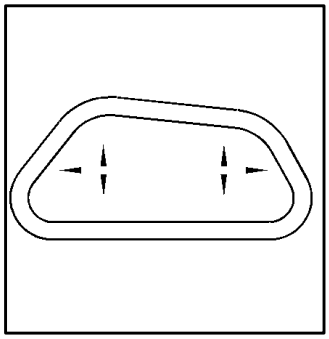

The six-way power seat controls are located on the outboard sides of both the driver's and the front passenger's seats.

- Move the front of the control in the direction of the arrows to adjust the front portion of the cushion up or down.
- Move the rear of the control in the direction of the arrows to adjust the rear portion of the cushion up or down.
- Lift up or push down on both outer arrows at the same time to move the entire seat up or down.
- To move the whole seat forward or rearward, slide the control in the direction of the center arrows.

Downloaded from www.Manualslib.com manuals search engine

Heated Front Seats (Option)

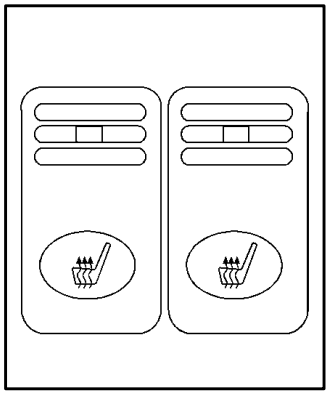

The heated seat switch is located in the instrument panel switchbank. This feature will quickly heat the lower cushions and lower back of the driver's and front passenger's seats for added comfort.

The left switch is for the driver's seat and the right switch is for the front passenger's seat. Press the bottom of the switch to turn the heater on. The indicator light on the switch will glow. Press the top of the switch to turn the heater off. The heated seat switch will turn off when the ignition is turned to OFF and will resume operation when the ignition is turned to RUN, unless the switch is manually turned off.

Reclining Front Seatbacks

All front seats recline.

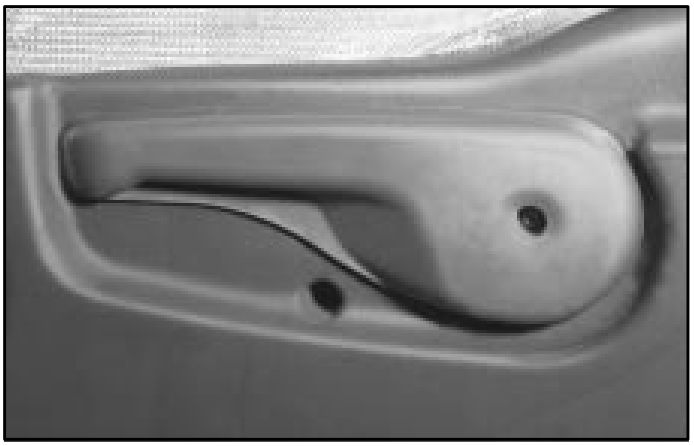

To adjust the seatback, pull up on the lever located on the outboard sides of both the driver's and the front passenger's seats. It is easier to recline the seat if you lean forward, taking your weight off the seatback.

Downloaded from www.Manualslib.com manuals search engine

But don’t have a seatback reclined if your vehicle is moving.

⚠ CAUTION:

Sitting in a reclined position when your vehicle is in motion can be dangerous. Even if you buckle up, your safety belts can’t do their job when you’re reclined like this.

The shoulder belt can’t do its job because it won’t be against your body. Instead, it will be in front of you. In a crash you could go into it, receiving neck or other injuries.

The lap belt can’t do its job either. In a crash the belt could go up over your abdomen. The belt forces would be there, not at your pelvic bones. This could cause serious internal injuries.

For proper protection when the vehicle is in motion, have the seatback upright. Then sit well back in the seat and wear your safety belt properly.

Downloaded from www.Manualslib.com manuals search engine

Head Restraints

Slide the head restraint up or down so that the top of the restraint is closest to the top of your ears. This position reduces the chance of a neck injury in a crash.

Rear Seats

Seat Controls

The rear seats in your vehicle have levers and straps used to adjust, remove and reinstall the seats. By using the levers and straps, in the correct order, you can easily remove the seats from your vehicle.

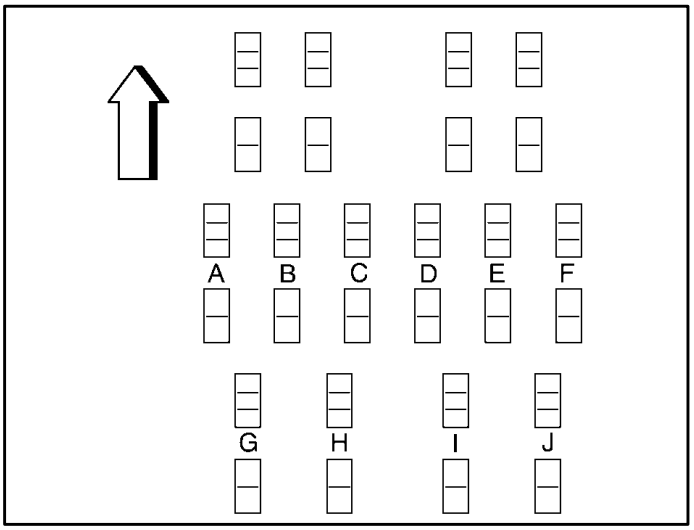

Floor Seat Pin Diagram

Downloaded from www.Manualslib.com manuals search engine

When you put the seats back in the vehicle, be sure to follow the label on the back of the seat for proper location. Follow the previous diagram when the text in this manual tells you what sets of floor cups to use for each seat.

Second Row Safety Belt Stowage

If your vehicle has a split bench seat in the second row, use the clip on the safety belt to secure the belt after it is disconnected from the mini-buckle. When removing the second row split bench seat, secure the loose end of the safety belt in this clip. This will keep the safety belt from dangling and possibly striking something.

Do not have the second row outside safety belt stored if someone is sitting in the second row outside position.

Flip and Fold Feature

The rear seats in your vehicle, except the captain's chairs, can be folded forward. Use this feature for exiting and entering third row seats.

1. If the seats have the adjustable head restraints, push them fully down.
2. Fold the seatback flat on the seat, by either pulling on the nylon strap on the rear of the seat or lifting up on the lever located on the front of the seatback. If the seat adjusts forward, slide it all the way back.

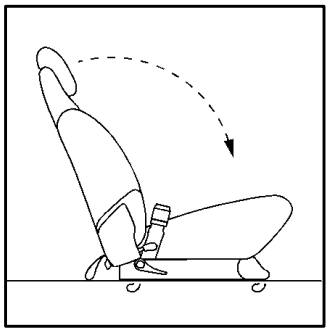

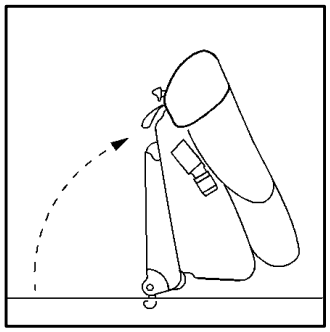

3. Release the rear set of hooks from the floor pins by pulling the nylon strap located at the base of the seat; hang on to the strap as the seat folds forward.

To return the seat(s) to the normal position, do the following:

1. Push the seat back and firmly push the rear hooks onto the rear floor pins by pushing down on the rear of the seat.
2. Try to raise the seat to check that it is locked down.
3. Lift the seatback recliner lever or pull the nylon strap on the back of the seat and raise the seatback until it locks upright.
4. Push and pull on the seatback to check that it is locked.

Downloaded from www.Manualslib.com manuals search engine

Split Bench Seats

If you have the split bench seat (50/50 or 40/60), the seatbacks can be folded down individually and the sections can be removed individually. The second row (40/60) sections can also be adjusted forward or rearward individually.

The second row (40/60) split bench may be equipped with a built-in child restraint. See “Built-In Child Restraint” in the Index.

Folding or Reclining the Seatbacks

The seatbacks on each section of the split bench seat can be either folded down or reclined. The following explains how to use either the nylon strap or the lever to fold or recline the seatbacks.

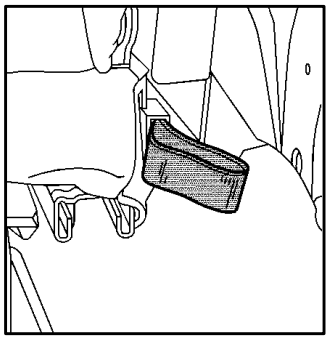

To fold down the seatback, pull this nylon strap on the rear of the seat, while pulling the seatback down until it locks into place.

To raise a seatback, pull the nylon strap while raising the seatback until it locks upright.

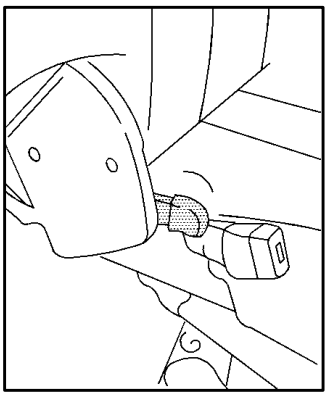

To fold down the seatback, lift up on this lever located on the front of the seatback.

Use the lever to raise or lower the seatback to the desired position.

When raising a seatback to an upright position, push and pull on the seatback to check that it is locked upright.

Downloaded from www.Manualslib.com manuals search engine

Adjusting the Split Bench Seats

There are two adjustment levers on each section of the split bench seats to adjust the seat forward or rearward.

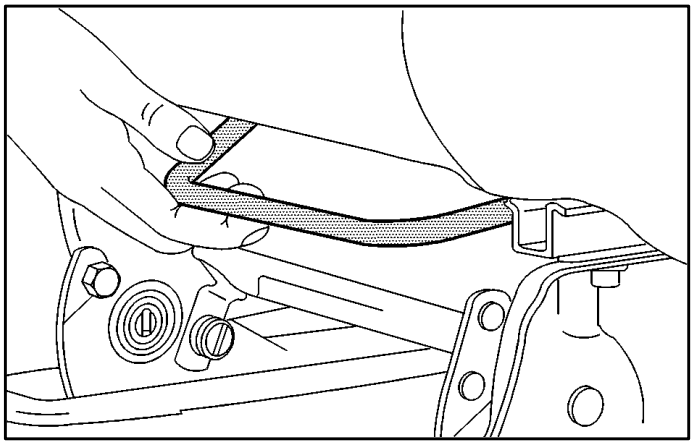

One is located below the center, in the front of each section of the split bench.

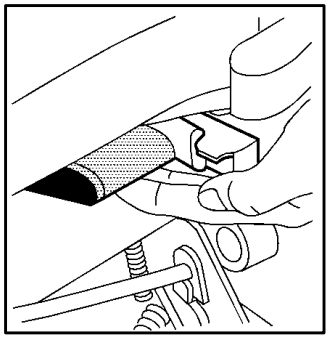

The other lever is located on the rear of the seat.

Lift up either lever and slide the seat forward or rearward. Release the lever. Push and pull on the seat to make sure it is locked into place.

Removing the Split Bench Seat

Make sure the seatback is in the upright position.

1. For the second row split bench, with the seatback in the upright position, unhook the side attachment for the safety belt. This mini-buckle is located on the right side of the seat.

Downloaded from www.Manualslib.com manuals search engine

2. Push the red center of the buckle up with a small pointed object -- like a key or a pen -- to remove the seat belt, if needed.

3. Lift the seatback recliner lever or pull the nylon strap on the back of the seat to fold the seatback forward.
4. Slide the seat all the way back by lifting one of the adjustment levers and sliding the seat fully rearward.

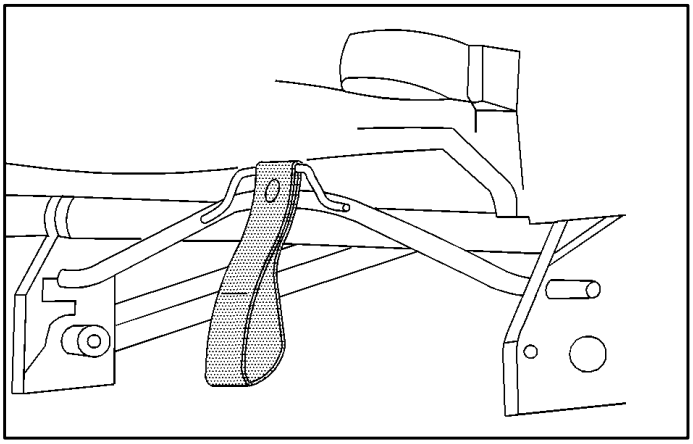

5. From behind the bench seat, pull the nylon strap at the center of the base of the seat to release the rear latches from the floor pins.

   Do not let go of the strap until the seat is folded all the way forward.

Downloaded from www.Manualslib.com manuals search engine

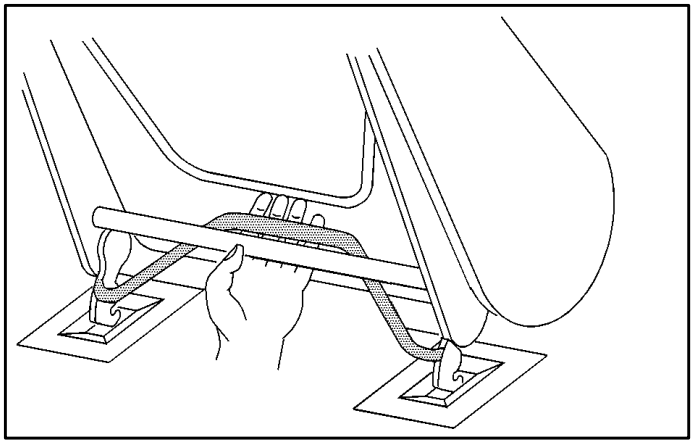

6. To unlatch the front latches, squeeze the angled bar toward the straight crossbar.
7. Remove the seat by rocking it slightly forward, then toward the rear of the vehicle and then pulling it out.

Repeat these steps for the other section of the split bench seat.

Replacing the Split Bench Sections

Make sure the seatback is in the upright position and the safety belts are on the correct section of the seat.

Don't put the sections of the bench seat in so they face rearward because they won't latch that way. If you want more storage room behind the seat, adjust each section by sliding it forward.

The split benches have seat position labels, located on the back of each seat, showing where the seat must go. Follow that diagram.

- The **left (40)** section of the **40/60** split bench uses the **A** and **B** sets of floor cups.
- The **right (60)** section of the **40/60** split bench uses the **C** and **D** sets of floor cups.
- The **left** section of the **50/50** split bench uses the **G** and **H** sets of floor cups.
- The **right** section of the **50/50** split bench uses the **I** and **J** sets of floor cups.

See "Rear Seats" in the beginning of this section for more details. The seat must be placed in the proper location for the legs to attach correctly.

Make sure the seat is in the full rear position before beginning this procedure.

Downloaded from www.Manualslib.com manuals search engine

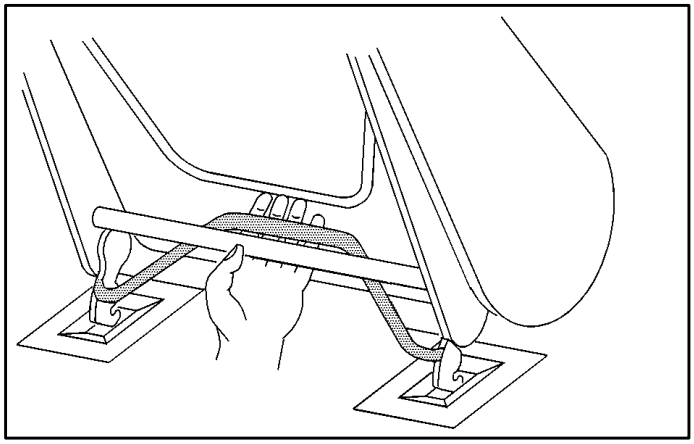

1. Squeeze the angled bar toward the solid crossbar while placing the front hooks of the bench seat onto the front two floor pins.

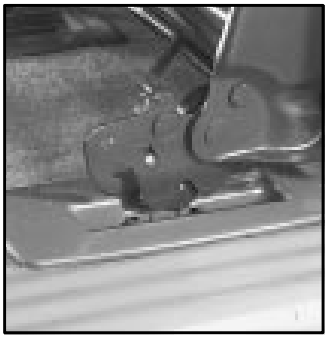

2. Make sure the bench seat is angled so that the front hooks clear the floor pins.

If the front legs are not attached correctly, the rear legs will not attach to the rear set of floor pins.

Downloaded from www.Manualslib.com manuals search engine

If the front latches are not attaching correctly, check that the seat is in the full rear position.

3. Firmly push the rear hooks onto the rear floor pins by pushing down on the rear of the seat.
4. Try to raise the seat to check that it is locked down.

⚠ CAUTION:

A seat that isn't locked into place properly can move around in a collision or sudden stop. People in the vehicle could be injured. Be sure to lock the seat into place properly when installing it.

5. Lift the seatback recliner lever or pull the nylon strap on the back of the seat and raise the seatback until it locks upright.
6. Push and pull on the seatback to check that it is locked.

⚠ CAUTION:

If the seatback isn't locked, it could move forward in a sudden stop or crash. That could cause injury to the person sitting there. Always press rearward on the seatback to be sure it is locked.

Downloaded from www.Manualslib.com manuals search engine

7. If you have the 40/60 seat, attach the mini-buckle so that the safety belt is ready for use when a passenger uses the seat.

   The buckle reattaches by pushing the latch into the buckle until the red center pops out again.

   Repeat these steps for the other section of the split bench seat.

⚠ CAUTION:

A safety belt that is improperly routed, not properly attached, or twisted won't provide the protection needed in a crash. The person wearing the belt could be seriously injured. After installing the seat, always check to be sure that the safety belts are properly routed and attached, and are not twisted.

Bucket Seats

If you have the rear bucket seats, the seatbacks can be folded down or reclined. The seats can also be adjusted forward or rearward and removed.

Folding or Reclining the Seatbacks

The seatback on a bucket seat can be either folded down or reclined. The following explains how to use either the nylon strap or the lever to fold or recline the seatback.

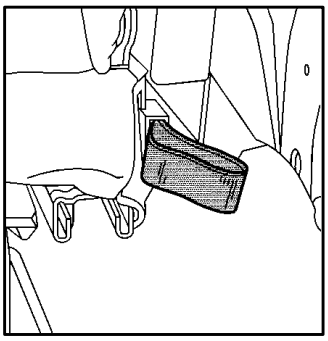

To fold down the seatback, pull this nylon strap on the rear of the seat.

To raise a seatback, pull the nylon strap while raising the seatback until it locks upright.

Downloaded from www.Manualslib.com manuals search engine

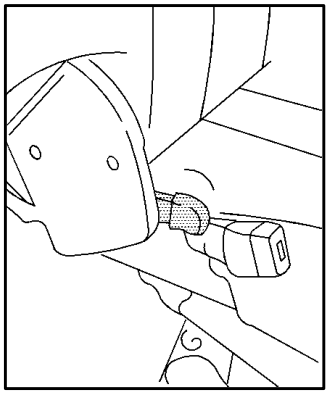

To fold down the seatback, lift up on this lever located on the front of the seatback.

Use the lever to raise or lower the seatback to the desired position.

When raising a seatback to an upright position, push and pull on the seatback to make sure that it is locked upright.

Adjusting the Bucket Seats

There are two adjustment levers on each seat to adjust the seat forward or rearward.

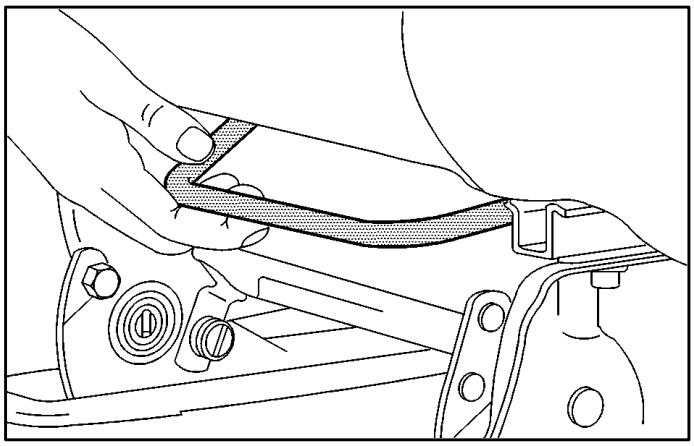

One is located below the center, in front of the bucket seats.

Downloaded from www.Manualslib.com manuals search engine

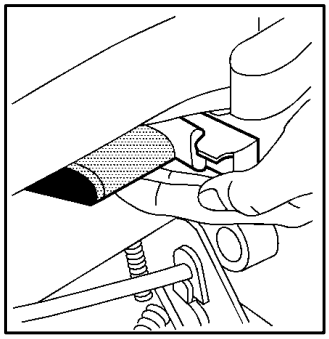

The other lever is located on the rear of the bucket seat.

Lift up either lever and slide the seat forward or rearward.

Release the lever. Push and pull on the seat to make sure that it is locked into place.

Removing the Bucket Seats

Make sure the seatback is in the upright position. The head restraints should be fully down.

1. Lift the seatback recliner lever or pull the nylon strap on the back of the seat to fold the seatback forward.
2. Slide the seat all the way back by lifting either one of the adjuster levers and sliding the seat fully rearward.

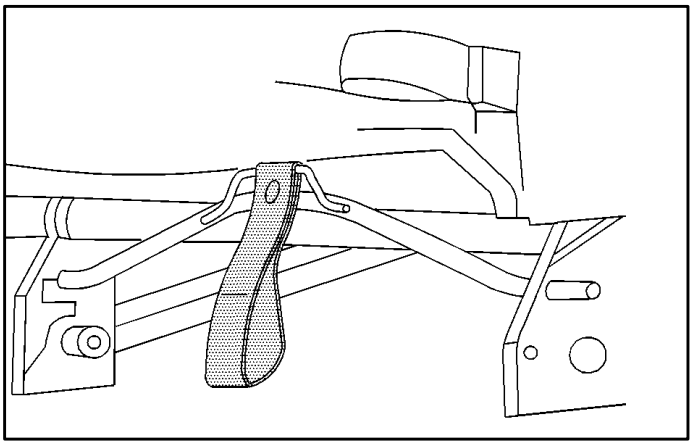

3. From behind the seat, pull the nylon strap, located at the base of the seat, to release the rear latches from the floor pins.

Downloaded from www.Manualslib.com manuals search engine

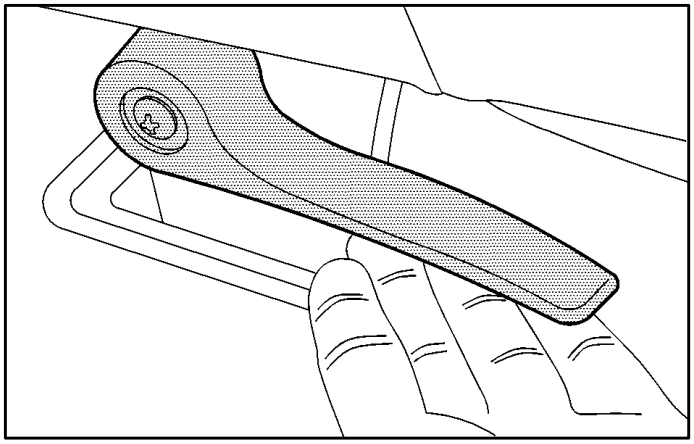

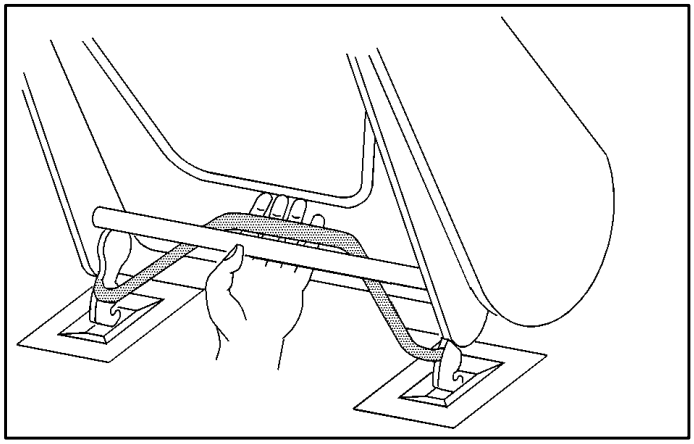

You can also lift the lever on the side of the seat to release the rear latches from the floor pins.

Do not let go of the strap or the lever until the seat is folded all the way forward.

4. To unlatch the front latches, with the seat folded forward, squeeze the angled bar toward the straight crossbar.
5. Remove the seat by rocking it slightly forward, then toward the rear of the vehicle and then pulling it out. This should be done in one motion.

Downloaded from www.Manualslib.com manuals search engine

Replacing the Bucket Seats

Don't put the seats in so they face rearward because they won't latch that way. If you want more storage room behind the seat, adjust the seat by sliding it forward.

The bucket seats have seat position labels, located on the back of the seat, showing where the seat must go. Follow that diagram. The seat must be placed in the proper location for the legs to attach correctly. See "Rear Seats" in the beginning of this section for more details.

The left bucket seat goes in the **A and B** sets of floor pins.

The center bucket seat goes in the **C and D** sets of floor pins.

The right bucket seat goes in the **E and F** sets of floor pins.

Make sure the seat is in the full rear position before beginning this procedure.

1. With the seat folded, squeeze the angled bar toward the solid crossbar while placing the front hooks of the bucket seat onto the front two floor pins.

2. Make sure the bucket seat is angled so that the front hooks clear the floor pins.

If the front legs are not attached correctly, the rear legs will not attach to the rear set of floor pins.

Downloaded from www.Manualslib.com manuals search engine

If the front latches are not attaching correctly, check that the seat is in the full rear position.

3. Firmly push the rear hooks onto the rear floor pins by pushing down the rear of the seat.

⚠ CAUTION:

A seat that isn't locked into place properly can move around in a collision or sudden stop. People in the vehicle could be injured. Be sure to lock the seat into place properly when installing it.

4. Try to raise the seat to check that it is locked down.
5. Lift the seatback recliner lever or pull the nylon strap on the back of the seat and raise the seatback until it locks upright.
6. Push and pull on the seatback to make sure that it is locked in place.

⚠ CAUTION:

If the seatback isn't locked, it could move forward in a sudden stop or crash. That could cause injury to the person sitting there. Always press rearward on the seatback to be sure it is locked.

Downloaded from www.Manualslib.com manuals search engine

Captain's Chairs

If your vehicle has the captain's chairs, the seatbacks can be folded forward or reclined and the seats can be removed.

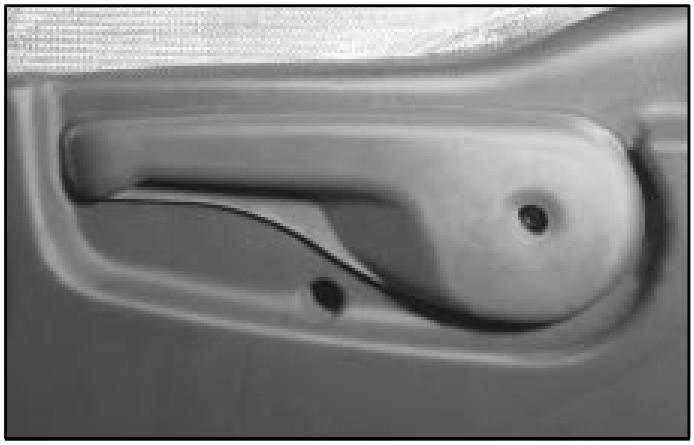

To recline the seatback, lift up on the recliner lever, located on the outboard side of the seat. Use the recliner lever to move the seatback to the desired position.

It is easier to raise or lower the seatback if you lean forward, taking the weight off the seatback.

The armrests can be lowered or raised for entering or exiting the vehicle.

The seatbacks on the second row captain's chairs also fold forward to put items behind the left and right seats.

Lift up on the recliner lever and fold the seatback forward. The seatback will lock into place when you push it back to the upright position.

⚠ CAUTION:

If the seatback isn't locked, it could move forward in a sudden stop or crash. That could cause injury to the person sitting there. Always press rearward on the seatback to be sure it is locked.

Downloaded from www.Manualslib.com manuals search engine

Adjusting the Captain's Chairs (Second Row)

The second row captain's chairs can be adjusted forward or rearward.

There are two adjustment levers on each seat. One is located below the center, in front of the seat. The other is located across the rear of the seat.

Lift up either lever to slide the seat forward or rearward.

Release the lever. Push and pull on the seat to make sure it is locked into place.

Removing the Captain's Chairs

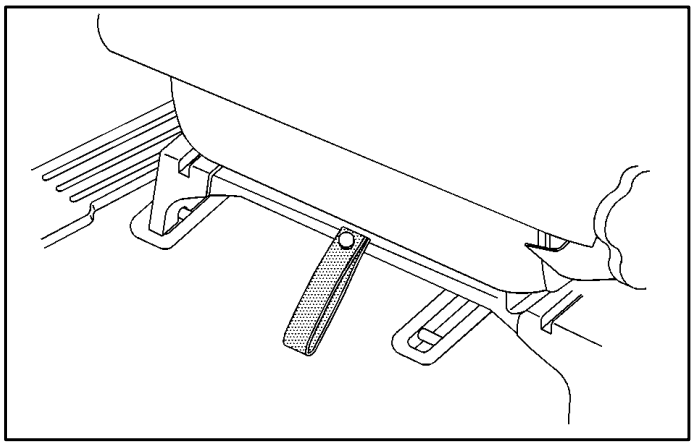

1. Pull the nylon strap behind the chair to release the rear hooks from the floor pins.

Downloaded from www.Manualslib.com manuals search engine

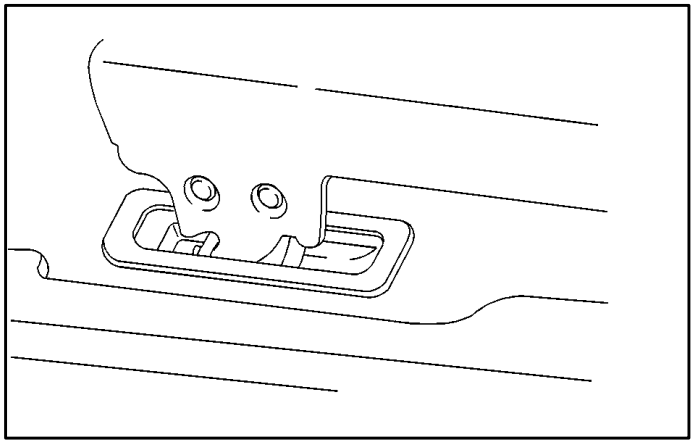

2. The seat can then be lifted off the front floor pins and removed from the vehicle.

Replacing the Captain's Chairs

The captain's chairs have seat position labels, located on the back of the seat, showing where the seat must go. Follow that diagram. The seat must be placed in the proper location for the legs to attach correctly. See "Rear Seats" in the beginning of this section for more details.

The left chair goes in the **A and C** sets of floor pins.

The right chair goes in the **D and F** sets of floor pins.

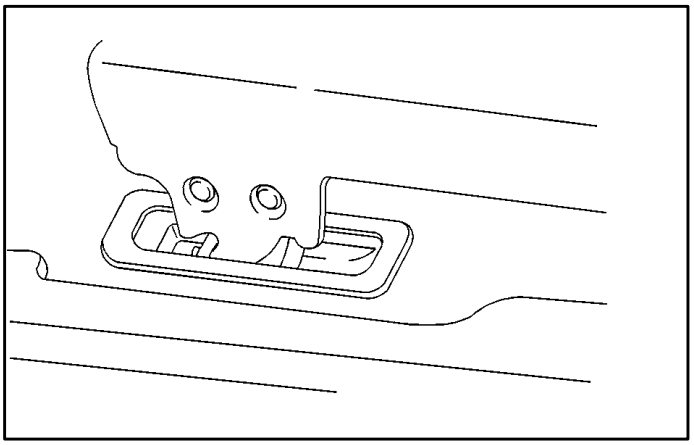

1. Hook the front latches over the front floor pins.

Downloaded from www.Manualslib.com manuals search engine

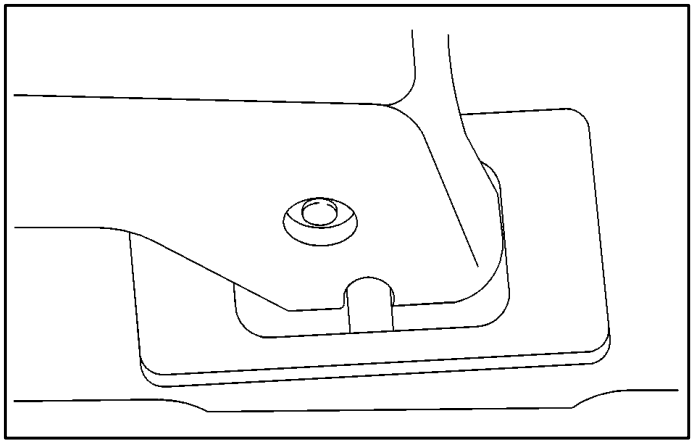

2. Push the rear of the seat down to lock the rear latches onto the rear set of floor pins.
3. Push and pull on the seat to be sure it is properly attached.

⚠ CAUTION:

A seat that isn't locked into place properly can move around in a collision or sudden stop. People in the vehicle could be injured. Be sure to lock the seat into place properly when installing it.

⚠ CAUTION:

If the seatback isn't locked, it could move forward in a sudden stop or crash. That could cause injury to the person sitting there. Always press rearward on the seatback to be sure it is locked.

Downloaded from www.Manualslib.com manuals search engine

Stowable Seat

The optional stowable seat is a full bench seat and comes with the convenience center. See “Convenience Center” in the Index for more information. The stowable seat can be removed and replaced, or with the seatback folded, it can lie flush with the convenience center.

Folding the Seatback

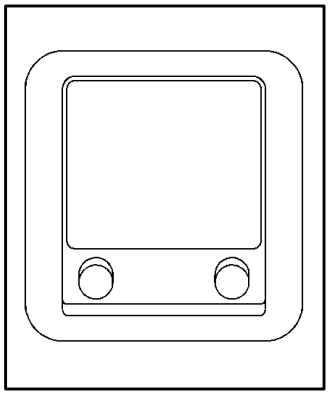

To fold down the seatback, pull up on the lever located on the back of the seat and push the seatback down until it is locked into place.

Push and pull on the seatback to make sure that it is locked into place.

To raise the seatback, do one of the following:

- From the rear of the vehicle, pull up on the lever to release the seatback, then pull the strap, located on the right side of the seat, to pull the seatback up. The seatback has a velcro patch to stow the strap on the rear of the seat when not in use, or
- from the passenger’s side sliding door, pull up on the lever to release the seatback, then push up on the seatback to raise the seat.

Push and pull on the seatback to make sure that it is locked into the upright position.

⚠ CAUTION:

If the seatback isn’t locked, it could move forward in a sudden stop or crash. That could cause injury to the person sitting there. Always press rearward on the seatback to be sure it is locked.

Downloaded from www.Manualslib.com manuals search engine

Removing the Stowable Seat

1. Remove the convenience center, if it is in the vehicle. See “Convenience Center” in the Index for more information.
2. Make sure all items are off of the stowable seat.
3. If the seatback is down, put the seatback in its upright position before removing the seat. See “Folding the Seatback” previously.

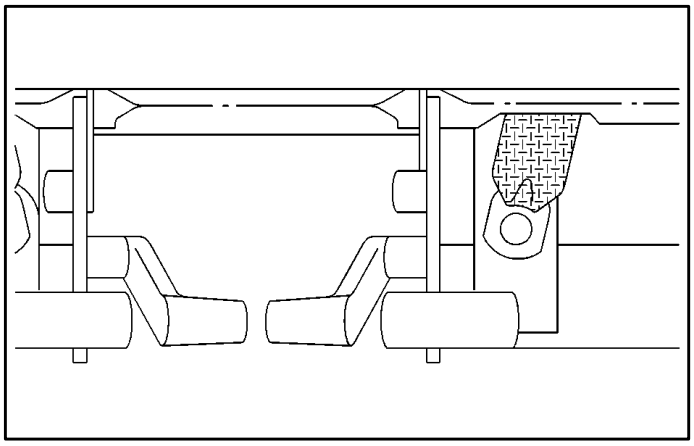

4. From behind the bench seat, push up the release handles at the base of the seat to release the latches from the floor pins.
5. While holding onto the crossbar at the bottom of the seat, remove the seat by rocking it slightly toward the rear of the vehicle and then pulling it out. This should be done in one motion.

NOTICE:

Do not use the release handles to pull the seat out. The handles could break during removal. This will not be covered by your warranty. Use the crossbar at the bottom of the seat when pulling the seat out.

Downloaded from www.Manualslib.com manuals search engine

Replacing the Stowable Seat

Do not put the stowable seat in so it faces rearward because it will not latch that way. The stowable seat has to go in before the convenience center. See “Convenience Center” in the Index for more information.

The stowable seat has seat position labels, located on the back of the seat, showing where the seat must go. Follow the floor pin diagram. Use the front floor pins of the floor cups and the rear floor cups in the third row.

Use the **G, H, I, and J** sets of floor cups.

See “Rear Seats” in the beginning of this section for more information. The seat must be placed in the proper location for the legs to attach correctly.

Make sure the seat is in its upright position before beginning this procedure.

1. Place the front hooks of the seat onto the front floor pins in the third row. To do this, the seat will need to be angled so the front hooks clear the floor pins.

   If the front legs are not attached correctly, the rear legs will not attach to the rear set of floor pins.

2. Firmly push the rear hooks into the rear floor pins by pushing down on the rear of the seat.
3. Try to raise the seat to make sure that it is locked down.
4. Push and pull on the seatback to make sure that it is locked into place.

⚠ CAUTION:

A seat that isn’t locked into place properly can move around in a collision or sudden stop. People in the vehicle could be injured. Be sure to lock the seat into place properly when installing it.

⚠ CAUTION:

If the seatback isn’t locked, it could move forward in a sudden stop or crash. That could cause injury to the person sitting there. Always press rearward on the seatback to be sure it is locked.

Downloaded from www.Manualslib.com manuals search engine

Safety Belts: They're for Everyone

This part of the manual tells you how to use safety belts properly. It also tells you some things you should not do with safety belts.

And it explains the Supplemental Restraint System (SRS), or air bag system.

⚠ CAUTION:

Don't let anyone ride where he or she can't wear a safety belt properly. If you are in a crash and you're not wearing a safety belt, your injuries can be much worse. You can hit things inside the vehicle or be ejected from it. You can be seriously injured or killed. In the same crash, you might not be if you are buckled up. Always fasten your safety belt, and check that your passengers' belts are fastened properly too.

⚠ CAUTION:

It is extremely dangerous to ride in a cargo area, inside or outside of a vehicle. In a collision, people riding in these areas are more likely to be seriously injured or killed. Do not allow people to ride in any area of your vehicle that is not equipped with seats and safety belts. Be sure everyone in your vehicle is in a seat and using a safety belt properly.

Your vehicle has a light that comes on as a reminder to buckle up. See "Safety Belt Reminder Light" in the Index.

In most states and Canadian provinces, the law says to wear safety belts. Here's why: *They work.*

Downloaded from www.Manualslib.com manuals search engine

You never know if you'll be in a crash. If you do have a crash, you don't know if it will be a bad one.

A few crashes are mild, and some crashes can be so serious that even buckled up a person wouldn't survive. But most crashes are in between. In many of them, people who buckle up can survive and sometimes walk away. Without belts they could have been badly hurt or killed.

After more than 30 years of safety belts in vehicles, the facts are clear. In most crashes buckling up does matter ... a lot!

Why Safety Belts Work

When you ride in or on anything, you go as fast as it goes.

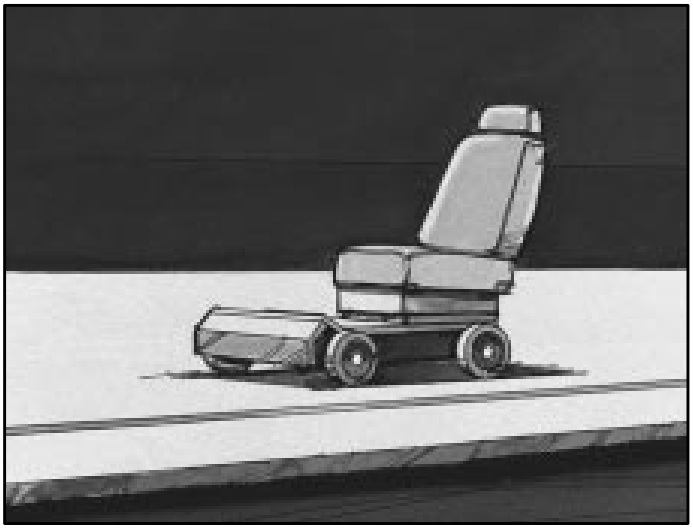

Take the simplest vehicle. Suppose it's just a seat on wheels.

Downloaded from www.Manualslib.com manuals search engine

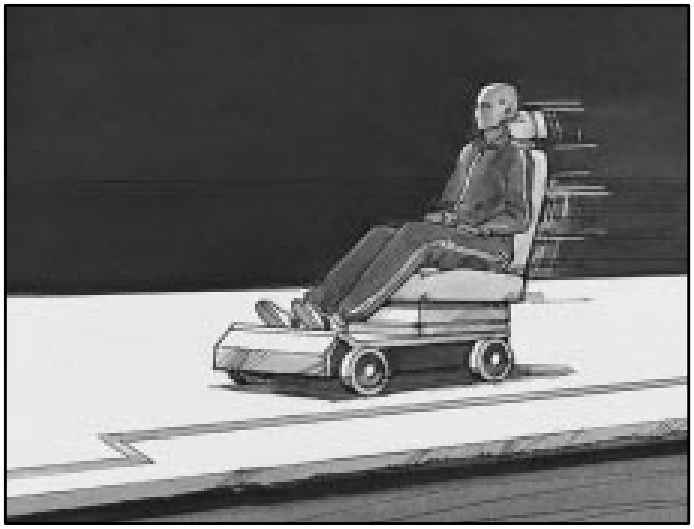

Put someone on it.

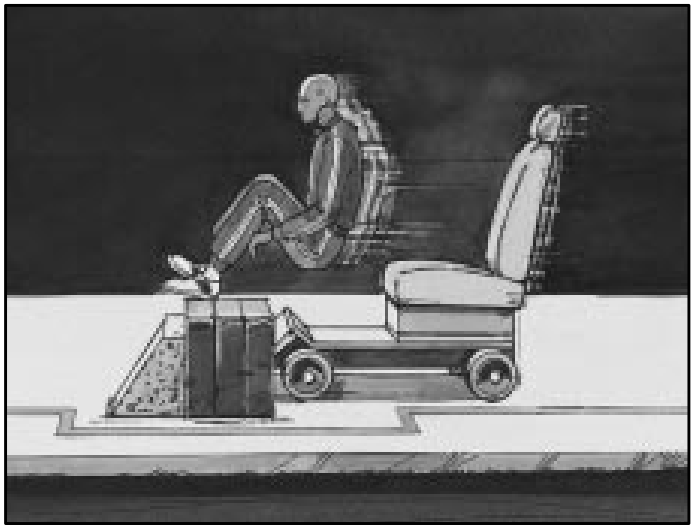

Get it up to speed. Then stop the vehicle. The rider doesn't stop.

Downloaded from www.Manualslib.com manuals search engine

The person keeps going until stopped by something.
In a real vehicle, it could be the windshield ...

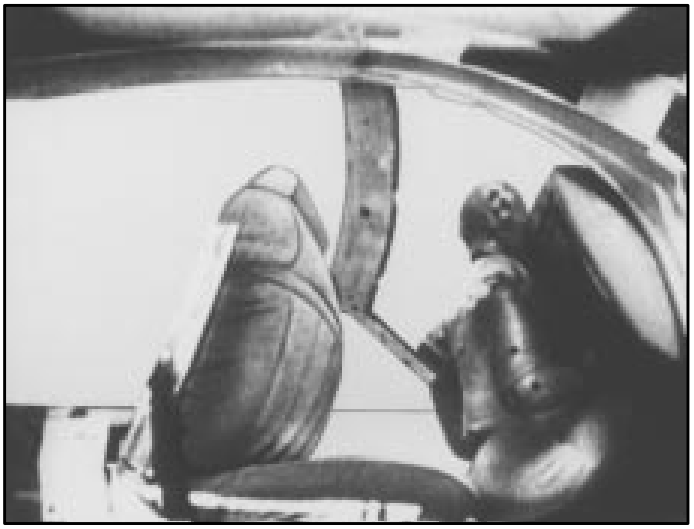

or the instrument panel ...

Downloaded from www.Manualslib.com manuals search engine

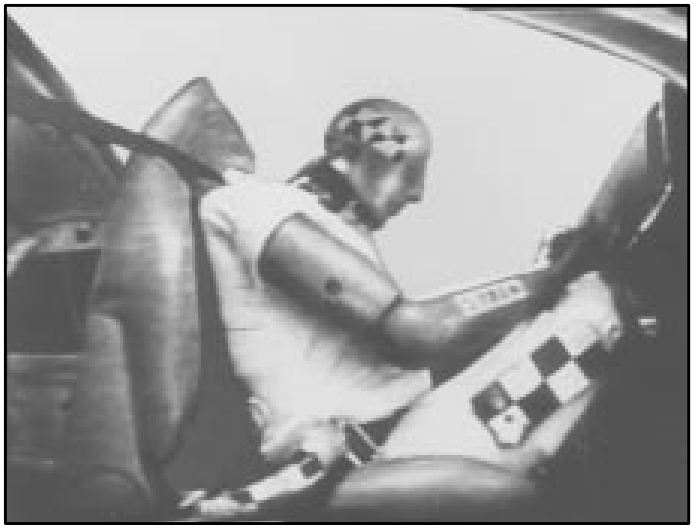

or the safety belts!

With safety belts, you slow down as the vehicle does. You get more time to stop. You stop over more distance, and your strongest bones take the forces. That's why safety belts make such good sense.

Here Are Questions Many People Ask About Safety Belts -- and the Answers

Q: **Won't I be trapped in the vehicle after an accident if I'm wearing a safety belt?**

A: You *could* be -- whether you're wearing a safety belt or not. But you can unbuckle a safety belt, even if you're upside down. And your chance of being conscious during and after an accident, so you *can* unbuckle and get out, is *much* greater if you are belted.

Q: **If my vehicle has air bags, why should I have to wear safety belts?**

A: Air bags are in many vehicles today and will be in most of them in the future. But they are supplemental systems only; so they work *with* safety belts -- not instead of them. Every air bag system ever offered for sale has required the use of safety belts. Even if you're in a vehicle that has air bags, you still have to buckle up to get the most protection. That's true not only in frontal collisions, but especially in side and other collisions.

Downloaded from www.Manualslib.com manuals search engine

Q: If I'm a good driver, and I never drive far from home, why should I wear safety belts?

A: You may be an excellent driver, but if you're in an accident -- even one that isn't your fault -- you and your passengers can be hurt. Being a good driver doesn't protect you from things beyond your control, such as bad drivers.

Most accidents occur within 25 miles (40 km) of home. And the greatest number of serious injuries and deaths occur at speeds of less than 40 mph (65 km/h).

Safety belts are for everyone.

How to Wear Safety Belts Properly

Adults

This part is only for people of adult size.

Be aware that there are special things to know about safety belts and children. And there are different rules for smaller children and babies. If a child will be riding in your vehicle, see the part of this manual called "Children." Follow those rules for everyone's protection.

First, you'll want to know which restraint systems your vehicle has.

We'll start with the driver position.

Driver Position

This part describes the driver's restraint system.

Lap-Shoulder Belt

The driver has a lap-shoulder belt. Here's how to wear it properly.

1. Close and lock the door.
2. Adjust the seat so you can sit up straight. To see how, see "Seats" in the Index.

Downloaded from www.Manualslib.com manuals search engine

3. Pick up the latch plate and pull the belt across you. Don't let it get twisted.

   The shoulder belt may lock if you pull the belt across you very quickly. If this happens, let the belt go back slightly to unlock it. Then pull the belt across you more slowly.

4. Push the latch plate into the buckle until it clicks.

   Pull up on the latch plate to make sure it is secure. If the belt isn't long enough, see "Safety Belt Extender" at the end of this section.

   Make sure the release button on the buckle is positioned so you would be able to unbuckle the safety belt quickly if you ever had to.

Downloaded from www.Manualslib.com manuals search engine

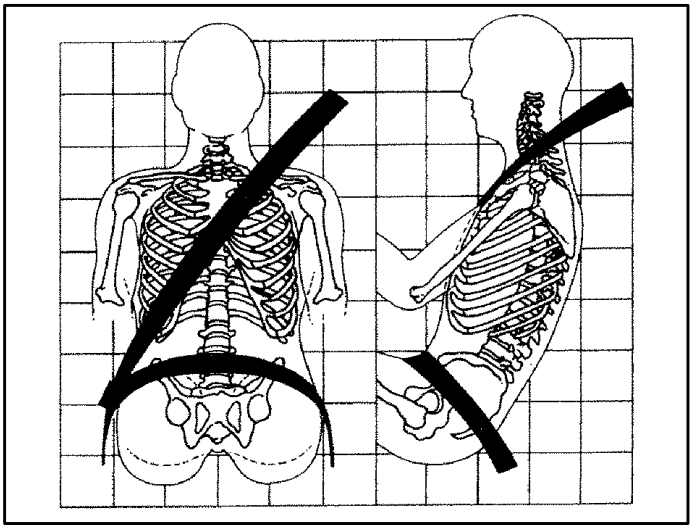

5. To make the lap part tight, pull down on the buckle end of the belt as you pull up on the shoulder belt.

The lap part of the belt should be worn low and snug on the hips, just touching the thighs. In a crash, this applies force to the strong pelvic bones. And you'd be less likely to slide under the lap belt. If you slid under it, the belt would apply force at your abdomen. This could cause serious or even fatal injuries. The shoulder belt should go over the shoulder and across the chest. These parts of the body are best able to take belt restraining forces.

The safety belt locks if there's a sudden stop or crash, or if you pull the belt very quickly out of the retractor.

Downloaded from www.Manualslib.com manuals search engine

Shoulder Belt Height Adjuster

Before you begin to drive, move the shoulder belt adjuster to the height that is right for you.

To move it down, push down on the button and move the height adjuster to the desired position. You can move the adjuster up just by pushing up on the shoulder belt guide. After you move the adjuster to where you want it, try to move it down without pushing the button down to make sure it has locked into position.

Adjust the height so that the shoulder portion of the belt is centered on your shoulder. The belt should be away from your face and neck, but not falling off your shoulder.

Downloaded from www.Manualslib.com manuals search engine

Q: **What's wrong with this?**

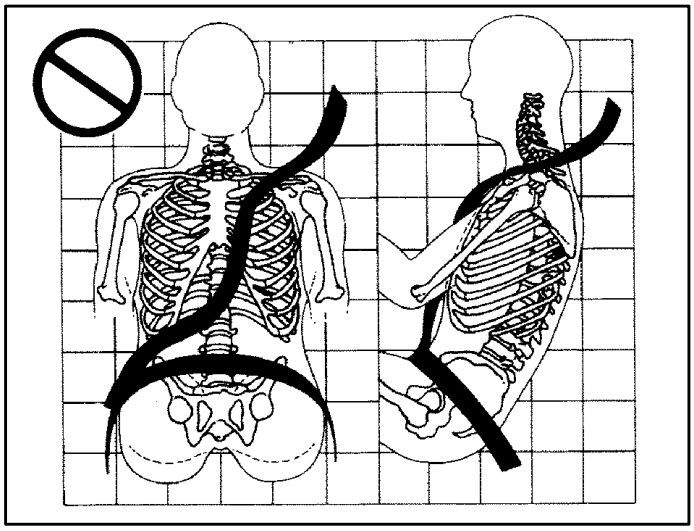

A: The shoulder belt is too loose. It won't give nearly as much protection this way.

⚠ CAUTION:

You can be seriously hurt if your shoulder belt is too loose. In a crash, you would move forward too much, which could increase injury. The shoulder belt should fit against your body.

Downloaded from www.Manualslib.com manuals search engine

Q: **What's wrong with this?**

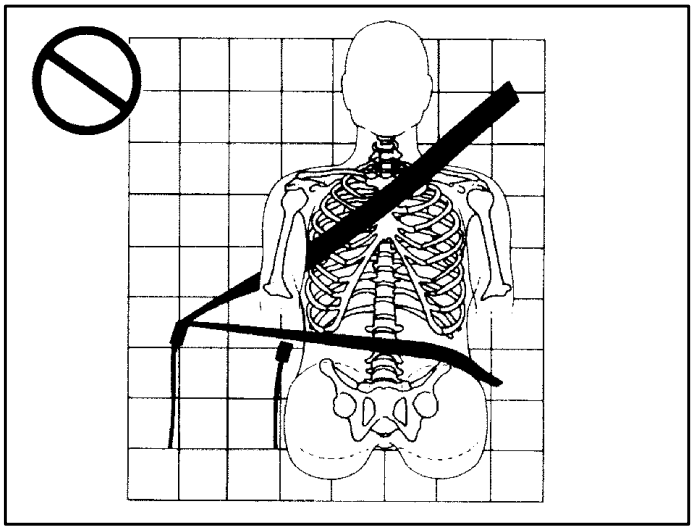

A: The belt is buckled in the wrong place.

⚠ CAUTION:

You can be seriously injured if your belt is buckled in the wrong place like this. In a crash, the belt would go up over your abdomen. The belt forces would be there, not at the pelvic bones. This could cause serious internal injuries. Always buckle your belt into the buckle nearest you.

Downloaded from www.Manualslib.com manuals search engine

Q: **What's wrong with this?**

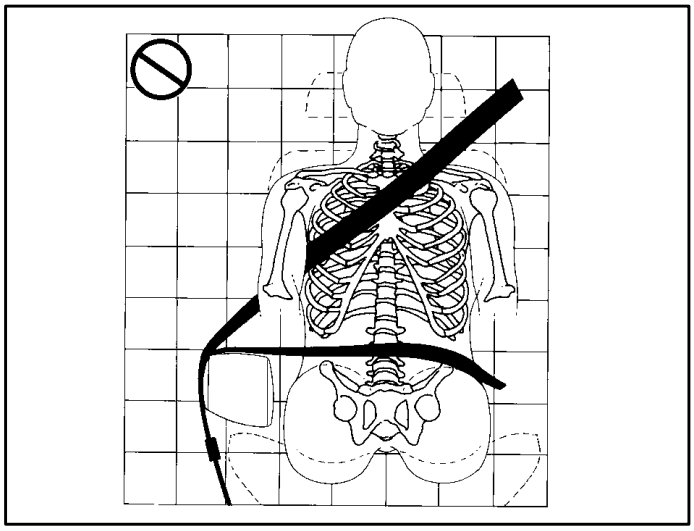

A: The belt is over an armrest.

⚠ CAUTION:

You can be seriously injured if your belt goes over an armrest like this. The belt would be much too high. In a crash, you can slide under the belt. The belt force would then be applied at the abdomen, not at the pelvic bones, and that could cause serious or fatal injuries. Be sure the belt goes under the armrests.

Downloaded from www.Manualslib.com manuals search engine

Q: **What's wrong with this?**

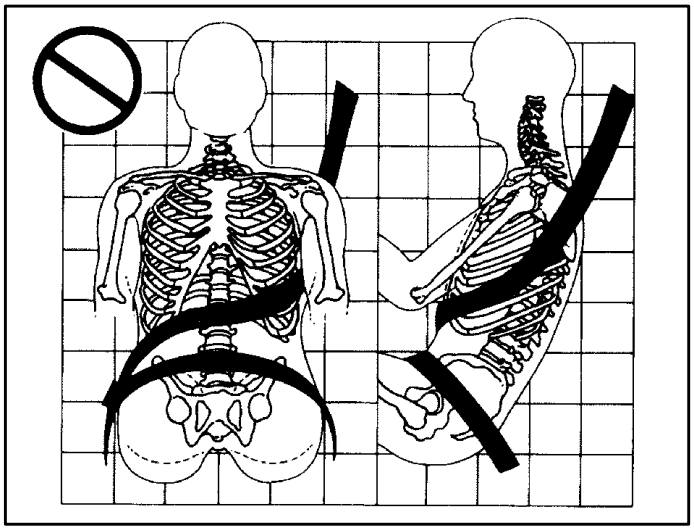

A: The shoulder belt is worn under the arm. It should be worn over the shoulder at all times.

⚠ CAUTION:

You can be seriously injured if you wear the shoulder belt under your arm. In a crash, your body would move too far forward, which would increase the chance of head and neck injury. Also, the belt would apply too much force to the ribs, which aren't as strong as shoulder bones. You could also severely injure internal organs like your liver or spleen.

Downloaded from www.Manualslib.com manuals search engine

Q: **What's wrong with this?**

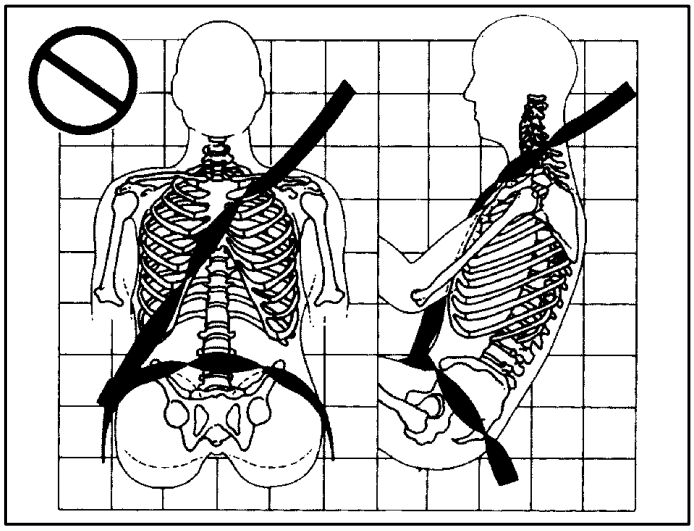

A: The belt is twisted across the body.

⚠ CAUTION:

You can be seriously injured by a twisted belt. In a crash, you wouldn't have the full width of the belt to spread impact forces. If a belt is twisted, make it straight so it can work properly, or ask your dealer to fix it.

Downloaded from www.Manualslib.com manuals search engine

To unlatch the belt, just push the button on the buckle. The belt should go back out of the way.

Before you close the door, be sure the belt is out of the way. If you slam the door on it, you can damage both the belt and your vehicle.

Safety Belt Use During Pregnancy

Safety belts work for everyone, including pregnant women. Like all occupants, they are more likely to be seriously injured if they don't wear safety belts.

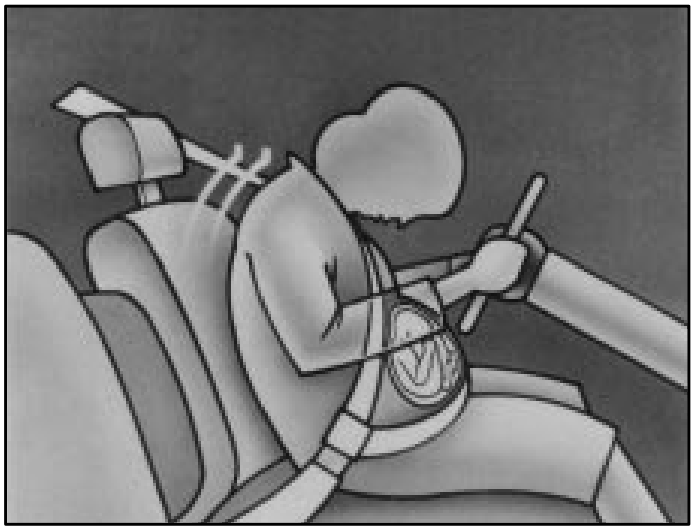

A pregnant woman should wear a lap-shoulder belt, and the lap portion should be worn as low as possible, below the rounding, throughout the pregnancy.

Downloaded from www.Manualslib.com manuals search engine

The best way to protect the fetus is to protect the mother. When a safety belt is worn properly, it's more likely that the fetus won't be hurt in a crash. For pregnant women, as for anyone, the key to making safety belts effective is wearing them properly.

Right Front Passenger Position

To learn how to wear the right front passenger's safety belt properly, see "Driver Position" earlier in this section.

The right front passenger's safety belt works the same way as the driver's safety belt -- except for two things.

If the belt stops before it reaches the buckle, tilt the latch plate and keep pulling until you can buckle the belt.

On some vehicles, if you pull the shoulder portion of the belt out all the way, you will engage the child restraint locking feature. If this happens, just let the belt go back all the way and start again.

Downloaded from www.Manualslib.com manuals search engine

Supplemental Restraint Systems (SRS)

This part explains the frontal and side impact Supplemental Restraint Systems (SRS) or air bag systems.

Your vehicle has four air bags -- a frontal air bag for the driver, another frontal air bag for the right front passenger, a side impact air bag for the driver, and another side impact air bag for the right front passenger.

Frontal air bags are designed to help reduce the risk of injury from the force of an inflating frontal air bag. But these air bags must inflate very quickly to do their job and comply with federal regulations.

Here are the most important things to know about the air bag systems:

⚠ CAUTION:

You can be severely injured or killed in a crash if you aren't wearing your safety belt -- even if you have air bags. Wearing your safety belt during a crash helps reduce your chance of hitting things inside the vehicle or being ejected from it.

CAUTION: (Continued)

CAUTION: (Continued)

Air bags are "supplemental restraints" to the safety belts. All air bags are designed to work with safety belts but don't replace them.

Frontal air bags for the driver and right front passenger are designed to work only in moderate to severe crashes where the front of your vehicle hits something. They aren't designed to inflate at all in rollover, rear, side or low-speed frontal crashes. And, for unrestrained occupants, frontal air bags may provide less protection in frontal crashes than more forceful air bags have provided in the past. The side impact air bags for the driver and right front passenger are designed to inflate only in moderate to severe crashes where something hits the side of your vehicle. They aren't designed to inflate in frontal, in rollover or in rear crashes. Everyone in your vehicle should wear a safety belt properly -- whether or not there's an air bag for that person.

Downloaded from www.Manualslib.com manuals search engine

⚠ CAUTION:

Both frontal and side impact air bags inflate with great force, faster than the blink of an eye. If you're too close to an inflating air bag, as you would be if you were leaning forward, it could seriously injure you. Safety belts help keep you in position for air bag inflation before and during a crash. Always wear your safety belt, even with frontal air bags. The driver should sit as far back as possible while still maintaining control of the vehicle. Front occupants should not lean on or sleep against the door.

⚠ CAUTION:

Anyone who is up against, or very close to, any air bag when it inflates can be seriously injured or killed. Air bags plus lap-shoulder belts offer the best protection for adults, but not for young children and infants. Neither the vehicle's safety belt system nor its air bag system is designed for them. Young children and infants need the protection that a child restraint system can provide. Always secure children properly in your vehicle. To read how, see the part of this manual called "Children."

There is an air bag readiness light on the instrument panel, which shows the air bag symbol.

The system checks the air bag electrical system for malfunctions. The light tells you if there is an electrical problem. See "Air Bag Readiness Light" in the Index for more information.

Downloaded from www.Manualslib.com manuals search engine

How the Air Bag Systems Work

Where are the air bags?

The driver's frontal air bag is in the middle of the steering wheel.

The right front passenger's frontal air bag is in the instrument panel on the passenger's side.

The driver's side impact air bag is in the side of the driver's seatback closest to the door.

Downloaded from www.Manualslib.com manuals search engine

The right front passenger's side impact air bag is in the side of the passenger's seatback closest to the door.

⚠ CAUTION:

If something is between an occupant and an air bag, the bag might not inflate properly or it might force the object into that person. The path of an inflating air bag must be kept clear. Don't put anything between an occupant and an air bag, and don't attach or put anything on the steering wheel hub or on or near any other air bag covering and don't let seat covers block the inflation path of a side impact air bag.

Downloaded from www.Manualslib.com manuals search engine

When should an air bag inflate?

The driver's and right front passenger's frontal air bags are designed to inflate in moderate to severe frontal or near-frontal crashes. But they are designed to inflate only if the impact speed is above the system's designed "threshold level."

If your vehicle goes straight into a wall that doesn't move or deform, the threshold level is about 12 to 19 mph (19 to 31 km/h). The threshold level can vary, however, with specific vehicle design, so that it can be somewhat above or below this range.

If your vehicle strikes something that will move or deform, such as a parked car, the threshold level will be higher. The driver's and right front passenger's frontal air bags are not designed to inflate in rollovers, side impacts, or rear impacts, because inflation would not help the occupant.

The side impact air bags are designed to inflate in moderate to severe side crashes. A side impact air bag will inflate if the crash severity is above the system's designed "threshold level." The threshold level can vary with specific vehicle design. Side impact air bags are not designed to inflate in frontal or near-frontal impacts, rollovers or rear impacts, because inflation would not help the occupant. A side impact air bag will only deploy on the side of the vehicle that is struck.

In any particular crash, no one can say whether an air bag should have inflated simply because of the damage to a vehicle or because of what the repair costs were. For frontal air bags, inflation is determined by the angle of the impact and how quickly the vehicle slows down in frontal and near-frontal impacts. For side impact air bags, inflation is determined by the location and severity of the impact.

What makes an air bag inflate?

In an impact of sufficient severity, the air bag sensing system detects that the vehicle is in a crash. For both frontal and side impact air bags, the sensing system triggers a release of gas from the inflator, which inflates the air bag. The inflator, air bag and related hardware are all part of the air bag modules inside the steering wheel, instrument panel and the side of the front seatbacks closest to the door.

Downloaded from www.Manualslib.com manuals search engine

How does an air bag restrain?

In moderate to severe frontal or near frontal collisions, even belted occupants can contact the steering wheel or the instrument panel. In moderate to severe side collisions, even belted occupants can contact the inside of the vehicle. The air bag supplements the protection provided by safety belts. Air bags distribute the force of the impact more evenly over the occupant's upper body, stopping the occupant more gradually. But the frontal air bags would not help you in many types of collisions, including rollovers, rear impacts, and side impacts, primarily because an occupant's motion is not toward the air bag. Side impact air bags would not help you in many types of collisions, including frontal or near frontal collisions, rollovers, and rear impacts, primarily because an occupant's motion is not toward those air bags. Air bags should never be regarded as anything more than a supplement to safety belts, and then only in moderate to severe frontal or near-frontal collisions for the driver's and right front passenger's frontal air bags, and only in moderate to severe side collisions for the driver's and right front passenger's side impact air bags.

What will you see after an air bag inflates?

After an air bag inflates, it quickly deflates, so quickly that some people may not even realize the air bag inflated. Some components of the air bag module -- the steering wheel hub for the driver's air bag, the instrument panel for the right front passenger's bag, the side of the seatback closest to the door for the driver and right front passenger's side impact air bags -- will be hot for a short time. The parts of the bag that come into contact with you may be warm, but not too hot to touch. There will be some smoke and dust coming from the vents in the deflated air bags. Air bag inflation doesn't prevent the driver from seeing or being able to steer the vehicle, nor does it stop people from leaving the vehicle.

⚠ CAUTION:

When an air bag inflates, there is dust in the air. This dust could cause breathing problems for people with a history of asthma or other breathing trouble. To avoid this, everyone in the vehicle should get out as soon as it is safe to do so. If you have breathing problems but can't get out of the vehicle after an air bag inflates, then get fresh air by opening a window or a door.

Downloaded from www.Manualslib.com manuals search engine

In many crashes severe enough to inflate an air bag, windshields are broken by vehicle deformation. Additional windshield breakage may also occur from the right front passenger air bag.

- Air bags are designed to inflate only once. After an air bag inflates, you'll need some new parts for your air bag system. If you don't get them, the air bag system won't be there to help protect you in another crash. A new system will include air bag modules and possibly other parts. The service manual for your vehicle covers the need to replace other parts.
- Your vehicle is equipped with a crash sensing and diagnostic module, which records information about the frontal air bag system. The module records information about the readiness of the system, when the system commands air bag inflation and driver's safety belt usage at deployment. The module also records speed, engine rpm, brake and throttle data.
- Let only qualified technicians work on your air bag systems. Improper service can mean that an air bag system won't work properly. See your dealer for service.

NOTICE:

If you damage the covering for the driver's or the right front passenger's air bag, or the air bag covering on the driver's and right front passenger's seatback, the bag may not work properly. You may have to replace the air bag module in the steering wheel, both the air bag module and the instrument panel for the right front passenger's air bag, or both the air bag module and seatback for the driver's and right front passenger's side impact air bag. Do not open or break the air bag coverings.

Downloaded from www.Manualslib.com manuals search engine

Servicing Your Air Bag-Equipped Vehicle

Air bags affect how your vehicle should be serviced. There are parts of the air bag systems in several places around your vehicle. Your dealer and the service manual have information about servicing your vehicle and the air bag systems. To purchase a service manual, see "Service and Owner Publications" in the Index.

⚠ CAUTION:

For up to 10 seconds after the ignition key is turned off and the battery is disconnected, an air bag can still inflate during improper service. You can be injured if you are close to an air bag when it inflates. Avoid yellow connectors. They are probably part of the air bag systems. Be sure to follow proper service procedures, and make sure the person performing work for you is qualified to do so.

The air bag systems do not need regular maintenance.

Safety Belt Pretensioners

Your vehicle has safety belt pretensioners. You'll find them on the buckle end of the safety belts for the driver and right front passenger. They help the safety belts reduce a person's forward movement in a moderate to severe crash in which the front of the vehicle hits something.

Pretensioners work only once. If they activate in a crash, you'll need to get new ones, and probably other new parts for your safety belt system. See "Replacing Restraint System Parts After a Crash" in the Index.

Rear Seat Passengers

It's very important for rear seat passengers to buckle up! Accident statistics show that unbelted people in the rear seat are hurt more often in crashes than those who are wearing safety belts.

Rear passengers who aren't safety belted can be thrown out of the vehicle in a crash. And they can strike others in the vehicle who are wearing safety belts.

Downloaded from www.Manualslib.com manuals search engine

Rear Seat Outside Passenger Positions

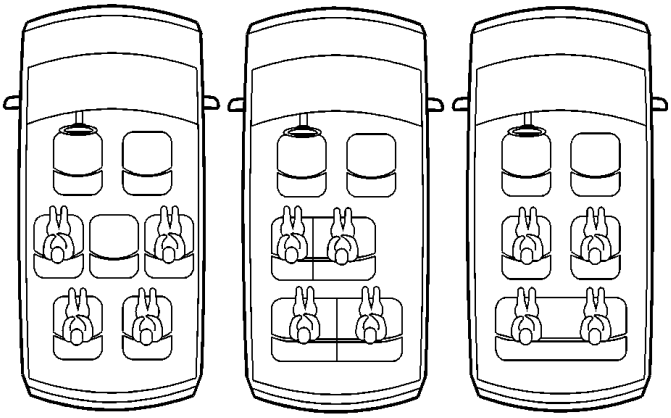

Lap-Shoulder Belt

The positions next to the windows have lap-shoulder belts. Here's how to wear one properly.

1. Pick up the latch plate and pull the belt across you. Don't let it get twisted.

   The shoulder belt may lock if you pull the belt across you very quickly. If this happens, let the belt go back slightly to unlock it. Then pull the belt across you more slowly.

2. Push the latch plate into the buckle until it clicks.

Downloaded from www.Manualslib.com manuals search engine

Second Row Outside Passenger Positions

Third Row Outside Passenger Positions

If the belt stops before it reaches the buckle, tilt the latch plate and keep pulling until you can buckle it.

Pull up on the latch plate to make sure it is secure.

If the belt is not long enough, see “Safety Belt Extender” at the end of this section. Make sure the release button on the buckle is positioned so you would be able to unbuckle the safety belt quickly if you ever had to.

Downloaded from www.Manualslib.com manuals search engine

3. To make the lap part tight, pull down on the buckle end of the belt as you pull up on the shoulder part.

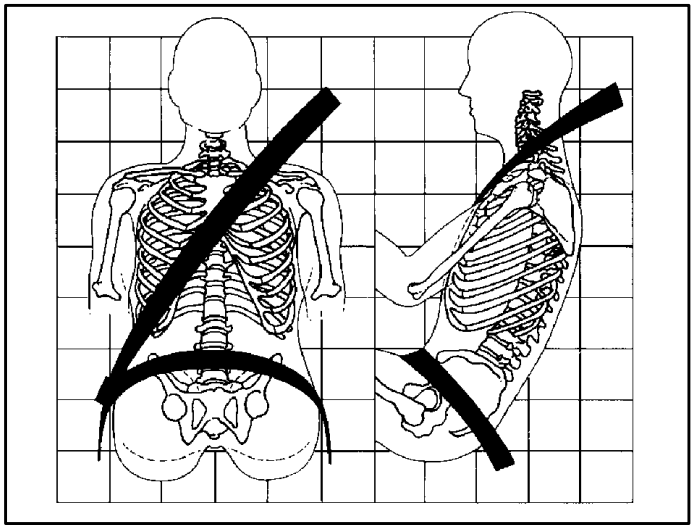

The lap part of the belt should be worn low and snug on the hips, just touching the thighs. In a crash, this applies force to the strong pelvic bones. And you'd be less likely to slide under the lap belt. If you slid under it, the belt would apply force at your abdomen. This could cause serious or even fatal injuries. The shoulder belt should go over the shoulder and across the chest. These parts of the body are best able to take belt restraining forces.

Downloaded from www.Manualslib.com manuals search engine

The safety belt locks if there's a sudden stop or a crash, or if you pull the belt very quickly out of the retractor.

⚠ CAUTION:

You can be seriously hurt if your shoulder belt is too loose. In a crash, you would move forward too much, which could increase injury. The shoulder belt should fit against your body.

To unlatch the belt, just push the button on the buckle.

Downloaded from www.Manualslib.com manuals search engine

Rear Safety Belt Comfort Guides for Children and Small Adults

Your vehicle may have rear shoulder belt comfort guides. This feature will provide added safety belt comfort for older children who have outgrown booster seats and for small adults. When installed on a shoulder belt, the comfort guide better positions the belt away from the neck and head.

If your vehicle has bucket seats in the second row, there is one guide for each outside passenger position. If your vehicle has a bench seat in the second row, there is one guide for the left-hand outside passenger position. To provide added safety belt comfort for children who have outgrown child restraints and for smaller adults, the comfort guides may be installed on the shoulder belts. Here's how to install a comfort guide and use the safety belt:

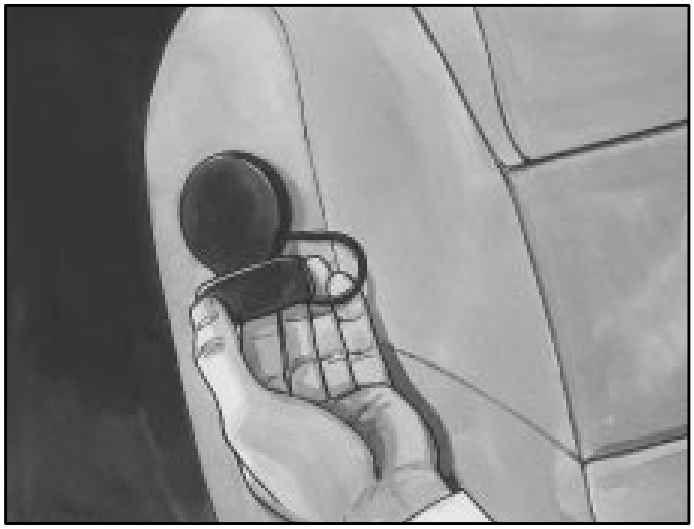

1. Remove the guide from its storage clip on the side of the seatback.

Downloaded from www.Manualslib.com manuals search engine

2. Place the guide over the belt and insert the two edges of the belt into the slots of the guide.

3. Be sure that the belt is not twisted and it lies flat. The guide must be on top of the belt.

Downloaded from www.Manualslib.com manuals search engine

4. Buckle, position and release the safety belt as described in “Rear Seat Outside Passenger Positions” earlier in this section. Make sure that the shoulder belt crosses the shoulder.

To remove and store the comfort guides, squeeze the belt edges together so that you can take them out from the guides. Slide the guide onto the storage clip.

Center Passenger Position (Bench Seat)

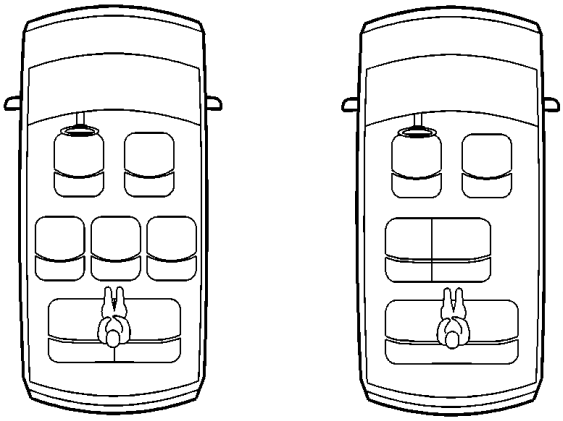

Lap Belt

If your vehicle has a third row rear bench seat, someone can sit in the center position.

Downloaded from www.Manualslib.com manuals search engine

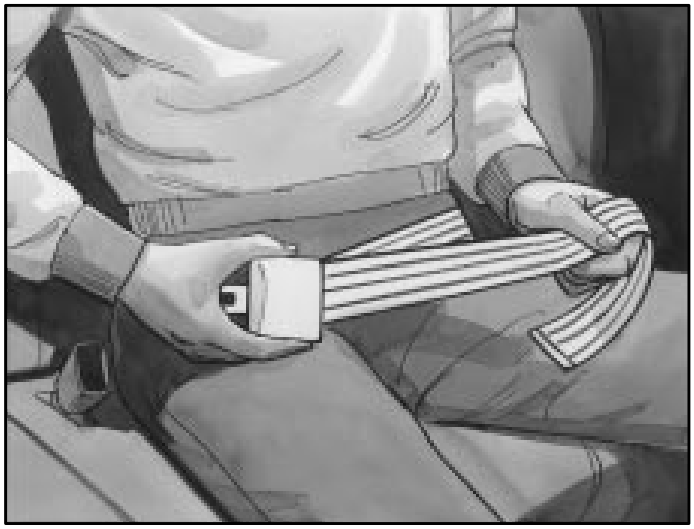

When you sit in the center position of the bench seat, you have a lap safety belt, which has no retractor. To make the belt longer, tilt the latch plate and pull it along the belt.

To make the belt shorter, pull its free end as shown until the belt is snug.

Buckle, position and release it the same way as the lap part of a lap-shoulder belt. If the belt isn't long enough, see "Safety Belt Extender" at the end of this section.

Make sure the release button on the buckle is positioned so you would be able to unbuckle the safety belt quickly if you ever had to.

Downloaded from www.Manualslib.com manuals search engine

Center Passenger Position (Bucket Seat)

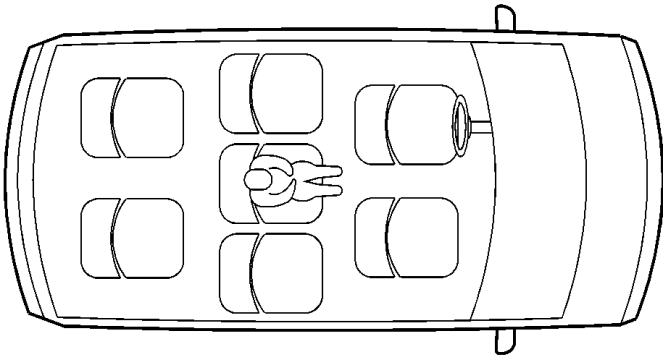

Lap Belt

If your vehicle has bucket seats, someone can sit in the center position bucket seat.

When you sit in the center position bucket seat, you have a lap safety belt which has a retractor.

1. Pick up the latch plate and, in a single motion, pull the belt across you. Don't let it get twisted.
2. Push the latch plate into the buckle until it clicks. If the belt stops before it reaches the buckle, let it go back all the way and start again. Pull up on the latch plate to make sure it is secure.
3. Feed the lap belt into the retractor to tighten it.

Downloaded from www.Manualslib.com manuals search engine

4. Position and release it the same way as the lap part of a lap-shoulder belt.

   If the belt isn't long enough, see "Safety Belt Extender" at the end of this section. Make sure the release button on the buckle is positioned so you would be able to unbuckle the safety belt quickly if you ever had to.

Children

Everyone in a vehicle needs protection! This includes infants and all other children. Neither the distance traveled nor the age and size of the traveler changes the need, for everyone, to use safety restraints. In fact, the law in every state in the United States and in every Canadian province says children up to some age must be restrained while in a vehicle.

Infants and Young Children

Every time infants and young children ride in vehicles, they should have the protection provided by the appropriate restraint. Young children should not use the vehicle's safety belts, unless there is no other choice.

Downloaded from www.Manualslib.com manuals search engine

⚠ CAUTION:

People should never hold a baby in their arms while riding in a vehicle. A baby doesn't weigh much -- until a crash. During a crash a baby will become so heavy it is not possible to hold it.

CAUTION: (Continued)

CAUTION: (Continued)

For example, in a crash at only 25 mph (40 km/h), a 12-lb. (5.5 kg) baby will suddenly become a 240-lb. (110 kg) force on a person's arms. A baby should be secured in an appropriate restraint.

Downloaded from www.Manualslib.com manuals search engine

⚠ CAUTION:

Children who are up against, or very close to, any air bag when it inflates can be seriously injured or killed. Air bags plus lap-shoulder belts offer outstanding protection for adults and older children, but not for young children and infants. Neither the vehicle's safety belt system nor its air bag system is designed for them. Young children and infants need the protection that a child restraint system can provide.

Q: **What are the different types of add-on child restraints?**

A: Add-on child restraints, which are purchased by the vehicle's owner, are available in four basic types. Selection of a particular restraint should take into consideration not only the child's weight, height and age but also whether or not the restraint will be compatible with the motor vehicle in which it will be used.

For most basic types of child restraints, there are many different models available. When purchasing a child restraint, be sure it is designed to be used in a motor vehicle. If it is, the restraint will have a label saying that it meets federal motor vehicle safety standards.

The restraint manufacturer's instructions that come with the restraint state the weight and height limitations for a particular child restraint. In addition, there are many kinds of restraints available for children with special needs.

Downloaded from www.Manualslib.com manuals search engine

⚠ CAUTION:

Newborn infants need complete support, including support for the head and neck. This is necessary because a newborn infant's neck is weak and its head weighs so much compared with the rest of its body. In a crash, an infant in a rear-facing seat settles into the restraint, so the crash forces can be distributed across the strongest part of an infant's body, the back and shoulders. Infants always should be secured in appropriate infant restraints.

⚠ CAUTION:

The body structure of a young child is quite unlike that of an adult or older child, for whom the safety belts are designed. A young child's hip bones are still so small that vehicle's regular safety belt may not remain low on the hip bones, as it should. Instead, it may settle up around the child's abdomen. In a crash, the belt would apply force on a body area that's unprotected by any bony structure. This alone could cause serious or fatal injuries. Young children always should be secured in appropriate child restraints.

Downloaded from www.Manualslib.com manuals search engine

Built-in Child Restraint (Option)

Bucket Seat

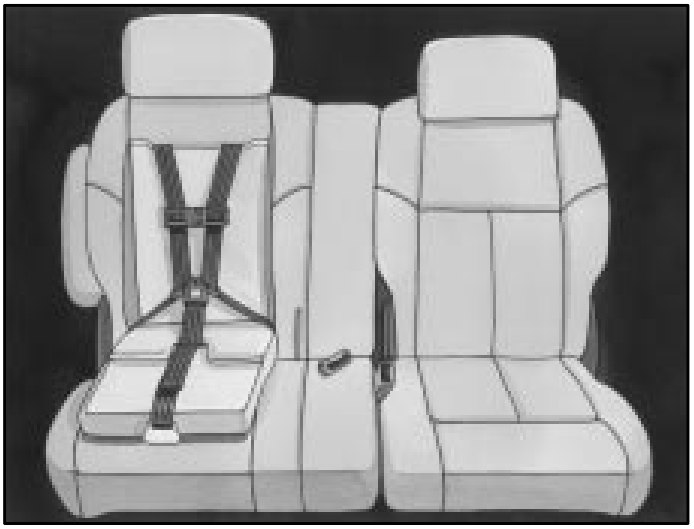

60/40 Bench Seat

If your vehicle has this option in a bucket seat, each bucket seat that has the built-in child restraint fits in only one location in your vehicle. To find out where a bucket seat that has a built-in child restraint must be located in your vehicle, see “Removable Rear Bucket Seats” in the Index. If your vehicle has this option in a 60/40 bench seat, this bench seat will only fit in the second row of your vehicle. In both types of seats, the built-in child restraint works the same way.

Downloaded from www.Manualslib.com manuals search engine

This child restraint system conforms to all applicable Federal Motor Vehicle Safety Standards.

Each child restraint is designed for use only by children who weigh between 22 and 40 pounds (10 and 18 kg) and whose height is between 33.5 and 40 inches (850 and 1 016 mm) and who are capable of sitting upright alone.

The child should also be at least one year old. It is important to use a rear-facing infant restraint until the child is about a year old. A rear-facing restraint gives the infant's head, neck and body the support they would need in a crash. See "Child Restraints" later in this section for more information.

Q: **What if the top of my child's shoulders is above the shoulder belt slots for the five-point child restraint harness system?**

A: A child whose shoulders are above the shoulder belt slots for the five-point child restraint harness system shouldn't use this child restraint. Instead, the child should sit on the vehicle's regular seat cushion and use the vehicle's adult safety belts.

⚠ CAUTION:

BEFORE YOU USE THIS CHILD RESTRAINT, BE SURE THE TOP OF THE CHILD'S SHOULDERS IS BELOW THE SLOTS THAT THE HARNESS GOES THROUGH. A CHILD WHOSE SHOULDERS ARE ABOVE THOSE SLOTS COULD BE INJURED DURING A SUDDEN STOP OR CRASH. IF THE TOP OF THE CHILD'S SHOULDERS IS ABOVE THE SLOTS, DON'T USE THIS CHILD RESTRAINT WHILE THE VEHICLE IS IN MOTION.

Downloaded from www.Manualslib.com manuals search engine

Securing a Child in the Built-In Child Restraint

1. Raise the head restraint until the lower edge of the head restraint is even with the top of the seatback.

2. Rotate the head restraint rearward until it touches the top of the seatback. Make sure there is no gap between the lower edge of the head restraint and the top of the seatback.

Downloaded from www.Manualslib.com manuals search engine

3. Lower the child restraint cushion.

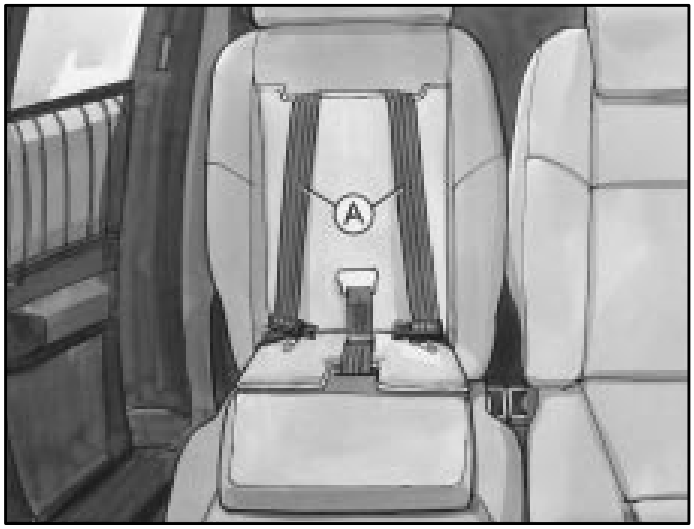

You'll be using the child restraint's harness (A) to secure your child. Don't use the vehicle's safety belts.

Downloaded from www.Manualslib.com manuals search engine

⚠ CAUTION:

Using the vehicle's regular safety belts on a child seated on the child restraint cushion can cause serious injury to the child in a sudden stop or crash. If a child is the proper size for the built-in child restraint, secure the child using the child restraint's harness. But children who are too large for the built-in child restraint should sit on the vehicle's regular seat and use the vehicle's adult safety belts.

WARNING! FAILURE TO FOLLOW THE MANUFACTURER'S INSTRUCTIONS ON THE USE OF THIS CHILD RESTRAINT SYSTEM CAN RESULT IN YOUR CHILD STRIKING THE VEHICLE'S INTERIOR DURING A SUDDEN STOP OR CRASH. SNUGLY ADJUST THE BELTS PROVIDED WITH THIS CHILD RESTRAINT AROUND YOUR CHILD.

4. Before placing the child in the child restraint, add slack to the shoulder harness. Pull the black shoulder harness release strap firmly. At the same time pull both shoulder harness straps through the slots in the seatback as shown.
5. Place the child on the child restraint cushion.

Downloaded from www.Manualslib.com manuals search engine

6. Select only one side of the harness. Place the harness over the child's shoulder.
7. Push the latch plate (B) into the buckle until it clicks.

   Be sure the buckle is free of any foreign objects that may prevent you from securing the latch plates. If you can't secure a latch plate, see your dealer for service before using the child restraint.

8. Place the other side of the harness over the child's shoulder.
9. Push the latch plate into the buckle until it clicks.

10. Pull up on both latch plates to make sure they are secure.

Downloaded from www.Manualslib.com manuals search engine

11. Now fasten the left and right halves of the shoulder harness clip together. The purpose of this clip is to help keep the harness positioned on the child's shoulders.

⚠ CAUTION:

An unfastened shoulder harness clip won't help keep the harness in place on the child's shoulders. If the harness isn't on the child's shoulders, it won't be able to restrain the child's upper body in a sudden stop or crash. The child could be seriously injured. Make sure the harness clip is properly fastened.

Downloaded from www.Manualslib.com manuals search engine

12. Pull the shoulder harness adjustment strap (C) firmly until the harness is snugly adjusted around the child. You should not be able to put more than two fingers between the harness and the child's chest. Make sure the harness and buckle strap are not twisted.

13. Adjust the position of the harness on the child's shoulder by moving the clip up or down along the harness. On each side of the harness, the shoulder part should be centered on the child's shoulder. The harness should be away from the child's face and neck, but not falling from the child's shoulders.

    If you expect that the child will sleep while riding, you can recline the seatback. See "Seats" in the Index.

Downloaded from www.Manualslib.com manuals search engine

Removing the Child from the Built-In Child Restraint

1. Unfasten the shoulder harness clip.

2. Unlatch the harness by pushing the button on the buckle.
3. Move one side of the harness off the child's shoulder.
4. Move the other side of the harness off the child's shoulder.
5. Remove the child from the child restraint cushion.

Downloaded from www.Manualslib.com manuals search engine

Storing the Built-In Child Restraint

Always properly store the built-in child restraint before using the vehicle's lap-shoulder belt.

1. Move both latch plates and both sides of the shoulder harness clip to the bottom of the harness straps.

2. Fold the child restraint cushion and leg rest up into the seatback.
3. Press the child restraint cushion firmly into the seatback.

Downloaded from www.Manualslib.com manuals search engine

4. Then press the leg rest firmly into the seatback, and secure it by pressing the upper corners against the fastener strips on the seatback.

5. Rotate the head restraint forward and push it all the way down.

Just like the other restraint systems in your vehicle, your built-in child restraint needs to be periodically checked and may need to have parts replaced after a crash. See “Checking Your Restraint Systems” and “Replacing Seat and Restraint System Parts After a Crash” in the Index.

Downloaded from www.Manualslib.com manuals search engine

Restraint Systems for Children

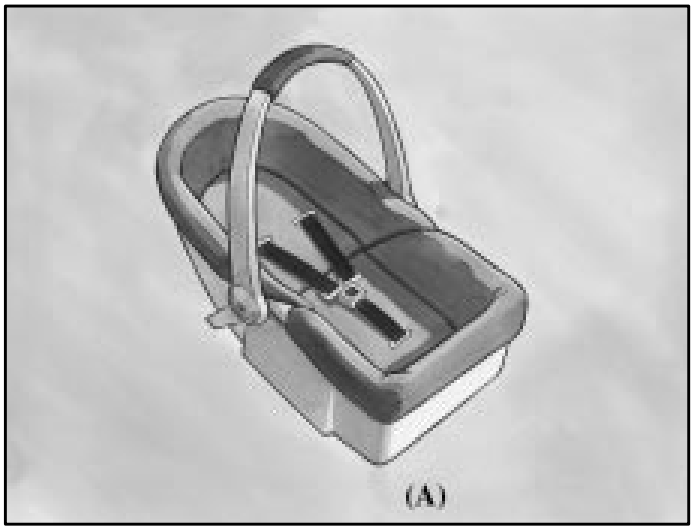

An infant car bed (A), a special bed made for use in a motor vehicle, is an infant restraint system designed to restrain or position a child on a continuous flat surface. Make sure that the infant's head rests toward the center of the vehicle.

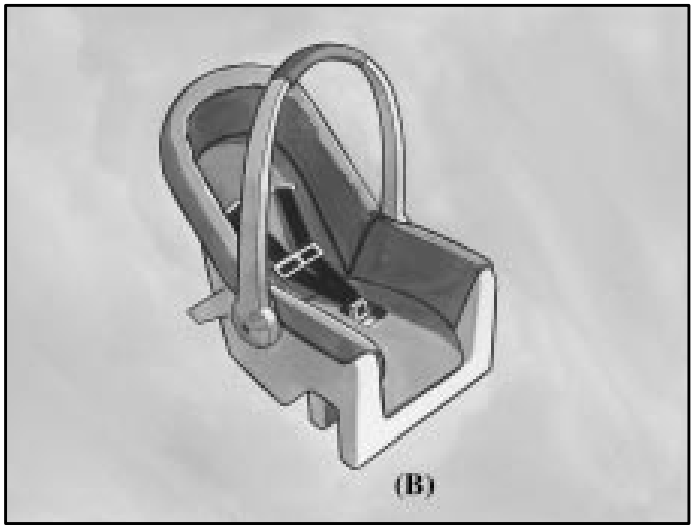

A rear-facing infant seat (B) provides restraint with the seating surface against the back of the infant. The harness system holds the infant in place and, in a crash, acts to keep the infant positioned in the restraint.

Downloaded from www.Manualslib.com manuals search engine

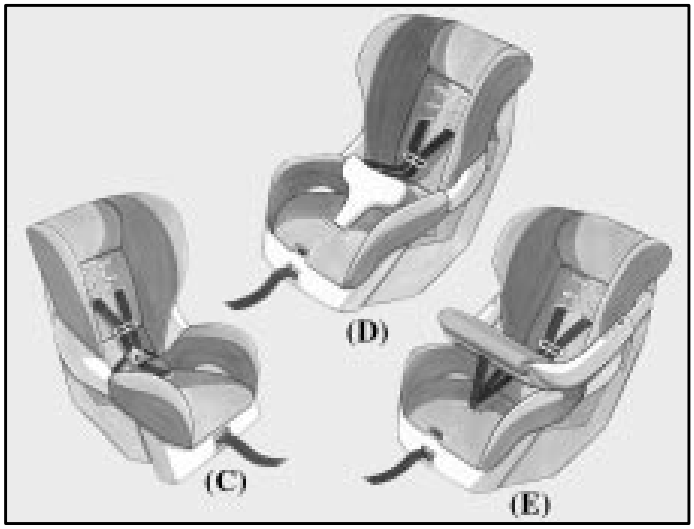

A forward-facing child seat (C-E) provides restraint for the child's body with the harness and also sometimes with surfaces such as T-shaped or shelf-like shields.

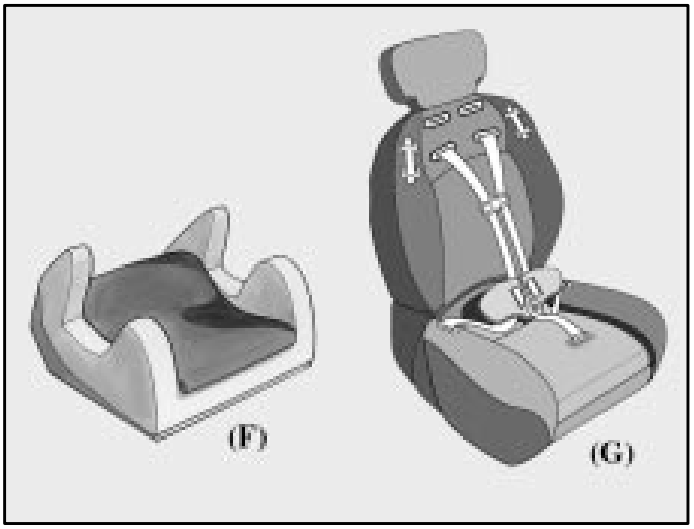

A booster seat (F-G) is a child restraint designed to improve the fit of the vehicle's safety belt system. Some booster seats have a shoulder belt positioner, and some high-back booster seats have a five-point harness. A booster seat can also help a child to see out the window.

Downloaded from www.Manualslib.com manuals search engine

Q: How do child restraints work?

A: A child restraint system is any device designed for use in a motor vehicle to restrain, seat, or position children. A built-in child restraint system is a permanent part of the motor vehicle. An add-on child restraint system is a portable one, which is purchased by the vehicle's owner.

For many years, add-on child restraints have used the adult belt system in the vehicle. To help reduce the chance of injury, the child also has to be secured within the restraint. The vehicle's belt system secures the add-on child restraint in the vehicle, and the add-on child restraint's harness system holds the child in place within the restraint.

One system, the three-point harness, has straps that come down over each of the infant's shoulders and buckle together at the crotch. The five-point harness system has two shoulder straps, two hip straps and a crotch strap. A shield may take the place of hip straps. A T-shaped shield has shoulder straps that are attached to a flat pad which rests low against the child's body. A shelf- or armrest-type shield has straps that are attached to a wide, shelf-like shield that swings up or to the side.

When choosing a child restraint, be sure the child restraint is designed to be used in a vehicle. If it is, it will have a label saying that it meets federal motor vehicle safety standards.

Then follow the instructions for the restraint. You may find these instructions on the restraint itself or in a booklet, or both. These restraints use the belt system in your vehicle, but the child also has to be secured within the restraint to help reduce the chance of personal injury. When securing an add-on child restraint, refer to the instructions that come with the restraint which may be on the restraint itself or in a booklet, or both, and to this manual. The child restraint instructions are important, so if they are not available, obtain a replacement copy from the manufacturer.

Q: When securing an aftermarket child seat in a bucket seat, I am unable to get the seat fastened in snugly enough. What should I do?

A: With some child seats, it may be difficult to tighten the vehicle belts so that there is less side-to-side or front-to-back movement of the child seat. A replacement buckle, which makes it easier to secure your child seat, is available from your dealer at no charge to you.

Downloaded from www.Manualslib.com manuals search engine

Where to Put the Restraint

Accident statistics show that children are safer if they are restrained in the rear rather than the front seat. General Motors, therefore, recommends that child restraints be secured in a rear seat including an infant riding in a rear-facing infant seat, a child riding in a forward-facing child seat and an older child riding in a booster seat. *Never* put a rear-facing child restraint in the front passenger seat. Here's why:

⚠ CAUTION:

A child in a rear-facing child restraint can be seriously injured or killed if the right front passenger's air bag inflates. This is because the back of the rear-facing child restraint would be very close to the inflating air bag. Always secure a rear-facing child restraint in a rear seat.

You may secure a forward-facing child restraint in the right front seat, but before you do, always move the front passenger seat as far back as it will go. It's better to secure the child restraint in a rear seat.

Wherever you install it, be sure to secure the child restraint properly.

Keep in mind that an unsecured child restraint can move around in a collision or sudden stop and injure people in the vehicle. Be sure to properly secure any child restraint in your vehicle -- even when no child is in it.

Downloaded from www.Manualslib.com manuals search engine

Top Strap

Some child restraints have a top strap, or “top tether.” It can help restrain the child restraint during a collision. For it to work, a top strap must be properly anchored to the vehicle.

If the child restraint does not have a top strap, one can be obtained, in kit form, for many child restraints. Ask the child restraint manufacturer whether or not a kit is available.

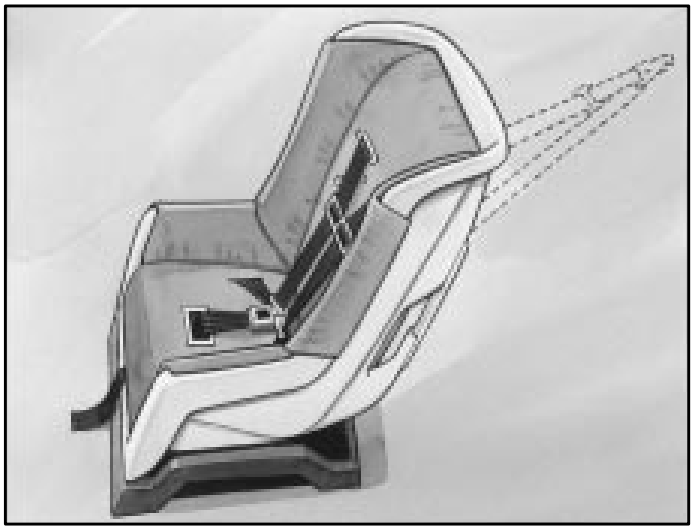

In Canada, the law requires that forward-facing child restraints have a top strap, and that the strap be anchored. In the United States, some child restraints also have a top strap. If your child restraint has a top strap, it should be anchored.

An anchor bar for a top strap is located at the rear of the seat cushion for each second and third row outboard seating position, and for the center position of the second row.

The anchor bar for the stowable bench seat is located on the passenger’s side of the crossbar. Use the center seating position to use the anchor bar properly. If the convenience center is in the vehicle, you must lift the tray sill to use the anchor.

Downloaded from www.Manualslib.com manuals search engine

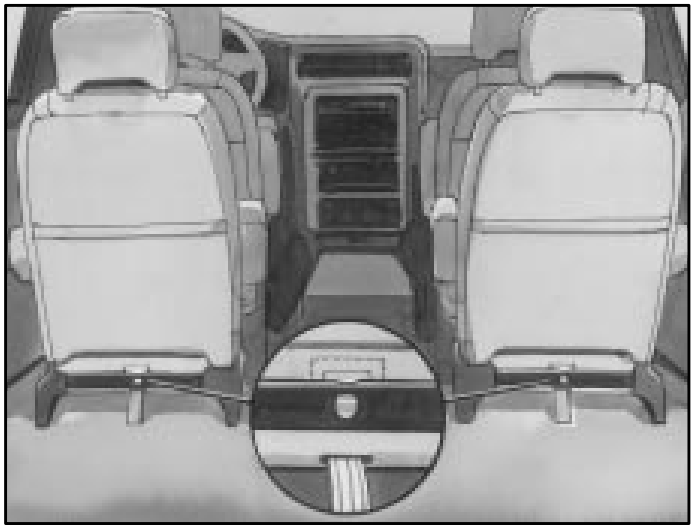

Second Row

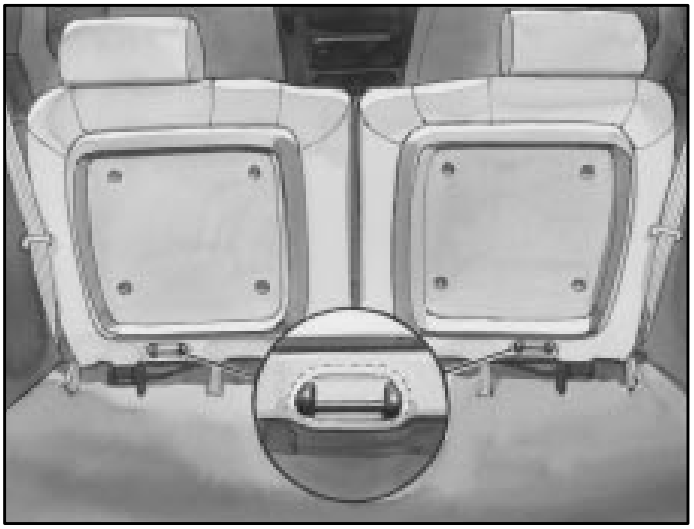

Third Row

Downloaded from www.Manualslib.com manuals search engine

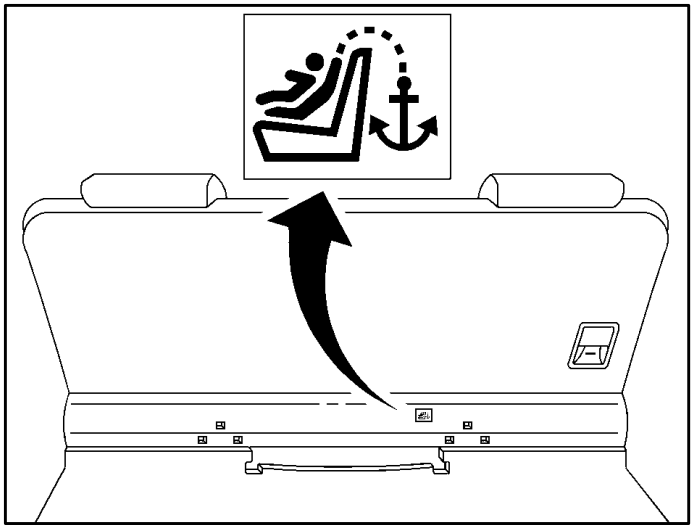

Third Row (Stowable Seat)

Don't use a child restraint with a top strap in the right front passenger's position because there's no place to anchor the top strap.

Anchor the top strap to one of these anchor points. Be sure to use an anchor point located on the same side of the vehicle as the seating position where the child restraint will be placed. Raise the head restraint and route the top strap under it.

Once you have the top strap anchored, you'll be ready to secure the child restraint itself. Tighten the top strap when and as the child restraint manufacturer's instructions say.

Downloaded from www.Manualslib.com manuals search engine

Lower Anchorages and Top Tethers for Children (LATCH System)

Your vehicle has the LATCH system. You'll find anchors (A) in the second row driver's side bucket seat, the 40 side of the 60/40 split bench seat and both second row captain's chairs.

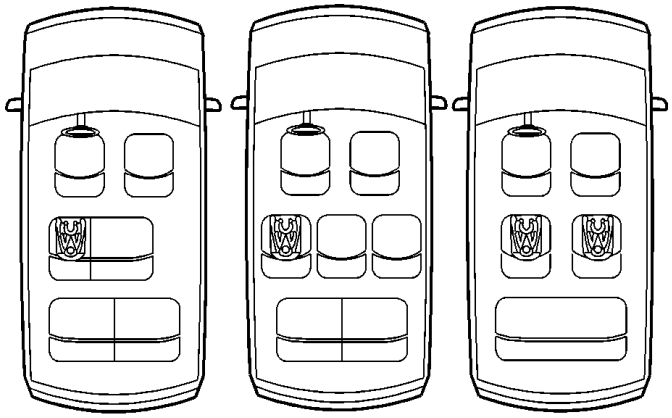

In order to use the system, you need either a forward-facing child restraint that has attaching points (B) at its base and a top tether anchor (C), or a rear-facing child restraint that has attaching points (B), as shown here.

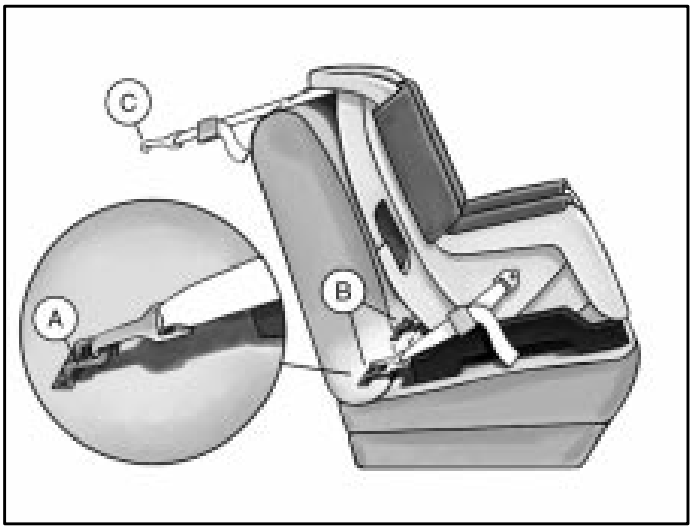

Downloaded from www.Manualslib.com manuals search engine

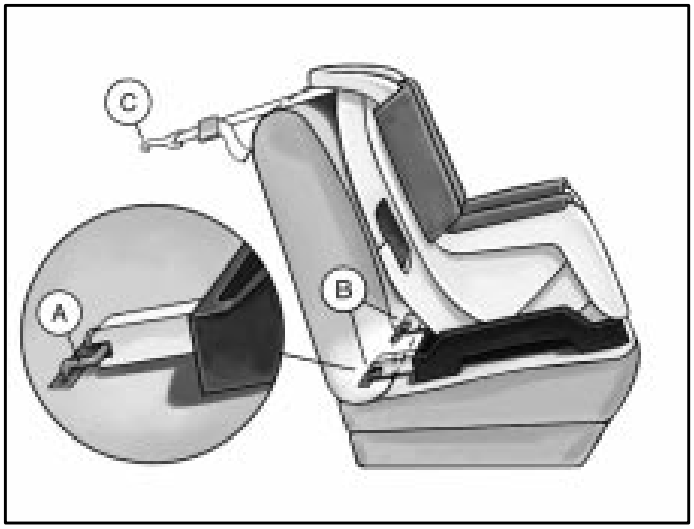

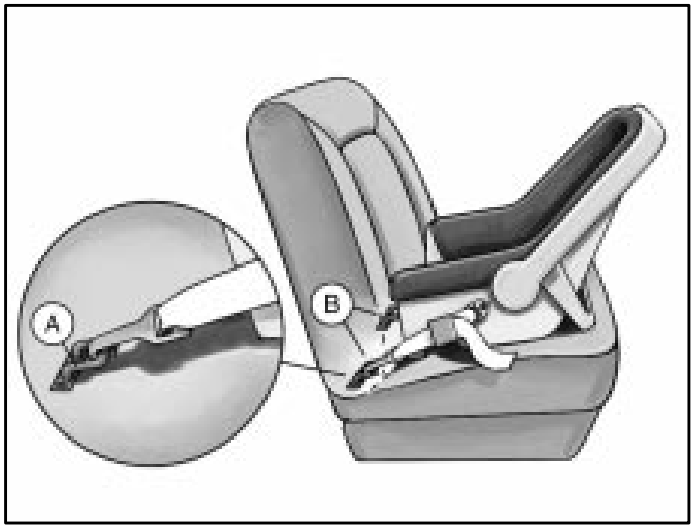

With this system, use the LATCH system instead of the vehicle's safety belts to secure a child restraint.

Downloaded from www.Manualslib.com manuals search engine

⚠ CAUTION:

If a LATCH-type child restraint isn't attached to its anchorage points, the restraint won't be able to protect a child sitting there. In a crash, the child could be seriously injured or killed. Make sure that a LATCH-type child restraint is properly installed using the anchorage points, or use the vehicle's safety belts to secure the restraint. See "Securing a Child Restraint in the Rear Outside Seat Position" in the Index for information on how to secure a child restraint in your vehicle using the vehicle's safety belts.

Securing a Child Restraint Designed for the LATCH System

1. Find the anchors for the seating position you want to use, where the bottom of the seatback meets the back of the seat cushion.
2. Put the child restraint on the seat.
3. If the child restraint is forward-facing, attach the anchor points on the child restraint to the anchors in the vehicle. The child restraint instructions will show you how.
4. Attach the top strap to the top strap anchor. See "Top Strap" in the Index. Tighten the top strap according to the child restraint instructions.
5. Push and pull the child restraint in different directions to be sure it is secure.

To remove the child restraint, simply unhook the top strap from the top tether anchor and then disconnect the anchor points.

Downloaded from www.Manualslib.com manuals search engine

Securing a Child Restraint in a Rear Outside Seat Position

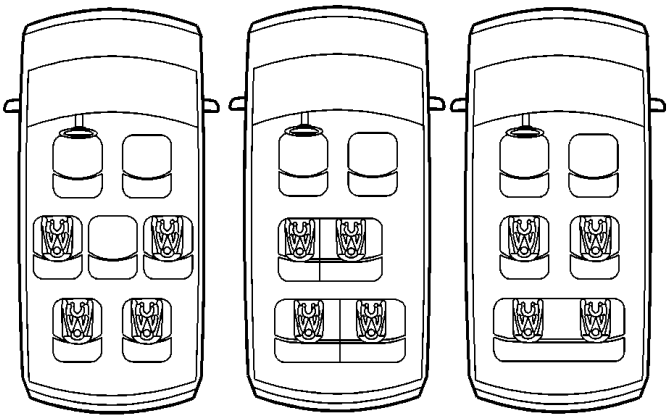

You'll be using the lap-shoulder belt. See the earlier part about the top strap if the child restraint has one. Be sure to follow the instructions that came with the child restraint. Secure the child in the child restraint when and as the instructions say.

1. Put the restraint on the seat.
2. Pick up the latch plate, and run the lap and shoulder portions of the vehicle's safety belt through or around the restraint. The child restraint instructions will show you how.

Downloaded from www.Manualslib.com manuals search engine

Second Row Outside Passenger Positions

Third Row Outside Passenger Positions

Tilt the latch plate to adjust the belt if needed.

If the shoulder belt goes in front of the child's face or neck, put it behind the child restraint.

Downloaded from www.Manualslib.com manuals search engine

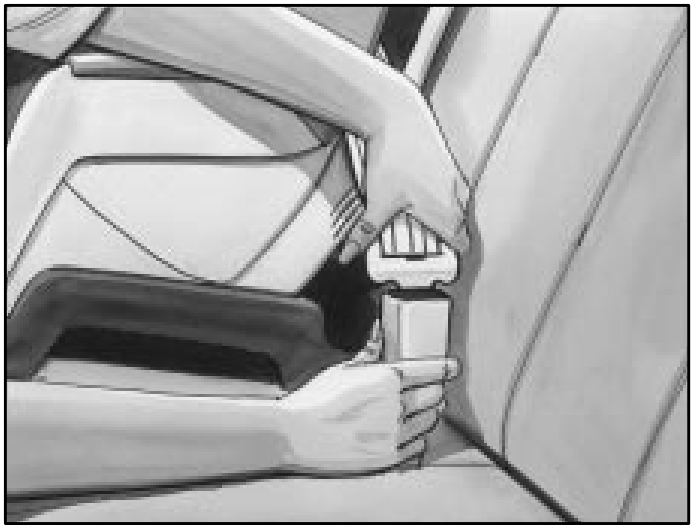

3. Buckle the belt. Make sure the release button is positioned so you would be able to unbuckle the safety belt quickly if you ever had to.

4. Some vehicles have a child restraint locking feature on the shoulder belt retractor. You can tell if your vehicle has this feature by pulling the shoulder belt all the way out of the retractor. Then, let the belt go back a few inches, and try to pull the belt out again. If you can't pull the belt out because it has locked, it means the retractor has the child restraint locking feature. If the belt doesn't lock and you can pull the belt out of the retractor again, it means your vehicle doesn't have the child restraint locking feature on the shoulder belt retractor.

Downloaded from www.Manualslib.com manuals search engine

- If your vehicle has the child restraint locking feature on the shoulder belt retractor, pull the rest of the shoulder belt all the way out of the retractor to set the lock.

  To tighten the belt, feed the shoulder belt back into the retractor while you push down on the child restraint. If you're using a forward-facing child restraint, you may find it helpful to use your knee to push down on the child restraint as you tighten the belt.

- If your vehicle doesn't have the child restraint locking feature on the shoulder belt retractor, tighten the belt by pulling up on the shoulder belt while you push down on the child restraint. If you're using a forward-facing child restraint you may find it helpful to use your knee to push down on the child restraint as you tighten the belt.

5. Push and pull the child restraint in different directions to be sure it is secure.

To remove the child restraint, just unbuckle the vehicle's safety belt and let it go back all the way. The safety belt will move freely again and be ready to work for an adult or larger child passenger.

Downloaded from www.Manualslib.com manuals search engine

Securing a Child Restraint in the Center Seat Position (Third Row Bench Seat)

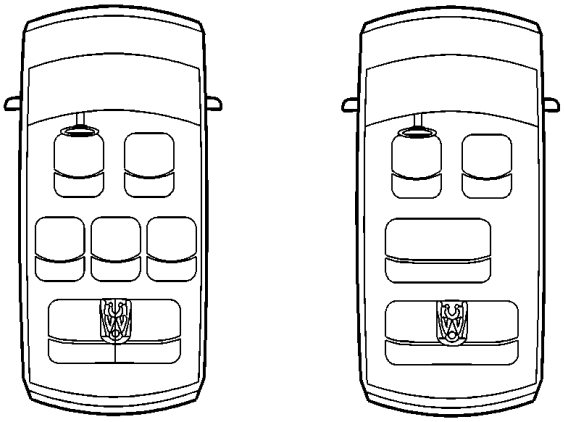

You'll be using the lap belt. Be sure to follow the instructions that came with the child restraint. Secure the child in the child restraint when and as the instructions say.

See the earlier part about the top strap if the child restraint has one.

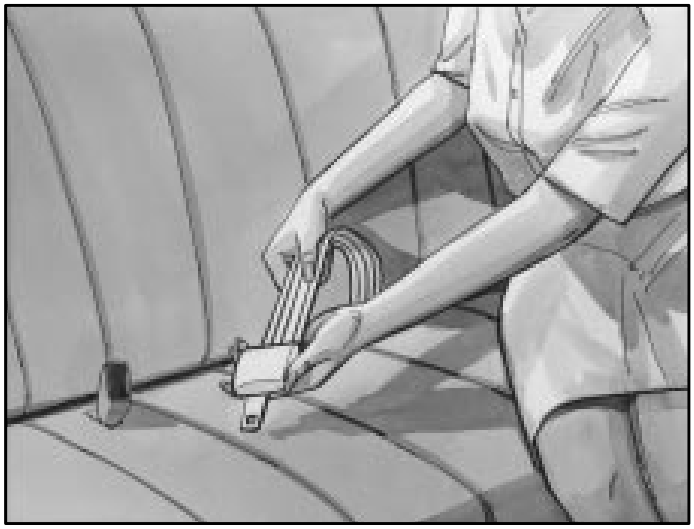

1. Make the belt as long as possible by tilting the latch plate and pulling it along the belt.
2. Put the restraint on the seat.
3. Run the vehicle's safety belt through or around the restraint. The child restraint instructions will show you how.

Downloaded from www.Manualslib.com manuals search engine

4. Buckle the belt. Make sure the release button is positioned so you would be able to unbuckle the safety belt quickly if you ever had to.

5. To tighten the belt, pull its free end while you push down on the child restraint. If you're using a forward-facing child restraint, you may find it helpful to use your knee to push down on the child restraint as you tighten the belt.

6. Push and pull the child restraint in different directions to be sure it is secure.

To remove the child restraint, just unbuckle the vehicle's safety belt. It will be ready to work for an adult or larger child passenger.

Downloaded from www.Manualslib.com manuals search engine

Securing a Child Restraint in the Center Seat Position (Bucket Seat)

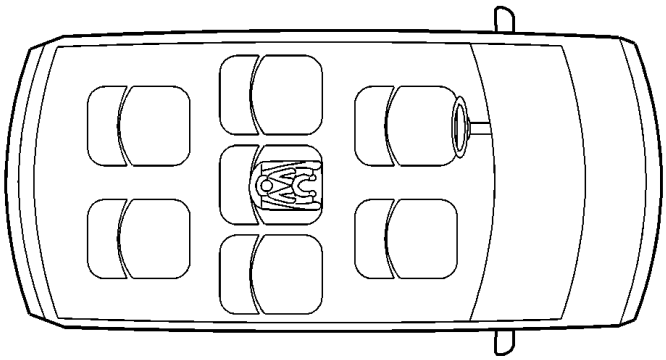

You'll be using the lap belt. See the earlier part about the top strap if the child restraint has one. Be sure to follow the instructions that came with the child restraint. Secure the child in the child restraint when and as the instructions say.

1. Put the restraint on the seat.
2. Pull the lap belt all the way out without stopping.
3. While holding it out, run the belt through or around the child restraint. The child restraint instructions will show you how.

Downloaded from www.Manualslib.com manuals search engine

4. Buckle the belt. Make sure the release button is positioned so you would be able to unbuckle the safety belt quickly if you ever had to.

5. To tighten the belt, feed it back into the retractor while you push down on the child restraint. If you're using a forward-facing child restraint, you may find it helpful to use your knee to push down on the child restraint as you tighten the belt.
6. Push and pull the child restraint in different directions to be sure it is secure.

To remove the child restraint, just unbuckle the vehicle's safety belt and let it go back all the way. The safety belt will move freely again and be ready to work for an adult or larger child passenger.

Downloaded from www.Manualslib.com manuals search engine

Securing a Child Restraint in the Right Front Seat Position

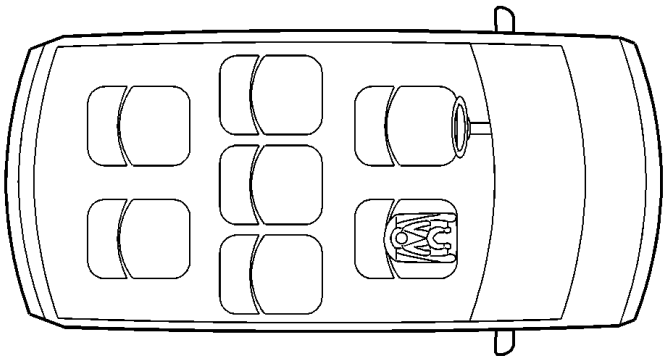

Your vehicle has a front passenger air bag. *Never* put a rear-facing child restraint in this seat. Here's why:

⚠ CAUTION:

A child in a rear-facing child restraint can be seriously injured or killed if the front passenger's air bag inflates. This is because the back of the rear-facing child restraint would be very close to the inflating air bag. Always secure a rear-facing child restraint in a rear seat.

Although a rear seat is a safer place, you can secure a forward-facing child restraint in the right front seat.

You'll be using the lap-shoulder belt. See the earlier part about the top strap if the child restraint has one. Be sure to follow the instructions that came with the child restraint. Secure the child in the child restraint when and as the instructions say.

1. Because your vehicle has a right front passenger air bag, always move the seat as far back as it will go before securing a forward-facing child restraint. See "Seats" in the Index.
2. Put the restraint on the seat.

Downloaded from www.Manualslib.com manuals search engine

3. Pick up the latch plate, and run the lap and shoulder portions of the vehicle's safety belt through or around the restraint. The child restraint instructions will show you how.

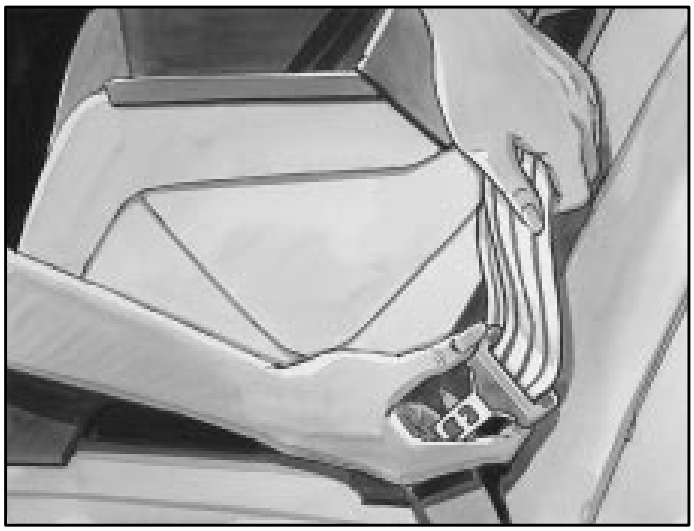

Tilt the latch plate to adjust the belt if needed.

If the shoulder belt goes in front of the child's face or neck, put it behind the child restraint.

4. Buckle the belt. Make sure the release button is positioned so you would be able to unbuckle the safety belt quickly if you ever had to.

Downloaded from www.Manualslib.com manuals search engine

5. Some vehicles have a child restraint locking feature on the shoulder belt retractor. You can tell if your vehicle has this feature by pulling the shoulder belt all the way out of the retractor. Then, let the belt go back a few inches, and try to pull the belt out again. If you can't pull the belt out because it has locked, it means the retractor has the child restraint locking feature. If the belt doesn't lock and you can pull the belt out of the retractor again, it means your vehicle doesn't have the child restraint locking feature on the shoulder belt retractor.

- If your vehicle has the child restraint locking feature on the shoulder belt retractor, pull the rest of the shoulder belt all the way out of the retractor to set the lock.

  To tighten the belt, feed the shoulder belt back into the retractor while you push down on the child restraint. You may find it helpful to use your knee to push down on the child restraint as you tighten the belt.

Downloaded from www.Manualslib.com manuals search engine

- If your vehicle doesn't have the child restraint locking feature on the shoulder belt retractor, tighten the belt by pulling up on the shoulder belt while you push down on the child restraint. You may find it helpful to use your knee to push down on the child restraint as you tighten the belt.

6. Push and pull the child restraint in different directions to be sure it is secure.

To remove the child restraint, just unbuckle the vehicle's safety belt and let it go back all the way. The safety belt will move freely again and be ready to work for an adult or larger child passenger.

Older Children

Older children who have outgrown booster seats should wear the vehicle's safety belts.

If you have the choice, a child should sit next to a window so the child can wear a lap-shoulder belt and get the additional restraint a shoulder belt can provide.

Downloaded from www.Manualslib.com manuals search engine

Q: What is the proper way to wear safety belts?

A: If possible, an older child should wear a lap-shoulder belt and get the additional restraint a shoulder belt can provide. The shoulder belt should not cross the face or neck. The lap belt should fit snugly below the hips, just touching the top of the thighs. It should never be worn over the abdomen, which could cause severe or even fatal internal injuries in a crash.

Accident statistics show that children are safer if they are restrained in the rear seat.

In a crash, children who are not buckled up can strike other people who are buckled up, or can be thrown out of the vehicle. Older children need to use safety belts properly.

⚠ CAUTION:

Never do this.

Here two children are wearing the same belt. The belt can't properly spread the impact forces. In a crash, the two children can be crushed together and seriously injured. A belt must be used by only one person at a time.

Downloaded from www.Manualslib.com manuals search engine

Q: **What if a child is wearing a lap-shoulder belt, but the child is so small that the shoulder belt is very close to the child's face or neck?**

A: Move the child toward the center of the vehicle, but be sure that the shoulder belt still is on the child's shoulder, so that in a crash the child's upper body would have the restraint that belts provide. If the child is sitting in a rear seat outside position, see "Rear Safety Belt Comfort Guides" in the Index. If the child is so small that the shoulder belt is still very close to the child's face or neck, you might want to place the child in a seat that has a lap belt, if your vehicle has one.

Downloaded from www.Manualslib.com manuals search engine

⚠ CAUTION:

Never do this.

Here a child is sitting in a seat that has a lap-shoulder belt, but the shoulder part is behind the child. If the child wears the belt in this way, in a crash the child might slide under the belt. The belt's force would then be applied right on the child's abdomen. That could cause serious or fatal injuries.

Wherever the child sits, the lap portion of the belt should be worn low and snug on the hips, just touching the child's thighs. This applies belt force to the child's pelvic bones in a crash.

Safety Belt Extender

If the vehicle's safety belt will fasten around you, you should use it.

But if a safety belt isn't long enough to fasten, your dealer will order you an extender. It's free. When you go in to order it, take the heaviest coat you will wear, so the extender will be long enough for you. The extender will be just for you, and just for the seat in your vehicle that you choose. Don't let someone else use it, and use it only for the seat it is made to fit. To wear it, just attach it to the regular safety belt.

Downloaded from www.Manualslib.com manuals search engine

Checking Your Restraint Systems

Now and then, make sure the safety belt reminder light and all your belts, buckles, latch plates, retractors and anchorages are working properly. If your vehicle has a built-in child restraint, also periodically make sure the harness straps, latch plates, buckle, clip, child head restraint and anchorages are working properly. Look for any other loose or damaged safety belt and built-in child restraint system parts. If you see anything that might keep a safety belt or built-in child restraint system from doing its job, have it repaired.

Torn or frayed safety belts may not protect you in a crash. They can rip apart under impact forces. If a belt is torn or frayed, get a new one right away.

If your vehicle has the built-in child restraint, torn or frayed harness straps can rip apart under impact forces just like torn or frayed safety belts can. They may not protect a child in a crash. If a harness strap is torn or frayed, get a new harness right away.

Also look for any opened or broken air bag covers, and have them repaired or replaced. (The air bag system does not need regular maintenance.)

Replacing Restraint System Parts After a Crash

If you've had a crash, do you need new safety belts or built-in child restraint parts?

After a very minor collision, nothing may be necessary. But if the safety belts or built-in child restraint harness straps were stretched, as they would be if worn during a more severe crash, then you need new safety belts or harness straps.

If the frontal air bags inflate, you'll also need to replace the driver's and right front passenger's safety belt buckle assembly. Be sure to do so. Then the new buckle assembly will be there to help protect you in a collision.

If safety belts or built-in child restraint harness straps are cut or damaged, replace them. Collision damage also may mean you will need to have safety belt, built-in child restraint or seat parts repaired or replaced. New parts and repairs may be necessary even if the safety belt or built-in child restraint wasn't being used at the time of the collision.

If an air bag inflates, you'll need to replace air bag system parts. See the part on the air bag system earlier in this section.

Downloaded from www.Manualslib.com manuals search engine

Section 2 Features and Controls

Here you can learn about the many standard and optional features on your vehicle, and information on starting, shifting and braking. Also explained are the instrument panel and the warning systems that tell you if everything is working properly -- and what to do if you have a problem.

2-2 Windows
2-5 Keys
2-7 Door Locks
2-10 Remote Keyless Entry System
2-16 Multifunction Alarm Locks and Lighting Choices
2-26 Dual Sliding Doors
2-28 Power Sliding Door (Option)
2-35 Liftgate
2-36 Theft
2-37 Content Theft-Deterrent
2-40 PASS-Key® III
2-42 New Vehicle “Break-In”
2-42 Ignition Positions
2-44 Starting Your Engine
2-45 Engine Coolant Heater (If Equipped)
2-47 Automatic Transaxle Operation
2-51 Parking Brake
2-52 Shifting Into PARK (P)
2-55 Shifting Out of PARK (P)
2-55 Parking Over Things That Burn
2-56 Engine Exhaust
2-56 Running Your Engine While You’re Parked
2-58 Turn Signal/Multifunction Lever
2-64 Exterior Lamps
2-66 Interior Lamps
2-72 Storage Compartments
2-84 Accessory Inflator System (Option)
2-86 Accessory Power Outlets
2-87 OnStar® System (If Equipped)
2-90 HomeLink® Transmitter (Option)
2-94 The Instrument Panel -- Your Information System
2-99 Warning Lights, Gages, Messages and Indicators
2-108 Message Center
2-115 Driver Information Center (DIC) (Option)
2-118 Rear Parking Assist (Option)

Downloaded from www.Manualslib.com manuals search engine

Windows

⚠ CAUTION:

Leaving children in a vehicle with the windows closed is dangerous. A child can be overcome by the extreme heat and can suffer permanent injuries or even death from heat stroke. Never leave a child alone in a vehicle, especially with the windows closed in warm or hot weather.

Downloaded from www.Manualslib.com manuals search engine

Power Windows

The switches on the driver's door armrest control the front windows when the ignition is in RUN, ACCESSORY or when Retained Accessory Power (RAP) is active. See "Retained Accessory Power (RAP)" in the Index. The left switch controls the driver's window. The right switch controls the passenger's window.

The driver's power window switch has two down positions. Push the switch to the first position to lower the window normally.

To raise the window, pull up the front of the switch.

Express-Down Window

To activate the express-down feature, push the switch all the way down, to the second position, then release it. The window will lower completely. To stop the window from lowering all the way, pull up the front of the switch.

Downloaded from www.Manualslib.com manuals search engine

Side Window Latches

The rear of each side window swings open.

To open, pull the latch forward to release it, then swing the window outward. Press the center of the latch to secure the window in the open position.

To close, pull the center of the latch forward and then close the latch. Press the center of the latch to secure the window in the closed position.

Power Rear Quarter Windows

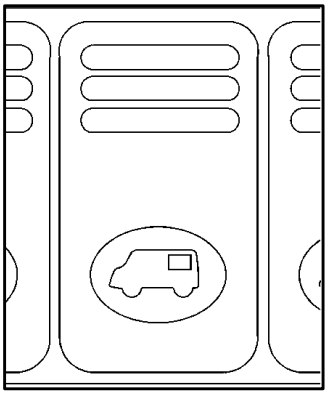

This button, located in the overhead console switchbank, is used for opening and closing the power rear quarter windows.

Press the top of the switch to open the windows; both windows will open. The windows can be opened fully or partway depending on how long the switch is pushed.

Press the bottom of the switch to close both windows. The windows can be closed fully or partway depending on how long the switch is pushed.

The ignition must be in RUN, ACCESSORY or when Retained Accessory Power (RAP) is active, to use the power rear quarter windows. See “Retained Accessory Power (RAP)” in the Index.

Downloaded from www.Manualslib.com manuals search engine

Keys

⚠ CAUTION:

Leaving children in a vehicle with the ignition key is dangerous for many reasons. A child or others could be badly injured or even killed.

They could operate the power windows or other controls or even make the vehicle move. Don't leave the keys in a vehicle with children.

Downloaded from www.Manualslib.com manuals search engine

The master key can be used for the ignition as well as all door locks, the liftgate lock and the storage compartments.

If you need a new key, contact your Pontiac dealer, who can obtain the correct key code. In an emergency, call Pontiac Roadside Assistance. See “Roadside Assistance” in the Index for more information.

Your vehicle has the PASS-Key® III vehicle theft system. The key has a transponder in the key head that matches a decoder in the vehicle’s steering column. If a replacement key or any additional key is needed, you must purchase this key from your dealer. The key will have PK3 stamped on it. Keep the bar code tag that came with the original keys. Give this tag to your dealer if you need a new key made.

Any new PASS-Key III key must be programmed before it will start your vehicle. See “PASS-Key® III” in the Index for more information on programming your new key.

NOTICE:

Your vehicle has a number of new features that can help prevent theft. But you can have a lot of trouble getting into your vehicle if you ever lock your key inside. You may even have to damage your vehicle to get in. So be sure you have an extra key.

Downloaded from www.Manualslib.com manuals search engine

Door Locks

⚠ CAUTION:

Unlocked doors can be dangerous.

- **Passengers -- especially children -- can easily open the doors and fall out of a moving vehicle. When a door is locked, the handle won't open it. You increase the chance of being thrown out of the vehicle in a crash if the doors aren't locked. So, wear safety belts properly and lock the doors whenever you drive.**
- **Young children who get into unlocked vehicles may be unable to get out. A child can be overcome by extreme heat and can suffer permanent injuries or even death from heat stroke. Always lock your vehicle whenever you leave it.**
- **Outsiders can easily enter through an unlocked door when you slow down or stop your vehicle. Locking your doors can help prevent this from happening.**

There are several ways to lock and unlock your vehicle.

From the outside, use your key or the remote keyless entry transmitter.

To unlock either front door from the outside with the key, insert the key and turn it toward the front of the vehicle.

You can lock either front door from the outside with your key by inserting and turning it toward the rear of the vehicle.

To lock either front door from the inside, push the manual lever forward.

To unlock either front door from the inside, pull back on the manual lever.

Downloaded from www.Manualslib.com manuals search engine

Power Door Locks

From the inside, press the front of the power door lock switch (on either front door) to unlock all doors and the liftgate. With the content theft-deterrent system, the power door lock switch will not unlock the doors until the system is disarmed. See “Content Theft-Deterrent” in the Index for more details.

You can lock all doors and the liftgate from the inside by pressing the rear of the power lock switch on either front door. With the content theft-deterrent system, the power door lock switch may cause the system to arm. See “Content Theft-Deterrent” in the Index for more details.

To unlock any door or the liftgate from the outside with your key, turn the key toward the front of the vehicle and release it. This will only unlock that door or the liftgate. To unlock all the doors and the liftgate at once, insert the key into the key cylinder, then turn it toward the front of the vehicle and hold it for one second.

With power door locks, you can lock all the doors from the outside by inserting the key and turning the key toward the rear of the vehicle.

Also, when the doors are locked with the power door locks, the inside as well as the outside door handle cannot open the doors. This safety feature prevents a door from being accidentally opened from the inside by moving the handle.

To override this safety feature, unlock the door you want to open.

When the liftgate has been unlocked with the power door locks, you won’t need the key to open it. Simply squeeze the handle located above the license plate. This is also true if you use the remote keyless entry transmitter. See “Remote Keyless Entry System” later in this section.

Downloaded from www.Manualslib.com manuals search engine

Last Door Closed Locking

The last door closed locking feature makes it easier to use your power door locks to lock all the doors and the liftgate when leaving your vehicle.

The first time you attempt to lock the doors using the power lock switch or the remote keyless entry transmitter, three chimes will signal that last door closed locking is being used when any door or the liftgate is open. All doors and the liftgate can be re-opened for up to five seconds from the time the last door is closed.

Five seconds after the last door is closed, all the doors will lock. You can lock the doors immediately using the power door lock switch or the remote keyless entry transmitter a second time.

If the ignition is in RUN or ACCESSORY, this feature will not lock the doors.

To turn the last door closed locking feature off or on, see “Multifunction Alarm Locks and Lighting Choices” in the Index.

Automatic Door Locks

All of the doors will lock automatically when you move your shift lever out of PARK (P). All doors will unlock automatically when the ignition is turned off while the shift lever is in PARK (P).

If someone needs to get out while you’re not in PARK (P), have that person use the manual lever or the power door lock switch. When the door is closed again, it will not lock automatically. Use the manual lever or the power door lock switch to lock the door.

To change the way automatic door locks operate, see “Multifunction Alarm Locks and Lighting Choices” in the Index.

With the automatic door locks feature, you can lock or unlock the doors at any time, either manually or using the power door lock switches.

Sliding Door Delayed Locking

If either sliding door is open when you use the power door locks to lock the vehicle, the sliding door that is open will not lock. Normally the last door closed locking feature will be used to lock the sliding door after it has been closed.

When the ignition is on or if the last door closed locking feature has been overridden or programmed to be off, the sliding door delayed locking feature will lock your sliding door for you. Three seconds after a sliding door is closed, all the doors will lock.

Downloaded from www.Manualslib.com manuals search engine

Lockout Deterrent

The lockout deterrent feature makes it difficult for you to lock your keys in your vehicle. If the driver's door is open while the keys are in the ignition, a chime will sound and you will not be able to use your power door lock switch to lock the vehicle.

If you don't leave the keys in the ignition or if you use the manual door lock, you could still lock your keys in your vehicle. Always remember to take your keys with you.

To turn this feature off or on, see "Multifunction Alarm Locks and Lighting Choices" in the Index.

Leaving Your Vehicle

If you are leaving the vehicle, take your keys, open your door and set the locks from the inside. Then get out and close the door.

Remote Keyless Entry System

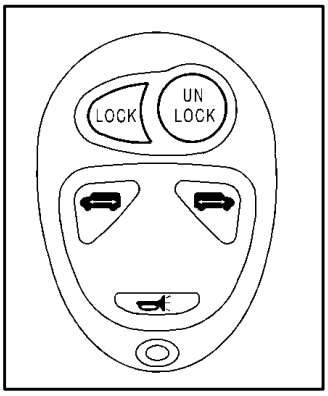

You can lock and unlock your doors and the liftgate from about 3 feet (1 m) up to 30 feet (9 m) away using the remote keyless entry transmitter supplied with your vehicle.

Your remote keyless entry system operates on a radio frequency subject to Federal Communications Commission (FCC) Rules and with Industry Canada.

This device complies with Part 15 of the FCC Rules. Operation is subject to the following two conditions: (1) this device may not cause harmful interference, and (2) this device must accept any interference received, including interference that may cause undesired operation.

Downloaded from www.Manualslib.com manuals search engine

This device complies with RSS-210 of Industry Canada. Operation is subject to the following two conditions: (1) this device may not cause interference, and (2) this device must accept any interference received, including interference that may cause undesired operation of the device.

Changes or modifications to this system by other than an authorized service facility could void authorization to use this equipment.

At times you may notice a decrease in range. This is normal for any remote keyless entry system. If the transmitter does not work or if you have to stand closer to your vehicle for the transmitter to work, try this:

- Check the distance. You may be too far from your vehicle. You may need to stand closer during rainy or snowy weather.
- Check the location. Other vehicles or objects may be blocking the signal. Take a few steps to the left or right, hold the transmitter higher, and try again.
- Check to determine if battery replacement is necessary. See the instructions that follow.
- If you're still having trouble, see your dealer or a qualified technician for service.

Operation

Remote Driver's Door and All Door Unlock

When you press UNLOCK on the remote keyless entry transmitter, only the driver's door will unlock. If you press UNLOCK again within five seconds, all the doors and the liftgate will unlock. If you would like all the doors to unlock the first time you press UNLOCK, see "Multifunction Alarm Locks and Lighting Choices" in the Index.

With the content theft-deterrent system, the UNLOCK button on the remote keyless entry transmitter will disarm the system. See "Content Theft-Deterrent" in the Index for more details.

Remote All Door Lock

To lock all doors, press LOCK on the remote keyless entry transmitter. See "Power Door Locks" in the Index for more details on the power door lock features. With the content theft-deterrent system, the LOCK button may arm the system. See "Content Theft-Deterrent" in the Index for more details.

Downloaded from www.Manualslib.com manuals search engine

Remote Lock Confirmation

With the content theft-deterrent system, your remote keyless entry transmitter will have this feature.

When you use the remote keyless entry transmitter to lock your vehicle, the parking lamps will flash to let you know the command has been received. If you press the LOCK button again, within five seconds, the horn will sound and the parking lamps will flash to let you know the vehicle is already locked.

If you would like to change the way the parking lamps and horn operate with remote lock confirmation, see “Multifunction Alarm Locks and Lighting Choices” in the Index.

Remote Unlock Confirmation

With the content theft-deterrent system, your remote keyless entry transmitter will have this feature.

When you use your remote keyless entry transmitter to unlock your vehicle or to operate the optional power sliding door(s), the parking lamps will flash to let you know the command was received.

If you would like to change the way the parking lamps operate with remote unlock confirmation, see “Multifunction Alarm Locks and Lighting Choices” in the Index.

Remote Alarm

When you press the horn button on the remote keyless entry transmitter, the parking lamps will flash and the horn will sound. This will allow you to attract attention, if needed.

Press the horn button again to stop the alarm from sounding.

Remote Power Sliding Door Operation (Option)

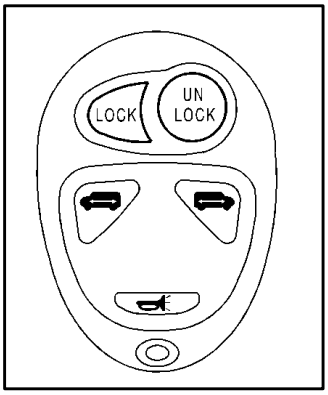

If your vehicle has the optional power sliding door, your remote keyless entry transmitter will have a button that has a van symbol on it. Press it to open or close the sliding door. See “Power Sliding Door” later in this section.

Downloaded from www.Manualslib.com manuals search engine

If your vehicle has the optional dual power sliding doors your remote keyless entry transmitter will have two buttons that have a van symbol on it. The van symbol on the left is for the driver's side sliding door and the van symbol on the right is for the passenger's side sliding door. See "Power Sliding Door" later in this section.

If the power sliding door(s) is locked, first unlock all doors, then press the van symbol to open the power sliding door(s). Press the van symbol again to close the sliding door(s). See "Remote Driver's Door and All Door Unlock" earlier in this section and "Power Sliding Door" later in this section.

You can operate the power sliding door(s) with the remote keyless entry transmitter only when the power sliding door override switch(es) on the overhead console is turned off. See "Power Sliding Door" later in this section.

If your vehicle's fuel filler door is opened, the driver's side power sliding door will not open completely. Do not try to force the door. Once the fuel filler door is closed, the driver's side sliding door can be opened normally.

Matching Transmitter(s) to Your Vehicle

Each remote keyless entry transmitter is coded to prevent another transmitter from unlocking your vehicle. If a transmitter is lost or stolen, a replacement can be purchased through your dealer. Remember to bring any remaining transmitters with you when you go to your dealer. When the dealer matches the replacement transmitter to your vehicle, any remaining transmitters must also be matched. Once your dealer has coded the new transmitter, the lost transmitter will not unlock your vehicle. Each vehicle can have only four transmitters matched to it.

See your dealer to match transmitters to another vehicle.

Downloaded from www.Manualslib.com manuals search engine

Battery Replacement

Under normal use, the battery in your remote keyless entry transmitter should last about three years.

You can tell the battery is weak if the transmitter won't work at the normal range in any location. If you have to get close to your vehicle before the transmitter works, it's probably time to change the battery.

Replacing the Battery in the Remote Transmitter

> **NOTICE:**
>
> **When replacing the battery, use care not to touch any of the circuitry. Static from your body transferred to these surfaces may damage the transmitter.**

1. Insert a flat object like a coin into the slot on the side of the transmitter and twist it to separate the halves.

2. Gently pry the battery out of the transmitter. Do not use the metal flanges to "pop out" the battery.
3. Replace the battery.
4. Reassemble the transmitter. Make sure the halves are snapped together tightly so water will not get in.
5. Check the transmitter operation.

Downloaded from www.Manualslib.com manuals search engine

Switchbanks

There are two sets of switchbanks located in the front of the vehicle. The switches will vary with the options that are on your vehicle. It is useful to become familiar with them since they are used frequently while operating the vehicle.

Overhead Console Switchbank

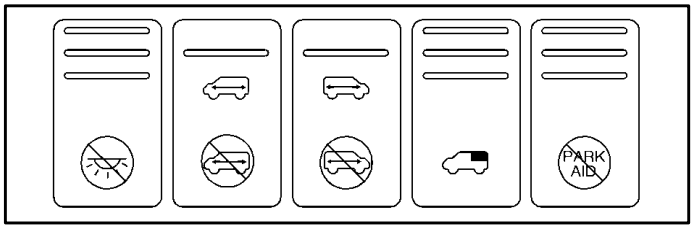

This switchbank is located in the overhead console. The switchbank may include the interior lamps override, the power sliding door, the power sliding door override, the power rear quarter windows and the rear parking aid disable. If your vehicle has the optional dual power sliding doors, the switchbank will have both power sliding door switches. The power sliding door override switches will be integrated on the power sliding door switches. If your vehicle does not have some of the options controlled by these switches, there will be a blank switch in its place.

For more information, see each of these features in the Index.

Instrument Panel Switchbank

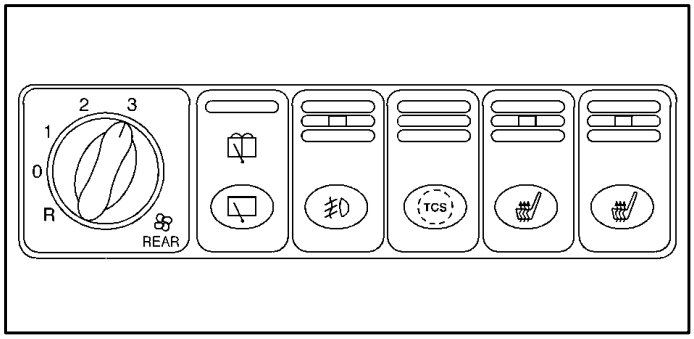

This switchbank is located in the instrument panel below the comfort controls. The switchbank may include the rear fan knob, the rear window wiper/washer, the fog lamps, the traction control and the heated seats. If your vehicle does not have some of the options controlled by these switches, there will be a blank switch in its place.

For more information, see each of these features in the Index.

If your vehicle is not equipped with the optional rear climate control system, there will be a storage space in this switchbank. The rubber mat can be removed for cleaning. Snap the mat into place after cleaning.

Downloaded from www.Manualslib.com manuals search engine

Multifunction Alarm Locks and Lighting Choices

Your vehicle's locks and lighting systems can be programmed with several different features. The features you can program depend on the options that came with your vehicle. The following chart shows the features that can be programmed.
To determine which features your vehicle is equipped with, follow the steps listed for entering the programming mode.

Feature							
Number of Chimes Sounded	Delayed Illumina – tion/ Exit Lighting	Automatic Door Locks	Last Door Closed Locking/ Lockout Deterrent	Remote Driver's Door Unlock Control	Remote Lock/ Unlock Confirma – tion	Content Theft	Content Theft Arming/ Disarming
2	X	X	X				
3	X	X	X	X			
4	X	X	X	X	X	X	X

Downloaded from www.Manualslib.com manuals search engine

Entering Programming Mode

To program features, your vehicle must be in the programming mode. Follow these steps:

1. The content theft-deterrent system must be disarmed. See “Content Theft-Deterrent System” in this section.
2. Remove fuse 47 from the instrument panel fuse block, located to the right of the glove box. See “Fuses and Circuit Breakers” in the Index.
3. Close the driver’s door.
4. Turn the ignition key towards you to ACCESSORY.
5. Count the number of chimes you hear. You will hear two to four chimes depending on the features your vehicle is equipped with. Refer to the chart shown previously.

You can now program your choices.

To exit the programming mode, follow the steps listed under “Exiting Programming Mode” later in this section.

Delayed Illumination and Exit Lighting

With delayed illumination, the interior lamps will stay on for about 25 seconds after all the doors and the liftgate are closed.

With exit lighting, the interior lamps will come on and stay on for about 25 seconds whenever you remove the key from the ignition.

Programmable Modes

Mode 1: Both Features Off (The interior lamps will turn on or off at the same instant that a door is opened or closed.)

Mode 2: Delayed Illumination Only (The interior lamps will stay on for about 25 seconds after all the doors and liftgate are closed, or until you lock the doors.)

Mode 3: Exit Lighting Only (The interior lamps will come on whenever you remove the key from the ignition and stay on for about 25 seconds, or until you lock the doors.)

Mode 4: Both Features On (This combines Modes 2 and 3.)

Downloaded from www.Manualslib.com manuals search engine

When your vehicle was shipped from the factory, it was programmed in Mode 4. The mode to which the vehicle has been programmed may have been changed since it left the factory. To determine the mode to which your vehicle is programmed or to program your vehicle to a different mode, do the following:

1. Follow the instructions for “Entering Programming Mode” listed previously.
2. Turn the interior lamps on by turning the instrument panel brightness control all the way up.
3. Count the number of chimes you hear. The number of chimes indicates the vehicle’s current programmed mode. (If you do not wish to change the current mode, you can either exit the programming mode by following the instructions later in this section or program the next feature available on your vehicle.)
4. Turn the interior lamps off to change the current mode.
5. Turn the interior lamps from on to off until you hear the number of chimes corresponding to the mode selection you want.

The mode you selected is now set. You can either exit the programming mode by following the instructions later in this section or program the next feature available on your vehicle.

Automatic Door Locks

With automatic door locks, all doors will automatically lock when you shift out of PARK (P) and automatically unlock when the ignition is turned to OFF.

Programmable Modes

Mode 1: Both Features Off (Automatic door locking and unlocking is disabled. You will always need to lock your doors manually before driving to increase occupant safety.)

Mode 2: Automatic Door Locking Only

- The automatic door unlock feature is turned off.
- Shift out of PARK (P) with the ignition on and the driver’s door closed; all doors will lock automatically.

Mode 3: Automatic Unlocking with the Ignition Off

- Turn off the ignition with the transaxle in PARK (P); all doors will unlock automatically.
- Shift out of PARK (P) with the ignition on and the driver’s door closed; all doors will lock automatically.

Downloaded from www.Manualslib.com manuals search engine

Mode 4: Automatic Unlocking with Transaxle in PARK (P)

- Shift into PARK (P) with the ignition on; all doors will unlock automatically.
- Shift out of PARK (P) with the ignition on and the driver's door closed; all doors will lock automatically.

When your vehicle was shipped from the factory, it was programmed in Mode 3. The mode to which the vehicle has been programmed may have been changed since it left the factory. To determine the mode to which your vehicle is programmed or to program your vehicle to a different mode, do the following:

1. Follow the instructions for "Entering Programming Mode" listed previously.
2. Press LOCK on the power door lock switch.
3. Count the number of chimes you hear. The number of chimes indicates the vehicle's current programmed mode. (If you do not wish to change the current mode, you can either exit the programming mode by following the instructions later in this section or program the next feature available on your vehicle.)
4. Press LOCK to change the current mode.
5. Press LOCK until you hear the number of chimes corresponding to the mode selection you want.

The mode you selected is now set. You can either exit the programming mode by following the instructions later in this section or program the next feature available on your vehicle.

Last Door Closed Locking and Lockout Prevention

With the last door closed locking and lockout prevention features, your vehicle will do the following:

- If you leave your key in the ignition and leave the driver's door open, you won't be able to lock the doors using the power door lock switch.
- When you press LOCK on the power door lock switch or the remote keyless entry transmitter while any door or the liftgate is open, the doors will not lock. Instead you will hear three chimes, that will let you know that the last door closed locking feature is in operation. Five seconds after all the doors and the liftgate are closed, all the doors and the liftgate will automatically lock.

Downloaded from www.Manualslib.com manuals search engine

Programmable Modes

Mode 1: Both Features Off (Doors will always lock immediately when you press LOCK on the power door lock switch or the remote keyless entry transmitter.)

Mode 2: Lockout Deterrent Only (If you leave your key in the ignition with the driver's door open, you won't be able to lock the doors with the power door locks.)

Mode 3: Last Door Closed Locking Only (If the power door lock switch or the remote keyless entry transmitter is used to lock the vehicle while any door or the liftgate is open, you will hear three chimes. The doors will not lock. Five seconds after the last door is closed, all doors and the liftgate will lock.)

Mode 4: Both Features On (This combines Modes 2 and 3.)

When your vehicle was shipped from the factory, it was programmed in Mode 4. The mode to which the vehicle has been programmed may have been changed since it left the factory.

To determine the mode to which your vehicle is programmed or to program your vehicle to a different mode, do the following:

1. Follow the instructions for "Entering Programming Mode" listed previously.
2. Press UNLOCK on the power door lock switch.
3. Count the number of chimes you hear. The number of chimes indicates the vehicle's current programmed mode. (If you do not wish to change the current mode, you can either exit the programming mode by following the instructions later in this section or program the next feature available on your vehicle.)
4. Press UNLOCK to change the current mode.
5. Press UNLOCK until you hear the number of chimes corresponding to the mode selection you want.

The mode you selected is now set. You can either exit the programming mode by following the instructions later in this section or program the next feature available on your vehicle.

Downloaded from www.Manualslib.com manuals search engine

Remote Driver's Unlock Control

With the remote driver's unlock control feature, you can program your vehicle to do the following:

- When you press UNLOCK on your remote keyless entry transmitter, the driver's door will unlock, and
- when you press UNLOCK on your remote keyless entry transmitter again within five seconds, all doors and the liftgate will unlock.

Programmable Modes

Mode 1: Remote All Doors Unlock (When you press UNLOCK on your remote keyless entry transmitter, all doors and the liftgate will unlock.)

Mode 2: Remote Driver's Door Unlock Only (When you press UNLOCK on your remote keyless entry transmitter once, the driver's door will unlock. When you press UNLOCK on your remote keyless entry transmitter again within five seconds, all doors and the liftgate will unlock.)

When your vehicle was shipped from the factory, it was programmed in Mode 2. The mode to which the vehicle has been programmed may have been changed since it left the factory.

To determine the mode to which your vehicle is programmed or to program your vehicle to a different mode, do the following:

1. Follow the instructions for "Entering Programming Mode" listed previously.
2. Press UNLOCK on the remote keyless entry transmitter.
3. Count the number of chimes you hear. The number of chimes indicates the vehicle's current programmed mode. (If you do not wish to change the current mode, you can either exit the programming mode by following the instructions later in this section or program the next feature available on your vehicle.)
4. Press UNLOCK to change the current mode.
5. Press UNLOCK until you hear the number of chimes corresponding to the mode selection you want.

The mode you selected is now set. You can either exit the programming mode by following the instructions later in this section or program the next feature available on your vehicle.

Downloaded from www.Manualslib.com manuals search engine

Remote Lock and Unlock Confirmation

With the remote lock and unlock confirmation feature, your vehicle can do the following:

- When you use the remote keyless entry transmitter to lock your vehicle, your parking lamps will flash to let you know the command has been received. If you press LOCK on the remote keyless entry transmitter again, the horn will sound and the parking lamps will flash to let you know your vehicle is locked, and
- when you use the remote keyless entry transmitter to unlock your vehicle or operate your optional power sliding door(s), your parking lamps will flash.

Programmable Modes

Mode 1: Both Features Off (Remote lock and unlock confirmation are disabled.)

Mode 2: Exterior Lamps Flash Only

- When you use the remote keyless entry transmitter to lock your vehicle, your parking lamps will flash to let you know the command has been received.
- When you use the remote keyless entry transmitter to unlock your vehicle or operate your optional power sliding door(s), your parking lamps will flash to let you know the command has been received.

Mode 3: Exterior Lamps Flash and Horn Sound

- When you use the remote keyless entry transmitter to lock your vehicle, the horn will sound and your parking lamps will flash to let you know the command has been received.
- When you use the remote keyless entry transmitter to unlock your vehicle or operate your optional power sliding door(s), your parking lamps will flash to let you know the command has been received.

Mode 4: Exterior Lamps Flash and Horn Sound (on second LOCK Press)

- When you use the remote keyless entry transmitter to lock your vehicle, your parking lamps will flash to let you know the command has been received. The horn will sound and your parking lamps will flash if you press the LOCK button again within five seconds.
- When you use the remote keyless entry transmitter to unlock your vehicle or operate your optional power sliding door(s), your parking lamps will flash to let you know the command has been received.

Downloaded from www.Manualslib.com manuals search engine

When your vehicle was shipped from the factory, it was programmed in Mode 4. The mode to which the vehicle has been programmed may have been changed since it left the factory. To determine the mode to which your vehicle is programmed or to program your vehicle to a different mode, do the following:

1. Follow the instructions for “Entering Programming Mode” listed previously.
2. Press LOCK on the remote keyless entry transmitter.
3. Count the number of chimes you hear. The number of chimes indicates the vehicle’s current programmed mode. (If you do not wish to change the current mode, you can either exit the programming mode by following the instructions later in this section or program the next feature available on your vehicle.)
4. Press LOCK to change the current mode.
5. Press LOCK until you hear the number of chimes corresponding to the mode selection you want.

The mode you selected is now set. You can either exit the programming mode by following the instructions later in this section or program the next feature available on your vehicle.

Content Theft-Deterrent System

With the content theft-deterrent system, if anyone damages or enters your vehicle while the system is armed, the horn will sound and your parking lamps will flash for two minutes. The content theft shock sensor detects if anyone damages your vehicle. The shock sensors sensitivity can be adjusted, by your Pontiac dealer, if more or less sensitivity is desired.

Programmable Modes

Mode 1: Damage Detection with Reduced Sensitivity (If anyone seriously damages your vehicle or opens a door or the liftgate while your content theft-deterrent system is armed, an alarm will sound and your parking lamps will flash for up to two minutes.)

Mode 2: Damage Detection Off (If anyone opens a door or the liftgate while your content theft-deterrent system is armed, an alarm will sound and your parking lamps will flash for up to two minutes.)

Mode 3: Feature Off (Your content theft-deterrent system is always disarmed.)

Mode 4: Damage Detection with Normal Sensitivity (If anyone damages or enters your vehicle while your content theft-deterrent system is armed, an alarm will sound and your parking lamps will flash for up to two minutes.)

Downloaded from www.Manualslib.com manuals search engine

When your vehicle was shipped from the factory, it was programmed in Mode 4. The mode to which the vehicle has been programmed may have been changed since it left the factory. To determine the mode to which your vehicle is programmed or to program your vehicle to a different mode, do the following:

1. Follow the instructions for “Entering Programming Mode” listed previously.
2. Turn the parking lamps on, then off.
3. Count the number of chimes you hear. The number of chimes indicates the vehicle’s current programmed mode. (If you do not wish to change the current mode, you can either exit the programming mode by following the instructions later in this section or program the next feature available on your vehicle.)
4. Turn the parking lamps on, then off to change the current mode.
5. Turn the parking lamps on, then off until you hear the number of chimes corresponding to the mode selection you want.

The mode you selected is now set. You can either exit the programming mode by following the instructions later in this section or program the next feature available on your vehicle.

Arming and Disarming the Content Theft-Deterrent System

To arm and disarm the content theft-deterrent system, the system must be turned on by using Modes 1, 2 or 4 listed previously in this section under “Content Theft-Deterrent System.”

With the arming and disarming feature, you can program the vehicle to do the following:

- Arm the system when you lock the doors using either power door lock switch while any door or the liftgate is open and the key is removed from the ignition.
- Arm the system when you lock the doors with your key or remote keyless entry transmitter and the key is removed from the ignition.
- Disarm the system when you unlock the doors with your key or remote keyless entry transmitter.

Programmable Modes

Mode 1: Power Door Lock Switch Arming Off

- The system will arm when you lock the doors with your key or remote keyless entry transmitter. The key must be removed from the ignition when you lock the doors or the content theft-deterrent system will not arm.

Downloaded from www.Manualslib.com manuals search engine

- The system will disarm when you unlock the doors with your key or remote keyless entry transmitter.

Mode 2: Remote Keyless Entry Transmitter Arm/Disarm Only

- The system will arm when you lock the doors with your remote keyless entry transmitter. The key must be removed from the ignition when you lock the doors or the content theft-deterrent system will not arm.
- The system will disarm when you unlock the doors with your remote keyless entry transmitter.

While this mode provides increased security, it can be a problem if your remote keyless entry transmitter is damaged, lost or if it fails to operate for any reason while the content theft-deterrent system is armed. The content theft-deterrent system must be disarmed for the engine to run while in Mode 2; your key can no longer disarm the system.

If your vehicle is equipped with the OnStar® system, OnStar will not be able to remotely unlock your vehicle if it has been programmed to Mode 2.

Mode 3: Standard Arming and Disarming

- The system will arm when you lock the doors using either power door lock switch while any door or the liftgate is open and the key is removed from the ignition.
- The system will arm when you lock the doors with your key or remote keyless entry transmitter and the key is removed from the ignition.
- The system will disarm when you unlock the doors with your key or remote keyless entry transmitter.

When your vehicle was shipped from the factory, it was programmed in Mode 1. The mode to which the vehicle has been programmed may have been changed since it left the factory. To determine the mode to which your vehicle is programmed or to program your vehicle to a different mode, do the following:

1. Follow the instructions for “Entering Programming Mode” listed previously.
2. Insert your spare key fully into any door key cylinder and turn it to the unlock position.

   This step is necessary to prevent accidental programming of this feature to Mode 2. Do not program this feature to Mode 2 without first reading Mode 2 entirely. The door key cylinder must remain in the unlock position during Steps 2 through 4.

Downloaded from www.Manualslib.com manuals search engine

3. Press the horn symbol on the remote keyless entry transmitter.
4. Count the number of chimes you hear. The number of chimes indicates the vehicle's current programmed mode. (If you do not wish to change the current mode, you can either exit the programming mode by following the instructions later in this section or program the next feature available on your vehicle.)
5. Press the horn symbol to change the current mode.
6. Press the horn symbol until you hear the number of chimes corresponding to the mode selection you want.
7. Remove your key from the door key cylinder.

The mode you selected is now set. You can either exit the programming mode by following the instructions next in this section or program the next feature available on your vehicle.

Exiting Programming Mode

To exit programming mode, turn the key from ACCESSORY to OFF and put fuse 47 back into the instrument panel fuse block.

After programming a feature, you can exit the programming mode at anytime. Also, if your vehicle is equipped with the content theft-deterrent system, remember to arm the system before exiting.

Dual Sliding Doors

To open either sliding door from outside the vehicle, pull the handle out and then pull the door toward the rear. If you slide the door all the way back, the door will rest in a detent position. The door must overcome this detent when closing.

To move the door forward, you must first pull the door past the open detent position.

The driver's side sliding door is designed to open only a little if the fuel door is open. If this ever happens, don't try to force the sliding door. Just close the driver's side sliding door. Then when the fuel filler door is closed, the driver's side sliding door can be opened normally.

Downloaded from www.Manualslib.com manuals search engine

Sliding Door Lock

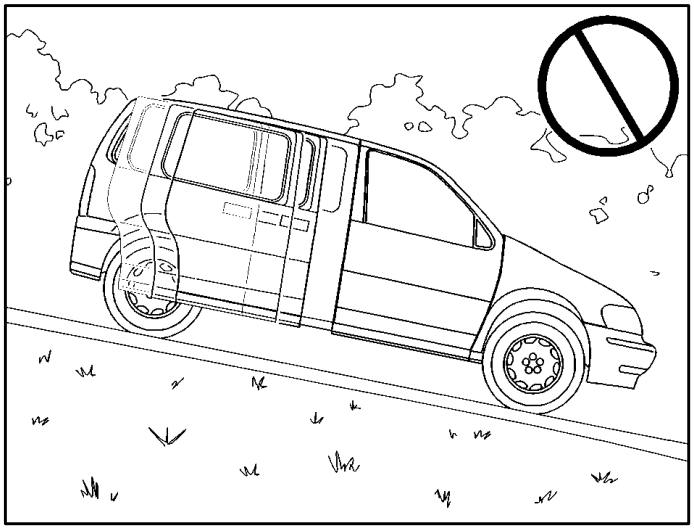

⚠ CAUTION:

If your vehicle is facing downward on a steep grade (15 percent or more), the door may not stay open and could slam shut, possibly injuring someone. To make sure the door does not slam shut, be sure to hold it open until everyone is clear of the door, and only then allow it to slowly close.

Downloaded from www.Manualslib.com manuals search engine

Lock either sliding door from inside the vehicle by moving the manual lever down. Unlock it by moving the lever up.

With the power door locks, the sliding door lock has a delay feature. See “Power Door Locks” and “Multifunction Alarm Locks and Lighting Choices” in the Index.

Power Sliding Door (Option)

With this option, you can open and close the sliding door(s) using the switches inside of your vehicle. You can also operate the power sliding door(s) with your remote keyless entry transmitter. See “Remote Keyless Entry System” in the Index.

⚠ CAUTION:

Leaving young children or pets unattended in your vehicle can be dangerous. They could operate the power sliding door. A child or others could be injured. Do not leave children or pets unattended in your vehicle.

To help avoid accidental operation of the sliding door(s), turn the power to the sliding door off by pushing the bottom of the power sliding door override switch. If you have the optional dual power sliding doors, push the bottom of both power sliding door switches to turn off the power to both sliding doors.

Downloaded from www.Manualslib.com manuals search engine

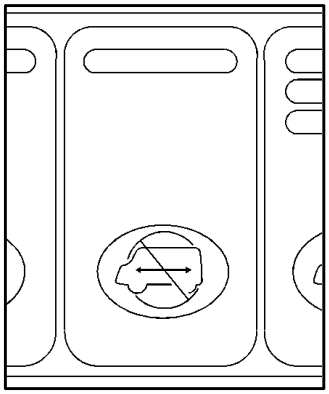

If you have the optional power sliding door, this switch is located in the overhead console switchbank.

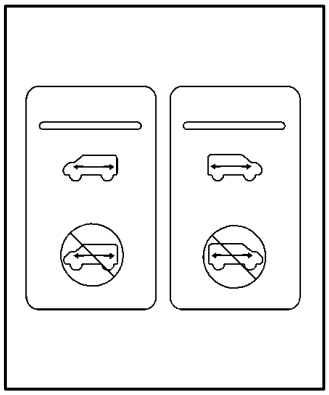

These switches are located in the overhead console switchbank, if you have the optional dual power sliding doors.

The power sliding door and the power sliding door override is one switch. The left switch is for the driver's side sliding door and the right switch is for the passenger's side sliding door.

Pushing the bottom of the switch(es) turns the power to the sliding door(s) off. When the power to the sliding door(s) is off, you will not be able to open the door(s) in the following ways:

- When using the power sliding door switch(es) located on the overhead console switchbank,
- when using the wall-mounted switch in front of the driver's or the passenger's sliding door, or
- when using the remote keyless entry transmitter.

NOTICE:

When your vehicle goes through an automatic car wash, be sure the power sliding door is turned off. If it isn't, the power sliding door may open accidentally.

Downloaded from www.Manualslib.com manuals search engine

To open or close the sliding door(s), press and release one of the following power door switches.

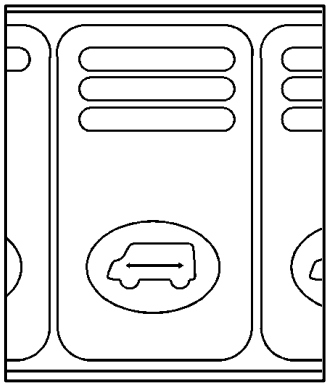

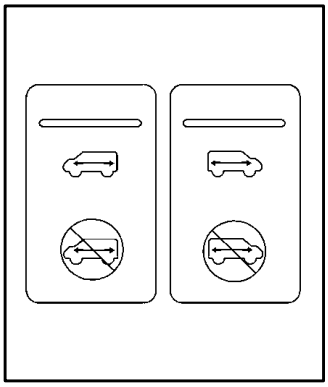

This switch(es) is located in the overhead console switchbank.

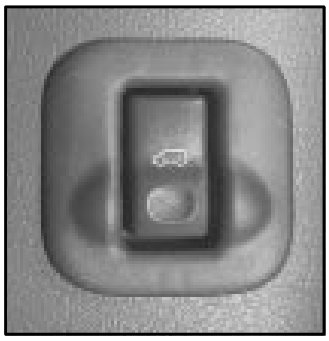

This switch is mounted on the wall, in front of the driver's or the passenger's side sliding door.

The power sliding door override switch(es) will also stop the door(s) immediately, while the door(s) is opening or closing, when the override switch(es) is turned on.

The power sliding door(s) will only open if the transaxle is in PARK (P). The transaxle does not have to be in PARK (P) to close the door(s).

If the power sliding door(s) is open or in the process of closing when you shift out of PARK (P), a buzzer will sound. This is a warning that the sliding door(s) is not completely closed.

If the power to the sliding door(s) is turned off, the buzzer will not sound indicating the door(s) is not completely closed.

⚠ CAUTION:

If you shift the transaxle out of PARK (P) and accelerate before the power sliding door latches closed, the door may reverse to the open position. A child or others could fall out of the vehicle and be injured. Always make sure the power sliding door is closed and latched before you drive away.

Downloaded from www.Manualslib.com manuals search engine

If anything obstructs the power sliding door(s) while it is closing, the door will automatically reverse to the open position, provided it meets sufficient resistance. Resistance must be as strong as the force of the closing door, or stronger. The force of the closing door increases significantly as the door approaches the latched position.

The driver's side sliding door is designed to open only a little if the fuel door is open. If this ever happens, don't try to force the sliding door. When the fuel filler door is closed, the driver's side sliding door can be opened normally.

⚠ CAUTION:

You or others could be injured if caught in the path of the sliding door. Make sure the door path is clear before closing the door.

If you want to open the power sliding door(s) when the override switch(es) is turned off, pull the inside or outside handle and let go. The door will open fully.

To open the power sliding door(s) when the power sliding door override switch(es) is on, pull the inside or outside handle and slide the door all the way back.

Downloaded from www.Manualslib.com manuals search engine

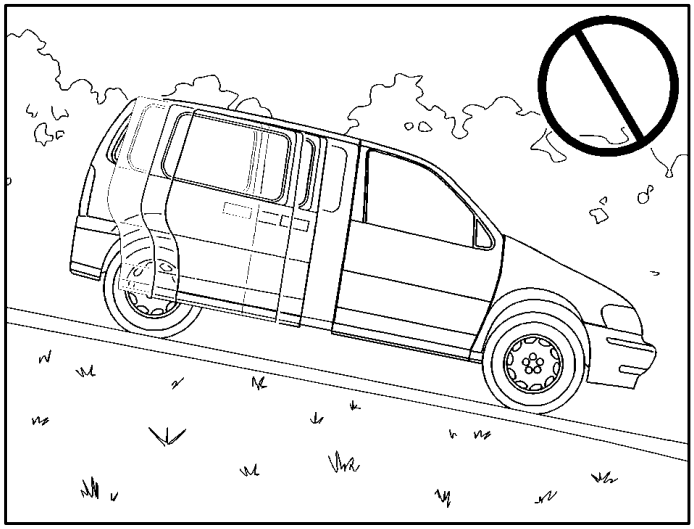

⚠ CAUTION:

If your vehicle is facing downward on a steep grade (15 percent or more), the door may not stay open and could slam shut, possibly injuring someone. To make sure the door does not slam shut, turn on the power sliding door feature. Then if the door closes, it will close under the control of the power door system.

If you want to close the power sliding door(s) when the override switch(es) is turned off, pull the inside or outside handle or the edge of the door. Move the door about 4 inches (10 cm) toward the closed position and release it. The door will close completely and latch for you.

To close the power sliding door(s) when the override switch(es) is turned on, pull the inside or outside handle and slide the door all the way forward to the latched position.

Downloaded from www.Manualslib.com manuals search engine

Sliding Door Security Lock

Your vehicle is equipped with a sliding door security lock that helps prevent young children or other passengers from opening the sliding door(s) using the inside door handle.

The security lock lever is located on the inside of the sliding door(s), on the front edge of the door. To access the lever, open the sliding door. Use the security lock label on the edge of the door as a guide.

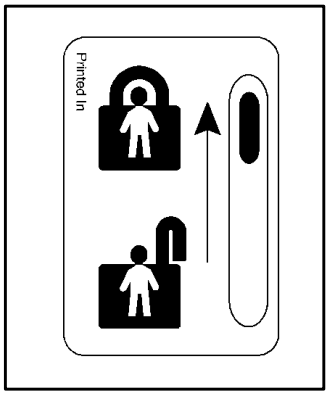

To use the security lock, move the security lock lever all the way up and close the door from the outside.

If your vehicle has the optional power sliding door(s), you can override the security lock by pressing either power door switch when the power sliding door override switch(es) is turned off. When the power sliding door override switch(es) is turned on, the power sliding door(s) cannot be opened from the inside when the sliding door security lock is in use.

If you want to open the sliding door when the security lock is on, unlock and open the door from the outside.

You should let adults and older children know how the security lock works, and how to cancel the lock. If you don't, adults or older children who ride in the rear won't be able to open the sliding door from the inside when the security lock feature is in use.

Downloaded from www.Manualslib.com manuals search engine

Resetting the Power Sliding Door

The power sliding door may operate incorrectly or not at all because of the following conditions:

- A low voltage or dead battery,
- disconnecting the battery, or
- if the instrument panel fuse 4 or the underhood fuse 5, 27 or 29 are removed or blown.

See “Fuses and Circuit Breakers” in the Index for more information about your fuse panel.

If any of these conditions occur, the power sliding door will need to be reset. If your vehicle has the optional dual power sliding doors, both doors will have to be reset. To do this, follow the directions listed here. It will be easier if you read through them once before beginning this procedure.

1. Check to be sure the power sliding door is unlocked and securely closed.
2. Turn the ignition key to OFF.
3. If on, turn the power sliding door override switch off.
4. Remove fuse 29 from the underhood fuse and relay center. Leave it out for 30 seconds.
5. Reinstall the fuse and wait 10 seconds.
6. Turn the power sliding door override switch on.
7. Push either of the power door buttons to open the power sliding door.
8. Open the door.
9. Wait five seconds and close the door by pushing either power door button.
10. Wait five seconds and repeat Steps 7 through 9.

If the door does not rest in the fully open position after repeating Step 7, repeat Steps 7 through 9 again. If the door still does not operate correctly, see your dealer for service.

Canceling the Sliding Door Security Lock

1. Unlock the sliding door and open the door from the outside.
2. Move the security lock lever all the way down.

The sliding door lock will now work normally.

Downloaded from www.Manualslib.com manuals search engine

Liftgate

To unlock the liftgate from the outside, turn the key in the cylinder clockwise. To lock the liftgate using the key, turn the key counterclockwise.

Open the liftgate using the handle located above the license plate. Once slightly opened, the liftgate will rise by itself. Lamps in the rear of the vehicle will come on, illuminating the rear cargo area. See “Interior Lamps” in the Index.

NOTICE:

Be sure there are no overhead obstructions, such as a garage door, before you open the liftgate. You could slam the liftgate into something and break the glass.

⚠ CAUTION:

It can be dangerous to drive with the liftgate open because carbon monoxide (CO) gas can come into your vehicle. You can’t see or smell CO. It can cause unconsciousness and even death.

If you must drive with the liftgate open or if electrical wiring or other cable connections must pass through the seal between the body and the liftgate:

- **Make sure all other windows are shut.**
- **Turn the fan on your heating or cooling system to its highest speed with the setting on bi-level (outside air button is pressed). That will force outside air into your vehicle. See “Comfort Controls” in the Index.**
- **If you have air outlets on or under the instrument panel, open them all the way.**

See “Engine Exhaust” in the Index.

Downloaded from www.Manualslib.com manuals search engine

To close the liftgate, pull down on the handle, then firmly shut the liftgate. Don't drive with the liftgate open, even slightly. See "Engine Exhaust" in the Index.

A message in your instrument panel cluster will warn you if the liftgate is not completely closed. See "Rear Hatch Ajar Warning Message" in the Index.

Theft

Vehicle theft is big business, especially in some cities. Although your vehicle has a number of theft-deterrent features, we know that nothing we put on it can make it impossible to steal. However, there are ways you can help.

Key in the Ignition

If you leave your vehicle with the keys inside, it's an easy target for joy riders or professional thieves -- so don't do it.

When you park your vehicle and open the driver's door, you'll hear a chime reminding you to remove your key from the ignition and take it with you. Always do this. Your steering wheel will be locked, and so will your ignition and transaxle. Also remember to lock the doors.

Downloaded from www.Manualslib.com manuals search engine

Parking at Night

Park in a lighted spot, close all windows and lock your vehicle. Remember to keep your valuables out of sight. Put them in a storage area, or take them with you.

Parking Lots

Even if you park in a lot where someone will be watching your vehicle, it's still best to lock it up and take your key. But what if you have to leave your key? What if you have to leave something valuable in your vehicle?

- Put your valuables in a storage area, like your glove box.
- If your vehicle has a remote keyless entry system, take the transmitter with you.
- Lock all the doors except the driver's.

Content Theft-Deterrent

Your vehicle has a theft-deterrent alarm system.

A light located on top of your instrument panel (near the center of the vehicle, next to the windshield) will flash slowly to let you know that the system has been armed.

While armed, the doors will not unlock with the power door lock switch.

Downloaded from www.Manualslib.com manuals search engine

Once armed, the alarm will go off if someone tries to enter the vehicle (without using the remote keyless entry transmitter or a key), breaks a window, tries to damage the vehicle or turns the ignition to ON. The horn will sound and the parking lamps will flash for up to two minutes.

When the alarm is armed, the liftgate may be opened with the remote keyless entry transmitter or with a key.

Arming with the Power Lock Switch

Your alarm system will arm when you use either power door lock switch to lock the doors while any door or the liftgate is open and the key is removed from the ignition. If you would like to turn on power door lock switch arming, see “Multifunction Alarm Locks and Lighting Choices” in the Index.

The security light flashes quickly to let you know when the system is ready to arm with the power door lock switches. The security light will stop flashing and stay on when you press the rear of the power door lock switch, to let you know the system is arming. After all doors and the liftgate are closed and locked, the security light will begin flashing at a very slow rate to let you know the system is armed.

Arming with the Remote Keyless Entry Transmitter

Your alarm system will arm when you use your remote keyless entry transmitter to lock the doors, if the key is not in the ignition. The security light will turn on to let you know the system is arming. After all doors and the liftgate are closed and locked, the security light will begin flashing at a very slow rate to let you know the system is armed.

Arming with Your Key

Your alarm system will arm when you use your key to lock the doors. The security light will turn on to let you know the system is arming. After all doors and the liftgate are closed and locked, the security light will begin flashing at a very slow rate to let you know the system is armed. If you would like your key not to arm the system, see “Multifunction Alarm Locks and Lighting Choices” in the Index.

Downloaded from www.Manualslib.com manuals search engine

Arming Confirmation

If remote unlock confirmation is on, your parking lamps will flash briefly to let you know when your alarm system has disarmed. If you would not like the parking lamps to flash, see “Multifunction Alarm Locks and Lighting Choices” in the Index.

Disarming with the Remote Keyless Entry Transmitter

Your alarm system will disarm when you use your remote keyless entry transmitter to unlock the doors. The security light will stop flashing to let you know the system is no longer armed.

Disarming with Your Key

Your alarm system will disarm when you use your key to unlock the doors. The security light will stop flashing to let you know the system is no longer armed. If you would like your key not to disarm the alarm system, see “Multifunction Alarm Locks and Lighting Choices” in the Index.

Nuisance Alarms

If you experience nuisance alarms (alarms which are not caused by the opening of a door or the liftgate and are not desirable), you may need to reduce the damage detection sensitivity. Try programming the content theft-deterrent to Mode 1.

If you continue to experience nuisance alarms, you may want to try turning off damage detection by programming your content theft-deterrent to Mode 2.

If you are still having trouble with nuisance alarms, you can turn off the content theft-deterrent system by programming your content theft-deterrent to Mode 3. See “Multifunction Alarm Locks and Lighting Choices” in the Index for more information. See your dealer or qualified technician for service.

Downloaded from www.Manualslib.com manuals search engine

PASS-Key® III

Your vehicle is equipped with the PASS-Key III (Personalized Automotive Security System) theft-deterrent system. PASS-Key III is a passive theft-deterrent system. This means you don't have to do anything different to arm or disarm the system. It works when you insert or remove the key from the ignition.

Your PASS-Key III system operates on a radio frequency subject to Federal Communications Commission (FCC) Rules and with Industry Canada.

This device complies with Part 15 of the FCC Rules. Operation is subject to the following two conditions: (1) this device may not cause harmful interference, and (2) this device must accept any interference received, including interference that may cause undesired operation.

This device complies with RSS-210 of Industry Canada. Operation is subject to the following two conditions: (1) this device may not cause interference, and (2) this device must accept any interference received, including interference that may cause undesired operation of the device.

Changes or modifications to this system by other than an authorized service facility could void authorization to use this equipment.

PASS-Key III uses a radio frequency transponder in the key that matches a decoder in your vehicle.

When the PASS-Key III system senses that someone is using the wrong key, it shuts down the vehicle's starter and fuel systems. The starter will not work and fuel will stop being delivered to the engine. Anyone using a trial-and-error method to start the vehicle will be discouraged because of the high number of electrical key codes.

If the engine does not start and the security message comes on, the key may have a damaged transponder. Turn the ignition off and try again.

Downloaded from www.Manualslib.com manuals search engine

If the engine still does not start, and the key appears to be undamaged, try another ignition key. At this time, you may also want to check the instrument panel fuse 12. If the engine still does not start with the other key, your vehicle needs service. If your vehicle does start, the first key may be faulty. See your dealer or a locksmith who can service the PASS-Key III to have a new key made. See “Fuses and Circuit Breakers” in the Index.

It is possible for the PASS-Key III decoder to learn the transponder value of a new or replacement key. Up to 10 additional keys may be programmed for the vehicle. This procedure is for learning additional keys only. If all the currently programmed keys are lost or do not operate, you must see your dealer or a locksmith who can service PASS-Key III to have keys made and programmed to the system.

See your dealer or a locksmith who can service PASS-Key III to get a new key blank that is cut exactly as the ignition key that operates the system.

To program the new key:

1. Verify the new key has “PK3” stamped on it.
2. Insert the ignition key in the ignition and start the engine. If the engine will not start see your dealer for service.
3. After the engine has started, turn the key to OFF and remove the key.
4. Insert the key to be programmed and turn it to RUN within 10 seconds of removing the previous key.
5. The security message will turn off once the key has been programmed. It may not be apparent that the security message went on due to how quickly the key is programmed.
6. Repeat Steps 1 through 4 if additional keys are to be programmed.

If you are ever driving and the security message comes on and stays on, you will be able to restart your engine if you turn it off. Your PASS-Key III system, however, is not working properly and must be serviced by your dealer. Your vehicle is not protected by the PASS-Key III system at this time.

If you lose or damage a PASS-Key III key, see your dealer or a locksmith who can service PASS-Key III to have a new key made. In an emergency, call Pontiac Roadside Assistance. See “Roadside Assistance” in the Index for more information.

Downloaded from www.Manualslib.com manuals search engine

New Vehicle "Break-In"

NOTICE:

Your vehicle doesn't need an elaborate "break-in." But it will perform better in the long run if you follow these guidelines:

- **Don't drive at any one speed -- fast or slow -- for the first 500 miles (805 km). Don't make full-throttle starts.**
- **Avoid making hard stops for the first 200 miles (322 km) or so. During this time your new brake linings aren't yet broken in. Hard stops with new linings can mean premature wear and earlier replacement. Follow this breaking-in guideline every time you get new brake linings.**
- **Don't tow a trailer during break-in. See "Towing a Trailer" in the Index for more information.**

Ignition Positions

With the key in the ignition, you can turn the switch to five positions.

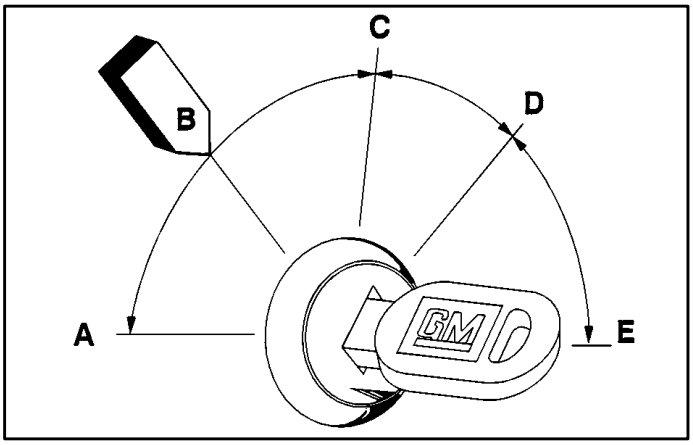

ACCESSORY (A): This is the position in which you can operate your electrical power accessories. Press in the ignition switch as you turn the top of the key toward you.

LOCK (B): This is the only position in which you can remove the key. This position locks your steering wheel, ignition and transaxle.

Downloaded from www.Manualslib.com manuals search engine

NOTICE:

If your key seems stuck in LOCK and you can't turn it, be sure you are using the correct key; if so, is it all the way in? If it is, then turn the steering wheel left and right while you turn the key hard. But turn the key only with your hand. Using a tool to force it could break the key or the ignition switch. If none of this works, then your vehicle needs service.

OFF (C): This position unlocks the steering wheel, ignition and transaxle, but does not send electrical power to any accessories. Use this position if your vehicle must be pushed or towed, but never try to push-start your vehicle. A warning chime will sound if you open the driver's door when the ignition is off and the key is in the ignition.

RUN (D): This is the position to which the switch returns after you start your engine and release the switch. The switch stays in RUN when the engine is running. But even when the engine is not running, you can use RUN to operate your electrical power accessories, and to display some instrument panel warning lights.

START (E): This position starts the engine. When the engine starts, release the key. The ignition switch will return to RUN for normal driving.

If the engine is not running, ACCESSORY and RUN are positions that allow you to operate your electrical accessories, such as the radio.

Retained Accessory Power (RAP)

With RAP, the power windows, the power rear quarter windows, the audio system and the optional electronic level control (ELC) will continue to work up to 10 minutes after the ignition key is turned to OFF and none of the doors are opened.

Downloaded from www.Manualslib.com manuals search engine

Starting Your Engine

Move your shift lever to PARK (P) or NEUTRAL (N). Your engine won't start in any other position -- that's a safety feature. To restart when you're already moving, use NEUTRAL (N) only.

NOTICE:

Don't try to shift to PARK (P) if your vehicle is moving. If you do, you could damage the transaxle. Shift to PARK (P) only when your vehicle is stopped.

1. With your foot off the accelerator pedal, turn your ignition key to START. When the engine starts, let go of the key. The idle speed will go down as your engine warms up.

NOTICE:

Holding your key in START for longer than 15 seconds at a time will cause your battery to be drained much sooner. And the excessive heat can damage your starter motor. Wait about 15 seconds between each try to help avoid draining your battery or damaging your starter.

2. If the engine doesn't start in 10 seconds, push the accelerator pedal about one-quarter of the way down while you turn the key to START. Do this until the engine starts. As soon as it does, let go of the key.

Downloaded from www.Manualslib.com manuals search engine

3. If your engine still won't start (or starts but then stops), it could be flooded with too much gasoline. Try pushing your accelerator pedal all the way to the floor and holding it there as you hold the key in START for a maximum of 15 seconds. This clears the extra gasoline from the engine. If the engine still won't start or starts briefly but then stops again, repeat Step 1 or 2, depending on temperature. When the engine starts, release the key and the accelerator pedal.

NOTICE:

Your engine is designed to work with the electronics in your vehicle. If you add electrical parts or accessories, you could change the way the engine operates. Before adding electrical equipment, check with your dealer. If you don't, your engine might not perform properly.

Engine Coolant Heater (If Equipped)

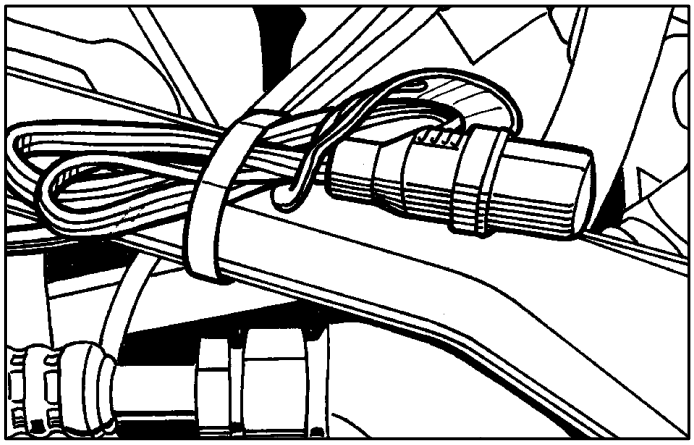

In very cold weather, 0°F (-18°C) or colder, the engine coolant heater can help. You'll get easier starting and better fuel economy during engine warm-up. Usually, the coolant heater should be plugged in a minimum of four hours prior to starting your vehicle.

Downloaded from www.Manualslib.com manuals search engine

To Use the Engine Coolant Heater

1. Turn off the engine.
2. Open the hood and unwrap the electrical cord. The electrical cord is located on the driver's side of the engine compartment.
3. Plug it into a normal, grounded 110-volt AC outlet.

⚠ CAUTION:

Plugging the cord into an ungrounded outlet could cause an electrical shock. Also, the wrong kind of extension cord could overheat and cause a fire. You could be seriously injured. Plug the cord into a properly grounded three-prong 110-volt AC outlet. If the cord won't reach, use a heavy-duty three-prong extension cord rated for at least 15 amps.

4. Before starting the engine, be sure to unplug and store the cord as it was before to keep it away from moving engine parts. If you don't, it could be damaged.

How long should you keep the coolant heater plugged in? The answer depends on the outside temperature, the kind of oil you have, and some other things. Instead of trying to list everything here, we ask that you contact your dealer in the area where you'll be parking your vehicle. The dealer can give you the best advice for that particular area.

Downloaded from www.Manualslib.com manuals search engine

Automatic Transaxle Operation

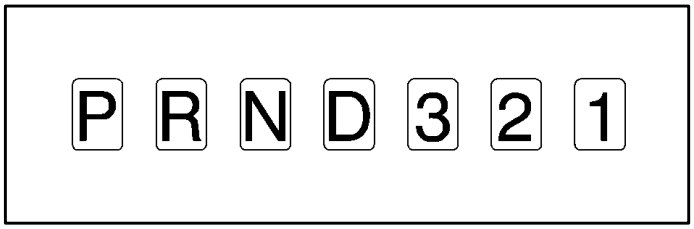

Maximum engine speed is limited when you're in PARK (P) or NEUTRAL (N), to protect driveline components from improper operation.

There are several different positions for your shift lever.

PARK (P): This gear position locks your front wheels. It's the best position to use when you start your engine because your vehicle can't move easily.

Ensure the shift lever is fully in PARK (P) before starting the engine. Your vehicle has an automatic transaxle shift lock control system. You have to fully *apply* your regular brakes *before* you can shift from PARK (P) when the ignition key is in RUN. As you step on the brake pedal, while in PARK (P), you may hear a click from the solenoid of the system. This ensures that the system is operating properly.

If you cannot shift out of PARK (P), ease pressure on the shift lever -- push the shift lever all the way into PARK (P) as you maintain brake application. Then move the shift lever into the gear you wish. See "Shifting Out of PARK (P)" in this section.

⚠ CAUTION:

It is dangerous to get out of your vehicle if the shift lever is not fully in PARK (P) with the parking brake firmly set. Your vehicle can roll.

Don't leave your vehicle when the engine is running unless you have to. If you have left the engine running, the vehicle can move suddenly. You or others could be injured. To be sure your vehicle won't move, even when you're on fairly level ground, always set your parking brake and move the shift lever to PARK (P).

See "Shifting Into PARK (P)" in the Index.
If you're pulling a trailer, see "Towing a Trailer" in the Index.

Downloaded from www.Manualslib.com manuals search engine

REVERSE (R): Use this gear to back up.

NOTICE:

Shifting to REVERSE (R) while your vehicle is moving forward could damage your transaxle. Shift to REVERSE (R) only after your vehicle is stopped.

To rock your vehicle back and forth to get out of snow, ice or sand without damaging your transaxle, see “Stuck: In Sand, Mud, Ice or Snow” in the Index.

NEUTRAL (N): In this position, your engine doesn’t connect with the wheels. To restart when you’re already moving, use NEUTRAL (N) only. Also, use NEUTRAL (N) when your vehicle is being towed.

⚠ CAUTION:

Shifting out of PARK (P) or NEUTRAL (N) while your engine is “racing” (running at high speed) is dangerous. Unless your foot is firmly on the brake pedal, your vehicle could move very rapidly. You could lose control and hit people or objects. Don’t shift out of PARK (P) or NEUTRAL (N) while your engine is racing.

NOTICE:

Damage to your transaxle caused by shifting out of PARK (P) or NEUTRAL (N) with the engine racing isn’t covered by your warranty.

Downloaded from www.Manualslib.com manuals search engine

AUTOMATIC OVERDRIVE (D): This position is for normal driving. If you need more power for passing, and you're:

- Going less than 35 mph (55 km/h), push your accelerator pedal about halfway down.
- Going about 35 mph (55 km/h) or more, push the accelerator all the way down.

You'll shift down to the next gear and have more power.

NOTICE:

If your vehicle seems to start up rather slowly, or if it seems not to shift gears as you go faster, something may be wrong with a transaxle system sensor. If you drive very far that way, your vehicle can be damaged. So, if this happens, have your vehicle serviced right away. Until then, you can use SECOND (2) when you are driving less than 35 mph (55 km/h) and AUTOMATIC OVERDRIVE (D) for higher speeds.

Warm-Up Shift

Your vehicle has a computer controlled transaxle designed to warm up the engine faster when the outside temperature is 35°F (2°C) or colder. You may notice that the transaxle will shift at a higher vehicle speed until the engine is warmed up. This is a normal condition designed to provide heat to the passenger compartment and defrost the windows more quickly. See "Comfort Controls, Heating" in the Index for more information.

THIRD (3): This position is also used for normal driving, but it offers more power and lower fuel economy than AUTOMATIC OVERDRIVE (D).

Here are some times you might choose THIRD (3) instead of AUTOMATIC OVERDRIVE (D):

- When driving on hilly, winding roads.
- When towing a trailer (so there is less shifting between gears).
- When going down a steep hill.

Downloaded from www.Manualslib.com manuals search engine

SECOND (2): This position gives you more power, but lower fuel economy. You can use SECOND (2) on hills. It can help control your speed as you go down steep mountain roads, but then you would also want to use your brakes off and on.

NOTICE:

Don't drive in SECOND (2) for more than 25 miles (40 km), or at speeds over 55 mph (90 km/h), or you can damage your transaxle. Use THIRD (3) or AUTOMATIC OVERDRIVE (D) as much as possible. Don't shift into SECOND (2) unless you are going slower than 65 mph (105 km/h) or you can damage your engine.

NOTICE:

If your vehicle seems to start up rather slowly, or if it seems not to shift gears as you go faster, something may be wrong with a transaxle system sensor. If you drive very far that way, your vehicle can be damaged. So, if this happens, have your vehicle serviced right away. Until then, you can use SECOND (2) when you are driving less than 35 mph (55 km/h) and THIRD (3) for higher speeds.

Downloaded from www.Manualslib.com manuals search engine

FIRST (1): This position gives you even more power (but lower fuel economy) than SECOND (2). You can use it on very steep hills, or in deep snow or mud. If the selector lever is put in FIRST (1), the transaxle won't downshift into first gear until the vehicle is going slow enough.

NOTICE:

If your front wheels can't turn, don't try to drive. This might happen if you were stuck in very deep sand or mud or were up against a solid object. You could damage your transaxle.

Also, if you stop when going uphill, don't hold your vehicle there with only the accelerator pedal. This could overheat and damage the transaxle. Use your brakes or shift into PARK (P) to hold your vehicle in position on a hill.

Parking Brake

The parking brake is located on the driver's side under the instrument panel.

To set the parking brake, hold the regular brake pedal down with your right foot and push down on the parking brake pedal with your left foot.

If the ignition is on, the brake system warning light will come on. See "Brake System Warning Light" in the Index.

Downloaded from www.Manualslib.com manuals search engine

To release the parking brake, hold the regular brake pedal down with your right foot while you push down on the parking brake pedal with your left foot. (To release the tension on the parking brake cable, you will need to apply about the same amount of pressure to the parking brake pedal as you did when you set the parking brake.) When you remove your foot from the parking brake pedal, it will pop up to the released position.

NOTICE:

Driving with the parking brake on can cause your rear brakes to overheat. You may have to replace them, and you could also damage other parts of your vehicle.

If you are towing a trailer and are parking on any hill, see "Towing a Trailer" in the Index. That section shows what to do first to keep the trailer from moving.

Shifting Into PARK (P)

⚠ CAUTION:

It can be dangerous to get out of your vehicle if the shift lever is not fully in PARK (P) with the parking brake firmly set. Your vehicle can roll. If you have left the engine running, the vehicle can move suddenly. You or others could be injured. To be sure your vehicle won't move, even when you're on fairly level ground, use the steps that follow. If you're pulling a trailer, see "Towing a Trailer" in the Index.

Downloaded from www.Manualslib.com manuals search engine

1. Hold the brake pedal down with your right foot and set the parking brake with your left foot.
2. Move the shift lever into PARK (P) like this:

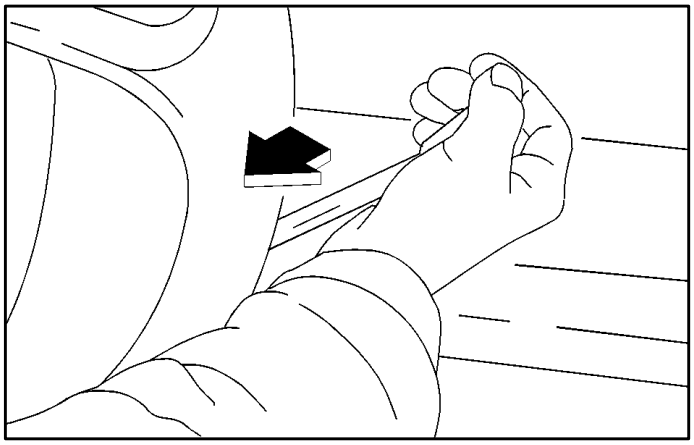

- Pull the lever toward you.

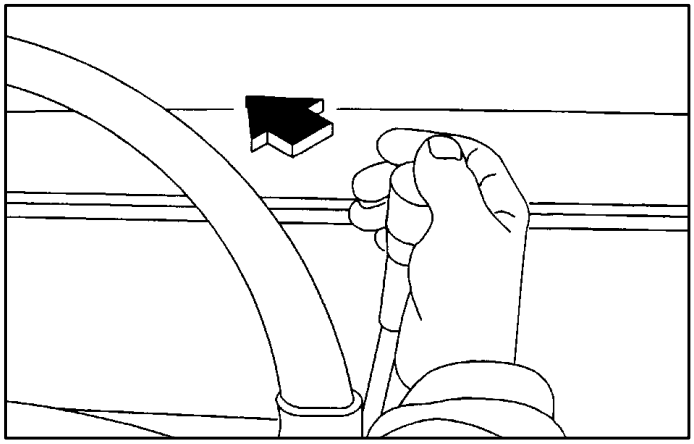

- Move the lever up as far as it will go.

3. Turn the ignition key to LOCK.
4. Remove the key and take it with you. If you can leave your vehicle with the ignition key in your hand, your vehicle is in PARK (P).

Downloaded from www.Manualslib.com manuals search engine

Leaving Your Vehicle With the Engine Running

⚠ CAUTION:

It can be dangerous to leave your vehicle with the engine running. Your vehicle could move suddenly if the shift lever is not fully in PARK (P) with the parking brake firmly set. And, if you leave the vehicle with the engine running, it could overheat and even catch fire. You or others could be injured. Don't leave your vehicle with the engine running unless you have to.

If you have to leave your vehicle with the engine running, be sure your vehicle is in PARK (P) and your parking brake is firmly set before you leave it. After you've moved the shift lever into PARK (P), hold the regular brake pedal down. Then, see if you can move the shift lever away from PARK (P) without first pulling it toward you. If you can, it means that the shift lever wasn't fully locked into PARK (P).

Torque Lock

If you are parking on a hill and you don't shift your transaxle into PARK (P) properly, the weight of the vehicle may put too much force on the parking pawl in the transaxle. You may find it difficult to pull the shift lever out of PARK (P). This is called "torque lock." To prevent torque lock, set the parking brake and then shift into PARK (P) properly before you leave the driver's seat. To find out how, see "Shifting Into PARK (P)" in the Index.

When you are ready to drive, move the shift lever out of PARK (P) *before* you release the parking brake.

If torque lock does occur, you may need to have another vehicle push yours a little uphill to take some of the pressure from the parking pawl in the transaxle, so you can pull the shift lever out of PARK (P).

Downloaded from www.Manualslib.com manuals search engine

Shifting Out of PARK (P)

Your vehicle has an automatic transaxle shift lock control system. You have to fully *apply* your regular brakes *before* you can shift from PARK (P), when the ignition is in RUN.

As you step on the brake pedal, while in PARK (P), you may hear a click from the solenoid of the system. This ensures that the system is operating properly. See “Automatic Transaxle Operation” in the Index.

If you cannot shift out of PARK (P), ease pressure on the shift lever by pushing the shift lever all the way into PARK (P) as you maintain brake application. Then move the shift lever into the gear you want. If you ever hold the brake pedal down but still can’t shift out of PARK (P), try this:

1. Turn the ignition key to OFF.
2. Apply and hold the brake until the end of Step 4.
3. Shift to NEUTRAL (N).
4. Start the engine and then shift to the drive gear you want.
5. Have the vehicle fixed as soon as you can.

Parking Over Things That Burn

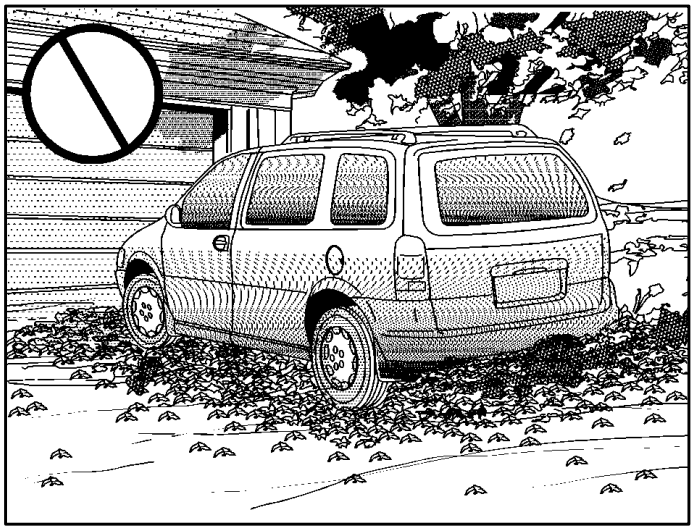

⚠ CAUTION:

Things that can burn could touch hot exhaust parts under your vehicle and ignite. Don’t park over papers, leaves, dry grass or other things that can burn.

Downloaded from www.Manualslib.com manuals search engine

Engine Exhaust

⚠ CAUTION:

Engine exhaust can kill. It contains the gas carbon monoxide (CO), which you can't see or smell. It can cause unconsciousness and death.

You might have exhaust coming in if:

- **Your exhaust system sounds strange or different.**
- **Your vehicle gets rusty underneath.**
- **Your vehicle was damaged in a collision.**
- **Your vehicle was damaged when driving over high points on the road or over road debris.**
- **Repairs weren't done correctly.**
- **Your vehicle or exhaust system had been modified improperly.**

If you ever suspect exhaust is coming into your vehicle:

- **Drive it only with all the windows down to blow out any CO; and**
- **Have your vehicle fixed immediately.**

Running Your Engine While You're Parked

It's better not to park with the engine running. But if you ever have to, here are some things to know.

⚠ CAUTION:

Idling the engine with the climate control system off could allow dangerous exhaust into your vehicle. See the earlier Caution under "Engine Exhaust."

Also, idling in a closed-in place can let deadly carbon monoxide (CO) into your vehicle even if the fan switch is at the highest setting. One place this can happen is a garage. Exhaust -- with CO -- can come in easily. NEVER park in a garage with the engine running.

Another closed-in place can be a blizzard. See "Blizzard" in the Index.

Downloaded from www.Manualslib.com manuals search engine

⚠ CAUTION:

It can be dangerous to get out of your vehicle if the shift lever is not fully in PARK (P) with the parking brake firmly set. Your vehicle can roll. Don't leave your vehicle when the engine is running unless you have to. If you've left the engine running, the vehicle can move suddenly. You or others could be injured. To be sure your vehicle won't move, even when you're on fairly level ground, always set your parking brake and move the shift lever to PARK (P).

Follow the proper steps to be sure your vehicle won't move. See "Shifting Into PARK (P)" in the Index.

If you're pulling a trailer, see "Towing a Trailer" in the Index.

Horn

You can sound the horn by pressing the horn symbols on your steering wheel.

Tilt Wheel

A tilt steering wheel allows you to adjust the steering wheel before you drive. You can also raise it to the highest level to give your legs more room when you exit and enter the vehicle.

To tilt the wheel, hold the steering wheel and pull the lever located on the left side of the steering wheel console.

Move the steering wheel to a comfortable level, then release the lever to lock the wheel in place.

Downloaded from www.Manualslib.com manuals search engine

Turn Signal/Multifunction Lever

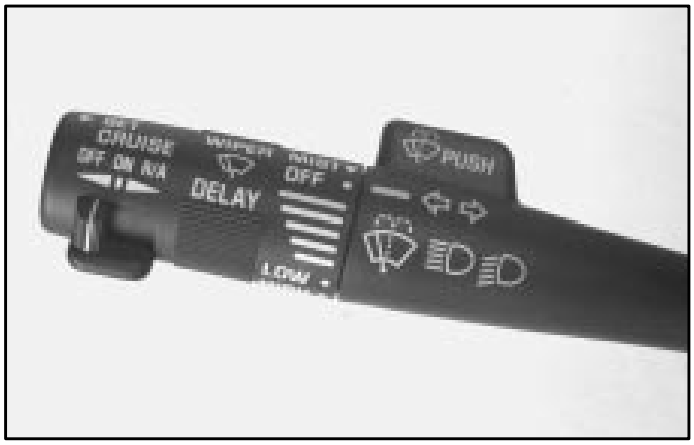

The lever on the left side of the steering column includes the following:

- Turn Signal and Lane-Change Indicator
- Headlamp High/Low-Beam Changer
- Flash-to-Pass
- Windshield Wiper and Washer Control
- Cruise Control (Option)

Turn Signal and Lane-Change Indicator

The turn signal has two upward (for right) and two downward (for left) positions. These positions allow you to signal a turn or a lane change.

To signal a turn, move the lever all the way up or down. When the turn is finished, the lever will return automatically.

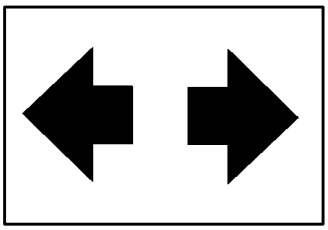

An arrow on the instrument panel cluster will flash in the direction of the turn or lane change.

To signal a lane change, just raise or lower the lever until the arrow starts to flash. Hold it there until you complete your lane change. The lever will return by itself when you release it.

As you signal a turn or a lane change, if the arrow flashes faster than normal, a signal bulb may be burned out and other drivers won't see your turn signal.

Downloaded from www.Manualslib.com manuals search engine

If a bulb is burned out, replace it to help avoid an accident. If the arrows don't go on at all when you signal a turn, check for burned-out bulbs and check the fuse. See "Bulb Replacement" and "Fuses and Circuit Breakers" in the Index.

If you have a trailer towing option with added wiring for the trailer lamps, the signal indicator will flash at a normal rate even if a turn signal bulb is burned out. Check the front and rear turn signal lamps regularly to make sure they are working.

Turn Signal On Chime

If either turn signal is left on for more than 3/4 mile (1.2 km), a chime will sound to let the driver know to turn it off.

If you need to leave the signal on for more than 3/4 mile (1.2 km), turn off the signal and then turn it back on.

Headlamp High/Low-Beam Changer

To change the headlamps from high to low beam, or low to high, simply pull the turn signal lever all the way toward you. Then release it.

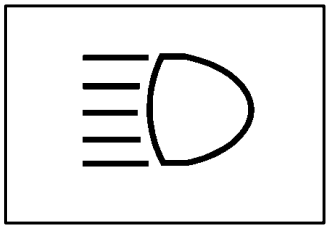

When the high beams are on, this light on the instrument panel cluster will also be on.

Your fog lamps will turn off when you switch to high beams. Using your high beams in fog is not recommended.

Flash-to-Pass

When the headlamps are off, pull the lever toward you to momentarily switch on the high beams (to signal that you are going to pass). When you release the lever, they will turn off.

Downloaded from www.Manualslib.com manuals search engine

Windshield Wipers

You control the windshield wipers by turning the band marked WIPER.

For a single wiping cycle, turn the band to MIST. Hold it there until the wipers start, then let go. The wipers will stop after one cycle. If you want more cycles, hold the band on mist longer.

For delayed wiping cycles, you can set the wiper speed for a long or short delay between wipes. This can be very useful in light rain or snow. Turn the band to choose the delay time. The closer to LOW, the shorter the delay time.

For steady wiping cycles, at low speed, turn the band away from you to the LOW position. For high-speed wiping, turn the band further to HIGH. To stop the wipers, turn the band to OFF.

Remember that damaged wiper blades may prevent you from seeing well enough to drive safely. To avoid damage, be sure to clear ice and snow from the wiper blades before using them. If they're frozen to the windshield, carefully loosen or thaw them. If your blades do become damaged, get new blades or blade inserts.

Heavy snow or ice can overload your wipers. A circuit breaker will stop them until the motor cools. Clear away snow or ice to prevent an overload.

Windshield Washer

To wash your windshield, press and hold the windshield washer paddle. The washers and wipers will operate. When you release the paddle, the washers will stop, and the wipers will continue to operate for two cycles, unless your wipers had already been on. In that case, the wipers will resume the wiper speed you had selected earlier.

⚠ CAUTION:

In freezing weather, don't use your washer until the windshield is warmed. Otherwise the washer fluid can form ice on the windshield, blocking your vision.

Downloaded from www.Manualslib.com manuals search engine

Rear Window Washer/Wiper

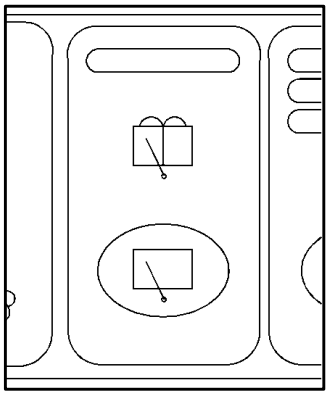

The rear window wiper switch is located in the instrument panel switchbank.

Push the wiper symbol on the bottom of the switch to turn on the intermittent wiper. To turn off the wiper, gently push the top of the switch.

To wash and wipe the rear window, push in the washer symbol on the top of the switch. Washer fluid will spray as long as the switch is held in. When the top of the switch is released, the wiper will continue to cycle three more times. There is only one washer fluid reservoir for the front and rear windshield wipers. See “Windshield Washer Fluid” in the Index.

To wash the rear window when the rear wiper is already on, push the top of the switch with the wash symbol on it.

Push in the bottom of the switch to continue the intermittent wiper cycle after the washing cycle is completed.

Cruise Control (Option)

With cruise control, you can maintain a speed of about 25 mph (40 km/h) or more without keeping your foot on the accelerator. This can really help on long trips.

Cruise control does not work at speeds below about 25 mph (40 km/h).

When you apply your brakes, the cruise control disengages.

⚠ CAUTION:

- **Cruise control can be dangerous where you can’t drive safely at a steady speed. So, don’t use your cruise control on winding roads or in heavy traffic.**
- **Cruise control can be dangerous on slippery roads. On such roads, fast changes in tire traction can cause needless wheel spinning, and you could lose control. Don’t use cruise control on slippery roads.**

Downloaded from www.Manualslib.com manuals search engine

If your vehicle is in cruise control when the optional traction control system begins to limit wheel spin, the cruise control will automatically disengage. See “Traction Control System” in the Index. When road conditions allow you to safely use it again, you may turn the cruise control back on.

Setting Cruise Control

⚠ CAUTION:

If you leave your cruise control switch on when you’re not using cruise, you might hit a button and go into cruise when you don’t want to. You could be startled and even lose control. Keep the cruise control switch off until you want to use cruise control.

1. Move the cruise control switch to ON.
2. Get up to the speed you want.

3. Push in the SET button at the end of the lever and release it.
4. Take your foot off the accelerator pedal.

Downloaded from www.Manualslib.com manuals search engine

Resuming a Set Speed

Suppose you set your cruise control at a desired speed and then you apply the brake. This, of course, shuts off the cruise control. But you don't need to reset it. Once you're going about 25 mph (40 km/h) or more, you can move the cruise control switch from ON to R/A (resume/accel) briefly.

You'll go right back up to your chosen speed and stay there.

If you hold the switch at R/A, the vehicle will keep going faster until you release the switch or apply the brake. So unless you want to go faster, don't hold the switch at R/A.

Increasing Speed While Using Cruise Control

There are two ways to go to a higher speed:

- Use the accelerator pedal to get to the higher speed. Push the SET button at the end of the lever, then release the button and the accelerator pedal. You'll now cruise at the higher speed.
- Move the cruise switch from ON to R/A. Hold it there until you get up to the speed you want, and then release the switch. (To increase your speed in very small amounts, move the switch to R/A briefly and then release it. Each time you do this, your vehicle will go about 1 mph (1.6 km/h) faster.)

The accelerate feature will work whether or not you have set an initial cruise control speed.

Reducing Speed While Using Cruise Control

There are two ways to reduce speed while using cruise control:

- Push in the SET button at the end of the lever until you reach the lower speed you want, then release it.
- To slow down in very small amounts, push the SET button briefly. Each time you do this, you'll go 1 mph (1.6 km/h) slower.

Passing Another Vehicle While Using Cruise Control

Use the accelerator pedal to increase your speed. When you take your foot off the pedal, your vehicle will slow down to the cruise control speed you set earlier.

Downloaded from www.Manualslib.com manuals search engine

Using Cruise Control on Hills

How well your cruise control will work on hills depends upon your speed, load and the steepness of the hills. When going up steep hills, you may have to step on the accelerator pedal to maintain your speed. When going downhill, you may have to brake or shift to a lower gear to keep your speed down. Of course, applying the brake takes you out of cruise control. Many drivers find this to be too much trouble and don't use cruise control on steep hills.

Ending Cruise Control

There are two ways to turn off the cruise control:

- Step lightly on the brake pedal, or
- move the cruise switch to OFF.

Erasing Cruise Speed Memory

When you turn off the cruise control or the ignition, your cruise control set speed memory is erased.

Exterior Lamps

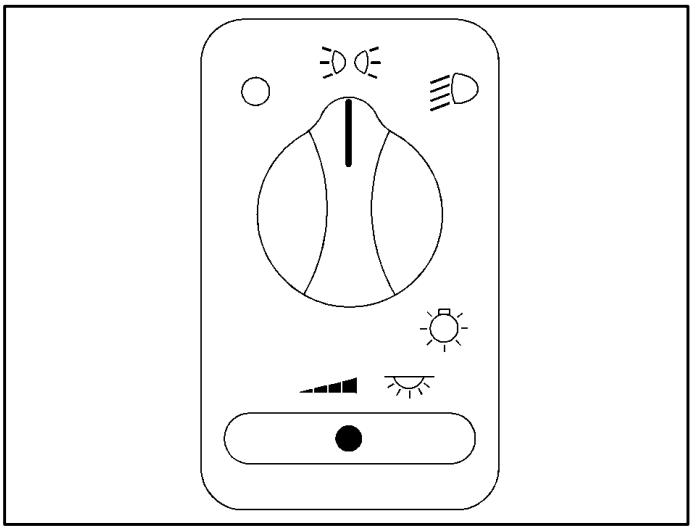

The exterior lamp control is located to the left of the steering column.

Turning the control to this setting turns on the following:

- Parking Lamps
- Sidemarker Lamps
- Taillamps
- Instrument Panel Lights

Downloaded from www.Manualslib.com manuals search engine

Turning the control to this setting turns on the headlamps, together with the following:

- Parking Lamps
- Sidemarker Lamps
- Taillamps
- Instrument Panel Lights

Turning the control to this setting turns off all the lamps and lights.

Lamps on Reminder

If the driver's door is opened and you turn the ignition to OFF or LOCK while leaving the lamps on, you will hear a warning chime.

Daytime Running Lamps

Daytime Running Lamps (DRL) can make it easier for others to see the front of your vehicle during the day. DRL can be helpful in many different driving conditions, but they can be especially helpful in the short periods after dawn and before sunset. Fully functional daytime running lights are required on all vehicles first sold in Canada.

A light sensor on top of the instrument panel makes the DRL work, so be sure it isn't covered. The DRL system will make your front parking and turn signal lamps come on in daylight when the following conditions are met:

- The ignition is on,
- the headlamp control is off, and
- the parking brake is released.

When the DRL are on, only your front parking and turn signal lamps will be on. Your instrument panel won't be lit up.

When it's dark enough outside, the exterior lamps will come on automatically. When it's bright enough outside, the exterior lamps will turn off and the DRL will turn on. Of course, you may still turn on the headlamps any time you need to.

To idle your vehicle with the DRL, set the parking brake while the ignition is in OFF or LOCK. Then start the vehicle. The DRL will stay off until you release the parking brake.

As with any vehicle, you should turn on the regular headlamp system when you need it.

Downloaded from www.Manualslib.com manuals search engine

Fog Lamps

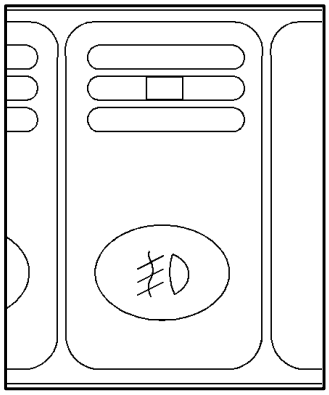

The fog lamps switch is located in the instrument panel switchbank. Push the fog lamp symbol on the switch to turn on the lamps.

The indicator light will glow when the fog lamps are on. Push the top part of the switch to turn them off. The indicator light will go off.

Your parking lamps or headlamps must be on for your fog lamps to turn on.

When your DRL are on, the headlamp control must first be turned from the off position before the fog lamps can be turned on. At night, when the light sensor automatically turns on your headlamps, the fog lamps can be turned on when the headlamp control is in any position.

Your fog lamps will go off when you switch to high beams. Using your high beams in fog is not recommended.

Interior Lamps

Instrument Panel Intensity Control

Turn the thumbwheel, located below the headlamps control, clockwise to increase the brightness of the instrument panel lights, and counterclockwise to decrease the brightness. Turn the thumbwheel all the way counterclockwise to turn them off.

Interior Lamps Control

Turn the thumbwheel all the way clockwise to turn on the interior lamps, if the interior lamps override switch is off. Turn the thumbwheel counterclockwise to turn the lamps off.

Downloaded from www.Manualslib.com manuals search engine

Interior Lamps Override Switch

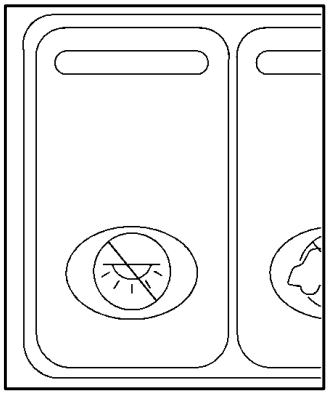

This switch is located in the overhead console switchbank.

Press the symbol on the bottom of the switch to override control of the interior lamps and turn off power to the courtesy lamps, reading lamps, visor vanity lamps (if equipped) and glove box lamp. This feature allows you to have the lamps off when any door is open.

Press the top of the interior lamps override switch to turn power back on to the interior lamps. This will allow the lamps to stay on when any door is open.

Illuminated Entry

With illuminated entry, the interior of your vehicle is illuminated so that you can see inside before you enter your vehicle. The lamps will come on for 40 seconds if you unlock your door using your key or the remote keyless entry transmitter and the ignition is in LOCK or OFF. After 40 seconds have passed, the interior lamps will slowly fade out. The lamps will turn off before the 40 seconds if you do one of the following:

- Lock all the doors using the key,
- press LOCK on the power door lock switch, or
- press LOCK on the remote keyless entry transmitter.

When any door is opened, illuminated entry is cancelled. The interior lamps will stay on while any door or liftgate is open, and slowly fade out when all doors and the liftgate are closed.

The interior lamps may stay on for up to 25 seconds after all doors have been closed if they have not been locked. See “Delayed Illumination” next in this section.

To turn the exit lighting feature off or on, see “Multifunction Alarm Locks and Lighting Choices” in the Index.

Downloaded from www.Manualslib.com manuals search engine

Delayed Illumination

The delayed illumination feature will continue to illuminate the interior for 25 seconds after all doors have been closed so that you can find your ignition and buckle your safety belt at night. Delayed illumination will not occur while the ignition is in RUN or ACCESSORY. After 25 seconds have passed, the interior lamps will slowly fade out. The lamps will fade out before the 25 seconds have passed if you do one of the following:

- Turn the ignition to RUN or ACCESSORY,
- lock all doors using the remote keyless entry transmitter, or
- lock all the doors using the power door lock switch or the key.

To turn the delayed illumination feature off or on, see “Multifunction Alarm Locks and Lighting Choices” in the Index.

Exit Lighting

With exit lighting, the interior lamps will come on for about 25 seconds whenever you remove the key from the ignition. If you turn the ignition key to RUN or ACCESSORY, the lamps will fade out. The lamps will also fade out if you lock the doors with the power door lock switch or the remote keyless entry transmitter.

When any door is opened, exit lighting is cancelled. The interior lamps will stay on while any door or the liftgate is open, and slowly fade out when all doors and the liftgate are closed.

The interior lamps may stay on for up to 25 seconds after all doors have been closed if they have not been locked, see “Delayed Illumination” earlier in this section.

To turn the exit lighting feature off or on, see “Multifunction Alarm Locks and Lighting Choices” in the Index.

Downloaded from www.Manualslib.com manuals search engine

Front Reading Lamps

There are two reading lamps in the overhead console.

To turn either reading lamp on or off, press the lens of the lamp. These lamps will come on each time you open a door, unless you turn on the interior lamps override feature. See “Interior Lamps Override Switch” in the Index.

Rear Reading Lamps

There are two reading lamps in the third row headliner, above the outboard seating positions.

To turn on or off either reading lamp, press the lens of the lamp.

There is also a reading lamp in the second row, integrated with the dome lamp. To turn on or off either reading lamp, press the button next to the lamp lens.

These lamps will not turn on if the interior lamps override switch is on. See “Interior Lamps Override Switch” in the Index.

Dome Lamp

The dome lamp is located in the center of your vehicle and has two buttons to manually turn on and off the lamp. The dome lamp will come on each time you open a door, unless you turn on the interior lamps override feature. See “Interior Lamps Override Switch” in the Index.

Downloaded from www.Manualslib.com manuals search engine

Cargo Lamp

The cargo lamp is located in the rear of your vehicle, above the liftgate opening, and does not have a switch. The cargo lamp will come on each time you open a door, unless you turn on the interior lamps override. See “Interior Lamps Override Switch” in the Index.

Battery Saver

Your vehicle has a feature to help prevent you from draining the battery, in case you accidentally leave the interior lamps on. If you leave any interior lamps on while the ignition is in LOCK or OFF, they will automatically turn off after 10 minutes. The lamps won’t come back on again until you do one of the following:

- Turn the ignition to RUN or ACCESSORY,
- turn the interior lamps thumbwheel all the way clockwise, then slightly back counterclockwise, or
- open (or close and reopen) a door that is closed.

If your vehicle has less than 15 miles (25 km) on the odometer, the battery saver will turn off the lamps after only three minutes.

Mirrors

Inside Day/Night Rearview Mirror

To reduce glare from lights behind you, pull the lever toward you (to the night position). To return the mirror to the day position, push the lever away from you.

Power Remote Control Mirrors

The control located on the driver’s door operates both outside rearview mirrors.

Downloaded from www.Manualslib.com manuals search engine

Turn the control counterclockwise to select the driver's side rearview mirror, or clockwise to select the passenger's side rearview mirror. Then use the control to adjust each mirror so that you can see a little of the side of your vehicle when you are sitting in a comfortable driving position.

If you are not adjusting either mirror, leave the control in the center off position. This prevents moving the mirrors accidentally once you have them adjusted.

Both outside mirrors can be folded forward or rearward. In the rearward position, they will fold almost flush with the vehicle. This feature is particularly useful in automatic car washes.

Your mirrors have a blue tint to reduce glare while driving at night.

Convex Outside Mirror

Your passenger's side mirror is convex. A convex mirror's surface is curved so you can see more from the driver's seat.

⚠ CAUTION:

A convex mirror can make things (like other vehicles) look farther away than they really are. If you cut too sharply into the right lane, you could hit a vehicle on your right. Check your inside mirror or glance over your shoulder before changing lanes.

Heated Outside Mirrors

The outside rearview mirrors are heated when you activate the rear window defogger. See "Rear Window Defogger" in the Index.

Downloaded from www.Manualslib.com manuals search engine

Storage Compartments

Your vehicle's large carrying capacity can store many items. If you have the extended wheelbase version, you can carry things as large as a 4′ x 8′ piece of plywood. You can also use the floor pins that are used to attach the seats, to secure larger loads.

Glove Box

Your vehicle has a glove box below the instrument panel. To open the glove box, lift the latch release. Use the key to lock or unlock the glove box.

The glove box door has a detent to prevent the door from lowering too far. Open the glove box until the door is partway open, then pull the door down if you need it fully open. To close the glove box, the door must be pushed up past the detent.

In the door of the glove box, you will find a tissue pack holder and clip for a pen or pencil.

Compact Overhead Console (Canada Only)

The front overhead console includes two reading lamps, a storage compartment and the overhead console switchbank.

Downloaded from www.Manualslib.com manuals search engine

Overhead Console (Option)

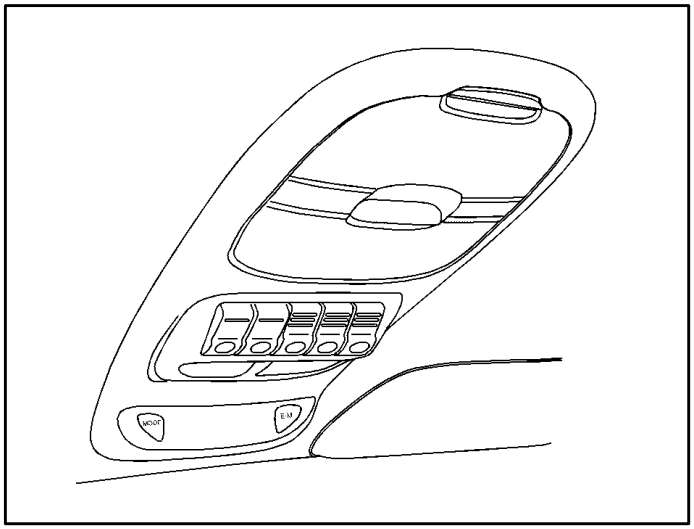

The optional front overhead console has reading lamps, the overhead console switchbank, storage compartments, garage door opener compartment, the OnStar® System buttons, the optional Driver Information Center (DIC) and the optional Homelink® Transmitter buttons.

If your vehicle has the optional Homelink® Transmitter buttons, they will take the place of the garage door opener compartment. The garage door opener compartment is explained next. For information on the other features listed, see each of them in the Index.

Garage Door Opener Compartment

You can store your garage door opener in the rear compartment of your overhead console, and operate it from this position. To install your garage door opener, follow these instructions:

1. Open the compartment by pressing the latch forward.
2. Peel the protective backing from the hook and loop fastener and press it firmly to the back of your garage door opener.

Downloaded from www.Manualslib.com manuals search engine

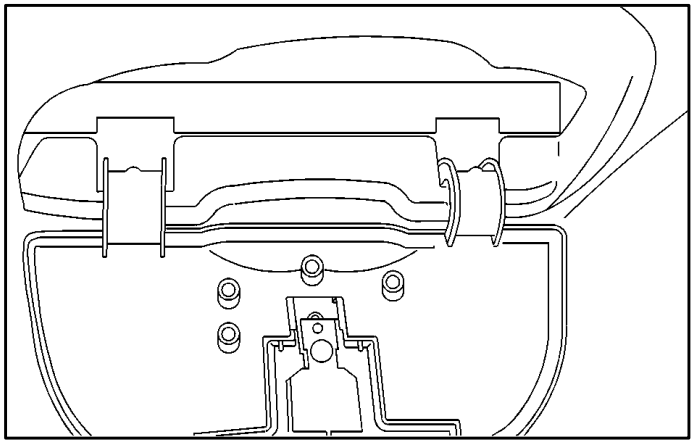

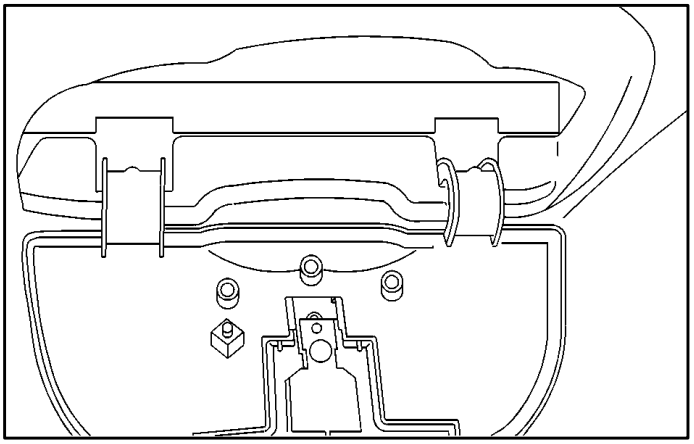

3. Line up the button of the garage door opener with one of the four buttons on the compartment door. Make sure the garage door opener button is facing down and press the opener firmly into place.
4. Once the opener is installed, use the black pegs inside the compartment door to make sure the lined area on the compartment door will contact the control button on your garage door opener when pressed.
5. Add one peg at a time until your garage door opener operates with the compartment door closed when you press the button.

Downloaded from www.Manualslib.com manuals search engine

Storage Bin

At the base of the center instrument panel console, there is a storage bin. To open the bin, lift the latch release and the door will fold down.

Inside the bin, you will find a tray that slides out. Slide the tray all the way toward the rear of the vehicle until the tray locks onto the plastic tabs at the end of the guide rails. The trays hold CDs or cassettes in the center area. You can also store cassettes in the left and right side areas. The tray can be removed for cleaning or when you want to replace the selection of CDs or cassettes. Slide the tray back into the storage bin before closing the bin door. The tray can also be placed in the glove box for locked storage if desired.

Removing and Replacing the Tray

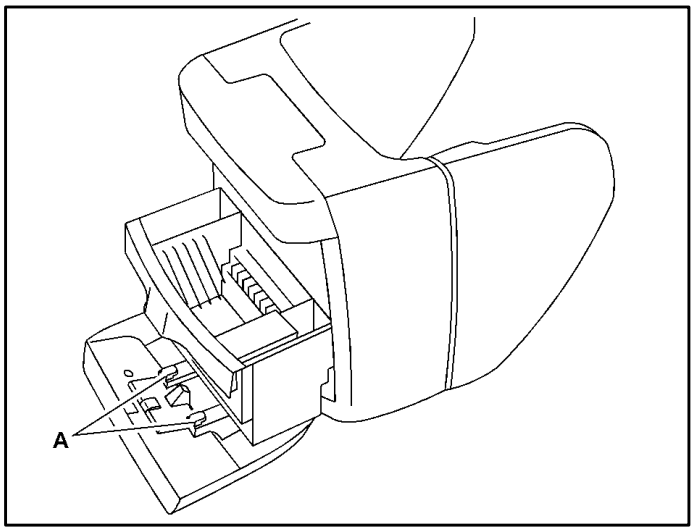

To remove the tray, slide it almost all the way out. Don't let the tray lock over the plastic tabs at the end of the guide rails (A). Lift the tray out of the guide rails. The rubber mat under the tray also lifts out for cleaning. When the rubber mat is put back in, be sure the tabs at the back of the mat are seated in the slots at the back of the storage bin.

Downloaded from www.Manualslib.com manuals search engine

The dividers in the tray can be removed by squeezing the plastic tabs on the bottom of the dividers, while pulling up. Put the dividers back in by sliding them down until the tabs click into place.

To reinstall the tray, line up the guides on the bottom of the tray with the guide rails in the storage bin door. Slide the tray back in.

Front Seat Storage Bin

The storage bin is located under the manual front passenger's seat. To open the bin, lift the handle and slide the drawer out.

Cupholders

There are cupholders located below the center console switchbank. The cupholders have a removeable liner for larger size cups and for cleaning the cupholders.

To use the cupholders, simply pull out the tray. Keep the tray in when not in use.

Saddlebag (If Equipped)

If your vehicle has the saddlebag, it provides extra storage space. It is found in the rear of your vehicle. It is designed to be stored in the side convenience nets and contains the inflator hose and valve stems/adaptors for the optional accessory inflator system.

Rear Storage Compartments and Cupholders

Your vehicle has a storage compartment and may have a cupholder on the driver's side of the vehicle, next to the third row seat(s).

Your vehicle also has cupholders on the bottom inboard side of the second row driver's side captain's chairs (if equipped) and the seatbacks have cupholders that can be used when the seatbacks are folded forward.

Downloaded from www.Manualslib.com manuals search engine

Convenience Net (Option)

The optional convenience net is designed to help keep small loads, like grocery bags, from falling over during sharp turns or quick stops and starts. Install the convenience net at the rear of your vehicle, inside the liftgate.

Attach the upper loops to the posts on either side of the liftgate opening (the label on the net should be in the upper left-hand corner). Attach the lower hooks to the metal rings on the floor.

The side of the convenience net closest to the front of the vehicle is higher than the side closest to the liftgate. Once you've loaded items into the net, stretch the higher side of the net up and over the top of the load to hold it firmly in place.

The convenience net has a maximum capacity of 100 lbs. (45 kg). It is not designed to hold larger, heavier loads. Store such loads on the floor of your vehicle, as far forward as you can.

When not in use, it is recommend that you take down the convenience net to extend the life of the net and to help retain its elasticity, and to keep the rear exit clear. Store the net in the pouch behind either front seat, in the optional saddlebag or in one of the side convenience nets.

Downloaded from www.Manualslib.com manuals search engine

Side Convenience Nets

The side convenience nets are designed to hold smaller items (about 8 lbs. (4 kg.)) than the large convenience net. Attach the loops to the posts on the rear side panels, near the jack storage area.

When not in use, it is recommended that you take down the convenience nets to extend the life of the nets and to help retain their elasticity.

Front Seat Storage Net

There is a storage net that stretches between the front seats. Pull the hooks towards the passenger's seat and insert them into the holes.

To store the net, lift the hooks up and out of the holes. The net does not detach from the driver's seat.

When not in use, it is recommended that you unhook the net to extend its life and retain its elasticity.

Downloaded from www.Manualslib.com manuals search engine

Convenience Center (Option)

⚠ CAUTION:

If the convenience center isn't secured properly, it can move around in a collision or sudden stop. People in the vehicle could be injured. Be sure to secure the convenience center properly.

The convenience center comes with the optional stowable seat. It provides extra storage space for the rear of the vehicle.

To open the convenience center, pull up on the door latch located in the front. The convenience center cover has two automatic prop rods to hold it up and in place.

To close the convenience center cover you must pull one of the prop rod linkages toward you while holding onto the door latch and lower the convenience center cover to close it.

Removing the Convenience Center

1. Make sure that all items are off of the convenience center and that it is empty.
2. Turn the hand knob counterclockwise until the knob is loose.
3. Lift up on the hand knob to grab a hold of the convenience center.
4. Lift up on the convenience center while pulling it toward you and pull it out.

Replacing the Convenience Center

1. The stowable seat must be properly installed in the vehicle. See "Stowable Seat" in the Index for more information. If the stowable seat is not in the vehicle with the convenience center, the convenience center will not be locked into the correct position in the vehicle.
2. Make sure that the convenience center is closed.
3. Lift the convenience center up and into the rear of the vehicle.

Downloaded from www.Manualslib.com manuals search engine

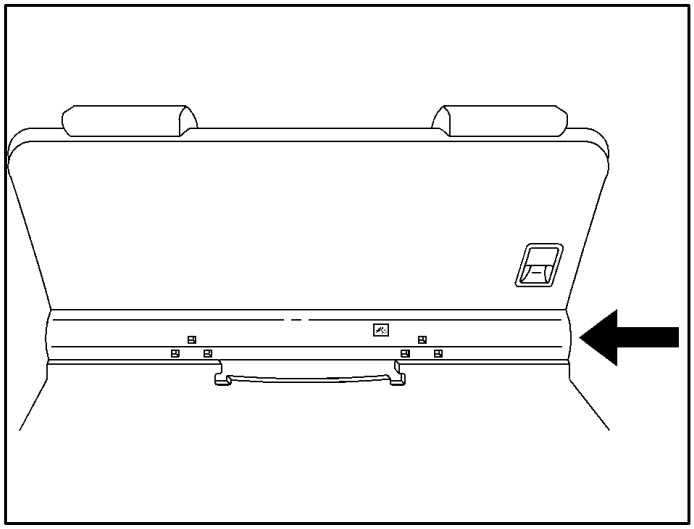

4. Put the tray sill, located on the back of the convenience center, in the upright position.
5. Slide the convenience center in and align it so that the forks, located on the bottom rear of the convenience center, slide into the seat anchors.
6. Press down on the front of the convenience center so the center locates on the sill mounting bracket.
7. Turn the hand knob clockwise until it is tight.
8. Pull up on the convenience center to make sure it is locked into place.

The tray sill can be folded down onto the stowable seat to close the space between the two when the stowable seat is folded down. To do this, flip the sill plate up and over toward the stowable seat.

The cover of the convenience center can be left in its upright position while the vehicle is moving.

The convenience center has six hooks on the inside cover for hanging items on. The prop rods can hold up to 49 lbs. (21.8 kg) on the cover of the convenience center while in its upright position.

The convenience center and the stowable seat both have a maximum weight capacity of 400 lbs. (181.6 kg).

NOTICE:

Your warranty does not cover parts or components that fail because of overloading.

Downloaded from www.Manualslib.com manuals search engine

Luggage Carrier (Option)

⚠ CAUTION:

If you try to carry something on top of your vehicle that is longer or wider than the luggage carrier -- like paneling, plywood, a mattress, and so forth -- the wind can catch it as you drive along. This can cause you to lose control. What you are carrying could be violently torn off, and this could cause you or other drivers to have a collision, and of course damage your vehicle. You may be able to carry something like this inside. But, never carry something longer or wider than the luggage carrier on top of your vehicle.

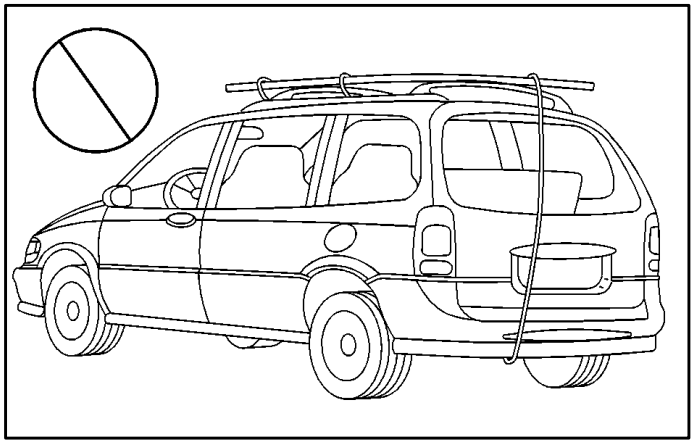

If you have the optional luggage carrier, you can load things on top of your vehicle. The luggage carrier has slats and side rails attached to the roof, as well as sliding crossrails and places to use for tying things down. These let you load some things on top of your vehicle, as long as they are not wider or longer than the luggage carrier.

Downloaded from www.Manualslib.com manuals search engine

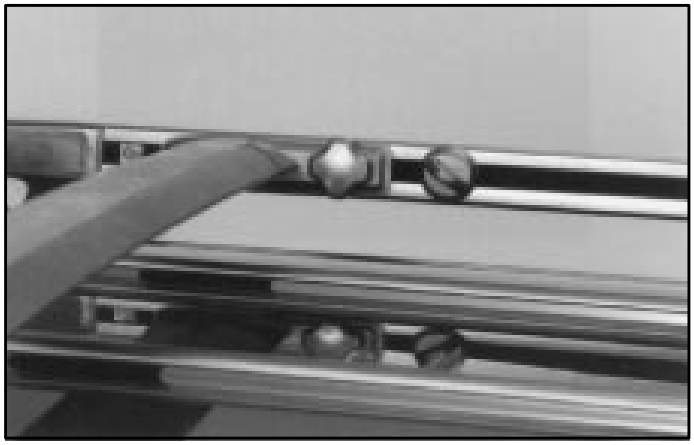

NOTICE:

Loading cargo that weighs more than 150 lbs. (68 kg) on the luggage carrier may damage your vehicle.

When you carry cargo on the luggage carrier of a proper size and weight, put it on the slats, as far forward as you can. Then slide the crossrail up against the rear of the load, to help keep it from moving. You can then tie it down.

Don't exceed the maximum vehicle capacity when loading your vehicle. For more information on vehicle capacity and loading, see "Loading Your Vehicle" in the Index.

To prevent damage or loss of cargo as you're driving, check now and then to make sure the luggage carrier and cargo are still securely fastened.

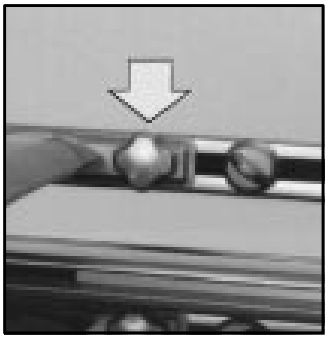

Your luggage carrier has release knobs set in the ends of each crossrail.

Downloaded from www.Manualslib.com manuals search engine

Turn the release knobs counterclockwise to unlock the crossrails. Slide the crossrails forward or backward, as needed, to accommodate loads of various sizes.

After repositioning the crossrails, be sure to tighten the release knobs by turning them clockwise. This will lock the crossrails in place.

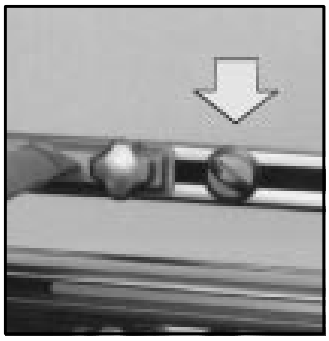

Use the tie-down loops on the slider to help secure large loads.

Sun Visors

To block out glare, you can swing down the visors. You can also remove them from the center mount and swing them to the side.

Visor Vanity Mirrors

Pull down the sun visor. Flip up the cover to expose the vanity mirror.

Lighted Visor Vanity Mirrors (If Equipped)

Pull down the sun visor. Flip up the cover to expose the vanity mirror. The lamps will come on when you open the cover.

Downloaded from www.Manualslib.com manuals search engine

Accessory Inflator System (Option)

Your vehicle may have an air inflator. With it, you can inflate things like air mattresses and basketballs, and you can also use it to bring your tires up to the proper pressure.

The air inflator is located in the rear compartment on the driver's side. To remove the cover, pull the tab on the cover and pull it off.

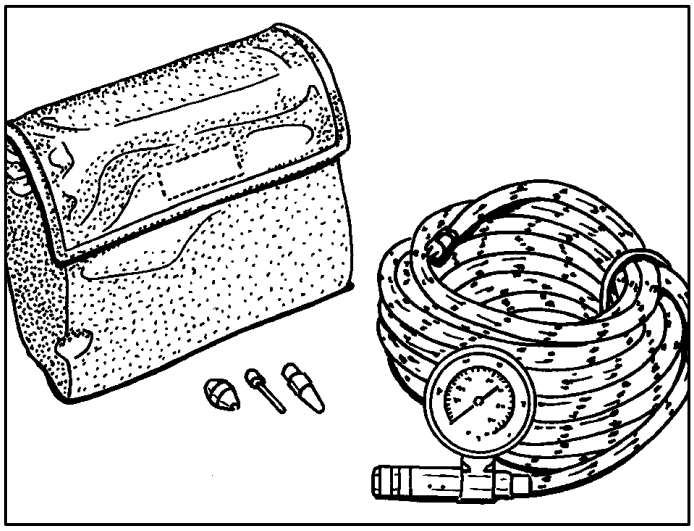

The air inflator kit is stored in the glove box or in the optional saddlebag. It includes a 20-foot (6 m) hose with an air pressure gage and nozzle adapters.

⚠ CAUTION:

Inflating something too much can make it explode, and you or others could be injured. Be sure to read the inflator instructions, and inflate any object only to its recommended pressure.

Downloaded from www.Manualslib.com manuals search engine

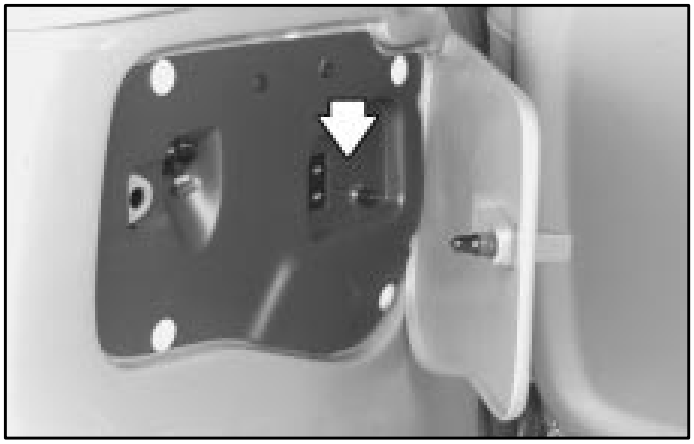

To use your air inflator system, do the following:

1. Turn the ignition key to ACCESSORY or START.
2. Attach the appropriate nozzle adapter, if required, to the end of the hose that has the pressure gage.
3. Attach that end of the hose to the object you wish to inflate.
4. Remove the protective cap covering the outlet.
5. Attach the other end of the hose to the outlet.
6. Press the ON switch.

If the air inflator system does not turn on, the fuse may be blown or installed incorrectly. See “Fuses and Circuit Breakers” in the Index or see your dealer for service.

Your air inflator will automatically shut off after about 10 minutes. To reset, press the ON switch again.

Don’t run your air inflator for longer than 30 minutes at one time. If you do, you may damage the system. After 30 minutes, wait at least 10 minutes before restarting the air inflator.

To turn off the inflator, do the following:

1. Press OFF and detach the hose, first from the inflated object, then from the outlet.
2. Put the protective cap back on.
3. Place the inflator kit tools in the pouch, and store in the glove box.

To put the cover back on, line up the tabs at the back of the cover and put it in place. Push down the tab to secure the cover.

Downloaded from www.Manualslib.com manuals search engine

Accessory Power Outlets

Accessory power outlets can be used to plug in electrical equipment such as a cellular telephone, CB radio, etc. Follow the proper installation instructions that are included with any electrical equipment you install.

The front accessory power outlets are located below the cupholder drawer. Pull the cover down to use the accessory power outlet. When not in use, keep the cover on.

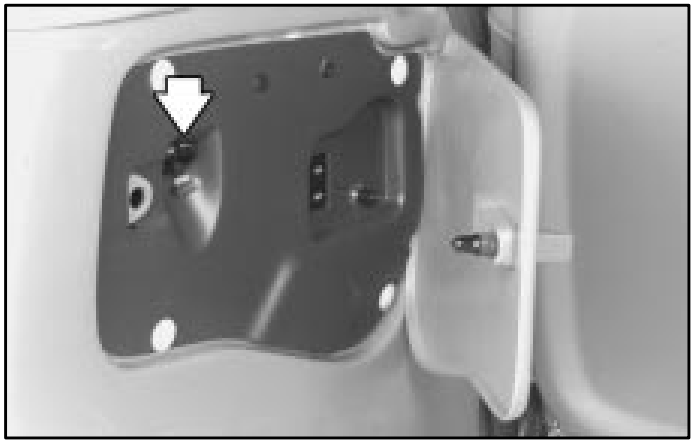

The rear accessory power outlet is located in the rear compartment on the driver's side. To remove the cover, pull the tab on the cover and pull it off.

To put the cover back on the rear accessory power outlet, line up the tabs at the back of the cover and put the cover in place. Push down the tab to secure the cover.

When not in use, always cover the rear accessory power outlet with the protective cap.

NOTICE:

When using the accessory power outlets:

- **Maximum load of any electrical equipment should not exceed 20 amps.**
- **Be sure to turn off any electrical equipment when not in use. Leaving electrical equipment on for extended periods can drain your battery.**

Certain accessory power plugs may not be compatible to the accessory power outlet and could result in blown vehicle or adapter fuses. If you experience a problem see your dealer for additional information on the accessory power plugs.

Downloaded from www.Manualslib.com manuals search engine

OnStar® System (If Equipped)

OnStar is a vehicle communications system that offers a variety of services and provides a hands-free communication link between you and the OnStar Center. A service subscription agreement and fee are required in order to receive OnStar service. Services are available 24 hours a day, 7 days a week. For more information, call 1-888-ONSTAR-7 (1-888-667-8277).

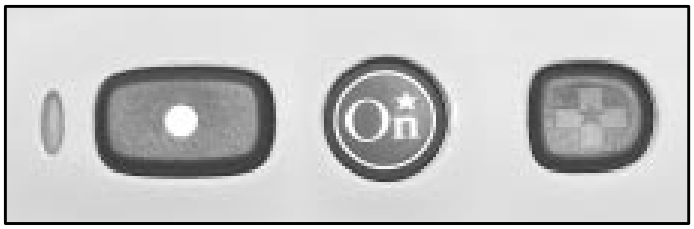

OnStar Services Button: Press this button once to contact an advisor who will be able to assist you with these services. If you are not quickly connected, the system will automatically reset and redial. This ensures connection to the center; there is no additional action required. Press the Call Answer/End button to cancel the automatic redial.

Emergency Button: In an emergency situation, press the emergency service button. Upon receiving the call, an advisor at the center will locate your vehicle and assess the situation. If necessary, the advisor will alert the nearest emergency service provider.

Call ANSWER/END Button: Use this button to answer a call. (If you are receiving a call, the audio system will mute, and the ring will be heard). Press this button at the end of a call to disconnect and return the audio system to its previous settings. This button will also cancel a call if one of the buttons is accidentally pressed or if the automatic redial function is activated.

Volume Control: You can control the volume of the OnStar System using either the volume control knob on the radio or, if equipped, the steering wheel volume control.

Telltale Light: This light will indicate the status of the system. A solid green light will come on when you start the vehicle to let you know that the system is on and is ready to make or receive calls.

If the light blinks green it means that an incoming or outgoing call is in progress. Press the Call ANSWER/END button if you notice the light blinking and you are not on a call.

Downloaded from www.Manualslib.com manuals search engine

The light will be red in the event of an OnStar system malfunction. If this occurs press the OnStar button to attempt to contact an advisor. If the connection is made, the advisor will assist you with steps to take to make sure that the system is functioning properly. If you cannot contact the advisor, take your vehicle to your dealership as soon as possible for assistance.

Safety and Security Services

- **Automatic Notification of Air Bag Deployment --** If an air bag deploys, a priority emergency signal is automatically sent to the center. An advisor will locate your vehicle's position, try to contact you and assist you in the situation. If the center is unable to contact you, an emergency service provider will be contacted.
- **Stolen Vehicle Tracking --** Call the center at 1-888-4-ONSTAR (1-888-466-7827) to report your vehicle stolen. The system can then locate and track your vehicle and the advisor will be able to notify the proper authorities.
- **Roadside Assistance with Location --** For vehicle breakdowns, press the OnStar button. An advisor will contact the appropriate help.
- **Remote Diagnostics --** If an instrument panel light comes on, the center can perform a check of the engine on-board computer. An advisor can then recommend what action needs to be taken.
- **OnStar MED-NET --** Med-Net can store your personal medical history and provide it to emergency personnel if necessary. (Requires activation and additional fee.)
- **Accident Assist --** An advisor can provide step-by-step guidance following an accident.
- **Remote Door Unlock --** To contact the center, call 1-888-4-ONSTAR. You will be required to provide your security information. An advisor will send a command to your vehicle to unlock itself. The advisor can delay unlocking your vehicle. Remote Door Unlock is disabled 48 hours after the vehicle is parked to maintain the battery charge.
- **Vehicle Locator Service --** To contact the center, call 1-888-4-ONSTAR. You will be required to provide your security information. An advisor will send a command to your vehicle to sound the horn and/or flash the lamps.

In order to provide you with excellent service, calls with the OnStar Center may be monitored or recorded.

Downloaded from www.Manualslib.com manuals search engine

Premium Services (Includes Safety and Security Services)

- **Route Support --** An advisor can provide directions or guidance to anywhere you want to go. In addition, they can help you locate gas stations, rest areas, ATMs, hospitals, hotels, stores, eateries and more.
- **Concierge Services --** The concierge advisor can obtain tickets, reservations, or help with vacation/trip planning and other unique items and services.
- **Ride Assist --** An advisor can locate transportation in the event that you are unable to drive.

OnStar System Limitations

Complete limitations can be found on the Subscriber Services Agreement.

OnStar Service is:

- Available in the 48 contiguous United States, Alaska, Hawaii and Canada;
- available when the vehicle is within the operating range of a cellular provider;
- subject to limitations caused by atmospheric conditions, such as severe weather or topographical conditions, such as mountainous terrain;
- subject to cellular carrier equipment limitations.

Global positioning capabilities used to deliver OnStar service will not be available if satellite signals are obstructed.

OnStar will not function if the vehicle's battery is discharged or disconnected. It may also be inoperative if the vehicle is in an accident and the OnStar or vehicle electrical system components are damaged.

Safety and security services are provided by existing governmental emergency service providers. OnStar will use reasonable efforts to contact the appropriate emergency service provider and request assistance but cannot promise that they will respond to the call in a timely manner or at all.

Downloaded from www.Manualslib.com manuals search engine

HomeLink® Transmitter (Option)

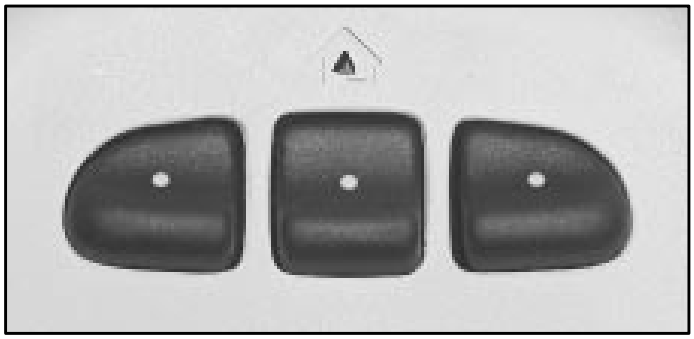

This device complies with Part 15 of the FCC Rules. Operation is subject to the following two conditions: (1) this device may not cause harmful interference, and (2) this device must accept any interference received, including interference that may cause undesired operation.

This device complies with RSS-210 of Industry Canada. Operation is subject to the following two conditions: (1) this device may not cause interference, and (2) this device must accept any interference, including interference that may cause undesired operation of the device.

Changes and modifications to this system by other than an authorized service facility could void authorization to use this equipment.

Programming the HomeLink Transmitter

Do not use the HomeLink Transmitter with any garage door opener that does not have the “stop and reverse” safety feature. This includes any garage door opener model manufactured before April 1, 1982.

Be sure that people and objects are clear of the garage door you are programming.

Your vehicle’s engine should be turned off while programming the transmitter. Follow these steps to program up to three channels:

1. If you have previously programmed a transmitter channel, proceed to Step 2. Otherwise, hold down the two outside buttons on the HomeLink Transmitter until the indicator light begins to flash rapidly (after 20 seconds). Then release the buttons. This procedure initializes the memory and erases any previous settings for all three channels.
2. Decide which one of the three channels you want to program. Hold the end of the hand-held transmitter about 1 to 3 inches (3 to 8 cm) away from the surface of the HomeLink Transmitter so that you can still see the indicator light.

Downloaded from www.Manualslib.com manuals search engine

3. Using both hands, press the hand-held transmitter button and the desired button on the HomeLink Transmitter. Continue to press both buttons through Step 4.
4. Hold down both buttons until you see the indicator light on the HomeLink Transmitter flash slowly and then rapidly. The rapid flashing indicates that the HomeLink Transmitter has been programmed. Release both buttons once the indicator light starts to flash rapidly.

If you have trouble programming the HomeLink Transmitter, make sure that you have followed the directions exactly as described. The HomeLink Transmitter may not work with older garage door openers that do not meet current Federal Consumer Safety Standards. If you cannot program the transmitter after repeated attempts, refer to “Rolling Code Programming” later in this section or contact the HomeLink Transmitter manufacturer at 1-800-355-3515.

Be sure to keep the original hand-held transmitter in case you need to erase and reprogram the HomeLink Transmitter.

Canadian Owners: During programming, the hand-held transmitter may automatically stop transmitting after one or two seconds. In this case, you should press and re-press the button on the hand-held transmitter every two seconds without ever releasing the button on the HomeLink Transmitter. Release both buttons when the indicator light on the HomeLink Transmitter begins to flash rapidly.

Downloaded from www.Manualslib.com manuals search engine

Operating the HomeLink Transmitter

Press and release the appropriate button on the HomeLink Transmitter. The indicator light comes on while the signal is being transmitted.

If the hand-held transmitter appears to program the HomeLink Transmitter but does not open your garage door, and if the garage door opener was manufactured after 1996, the garage door opener may have a “rolling code” system. A rolling code system changes the code of the garage door opener every time you open or close the garage door.

To determine if you have this system, press the button on the HomeLink Transmitter that you have programmed already. If the indicator light on the HomeLink Transmitter flashes rapidly for two seconds and then turns solid, the garage door opener has a rolling code system. In a rolling code system, the garage door motor head unit must be trained to the HomeLink Transmitter.

“Rolling Code” Programming

If you have not previously programmed the hand-held transmitter to the HomeLink Transmitter, see “Programming the HomeLink Transmitter” listed previously. If you have completed this programming already, you now need to train the garage door opener motor head unit to recognize the HomeLink Transmitter.

1. Find the training button on the garage door opener motor head unit. The exact location and color of the button may vary by garage door opener brand. If you have difficulty finding the training button, refer to your garage door opener owner’s manual.

   Because of the steps involved, it may be helpful to have another person available to assist you in programming the transmitter.

Downloaded from www.Manualslib.com manuals search engine

2. Press the training button on the garage door opener motor head unit.

   Following this step, you have 30 seconds to start Step 3.

3. Return to the HomeLink Transmitter in your vehicle and firmly press and release the HomeLink Transmitter button you have already programmed for two to three seconds. Press and release the button again (you may need to do this step up to three times) to make sure that the HomeLink Transmitter has been trained to the garage door opener motor head unit. Check that the training was successful.

The garage door opener should now recognize the HomeLink Transmitter. You may either use the HomeLink Transmitter or the hand-held transmitter to open the garage door.

If after following these instructions, you still have problems training the garage door opener, contact the HomeLink Transmitter manufacturer at 1-800-355-3515.

Erasing Channels

To erase all three programmed channels, hold down the two outside buttons until the indicator light begins to flash (after 20 seconds). Release both buttons.

Accessories

Accessories for the HomeLink Transmitter are available from the manufacturer of the unit. If you would like additional information, please call 1-800-355-3515.

Downloaded from www.Manualslib.com manuals search engine

The Instrument Panel -- Your Information System

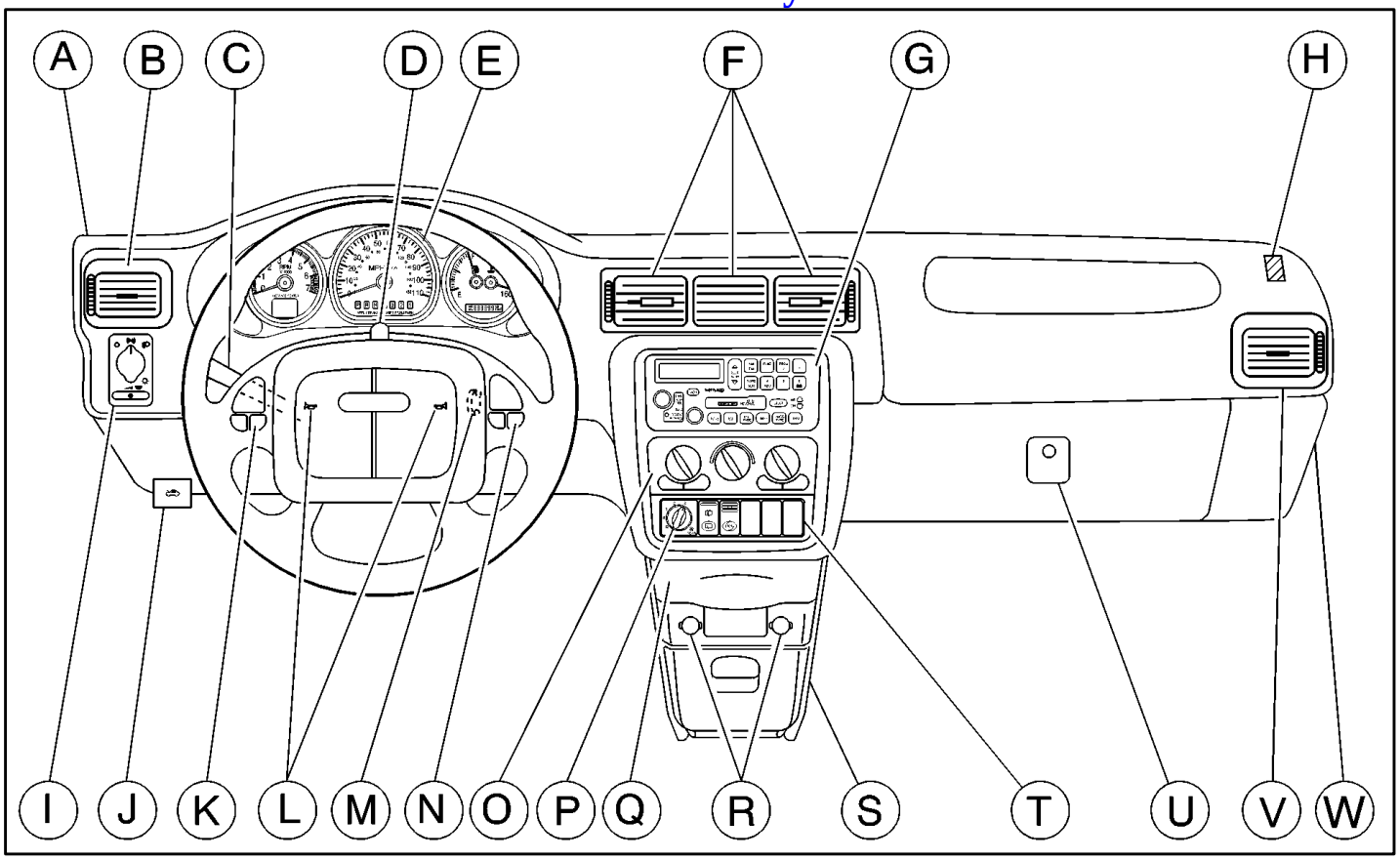

Downloaded from www.Manualslib.com manuals search engine

The main components of the instrument panel are the following:

A. Side Vents
B. Front Vents
C. Turn Signal/Multifunction Lever
D. Hazard Warning Flasher Switch
E. Instrument Panel Cluster
F. Center Vents
G. Audio System
H. Side Vents
I. Exterior Lamp Control
J. Hood Release
K. Audio Steering Wheel Controls (Option)
L. Horn
M. Ignition Switch
N. Audio Steering Wheel Controls (Option)
O. Climate Controls
P. Rear Fan Controls (Option)
Q. Cupholder Tray
R. Accessory Power Outlet
S. Storage Bin
T. Instrument Panel Switchbank
U. Glove Box
V. Front Vents
W. Instrument Panel Fuse Block

Downloaded from www.Manualslib.com manuals search engine

Instrument Panel Cluster

Your instrument panel cluster is designed to let you know at a glance how your vehicle is running. You'll know how fast you're going, how much fuel you're using, and many other things you'll need to drive safely and economically. The indicator warning lights and gages are explained on the following pages.

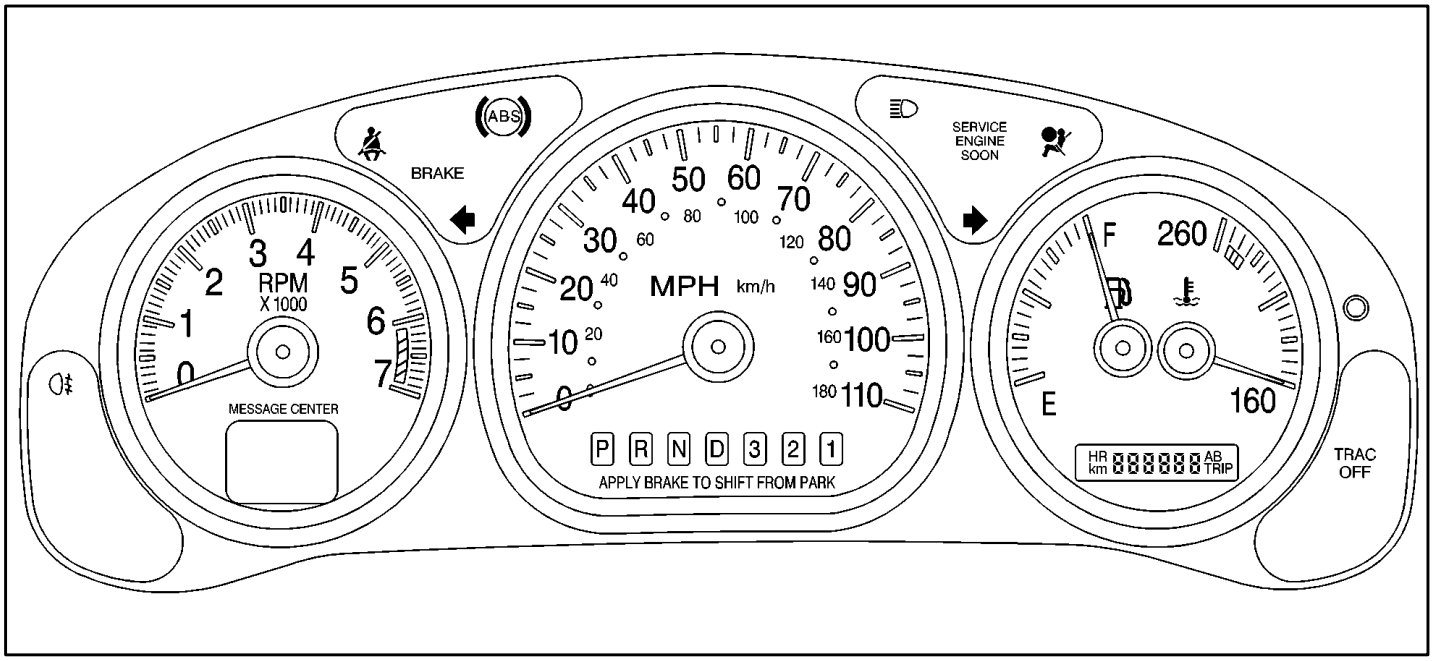

United States shown, Canada similar

Downloaded from www.Manualslib.com manuals search engine

Speedometer and Tamper Resistant Odometer

Your speedometer lets you see your speed in both miles per hour (mph) and kilometers per hour (km/h). Your odometer shows how far your vehicle has been driven, in either miles (used in the United States) or kilometers (used in Canada).

Your vehicle has a tamper-resistant odometer.

You may wonder what happens if your vehicle needs a new odometer installed. If the new one can be set to the mileage total of the old odometer, then that will be done. If it can't, then it's set at zero and a label must be put on the driver's door to show the old mileage reading when the new odometer was installed.

Dual Trip Odometers

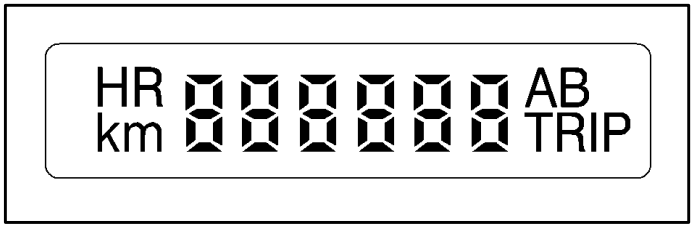

In addition to the standard odometer, the cluster can also display two separate trip odometers (designated by the letter "A" or "B" in the display window) as well as your vehicle's Engine Oil Life (designated by the word OIL in the display window). The display can be toggled between the odometer, the trip odometers and engine oil life by quickly pressing and releasing the trip/reset button located to the right of the temperature gage. The display toggles once each time the trip/reset button is pressed for less than 1.5 seconds. The display toggles in the following sequence: Odometer - Trip Odometer A - Trip Odometer B - Engine Oil Life. If the engine oil life is left on the display, it will automatically toggle back to the odometer after approximately 15 seconds. Each of the two trip odometers can be used to keep track of different trip distances (for example, the mileage of a long trip and the mileage driven on the current tank of fuel). The trip odometers will continue to keep track of miles (kilometers) driven even if they are not currently displayed. To reset the odometer to zero (0), push and hold the trip/reset button for at least 1.5 seconds, but less than three seconds. Only the trip odometer that is showing in the display will be reset.

Downloaded from www.Manualslib.com manuals search engine

Retro-Active Reset

Each of the two trip odometers has a feature called retro-active reset. This feature can be used to set either (or both) trip odometer(s) to the number of miles (kilometers) driven since the ignition was last turned on. This can be used if you forget to reset your trip odometer at the beginning of a trip. To use the retro-active reset feature, push and hold the trip/reset button for at least three seconds. The trip odometer will then display the number of miles (kilometers) driven since the ignition was last turned on and you began driving. (If you use the retro-active reset feature after you have started the vehicle, but before you begin moving, the display will show the number of miles (kilometers) you drove during the last ignition cycle.) Once you begin driving, the trip odometer will accumulate mileage. For example, if you have driven 5.0 miles (8.0 km) since you started your vehicle, and then activate the retro-active reset feature, the display will show 5.0 miles (8.0 km). As you drive, the display will then increase to 5.1 miles (8.2 km), 5.2 miles (8.4 km), etc. Only the trip odometer that is displayed will be affected by the retro-active reset so that both trip odometers can be used separately.

Tachometer

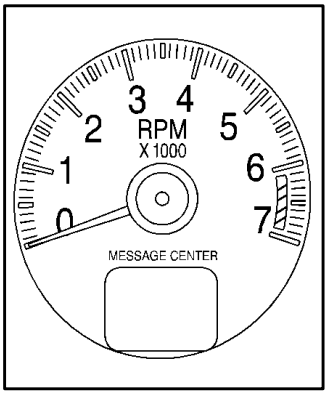

The tachometer displays the engine speed in revolutions per minute (rpm).

NOTICE:

Do not operate the engine with the tachometer in the red area, or engine damage may occur.

Downloaded from www.Manualslib.com manuals search engine

Warning Lights, Gages, Messages and Indicators

This part describes the warning lights and gages that may be on your vehicle. The pictures will help you locate them.

Warning lights and gages can signal that something is wrong before it becomes serious enough to cause an expensive repair or replacement. Paying attention to your warning lights and gages could also save you or others from injury.

Warning lights come on when there may be or is a problem with one of your vehicle's functions. As you will see in the details on the next few pages, some warning lights come on briefly when you start the engine just to let you know they're working. If you are familiar with this section, you should not be alarmed when this happens.

Gages can indicate when there may be or is a problem with one of your vehicle's functions. Often gages and warning lights work together to let you know when there's a problem with your vehicle.

When one of the warning lights comes on and stays on when you are driving, or when one of the gages shows there may be a problem, check the section that tells you what to do about it. Please follow this manual's advice. Waiting to do repairs can be costly -- and even dangerous. So please get to know your warning lights and gages. They're a big help.

Your vehicle also has a message center that works along with the warning lights and gages. See "Message Center" in the Index.

Safety Belt Reminder Light

When the key is turned to RUN or START, a chime will come on for about eight seconds to remind people to fasten their safety belts.

The safety belt light will also come on and stay on for about 70 seconds. If the driver's belt is already buckled, neither the chime nor the light will come on.

Downloaded from www.Manualslib.com manuals search engine

Air Bag Readiness Light

There is an air bag readiness light on the instrument panel, which shows the air bag symbol. The system checks the air bag's electrical system for malfunctions. The light tells you if there is an electrical problem. The system check includes the air bag sensor, the air bag modules, the wiring and the diagnostic module. For more information on the air bag system, see "Air Bag" in the Index.

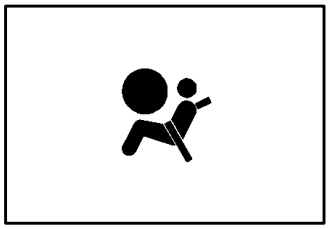

This light will come on when you start your vehicle, and it will flash for a few seconds. Then the light should go out. This means the system is ready.

If the air bag readiness light stays on after you start the vehicle or comes on when you are driving, your air bag system may not work properly. Have your vehicle serviced right away.

⚠ CAUTION:

If the air bag readiness light stays on after you start your vehicle, it means the air bag system may not be working properly. The air bags in your vehicle may not inflate in a crash, or they could even inflate without a crash. To help avoid injury to yourself or others, have your vehicle serviced right away if the air bag readiness light stays on after you start your vehicle.

The air bag readiness light should flash for a few seconds when you turn the ignition key to RUN. If the light doesn't come on then, have it fixed so it will be ready to warn you if there is a problem.

Downloaded from www.Manualslib.com manuals search engine

Brake System Warning Light

When the ignition is on, the brake system warning light will come on when you set your parking brake. The light will stay on if your parking brake doesn't release fully. If it stays on after your parking brake is fully released, it means you have a brake problem.

Your vehicle's hydraulic brake system is divided into two parts. If one part isn't working, the other part can still work and stop you. For good braking, though, you need both parts working well.

If the warning light comes on, there could be a brake problem. Have your brake system inspected right away.

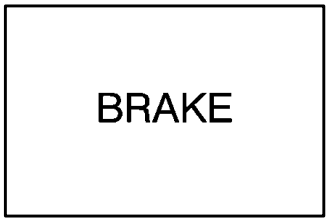

United States

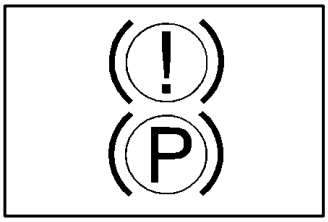

Canada

This light should come on briefly when you turn the ignition key to RUN. If it doesn't come on then, have it fixed so it will be ready to warn you if there's a problem.

If the light comes on while you are driving, pull off the road and stop carefully. You may notice that the pedal is harder to push. Or, the pedal may go closer to the floor. It may take longer to stop. If the light is still on, have the vehicle towed for service. See "Anti-Lock Brake System Warning Light" and "Towing Your Vehicle" in the Index.

⚠ CAUTION:

Your brake system may not be working properly if the brake system warning light is on. Driving with the brake system warning light on can lead to an accident. If the light is still on after you've pulled off the road and stopped carefully, have the vehicle towed for service.

Downloaded from www.Manualslib.com manuals search engine

Anti-Lock Brake System Warning Light

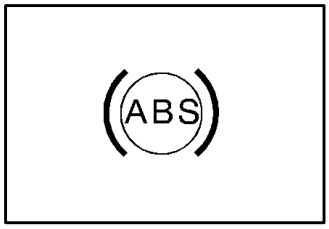

The anti-lock brake system warning light should come on for a few seconds when you turn the ignition key to RUN.

If the anti-lock brake system warning light stays on longer than normal after you've started your engine, turn the ignition off. Or, if the light comes on and stays on when you're driving, stop as soon as possible and turn the ignition off. Then start the engine again to reset the system. If the light still stays on, or comes on again while you're driving, the anti-lock brake system needs service and you don't have anti-lock brakes. The brake pedal may be harder to push, or it may go to the floor. It may take longer to stop. Adjust your driving accordingly.

The anti-lock brake system warning light should come on briefly when you turn the ignition key to RUN. If the light doesn't come on then, have it fixed so it will be ready to warn you if there is a problem.

Traction Control System Warning Light (Option)

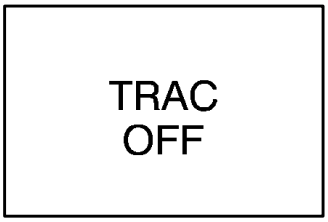

United States

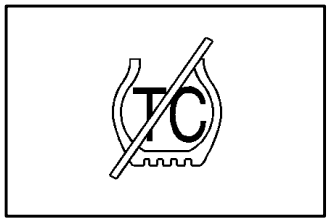

Canada

The traction control system warning light may come on for the following reasons:

- If you turn the system off by pressing the TCS button located in the center console switchbank the warning light will come on and stay on. To turn the system back on, press the button again. The warning light should go off. See "Traction Control System" in the Index for more information.
- If there's a brake system problem that is specifically related to traction control, the traction control system will turn off and the warning light will come on. If your brakes begin to overheat, the traction control system will turn off and the warning light will come on until your brakes cool down.

Downloaded from www.Manualslib.com manuals search engine

- If the traction control system is affected by an engine-related problem, the system will turn off and the warning light will come on.

If the traction control system warning light comes on and stays on for an extended period of time when the system is turned on, your vehicle needs service.

Engine Coolant Temperature Gage

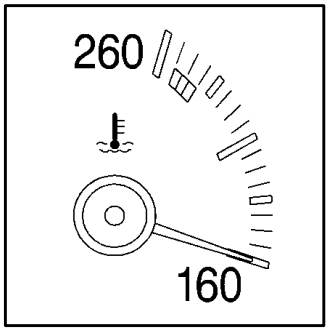

United States

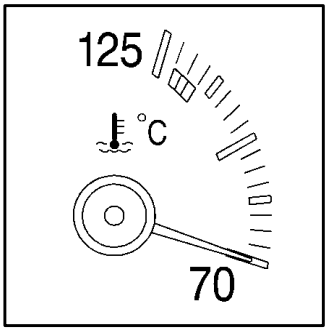

Canada

This gage shows the engine coolant temperature. If the gage pointer moves into the red area, your engine is too hot!

It means that your engine coolant has overheated. If you have been operating your vehicle under normal driving conditions, you should pull off the road, stop your vehicle and turn off the engine as soon as possible.

See “Engine Overheating” in the Index.

Malfunction Indicator Lamp (Service Engine Soon Light in the United States or Check Engine Light in Canada)

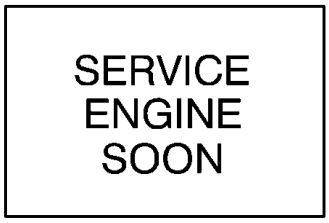

United States

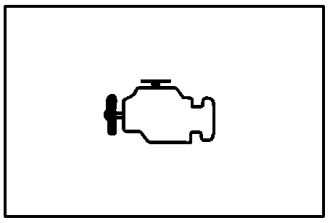

Canada

Your vehicle is equipped with a computer which monitors operation of the fuel, ignition and emission control systems.

Downloaded from www.Manualslib.com manuals search engine

This system is called OBD II (On-Board Diagnostics-Second Generation) and is intended to assure that emissions are at acceptable levels for the life of the vehicle, helping to produce a cleaner environment. The SERVICE ENGINE SOON or CHECK ENGINE light comes on to indicate that there is a problem and service is required. Malfunctions often will be indicated by the system before any problem is apparent. This may prevent more serious damage to your vehicle. This system is also designed to assist your service technician in correctly diagnosing any malfunction.

NOTICE:

If you keep driving your vehicle with this light on, after a while, your emission controls may not work as well, your fuel economy may not be as good and your engine may not run as smoothly. This could lead to costly repairs that may not be covered by your warranty.

NOTICE:

Modifications made to the engine, transaxle, exhaust, intake or fuel system of your vehicle or the replacement of the original tires with other than those of the same Tire Performance Criteria (TPC) can affect your vehicle's emission controls and may cause the SERVICE ENGINE SOON or CHECK ENGINE light to come on. Modifications to these systems could lead to costly repairs not covered by your warranty. This may also result in a failure to pass a required Emission Inspection/Maintenance test.

Downloaded from www.Manualslib.com manuals search engine

This light should come on, as a check to show you it is working, when the ignition is on and the engine is not running. If the light doesn't come on, have it repaired. This light will also come on during a malfunction in one of two ways:

- **Light Flashing --** A misfire condition has been detected. A misfire increases vehicle emissions and may damage the emission control system on your vehicle. Dealer or qualified service center diagnosis and service may be required.
- **Light On Steady --** An emission control system malfunction has been detected on your vehicle. Dealer or qualified service center diagnosis and service may be required.

If the Light Is Flashing

The following may prevent more serious damage to your vehicle:

- Reducing vehicle speed.
- Avoiding hard accelerations.
- Avoiding steep uphill grades.
- If you are towing a trailer, reduce the amount of cargo being hauled as soon as it is possible.

If the light stops flashing and remains on steady, see "If the Light Is On Steady" following.

If the light continues to flash, when it is safe to do so, *stop the vehicle*. Find a safe place to park your vehicle. Turn the key off, wait at least 10 seconds and restart the engine. If the light remains on steady, see "If the Light Is On Steady" following. If the light is still flashing, follow the previous steps, and drive the vehicle to your dealer or qualified service center for service.

If the Light Is On Steady

You may be able to correct the emission system malfunction by considering the following:

Did you recently put fuel into your vehicle?

If so, reinstall the fuel cap, making sure to fully install the cap. See "Filling Your Tank" in the Index. The diagnostic system can determine if the fuel cap has been left off or improperly installed. A loose or missing fuel cap will allow fuel to evaporate into the atmosphere. A few driving trips with the cap properly installed should turn the light off.

Did you just drive through a deep puddle of water?

If so, your electrical system may be wet. The condition will usually be corrected when the electrical system dries out. A few driving trips should turn the light off.

Downloaded from www.Manualslib.com manuals search engine

Are you low on fuel?

As your engine starts to run out of fuel, your engine may not run as efficiently as designed since small amounts of air are sucked into the fuel line causing a misfire. The system can detect this. Adding fuel should correct this condition. Make sure to install the fuel cap properly. See “Filling Your Tank” in the Index. It will take a few driving trips to turn the light off.

Have you recently changed brands of fuel?

If so, be sure to fuel your vehicle with quality fuel. See “Fuel” in the Index. Poor fuel quality will cause your engine not to run as efficiently as designed. You may notice this as stalling after start-up, stalling when you put the vehicle into gear, misfiring, hesitation on acceleration or stumbling on acceleration. (These conditions may go away once the engine is warmed up.) This will be detected by the system and cause the light to turn on.

If you experience one or more of these conditions, change the fuel brand you use. It will require at least one full tank of the proper fuel to turn the light off.

If none of the above steps have made the light turn off, have your dealer or qualified service center check the vehicle. Your dealer has the proper test equipment and diagnostic tools to fix any mechanical or electrical problems that may have developed.

Emissions Inspection and Maintenance Programs

Some state/provincial and local governments have or may begin programs to inspect the emission control equipment on your vehicle. Failure to pass this inspection could prevent you from getting a vehicle registration.

Here are some things you need to know in order to help your vehicle pass an inspection:

Your vehicle will not pass this inspection if the SERVICE ENGINE SOON or CHECK ENGINE light is on or not working properly.

Your vehicle will not pass this inspection if the OBD (on-board diagnostic) system determines that critical emission control systems have not been completely diagnosed by the system. The vehicle would be considered not ready for inspection. This can happen if you have recently replaced your battery or if your battery has run down. The diagnostic system is designed to evaluate critical emission control systems during normal driving. This may take several days of routine driving. If you have done this and your vehicle still does not pass the inspection for lack of OBD system readiness, see your dealer or qualified service center to prepare the vehicle for inspection.

Downloaded from www.Manualslib.com manuals search engine

Fuel Gage

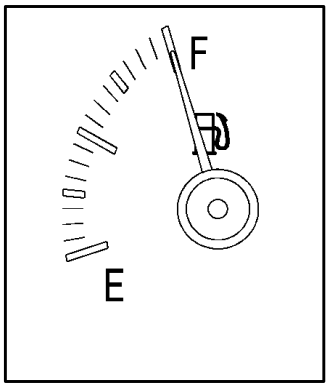

United States

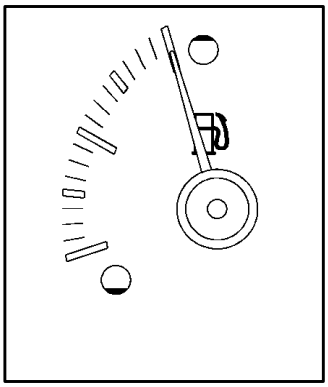

Canada

When the indicator nears empty, you still have a little fuel left, but you should get more soon.

If your fuel is low, the warning message in the message center will come on. See “Low Fuel Warning Message” later in this section.

Your fuel gage tells you about how much fuel you have left when the ignition is on.

Here are four things that some owners ask about. All these things are normal and do not indicate that anything is wrong with the fuel gage.

- At the gas station, the gas pump shuts off before the gage reads full.
- It takes a little more (or less) fuel to fill up than the gage reads. For example, the gage reads half full, but it took more (or less) than half of the tank’s capacity to fill it.
- The gage pointer may move while cornering, braking or speeding up.
- The gage may not indicate empty when the ignition is turned off.

Downloaded from www.Manualslib.com manuals search engine

Message Center

The message center is located in the instrument panel cluster. It gives you important safety and maintenance facts.

Charging System Indicator Message

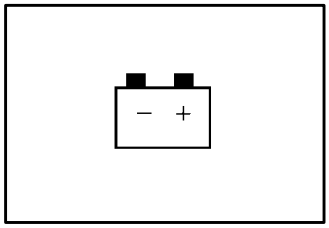

The charging system battery symbol will come on in the message center when you turn on the ignition as a check to show you it is working.

It will remain on as long as the engine is not running. It should go out once the engine is running. If it stays on, or comes on while you are driving, you may have a problem with the charging system. It could indicate that you have problems with a generator drive belt, or another electrical problem. Have it checked right away. Driving while this indicator appears in the message center could drain your battery.

If you must drive a short distance with the message on, be certain to turn off all your accessories, such as the radio and air conditioner.

Service Traction System Warning Message (Option)

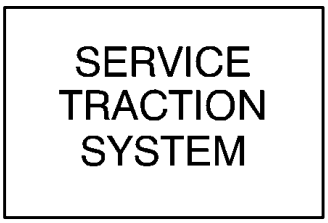

United States

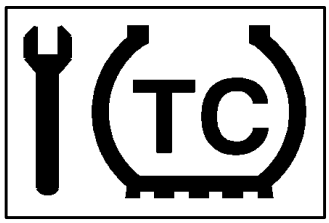

Canada

If your vehicle has the traction control system and this message is displayed when you're driving, there may be a problem with your traction control system. Your vehicle may need service.

When this message is displayed, the traction control system will not limit wheel spin. Adjust your driving accordingly.

Downloaded from www.Manualslib.com manuals search engine

The message may appear for the following reasons:

- If there's a brake system problem that is specifically related to traction control, the traction control system will turn off and the warning message will come on. If your brakes begin to overheat, the traction control system will turn off and the warning message will come on until your brakes cool down.
- If the traction control system is affected by an engine-related problem, the system will turn off and the warning message will come on.

If the traction control system warning message comes on and stays on for an extended period of time when the system is turned on, your vehicle needs service.

Traction Active Message (Option)

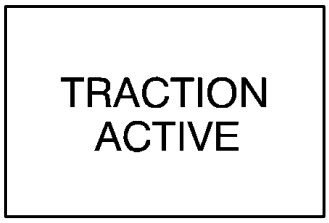

United States

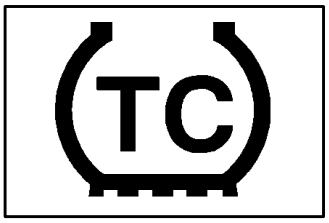

Canada

If your vehicle has the traction control system, the TRACTION ACTIVE message will appear when the traction control system is limiting wheel spin. You may feel or hear the system working, but this is normal.

Slippery road conditions may exist if this message appears, so adjust your driving accordingly. The message will stay on for a few seconds after the traction control system stops limiting wheel spin.

Downloaded from www.Manualslib.com manuals search engine

Engine Coolant Temperature Warning Message

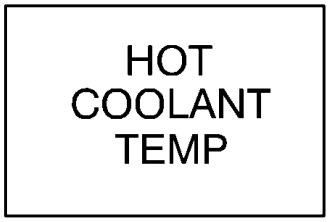

United States

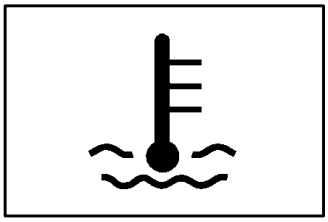

Canada

This message will come on when your engine gets too hot.

If this message comes on, it means that your engine coolant has overheated. If you have been operating your vehicle under normal driving conditions, you should pull off the road, stop your vehicle and turn off the engine as soon as possible.

See “Engine Overheating” in the Index.

Low Oil Pressure Message

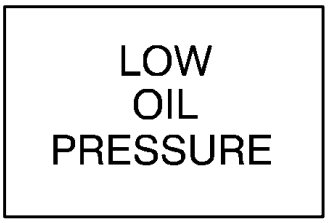

United States

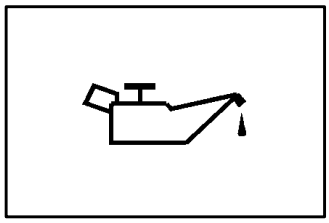

Canada

Your vehicle is equipped with a low oil pressure warning message.

Your oil pressure message lets you know when you may have a problem with your engine oil pressure.

When the engine is running and this message appears, the engine oil level may be too low. There may also be another problem causing low oil pressure.

Downloaded from www.Manualslib.com manuals search engine

⚠ CAUTION:

Don't keep driving if the oil pressure is low. If you do, your engine can become so hot that it catches fire. You or others could be burned. Check your oil as soon as possible and have your vehicle serviced.

NOTICE:

Damage to your engine from neglected oil problems can be costly and is not covered by your warranty.

Low Engine Oil Level Message

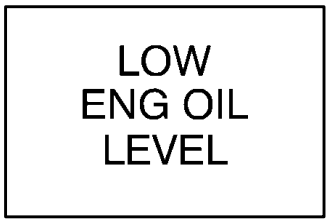

United States

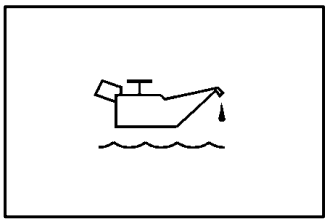

Canada

If this message comes on, it means your engine is low on oil.

You need to check the oil level right away. Have your vehicle serviced immediately.

Downloaded from www.Manualslib.com manuals search engine

Change Engine Oil Message

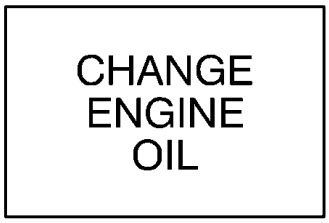

United States

Canada

If this message comes on and stays on after you started the engine, have the oil changed.

For additional information, see “Engine Oil, When to Change” in the Index. After changing the engine oil the system must be reset. See “How to Reset the Change Engine Oil Message” in the Index.

Power Sliding Door Warning Message

United States

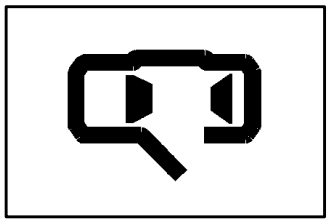

Canada

This message will come on if the power sliding door is not completely closed and the ignition is turned to RUN or START.

Downloaded from www.Manualslib.com manuals search engine

If you shift the transaxle out of PARK (P) while the power sliding door is open or in the process of closing, and the power sliding door is turned off, a buzzer will sound. This is a warning that the power sliding door is not completely closed.

⚠ CAUTION:

If you shift the transaxle out of PARK (P) and accelerate before the power sliding door latches closed, the door may reverse to the open position. A child or others could fall out of the vehicle and be injured. Always make sure the power sliding door is closed and latched before you drive away.

Door Ajar Warning Message

United States

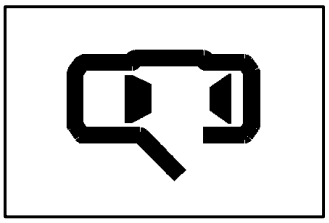

Canada

This message will come on when the ignition is turned to RUN or START and the driver's or passenger's door is open.

It may also come on if a sliding door is not in the fully latched position.

Downloaded from www.Manualslib.com manuals search engine

Rear Hatch Ajar Warning Message

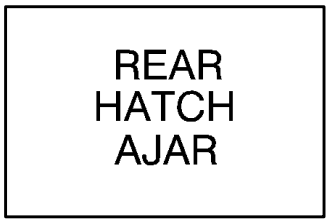

United States

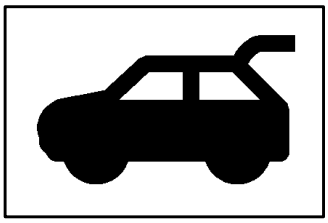

Canada

This message will come on when the ignition is turned to RUN or START and the rear hatch is open.

PASS-Key® III Security Message

United States

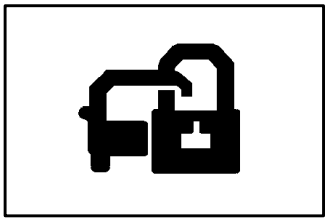

Canada

If you are ever driving and this message comes on and stays on, you will be able to restart your engine if you turn it off.

Your PASS-Key III system, however, is not working properly and must be serviced by your dealer. Your vehicle is not protected by the PASS-Key III system at this time. See “PASS-Key III” in the Index for more information.

Low Fuel Warning Message

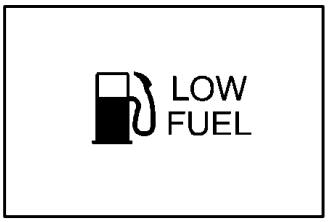

United States

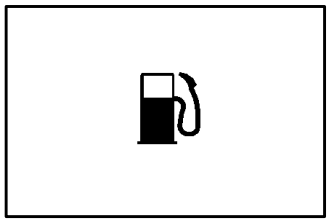

Canada

If your fuel is low, the warning message will come on and stay on until you add fuel.

If the warning message is still on after adding fuel, you need to reset the warning message. To reset the warning message, turn the ignition to OFF then to ON. If the message stays on, see your dealer right away.

Downloaded from www.Manualslib.com manuals search engine

Driver Information Center (DIC) (Option)

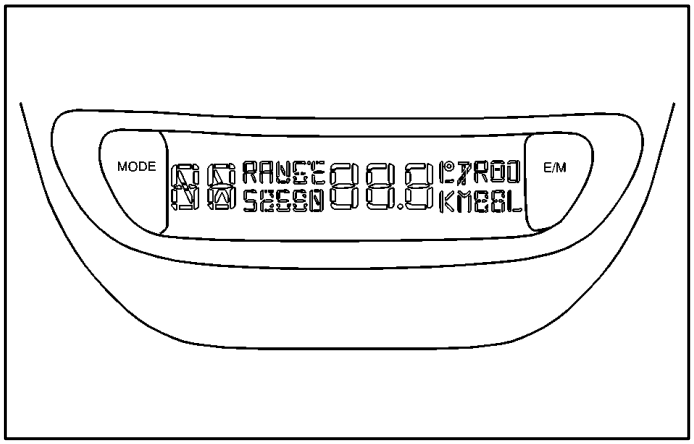

The DIC will show information about the vehicle and the surroundings.

- **E/M (English/Metric Button)**: You can change the display to a metric or English reading at any time by pressing E/M.
- **MODE**: Press this button to cycle through three modes of operation -- off, compass/temperature and trip computer mode.

  In the trip computer mode, pressing the MODE button cycles through the five displays. Press the MODE button after the last trip computer display to return the DIC to the OFF mode.

Off: No driver information is displayed in this mode of operation.

Compass/Temperature Mode: One of eight compass readings and the outside temperature are displayed. If the temperature is below 38°F (3°C), the temperature reading will toggle between displaying the outside temperature and the word “ICE” for two minutes.

Downloaded from www.Manualslib.com manuals search engine

Compass Variance

Compass variance is the difference between magnetic north and geographic north. In some areas of the country, the difference is great enough to cause the compass to give false readings. If this occurs, the compass variance must be set.

Setting the Variance

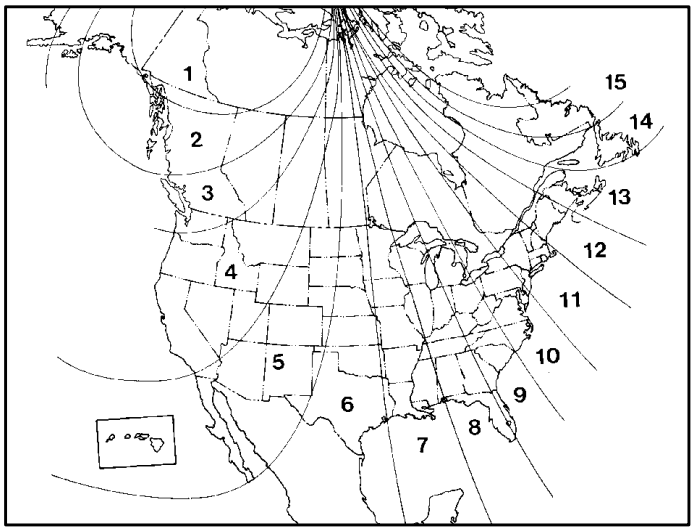

Turn the ignition on and cycle the DIC to the compass/temperature mode. Press both the E/M and MODE buttons simultaneously for approximately five seconds. The last entered variance zone number will be displayed. Press the E/M button until the proper variance number, as shown on the map, is showing. Press the MODE button to set the new variance zone and resume normal operation.

The display will show all the display segments briefly to acknowledge the change in the zone number.

Automatic Compass Calibration

The compass is self-calibrating, which eliminates the need to manually set the compass. When the vehicle is new, the calibration process may not be complete. In these cases the calibration symbol “C” will be displayed where the compass reading is normally displayed.

To calibrate the compass, in an area free from large metal objects, make three 360° turns. The calibration symbol will turn off and the compass reading will be displayed.

Downloaded from www.Manualslib.com manuals search engine

Manual Compass Calibration

If the compass appears erratic and the calibration symbol does not appear, you must manually put the compass into the calibration mode.

Turn the ignition on and cycle the DIC to the compass/temperature mode. Press both the E/M and MODE buttons simultaneously for at least 10 seconds until the calibration symbol appears. Release both buttons and complete three 360° turns in an area free from large metal objects. The calibration symbol will turn off and the compass reading will be displayed.

Error Displays

- An error of the vehicle's speed sensor or fuel sender will cause -E- to be displayed.
- In the absence of vehicle communications, a double dash "--" is displayed.

If one of these error messages appear, see your dealer.

Trip Computer

There are five trip computer displays which may be stepped through by pushing the MODE button. The information will appear in the following order:

- **AVG ECON (Average Fuel Economy):** This shows the average fuel economy since the last reset.
- **INST ECON (Instantaneous Fuel Economy):** This shows fuel economy for the most recent second of driving.
- **RANGE (Trip Range):** This shows the estimated distance that can be traveled with the remaining fuel. The fuel economy used to calculate range is based on the last few hours of driving.
- **FUEL USED (Trip Fuel Used):** This shows the accumulated fuel used since the last reset.
- **AVG SPEED (Average Speed):** This shows the average speed since the last reset.

Downloaded from www.Manualslib.com manuals search engine

Resetting the Trip Computer

Press and hold the MODE and E/M buttons for at least two seconds. The reset is acknowledged with the display showing all segments on briefly. A reset can only be done in AVG ECON, FUEL USED and AVG SPEED displays. AVG ECON, FUEL USED and AVG SPEED can only be reset independently. Only the mode that is displayed will be reset.

Rear Parking Assist (Option)

Rear parking assist can help you to determine how close an object is to your rear bumper within a given area, making parking easier. It is not intended to be used primarily as a rear obstacle detection system.

The rear parking assist display is located inside the vehicle, above the rear window. It has three color-coded lights that can be seen through the rearview mirror.

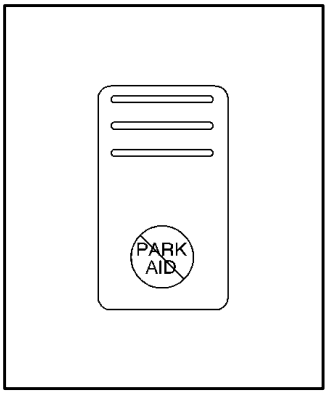

Rear parking assist can be turned off by pressing the rear park aid disable switch located in the overhead console switchbank.

How the System Works

If the rear park aid disable switch is not on, the rear parking assist will turn on automatically when the shift lever is moved into REVERSE (R) and the vehicle speed is less than 3 mph (5 km/h). When the system turns on, the three lights on the display will illuminate for 1.5 seconds to let you know that the system is working. Rear parking assist senses how close your vehicle is to an object. The distance is determined by the four ultrasonic sensors located on the rear bumper.

Downloaded from www.Manualslib.com manuals search engine

When shifting into REVERSE (R) and an object is detected, one of the following will occur:

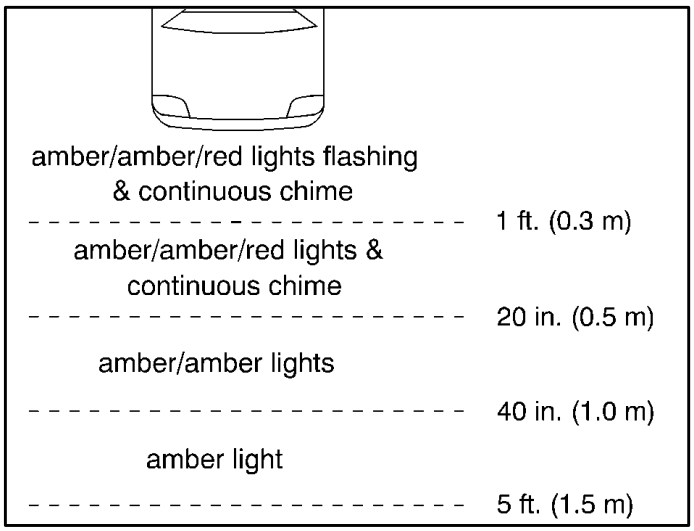

A chime will sound the first time an object is detected, if the object is between 20 inches (0.5 m) and 5 feet (1.5 m) away.

Rear parking assist can detect objects 3 inches (7.6 cm) and wider, and at least 10 inches (2.5 cm) tall, but cannot detect objects that are above liftgate level. In order for the rear sensors to recognize an object, it must be within operating range.

If the rear parking assist system is not functioning properly, the display will flash red, indicating that there is a problem, unless the disable switch is on. The light will also flash red when shifting into REVERSE (R) if a trailer was attached to your vehicle, or a bicycle or an object was on the back of, or hanging out of your liftgate during your last drive cycle. The light will continue to flash whenever in REVERSE (R), until your vehicle is driven forward at least 15 mph (25 km/h) without any obstructions behind the vehicle.

It may also flash red if the ultrasonic sensors are not kept clean. So be sure to keep your rear bumper free of mud, dirt, snow, ice and slush or the system may not work properly. If after cleaning the rear bumper and then driving forward at least 15 mph (25 km/h), the display continues to flash red, see your dealer.

It will also flash red if your vehicle is moving in REVERSE (R) at a speed greater than 3 mph (5 km/h). Other conditions that may affect system performance include things like the vibrations from a jackhammer or the compression of air brakes on a very large truck.

As always, drivers should use care when backing up a vehicle. Always look behind you, being sure to check for other vehicles, obstructions and blind spots. For cleaning instructions, see “Cleaning Your Vehicle” in the Index.

Downloaded from www.Manualslib.com manuals search engine

Section 3 Comfort Controls and Audio Systems

In this section, you'll find out how to operate the comfort control and audio systems offered with your vehicle. Be sure to read about the particular systems supplied with your vehicle.

3-2 Comfort Controls
3-2 Air Conditioning with Temperature Control
3-4 Heating
3-4 Defogging and Defrosting
3-5 Rear Window Defogger
3-6 Rear Climate Control (Option)
3-8 Ventilation System
3-9 Audio Systems
3-10 Setting the Clock
3-10 AM-FM Stereo with Compact Disc Player with Programmable Equalization and Radio Data System (RDS)
3-17 AM-FM Stereo with Cassette Tape and Compact Disc Player with Programmable Equalization and Radio Data System (RDS) (If Equipped)
3-26 AM-FM Stereo with 6-Disc Compact Disc Player with Programmable Equalization and Radio Data System (RDS) (Option)
3-37 Rear Seat Audio (If Equipped)
3-39 Theft-Deterrent Feature
3-40 Audio Steering Wheel Controls (If Equipped)
3-40 Understanding Radio Reception
3-41 Tips About Your Audio System
3-42 Care of Your Cassette Tape Player
3-43 Care of Your Compact Discs
3-43 Care of Your Compact Disc Player
3-43 Integrated Windshield Antenna

Downloaded from www.Manualslib.com manuals search engine

Comfort Controls

This section tells you how to make your air system work for you.

With this system, you can control the heating, cooling and ventilation in your vehicle. Your vehicle also has a flow-through ventilation system described later in this section.

Air Conditioning with Temperature Control

Fan Knob

The left knob is the fan knob and selects the force of air you want. Turn the knob clockwise to increase fan speed and counterclockwise to decrease fan speed. The fan must be turned on for the air conditioning compressor to operate.

Temperature Knob

The center knob controls the temperature of the air coming through the system. Turn it clockwise (toward the red area) for warmer air. Turn it counterclockwise (toward the blue area) for cooler air.

Mode Knob

The right knob is used to select and determine the direction of the air flowing into the vehicle.

UPPER: This setting directs outside air through the instrument panel outlets.

BI-LEVEL: This setting directs outside air into your vehicle in two ways. Cooler air is directed toward your upper body through the front instrument panel outlets, while warmed air is directed through the heater ducts at your feet.

LOWER: This setting brings in most of the air through the floor ducts. This setting is also used to send air to the rear of the vehicle. Keep the area under the front seats free of objects that could obstruct airflow to the rear of the vehicle.

Downloaded from www.Manualslib.com manuals search engine

DEFOG: This setting directs air to the windshield and through the floor ducts. This mode is particularly useful during cold or inclement weather because of your vehicle's larger windshield area.

DEFROST: This setting directs most of the air to the windshield and side window vents.

Mode Buttons

OUTSIDE AIR: Press this button (the light will glow) to send outside air into your vehicle. Using this setting while trying to defrost or defog the windows will help clear the vents of moisture. Press the RECIRCULATION button (the light on the OUTSIDE AIR button will go off) to limit outside air entering the vehicle. When the LOWER, DEFOG or DEFROST setting is selected, the system will automatically go to OUTSIDE AIR mode.

RECIRCULATION: Press this button (the light will glow) to limit the amount of outside air entering your vehicle by recirculating much of the air inside your vehicle. You may use this setting to limit odors entering your vehicle. Press the OUTSIDE AIR button (the light on the RECIRCULATION button will go off) to let outside air circulate into the vehicle.

Operating the Heating/Ventilation/Air Conditioning (HVAC) system in the RECIRCULATION mode may cause fogging of the vehicle's windows when the weather is cold and damp. To clear the fog, switch the HVAC system to either the DEFOG or DEFROST mode and increase the fan speed. To avoid re-fogging of the windows, operate the HVAC system in the OUTSIDE AIR mode.

Air Conditioning

On very hot days, your vehicle will cool down more quickly and economically if you open the windows long enough to let hot, inside air escape. For all settings, adjust the temperature control knob and fan speed as desired.

To get maximum cooling or a quick cool-down on very hot days, press the A/C and RECIRCULATION buttons (the lights will glow) and turn the temperature knob counterclockwise (toward the blue area). Adjust the mode knob to direct the air to the desired location. This setting should not be used for long periods of time because the air may become too cold and dry. Push the A/C button again (the light will go off) to turn off the air conditioning.

Downloaded from www.Manualslib.com manuals search engine

When the air conditioner compressor is on, you may sometimes notice slight changes in your vehicle's engine performance and power. This is normal. The system is designed to help fuel economy while it maintains the desired cooling level.

The air conditioner removes moisture from the air, so you may sometimes notice water dripping from under your vehicle's engine compartment when it is idling or after it has been turned off. This is normal.

Heating

Turn the temperature knob clockwise (toward the red area) to warm the air.

In the LOWER mode, outside air will be brought in and sent through the floor outlets. The heater works best if you keep your windows closed while using it.

The BI-LEVEL setting is designed for use on sunny days when the air is only moderately warm or cool. On days like these, the sun may adequately warm your upper body, but your lower body may not be warm enough. For the best results, turn the temperature knob to the middle position, and then adjust it for comfort.

Your vehicle has a computer controlled transaxle designed to warm up the engine faster when the outside temperature is 35°F (2°C) or colder. You may notice that the transaxle will shift at a higher vehicle speed until the engine is warmed up. This is a normal condition designed to provide heat to the passenger compartment and defrost the windows more quickly.

If you have the optional engine coolant heater and use it during cold weather, 0°F (-18°C) or lower, your heating system will provide heat more quickly because the engine coolant is already warmed. See "Engine Coolant Heater" in the Index.

Defogging and Defrosting

To rapidly defrost the windshield, turn the temperature knob all the way clockwise (to the red area) and turn the mode knob to DEFROST. Adjust the fan to the highest speed.

To keep the windshield clear and bring in heated air through the heater ducts, turn the mode knob to DEFOG.

When the temperature outside is above freezing, the air conditioner compressor will run in these settings to help remove moisture from the air.

Downloaded from www.Manualslib.com manuals search engine

Your vehicle is equipped with side window defogger vents located on the top of the instrument panel. For additional side window defogging, turn the mode knob to the BI-LEVEL setting and adjust the fan to the highest speed. Aim the side vents on the instrument panel toward the side windows. For increased airflow to the side vents, close the center vents.

Operating the HVAC system in the RECIRCULATION mode may cause fogging of the vehicle's windows when the weather is cold and damp. To clear the fog, switch the HVAC system to either the DEFOG or DEFROST mode and increase the fan speed. To avoid re-fogging of the windows, operate the HVAC system in the OUTSIDE AIR mode.

For additional information, refer to "RECIRCULATION" earlier in this section.

Rear Window Defogger

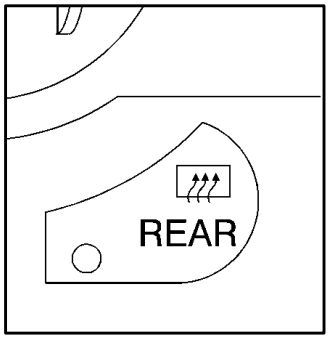

Press the REAR button (the light will glow) to warm the defogger grid on the rear window and to turn on the heated outside rearview mirrors.

The system will turn off automatically after about 10 minutes of use. If you turn it on again, the defogger will operate for about five minutes. You can also turn the defogger off by turning off the ignition or by pressing the button again.

Downloaded from www.Manualslib.com manuals search engine

Do not attach a temporary vehicle license across the defogger grid on the rear window.

NOTICE:

Don't use a razor blade or something else sharp on the inside of the rear window. If you do, you could cut or damage the warming grid, and the repairs wouldn't be covered by your warranty.

Rear Climate Control (Option)

If you have the optional rear climate control, the rear seat passengers can control the temperature and the amount of air directed to the rear of the vehicle. You can also adjust the amount of air directed to the rear of the vehicle using the front fan knob.

When it's cold outside, set the main climate control knob to LOWER, DEFOG or DEFROST, to send air to the rear of the vehicle through the lower vents.

Set the main climate control mode knob to UPPER or BI-LEVEL to send air to the rear of the vehicle through the headliner outlets.

To send conditioned air to the rear of the vehicle, press the A/C button (the light will glow) on the main climate controls. If you do not select A/C, air directed to the rear of the vehicle will be cabin temperature.

Rear Fan Control

This option comes with the rear climate controls.

Keep the area around the base of the center instrument panel console and the area between and under the front seats free of objects that would obstruct airflow to the rear of the vehicle.

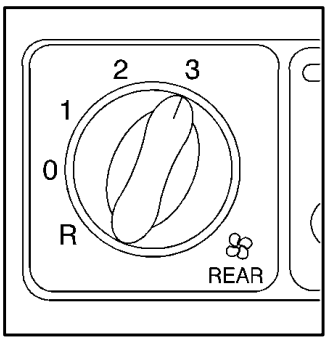

The rear fan control is located below the climate control system, in the switchbank.

Downloaded from www.Manualslib.com manuals search engine

Turn the fan knob to the desired setting for the amount of air to be directed to the rear of the vehicle. The temperature of the air will be the same as the air in the front of the vehicle. The rear fan control in the instrument panel switchbank has an “R” setting which allows the rear passengers to use the rear climate control knobs to adjust the air through the rear air outlets.

Rear Comfort Controls

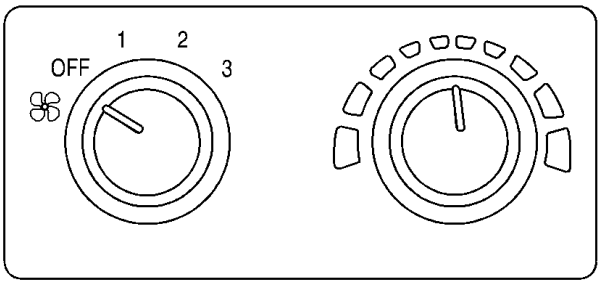

The rear climate control knobs are in the panel above the driver’s seat.

Turn the temperature knob counterclockwise (to the blue area) for cooler air, or clockwise (to the red area) for warmer air.

To maintain a comfortable temperature in the rear, use either rear fan knob to adjust the force of air coming through the rear outlets.

Select the desired climate control mode using the directional controls on the instrument panel (see “Mode Knob” earlier in this section). The mode you choose will regulate both the front and rear climate control systems.

Downloaded from www.Manualslib.com manuals search engine

Rear Air Vents

To maximize airflow through the rear heater outlet, place the left bucket seat in the second row in the forward position. See “Adjusting Rear Seats” in the Index.

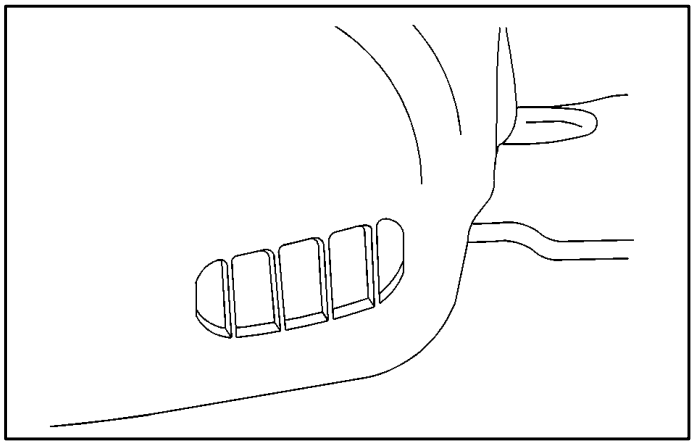

The vent behind the left rear seat is the cold air return vent. Be sure to keep it free of obstructions.

Keep the area around the base of the center instrument panel console, between and under the front seats, free of objects that could obstruct airflow to the rear.

Ventilation System

Your vehicle’s flow-through ventilation system supplies outside air into the vehicle when it is moving. Outside air will also enter the vehicle when the fan is running.

Your vehicle has air outlets that allow you to adjust the direction and amount of airflow inside the vehicle. Push the outlet up or down to change the direction of the air flow. Increase or reduce the amount of airflow by opening and closing the louvers. Opening and closing the louvers will also direct airflow from side to side.

The air-flow through the vents can be shut off completely by turning the thumbwheel next to each outlet all the way down. You can also stop outside air from entering the vehicle by turning the fan to OFF and pushing the RECIRCULATION button.

Downloaded from www.Manualslib.com manuals search engine

Ventilation Tips

- Keep the hood and front air inlet free of ice, snow or any other obstruction (such as leaves). This will allow the heater and defroster to work much better, reducing the chance of fogging the inside of your windows.
- When you enter a vehicle in cold weather, turn the fan knob to “5”, the highest setting, for a few moments before driving off. This helps clear the intake ducts of snow and moisture, and reduces the chance of fogging the inside of your windows.
- Keep the area around the base of the center instrument panel console and the air path under the front seats clear of objects. This helps air to circulate throughout your vehicle.
- In cold weather, operating the system in the OUTSIDE AIR mode will improve the time it takes to warm the vehicle.

Audio Systems

Your audio system has been designed to operate easily and give years of listening pleasure. You will get the most enjoyment out of it if you acquaint yourself with it first. Find out what your audio system can do and how to operate all its controls, to be sure you’re getting the most out of the advanced engineering that went into it.

If you have power door locks, your vehicle has a feature called Retained Accessory Power (RAP). With RAP, you can play your audio system even after the ignition is off. See “Retained Accessory Power” in the Index.

Downloaded from www.Manualslib.com manuals search engine

Setting the Clock

Your radio may have a button marked with an H or HR to represent hours and an M or MIN to represent minutes.

Press and hold the HR or H button until the correct hour appears. AM will appear on the display for morning hours. Press and hold the MIN or M button until the correct minute appears. The clock may be set with the ignition on or off.

To set the clock to the time of an FM station broadcasting Radio Data System (RDS) information, press and hold HR (or H) and MIN (or M) at the same time until TIME UPDATED appears on the display. If the time is not available from the station, NO UPDATE will appear on the display instead.

AM-FM Stereo with Compact Disc Player with Programmable Equalization and Radio Data System (RDS)

Playing the Radio

PWR VOL: Press this knob to turn the system on and off. To increase volume, turn the knob clockwise. Turn it counterclockwise to decrease volume.

Downloaded from www.Manualslib.com manuals search engine

SCV: Your system has a feature called Speed-Compensated Volume (SCV). With SCV, your audio system adjusts automatically to make up for road and wind noise as you drive. Set the volume at the desired level. Press this button to select MIN, MED or MAX. Each choice allows for more volume compensation at faster vehicle speeds. Then, as you drive, SCV automatically increases the volume, as necessary, to overcome noise at any particular speed. The volume level should always sound the same to you as you drive. If you don't want to use SCV, select OFF.

Finding a Station

AM FM: Press this button to switch between AM, FM1 and FM2. The display shows your selection.

TUNE: Turn this button to choose radio stations.

SEEK: Press the up or down arrow to go to the next higher or lower station and stay there. The sound will mute while seeking.

SCAN: Press and hold one of the SEEK arrows for two seconds until the scan icon appears on the display and you hear a beep. Use SCAN to listen to stations for a few seconds. The radio will go to a station, stop for a few seconds, then go on to the next station. Press one of the SEEK arrows again to stop scanning. The sound will mute while scanning.

PUSHBUTTONS: The six numbered pushbuttons let you return to your favorite stations. You can set up to 18 stations (six AM, six FM1 and six FM2) by performing the following steps:

1. Turn the radio on.
2. Press AM FM to select the band.
3. Tune in the desired station.
4. Press EQ to select the equalization.
5. Press and hold one of the six numbered buttons until you hear a beep. Whenever you press that numbered button, the station you set will return and the equalization that you selected will also be automatically selected for that button.
6. Repeat the steps for each pushbutton.

Downloaded from www.Manualslib.com manuals search engine

PRESET SCAN: Press and hold one of the SEEK arrows for more than four seconds until the preset scan icon and the preset number appear on the display. You will hear a double beep. Use PRESET SCAN to listen to each of your preset stations for a few seconds. The radio will go to the first preset station stored on your pushbuttons, stop for a few seconds, then go on to the next preset station. Preset scan will only scan the six presets that are in the band selected. Press one of the SEEK arrows again to stop scanning presets.

PRESET SCAN will skip over presets where no station is being received at that time to prevent hearing static.

Setting the Tone

TONE: Press and release this button until the desired tone control (BASS, MID or TREB) is found. The SELECT LED indicator will light to show that the tone control can be adjusted. When using BASS or MID, turn the SELECT knob clockwise to increase bass. Turn it counterclockwise to decrease bass. When using TREB, turn the SELECT knob clockwise to increase treble. Turn it counterclockwise to decrease treble. If a station is weak or noisy, you may want to decrease the treble.

To set all of the tone controls to the middle position, press and hold TONE until FLAT appears on the display.

EQ: This feature allows you to choose preset bass, mid and treble equalization settings designed for different individual listening tastes. Press EQ to select the desired preset equalization setting. Each time you press EQ, another setting will appear on the display.

You can preset up to six equalization settings by performing the following steps:

1. Turn the radio on.
2. Use the TONE button and the SELECT knob to select the desired equalization.
3. Press and hold EQ for two seconds. SELECT EQ # will appear on the display. The EQ icon will flash.
4. Press EQ or turn the SELECT knob to select the desired EQ number. Each time you press EQ or turn the SELECT knob, another EQ setting will appear on the display.
5. Press and hold the EQ button or push the SELECT knob to store the equalization preset. You will hear a beep and EQ SAVED will appear on the display.
6. Repeat the steps for each EQ setting. EQ 5 has been programmed at the factory for use with talk radio, but it can be preset to a different tone.

Downloaded from www.Manualslib.com manuals search engine

Using RDS Mode

Your audio system is equipped with a Radio Data System (RDS). RDS mode gives you many useful new features. With RDS, the radio can:

- Seek only to stations with the types of programs you want to listen to,
- seek to stations with traffic announcements,
- receive announcements concerning local and national emergencies, and
- receive and display messages from radio stations.

RDS features are only available for use on FM stations which broadcast RDS information. The RDS features of your radio rely upon receiving specific RDS information from these stations. These features will only work when the RDS information is available. In rare cases, a radio station may broadcast incorrect information that will cause the radio features to work improperly. If this happens, please contact the radio station.

When you are tuned to an RDS station, the station name will appear on the display, instead of the frequency. Most RDS stations provide their station name, the time of day and a Program Type (PTY) for their current programming.

TRAF: Press this button to receive traffic announcements. The traffic announcement brackets will appear on the display. TRAF will appear on the display if the tuned station broadcasts traffic announcements. If the current tuned station does not broadcast traffic announcements, the radio will seek to a station that does. When the radio finds a station that broadcasts traffic announcements, it will stop. If no station is found, NO TRAFFIC will appear on the display.

When a traffic announcement comes on the tuned radio station or a related network station, you will hear it, even if the volume is muted or a compact disc is playing. If the compact disc player was being used, the compact disc will stay in the player and resume play at the point where it stopped.

INFO: If the current station has a message, INFO will appear on the display. Press this button to see the message. If the whole message does not appear on the display, parts of the message will appear every three seconds until the message is completed. To see the parts of the message faster than every three seconds, press this button again. A new group of words will appear on the display. Once the complete message has been displayed, INFO will disappear from the display until another new message is received.

Downloaded from www.Manualslib.com manuals search engine

PROG TYPE: This button is used to turn on and off Program Type (PTY) select. The PTY icon will appear on the display and the SELECT LED indicator next to the SELECT knob will light. The last selected PTY will appear on the display for five seconds. Turn the SELECT knob to select the PTY you want to listen to. Press the SEEK SCAN arrows to find radio stations of the PTY you want to listen to. The last PTY selected will be used for seek or scan modes. If a station with the selected PTY is not found, NOT FOUND will appear on the display. If both PROG TYPE and TRAF are on, the radio will search for stations with traffic announcements and the selected PTY.

To use the PROG TYPE interrupt feature, press and hold this button until you hear a beep on the PTY you want to interrupt. An asterisk (*) will appear next to the PTY name, example (CLASSICAL*). When you are listening to a compact disc, the last selected RDS FM station will interrupt play if that selected PTY format is broadcast.

PUSHBUTTONS: The six numbered pushbuttons let you return to your favorite Program Types (PTYs). These buttons have factory PTY presets. You can set up to 12 PTYs (six FM1 and six FM2) by performing the following steps:

1. Press PROG TYPE, if it is not already on.
2. Press AM FM to select FM1 or FM2.
3. Turn the SELECT knob to select a PTY.
4. Press and hold one of the six numbered buttons until you hear a beep. Whenever you press that numbered button, the PTY you set will return.
5. Repeat the steps for each pushbutton.

ALERT!: This type of announcement warns of national or local emergencies. You will not be able to turn off alert announcements. ALERT! appears on the display when an alert announcement plays. When an alert announcement comes on the tuned radio station, you will hear it, even if the volume is muted or a compact disc is playing. If the compact disc player is playing, play will stop for the announcement and resume when the announcement is finished.

Downloaded from www.Manualslib.com manuals search engine

ALTERNATE FREQUENCY: This feature allows the radio to switch to a stronger station with the same program type. Press and hold AM FM for two seconds to turn alternate frequency on. AF ON will appear on the display. The radio may switch to stronger stations. Press and hold AM FM again for two seconds to turn alternate frequency off. AF OFF will appear on the display. The radio will not switch to other stations.

Adjusting the Speakers

BAL FADE: This button adjusts balance and fade. To adjust balance, press this button until BAL appears on the display. Turn the SELECT knob clockwise for the right speakers and counterclockwise for the left speakers. The middle position balances the sound between the speakers. To adjust fade, press this button until FAD appears on the display. Turn the SELECT knob clockwise to adjust the sound to the front speakers and counterclockwise for the rear speakers. The middle position balances the sound between the speakers. Press and hold this button for two seconds to return both fade and balance to the middle position.

Playing a Compact Disc

With the ignition on, insert a disc partway into the slot, label side up. The player will pull it in and the disc should begin playing. If you want to insert a CD when the ignition is off, first press the eject button or the RCL knob.

Inserting a CD with the radio off and the ignition on will start auto play.

When the disc is inserted, the CD symbol will be displayed. If you select an EQ setting for your CD, it will be activated each time you play a CD.

As each new track starts to play, the track number will appear on the display.

If CHECK CD appears on the radio display and the disc comes out, it could be that one of the following:

- The road is too rough. The disc should play when the road is smoother.
- The disc is dirty, scratched, wet or upside down.
- The air is very humid. If so, wait about an hour and try again.

Downloaded from www.Manualslib.com manuals search engine

If any error occurs repeatedly or if an error can't be corrected, please contact your dealer. If your radio displays an error message, write it down and provide it to your dealer when reporting the problem.

▶▶ (1): Press and hold this button to advance quickly within a track. Release it to play the passage. You will hear sound at a reduced volume. The display will show elapsed time.

RDM (3): Press this button to hear the tracks in random, rather than sequential, order. RDM and the track number will appear on the display.

◀◀ (4): Press and hold this button to reverse quickly within a track. Release it to play the passage. You will hear sound at a reduced volume. The display will show elapsed time.

EQ: Press EQ to select the desired preset equalization setting while playing a compact disc. The equalization will be automatically set whenever you play a compact disc.

SEEK: Press the down arrow while playing a CD to go to the start of the current track if more than eight seconds have played. Press the up arrow to go to the next track. If you hold the button or press it more than once, the player will continue moving backward or forward through the disc.

SCAN: Press and hold one of the SEEK arrows for more than two seconds until SCAN appears on the display and you hear a beep. Use SCAN to listen to each selection for a few seconds. The disc will go to the next selection, stop for a few seconds, then go on to the next selection. Press this button again to stop scanning. The sound will mute while scanning. SCAN and the track number will appear on the display.

RCL: Press this button to see how long the current track has been playing. To change what is normally shown on the display (track or elapsed time), press the button until you see the display you want, then hold the button until the display flashes. While elapsed time is showing, CD TIME will appear on the display.

Downloaded from www.Manualslib.com manuals search engine

AM FM: Press this button to play the radio when a disc is in the player.

CD AUX: With a compact disc in the player and the radio playing, press this button to play a compact disc. Press AM FM to return to the radio when a compact disc is playing. The inactive CD will remain safely inside the radio for future listening. The CD icon will appear on the display when a compact disc is loaded.

⏏: Press this button to remove the disc. The radio will play. Eject may be activated with either the ignition or radio off. CDs may be loaded with the radio and ignition off if this button is pressed first.

Radio Calibration

Your audio system has been calibrated for your vehicle from the factory. If CALIBRATE appears on the display it means that your radio has not been configured properly for your vehicle and must be returned to the dealership for service.

AM-FM Stereo with Cassette Tape and Compact Disc Player with Programmable Equalization and Radio Data System (RDS) (If Equipped)

Playing the Radio

PWR VOL: Press this knob to turn the system on and off. To increase volume, turn the knob clockwise. Turn it counterclockwise to decrease volume.

Downloaded from www.Manualslib.com manuals search engine

SCV: Your system has a feature called Speed-Compensated Volume (SCV). With SCV, your audio system adjusts automatically to make up for road and wind noise as you drive. Set the volume at the desired level. Press this button to select MIN, MED or MAX. Each choice allows for more volume compensation at faster vehicle speeds. Then, as you drive, SCV automatically increases the volume, as necessary, to overcome noise at any particular speed. The volume level should always sound the same to you as you drive. If you don't want to use SCV, select OFF.

Finding a Station

AM FM: Press this button to switch between AM, FM1 and FM2. The display shows your selection.

TUNE: Turn this knob to choose radio stations.

SEEK: Press the up or down arrow to go to the next higher or lower station and stay there. The sound will mute while seeking.

SCAN: Press and hold one of the SEEK arrows for two seconds until the scan icon appears on the display and you hear a beep. Use SCAN to listen to stations for a few seconds. The radio will go to a station, stop for a few seconds, then go on to the next station. Press one of the SEEK arrows again to stop scanning. The sound will mute while scanning.

PUSHBUTTONS: The six numbered pushbuttons let you return to your favorite stations. You can set up to 18 stations (six AM, six FM1 and six FM2) by performing the following steps:

1. Turn the radio on.
2. Press AM FM to select the band.
3. Tune in the desired station.
4. Press EQ to select the equalization.
5. Press and hold one of the six numbered buttons until you hear a beep. Whenever you press that numbered button, the station you set will return and the equalization that you selected will also be automatically selected for that button.
6. Repeat the steps for each pushbutton.

PRESET SCAN: Press and hold one of the SEEK arrows for more than four seconds until the preset scan icon and the preset number appear on the display. You will hear a double beep. Use PRESET SCAN to listen to each of your preset stations for a few seconds. The radio will go to the first preset station stored on your pushbuttons, stop for a few seconds, then go on to the next preset station. Press one of the SEEK arrows again to stop scanning presets.

Preset scan will skip over presets where no station is being received at that time to prevent hearing static.

Downloaded from www.Manualslib.com manuals search engine

Setting the Tone

TONE: Press and release this button until the desired tone control (BASS, MID or TREB) is found. The SELECT LED indicator will light to show that the tone control can be adjusted. When using BASS or MID, turn the SELECT knob clockwise to increase bass. Turn it counterclockwise to decrease bass. When using TREB, turn the SELECT knob clockwise to increase treble. Turn it counterclockwise to decrease treble. If a station is weak or noisy, you may want to decrease the treble.

To set all of the tone controls to the middle position, press and hold TONE until FLAT appears on the display.

EQ: This feature allows you to choose preset bass, mid and treble equalization settings designed for different individual listening tastes. Press EQ to select the desired preset equalization setting. Each time you press EQ, another setting will appear on the display.

You can preset up to six equalization settings by performing the following steps:

1. Turn the radio on.
2. Use the TONE button and the SELECT knob to select the desired equalization.
3. Press and hold EQ for two seconds. SELECT EQ # will appear on the display. The EQ icon will flash.
4. Press EQ or turn the SELECT knob to select the desired EQ number. Each time you press EQ or turn the SELECT knob, another EQ setting will appear on the display.
5. Press and hold the EQ button or push the SELECT knob to store the equalization preset. You will hear a beep and EQ SAVED will appear on the display.
6. Repeat the steps for each EQ setting. EQ 5 has been programmed for use with talk radio, but it can be preset to a different tone.

Downloaded from www.Manualslib.com manuals search engine

Using RDS Mode

Your audio system is equipped with a Radio Data System (RDS). RDS mode gives you many useful new features. With RDS, the radio can do the following:

- Seek only to stations with the types of programs you want to listen to,
- seek to stations with traffic announcements,
- receive announcements concerning local and national emergencies, and
- receive and display messages from radio stations.

RDS features are only available for use on FM stations which broadcast RDS information. The RDS features of your radio rely upon receiving specific RDS information from these stations. These features will only work when the RDS information is available. In rare cases, a radio station may broadcast incorrect information that will cause the radio features to work improperly. If this happens, please contact the radio station.

When you are tuned to an RDS station, the station name will appear on the display, instead of the frequency. Most RDS stations provide their station name, the time of day and a Program Type (PTY) for their current programming.

TRAF: Press this button to receive traffic announcements. The traffic announcement brackets will appear on the display. TRAF will appear on the display if the tuned station broadcasts traffic announcements. If the current tuned station does not broadcast traffic announcements, the radio will seek to a station that does. When the radio finds a station that broadcasts traffic announcements, it will stop. If no station is found, NO TRAFFIC will appear on the display.

When a traffic announcement comes on the tuned radio station or a related network station, you will hear it, even if the volume is muted or a cassette tape or compact disc is playing. If the cassette tape or compact disc player was being used, the tape or compact disc will stay in the player and resume play at the point where it stopped.

INFO: If the current station has a message, INFO will appear on the display. Press this button to see the message. If the whole message does not appear on the display, parts of the message will appear every three seconds until the message is completed. To see the parts of the message faster than every three seconds, press this button again. A new group of words will appear on the display. Once the complete message has been displayed, INFO will disappear from the display until another new message is received.

Downloaded from www.Manualslib.com manuals search engine

PROG TYPE: This button is used to turn on and off Program Type (PTY) select. The PTY icon will appear on the display and the SELECT LED indicator next to the SELECT knob will light. The last selected PTY will appear on the display for five seconds. Turn the SELECT knob to select the PTY you want to listen to. Press the SEEK SCAN arrows to find radio stations of the PTY you want to listen to. The last PTY selected will be used for seek or scan modes. If a station with the selected PTY is not found, NOT FOUND will appear on the display. If both PROG TYPE and TRAF are on, the radio will search for stations with traffic announcements and the selected PTY.

To use the PROG TYPE interrupt feature, press and hold this button until you hear a beep on the PTY you want to interrupt. An asterisk (*) will appear next to the PTY name, example (CLASSICAL*). When you are listening to a cassette or compact disc, the last selected RDS FM station will interrupt play if that selected PTY format is broadcast.

PUSHBUTTONS: The six numbered pushbuttons let you return to your favorite Program Types (PTYs). These buttons have factory PTY presets. You can set up to 12 PTYs (six FM1 and six FM2) by performing the following steps:

1. Press PROG TYPE, if it is not already on.
2. Press AM FM to select FM1 or FM2.
3. Turn the SELECT knob to select a PTY.
4. Press and hold one of the six numbered buttons until you hear a beep. Whenever you press that numbered button, the PTY you set will return.
5. Repeat the steps for each pushbutton.

ALERT!: This type of announcement warns of national or local emergencies. You will not be able to turn off alert announcements. ALERT! appears on the display when an alert announcement plays. When an alert announcement comes on the tuned radio station, you will hear it, even if the volume is muted or a cassette tape or compact disc is playing. If the cassette tape or compact disc player is playing, play will stop for the announcement and resume when the announcement is finished.

Downloaded from www.Manualslib.com manuals search engine

ALTERNATE FREQUENCY: This feature allows the radio to switch to a stronger station with the same program type. Press and hold AM FM for two seconds to turn alternate frequency on. AF ON will appear on the display. The radio may switch to stronger stations. Press and hold AM FM again for two seconds to turn alternate frequency off. AF OFF will appear on the display. The radio will not switch to other stations.

Adjusting the Speakers

BAL FADE: This button adjusts balance and fade. To adjust balance, press this button until BAL appears on the display. Turn the SELECT knob clockwise for the right speakers and counterclockwise for the left speakers. The middle position balances the sound between the speakers. To adjust fade, press this button until FAD appears on the display. Turn the SELECT knob clockwise to adjust the sound to the front speakers and counterclockwise for the rear speakers. The middle position balances the sound between the speakers. Press and hold this button for two seconds to return both fade and balance to the middle position.

Playing a Cassette Tape

Your tape player is built to work best with tapes that are up to 30 to 45 minutes long on each side. Tapes longer than that are so thin they may not work well in this player. The longer side with the tape visible should face to the right. If the ignition is on, but the radio is off, the tape can be inserted and will begin playing. If you hear nothing but a garbled sound, the tape may not be in squarely. Press the eject button to remove the tape and start over.

While the tape is playing, use the VOL, BAL FADE, TONE, EQ, SEEK and SCAN controls just as you do for the radio. The display will show TAPE and an arrow showing which side of the tape is playing. The tape player automatically begins playing the other side when it reaches the end of the tape.

Your tape bias is set automatically when a metal or chrome tape is inserted. If you want to insert a tape when the ignition is off, first press the eject button or the RCL knob.

If an error appears on the radio display, the tape won’t play because of an error.

Downloaded from www.Manualslib.com manuals search engine

TIGHT TAPE is displayed when the tape is tight and the player can't turn the tape hubs. Remove the tape. Hold the tape with the open end down and try to turn the right hub counterclockwise with a pencil. Turn the tape over and repeat. If the hubs do not turn easily, your tape may be damaged and should not be used in the player. Try a new tape to make sure your player is working properly.

BROKEN TAPE is displayed when the tape is broken. Try a new tape.

WRAPPED TAPE is displayed when the tape is wrapped around the tape head. Attempt to get the cassette out. Try a new tape.

If any error occurs repeatedly or if an error can't be corrected, please contact your dealer. If your radio displays an error message, write it down and provide it to your dealer when reporting the problem.

▶▶ (1): Press this button to advance quickly to another part of the tape. Press the button again to return to playing speed. The radio will play the last selected station while the tape advances. You may select stations during FWD operation by using TUNE.

While in FWD mode the display will show FREQ and FWD and two right arrows. If the radio is playing a RDS station the display will only show FREQ.

▼▲ (2): Press this button to play the other side of the tape.

◀◀ (4): Press this button to reverse the tape rapidly. Press it again to return to playing speed. The radio will play the last selected station while the tape reverses. You may select stations during REV operation by using TUNE.

DD (6): Press this button to reduce background noise. DOLBY NR ON will appear on the display. Press it again to turn Dolby NR off.

Dolby Noise Reduction is manufactured under a license from Dolby Laboratories Licensing Corporation. Dolby and the double-D symbol are trademarks of Dolby Laboratories Licensing Corporation.

EQ: Press EQ to select the desired preset equalization setting while playing a cassette. The equalization will be automatically set whenever you play a cassette tape.

SEEK: Press the up or down arrow to search for the next or previous selection on the tape. Your tape must have at least three seconds of silence between each selection for SEEK to work. You can skip nine selections up or down on the tape. Choose how many selections you want to skip. Press the SEEK arrow that many times. The number of selections to be skipped will appear on the display.

Downloaded from www.Manualslib.com manuals search engine

SCAN: Press and hold one of the SEEK arrows for more than two seconds until SCAN appears on the display and you hear a beep. Use SCAN to listen to each selection for a few seconds. The tape will go to the next selection, stop for a few seconds, then go on to the next selection. Press this button again to stop scanning. The sound will mute and SCAN will appear on the display while scanning. The tape will scan in forward only.

AM FM: Press this button to play the radio when a tape is in the player. The tape will stop but remain in the player.

CD TAPE: With a compact disc in the player and the radio playing, press this button to play a compact disc. Press AM FM to return to the radio when a compact disc is playing. Press CD TAPE to switch between the tape and compact disc if both are loaded. The inactive tape or CD will remain safely inside the radio for future listening. The display will show tape and CD icons.

⏏: Press this button to remove the tape. The radio will play. Eject may be activated with either the ignition or radio off. Cassettes may be loaded with the radio and ignition off if this button is pressed first.

CLEAN PLAYER: If this message appears on the display, the cassette tape player needs to be cleaned. It will still play tapes, but you should clean it as soon as possible to prevent damage to the tapes and player. See “Care of Your Cassette Tape Player” in the Index. After you clean the player, press and hold the eject button for five seconds to reset the CLEAN PLAYER indicator. The radio will display CLEANED to show the indicator was reset.

Playing a Compact Disc

With the ignition on, insert a disc partway into the slot, label side up. The player will pull it in and the disc should begin playing. If you want to insert a CD when the ignition is off, first press the eject button or the RCL knob.

Inserting a CD with the radio off and the ignition on will start auto play.

When the disc is inserted, the CD symbol will be displayed. If you select an EQ setting for your CD, it will be activated each time you play a CD.

Downloaded from www.Manualslib.com manuals search engine

As each new track starts to play, the track number will appear on the display.

If CHECK CD appears on the radio display and the disc comes out, it could be one of the following:

- The road is too rough. The disc should play when the road is smoother.
- The disc is dirty, scratched, wet or upside down.
- The air is very humid. If so, wait about an hour and try again.

If any error occurs repeatedly or if an error can't be corrected, please contact your dealer. If your radio displays an error message, write it down and provide it to your dealer when reporting the problem.

▶▶ (1): Press and hold this button to advance quickly within a track. Release it to play the passage. You will hear sound at a reduced volume. The display will show elapsed time.

RDM (3): Press this button to hear the tracks in random, rather than sequential, order. RDM and the track number will appear on the display.

◀◀ (4): Press and hold this button to reverse quickly within a track. Release it to play the passage. You will hear sound at a reduced volume. The display will show elapsed time.

EQ: Press EQ to select the desired preset equalization setting while playing a compact disc. The equalization will be automatically set whenever you play a compact disc.

SEEK: Press the down arrow while playing a CD to go to the start of the current track if more than eight seconds have played. Press the up arrow to go to the next track. If you hold the button or press it more than once, the player will continue moving backward or forward through the disc.

SCAN: Press and hold one of the SEEK arrows for more than two seconds until SCAN appears on the display and you hear a beep. Use SCAN to listen to each selection for a few seconds. The disc will go to the next selection, stop for a few seconds, then go on to the next selection. Press this button again to stop scanning. The sound will mute while scanning. SCAN and the track number will appear on the display.

RCL: Press this button to see how long the current track has been playing. To change what is normally shown on the display (track or elapsed time), press the button until you see the display you want, then hold the button until the display flashes. While elapsed time is showing, CD TIME will appear on the display.

Downloaded from www.Manualslib.com manuals search engine

AM FM: Press this button to play the radio when a disc is in the player.

CD TAPE: With a cassette tape in the player and the radio playing, press this button to play a cassette tape. Press AM FM to return to the radio when a cassette tape is playing. Press CD TAPE to switch between the tape and compact disc if both are loaded. The inactive tape or CD will remain safely inside the radio for future listening. The display will show tape and CD icons. If you have the optional CD changer and the CD changer is loaded, the CD TAPE button will activate the changer and an icon will be lit in the display.

⏏: Press this button to remove the disc. The radio will play. Eject may be activated with either the ignition or radio off. CDs may be loaded with the radio and ignition off if this button is pressed first.

Radio Calibration

Your audio system has been calibrated for your vehicle from the factory. If CALIBRATE appears on the display it means that your radio has not been configured properly for your vehicle and must be returned to the dealership for service.

AM-FM Stereo with 6-Disc Compact Disc Player with Programmable Equalization and Radio Data System (RDS) (Option)

Playing the Radio

VOLUME PWR: Press this knob to turn the system on and off. To increase volume, turn the knob clockwise. Turn it counterclockwise to decrease volume.

Downloaded from www.Manualslib.com manuals search engine

AUTO VOL: Your system has a feature called automatic volume. With this feature, your audio system adjusts automatically to make up for road and wind noise as you drive. Set the volume at the desired level. Press this button to select MIN, MED or MAX. Each choice allows for more volume compensation at faster vehicle speeds. Then, as you drive, automatic volume automatically increases the volume, as necessary, to overcome noise at any particular speed. The volume level should always sound the same to you as you drive. If you don't want to use automatic volume, select OFF.

Finding a Station

AM FM: Press this button to switch between AM, FM1 and FM2. The display shows your selection.

TUNE: Turn this knob to select radio stations.

SEEK: Press the right or left arrow to go to the next higher or lower station and stay there. The sound will mute while seeking.

SCAN: Press and hold either SEEK SCAN arrow for two seconds until SC appears on the display and you hear a beep. Use SCAN to listen to stations for a few seconds. The radio will go to a station, stop for a few seconds, then go on to the next station. Press either SEEK SCAN arrow again to stop scanning. If you press SEEK SCAN for more than four seconds, the radio will change to preset scan mode. The sound will mute while scanning.

PUSHBUTTONS: The six numbered pushbuttons let you return to your favorite stations. You can set up to 18 stations (six AM, six FM1 and six FM2) by performing the following steps:

1. Turn the radio on.
2. Press AM FM to select the band.
3. Tune in the desired station.
4. Press AUTO EQ to select the equalization that best suits the type of station selected.
5. Press and hold one of the six numbered buttons until you hear a beep. Whenever you press that numbered button, the station you set will return and the equalization that you selected will also be automatically selected for that button.
6. Repeat the steps for each pushbutton.

Downloaded from www.Manualslib.com manuals search engine

PRESET SCAN: Press and hold either SEEK SCAN arrow for more than four seconds, PRESET SCAN will appear on the display. You will hear a double beep and the “P” will blink with the preset number. Use PRESET SCAN to listen to each of your preset stations for a few seconds. The radio will go to a preset station stored on your pushbuttons, stop for a few seconds, then go on to the next preset station. Press either SEEK SCAN arrow again to stop scanning presets.

Setting the Tone

BASS: Press the AUDIO knob until BASS appears on the display. Turn the knob to increase or decrease bass. When you use this control, the radio’s tone setting will switch to custom.

To set the bass to the middle position, select BASS and press and hold the AUDIO knob. The radio will produce one beep and set the display level to zero. To set all tone and speaker controls to the middle position, press and hold the AUDIO knob when no tone or speaker control is active. The radio will produce one beep and CENTERED will appear on the display.

MID: Press the AUDIO knob until MID appears on the display. Turn the knob to increase or decrease mid. When you use this control, the radio’s tone setting will switch to custom.

To set the mid to the middle position, select MID and press and hold the AUDIO knob. The radio will produce one beep and set the display level to zero. To set all tone and speaker controls to the middle position, press and hold the AUDIO knob when no tone or speaker control is active. The radio will produce one beep and CENTERED will appear on the display.

TREB: Press the AUDIO knob until TREB appears on the display. Turn the knob to increase or decrease treble. When you use this control, the radio’s tone setting will switch to custom. If a station is weak or noisy, you may want to decrease the treble.

To set treble to the middle position, select TREB and press and hold the AUDIO knob. The radio will produce one beep and set the display level to zero. To set all tone and speaker controls to the middle position, press and hold the AUDIO knob when no tone or speaker control is active. The radio will produce one beep and CENTERED will appear on the display.

Downloaded from www.Manualslib.com manuals search engine

AUTO EQ: This feature allows you to choose preset bass, mid and treble equalization settings designed for country, jazz, talk, pop, rock and classical stations. The last setting will appear on the display when you first press AUTO EQ. Each time you press AUTO EQ, another setting will appear on the display. Press AUTO EQ again after TALK appears and CUSTOM will appear. Tone control will return to the BASS, MID and TREB. Also, if you alter BASS, MID, or TREB while in an auto EQ setting, the radio will return to CUSTOM. CUSTOM will appear on the display.

Using RDS Mode

Your audio system is equipped with a Radio Data System (RDS). RDS mode gives you many useful new features. With RDS, the radio can do the following:

- Seek only to stations with the types of programs you want to listen to,
- seek to stations with traffic announcements,
- receive announcements concerning local and national emergencies, and
- receive and display messages from radio stations.

RDS features are only available for use on FM stations which broadcast RDS information. The RDS features of your radio rely upon receiving specific RDS information from these stations. These features will only work when the RDS information is available. In rare cases, a radio station may broadcast incorrect information that will cause the radio features to work improperly. If this happens, please contact the radio station.

When you are tuned to an RDS station, the station name will appear on the display, instead of the frequency. Most RDS stations provide their station name, the time of day and a Program Type (PTY) for their current programming.

Downloaded from www.Manualslib.com manuals search engine

TRAF: Press this button to receive traffic announcements. The traffic announcement brackets will appear on the display. TRAF will appear on the display if the tuned station broadcasts traffic announcements. If the current tuned station does not broadcast traffic announcements, the radio will seek to a station that does. When the radio finds a station that broadcasts traffic announcements, it will stop. If no station is found, NONE FOUND will appear on the display.

When a traffic announcement comes on the tuned radio station or a related network station, you will hear it, even if the volume is muted or a compact disc is playing. If the compact disc player was being used, the compact disc will stay in the player and resume play at the point where it stopped.

INFO: If the current station has a message, INFO will appear on the display. Press this button to see the message. If the whole message does not appear on the display, parts of the message will appear every three seconds until the message is completed. To see the parts of the message faster than every three seconds, press this button again. A new group of words will appear on the display. Once the complete message has been displayed, INFO will disappear from the display until another new message is received.

P-TYPE: This button is used to turn on and off Program Type (PTY) selections. PTY and the light next to the button will turn on. The last selected PTY will appear on the display for five seconds. Turn the P-TYPE knob to select the PTY you want to listen to. Press the SEEK SCAN arrows to find radio stations of the PTY you want to listen to. The last PTY selected will be used for seek or scan modes. If a station with the selected PTY is not found, NONE FOUND will appear on the display. If both P-TYPE and TRAF are on, the radio will search for stations with traffic announcements and the selected PTY.

To use the P-TYPE interrupt feature, press and hold the P-TYPE button until you hear a beep on the PTY you want to interrupt on. When you are listening to a compact disc, the last selected RDS FM station will interrupt play if that selected PTY format is broadcast.

Downloaded from www.Manualslib.com manuals search engine

PUSHBUTTONS: The six numbered pushbuttons let you return to your favorite Program Types (PTYs). These buttons have factory PTY presets. You can set up to 12 PTYs (six FM1 and six FM2) by performing the following steps:

1. Press P-TYPE, if it is not already on.
2. Press AM FM to select FM1 or FM2.
3. Turn the P-TYPE knob to select a PTY.
4. Press and hold one of the six numbered buttons until you hear a beep. Whenever you press that numbered button, the PTY you set will return.
5. Repeat the steps for each pushbutton.

ALERT!: This type of announcement warns of national or local emergencies. You will not be able to turn off alert announcements. ALERT! appears on the display when an alert announcement plays. When an alert announcement comes on the tuned radio station, you will hear it, even if the volume is muted or a compact disc is playing. If the compact disc player is playing, play will stop for the announcement and resume when the announcement is finished.

ALTERNATE FREQUENCY: This feature allows the radio to switch to a stronger station with the same program type. Press and hold AM FM for two seconds to turn alternate frequency on. AF ON will appear on the display. The radio may switch to stronger stations. Press and hold AM FM again for two seconds to turn alternate frequency off. AF OFF will appear on the display. The radio will not switch to other stations. When you turn the ignition off and then on again, the alternate frequency feature will automatically be turned on.

Downloaded from www.Manualslib.com manuals search engine

Adjusting the Speakers

BAL-FADE: The AUDIO knob adjusts balance and fade. To adjust balance, press the AUDIO knob until BAL appears on the display. Turn the knob to adjust the sound to the left or right speakers. The middle position balances the sound between the speakers. To adjust fade, press and hold the AUDIO knob until FAD appears on the display. Turn the knob to adjust the sound to the front or rear speakers. The middle position balances the sound between the speakers.

To set the balance and fade to the middle position, select balance or fade and press and hold the AUDIO knob. The radio will beep once and will set the display level to the middle position. To set all tone and speaker controls to the middle position, press and hold the AUDIO knob when tone or speaker controls are not active. The radio will produce one beep and CENTERED will appear on the display.

Playing a Compact Disc

LOAD: This compact disc player will accommodate up to six discs.

To insert one disc do the following:

1. Turn the ignition on.
2. Press and release the LOAD button.
3. Wait for the light, located to the right of the slot, to turn green.
4. Load a disc. Insert a disc partway into the slot, label side up. The player will pull the disc in.

   When the disc is inserted, the CD symbol will be displayed. If you select an EQ setting for your disc, it will be activated each time you play a disc.

   If the radio is on or off, the disc will begin to play automatically.

Downloaded from www.Manualslib.com manuals search engine

To insert multiple discs do the following:

1. Turn the ignition on.
2. Press and hold the LOAD button for two seconds.

   You will then hear a beep and the light, located to the right of the slot, will begin to flash.
3. Once the light stops flashing and turns green, load a disc. Insert a disc partway into the slot, label side up. The player will pull the disc in.

   Once the disc is loaded, the light will begin flashing again. Once the light stops flashing and turns green you can then load another disc. The disc player takes up to six discs. Do not try to load more than six.

   When a disc is inserted, the CD symbol will be displayed. If more than one disc has been loaded, a number for each disc will be displayed. If you select an EQ setting for your disc, it will be activated each time you play a disc.

   If the radio is on or off, the last disc loaded will begin to play automatically.
4. To load more than one disc but less than six, complete Steps 1, 2 and 3. When you have finished loading discs, with the radio on or off, press LOAD to cancel the loading function. The radio will begin to play the last CD loaded.

As each new track starts to play, the track number will appear on the display.

Playing a Specific Loaded CD: For every CD loaded, a number will appear on the radio display. To play a specific CD, first press the CD AUX button to start playing a CD. Then press the numbered button that corresponds to the CD you want to play. A small bar will appear under the CD number that is playing, and the track number will appear.

If CHECK CD appears on the radio display, it could be due to one of the following conditions:

- The road is too rough. The disc should play when the road is smoother.
- The disc is dirty, scratched, wet or upside down.
- The air is very humid. If so, wait about an hour and try again.

If any error occurs repeatedly or if an error can’t be corrected, please contact your dealer. If your radio displays an error message, write it down and provide it to your dealer when reporting the problem.

Downloaded from www.Manualslib.com manuals search engine

CD ⏏: This button will eject a disc or discs, if you have multiple discs loaded. To eject a disc or discs from the disc player perform one of the following steps:

- Press and release the eject button to eject the disc that is currently playing, or
- to eject all of the discs, press this button for two seconds, you will hear a beep, and the light will flash to let you know when a disc is being ejected.

When the eject button is pressed, the receiver will eject the disc and REMOVE CD will be displayed. You can now remove the disc. If the disc is not removed, after 25 seconds, the disc will be automatically pulled back into the receiver. If you try to push the disc back into the receiver, before the 25 second time period is complete, the receiver will sense an error and will try to eject the disc several times before stopping. You cannot repeatedly press the eject button to eject the disc after you have tried to push the CD in manually. The receivers 25-second eject timer will reset at each press of eject, which will cause the receiver to not eject the disc until the 25-second time period has elapsed.

Once the player stops and the disc is ejected, remove the disc. After removing the disc, press the VOLUME PWR knob off and then on again. This will clear the disc-sensing feature and enable discs to be loaded into the player again.

REV: Press and hold this button to reverse quickly within a track. Release it to play the passage. You will hear sound at a reduced volume. The display will show elapsed time.

FWD: Press and hold this button to advance quickly within a track. Release it to play the passage. You will hear sound at a reduced volume. The display will show elapsed time.

RPT: With repeat, you can repeat one track or an entire disc. To use repeat, do the following:

- To repeat the track you are listening to, press and release the RPT button. RPT will appear on the display. Press RPT again to turn it off.
- To repeat the disc you are listening to, press and hold the RPT button for two seconds. Press RPT again to turn if off.

Downloaded from www.Manualslib.com manuals search engine

RDM: With random, you can listen to the tracks in random, rather than sequential order, on all of the discs or on one disc. To use random, do the following:

- Press and release the RDM button to play the tracks on all of the discs that are loaded, in random order. RDM will appear in the display. Press RDM to turn it off.
- To play the tracks on the disc you are listening to in random order, press and hold RDM for more than two seconds. You will hear a beep and RDM will appear on the display. Press RDM again to turn if off.

AUTO EQ: Press AUTO EQ to select the desired preset equalization setting while playing a compact disc. The equalization will be automatically set whenever you play a compact disc.

SEEK: Press the left arrow while playing a CD to go to the start of the current track, if more than ten seconds have played. Press the right arrow to go to the next track. If you press the button more than once, the player will continue moving backward or forward through the disc.

SCAN: Press and hold either SEEK SCAN arrow for more than two seconds until SCAN appears on the display and you hear a beep. Use SEEK SCAN to listen to each track for a few seconds. The sound will mute while scanning. SCAN will appear on the display. Press either SEEK SCAN arrow again, to stop scanning.

DISC SCAN: Press and hold either SEEK SCAN arrow for more than four seconds until DISC SCAN appears on the display and you hear a beep. Use DISC SCAN to listen to the first track, for ten seconds of each disc loaded. The sound will mute while scanning to the next track. DISC SCAN will appear on the display. Press either SEEK SCAN arrow again, to stop scanning.

RCL: Press this button to see how long the current track has been playing. To change what is normally shown on the display (track or elapsed time), press the button until you see the display you want, then hold the button until the display flashes.

AM FM: Press this button to play the radio when a disc is in the player.

Downloaded from www.Manualslib.com manuals search engine

Using Song List Mode

The integrated 6-disc CD changer has a feature called song list. This feature is capable of saving 20 track selections.

To save tracks into SONG LIST perform the following steps:

1. The disc player must be on with at least one disc loaded. See “LOAD/EJECT” previously for more information.
2. The disc changer must not be in song list mode. S-LIST should not appear in the display. If S-LIST is present, press SONG LIST to turn it off.
3. Select the desired disc by pressing the numbered pushbutton and then use the SEEK SCAN right arrow button to locate the track that you want to save. The track will begin to play.
4. Press and hold SONG LIST for two or more seconds to save the track into memory. When SONG LIST is pressed a beep will be heard immediately. After two seconds of pressing SONG LIST continuously, two beeps will sound, to confirm that the track has been saved.
5. Repeat Steps 3 and 4 for saving other selections.

To play the song list, press SONG LIST. One beep will be heard and S-LIST will appear on the display.

The recorded tracks will begin to play in the order that they were saved.

You may seek through the song list by using the SEEK SCAN arrows. Seeking past the last saved track will return you to the first saved track.

To delete tracks from SONG LIST perform the following steps:

1. The disc player must be turned on.
2. Press SONG LIST to turn song list on. S-LIST will appear on the display.
3. Press the SEEK SCAN arrows to select the desired track to be deleted.
4. Press and hold the SONG LIST button for two seconds. When pressing SONG LIST one beep will be heard immediately. After two seconds of pressing the SONG LIST button continuously, two beeps will be heard, to confirm that the track has been deleted.

After a track has been deleted, the remaining tracks are moved up the list. When another track is added to the song list, the tracks will be added to the end of the list.

Downloaded from www.Manualslib.com manuals search engine

To delete the entire SONG LIST perform the following steps:

1. The disc player must be on.
2. Press SONG LIST to turn song list on. S-LIST will appear on the display.
3. Press and hold SONG LIST for more than four seconds. A beep will be heard, followed by two beeps after two seconds and a final beep will be heard after four seconds. S-LIST EMPTY will appear on the display indicating that the song list has been deleted.

If a disc is ejected, and the song list contains saved tracks from that disc, those tracks are automatically deleted from the song list.

To end SONG LIST mode, press the SONG LIST button. One beep will be heard and S-LIST will be removed from the display.

Rear Seat Audio (If Equipped)

This feature allows rear seat passengers to listen to any of the music sources including AM-FM, automatic tone control, cassette tapes or CDs. However, the rear seat passengers can only control the music sources that the front seat passengers are not listening to. For example, rear seat passengers may listen to a cassette tape or CD through headphones while the driver listens to the radio through the front speakers. The rear seat passengers have control of the volume for each set of headphones. Be aware that the front seat audio controls always override the rear seat audio controls.

This feature is intended for rear seat passengers.

Downloaded from www.Manualslib.com manuals search engine

The following function is controlled by the primary radio knob:

POWER-VOL: Push this knob twice to turn the rear seat audio system on or off. ON or OFF will be displayed for five seconds. The rear speakers will be muted when the power is turned on. You may operate the rear seat audio functions when the primary radio power is off if the ignition is on.

The following functions are controlled by the rear seat audio system buttons:

PWR: Press this button to turn the rear seat audio system on or off. The rear speakers will be muted when the power is turned on. You may operate the rear seat audio functions even when the primary radio power is off.

VOL: Press this knob lightly so it extends. Turn the knob clockwise to increase volume and counterclockwise to decrease volume. Push the knob back into its stored position when you're not using it. The upper VOL knob controls the upper headphone and the lower VOL knob controls the lower headphone.

AM FM: Press this button to switch between AM, FM1 and FM2. The display will show your frequency selection. If the front passengers are already listening to AM-FM, the rear seat audio controller will not switch between the bands and cannot change the frequency.

SEEK: Press the up arrow to tune to the next higher station and stay there. Press the down arrow to tune to the next lower station and stay there. The display will show your selection. The sound will mute while seeking. The SEEK button is inactive if the AM FM mode on the front radio is in use.

While listening to a cassette tape, press the up arrow to hear the next selection on the tape. Press the down arrow to go back to the previous selection. The SEEK button is inactive if the tape mode on the front radio is in use.

While listening to a CD, press the up arrow to hear the next selection on the CD. Press the down arrow to go back to the start of the current selection (if more than eight seconds have played). The SEEK button is inactive if the CD mode on the front radio (if equipped) or the CD changer is in use.

Downloaded from www.Manualslib.com manuals search engine

P.SET PROG: The front passengers must be listening to something different for each of these functions to work:

- Press this button to seek through your preset radio stations set on your primary radio pushbuttons. The display will show your selections.
- When a cassette tape is playing, press this button to go to the other side of the tape.

TAPE CD: With a cassette tape in the player and the radio playing, press this button to play a cassette tape. Press TAPE CD to switch between the tape and compact disc if both are loaded. Press AM FM to return to the radio when a cassette tape or compact disc is playing. The inactive tape or CD will remain safely inside the radio for future listening.

Theft-Deterrent Feature

THEFTLOCK® is designed to discourage theft of your radio. The feature works automatically by learning a portion of the Vehicle Identification Number (VIN). If the radio is moved to a different vehicle, it will not operate and LOCKED will be displayed.

When the radio and vehicle are turned off, the blinking red light indicates that THEFTLOCK is armed.

With THEFTLOCK activated, your radio will not operate if stolen.

Downloaded from www.Manualslib.com manuals search engine

Audio Steering Wheel Controls (If Equipped)

If your vehicle has this feature, you can control certain radio and remote playback functions using the buttons on your steering wheel.

VOLUME: Press the up or down arrow to increase or decrease volume.

PLAY: Press this button to play a cassette tape or compact disc when the radio is playing.

MUTE: Press this button to silence the system. Press it again, or any other radio button, to turn on the sound.

SEEK: Press the up arrow to tune to the next radio station and the down arrow to tune to the previous radio station. If a cassette tape or compact disc is playing, the player will advance to the next selection with the up arrow and go to the previous selection with the down arrow.

PRESET: Press this button to play a station you have programmed on the radio preset buttons. When a cassette tape is playing, press this button to change tape sides.

AM FM: Press this button to choose AM, FM1 or FM2. If a cassette tape or compact disc is playing, it will stop and the radio will play.

Understanding Radio Reception

AM

The range for most AM stations is greater than for FM, especially at night. The longer range, however, can cause stations to interfere with each other. AM can pick up noise from things like storms and power lines. Try reducing the treble to reduce this noise if you ever get it.

Downloaded from www.Manualslib.com manuals search engine

FM Stereo

FM stereo will give you the best sound, but FM signals will reach only about 10 to 40 miles (16 to 65 km). Tall buildings or hills can interfere with FM signals, causing the sound to come and go.

Tips About Your Audio System

Hearing damage from loud noise is almost undetectable until it is too late. Your hearing can adapt to higher volumes of sound. Sound that seems normal can be loud and harmful to your hearing. Take precautions by adjusting the volume control on your radio to a safe sound level before your hearing adapts to it.

To help avoid hearing loss or damage:

- Adjust the volume control to the lowest setting.
- Increase volume slowly until you hear comfortably and clearly.

NOTICE:

Before you add any sound equipment to your vehicle -- like a tape player, CB radio, mobile telephone or two-way radio -- be sure you can add what you want. If you can, it's very important to do it properly. Added sound equipment may interfere with the operation of your vehicle's engine, Delphi Delco Electronics radio or other systems, and even damage them. Your vehicle's systems may interfere with the operation of sound equipment that has been added improperly.

So, before adding sound equipment, check with your dealer and be sure to check Federal rules covering mobile radio and telephone units.

Downloaded from www.Manualslib.com manuals search engine

Care of Your Cassette Tape Player

A tape player that is not cleaned regularly can cause reduced sound quality, ruined cassettes or a damaged mechanism. Cassette tapes should be stored in their cases away from contaminants, direct sunlight and extreme heat. If they aren't, they may not operate properly or may cause failure of the tape player.

Your tape player should be cleaned regularly after every 50 hours of use. Your radio may display CLN to indicate that you have used your tape player for 50 hours without resetting the tape clean timer. If this message appears on the display, your cassette tape player needs to be cleaned. It will still play tapes, but you should clean it as soon as possible to prevent damage to your tapes and player. If you notice a reduction in sound quality, try a known good cassette to see if it is the tape or the tape player at fault. If this other cassette has no improvement in sound quality, clean the tape player.

The recommended cleaning method for your cassette tape player is the use of a scrubbing action, non-abrasive cleaning cassette with pads which scrub the tape head as the hubs of the cleaner cassette turn. The recommended cleaning cassette is available through your dealer (GM Part No. 12344789).

When using a scrubbing action, non-abrasive cleaning cassette, it is normal for the cassette to eject because your unit is equipped with a cut tape detection feature and a cleaning cassette may appear as a broken tape. To prevent the cleaning cassette from being ejected, use the following steps.

1. Turn the ignition to RUN or ACCESSORY.
2. Turn the radio off.
3. Press and hold the TAPE button for five seconds. The tape symbol on the display will flash for two seconds.
4. Insert the scrubbing action cleaning cassette.
5. Eject the cleaning cassette after the manufacturer's recommended cleaning time.

When the cleaning cassette has been ejected, the cut tape detection feature is active again.

You may also choose a non-scrubbing action, wet-type cleaner which uses a cassette with a fabric belt to clean the tape head. This type of cleaning cassette will not eject on its own. A non-scrubbing action cleaner may not clean as thoroughly as the scrubbing type cleaner. The use of a non-scrubbing action, dry-type cleaning cassette is not recommended.

Downloaded from www.Manualslib.com manuals search engine

After you clean the player, press and hold EJECT for five seconds to reset the CLN indicator. The radio will display --- to show the indicator was reset.

Cassettes are subject to wear and the sound quality may degrade over time. Always make sure the cassette tape is in good condition before you have your tape player serviced.

Care of Your Compact Discs

Handle discs carefully. Store them in their original cases or other protective cases and away from direct sunlight and dust. If the surface of a disc is soiled, dampen a clean, soft cloth in a mild, neutral detergent solution and clean it, wiping from the center to the edge.

Be sure never to touch the side without writing when handling discs. Pick up discs by grasping the outer edges or the edge of the hole and the outer edge.

Care of Your Compact Disc Player

The use of CD lens cleaner discs is not advised, due to the risk of contaminating the lens of the CD optics with lubricants internal to the CD mechanism.

Integrated Windshield Antenna

The antenna in your vehicle is a very thin, metal layer in the windshield. If you look near the edges of the windshield, you can see the outline of the antenna. The connector is at the top of the windshield, where the headliner ends.

If you experience difficulty with remote transmitters, such as a garage door opener, try pointing the device through the very top of the windshield.

Downloaded from www.Manualslib.com manuals search engine

Section 4 Your Driving and the Road

Here you'll find information about driving on different kinds of roads and in varying weather conditions. We've also included many other useful tips on driving.

4-2 Defensive Driving
4-3 Drunken Driving
4-6 Control of a Vehicle
4-6 Braking
4-9 Traction Control System (Option)
4-11 Steering
4-13 Off-Road Recovery
4-13 Passing
4-15 Loss of Control
4-16 Driving at Night
4-17 Driving in Rain and on Wet Roads
4-20 City Driving
4-21 Freeway Driving
4-22 Before Leaving on a Long Trip
4-23 Highway Hypnosis
4-23 Hill and Mountain Roads
4-25 Winter Driving
4-29 Recreational Vehicle Towing
4-29 Loading Your Vehicle
4-32 Towing a Trailer

Downloaded from www.Manualslib.com manuals search engine

Defensive Driving

The best advice anyone can give about driving is: Drive defensively.

Please start with a very important safety device in your vehicle: Buckle up. See “Safety Belts” in the Index.

Defensive driving really means “be ready for anything.” On city streets, rural roads or freeways, it means “always expect the unexpected.”

Assume that pedestrians or other drivers are going to be careless and make mistakes. Anticipate what they might do. Be ready for their mistakes.

Rear-end collisions are about the most preventable of accidents. Yet they are common. Allow enough following distance. It’s the best defensive driving maneuver, in both city and rural driving. You never know when the vehicle in front of you is going to brake or turn suddenly.

Defensive driving requires that a driver concentrate on the driving task. Anything that distracts from the driving task -- such as concentrating on a cellular telephone call, reading, or reaching for something on the floor -- makes proper defensive driving more difficult and can even cause a collision, with resulting injury. Ask a passenger to help do things like this, or pull off the road in a safe place to do them yourself. These simple defensive driving techniques could save your life.

Downloaded from www.Manualslib.com manuals search engine

Drunken Driving

Death and injury associated with drinking and driving is a national tragedy. It's the number one contributor to the highway death toll, claiming thousands of victims every year.

Alcohol affects four things that anyone needs to drive a vehicle:

- Judgment
- Muscular Coordination
- Vision
- Attentiveness.

Police records show that almost half of all motor vehicle-related deaths involve alcohol. In most cases, these deaths are the result of someone who was drinking and driving. In recent years, about 16,000 annual motor vehicle-related deaths have been associated with the use of alcohol, with more than 300,000 people injured.

Many adults -- by some estimates, nearly half the adult population -- choose never to drink alcohol, so they never drive after drinking. For persons under 21, it's against the law in every U.S. state to drink alcohol. There are good medical, psychological and developmental reasons for these laws.

The obvious way to solve the leading highway safety problem is for people never to drink alcohol and then drive. But what if people do? How much is "too much" if the driver plans to drive? It's a lot less than many might think. Although it depends on each person and situation, here is some general information on the problem.

The Blood Alcohol Concentration (BAC) of someone who is drinking depends upon four things:

- The amount of alcohol consumed
- The drinker's body weight
- The amount of food that is consumed before and during drinking
- The length of time it has taken the drinker to consume the alcohol.

According to the American Medical Association, a 180-lb. (82 kg) person who drinks three 12-ounce (355 ml) bottles of beer in an hour will end up with a BAC of about 0.06 percent. The person would reach the same BAC by drinking three 4-ounce (120 ml) glasses of wine or three mixed drinks if each had 1-1/2 ounces (45 ml) of a liquor like whiskey, gin or vodka.

Downloaded from www.Manualslib.com manuals search engine

It's the amount of alcohol that counts. For example, if the same person drank three double martinis (3 ounces or 90 ml of liquor each) within an hour, the person's BAC would be close to 0.12 percent. A person who consumes food just before or during drinking will have a somewhat lower BAC level.

There is a gender difference, too. Women generally have a lower relative percentage of body water than men. Since alcohol is carried in body water, this means that a woman generally will reach a higher BAC level than a man of her same body weight when each has the same number of drinks.

The law in many U.S. states sets the legal limit at a BAC of 0.10 percent. In a growing number of U.S. states, and throughout Canada, the limit is 0.08 percent. In some other countries, it's even lower. The BAC limit for all commercial drivers in the United States is 0.04 percent.

The BAC will be over 0.10 percent after three to six drinks (in one hour). Of course, as we've seen, it depends on how much alcohol is in the drinks, and how quickly the person drinks them.

But the ability to drive is affected well below a BAC of 0.10 percent. Research shows that the driving skills of many people are impaired at a BAC approaching 0.05 percent, and that the effects are worse at night. All drivers are impaired at BAC levels above 0.05 percent. Statistics show that the chance of being in a collision increases sharply for drivers who have a BAC of 0.05 percent or above. A driver with a BAC level of 0.06 percent has doubled his or her chance of having a collision. At a BAC level of 0.10 percent, the chance of this driver having a collision is 12 times greater; at a level of 0.15 percent, the chance is 25 times greater!

Downloaded from www.Manualslib.com manuals search engine

The body takes about an hour to rid itself of the alcohol in one drink. No amount of coffee or number of cold showers will speed that up. “I’ll be careful” isn’t the right answer. What if there’s an emergency, a need to take sudden action, as when a child darts into the street? A person with even a moderate BAC might not be able to react quickly enough to avoid the collision.

There’s something else about drinking and driving that many people don’t know. Medical research shows that alcohol in a person’s system can make crash injuries worse, especially injuries to the brain, spinal cord or heart. This means that when anyone who has been drinking -- driver or passenger -- is in a crash, that person’s chance of being killed or permanently disabled is higher than if the person had not been drinking.

⚠ CAUTION:

Drinking and then driving is very dangerous. Your reflexes, perceptions, attentiveness and judgment can be affected by even a small amount of alcohol. You can have a serious -- or even fatal -- collision if you drive after drinking. Please don’t drink and drive or ride with a driver who has been drinking. Ride home in a cab; or if you’re with a group, designate a driver who will not drink.

Downloaded from www.Manualslib.com manuals search engine

Control of a Vehicle

You have three systems that make your vehicle go where you want it to go. They are the brakes, the steering and the accelerator. All three systems have to do their work at the places where the tires meet the road.

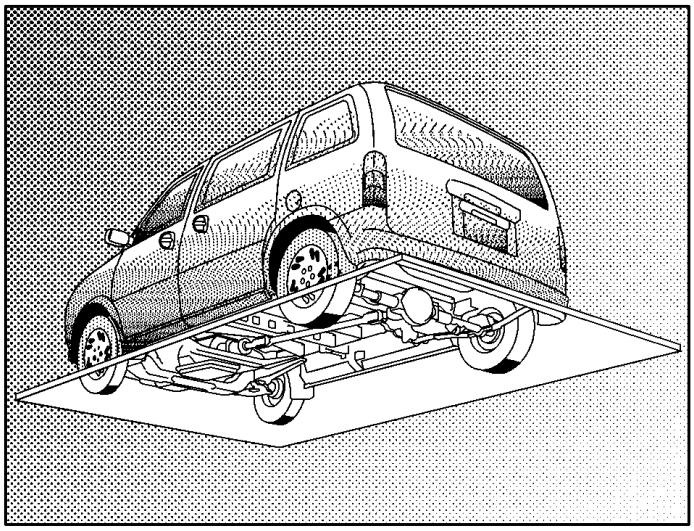

Sometimes, as when you're driving on snow or ice, it's easy to ask more of those control systems than the tires and road can provide. That means you can lose control of your vehicle. Also see "Traction Control System" in the Index.

Braking

Braking action involves *perception time* and *reaction time.*

First, you have to decide to push on the brake pedal. That's *perception time.* Then you have to bring up your foot and do it. That's *reaction time.*

Average *reaction time* is about 3/4 of a second. But that's only an average. It might be less with one driver and as long as two or three seconds or more with another. Age, physical condition, alertness, coordination and eyesight all play a part. So do alcohol, drugs and frustration. But even in 3/4 of a second, a vehicle moving at 60 mph (100 km/h) travels 66 feet (20 m). That could be a lot of distance in an emergency, so keeping enough space between your vehicle and others is important.

And, of course, actual stopping distances vary greatly with the surface of the road (whether it's pavement or gravel); the condition of the road (wet, dry, icy); tire tread; the condition of your brakes; the weight of the vehicle and the amount of brake force applied.

Downloaded from www.Manualslib.com manuals search engine

Avoid needless heavy braking. Some people drive in spurts -- heavy acceleration followed by heavy braking -- rather than keeping pace with traffic. This is a mistake. Your brakes may not have time to cool between hard stops. Your brakes will wear out much faster if you do a lot of heavy braking. If you keep pace with the traffic and allow realistic following distances, you will eliminate a lot of unnecessary braking. That means better braking and longer brake life.

If your engine ever stops while you're driving, brake normally but don't pump your brakes. If you do, the pedal may get harder to push down. If your engine stops, you will still have some power brake assist. But you will use it when you brake. Once the power assist is used up, it may take longer to stop and the brake pedal will be harder to push.

Anti-Lock Brakes (ABS)

Your vehicle has anti-lock brakes (ABS). ABS is an advanced electronic braking system that will help prevent a braking skid.

When you start your engine, or when you begin to drive away, your anti-lock brake system will check itself. You may hear a momentary motor or clicking noise while this test is going on, and you may even notice that your brake pedal moves or pulses a little. This is normal.

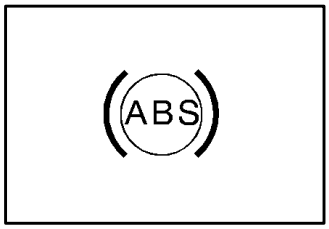

If there's a problem with the anti-lock brake system, this warning light will stay on. See "Anti-Lock Brake System Warning Light" in the Index.

Downloaded from www.Manualslib.com manuals search engine

Here's how anti-lock works. Let's say the road is wet. You're driving safely. Suddenly an animal jumps out in front of you.

You slam on the brakes and continue braking. Here's what happens with ABS.

A computer senses that wheels are slowing down. If one of the wheels is about to stop rolling, the computer will separately work the brakes at each wheel.

The anti-lock system can change the brake pressure faster than any driver could. The computer is programmed to make the most of available tire and road conditions. This can help you steer around the obstacle while braking hard.

As you brake, your computer keeps receiving updates on wheel speed and controls braking pressure accordingly.

Downloaded from www.Manualslib.com manuals search engine

Remember: Anti-lock doesn't change the time you need to get your foot up to the brake pedal or always decrease stopping distance. If you get too close to the vehicle in front of you, you won't have time to apply your brakes if that vehicle suddenly slows or stops. Always leave enough room up ahead to stop, even though you have anti-lock brakes.

Using Anti-Lock

Don't pump the brakes. Just hold the brake pedal down firmly and let anti-lock work for you. You may feel a slight brake pedal pulsation or notice some noise, but this is normal.

Braking in Emergencies

With anti-lock, you can steer and brake at the same time. In many emergencies, steering can help you more than even the very best braking.

Traction Control System (Option)

Your vehicle may have a traction control system that limits wheel spin. This is especially useful in slippery road conditions. The system operates only if it senses that one or both of the front wheels are spinning or beginning to lose traction. When this happens, the system works the front brakes and reduces engine power to limit wheel spin.

The TRACTION ACTIVE message will come on when the traction control system is limiting wheel spin. See "TRACTION ACTIVE Message" in the Index. You may feel or hear the system working, but this is normal.

If your vehicle is in cruise control when the traction control system begins to limit wheel spin, the cruise control will automatically disengage. When road conditions allow you to safely use it again, you may reengage the cruise control. See "Cruise Control" in the Index.

Downloaded from www.Manualslib.com manuals search engine

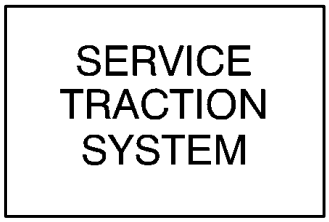

United States

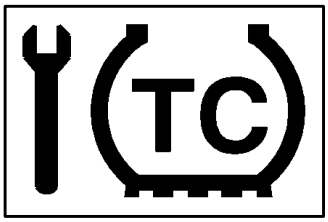

Canada

If this message comes on and stays on or comes on while you are driving, there's a problem with your traction control system.

See "Service Traction System Warning Message" in the Index. When this warning message is on, the TRAC OFF light will come on to remind you that the system will not limit wheel spin. Adjust your driving accordingly.

The traction control system automatically comes on whenever you start your vehicle. To limit wheel spin, especially in slippery road conditions, you should always leave the system on. But you can turn the traction control system off if you ever need to. You should turn the system off if your vehicle ever gets stuck in sand, mud or snow and rocking the vehicle is required. See "Rocking Your Vehicle" in the Index.

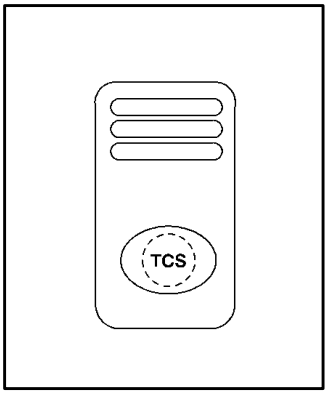

To turn the system off, press the TCS button on the center console switchbank.

If the system is limiting wheel spin when you press the button, the message will go off, but the system will not turn off until there is no longer a current need to limit wheel spin. The TRAC OFF light will come on to remind you the system is off. You can turn the system back on at any time by pressing the button again. The traction control system warning message should go off.

Downloaded from www.Manualslib.com manuals search engine

Steering

Power Steering

If you lose power steering assist because the engine stops or the system is not functioning, you can steer but it will take much more effort.

Steering Tips

Driving on Curves

It's important to take curves at a reasonable speed.

A lot of the "driver lost control" accidents mentioned on the news happen on curves. Here's why:

Experienced driver or beginner, each of us is subject to the same laws of physics when driving on curves. The traction of the tires against the road surface makes it possible for the vehicle to change its path when you turn the front wheels. If there's no traction, inertia will keep the vehicle going in the same direction. If you've ever tried to steer a vehicle on wet ice, you'll understand this.

The traction you can get in a curve depends on the condition of your tires and the road surface, the angle at which the curve is banked, and your speed. While you're in a curve, speed is the one factor you can control.

Suppose you're steering through a sharp curve. Then you suddenly accelerate. Both control systems -- steering and acceleration -- have to do their work where the tires meet the road. Adding the sudden acceleration can demand too much of those places. You can lose control. Refer to "Traction Control System" in the Index.

What should you do if this ever happens? Ease up on the accelerator pedal, steer the vehicle the way you want it to go, and slow down.

Speed limit signs near curves warn that you should adjust your speed. Of course, the posted speeds are based on good weather and road conditions. Under less favorable conditions you'll want to go slower.

If you need to reduce your speed as you approach a curve, do it before you enter the curve, while your front wheels are straight ahead.

Try to adjust your speed so you can "drive" through the curve. Maintain a reasonable, steady speed. Wait to accelerate until you are out of the curve, and then accelerate gently into the straightaway.

Downloaded from www.Manualslib.com manuals search engine

Steering in Emergencies

There are times when steering can be more effective than braking. For example, you come over a hill and find a truck stopped in your lane, or a car suddenly pulls out from nowhere, or a child darts out from between parked cars and stops right in front of you. You can avoid these problems by braking -- if you can stop in time. But sometimes you can't; there isn't room. That's the time for evasive action -- steering around the problem.

Your vehicle can perform very well in emergencies like these. First apply your brakes. See "Braking in Emergencies" earlier in this section. It is better to remove as much speed as you can from a possible collision. Then steer around the problem, to the left or right depending on the space available.

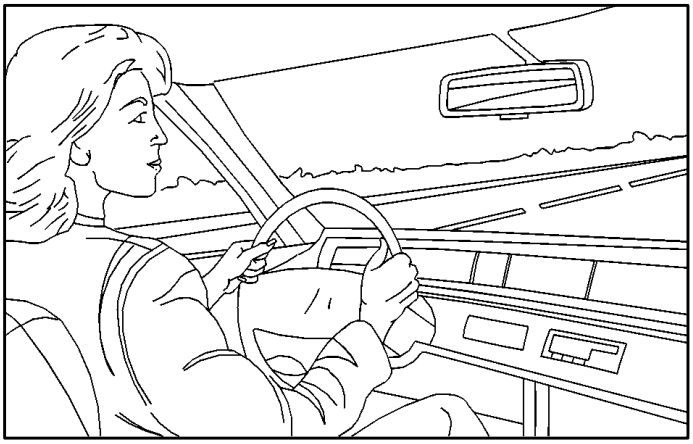

An emergency like this requires close attention and a quick decision. If you are holding the steering wheel at the recommended 9 and 3 o'clock positions, you can turn it a full 180 degrees very quickly without removing either hand. But you have to act fast, steer quickly, and just as quickly straighten the wheel once you have avoided the object.

The fact that such emergency situations are always possible is a good reason to practice defensive driving at all times and wear safety belts properly.

Downloaded from www.Manualslib.com manuals search engine

Off-Road Recovery

You may find that your right wheels have dropped off the edge of a road onto the shoulder while you're driving.

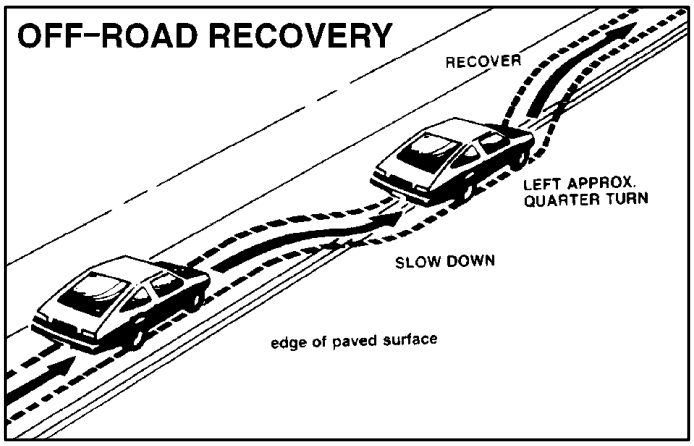

If the level of the shoulder is only slightly below the pavement, recovery should be fairly easy. Ease off the accelerator and then, if there is nothing in the way, steer so that your vehicle straddles the edge of the pavement. You can turn the steering wheel up to one-quarter turn until the right front tire contacts the pavement edge. Then turn your steering wheel to go straight down the roadway.

Passing

The driver of a vehicle about to pass another on a two-lane highway waits for just the right moment, accelerates, moves around the vehicle ahead, then goes back into the right lane again. A simple maneuver?

Not necessarily! Passing another vehicle on a two-lane highway is a potentially dangerous move, since the passing vehicle occupies the same lane as oncoming traffic for several seconds. A miscalculation, an error in judgment, or a brief surrender to frustration or anger can suddenly put the passing driver face to face with the worst of all traffic accidents -- the head-on collision.

So here are some tips for passing:

- "Drive ahead." Look down the road, to the sides and to crossroads for situations that might affect your passing patterns. If you have any doubt whatsoever about making a successful pass, wait for a better time.
- Watch for traffic signs, pavement markings and lines. If you can see a sign up ahead that might indicate a turn or an intersection, delay your pass. A broken center line usually indicates it's all right to pass (providing the road ahead is clear). Never cross a solid line on your side of the lane or a double solid line, even if the road seems empty of approaching traffic.

Downloaded from www.Manualslib.com manuals search engine

- Do not get too close to the vehicle you want to pass while you're awaiting an opportunity. For one thing, following too closely reduces your area of vision, especially if you're following a larger vehicle. Also, you won't have adequate space if the vehicle ahead suddenly slows or stops. Keep back a reasonable distance.
- When it looks like a chance to pass is coming up, start to accelerate but stay in the right lane and don't get too close. Time your move so you will be increasing speed as the time comes to move into the other lane. If the way is clear to pass, you will have a "running start" that more than makes up for the distance you would lose by dropping back. And if something happens to cause you to cancel your pass, you need only slow down and drop back again and wait for another opportunity.
- If other cars are lined up to pass a slow vehicle, wait your turn. But take care that someone isn't trying to pass you as you pull out to pass the slow vehicle. Remember to glance over your shoulder and check the blind spot.
- Check your mirrors, glance over your shoulder and start your left lane change signal before moving out of the right lane to pass. When you are far enough ahead of the passed vehicle to see its front in your inside mirror, activate your right lane change signal and move back into the right lane. (Remember that your right outside mirror is convex. The vehicle you just passed may seem to be farther away from you than it really is.)
- Try not to pass more than one vehicle at a time on two-lane roads. Reconsider before passing the next vehicle.
- Don't overtake a slowly moving vehicle too rapidly. Even though the brake lamps are not flashing, it may be slowing down or starting to turn.
- If you're being passed, make it easy for the following driver to get ahead of you. Perhaps you can ease a little to the right.

Downloaded from www.Manualslib.com manuals search engine

Loss of Control

Let's review what driving experts say about what happens when the three control systems (brakes, steering and acceleration) don't have enough friction where the tires meet the road to do what the driver has asked.

In any emergency, don't give up. Keep trying to steer and constantly seek an escape route or area of less danger.

Skidding

In a skid, a driver can lose control of the vehicle. Defensive drivers avoid most skids by taking reasonable care suited to existing conditions, and by not "overdriving" those conditions. But skids are always possible.

The three types of skids correspond to your vehicle's three control systems. In the braking skid, your wheels aren't rolling. In the steering or cornering skid, too much speed or steering in a curve causes tires to slip and lose cornering force. And in the acceleration skid, too much throttle causes the driving wheels to spin.

A cornering skid is best handled by easing your foot off the accelerator pedal. If you have the "Traction Control System," remember: It helps avoid only the acceleration skid. If you do not have this system, or if the system is off, then an acceleration skid is also best handled by easing your foot off the accelerator pedal.

If your vehicle starts to slide, ease your foot off the accelerator pedal and quickly steer the way you want the vehicle to go. If you start steering quickly enough, your vehicle may straighten out. Always be ready for a second skid if it occurs.

Of course, traction is reduced when water, snow, ice, gravel or other material is on the road. For safety, you'll want to slow down and adjust your driving to these conditions. It is important to slow down on slippery surfaces because stopping distance will be longer and vehicle control more limited.

While driving on a surface with reduced traction, try your best to avoid sudden steering, acceleration or braking (including engine braking by shifting to a lower gear). Any sudden changes could cause the tires to slide. You may not realize the surface is slippery until your vehicle is skidding. Learn to recognize warning clues -- such as enough water, ice or packed snow on the road to make a "mirrored surface" -- and slow down when you have any doubt.

Remember: Any anti-lock brake system (ABS) helps avoid only the braking skid.

Downloaded from www.Manualslib.com manuals search engine

Driving at Night

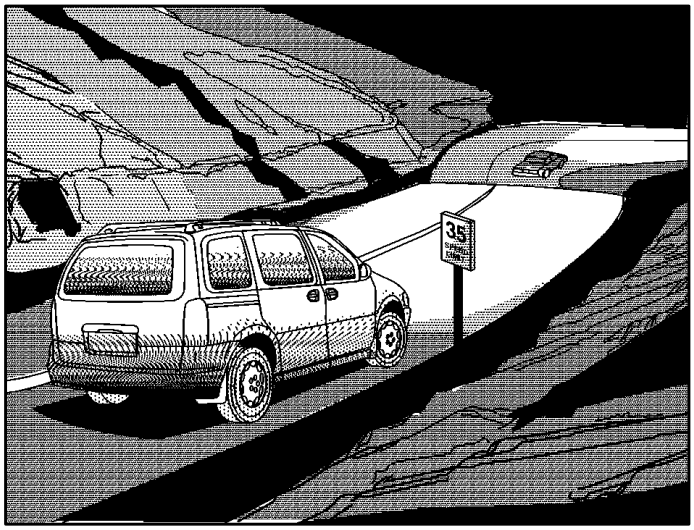

Night driving is more dangerous than day driving. One reason is that some drivers are likely to be impaired -- by alcohol or drugs, with night vision problems, or by fatigue.

Here are some tips on night driving.

- Drive defensively.
- Don't drink and drive.
- Adjust your inside rearview mirror to reduce the glare from headlamps behind you.
- Since you can't see as well, you may need to slow down and keep more space between you and other vehicles.
- Slow down, especially on higher speed roads. Your headlamps can light up only so much road ahead.
- In remote areas, watch for animals.
- If you're tired, pull off the road in a safe place and rest.

No one can see as well at night as in the daytime. But as we get older these differences increase. A 50-year-old driver may require at least twice as much light to see the same thing at night as a 20-year-old.

What you do in the daytime can also affect your night vision. For example, if you spend the day in bright sunshine you are wise to wear sunglasses. Your eyes will have less trouble adjusting to night. But if you're driving, don't wear sunglasses at night. They may cut down on glare from headlamps, but they also make a lot of things invisible.

Downloaded from www.Manualslib.com manuals search engine

You can be temporarily blinded by approaching headlamps. It can take a second or two, or even several seconds, for your eyes to readjust to the dark. When you are faced with severe glare (as from a driver who doesn't lower the high beams, or a vehicle with misaimed headlamps), slow down a little. Avoid staring directly into the approaching headlamps.

Keep your windshield and all the glass on your vehicle clean -- inside and out. Glare at night is made much worse by dirt on the glass. Even the inside of the glass can build up a film caused by dust. Dirty glass makes lights dazzle and flash more than clean glass would, making the pupils of your eyes contract repeatedly.

Remember that your headlamps light up far less of a roadway when you are in a turn or curve. Keep your eyes moving; that way, it's easier to pick out dimly lighted objects. Just as your headlamps should be checked regularly for proper aim, so should your eyes be examined regularly. Some drivers suffer from night blindness -- the inability to see in dim light -- and aren't even aware of it.

Driving in Rain and on Wet Roads

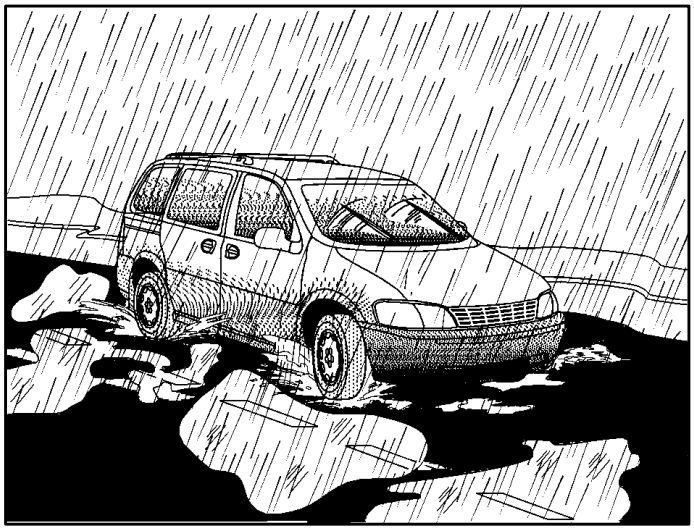

Rain and wet roads can mean driving trouble. On a wet road, you can't stop, accelerate or turn as well because your tire-to-road traction isn't as good as on dry roads. And, if your tires don't have much tread left, you'll get even less traction. It's always wise to go slower and be cautious if rain starts to fall while you are driving. The surface may get wet suddenly when your reflexes are tuned for driving on dry pavement.

Downloaded from www.Manualslib.com manuals search engine

The heavier the rain, the harder it is to see. Even if your windshield wiper blades are in good shape, a heavy rain can make it harder to see road signs and traffic signals, pavement markings, the edge of the road and even people walking.

It's wise to keep your wiping equipment in good shape and keep your windshield washer tank filled with washer fluid. Replace your windshield wiper inserts when they show signs of streaking or missing areas on the windshield, or when strips of rubber start to separate from the inserts.

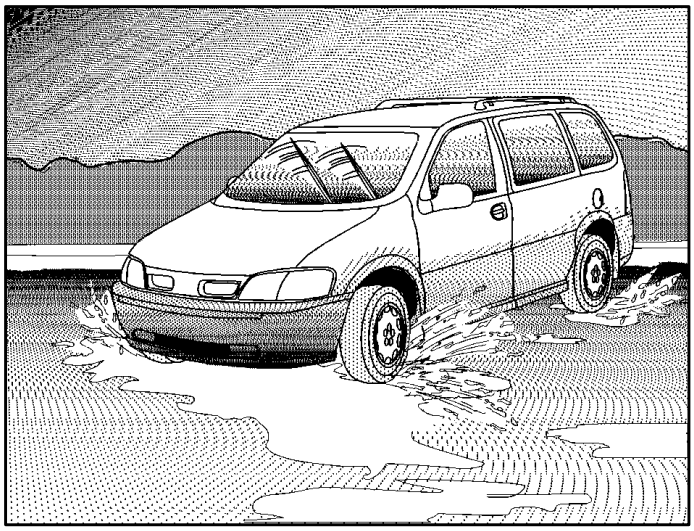

Driving too fast through large water puddles or even going through some car washes can cause problems, too. The water may affect your brakes. Try to avoid puddles. But if you can't, try to slow down before you hit them.

⚠ CAUTION:

Wet brakes can cause accidents. They won't work as well in a quick stop and may cause pulling to one side. You could lose control of the vehicle.

After driving through a large puddle of water or a car wash, apply your brake pedal lightly until your brakes work normally.

Hydroplaning

Hydroplaning is dangerous. So much water can build up under your tires that they can actually ride on the water. This can happen if the road is wet enough and you're going fast enough. When your vehicle is hydroplaning, it has little or no contact with the road.

Downloaded from www.Manualslib.com manuals search engine

Hydroplaning doesn't happen often. But it can if your tires do not have much tread or if the pressure in one or more is low. It can happen if a lot of water is standing on the road. If you can see reflections from trees, telephone poles or other vehicles, and raindrops "dimple" the water's surface, there could be hydroplaning.

Hydroplaning usually happens at higher speeds. There just isn't a hard and fast rule about hydroplaning. The best advice is to slow down when it is raining.

Driving Through Deep Standing Water

NOTICE:

If you drive too quickly through deep puddles or standing water, water can come in through your engine's air intake and badly damage your engine. Never drive through water that is slightly lower than the underbody of your vehicle. If you can't avoid deep puddles or standing water, drive through them very slowly.

Driving Through Flowing Water

⚠ CAUTION:

Flowing or rushing water creates strong forces. If you try to drive through flowing water, as you might at a low water crossing, your vehicle can be carried away. As little as six inches of flowing water can carry away a smaller vehicle. If this happens, you and the other vehicle occupants could drown. Don't ignore police warning signs, and otherwise be very cautious about trying to drive through flowing water.

Some Other Rainy Weather Tips

- Besides slowing down, allow some extra following distance. And be especially careful when you pass another vehicle. Allow yourself more clear room ahead, and be prepared to have your view restricted by road spray.
- Have good tires with proper tread depth. See "Tires" in the Index.

Downloaded from www.Manualslib.com manuals search engine

City Driving

One of the biggest problems with city streets is the amount of traffic on them. You'll want to watch out for what the other drivers are doing and pay attention to traffic signals.

Here are ways to increase your safety in city driving:

- Know the best way to get to where you are going. Get a city map and plan your trip into an unknown part of the city just as you would for a cross-country trip.
- Try to use the freeways that rim and crisscross most large cities. You'll save time and energy. See the next part, "Freeway Driving."
- Treat a green light as a warning signal. A traffic light is there because the corner is busy enough to need it. When a light turns green, and just before you start to move, check both ways for vehicles that have not cleared the intersection or may be running the red light.

Downloaded from www.Manualslib.com manuals search engine

Freeway Driving

Mile for mile, freeways (also called thruways, parkways, expressways, turnpikes or superhighways) are the safest of all roads. But they have their own special rules.

The most important advice on freeway driving is: Keep up with traffic and keep to the right. Drive at the same speed most of the other drivers are driving. Too-fast or too-slow driving breaks a smooth traffic flow. Treat the left lane on a freeway as a passing lane.

At the entrance, there is usually a ramp that leads to the freeway. If you have a clear view of the freeway as you drive along the entrance ramp, you should begin to check traffic. Try to determine where you expect to blend with the flow. Try to merge into the gap at close to the prevailing speed. Switch on your turn signal, check your mirrors and glance over your shoulder as often as necessary. Try to blend smoothly with the traffic flow.

Once you are on the freeway, adjust your speed to the posted limit or to the prevailing rate if it's slower. Stay in the right lane unless you want to pass.

Before changing lanes, check your mirrors. Then use your turn signal.

Just before you leave the lane, glance quickly over your shoulder to make sure there isn't another vehicle in your "blind" spot.

Once you are moving on the freeway, make certain you allow a reasonable following distance. Expect to move slightly slower at night.

When you want to leave the freeway, move to the proper lane well in advance. If you miss your exit, do not, under any circumstances, stop and back up. Drive on to the next exit.

The exit ramp can be curved, sometimes quite sharply.

Downloaded from www.Manualslib.com manuals search engine

The exit speed is usually posted.

Reduce your speed according to your speedometer, not to your sense of motion. After driving for any distance at higher speeds, you may tend to think you are going slower than you actually are.

Before Leaving on a Long Trip

Make sure you're ready. Try to be well rested. If you must start when you're not fresh -- such as after a day's work -- don't plan to make too many miles that first part of the journey. Wear comfortable clothing and shoes you can easily drive in.

Is your vehicle ready for a long trip? If you keep it serviced and maintained, it's ready to go. If it needs service, have it done before starting out. Of course, you'll find experienced and able service experts in Pontiac dealerships all across North America. They'll be ready and willing to help if you need it.

Here are some things you can check before a trip:

- *Windshield Washer Fluid:* Is the reservoir full? Are all windows clean inside and outside?
- *Wiper Blades:* Are they in good shape?
- *Fuel, Engine Oil, Other Fluids:* Have you checked all levels?
- *Lamps:* Are they all working? Are the lenses clean?
- *Tires:* They are vitally important to a safe, trouble-free trip. Is the tread good enough for long-distance driving? Are the tires all inflated to the recommended pressure?
- *Weather Forecasts:* What's the weather outlook along your route? Should you delay your trip a short time to avoid a major storm system?
- *Maps:* Do you have up-to-date maps?

Downloaded from www.Manualslib.com manuals search engine

Highway Hypnosis

Is there actually such a condition as “highway hypnosis”? Or is it just plain falling asleep at the wheel? Call it highway hypnosis, lack of awareness, or whatever.

There is something about an easy stretch of road with the same scenery, along with the hum of the tires on the road, the drone of the engine, and the rush of the wind against the vehicle that can make you sleepy. Don’t let it happen to you! If it does, your vehicle can leave the road in *less than a second*, and you could crash and be injured.

What can you do about highway hypnosis? First, be aware that it can happen.

Then here are some tips:

- Make sure your vehicle is well ventilated, with a comfortably cool interior.
- Keep your eyes moving. Scan the road ahead and to the sides. Check your mirrors and your instruments frequently.
- If you get sleepy, pull off the road into a rest, service or parking area and take a nap, get some exercise, or both. For safety, treat drowsiness on the highway as an emergency.

Hill and Mountain Roads

Driving on steep hills or mountains is different from driving in flat or rolling terrain.

Downloaded from www.Manualslib.com manuals search engine

If you drive regularly in steep country, or if you're planning to visit there, here are some tips that can make your trips safer and more enjoyable.

- Keep your vehicle in good shape. Check all fluid levels and also the brakes, tires, cooling system and transaxle. These parts can work hard on mountain roads.
- Know how to go down hills. The most important thing to know is this: let your engine do some of the slowing down. Shift to a lower gear when you go down a steep or long hill.

⚠ CAUTION:

If you don't shift down, your brakes could get so hot that they wouldn't work well. You would then have poor braking or even none going down a hill. You could crash. Shift down to let your engine assist your brakes on a steep downhill slope.

⚠ CAUTION:

Coasting downhill in NEUTRAL (N) or with the ignition off is dangerous. Your brakes will have to do all the work of slowing down. They could get so hot that they wouldn't work well. You would then have poor braking or even none going down a hill. You could crash. Always have your engine running and your vehicle in gear when you go downhill.

- Know how to go uphill. You may want to shift down to a lower gear. The lower gears help cool your engine and transaxle, and you can climb the hill better.
- Stay in your own lane when driving on two-lane roads in hills or mountains. Don't swing wide or cut across the center of the road. Drive at speeds that let you stay in your own lane.
- As you go over the top of a hill, be alert. There could be something in your lane, like a stalled car or an accident.
- You may see highway signs on mountains that warn of special problems. Examples are long grades, passing or no-passing zones, a falling rocks area or winding roads. Be alert to these and take appropriate action.

Downloaded from www.Manualslib.com manuals search engine

Winter Driving

Here are some tips for winter driving:

- Have your vehicle in good shape for winter.
- You may want to put winter emergency supplies in your vehicle.

Include an ice scraper, a small brush or broom, a supply of windshield washer fluid, a rag, some winter outer clothing, a small shovel, a flashlight, a red cloth and reflective warning triangles. And, if you will be driving under severe conditions, include a small bag of sand, a piece of old carpet or a couple of burlap bags to help provide traction. Be sure you properly secure these items in your vehicle.

Driving on Snow or Ice

Most of the time, those places where your tires meet the road probably have good traction.

However, if there is snow or ice between your tires and the road, you can have a very slippery situation. You'll have a lot less traction or "grip" and will need to be very careful.

Downloaded from www.Manualslib.com manuals search engine

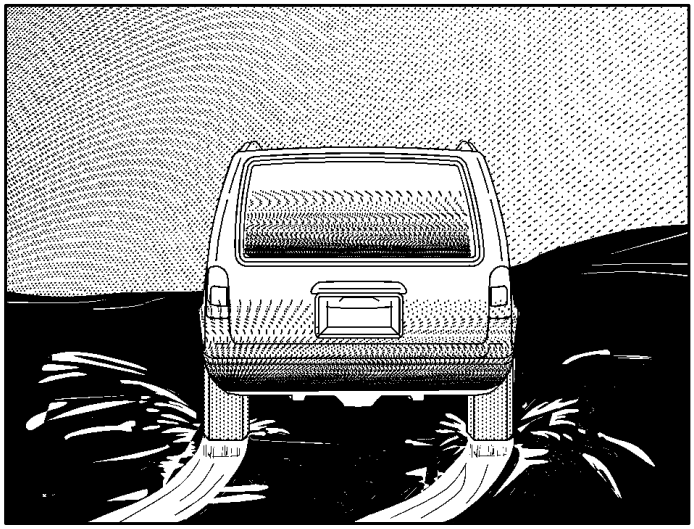

What's the worst time for this? "Wet ice." Very cold snow or ice can be slick and hard to drive on. But wet ice can be even more trouble because it may offer the least traction of all. You can get wet ice when it's about freezing (32°F; 0°C) and freezing rain begins to fall. Try to avoid driving on wet ice until salt and sand crews can get there.

Whatever the condition -- smooth ice, packed, blowing or loose snow -- drive with caution.

If you have traction control, keep the system on. It will improve your ability to accelerate when driving on a slippery road. But you can turn the traction control system off if you ever need to. You should turn the system off if your vehicle ever gets stuck in sand, mud, ice or snow. See "Rocking Your Vehicle" in the Index. Even though your vehicle has a traction control system, you'll want to slow down and adjust your driving to the road conditions. See "Traction Control System" in the Index.

If you don't have traction control, accelerate gently. Try not to break the gentle traction. If you accelerate too fast, the drive wheels will spin and polish the surface under the tires even more.

Downloaded from www.Manualslib.com manuals search engine

Your anti-lock brakes improve your vehicle's stability when you make a hard stop on a slippery road. Even though you have an anti-lock braking system, you'll want to begin stopping sooner than you would on dry pavement. See "Anti-Lock" in the Index.

- Allow greater following distance on any slippery road.
- Watch for slippery spots. The road might be fine until you hit a spot that's covered with ice. On an otherwise clear road, ice patches may appear in shaded areas where the sun can't reach: around clumps of trees, behind buildings or under bridges. Sometimes the surface of a curve or an overpass may remain icy when the surrounding roads are clear. If you see a patch of ice ahead of you, brake before you are on it. Try not to brake while you're actually on the ice, and avoid sudden steering maneuvers.

If You're Caught in a Blizzard

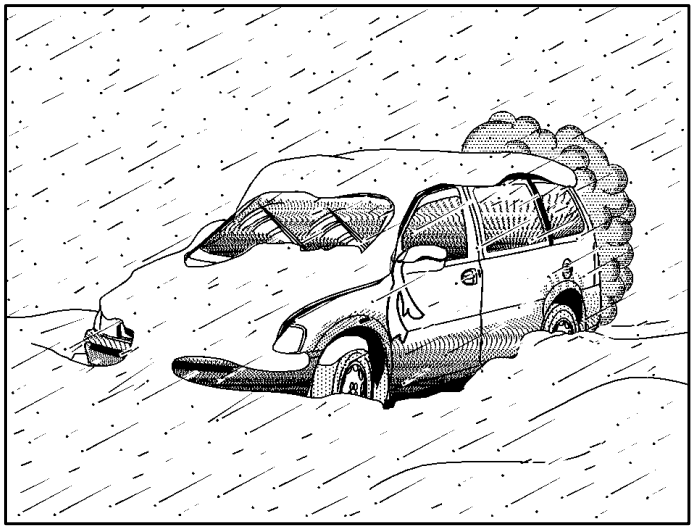

If you are stopped by heavy snow, you could be in a serious situation. You should probably stay with your vehicle unless you know for sure that you are near help and you can hike through the snow. Here are some things to do to summon help and keep yourself and your passengers safe:

- Turn on your hazard flashers.

Downloaded from www.Manualslib.com manuals search engine

- Tie a red cloth to your vehicle to alert police that you've been stopped by the snow.
- Put on extra clothing or wrap a blanket around you. If you have no blankets or extra clothing, make body insulators from newspapers, burlap bags, rags, floor mats -- anything you can wrap around yourself or tuck under your clothing to keep warm.

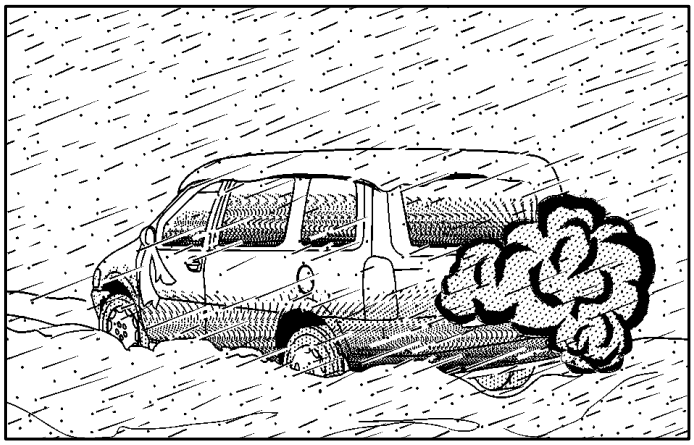

You can run the engine to keep warm, but be careful.

⚠ CAUTION:

Snow can trap exhaust gases under your vehicle. This can cause deadly CO (carbon monoxide) gas to get inside. CO could overcome you and kill you. You can't see it or smell it, so you might not know it is in your vehicle. Clear away snow from around the base of your vehicle, especially any that is blocking your exhaust pipe. And check around again from time to time to be sure snow doesn't collect there.

Open a window just a little on the side of the vehicle that's away from the wind. This will help keep CO out.

Run your engine only as long as you must. This saves fuel. When you run the engine, make it go a little faster than just idle. That is, push the accelerator slightly. This uses less fuel for the heat that you get and it keeps the battery charged. You will need a well-charged battery to restart the vehicle, and possibly for signaling later on with your headlamps. Let the heater run for a while.

Downloaded from www.Manualslib.com manuals search engine

Then, shut the engine off and close the window almost all the way to preserve the heat. Start the engine again and repeat this only when you feel really uncomfortable from the cold. But do it as little as possible. Preserve the fuel as long as you can. To help keep warm, you can get out of the vehicle and do some fairly vigorous exercises every half hour or so until help comes.

Recreational Vehicle Towing

Your vehicle was not designed to be towed with all four wheels on the ground. If your vehicle must be towed, see “Towing Your Vehicle” in the Index.

NOTICE:

Towing your vehicle with all four wheels on the ground will damage drivetrain components.

Loading Your Vehicle

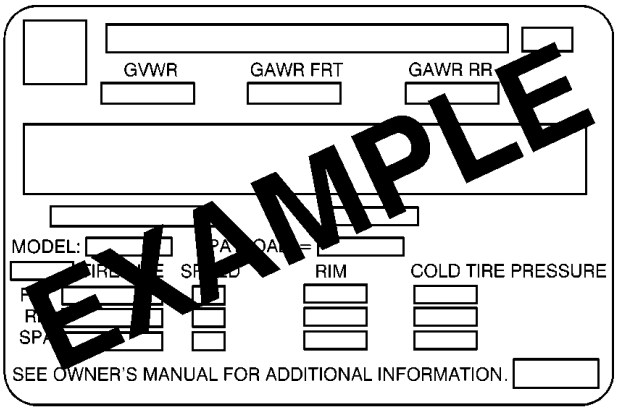

The Certification/Tire label is found on the rear edge of the driver’s door.

Downloaded from www.Manualslib.com manuals search engine

The label shows the size of your original tires and the inflation pressures needed to obtain the gross weight capacity of your vehicle. This is called the Gross Vehicle Weight Rating (GVWR). The GVWR includes the weight of the vehicle, all occupants, fuel and cargo.

The Certification/Tire label also tells you the maximum weights for the front and rear axles, called the Gross Axle Weight Rating (GAWR). To find out the actual loads on your front and rear axles, you need to go to a weigh station and weigh your vehicle. Your dealer can help you with this. Be sure to spread out your load equally on both sides of the centerline.

Never exceed the GVWR for your vehicle or the GAWR for either the front or rear axle.

⚠ CAUTION:

Do not load your vehicle any heavier than the GVWR, or either the maximum front or rear GAWR. If you do, parts on your vehicle can break, and it can change the way your vehicle handles. These could cause you to lose control and crash. Also, overloading can shorten the life of your vehicle.

NOTICE:

Your warranty does not cover parts or components that fail because of overloading.

If you put things inside your vehicle -- like suitcases, tools, packages, or anything else -- they will go as fast as the vehicle goes. If you have to stop or turn quickly, or if there is a crash, they'll keep going.

Downloaded from www.Manualslib.com manuals search engine

⚠ CAUTION:

Things you put inside your vehicle can strike and injure people in a sudden stop or turn, or in a crash.

- **Put things in the cargo area of your vehicle. Try to spread the weight evenly.**
- **Never stack heavier things, like suitcases, inside the vehicle so that some of them are above the tops of the seats.**
- **Don't leave an unsecured child restraint in your vehicle.**
- **When you carry something inside the vehicle, secure it whenever you can.**
- **Don't leave a seat folded down unless you need to.**

Electronic Level Control (Option)

On vehicles equipped with the optional electronic level control, the rear of the vehicle is automatically kept level as you load or unload your vehicle. However, you should still not exceed the GVWR or the GAWR.

If the engine is running or the ignition key is in ACCESSORY or when Retained Accessory Power (RAP) is active, you may hear the compressor operating when you load or unload your vehicle, and periodically as the system self-adjusts. This is normal. See "Retained Accessory Power" in the Index.

The compressor should operate for brief periods of time. If the sound continues for an extended period of time, your vehicle needs service.

Using heavier suspension components to get added durability might not change your weight ratings. Ask your dealer to help you load your vehicle the right way.

Downloaded from www.Manualslib.com manuals search engine

Towing a Trailer

⚠ CAUTION:

If you don't use the correct equipment and drive properly, you can lose control when you pull a trailer. For example, if the trailer is too heavy, the brakes may not work well -- or even at all. You and your passengers could be seriously injured. Pull a trailer only if you have followed all the steps in this section. Ask your dealer for advice and information about towing a trailer with your vehicle.

NOTICE:

Pulling a trailer improperly can damage your vehicle and result in costly repairs not covered by your warranty. To pull a trailer correctly, follow the advice in this part, and see your dealer for important information about towing a trailer with your vehicle.

Your vehicle can tow a trailer. To identify what the vehicle trailering capacity is for your vehicle, you should read the information in "Weight of the Trailer" that appears later in this section. But trailering is different than just driving your vehicle by itself. Trailering means changes in handling, durability and fuel economy. Successful, safe trailering takes correct equipment, and it has to be used properly.

That's the reason for this section. In it are many time-tested, important trailering tips and safety rules. Many of these are important for your safety and that of your passengers. So please read this section carefully before you pull a trailer.

Load-pulling components such as the engine, transaxle, wheel assemblies and tires are forced to work harder against the drag of the added weight. The engine is required to operate at relatively higher speeds and under greater loads, generating extra heat. What's more, the trailer adds considerably to wind resistance, increasing the pulling requirements.

Downloaded from www.Manualslib.com manuals search engine

If You Do Decide To Pull A Trailer

If you do, here are some important points:

- There are many different laws, including speed limit restrictions, having to do with trailering. Make sure your rig will be legal, not only where you live but also where you'll be driving. A good source for this information can be state or provincial police.
- Consider using a sway control if your trailer will weigh 2,000 lbs. (900 kg) or less. You should always use a sway control if your trailer will weigh more than 2,000 lbs. (900 kg). You can ask a hitch dealer about sway controls.
- Don't tow a trailer at all during the first 500 miles (800 km) your new vehicle is driven. Your engine, axle or other parts could be damaged.
- Then, during the first 500 miles (800 km) that you tow a trailer, don't drive over 50 mph (80 km/h) and don't make starts at full throttle. This helps your engine and other parts of your vehicle wear in at the heavier loads.
- You should use THIRD (3) (or, as you need to, a lower gear) when towing a trailer. Operating your vehicle in THIRD (3) when towing a trailer will minimize heat buildup and extend the life of your transaxle.

Three important considerations have to do with weight:

- the weight of the trailer,
- the weight of the trailer tongue
- and the weight on your vehicle's tires.

Weight of the Trailer

How heavy can a trailer safely be?

It should never weigh more than 1,400 lbs. (630 kg) with up to six occupants in the vehicle or more than 2,000 lbs. (900 kg) with up to two occupants. If you have the optional trailer towing package, your vehicle can tow up to 2,900 lbs. (1 300 kg) with up to six occupants or up to 3,500 lbs. (1 575 kg) with up to two occupants. But even that can be too heavy.

It depends on how you plan to use your rig. For example, speed, altitude, road grades, outside temperature and how much your vehicle is used to pull a trailer are all important. And, it can also depend on any special equipment that you have on your vehicle.

Downloaded from www.Manualslib.com manuals search engine

You can ask your dealer for our trailering information or advice, or you can write us at:

Pontiac - GMC Customer Assistance Center
P.O. Box 33172
Detroit, MI 48232-5172

In Canada, write to:

General Motors of Canada Limited
Customer Communication Centre, 163-005
1908 Colonel Sam Drive
Oshawa, Ontario L1H 8P7

Weight of the Trailer Tongue

The tongue load (A) of any trailer is an important weight to measure because it affects the total or gross weight of your vehicle. The Gross Vehicle Weight (GVW) includes the curb weight of the vehicle, any cargo you may carry in it, and the people who will be riding in the vehicle. And if you will tow a trailer, you must add the tongue load to the GVW because your vehicle will be carrying that weight, too. See “Loading Your Vehicle” in the Index for more information about your vehicle’s maximum load capacity.

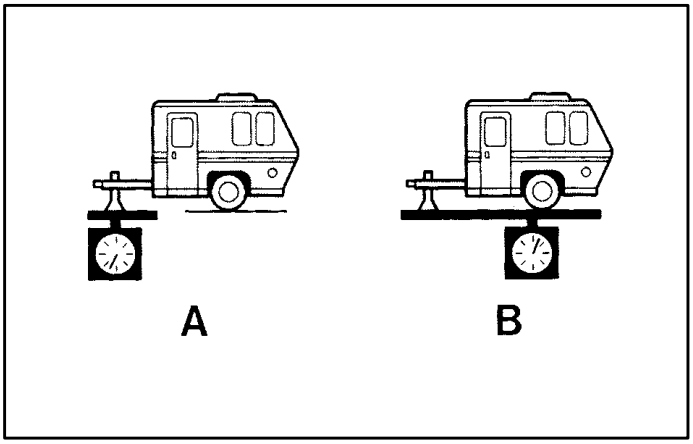

If you’re using a weight-carrying hitch, the trailer tongue (A) should weigh 10 percent of the total loaded trailer weight (B). If you’re using a weight-distributing hitch, the trailer tongue (A) should weigh 12 percent of the total loaded trailer weight (B).

After you’ve loaded your trailer, weigh the trailer and then the tongue, separately, to see if the weights are proper. If they aren’t, you may be able to get them right simply by moving some items around in the trailer.

Downloaded from www.Manualslib.com manuals search engine

Total Weight on Your Vehicle's Tires

Be sure your vehicle's tires are inflated to the upper limit for cold tires. You'll find these numbers on the Certification/Tire Label at the rear edge of the driver's door, or see "Tire Loading" in the Index. Then be sure you don't go over the GVW limit for your vehicle, including the weight of the trailer tongue.

Hitches

It's important to have the correct hitch equipment. Crosswinds, large trucks going by and rough roads are a few reasons why you'll need the right hitch. Here are some rules to follow:

- The bumpers on your vehicle are not intended for hitches. Do not attach rental hitches or other bumper-type hitches to them. Use only a frame-mounted hitch that does not attach to the bumper.
- If you'll be pulling a trailer that, when loaded, will weigh more than 2,000 lbs. (900 kg), be sure to use a properly mounted, weight-carrying hitch and sway control of the proper size. This equipment is very important for proper vehicle loading and good handling when you're driving.
- Will you have to make any holes in the body of your vehicle when you install a trailer hitch?

  If you do, then be sure to seal the holes later when you remove the hitch. If you don't seal them, deadly carbon monoxide (CO) from your exhaust can get into your vehicle. See "Carbon Monoxide" in the Index. Dirt and water can, too.

Downloaded from www.Manualslib.com manuals search engine

Safety Chains

You should always attach chains between your vehicle and your trailer. Cross the safety chains under the tongue of the trailer to help prevent the tongue from contacting the road if it becomes separated from the hitch. Instructions about safety chains may be provided by the hitch manufacturer or by the trailer manufacturer. Follow the manufacturer's recommendation for attaching safety chains and do not attach them to the bumper. Always leave just enough slack so you can turn with your rig. Never allow safety chains to drag on the ground.

Trailer Brakes

If your trailer weighs more than 1,000 lbs. (450 kg) loaded, then it needs its own brakes -- and they must be adequate. Be sure to read and follow the instructions for the trailer brakes so you'll be able to install, adjust and maintain them properly.

Because you have anti-lock brakes, do not try to tap into your vehicle's brake system. If you do, both brake systems won't work well, or at all.

Driving with a Trailer

⚠ CAUTION:

If you have a rear-most window open and you pull a trailer with your vehicle, carbon monoxide (CO) could come into your vehicle. You can't see or smell CO. It can cause unconsciousness or death. See "Engine Exhaust" in the Index. To maximize your safety when towing a trailer:

- **Have your exhaust system inspected for leaks, and make necessary repairs before starting on your trip.**
- **Keep the rear-most windows closed.**
- **If exhaust does come into your vehicle through a window in the rear or another opening, drive with your front, main heating or cooling system on and with the fan on any speed. This will bring fresh, outside air into your vehicle. Do not use RECIRCULATION because it only recirculates the air inside your vehicle. See "Comfort Controls" in the Index.**

Downloaded from www.Manualslib.com manuals search engine

Towing a trailer requires a certain amount of experience. Before setting out for the open road, you'll want to get to know your rig. Acquaint yourself with the feel of handling and braking with the added weight of the trailer. And always keep in mind that the vehicle you are driving is now a good deal longer and not nearly as responsive as your vehicle is by itself.

Before you start, check the trailer hitch and platform (and attachments), safety chains, electrical connector, lamps, tires and mirror adjustment. If the trailer has electric brakes, start your vehicle and trailer moving and then apply the trailer brake controller by hand to be sure the brakes are working. This lets you check your electrical connection at the same time.

During your trip, check occasionally to be sure that the load is secure, and that the lamps and any trailer brakes are still working.

Following Distance

Stay at least twice as far behind the vehicle ahead as you would when driving your vehicle without a trailer. This can help you avoid situations that require heavy braking and sudden turns.

Passing

You'll need more passing distance up ahead when you're towing a trailer. And, because you're a good deal longer, you'll need to go much farther beyond the passed vehicle before you can return to your lane.

Backing Up

Hold the bottom of the steering wheel with one hand. Then, to move the trailer to the left, just move that hand to the left. To move the trailer to the right, move your hand to the right. Always back up slowly and, if possible, have someone guide you.

Downloaded from www.Manualslib.com manuals search engine

Making Turns

NOTICE:

Making very sharp turns while trailering could cause the trailer to come in contact with the vehicle. Your vehicle could be damaged. Avoid making very sharp turns while trailering.

When you're turning with a trailer, make wider turns than normal. Do this so your trailer won't strike soft shoulders, curbs, road signs, trees or other objects. Avoid jerky or sudden maneuvers. Signal well in advance.

Turn Signals When Towing a Trailer

When you tow a trailer, your vehicle has to have extra wiring.

The arrows on your instrument panel will flash whenever you signal a turn or lane change. Properly hooked up, the trailer lamps will also flash, telling other drivers you're about to turn, change lanes or stop.

When towing a trailer, the arrows on your instrument panel will flash for turns even if the bulbs on the trailer are burned out. Thus, you may think drivers behind you are seeing your signal when they are not. It's important to check occasionally to be sure the trailer bulbs are still working.

Driving On Grades

Reduce speed and shift to a lower gear *before* you start down a long or steep downgrade. If you don't shift down, you might have to use your brakes so much that they would get hot and no longer work well.

If you are towing a trailer that weighs more than 1,000 lbs. (450 kg), you may prefer to drive in THIRD (3) instead of AUTOMATIC OVERDRIVE (D) (or, as you need to, a lower gear). This will minimize heat build-up and extend the life of your transaxle.

Downloaded from www.Manualslib.com manuals search engine

Parking on Hills

⚠ CAUTION:

You really should not park your vehicle, with a trailer attached, on a hill. If something goes wrong, your rig could start to move. People can be injured, and both your vehicle and the trailer can be damaged.

But if you ever have to park your rig on a hill, here's how to do it:

1. Apply your regular brakes, but don't shift into PARK (P) yet.
2. Have someone place chocks under the trailer wheels.
3. When the wheel chocks are in place, release the regular brakes until the chocks absorb the load.
4. Reapply the regular brakes. Then apply your parking brake, and then shift to PARK (P).
5. Release the regular brakes.

When You Are Ready to Leave After Parking on a Hill

1. Apply your regular brakes and hold the pedal down while you:
   - Start your engine;
   - Shift into a gear; and
   - Release the parking brake.
2. Let up on the brake pedal.
3. Drive slowly until the trailer is clear of the chocks.
4. Stop and have someone pick up and store the chocks.

Maintenance When Trailer Towing

Your vehicle will need service more often when you're pulling a trailer. See the Maintenance Schedule for more on this. Things that are especially important in trailer operation are automatic transaxle fluid (don't overfill), engine oil, belts, cooling system and brake system. Each of these is covered in this manual, and the Index will help you find them quickly. If you're trailering, it's a good idea to review these sections before you start your trip.

Check periodically to see that all hitch nuts and bolts are tight.

Downloaded from www.Manualslib.com manuals search engine

Section 5 Problems on the Road

Here you'll find what to do about some problems that can occur on the road.

5-2 Hazard Warning Flashers
5-2 Other Warning Devices
5-3 Jump Starting
5-8 Towing Your Vehicle
5-9 Engine Overheating
5-12 Cooling System
5-20 If a Tire Goes Flat
5-21 Changing a Flat Tire
5-32 Compact Spare Tire
5-33 If You're Stuck: In Sand, Mud, Ice or Snow

Downloaded from www.Manualslib.com manuals search engine

Hazard Warning Flashers

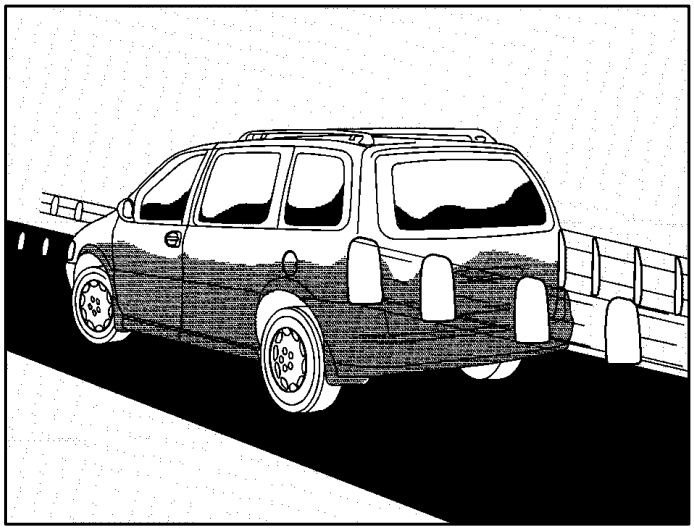

Your hazard warning flashers let you warn others. They also let police know you have a problem. Your front and rear turn signal lamps will flash on and off.

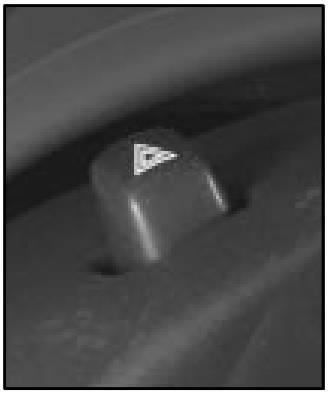

Your hazard warning flashers button is located on top of the steering column. Press the button in to turn on your flashers.

Your hazard warning flashers work no matter what position your key is in, and even if the key isn't in.

To turn off the flashers, push the button down and it will pop back up by itself.

When the hazard warning flashers are on, your turn signals won't work.

Other Warning Devices

If you carry reflective triangles, you can set one up at the side of the road about 300 feet (100 m) behind your vehicle.

Downloaded from www.Manualslib.com manuals search engine

Jump Starting

If your battery has run down, you may want to use another vehicle and some jumper cables to start your vehicle. But please use the following steps listed to do it safely.

On vehicles equipped with the optional power sliding door, a low-voltage battery or replacing a battery may cause the system to become inoperative. See “Power Sliding Door” in the Index for more information.

⚠ CAUTION:

Batteries can hurt you. They can be dangerous because:

- **They contain acid that can burn you.**
- **They contain gas that can explode or ignite.**
- **They contain enough electricity to burn you.**

If you don’t follow these steps exactly, some or all of these things can hurt you.

NOTICE:

Ignoring these steps could result in costly damage to your vehicle that wouldn’t be covered by your warranty.

The ACDelco® battery in your vehicle has a built-in hydrometer. Do not charge, test or jump start the battery if the hydrometer looks clear or light yellow. Replace the battery when there is a clear or light yellow hydrometer and a cranking complaint.

Trying to start your vehicle by pushing or pulling it won’t work, and it could damage your vehicle.

1. Check the other vehicle. It must have a 12-volt battery with a negative ground system.

NOTICE:

If the other system isn’t a 12-volt system with a negative ground, both vehicles can be damaged.

Downloaded from www.Manualslib.com manuals search engine

2. Get the vehicles close enough so the jumper cables can reach, but be sure the vehicles aren't touching each other. If they are, it could cause a ground connection you don't want. You wouldn't be able to start your vehicle, and the bad grounding could damage the electrical systems.

   To avoid the possibility of the vehicles rolling, set the parking brake firmly on both vehicles involved in the jump start procedure. Put an automatic transaxle in PARK (P) or a manual transaxle in NEUTRAL before setting the parking brake.

3. Turn off the ignition on both vehicles. Unplug unnecessary accessories plugged into the cigarette lighter or the accessory power outlet. Turn off all lamps that aren't needed, as well as radios. This will avoid sparks and help save both batteries. In addition, it could save your radio!

NOTICE:

If you leave your radio on, it could be badly damaged. The repairs wouldn't be covered by your warranty.

4. Open the hoods and locate the batteries. Find the positive (+) and negative (-) terminals on each battery.

⚠ CAUTION:

An electric fan can start up even when the engine is not running and can injure you. Keep hands, clothing and tools away from any underhood electric fan.

Downloaded from www.Manualslib.com manuals search engine

5. Your vehicle has a remote positive (+) jump starting terminal. The terminal is under a tethered cap at the front of the underhood fuse and relay center. See “Engine Compartment Overview” in the Index for more information on location.

Squeeze the tabs and pull up on the cap to access the remote positive (+) terminal.

You should always use the remote positive (+) terminal instead of the positive (+) terminal on your battery.

⚠ CAUTION:

Using a match near a battery can cause battery gas to explode. People have been hurt doing this, and some have been blinded. Use a flashlight if you need more light.

Be sure the battery has enough water. You don’t need to add water to the ACDelco® battery installed in every new GM vehicle. But if a battery has filler caps, be sure the right amount of fluid is there. If it is low, add water to take care of that first. If you don’t, explosive gas could be present.

Battery fluid contains acid that can burn you. Don’t get it on you. If you accidentally get it in your eyes or on your skin, flush the place with water and get medical help immediately.

Downloaded from www.Manualslib.com manuals search engine

⚠ CAUTION:

Fans or other moving engine parts can injure you badly. Keep your hands away from moving parts once the engine is running.

6. Check that the jumper cables don't have loose or missing insulation. If they do, you could get a shock. The vehicles could be damaged, too.

   Before you connect the cables, here are some basic things you should know. Positive (+) will go to positive (+) and negative (-) will go to a heavy, unpainted metal engine part or a body metal surface. Don't connect positive (+) to negative (-) or you will get a short that would damage the battery and maybe other parts, too. And don't connect negative (-) to negative (-) on the dead battery, as this can cause sparks.

7. Connect the red positive (+) cable to the positive (+) terminal of the vehicle with the dead battery. Use a remote positive (+) terminal if the vehicle has one.

8. Don't let the other end touch metal. Connect it to the positive (+) terminal of the good battery. Use a remote positive (+) terminal if the vehicle has one.

Downloaded from www.Manualslib.com manuals search engine

9. Now connect the black negative (-) cable to the good battery's negative (-) terminal.

Don't let the other end touch anything until the next step. The other end of the negative (-) cable *doesn't* go to the dead battery. It goes to a heavy, unpainted metal part on the engine of the vehicle with the dead battery.

10. Attach the cable at least 18 inches (45 cm) away from the dead battery, but not near engine parts that move.

The electrical connection is just as good there, but the chance of sparks getting back to the battery is much less.

11. Now start the vehicle with the good battery and run the engine for a while.
12. Try to start the vehicle with the dead battery. If it won't start after a few tries, it probably needs service.

Downloaded from www.Manualslib.com manuals search engine

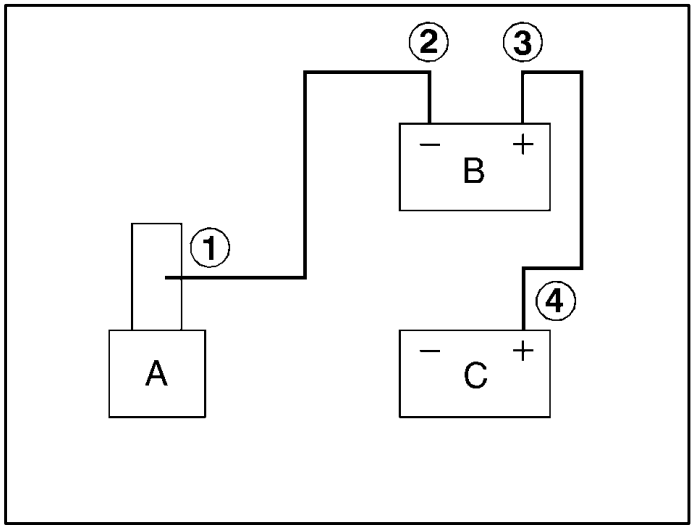

Jumper Cable Removal

A. Heavy, Unpainted Metal Engine Part

B. Good Battery

C. Dead Battery

To disconnect the jumper cables from both vehicles, do the following:

1. Disconnect the black negative (-) cable from the heavy, unpainted metal engine part on the vehicle that had the dead battery.
2. Disconnect the black negative (-) cable from the negative (-) terminal on the vehicle with the good battery.
3. Disconnect the red positive (+) cable from the vehicle with the good battery.
4. Disconnect the red positive (+) cable from the other vehicle.

Towing Your Vehicle

Consult your dealer or a professional towing service if you need to have your vehicle towed. See “Roadside Assistance” and “Recreational Vehicle Towing” in the Index.

Downloaded from www.Manualslib.com manuals search engine

Engine Overheating

You will find an engine coolant temperature gage on your vehicle's instrument panel cluster. See "Engine Coolant Temperature Gage" in the Index. You also have an engine coolant temperature warning message on your instrument panel. See "Engine Coolant Temperature Warning Message" in the Index.

Overheated Engine Protection Operating Mode

This emergency operating mode allows your vehicle to be driven to a safe place in an emergency situation. Should an overheated engine condition exist, an overheat protection mode which alternates firing groups of cylinders helps prevent engine damage. In this mode, you will notice a significant loss in power and engine performance. The temperature gage will indicate an overheat condition exists. Towing a trailer in the overheat protection mode should be avoided.

NOTICE:

After driving in the overheated engine protection operating mode, to avoid engine damage, allow the engine to cool before attempting any repair. The engine oil will be severely degraded. Repair the cause of coolant loss and change the oil. See "Engine Oil" in the Index.

Downloaded from www.Manualslib.com manuals search engine

If Steam Is Coming From Your Engine

⚠ CAUTION:

Steam from an overheated engine can burn you badly, even if you just open the hood. Stay away from the engine if you see or hear steam coming from it. Just turn it off and get everyone away from the vehicle until it cools down. Wait until there is no sign of steam or coolant before you open the hood.

If you keep driving when your engine is overheated, the liquids in it can catch fire. You or others could be badly burned. Stop your engine if it overheats, and get out of the vehicle until the engine is cool. See “Overheated Engine Protection Operating Mode” in the Index.

Downloaded from www.Manualslib.com manuals search engine

NOTICE:

If your engine catches fire because you keep driving with no coolant, your vehicle can be badly damaged. The costly repairs would not be covered by your warranty. See "Overheated Engine Protection Operating Mode" in the Index.

If No Steam Is Coming From Your Engine

If you get an engine overheat warning but see or hear no steam, the problem may not be too serious. Sometimes the engine can get a little too hot when you:

- Climb a long hill on a hot day.
- Stop after high-speed driving.
- Idle for long periods in traffic.
- Tow a trailer.

If you get the overheat warning with no sign of steam, try this for a minute or so:

1. If your air conditioner is on, turn it off.
2. Turn on your heater to full hot at the highest fan speed and open the window as necessary.
3. If you're in a traffic jam, shift to NEUTRAL (N); otherwise, shift to the highest gear while driving -- AUTOMATIC OVERDRIVE (D) or THIRD (3).

If you no longer have the overheat warning, you can drive. Just to be safe, drive slower for about 10 minutes. If the warning doesn't come back on, you can drive normally.

If the warning continues, pull over, stop, and park your vehicle right away.

If there's still no sign of steam, idle the engine for three minutes while you're parked. If you still have the warning, *turn off the engine and get everyone out of the vehicle* until it cools down. Also, see "Overheated Engine Protection Operating Mode" listed previously in this section.

You may decide not to lift the hood but to get service help right away.

Downloaded from www.Manualslib.com manuals search engine

Cooling System

When you decide it's safe to lift the hood, here's what you'll see:

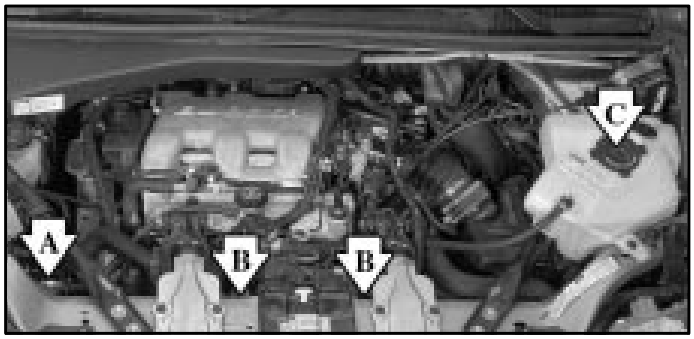

A. Radiator Pressure Cap

B. Electric Engine Cooling Fans

C. Coolant Recovery Tank

⚠ CAUTION:

An electric engine cooling fan under the hood can start up even when the engine is not running and can injure you. Keep hands, clothing and tools away from any underhood electric fan.

If the coolant inside the coolant recovery tank is boiling, don't do anything else until it cools down.

Downloaded from www.Manualslib.com manuals search engine

When the engine is cold, the coolant level should be at or above the FULL COLD mark. If it isn't, you may have a leak in the radiator hoses, heater hoses, radiator, water pump or somewhere else in the cooling system.

⚠ CAUTION:

Heater and radiator hoses, and other engine parts, can be very hot. Don't touch them. If you do, you can be burned.

Don't run the engine if there is a leak. If you run the engine, it could lose all coolant. That could cause an engine fire, and you could be burned. Get any leak fixed before you drive the vehicle.

NOTICE:

Engine damage from running your engine without coolant isn't covered by your warranty. See "Overheated Engine Protection Operating Mode" in the Index.

Downloaded from www.Manualslib.com manuals search engine

NOTICE:

When adding coolant, it is important that you use only DEX-COOL® (silicate-free) coolant.

If coolant other than DEX-COOL is added to the system, premature engine, heater core or radiator corrosion may result. In addition, the engine coolant will require change sooner -- at 30,000 miles (50 000 km) or 24 months, whichever occurs first. Damage caused by the use of coolant other than DEX-COOL® is not covered by your new vehicle warranty.

If there seems to be no leak, with the engine on, check to see if the electric engine cooling fans are running. If the engine is overheating, both fans should be running. If they aren't, your vehicle needs service.

How to Add Coolant to the Coolant Recovery Tank

If you haven't found a problem yet, but the coolant level isn't at or above the FULL COLD mark, add a 50/50 mixture of *clean, drinkable water* and DEX-COOL® engine coolant at the coolant recovery tank. See "Engine Coolant" in the Index for more information.

⚠ CAUTION:

Adding only plain water to your cooling system can be dangerous. Plain water, or some other liquid like alcohol, can boil before the proper coolant mixture will. Your vehicle's coolant warning system is set for the proper coolant mixture. With plain water or the wrong mixture, your engine could get too hot but you wouldn't get the overheat warning. Your engine could catch fire and you or others could be burned. Use a 50/50 mixture of clean, drinkable water and DEX-COOL® coolant.

Downloaded from www.Manualslib.com manuals search engine

NOTICE:

In cold weather, water can freeze and crack the engine, radiator, heater core and other parts. Use the recommended coolant and the proper coolant mixture.

⚠ CAUTION:

You can be burned if you spill coolant on hot engine parts. Coolant contains ethylene glycol and it will burn if the engine parts are hot enough. Don't spill coolant on a hot engine.

When the coolant in the coolant recovery tank is at or above the FULL COLD mark, start your vehicle.

If the overheat warning continues, there's one more thing you can try. You can add the proper coolant mixture directly to the radiator, but be sure the cooling system is cool before you do it.

Downloaded from www.Manualslib.com manuals search engine

⚠ CAUTION:

Steam and scalding liquids from a hot cooling system can blow out and burn you badly. They are under pressure, and if you turn the radiator pressure cap -- even a little -- they can come out at high speed. Never turn the cap when the cooling system, including the radiator pressure cap, is hot. Wait for the cooling system and the radiator pressure cap to cool if you ever have to turn the pressure cap.

Downloaded from www.Manualslib.com manuals search engine

How to Add Coolant to the Radiator

1. You can remove the radiator pressure cap when the cooling system, including the radiator pressure cap and upper radiator hose, is no longer hot. Turn the pressure cap slowly counterclockwise until it first stops. (Don't press down while turning the pressure cap.)

   If you hear a hiss, wait for that to stop. A hiss means there is still some pressure left.

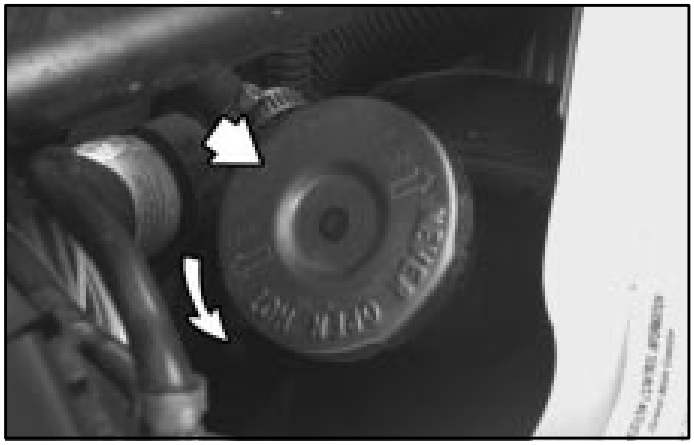

2. Then keep turning the pressure cap, but now push down as you turn it. Remove the pressure cap.

⚠ CAUTION:

You can be burned if you spill coolant on hot engine parts. Coolant contains ethylene glycol and it will burn if the engine parts are hot enough. Don't spill coolant on a hot engine.

Downloaded from www.Manualslib.com manuals search engine

Bypass Tube

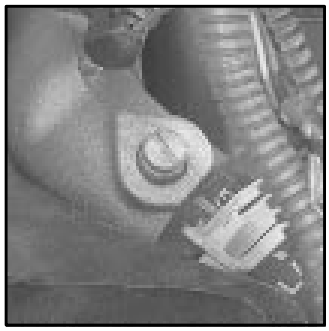

Housing

3. After the engine cools, open the coolant air bleed valves.

   There are two bleed valves. One is located on the thermostat housing. The other is located on the thermostat bypass tube.

4. Fill the radiator with the proper DEX-COOL® coolant mixture, up to the base of the filler neck. See “Engine Coolant” in the Index for more information about the proper coolant mixture.

   If you see a stream of coolant coming from an air bleed valve, close the valve. Otherwise, close the valves after the radiator is filled.

5. Rinse or wipe any spilled coolant from the engine and the compartment.

Downloaded from www.Manualslib.com manuals search engine

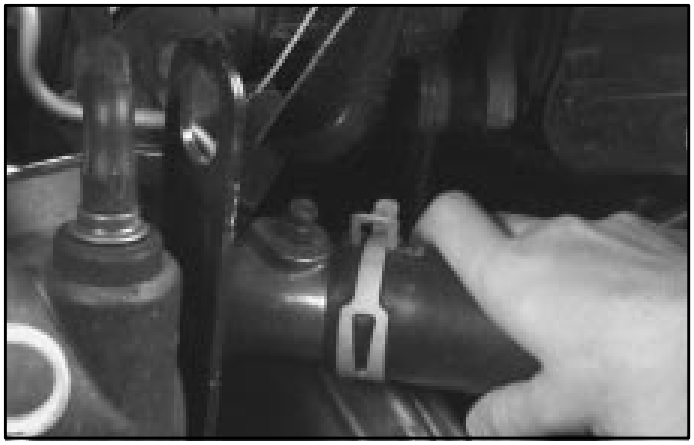

6. Start the engine and let it run until you can feel the upper radiator hose getting hot. Watch out for the engine cooling fans.
7. By this time, the coolant level inside the radiator filler neck may be lower. If the level is lower, add more of the proper DEX-COOL® coolant mixture through the filler neck until the level reaches the base of the filler neck.
8. Then replace the pressure cap. At any time during this procedure if coolant begins to flow out of the filler neck, reinstall the pressure cap. Be sure the arrows on the pressure cap line up like this.

Downloaded from www.Manualslib.com manuals search engine

9. Then fill the coolant recovery tank to the FULL COLD mark.
10. Put the cap back on the coolant recovery tank.

If a Tire Goes Flat

It's unusual for a tire to "blow out" while you're driving, especially if you maintain your tires properly. If air goes out of a tire, it's much more likely to leak out slowly. But if you should ever have a "blowout," here are a few tips about what to expect and what to do:

If a front tire fails, the flat tire will create a drag that pulls the vehicle toward that side. Take your foot off the accelerator pedal and grip the steering wheel firmly. Steer to maintain lane position, and then gently brake to a stop well out of the traffic lane.

A rear blowout, particularly on a curve, acts much like a skid and may require the same correction you'd use in a skid. In any rear blowout, remove your foot from the accelerator pedal. Get the vehicle under control by steering the way you want the vehicle to go. It may be very bumpy and noisy, but you can still steer. Gently brake to a stop -- well off the road if possible.

If a tire goes flat, the next part shows how to use your jacking equipment to change a flat tire safely.

Downloaded from www.Manualslib.com manuals search engine

Changing a Flat Tire

If a tire goes flat, avoid further tire and wheel damage by driving slowly to a level place. Turn on your hazard warning flashers.

⚠ CAUTION:

Changing a tire can cause an injury. The vehicle can slip off the jack and roll over you or other people. You and they could be badly injured. Find a level place to change your tire. To help prevent the vehicle from moving:

1. **Set the parking brake firmly.**
2. **Put the shift lever in PARK (P).**
3. **Turn off the engine.**

To be even more certain the vehicle won't move, you can put blocks at the front and rear of the tire farthest away from the one being changed. That would be the tire on the other side of the vehicle, at the opposite end.

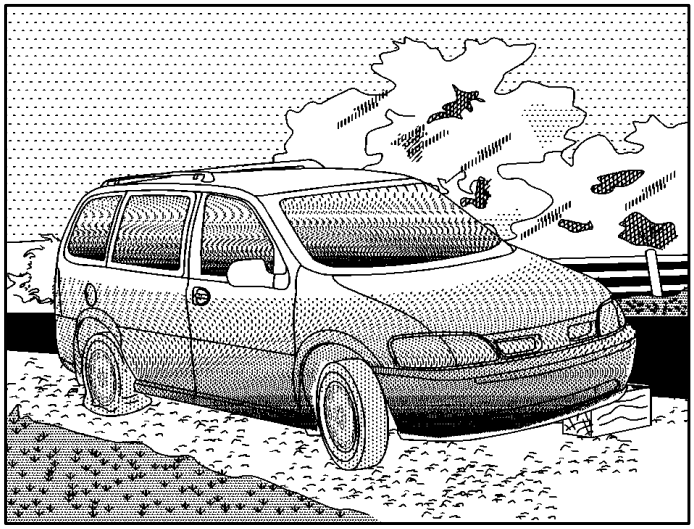

The following steps will tell you how to use the jack and change a tire.

Downloaded from www.Manualslib.com manuals search engine

Removing the Spare Tire and Tools

The equipment you'll need is located in the storage compartment at the rear of the vehicle, on the passenger's side.

1. Remove the side convenience net.
2. Open the jack storage compartment by lifting up the tab and pulling the cover off.

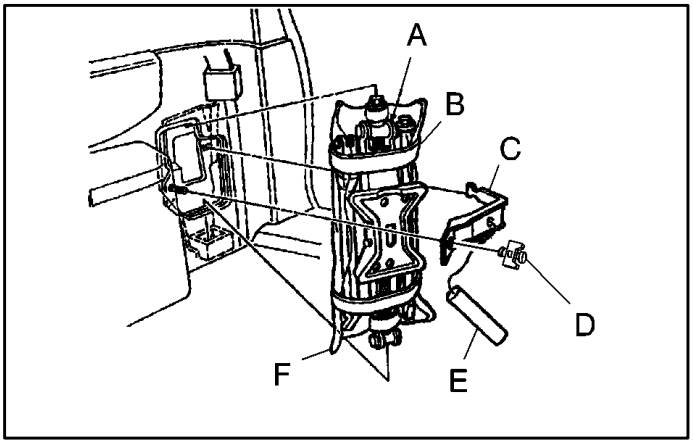

A. Jack
B. Strap
C. Bracket
D. Wing Nut
E. Jacking Instructions
F. Bag and Tools

Remove the jack and jacking tools by loosening the wing nut and bracket.

Separate the plastic pouch from the jack and remove the jacking tools (folding wrench and extension) from the pouch.

Downloaded from www.Manualslib.com manuals search engine

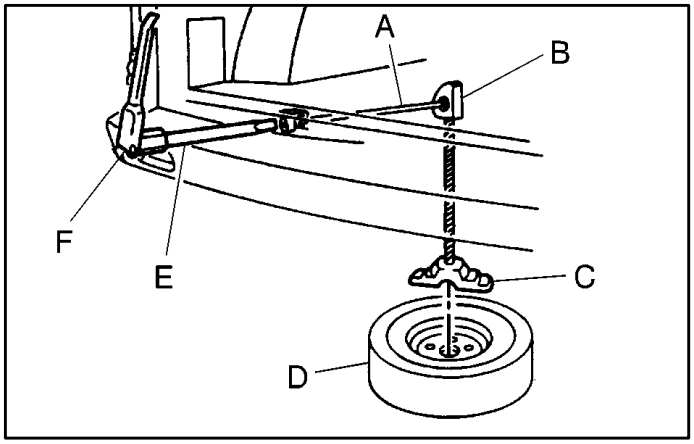

A. Hoist Shaft
B. Hoist Assembly
C. Retainer
D. Spare Tire
E. Extension (Chisel End)
F. Folding Wrench

The compact spare tire is located under the vehicle, ahead of the rear bumper. (See “Compact Spare Tire” later in this section for more information about the compact spare.) Attach the folding wrench to the extension and insert the chisel end on an angle through the hole in the rear bumper and into the hoist shaft.

Then, turn the folding wrench counterclockwise to lower the spare tire to the ground. Continue to turn the wrench so the spare tire can be pulled out from under the vehicle.

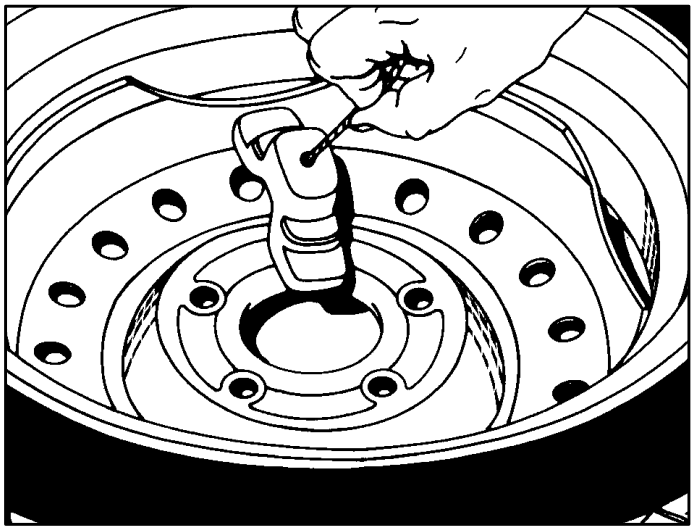

Tilt the retainer at the end of the cable so it can be pulled up through the wheel opening.

Downloaded from www.Manualslib.com manuals search engine

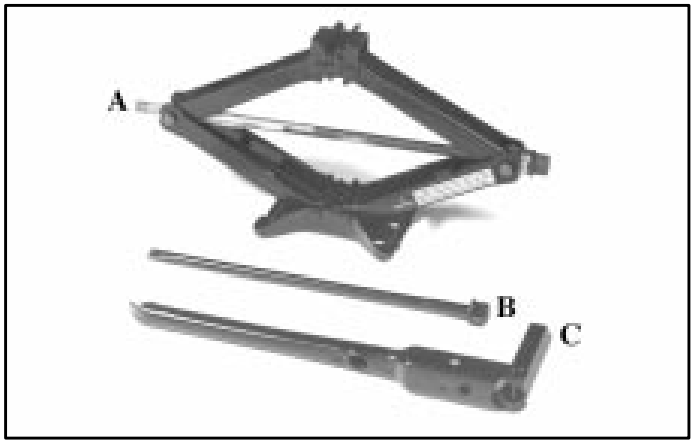

The tools you'll be using include the jack (A), extension (B) and folding wrench (C).

Removing the Flat Tire and Installing the Spare Tire

1. With the end of the folding wrench, loosen the nuts.

   If your vehicle has the plastic "bolt-on" wheel covers, loosen them completely using the folding wrench, and remove the wheel cover.

Downloaded from www.Manualslib.com manuals search engine

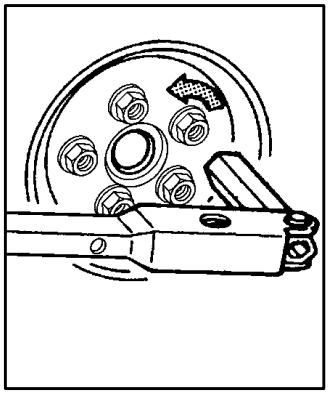

2. Loosen the wheel nuts -- but do not remove them -- using the folding wrench. (Turn the handle about 180 degrees, then flip the handle back to the starting position. This avoids taking the wrench off the lug nut for each turn.)

For wheels with a wheel lock key, use the wheel lock key between the lock nut and folding wrench. The key is supplied in the front passenger door pocket.

NOTICE:

To help avoid damage to lock nut or wheel lock key, do not use an impact wrench with this key.

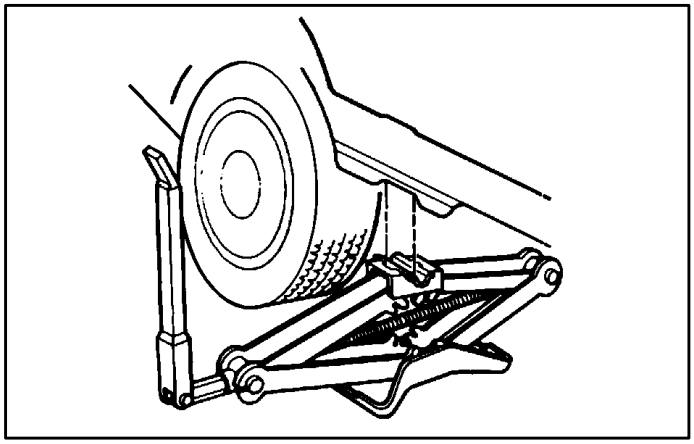

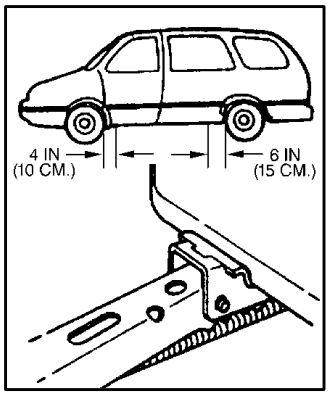

3. Near each wheel, there is a notch in the vehicle's body. Position the jack and raise the jack head until it fits firmly into the notch in the vehicle's frame nearest the flat tire.

Downloaded from www.Manualslib.com manuals search engine

NOTICE:

Do not place the jack under the rear axle control arms. Only use the areas shown for proper jack location.

Do not raise the vehicle yet. Put the compact spare tire near you.

⚠ CAUTION:

Getting under a vehicle when it is jacked up is dangerous. If the vehicle slips off the jack, you could be badly injured or killed. Never get under a vehicle when it is supported only by a jack.

⚠ CAUTION:

Raising your vehicle with the jack improperly positioned can damage the vehicle and even make the vehicle fall. To help avoid personal injury and vehicle damage, be sure to fit the jack lift head into the proper location before raising the vehicle.

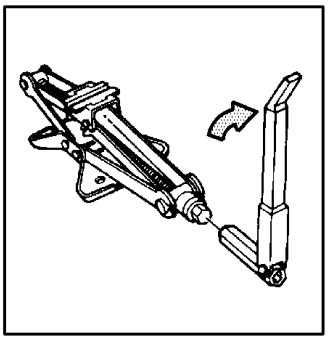

4. Attach the folding wrench to the jack, and turn the wrench clockwise to raise the jack head a few inches.

5. Raise the vehicle by turning the folding wrench clockwise in the jack. Raise the vehicle far enough off the ground so there is enough room for the spare tire to fit under the wheel well.

Downloaded from www.Manualslib.com manuals search engine

6. Remove all the wheel nuts and take off the flat tire.

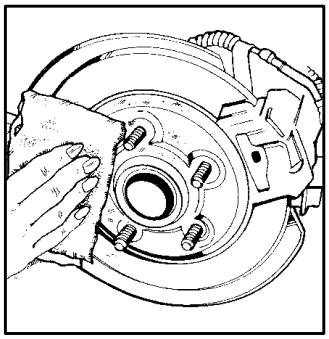

7. Remove any rust or dirt from the wheel bolts, mounting surfaces and spare wheel.

⚠ CAUTION:

Rust or dirt on the wheel, or on the parts to which it is fastened, can make the wheel nuts become loose after a time. The wheel could come off and cause an accident. When you change a wheel, remove any rust or dirt from the places where the wheel attaches to the vehicle. In an emergency, you can use a cloth or a paper towel to do this; but be sure to use a scraper or wire brush later, if you need to, to get all the rust or dirt off.

⚠ CAUTION:

Never use oil or grease on studs or nuts. If you do, the nuts might come loose. Your wheel could fall off, causing a serious accident.

8. Install the spare tire and put the wheel nuts back on with the rounded end of the nuts toward the wheel. Tighten each nut by hand until the wheel is held against the hub.

Downloaded from www.Manualslib.com manuals search engine

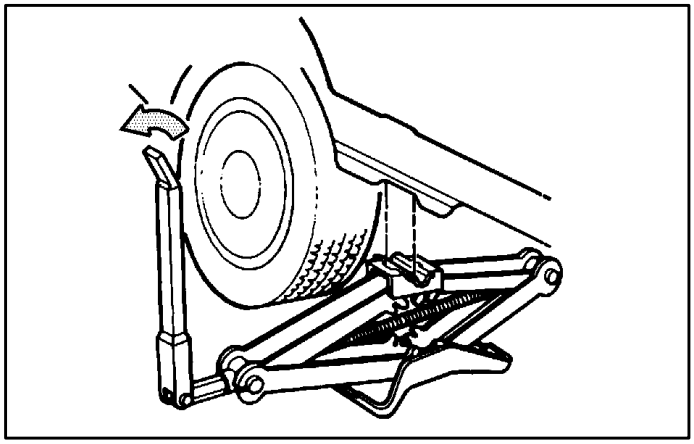

9. Lower the vehicle by attaching the folding wheel wrench to the jack and turning the wrench counterclockwise. Lower the jack completely.

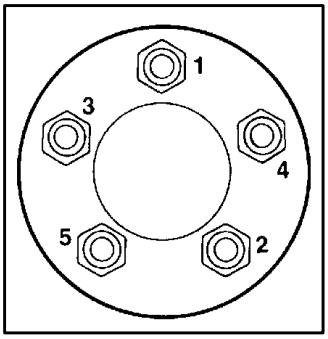

10. Tighten the wheel nuts firmly in a crisscross sequence, as shown.

Downloaded from www.Manualslib.com manuals search engine

⚠ CAUTION:

Incorrect wheel nuts or improperly tightened wheel nuts can cause the wheel to become loose and even come off. This could lead to an accident. Be sure to use the correct wheel nuts. If you have to replace them, be sure to get new GM original equipment wheel nuts.

Stop somewhere as soon as you can and have the nuts tightened with a torque wrench to 100 lb-ft (140 N·m).

NOTICE:

Improperly tightened wheel nuts can lead to brake pulsation and rotor damage. To avoid expensive brake repairs, evenly tighten the wheel nuts in the proper sequence and to the proper torque specification.

11. Don't try to put a wheel cover on the compact spare tire. It won't fit. Store the wheel cover securely in the rear of the vehicle until you have the flat tire repaired or replaced.

NOTICE:

Wheel covers won't fit on your compact spare. If you try to put a wheel cover on your compact spare, you could damage the cover or the spare.

Downloaded from www.Manualslib.com manuals search engine

Storing a Flat or Spare Tire and Tools

⚠ CAUTION:

Storing a jack, a tire or other equipment in the passenger compartment of the vehicle could cause injury. In a sudden stop or collision, loose equipment could strike someone. Store all these in the proper place.

1. Lay the tire near the rear of the vehicle with the valve stem down.
2. Slide the cable retainer through the center of the wheel and start to raise the tire.

   Make sure the retainer is fully seated across the underside of the wheel.
3. When the tire is almost in the stored position, turn the tire so the valve is towards the rear of the vehicle.

   This will help when you check and maintain tire pressure in the spare.
4. Raise the tire fully against the underside of the vehicle. Continue turning the folding wrench until the tire is secure and the cable is tight. The spare tire hoist cannot be overtightened.

Downloaded from www.Manualslib.com manuals search engine

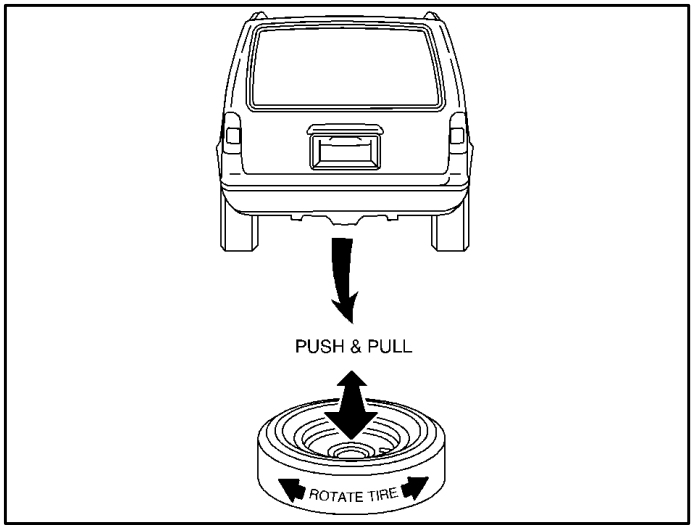

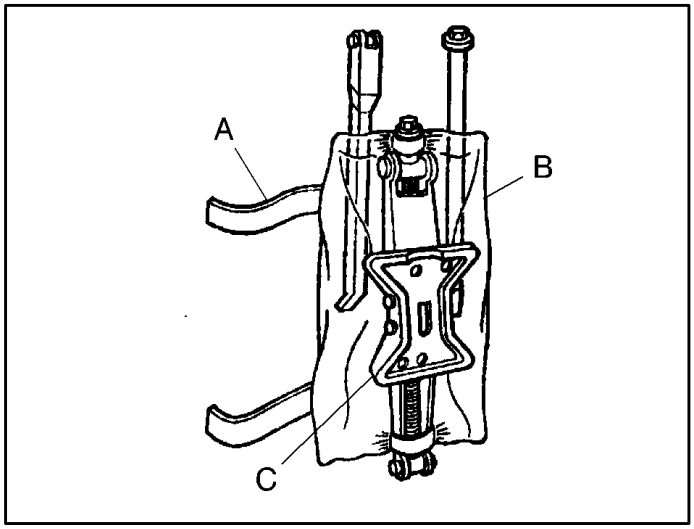

5. Make sure the tire is stored securely. Push, pull, and then try to rotate or turn the tire. If the tire moves, use the folding wrench to tighten the cable.

Put back all tools as they were stored in the jack storage compartment and put the compartment cover back on.

To put the cover back on, line up the tabs on the right of the cover with the slots in the cover opening. Push the cover in place and push down the tab so that it rests in the groove. This secures the cover in place.

A. Strap

B. Bag and Tools

C. Jack

Unless you have the plastic “bolt-on” wheel covers, be sure to also store the center cap. When you replace the compact spare with a full-size tire, reinstall the bolt-on wheel covers and the center cap. Tighten them “hand tight” over the wheel nuts, using the folding wrench.

Downloaded from www.Manualslib.com manuals search engine

Compact Spare Tire

Although the compact spare tire was fully inflated when your vehicle was new, it can lose air after a time. Check the inflation pressure regularly. It should be 60 psi (420 kPa).

After installing the compact spare on your vehicle, you should stop as soon as possible and make sure your spare tire is correctly inflated. The compact spare is made to perform well at speeds up to 65 mph (105 km/h) for distances up to 3,000 miles (5 000 km), so you can finish your trip and have your full-size tire repaired or replaced where you want. Of course, it's best to replace your spare with a full-size tire as soon as you can. Your spare will last longer and be in good shape in case you need it again.

NOTICE:

When the compact spare is installed, don't take your vehicle through an automatic car wash with guide rails. The compact spare can get caught on the rails. That can damage the tire and wheel, and maybe other parts of your vehicle.

Don't use your compact spare on other vehicles.

And don't mix your compact spare tire or wheel with other wheels or tires. They won't fit. Keep your spare tire and its wheel together.

NOTICE:

Tire chains won't fit your compact spare. Using them can damage your vehicle and can damage the chains too. Don't use tire chains on your compact spare.

Downloaded from www.Manualslib.com manuals search engine

If You're Stuck: In Sand, Mud, Ice or Snow

In order to free your vehicle when it is stuck, you will need to spin the wheels, but you don't want to spin your wheels too fast. The method known as "rocking" can help you get out when you're stuck, but you must use caution.

⚠ CAUTION:

If you let your tires spin at high speed, they can explode, and you or others could be injured. And, the transaxle or other parts of the vehicle can overheat. That could cause an engine compartment fire or other damage. When you're stuck, spin the wheels as little as possible. Don't spin the wheels above 35 mph (55 km/h) as shown on the speedometer.

NOTICE:

Spinning your wheels can destroy parts of your vehicle as well as the tires. If you spin the wheels too fast while shifting your transaxle back and forth, you can destroy your transaxle.

For information about using tire chains on your vehicle, see "Tire Chains" in the Index.

Rocking Your Vehicle To Get It Out

First, turn your steering wheel left and right. That will clear the area around your front wheels. If your vehicle has traction control, you should turn your traction control system off. See "Traction Control System" in the Index. Then shift back and forth between REVERSE (R) and a forward gear, spinning the wheels as little as possible. Release the accelerator pedal while you shift, and press lightly on the accelerator pedal when the transaxle is in gear. By slowly spinning your wheels in the forward and reverse directions, you will cause a rocking motion that may free your vehicle. If that doesn't get you out after a few tries, you may need to be towed out. If you do need to be towed out, see "Towing Your Vehicle" in the Index.

Downloaded from www.Manualslib.com manuals search engine

Section 6 Service and Appearance Care

Here you will find information about the care of your vehicle. This section begins with service and fuel information, and then it shows how to check important fluid and lubricant levels. There is also technical information about your vehicle, and a part devoted to its appearance care.

6-2 Service
6-3 Fuel
6-5 Fuels in Foreign Countries
6-6 Filling Your Tank
6-8 Filling a Portable Fuel Container
6-9 Checking Things Under the Hood
6-12 Engine Oil
6-17 Engine Air Cleaner/Filter
6-18 Passenger Compartment Air Filter Replacement
6-19 Automatic Transaxle Fluid
6-22 Engine Coolant
6-26 Radiator Pressure Cap
6-26 Power Steering Fluid
6-27 Windshield Washer Fluid
6-28 Brakes
6-32 Battery
6-32 Bulb Replacement
6-39 Windshield Wiper Blade Replacement
6-41 Tires
6-50 Appearance Care
6-50 Cleaning the Inside of Your Vehicle
6-54 Cleaning the Outside of Your Vehicle
6-56 Underbody Maintenance
6-56 Chemical Paint Spotting
6-57 GM Vehicle Care/Appearance Materials
6-58 Vehicle Identification Number (VIN)
6-59 Electrical System
6-66 Replacement Bulbs
6-67 Capacities and Specifications
6-68 Normal Maintenance Replacement Parts

Downloaded from www.Manualslib.com manuals search engine

Service

Your dealer knows your vehicle best and wants you to be happy with it. We hope you'll go to your dealer for all your service needs. You'll get genuine GM parts and GM-trained and supported service people.

We hope you'll want to keep your GM vehicle all GM. Genuine GM parts have one of these marks:

Doing Your Own Service Work

If you want to do some of your own service work, you'll want to use the proper service manual. It tells you much more about how to service your vehicle than this manual can. To order the proper service manual, see "Service and Owner Publications" in the Index.

Your vehicle has an air bag system. Before attempting to do your own service work, see "Servicing Your Air Bag-Equipped Vehicle" in the Index.

You should keep a record with all parts receipts and list the mileage and the date of any service work you perform. See "Maintenance Record" in the Index.

Downloaded from www.Manualslib.com manuals search engine

⚠ CAUTION:

You can be injured and your vehicle could be damaged if you try to do service work on a vehicle without knowing enough about it.

- **Be sure you have sufficient knowledge, experience, the proper replacement parts and tools before you attempt any vehicle maintenance task.**
- **Be sure to use the proper nuts, bolts and other fasteners. "English" and "metric" fasteners can be easily confused. If you use the wrong fasteners, parts can later break or fall off. You could be hurt.**

Adding Equipment to the Outside of Your Vehicle

Things you might add to the outside of your vehicle can affect the airflow around it. This may cause wind noise and affect windshield washer performance. Check with your dealer before adding equipment to the outside of your vehicle.

Fuel

Use regular unleaded gasoline rated at 87 octane or higher. It is recommended that the gasoline meet specifications which were developed by the American Automobile Manufacturers Association (AAMA) and endorsed by the Canadian Motor Vehicle Manufacturers Association for better vehicle performance and engine protection. Gasolines meeting the AAMA specification could provide improved driveability and emission control system performance compared to other gasolines.

Downloaded from www.Manualslib.com manuals search engine

In Canada, look for the "Auto Makers' Choice" label on the fuel pump.

Canada Only

Be sure the posted octane is at least 87. If the octane is less than 87, you may get a heavy knocking noise when you drive. If it's bad enough, it can damage your engine.

If you're using fuel rated at 87 octane or higher and you hear heavy knocking, your engine needs service. But don't worry if you hear a little pinging noise when you're accelerating or driving up a hill. That's normal, and you don't have to buy a higher octane fuel to get rid of pinging. It's the heavy, constant knock that means you have a problem.

If your vehicle is certified to meet California Emission Standards (indicated on the underhood emission control label), it is designed to operate on fuels that meet California specifications. If such fuels are not available in states adopting California emissions standards, your vehicle will operate satisfactorily on fuels meeting federal specifications, but emission control system performance may be affected. The malfunction indicator lamp on your instrument panel may turn on and/or your vehicle may fail a smog-check test. See "Malfunction Indicator Lamp" in the Index. If this occurs, return to your authorized Pontiac dealer for diagnosis to determine the cause of failure. In the event it is determined that the cause of the condition is the type of fuels used, repairs may not be covered by your warranty.

Some gasolines that are not reformulated for low emissions may contain an octane-enhancing additive called methylcyclopentadienyl manganese tricarbonyl (MMT); ask your service station operator whether or not the fuel contains MMT. General Motors does not recommend the use of such gasolines. If fuels containing MMT are used, spark plug life may be reduced and your emission control system performance may be affected. The malfunction indicator lamp on your instrument panel may turn on. If this occurs, return to your authorized Pontiac dealer for service.

Downloaded from www.Manualslib.com manuals search engine

To provide cleaner air, all gasolines in the United States are now required to contain additives that will help prevent deposits from forming in your engine and fuel system, allowing your emission control system to function properly. Therefore, you should not have to add anything to the fuel. In addition, gasolines containing oxygenates, such as ethers and ethanol, and reformulated gasolines may be available in your area to contribute to clean air. General Motors recommends that you use these gasolines, particularly if they comply with the specifications described earlier.

NOTICE:

Your vehicle was not designed for fuel that contains methanol. Don't use it. It can corrode metal parts in your fuel system and also damage plastic and rubber parts. That damage wouldn't be covered under your warranty.

Fuels in Foreign Countries

If you plan on driving in another country outside the United States or Canada, the proper fuel may be hard to find. Never use leaded gasoline or any other fuel not recommended in the previous text on fuel. Costly repairs caused by use of improper fuel wouldn't be covered by your warranty.

To check on fuel availability, ask an auto club, or contact a major oil company that does business in the country where you'll be driving.

Downloaded from www.Manualslib.com manuals search engine

Filling Your Tank

⚠ CAUTION:

Gasoline vapor is highly flammable. It burns violently, and that can cause very bad injuries. Don't smoke if you're near gasoline or refueling your vehicle. Keep sparks, flames and smoking materials away from gasoline.

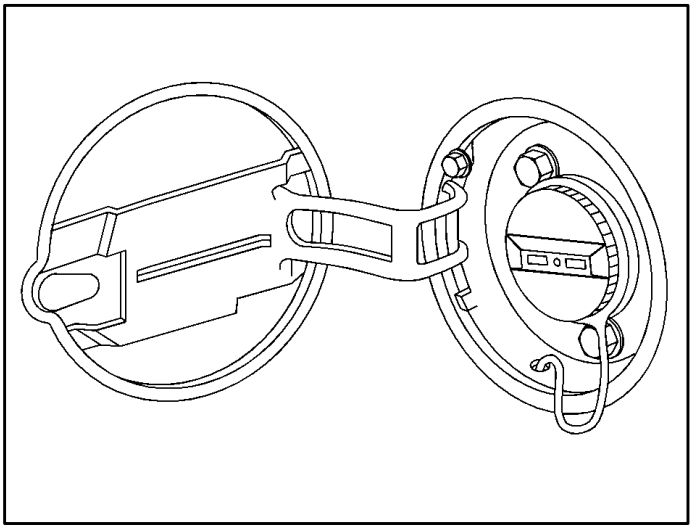

The fuel filler door is located on the driver's side of the vehicle.

When the fuel door is opened on a vehicle with dual sliding doors, the driver's side sliding door will only open partway.

Downloaded from www.Manualslib.com manuals search engine

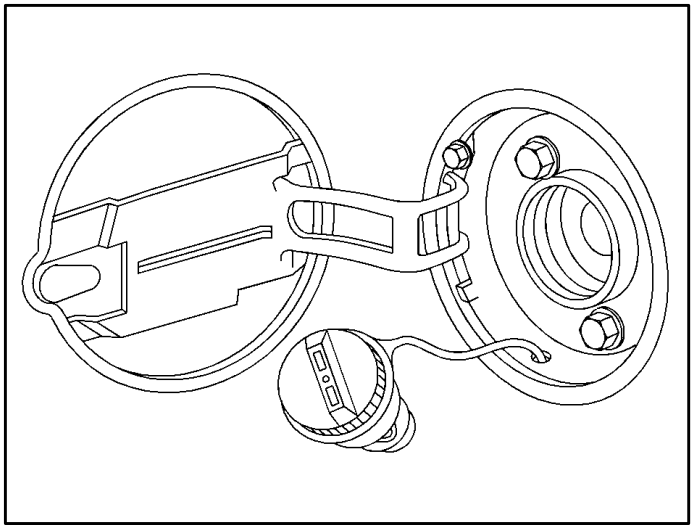

While refueling, let the cap hang by the tether as shown.

To remove the cap, turn it slowly to the left (counterclockwise). The cap has a spring in it; if you let go of the cap too soon, it will spring back to the right.

⚠ CAUTION:

If you get gasoline on yourself and then something ignites it, you could be badly burned. Gasoline can spray out on you if you open the fuel filler cap too quickly. This spray can happen if your tank is nearly full, and is more likely in hot weather. Open the fuel filler cap slowly and wait for any "hiss" noise to stop. Then unscrew the cap all the way.

Be careful not to spill gasoline. Clean gasoline from painted surfaces as soon as possible. See "Cleaning the Outside of Your Vehicle" in the Index.

When you put the cap back on, turn it to the right (clockwise) until you hear a clicking sound. Make sure you fully install the cap. The diagnostic system can determine if the fuel cap has been left off or improperly installed. This would allow fuel to evaporate into the atmosphere. See "Malfunction Indicator Lamp" in the Index.

Downloaded from www.Manualslib.com manuals search engine

The malfunction indicator lamp (SERVICE ENGINE SOON or CHECK ENGINE light) will come on if the fuel cap is not properly installed.

NOTICE:

If you need a new cap, be sure to get the right type. Your dealer can get one for you. If you get the wrong type, it may not fit properly. This may cause your malfunction indicator lamp to light and your fuel tank and emissions system may be damaged. See "Malfunction Indicator Lamp" in the Index.

Filling a Portable Fuel Container

⚠ CAUTION:

Never fill a portable fuel container while it is in your vehicle. Static electricity discharge from the container can ignite the gasoline vapor. You can be badly burned and your vehicle damaged if this occurs. To help avoid injury to you and others:

- **Dispense gasoline only into approved containers.**
- **Do not fill a container while it is inside a vehicle, in a vehicle's trunk, pickup bed or on any surface other than the ground.**
- **Bring the fill nozzle in contact with the inside of the fill opening before operating the nozzle. Contact should be maintained until the filling is complete.**
- **Don't smoke while pumping gasoline.**

Downloaded from www.Manualslib.com manuals search engine

Checking Things Under the Hood

⚠ CAUTION:

An electric fan under the hood can start up and injure you even when the engine is not running. Keep hands, clothing and tools away from any underhood electric fan.

⚠ CAUTION:

Things that burn can get on hot engine parts and start a fire. These include liquids like fuel, oil, coolant, brake fluid, windshield washer and other fluids, and plastic or rubber. You or others could be burned. Be careful not to drop or spill things that will burn onto a hot engine.

Hood Release

To open the hood do the following:

1. Pull the hood release handle, located on the driver's side under the instrument panel.

Downloaded from www.Manualslib.com manuals search engine

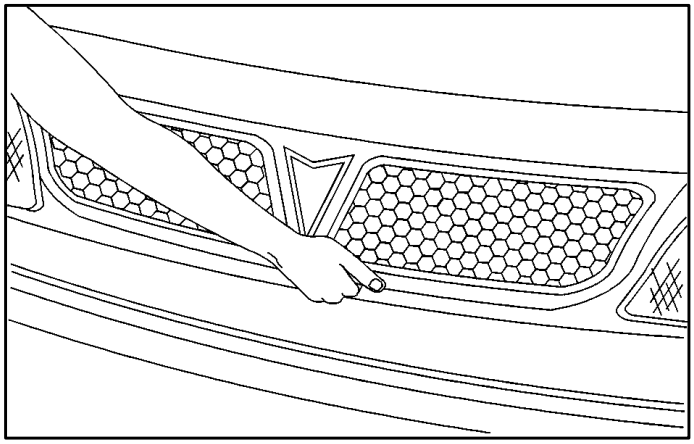

2. Go to the front of the vehicle and push up on the underhood release, located near the center under the grille.
3. Lift the hood.
4. Pull forward on the hood prop to release it from its storage clip.

   The hood prop may be hot due to increased engine temperatures under the hood, so be careful when handling it. Use your hood prop sleeve when handling the hood prop.

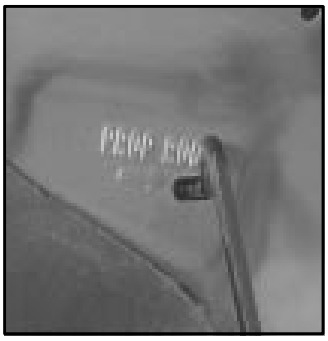

5. Put the end of the hood prop into the slot in the underside of the hood.

Downloaded from www.Manualslib.com manuals search engine

Engine Compartment Overview

When you lift the hood, you'll see these items:

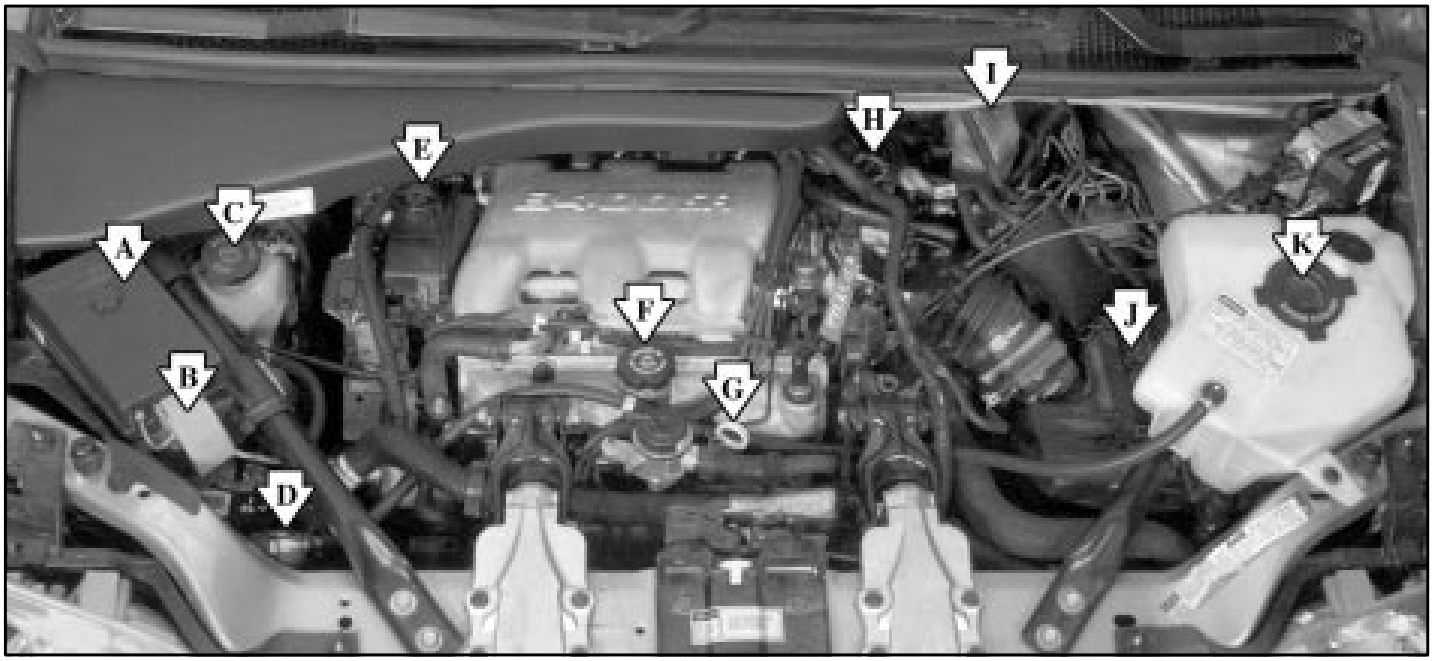

A. Underhood Fuse and Relay Center
B. Remote Positive (+) Terminal
C. Windshield Washer Fluid Reservoir
D. Radiator Pressure Cap
E. Power Steering Fluid Reservoir
F. Engine Oil Fill Cap
G. Engine Oil Dipstick
H. Transaxle Fluid Dipstick
I. Brake Master Cylinder Reservoir
J. Engine Air Cleaner/Filter
K. Engine Coolant Reservoir

Downloaded from www.Manualslib.com manuals search engine

Before closing the hood, be sure all the filler caps are on properly then follow these steps:

1. Lift the hood to relieve pressure on the hood prop.
2. Remove the hood prop from the slot in the hood.
3. Return the prop to its retainer.
4. Let the hood down and close it firmly.

Engine Oil

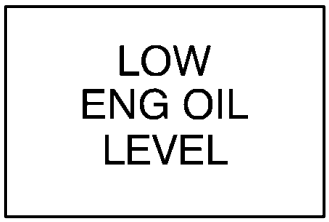

United States

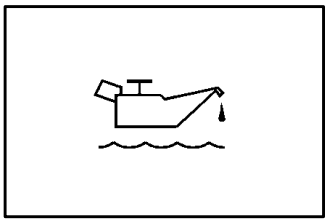

Canada

If the low engine oil level message appears on the instrument panel, it means you need to check your engine oil level right away. For more information, see “Low Engine Oil Level Message” in the Index.

You should check your engine oil level regularly; this is an added reminder.

Checking Engine Oil

It’s a good idea to check your engine oil every time you get fuel. In order to get an accurate reading, the oil must be warm and the vehicle must be on level ground.

The engine oil dipstick is located at the front of the engine compartment, near the center. The dipstick handle has a bright, yellow loop design for easy identification. See “Engine Compartment Overview” in the Index for more information on location.

Turn off the engine and give the oil several minutes to drain back into the oil pan. If you don’t, the oil dipstick might not show the actual level.

Pull out the dipstick and clean it with a paper towel or cloth, then push it back in all the way. Remove it again, keeping the tip down, and check the level.

Downloaded from www.Manualslib.com manuals search engine

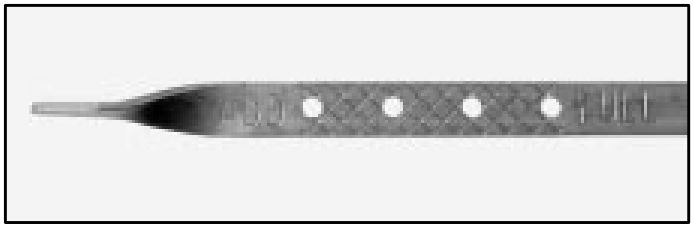

When to Add Engine Oil

If the oil is at or below the ADD mark, then you'll need to add at least one quart of oil. But you must use the right kind. This part explains what kind of oil to use. For crankcase capacity, see "Capacities and Specifications" in the Index.

NOTICE:

Don't add too much oil. If your engine has so much oil that the oil level gets above the cross-hatched area that shows the proper operating range, your engine could be damaged.

The engine oil fill cap is located behind the engine oil dipstick. See "Engine Compartment Overview" in the Index for more information on location.

Be sure to fill it enough to put the level somewhere in the proper operating range. Push the dipstick all the way back in when you're through.

Downloaded from www.Manualslib.com manuals search engine

What Kind of Engine Oil to Use

Oils recommended for your vehicle can be identified by looking for the starburst symbol.

This symbol indicates that the oil has been certified by the American Petroleum Institute (API). Do not use any oil which does not carry this starburst symbol.

If you change your own oil, be sure you use oil that has the starburst symbol on the front of the oil container. If you have your oil changed for you, be sure the oil put into your engine is American Petroleum Institute certified for gasoline engines.

You should also use the proper viscosity oil for your vehicle, as shown in the following chart:

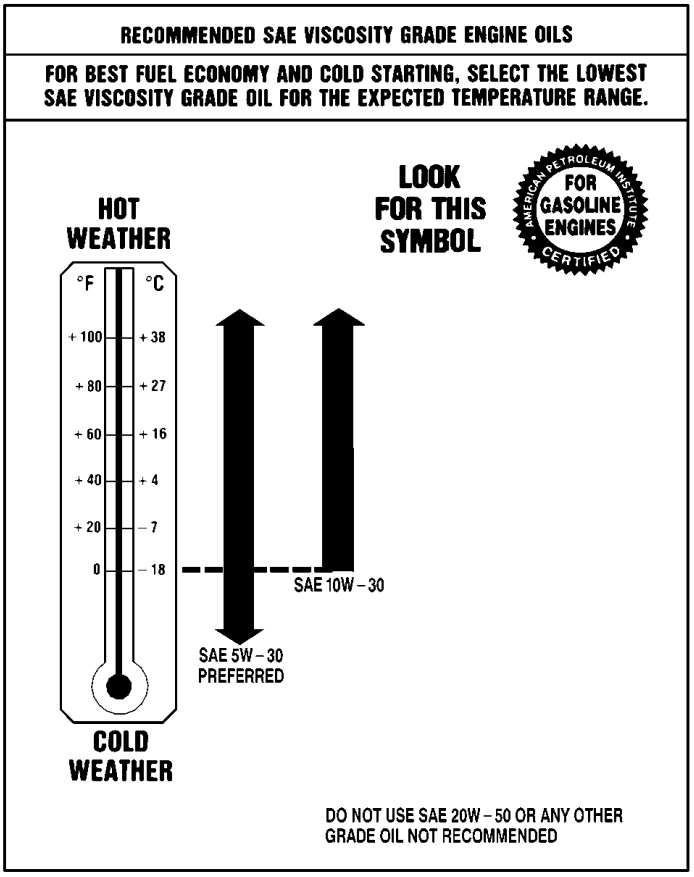

Downloaded from www.Manualslib.com manuals search engine

As in the chart shown previously, SAE 5W-30 is best for your vehicle. However, you can use SAE 10W-30 if it's going to be 0°F (-18°C) or above. These numbers on an oil container show its viscosity, or thickness. Do not use other viscosity oils, such as SAE 20W-50.

NOTICE:

Use only engine oil with the American Petroleum Institute Certified For Gasoline Engines starburst symbol. Failure to use the recommended oil can result in engine damage not covered by your warranty.

GM Goodwrench® oil meets all the requirements for your vehicle.

If you are in an area where the temperature falls below -20°F (-29°C), consider using either an SAE 5W-30 synthetic oil or an SAE 0W-30 oil. Both will provide easier cold starting and better protection for your engine at extremely low temperatures.

Engine Oil Additives

Don't add anything to your oil. The recommended oils with the starburst symbol are all you will need for good performance and engine protection.

When to Change Engine Oil

Your vehicle has a computer that lets you know when to change your engine oil. This is not based on mileage, but on engine revolutions and engine operating temperature. When the computer has calculated that the oil needs changing, the GM Oil Life System™ will indicate that a change is necessary. The mileage between oil and filter changes will vary depending on how you drive your vehicle -- usually between 3,000 miles (5 000 km) and 10,000 miles (16 000 km) since your last oil and filter change. Under severe conditions, the system may come on before 3,000 miles (5 000 km). Never drive your vehicle more than 10,000 miles (16 000 km) or 12 months (whichever occurs first) without an oil change.

The system won't detect dust in the oil. So, if you drive in a dusty area, be sure to change your oil and filter every 3,000 miles (5 000 km) or sooner. Remember to reset the change engine oil message whenever the oil is changed.

Downloaded from www.Manualslib.com manuals search engine

How to Reset the Change Engine Oil Message

1. With the ignition key in RUN but the engine off, repeatedly push the trip/reset button until OIL is displayed.
2. Once OIL is displayed, push and hold the trip/reset button for five seconds. The number will disappear and be replaced by 100 (indicating 100% oil life remaining).
3. Turn the key to OFF.

   If the change engine oil message comes back on, the engine oil life monitor has not reset. Repeat the procedure.

What to Do with Used Oil

Did you know that used engine oil contains certain elements that may be unhealthy for your skin and could even cause cancer? Don't let used oil stay on your skin for very long. Clean your skin and nails with soap and water, or a good hand cleaner. Wash or properly throw away clothing or rags containing used engine oil. See the manufacturer's warnings about the use and disposal of oil products.

Used oil can be a real threat to the environment. If you change your own oil, be sure to drain all free-flowing oil from the filter before disposal. Don't ever dispose of oil by putting it in the trash, pouring it on the ground, into sewers, or into streams or bodies of water. Instead, recycle it by taking it to a place that collects used oil. If you have a problem properly disposing of your used oil, ask your dealer, a service station or a local recycling center for help.

Downloaded from www.Manualslib.com manuals search engine

Engine Air Cleaner/Filter

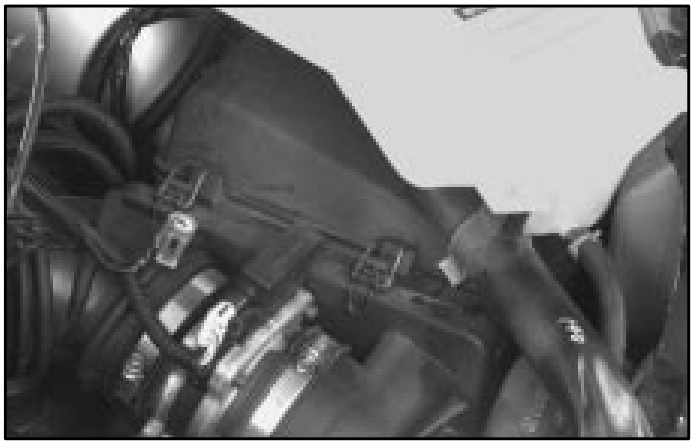

The engine air cleaner/filter is located at the front of the engine compartment, on the driver's side of the vehicle, under the engine coolant reservoir. See "Engine Compartment Overview" in the Index for more information on location.

Checking or Replacing the Engine Air Cleaner/Filter

1. Unlatch the two hooks on top of the engine air cleaner/filter housing.
2. Turn back the air inlet panel and rest it on top of the housing. The air intake tube is designed to flex back; you do not need to disconnect it.
3. After replacing the engine air cleaner/filter, seat the tabs on the bottom of the panel into the slots on the housing.
4. Latch the hooks to secure the panel in place. If the panel moves easily, check that the tabs are seated correctly in the slots.

⚠ CAUTION:

Operating the engine with the air cleaner/filter off can cause you or others to be burned. The air cleaner not only cleans the air, it stops flame if the engine backfires. If it isn't there, and the engine backfires, you could be burned. Don't drive with it off, and be careful working on the engine with the air cleaner/filter off.

Downloaded from www.Manualslib.com manuals search engine

NOTICE:

If the air cleaner/filter is off, a backfire can cause a damaging engine fire. And, dirt can easily get into your engine, which will damage it. Always have the air cleaner/filter in place when you're driving.

Passenger Compartment Air Filter Replacement

Passenger compartment air, both outside and recirculated air, is routed through a passenger compartment filter, which is part of a two-piece filter system. The filter removes certain contaminants from the air, including pollen and dust particles, as well as odors such as exhaust or fuel fumes. Reductions in airflow, which may occur more quickly in dusty areas, indicate that the filter needs to be replaced early. For how often to change the air filter, see "Scheduled Maintenance" in the Index.

The access panel for the passenger compartment air filter is located in the back of the glove box.

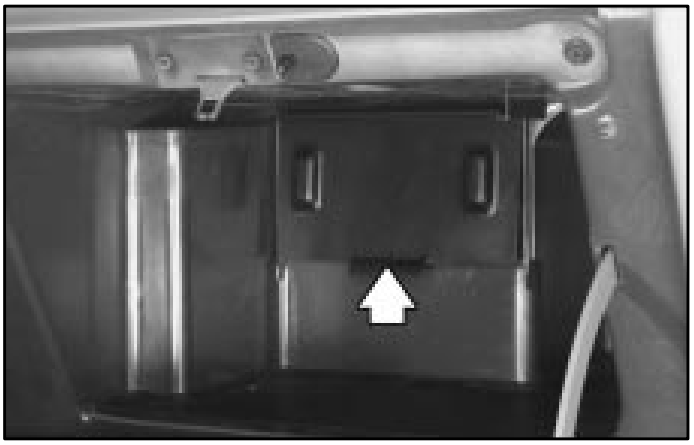

1. Pull the tab up and out on the outer access panel.

Downloaded from www.Manualslib.com manuals search engine

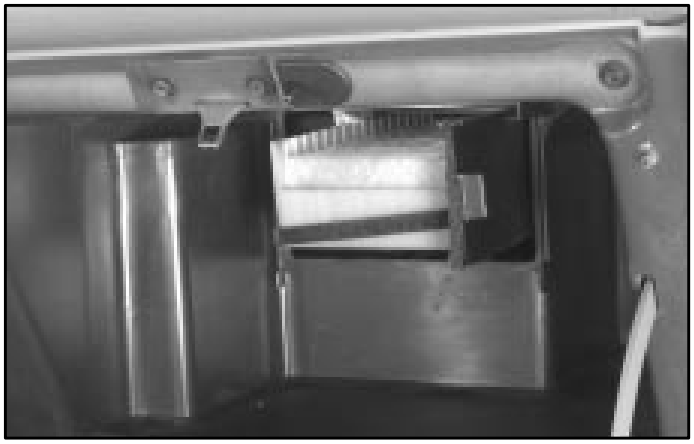

2. Then push the tab, located on the left of the inner access panel, to the right.
3. The first air filter will pull straight out. To remove the second, reach in and slide it toward the opening. Pull the second filter out.
4. Replace the filters by reversing Step 3. Make sure the filters are inserted so that the sealing foam is angled in the same direction on both filters. For the type of filter to use, see “Normal Maintenance Replacement Parts” in the Index.
5. Close the inner access door, while squeezing the tab. Be sure it is tightly closed.
6. Snap the outer access panel into the back of the glove box.

Automatic Transaxle Fluid

When to Check and Change

A good time to check your automatic transaxle fluid level is when the engine oil is changed.

Change both the fluid and filter every 50,000 miles (83 000 km) if the vehicle is mainly driven under one or more of these conditions:

- In heavy city traffic where the outside temperature regularly reaches 90°F (32°C) or higher.
- In hilly or mountainous terrain.
- When doing frequent trailer towing.
- Uses such as found in taxi, police or delivery service.

If you do not use your vehicle under any of these conditions, change the fluid and filter at 100,000 miles (166 000 km).

See “Scheduled Maintenance Services” in the Index.

Downloaded from www.Manualslib.com manuals search engine

How to Check

Because this operation can be a little difficult, you may choose to have this done at the dealership service department.

If you do it yourself, be sure to follow all the instructions here, or you could get a false reading on the dipstick.

NOTICE:

Too much or too little fluid can damage your transaxle. Too much can mean that some of the fluid could come out and fall on hot engine parts or exhaust system parts, starting a fire. Be sure to get an accurate reading if you check your transaxle fluid.

Wait at least 30 minutes before checking the transaxle fluid level if you have been driving:

- When outside temperatures are above 90°F (32°C).
- At high speed for quite a while.
- In heavy traffic -- especially in hot weather.
- While pulling a trailer.

To get the right reading, the fluid should be at normal operating temperature, which is 180°F to 200°F (82°C to 93°C).

Get the vehicle warmed up by driving about 15 miles (24 km) when outside temperatures are above 50°F (10°C). If it's colder than 50°F (10°C), you may have to drive longer.

Checking the Fluid Level

Prepare your vehicle as follows:

- Park your vehicle on a level place. Keep the engine running.
- With the parking brake applied, place the shift lever in PARK (P).
- With your foot on the brake pedal, move the shift lever through each gear range, pausing for about three seconds in each range. Then, position the shift lever in PARK (P).
- Let the engine run at idle for three to five minutes.

Downloaded from www.Manualslib.com manuals search engine

Then, without shutting off the engine, follow these steps:

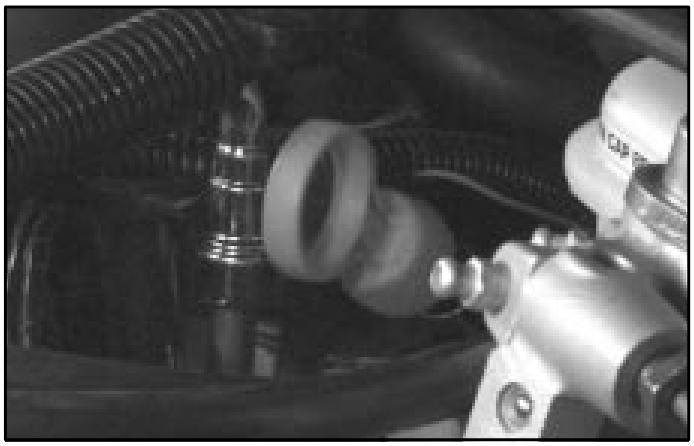

The dipstick is located toward the back of the engine compartment, next to the brake master cylinder. The dipstick has a bright, red loop design for easy identification. See “Engine Compartment Overview” in the Index for more information on location.

1. Pull out the dipstick and wipe it with a clean rag or paper towel.
2. Push it back in all the way, wait three seconds and then pull it back out again.

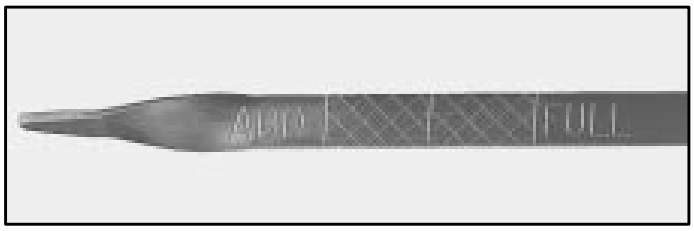

3. Check both sides of the dipstick, and read the lower level. The fluid level must be in the cross-hatched area.
4. If the fluid level is in the acceptable range, push the dipstick back in all the way.

Downloaded from www.Manualslib.com manuals search engine

How to Add Fluid

Refer to the Maintenance Schedule to determine what kind of transaxle fluid to use. See “Recommended Fluids and Lubricants” in the Index.

If the fluid level is low, add only enough of the proper fluid to bring the level into the cross-hatched area on the dipstick.

1. Pull out the dipstick.
2. Using a long-neck funnel, add enough fluid at the dipstick hole to bring it to the proper level.

   It doesn’t take much fluid, generally less than one pint (0.5 L). *Don’t overfill.*

NOTICE:

We recommend you use only fluid labeled DEXRON®-III, because fluid with that label is made especially for your automatic transaxle. Damage caused by fluid other than DEXRON®-III is not covered by your new vehicle warranty.

3. After adding fluid, recheck the fluid level as described under “How to Check.”
4. When the correct fluid level is obtained, push the dipstick back in all the way.

Engine Coolant

The cooling system in your vehicle is filled with DEX-COOL® engine coolant. This coolant is designed to remain in your vehicle for 5 years or 150,000 miles (240 000 km), whichever occurs first, if you add only DEX-COOL® extended life coolant.

The following explains your cooling system and how to add coolant when it is low. If you have a problem with engine overheating, see “Engine Overheating” in the Index.

A 50/50 mixture of clean, drinkable water and DEX-COOL® coolant will:

- Give freezing protection down to -34°F (-37°C).
- Give boiling protection up to 265°F (129°C).
- Protect against rust and corrosion.
- Help keep the proper engine temperature.
- Let the warning messages and gages work as they should.

Downloaded from www.Manualslib.com manuals search engine

NOTICE:

When adding coolant, it is important that you use only DEX-COOL® (silicate-free) coolant.

If coolant other than DEX-COOL is added to the system, premature engine, heater core or radiator corrosion may result. In addition, the engine coolant will require change sooner -- at 30,000 miles (50 000 km) or 24 months, whichever occurs first. Damage caused by the use of coolant other than DEX-COOL® is not covered by your new vehicle warranty.

What to Use

Use a mixture of one-half *clean, drinkable water* and one-half DEX-COOL® coolant which won't damage aluminum parts. If you use this coolant mixture, you don't need to add anything else.

⚠ CAUTION:

Adding only plain water to your cooling system can be dangerous. Plain water, or some other liquid like alcohol, can boil before the proper coolant mixture will. Your vehicle's coolant warning system is set for the proper coolant mixture. With plain water or the wrong mixture, your engine could get too hot but you wouldn't get the overheat warning. Your engine could catch fire and you or others could be burned. Use a 50/50 mixture of clean, drinkable water and DEX-COOL® coolant.

Downloaded from www.Manualslib.com manuals search engine

NOTICE:

If you use an improper coolant mixture, your engine could overheat and be badly damaged. The repair cost wouldn't be covered by your warranty. Too much water in the mixture can freeze and crack the engine, radiator, heater core and other parts.

If you have to add coolant more than four times a year, have your dealer check your cooling system.

NOTICE:

If you use the proper coolant, you don't have to add extra inhibitors or additives which claim to improve the system. These can be harmful.

Checking Coolant

The engine coolant reservoir is located on the driver's side of the vehicle, above the engine air cleaner/filter. See "Engine Compartment Overview" in the Index for more information on location.

The vehicle must be on a level surface. When your engine is cold, the coolant level should be at the FULL COLD mark, or a little higher. When your engine is warm, the level should be above the FULL COLD mark or a little higher.

Downloaded from www.Manualslib.com manuals search engine

Adding Coolant

If you need more coolant, add the proper DEX-COOL® coolant mixture *at the coolant recovery tank.*

> ⚠ **CAUTION:**
>
> **Turning the radiator pressure cap when the engine and radiator are hot can allow steam and scalding liquids to blow out and burn you badly. With the coolant recovery tank, you will almost never have to add coolant at the radiator. Never turn the radiator pressure cap -- even a little -- when the engine and radiator are hot.**

Add coolant mixture at the recovery tank, but be careful not to spill it.

> ⚠ **CAUTION:**
>
> **You can be burned if you spill coolant on hot engine parts. Coolant contains ethylene glycol, and it will burn if the engine parts are hot enough. Don't spill coolant on a hot engine.**

Occasionally check the coolant level in the radiator. For information on how to add coolant to the radiator, see "Cooling System" in the Index.

Downloaded from www.Manualslib.com manuals search engine

Radiator Pressure Cap

NOTICE:

Your radiator cap is a 15 psi (105 kPa) pressure-type cap and must be tightly installed to prevent coolant loss and possible engine damage from overheating. Be sure the arrows on the cap line up with the overflow tube on the radiator filler neck.

The radiator pressure cap is located at the front of the engine compartment on the passenger's side of the vehicle. See "Engine Compartment Overview" in the Index for more information on location.

Power Steering Fluid

The power steering fluid reservoir is located to the right of the windshield washer fluid reservoir, at the back of the engine compartment. See "Engine Compartment Overview" in the Index for more information on location.

When to Check Power Steering Fluid

It is not necessary to regularly check power steering fluid unless you suspect there is a leak in the system or you hear an unusual noise. A fluid loss in this system could indicate a problem. Have the system inspected and repaired.

Downloaded from www.Manualslib.com manuals search engine

How to Check Power Steering Fluid

Turn the key off, let the engine compartment cool down, wipe the cap and the top of the reservoir clean, then unscrew the cap and wipe the dipstick with a clean rag. Replace the cap and completely tighten it. Then remove the cap again and look at the fluid level on the dipstick.

When the engine compartment is hot, the level should be at the “H” mark. When it’s cold, the level should be at the “C” mark. If the fluid is at the ADD mark, you should add fluid.

What to Use

To determine what kind of fluid to use, see “Recommended Fluids and Lubricants” in the Index. Always use the proper fluid. Failure to use the proper fluid can cause leaks and damage hoses and seals.

Windshield Washer Fluid

What to Use

When you need windshield washer fluid, be sure to read the manufacturer’s instructions before use. If you will be operating your vehicle in an area where the temperature may fall below freezing, use a fluid that has sufficient protection against freezing.

Adding Washer Fluid

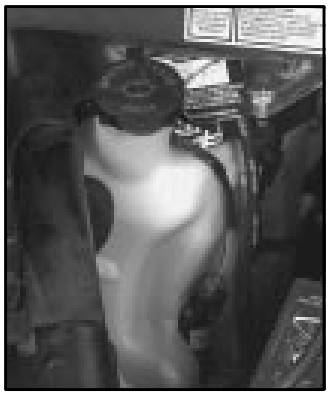

The windshield washer fluid reservoir is located on the passenger’s side of the engine compartment, near the fuse and relay center. See “Engine Compartment Overview” in the Index for more information on location.

Open the cap labeled WASHER FLUID ONLY. Add washer fluid until the tank is full.

Downloaded from www.Manualslib.com manuals search engine

NOTICE:

- **When using concentrated washer fluid, follow the manufacturer's instructions for adding water.**
- **Don't mix water with ready-to-use washer fluid. Water can cause the solution to freeze and damage your washer fluid tank and other parts of the washer system. Also, water doesn't clean as well as washer fluid.**
- **Fill your washer fluid tank only three-quarters full when it's very cold. This allows for expansion if freezing occurs, which could damage the tank if it is completely full.**
- **Don't use engine coolant (antifreeze) in your windshield washer. It can damage your washer system and paint.**

Brakes

Brake Fluid

Your brake master cylinder reservoir is filled with DOT-3 brake fluid. See "Engine Compartment Overview" in the Index for the location of the reservoir.

Downloaded from www.Manualslib.com manuals search engine

There are only two reasons why the brake fluid level in the reservoir might go down. The first is that the brake fluid goes down to an acceptable level during normal brake lining wear. When new linings are put in, the fluid level goes back up. The other reason is that fluid is leaking out of the brake system. If it is, you should have your brake system fixed, since a leak means that sooner or later your brakes won't work well, or won't work at all.

So, it isn't a good idea to "top off" your brake fluid. Adding brake fluid won't correct a leak. If you add fluid when your linings are worn, then you'll have too much fluid when you get new brake linings. You should add (or remove) brake fluid, as necessary, only when work is done on the brake hydraulic system.

⚠ CAUTION:

If you have too much brake fluid, it can spill on the engine. The fluid will burn if the engine is hot enough. You or others could be burned, and your vehicle could be damaged. Add brake fluid only when work is done on the brake hydraulic system. See "Checking Brake Fluid" in this section.

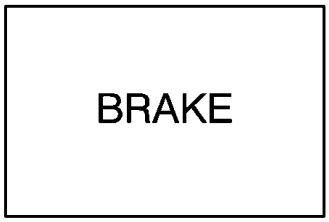

United States

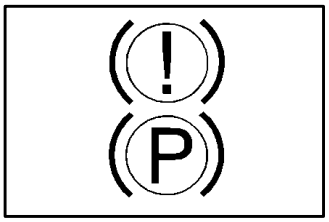

Canada

When your brake fluid falls to a low level, your brake warning light will come on. See "Brake System Warning Light" in the Index.

What to Add

When you do need brake fluid, use only DOT-3 brake fluid. Refer to "Recommended Fluids and Lubricants" in the Index. Use new brake fluid from a sealed container only.

Always clean the brake fluid reservoir cap and the area around the cap before removing it. This will help keep dirt from entering the reservoir.

Downloaded from www.Manualslib.com manuals search engine

⚠ CAUTION:

With the wrong kind of fluid in your brake system, your brakes may not work well, or they may not even work at all. This could cause a crash. Always use the proper brake fluid.

NOTICE:

- **Using the wrong fluid can badly damage brake system parts. For example, just a few drops of mineral-based oil, such as engine oil, in your brake system can damage brake system parts so badly that they'll have to be replaced. Don't let someone put in the wrong kind of fluid.**
- **If you spill brake fluid on your vehicle's painted surfaces, the paint finish can be damaged. Be careful not to spill brake fluid on your vehicle. If you do, wash it off immediately. See "Appearance Care" in the Index.**

Brake Wear

Your vehicle has front disc brakes and rear drum brakes.

Disc brake pads have built-in wear indicators that make a high-pitched warning sound when the brake pads are worn and new pads are needed. The sound may come and go or be heard all the time your vehicle is moving (except when you are pushing on the brake pedal firmly).

⚠ CAUTION:

The brake wear warning sound means that soon your brakes won't work well. That could lead to an accident. When you hear the brake wear warning sound, have your vehicle serviced.

NOTICE:

Continuing to drive with worn-out brake pads could result in costly brake repair.

Downloaded from www.Manualslib.com manuals search engine

Some driving conditions or climates may cause a brake squeal when the brakes are first applied or lightly applied. This does not mean something is wrong with your brakes.

Properly torqued wheel nuts are necessary to help prevent brake pulsation. When tires are rotated, inspect brake pads for wear and evenly tighten wheel nuts in the proper sequence to GM torque specifications.

Your rear drum brakes don't have wear indicators, but if you ever hear a rear brake rubbing noise, have the rear brake linings inspected immediately. Also, the rear brake drums should be removed and inspected each time the tires are removed for rotation or changing. When you have the front brake pads replaced, have the rear brakes inspected, too.

Brake linings should always be replaced as complete axle sets.

See "Brake System Inspection" in Section 7 of this manual under Part C "Periodic Maintenance Inspections."

Brake Pedal Travel

See your dealer if the brake pedal does not return to normal height, or if there is a rapid increase in pedal travel. This could be a sign of brake trouble.

Brake Adjustment

Every time you apply the brakes, with or without the vehicle moving, your brakes adjust for wear.

Replacing Brake System Parts

The braking system on a vehicle is complex. Its many parts have to be of top quality and work well together if the vehicle is to have really good braking. Your vehicle was designed and tested with top-quality GM brake parts. When you replace parts of your braking system -- for example, when your brake linings wear down and you have to have new ones put in -- be sure you get new approved GM replacement parts. If you don't, your brakes may no longer work properly. For example, if someone puts in brake linings that are wrong for your vehicle, the balance between your front and rear brakes can change -- for the worse. The braking performance you've come to expect can change in many other ways if someone puts in the wrong replacement brake parts.

Downloaded from www.Manualslib.com manuals search engine

Battery

Your new vehicle comes with a maintenance free ACDelco® battery. When it's time for a new battery, get one that has the replacement number shown on the original battery's label. We recommend an ACDelco battery. See "Engine Compartment Overview" in the Index for battery location.

WARNING: Battery posts, terminals and related accessories contain lead and lead compounds, chemicals known to the State of California to cause cancer and reproductive harm. Wash hands after handling.

Vehicle Storage

If you're not going to drive your vehicle for 25 days or more, remove the black, negative (-) cable from the battery. This will help keep your battery from running down.

⚠ CAUTION:

Batteries have acid that can burn you and gas that can explode. You can be badly hurt if you aren't careful. See "Jump Starting" in the Index for tips on working around a battery without getting hurt.

Contact your dealer to learn how to prepare your vehicle for longer storage periods.

Also, for your audio system, see "Theft-Deterrent Feature" in the Index.

Bulb Replacement

For the type of bulbs, see "Replacement Bulbs" in the Index.

For any bulb changing procedure not listed in this section, contact your dealer's service department.

Halogen Bulbs

⚠ CAUTION:

Halogen bulbs have pressurized gas inside and can burst if you drop or scratch the bulb. You or others could be injured. Be sure to read and follow the instructions on the bulb package.

Downloaded from www.Manualslib.com manuals search engine

Headlamps

To replace he headlamp bulb(s) do the following:

1. Open the hood.
2. Remove the front turn signal/parking lamp assembly. See “Front Turn Signal/Parking Lamps” later in this section.

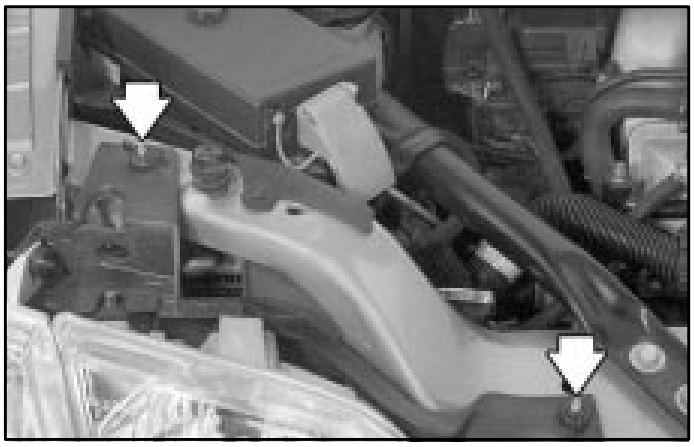

3. Remove the two wing nuts located on top of the headlamp assembly.

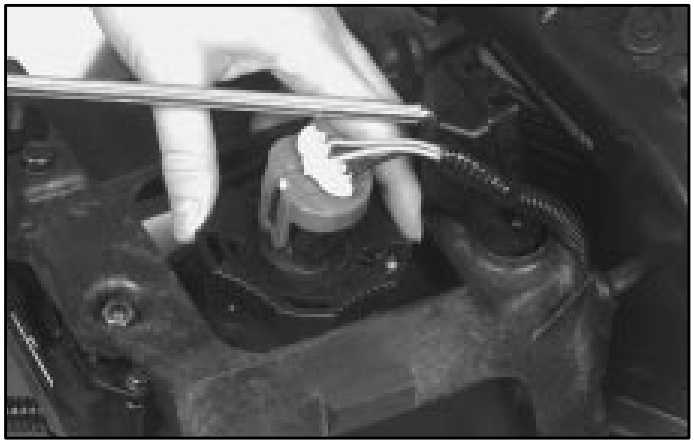

4. Unscrew the black retainer ring that holds the bulb assembly in place.
5. Pull the bulb assembly straight up from the lamp housing.
6. Unhook the electrical connector by lifting up the blue tabs and pulling the bulb out.

Downloaded from www.Manualslib.com manuals search engine

7. Install the new bulb through the black retainer ring and into the electrical connector. Tighten the black retainer ring in place. Push the bulb firmly enough so that the blue tabs hook over the tab on the bulb.

8. Carefully put the bulb assembly back into the lamp housing. Be careful not to damage the bulb on the headlamp aiming bar.

Downloaded from www.Manualslib.com manuals search engine

9. Align the pins on the bottom of the headlamp assembly with the holes in the lamp support bracket while placing the holes in the assembly over the bolts where the wing nuts attach.
10. Reinstall and tighten the wing nuts.
11. Reinstall the front turn signal/parking lamp assembly by lining up the tabs at the back of the assembly with the holes in the fender and tighten the thumbscrew.

    Be sure the tab from the front turn signal/parking lamp assembly is inboard of the tab from the headlamp assembly.

Front Turn Signal/Parking Lamps

To replace the front turn signal/parking lamp bulb(s) do the following:

1. Open the hood.

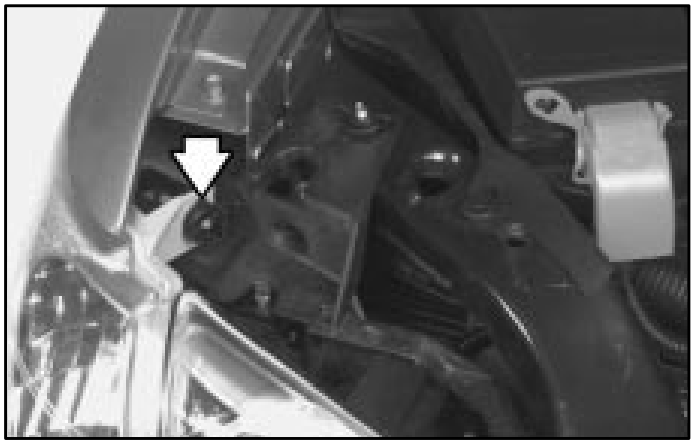

2. Remove the thumbscrew attaching the front turn signal/parking lamp assembly to the headlamp assembly.
3. Pull the front turn signal/parking lamp assembly away from the vehicle.
4. Unscrew the bulb socket from the lamp assembly by pressing the tab while turning it counterclockwise.

Downloaded from www.Manualslib.com manuals search engine

5. Replace the bulb by pulling the old one out and gently pushing the new one into the lamp socket.
6. Line up the tabs on the socket with the gaps in the socket holes and screw the bulb socket back into the lamp housing until a click is heard (the tab popping back out).

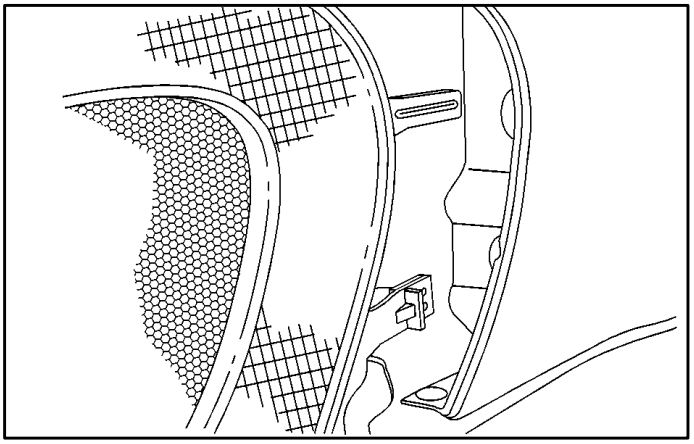

7. To reinstall the lamp assembly, line up and insert the tabs on the back of the assembly in the slots in the fender. Engage the lower clip on the back of the lamp assembly into the fender, keeping the upper tab on the front turn signal/parking lamp assembly inboard of the headlamp bracket tab.
8. To align the front turn signal/parking lamp assembly with the headlamp assembly, lift up the front turn signal/parking lamp assembly until the upper edge is contacting the fender.
9. Fasten the front turn signal/parking lamp assembly to the headlamp assembly with the thumbscrew removed in Step 2.

Downloaded from www.Manualslib.com manuals search engine

Front Sidemarker

To replace the front sidemarker bulb(s) do the following:

1. Open the hood.

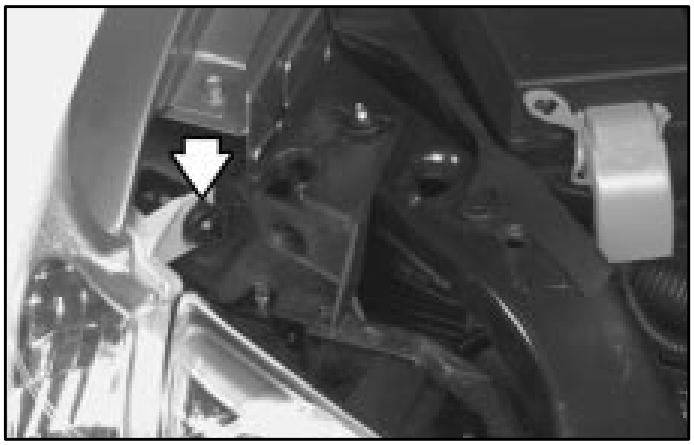

2. Remove the thumbscrew attaching the front turn signal/parking lamp assembly to the headlamp assembly.
3. Pull the front turn signal/parking lamp assembly away from the vehicle.
4. Unscrew the bulb socket from the lamp assembly by turning it counterclockwise.

5. Replace the bulb by pulling the old one out and gently pushing the new one into the lamp socket.
6. Line up the tabs on the socket with the gaps in the socket holes and screw the bulb socket back into the lamp housing.

Downloaded from www.Manualslib.com manuals search engine

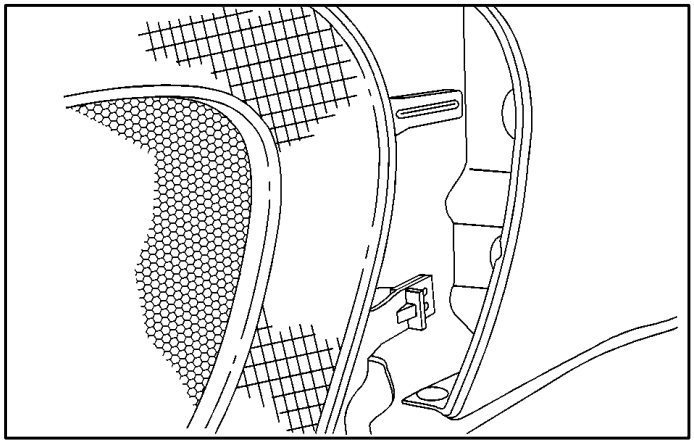

7. To reinstall the lamp assembly, line up and insert the tabs on the back of the assembly in the slots in the fender. Engage the lower clip on the back of the lamp assembly into the fender, keeping the upper tab on the front turn signal/parking lamp assembly inboard of the headlamp bracket tab.
8. To align the front turn signal/parking lamp assembly with the headlamp assembly, lift up the front turn signal/parking lamp assembly until the upper edge is contacting the fender.
9. Fasten the front turn signal/parking lamp assembly to the headlamp assembly with the thumbscrew removed in Step 2.

Taillamps

To replace the taillamp bulb(s) do the following:

1. Open the liftgate.
2. Remove the two screws from the taillamp housing on the inboard side.
3. Pull off the entire taillamp housing.

   The locator/retaining pins on the outboard side are part of the lamp assembly and will remain intact during removal.

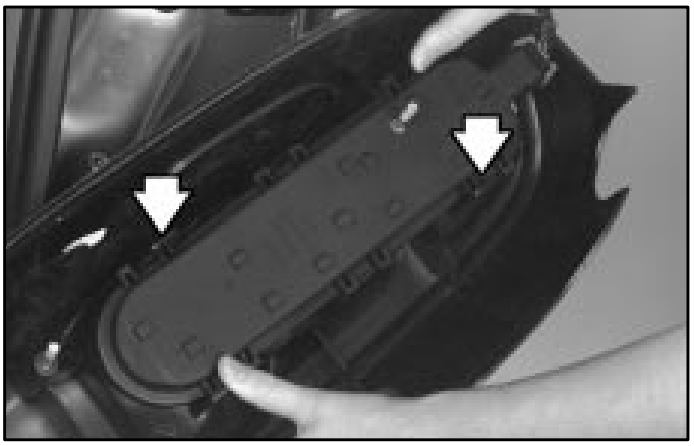

Downloaded from www.Manualslib.com manuals search engine

4. Remove the bulb holder by pressing the four retaining tabs and pulling the holder away from the assembly.

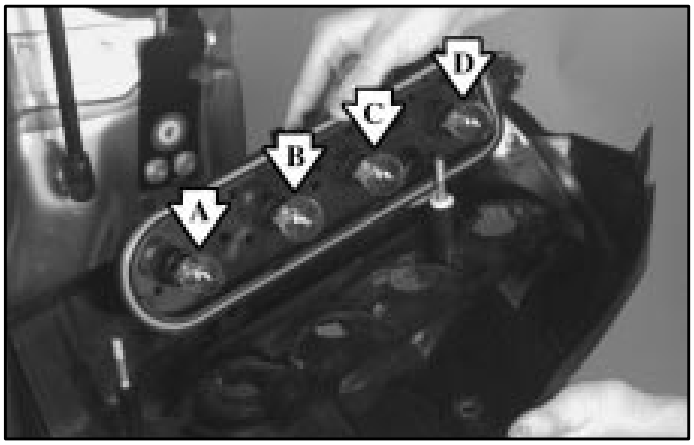

A. Taillamp Bulb
B. Back-Up Lamp Bulb
C. Turn Signal Lamp Bulb
D. Stop/Taillamp Bulb

5. Replace the bulb(s) by pulling the old bulb(s) out and gently pushing the new bulb(s) into the bulb holder socket.
6. Snap the bulb holder back into place, making sure all retaining tabs are properly over the bulb holder tabs.
7. Reinstall the taillamp assembly by inserting the outboard locating/retaining pins until the lamp is seated. Secure with the inboard screws.

Windshield Wiper Blade Replacement

Windshield wiper blades should be inspected at least twice a year for wear or cracking. See “Wiper Blade Check” in the Index for more information.

Replacement blades come in different types and are removed in different ways. For proper type and length, see “Normal Maintenance Replacement Parts” in the Index.

To remove the windshield wiper blade(s) do the following:

1. Turn the wipers on to the lowest intermittent setting.
2. Turn the ignition to OFF while the wipers are at the outer positions of the wipe pattern. The blades are more accessible for removal/replacement while in this position.
3. Pull the windshield wiper arm away from the windshield or backglass.

Downloaded from www.Manualslib.com manuals search engine

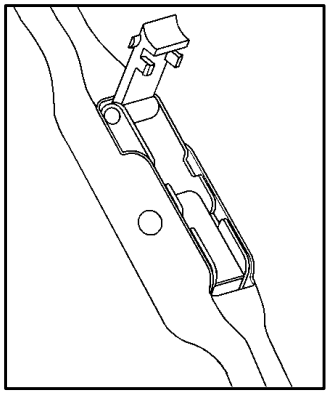

4. While holding the wiper arm away from the glass, push the release clip from under the blade.

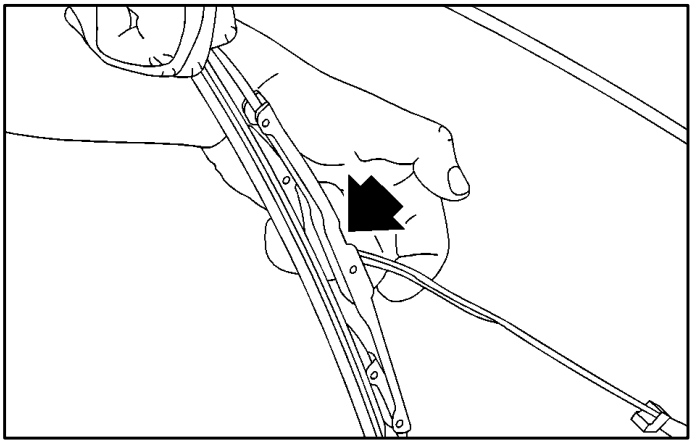

5. Push the release clip at the connecting point of the blade and the arm up and pull the blade assembly down toward the glass to remove it from the wiper arm.
6. Push the new wiper blade securely on the wiper arm until you hear the release clip “click” into place.
7. Push the release clip, from Step 4, down to secure the wiper blade into place.

Downloaded from www.Manualslib.com manuals search engine

Tires

Your new vehicle comes with high-quality tires made by a leading tire manufacturer. If you ever have questions about your tire warranty and where to obtain service, see your Pontiac Warranty booklet for details.

⚠ CAUTION:

Poorly maintained and improperly used tires are dangerous.

- **Overloading your tires can cause overheating as a result of too much friction. You could have an air-out and a serious accident. See "Loading Your Vehicle" in the Index.**

CAUTION: (Continued)

CAUTION: (Continued)

- **Underinflated tires pose the same danger as overloaded tires. The resulting accident could cause serious injury. Check all tires frequently to maintain the recommended pressure. Tire pressure should be checked when your tires are cold.**
- **Overinflated tires are more likely to be cut, punctured or broken by a sudden impact -- such as when you hit a pothole. Keep tires at the recommended pressure.**
- **Worn, old tires can cause accidents. If your tread is badly worn, or if your tires have been damaged, replace them.**

Downloaded from www.Manualslib.com manuals search engine

Inflation -- Tire Pressure

The Certification/Tire label, which is on the rear edge of the driver's door, shows the correct inflation pressures for your tires when they're cold. "Cold" means your vehicle has been sitting for at least three hours or driven no more than 1 mile (1.6 km).

NOTICE:

Don't let anyone tell you that underinflation or overinflation is all right. It's not. If your tires don't have enough air (underinflation), you can get the following:

- **Too much flexing**
- **Too much heat**
- **Tire overloading**
- **Bad wear**
- **Bad handling**
- **Bad fuel economy.**

NOTICE: (Continued)

NOTICE: (Continued)

If your tires have too much air (overinflation), you can get the following:

- **Unusual wear**
- **Bad handling**
- **Rough ride**
- **Needless damage from road hazards.**

When to Check

Check your tires once a month or more.

Don't forget your compact spare tire. It should be at 60 psi (420 kPa).

How to Check

Use a good quality pocket-type gage to check tire pressure. You can't tell if your tires are properly inflated simply by looking at them. Radial tires may look properly inflated even when they're underinflated.

Be sure to put the valve caps back on the valve stems. They help prevent leaks by keeping out dirt and moisture.

Downloaded from www.Manualslib.com manuals search engine

Tire Inspection and Rotation

Tires should be rotated every 6,000 to 8,000 miles (10 000 to 13 000 km). Any time you notice unusual wear, rotate your tires as soon as possible and check wheel alignment. Also check for damaged tires or wheels. See “When It’s Time for New Tires” and “Wheel Replacement” later in this section for more information. Make sure the spare tire is stored securely. Push, pull, and then try to rotate or turn the tire. If it moves, use the folding wrench to tighten the cable. See “Storing a Flat or Spare Tire and Tools” in the Index.

The purpose of regular rotation is to achieve more uniform wear for all tires on the vehicle. The first rotation is the most important. See “Scheduled Maintenance Services” in the Index for scheduled rotation intervals.

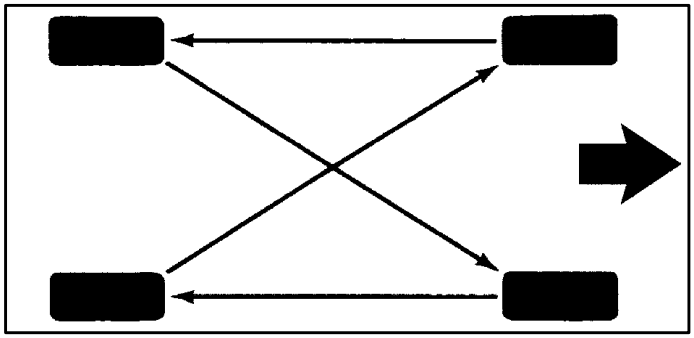

When rotating your tires, always use the correct rotation pattern shown here.

Don’t include the compact spare tire in your tire rotation.

Downloaded from www.Manualslib.com manuals search engine

After the tires have been rotated, adjust the front and rear inflation pressures as shown on the Certification/Tire label. Make certain that all wheel nuts are properly tightened. See “Wheel Nut Torque” in the Index.

⚠ CAUTION:

Rust or dirt on a wheel, or on the parts to which it is fastened, can make wheel nuts become loose after a time. The wheel could come off and cause an accident. When you change a wheel, remove any rust or dirt from places where the wheel attaches to the vehicle. In an emergency, you can use a cloth or a paper towel to do this; but be sure to use a scraper or wire brush later, if you need to, to get all the rust or dirt off. See “Changing a Flat Tire” in the Index.

When It’s Time for New Tires

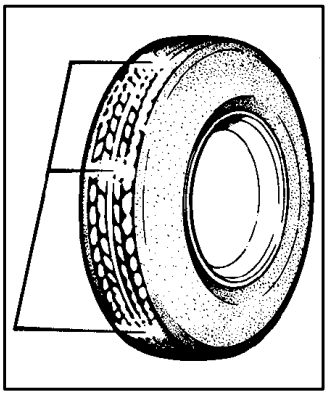

One way to tell when it’s time for new tires is to check the treadwear indicators, which will appear when your tires have only 1/16 inch (1.6 mm) or less of tread remaining.

You need a new tire if any of the following statements are true:

- You can see the indicators at three or more places around the tire.
- You can see cord or fabric showing through the tire’s rubber.
- The tread or sidewall is cracked, cut or snagged deep enough to show cord or fabric.
- The tire has a bump, bulge or split.
- The tire has a puncture, cut or other damage that can’t be repaired well because of the size or location of the damage.

Downloaded from www.Manualslib.com manuals search engine

Buying New Tires

To find out what kind and size of tires you need, look at the Certification/Tire label.

The tires installed on your vehicle when it was new had a Tire Performance Criteria Specification (TPC Spec) number on each tire's sidewall. When you get new tires, get ones with that same TPC Spec number. That way your vehicle will continue to have tires that are designed to give proper endurance, handling, speed rating, traction, ride and other things during normal service on your vehicle. If your tires have an all-season tread design, the TPC number will be followed by an "MS" (for mud and snow).

If you ever replace your tires with those not having a TPC Spec number, make sure they are the same size, load range, speed rating and construction type (bias, bias-belted or radial) as your original tires.

⚠ CAUTION:

Mixing tires could cause you to lose control while driving. If you mix tires of different sizes or types (radial and bias-belted tires), the vehicle may not handle properly, and you could have a crash. Using tires of different sizes may also cause damage to your vehicle. Be sure to use the same size and type tires on all wheels.

It's all right to drive with your compact spare, though. It was developed for use on your vehicle.

⚠ CAUTION:

If you use bias-ply tires on your vehicle, the wheel rim flanges could develop cracks after many miles of driving. A tire and/or wheel could fail suddenly, causing a crash. Use only radial-ply tires with the wheels on your vehicle.

Downloaded from www.Manualslib.com manuals search engine

Uniform Tire Quality Grading

Quality grades can be found where applicable on the tire sidewall between tread shoulder and maximum section width. For example:

Treadwear 200 Traction AA Temperature A

The following information relates to the system developed by the United States National Highway Traffic Safety Administration, which grades tires by treadwear, traction and temperature performance. (This applies only to vehicles sold in the United States.) The grades are molded on the sidewalls of most passenger car tires. The Uniform Tire Quality Grading system does not apply to deep tread, winter-type snow tires, space-saver or temporary use spare tires, tires with nominal rim diameters of 10 to 12 inches (25 to 30 cm), or to some limited-production tires.

While the tires available on General Motors passenger cars and light trucks may vary with respect to these grades, they must also conform to federal safety requirements and additional General Motors Tire Performance Criteria (TPC) standards.

Treadwear

The treadwear grade is a comparative rating based on the wear rate of the tire when tested under controlled conditions on a specified government test course. For example, a tire graded 150 would wear one and a half (1 1/2) times as well on the government course as a tire graded 100. The relative performance of tires depends upon the actual conditions of their use, however, and may depart significantly from the norm due to variations in driving habits, service practices and differences in road characteristics and climate.

Traction -- AA, A, B, C

The traction grades, from highest to lowest, are AA, A, B, and C. Those grades represent the tire's ability to stop on wet pavement as measured under controlled conditions on specified government test surfaces of asphalt and concrete. A tire marked C may have poor traction performance. Warning: The traction grade assigned to this tire is based on straight-ahead braking traction tests, and does not include acceleration, cornering, hydroplaning, or peak traction characteristics.

Downloaded from www.Manualslib.com manuals search engine

Temperature -- A, B, C

The temperature grades are A (the highest), B, and C, representing the tire's resistance to the generation of heat and its ability to dissipate heat when tested under controlled conditions on a specified indoor laboratory test wheel. Sustained high temperature can cause the material of the tire to degenerate and reduce tire life, and excessive temperature can lead to sudden tire failure. The grade C corresponds to a level of performance which all passenger car tires must meet under the Federal Motor Vehicle Safety Standard No. 109. Grades B and A represent higher levels of performance on the laboratory test wheel than the minimum required by law.

Warning: The temperature grade for this tire is established for a tire that is properly inflated and not overloaded. Excessive speed, underinflation, or excessive loading, either separately or in combination, can cause heat buildup and possible tire failure.

Wheel Alignment and Tire Balance

The wheels on your vehicle were aligned and balanced carefully at the factory to give you the longest tire life and best overall performance.

Scheduled wheel alignment and wheel balancing are not needed. However, if you notice unusual tire wear or your vehicle pulling one way or the other, the alignment may need to be reset. If you notice your vehicle vibrating when driving on a smooth road, your wheels may need to be rebalanced.

Wheel Replacement

Replace any wheel that is bent, cracked, or badly rusted or corroded. If wheel nuts keep coming loose, the wheel, wheel bolts and wheel nuts should be replaced. If the wheel leaks air, replace it (except some aluminum wheels, which can sometimes be repaired). See your dealer if any of these conditions exist.

Your dealer will know the kind of wheel you need.

Downloaded from www.Manualslib.com manuals search engine

Each new wheel should have the same load-carrying capacity, diameter, width, offset and be mounted the same way as the one it replaces.

If you need to replace any of your wheels, wheel bolts or wheel nuts, replace them only with new GM original equipment parts. This way, you will be sure to have the right wheel, wheel bolts and wheel nuts for your vehicle.

⚠ CAUTION:

Using the wrong replacement wheels, wheel bolts or wheel nuts on your vehicle can be dangerous. It could affect the braking and handling of your vehicle, make your tires lose air and make you lose control. You could have a collision in which you or others could be injured. Always use the correct wheel, wheel bolts and wheel nuts for replacement.

NOTICE:

The wrong wheel can also cause problems with bearing life, brake cooling, speedometer or odometer calibration, headlamp aim, bumper height, vehicle ground clearance and tire or tire chain clearance to the body and chassis.

See “Changing a Flat Tire” in the Index for more information.

Used Replacement Wheels

⚠ CAUTION:

Putting a used wheel on your vehicle is dangerous. You can’t know how it’s been used or how far it’s been driven. It could fail suddenly and cause an accident. If you have to replace a wheel, use a new GM original equipment wheel.

Downloaded from www.Manualslib.com manuals search engine

Tire Chains

NOTICE:

If your vehicle has P225/60R16 size tires, don't use tire chains. They can damage your vehicle because there's not enough clearance.

Use another type of traction device only if its manufacturer recommends it for use on your vehicle and tire size combination and road conditions. Follow that manufacturer's instructions. To help avoid damage to your vehicle, drive slowly, readjust or remove the device if it's contacting your vehicle, and don't spin your wheels.

NOTICE: (Continued)

NOTICE: (Continued)

If you do find traction devices that will fit, install them on the front tires.

If you have other tires, use tire chains only where legal and only when you must. Use only SAE Class "S" type chains that are the proper size for your tires. Install them on the front tires and tighten them as tightly as possible with the ends securely fastened. Drive slowly and follow the chain manufacturer's instructions. If you can hear the chains contacting your vehicle, stop and retighten them. If the contact continues, slow down until it stops. Driving too fast or spinning the wheels with chains on will damage your vehicle.

Downloaded from www.Manualslib.com manuals search engine

Appearance Care

Remember, cleaning products can be hazardous. Some are toxic. Others can burst into flame if you strike a match or get them on a hot part of the vehicle. Some are dangerous if you breathe their fumes in a closed space. When you use anything from a container to clean your vehicle, be sure to follow the manufacturer's warnings and instructions. And always open your doors or windows when you're cleaning the inside.

Never use these to clean your vehicle:

- Gasoline
- Benzene
- Naphtha
- Carbon Tetrachloride
- Acetone
- Paint Thinner
- Turpentine
- Lacquer Thinner
- Nail Polish Remover

They can all be hazardous -- some more than others -- and they can all damage your vehicle, too.

Don't use any of these unless this manual says you can. In many uses, these will damage your vehicle:

- Alcohol
- Laundry Soap
- Bleach
- Reducing Agents

Cleaning the Inside of Your Vehicle

Use a vacuum cleaner often to get rid of dust and loose dirt. Wipe vinyl, leather, plastic and painted surfaces with a clean, damp cloth.

Cleaning of Fabric/Carpet

Your dealer has two cleaners, Multi-Purpose Interior Cleaner and Capture Non-Solvent Dry Spot and Soil Remover for cleaning fabric and carpet. They will clean normal spots and stains very well. You can get GM-approved cleaning products from your dealer. See "Appearance Care and Materials" in the Index.

Downloaded from www.Manualslib.com manuals search engine

Here are some cleaning tips:

- Always read the instructions on the cleaner label.
- Clean up stains as soon as you can -- before they set.
- Carefully scrape off any excess stain.
- Use a clean cloth or sponge, and change to a clean area often. A soft brush may be used if stains are stubborn.
- If a ring forms on fabric after spot cleaning, clean the entire area immediately or it will set.

Using Multi-Purpose Interior Cleaner on Fabric

1. Vacuum and brush the area to remove any loose dirt.
2. Always clean a whole trim panel or section. Mask surrounding trim along stitch or welt lines.
3. Mix powdered cleaner following the directions on the container label to form thick suds.
4. Use suds only and apply with a clean sponge. Don't saturate the material and don't rub it roughly.
5. As soon as you've cleaned the section, use a sponge to remove the suds.
6. Wipe cleaned area with a clean, damp towel or cloth.
7. Wipe with a clean cloth and let dry.

Special Fabric Cleaning Problems

Stains caused by such things as catsup, coffee (black), egg, fruit, fruit juice, milk, soft drinks, vomit, urine and blood can be removed as follows:

1. Carefully scrape off excess stain, then sponge the soiled area with cool water.
2. If a stain remains, follow the Multi-Purpose Interior Cleaner instructions described earlier.
3. If an odor lingers after cleaning vomit or urine, treat the area with a water/baking soda solution: 1 teaspoon (5 ml) of baking soda to 1 cup (250 ml) of lukewarm water.
4. Let dry.

Stains caused by candy, ice cream, mayonnaise, chili sauce and unknown stains can be removed as follows:

1. Carefully scrape off excess stain.
2. First, clean with cool water and allow to dry completely.
3. If a stain remains, follow instructions for Multi-Purpose Interior Cleaner.

Downloaded from www.Manualslib.com manuals search engine

Cleaning Vinyl

Use warm water and a clean cloth.

- Rub with a clean, damp cloth to remove dirt. You may have to do it more than once.
- Things like tar, asphalt and shoe polish will stain if you don't get them off quickly. Use a clean cloth and a vinyl/leather cleaner. See your dealer for this product.

Cleaning Leather

Use a soft cloth with lukewarm water and a mild soap or saddle soap and wipe dry with a soft cloth. Then, let the leather dry naturally. Do not use heat to dry.

- For stubborn stains, use a leather cleaner. See your dealer for this product.
- *Never* use oils, varnishes, solvent-based or abrasive cleaners, furniture polish or shoe polish on leather.
- Soiled or stained leather should be cleaned immediately. If dirt is allowed to work into the finish, it can harm the leather.

Cleaning the Top of the Instrument Panel

Use only mild soap and water to clean the top surfaces of the instrument panel. Sprays containing silicones or waxes may cause annoying reflections in the windshield and even make it difficult to see through the windshield under certain conditions.

Cleaning Interior Plastic Components

Use only a mild soap and water solution on a soft cloth or sponge. Commercial cleaners may affect the surface finish.

Cleaning the Built-in Child Restraint Pad

The built-in child restraint pad is attached to the seat frame with fastener strips. You can remove the pad and hand wash it with mild soap and water.

Downloaded from www.Manualslib.com manuals search engine

Care of Safety Belts and Built-in Child Restraint Harness

Keep the safety belts and the built-in child restraint harness clean and dry.

⚠ CAUTION:

Do not bleach or dye safety belts or the built-in child restraint harness. If you do, they may be severely weakened. In a crash, they might not be able to provide adequate protection. Clean the safety belts and the child restraint harness only with mild soap and lukewarm water.

Cleaning Glass Surfaces

Glass should be cleaned often. GM Glass Cleaner or a liquid household glass cleaner will remove normal tobacco smoke and dust films on interior glass. See “Appearance Care and Materials” in the Index.

Don’t use abrasive cleaners on glass, because they may cause scratches. Avoid placing decals on the inside rear window, since they may have to be scraped off later.

If abrasive cleaners are used on the inside of the rear window, an electric defogger element may be damaged. Any temporary license should not be attached across the defogger grid.

Cleaning the Outside of the Windshield, Backglass and Wiper Blades

If the windshield is not clear after using the windshield washer, or if the wiper blade chatters when running, wax, sap or other material may be on the blade or windshield.

Clean the outside of the windshield with GM Windshield Cleaner, Bon Ami® Powder (non-scratching glass cleaning powder), GM Part No. 1050011. The windshield is clean if beads do not form when you rinse it with water.

Grime from the windshield will stick to the wiper blades and affect their performance. Clean the blade by wiping vigorously with a cloth soaked in full-strength windshield washer solvent. Then rinse the blade with water.

Check the wiper blades and clean them as necessary; replace blades that look worn.

Downloaded from www.Manualslib.com manuals search engine

Weatherstrips

Silicone grease on weatherstrips will make them last longer, seal better, and not stick or squeak. Apply silicone grease with a clean cloth at least every six months. During very cold, damp weather more frequent application may be required. See “Recommended Fluids and Lubricants” in the Index.

Cleaning the Outside of Your Vehicle

The paint finish on your vehicle provides beauty, depth of color, gloss retention and durability.

Washing Your Vehicle

The best way to preserve your vehicle’s finish is to keep it clean by washing it often with lukewarm or cold water.

Don’t wash your vehicle in the direct rays of the sun. Use a car washing soap. Don’t use strong soaps or chemical detergents. Be sure to rinse the vehicle well, removing all soap residue completely. You can get GM-approved cleaning products from your dealer. See “Appearance Care and Materials” in the Index. Don’t use cleaning agents that are petroleum based, or that contain acid or abrasives. All cleaning agents should be flushed promptly and not allowed to dry on the surface, or they could stain.

Dry the finish with a soft, clean chamois or an all-cotton towel to avoid surface scratches and water spotting.

Before you enter an automatic car wash, if your vehicle is equipped with the optional power sliding door, be sure to have the switch for the power sliding door override feature enabled. See “Power Sliding Door” in the Index.

High pressure car washes may cause water to enter your vehicle.

Cleaning Exterior Lamps/Lenses

Use only lukewarm or cold water, a soft cloth and a car washing soap to clean exterior lamps and lenses. Follow instructions under “Washing Your Vehicle.”

Finish Care

Occasional waxing or mild polishing of your vehicle by hand may be necessary to remove residue from the paint finish. You can get GM-approved cleaning products from your dealer. See “Appearance Care and Materials” in the Index.

Your vehicle has a “basecoat/clearcoat” paint finish. The clearcoat gives more depth and gloss to the colored basecoat. Always use waxes and polishes that are non-abrasive and made for a basecoat/clearcoat paint finish.

Downloaded from www.Manualslib.com manuals search engine

NOTICE:

Machine compounding or aggressive polishing on a basecoat/clearcoat paint finish may dull the finish or leave swirl marks.

Foreign materials such as calcium chloride and other salts, ice melting agents, road oil and tar, tree sap, bird droppings, chemicals from industrial chimneys, etc., can damage your vehicle's finish if they remain on painted surfaces. Wash the vehicle as soon as possible. If necessary, use non-abrasive cleaners that are marked safe for painted surfaces to remove foreign matter.

Exterior painted surfaces are subject to aging, weather and chemical fallout that can take their toll over a period of years. You can help to keep the paint finish looking new by keeping your vehicle garaged or covered whenever possible.

Cleaning Aluminum Wheels (If Equipped)

Keep your wheels clean using a soft clean cloth with mild soap and water. Rinse with clean water. After rinsing thoroughly, dry with a soft clean towel. A wax may then be applied.

The surface of these wheels is similar to the painted surface of your vehicle. Don't use strong soaps, chemicals, abrasive polishes, abrasive cleaners, cleaners with acid or abrasive cleaning brushes on them because you could damage the surface. Do not use chrome polish on aluminum wheels.

Don't take your vehicle through an automatic car wash that has silicon carbide tire cleaning brushes. These brushes can also damage the surface of these wheels.

Cleaning Tires

To clean your tires, use a stiff brush with a tire cleaner.

NOTICE:

When applying a tire dressing always take care to wipe off any overspray or splash from all painted surfaces on the body or wheels of the vehicle. Petroleum-based products may damage the paint finish and tires.

Downloaded from www.Manualslib.com manuals search engine

Sheet Metal Damage

If your vehicle is damaged and requires sheet metal repair or replacement, make sure the body repair shop applies anti-corrosion material to the parts repaired or replaced to restore corrosion protection.

Original manufacturer replacement parts will provide the corrosion protection while maintaining the warranty.

Finish Damage

Any stone chips, fractures or deep scratches in the finish should be repaired right away. Bare metal will corrode quickly and may develop into a major repair expense.

Minor chips and scratches can be repaired with touch-up materials available from your dealer or other service outlets. Larger areas of finish damage can be corrected in your dealer's body and paint shop.

Underbody Maintenance

Chemicals used for ice and snow removal and dust control can collect on the underbody. If these are not removed, accelerated corrosion (rust) can occur on the underbody parts such as fuel lines, frame, floor pan and exhaust system even though they have corrosion protection.

At least every spring, flush these materials from the underbody with plain water. Clean any areas where mud and other debris can collect. Dirt packed in closed areas of the frame should be loosened before being flushed. Your dealer or an underbody car washing system can do this for you.

Chemical Paint Spotting

Some weather and atmospheric conditions can create a chemical fallout. Airborne pollutants can fall upon and attack painted surfaces on your vehicle. This damage can take two forms: blotchy, ringlet-shaped discolorations, and small irregular dark spots etched into the paint surface.

Although no defect in the paint job causes this, Pontiac will repair, at no charge to the owner, the surfaces of new vehicles damaged by this fallout condition within 12 months or 12,000 miles (20 000 km) of purchase, whichever occurs first.

Downloaded from www.Manualslib.com manuals search engine

GM Vehicle Care/Appearance Materials

PART NUMBER	SIZE	DESCRIPTION	USAGE
994954	23 in. x 25 in.	Polishing Cloth – Wax Treated	Exterior polishing cloth
1050172	16 oz. (0.473 L)	Tar and Road Oil Remover	Removes tar, road oil and asphalt
1050173	16 oz. (0.473 L)	Chrome Cleaner and Polish	Use on chrome, stainless steel, nickel, copper and brass
1050174	16 oz. (0.473 L)	White Sidewall Tire Cleaner	Removes soil and black marks from whitewalls
1050214	32 oz. (0.946 L)	Vinyl Cleaner	Cleans vinyl tops, upholstery and convertible tops
1050427	23 oz. (0.680 L)	Glass Cleaner	Removes dirt, grime, smoke and fingerprints
1052918**	8 oz. (0.237 L)	Armor All™ Protectant	Protects leather, wood, acrylics, Plexiglas™, plastic, rubber and vinyl
1052925	16 oz. (0.473 L)	Multi-Purpose Interior Cleaner	Cleans carpets, seats, interior trim, door panels and floor mats
1052929	16 oz. (0.473 L)	Wheel Cleaner	Spray on and rinse with water
1052930	8 oz. (0.237 L)	Capture Dry Spot Remover	Attracts, absorbs and removes soils on fabric
12345721	2.5 sq. ft.	Synthetic Chamois	Shines vehicle without scratching
12345725	12 oz. (0.354 L)	Silicone Tire Shine	Spray on tire shine
12377964*	16 oz. (0.473 L)	Finish Enhancer	Removes dust, fingerprints and surface contaminants
12377966*	16 oz. (0.473 L)	Cleaner Wax	Removes light scratches and oxidation and protects finish
12377984*	16 oz. (0.473 L)	Surface Cleaner	Removes contaminants, blemishes and swirl marks

See your General Motors Parts Department for these products.
See “Recommended Fluids and Lubricants” in the Index.

* For exterior use only.
** Not recommended for use on instrument panels.

Downloaded from www.Manualslib.com manuals search engine

Vehicle Identification Number (VIN)

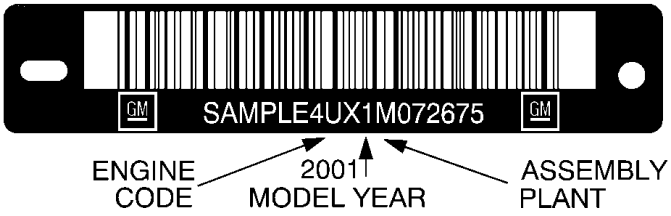

This is the legal identifier for your vehicle. It appears on a plate in the front corner of the instrument panel, on the driver's side. You can see it if you look through the windshield from outside your vehicle. The VIN also appears on the Vehicle Certification and Service Parts labels and the certificates of title and registration.

Engine Identification

The 8th character in your VIN is the engine code. This code will help you identify your engine, specifications and replacement parts.

Service Parts Identification Label

You'll find this label on the inside of the access panel located on the driver's side of the rear of the vehicle. It's very helpful if you ever need to order parts. On this label is:

- your VIN,
- the model designation,
- paint information and
- a list of all production options and special equipment.

Be sure that this label is not removed from the vehicle.

Downloaded from www.Manualslib.com manuals search engine

Electrical System

Add-On Electrical Equipment

NOTICE:

Don't add anything electrical to your vehicle unless you check with your dealer first. Some electrical equipment can damage your vehicle and the damage wouldn't be covered by your warranty. Some add-on electrical equipment can keep other components from working as they should.

Your vehicle has an air bag system. Before attempting to add anything electrical to your vehicle, see "Servicing Your Air Bag-Equipped Vehicle" in the Index.

Headlamp Wiring

The headlamp wiring is protected by an internal circuit breaker in the instrument panel fuse panel. An electrical overload will cause the lamps to go on and off, or in some cases to remain off. If this happens, have your headlamp wiring checked right away.

Windshield Wipers

The windshield wiper motor is protected by an internal circuit breaker and a fuse. If the motor overheats due to heavy snow, etc., the wiper will stop until the motor cools. If the overload is caused by some electrical problem, be sure to get it fixed.

Power Windows and Other Power Options

Circuit breakers in the instrument panel fuse panel protect the power windows and other power accessories. When the current load is too heavy, the circuit breaker opens and closes, protecting the circuit until the problem is fixed.

Downloaded from www.Manualslib.com manuals search engine

Fuses and Circuit Breakers

The wiring circuits in your vehicle are protected from short circuits by a combination of fuses, circuit breakers and fusible thermal links.

Look at the silver-colored band inside the fuse. If the band is broken or melted, replace the fuse. Be sure you replace a bad fuse with a new one of the identical size and rating.

If you ever have a problem on the road and don't have a spare fuse, you can borrow one that has the same amperage or use one of the spare fuses in the underhood fuse and relay center. Just pick some feature of your vehicle that you can get along without -- like the radio or cigarette lighter -- and use its fuse, if it is the right amperage. Replace it as soon as you can.

There are two fuse blocks in your vehicle: the instrument panel fuse block and the underhood fuse and relay center.

Instrument Panel Fuse Block

The instrument panel fuse block is located to the right of the glove box.

Pull the door open to access the instrument panel fuse block.

Downloaded from www.Manualslib.com manuals search engine

CIRCUIT BEAKERS DISJONCTEUR					
	6	15	24	33	42
1	7	16	25	34	43
	8	17	26	35	44
2	9	18	27	36	45
	10	19	28	37	46
3	11	20	29	38	47
4	12	21	30	39	48
	13	22	31	40	49
5	14	23	32	41	50

Circuit Breakers	Usage
1	Daytime Running Lamps (DRL) Control Module, Headlamp and Instrument Panel Dimmer Switch
2	Power Sliding Door
3	Front Power Windows
4	6-Way Power Seats and Rear Side Door Actuator Motor
5	Blower Motor Hi Speed Relay Module

Fuses	Usage
6	Steering Wheel Radio Control Switches (Illumination)
7	Instrument Cluster to PRNDL Indicators
8	Power Remote Control Mirror Switch
9	Cruise Control Module, Switch and Release Switch
10	Not Used
11	Powertrain Control Module (PCM), Ignition Crank
12	PASS-Key® III System
13	Body Control Module (BCM)
14	Heated Mirrors
15	Not Used
16	Not Used
17	Cigarette Lighter, DIC, Front Auxiliary Power Outlets
18	Turn Signal Switch

Downloaded from www.Manualslib.com manuals search engine

Fuses	Usage
19	Interior Lamp and Multifunction Switch (Power Vent Switch)
20	Windshield Wiper/Washer Motor and Switch
21	Turn Signal Switch
22	Rear Electric Accessory Plug Housing
23	DRL Control Module
24	Not Used
25	Rear Window Defogger Relay, Heated Mirrors
26	OnStar®
27	Inflatable Restraint Control Module
28	Heater-A/C Control
29	Instrument Cluster, BCM, Electronic Level Control (ELC) Sensor and Relay
30	Stoplamp Switch
31	Module/Electronic Brake Control Module/Electronic Brake Traction Control Module (EBCM/EBTCM)
32	Evaporative Emissions (EVAP) Canister Vent Solenoid Valve
33	Not Used
34	ELC Air Compressor and ELC Relay, Trailer Harness
35	Courtesy Lamp
36	BCM, Electronic Brake Control Indicator Lamp Driver Module, Instrument Panel Cluster, Rear Side Door Actuator Control Module, Rear Windows
37	Rear HVAC-A/C Control
38	Rear Window Wiper Motor, Rear Window Wiper/Washer and Multifunction Switch (Rear Window Wiper/Washer Switch)

Downloaded from www.Manualslib.com manuals search engine

Fuses	Usage
39	Not Used
40	Not Used
41	Not Used
42	Not Used
43	Not Used
44	Retained Accessory Power (RAP) Relay
45	Not Used
46	Air Inlet Actuator, DIC Display, DRL Control Module, Heater-A/C Control, Temperature Door Actuator (Front) and Rear Window Defogger Relay
47	BCM Programming
48	Not Used
49	Not Used
50	IGN MAIN Relay and PCM, Electronic Break Control Module

Underhood Fuse and Relay Center

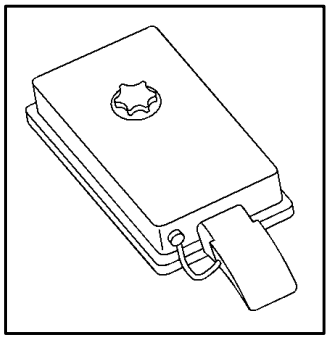

This fuse and relay center is located in the engine compartment, in front of the windshield washer fluid reservoir. See “Engine Compartment Overview” in the Index for more information on location.

The fuses marked spare are available if a replacement fuse is needed.

To remove the cover, turn the knob counterclockwise and lift up. Remove the cover.

When finished, put the cover back on, turn the knob clockwise to tighten the cover in place. Make sure that the remote positive (+) terminal cover is on correctly.

Downloaded from www.Manualslib.com manuals search engine

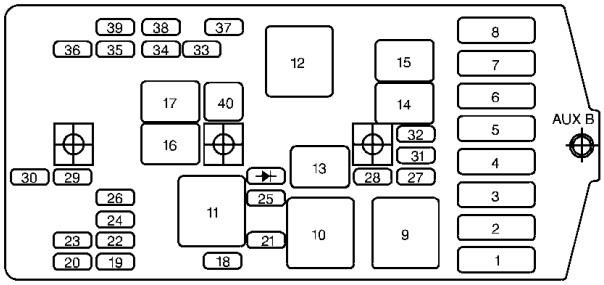

Maxi Fuse	Usage
1 COOL FAN 2	Coolant Fans
2	Not Used
3 HEADLAMPS	Circuit Breakers: FRT HVAC HI BLWR, and HEADLAMP Fuses (Instrument Panel): HAZARD and STOPLAMP
4 BATT MAIN 2	Circuit Breaker: PWR SEAT/PSD. Fuses (Instrument Panel): ELC and RR DEFOG

Maxi Fuse	Usage
5 IGN MAIN 1	Ignition Switch to Fuses (Instrument Panel): ABS/TCS IGN, CRUISE, DRL, ELEC PRNDL, IGN 1, PSD, SIR, T/SIG and PCM [IGN MAIN Relay (Underhood Electrical Center Fuses: A/C CLU, ELEK IGN, IGN 1-U/H, INJ, TCC)]
6 COOL FAN 1	Coolant Fans
7 BATT MAIN 1	Fuses (Instrument Panel): ABS MOD BATT, CIGAR/DLC, CTSY LAMP, FRT PWR SCKT, PWR LOCK, PWR MIRROR and RR PWR SCKT
8 IGN MAIN 2	Ignition Switch to Fuses (I/P): BCM PRGRM, FRT HVAC LOW/MED BLWR, FRT WPR/WSHR, HVAC/DRL, MALL/RADIO/DIC, PWR QRT VENT, RR HVAC, RR WPR/WSHR. SWC ACCY and PWR WDO Circuit Breaker

Downloaded from www.Manualslib.com manuals search engine

Mini Relays	Usage
9 COOL FAN	RH FAN 1, LH FAN 2
10 COOL FAN 2	LH FAN 2
11 IGN MAIN	FUSES: A/C CLU, IGN 1-U/H, INS, ELEK IGN, TCC
12 COOL FAN 1	RH FAN 1, LH FAN 2

Micro Relays	Usage
13 A/C CLU	A/C Clutch
14 FUEL PUMP	Fuel Pump
15	Not Used
16 HORN	Horn
17 FOG LAMP	LH Fog Lamp, RH Fog Lamp, Fog Lamp Indicator

Mini Fuse	Usage
18 INJ	Fuel Injectors 1-6
19 SPARE	Not Used
20 SPARE	Not Used

Mini Fuse	Usage
21 IGN1-UH	Evaporative Emissions (EVAP) Canister Purge Valve, Heated Oxygen Sensors 1 and 2, Mass Air Flow (MAF) Sensor
22 SPARE	Not Used
23 SPARE	Not Used
24 SPARE	Not Used
25 ELEK IGN	Ignition Control Module (ICM)
26 SPARE	Not Used
27 B/U LAMP	Transaxle Range Switch to Back-up Lamps
28 A/C CLU	A/C CLU Relay to A/C Compressor Clutch Oil
29 RADIO	Driver Information Display, Heater A/C Control, Radio, Rear Side Door Actuator Control Motor, Remote Control Door Lock Receiver (RCDLR), Security Indicator Lamp and Theft-Deterrent Shock Sensor
30 ALT SENSE	Generator

Downloaded from www.Manualslib.com manuals search engine

Mini Fuse	Usage
31 TCC	Automatic Transaxle (Torque Converter Clutch Solenoids) Stoplamp Switch to PCM
32 FUEL PUMP	Fuel Pump Relay
33 ECM SENSE	Powertrain Control Module (PCM)
34	Not Used
35 FOG LP	Fog Lamp Relay
36 HORN	Horn Relay
37 PARK LP	Daytime Running Lamps (DRL) Control Module, Headlamps and Instrument Panel Dimmer Switch Theft-Deterrent Relay to Headlamps
38	Not Used
39 AIR	Not Used
Diodes	
A/C CLU DIODE	Air Conditioning Clutch Diode
40	Mini Fuse Puller

Replacement Bulbs

Headlamps 9004-HBI

Front Turn Signal/
Parking Lamps . . . . . 3157 NA or 3157 NAK

Front Sidemarker Lamps 194

Stop/Taillamps (Top) 3057

Signal Lamps (2nd from Top) 3156

Back-up Lamps (3rd from Top) 3156

Taillamps (Bottom) 3057

Downloaded from www.Manualslib.com manuals search engine

Capacities and Specifications

The following approximate capacities are given in English and metric conversions.

Please refer to “Recommended Fluids and Lubricants” in the Index for more information.

Automatic Transaxle
Pan Removal
and Replacement . . . . . 7.4 quarts (7.0 L)
Complete Overhaul . . . . . 10.0 quarts (9.5 L)

Cooling System
With A/C . . . . . 9.6 quarts (9.1 L)
With Rear Climate Control . . . . 11.9 quarts (11.3 L)

Engine Crankcase - Oil and Filter Change . . . . . 4.5 quarts (4.25 L)

Fuel Capacity
Standard/Regular . . . . . 20.0 U.S. gallons (75.0 L)
Optional/Extended . . . . 25.5 U.S. gallons (94.0 L)

Refrigerant, Air Conditioning . . . . . See Refrigerant Label under the hood.

Tire Pressures, Sizes . . . . . See Certification/Tire label on the rear edge of the driver’s door.

Wheel Nut Torque . . . . . 100 lb-ft (140 N·m)

Windshield Washer Fluid . . . . . 1.0 U.S. gallon (0.37 L)

All capacities are approximate. When adding, be sure to fill to the appropriate level, as recommended in this manual.

Engine Specifications

Engine VIN Code . . . . . E
Engine Type V6
Firing Order 1-2-3-4-5-6
Horsepower 185
Thermostat Temperature Specification . . . . . 195°F (91°C)

Downloaded from www.Manualslib.com manuals search engine

Normal Maintenance Replacement Parts

Engine Air
Cleaner/Filter . . . . . ACDelco® Type A-1208C
Battery Replacement . . . . . CCA=600
Engine Oil Filter PF47
Passenger Compartment
Air Filter (2) . . . . . GM Part No. 52482929
PCV Valve CV892C
Radiator Cap RC27
Spark Plugs . . . . . ACDelco® Type 41-940
Gap: 0.060 inches (1.5 mm)
Windshield Wiper Blades
Length . . . . . 24.0 inches (60.0 cm)
Type . . . . . Shepherd's Hook
Wiper Blade (Backglass)
Length . . . . . 16.0 inches (40.6 cm)
Type . . . . . Shepherd's Hook

Vehicle Dimensions - Regular Wheel Base

Length . . . . . 187.3 inches (475.8 cm)
Width . . . . . 72.7 inches (184.7 cm)
Height . . . . . 67.4 inches (171.2 cm)
Wheelbase . . . . . 112.0 inches (284.5 cm)
Front Tread Width . . . . . 61.5 inches (156.2 cm)
Rear Tread Width . . . . . 63.3 inches (160.8 cm)

Vehicle Dimensions - Extended Wheel Base

Length . . . . . 201.3 inches (511.4 cm)
Width . . . . . 72.7 inches (184.7 cm)
Height . . . . . 68.1 inches (172.9 cm)
Wheelbase . . . . . 120.0 inches (304.7 cm)
Front Tread Width . . . . . 61.5 inches (156.2 cm)
Rear Tread Width . . . . . 63.3 inches (160.8 cm)

Downloaded from www.Manualslib.com manuals search engine

Section 7 Maintenance Schedule

This section covers the maintenance required for your vehicle. Your vehicle needs these services to retain its safety, dependability and emission control performance.

7-2 Introduction
7-4 Part A: Scheduled Maintenance Services
7-15 Part B: Owner Checks and Services
7-20 Part C: Periodic Maintenance Inspections
7-22 Part D: Recommended Fluids and Lubricants
7-24 Part E: Maintenance Record

Downloaded from www.Manualslib.com manuals search engine

IMPORTANT:
KEEP ENGINE OIL AT THE PROPER LEVEL AND CHANGE AS RECOMMENDED

GM Protection Plan

Have you purchased the GM Protection Plan? The Plan supplements your new vehicle warranties. See your Warranty and Owner Assistance booklet or your dealer for details.

Introduction

Your Vehicle and the Environment

Proper vehicle maintenance not only helps to keep your vehicle in good working condition, but also helps the environment. All recommended maintenance procedures are important. Improper vehicle maintenance can even affect the quality of the air we breathe. Improper fluid levels or the wrong tire inflation can increase the level of emissions from your vehicle. To help protect our environment, and to keep your vehicle in good condition, please maintain your vehicle properly.

Maintenance Requirements

Maintenance intervals, checks, inspections and recommended fluids and lubricants as prescribed in this manual are necessary to keep your vehicle in good working condition. Any damage caused by failure to follow recommended maintenance may not be covered by warranty.

Downloaded from www.Manualslib.com manuals search engine

How This Section is Organized

This maintenance schedule is divided into five parts:

"Part A: Scheduled Maintenance Services" shows what to have done and how often. Some of these services can be complex, so unless you are technically qualified and have the necessary equipment, you should let your dealer's service department or another qualified service center do these jobs.

⚠ CAUTION:

Performing maintenance work on a vehicle can be dangerous. In trying to do some jobs, you can be seriously injured. Do your own maintenance work only if you have the required know-how and the proper tools and equipment for the job. If you have any doubt, have a qualified technician do the work.

If you want to get the service information, see "Service and Owner Publications" in the Index.

"Part B: Owner Checks and Services" tells you what should be checked and when. It also explains what you can easily do to help keep your vehicle in good condition.

"Part C: Periodic Maintenance Inspections" explains important inspections that your dealer's service department or another qualified service center should perform.

"Part D: Recommended Fluids and Lubricants" lists some recommended products necessary to help keep your vehicle properly maintained. These products, or their equivalents, should be used whether you do the work yourself or have it done.

"Part E: Maintenance Record" is a place for you to record and keep track of the maintenance performed on your vehicle. Keep your maintenance receipts. They may be needed to qualify your vehicle for warranty repairs.

Downloaded from www.Manualslib.com manuals search engine

Part A: Scheduled Maintenance Services

Using Your Maintenance Schedule

We at General Motors want to help you keep your vehicle in good working condition. But we don't know exactly how you'll drive it. You may drive very short distances only a few times a week. Or you may drive long distances all the time in very hot, dusty weather. You may use your vehicle in making deliveries. Or you may drive it to work, to do errands or in many other ways.

Because of all the different ways people use their vehicles, maintenance needs vary. You may need more frequent checks and replacements. So please read the following and note how you drive. If you have any questions on how to keep your vehicle in good condition, see your dealer.

This part tells you the maintenance services you should have done and when you should schedule them. If you go to your dealer for your service needs, you'll know that GM-trained and supported service people will perform the work using genuine GM parts.

The proper fluids and lubricants to use are listed in Part D. Make sure whoever services your vehicle uses these. All parts should be replaced and all necessary repairs done before you or anyone else drives the vehicle.

This schedule is for vehicles that:

- carry passengers and cargo within recommended limits. You will find these limits on your vehicle's Certification/Tire label. See "Loading Your Vehicle" in the Index.
- are driven on reasonable road surfaces within legal driving limits.
- use the recommended fuel. See "Fuel" in the Index.

Downloaded from www.Manualslib.com manuals search engine

Scheduled Maintenance

The services shown in this schedule up to 100,000 miles (166 000 km) should be performed after 100,000 miles (166 000 km) at the same intervals. The services shown at 150,000 miles (240 000 km) should be performed at the same interval after 150,000 miles (240 000 km).

See “Owner Checks and Services” and “Periodic Maintenance Inspections” following.

Footnotes

† The U.S. Environmental Protection Agency or the California Air Resources Board has determined that the failure to perform this maintenance item will not nullify the emission warranty or limit recall liability prior to the completion of the vehicle’s useful life. We, however, urge that all recommended maintenance services be performed at the indicated intervals and the maintenance be recorded.

+ A good time to check your brakes is during tire rotation. See “Brake System Inspection” under “Periodic Maintenance Inspections” in Part C of this schedule.

Downloaded from www.Manualslib.com manuals search engine

Scheduled Maintenance

Engine Oil and Chassis Lubrication Scheduled Maintenance

Change engine oil and filter as indicated by the GM Oil Life System™ (or every 12 months, whichever occurs first). Reset the system. The system will show you when to change the oil -- usually between 3,000 miles (5 000 km) and 10,000 miles (16 000 km) since your last oil change. Under severe conditions, the indicator may come on before 3,000 miles (5 000 km). Never drive your vehicle more than 10,000 miles (16 000 km) or 12 months without an oil and filter change.

The system won't detect dust in the oil. So if you drive in a dusty area, be sure to change your oil and filter every 3,000 miles (5 000 km) or sooner if the change engine oil message appears. Remember to reset the Oil Life System when the oil and filter have been changed. See "Oil Life System" in the Index for information on resetting.

An Emission Control Service.

Lubricate chassis components with each engine oil and filter change. Lubricate the suspension, steering linkage, transaxle shift linkage, parking brake cable guides and the underbody contact points and linkage.

Downloaded from www.Manualslib.com manuals search engine

Scheduled Maintenance

ENGINE OIL CHANGE		
DATE	ACTUAL MILEAGE	SERVICED BY:

ENGINE OIL CHANGE		
DATE	ACTUAL MILEAGE	SERVICED BY:

Downloaded from www.Manualslib.com manuals search engine

Scheduled Maintenance

ENGINE OIL CHANGE		
DATE	ACTUAL MILEAGE	SERVICED BY:

ENGINE OIL CHANGE		
DATE	ACTUAL MILEAGE	SERVICED BY:

Downloaded from www.Manualslib.com manuals search engine

Scheduled Maintenance

7,500 Miles (12 500 km)

DATE	
ACTUAL MILEAGE	SERVICED BY:

☐ Rotate tires. See “Tire Inspection and Rotation” in the Index for proper rotation pattern and additional information. *(See footnote +.)*

15,000 Miles (25 000 km)

DATE	
ACTUAL MILEAGE	SERVICED BY:

☐ Inspect engine air cleaner filter if you are driving in dusty conditions. Replace filter if necessary.
An Emission Control Service. (See footnote †.)

☐ Replace passenger compartment air filter. If you drive regularly under dusty conditions, the filter may require replacement more often.

☐ Rotate tires. See “Tire Inspection and Rotation” in the Index for proper rotation pattern and additional information. *(See footnote +.)*

22,500 Miles (37 500 km)

DATE	
ACTUAL MILEAGE	SERVICED BY:

☐ Rotate tires. See “Tire Inspection and Rotation” in the Index for proper rotation pattern and additional information. *(See footnote +.)*

Downloaded from www.Manualslib.com manuals search engine

Scheduled Maintenance

30,000 Miles (50 000 km)

DATE	
ACTUAL MILEAGE	SERVICED BY:

- ☐ Replace passenger compartment air filter. If you drive regularly under dusty conditions, the filter may require replacement more often.
- ☐ Rotate tires. See “Tire Inspection and Rotation” in the Index for proper rotation pattern and additional information. *(See footnote +.)*
- ☐ Replace engine air cleaner filter.
  An Emission Control Service.

37,500 Miles (62 500 km)

DATE	
ACTUAL MILEAGE	SERVICED BY:

- ☐ Rotate tires. See “Tire Inspection and Rotation” in the Index for proper rotation pattern and additional information. *(See footnote +.)*

45,000 Miles (75 000 km)

DATE	
ACTUAL MILEAGE	SERVICED BY:

- ☐ Inspect engine air cleaner filter if you are driving in dusty conditions. Replace filter if necessary.
  An Emission Control Service. (See footnote †.)
- ☐ Replace passenger compartment air filter. If you drive regularly under dusty conditions, the filter may require replacement more often.
- ☐ Rotate tires. See “Tire Inspection and Rotation” in the Index for proper rotation pattern and additional information. *(See footnote +.)*

Downloaded from www.Manualslib.com manuals search engine

Scheduled Maintenance

50,000 Miles (83 000 km)

DATE	
ACTUAL MILEAGE	SERVICED BY:

☐ Change automatic transaxle fluid and filter if the vehicle is mainly driven under one or more of these conditions:

- In heavy city traffic where the outside temperature regularly reaches 90°F (32°C) or higher.
- In hilly or mountainous terrain.
- When doing frequent trailer towing.
- Uses such as found in taxi, police or delivery service.

If you do not use your vehicle under any of these conditions, change the fluid and filter at 100,000 miles (166 000 km).

52,500 Miles (87 500 km)

DATE	
ACTUAL MILEAGE	SERVICED BY:

☐ Rotate tires. See “Tire Inspection and Rotation” in the Index for proper rotation pattern and additional information. *(See footnote +.)*

Downloaded from www.Manualslib.com manuals search engine

Scheduled Maintenance

60,000 Miles (100 000 km)

DATE	
ACTUAL MILEAGE	SERVICED BY:

- ☐ Replace passenger compartment air filter. If you drive regularly under dusty conditions, the filter may require replacement more often.
- ☐ Rotate tires. See “Tire Inspection and Rotation” in the Index for proper rotation pattern and additional information. *(See footnote +.)*
- ☐ Inspect engine accessory drive belt.
  An Emission Control Service.
- ☐ Replace engine air cleaner filter.
  An Emission Control Service.

67,500 Miles (112 500 km)

DATE	
ACTUAL MILEAGE	SERVICED BY:

- ☐ Rotate tires. See “Tire Inspection and Rotation” in the Index for proper rotation pattern and additional information. *(See footnote +.)*

75,000 Miles (125 000 km)

DATE	
ACTUAL MILEAGE	SERVICED BY:

- ☐ Inspect engine air cleaner filter if you are driving in dusty conditions. Replace filter if necessary.
  An Emission Control Service. (See footnote †.)
- ☐ Replace passenger compartment air filter. If you drive regularly under dusty conditions, the filter may require replacement more often.
- ☐ Rotate tires. See “Tire Inspection and Rotation” in the Index for proper rotation pattern and additional information. *(See footnote +.)*

Downloaded from www.Manualslib.com manuals search engine

Scheduled Maintenance

82,500 Miles (137 500 km)

☐ Rotate tires. See “Tire Inspection and Rotation” in the Index for proper rotation pattern and additional information. *(See footnote +.)*

DATE	
ACTUAL MILEAGE	SERVICED BY:

90,000 Miles (150 000 km)

☐ Replace passenger compartment air filter. If you drive regularly under dusty conditions, the filter may require replacement more often.

☐ Replace engine air cleaner filter.
An Emission Control Service.

☐ Rotate tires. See “Tire Inspection and Rotation” in the Index for proper rotation pattern and additional information. *(See footnote +.)*

DATE	
ACTUAL MILEAGE	SERVICED BY:

97,500 Miles (162 500 km)

☐ Rotate tires. See “Tire Inspection and Rotation” in the Index for proper rotation pattern and additional information. *(See footnote +.)*

DATE	
ACTUAL MILEAGE	SERVICED BY:

Downloaded from www.Manualslib.com manuals search engine

Scheduled Maintenance

100,000 Miles (166 000 km)

DATE	
ACTUAL MILEAGE	SERVICED BY:

- ☐ Inspect spark plug wires.
  An Emission Control Service.
- ☐ Replace spark plugs.
  An Emission Control Service.
- ☐ Change automatic transaxle fluid and filter if the vehicle is mainly driven under one or more of these conditions:
  - – In heavy city traffic where the outside temperature regularly reaches 90°F (32°C) or higher.
  - – In hilly or mountainous terrain.
  - – When doing frequent trailer towing.
  - – Uses such as found in taxi, police or delivery service.
- ☐ If you haven't used your vehicle under severe service conditions listed previously and, therefore, haven't changed your automatic transaxle fluid, change both the fluid and filter.

150,000 Miles (240 000 km)

DATE	
ACTUAL MILEAGE	SERVICED BY:

- ☐ Drain, flush and refill cooling system (or every 60 months since last service, whichever occurs first). See "Engine Coolant" in the Index for what to use. Inspect hoses. Clean radiator, condenser, pressure cap and neck. Pressure test the cooling system and pressure cap.
  An Emission Control Service.

Downloaded from www.Manualslib.com manuals search engine

Part B: Owner Checks and Services

Listed in this part are owner checks and services which should be performed at the intervals specified to help ensure the safety, dependability and emission control performance of your vehicle.

Be sure any necessary repairs are completed at once. Whenever any fluids or lubricants are added to your vehicle, make sure they are the proper ones, as shown in Part D.

At Each Fuel Fill

It is important for you or a service station attendant to perform these underhood checks at each fuel fill.

Engine Oil Level Check

Check the engine oil level and add the proper oil if necessary. See “Engine Oil” in the Index for further details.

Engine Coolant Level Check

Check the engine coolant level and add DEX-COOL® coolant mixture if necessary. See “Engine Coolant” in the Index for further details.

Windshield Washer Fluid Level Check

Check the windshield washer fluid level in the windshield washer tank and add the proper fluid if necessary. See “Windshield Washer Fluid” in the Index for further details.

At Least Once a Month

Tire Inflation Check

Make sure tires are inflated to the correct pressures. Don’t forget to check your spare tire. See “Tires” in the Index for further details.

Cassette Deck Service

Clean cassette deck. Cleaning should be done every 50 hours of tape play. See “Audio Systems” in the Index for further details.

Downloaded from www.Manualslib.com manuals search engine

At Least Twice a Year

Restraint System Check

Make sure the safety belt reminder light and all your belts, buckles, latch plates, retractors and anchorages are working properly. If your vehicle has a built-in child restraint, also periodically make sure the harness straps, latch plates, buckle, clip, child head restraint and anchorages are working properly. Look for any other loose or damaged safety belt and built-in child restraint system parts. If you see anything that might keep a safety belt or built-in child restraint system from doing its job, have it repaired. Have any torn or frayed safety belts or harness straps replaced.

Also look for any opened or broken air bag coverings, and have them repaired or replaced. (The air bag system does not need regular maintenance.)

Wiper Blade Check

Inspect wiper blades for wear or cracking. Replace blade inserts that appear worn or damaged or that streak or miss areas of the windshield. Also see “Wiper Blades, Cleaning” in the Index.

Spare Tire Check

At least twice a year, after the monthly inflation check of the spare tire determines that the spare is inflated to the correct tire inflation pressure, make sure that the spare tire is stored securely. Push, pull, and then try to rotate or turn the tire. If it moves, use the folding wrench to tighten the cable. See “Storing the Spare Tire and Tools” in the Index.

Weatherstrip Lubrication

Silicone grease on weatherstrips will make them last longer, seal better, and not stick or squeak. Apply silicone grease with a clean cloth. During very cold, damp weather more frequent application may be required. See “Recommended Fluids and Lubricants” in the Index.

Automatic Transaxle Check

Check the transaxle fluid level; add if needed.
See “Automatic Transaxle Fluid” in the Index.
A fluid loss may indicate a problem. Check the system and repair if needed.

Downloaded from www.Manualslib.com manuals search engine

At Least Once a Year

Key Lock Cylinders Service

Lubricate the key lock cylinders with the lubricant specified in Part D.

Body Lubrication Service

Lubricate all key lock cylinders, hood latch assemblies, secondary latches, pivots, spring anchor and release pawl, hood and door hinges, rear folding seats, fuel door hinge, liftgate hinges, power sliding door cable and sliding door track(s). Part D tells you what to use. More frequent lubrication may be required when exposed to a corrosive environment.

Starter Switch Check

⚠ CAUTION:

When you are doing this check, the vehicle could move suddenly. If it does, you or others could be injured. Follow the steps below.

1. Before you start, be sure you have enough room around the vehicle.
2. Firmly apply both the parking brake and the regular brake. See “Parking Brake” in the Index if necessary.

   NOTE: Do not use the accelerator pedal, and be ready to turn off the engine immediately if it starts.
3. Try to start the engine in each gear. The starter should work only in PARK (P) or NEUTRAL (N). If the starter works in any other position, your vehicle needs service.

Downloaded from www.Manualslib.com manuals search engine

Automatic Transaxle Shift Lock Control System Check

⚠ CAUTION:

When you are doing this check, the vehicle could move suddenly. If it does, you or others could be injured. Follow the steps below.

1. Before you start, be sure you have enough room around the vehicle. It should be parked on a level surface.
2. Firmly apply the parking brake. See “Parking Brake” in the Index if necessary.

   NOTE: Be ready to apply the regular brake immediately if the vehicle begins to move.
3. With the engine off, turn the key to the RUN position, but don’t start the engine. Without applying the regular brake, try to move the shift lever out of PARK (P) with normal effort. If the shift lever moves out of PARK (P), your vehicle needs service.

Ignition Transaxle Lock Check

While parked, and with the parking brake set, try to turn the ignition key to LOCK in each shift lever position.

- The key should turn to LOCK only when the shift lever is in PARK (P).
- The key should come out only in LOCK.

Downloaded from www.Manualslib.com manuals search engine

Parking Brake and Automatic Transaxle PARK (P) Mechanism Check

⚠ CAUTION:

When you are doing this check, your vehicle could begin to move. You or others could be injured and property could be damaged. Make sure there is room in front of your vehicle in case it begins to roll. Be ready to apply the regular brake at once should the vehicle begin to move.

Park on a fairly steep hill, with the vehicle facing downhill. Keeping your foot on the regular brake, set the parking brake.

- To check the parking brake's holding ability: With the engine running and transaxle in NEUTRAL (N), slowly remove foot pressure from the regular brake pedal. Do this until the vehicle is held by the parking brake only.
- To check the PARK (P) mechanism's holding ability: With the engine running, shift to PARK (P). Then release the parking brake followed by the regular brake.

Underbody Flushing Service

At least every spring, use plain water to flush any corrosive materials from the underbody. Take care to clean thoroughly any areas where mud and other debris can collect.

Downloaded from www.Manualslib.com manuals search engine

Part C: Periodic Maintenance Inspections

Listed in this part are inspections and services which should be performed at least twice a year (for instance, each spring and fall). *You should let your dealer's service department or other qualified service center do these jobs. Make sure any necessary repairs are completed at once.*

Proper procedures to perform these services may be found in a service manual. See "Service and Owner Publications" in the Index.

Steering, Suspension and Front Drive Axle Boot and Seal Inspection

Inspect the front and rear suspension and steering system for damaged, loose or missing parts, signs of wear or lack of lubrication. Inspect the power steering lines and hoses for proper hook-up, binding, leaks, cracks, chafing, etc. Clean and then inspect the drive axle boot seals for damage, tears or leakage. Replace seals if necessary.

Exhaust System Inspection

Inspect the complete exhaust system. Inspect the body near the exhaust system. Look for broken, damaged, missing or out-of-position parts as well as open seams, holes, loose connections or other conditions which could cause a heat build-up in the floor pan or could let exhaust fumes into the vehicle. See "Engine Exhaust" in the Index.

Downloaded from www.Manualslib.com manuals search engine

Engine Cooling System Inspection

Inspect the hoses and have them replaced if they are cracked, swollen or deteriorated. Inspect all pipes, fittings and clamps; replace as needed. Clean the outside of the radiator and air conditioning condenser. To help ensure proper operation, a pressure test of the cooling system and pressure cap is recommended at least once a year.

Throttle System Inspection

Inspect the throttle system for interference or binding, and for damaged or missing parts. Replace parts as needed. Replace any components that have high effort or excessive wear. Do not lubricate accelerator and cruise control cables.

Brake System Inspection

Inspect the complete system. Inspect brake lines and hoses for proper hook-up, binding, leaks, cracks, chafing, etc. Inspect disc brake pads for wear and rotors for surface condition. Also inspect drum brake linings for wear and cracks. Inspect other brake parts, including drums, wheel cylinders, calipers, parking brake, etc. Check parking brake adjustment. You may need to have your brakes inspected more often if your driving habits or conditions result in frequent braking.

Downloaded from www.Manualslib.com manuals search engine

Part D: Recommended Fluids and Lubricants

NOTE: Fluids and lubricants identified below by name, part number or specification may be obtained from your dealer.

USAGE	FLUID/LUBRICANT
Engine Oil	Engine oil with the American Petroleum Institute Certified for Gasoline Engines starburst symbol of the proper viscosity. To determine the preferred viscosity for your vehicle's engine, see "Engine Oil" in the Index.
Engine Coolant	50/50 mixture of clean, drinkable water and use only GM Goodwrench® DEX-COOL® or Havoline® DEX-COOL® Coolant. See "Engine Coolant" in the Index.

USAGE	FLUID/LUBRICANT
Hydraulic Brake System	Delco Supreme 11® Brake Fluid (GM Part No. 12377967 or equivalent DOT-3 brake fluid).
Windshield Washer Solvent	GM Optikleen® Washer Solvent (GM Part No. 1051515) or equivalent.
Parking Brake Cable Guides	Chassis Lubricant (GM Part No. 12377985 or equivalent) or lubricant meeting requirements of NLGI # 2, Category LB or GC-LB.
Power Steering System	GM Power Steering Fluid (GM Part No. 1052884 - 1 pint, 1050017 - 1 quart, or equivalent).
Automatic Transaxle	DEXRON®-III Automatic Transmission Fluid.

Downloaded from www.Manualslib.com manuals search engine

USAGE	FLUID/LUBRICANT
Key Lock Cylinders	Multi-Purpose Lubricant, Superlube® (GM Part No. 12346241 or equivalent).
Chassis Lubrication	Chassis Lubricant (GM Part No. 12377985 or equivalent) or lubricant meeting requirements of NLGI # 2, Category LB or GC-LB.
Hood Latch Assembly, Secondary Latch, Pivots, Spring Anchor and Release Pawl	Lubriplate® Lubricant Aerosol (GM Part No. 12346293 or equivalent) or lubricant meeting requirements of NLGI # 2, Category LB or GC-LB.

USAGE	FLUID/LUBRICANT
Hood and Door Hinges	Multi-Purpose Lubricant, Superlube® (GM Part No. 12346241 or equivalent).
Rear Folding Seat, Fuel Door Hinge, Liftgate Hinges, Power Sliding Door Cable	Multi-Purpose Lubricant, Superlube® (GM Part No. 12346241 or equivalent).
Sliding Door Track	Lubriplate® Lubricant Aerosol (GM Part No. 12346293 or equivalent) or lubricant meeting requirements of NLGI # 2, Category LB or GC-LB.
Weatherstrip Conditioning	Dielectric Silicone Grease (GM Part No. 12345579 or equivalent).

Downloaded from www.Manualslib.com manuals search engine

Part E: Maintenance Record

After the scheduled services are performed, record the date, odometer reading and who performed the service in the boxes provided after the maintenance interval. Any additional information from “Owner Checks and Services” or “Periodic Maintenance” can be added on the following record pages. Also, you should retain all maintenance receipts. Your owner information portfolio is a convenient place to store them.

Maintenance Record			
DATE	ODOMETER READING	SERVICED BY	MAINTENANCE PERFORMED

Downloaded from www.Manualslib.com manuals search engine

Maintenance Record			
DATE	ODOMETER READING	SERVICED BY	MAINTENANCE PERFORMED

Downloaded from www.Manualslib.com manuals search engine

Maintenance Record			
DATE	ODOMETER READING	SERVICED BY	MAINTENANCE PERFORMED

Downloaded from www.Manualslib.com manuals search engine

Section 8 Customer Assistance Information

Here you will find out how to contact Pontiac if you need assistance. This section also tells you how to obtain service publications and how to report any safety defects.

8-2 Pontiac Cares
8-3 What Makes Up Pontiac Cares?
8-3 Customer Satisfaction Procedure
8-5 Customer Assistance for Text Telephone (TTY) Users
8-5 Customer Assistance Offices
8-7 GM Mobility Program for Persons with Disabilities
8-8 Pontiac Roadside Assistance Program
8-9 Canadian Roadside Assistance
8-10 Courtesy Transportation
8-11 Warranty Information
8-12 Reporting Safety Defects to the United States Government
8-12 Reporting Safety Defects to the Canadian Government
8-13 Reporting Safety Defects to General Motors

Downloaded from www.Manualslib.com manuals search engine

Pontiac Cares

With PONTIAC CARES, you are never more than a phone call away from having your concern taken care of.

The PONTIAC CARES philosophy and elements are designed to make you realize that Pontiac recognizes you as a valuable customer, appreciates your purchase decision, and is dedicated to taking care of the most important person ... YOU! PONTIAC CARES is: A valuable feature that comes with every Pontiac, a feature that offers a multitude of benefits that can give you safety, security, comfort and convenience.

Downloaded from www.Manualslib.com manuals search engine

What Makes Up Pontiac Cares?

- A 3 year/36,000 mile (60 000 km) Bumper-to-Bumper Warranty
- Customer Assistance
- Roadside Assistance
- Courtesy Transportation

All of these elements combine to make your driving experience an enjoyable one and are discussed in greater detail in your owner's manual. Pontiac is focusing on the changing needs of our customers and is committed to giving you an exceptional level of customer care throughout your ownership experience. Our goal is to create total customer enthusiasm in our product and our services and make you the most satisfied customer in the world.

Customer Satisfaction Procedure

Downloaded from www.Manualslib.com manuals search engine

Your satisfaction and goodwill are important to your dealer and to Pontiac. Normally, any concerns with the sales transaction or the operation of your vehicle will be resolved by your dealer's sales or service departments. Sometimes, however, despite the best intentions of all concerned, misunderstandings can occur. If your concern has not been resolved to your satisfaction, the following steps should be taken:

STEP ONE -- Discuss your concern with a member of dealership management. Normally, concerns can be quickly resolved at that level. If the matter has already been reviewed with the sales, service or parts manager, contact the owner of the dealership or the general manager.

STEP TWO -- If after contacting a member of dealership management, it appears your concern cannot be resolved by the dealership without further help, contact the Pontiac Customer Assistance Center by calling 1-800-762-2737. In Canada, contact GM of Canada Customer Communication Centre in Oshawa by calling 1-800-263-3777 (English) or 1-800-263-7854 (French).

We encourage you to call the toll-free number in order to give your inquiry prompt attention. Please have the following information available to give the Customer Assistance Representative:

- Vehicle Identification Number (This is available from the vehicle registration or title, or the plate at the top left of the instrument panel and visible through the windshield.)
- Dealership name and location
- Vehicle delivery date and present mileage

When contacting Pontiac, please remember that your concern will likely be resolved at a dealer's facility. That is why we suggest you follow Step One first if you have a concern.

STEP THREE -- Both General Motors and your dealer are committed to making sure you are completely satisfied with your new vehicle. However, if you continue to remain unsatisfied after following the procedure outlined in Steps One and Two, you should file with the GM/BBB Auto Line Program to enforce any additional rights you may have. Canadian owners refer to your Warranty and Owner Assistance Information booklet for information on the Canadian Motor Vehicle Arbitration Plan (CAMVAP).

Downloaded from www.Manualslib.com manuals search engine

The BBB Auto Line Program is an out of court program administered by the Council of Better Business Bureaus to settle automotive disputes regarding vehicle repairs or the interpretation of the New Vehicle Limited Warranty. Although you may be required to resort to this informal dispute resolution program prior to filing a court action, use of the program is free of charge and your case will generally be heard within 40 days. If you do not agree with the decision given in your case, you may reject it and proceed with any other venue for relief available to you.

You may contact the BBB using the toll-free telephone number or write them at the following address:

BBB Auto Line
Council of Better Business Bureaus, Inc.
4200 Wilson Boulevard
Suite 800
Arlington, VA 22203-1804

Telephone: 1-800-955-5100

This program is available in all 50 states and the District of Columbia. Eligibility is limited by vehicle age, mileage and other factors. General Motors reserves the right to change eligibility limitations and/or discontinue its participation in this program.

Customer Assistance for Text Telephone (TTY) Users

To assist customers who are deaf, hard of hearing, or speech-impaired and who use Text Telephones (TTYs), Pontiac has TTY equipment available at its Customer Assistance Center. Any TTY user can communicate with Pontiac by dialing: 1-800-833-PONT (7668).
(TTY users in Canada can dial 1-800-263-3830.)

Customer Assistance Offices

Pontiac encourages customers to call the toll-free number for assistance. If a U.S. customer wishes to write to Pontiac, the letter should be addressed to Pontiac's Customer Assistance Center.

United States

Pontiac-GMC Customer Assistance Center
P.O. Box 33172
Detroit, MI 48232-5172

1-800-762-2737 or
1-800-833-7668 (For Text Telephone devices (TTYs))
Roadside Assistance: 1-800-ROADSIDE (762-3743)

From:

Puerto Rico:	1-800-496-9992 (English)
	1-800-496-9993 (Spanish)
U.S. Virgin Islands:	1-800-496-9994
Fax Number:	313-381-0022

Downloaded from www.Manualslib.com manuals search engine

Canada

General Motors of Canada Limited
Customer Communication Centre, 163-005
1908 Colonel Sam Drive
Oshawa, Ontario L1H 8P7

1-800-263-3777 (English)
1-800-263-7854 (French)
1-800-263-3830 (For Text Telephone devices (TTYs))
Roadside Assistance: 1-800-268-6800

Mexico, Central America and Caribbean Islands/Countries (Except Puerto Rico and U.S. Virgin Islands)

General Motors de Mexico, S. de R.L. de C.V.
Customer Assistance Center
Paseo de la Reforma # 2740
Col. Lomas de Bezares
C.P. 11910, Mexico, D.F.

01-800-508-0000
Long Distance: 011-52 - 53 29 0 800

Downloaded from www.Manualslib.com manuals search engine

GM Mobility Program for Persons with Disabilities

This program, available to qualified applicants, can reimburse you up to $1,000 toward aftermarket driver or passenger adaptive equipment you may require for your vehicle (hand controls, wheelchair/scooter lifts, etc.).

This program can also provide you with free resource information, such as area driver assessment centers and mobility equipment installers. The program is available for a limited period of time from the date of vehicle purchase/lease. See your dealer for more details or call the GM Mobility Assistance Center at 1-800-323-9935. Text telephone (TTY) users, call 1-800-833-9935.

GM of Canada also has a Mobility Program. Call 1-800-GM-DRIVE (463-7483) for details. When calling from outside Canada, please dial 1-905-644-3063. All TTY users call 1-800-263-3830.

Downloaded from www.Manualslib.com manuals search engine

Pontiac Roadside Assistance Program

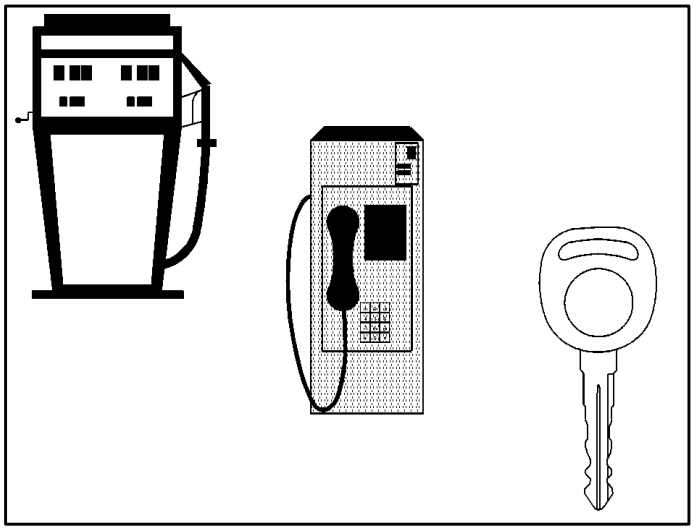

Security While You Travel

1-800-ROADSIDE (1-800-762-3743)

As the proud owner of a new Pontiac vehicle, you are automatically enrolled in the Pontiac Roadside Assistance program. This value-added service is intended to provide you with peace of mind as you drive in the city or travel the open road.

Pontiac's Roadside Assistance toll-free number is staffed by a team of technically trained advisors, who are available 24 hours a day, 365 days a year.

We take anxiety out of uncertain situations by providing minor repair information over the phone or making arrangements to tow your vehicle to the nearest Pontiac dealer.

We will provide the following services for 3 years/36,000 miles (60 000 km), at no expense to you:

- Fuel delivery
- Lock-out service (identification required)
- Tow to nearest dealership for warranty service
- Change a flat tire
- Jump starts

Downloaded from www.Manualslib.com manuals search engine

We have quick, easy access to telephone numbers of the following additional services depending on your needs:

- Hotels
- Glass replacement
- Tire repair facilities
- Rental vehicle or taxis
- Airports or train stations
- Police, fire department or hospitals

In many instances, mechanical failures are covered under Pontiac's comprehensive warranty. However, when other services are utilized, our advisors will explain any payment obligations you might incur.

For prompt and efficient assistance when calling, please provide the following information to give the advisor:

- Location of vehicle
- Telephone number of your location
- Vehicle model, year and color
- Mileage of vehicle
- Vehicle Identification Number (VIN)
- Vehicle license plate number

Pontiac reserves the right to limit services or reimbursement to an owner or driver when, in Pontiac's judgement, the claims become excessive in frequency or type of occurrence.

While we hope you never have the occasion to use our service, it is added security while traveling for you and your family. Remember, we're only a phone call away. Pontiac Roadside Assistance -- 1-800-ROADSIDE or 1-800-762-3743, text telephone (TTY) users, call 1-888-889-2438.

Canadian Roadside Assistance

Vehicles purchased in Canada have an extensive Roadside Assistance program accessible from anywhere in Canada or the United States. Please refer to the separate brochure provided by the dealer or call 1-800-268-6800 for emergency services.

Downloaded from www.Manualslib.com manuals search engine

Courtesy Transportation

Pontiac has always exemplified quality and value in its offering of motor vehicles. To enhance your ownership experience, we and our participating dealers are proud to offer Courtesy Transportation, a customer support program for new vehicles.

The Courtesy Transportation program is offered to retail purchase/lease customers in conjunction with the Bumper-to-Bumper coverage provided by the New Vehicle Limited Warranty. Several transportation options are available when warranty repairs are required. This will reduce your inconvenience during warranty repairs.

Plan Ahead When Possible

When your vehicle requires warranty service, you should contact your dealer and request an appointment. By scheduling a service appointment and advising your service consultant of your transportation needs, your dealer can help minimize your inconvenience. If your vehicle cannot be scheduled into the service department immediately, keep driving it until it can be scheduled for service, unless, of course, the problem is safety-related. If it is, please call your dealership, let them know this, and ask for instructions.

If the dealer requests that you simply drop the vehicle off for service, you are urged to do so as early in the work day as possible to allow for same day repair.

Transportation Options

Warranty service can generally be completed while you wait. However, if you are unable to wait Pontiac helps minimize your inconvenience by providing several transportation options. Depending on the circumstances, your dealer can offer you one of the following:

Shuttle Service

Participating dealers can provide you with shuttle service to get you to your destination with minimal interruption of your daily schedule. This includes a one way shuttle ride to a destination up to 10 miles from the dealership.

Public Transportation or Fuel Reimbursement

If your vehicle requires overnight warranty repairs, reimbursement up to $30 per day (five days maximum) may be available for the use of public transportation such as taxi or bus. In addition, should you arrange transportation through a friend or relative, reimbursement for reasonable fuel expenses up to $10 per day (five day maximum) may be available. Claim amounts should reflect actual costs and be supported by original receipts.

Downloaded from www.Manualslib.com manuals search engine

Courtesy Rental Vehicle

When your vehicle is unavailable due to overnight warranty repairs, your dealer may arrange to provide you with a courtesy rental vehicle or reimburse you for ’a rental vehicle you obtained, at actual cost, up to a maximum of $30.00 per day supported by receipts. This requires that you sign and complete a rental agreement and meet state, local and rental vehicle provider requirements. Requirements vary and may include minimum age requirements, insurance coverage, credit card, etc. You are responsible for fuel usage charges and may also be responsible for taxes, levies, usage fees, excessive mileage or rental usage beyond the completion of the repair.

Generally it is not possible to provide a like-vehicle as a courtesy rental.

Additional Program Information

Courtesy Transportation is available during the Bumper-to-Bumper warranty coverage period, but it *is not* part of the New Vehicle Limited Warranty. A separate booklet entitled “Warranty and Owner Assistance Information” furnished with each new vehicle provides detailed warranty coverage information.

Courtesy Transportation is available only at participating dealers and all program options, such as shuttle service, may not be available at every dealer. Please contact your dealer for specific information about availability. All Courtesy Transportation arrangements will be administered by appropriate dealer personnel.

Canadian Vehicles: For warranty repairs during the Complete Vehicle Coverage period of the General Motors of Canada New Vehicle Limited Warranty, alternative transportation may be available under the Courtesy Transportation Program. Please consult your dealer for details.

General Motors reserves the right to unilaterally modify, change or discontinue Courtesy Transportation at any time and to resolve all questions of claim eligibility pursuant to the terms and conditions described herein at its sole discretion.

Warranty Information

Your vehicle comes with a separate warranty booklet that contains detailed warranty information.

Downloaded from www.Manualslib.com manuals search engine

REPORTING SAFETY DEFECTS TO THE UNITED STATES GOVERNMENT

If you believe that your vehicle has a defect which could cause a crash or could cause injury or death, you should immediately inform the National Highway Traffic Safety Administration (NHTSA), in addition to notifying General Motors.

If NHTSA receives similar complaints, it may open an investigation, and if it finds that a safety defect exists in a group of vehicles, it may order a recall and remedy campaign. However, NHTSA cannot become involved in individual problems between you, your dealer or General Motors.

To contact NHTSA, you may either call the Auto Safety Hotline toll-free at 1-800-424-9393 (or 366-0123 in the Washington, D.C. area) or write to:

NHTSA, U.S. Department of Transportation
Washington, D.C. 20590

You can also obtain other information about motor vehicle safety from the hotline.

REPORTING SAFETY DEFECTS TO THE CANADIAN GOVERNMENT

If you live in Canada, and you believe that your vehicle has a safety defect, you should immediately notify Transport Canada, in addition to notifying General Motors of Canada Limited. You may write to:

Transport Canada
330 Sparks Street
Tower C
Ottawa, Ontario K1A 0N5

Downloaded from www.Manualslib.com manuals search engine

REPORTING SAFETY DEFECTS TO GENERAL MOTORS

In addition to notifying NHTSA (or Transport Canada) in a situation like this, we certainly hope you'll notify us. Please call us at 1–800–762-2737, or write:

Pontiac-GMC Customer Assistance Center
P.O. Box 33172
Detroit, MI 48232-5172

In Canada, please call us at 1-800-263-3777 (English) or 1-800-263-7854 (French). Or, write:

General Motors of Canada Limited
Customer Communication Centre, 163-005
1908 Colonel Sam Drive
Oshawa, Ontario L1H 8P7

Downloaded from www.Manualslib.com manuals search engine

2001 PONTIAC SERVICE PUBLICATIONS ORDERING INFORMATION

The following publications covering the operation and servicing of your vehicle can be purchased by filling out the Service Publication Order Form in this book and mailing it in with your check, money order, or credit card information to Helm, Incorporated (address below.)

CURRENT PUBLICATIONS FOR 2001 PONTIAC

SERVICE MANUALS

Service Manuals have the diagnosis and repair information on engines, transmission, axle, suspension, brakes, electrical, steering, body, etc.
RETAIL SELL PRICE: $120.00

TRANSMISSION, TRANSAXLE, TRANSFER CASE UNIT REPAIR MANUAL

This manual provides information on unit repair service procedures, adjustments and specifications for the 2001 GM transmissions, transaxles and transfer cases.
RETAIL SELL PRICE: $50.00

SERVICE BULLETINS

Service Bulletins give technical service information needed to knowledgeably service General Motors cars and trucks. Each bulletin contains instructions to assist in the diagnosis and service of your vehicle.

OWNER'S INFORMATION

Owner publications are written directly for Owners and intended to provide basic operational information about the vehicle. The owner's manual will include the Maintenance Schedule for all models.

In-Portfolio: Includes a Portfolio, Owner's Manual and Warranty Booklet.
RETAIL SELL PRICE: $20.00

Without Portfolio: Owner's Manual only.
RETAIL SELL PRICE: $15.00

CURRENT & PAST MODEL ORDER FORMS

Service Publications are available for current and past model GM vehicles. To request an order form, please specify year and model name of the vehicle.

PLEASE COMPLETE THE ORDER FORM SHOWN ON THE FOLLOWING PAGE AND MAIL TO:

Helm, Incorporated • P.O. Box 07130 • Detroit, MI 48207

OR ORDER TOLL FREE: 1-800-551-4123

Monday-Friday 8:00 AM – 6:00 PM Eastern Time

Visit Helm, Inc. on the World Wide Web at: www.helminc.com

For Credit Card Orders Only (VISA–MasterCard–Discover)

Downloaded from www.Manualslib.com manuals search engine

ORDER TOLL FREE
(NOTE: For Credit Card Holders Only)
1-800-551-4123
(Monday-Friday 8:00 AM – 6:00 PM EST)
FAX Orders Only 1-313-865-5927

Orders will be mailed within 10 days of receipt. Please allow adequate time for postal service. If further information is needed, write to the address shown below or call 1-800-551-4123. Material cannot be returned for credit without packing slip with return information within 30 days of delivery. On returns, a re-stocking fee may be applied against the original order.

2001 GM

PUBLICATION FORM NUMBER	ITEM DESCRIPTION	VEHICLE MODEL NAME	VEHICLE MODEL YEAR	QTY.	PRICE EACH*	TOTAL PRICE
	Service Manual		2001		$120.00	
	Car & Light Truck Transmission Unit Repair		2001		$50.00	
	Owner's Manual In Portfolio		2001		$20.00	
	Owner's Manual Without Portfolio		2001		$15.00	

SHIP TO

NOTE: Dealers and Companies please provide dealer or company name, and also the name of the person to whose attention the shipment should be sent.
Mail completed order form to:
HELM, INCORPORATED • P.O. Box 07130 • Detroit, MI 48207
For purchases outside U.S.A. please write to the above address for quotation.

(CUSTOMER'S NAME) **(ATTENTION)**

(STREET ADDRESS—NO P.O. BOX NUMBERS)

(CITY) **(STATE)** **(ZIP CODE)**

DAYTIME TELEPHONE NO. ( ) _____
AREA CODE

PAYMENT

☐ **Check or Money Order payable to Helm, Inc. (USA funds only — *do not send cash.)***
☐ MasterCard
☐ VISA
☐ Discover

TOTAL MATERIAL	
Michigan Purchasers add 6% sales tax	
U.S. Order Processing	**$6.00**
Canadian Postage	
GRAND TOTAL	

Account Number: ☐☐☐☐ ☐☐☐☐ ☐☐☐☐ ☐☐☐☐

Expiration Date mo/yr: ☐☐ ☐☐

Check here if your billing address is different from your shipping address shown. ☐

CUSTOMER SIGNATURE

GM-PON-ORD99

*(Prices are subject to change without notice and without incurring obligation. Allow ample time for delivery.)

Note to Canadian Customers: All listed prices are quoted in U.S. funds. Canadian residents are to make checks payable in U.S. funds.

Downloaded from www.Manualslib.com manuals search engine

NOTES

Downloaded from www.Manualslib.com manuals search engine