SECTION AT
AUTOMATIC TRANSAXLE

CONTENTS

PRECAUTIONS 5
Precautions for Supplemental Restraint System (SRS) “AIR BAG” and “SEAT BELT PRE-TENSIONER” 5
Precautions for On Board Diagnostic (EURO-OBD) System of A/T and Engine — Euro-OBD — 5
Precautions for Trouble Diagnosis 5
Precautions for Harness Repair 5
Precautions 6
Service Notice or Precautions 7
Wiring Diagrams and Trouble Diagnosis 8
PREPARATION 9
Special Service Tools 9
Commercial Service Tools 12
A/T FLUID 13
Checking A/T Fluid 13
Changing A/T Fluid 13
OVERALL SYSTEM 14
A/T Electrical Parts Location 14
Circuit Diagram 15
Cross-Sectional View 16
Hydraulic Control Circuit 17
Shift Mechanism 18
Control System 27
Control Mechanism 28
Control Valve 34

EURO-OBD

TROUBLE DIAGNOSIS — INDEX 35
Alphabetical & P No. Index for DTC 35
ON BOARD DIAGNOSTIC SYSTEM DESCRIPTION 37
Introduction 37
EURO-OBD Function for A/T System 37
One or Two Trip Detection Logic of EURO-OBD ... 37
EURO-OBD Diagnostic Trouble Code (DTC) 37
Malfunction Indicator (MI) 41
CONSULT-II 41
Diagnostic Procedure Without CONSULT-II 50
TROUBLE DIAGNOSIS — INTRODUCTION 56
Introduction 56
Work Flow 60
TROUBLE DIAGNOSIS — BASIC INSPECTION ... 63
A/T Fluid Check 63
Stall Test 64
Line Pressure Test 67
Road Test 68
TROUBLE DIAGNOSIS — GENERAL DESCRIPTION 86
Symptom Chart 86
TCM Terminals and Reference Value 107
CAN COMMUNICATION 110
System Description 110
CAN Communication Unit 110
DTC P0705 PARK/NEUTRAL POSITION (PNP) SWITCH 113
Description 113
Wiring Diagram — AT — PNP/SW 115
Diagnostic Procedure 116
Component Inspection 118
DTC P0710 A/T FLUID TEMPERATURE SENSOR CIRCUIT 119
Description 119
Wiring Diagram — AT — FTS 121
Diagnostic Procedure 122
Component Inspection 124
DTC P0720 VEHICLE SPEED SENSOR A/T (REVOLUTION SENSOR) 125
Description 125
Wiring Diagram — AT — VSSA/T 128
Diagnostic Procedure 129
DTC P0725 ENGINE SPEED SIGNAL 131
Description 131
Wiring Diagram — AT — ENGSS 132
Diagnostic Procedure 133
DTC P0731 A/T 1ST GEAR FUNCTION 135
Description 135
Wiring Diagram — AT — 1ST 138

Diagnostic Procedure 139
Component Inspection 140
DTC P0732 A/T 2ND GEAR FUNCTION 141
Description 141
Wiring Diagram — AT — 2ND 144
Diagnostic Procedure 145
Component Inspection 146
DTC P0733 A/T 3RD GEAR FUNCTION 147
Description 147
Wiring Diagram — AT — 3RD 150
Diagnostic Procedure 151
Component Inspection 152
DTC P0734 A/T 4TH GEAR FUNCTION 153
Description 153
Wiring Diagram — AT — 4TH 156
Diagnostic Procedure 157
Component Inspection 160
DTC P0740 TORQUE CONVERTER CLUTCH SOLENOID VALVE 161
Description 161
Wiring Diagram — AT — TCV 163
Diagnostic Procedure 164
Component Inspection 164
DTC P0745 LINE PRESSURE SOLENOID VALVE. 166
Description 166
Wiring Diagram — AT — LPSV 168
Diagnostic Procedure 169
Component Inspection 171
DTC P0750 SHIFT SOLENOID VALVE A 173
Description 173
Wiring Diagram — AT — SSV/A 175
Diagnostic Procedure 176
Component Inspection 177
DTC P0755 SHIFT SOLENOID VALVE B 178
Description 178
Wiring Diagram — AT — SSV/B 180
Diagnostic Procedure 181
Component Inspection 182
DTC P1705 ACCELERATOR PEDAL POSITION (APP) SENSOR 183
Description 183
Wiring Diagram — AT — TPS 186
Diagnostic Procedure 187
DTC P1760 OVERRUN CLUTCH SOLENOID VALVE 189
Description 189
Wiring Diagram — AT — OVRCSV 191
Diagnostic Procedure 192
Component Inspection 193
DTC U1000 CAN COMMUNICATION LINE 194
Description 194
On Board Diagnosis Logic 194
DTC Confirmation Procedure 194
Wiring Diagram — AT 195
Diagnostic Procedure 196
DTC BATT/FLUID TEMP SEN (A/T FLUID TEMP SENSOR CIRCUIT AND TCM POWER SOURCE). 197
Description 197
Wiring Diagram — AT — BA/FTS 199
Diagnostic Procedure 200
Component Inspection 202
DTC VEHICLE SPEED SENSOR MTR 203
Description 203
Wiring Diagram — AT — VSSMTR 205
Diagnostic Procedure 206
DTC CONTROL UNIT (RAM), CONTROL UNIT (ROM) 207
Description 207
Diagnostic Procedure 208
DTC CONTROL UNIT (EEP ROM) 209
Description 209
Diagnostic Procedure 210
TROUBLE DIAGNOSES FOR SYMPTOMS 211
Wiring Diagram — AT — NONDTC 211
1. O/D OFF Indicator Lamp Does Not Come On . 213
2. Engine Cannot Be Started In “P” and “N” Position. 214
3. In “P” Position, Vehicle Moves Forward Or Backward When Pushed 214
4. In “N” Position, Vehicle Moves 216
5. Large Shock. “N” → “R” Position 217
6. Vehicle Does Not Creep Backward In “R” Position. 218
7. Vehicle Does Not Creep Forward In “D”, “2” Or “1” Position 221
8. Vehicle Cannot Be Started From D_1 223
9. A/T Does Not Shift: $D_1 \rightarrow D_2$ Or Does Not Kick-down: $D_4 \rightarrow D_2$ 225
10. A/T Does Not Shift: $D_2 \rightarrow D_3$ 227
11. A/T Does Not Shift: $D_3 \rightarrow D_4$ 229
12. A/T Does Not Perform Lock-up 232
13. A/T Does Not Hold Lock-up Condition 233
14. Lock-up Is Not Released 234
15. Engine Speed Does Not Return To Idle (Light Braking $D_4 \rightarrow D_3$) 235
16. Vehicle Does Not Start From D_1 236
17. A/T Does Not Shift: $D_4 \rightarrow D_3$, When Overdrive Control Switch “ON” → “OFF” 237
18. A/T Does Not Shift: $D_3 \rightarrow 2_2$, When Selector Lever “D” → “2” Position 237
19. A/T Does Not Shift: $2_2 \rightarrow 1_1$, When Selector Lever “2” → “1” Position 238
20. Vehicle Does Not Decelerate By Engine Brake. 239
21. TCM Self-diagnosis Does Not Activate (PNP & Overdrive Control Switches, and Throttle Position Sensor Circuit Checks) 239

EXC.F/EURO-OBD

ON BOARD DIAGNOSTIC SYSTEM DESCRIPTION 246
CONSULT-II 246
Diagnostic Procedure Without CONSULT-II 252
TROUBLE DIAGNOSIS — INTRODUCTION 257
Introduction 257
Work Flow 261
TROUBLE DIAGNOSIS — BASIC INSPECTION .. 263
A/T Fluid Check 263
Stall Test 264

Line Pressure Test 267
Road Test 268
TROUBLE DIAGNOSIS — GENERAL DESCRIPTION 285
Symptom Chart 285
TCM Terminals and Reference Value 304
CAN COMMUNICATION 307
System Description 307
CAN Communication Unit 307
TROUBLE DIAGNOSES FOR SYMPTOMS 310
Wiring Diagram — AT — NONDTC 310
1. O/D OFF Indicator Lamp Does Not Come On . 312
2. Engine Cannot Be Started In “P” and “N” Position 313
3. In “P” Position, Vehicle Moves Forward Or Backward When Pushed 313
4. In “N” Position, Vehicle Moves 315
5. Large Shock. “N” → “R” Position 316
6. Vehicle Does Not Creep Backward In “R” Position 317
7. Vehicle Does Not Creep Forward In “D”, “2” Or “1” Position 320
8. Vehicle Cannot Be Started From D_1 321
9. A/T Does Not Shift: $D_1 \rightarrow D_2$ Or Does Not Kick down: $D_4 \rightarrow D_2$ 324
10. A/T Does Not Shift: $D_2 \rightarrow D_3$ 326
11. A/T Does Not Shift: $D_3 \rightarrow D_4$ 328
12. A/T Does Not Perform Lock-up 330
13. A/T Does Not Hold Lock-up Condition 330
14. Lock-up Is Not Released 332
15. Engine Speed Does Not Return To Idle (Light Braking $D_4 \rightarrow D_3$) 332
16. Vehicle Does Not Start From D_1 334
17. A/T Does Not Shift: $D_4 \rightarrow D_3$, When Overdrive Control Switch “ON” → “OFF” 334
18. A/T Does Not Shift: $D_3 \rightarrow 2_2$, When Selector Lever “D” → “2” Position 335
19. A/T Does Not Shift: $2_2 \rightarrow 1_1$, When Selector Lever “2” → “1” Position 336
20. Vehicle Does Not Decelerate By Engine Brake 337
21. TCM Self-diagnosis Does Not Activate (PNP & Overdrive Control Switches, and Throttle Position Sensor Circuit Checks) 337

ALL

MAIN POWER SUPPLY AND GROUND CIRCUIT. 344
Wiring Diagram — AT — MAIN 344
Diagnostic Procedure 345
VEHICLE SPEED SENSOR - A/T (REVOLUTION SENSOR) 347
Description 347
Wiring Diagram — AT — VSSAT 349
Diagnostic Procedure 350
DTC VEHICLE SPEED SENSOR MTR 352
Description 352
Wiring Diagram — AT — VSSMTR 354
Diagnostic Procedure 355
ACCELE RATOR PEDAL POSITION (APP) SENSOR 356
Description 356
Wiring Diagram — AT — TPS 358
Diagnostic Procedure 359
SHIFT SOLENOID VALVE A 361
Description 361
Wiring Diagram — AT — SSV/A 363
Diagnostic Procedure 364
Component Inspection 365
SHIFT SOLENOID VALVE B 366
Description 366
Wiring Diagram — AT — SSV/B 368
Diagnostic Procedure 369
Component Inspection 370
OVERRUN CLUTCH SOLENOID VALVE 371
Description 371
Wiring Diagram — AT — OVRCSV 373
Diagnostic Procedure 374
Component Inspection 375
TORQUE CONVERTER CLUTCH SOLENOID VALVE 376
Description 376
Wiring Diagram — AT — TCV 378
Diagnostic Procedure 379
Component Inspection 380
BATT/FLUID TEMP SEN (A/T FLUID TEMP SENSOR CIRCUIT AND TCM POWER SOURCE) 381
Description 381
Wiring Diagram — AT — BA/FTS 383
Diagnostic Procedure 384
Component Inspection 386
ENGINE SPEED SIGNAL 387
Description 387
Wiring Diagram — AT — ENGSS 389
Diagnostic Procedure 390
LINE PRESSURE SOLENOID VALVE 392
Description 392
Wiring Diagram — AT — LPSV 394
Diagnostic Procedure 395
Component Inspection 397
CAN COMMUNICATION LINE 399
Description 399
On Board Diagnosis Logic 399
Self-Diagnosis Code Confirmation Procedure 399
Wiring Diagram — AT — CAN 400
Diagnostic Procedure 401
A/T SHIFT LOCK SYSTEM 402
Description 402
Shift Lock System Electrical Parts Location 402
Wiring Diagram — SHIFT — 403
Diagnostic Procedure 404
KEY INTERLOCK CABLE 408
Components 408
Removal 408
Installation 409
ON-VEHICLE SERVICE 410
Control Valve Assembly and Accumulators 410
Control Cable Adjustment 412
Park/Neutral Position (PNP) Switch Adjustment . 412
Differential Side Oil Seal Replacement 413
Revolution Sensor Replacement 413

REMOVAL AND INSTALLATION 414
Removal 414
Installation 415
OVERHAUL 417
Output Shaft, Idler Gear, Reduction Pinion Gear and Bearing Retainer 417
Oil Channel 420
Locations of Adjusting Shims, Needle Bearings, Thrust Washers and Snap Rings 421
DISASSEMBLY 422
Disassembly 422
REPAIR FOR COMPONENT PARTS 436
Manual Shaft 436
Oil Pump 439
Control Valve Assembly 443
Control Valve Upper Body 453
Control Valve Lower Body 457
Reverse Clutch 459
High Clutch 463
Forward and Overrun Clutches 468
Low & Reverse Brake 474
Rear Internal Gear, Forward Clutch Hub and Over-run Clutch Hub 478
Output Shaft, Idler Gear, Reduction Pinion Gear and Bearing Retainer 482
Band Servo Piston Assembly 487
Final Drive 492
ASSEMBLY 497
Assembly (1) 497
Adjustment (1) 498
Assembly (2) 504
Adjustment (2) 508
Assembly (3) 512
SERVICE DATA AND SPECIFICATIONS (SDS) ... 519
General Specifications 519
Shift Schedule 519
Stall Revolution 519
Line Pressure 519
Control Valves 520
Clutch and Brakes 520
Clutch and Brake Return Springs 522
Oil Pump 522
Input Shaft 522
Planetary carrier 522
Final Drive 523
Reduction Pinion Gear 524
Output Shaft 526
Bearing Retainer 527
Total End Play 527
Reverse Clutch End Play 527
Accumulator 527
Band Servo 528
Removal and Installation 528
Shift Solenoid Valves 528
Solenoid Valves 528
A/T Fluid Temperature Sensor 528
Revolution Sensor 528
Dropping Resistor 528

PRECAUTIONS

PFP:00001

Precautions for Supplemental Restraint System (SRS) “AIR BAG” and “SEAT BELT PRE-TENSIONER”

ECS0096A

The Supplemental Restraint System such as “AIR BAG” and “SEAT BELT PRE-TENSIONER”, used along with a front seat belt, helps to reduce the risk or severity of injury to the driver and front passenger for certain types of collision. Information necessary to service the system safely is included in the SRS and SB section of this Service Manual.

WARNING:

- **To avoid rendering the SRS inoperative, which could increase the risk of personal injury or death in the event of a collision which would result in air bag inflation, all maintenance must be performed by an authorized NISSAN/INFINITI dealer.**
- **Improper maintenance, including incorrect removal and installation of the SRS, can lead to personal injury caused by unintentional activation of the system. For removal of Spiral Cable and Air Bag Module, see the SRS section.**
- **Do not use electrical test equipment on any circuit related to the SRS unless instructed to in this Service Manual. SRS wiring harnesses can be identified by yellow and/or orange harnesses or harness connectors.**

Precautions for On Board Diagnostic (EURO-OBD) System of A/T and Engine — Euro-OBD —

ECS0096B

The ECM has an on board diagnostic system. It will light up the malfunction indicator (MI) to warn the driver of a malfunction causing emission deterioration.

CAUTION:

- **Be sure to turn the ignition switch “OFF” and disconnect the negative battery terminal before any repair or inspection work. The open/short circuit of related switches, sensors, solenoid valves, etc. will cause the MI to light up.**
- **Be sure to connect and lock the connectors securely after work. A loose (unlocked) connector will cause the MI to light up due to an open circuit. (Be sure the connector is free from water, grease, dirt, bent terminals, etc.)**
- **Be sure to route and secure the harnesses properly after work. Interference of the harness with a bracket, etc. may cause the MI to light up due to a short circuit.**
- **Be sure to connect rubber tubes properly after work. A misconnected or disconnected rubber tube may cause the MI to light up due to a malfunction of the EGR system or fuel injection system, etc.**
- **Be sure to erase the unnecessary malfunction information (repairs completed) from the TCM and ECM before returning the vehicle to the customer.**

Precautions for Trouble Diagnosis

ECS0096C

CAN SYSTEM

- Do not apply voltage of 7.0V or higher to the measurement terminals.
- Use the tester with its open terminal voltage being 7.0V or less.

Precautions for Harness Repair

ECS0096D

CAN SYSTEM

- Solder the repaired parts, and wrap with tape. [Frays of twisted line must be within 110 mm (4.33 in)]

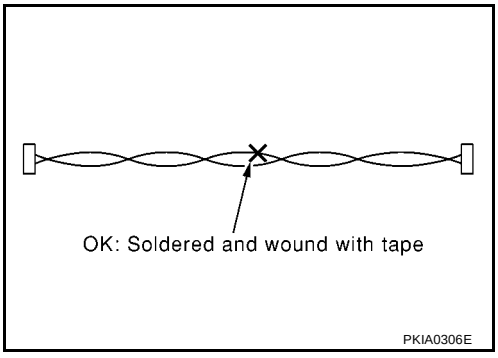

- Do not perform bypass wire connections for the repair parts.(The spliced wire will become separated and the characteristics of twisted line will be lost.)

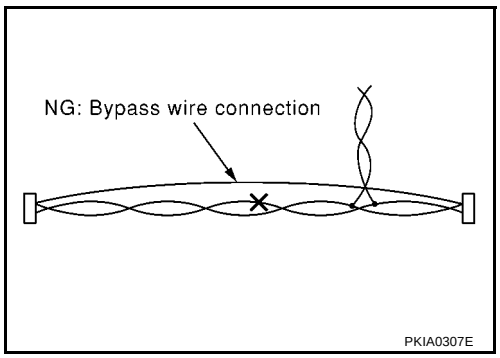

Precautions

ECS0096E

- **Before connecting or disconnecting the TCM harness connector, turn ignition switch OFF and disconnect negative battery terminal. Failure to do so may damage the TCM. Because battery voltage is applied to TCM even if ignition switch is turned off.**

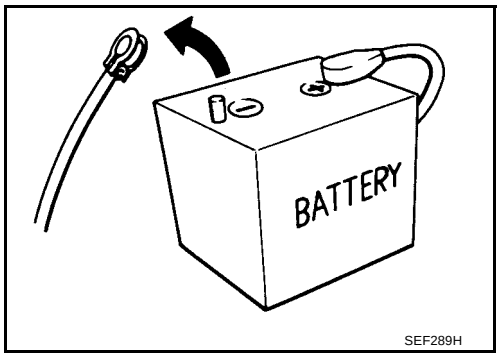

- **When connecting or disconnecting pin connectors into or from TCM, take care not to damage pin terminals (bend or break).**
  Make sure that there are not any bends or breaks on TCM pin terminal, when connecting pin connectors.

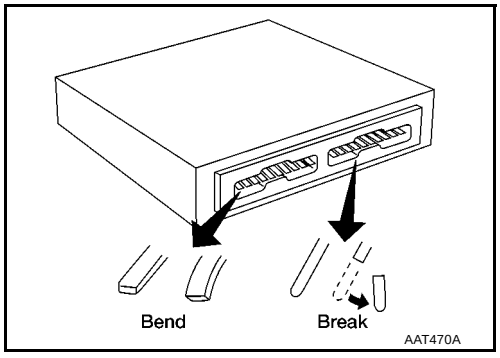

- **Before replacing TCM, perform TCM input/output signal inspection and make sure whether TCM functions properly or not. (See page** **AT-107, "TCM Terminals and Reference Value"**.)

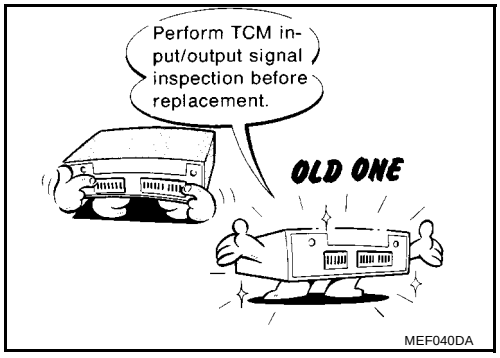

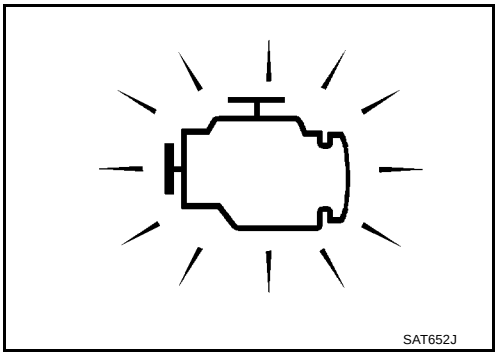

- **After performing each TROUBLE DIAGNOSIS, perform "DTC (Diagnostic Trouble Code) CONFIRMATION PROCEDURE".**
  The DTC should not be displayed in the "DTC CONFIRMATION PROCEDURE" if the repair is completed.
- Before proceeding with disassembly, thoroughly clean the outside of the transaxle. It is important to prevent the internal parts from becoming contaminated by dirt or other foreign matter.
- Disassembly should be done in a clean work area.
- Use lint-free cloth or towels for wiping parts clean. Common shop rags can leave fibers that could interfere with the operation of the transaxle.
- Place disassembled parts in order for easier and proper assembly.
- All parts should be carefully cleaned with a general purpose, non-flammable solvent before inspection or reassembly.
- Gaskets, seals and O-rings should be replaced any time the transaxle is disassembled.
- It is very important to perform functional tests whenever they are indicated.
- The valve body contains precision parts and requires extreme care when parts are removed and serviced. Place disassembled valve body parts in order for easier and proper assembly. Care will also prevent springs and small parts from becoming scattered or lost.
- Properly installed valves, sleeves, plugs, etc. will slide along bores in valve body under their own weight.
- Before assembly, apply a coat of recommended ATF to all parts. Apply petroleum jelly to protect O-rings and seals, or hold bearings and washers in place during assembly. Do not use grease.
- Extreme care should be taken to avoid damage to O-rings, seals and gaskets when assembling.
- After overhaul, refill the transaxle with new ATF.
- When the A/T drain plug is removed, only some of the fluid is drained. Old A/T fluid will remain in torque converter and ATF cooling system.
  Always follow the procedures under AT-13, "Changing A/T Fluid" when changing A/T fluid.

Service Notice or Precautions

ECS0096F

FAIL-SAFE

The TCM has an electronic Fail-Safe (limp home mode). This allows the vehicle to be driven even if a major electrical input/output device circuit is damaged.
Under Fail-Safe, the vehicle always runs in third gear, even with a shift lever position of "1", "2" or "D". The customer may complain of sluggish or poor acceleration.
When the ignition key is turned "ON" following Fail-Safe operation, O/D OFF indicator lamp blinks for about 8 seconds. Refer to AT-252, "Diagnostic Procedure Without CONSULT-II" (EXCEPT FOR EURO-OBD) or AT-51, "TCM SELF-DIAGNOSTIC PROCEDURE (NO TOOLS)" (EURO-OBD).
The blinking of the O/D OFF indicator lamp for about 8 seconds will appear only once and be cleared. The customer may resume normal driving conditions.
Always follow the "Work Flow", refer to AT-261 (EXCEPT FOR EURO-OBD) or AT-60 (EURO-OBD).
The SELF-DIAGNOSIS results will be as follows:

- The first SELF-DIAGNOSIS will indicate damage to the vehicle speed sensor or the revolution sensor.
- During the next SELF-DIAGNOSIS, performed after checking the sensor, no damages will be indicated.

TORQUE CONVERTER SERVICE

The torque converter should be replaced under any of the following conditions:

- External leaks in the hub weld area.
- Converter hub is scored or damaged.
- Converter pilot is broken, damaged or fits poorly into crankshaft.
- Steel particles are found after flushing the cooler and cooler lines.
- Pump is damaged or steel particles are found in the converter.
- Vehicle has TCC shudder and/or no TCC apply. Replace only after all hydraulic and electrical diagnoses have been made. (Converter clutch material may be glazed.)
- Converter is contaminated with engine coolant containing antifreeze.

- Internal failure of stator roller clutch.
- Heavy clutch debris due to overheating (blue converter).
- Steel particles or clutch lining material found in fluid filter or on magnet when no internal parts in unit are worn or damaged — indicates that lining material came from converter.

The torque converter should not be replaced if:

- The fluid has an odor, is discolored, and there is no evidence of metal or clutch facing particles.
- The threads in one or more of the converter bolt holes are damaged.
- Transaxle failure did not display evidence of damaged or worn internal parts, steel particles or clutch plate lining material in unit and inside the fluid filter.
- Vehicle has been exposed to high mileage (only). The exception may be where the torque converter clutch dampener plate lining has seen excess wear by vehicles operated in heavy and/or constant traffic, such as taxi, delivery or police use.

EURO-OBD SELF-DIAGNOSIS — EURO-OBD —

- A/T self-diagnosis is performed by the TCM in combination with the ECM. The results can be read through the blinking pattern of the O/D OFF indicator lamp or the malfunction indicator (MI). Refer to the table on AT-42, "SELF-DIAGNOSTIC RESULT TEST MODE" for the indicator used to display each self-diagnostic result.
- The self-diagnostic results indicated by the MI are automatically stored in both the ECM and TCM memories.
  Always perform the procedure AT-39, "HOW TO ERASE DTC" to complete the repair and avoid unnecessary blinking of the MI.
- The following self-diagnostic items can be detected using ECM self-diagnostic results mode* only when the O/D OFF indicator lamp does not indicate any malfunctions.
  - PNP switch
  - A/T 1st, 2nd, 3rd, or 4th gear function

*: For details of EURO-OBD, refer to AT-37, "ON BOARD DIAGNOSTIC SYSTEM DESCRIPTION" .

- **Certain systems and components, especially those related to EURO-OBD, may use a new style slide-locking type harness connector.**
  For description and how to disconnect, refer to EL-7, “HARNESS CONNECTOR”.

Wiring Diagrams and Trouble Diagnosis

ECS0096G

When you read wiring diagrams, refer to the following:

- GI-11, “How to Read Wiring Diagrams” in GI section.
- EL-11, “POWER SUPPLY ROUING” in EL section.

When you perform trouble diagnosis, refer to the following:

- GI-21, “How to Perform Efficient Diagnosis for an Electrical Incident” in GI section.
- GI-31, “How to Follow Trouble Diagnoses” in GI section.

PREPARATION

PFP:00100

Special Service Tools

ECS0096H

Tool number Tool name	Description	
(J34301-C) Oil pressure gauge set 1 (J34301-1) Oil pressure gauge 2 (J34301-2) Hoses 3 (J34298) Adapter 4 (J34282-2) Adapter 5 (790-301-1230-A) 60°Adapter 6 (J34301-15) Square socket	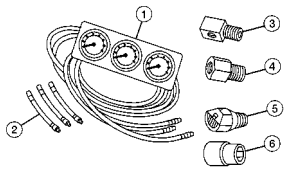 AAT896	Measuring line pressure and governor pressure
KV311030000 (J38982) Drift	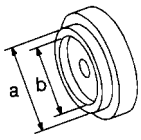 NT105	Installing differential oil seal (Use with ST35325000.) **a: 59mm (2.32 in) dia.** **b: 49mm (1.93 in) dia.**
ST35325000 (-) Drift	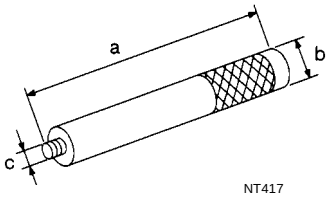 NT417	Installing differential oil seal (Use with KV311030000.) **a: 215 mm (8.46 in)** **b: 25 mm (0.98 in)** **c: M12 x 1.5P**
KV38107700 (J39027) Preload adapter	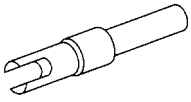 NT087	● Measuring turning torque of final drive assembly ● Measuring clearance between side gear and differential case with washer ● Selecting differential side bearing adjusting shim
KV31103200 (J34285-A and J34285-87) Clutch spring compressor	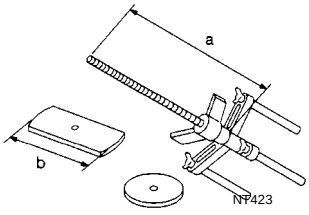 NT423	Removing and installing clutch return spring **a: 320mm (12.0 in)** **b: 174 mm (6.85in)**
ST23540000 (J25689-A) Pin punch	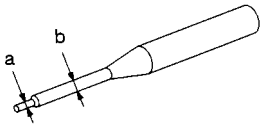 NT442	Removing and installing parking rod plate, manual plate and differential pinion mate shaft retaining pins **a: 2.3 mm (0.091 in) dia.** **b: 4 mm (0.16 in) dia.**

Tool number Tool name	Description	
KV32101000 (J25689-A) Pin punch	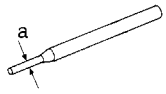 NT410	Installing throttle lever and manual shaft retaining pins **a: 4 mm (0.16 in) dia.**
ST25710000 (-) Pin punch	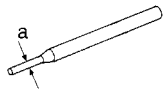 NT410	Aligning groove of manual shaft and hole of transmission case **a: 2 mm (0.08 in) dia.**
ST3306S001 (J22888-D) Differential side bearing puller set 1 ST33051001 (J22888-D) Puller ST33061000 2 (J8107-2) Adapter	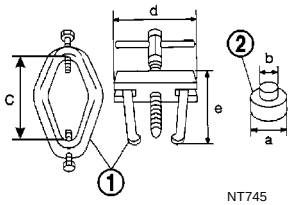 NT745	Removing differential side bearing inner race **a: 39 mm (1.54 in) dia.** **b: 29.5 mm (1.161 in) dia.** **c: 130 mm (5.12 in)** **d: 135 mm (5.31 in)** **e: 120 mm (4.72 in)**
KV381054S0 (J34286) Puller	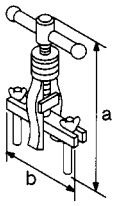 NT414	● Removing idler gear bearing outer race ● Removing differential side oil seals ● Removing differential side bearing outer race ● Removing needle bearing from bearing retainer **a: 250 mm (9.84 in)** **b: 160 mm (6.30 in)**
ST27180001 (J25726-A) Puller	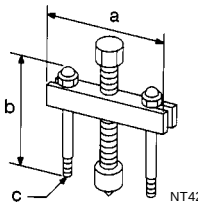 NT424	● Removing idler gear **a: 100 mm (3.94 in)** **b: 110 mm (4.33 in)** **c: M8 x 1.25P**
ST30031000 (J22912-1) Puller	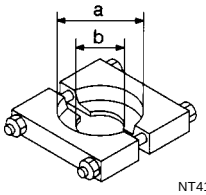 NT411	Removing reduction gear bearing inner race **a: 90 mm (3.54 in) dia.** **b: 50 mm (1.97 in) dia.**
ST3527200 (J26092) Drift	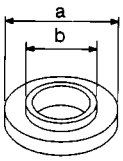 NT426	● Installing reduction gear bearing inner race ● Installing idler gear bearing inner race **a: 72 mm (2.83 in) dia.** **b: 35.5 mm (1.398 in) dia.**

Tool number Tool name	Description	
ST37830000 (-) Drift	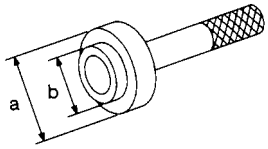 NT427	● Installing idler gear bearing outer race **a: 62 mm (2.44 in) dia.** **b: 39 mm (1.54 in) dia.**
ST35321000 (-) Drift	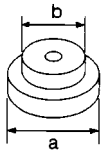 NT073	Installing output shaft bearing **a: 49 mm (1.93 in) dia.** **b: 41 mm (1.61 in) dia.**
ST30633000 (-) Drift	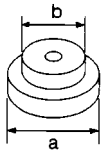 NT073	Installing differential side bearing outer race **a: 67mm (2.64 in) dia.** **b: 49 mm (1.93 in) dia.**
ST35271000 (J26091) Drift	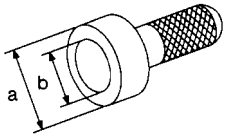 NT115	● Installing idler gear **a: 72 mm (2.83 in) dia.** **b: 63 mm (2.48 in) dia.**
ST33400001 (J26082) Drift	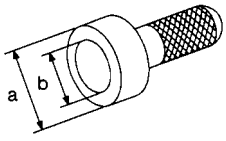 NT115	● Installing oil pump housing oil seal **a: 60 mm (2.36 in) dia.** **b: 47 mm (1.85 in) dia.**

Commercial Service Tools

ECS0096I

Tool name	Description	
Puller	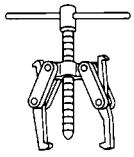 NT077	● Removing idler gear bearing inner race ● Removing and installing band servo piston snap ring
Drift	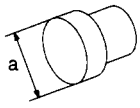 NT109	Removing idler gear bearing inner race **a: 34 mm (1.34 in) dia.**
Drift	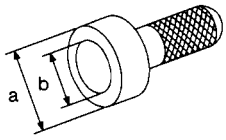 NT115	Installing differential left side bearing **a: 86 mm (3.39 in) dia.** **b: 80 mm (3.15 in) dia.**
Drift	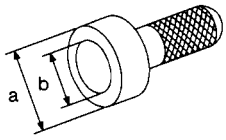 NT115	Installing differential right side bearing **a: 46 mm (1.81 in) dia.** **b: 40 mm (1.57 in) dia.**

A/T FLUID

PFP:KLE40

Checking A/T Fluid

ECS0096J

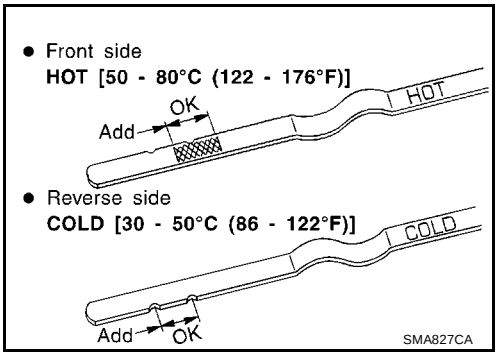

1. Warm up engine.
2. Check for fluid leakage.
3. Before driving, fluid level can be checked at fluid temperatures of 30 to 50°C (86 to 122°F) using “COLD” range on dipstick.

a. Park vehicle on level surface and set parking brake.

b. Start engine and move selector lever through each gear position. Leave selector lever in “P” position.

c. Check fluid level with engine idling.

d. Remove dipstick and note reading. If level is at low side of either range, and fluid to the charging pipe.

e. Re-insert dipstick into charging pipe as far as it will go.

f. Remove dipstick and note reading. If reading is at low side of range, add fluid to the charging pipe.

Do not overfill.

4. Drive vehicle for approximately 5 minutes in urban areas.
5. Re-check fluid level at fluid temperatures of 50 to 80°C (122 to 176°F) using “HOT” range on dipstick.
6. Check fluid condition.
   - If fluid is very dark or smells burned, refer to AT section for checking operation of A/T. Flush cooling system after repair of A/T.
   - If A/T fluid contains frictional material (clutches, bands, etc.), replace radiator and flush cooler line using cleaning solvent and compressed air after repair of A/T. Refer to LC-16, “Radiator”.

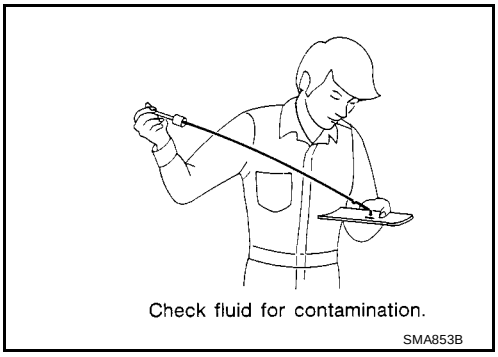

Changing A/T Fluid

ECS0096K

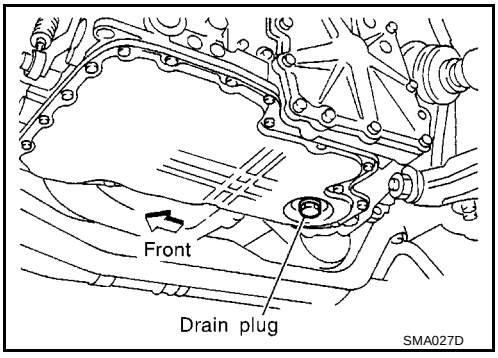

1. Warm up A/T fluid.
2. Stop engine.
3. Drain A/T fluid from drain plug and refill with new A/T fluid. Always refill same volume with drained fluid.

   Fluid grade:

   Genuine Nissan ATF or equivalent. Refer to MA-13, “Recommend Fluids and Lubricants”.

   Fluid capacity (With torque converter):

   Approx. 7.7 ℓ (6-3/4 Imp qt)

   Drain plug:

   : 29 - 39 N·m (3.0 - 4.0 kg-m, 22 - 29 ft-lb)

4. Run engine at idle speed for five minutes.
5. Check fluid level and condition. Refer to AT-13, "Checking A/T Fluid" . If fluid is still dirty, repeat steps 2 through 5.

OVERALL SYSTEM

PFP:00000

A/T Electrical Parts Location

ECS0096L

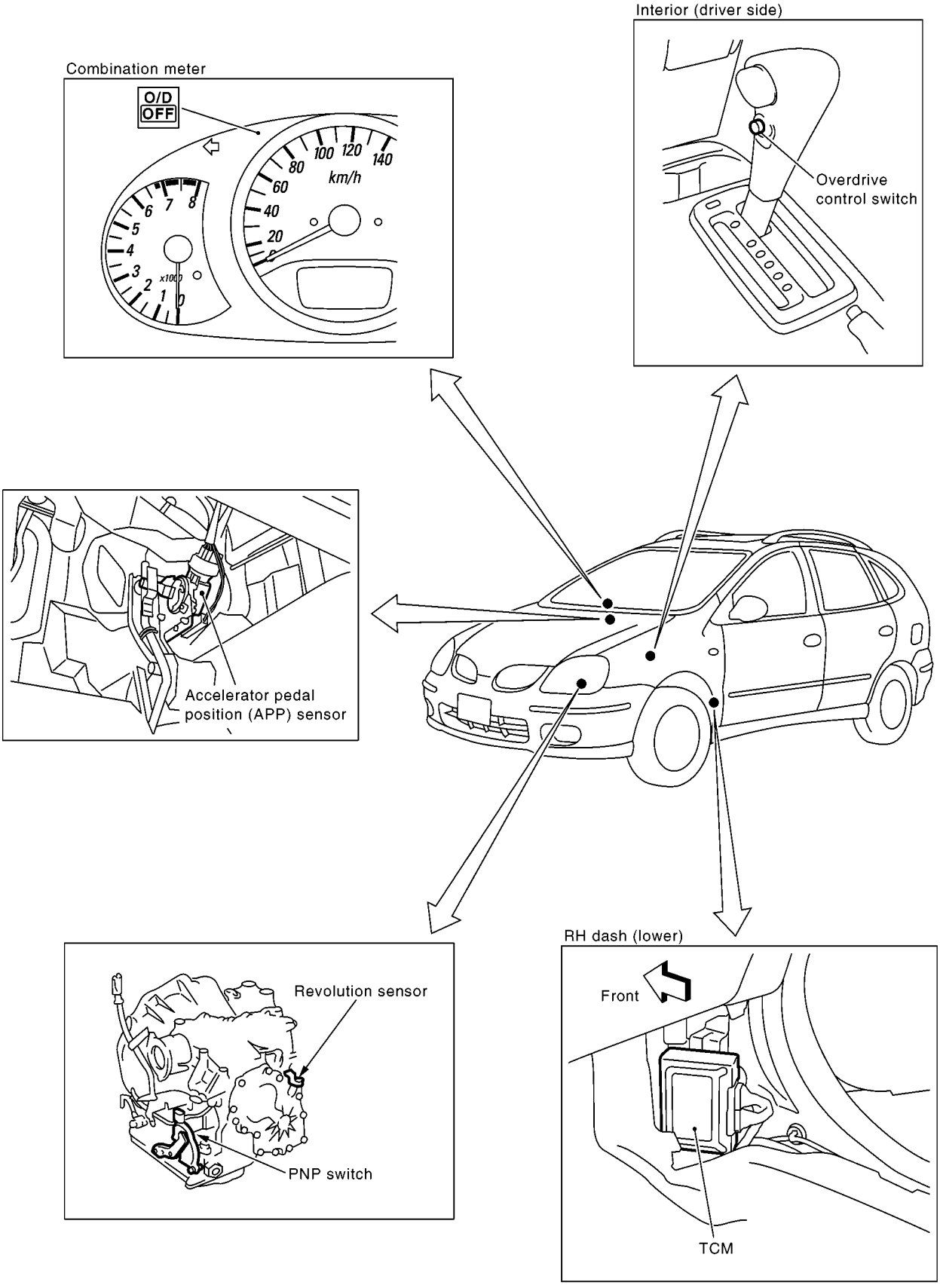

MCIA0065E

Circuit Diagram

ECS0096M

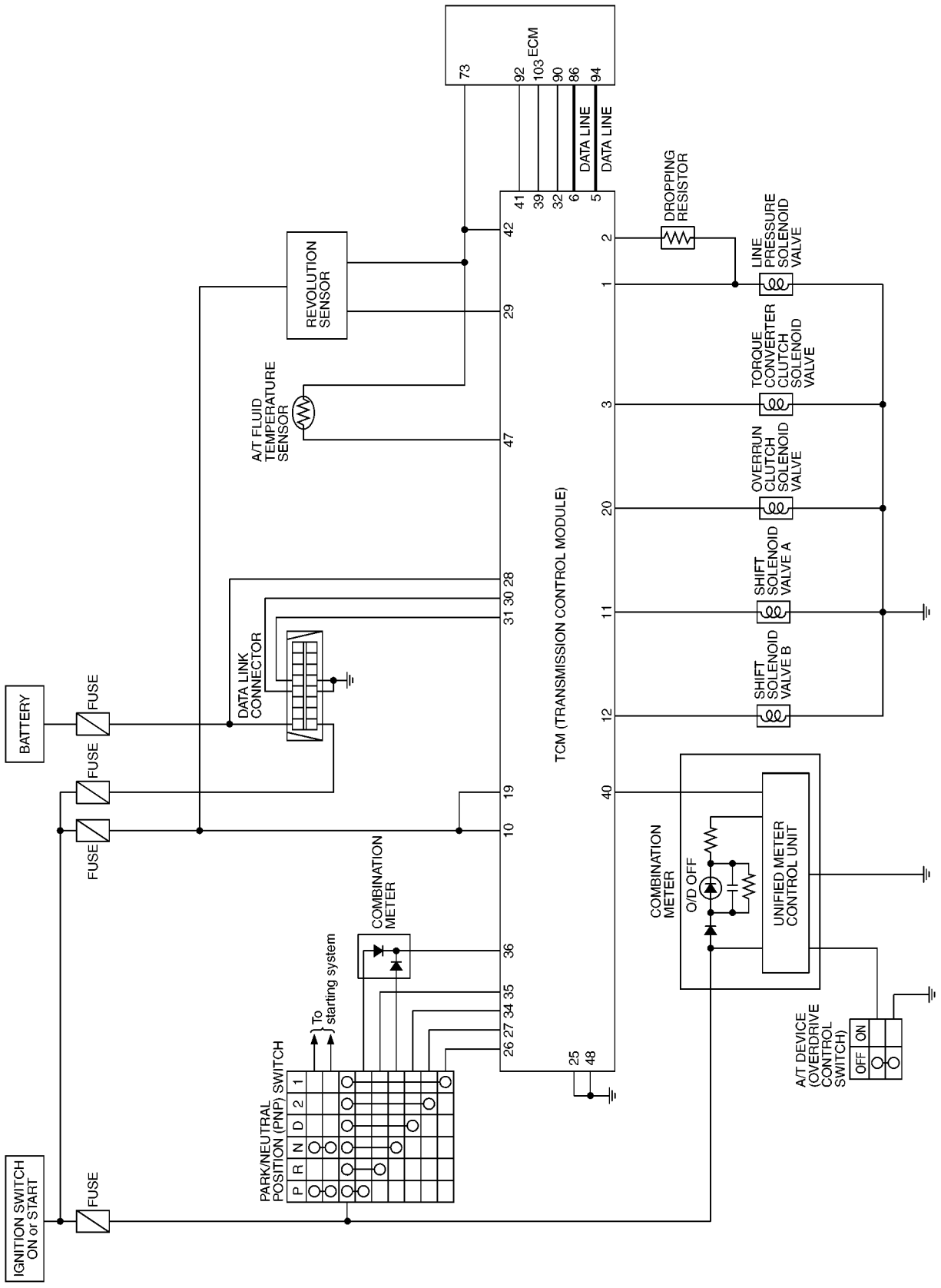

YAT368A

Cross-Sectional View

ECS0096N

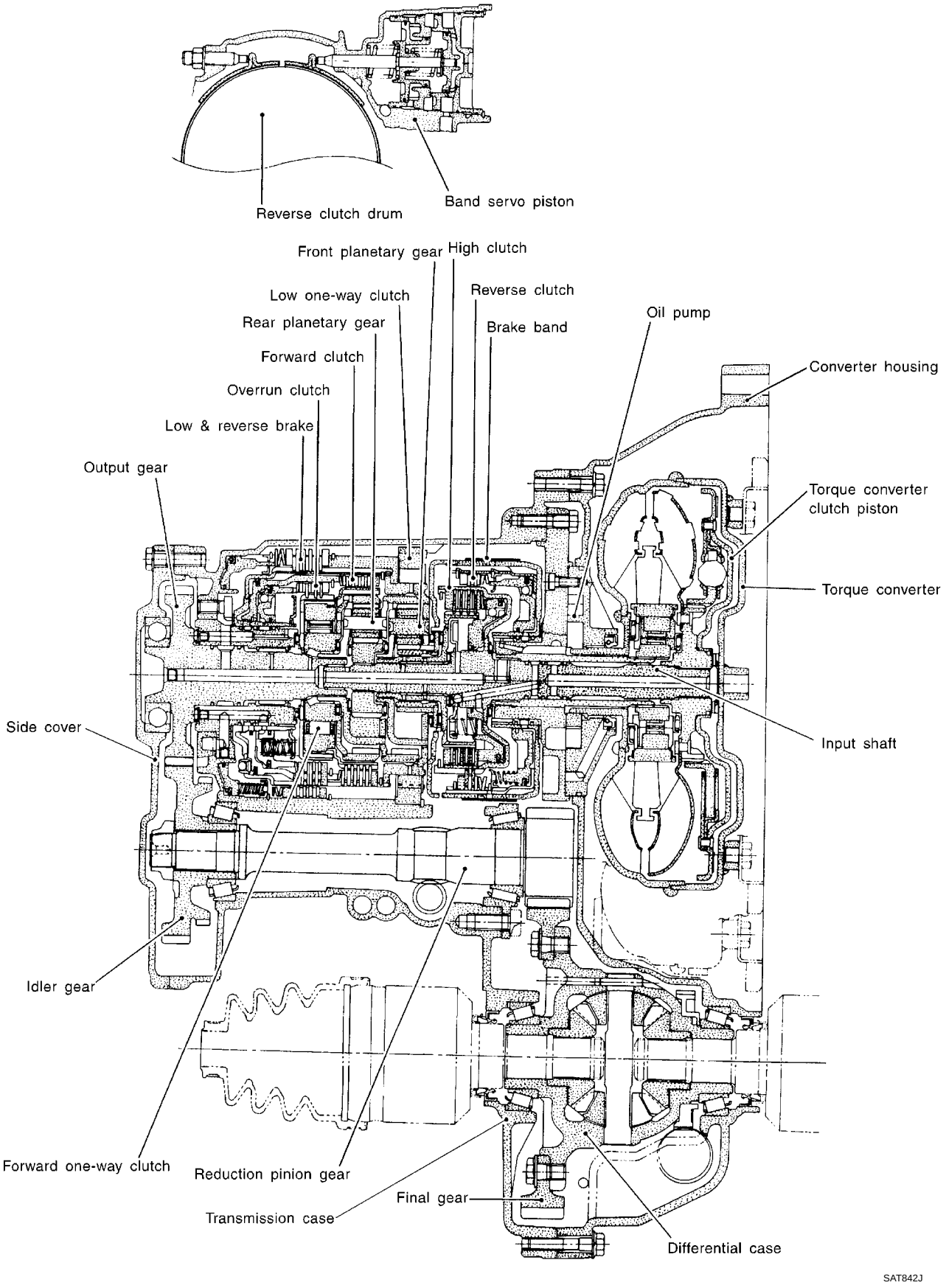

Hydraulic Control Circuit

ECS0096O

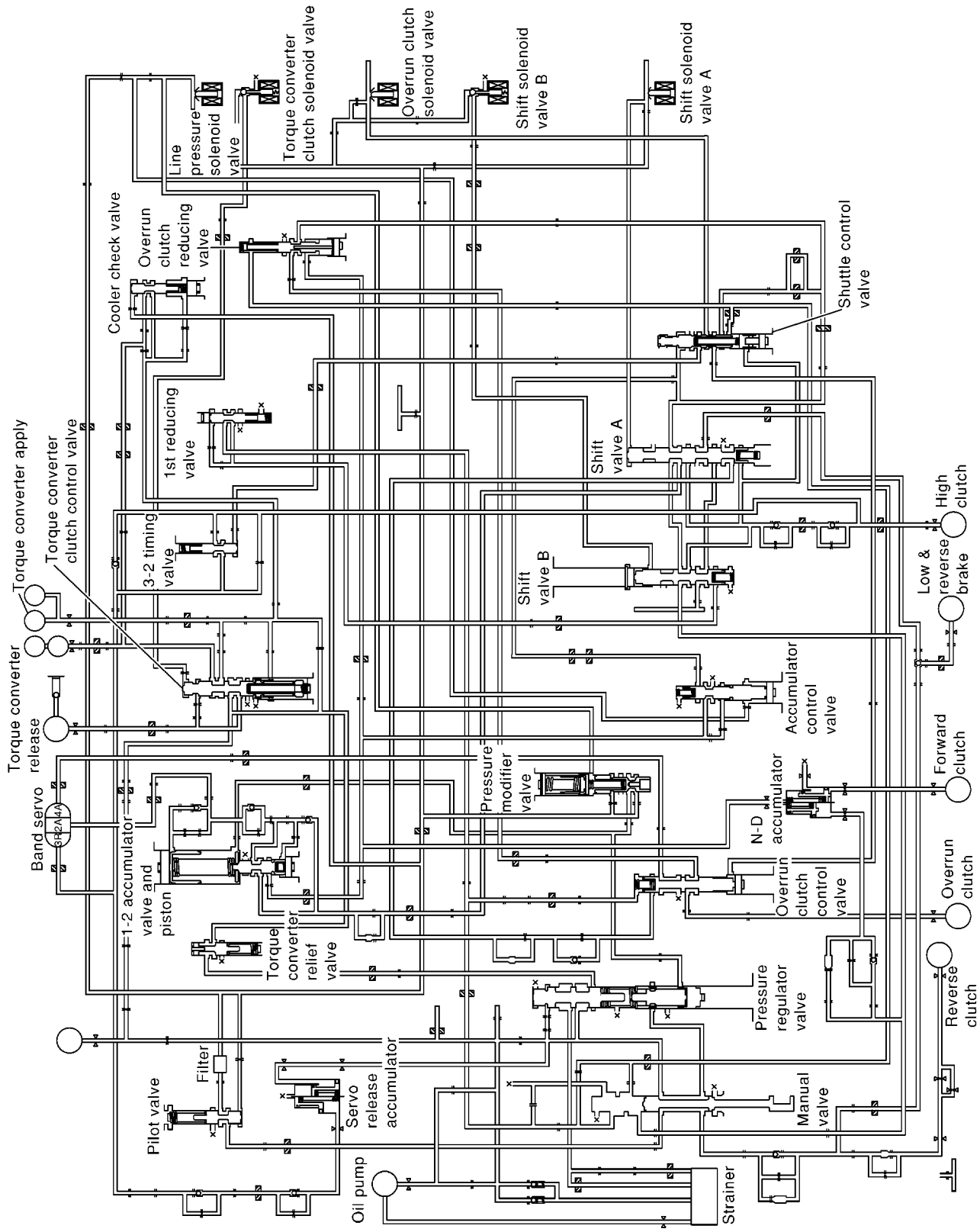

SAT844J

Shift Mechanism

ECS0096P

CONSTRUCTION

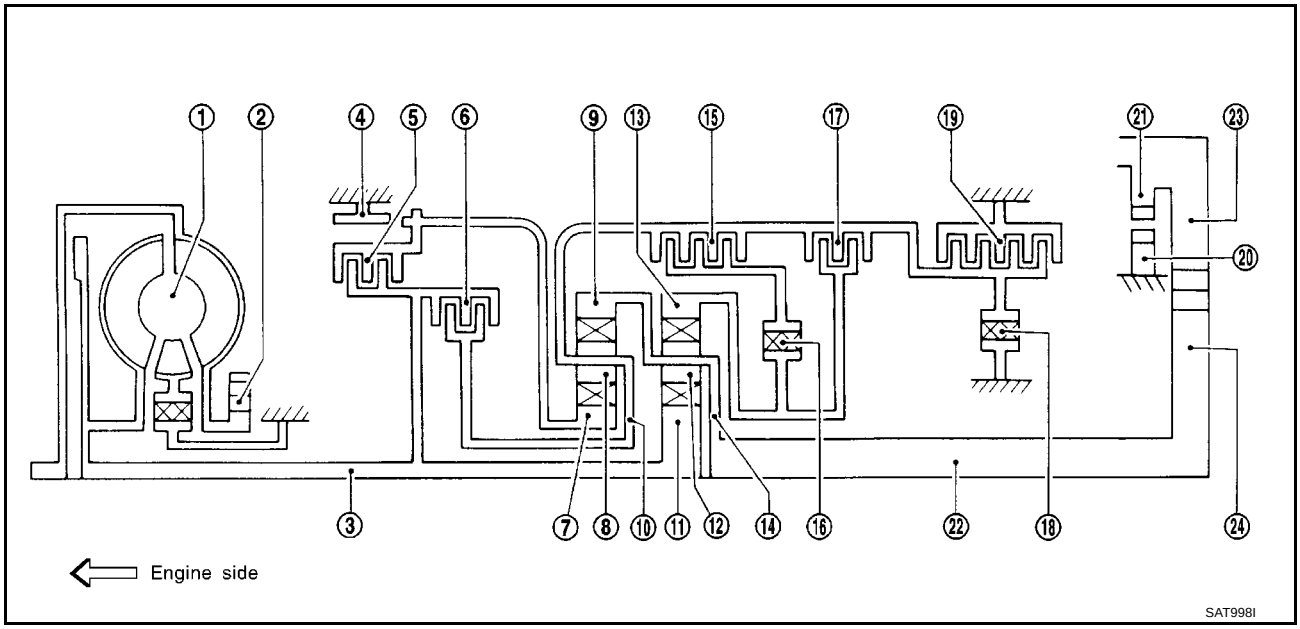

1. Torque converter
2. Oil pump
3. Input shaft
4. Brake band
5. Reverse clutch
6. High clutch
7. Front sun gear
8. Front pinion gear
9. Front internal gear
10. Front planetary carrier
11. Rear sun gear
12. Rear pinion gear
13. Rear internal gear
14. Rear planetary carrier
15. Forward clutch
16. Forward one-way clutch
17. Overrun clutch
18. Low one-way clutch
19. Low & reverse brake
20. Parking pawl
21. Parking gear
22. Output shaft
23. Idle gear
24. Output gear

FUNCTION OF CLUTCH AND BRAKE

Clutch and brake components	Abbr.	Function
5 Reverse clutch	R/C	To transmit input power to front sun gear **7** .
6 High clutch	H/C	To transmit input power to front planetary carrier **10** .
15 Forward clutch	F/C	To connect front planetary carrier **10** with forward one-way clutch **16** .
17 Overrun clutch	O/C	To connect front planetary carrier **10** with rear internal gear **13** .
4 Brake band	B/B	To lock front sun gear **7** .
16 Forward one-way clutch	F/O.C	When forward clutch **15** is engaged, to stop rear internal gear **13** from rotating in opposite direction against engine revolution.
18 Low one-way clutch	L/O.C	To stop front planetary carrier **10** from rotating in opposite direction against engine revolution.
19 Low & reverse brake	L & R/B	To lock front planetary carrier **10** .

CLUTCH AND BAND CHART

Shift position	Reverse clutch **5**	High clutch **6**	Forward clutch **15**	Overrun clutch **17**	Band servo			Forward one-way clutch **16**	Low one-way clutch **18**	Low & reverse brake **19**	Lock-up	Remarks
					2nd apply	3rd release	4th apply					
P												PARK POSITION
R	○									○		REVERSE POSITION
N												NEUTRAL POSITION

Shift position		Reverse clutch **5**	High clutch **6**	Forward clutch **15**	Overrun clutch **17**	Band servo 2nd apply	Band servo 3rd release	Band servo 4th apply	Forward one-way clutch **16**	Low one-way clutch **18**	Low & reverse brake **19**	Lock-up	Remarks
D*4	1st			○	*1D				B	B			Automatic shift 1 ⇔ 2 ⇔ 3 ⇔ 4
	2nd			○	*1A	○			B				
	3rd		○	○	*1A	*2C	C		B			*5○	
	4th		○	C		*3C	C	○				○	
2	1st			○	D				B	B			Automatic shift 1 ⇔ 2
	2nd			○	A	○			B				
1	1st			○	○				B		○		Locks (held stationary) in 1st speed 1 ⇐ 2
	2nd			○	○	○			B				

- *1: Operates when overdrive control switch is set in “OFF” position.
- *2: Oil pressure is applied to both 2nd “apply” side and 3rd “release” side of band servo piston. However, brake band does not contract because oil pressure area on the “release” side is greater than that on the “apply” side.
- *3: Oil pressure is applied to 4th “apply” side in condition *2 above, and brake band contracts.
- *4: A/T will not shift to 4th when overdrive control switch is set in “OFF” position.
- *5: Operates when overdrive control switch is “OFF”.
- ○: Operates.
- A: Operates when throttle opening is less than 3/16, activating engine brake.
- B: Operates during “progressive” acceleration.
- C: Operates but does not affect power transmission.
- D: Operates when throttle opening is less than 3/16, but does not affect engine brake.

POWER TRANSMISSION

“N” and “P” Positions

- “N” position
  Power from the input shaft is not transmitted to the output shaft because the clutches do not operate.
- “P” position
  Similar to the “N” position, the clutches do not operate. The parking pawl engages with the parking gear to mechanically hold the output shaft so that the power train is locked.

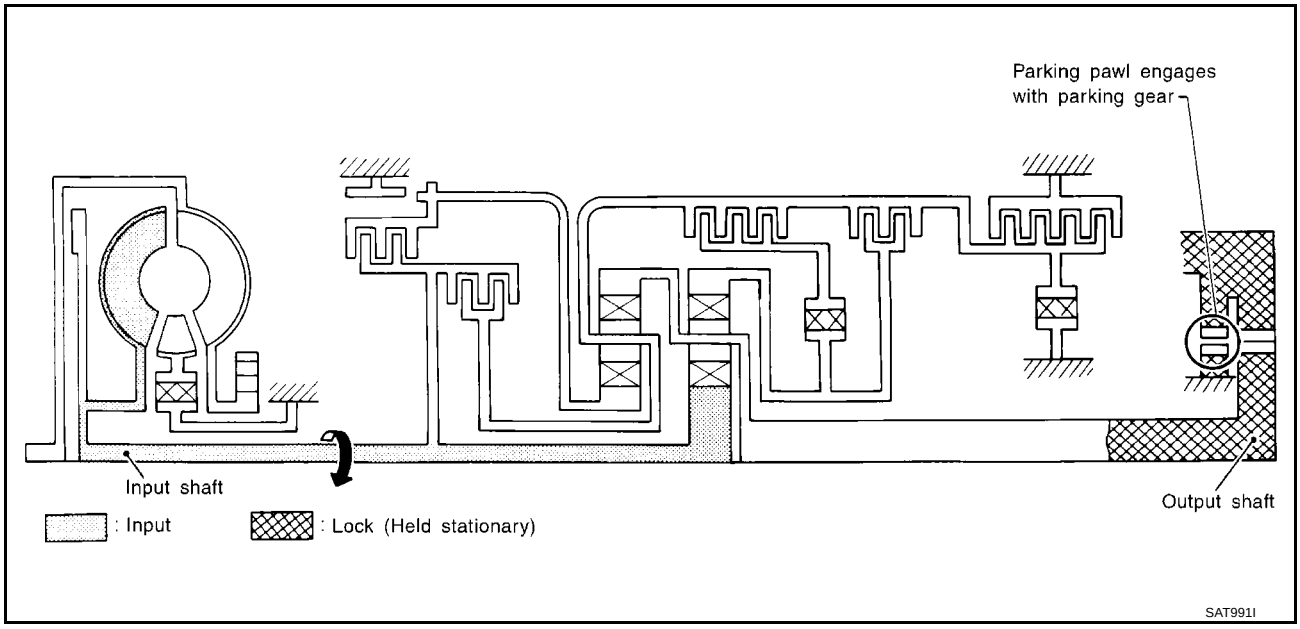

“1_1 ” Position

● **Forward clutch** ● **Forward one-way clutch** ● **Overrun clutch** ● **Low and reverse brake**	As overrun clutch engages, rear internal gear is locked by the operation of low & reverse brake. This is different from that of D_1 and 2_1 .
Engine brake	Overrun clutch always engages, therefore engine brake can be obtained when decelerating.

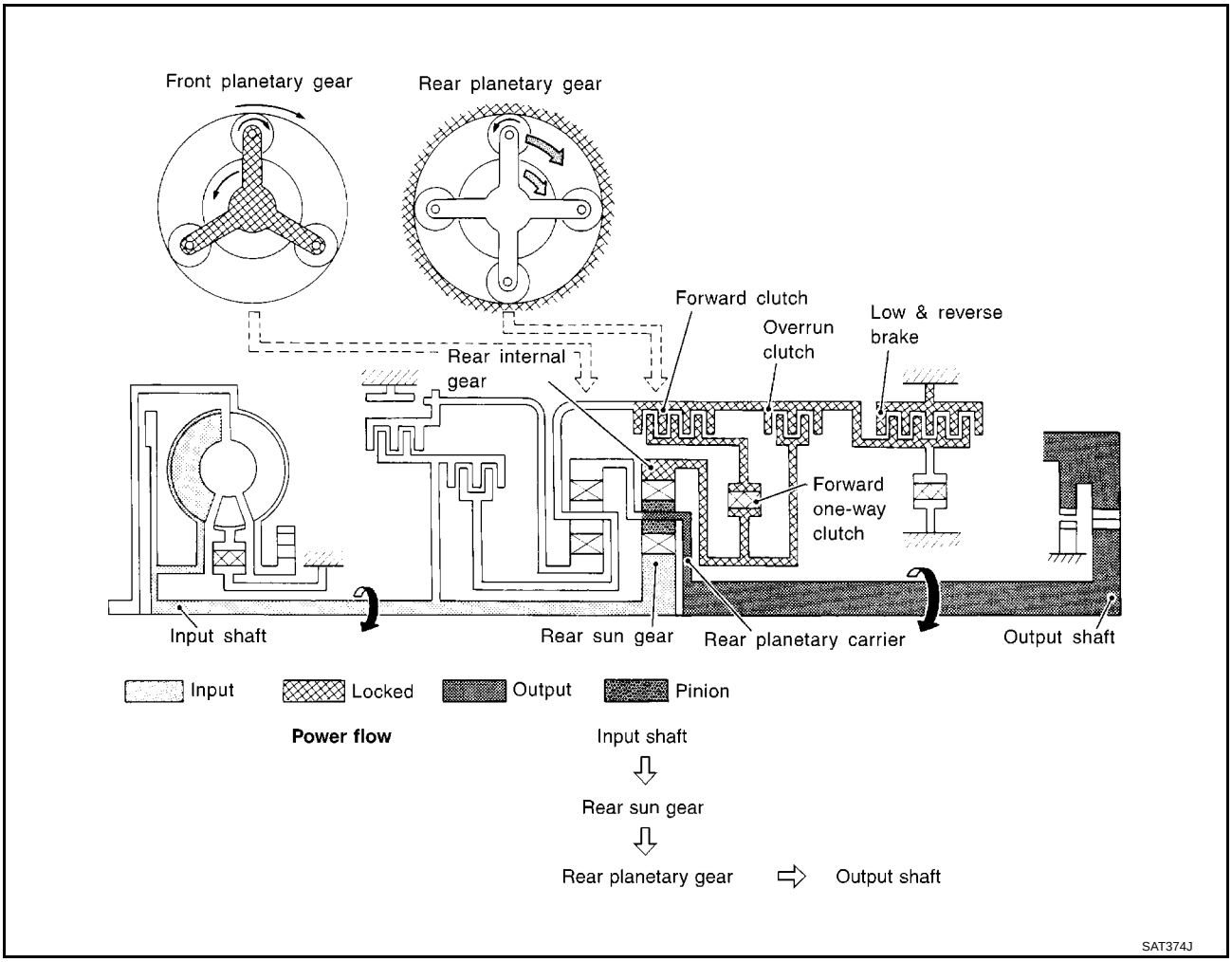

“D1 ” and “21 ” Positions

● **Forward one-way clutch** ● **Forward clutch** ● **Low one-way clutch**	Rear internal gear is locked to rotate counterclockwise because of the functioning of these three clutches.
Overrun clutch engagement conditions (Engine brake)	D1 : Overdrive control switch “OFF” and throttle opening is less than 3/16 21 : Operates when throttle opening is less than 3/16, but does not affect engine brake. At D1 and 21 positions, engine brake is not activated due to free turning of low one-way clutch.

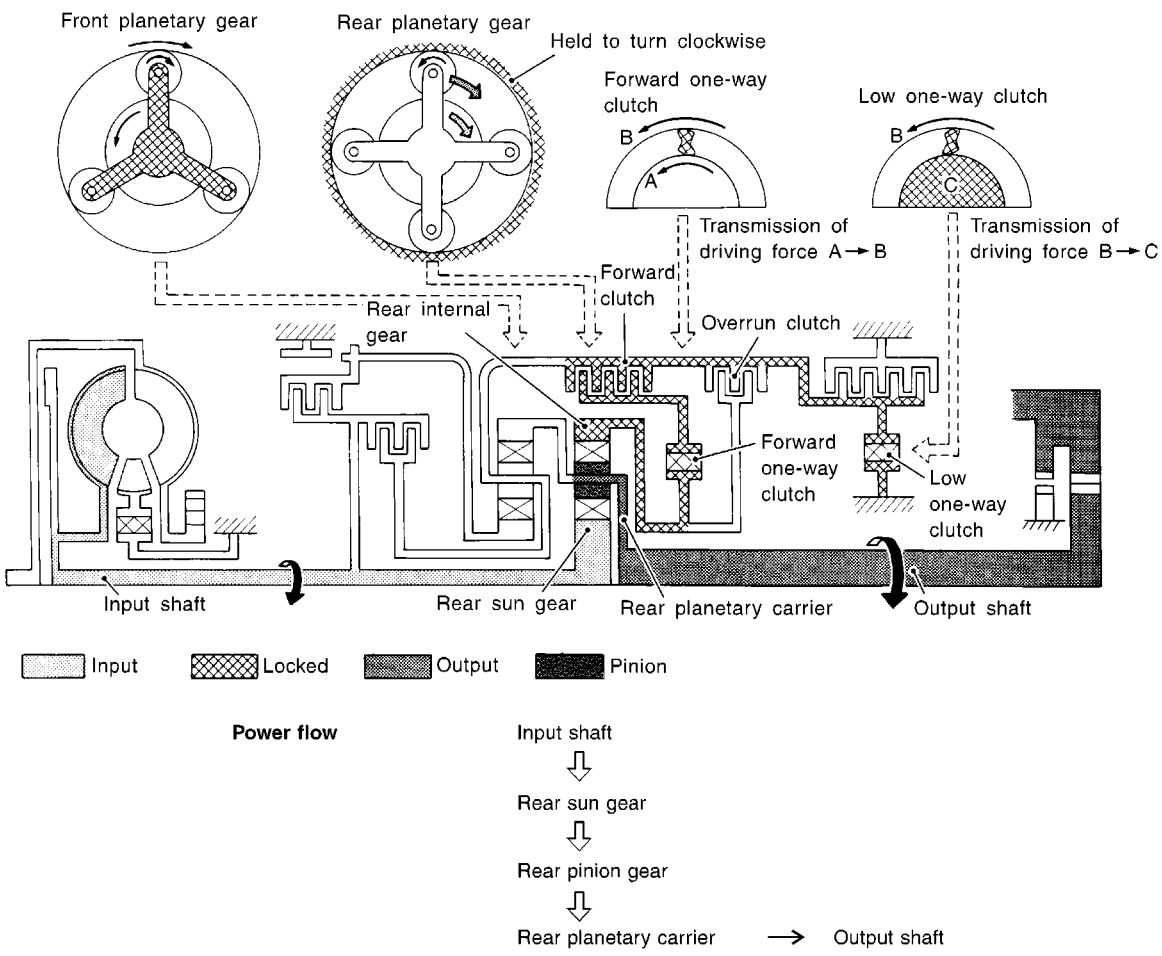

“D2 ”, “22 ” and “12 ” Positions

● **Forward clutch** ● **Forward one-way clutch** ● **Brake band**	Rear sun gear drives rear planetary carrier and combined front internal gear. Front internal gear now rotates around front sun gear accompanying front planetary carrier. As front planetary carrier transfers the power to rear internal gear through forward clutch and forward one-way clutch, this rotation of rear internal gear increases the speed of rear planetary carrier compared with that of the 1st speed.
Overrun clutch engagement conditions	D2 : Overdrive control switch “OFF” and throttle opening is less than 3/16 22: Operates when throttle opening is less than 3/16, but does not affect engine brake. 12 : Always engaged

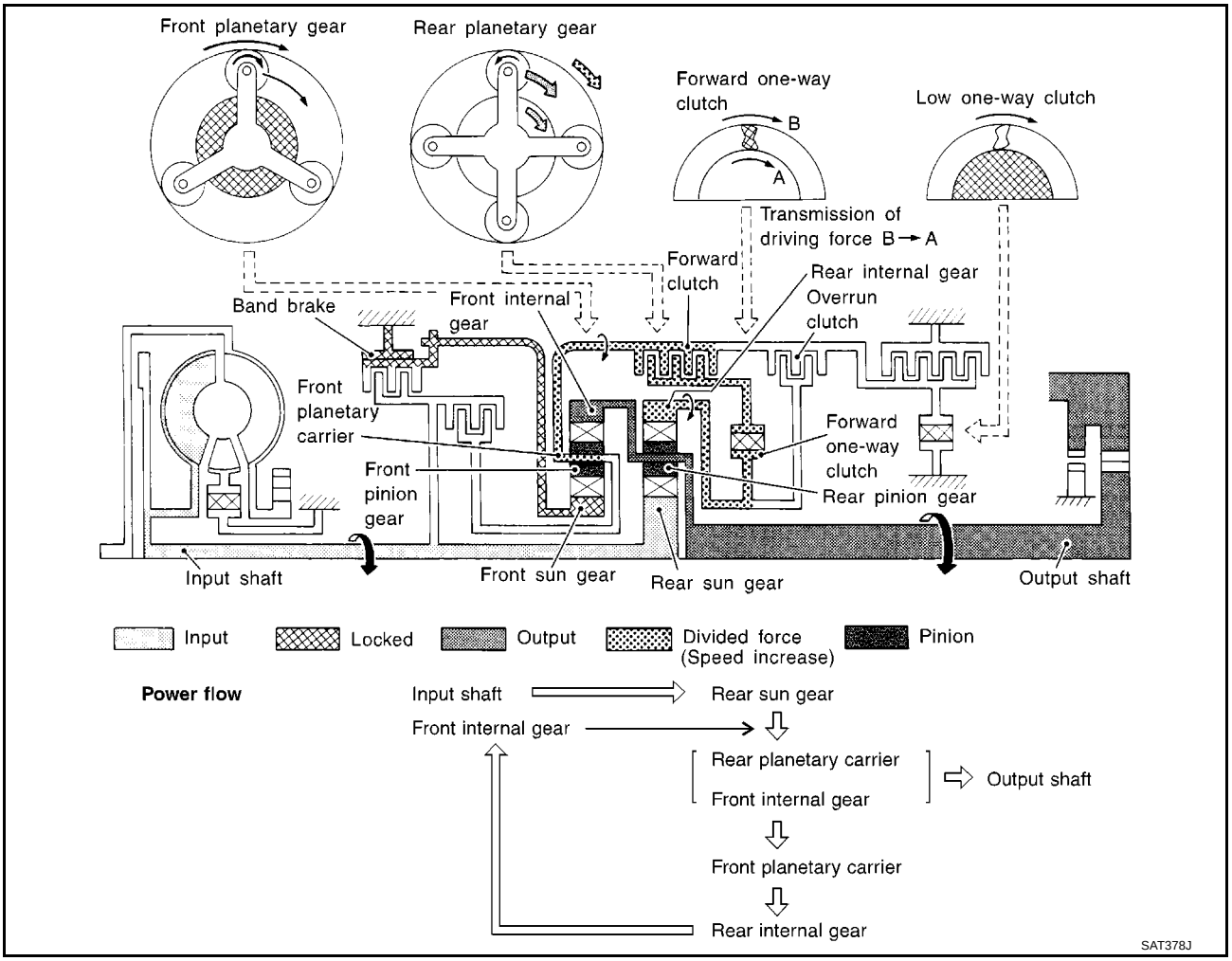

“D3 ” Position

● **High clutch** ● **Forward clutch** ● **Forward one-way clutch**	Input power is transmitted to front planetary carrier through high clutch. And front planetary carrier is connected to rear internal gear by operation of forward clutch and forward one-way clutch. This rear internal gear rotation and another input (the rear sun gear) accompany rear planetary carrier to turn at the same speed.
Overrun clutch engagement conditions	D3 : Overdrive control switch “OFF” and throttle opening is less than 3/16

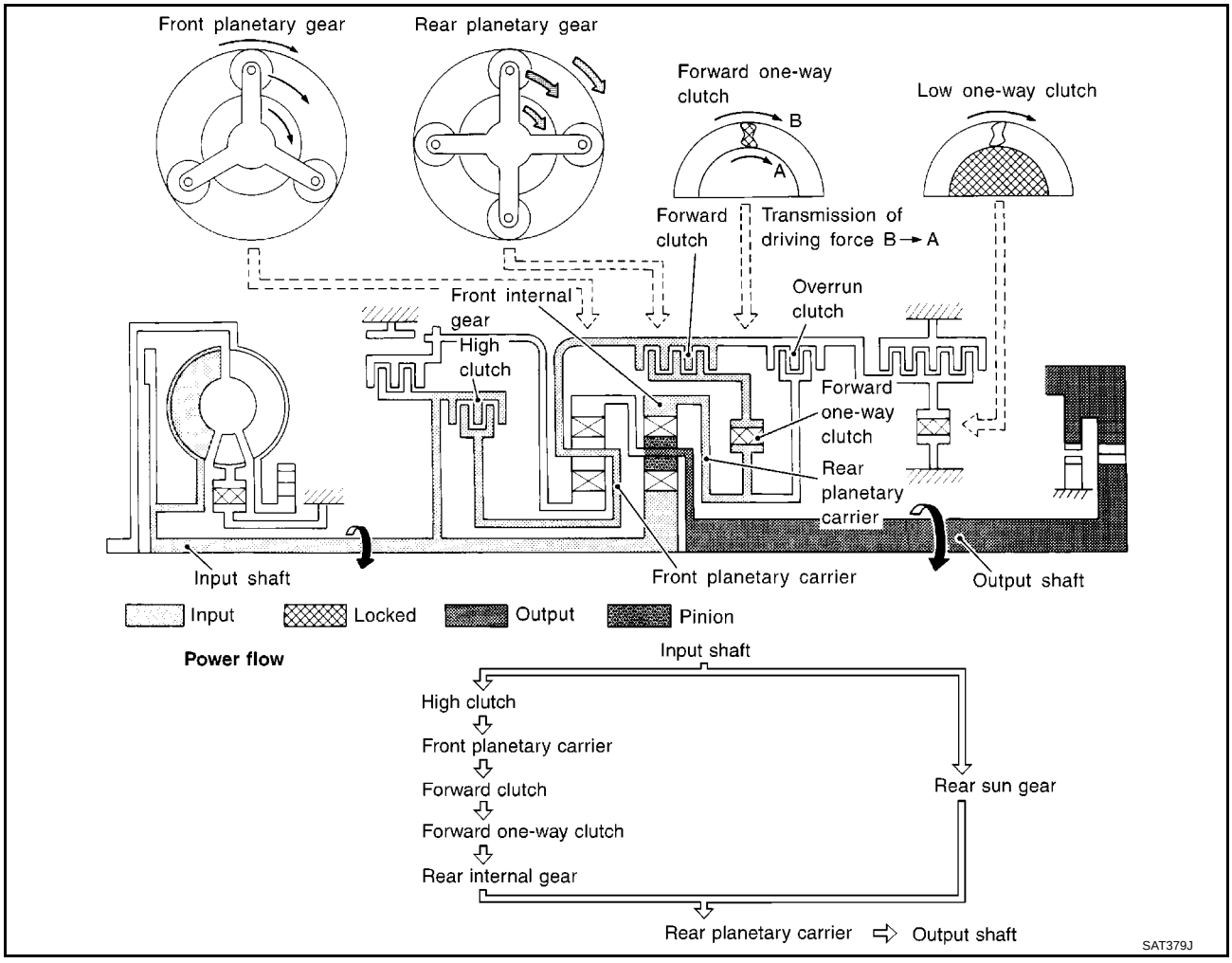

"D4 " (OD) Position

● **High clutch** ● **Brake band** ● **Forward clutch** (Does not affect power transmission)	Input power is transmitted to front planetary carrier through high clutch. This front planetary carrier turns around the front sun gear which is fixed by brake band and makes front internal gear (output) turn faster.
Engine brake	At D4 position, there is no one-way clutch in the power transmission line and engine brake can be obtained when decelerating.

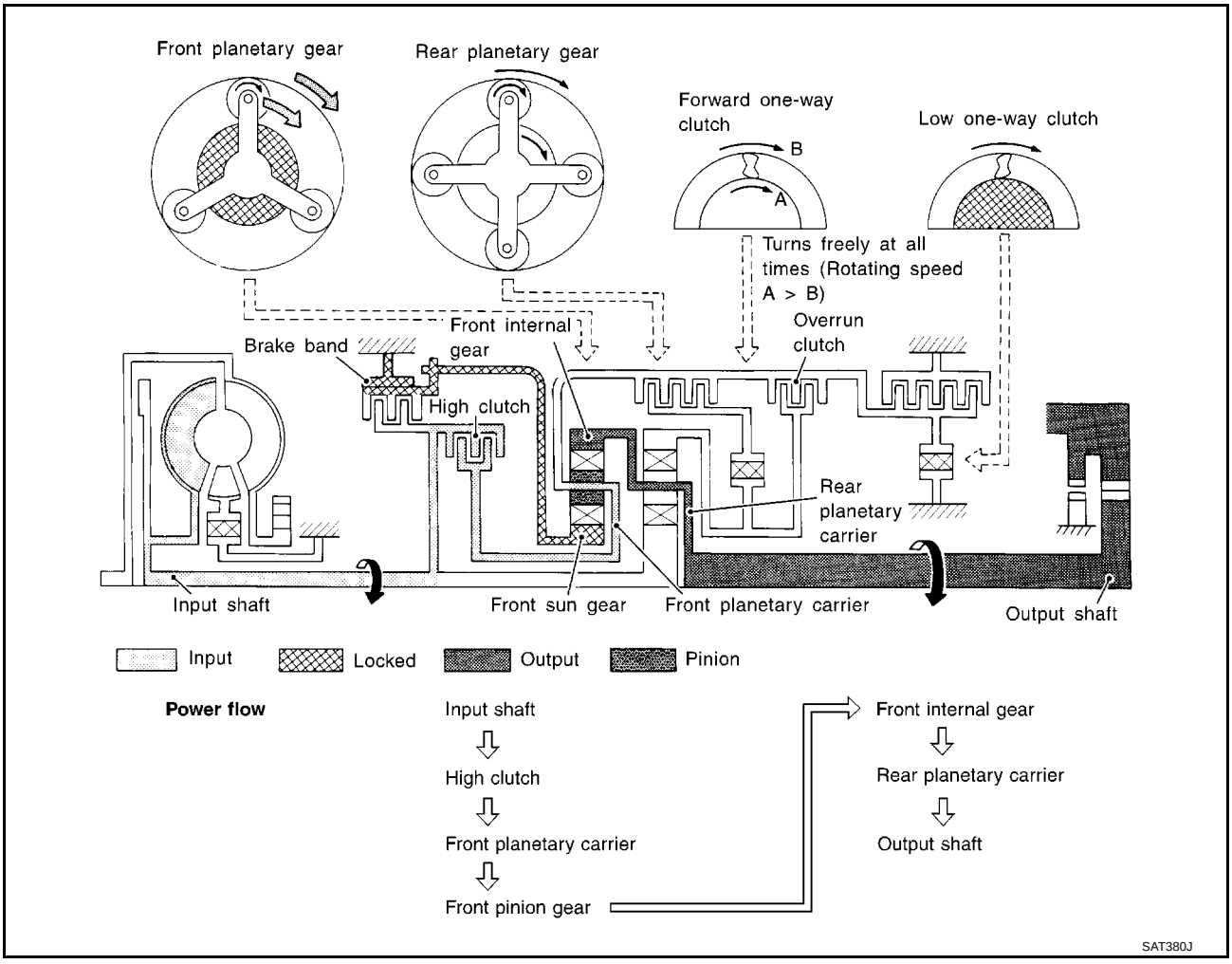

“R” Position

● **Reverse clutch** ● **Low and reverse brake**	Front planetary carrier is stationary because of the operation of low & reverse brake. Input power is transmitted to front sun gear through reverse clutch, which drives front internal gear in the opposite direction.
Engine brake	As there is no one-way clutch in the power transmission line, engine brake can be obtained when decelerating.

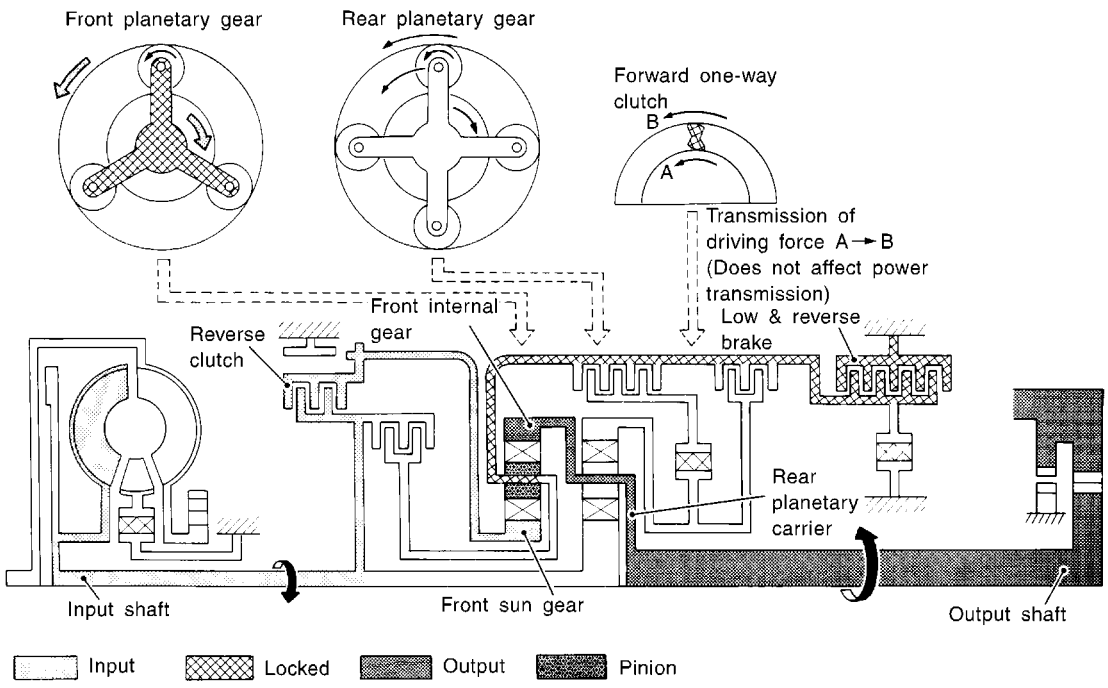

Power flow

Input shaft
⇩
Reverse clutch
⇩
Front pinion gear ⇦ Front sun gear
⇩
Front internal gear ⇨ Output shaft

SAT381J

Control System

ECS0096Q

OUTLINE

The automatic transaxle senses vehicle operating conditions through various switches and sensors. It always controls the optimum shift position and reduces shifting and lock-up shocks.

SWITCHES & SENSORS		TCM		ACTUATORS
PNP switch Throttle position sensor* Engine speed signal A/T fluid temperature sensor Revolution sensor Vehicle speed sensor Overdrive control switch Stop lamp switch	▶	Shift control Line pressure control Lock-up control Overrun clutch control Timing control Fail-safe control Self-diagnosis CONSULT-II communication line control	▶	Shift solenoid valve A Shift solenoid valve B Overrun clutch solenoid valve Torque converter clutch solenoid valve Line pressure solenoid valve O/D OFF indicator lamp

*: This sensor means Accelerator pedal position (APP) sensor.

CONTROL SYSTEM

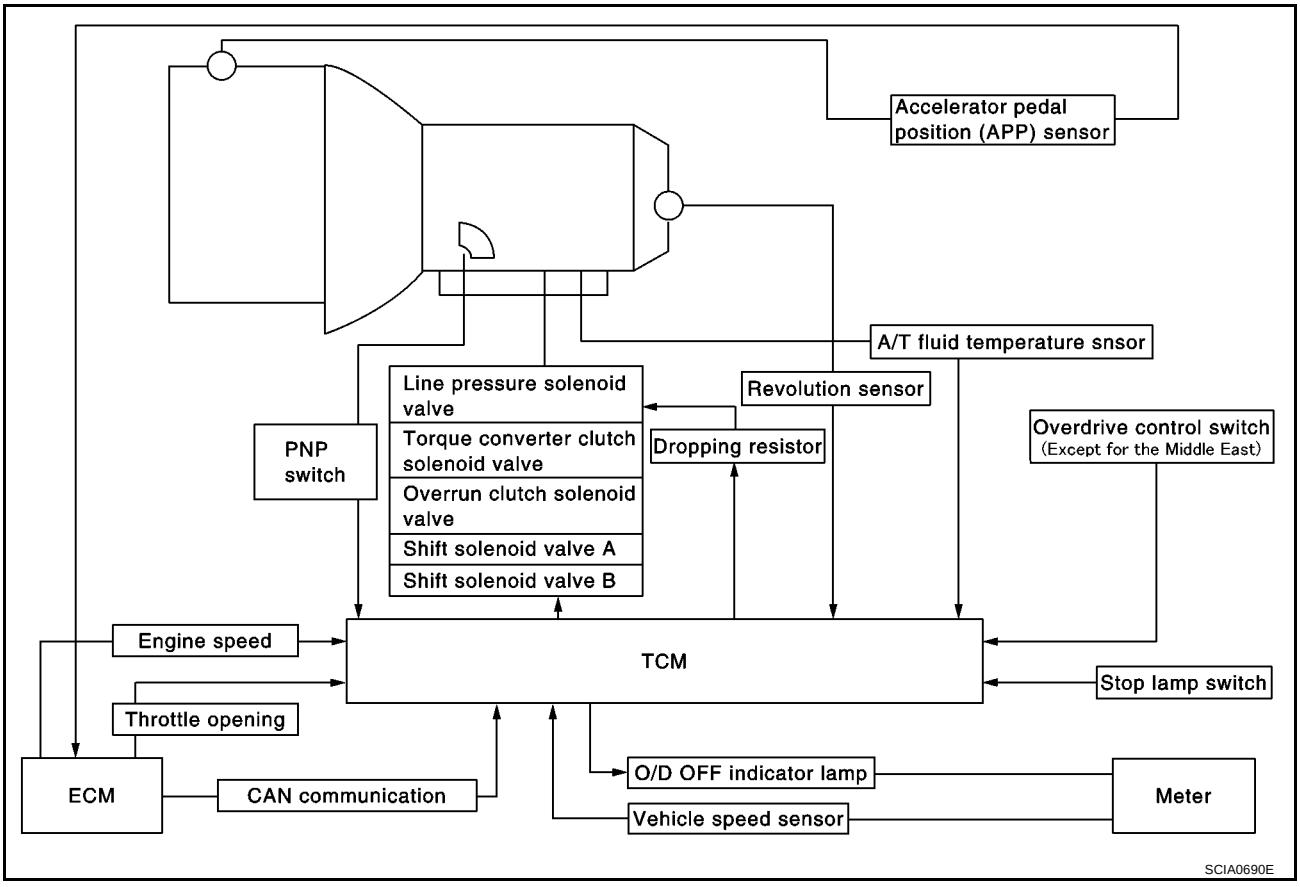

TCM FUNCTION

The function of the TCM is to:

- Receive input signals sent from various switches and sensors.
- Determine required line pressure, shifting point, lock-up operation, and engine brake operation.
- Send required output signals to the respective solenoid valves.

INPUT/OUTPUT SIGNAL OF TCM

	Sensors, switches and solenoid valves	Function
Input	PNP switch	Detects select lever position and sends a signal to TCM.
	Throttle position sensor (accelerator pedal position (APP) sensor)	Detects throttle valve position and sends a signal to TCM.
	Engine speed signal	From ECM.
	A/T fluid temperature sensor	Detects transmission fluid temperature and sends a signal to TCM.
	Revolution sensor	Detects output shaft rpm and sends a signal to TCM.
	Vehicle speed sensor	Used as an auxiliary vehicle speed sensor. Sends a signal when revolution sensor (installed on transmission) malfunctions.
	Overdrive control switch	Sends a signal, which prohibits a shift to “D4 ” (overdrive) position, to the TCM.
	Stop lamp switch	Releases lock-up system when depressing pedal in lock-up condition.
Output	Shift solenoid valve A/B	Selects shifting point suited to driving conditions in relation to a signal sent from TCM.
	Line pressure solenoid valve	Regulates (or decreases) line pressure suited to driving conditions in relation to a signal sent from TCM.
	Torque converter clutch solenoid valve	Regulates (or decreases) lock-up pressure suited to driving conditions in relation to a signal sent from TCM.
	Overrun clutch solenoid valve	Controls an “engine brake” effect suited to driving conditions in relation to a signal sent from TCM.
	O/D OFF indicator lamp	Shows TCM faults when A/T control components malfunction.

Control Mechanism

ECS0096R

LINE PRESSURE CONTROL

TCM has various line pressure control characteristics to match the driving conditions.
An ON-OFF duty signal is sent to the line pressure solenoid valve based on TCM characteristics.
Hydraulic pressure on the clutch and brake is electronically controlled through the line pressure solenoid valve to accommodate engine torque. This results in smooth shift operation.

Normal Control

The line pressure to throttle opening characteristics is set for suitable clutch operation.

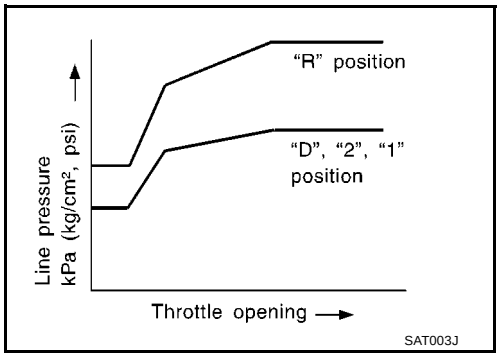

Back-up Control (Engine Brake)

If the selector lever is shifted to “2” position while driving in D_4 (OD) or D_3 , great driving force is applied to the clutch inside the transmission. Clutch operating pressure (line pressure) must be increased to deal with this driving force.

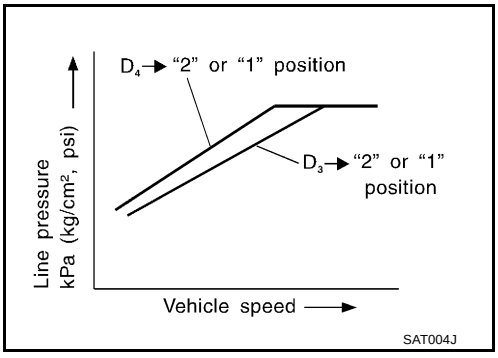

During Shift Change

The line pressure is temporarily reduced corresponding to a change in engine torque when shifting gears (that is, when the shift solenoid valve is switched for clutch operation) to reduce shifting shock.

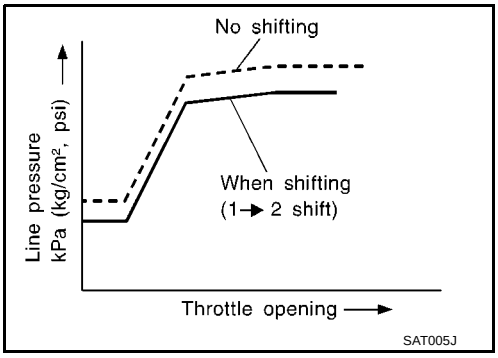

At Low Fluid Temperature

- Fluid viscosity and frictional characteristics of the clutch facing change with fluid temperature. Clutch engaging or band-contacting pressure is compensated for, according to fluid temperature, to stabilize shifting quality.
- The line pressure is reduced below 60°C (140°F) to prevent shifting shock due to low viscosity of automatic transmission fluid when temperature is low.

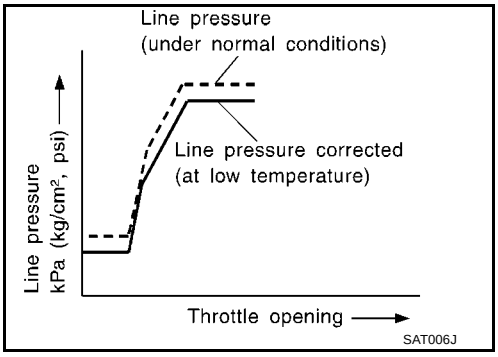

- Line pressure is increased to a maximum irrespective of the throttle opening when fluid temperature drops to –10°C (14°F). This pressure rise is adopted to prevent a delay in clutch and brake operation due to extreme drop of fluid viscosity at low temperature.

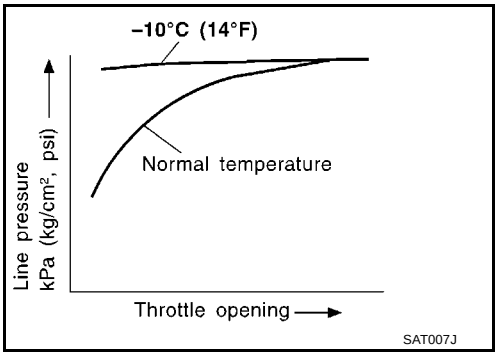

SHIFT CONTROL

The shift is regulated entirely by electronic control to accommodate vehicle speed and varying engine operations. This is accomplished by electrical signals transmitted by the revolution sensor and throttle position sensor. This results in improved acceleration performance and fuel economy.

Control of Shift Solenoid Valves A and B

The TCM activates shift solenoid valves A and B according to signals from the throttle position sensor and revolution sensor to select the optimum gear position on the basis of the shift schedule memorized in the TCM.
The shift solenoid valve performs simple ON-OFF operation. When set to “ON”, the drain circuit closes and pilot pressure is applied to the shift valve.

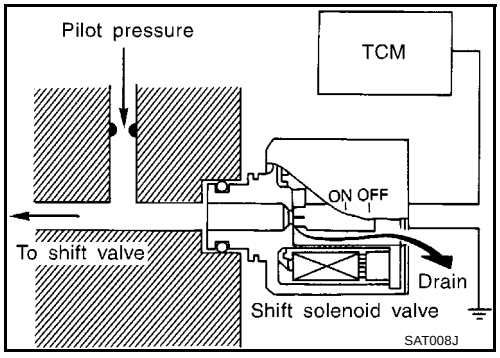

Relation Between Shift Solenoid Valves A and B and Gear Positions

Shift solenoid valve	Gear position				
	D_1 , 2_1 , 1_1	D_2 , 2_2 , 1_2	D_3	D_4 (OD)	N-P
A	ON (Closed)	OFF (Open)	OFF (Open)	ON (Closed)	ON (Closed)
B	ON (Closed)	ON (Closed)	OFF (Open)	OFF (Open)	ON (Closed)

Control of Shift Valves A and B

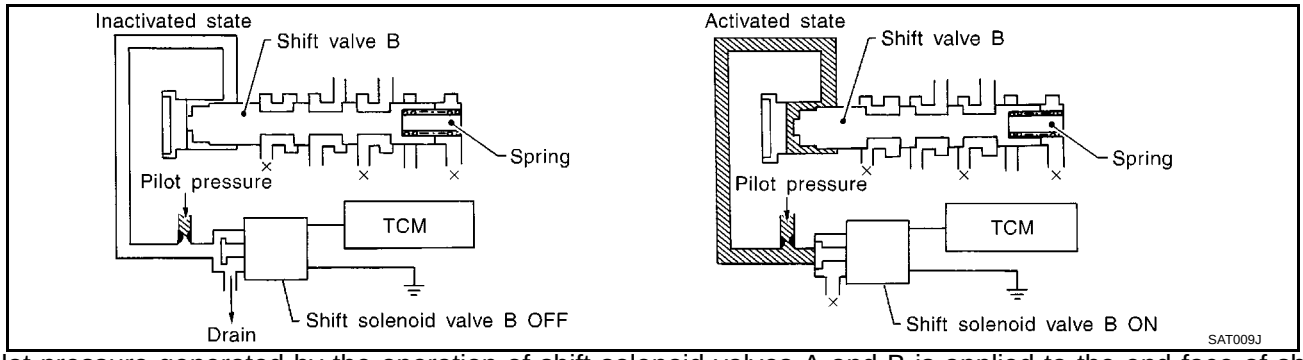

Pilot pressure generated by the operation of shift solenoid valves A and B is applied to the end face of shift valves A and B.
The drawing above shows the operation of shift valve B. When the shift solenoid valve is “ON”, pilot pressure applied to the end face of the shift valve overcomes spring force, moving the valve to right side on illustration.

LOCK-UP CONTROL

The torque converter clutch piston in the torque converter is locked to eliminate torque converter slip to increase power transmission efficiency. The solenoid valve is controlled by an ON-OFF duty signal sent from the TCM. The signal is converted to an oil pressure signal which controls the torque converter clutch piston.

Conditions for Lock-Up Operation

When vehicle is driven in 4th gear position, vehicle speed and throttle opening are detected. If the detected values fall within the lock-up zone memorized in the TCM, lock-up is performed.

Overdrive control switch	ON	OFF
Selector lever	“D” position	
Gear position	D_4	D_3
Vehicle speed sensor	More than set value	
Throttle position sensor	Less than set opening	
Closed throttle position switch	OFF	
A/T fluid temperature sensor	More than 40°C (104°F)	

Torque Converter Clutch Solenoid Valve Control

The torque converter clutch solenoid valve is controlled by the TCM. The plunger closes the drain circuit during the “OFF” period, and opens the circuit during the “ON” period. If the percentage of OFF-time increases in one cycle, the pilot pressure drain time is reduced and pilot pressure remains high.

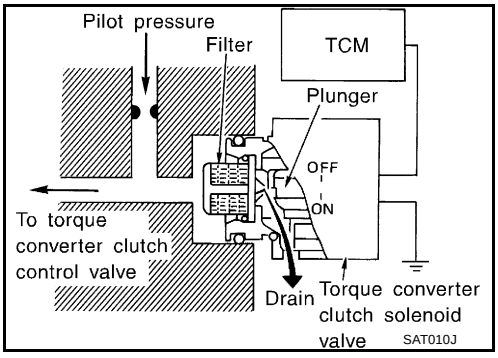

The torque converter clutch piston is designed to slip to adjust the ratio of ON-OFF, thereby reducing lock-up shock.

OFF-time INCREASING
↓
Amount of drain DECREASING
↓
Pilot pressure HIGH
↓
Lock-up RELEASING

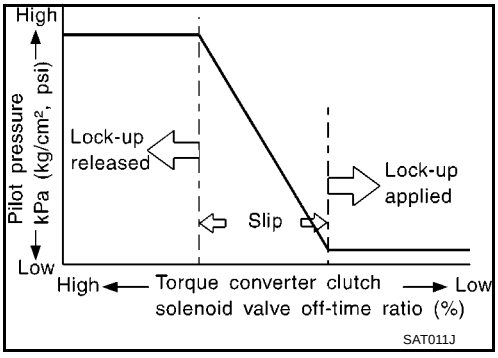

Torque Converter Clutch Control Valve Operation

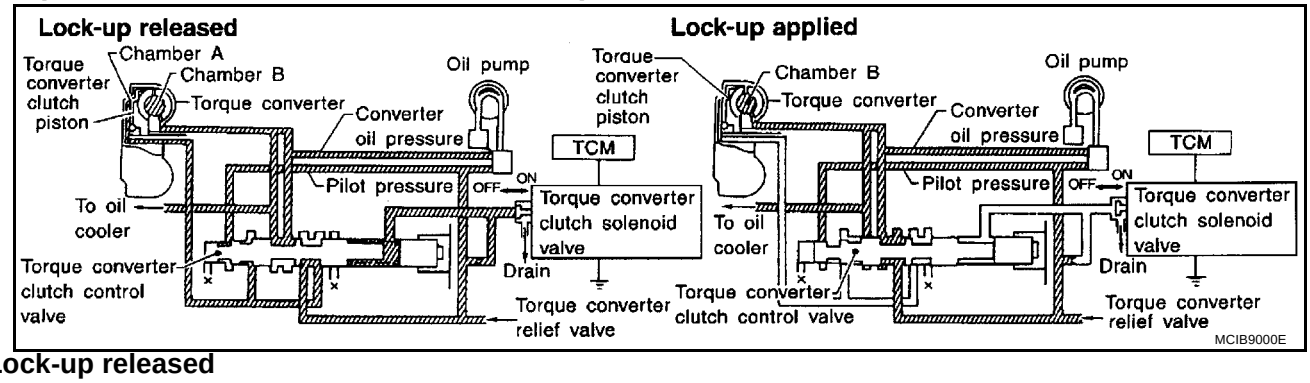

Lock-up released

The OFF-duration of the torque converter clutch solenoid valve is long, and pilot pressure is high. The pilot pressure pushes the end face of the torque converter clutch control valve in combination with spring force to move the valve to the left. As a result, converter pressure is applied to chamber A (torque converter clutch piston release side). Accordingly, the torque converter clutch piston remains unlocked.

Lock-up applied

When the OFF-duration of the torque converter clutch solenoid valve is short, pilot pressure drains and becomes low. Accordingly, the control valve moves to the right by the pilot pressure of the other circuit and converter pressure. As a result, converter pressure is applied to chamber B, keeping the torque converter clutch piston applied.

Also smooth lock-up is provided by transient application and release of the lock-up.

OVERRUN CLUTCH CONTROL (ENGINE BRAKE CONTROL)

Forward one-way clutch is used to reduce shifting shocks in downshifting operations. This clutch transmits engine torque to the wheels. However, drive force from the wheels is not transmitted to the engine because the one-way clutch rotates idle. This means the engine brake is not effective.
The overrun clutch operates when the engine brake is needed.

Overrun Clutch Operating Conditions

Selector lever position	Gear position	Throttle opening
“D” position → move to center	D_1 , D_2 , D_3 gear position	Less than 3/16
“2” position → move to center	2_1 , 2_2 gear position	
“1” position → move to center	1_1 , 1_2 gear position	At any position

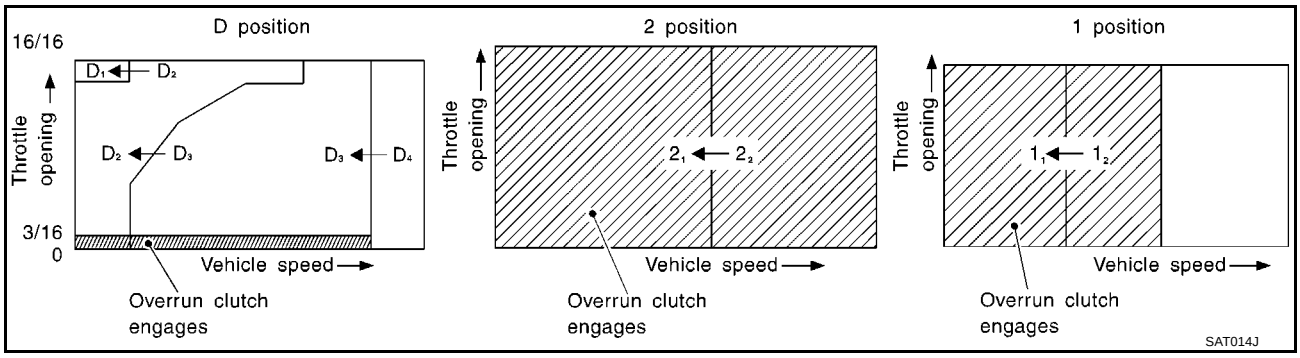

Overrun Clutch Solenoid Valve Control

The overrun clutch solenoid valve is operated by an ON-OFF signal transmitted by the TCM to provide overrun clutch control (engine brake control).
When this solenoid valve is “ON”, the pilot pressure drain port closes. When it is “OFF”, the drain port opens.
During the solenoid valve “ON” pilot pressure is applied to the end face of the overrun clutch control valve.

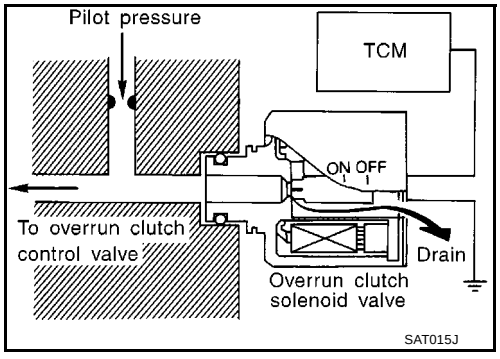

Overrun Clutch Control Valve Operation

When the solenoid valve is “ON”, pilot pressure is applied to the overrun clutch control valve. This pushes up the overrun clutch control valve. The line pressure is then shut off so that the clutch does not engage.
When the solenoid valve is “OFF”, pilot pressure is not generated. At this point, the overrun clutch control valve moves downward by spring force. As a result, overrun clutch operation pressure is provided by the overrun clutch reducing valve. This causes the overrun clutch to engage.
In the 1 position, the overrun clutch control valve remains pushed down so that the overrun clutch is engaged at all times.

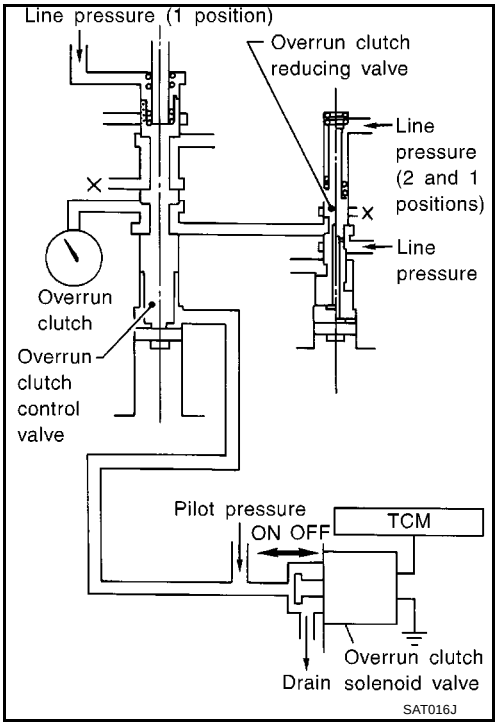

Control Valve

ECS0096S

FUNCTION OF CONTROL VALVES

Valve name	Function
Pressure regulator valve, plug and sleeve	Regulates oil discharged from the oil pump to provide optimum line pressure for all driving conditions.
Pressure modifier valve and sleeve	Used as a signal supplementary valve to the pressure regulator valve. Regulates pressure-modifier pressure (signal pressure) which controls optimum line pressure for all driving conditions.
Pilot valve	Regulates line pressure to maintain a constant pilot pressure level which controls lock-up mechanism, overrun clutch, shift timing.
Accumulator control valve	Regulates accumulator back-pressure to pressure suited to driving conditions.
Manual valve	Directs line pressure to oil circuits corresponding to select positions. Hydraulic pressure drains when the shift lever is in Neutral.
Shift valve A	Simultaneously switches four oil circuits using output pressure of shift solenoid valve A to meet driving conditions (vehicle speed, throttle opening, etc.). Provides automatic downshifting and up-shifting (1st → 2nd → 3rd → 4th gears/4th → 3rd → 2nd → 1st gears) in combination with shift valve B.
Shift valve B	Simultaneously switches three oil circuits using output pressure of shift solenoid valve B in relation to driving conditions (vehicle speed, throttle opening, etc.). Provides automatic downshifting and up-shifting (1st → 2nd → 3rd → 4th gears/4th → 3rd → 2nd → 1st gears) in combination with shift valve A.
Overrun clutch control valve	Switches hydraulic circuits to prevent engagement of the overrun clutch simultaneously with application of the brake band in D_4 . (Interlocking occurs if the overrun clutch engages during D_4 .)
1st reducing valve	Reduces low & reverse brake pressure to dampen engine-brake shock when down-shifting from the “1” position 1_2 to 1_1 .
Overrun clutch reducing valve	Reduces oil pressure directed to the overrun clutch and prevents engine-brake shock. In “1” and “2” positions, line pressure acts on the overrun clutch reducing valve to increase the pressure-regulating point, with resultant engine brake capability.
Torque converter relief valve	Prevents an excessive rise in torque converter pressure.
Torque converter clutch control valve, plug and sleeve	Activates or deactivates the lock-up function. Also provides smooth lock-up through transient application and release of the lock-up system.
1-2 accumulator valve and piston	Dampens the shock encountered when 2nd gear band servo contracts, and provides smooth shifting.
3-2 timing valve	Switches oil pressure with 3-2 timing valve according to throttle opening.
Shuttle control valve	Reduces shock when down-shifting from 3rd to 2nd and regulates overrun clutch.
Cooler check valve	Regulates oil pressure which causes lock-up when driving at low speeds.

TROUBLE DIAGNOSIS — INDEX

PFP:00000

Alphabetical & P No. Index for DTC

ECS0096T

ALPHABETICAL INDEX FOR DTC

Check if the vehicle is a model with EURO-OBD system or not by the “Type approval number” on the identification plate. Refer to GI-40, “Identification Plate”.

Type approval number	Model
Available	With EURO-OBD system
Not available (blank)	Without EURO-OBD system

Items (CONSULT-II screen terms)	DTC CONSULT-II GST*1	Reference page
A/T 1ST GR FNCTN	P0731	AT-135, "DTC P0731 A/T 1ST GEAR FUNCTION"
A/T 2ND GR FNCTN	P0732	AT-141, "DTC P0732 A/T 2ND GEAR FUNCTION"
A/T 3RD GR FNCTN	P0733	AT-147, "DTC P0733 A/T 3RD GEAR FUNCTION"
A/T 4TH GR FNCTN	P0734	AT-153, "DTC P0734 A/T 4TH GEAR FUNCTION"
ATF TEMP SEN/CIRC	P0710	AT-119, "DTC P0710 A/T FLUID TEMPERATURE SENSOR CIRCUIT"
ENGINE SPEED SIG	P0725	AT-131, "DTC P0725 ENGINE SPEED SIGNAL"
L/PRESS SOL/CIRC	P0745	AT-166, "DTC P0745 LINE PRESSURE SOLENOID VALVE"
O/R CLTCH SOL/CIRC	P1760	AT-189, "DTC P1760 OVER-RUN CLUTCH SOLENOID VALVE"
PNP SW/CIRC	P0705	AT-113, "DTC P0705 PARK/NEUTRAL POSITION (PNP) SWITCH"
SFT SOL A/CIRC*2	P0750	AT-173, "DTC P0750 SHIFT SOLENOID VALVE A"
SFT SOL B/CIRC*2	P0755	AT-178, "DTC P0755 SHIFT SOLENOID VALVE B"
TCC SOLENOID/CIRC	P0740	AT-161, "DTC P0740 TORQUE CONVERTER CLUTCH SOLE-NOID VALVE"
TP SEN/CIRC A/T*2	P1705	AT-183, "DTC P1705 ACCEL-ERATOR PEDAL POSITION (APP) SENSOR"
VEH SPD SEN/CIR AT*3	P0720	AT-125, "DTC P0720 VEHICLE SPEED SENSOR A/T (REVO-LUTION SENSOR)"
CAN COMM CIRCUIT	U1000	AT-194, "DTC U1000 CAN COMMUNICATION LINE"

- *1: These numbers are prescribed by ISO 15031-5.
- *2: When the fail-safe operation occurs, the MI illuminates.
- *3: The MI illuminates when both the “Revolution sensor signal” and the “Vehicle speed sensor signal” meet the fail-safe condition at the same time.

P NO. INDEX FOR DTC

Check if the vehicle is a model with EURO-OBD system or not by the “Type approval number” on the identification plate. Refer to GI-40, “Identification Plate”.

Type approval number	Model
Available	With EURO-OBD system
Not available (blank)	Without EURO-OBD system

DTC CONSULT-II GST*1	Items (CONSULT-II screen terms)	Reference page
P0705	PNP SW/CIRC	AT-113, "DTC P0705 PARK/NEUTRAL POSITION (PNP) SWITCH"
P0710	ATF TEMP SEN/CIRC	AT-119, "DTC P0710 A/T FLUID TEMPERATURE SENSOR CIRCUIT"
P0720	VEH SPD SEN/CIR AT*3	AT-125, "DTC P0720 VEHICLE SPEED SENSOR A/T (REVOLUTION SENSOR)"
P0725	ENGINE SPEED SIG	AT-131, "DTC P0725 ENGINE SPEED SIGNAL"
P0731	A/T 1ST GR FNCTN	AT-135, "DTC P0731 A/T 1ST GEAR FUNCTION"
P0732	A/T 2ND GR FNCTN	AT-141, "DTC P0732 A/T 2ND GEAR FUNCTION"
P0733	A/T 3RD GR FNCTN	AT-147, "DTC P0733 A/T 3RD GEAR FUNCTION"
P0734	A/T 4TH GR FNCTN	AT-153, "DTC P0734 A/T 4TH GEAR FUNCTION"
P0740	TCC SOLENOID/CIRC	AT-161, "DTC P0740 TORQUE CONVERTER CLUTCH SOLENOID VALVE"
P0745	L/PRESS SOL/CIRC	AT-166, "DTC P0745 LINE PRESSURE SOLENOID VALVE"
P0750	SFT SOL A/CIRC*2	AT-173, "DTC P0750 SHIFT SOLENOID VALVE A"
P0755	SFT SOL B/CIRC*2	AT-178, "DTC P0755 SHIFT SOLENOID VALVE B"
P1705	TP SEN/CIRC A/T*2	AT-183, "DTC P1705 ACCELERATOR PEDAL POSITION (APP) SENSOR"
P1760	O/R CLTCH SOL/CIRC	AT-189, "DTC P1760 OVERRUN CLUTCH SOLENOID VALVE"
U1000	CAN COMM CIRCUIT	AT-194, "DTC U1000 CAN COMMUNICATION LINE"

- *1: These numbers are prescribed by ISO 15031-5.
- *2: When the fail-safe operation occurs, the MI illuminates.
- *3: The MI illuminates when both the “Revolution sensor signal” and the “Vehicle speed sensor signal” meet the fail-safe condition at the same time.

ON BOARD DIAGNOSTIC SYSTEM DESCRIPTION

PFP:00000

Introduction

ECS0096U

The A/T system has two self-diagnostic systems.
The first is the emission-related on board diagnostic system (EURO-OBD) performed by the TCM in combination with the ECM. The malfunction is indicated by the MI (malfunction indicator) and is stored as a DTC in the ECM memory but not the TCM memory.
The second is the TCM original self-diagnosis indicated by the O/D OFF indicator lamp. The malfunction is stored in the TCM memory. The detected items are overlapped with EURO-OBD self-diagnostic items. For detail, refer to AT-37, "ON BOARD DIAGNOSTIC SYSTEM DESCRIPTION" .

EURO-OBD Function for A/T System

ECS0096V

The ECM provides emission-related on board diagnostic (EURO-OBD) functions for the A/T system. One function is to receive a signal from the TCM used with EURO-OBD-related parts of the A/T system. The signal is sent to the ECM when a malfunction occurs in the corresponding EURO-OBD-related part. The other function is to indicate a diagnostic result by means of the MI (malfunction indicator) on the instrument panel. Sensors, switches and solenoid valves are used as sensing elements.
The MI automatically illuminates in One or Two Trip Detection Logic when a malfunction is sensed in relation to A/T system parts.

One or Two Trip Detection Logic of EURO-OBD

ECS0096W

ONE TRIP DETECTION LOGIC

If a malfunction is sensed during the first test drive, the MI will illuminate and the malfunction will be stored in the ECM memory as a DTC. The TCM is not provided with such a memory function.

TWO TRIP DETECTION LOGIC

When a malfunction is sensed during the first test drive, it is stored in the ECM memory as a 1st trip DTC (diagnostic trouble code) or 1st trip freeze frame data. At this point, the MI will not illuminate. — First Trip
If the same malfunction as that experienced during the first test drive is sensed during the second test drive, the MI will illuminate. — Second Trip
A/T-related parts for which the MI illuminates during the first or second test drive are listed below.

Items	MI	
	One trip detection	Two trip detection
Shift solenoid valve A — DTC: P0750	X	
Shift solenoid valve B — DTC: P0755	X	
Throttle position sensor — DTC: P1705	X	
Except above		X

The “trip” in the “One or Two Trip Detection Logic” means a driving mode in which self-diagnosis is performed during vehicle operation.

EURO-OBD Diagnostic Trouble Code (DTC)

ECS0096X

HOW TO READ DTC AND 1ST TRIP DTC

DTC and 1st trip DTC can be read by the following methods.

(With CONSULT-II or GST)
CONSULT-II or GST (Generic Scan Tool) Examples: P0705, P0710, P0720, P0725, etc.
These DTCs are prescribed by ISO 15031-5.
(CONSULT-II also displays the malfunctioning component or system.)

- **1st trip DTC No. is the same as DTC No.**
- **Output of the diagnostic trouble code indicates that the indicated circuit has a malfunction. However, in case of the Mode II and GST they do not indicate whether the malfunction is still occurring or occurred in the past and returned to normal.**
  CONSULT-II can identify them as shown below. Therefore, using CONSULT-II (if available) is recommended.

A sample of CONSULT-II display for DTC is shown in the following page. DTC or 1st trip DTC of a malfunction is displayed in SELF DIAGNOSIS mode for “ENGINE” with CONSULT-II. Time data indicates how many times the vehicle was driven after the last detection of a DTC.

SELECT SYSTEM
A/T
ENGINE

SAT014K

If the DTC is being detected currently, the time data will be “0”.

SELF-DIAG RESULTS	
DTC RESULTS	TIME
PNP SW/CIRC [P0705]	0

SAT015K

If a 1st trip DTC is stored in the ECM, the time data will be “1t”.

SELF-DIAG RESULTS	
DTC RESULTS	TIME
PNP SW/CIRC [P0705]	1 t

SAT016K

Freeze Frame Data and 1st Trip Freeze Frame Data

The ECM has a memory function, which stores the driving condition such as fuel system status, calculated load value, engine coolant temperature, short term fuel trim, long term fuel trim, engine speed and vehicle speed at the moment the ECM detects a malfunction.
Data which are stored in the ECM memory, along with the 1st trip DTC, are called 1st trip freeze frame data, and the data, stored together with the DTC data, are called freeze frame data and displayed on CONSULT-II or GST. The 1st trip freeze frame data can only be displayed on the CONSULT-II screen, not on the GST. For detail, refer to EC-116, "CONSULT-II Function" (QG).
Only one set of freeze frame data (either 1st trip freeze frame data of freeze frame data) can be stored in the ECM. 1st trip freeze frame data is stored in the ECM memory along with the 1st trip DTC. There is no priority for 1st trip freeze frame data and it is updated each time a different 1st trip DTC is detected. However, once freeze frame data (2nd trip detection/MI on) is stored in the ECM memory, 1st trip freeze frame data is no longer stored. Remember, only one set of freeze frame data can be stored in the ECM.
The ECM has the following priorities to update the data.

Priority	Items	
1	Freeze frame data	Misfire — DTC: P0300 - P0306 Fuel Injection System Function — DTC: P0171, P0172, P0174, P0175
2		Except the above items (Includes A/T related items)
3	1st trip freeze frame data	

Both 1st trip freeze frame data and freeze frame data (along with the DTCs) are cleared when the ECM memory is erased.

HOW TO ERASE DTC

The diagnostic trouble code can be erased by CONSULT-II, GST or ECM DIAGNOSTIC TEST MODE as described following.

- **If the battery terminal is disconnected, the diagnostic trouble code will be lost within 24 hours.**
- **When you erase the DTC, using CONSULT-II or GST is easier and quicker than switching the mode selector on the ECM.**

The following emission-related diagnostic information is cleared from the ECM memory when erasing DTC related to EURO-OBD. For details, refer to EC-68, "HOW TO ERASE EMISSION-RELATED DIAGNOSTIC INFORMATION" .

- **Diagnostic trouble codes (DTC)**
- **1st trip diagnostic trouble codes (1st trip DTC)**
- **Freeze frame data**
- **1st trip freeze frame data**
- **System readiness test (SRT) codes**
- **Test values**

HOW TO ERASE DTC (WITH CONSULT-II)

- **If a DTC is displayed for both ECM and TCM, it needs to be erased for both ECM and TCM.**

1. If the ignition switch stays “ON” after repair work, be sure to turn ignition switch “OFF” once. Wait at least 5 seconds and then turn it “ON” (engine stopped) again.
2. Turn CONSULT-II “ON” and touch “A/T”.
3. Touch “SELF DIAGNOSIS”.
4. Touch “ERASE”. (The DTC in the TCM will be erased.) Then touch “BACK” twice.
5. Touch “ENGINE”.
6. Touch “SELF DIAGNOSIS”.

7. Touch “ERASE”. (The DTC in the ECM will be erased.)

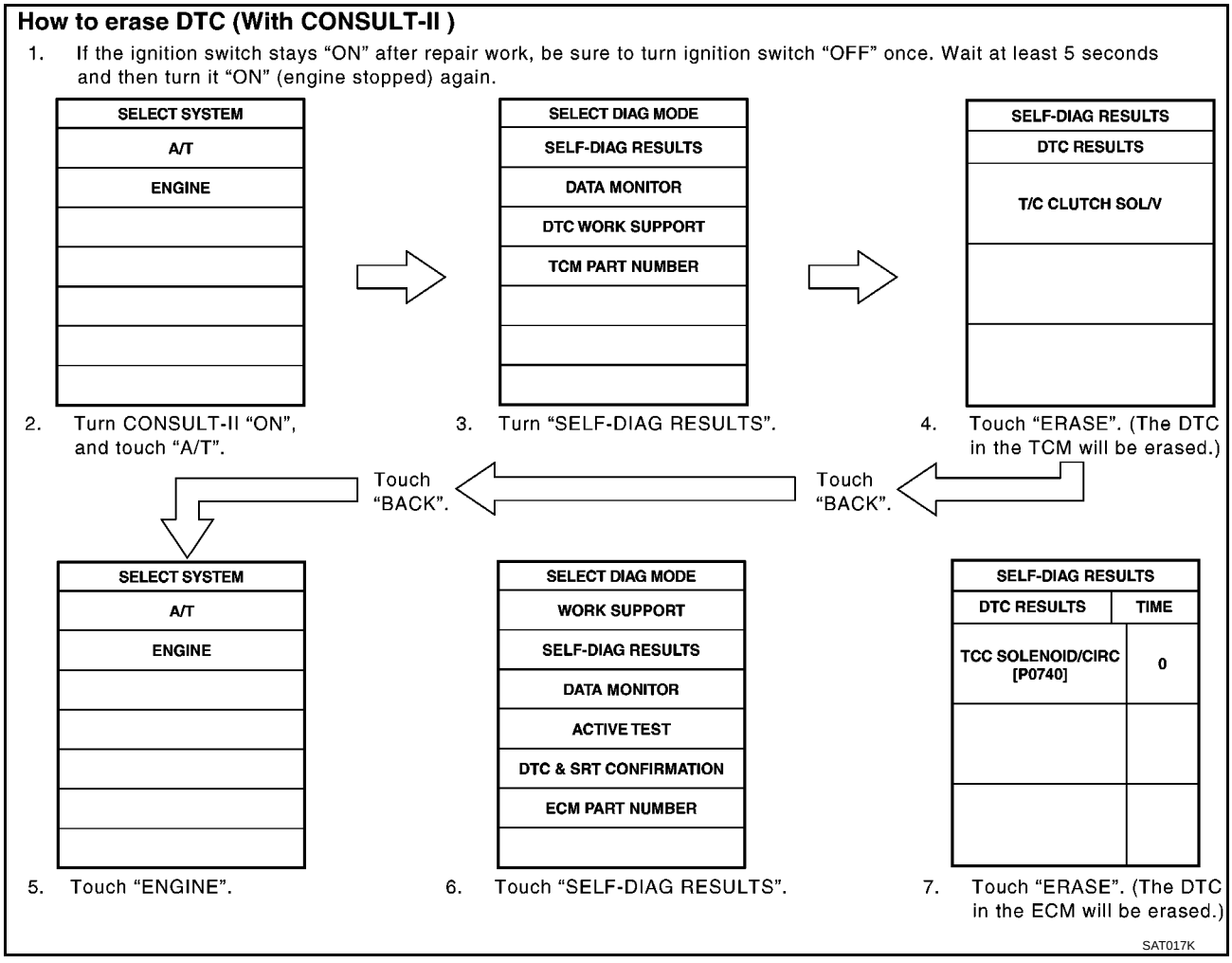

HOW TO ERASE DTC (WITH GST)

1. If the ignition switch stays “ON” after repair work, be sure to turn ignition switch “OFF” once. Wait at least 5 seconds and then turn it “ON” (engine stopped) again.
2. Perform “EURO-OBD SELF-DIAGNOSTIC PROCEDURE (No Tools)”. Refer to AT-50 . (The engine warm-up step can be skipped when performing the diagnosis only to erase the DTC.)
3. Select Mode 4 with Generic Scan Tool (GST). For details, refer to EC-127, "Generic Scan Tool (GST) Function" .

HOW TO ERASE DTC (NO TOOLS)

1. If the ignition switch stays “ON” after repair work, be sure to turn ignition switch “OFF” once. Wait at least 5 seconds and then turn it “ON” (engine stopped) again.
2. Perform “TCM SELF-DIAGNOSTIC PROCEDURE (No Tools)”. Refer to AT-51 . (The engine warm-up step can be skipped when performing the diagnosis only to erase the DTC.)

Malfunction Indicator (MI)

ECS0096Y

1. The malfunction indicator lamp will light up when the ignition switch is turned ON without the engine running. This is for checking the lamp.
   - If the malfunction indicator does not light up, refer to EC-545, "MI & DATA LINK CONNECTORS" .
     (Or see MI & CONSULT-II in EC section. Refer to EC-70, "Malfunction Indicator (MI)" , EC-116, "CONSULT-II Function" .
2. When the engine is started, the malfunction indicator should turned OFF.
   If the lamp remains ON, the on board diagnostic system has detected an emission-related (EURO-OBD) malfunction. For detail, refer to EC-54, "ON BOARD DIAGNOSTIC (OBD) SYSTEM" .

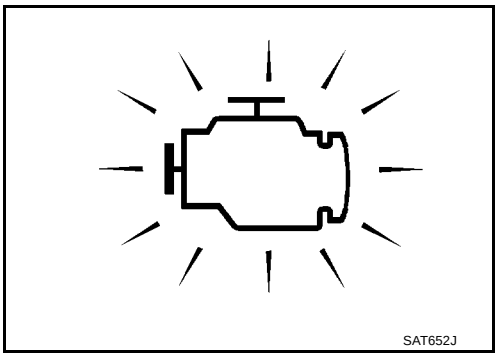

CONSULT-II

ECS0096Z

After performing “SELF-DIAGNOSTIC PROCEDURE (WITH CONSULT-II)” AT-41 , place check marks for results on the “DIAGNOSTIC WORKSHEET”, AT-57 . Reference pages are provided following the items.

NOTICE:

1. The CONSULT-II electrically displays shift timing and lock-up timing (that is, operation timing of each solenoid valve).
   Check for time difference between actual shift timing and the CONSULT-II display. If the difference is noticeable, mechanical parts (except solenoid valves, sensors, etc.) may be malfunctioning. Check mechanical parts using applicable diagnostic procedures.
2. Shift schedule (which implies gear position) displayed on CONSULT-II and that indicated in Service Manual may differ slightly. This occurs because of the following reasons:
   - Actual shift schedule has more or less tolerance or allowance,
   - Shift schedule indicated in Service Manual refers to the point where shifts start, and
   - Gear position displayed on CONSULT-II indicates the point where shifts are completed.
3. Shift solenoid valve “A” or “B” is displayed on CONSULT-II at the start of shifting. Gear position is displayed upon completion of shifting (which is computed by TCM).
4. Additional CONSULT-II information can be found in the Operation Manual supplied with the CONSULT-II unit.

SELF-DIAGNOSTIC PROCEDURE (WITH CONSULT-II)

1. Turn on CONSULT-II and touch “ENGINE” for EURO-OBD detected items or touch “A/T” for TCM self-diagnosis.
   If A/T is not displayed, check TCM power supply and ground circuit. Refer to AT-107, "TCM Terminals and Reference Value" . If result is NG, refer to EL-11, ”Power Supply Routing”.

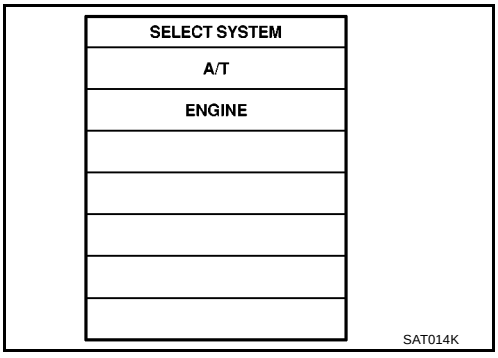

2. Touch “SELF DIAGNOSIS”.
   Display shows malfunction experienced since the last erasing operation.
   CONSULT-II performs “real time diagnosis”.
   Also, any malfunction detected while in this mode will be displayed at real time.

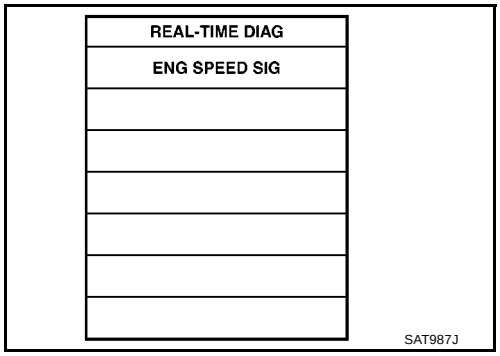

SELF-DIAGNOSTIC RESULT TEST MODE

Detected items (Screen terms for CONSULT-II, “SELF DIAGNOSIS” test mode)		Malfunction is detected when...	TCM self-diagnosis	EURO-OBD (DTC)
“A/T”	“ENGINE”		Available by O/D OFF indicator lamp or “A/T” on CONSULT-II	Available by malfunction indicator*2 , “ENGINE” on CONSULT-II or GST
Park/neutral position (PNP) switch circuit		● TCM does not receive the correct voltage signal (based on the gear position) from the switch.	—	P0705
—	PNP SW/CIRC			
Revolution sensor		● TCM does not receive the proper voltage signal from the sensor.	X	P0720
VHCL SPEED SEN·A/T	VEH SPD SEN/CIR AT			
Vehicle speed sensor (Meter)		● TCM does not receive the proper voltage signal from the sensor.	X	—
VHCL SPEED SEN·MTR	—			
A/T 1st gear function		● A/T cannot be shifted to the 1st gear position even if electrical circuit is good.	—	P0731*1
—	A/T 1ST GR FNCTN			
A/T 2nd gear function		● A/T cannot be shifted to the 2nd gear position even if electrical circuit is good.	—	P0732*1
—	A/T 2ND GR FNCTN			
A/T 3rd gear function		● A/T cannot be shifted to the 3rd gear position even if electrical circuit is good.	—	P0733*1
—	A/T 3RD GR FNCTN			
A/T 4th gear function		● A/T cannot be shifted to the 4th gear position even if electrical circuit is good.	—	P0734*1
—	A/T 4TH GR FNCTN			
Shift solenoid valve A		● TCM detects an improper voltage drop when it tries to operate the solenoid valve.	X	P0750
SHIFT SOLENOID/V A	SFT SOL A/CIRC			
Shift solenoid valve B		● TCM detects an improper voltage drop when it tries to operate the solenoid valve.	X	P0755
SHIFT SOLENOID/V B	SFT SOL B/CIRC			
Overrun clutch solenoid valve		● TCM detects an improper voltage drop when it tries to operate the solenoid valve.	X	P1760
OVERRUN CLUTCH S/V	O/R CLUCH SOL/ CIRC			
T/C clutch solenoid valve		● TCM detects an improper voltage drop when it tries to operate the solenoid valve.	X	P0740
T/C CLUTCH SOL/V	TCC SOLENOID/ CIRC			

Detected items (Screen terms for CONSULT-II, "SELF DIAGNOSIS" test mode)		Malfunction is detected when...	TCM self-diagnosis	EURO-OBD (DTC)
"A/T"	"ENGINE"		Available by O/D OFF indicator lamp or "A/T" on CONSULT-II	Available by malfunction indicator*2 , "ENGINE" on CONSULT-II or GST
Line pressure solenoid valve		● TCM detects an improper voltage drop when it tries to operate the solenoid valve.	X	P0745
LINE PRESSURE S/V	L/PRESS SOL/CIRC			
Throttle position sensor (Accelerator Pedal Position (APP) sensor)		● TCM receives an excessively low or high voltage from the sensor.	X	P1705
THROTTLE POSI SEN	TP SEN/CIRC A/T			
Engine speed signal		● TCM does not receive the proper voltage signal from the ECM.	X	P0725
ENGINE SPEED SIG				
A/T fluid temperature sensor		● TCM receives an excessively low or high voltage from the sensor.	X	P0710
BATT/FLUID TEMP SEN	ATF TEMP SEN/CIRC			
Engine control		● The ECM-A/T communication line is open or shorted.	X	U1000
A/T COMM LINE*3	—			
TCM (RAM)		● TCM memory (RAM) is malfunctioning.	—	—
CONTROL UNIT (RAM)	—			
TCM (ROM)		● TCM memory (ROM) is malfunctioning.	—	—
CONTROL UNIT (ROM)	—			
TCM (EEP ROM)		● TCM memory (EEP ROM) is malfunctioning.	—	—
CONT UNIT (EEP ROM)	—			
Initial start		● This is not a malfunction message (Whenever shutting off a power supply to the TCM, this message appears on the screen.)	X	—
INITIAL START	—			
No failure (NO SELF DIAGNOSTIC FAILURE INDICATED FURTHER TESTING MAY BE REQUIRED**)		● No failure has been detected.	X	X

X: Applicable
—: Not applicable
*1: These malfunctions cannot be displayed by MI if another malfunction is assigned to lamp MI.
*2: Refer to AT-41, "Malfunction Indicator (MI)" .
*3: A/T COMM LINE means CAN COMM LINE in this model.

DATA MONITOR MODE (A/T)

Item	Display	Mover to center Monitor items				Description	Remarks
		TCM Input signals	CAN comm sig-nals	Main signals	Selection from menu		
Vehicle speed sensor 1 (A/T) (Revolution sen-sor)	VHCL/S SE·A/T [km/h] or [mph]	X	—	—	▼	● Vehicle speed com-puted from signal of revolution sensor is displayed.	When racing engine in N or P with vehicle station-ary, CONSULT-II data may not indicate 0 km/h (0 mph).
Vehicle speed sensor 2 (Meter)	VHCL/S SE·MTR [km/h] or [mph]	X	—	—	▼	● Vehicle speed com-puted from signal of vehicle speed sensor is displayed.	Vehicle speed display may not be accurate under approx. 10 km/h (6 mph). It may not indi-cate 0 km/h (0 mph) when vehicle is station-ary.
Throttle position sensor	THRTL POS SEN [V]	X	—	—	▼	● Throttle position sensor signal voltage is dis-played.	This sensor means accelerator pedal posi-tion(APP)sensor.
A/T fluid tempera-ture sensor	FLUID TEMP SE [V]	X	—	—	▼	● A/T fluid temperature sensor signal voltage is displayed. ● Signal voltage lowers as fluid temperature rises.	
Battery voltage	BATTERY VOLT [V]	X	—	—	▼	● Source voltage of TCM is displayed.	
Engine speed	ENGINE SPEED [rpm]	X	—	X	▼	● Engine speed, com-puted from engine speed signal, is dis-played.	Engine speed display may not be accurate under approx. 800 rpm. It may not indicate 0 rpm even when engine is not running.
Overdrive control switch	OVERDRIVE SW [ON/OFF]	X	—	—	▼	● ON/OFF state com-puted from signal of overdrive control SW is displayed.	
PN position (PNP) switch	PN POSI SW [ON/OFF]	X	—	—	▼	● ON/OFF state com-puted from signal of PN position SW is dis-played.	
R position switch	R POSITION SW [ON/OFF]	X	—	—	▼	● ON/OFF state com-puted from signal of R position SW is dis-played.	
D position switch	D POSITION SW [ON/OFF]	X	—	—	▼	● ON/OFF state com-puted from signal of D position SW is dis-played.	
2 position switch	2 POSITION SW [ON/OFF]	X	—	—	▼	● ON/OFF status, com-puted from signal of 2 position SW, is dis-played.	

Item	Display	Mover to center Monitor items				Description	Remarks
		TCM Input signals	CAN comm sig-nals	Main signals	Selection from menu		
1 position switch	1 POSITION SW [ON/OFF]	X	—	—	▼	● ON/OFF status, computed from signal of 1 position SW, is displayed.	
Kickdown switch	KICKDOWN SW [ON/OFF]	X	—	—	▼	● ON/OFF status, computed from signal of kick down SW, is displayed.	● This is displayed even when no kick down switch is equipped.
Gear position	GEAR	—	—	X	▼	● Gear position data used for computation by TCM, is displayed.	
Selector lever position	SLCT LVR POSI	—	—	X	▼	● Selector lever position data, used for computation by TCM, is displayed.	● A specific value used for control is displayed if fail-safe is activated due to error.
Vehicle speed	VEHICLE SPEED [km/h] or [mph]	—	—	X	▼	● Vehicle speed data, used for computation by TCM, is displayed.	
Torque converter slip ratio	TC SLIP RATIO [0.000]	—	—	—	▼	● Ratio of engine revolution to input shaft revolution of torque converter	
Torque converter slip speed	TC SLIP SPEED [rpm]	—	—	—	▼	Difference in revolution between input shaft revolution and input shaft revolution of torque converter	Display doesn't indicate o rpm even if engine is stopped. But this isn't malfunction.
can communication	CAN COMM [OK/UNKWN]	—	X	—	▼		
CAN circuit 1	CAN CIRC 1 [OK/UNKWN]	—	X	—	▼		
CAN circuit 2	CAN CIRC 2 [OK/UNKWN]	—	X	—	▼		
CAN circuit 3	CAN CIRC 3 [OK/UNKWN]	—	X	—	▼		
CAN circuit 4	CAN CIRC 4 [OK/UNKWN]	—	X	—	▼		
CAN circuit 5	CAN CIRC 5 [OK/UNKWN]	—	X	—	▼		
Throttle position	THROTTLE POSI [/8]	—	—	X	▼	● Throttle position data, used for computation by TCM, is displayed.	● A specific value used for control is displayed if fail-safe is activated due to error.
Stop lamp switch	BRAKE SW [ON/OFF]	X	—	—	▼	● ON/OFF status is displayed. ON... Brake pedal is depressed. OFF... Brake pedal is released.	

Item	Display	Mover to center Monitor items				Description	Remarks
		TCM Input signals	CAN comm sig-nals	Main signals	Selection from menu		
Line pressure duty	LINE PRES DTY [%]	—	—	X	▼	● Control value of line pressure solenoid valve, computed by TCM from each input signal, is displayed.	
Torque converter clutch solenoid valve duty	TCC S/V DUTY [%]	—	—	X	▼	● Control value of torque converter clutch sole-noid valve, computed by TCM from each input signal, is dis-played.	
Shift solenoid valve A	SHIFT S/V A [ON/OFF]	—	—	X	▼	● Control value of shift solenoid valve A, com-puted by TCM from each input signal, is displayed.	Control value of sole-noid is displayed even if solenoid circuit is dis-connected. The OFF signal is dis-played if solenoid circuit is shorted.
Shift solenoid valve B	SHIFT S/V B [ON/OFF]	—	—	X	▼	● Control value of shift solenoid valve B, com-puted by TCM from each input signal, is displayed.	
Overrun clutch solenoid valve	OVERRUN/C S/V [ON/OFF]	—	—	X	▼	● Control value of over-run clutch solenoid valve computed by TCM from each input signal is displayed.	
Self-diagnosis dis-play lamp (O/D OFF indica-tor lamp)	SELF-D DP LMP [ON/OFF]	—	—	X	▼	● Control status of O/D OFF indicator lamp is displayed.	
Voltage [V]		—	—	—	▼	Value measured by voltage probe is displayed.	
Frequency [Hz]		—	—	—	▼	Value measured by pulse probe is displayed. If mea-surement is impossible, “#” sign is displayed. “#” sign is also displayed at the final data value until the mea-surement result is obtained.	
DUTY-HI		—	—	—	▼	Duty cycle value for measurement probe is dis-played.	
DUTY-LOW		—	—	—	▼		
PLS WIDTH-HI		—	—	—	▼	Measured pulse width of measurement probe is dis-played.	
PLS WIDTH-LOW		—	—	—	▼		

X: Applicable —: Not applicable ▼: Option

DTC WORK SUPPORT MODE WITH CONSULT-II

CONSULT-II Setting Procedure

1. Turn ignition switch “OFF”.
2. Connect CONSULT-II to data link connector which is located in left or right side lower dash panel.

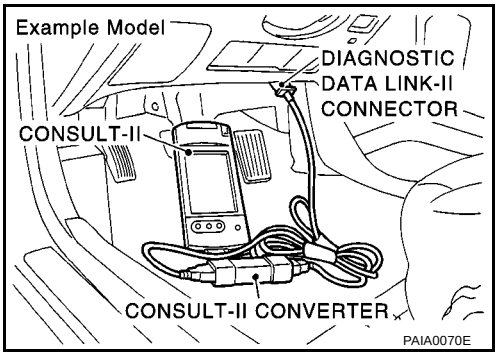

3. Turn ignition switch “ON”.
4. Touch “START (NISSAN BASED VHCL)”.

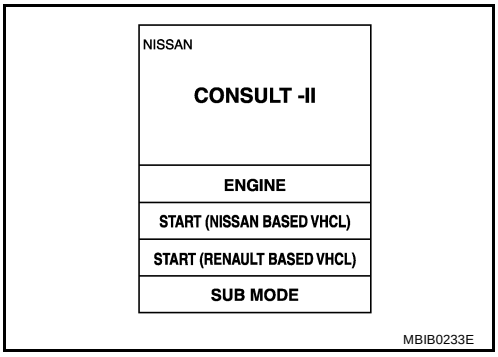

5. Touch “A/T”.

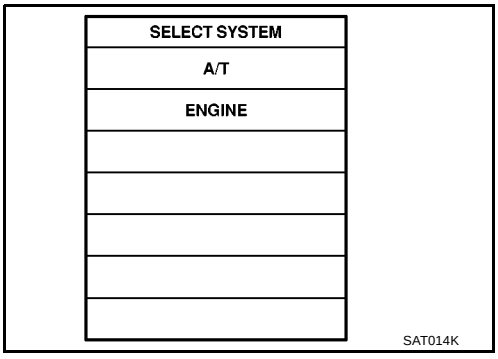

6. Touch “DTC WORK SUPPORT”.

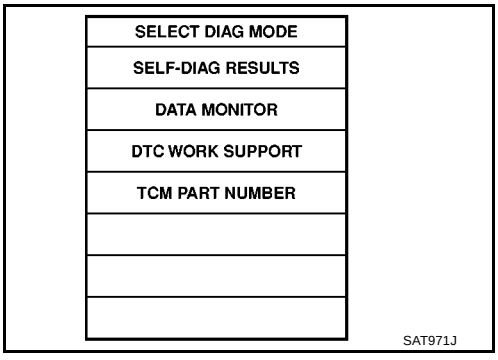

7. Touch select item menu (1ST, 2ND, etc.).

SELECT WORK ITEM
1ST GR FNCTN P0731
2ND GR FNCTN P0732
3RD GR FNCTN P0733
4TH GRFNCTN P0734
TCC S/V FNCTN P0744

SAT018K

8. Touch “START”.

1ST GR FNCTN P0731
THIS SUPPORT FUNCTION IS FOR DTC P0731. SEE THE SERVICE MANUAL ABOUT THE OPERATING CON-DITION FOR THIS DIAGNOSIS.

SAT589J

9. Perform driving test according to “DTC CONFIRMATION PRO-CEDURE” in “TROUBLE DIAGNOSIS FOR DTC”.

1ST GR FNCTN P0731	
OUT OF CONDTION	
MONITOR	
GEAR	XXX
VEHICLE SPEED	XXXkm/h
THROTTLE POSI	XXX
TCC S/V DUTY	XXX %

SAT019K

- **When testing conditions are satisfied, CONSULT-II screen changes from “OUT OF CONDITION” to “TESTING”.**

1ST GR FNCTN P0731	
TESTING	
MONITOR	
GEAR	XXX
VEHICLE SPEED	XXXkm/h
THROTTLE POSI	XXX
TCC S/V DUTY	XXX %

SAT591J

10. Stop vehicle. If “NG” appears on the screen, malfunction may exist. Go to “DIAGNOSTIC PROCEDURE”.

1ST GR FNCTN P0731
STOP VEHICLE

SAT592J

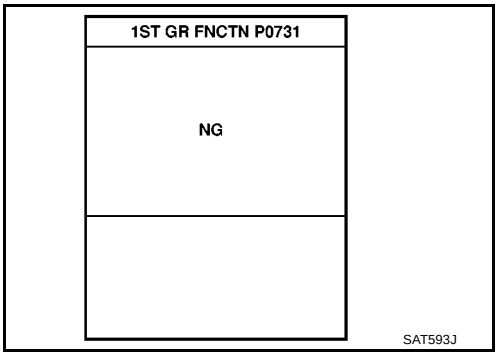

11. Perform test drive to check gear shift feeling in accordance with instructions displayed.

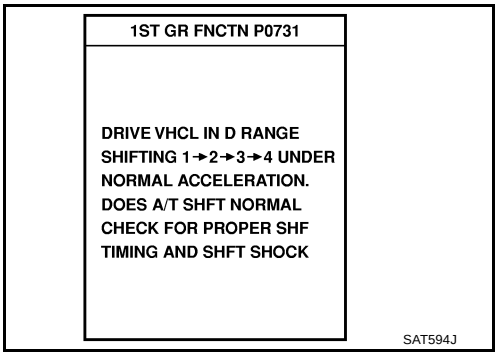

12. Touch “YES” or “NO”.

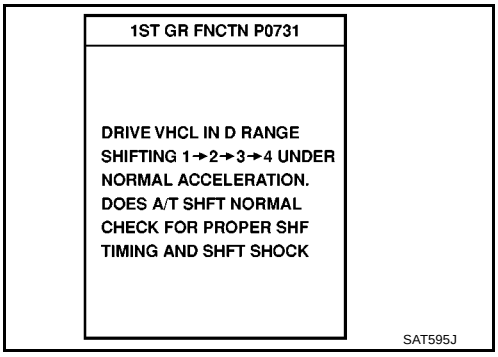

13. CONSULT-II procedure ended.

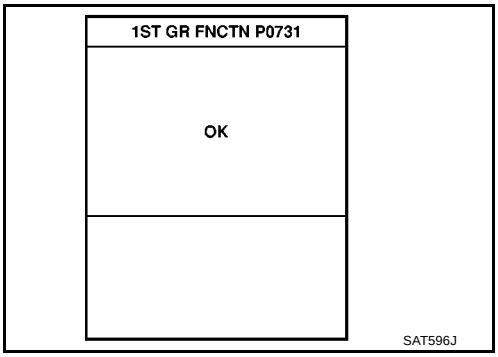

If “NG” appears on the screen, a malfunction may exist. Go to “DIAGNOSTIC PROCEDURE”.

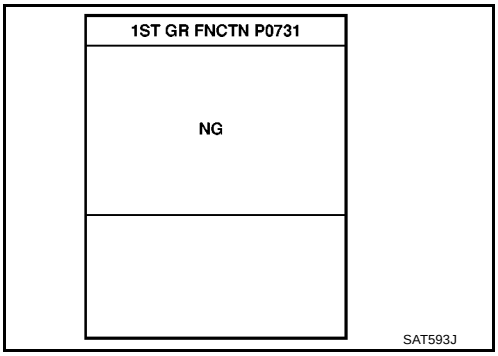

DTC WORK SUPPORT MODE

DTC work support item	Description	Check items (Possible cause)
1ST GR FNCTN P0731	Following items for “A/T 1st gear function (P0731)” can be confirmed. ● Self-diagnosis status (whether the diagnosis is being conducted or not) ● Self-diagnosis result (OK or NG)	● Shift solenoid valve A ● Shift solenoid valve B ● Each clutch ● Hydraulic control circuit
2ND GR FNCTN P0732	Following items for “A/T 2nd gear function (P0732)” can be confirmed. ● Self-diagnosis status (whether the diagnosis is being conducted or not) ● Self-diagnosis result (OK or NG)	● Shift solenoid valve B ● Each clutch ● Hydraulic control circuit
3RD GR FNCTN P0733	Following items for “A/T 3rd gear function (P0733)” can be confirmed. ● Self-diagnosis status (whether the diagnosis is being conducted or not) ● Self-diagnosis result (OK or NG)	● Shift solenoid valve A ● Each clutch ● Hydraulic control circuit
4TH GR FNCTN P0734	Following items for “A/T 4th gear function (P0734)” can be confirmed. ● Self-diagnosis status (whether the diagnosis is being conducted or not) ● Self-diagnosis result (OK or NG)	● Shift solenoid valve A ● Shift solenoid valve B ● Overrun clutch solenoid valve ● Line pressure solenoid valve ● Each clutch ● Hydraulic control circuit

Diagnostic Procedure Without CONSULT-II

ECS00970

EURO-OBD SELF-DIAGNOSTIC PROCEDURE (WITH GST)

Refer to EC-127, "Generic Scan Tool (GST) Function" .

EURO-OBD SELF-DIAGNOSTIC PROCEDURE (NO TOOLS)

Refer to EC-70, "Malfunction Indicator (MI)" .

TCM SELF-DIAGNOSTIC PROCEDURE (NO TOOLS)

1. CHECK O/D OFF INDICATOR LAMP

1. Start engine and warm it up to normal operating temperature.
2. Turn ignition switch to “OFF” position.
   Wait 5 seconds.
3. Turn ignition switch to “ACC” position.
4. Set overdrive control switch to “ON” position.
5. Move selector lever to “P” position.
6. Turn ignition switch to “ON” position. (Do not start engine.)

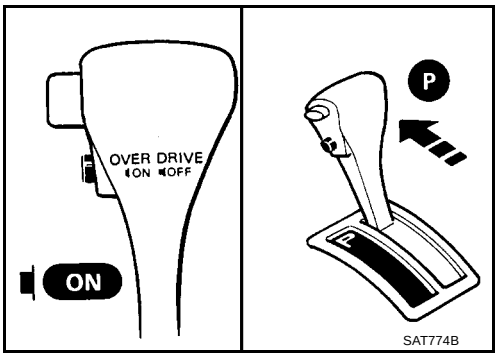

7. Does O/D OFF indicator lamp come on for about 2 seconds?

Yes or No

Yes >> GO TO 2
No >> Go to AT-213, "1. O/D OFF Indicator Lamp Does Not Come On" .

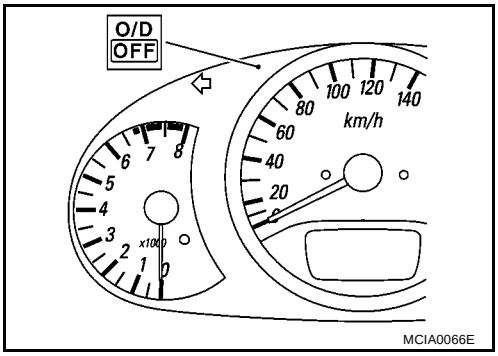

2. JUDGEMENT PROCEDURE STEP 1

1. Turn ignition switch to “OFF” position.
2. Turn ignition switch to “ACC” position.
3. Move selector lever to “D” position.
4. Set overdrive control switch to “OFF” position.
5. Turn ignition switch to “ON” position. (Do not start engine.)

– Wait more than 2 seconds after turning ignition switch “ON”.

>> GO TO 3

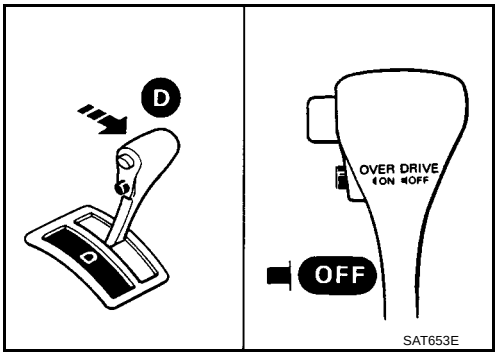

3. JUDGEMENT PROCEDURE STEP 2

1. Move selector lever to “2” position.
2. Set overdrive control switch to “ON” position.

>> GO TO 4

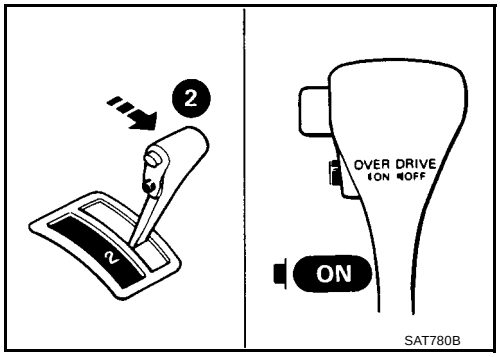

4. JUDGEMENT PROCEDURE STEP 3

1. Move selector lever to “1” position.
2. Set overdrive control switch to “OFF” position.

>> GO TO 5

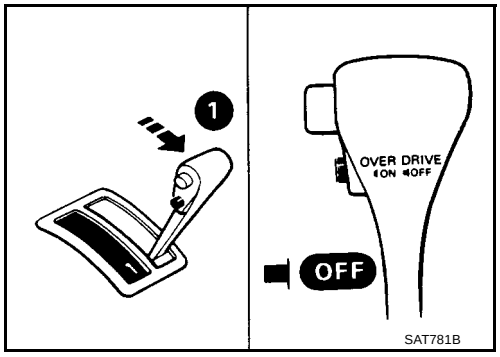

5. JUDGEMENT PROCEDURE STEP 4

1. Depress accelerator pedal fully and release it.

>> GO TO 6

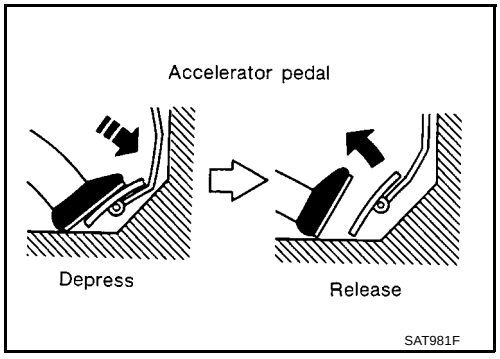

6. CHECK SELF-DIAGNOSIS CODE

Check O/D OFF indicator lamp. Refer to AT-53, "JUDGEMENT OF SELF-DIAGNOSIS CODE" .

>> **DIAGNOSIS END**

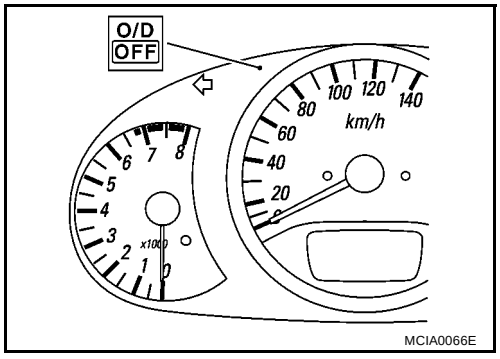

JUDGEMENT OF SELF-DIAGNOSIS CODE

O/D OFF indicator lamp:	
All judgement flickers are the same. 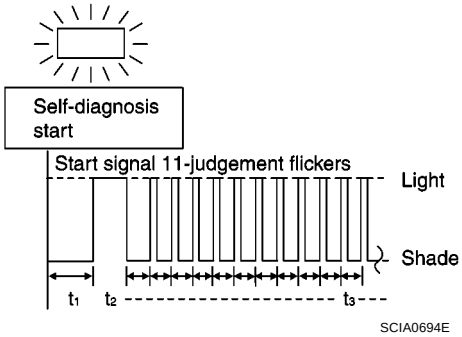 All circuits that can be confirmed by self-diagnosis are OK.	1st judgement flicker is longer than others. 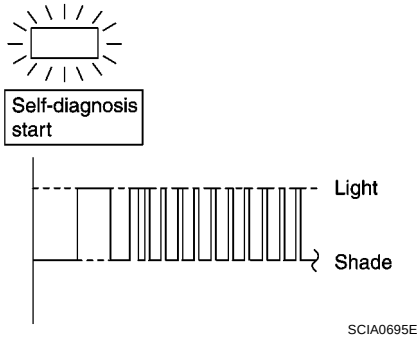 Revolution sensor circuit is short-circuited or disconnected. ⇒ **Go to DTC P0720 VEHICLE SPEED SENSOR·A/T (REVOLUTION SENSOR).** Refer to AT-125
2nd judgement flicker is longer than others. 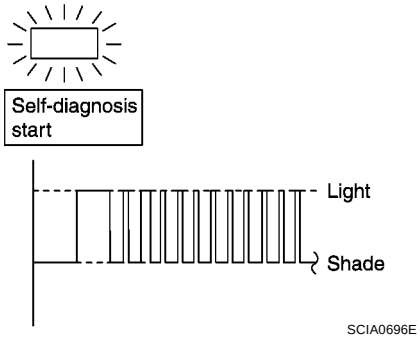 Vehicle speed sensor circuit is short-circuited or disconnected. ⇒ **Go to DTC VEHICLE SPEED SENSOR·MTR.** Refer to AT-203	3rd judgement flicker is longer than others. 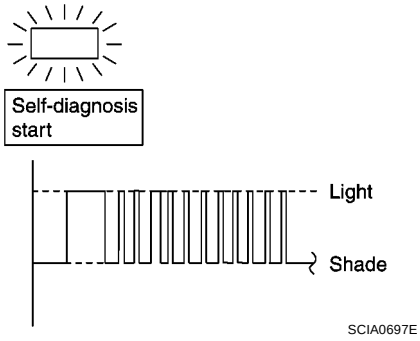 Throttle position sensor circuit is short-circuited or disconnected. ⇒ **Go to DTC P1705 ACCELERATOR PEDAL POSITION(APP)SENSOR** Refer to AT-183
4th judgement flicker is longer than others. 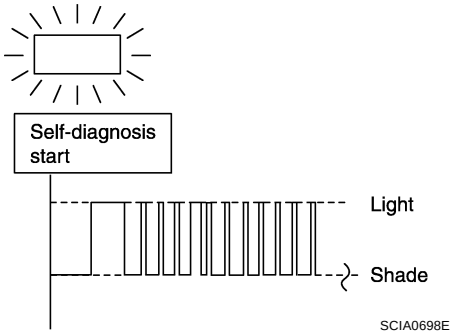 Shift solenoid valve A circuit is short-circuited or disconnected. ⇒ **Go to DTC P0750 SHIFT SOLENOID VALVE A.** Refer to AT-173	5th judgement flicker is longer than others. 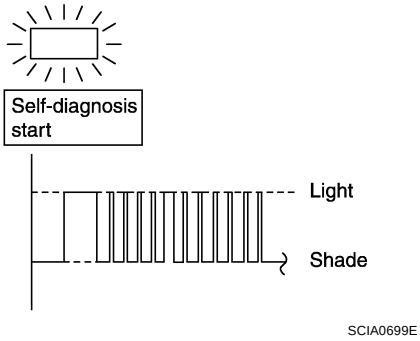 Shift solenoid valve B circuit is short-circuited or disconnected. ⇒ **Go to DTC P0755 SHIFT SOLENOID VALVE B.** Refer to AT-178

O/D OFF indicator lamp:	
6th judgement flicker is longer than others. 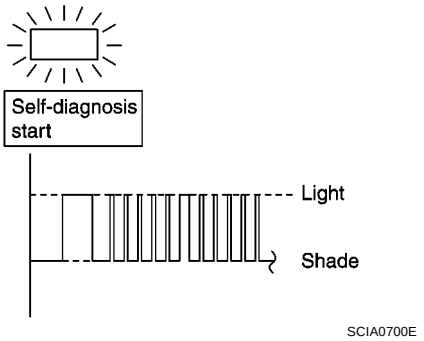 Overrun clutch solenoid valve circuit is short-circuited or disconnected. ⇒ **Go to DTC P1760 OVERRUN CLUTCH SOLENOID VALVE.** Refer to AT-189	7th judgement flicker is longer than others. 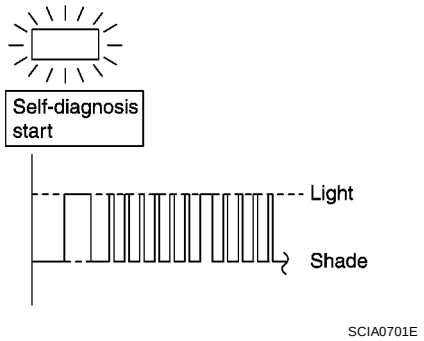 Torque converter clutch solenoid valve circuit is short-circuited or disconnected. ⇒ **Go to DTC P0740 TORQUE CONVERTER CLUTCH SOLENOID VALVE.** Refer to AT-161
8th judgement flicker is longer than others. 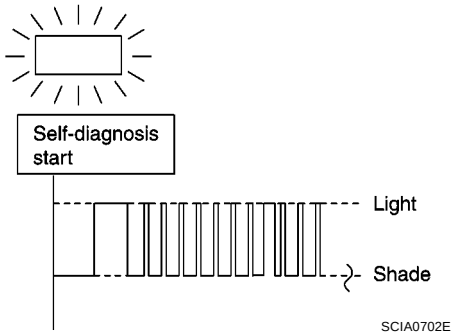 A/T fluid temperature sensor is disconnected or TCM power source circuit is damaged. ⇒ **Go to DTC BATT/FLUID TEMP SEN (A/T FLUID TEMP SENSOR CIRCUIT AND TCM POWER SOURCE).** Refer to AT-197	9th judgement flicker is longer than others. 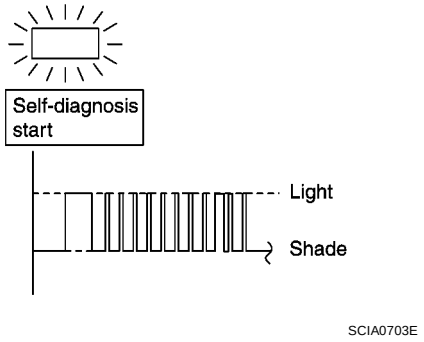 Engine speed signal circuit is short-circuited or disconnected. ⇒ **Go to DTC P0725 ENGINE SPEED SIGNAL.** Refer to AT-131

O/D OFF indicator lamp:	
10th judgement flicker is longer than others. 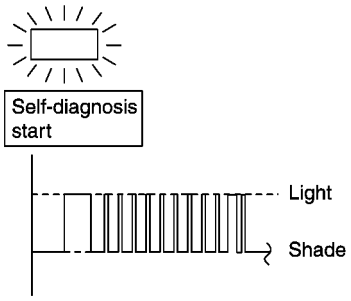 SCIA0704E Line pressure solenoid valve circuit is short-circuited or disconnected. ⇒ **Go to DTC P0745 LINE PRESSURE SOLENOID VALVE.** Refer to AT-166	11th judgement flicker is longer than others. 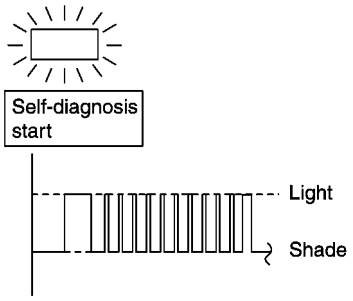 SCIA0705E The ECM-AT communication line is open or shorted. ⇒**Go to DTC U1000 CAN COMMNICATION LINE.** Refer to AT-194
Lamp comes off. 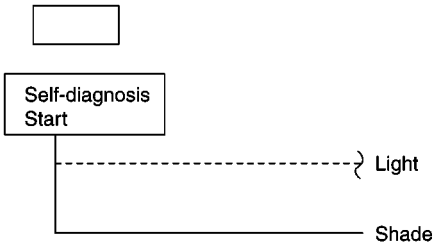 SCIA0706E PNP switch, overdrive control switch or throttle position switch circuit is disconnected or TCM is damaged. ⇒ **Go to 21. TCM Self-diagnosis Does Not Activate (PNP & Overdrive Control Switches, and Throttle Position Sensor Circuit Checks).** Refer to AT-239	Flickers as shown below. 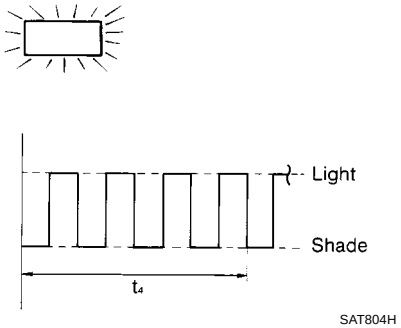 SAT804H Battery power is low. Battery has been disconnected for a long time. Battery is connected conversely. (When reconnecting TCM connectors.—This is not a problem).

t_1 = 2.5 seconds t_2 = 2.0 seconds t_3 = 1.0 second t_4 = 1.0 second

TROUBLE DIAGNOSIS — INTRODUCTION

PFP:00000

Introduction

ECS00971

The TCM receives a signal from the vehicle speed sensor, throttle position sensor or PNP switch and provides shift control or lock-up control via A/T solenoid valves.
The TCM also communicates with the ECM by means of a signal sent from sensing elements used with the EURO-OBD related parts of the A/T system for malfunction-diagnostic purposes. The TCM is capable of diagnosing malfunctioning parts while the ECM can store malfunctions in its memory.
Input and output signals must always be correct and stable in the operation of the A/T system. The A/T system must be in good operating condition and be free of valve seizure, solenoid valve malfunction, etc.

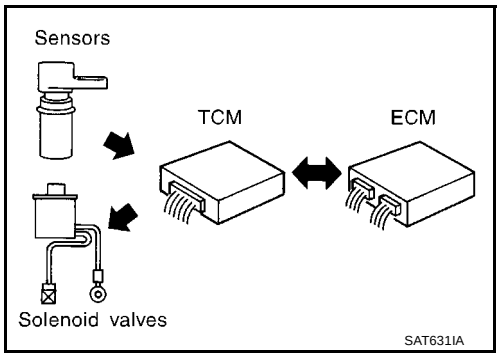

It is much more difficult to diagnose a problem that occurs intermittently rather than continuously. Most intermittent problems are caused by poor electric connections or improper wiring. In this case, careful checking of suspected circuits may help prevent the replacement of good parts.
A visual check only, may not find the cause of the problems. A road test with CONSULT-II (or GST) or a circuit tester connected should be performed. Follow the “Work Flow”. Refer to AT-60, "Work Flow" .

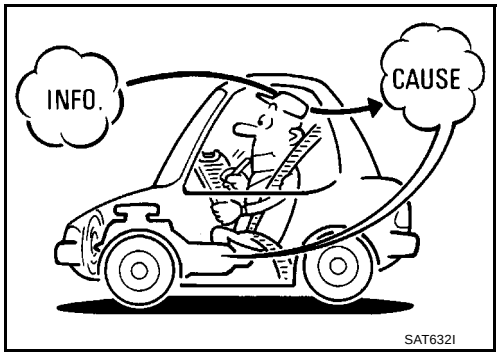

Before undertaking actual checks, take a few minutes to talk with a customer who approaches with a drive ability complaint. The customer can supply good information about such problems, especially intermittent ones. Find out what symptoms are present and under what conditions they occur. A “Diagnostic Worksheet” like the example (AT-57, "DIAGNOSTIC WORKSHEET") should be used.
Start your diagnosis by looking for “conventional” problems first. This will help troubleshoot drive ability problems on an electronically controlled engine vehicle.
Also check related Service bulletins for information.

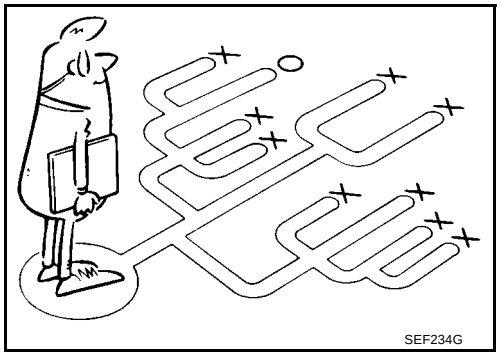

DIAGNOSTIC WORKSHEET

Information from Customer

KEY POINTS

- **WHAT**..... Vehicle & A/T model
- **WHEN**..... Date, Frequencies
- **WHERE**..... Road conditions
- **HOW**..... Operating conditions, Symptoms

Customer name MR/MS	Model & Year	VIN
Trans. model	Engine	Mileage
Incident Date	Manuf. Date	In Service Date
Frequency	❑ Continuous ❑ Intermittent (times a day)	
Symptoms	❑ Vehicle does not move. (❑ Any position ❑ Particular position)	
	❑ No up-shift (❑ 1st → 2nd ❑ 2nd → 3rd ❑ 3rd → O/D)	
	❑ No down-shift (❑ O/D → 3rd ❑ 3rd → 2nd ❑ 2nd → 1st)	
	❑ Lockup malfunction	
	❑ Shift point too high or too low.	
	❑ Shift shock or slip (❑ N → D ❑ Lockup ❑ Any drive position)	
	❑ Noise or vibration	
	❑ No kick down	
	❑ No pattern select	
	❑ Others ( )	
O/D OFF indicator lamp	Blinks for about 8 seconds.	
	❑ Continuously lit	❑ Not lit
Malfunction indicator (MI)	❑ Continuously lit	❑ Not lit

Diagnostic Worksheet

1.	❏ Read the Fail-safe and listen to customer complaints.			AT-57, "Information from Customer"
2.	❏ CHECK A/T FLUID			AT-63, "A/T Fluid Check"
		❏ Leakage (Follow specified procedure) ❏ Fluid condition ❏ Fluid level		
3.	❏ Perform STALL TEST and LINE PRESSURE TEST.			AT-64, "Stall Test", AT-67, "Line Pressure Test"
		❏ Stall test — Mark possible damaged components/others.		
			❏ Torque converter one-way clutch ❏ Reverse clutch ❏ Forward clutch ❏ Overrun clutch ❏ Forward one-way clutch	❏ Low & reverse brake ❏ Low one-way clutch ❏ Engine ❏ Line pressure is low ❏ Clutches and brakes except high clutch and brake band are OK
		❏ Line Pressure test — Suspected parts:		
4.	❏ Perform all ROAD TEST and mark required procedures.			AT-68, "Road Test"
	4-1.	Check before engine is started.		AT-70, "1. CHECK BEFORE ENGINE IS STARTED"
		❏ SELF-DIAGNOSTIC PROCEDURE/DIAGNOSTIC TROUBLE CODE (DTC) CONFIRMATION PROCEDURE. — Mark detected items.		
			❏ PNP switch, AT-113 . ❏ A/T fluid temperature sensor, AT-119 . ❏ Vehicle speed sensor·A/T (Revolution sensor), AT-125 . ❏ Engine speed signal, AT-131 . ❏ Torque converter clutch solenoid valve, AT-161 . ❏ Line pressure solenoid valve, AT-166 . ❏ Shift solenoid valve A, AT-173 . ❏ Shift solenoid valve B, AT-178 . ❏ Accelerator pedal position (APP) sensor, AT-183 . ❏ Overrun clutch solenoid valve, AT-189 . ❏ PNP & overdrive control switches, and throttle position sensor, AT-239 . ❏ Batt/fluid temp sen (A/T fluid temperature sensor and TCM power source), AT-197 . ❏ Vehicle speed sensor·MTR, AT-203 . ❏ CAN communication line, AT-194 . ❏ Control unit (RAM), control unit (ROM), AT-207 . ❏ Control unit (EEP ROM), AT-209 . ❏ Battery ❏ Others	
	4-2.	Check at idle		AT-71, "2. CHECK AT IDLE"
		❏ 1. O/D OFF Indicator Lamp Does Not Come On, AT-213 . ❏ 2. Engine Cannot Be Started In “P” And “N” Position, AT-214 . ❏ 3. In “P” Position, Vehicle Moves Forward Or Backward When Pushed, AT-214 . ❏ 4. In “N” Position, Vehicle Moves, AT-216 . ❏ 5. Large Shock. “N” → “R” Position, AT-217 . ❏ 6. Vehicle Does Not Creep Backward In “R” Position, AT-218 . ❏ 7. Vehicle Does Not Creep Forward In “D”, “2” Or “1” Position, AT-221 .		

4.	4-3.	Cruise test	AT-74, "3. CRUISE TEST" AT-78, "Cruise Test — Part 1"
		Part-1	
		❏ 8. Vehicle Cannot Be Started From D_1 , AT-223 . ❏ 9. A/T Does Not Shift: $D_1 \rightarrow D_2$ Or Does Not Kickdown: $D_4 \rightarrow D_2$, AT-225 . ❏ 10. A/T Does Not Shift: $D_2 \rightarrow D_3$, AT-227 . ❏ 11. A/T Does Not Shift: $D_3 \rightarrow D_4$, AT-229 . ❏ 12. A/T Does Not Perform Lock-up, AT-232 . ❏ 13. A/T Does Not Hold Lock-up Condition, AT-233 . ❏ 14. Lock-up Is Not Released, AT-234 . ❏ 15. Engine Speed Does Not Return To Idle (Light Braking $D_4 \rightarrow D_3$), AT-235 .	
		Part-2	AT-81, "Cruise Test — Part 2"
		❏ 16. Vehicle Does Not Start From D_1 , AT-236 . ❏ 9. A/T Does Not Shift: $D_1 \rightarrow D_2$ Or Does Not Kickdown: $D_4 \rightarrow D_2$, AT-225 . ❏ 10. A/T Does Not Shift: $D_2 \rightarrow D_3$, AT-227 . ❏ 11. A/T Does Not Shift: $D_3 \rightarrow D_4$, AT-229 .	
		Part-3	AT-83, "Cruise Test — Part 3"
		❏ 17. A/T Does Not Shift: $D_4 \rightarrow D_3$ When Overdrive Control Switch “ON” → “OFF”, AT-237 . ❏ 15. Engine Speed Does Not Return To Idle (Light Braking $D_4 \rightarrow D_3$), AT-235 . ❏ 18. A/T Does Not Shift: $D_3 \rightarrow 2_2$, When Selector Lever “D” → “2” Position, AT-237 . ❏ 15. Engine Speed Does Not Return To Idle (Light Braking $D_4 \rightarrow D_3$), AT-235 . ❏ 19. A/T Does Not Shift: $2_2 \rightarrow 1_1$, When Selector Lever “2” → “1” Position, AT-238 . ❏ 20. Vehicle Does Not Decelerate By Engine Brake, AT-239 . ❏ 21. TCM Self-diagnosis Does Not Activate (PNP & Overdrive Control Switches, and Throttle Position Sensor Circuit Checks), AT-239 . ❏ SELF-DIAGNOSTIC PROCEDURE/DIAGNOSTIC TROUBLE CODE (DTC) CONFIRMATION PROCEDURE — Mark detected items.	
		❏ PNP switch, AT-113 . ❏ A/T fluid temperature sensor, AT-119 . ❏ Vehicle speed sensor·A/T (Revolution sensor), AT-125 . ❏ Engine speed signal, AT-131 . ❏ Torque converter clutch solenoid valve, AT-161 . ❏ Line pressure solenoid valve, AT-166 . ❏ Shift solenoid valve A, AT-173 . ❏ Shift solenoid valve B, AT-178 . ❏ Accelerator pedal position (APP) sensor, AT-183 . ❏ Overrun clutch solenoid valve, AT-189 . ❏ PNP & overdrive control switches, and throttle position sensor, AT-239 . ❏ A/T fluid temperature sensor and TCM power source, AT-197 . ❏ Vehicle speed sensor·MTR, AT-203 . ❏ CAN communication line, AT-194 ❏ Control unit (RAM), control unit (ROM), AT-207 . ❏ Control unit (EEP ROM), AT-209 . ❏ Battery ❏ Others	
5.	❏ For self-diagnosis NG items, inspect each component. Repair or replace the damaged parts.		AT-50, "Diagnostic Procedure Without CONSULT-II"
6.	❏ Perform all ROAD TEST and re-mark required procedures.		AT-68, "Road Test"
7.	❏ Perform DTC CONFIRMATION PROCEDURE for following MI indicating items and check out NG items. Refer toEC-55, "Emission-related Diagnostic Information" .		EC section
		❏ DTC (P0731) A/T 1st gear function, AT-135 . ❏ DTC (P0732) A/T 2nd gear function, AT-141 . ❏ DTC (P0733) A/T 3rd gear function, AT-147 . ❏ DTC (P0734) A/T 4th gear function, AT-153 .	

8.	❏ Perform the Diagnostic Procedures for all remaining items marked NG. Repair or replace the damaged parts. Refer to the Symptom Chart when you perform the procedures. (The chart also shows some other possible symptoms and the component inspection orders.)	AT-7, "Service Notice or Precautions"
9.	❏ Erase DTC from TCM and ECM memories.	AT-39, "HOW TO ERASE DTC"

Work Flow

ECS00972

HOW TO PERFORM TROUBLE DIAGNOSES FOR QUICK AND ACCURATE REPAIR

A good understanding of the malfunction conditions can make troubleshooting faster and more accurate. In general, each customer feels differently about a problem. It is important to fully understand the symptoms or conditions for a customer complaint.
Make good use of the two sheets provided, “Information From Customer” (AT-57) and “Diagnostic Worksheet” (AT-58), to perform the best troubleshooting possible.

WORK FLOW CHART

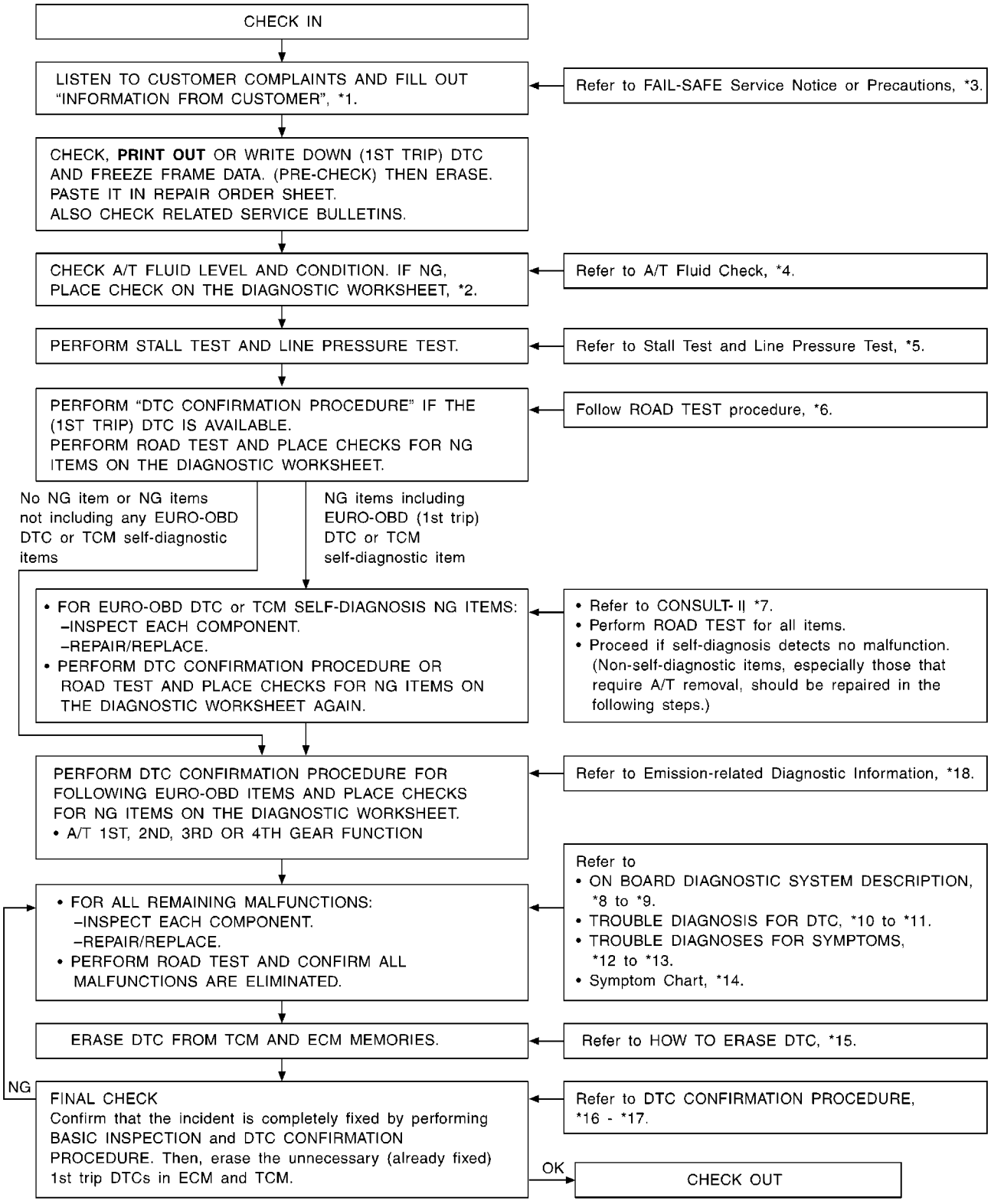

SAT183K

*1: AT-57, "Information from Customer"	*2: AT-58, "Diagnostic Worksheet"	*3: AT-7, "Service Notice or Precautions"
*4: AT-63, "A/T Fluid Check"	*5: AT-64, "Stall Test" and AT-67, "Line Pressure Test"	*6: AT-68, "Road Test"
*7: AT-41, "CONSULT-II"	*8: AT-37, "ON BOARD DIAGNOSTIC SYSTEM DESCRIPTION"	*9: AT-50, "Diagnostic Procedure Without CONSULT-II"
*10: AT-113, "DTC P0705 PARK/NEUTRAL POSITION (PNP) SWITCH"	*11: AT-125, "DTC P0720 VEHICLE SPEED SENSOR A/T (REVOLUTION SENSOR)" and AT-207, "DTC CONTROL UNIT (RAM), CONTROL UNIT (ROM)" to AT-209, "DTC CONTROL UNIT (EEP ROM)"	*12: AT-213, "1. O/D OFF Indicator Lamp Does Not Come On"
*13: AT-239, "20. Vehicle Does Not Decelerate By Engine Brake"	*14: AT-86, "Symptom Chart"	*15: AT-39, "HOW TO ERASE DTC"
*16: AT-113, "DTC P0705 PARK/NEUTRAL POSITION (PNP) SWITCH"	*17: AT-125, "DTC P0720 VEHICLE SPEED SENSOR A/T (REVOLUTION SENSOR)" and AT-207, "DTC CONTROL UNIT (RAM), CONTROL UNIT (ROM)" to AT-209, "DTC CONTROL UNIT (EEP ROM)"	*18: EC-581, "Emission-related Diagnostic Information"

TROUBLE DIAGNOSIS — BASIC INSPECTION

PFP:00000

A/T Fluid Check

ECS00973

FLUID LEAKAGE CHECK

1. Clean area suspected of leaking. — for example, mating surface of converter housing and transmission case.
2. Start engine, apply foot brake, place selector lever in “D” position and wait a few minutes.
3. Stop engine.

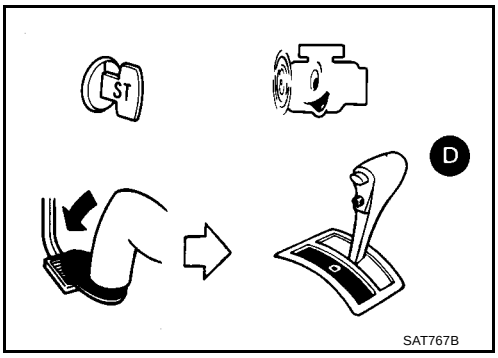

SAT767B

4. Check for fluid leakage.

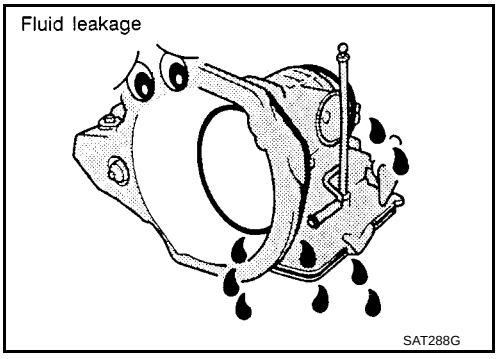

SAT288G

FLUID CONDITION CHECK

Fluid color	Suspected problem
Dark or black with burned odor	Wear of frictional material
Milky pink	Water contamination — Road water entering through filler tube or breather
Varnished fluid, light to dark brown and tacky	Oxidation — Over or under filling, — Overheating

FLUID LEVEL CHECK

Refer to AT-13, "Checking A/T Fluid" .

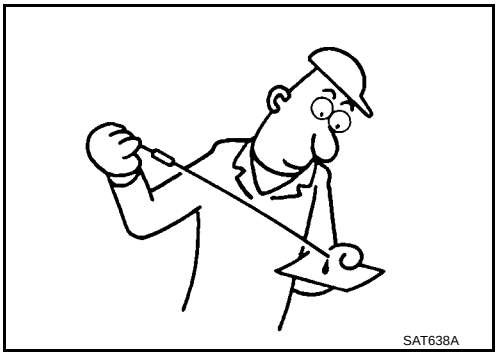
SAT638A

Stall Test

ECS00974

STALL TEST PROCEDURE

1. Check A/T fluid and engine oil levels. If necessary, add.
2. Drive vehicle for approx. 10 minutes or until fluid and oil reach operating temperature.

   ATF operating temperature:

   50 - 80°C (122 - 176°F)

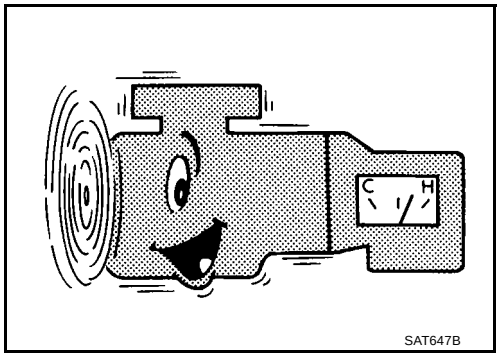

SAT647B

3. Set parking brake and block wheels.
4. Install a tachometer where it can be seen by driver during test.
   - **It is good practice to mark the point of specified engine rpm on indicator.**

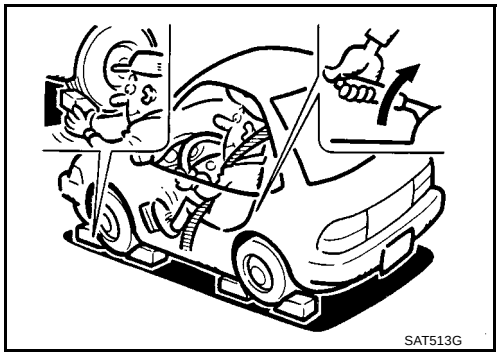
SAT513G

5. Start engine, apply foot brake, and place selector lever in D position.
6. Accelerate to wide open throttle gradually while applying foot brake.
7. Quickly note the engine stall revolution and immediately release throttle.
   - **During test, never hold throttle wide open for more than 5 seconds.**

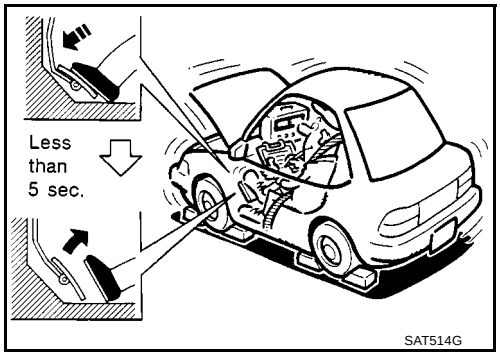

SAT514G

Stall revolution:

QG18DE	2,300 - 2,750 rpm

8. Move selector lever to “N” position.
9. Cool off ATF.
   - **Run engine at idle for at least one minute.**
10. Repeat steps 5 through 9 with selector lever in “2”, “1” and “R” positions.

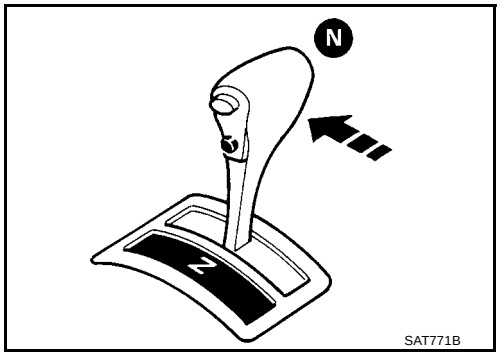

SAT771B

JUDGEMENT OF STALL TEST

The test result and possible damaged components relating to each result are shown in the illustrations on next page.
In order to pinpoint the possible damaged components, follow the WORK FLOW shown in AT-60, "Work Flow" (EURO-OBD).

NOTE:
Stall revolution is too high in “D”, “2” or “1” position:

- Slippage occurs in 1st gear but not in 2nd and 3rd gears..... Low one-way clutch slippage
- Slippage occurs in the following gears:
  1st through 3rd gears in “D” position and engine brake functions with overdrive control switch set to “OFF”.
  1st and 2nd gears in “2” position and engine brake functions with accelerator pedal released (fully closed throttle)..... Forward clutch or forward one-way clutch slippage

Stall revolution is too high in R position:

- Engine brake does not function in “1” position..... Low & reverse brake slippage
- Engine brake functions in “1” position..... Reverse clutch slippage

Stall revolution within specifications:

- Vehicle does not achieve speed of more than 80 km/h (50 MPH)..... One-way clutch seizure in torque converter housing

CAUTION:
Be careful since automatic fluid temperature increases abnormally.

- Slippage occurs in 3rd and 4th gears in “D” position..... High clutch slippage
- Slippage occurs in 2nd and 4th gear in “D” position..... Brake band slippage
- Engine brake does not function in 2nd and 3rd gears in “D” position, 2nd gear in “2” position, and 1st gear in “1” position with overdrive control switch set to “OFF”.

Stall revolution less than specifications:

- Poor acceleration during starts..... One-way clutch seizure in torque converter

Selector lever position	Judgement		
D	H	O	L
2	H	O	L
1	H	O	L
R	O	H	L

O : Stall revolution is normal.
H : Stall revolution is higher than specified.
L : Stall revolution is lower than specified.

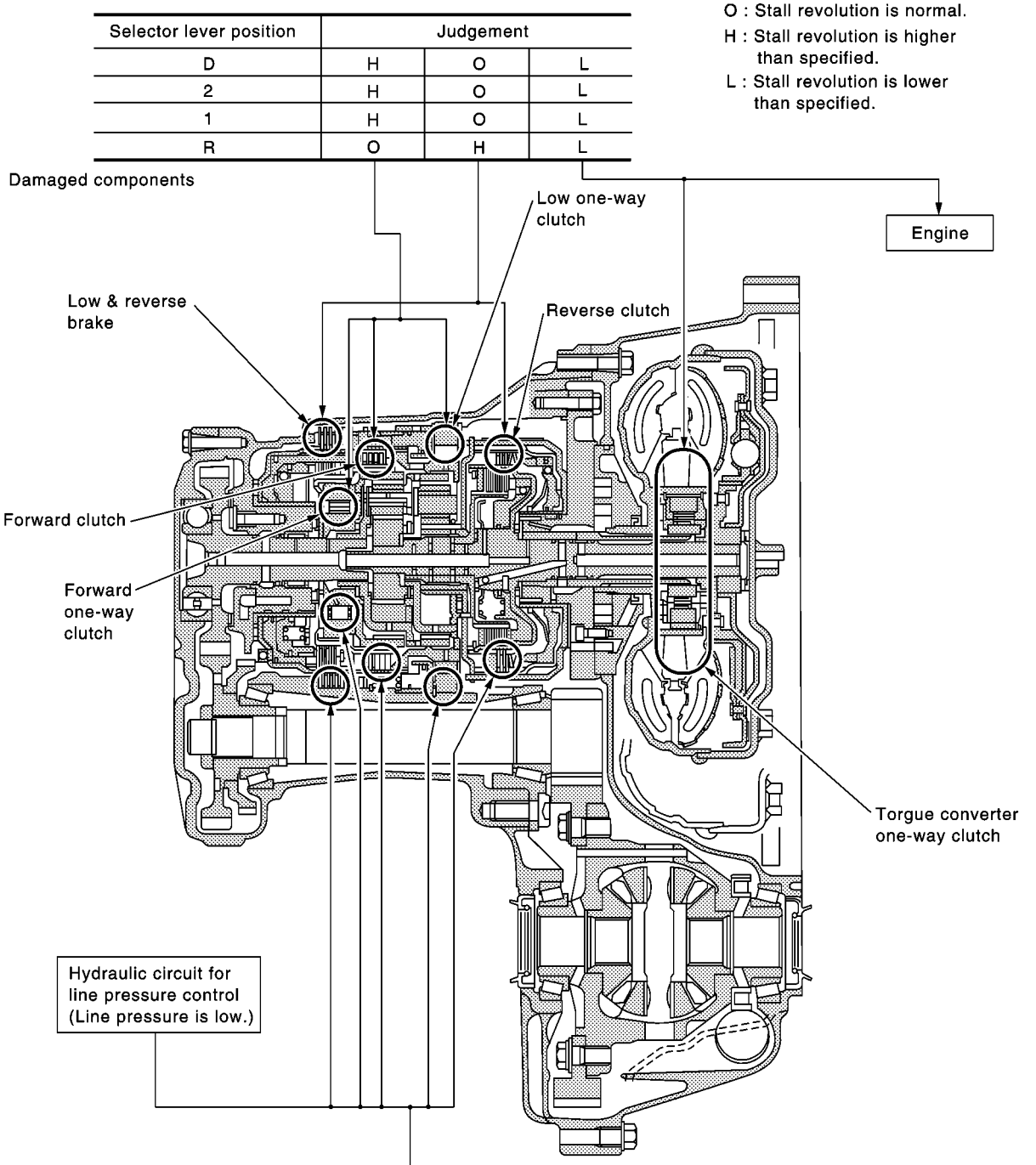

Clutches and brakes except high clutch, brake band and overrun clutch are OK. (Condition of high clutch, brake band and overrun clutch cannot be confirmed by stall test.)

D	H	O
2	H	O
1	H	O
R	H	O
Selector lever position	Judgement	

SCIA0707E

Line Pressure Test

ECS00975

LINE PRESSURE TEST PORTS

Location of line pressure test ports are shown in the illustration.

- **Always replace pressure plugs as they are self-sealing bolts.**

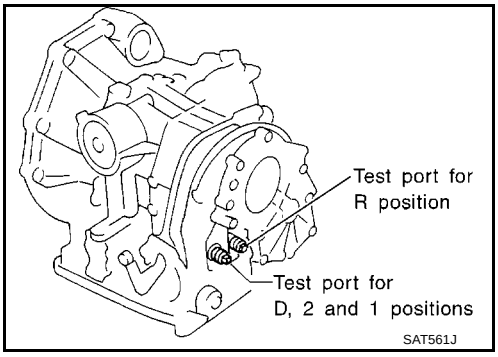

LINE PRESSURE TEST PROCEDURE

1. Check A/T fluid and engine oil levels. If necessary, add fluid or oil.
2. Drive vehicle for approx. 10 minutes or until engine oil and ATF reach operating temperature.

   ATF operating temperature: 50 - 80°C (122 -176°F)

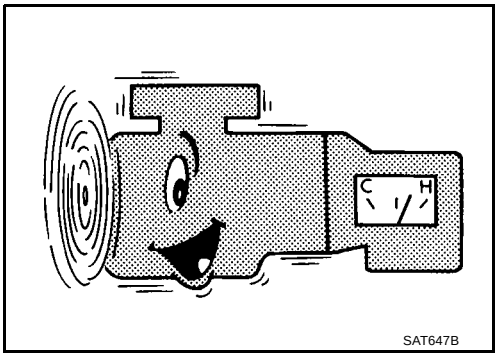

3. Install pressure gauge to corresponding line pressure port.

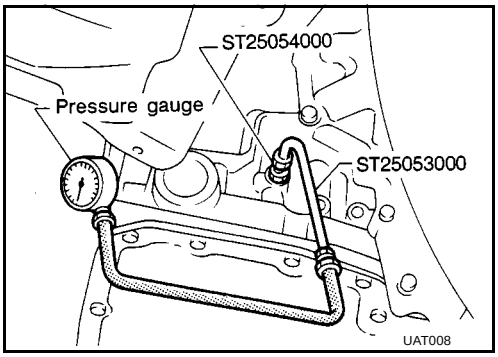

4. Set parking brake and block wheels.
   - **Continue to depress brake pedal fully while line pressure test is being performed at stall speed.**
5. Start engine and measure line pressure at idle and stall speed.
   - **When measuring line pressure at stall speed, follow the stall test procedure.**

Line pressure: Refer to **AT-519, "SERVICE DATA AND SPECIFICATIONS (SDS)"** **.**

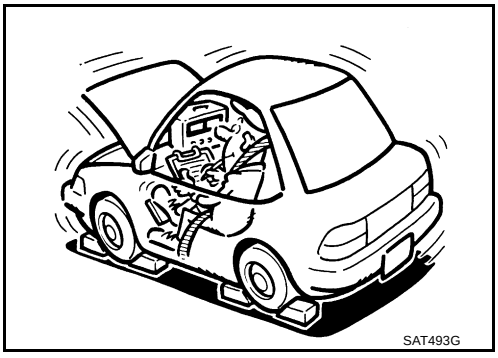

JUDGEMENT OF LINE PRESSURE TEST

Judgement		Suspected parts
At idle	Line pressure is low in all positions.	● Oil pump wear ● Control piston damage ● Pressure regulator valve or plug sticking ● Spring for pressure regulator valve damaged ● Line pressure leakage between oil strainer and pressure regulator valve ● Clogged strainer
	Line pressure is low in particular position.	● Line pressure leakage between manual valve and particular clutch ● For example, line pressure is: – Low in “R” and “1” positions, but – Normal in “D” and “2” positions. Therefore, fluid leakage exists at or around low and reverse brake circuit. Refer to AT-18, "Shift Mechanism" .
	Line pressure is high.	● Maladjustment of throttle position sensor ● A/T fluid temperature sensor damaged ● Line pressure solenoid valve sticking ● Short circuit of line pressure solenoid valve circuit ● Pressure modifier valve sticking ● Pressure regulator valve or plug sticking ● Open in dropping resistor circuit
At stall speed	Line pressure is low.	● Maladjustment of throttle position sensor ● Line pressure solenoid valve sticking ● Short circuit of line pressure solenoid valve circuit ● Pressure regulator valve or plug sticking ● Pressure modifier valve sticking ● Pilot valve sticking

Road Test

ECS00976

DESCRIPTION

- The purpose of the test is to determine overall performance of A/T and analyze causes of problems.
- The road test consists of the following three parts:

1. Check before engine is started
2. Check at idle
3. Cruise test

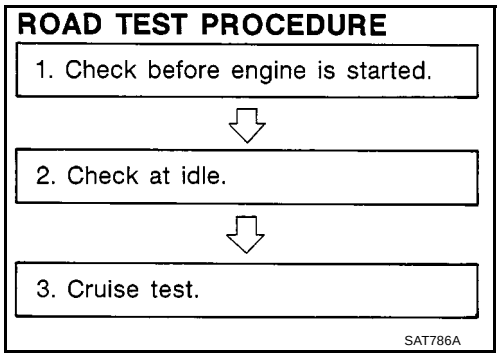

- Before road test, familiarize yourself with all test procedures and items to check.
- Conduct tests on all items until specified symptom is found. Troubleshoot items which check out No Good after road test. Refer to the following items.

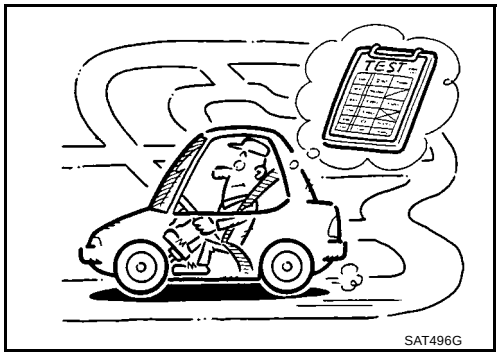

	ON BOARD DIAGNOSTIC SYSTEM DESCRIPTION	TROUBLE DIAGNOSES FOR SYMPTOMS
EURO-OBD	AT-37, "ON BOARD DIAGNOSTIC SYSTEM DESCRIPTION" to AT-50, "Diagnostic Procedure Without CONSULT-II"	AT-213, "1. O/D OFF Indicator Lamp Does Not Come On" to AT-239, "21. TCM Self-diagnosis Does Not Activate (PNP & Overdrive Control Switches, and Throttle Position Sensor Circuit Checks)"

1. CHECK BEFORE ENGINE IS STARTED

1. CHECK O/D OFF INDICATOR LAMP

1. Park vehicle on flat surface.
2. Turn ignition switch to “OFF” position.
3. Move selector lever to “P” position.
4. Set overdrive control switch to “ON” position.
5. Turn ignition switch to “ON” position. (Do not start engine.)

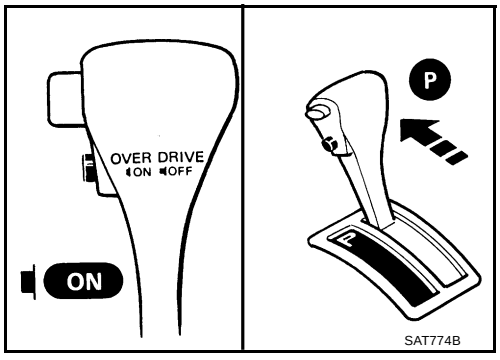

6. Does O/D OFF indicator lamp come on for about 2 seconds?

Yes or No

Yes >> GO TO 2
No >> Stop ROAD TEST. GO TO “1. O/D OFF Indicator Lamp Does Not Come On” AT-213 .

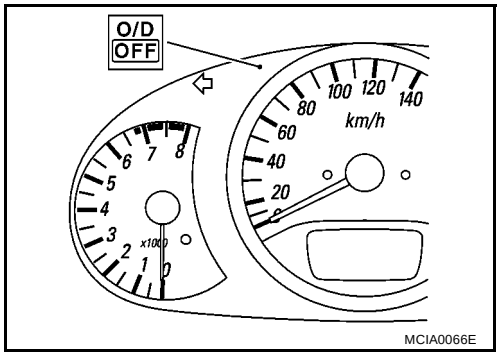

2. CHECK O/D OFF INDICATOR LAMP

Does O/D OFF indicator lamp flicker for about 8 seconds?

Yes or No

Yes >> Perform self-diagnosis and check NG items on the AT-57, "DIAGNOSTIC WORKSHEET" . Refer to AT-51, "TCM SELF-DIAGNOSTIC PROCEDURE (NO TOOLS)" .
No >> 1. Turn ignition switch to “OFF” position.
2. Perform self-diagnosis and note NG items. Refer to AT-51, "TCM SELF-DIAGNOSTIC PROCEDURE (NO TOOLS)" .
3. GO TO “2. CHECK AT IDLE” AT-71 .

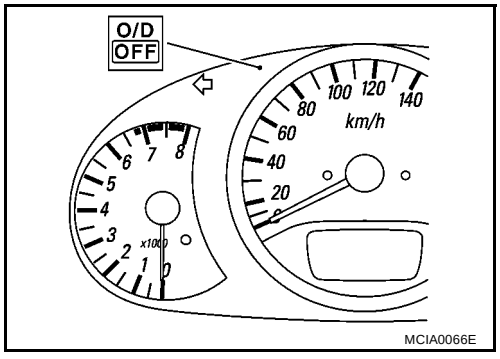

2. CHECK AT IDLE

1. CHECK ENGINE START

1. Park vehicle on flat surface.
2. Turn ignition switch to “OFF” position.
3. Move selector lever to “P” or “N” position.
4. Turn ignition switch to “START” position.
5. Is engine started?

Yes or No

Yes >> GO TO 2

No >> Mark the box on the DIAGNOSTIC WORKSHEET.Go to “2 Engine Cannot Be Started In “P” and “N” Position”, AT-214 . Continue ROAD TEST. Refer to AT-68, "Road Test" .

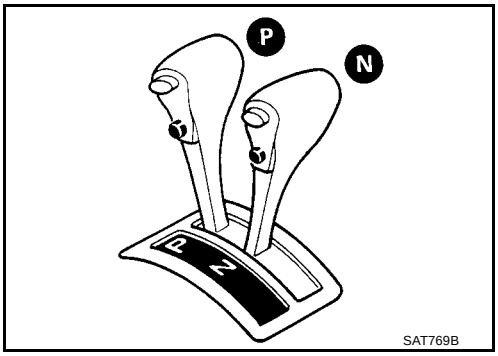

2. CHECK ENGINE START

1. Turn ignition switch to “OFF” position.
2. Move selector lever to “D”, “1”, “2” or “R” position.
3. Turn ignition switch to “START” position.
4. Is engine started?

Yes or No

Yes >> Mark the box on the DIAGNOSTIC WORKSHEET. Go To “2. Engine Cannot Be Started In “P” and “N” Position”, AT-214 . Continue ROAD TEST. Refer to AT-68, "Road Test" .

No >> GO TO 3

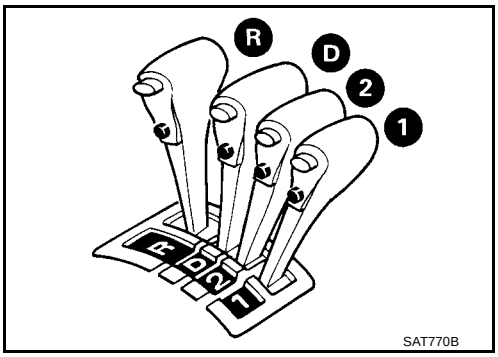

3. CHECK VEHICLE MOVE

1. Turn ignition switch to “OFF” position.
2. Move selector lever to “P” position.
3. Release parking brake.
4. Push vehicle forward or backward.

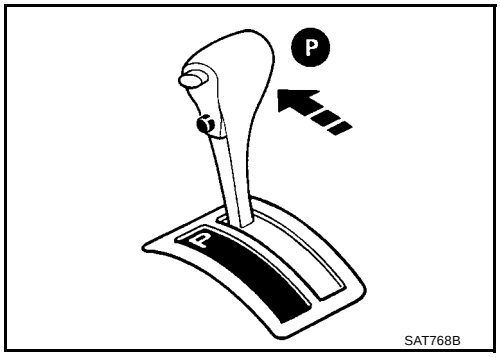

5. Does vehicle move when it is pushed forward or backward?

Yes or No

Yes >> Mark the box on the DIAGNOSTIC WORKSHEET. Go To “3. In “P” Position, Vehicle Moves Forward Or Backward When Pushed”, AT-214 . Continue ROAD TEST. Refer to AT-68, "Road Test" .

No >> GO TO 4

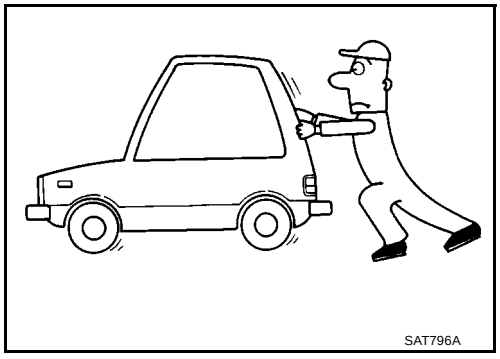

4. CHECK VEHICLE MOVE

1. Apply parking brake.
2. Move selector lever to “N” position.
3. Turn ignition switch to “START” position and start engine.
4. Release parking brake.
5. Does vehicle move forward or backward?

Yes or No

Yes >> Mark the box on the DIAGNOSTIC WORKSHEET. Go To “4. In “N” Position, Vehicle Moves”, AT-216 . Continue ROAD TEST. Refer to AT-68, "Road Test" .

No >> GO TO 5

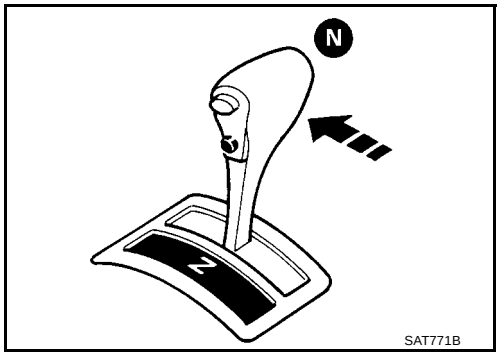

5. CHECK SHIFT SHOCK

1. Apply foot brake.

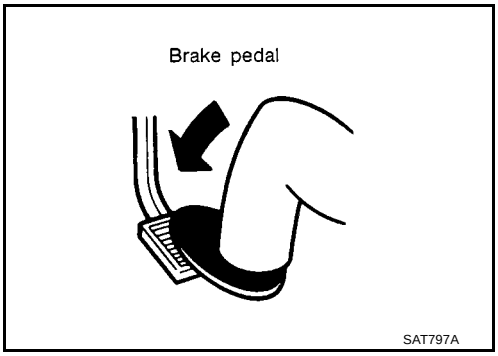

2. Move selector lever to “R” position.
3. Is there large shock when changing from “N” to “R” position?

Yes or No

Yes >> Mark the box on the DIAGNOSTIC WORKSHEET. Go To “5. Large Shock “N” → “R” Position”, AT-217 . Continue ROAD TEST. Refer to AT-68, "Road Test" .

No >> GO TO 6

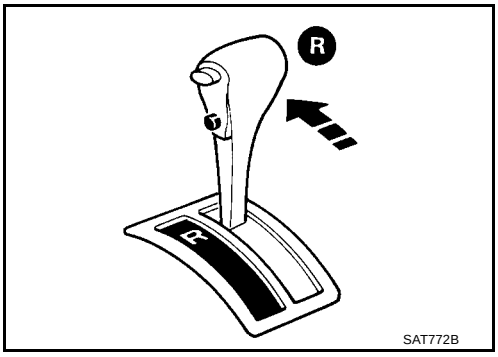

6. CHECK VEHICLE MOVE

1. Release foot brake for several seconds.
2. Does vehicle creep backward when foot brake is released?

Yes or No

Yes >> GO TO 7

No >> Mark the box on the DIAGNOSTIC WORKSHEET. Go To “6. Vehicle Does Not Creep Backward In “R” Position”, AT-218 . Continue ROAD TEST. Refer to AT-68, "Road Test" .

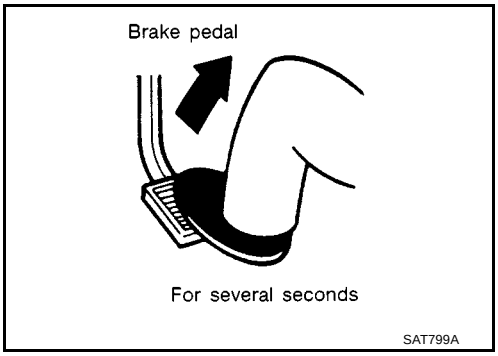

7. CHECK VEHICLE MOVE

1. Move selector lever to “D”, “2” and “1” positions and check if vehicle creeps forward.
2. Does vehicle creep forward in all three positions?

Yes or No

Yes >> Go To “3. CRUISE TEST”, AT-74 .

No >> Mark the box on the DIAGNOSTIC WORKSHEET. Go To “7. Vehicle Does Not Creep Forward In “D”, “2” Or “1” Position”, AT-221 . Continue ROAD TEST. Refer to AT-68, "Road Test" .

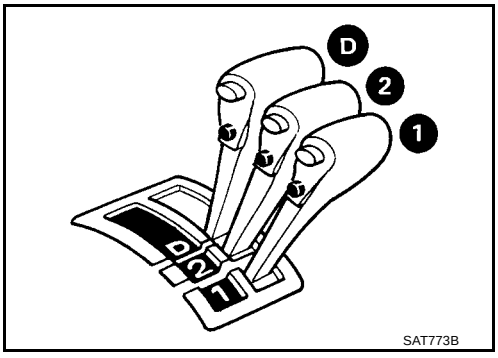

3. CRUISE TEST

- Check all items listed in Parts 1 through 3.

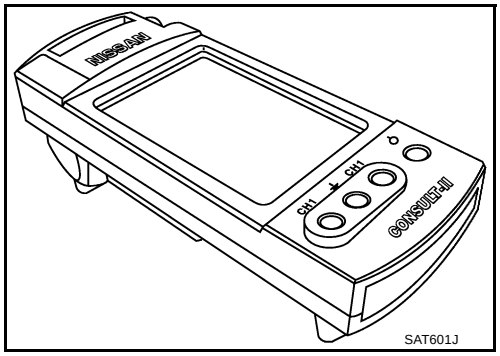

SAT601J

With CONSULT-II

- Using CONSULT-II, conduct a cruise test and record the result.
- Print the result and ensure that shifts and lock-ups take place as per Shift Schedule.

CONSULT-II Setting Procedure

1. Turn ignition switch “OFF”.
2. Connect CONSULT-II to data link connector, which is located in left side lower dash panel.
3. Turn ignition switch “ON”.

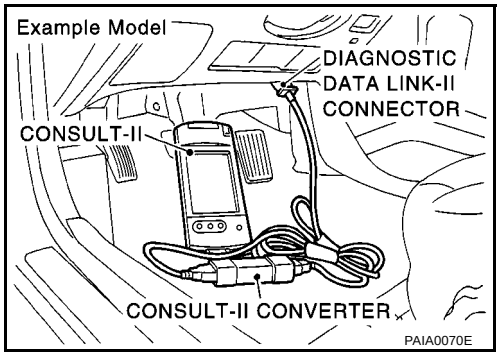

PAIA0070E

4. Touch “START (NISSAN BASED VHCL)”.

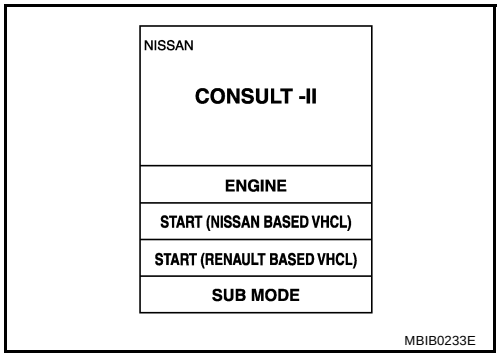

MBIB0233E

5. Touch “A/T”.

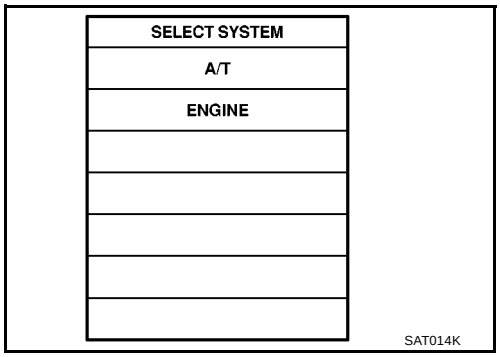

SAT014K

6. Touch “DATA MONITOR”.

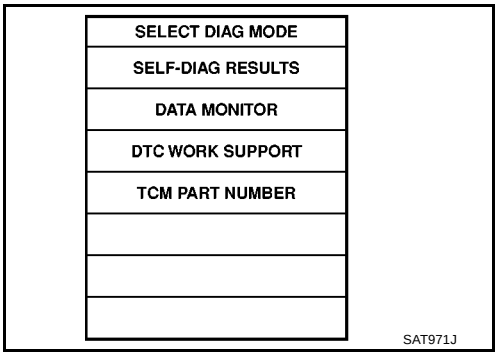

7. Touch “MAIN SIGNALS” or “TCM INPUT SIGNALS”.
8. Select “Numerical Display”, “Barchart Display” or “Line Graph Display”.

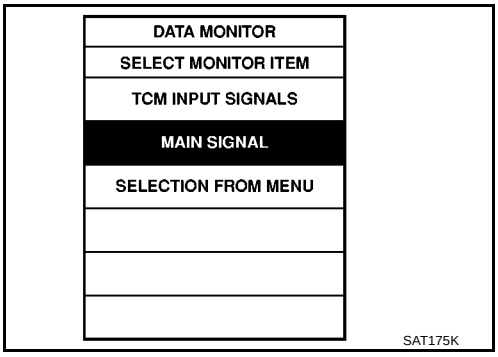

9. Touch “SETTING” to recording condition (“AUTO TRIG” or “MANU TRIG”) and touch “BACK”.
10. Touch “Start”.

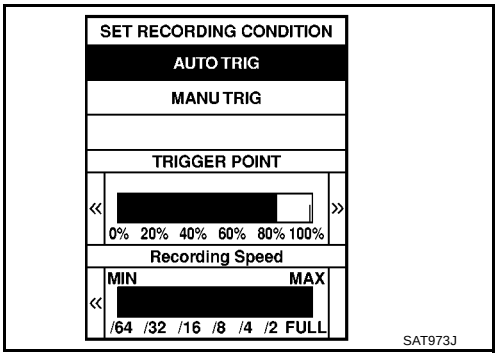

11. When performing cruise test, touch “RECORD”.

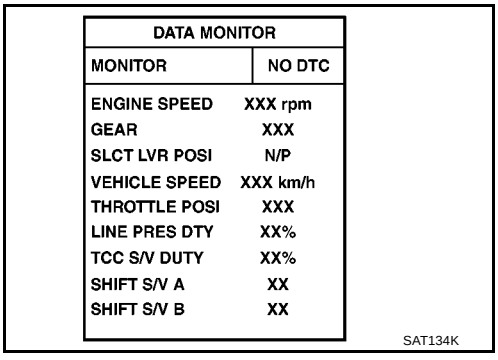

12. After finishing cruise test part 1, touch “STOP”.

DATA MONITOR		
Recording Data	X%	DTC DETECTED
ENGINE SPEED	XXX rpm	
GEAR	XXX	
SLCT LVR POSI	N/P	
VEHICLE SPEED	XXX km/h	
THROTTLE POSI	XXX	
LINE PRES DTY	XX%	
TCC S/V DUTY	XX%	
SHIFT S/V A	XX	
SHIFT S/V B	XX	

SAT135K

13. Touch “STORE” and touch “BACK”.

REAL-TIME DIAG
ENG SPEED SIG

SAT987J

STORE	
SYSTEM	SAVE REC DATA

SAT974J

14. Touch “DISPLAY”.
15. Touch “PRINT”.
16. Check the monitor data printed out.
17. Continue cruise test part 2 and 3.

Trigger	VHCL S/SEN A/T	VHCL S/SEN MTR	THRTL POSI SEN
	km/h	km/h	V

SAT975J

Without CONSULT-II

- Throttle position sensor can be checked by voltage across terminals 41 and 42 of TCM.

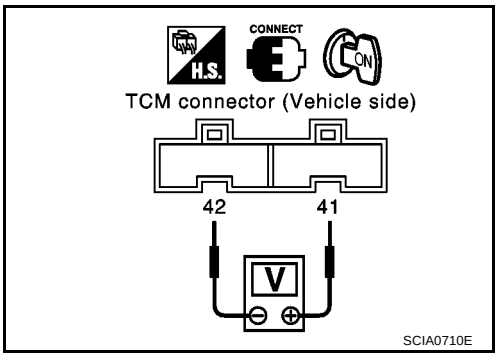

Cruise Test — Part 1

1. CHECK STARTING GEAR (D_1) POSITION

1. Drive vehicle for approx. 10 minutes to warm engine oil and ATF up to operating temperature.

   ATF operating temperature: 50 - 80°C (122 - 176°F)

2. Park vehicle on flat surface.
3. Set overdrive control switch to “ON” position.
4. Move selector lever to “P” position.
5. Start engine.

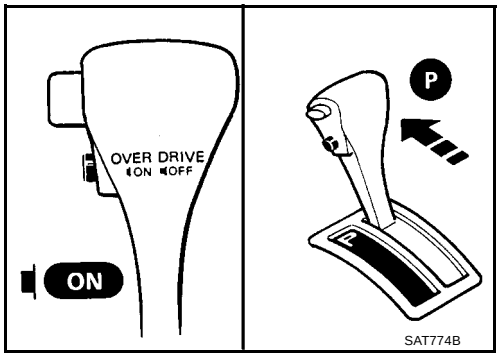

6. Move selector lever to “D” position.

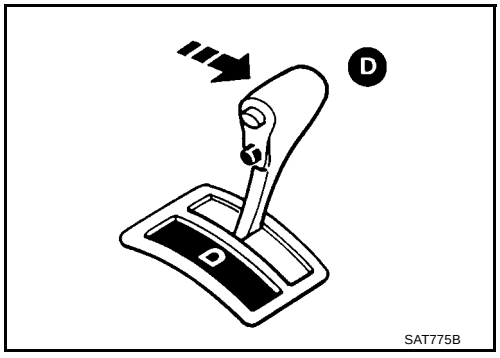

7. Accelerate vehicle by constantly depressing accelerator pedal halfway.
8. Does vehicle start from D_1 ?

   Read gear position.

Yes or No

Yes >> GO TO 2
No >> Go To “8. Vehicle Cannot Be Started From D_1 ”, AT-223 . Continue ROAD TEST. Refer to AT-68, "Road Test" .

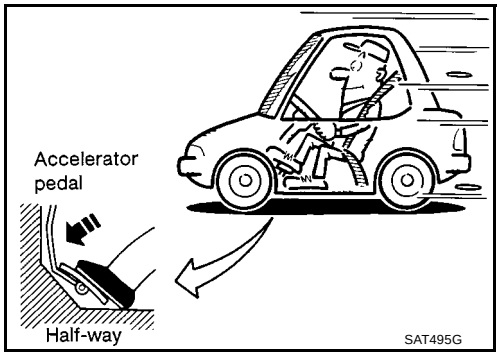

2. CHECK SHIFT UP (D_1 TO D_2)

Does A/T shift from D_1 to D_2 at the specified speed?

Read gear position, throttle opening and vehicle speed.

Specified speed when shifting from D_1 to D_2 :

Refer to AT-519, "Shift Schedule" .

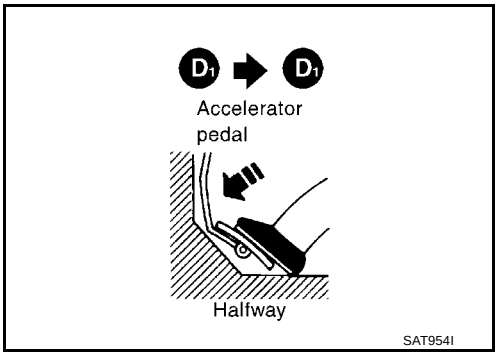

Yes or No

Yes >> GO TO 3

No >> Go To "9. A/T Does Not Shift: D_1 → D_2 Or Does Not Kickdown: D_4 → D_2 ", AT-225 . Continue ROAD TEST. Refer to AT-68, "Road Test" .

3. CHECK SHIFT UP (D_2 TO D_3)

Does A/T shift from D_2 to D_3 at the specified speed?

Read gear position, throttle position and vehicle speed.

Specified speed when shifting from D_2 to D_3 :

Refer to AT-519, "Shift Schedule" .

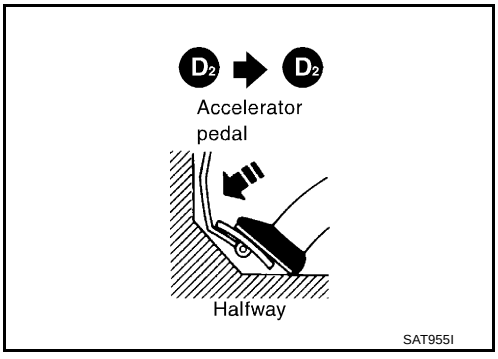

Yes or No

Yes >> GO TO 4

No >> Go To "10. A/T Does Not Shift: D_2 → D_3 ", AT-227 . Continue ROAD TEST. Refer to AT-68, "Road Test" .

4. CHECK SHIFT UP (D_3 TO D_4)

Does A/T shift from D_3 to D_4 at the specified speed?

Read gear position, throttle position and vehicle speed.

Specified speed when shifting from D_3 to D_4 :

Refer to AT-519, "Shift Schedule" .

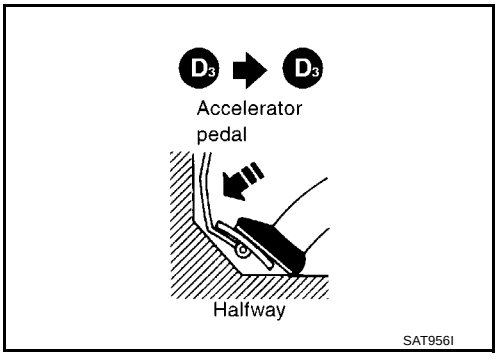

Yes or No

Yes >> GO TO 5

No >> Go To "11. A/T Does Not Shift: D_3 → D_4 ", AT-229 . Continue ROAD TEST. Refer to AT-68, "Road Test" .

5. CHECK LOCK-UP (D_4 TO D_4 L/U)

Does A/T perform lock-up at the specified speed?

Read vehicle speed, throttle position when lock-up duty becomes 94%.

Specified speed when lock-up occurs:

Refer to AT-519, "Shift Schedule" .

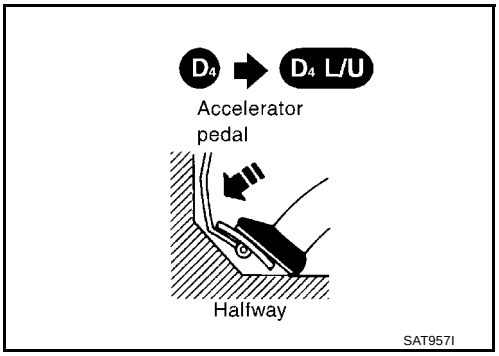

Yes or No

Yes >> GO TO 6

No >> Go To “12. A/T Does Not Perform Lock-up”, AT-232 . Continue ROAD TEST. Refer to AT-68, "Road Test" .

6. CHECK HOLD LOCK-UP

Does A/T hold lock-up condition for more than 30 seconds?

Yes or No

Yes >> GO TO 7

No >> Go To “13. A/T Does Not Hold Lock-up Condition”, AT-233 .

7. CHECK SHIFT DOWN (D_4 L/U TO D_4)

1. Release accelerator pedal.
2. Is lock-up released when accelerator pedal is released?

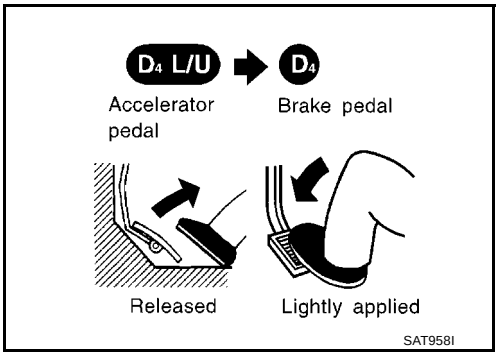

Yes or No

Yes >> GO TO 8

No >> Go To “14. Lock-up Is Not Released”, AT-234 . Continue ROAD TEST. Refer to AT-68, "Road Test" .

8. CHECK SHIFT DOWN (D_4 TO D_3)

1. Decelerate vehicle by applying foot brake lightly.
2. Does engine speed return to idle smoothly when A/T is shifted from D_4 to D_3 ?

Read gear position and engine speed.

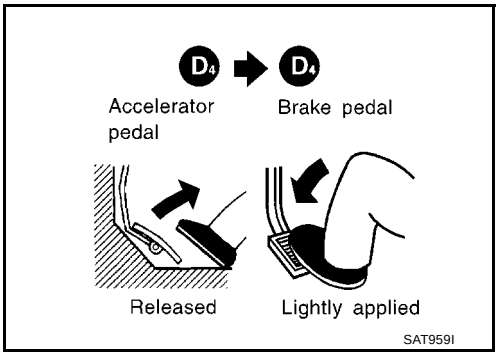

Yes or No

Yes >> 1. Stop vehicle.
2. Go To “Cruise test — Part 2”, AT-81 .

No >> Go To “15. Engine Speed Does Not Return To Idle (Light Braking $D_4 \rightarrow D_3$)”, AT-235 . Continue ROAD TEST. Refer to AT-68, "Road Test" .

Cruise Test — Part 2

1. CHECK STARTING GEAR (D_1) POSITION

1. Confirm overdrive control switch is in “ON” position.
2. Confirm selector lever is in “D” position.
3. Accelerate vehicle by half throttle again.
4. Does vehicle start from D_1 ?

Read gear position.

Yes or No

Yes >> GO TO 2
No >> Go To “16. Vehicle Does Not Start From D_1 ”, AT-236 . Continue ROAD TEST. Refer to AT-68, "Road Test" .

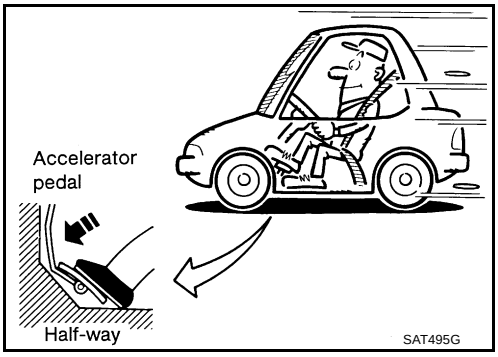

2. CHECK SHIFT UP AND SHIFT DOWN (D_3 TO D_4 TO D_2)

1. Accelerate vehicle to 80 km/h (50 MPH) as shown in illustration.
2. Release accelerator pedal and then quickly depress it fully.
3. Does A/T shift from D_4 to D_2 as soon as accelerator pedal is depressed fully?

Read gear position and throttle position.

Yes or No

Yes >> GO TO 3
No >> Go To “9. A/T Does Not Shift: D_1 → D_2 Or Does Not Kickdown: D_4 → D_2 ”, AT-225 . Continue ROAD TEST. Refer to AT-68, "Road Test" .

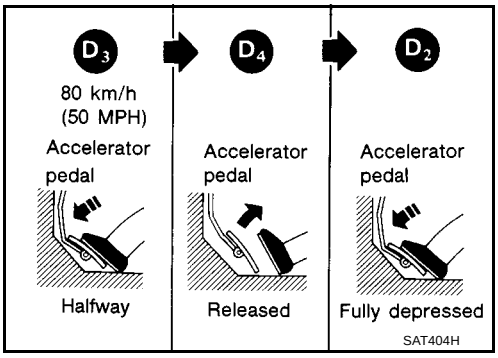

3. CHECK SHIFT UP (D_2 TO D_3)

Does A/T shift from D_2 to D_3 at the specified speed?

Read gear position, throttle position and vehicle speed.

Specified speed when shifting from D_2 to D_3 :

Refer to AT-519, "Shift Schedule" .

Yes or No

Yes >> GO TO 4
No >> Go To “10. A/T Does Not Shift: D_2 → D_3 ”, AT-227 . Continue ROAD TEST. Refer to AT-68, "Road Test" .

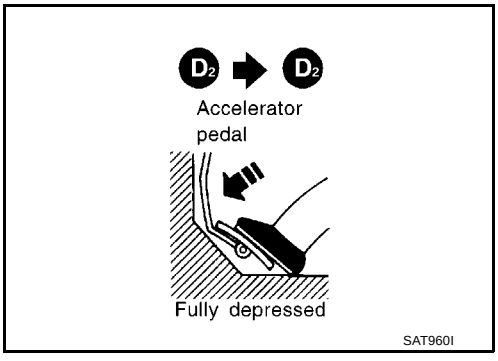

4. CHECK SHIFT UP (D_3 TO D_4) AND ENGINE BRAKE

Release accelerator pedal after shifting from D_2 to D_3.
Does A/T shift from D_3 to D_4 and does vehicle decelerate by engine brake?

Read gear position, throttle position and vehicle speed.

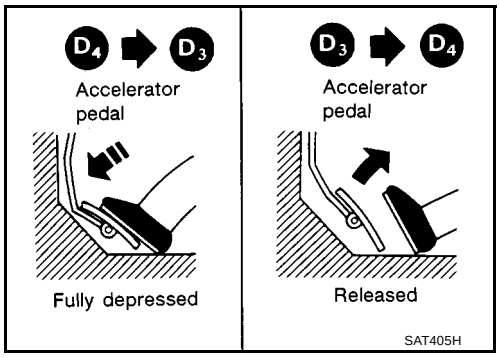

Yes or No

Yes >> 1. Stop vehicle.
2. Go To “Cruise test — Part 3”, AT-83 .

No >> Go To “11. A/T Does Not Shift: D_3 → D_4 ”, AT-229 .
Continue ROAD TEST. Refer to AT-68, "Road Test" .

Cruise Test — Part 3

1. CHECK SHIFT DOWN (D_4 TO D_3)

1. Confirm overdrive control switch is in “ON” position.
2. Confirm selector lever is in “D” position.
3. Accelerate vehicle using half-throttle to D_4 .

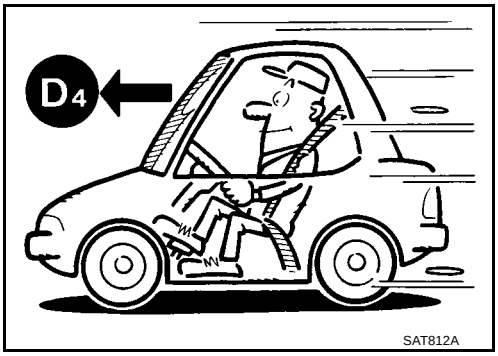

4. Release accelerator pedal.

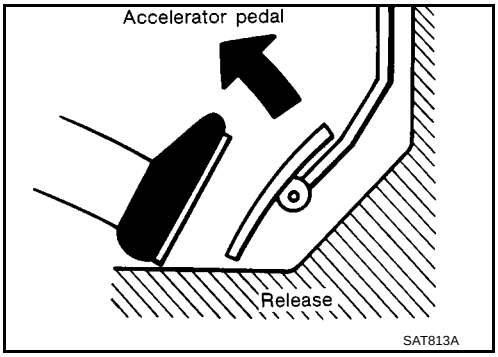

5. Set overdrive control switch to “OFF” position while driving in D_4 .

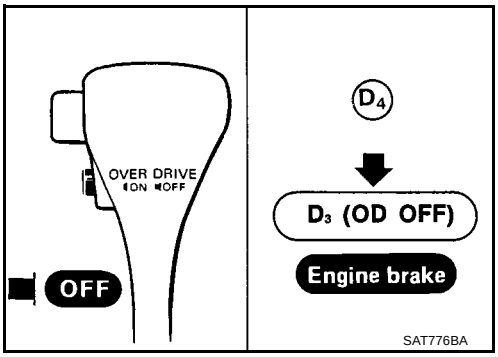

6. Does A/T shift from D_4 to D_3 (O/D OFF)?

Read gear position and vehicle speed.

Yes or No

Yes >> GO TO 2

No >> Go To “17. A/T Does Not Shift: D_4 → D_3 , When Overdrive Control Switch “ON” → “OFF”, AT-237 . Continue ROAD TEST. Refer to AT-68, "Road Test" .

2. CHECK ENGINE BRAKE

Does vehicle decelerate by engine brake?

Yes or No

Yes >> GO TO 3

No >> Go To “15. Engine Speed Does Not Return To Idle (Light Braking $D_4 \rightarrow D_3$)”, AT-235 . Continue ROAD TEST. Refer to AT-68, "Road Test" .

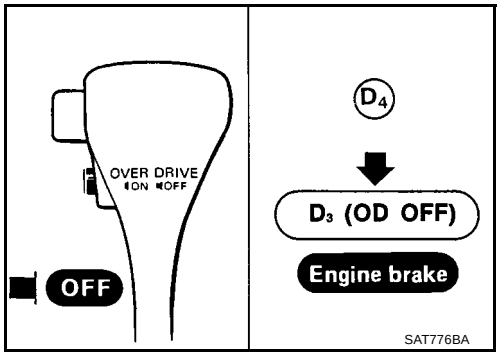

3. CHECK SHIFT DOWN (D_3 TO D_2)

1. Move selector lever from “D” to “2” position while driving in D_3 (O/D OFF).
2. Does A/T shift from D_3 (O/D OFF) to 2_2 ?

Read gear position.

Yes or No

Yes >> GO TO 4

No >> Go To “18. A/T Does Not Shift: $D_3 \rightarrow D_2$, When Selector Lever “D” → “2” Position”, AT-237 . Continue ROAD TEST. Refer to AT-68, "Road Test" .

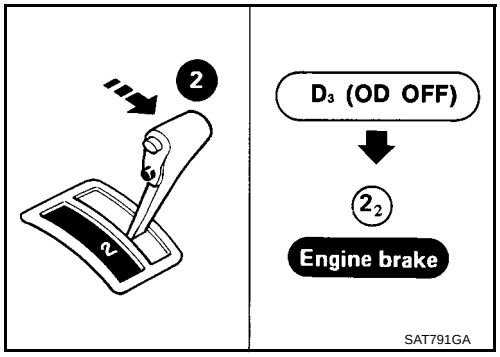

4. CHECK ENGINE BRAKE

Does vehicle decelerate by engine brake?

Yes or No

Yes >> GO TO 5

No >> Go To “15. Engine Speed Does Not Return To Idle (Light Braking $D_4 \rightarrow D_3$)”, AT-235 . Continue ROAD TEST. Refer to AT-68, "Road Test" .

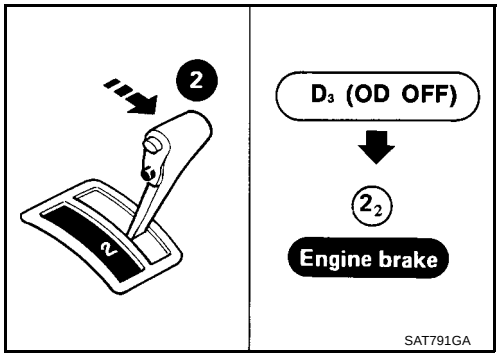

5. CHECK SHIFT DOWN

1. Move selector lever from “2” to “1” position while driving in 2_2 .
2. Does A/T shift from 2_2 to 1_1 position?

Read gear position.

Yes or No

Yes >> GO TO 6

No >> Go To “19. A/T Does Not Shift: $2_2 \rightarrow 1_1$, When Selector lever “2” → “1” Position”, AT-238 . Continue ROAD TEST. Refer to AT-68, "Road Test" .

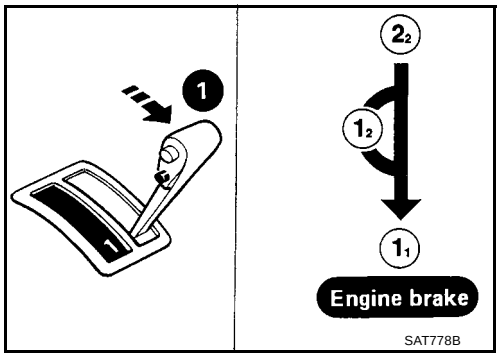

6. CHECK ENGINE BRAKE

Does vehicle decelerate by engine brake?

Yes or No

Yes >> 1. Stop vehicle.
2. Perform self-diagnosis.
EURO-OBD: Refer to AT-51, "TCM SELF-DIAGNOSTIC PROCEDURE (NO TOOLS)" .

No >> Go To “20. Vehicle Does Not Decelerate By Engine Brake”, AT-239 . Continue ROAD TEST. Refer to AT-68, "Road Test" .

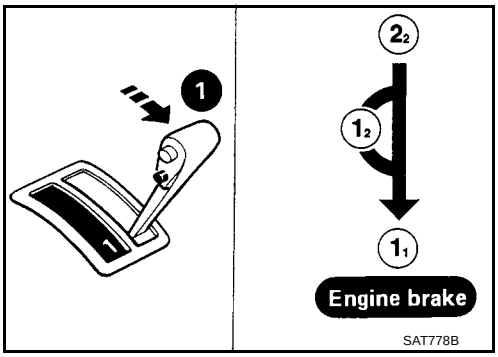

TROUBLE DIAGNOSIS — GENERAL DESCRIPTION

PFP:00000

Symptom Chart

ECS00977

Numbers are arranged in order of inspection.
Perform inspections starting with number one and work up.

Symptom	Condition	Diagnostic Item	Reference Page
			EURO-OBD
Engine cannot start in “P” and “N” positions. AT-214, "2. Engine Cannot Be Started In “P” and “N” Position"	ON vehicle	1. Ignition switch and starter	EL-11, “Power Supply Routing”, SC-13, “Starting System”
		2. Control cable adjustment	AT-412, "Control Cable Adjustment"
		3. PNP switch adjustment	AT-412, "Park/Neutral Position (PNP) Switch Adjustment"
Engine starts in position other than “N” and “P” positions. AT-214, "2. Engine Cannot Be Started In “P” and “N” Position"	ON vehicle	1. Control cable adjustment	AT-412, "Control Cable Adjustment"
		2. PNP switch adjustment	AT-412, "Park/Neutral Position (PNP) Switch Adjustment"
Transaxle noise in “P” and “N” positions.	ON vehicle	1. Fluid level	AT-63, "FLUID LEVEL CHECK"
		2. Line pressure test	AT-67, "Line Pressure Test"
		3. Throttle position sensor [Accelerator pedal position (APP) sensor]	AT-183, "DTC P1705 ACCELERATOR PEDAL POSITION (APP) SENSOR"
		4. Vehicle speed sensor·A/T (Revolution sensor) and vehicle speed sensor·MTR	AT-125, "DTC P0720 VEHICLE SPEED SENSOR A/T (REVOLUTION SENSOR)", AT-203, "DTC VEHICLE SPEED SENSOR MTR"
		5. Engine speed signal	AT-131, "DTC P0725 ENGINE SPEED SIGNAL"
	OFF vehicle	6. Oil pump	AT-439, "Oil Pump"
		7. Torque converter	AT-421, "Locations of Adjusting Shims, Needle Bearings, Thrust Washers and Snap Rings"
Vehicle moves when changing into “P” position, or parking gear does not disengage when shifted out of “P” position. AT-214, "3. In “P” Position, Vehicle Moves Forward Or Backward When Pushed"	ON vehicle	1. Control cable adjustment	AT-412, "Control Cable Adjustment"
	OFF vehicle	2. Parking components	AT-417, "Output Shaft, Idler Gear, Reduction Pinion Gear and Bearing Retainer", AT-436, "REPAIR FOR COMPONENT PARTS"
Vehicle runs in “N” position. AT-216, "4. In “N” Position, Vehicle Moves"	ON vehicle	1. Control cable adjustment	AT-412, "Control Cable Adjustment"
	OFF vehicle	2. Forward clutch	AT-468, "Forward and Overrun Clutches"
		3. Reverse clutch	AT-459, "Reverse Clutch"
		4. Overrun clutch	AT-468, "Forward and Overrun Clutches"

Symptom	Condition	Diagnostic Item	Reference Page EURO-OBD
Vehicle will not run in “R” position (but runs in “D”, “2” and “1” positions). Clutch slips. Very poor acceleration. AT-218, "6. Vehicle Does Not Creep Backward In “R” Position"	ON vehicle	1. Control cable adjustment	AT-412, "Control Cable Adjustment"
		2. Line pressure test	AT-67, "Line Pressure Test"
		3. Line pressure solenoid valve	AT-166, "DTC P0745 LINE PRESSURE SOLENOID VALVE"
		4. Control valve assembly	AT-410, "Control Valve Assembly and Accumulators"
	OFF vehicle	5. Reverse clutch	AT-459, "Reverse Clutch"
		6. High clutch	AT-463, "High Clutch"
		7. Forward clutch	AT-468, "Forward and Overrun Clutches"
		8. Overrun clutch	AT-468, "Forward and Overrun Clutches"
		9. Low & reverse brake	AT-474, "Low & Reverse Brake"
Vehicle braked when shifting into “R” position.	ON vehicle	1. Fluid level	AT-63, "A/T Fluid Check"
		2. Control cable adjustment	AT-412, "Control Cable Adjustment"
		3. Line pressure test	AT-67, "Line Pressure Test"
		4. Line pressure solenoid valve	AT-166, "DTC P0745 LINE PRESSURE SOLENOID VALVE"
		5. Control valve assembly	AT-410, "Control Valve Assembly and Accumulators"
	OFF vehicle	6. High clutch	AT-463, "High Clutch"
		7. Brake band	AT-487, "Band Servo Piston Assembly"
		8. Forward clutch	AT-468, "Forward and Overrun Clutches"
		9. Overrun clutch	AT-468, "Forward and Overrun Clutches"

Symptom	Condition	Diagnostic Item	Reference Page
			EURO-OBD
Sharp shock in shifting from “N” to “D” position.	ON vehicle	1. Engine idling rpm	EC-48, "Idle Speed and Ignition Timing Check" (With EURO-OBD), EC-575, "Idle Speed and Ignition Timing Check" (Without EURO-OBD)
		2. Throttle position sensor [Accelerator pedal position (APP) sensor]	AT-183, "DTC P1705 ACCELERATOR PEDAL POSITION (APP) SENSOR"
		3. Line pressure test	AT-67, "Line Pressure Test"
		4. A/T fluid temp sen circ and TCM pow sour	AT-197, "DTC BATT/FLUID TEMP SEN (A/T FLUID TEMP SENSOR CIRCUIT AND TCM POWER SOURCE)"
		5. Engine speed signal	AT-131, "DTC P0725 ENGINE SPEED SIGNAL"
		6. Line pressure solenoid valve	AT-166, "DTC P0745 LINE PRESSURE SOLENOID VALVE"
		7. Control valve assembly	AT-410, "Control Valve Assembly and Accumulators"
		8. Accumulator N-D	AT-410, "Control Valve Assembly and Accumulators"
	OFF vehicle	9. Forward clutch	AT-468, "Forward and Overrun Clutches"
Vehicle will not run in “D” and “2” positions (but runs in “1” and “R” positions).	ON vehicle	1. Control cable adjustment	AT-412, "Control Cable Adjustment"
	OFF vehicle	2. Low one-way clutch	AT-417, "OVERHAUL", AT-421, "Locations of Adjusting Shims, Needle Bearings, Thrust Washers and Snap Rings"
Vehicle will not run in “D”, “1”, “2” positions (but runs in “R” position). Clutch slips. Very poor acceleration. AT-221, "7. Vehicle Does Not Creep Forward In “D”, “2” Or “1” Position"	ON vehicle	1. Fluid level	AT-63, "FLUID LEVEL CHECK"
		2. Line pressure test	AT-67, "Line Pressure Test"
		3. Line pressure solenoid valve	AT-166, "DTC P0745 LINE PRESSURE SOLENOID VALVE"
		4. Control valve assembly	AT-410, "Control Valve Assembly and Accumulators"
		5. Accumulator N-D	AT-410, "Control Valve Assembly and Accumulators"

Symptom	Condition	Diagnostic Item	Reference Page EURO-OBD
Vehicle will not run in “D”, “1”, “2” positions (but runs in “R” position). Clutch slips. Very poor acceleration. AT-221, "7. Vehicle Does Not Creep Forward In “D”, “2” Or “1” Position"	OFF vehicle	6. Reverse clutch	AT-459, "Reverse Clutch"
		7. High clutch	AT-463, "High Clutch"
		8. Forward clutch	AT-468, "Forward and Overrun Clutches"
		9. Forward one-way clutch	AT-417, "OVERHAUL"
		10. Low one-way clutch	AT-417, "OVERHAUL", AT-421, "Locations of Adjusting Shims, Needle Bearings, Thrust Washers and Snap Rings"
Clutches or brakes slip somewhat in starting.	ON vehicle	1. Fluid level	AT-63, "FLUID LEVEL CHECK"
		2. Control cable adjustment	AT-412, "Control Cable Adjustment"
		3. Throttle position sensor [Accelerator pedal position (APP) sensor]	AT-183, "DTC P1705 ACCELERATOR PEDAL POSITION (APP) SENSOR"
		4. Line pressure test	AT-67, "Line Pressure Test"
		5. Line pressure solenoid valve	AT-166, "DTC P0745 LINE PRESSURE SOLENOID VALVE"
		6. Control valve assembly	AT-410, "Control Valve Assembly and Accumulators"
		7. Accumulator N-D	AT-410, "Control Valve Assembly and Accumulators"
	OFF vehicle	8. Forward clutch	AT-468, "Forward and Overrun Clutches"
		9. Reverse clutch	AT-459, "Reverse Clutch"
		10. Low & reverse brake	AT-474, "Low & Reverse Brake"
		11. Oil pump	AT-439, "Oil Pump"
		12. Torque converter	AT-421, "Locations of Adjusting Shims, Needle Bearings, Thrust Washers and Snap Rings"
Excessive creep.	ON vehicle	1. Engine idling rpm	EC-48, "Idle Speed and Ignition Timing Check" (With EURO-OBD), EC-575, "Idle Speed and Ignition Timing Check" (Without EURO-OBD)

Symptom	Condition	Diagnostic Item	Reference Page
			EURO-OBD
No creep at all. AT-218, "6. Vehicle Does Not Creep Backward In “R” Position" and AT-221, "7. Vehicle Does Not Creep Forward In “D”, “2” Or “1” Position"	ON vehicle	1. Fluid level	AT-63, "FLUID LEVEL CHECK"
		2. Line pressure test	AT-67, "LINE PRESSURE TEST PROCEDURE"
		3. Control valve assembly	AT-410, "Control Valve Assembly and Accumulators"
	OFF vehicle	4. Forward clutch	AT-468, "Forward and Overrun Clutches"
		5. Oil pump	AT-439, "Oil Pump"
		6. Torque converter	AT-421, "Locations of Adjusting Shims, Needle Bearings, Thrust Washers and Snap Rings"
Failure to change gear from “D_1 ” to “D_2 ”.	ON vehicle	1. PNP switch adjustment	AT-412, "Park/Neutral Position (PNP) Switch Adjustment"
		2. Control cable adjustment	AT-412, "Control Cable Adjustment"
		3. Shift solenoid valve A	AT-173, "DTC P0750 SHIFT SOLENOID VALVE A"
		4. Control valve assembly	AT-410, "Control Valve Assembly and Accumulators"
		5. Vehicle speed sensor·A/T (Revolution sensor) and vehicle speed sensor·MTR	AT-125, "DTC P0720 VEHICLE SPEED SENSOR A/T (REVOLUTION SENSOR)", AT-203, "DTC VEHICLE SPEED SENSOR MTR"
	OFF vehicle	6. Brake band	AT-487, "Band Servo Piston Assembly"

Symptom	Condition	Diagnostic Item	Reference Page EURO-OBD
Failure to change gear from “D2 ” to “D3 ”.	ON vehicle	1. PNP switch adjustment	AT-412, "Park/Neutral Position (PNP) Switch Adjustment"
		2. Control cable adjustment	AT-412, "Control Cable Adjustment"
		3. Shift solenoid valve B	AT-178, "DTC P0755 SHIFT SOLENOID VALVE B"
		4. Control valve assembly	AT-410, "Control Valve Assembly and Accumulators"
		5. Vehicle speed sensor·A/T (Revolution sensor) and vehicle speed sensor·MTR	AT-125, "DTC P0720 VEHICLE SPEED SENSOR A/T (REVOLUTION SENSOR)", AT-203, "DTC VEHICLE SPEED SENSOR MTR"
	OFF vehicle	6. High clutch	AT-463, "High Clutch"
		7. Brake band	AT-487, "Band Servo Piston Assembly"
Failure to change gear from “D3 ” to “D4 ”.	ON vehicle	1. PNP switch adjustment	AT-412, "Park/Neutral Position (PNP) Switch Adjustment"
		2. Control cable adjustment	AT-412, "Control Cable Adjustment"
		3. Shift solenoid valve A	AT-173, "DTC P0750 SHIFT SOLENOID VALVE A"
		4. Vehicle speed sensor·A/T (Revolution sensor) and vehicle speed sensor·MTR	AT-125, "DTC P0720 VEHICLE SPEED SENSOR A/T (REVOLUTION SENSOR)", AT-203, "DTC VEHICLE SPEED SENSOR MTR"
		5. A/T fluid temp sen circ and TCM pow sour	AT-197, "DTC BATT/FLUID TEMP SEN (A/T FLUID TEMP SENSOR CIRCUIT AND TCM POWER SOURCE)"
	OFF vehicle	6. Brake band	AT-487, "Band Servo Piston Assembly"

Symptom	Condition	Diagnostic Item	Reference Page
			EURO-OBD
Too high a gear change point from “D_1 ” to “D_2 ”, from “D_2 ” to “D_3 ”, from “D_3 ” to “D_4 ”. AT-225, "9. A/T Does Not Shift: $D_1 \rightarrow D_2$ Or Does Not Kickdown: $D_4 \rightarrow D_2$", AT-227, "10. A/T Does Not Shift: $D_2 \rightarrow D_3$" and AT-229, "11. A/T Does Not Shift: $D_3 \rightarrow D_4$"	ON vehicle	1.Throttle position sensor [Accelerator pedal position (APP) sensor]	AT-183, "DTC P1705 ACCELERATOR PEDAL POSITION (APP) SENSOR"
		2. Vehicle speed sensor·A/T (Revolution sensor) and vehicle speed sensor·MTR	AT-125, "DTC P0720 VEHICLE SPEED SENSOR A/T (REVOLUTION SENSOR)", AT-203, "DTC VEHICLE SPEED SENSOR MTR"
		3. Shift solenoid valve A	AT-173, "DTC P0750 SHIFT SOLENOID VALVE A"
		4. Shift solenoid valve B	AT-178, "DTC P0755 SHIFT SOLENOID VALVE B"
Gear change directly from “D_1 ” to “D_3 ” occurs.	ON vehicle	1. Fluid level	AT-63, "FLUID LEVEL CHECK"
		2. Accumulator servo release	AT-410, "Control Valve Assembly and Accumulators"
	OFF vehicle	3. Brake band	AT-487, "Band Servo Piston Assembly"
Engine stops when shifting lever into “R”, “D”, “2” and “1”.	ON vehicle	1. Engine idling rpm	EC-48, "Idle Speed and Ignition Timing Check" (With EURO-OBD), EC-575, "Idle Speed and Ignition Timing Check" (Without EURO-OBD)
		2. Torque converter clutch solenoid valve	AT-161, "DTC P0740 TORQUE CONVERTER CLUTCH SOLENOID VALVE"
		3. Control valve assembly	AT-410, "Control Valve Assembly and Accumulators"
	OFF vehicle	4. Torque converter	AT-421, "Locations of Adjusting Shims, Needle Bearings, Thrust Washers and Snap Rings"

Symptom	Condition	Diagnostic Item	Reference Page EURO-OBD
Too sharp a shock in change from “D_1 ” to “D_2 ”.	ON vehicle	1. Throttle position sensor [Accelerator pedal position (APP) sensor]	AT-183, "DTC P1705 ACCELERATOR PEDAL POSITION (APP) SENSOR"
		2. Line pressure test	AT-67, "Line Pressure Test"
		3. Accumulator servo release	AT-410, "Control Valve Assembly and Accumulators"
		4. Control valve assembly	AT-410, "Control Valve Assembly and Accumulators"
		5. A/T fluid temp sen circ and TCM pow sour	AT-197, "DTC BATT/FLUID TEMP SEN (A/T FLUID TEMP SENSOR CIRCUIT AND TCM POWER SOURCE)"
	OFF vehicle	6. Brake band	AT-487, "Band Servo Piston Assembly"
Too sharp a shock in change from “D_2 ” to “D_3 ”.	ON vehicle	1. Throttle position sensor [Accelerator pedal position (APP) sensor]	AT-183, "DTC P1705 ACCELERATOR PEDAL POSITION (APP) SENSOR"
		2. Line pressure test	AT-67, "Line Pressure Test"
		3. Control valve assembly	AT-410, "Control Valve Assembly and Accumulators"
	OFF vehicle	4. High clutch	AT-463, "High Clutch"
		5. Brake band	AT-487, "Band Servo Piston Assembly"
Too sharp a shock in change from “D_3 ” to “D_4 ”.	ON vehicle	1. Throttle position sensor [Accelerator pedal position (APP) sensor]	AT-183, "DTC P1705 ACCELERATOR PEDAL POSITION (APP) SENSOR"
		2. Line pressure test	AT-67, "Line Pressure Test"
		3. Control valve assembly	AT-410, "Control Valve Assembly and Accumulators"
	OFF vehicle	4. Brake band	AT-487, "Band Servo Piston Assembly"
		5. Overrun clutch	AT-468, "Forward and Overrun Clutches"

Symptom	Condition	Diagnostic Item	Reference Page EURO-OBD
Almost no shock or clutches slipping in change from “D_1 ” to “D_2 ”.	ON vehicle	1. Fluid level	AT-63, "FLUID LEVEL CHECK"
		2. Throttle position sensor [Accelerator pedal position (APP) sensor]	AT-183, "DTC P1705 ACCELERATOR PEDAL POSITION (APP) SENSOR"
		3. Line pressure test	AT-67, "Line Pressure Test"
		4. Accumulator servo release	AT-410, "Control Valve Assembly and Accumulators"
		5. Control valve assembly	AT-410, "Control Valve Assembly and Accumulators"
	OFF vehicle	6. Brake band	AT-487, "Band Servo Piston Assembly"
Almost no shock or slipping in change from “D_2 ” to “D_3 ”.	ON vehicle	1. Fluid level	AT-63, "FLUID LEVEL CHECK"
		2. Throttle position sensor [Accelerator pedal position (APP) sensor]	AT-183, "DTC P1705 ACCELERATOR PEDAL POSITION (APP) SENSOR"
		3. Line pressure test	AT-67, "Line Pressure Test"
		4. Control valve assembly	AT-410, "Control Valve Assembly and Accumulators"
	OFF vehicle	5. High clutch	AT-463, "High Clutch"
		6. Brake band	AT-487, "Band Servo Piston Assembly"
Almost no shock or slipping in change from “D_3 ” to “D_4 ”.	ON vehicle	1. Fluid level	AT-63, "FLUID LEVEL CHECK"
		2. Throttle position sensor [Accelerator pedal position (APP) sensor]	AT-183, "DTC P1705 ACCELERATOR PEDAL POSITION (APP) SENSOR"
		3. Line pressure test	AT-67, "Line Pressure Test"
		4. Control valve assembly	AT-410, "Control Valve Assembly and Accumulators"
	OFF vehicle	5. High clutch	AT-463, "High Clutch"
		6. Brake band	AT-487, "Band Servo Piston Assembly"
Vehicle braked by gear change from “D_1 ” to “D_2 ”.	ON vehicle	1. Fluid level	AT-63, "FLUID LEVEL CHECK"
	OFF vehicle	2. Reverse clutch	AT-459, "Reverse Clutch"
		3. Low & reverse brake	AT-474, "Low & Reverse Brake"
		4. High clutch	AT-463, "High Clutch"
		5. Low one-way clutch	AT-417, "OVERHAUL", AT-421, "Locations of Adjusting Shims, Needle Bearings, Thrust Washers and Snap Rings"

Symptom	Condition	Diagnostic Item	Reference Page EURO-OBD
Vehicle braked by gear change from “D2 ” to “D3 ”.	ON vehicle	1. Fluid level	AT-63, "FLUID LEVEL CHECK"
	OFF vehicle	2. Brake band	AT-487, "Band Servo Piston Assembly"
Vehicle braked by gear change from “D3 ” to “D4 ”.	ON vehicle	1. Fluid level	AT-63, "FLUID LEVEL CHECK"
	OFF vehicle	2. Overrun clutch	AT-468, "Forward and Overrun Clutches"
		3. Forward one-way clutch	AT-417, "OVERHAUL"
		4. Reverse clutch	AT-459, "Reverse Clutch"
Maximum speed not attained. Poor acceleration.	ON vehicle	1. Fluid level	AT-63, "FLUID LEVEL CHECK"
		2. PNP switch adjustment	AT-412, "Park/Neutral Position (PNP) Switch Adjustment"
		3. Shift solenoid valve A	AT-173, "DTC P0750 SHIFT SOLENOID VALVE A"
		4. Shift solenoid valve B	AT-178, "DTC P0755 SHIFT SOLENOID VALVE B"
		5. Control valve assembly	AT-410, "Control Valve Assembly and Accumulators"
	OFF vehicle	6. Reverse clutch	AT-459, "Reverse Clutch"
		7. High clutch	AT-463, "High Clutch"
		8. Brake band	AT-487, "Band Servo Piston Assembly"
		9. Low & reverse brake	AT-474, "Low & Reverse Brake"
		10. Oil pump	AT-439, "Oil Pump"
		11. Torque converter	AT-421, "Locations of Adjusting Shims, Needle Bearings, Thrust Washers and Snap Rings"

Symptom	Condition	Diagnostic Item	Reference Page
			EURO-OBD
Failure to change gear from “D4 ” to “D3 ”.	ON vehicle	1. Fluid level	AT-63, "FLUID LEVEL CHECK"
		2. Throttle position sensor [Accelerator pedal position (APP) sensor]	AT-183, "DTC P1705 ACCELERATOR PEDAL POSITION (APP) SENSOR"
		3. Overrun clutch solenoid valve	AT-189, "DTC P1760 OVERRUN CLUTCH SOLENOID VALVE"
		4. Shift solenoid valve A	AT-173, "DTC P0750 SHIFT SOLENOID VALVE A"
		5. Line pressure solenoid valve	AT-166, "DTC P0745 LINE PRESSURE SOLENOID VALVE"
		6. Control valve assembly	AT-410, "Control Valve Assembly and Accumulators"
	OFF vehicle	7. Low & reverse brake	AT-474, "Low & Reverse Brake"
		8. Overrun clutch	AT-468, "Forward and Overrun Clutches"
Failure to change gear from “D3 ” to “D2 ” or from “D4 ” to “D2 ”.	ON vehicle	1. Fluid level	AT-63, "FLUID LEVEL CHECK"
		2. Throttle position sensor [Accelerator pedal position (APP) sensor]	AT-183, "DTC P1705 ACCELERATOR PEDAL POSITION (APP) SENSOR"
		3. Shift solenoid valve A	AT-173, "DTC P0750 SHIFT SOLENOID VALVE A"
		4. Shift solenoid valve B	AT-178, "DTC P0755 SHIFT SOLENOID VALVE B"
		5. Control valve assembly	AT-410, "Control Valve Assembly and Accumulators"
	OFF vehicle	6. High clutch	AT-463, "High Clutch"
		7. Brake band	AT-487, "Band Servo Piston Assembly"

Symptom	Condition	Diagnostic Item	Reference Page EURO-OBD
Failure to change gear from “D_2 ” to “D_1 ” or from “D_3 ” to “D_1 ”.	ON vehicle	1. Fluid level	AT-63, "FLUID LEVEL CHECK"
		2. Throttle position sensor [Accelerator pedal position (APP) sensor]	AT-183, "DTC P1705 ACCELERATOR PEDAL POSITION (APP) SENSOR"
		3. Shift solenoid valve A	AT-173, "DTC P0750 SHIFT SOLENOID VALVE A"
		4. Shift solenoid valve B	AT-178, "DTC P0755 SHIFT SOLENOID VALVE B"
		5. Control valve assembly	AT-410, "Control Valve Assembly and Accumulators"
	OFF vehicle	6. Low one-way clutch	AT-417, "OVERHAUL", AT-421, "Locations of Adjusting Shims, Needle Bearings, Thrust Washers and Snap Rings"
		7. High clutch	AT-463, "High Clutch"
		8. Brake band	AT-487, "Band Servo Piston Assembly"
Gear change shock felt during deceleration by releasing accelerator pedal.	ON vehicle	1. Throttle position sensor [Accelerator pedal position (APP) sensor]	AT-183, "DTC P1705 ACCELERATOR PEDAL POSITION (APP) SENSOR"
		2. Line pressure test	AT-67, "Line Pressure Test"
		3. Overrun clutch solenoid valve	AT-189, "DTC P1760 OVERRUN CLUTCH SOLENOID VALVE"
		4. Control valve assembly	AT-410, "Control Valve Assembly and Accumulators"
Too high a change point from “D_4 ” to “D_3 ”, from “D_3 ” to “D_2 ”, from “D_2 ” to “D_1 ”.	ON vehicle	1. Throttle position sensor [Accelerator pedal position (APP) sensor]	AT-183, "DTC P1705 ACCELERATOR PEDAL POSITION (APP) SENSOR"
		2. Vehicle speed sensor·A/T (Revolution sensor) and vehicle speed sensor·MTR	AT-125, "DTC P0720 VEHICLE SPEED SENSOR A/T (REVOLUTION SENSOR)", AT-203, "DTC VEHICLE SPEED SENSOR MTR"

Symptom	Condition	Diagnostic Item	Reference Page
			EURO-OBD
Kickdown does not operate when depressing accelerator pedal in “D4 ” within kick down vehicle speed.	ON vehicle	1. Throttle position sensor [Accelerator pedal position (APP) sensor]	AT-183, "DTC P1705 ACCELERATOR PEDAL POSITION (APP) SENSOR"
		2. Vehicle speed sensor·A/T (Revolution sensor) and vehicle speed sensor·MTR	AT-125, "DTC P0720 VEHICLE SPEED SENSOR A/T (REVOLUTION SENSOR)", AT-203, "DTC VEHICLE SPEED SENSOR MTR"
		3. Shift solenoid valve A	AT-173, "DTC P0750 SHIFT SOLENOID VALVE A"
		4. Shift solenoid valve B	AT-178, "DTC P0755 SHIFT SOLENOID VALVE B"
Kickdown operates or engine over-runs when depressing accelerator pedal in “D4 ” beyond kick down vehicle speed limit.	ON vehicle	1. Vehicle speed sensor·A/T (Revolution sensor) and vehicle speed sensor·MTR	AT-125, "DTC P0720 VEHICLE SPEED SENSOR A/T (REVOLUTION SENSOR)", AT-203, "DTC VEHICLE SPEED SENSOR MTR"
		2. Throttle position sensor [Accelerator pedal position (APP) sensor]	AT-183, "DTC P1705 ACCELERATOR PEDAL POSITION (APP) SENSOR"
		3. Shift solenoid valve A	AT-173, "DTC P0750 SHIFT SOLENOID VALVE A"
		4. Shift solenoid valve B	AT-178, "DTC P0755 SHIFT SOLENOID VALVE B"
Races extremely fast or slips in changing from “D4 ” to “D3 ” when depressing accelerator pedal.	ON vehicle	1. Fluid level	AT-63, "FLUID LEVEL CHECK"
		2. Throttle position sensor [Accelerator pedal position (APP) sensor]	AT-183, "DTC P1705 ACCELERATOR PEDAL POSITION (APP) SENSOR"
		3. Line pressure test	AT-67, "Line Pressure Test"
		4. Line pressure solenoid valve	AT-166, "DTC P0745 LINE PRESSURE SOLENOID VALVE"
		5. Control valve assembly	AT-410, "Control Valve Assembly and Accumulators"
	OFF vehicle	6. High clutch	AT-463, "High Clutch"
		7. Forward clutch	AT-468, "Forward and Overrun Clutches"

Symptom	Condition	Diagnostic Item	Reference Page EURO-OBD
Races extremely fast or slips in changing from “D4 ” to “D2 ” when depressing accelerator pedal.	ON vehicle	1. Fluid level	AT-63, "FLUID LEVEL CHECK"
		2. Throttle position sensor [Accelerator pedal position (APP) sensor]	AT-183, "DTC P1705 ACCELERATOR PEDAL POSITION (APP) SENSOR"
		3. Line pressure test	AT-67, "Line Pressure Test"
		4. Line pressure solenoid valve	AT-166, "DTC P0745 LINE PRESSURE SOLENOID VALVE"
		5. Shift solenoid valve A	AT-173, "DTC P0750 SHIFT SOLENOID VALVE A"
		6. Control valve assembly	AT-410, "Control Valve Assembly and Accumulators"
	OFF vehicle	7. Brake band	AT-487, "Band Servo Piston Assembly"
		8. Forward clutch	AT-468, "Forward and Overrun Clutches"
Races extremely fast or slips in changing from “D3 ” to “D2 ” when depressing accelerator pedal.	ON vehicle	1. Fluid level	AT-63, "FLUID LEVEL CHECK"
		2. Throttle position sensor [Accelerator pedal position (APP) sensor]	AT-183, "DTC P1705 ACCELERATOR PEDAL POSITION (APP) SENSOR"
		3. Line pressure test	AT-67, "Line Pressure Test"
		4. Line pressure solenoid valve	AT-166, "DTC P0745 LINE PRESSURE SOLENOID VALVE"
		5. Control valve assembly	AT-410, "Control Valve Assembly and Accumulators"
		6. A/T fluid temp sen circ and TCM pow sour	AT-197, "DTC BATT/FLUID TEMP SEN (A/T FLUID TEMP SENSOR CIRCUIT AND TCM POWER SOURCE)"
	OFF vehicle	7. Brake band	AT-487, "Band Servo Piston Assembly"
		8. Forward clutch	AT-468, "Forward and Overrun Clutches"
		9. High clutch	AT-463, "High Clutch"

Symptom	Condition	Diagnostic Item	Reference Page
			EURO-OBD
Races extremely fast or slips in changing from “D4 ” or “D3 ” to “D1 ” when depressing accelerator pedal.	ON vehicle	1. Fluid level	AT-63, "FLUID LEVEL CHECK"
		2. Throttle position sensor [Accelerator pedal position (APP) sensor]	AT-183, "DTC P1705 ACCELERATOR PEDAL POSITION (APP) SENSOR"
		3. Line pressure test	AT-67, "Line Pressure Test"
		4. Line pressure solenoid valve	AT-166, "DTC P0745 LINE PRESSURE SOLENOID VALVE"
		5. Control valve assembly	AT-410, "Control Valve Assembly and Accumulators"
	OFF vehicle	6. Forward clutch	AT-468, "Forward and Overrun Clutches"
		7. Forward one-way clutch	AT-417, "OVERHAUL"
		8. Low one-way clutch	AT-417, "OVERHAUL", AT-421, "Locations of Adjusting Shims, Needle Bearings, Thrust Washers and Snap Rings"
Vehicle will not run in any position.	ON vehicle	1. Fluid level	AT-63, "FLUID LEVEL CHECK"
		2. Control cable adjustment	AT-412, "Control Cable Adjustment"
		3. Line pressure test	AT-67, "Line Pressure Test"
		4. Line pressure solenoid valve	AT-166, "DTC P0745 LINE PRESSURE SOLENOID VALVE"
	OFF vehicle	5. Oil pump	AT-439, "Oil Pump"
		6. High clutch	AT-463, "High Clutch"
		7. Brake band	AT-487, "Band Servo Piston Assembly"
		8. Low & reverse brake	AT-474, "Low & Reverse Brake"
		9. Torque converter	AT-421, "Locations of Adjusting Shims, Needle Bearings, Thrust Washers and Snap Rings"
		10. Parking components	AT-417, "Output Shaft, Idler Gear, Reduction Pinion Gear and Bearing Retainer"
Transmission noise in “D”, “2”, “1” and “R” positions.	ON vehicle	1. Fluid level	AT-63, "FLUID LEVEL CHECK"
	OFF vehicle	2. Torque converter	AT-421, "Locations of Adjusting Shims, Needle Bearings, Thrust Washers and Snap Rings"

Symptom	Condition	Diagnostic Item	Reference Page
			EURO-OBD
Failure to change from “D_3 ” to “2_2 ” when changing lever into “2” position. AT-237, "18. A/T Does Not Shift: D_3 → 2_2 , When Selector Lever “D” → “2” Position"	ON vehicle	1. PNP switch adjustment	AT-412, "Park/Neutral Position (PNP) Switch Adjustment"
		2. Throttle position sensor [Accelerator pedal position (APP) sensor]	AT-183, "DTC P1705 ACCELERATOR PEDAL POSITION (APP) SENSOR"
		3. Overrun clutch solenoid valve	AT-189, "DTC P1760 OVERRUN CLUTCH SOLENOID VALVE"
		4. Shift solenoid valve A	AT-173, "DTC P0750 SHIFT SOLENOID VALVE A"
		5. Shift solenoid valve B	AT-178, "DTC P0755 SHIFT SOLENOID VALVE B"
		6. Control valve assembly	AT-410, "Control Valve Assembly and Accumulators"
		7. Control cable adjustment	AT-412, "Control Cable Adjustment"
Failure to change from “D_3 ” to “2_2 ” when changing lever into “2” position. AT-237, "18. A/T Does Not Shift: D_3 → 2_2 , When Selector Lever “D” → “2” Position"	OFF vehicle	8. Brake band	AT-487, "Band Servo Piston Assembly"
		9. Overrun clutch	AT-468, "Forward and Overrun Clutches"
Gear change from “2_2 ” to “2_3 ” in “2” position.	ON vehicle	1. PNP switch adjustment	AT-412, "Park/Neutral Position (PNP) Switch Adjustment"

Symptom	Condition	Diagnostic Item	Reference Page EURO-OBD
Engine brake does not operate in “1” position. AT-236, "16. Vehicle Does Not Start From D_1"	ON vehicle	1. PNP switch adjustment	AT-412, "Park/Neutral Position (PNP) Switch Adjustment"
		2. Control cable adjustment	AT-412, "Control Cable Adjustment"
		3. Throttle position sensor [Accelerator pedal position (APP) sensor]	AT-183, "DTC P1705 ACCELERATOR PEDAL POSITION (APP) SENSOR"
		4. Vehicle speed sensor·A/T (Revolution sensor) and vehicle speed sensor·MTR	AT-125, "DTC P0720 VEHICLE SPEED SENSOR A/T (REVOLUTION SENSOR)", AT-203, "DTC VEHICLE SPEED SENSOR MTR"
		5. Shift solenoid valve A	AT-173, "DTC P0750 SHIFT SOLENOID VALVE A"
		6. Control valve assembly	AT-410, "Control Valve Assembly and Accumulators"
		7. Overrun clutch solenoid valve	AT-189, "DTC P1760 OVERRUN CLUTCH SOLENOID VALVE"
	OFF vehicle	8. Overrun clutch	AT-468, "Forward and Overrun Clutches"
		9. Low & reverse brake	AT-474, "Low & Reverse Brake"
Gear change from “1_1” to “1_2” in “1” position.	ON vehicle	1. PNP switch adjustment	AT-412, "Park/Neutral Position (PNP) Switch Adjustment"
		2. Control cable adjustment	AT-412, "Control Cable Adjustment"
Does not change from “1_2” to “1_1” in “1” position.	ON vehicle	1. PNP switch adjustment	AT-412, "Park/Neutral Position (PNP) Switch Adjustment"
		2. Vehicle speed sensor·A/T (Revolution sensor) and vehicle speed sensor·MTR	AT-125, "DTC P0720 VEHICLE SPEED SENSOR A/T (REVOLUTION SENSOR)", AT-203, "DTC VEHICLE SPEED SENSOR MTR"
		3. Shift solenoid valve A	AT-173, "DTC P0750 SHIFT SOLENOID VALVE A"
		4. Control valve assembly	AT-410, "Control Valve Assembly and Accumulators"
		5. Overrun clutch solenoid valve	AT-189, "DTC P1760 OVERRUN CLUTCH SOLENOID VALVE"
	OFF vehicle	6. Overrun clutch	AT-468, "Forward and Overrun Clutches"
		7. Low & reverse brake	AT-474, "Low & Reverse Brake"

Symptom	Condition	Diagnostic Item	Reference Page EURO-OBD
Large shock changing from “12 ” to “11 ” in “1” position.	ON vehicle	1. Control valve assembly	AT-410, "Control Valve Assembly and Accumulators"
	OFF vehicle	2. Low & reverse brake	AT-474, "Low & Reverse Brake"
Transmission overheats.	ON vehicle	1. Fluid level	AT-63, "FLUID LEVEL CHECK"
		2. Engine idling rpm	EC-48, "Idle Speed and Ignition Timing Check" (With EURO-OBD), EC-575, "Idle Speed and Ignition Timing Check" (Without EURO-OBD)
		3. Throttle position sensor [Accelerator pedal position (APP) sensor]	AT-183, "DTC P1705 ACCELERATOR PEDAL POSITION (APP) SENSOR"
		4. Line pressure test	AT-67, "Line Pressure Test"
		5. Line pressure solenoid valve	AT-166, "DTC P0745 LINE PRESSURE SOLENOID VALVE"
		6. Control valve assembly	AT-410, "Control Valve Assembly and Accumulators"
	OFF vehicle	7. Oil pump	AT-439, "Oil Pump"
		8. Reverse clutch	AT-459, "Reverse Clutch"
		9. High clutch	AT-463, "High Clutch"
		10. Brake band	AT-487, "Band Servo Piston Assembly"
		11. Forward clutch	AT-468, "Forward and Overrun Clutches"
		12. Overrun clutch	AT-468, "Forward and Overrun Clutches"
		13. Low & reverse brake	AT-474, "Low & Reverse Brake"
		14. Torque converter	AT-421, "Locations of Adjusting Shims, Needle Bearings, Thrust Washers and Snap Rings"
ATF shoots out during operation. White smoke emitted from exhaust pipe during operation.	ON vehicle	1. Fluid level	AT-63, "FLUID LEVEL CHECK"
	OFF vehicle	2. Reverse clutch	AT-459, "Reverse Clutch"
		3. High clutch	AT-463, "High Clutch"
		4. Brake band	AT-487, "Band Servo Piston Assembly"
		5. Forward clutch	AT-468, "Forward and Overrun Clutches"
		6. Overrun clutch	AT-468, "Forward and Overrun Clutches"
		7. Low & reverse brake	AT-474, "Low & Reverse Brake"

Symptom	Condition	Diagnostic Item	Reference Page
			EURO-OBD
Offensive smell at fluid charging pipe.	ON vehicle	1. Fluid level	AT-63, "FLUID LEVEL CHECK"
	OFF vehicle	2. Torque converter	AT-421, "Locations of Adjusting Shims, Needle Bearings, Thrust Washers and Snap Rings"
		3. Oil pump	AT-439, "Oil Pump"
		4. Reverse clutch	AT-459, "Reverse Clutch"
		5. High clutch	AT-463, "High Clutch"
		6. Brake band	AT-487, "Band Servo Piston Assembly"
		7. Forward clutch	AT-468, "Forward and Overrun Clutches"
		8. Overrun clutch	AT-468, "Forward and Overrun Clutches"
		9. Low & reverse brake	AT-474, "Low & Reverse Brake"
Torque converter is not locked up.	ON vehicle	1. Throttle position sensor [Accelerator pedal position (APP) sensor]	AT-183, "DTC P1705 ACCELERATOR PEDAL POSITION (APP) SENSOR"
		2. Vehicle speed sensor·A/T (Revolution sensor) and vehicle speed sensor·MTR	AT-125, "DTC P0720 VEHICLE SPEED SENSOR A/T (REVOLUTION SENSOR)", AT-203, "DTC VEHICLE SPEED SENSOR MTR"
		3. PNP switch adjustment	AT-412, "Park/Neutral Position (PNP) Switch Adjustment"
		4. Engine speed signal	AT-131, "DTC P0725 ENGINE SPEED SIGNAL"
		5. A/T fluid temp sen circ and TCM pow sour	AT-197, "DTC BATT/FLUID TEMP SEN (A/T FLUID TEMP SENSOR CIRCUIT AND TCM POWER SOURCE)"
		6. Line pressure test	AT-67, "Line Pressure Test"
		7. Torque converter clutch solenoid valve	AT-161, "DTC P0740 TORQUE CONVERTER CLUTCH SOLENOID VALVE"
		8. Control valve assembly	AT-410, "Control Valve Assembly and Accumulators"
	OFF vehicle	9. Torque converter	AT-421, "Locations of Adjusting Shims, Needle Bearings, Thrust Washers and Snap Rings"

Symptom	Condition	Diagnostic Item	Reference Page EURO-OBD
Torque converter clutch piston slip.	ON vehicle	1. Fluid level	AT-63, "FLUID LEVEL CHECK"
		2. Throttle position sensor [Accelerator pedal position (APP) sensor]	AT-183, "DTC P1705 ACCELERATOR PEDAL POSITION (APP) SENSOR"
		3. Line pressure test	AT-67, "Line Pressure Test"
		4. Torque converter clutch solenoid valve	AT-161, "DTC P0740 TORQUE CONVERTER CLUTCH SOLENOID VALVE"
		5. Line pressure solenoid valve	AT-166, "DTC P0745 LINE PRESSURE SOLENOID VALVE"
		6. Control valve assembly	AT-410, "Control Valve Assembly and Accumulators"
	OFF vehicle	7. Torque converter	AT-421, "Locations of Adjusting Shims, Needle Bearings, Thrust Washers and Snap Rings"
Lock-up point is extremely high or low. AT-232, "12. A/T Does Not Perform Lock-up"	ON vehicle	1. Throttle position sensor [Accelerator pedal position (APP) sensor]	AT-183, "DTC P1705 ACCELERATOR PEDAL POSITION (APP) SENSOR"
		2. Vehicle speed sensor·A/T (Revolution sensor) and vehicle speed sensor·MTR	AT-125, "DTC P0720 VEHICLE SPEED SENSOR A/T (REVOLUTION SENSOR)", AT-203, "DTC VEHICLE SPEED SENSOR MTR"
		3. Torque converter clutch solenoid valve	AT-161, "DTC P0740 TORQUE CONVERTER CLUTCH SOLENOID VALVE"
		4. Control valve assembly	AT-410, "Control Valve Assembly and Accumulators"

Symptom	Condition	Diagnostic Item	Reference Page
			EURO-OBD
A/T does not shift to “D4 ” when driving with overdrive control switch “ON”.	ON vehicle	1. Throttle position sensor [Accelerator pedal position (APP) sensor]	AT-183, "DTC P1705 ACCELERATOR PEDAL POSITION (APP) SENSOR"
		2. PNP switch adjustment	AT-412, "Park/Neutral Position (PNP) Switch Adjustment"
		3. Vehicle speed sensor·A/T (Revolution sensor) and vehicle speed sensor·MTR	AT-125, "DTC P0720 VEHICLE SPEED SENSOR A/T (REVOLUTION SENSOR)", AT-203, "DTC VEHICLE SPEED SENSOR MTR"
		4. Shift solenoid valve A	AT-173, "DTC P0750 SHIFT SOLENOID VALVE A"
		5. Overrun clutch solenoid valve	AT-189, "DTC P1760 OVERRUN CLUTCH SOLENOID VALVE"
		6. Control valve assembly	AT-410, "Control Valve Assembly and Accumulators"
		7. A/T fluid temp sen circ and TCM pow sour	AT-197, "DTC BATT/FLUID TEMP SEN (A/T FLUID TEMP SENSOR CIRCUIT AND TCM POWER SOURCE)"
		8. Line pressure test	AT-67, "Line Pressure Test"
	OFF vehicle	9. Brake band	AT-487, "Band Servo Piston Assembly"
		10. Overrun clutch	AT-468, "Forward and Overrun Clutches"
Engine is stopped at “R”, “D”, “2” and “1” positions.	ON vehicle	1. Fluid level	AT-63, "FLUID LEVEL CHECK"
		2. Torque converter clutch solenoid valve	AT-161, "DTC P0740 TORQUE CONVERTER CLUTCH SOLENOID VALVE"
		3. Shift solenoid valve A	AT-173, "DTC P0750 SHIFT SOLENOID VALVE A"
		4. Shift solenoid valve B	AT-178, "DTC P0755 SHIFT SOLENOID VALVE B"
		5. Control valve assembly	AT-410, "Control Valve Assembly and Accumulators"

CONSULT-II REFERENCE VALUE IN DATA MONITOR MODE

Remarks: Specification data are reference values.

Monitor item	Condition	Specification (Approximately)	
A/T fluid temperature sensor	Cold [20°C (68°F)] ↓ Hot [80°C (176°F)]	1.5V ↓ 0.5V	2.5kΩ ↓ 0.3kΩ
Line pressure solenoid valve duty	Small throttle opening (Low line pressure) ↓ Large throttle opening (High line pressure)	Approximately 24% ↓ Approximately 95%	
Torque converter clutch solenoid valve duty	Lock-up “OFF” ↓ Lock-up “ON”	Approximately 4% ↓ Approximately 94%	
Throttle position sensor (Accelerator pedal position (APP) sensor)	Fully-closed throttle	Approximately 0.5V	
	Fully-open throttle	Approximately 4V	

TCM Terminals and Reference Value

ECS00978

PREPARATION

- Measure voltage between each terminal and terminal 25 or 48 by following “TCM INSPECTION TABLE”.

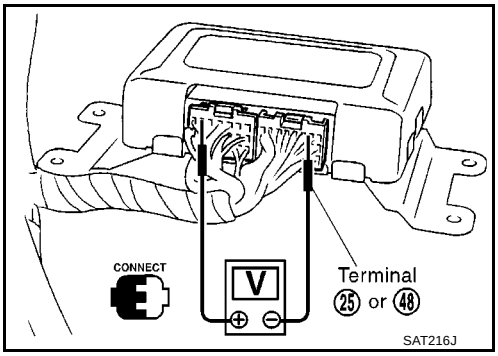

TCM HARNESS CONNECTOR TERMINAL LAYOUT

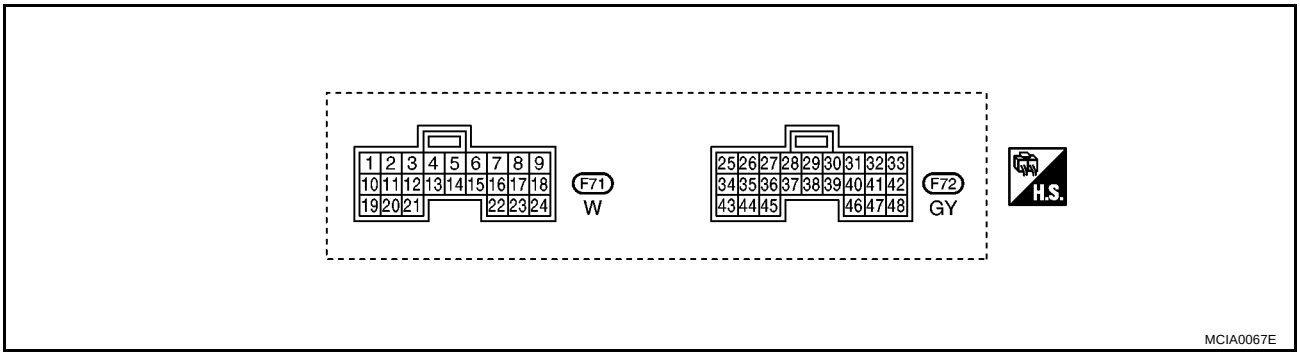

TCM INSPECTION TABLE

(Data are reference values.)

Terminal No.	Wire color	Item	Condition		Judgement standard(Approx.)
1	R/W	Line pressure solenoid valve		When releasing accelerator pedal after warming up engine.	1.5 - 3.0V
				When depressing accelerator pedal fully after warming up engine.	0V
2	P/B	Line pressure solenoid valve (with dropping resistor)		When releasing accelerator pedal after warming up engine.	4 - 14V
				When depressing accelerator pedal fully after warming up engine.	0V

Terminal No.	Wire color	Item	Condition		Judgement standard(Approx.)
3	GY/R	Torque converter clutch solenoid valve		When A/T performs lock-up.	8 - 15V
				When A/T does not perform lock-up.	0V
5*2	L	CAN (H)	—	—	—
6*2	R	CAN (L)	—	—	—
10	BR/R	Power source	ON or OFF	When turning ignition switch to “ON”.	Battery voltage
				When turning ignition switch to “OFF”.	0V
11	L/W	Shift solenoid valve A		When shift solenoid valve A operates. (When driving in “D1 ” or “D4 ”.)	Battery voltage
				When shift solenoid valve A does not operate. (When driving in “D2 ” or “D3 ”.)	0V
12	L/Y	Shift solenoid valve B		When shift solenoid valve B operates. (When driving in “D1 ” or “D2 ”.)	Battery voltage
				When shift solenoid valve B does not operate. (When driving in “D3 ” or “D4 ”.)	0V
19	BR/R	Power source	ON or OFF	Same as No. 10	
20	L/B	Overrun clutch solenoid valve		When overrun clutch solenoid valve operates.	Battery voltage
				When overrun clutch solenoid valve does not operate.	0V
25	B	Ground	—	—	0V
26	BR/Y	PNP switch “1” position	ON and	When setting selector lever to “1” position.	Battery voltage
				When setting selector lever to other positions.	0V
27	L	PNP switch “2” position		When setting selector lever to “2” position.	Battery voltage
				When setting selector lever to other positions.	0V
28	R/B	Power source (Memory back-up)	ON or OFF	When turning ignition switch to “OFF”.	Battery voltage
				When turning ignition switch to “ON”.	Battery voltage
29	W	Revolution sensor		When moving at 20 km/h (12 MPH), use the CONSULT-II pulse frequency measuring function.*1 **CAUTION: Connect the diagnosis data link cable to the vehicle diagnosis connector.**	150 Hz
				When vehicle parks.	Under 1.3V or over 4.5V

Terminal No.	Wire color	Item	Condition		Judgement standard(Approx.)
30 *3	G/B	CONSULT- II (RX)		—	—
31 *3	GY/L	CONSULT- II (TX)		—	—
32*2	R	Throttle position sensor (Power source)	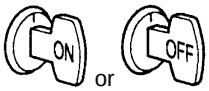	When turning ignition switch to “ON”.	4.5 - 5.5V
				When turning ignition switch to “OFF”.	0V
34	W/G	PNP switch “D” position	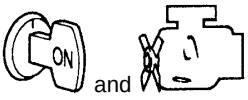	When setting selector lever to “D” position.	Battery voltage
				When setting selector lever to other positions.	0V
35	G/W	PNP switch “R” position		When setting selector lever to “R” position.	Battery voltage
				When setting selector lever to other positions.	0V
36	G	PNP switch “N” or “P” position		When setting selector lever to “N” or “P” position.	Battery voltage
				When setting selector lever to other positions.	0V
39*2	L/OR	Engine speed signal	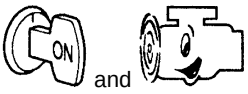	EC-102, "ECM INSPECTION TABLE".	
40	L/B	Vehicle speed sensor		When moving vehicle at 2 to 3 km/h (1 to 2 MPH) for 1 m (3 ft) or more.	Voltage varies between 0V and more than 4.5V
41*2	GY	Throttle position sensor		When depressing accelerator pedal slowly after warming up engine. (Voltage rises gradually in response to throttle position.)	Fully-closed throttle: 0.5V Fully-open throttle: 4V
42	B	Sensor ground	—	—	—
47	BR	A/T fluid temperature sensor		When ATF temperature is 20°C (68°F).	1.5V
				When ATF temperature is 80°C (176°F).	0.5V
48	B	Ground	—	—	0V

*1: A circuit tester cannot be used to test this item.
*2: These terminals are connected to the ECM.
*3: These terminals are connected to the data link connector.

CAN COMMUNICATION

PFP:23710

System Description

ECS00979

CAN (Controller Area Network) is a serial communication line for real time application. It is an on-vehicle multiplex communication line with high data communication speed and excellent error detection ability. Many electronic control units are equipped onto a vehicle, and each control unit shares information and links with other control units during operation (not independent). In CAN communication, control units are connected with 2 communication lines (CAN H line, CAN L line) allowing a high rate of information transmission with less wiring. Each control unit transmits/receives data but selectively reads required data only.

CAN Communication Unit

ECS0097A

CAN COMMUNICATION UNIT FOR MODELS WITH ESP

System diagram

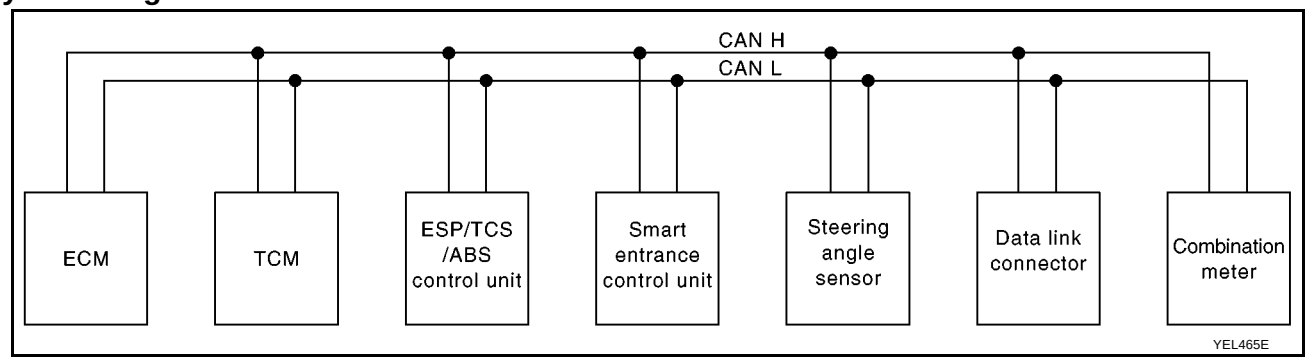

Input/output signal chart

T: Transmit R: Receive

Signals	ECM	TCM	ESP/TCS/ ABS control unit	Smart entrance control unit	Steering angle sensor	Combination meter
Engine speed signal	T		R			R
Brake switch signal		R				T
Rear window defogger signal	R			T		
Heater fan switch signal	R					T
Air conditioner switch signal	R					T
MI signal	T					R
Engine coolant temperature signal	T					R
Fuel consumption signal	T					R
Vehicle speed signal			T			R
	R					T
Seat belt reminder signal				R		T
Headlamp switch signal				T		R
Flashing indicator signal				T		R
Engine cooling fan speed signal	T			R		
Door switches state signal				T		R
A/C compressor signal	T			R		
A/C compressor feedback signal	T					R
Accelerator pedal position signal	T		R			
Output shaft revolution signal	R	T				
OD OFF switch signal		R				T
OD OFF indicator signal		T				R
A/T self-diagnosis signal	R	T				
P range signal		T	R			

Signals	ECM	TCM	ESP/TCS/ ABS control unit	Smart entrance control unit	Steering angle sensor	Combination meter
Steering angle sensor signal			R		T	
A/T position indicator signal	R	T	R			R
ABS warning lamp signal			T			R
Slip indicator lamp signal			T			R
VDC Off indicator lamp signal			T			R
Brake warning lamp signal			T			R
N range switch signal		R				T
P range switch signal		R				T

CAN COMMUNICATION UNIT FOR MODELS WITHOUT ESP

System diagram

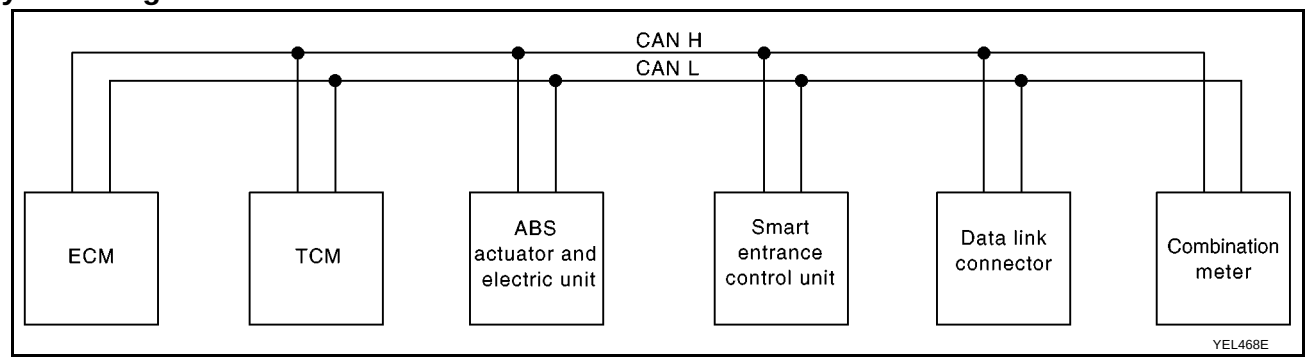

Input/output signal chart

T: Transmit R: Receive

Signals	ECM	TCM	ABS actuator and electric unit (control unit)	Smart entrance control unit	Combination meter
Engine speed signal	T				R
Brake switch signal		R			T
Rear window defogger signal	R			T	
Heater fan switch signal	R				T
Air conditioner switch signal	R				T
MI signal	T				R
Engine coolant temperature signal	T				R
Fuel consumption signal	T				R
Vehicle speed signal			T		R
	R				T
Seat belt reminder signal				R	T
Headlamp switch signal				T	R
Flashing indicator signal				T	R
Engine cooling fan speed signal	T			R	
Door switches state signal				T	R
A/C compressor signal	T			R	
A/C compressor feedback signal	T				R
Accelerator pedal position signal	T	R			
Output shaft revolution signal	R	T			

Signals	ECM	TCM	ABS actuator and electric unit (control unit)	Smart entrance control unit	Combination meter
ABS operation signal			T		R
OD OFF switch signal		R			T
OD OFF indicator signal		T			R
A/T self-diagnosis signal	R	T			
ABS warning lamp signal			T		R
N range switch signal		R			T
P range switch signal		R			T

DTC P0705 PARK/NEUTRAL POSITION (PNP) SWITCH

PFP:32006

Description

ECS0097B

- The PNP switch assembly includes a transmission range switch.
- The transmission range switch detects the selector lever position and sends a signal to the TCM.

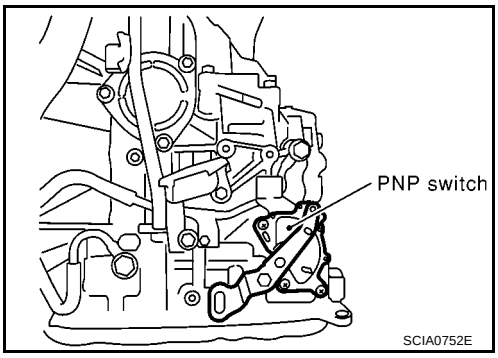

TCM TERMINALS AND REFERENCE VALUE

Remarks: Specification data are reference values.

Terminal No.	Wire color	Item	Condition		Judgement standard (Approx.)
26	BR/Y	PNP switch “1” position	ON and Engine running	When setting selector lever to “1” position.	Battery voltage
				When setting selector lever to other positions.	0V
27	L	PNP switch “2” position		When setting selector lever to “2” position.	Battery voltage
				When setting selector lever to other positions.	0V
34	W/G	PNP switch “D” position		When setting selector lever to “D” position.	Battery voltage
				When setting selector lever to other positions.	0V
35	G/W	PNP switch “R” position		When setting selector lever to “R” position.	Battery voltage
				When setting selector lever to other positions.	0V
36	G	PNP switch “N” or “P” position		When setting selector lever to “N” or “P” position.	Battery voltage
				When setting selector lever to other positions.	0V

ON BOARD DIAGNOSIS LOGIC

Diagnostic trouble code	Malfunction is detected when...	Check items (Possible cause)
: PNP SW/CIRC	TCM does not receive the correct voltage signal from the switch based on the gear position.	● Harness or connectors (The PNP switch circuit is open or shorted.) ● PNP switch
: P0705		

DIAGNOSTIC TROUBLE CODE (DTC) CONFIRMATION PROCEDURE

CAUTION:

Always drive vehicle at a safe speed.

NOTE:

If “DIAGNOSTIC TROUBLE CODE CONFIRMATION PROCEDURE” has been previously conducted, always turn ignition switch “OFF” and wait at least 5 seconds before conducting the next test.

After the repair, perform the following procedure to confirm the malfunction is eliminated.

With CONSULT-II

1. Turn ignition switch “ON”.
2. Select “DATA MONITOR” mode for “ENGINE” with CONSULT-II.
3. Start engine and maintain the following conditions for at least 5 consecutive seconds.
   VHCL SPEED SE: 10 km/h (6 MPH) or more
   THRTL POS SEN: More than 1.3V
   Selector lever: D position (OD “ON” or “OFF”)
4. If DTC is detected, go to AT-116, "Diagnostic Procedure" .

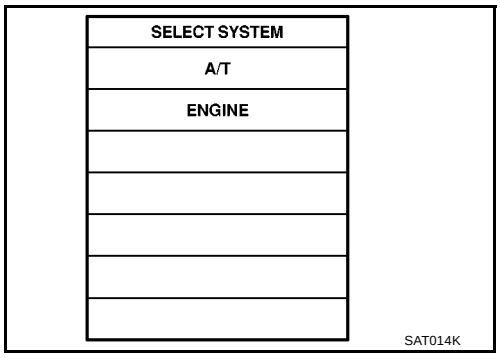

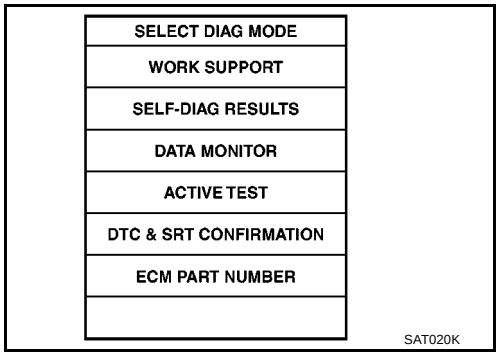

With GST

Follow the procedure “With CONSULT-II”.

Wiring Diagram — AT — PNP/SW

ECS0097C

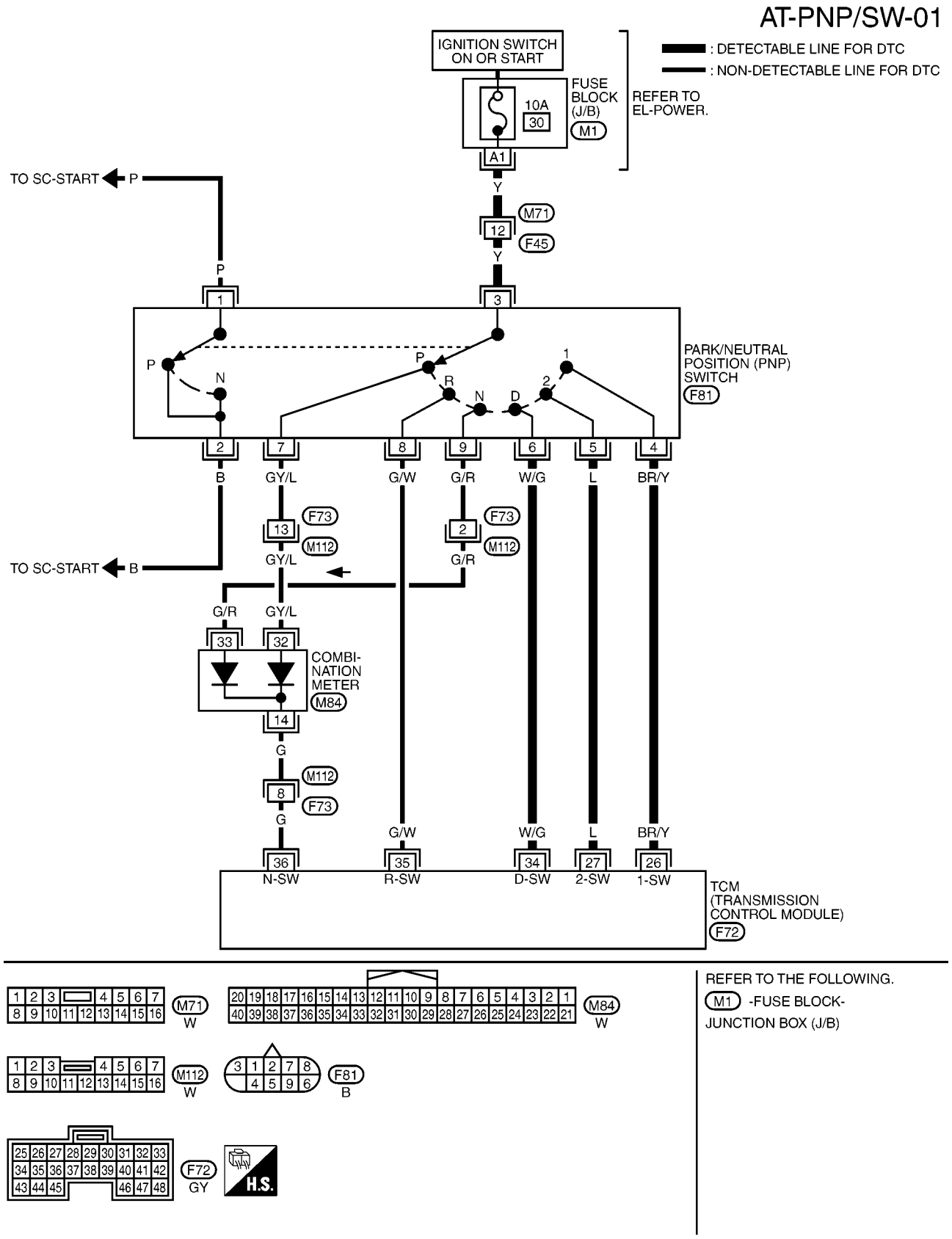

Diagnostic Procedure

ECS0097D

1. INSPECTION START

Do you have CONSULT-II?

Yes or No

Yes >> GO TO 2
No >> GO TO 3

2. CHECK PNP SWITCH CIRCUIT (WITH CONSULT-II)

With CONSULT-II

1. Turn ignition switch to “ON” position.
   (Do not start engine.)
2. Select “TCM INPUT SIGNALS” in “DATA MONITOR” mode for “A/T” with CONSULT-II.
3. Read out “P/N”, “R”, “D”, “2” and “1” position switches moving selector lever to each position.

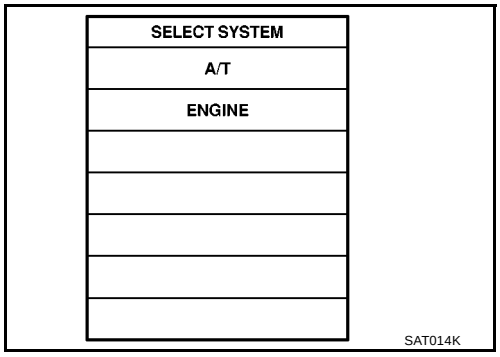

Check the signal of the selector lever position is indicated properly.

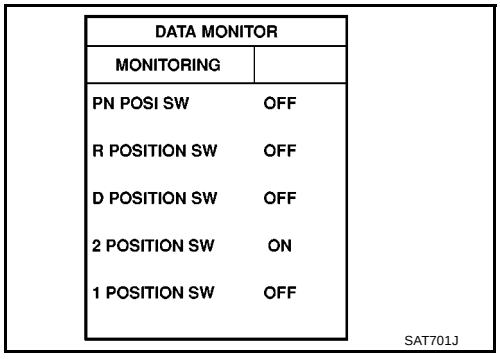

OK or NG

OK >> GO TO 4
NG >> Check the following items:

- PNP switch
  Refer to AT-118, "Component Inspection" .
- Harness for short or open between ignition switch and PNP switch (Main harness)
- Harness for short or open between PNP switch and TCM (Main harness)
- Ignition switch and fuse
  Refer to EL-11, “Power Supply Routing”.
- Diode (P, N positions)

3. CHECK PNP SWITCH CIRCUIT (WITHOUT CONSULT-II)

Without CONSULT-II

1. Turn ignition switch to “ON” position.
   (Do not start engine.)
2. Check voltage between TCM terminals 26, 27, 34, 35, 36 and ground while moving selector lever through each position.

Voltage:

B: Battery voltage

0: 0V

Lever position	Terminal No.				
	36	35	34	27	26
P, N	**B**	0	0	0	0
R	0	**B**	0	0	0
D	0	0	**B**	0	0
2	0	0	0	**B**	0
1	0	0	0	0	**B**

MTBL0136

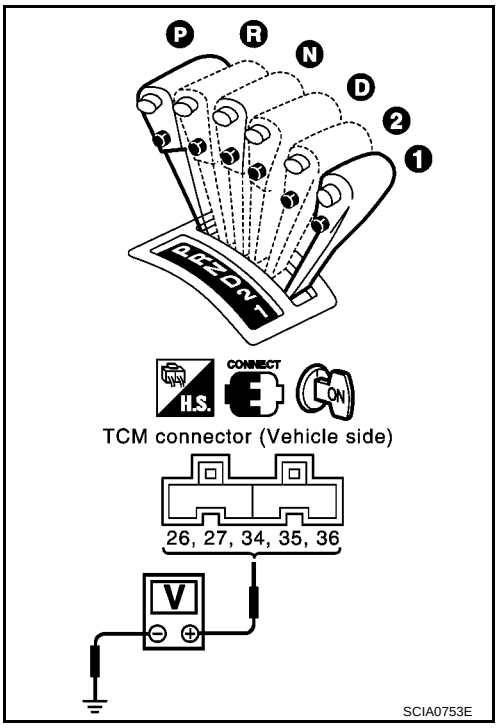

OK or NG

OK >> GO TO 4

NG >> Check the following items:

- PNP switch
  Refer to AT-118, "Component Inspection" .
- Harness for short or open between ignition switch and PNP switch (Main harness)
- Harness for short or open between PNP switch and TCM (Main harness)
- Ignition switch and fuse
  Refer to EL-11, “Power Supply Routing”.
- Diode (P, N positions)

4. CHECK DTC

Perform AT-113, "DIAGNOSTIC TROUBLE CODE (DTC) CONFIRMATION PROCEDURE" .

OK or NG

OK >> **INSPECTION END**

NG >> 1. Perform TCM input/output signal inspection.

2. If NG, recheck TCM pin terminals for damage or loose connection with harness connector.

Component Inspection

ECS0097E

PARK/NEUTRAL POSITION (PNP) SWITCH

1. Check continuity between terminals 1 and 3 and between terminals 2 and 4, 5, 6, 7, 8, 9 while moving manual shaft through each position.

Lever position	Terminal No.	
P	3 — 7	1 — 2
R	3 — 8	
N	3 — 9	1 — 2
D	3 — 6	
2	3 — 5	
1	3 — 4	

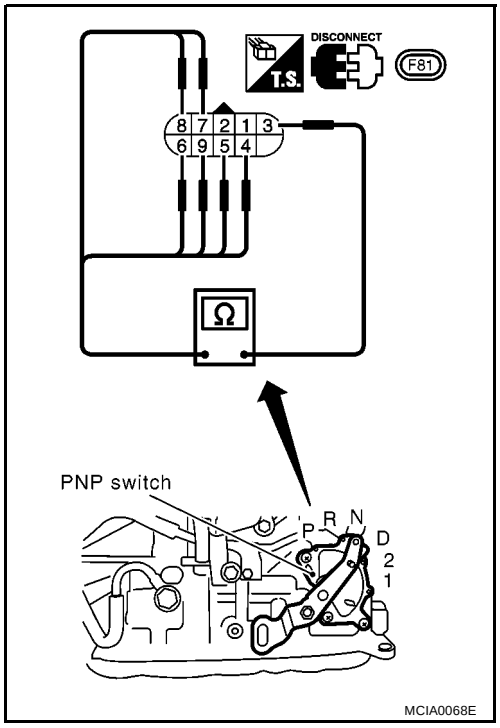

2. If NG, check again with control cable disconnected from manual shaft of A/T assembly. Refer to step 1.
3. If OK on step 2, adjust control cable. Refer to AT-412, "Control Cable Adjustment" .
4. If NG on step 2, remove PNP switch from A/T and check continuity of PNP switch terminals. Refer to step 1.
5. If OK on step 4, adjust PNP switch. Refer to AT-412, "Park/Neutral Position (PNP) Switch Adjustment" .
6. If NG on step 4, replace PNP switch.

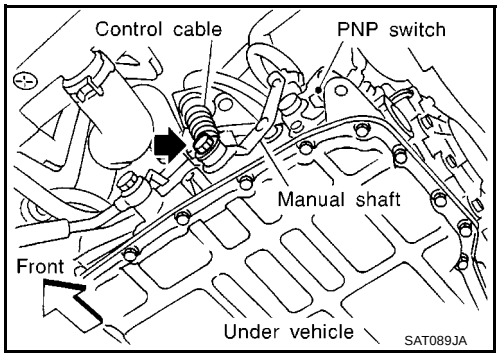

DTC P0710 A/T FLUID TEMPERATURE SENSOR CIRCUIT

PFP:31940

Description

ECS0097F

The A/T fluid temperature sensor detects the A/T fluid temperature and sends a signal to the TCM.

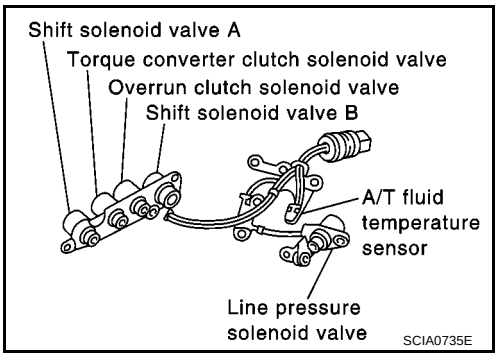

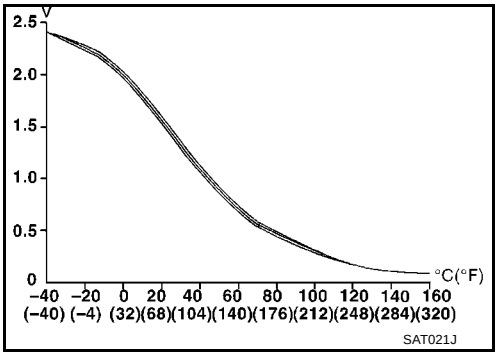

CONSULT-II REFERENCE VALUE IN DATA MONITOR MODE

Remarks: Specification data are reference values.

Monitor item	Condition	Specification (Approximately)	
A/T fluid temperature sensor	Cold [20°C (68°F)] ↓ Hot [80°C (176°F)]	1.5V ↓ 0.5V	2.5 kΩ ↓ 0.3 kΩ

TCM TERMINALS AND REFERENCE VALUE

Remarks: Specification data are reference values.

Terminal No.	Wire color	Item	Condition		Judgement standard (Approx.)
42	B	Sensor ground	—	—	—
47	BR	A/T fluid temperature sensor		When ATF temperature is 20°C (68°F).	1.5V
				When ATF temperature is 80°C (176°F).	0.5V

ON BOARD DIAGNOSIS LOGIC

Diagnostic trouble code	Malfunction is detected when...	Check items (Possible cause)
: ATF TEMP SEN/CIRC : P0710	TCM receives an excessively low or high voltage from the sensor.	● Harness or connectors (The sensor circuit is open or shorted.) ● A/T fluid temperature sensor

DIAGNOSTIC TROUBLE CODE (DTC) CONFIRMATION PROCEDURE

CAUTION:

Always drive vehicle at a safe speed.

NOTE:

If "DIAGNOSTIC TROUBLE CODE CONFIRMATION PROCEDURE" has been previously conducted, always turn ignition switch "OFF" and wait at least 5 seconds before conducting the next test.

After the repair, perform the following procedure to confirm the malfunction is eliminated.

With CONSULT-II

1. Turn ignition switch “ON” and select “DATA MONITOR” mode for “ENGINE” with CONSULT-II.
2. Start engine and maintain the following conditions for at least 10 minutes (Total). (It is not necessary to maintain continuously.)
   CMPS·RPM (REF): 450 rpm or more
   VHCL SPEED SE: 10 km/h (6 MPH) or more
   THRTL POS SEN: More than 1.2V
   Selector lever: D position (OD “ON”)
3. If DTC is detected, go to AT-122, "Diagnostic Procedure" .

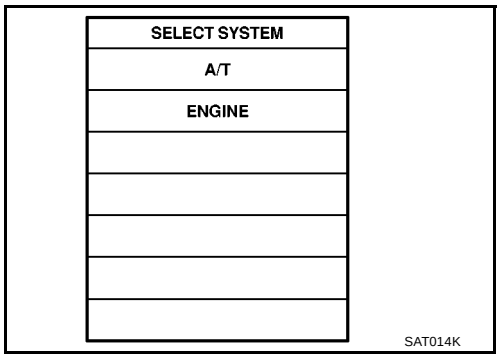

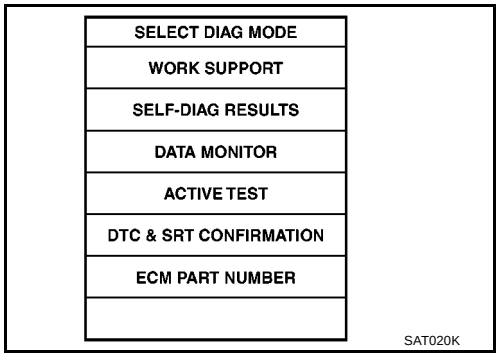

With GST

Follow the procedure “With CONSULT-II”.

Wiring Diagram — AT — FTS

ECS0097G

AT-FTS-01

: DETECTABLE LINE FOR DTC
: NON-DETECTABLE LINE FOR DTC

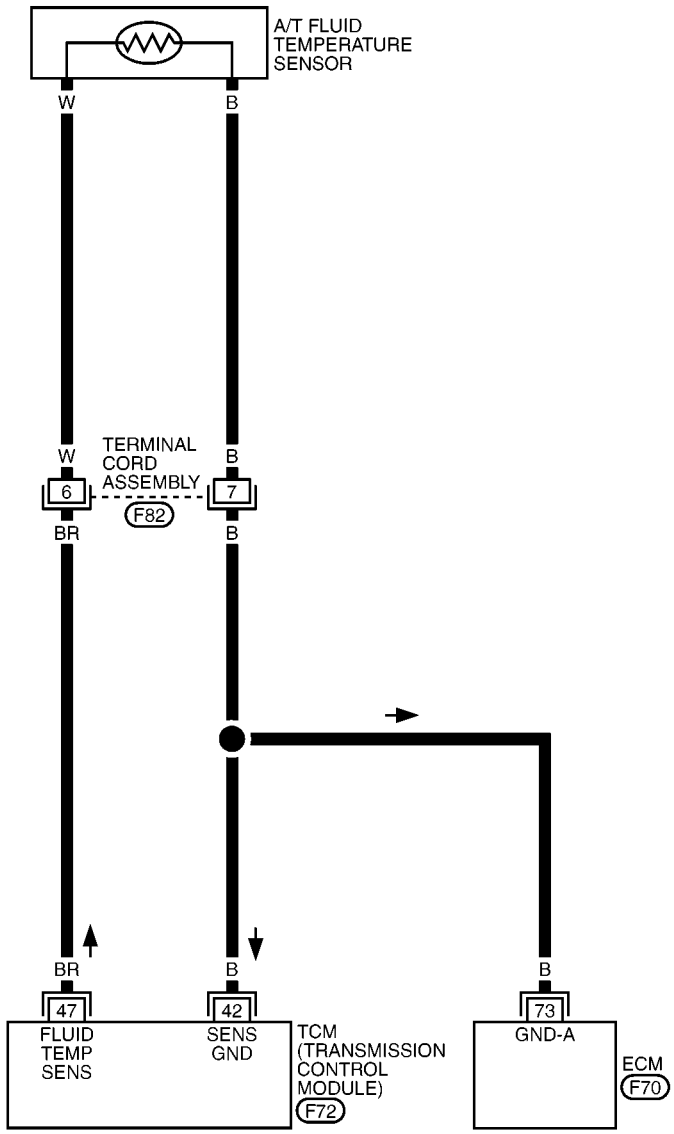

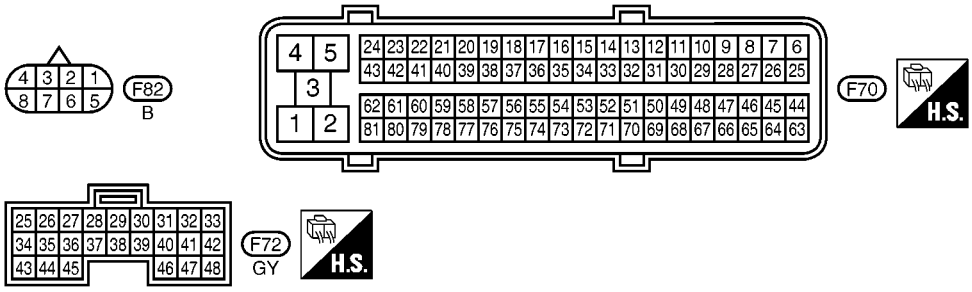

YAT370A

Diagnostic Procedure

ECS0097H

1. INSPECTION START

Do you have CONSULT-II?

Yes or No

Yes >> GO TO 2
No >> GO TO 3

2. CHECK INPUT SIGNAL OF A/T FLUID TEMPERATURE SENSOR (WITH CONSULT-II)

With CONSULT-II

1. Start engine.
2. Select “TCM INPUT SIGNALS” in “DATA MONITOR” mode for “A/T” with CONSULT-II.
3. Read out the value of “FLUID TEMP SE”.

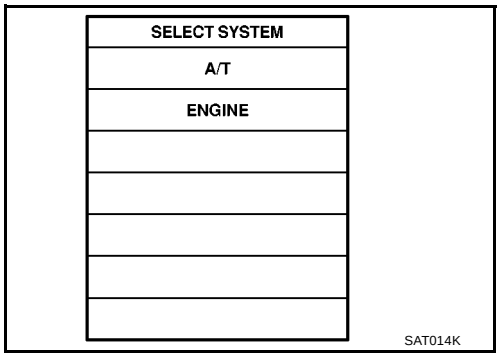

Voltage:

Cold [20°C (68°F)] → Hot [80°C (176°F)]

Approximately 1.5V → 0.5V

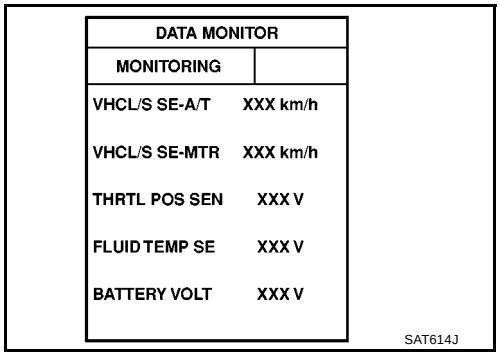

OK or NG

OK >> GO TO 4
NG >> GO TO 5

3. CHECK INPUT SIGNAL OF A/T FLUID TEMPERATURE SENSOR (WITHOUT CONSULT-II)

Without CONSULT-II

1. Start engine.
2. Check voltage between TCM terminal 47 and ground while warming up A/T.

   Voltage:

   Cold [20°C (68°F)] → Hot [80°C (176°F)]

   Approximately 1.5V → 0.5V

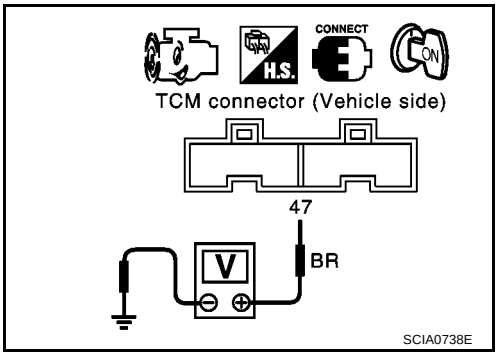

3. Turn ignition switch to “OFF” position.
4. Disconnect TCM harness connector.
5. Check continuity between terminal 42 and ground.

   Continuity should exist.

   If OK, check harness for short to ground and short to power.

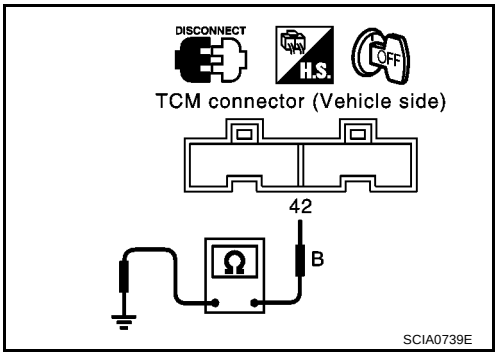

OK or NG

OK >> GO TO 4
NG >> GO TO 5

4. CHECK DTC

Perform Diagnostic Trouble Code (DTC) confirmation procedure, AT-119, "DIAGNOSTIC TROUBLE CODE (DTC) CONFIRMATION PROCEDURE" .

OK or NG

OK >> **INSPECTION END**
NG >> 1. Perform TCM input/output signal inspection.
2. If NG, recheck TCM pin terminals for damage or loose connection with harness connector.

5. CHECK A/T FLUID TEMPERATURE SENSOR WITH TERMINAL CORD ASSEMBLY

1. Turn ignition switch to “OFF” position.
2. Disconnect terminal cord assembly connector in engine compartment.
3. Check resistance between terminals 6 and 7 when A/T is cold.

   Resistance:

   Cold [20°C (68°F)]

   Approximately 2.5 kΩ

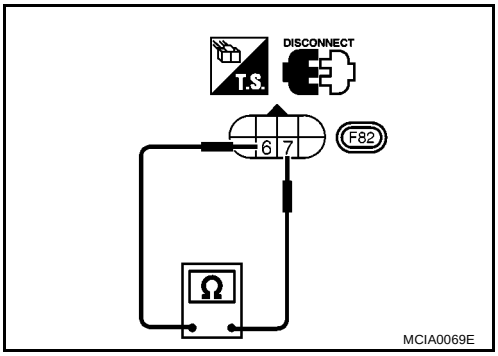

4. Reinstall any part removed.

OK or NG

OK (With CONSULT-II)>>GOTO2
OK (Without CONSULT-II)>>GOTO3
NG >> 1. Remove oil pan.
2. Check the following items:
- A/T fluid temperature sensor
  Refer to AT-124, "Component Inspection" .
- Harness of terminal cord assembly for short or open

Component Inspection

ECS0097I

A/T FLUID TEMPERATURE SENSOR

- For removal, refer to AT-410, "Control Valve Assembly and Accumulators" .
- Check resistance between two terminals while changing temperature as shown at right.

Temperature °C (°F)	Resistance
20 (68)	Approximately 2.5 kΩ
80 (176)	Approximately 0.3 kΩ

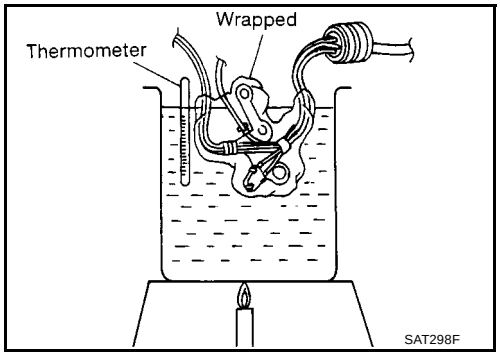

DTC P0720 VEHICLE SPEED SENSOR A/T (REVOLUTION SENSOR)

PFP:32702

Description

ECS0097J

The revolution sensor detects the revolution of the idler gear parking pawl lock gear and emits a pulse signal. The pulse signal is sent to the TCM which converts it into vehicle speed.

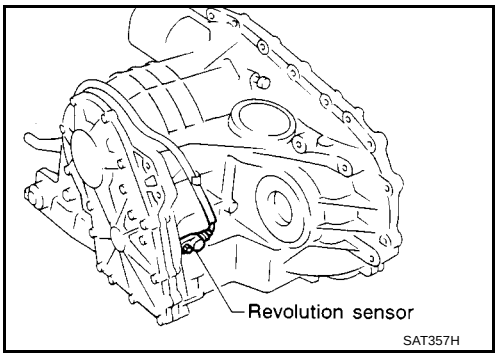

TCM TERMINALS AND REFERENCE VALUE

Remarks: Specification data are reference values.

Terminal No.	Wire color	Item	Condition		Judgement standard (Approx.)
29	W	Revolution sensor		When moving at 20 km/h (12 MPH), use the CONSULT-II pulse frequency measuring function.*1 **CAUTION:** **Connect the diagnosis data link cable to the vehicle diagnosis connector.** *1: A circuit tester cannot be used to test this item.	150 Hz
				When vehicle parks.	Under 1.3V or over 4.5V
42	B	Sensor ground	—	—	—

ON BOARD DIAGNOSIS LOGIC

Diagnostic trouble code	Malfunction is detected when...	Check items (Possible cause)
: VEH SPD SEN/CIR AT	TCM does not receive the proper voltage signal from the sensor.	● Harness or connectors (The sensor circuit is open or shorted.) ● Revolution sensor
: P0720		

DIAGNOSTIC TROUBLE CODE (DTC) CONFIRMATION PROCEDURE

CAUTION:

- **Always drive vehicle at a safe speed.**
- **Be careful not to rev engine into the red zone on the tachometer.**

NOTE:

If "DIAGNOSTIC TROUBLE CODE CONFIRMATION PROCEDURE" has been previously conducted, always turn ignition switch "OFF" and wait at least 5 seconds before conducting the next test.

After the repair, perform the following procedure to confirm the malfunction is eliminated.

With CONSULT-II

1. Turn ignition switch "ON" and select "DATA MONITOR" mode for "A/T" with CONSULT-II.

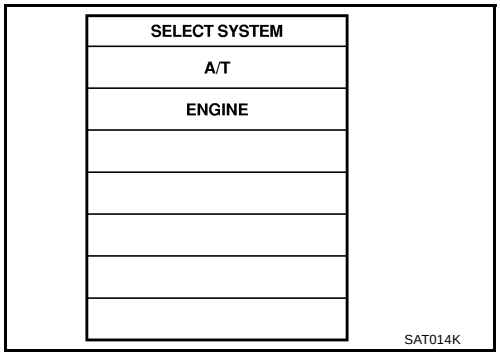

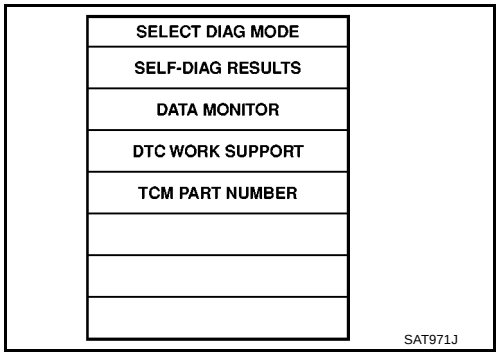

2. Drive vehicle and check for an increase of "VHCL/S SE·MTR" value increase.
   If the check result is NG, go to AT-129, "Diagnostic Procedure" .
   If the check result is OK, go to following step.
3. Select "DATA MONITOR" mode for "ENGINE" with CONSULT-II.

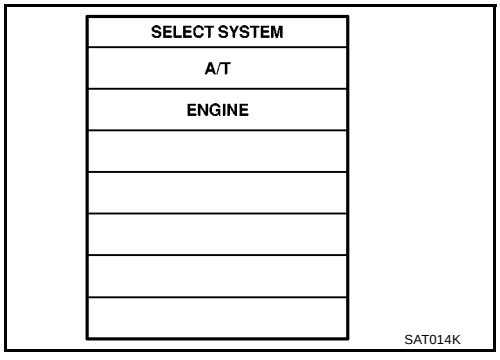

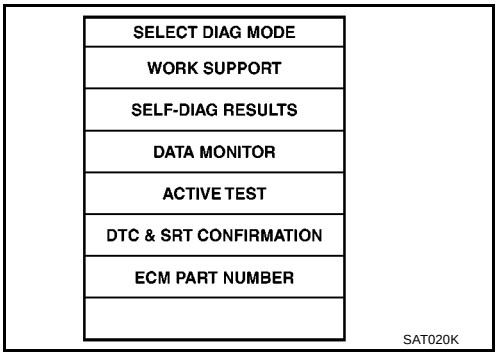

4. Start engine and maintain the following conditions for at least 5 consecutive seconds.
   VHCL SPEED SE: 30 km/h (19 MPH) or more
   THRTL POS SEN: More than 1.2V
   Selector lever: D position (OD “ON”)
   Driving location: Driving the vehicle uphill (increased engine load) will help maintain the driving conditions required for this test.
   If the check result is NG, go to AT-129, "Diagnostic Procedure" .
   If the check result is OK, go to following step.
5. Maintain the following conditions for at least 5 consecutive seconds.
   CMPS·RPM (REF): 3,500 rpm or more
   THRTL POS SEN: More than 1.2V
   Selector lever: D position (OD “ON”)
   Driving location: Driving the vehicle uphill (increased engine load) will help maintain the driving conditions required for this test.

With GST

Follow the procedure “With CONSULT-II”.

Wiring Diagram — AT — VSSA/T

ECS0097K

AT-VSSAT-01

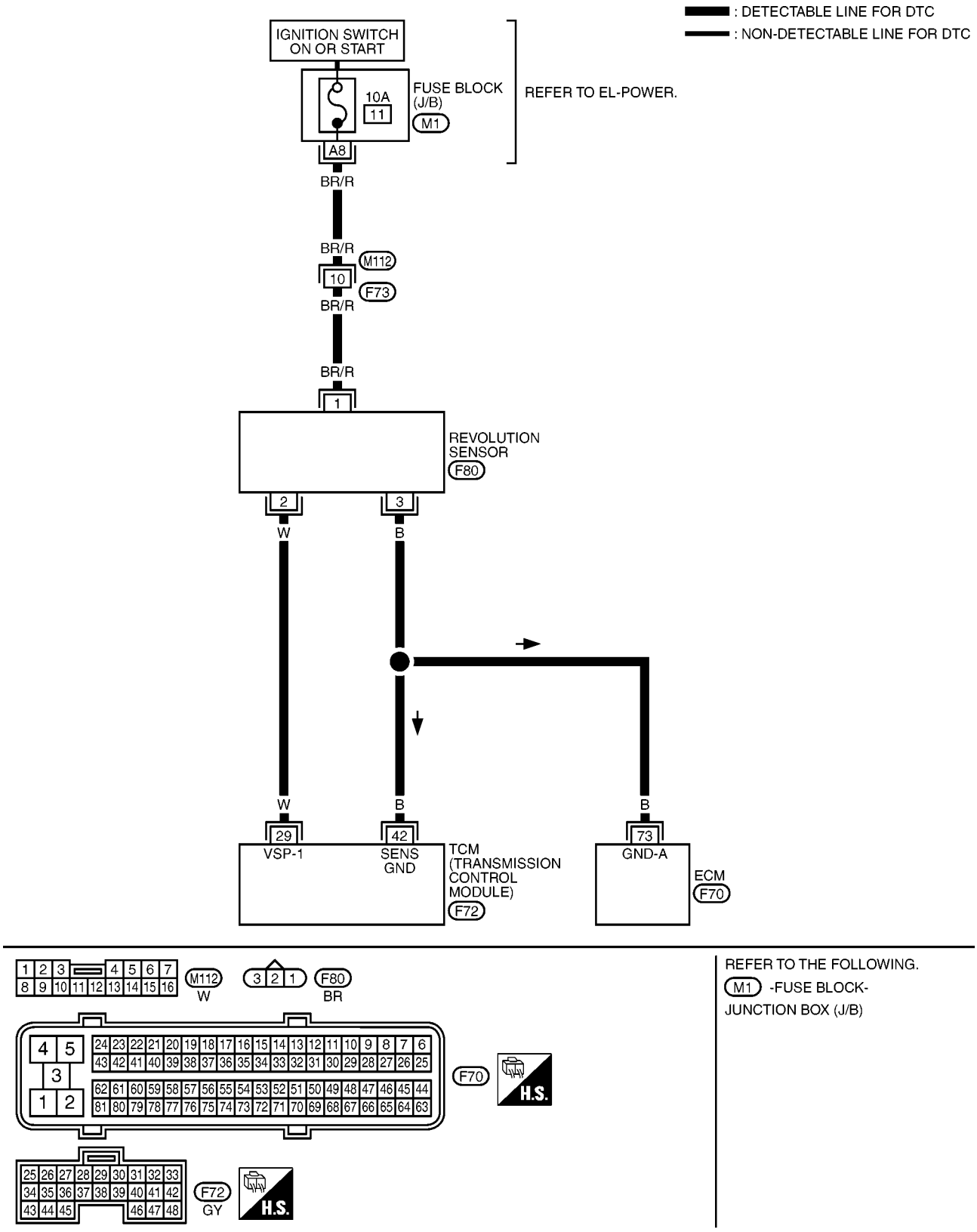

Diagnostic Procedure

ECS0097L

1. CHECK INPUT SIGNAL (WITH CONSULT-II)

With CONSULT-II

1. Start engine.
2. Select “TCM INPUT SIGNALS” in “DATA MONITOR” mode for “A/T” with CONSULT-II.
3. Read out the value of “VHCL/S SE·A/T” while driving.

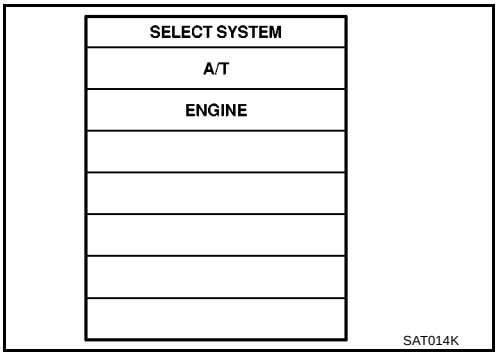

Check the value changes according to driving speed.

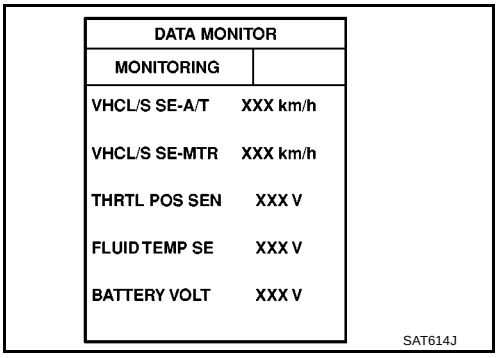

OK or NG

OK >> GO TO 3
NG >> GO TO 2

2. CHECK REVOLUTION SENSOR (WITH CONSULT-II)

With CONSULT-II

1. Start engine.

Condition	Judgement standard (Approx.)
When moving at 20 km/h (12 MPH), use the CONSULT-II pulse frequency measuring function. *1 **CAUTION:** **Connect the diagnosis data link cable to the vehicle diagnosis connector.** *1: A circuit tester cannot be used to test this item.	Approximately 150 Hz
When vehicle parks.	Under 1.3V or 4.5V

MTBL0581

– Harness for short or open between TCM, ECM and revolution sensor (Main harness)

OK or NG

OK >> GO TO 3
NG >> Repair or replace damaged parts.

3. CHECK DTC

Perform AT-126, "DIAGNOSTIC TROUBLE CODE (DTC) CONFIRMATION PROCEDURE" .

OK or NG

OK >> **INSPECTION END**
NG >> GO TO 4

4. CHECK TCM INSPECTION

1. Perform TCM input/output signal inspection.
2. If NG, recheck TCM pin terminals for damage or loose connection with harness connector.

OK or NG

OK >> **INSPECTION END**
NG >> Repair or replace damaged parts.

DTC P0725 ENGINE SPEED SIGNAL

PFP:24825

Description

ECS0097M

The engine speed signal is sent from the ECM to the TCM.

TCM TERMINALS AND REFERENCE VALUE

Remarks: Specification data are reference values.

Terminal No.	Wire color	Item	Condition		Judgement standard (Approx.)
39	L/OR	Engine speed signal	and 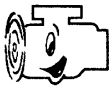	Refer to EC-102, "ECM INSPECTION TABLE" .	—

ON BOARD DIAGNOSIS LOGIC

Diagnostic trouble code	Malfunction is detected when...	Check item (Possible cause)
: ENGINE SPEED SIG : P0725	TCM does not receive the proper voltage signal from ECM.	● Harness or connectors (The sensor circuit is open or shorted.)

DIAGNOSTIC TROUBLE CODE (DTC) CONFIRMATION PROCEDURE

CAUTION:

Always drive vehicle at a safe speed.

NOTE:

If "DIAGNOSTIC TROUBLE CODE CONFIRMATION PROCEDURE" has been previously conducted, always turn ignition switch "OFF" and wait at least 5 seconds before conducting the next test.

After the repair, perform the following procedure to confirm the malfunction is eliminated.

With CONSULT-II

1. Turn ignition switch "ON" and select "DATA MONITOR" mode for "ENGINE" with CONSULT-II.
2. Start engine and maintain the following conditions for at least 10 consecutive seconds.
   VHCL SPEED SE: 10 km/h (6 MPH) or more
   THRTL POS SEN: More than 1.2V
   Selector lever: D position (OD "ON")
3. If DTC is detected, go to AT-133, "Diagnostic Procedure" .

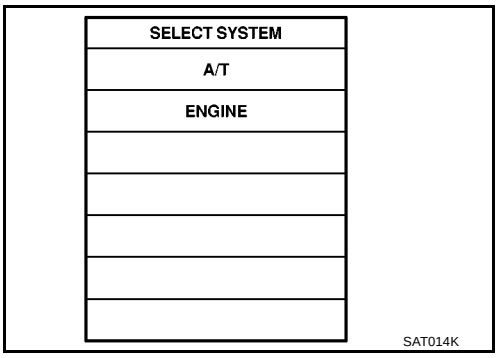

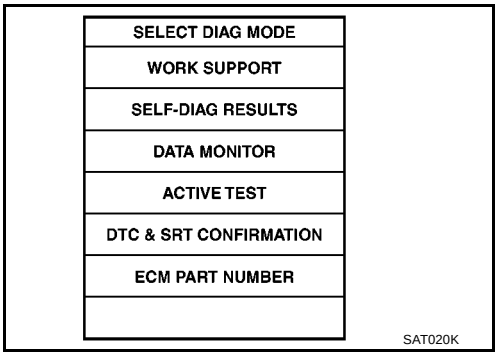

With GST

Follow the procedure "With CONSULT-II".

Wiring Diagram — AT — ENGSS

ECS0097N

AT-ENGSS-01

: DETECTABLE LINE FOR DTC

: NON-DETECTABLE LINE FOR DTC

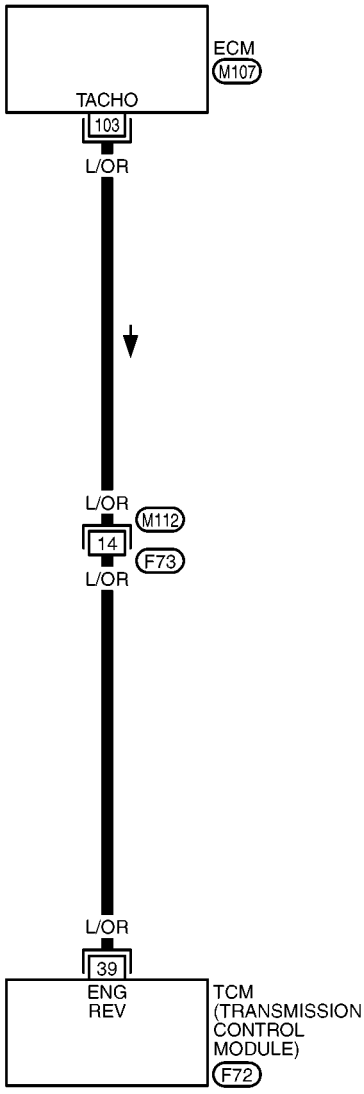

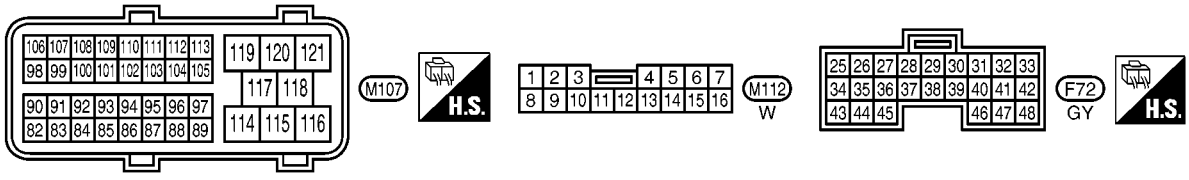

YAT372A

Diagnostic Procedure

ECS0097O

1. CHECK DTC WITH ECM

Perform “Overall function check” for ignition signal. Refer to EC-518, "Diagnostic Procedure" .

OK or NG

OK (With CONSULT-II)>>GO TO 2
OK (Without CONSULT-II)>>GO TO 3
NG >> Follow the construction of EC-518, "Diagnostic Procedure" .

2. CHECK INPUT SIGNAL (WITH CONSULT-II)

With CONSULT-II

1. Start engine.
2. Select “TCM INPUT SIGNALS” in “DATA MONITOR” mode for “A/T” with CONSULT-II.

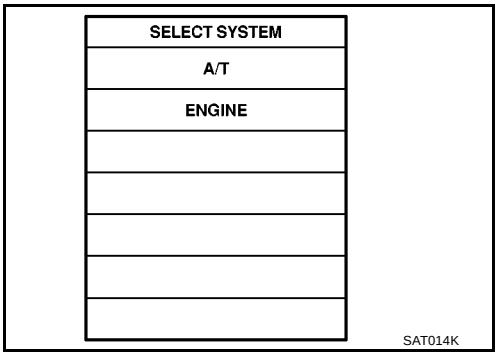

3. Read out the value of “ENGINE SPEED”.
   Check engine speed changes according to throttle position.

OK or NG

OK >> GO TO 4
NG >> Check the following items:
- Harness for short or open between TCM and ECM
- Resistor and ignition coil Refer to EC-514, "IGNITION SIGNAL" .

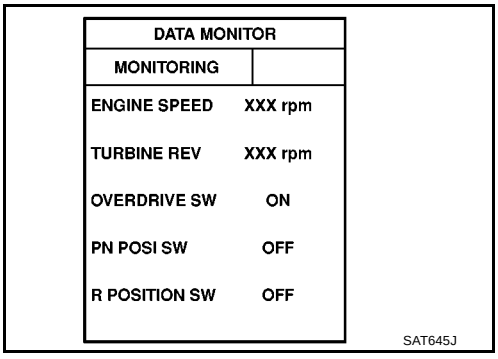

3. CHECK INPUT SIGNAL (WITHOUT CONSULT-II)

Without CONSULT-II

1. Start engine.
2. Check voltage between TCM terminal 39 and ground.

Voltage (Idle speed): Refer to EC-87, "Basic Inspection" .

OK or NG

OK >> GO TO 4
NG >> Check the following items:
- Harness for short or open between TCM and ECM
- Resistor and ignition coil EC-514, "IGNITION SIGNAL" .

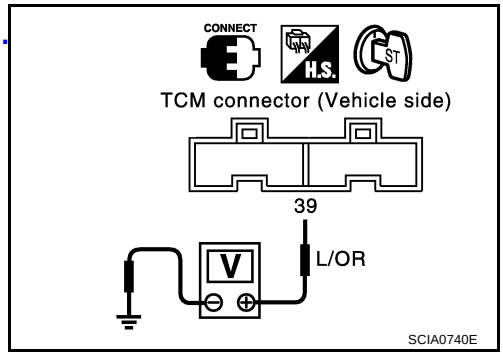

4. CHECK DTC

Perform AT-131, "DIAGNOSTIC TROUBLE CODE (DTC) CONFIRMATION PROCEDURE" .

OK or NG

OK >> **INSPECTION END**

NG >> 1. Perform TCM input/output signal inspection.

2. If NG, recheck TCM pin terminals for damage or loose connection with harness connector.

DTC P0731 A/T 1ST GEAR FUNCTION

PFP:31940

Description

ECS0097P

- This is an OBD-II self-diagnostic item and not available in TCM self-diagnosis.
- This malfunction will not be detected while the O/D OFF indicator lamp is indicating another self-diagnosis malfunction.
- This malfunction is detected when the A/T does not shift into first gear position as instructed by the TCM. This is not caused by electrical malfunction (circuits open or shorted) but by mechanical malfunction such as control valve sticking, improper solenoid valve operation, etc.

Gear position	1	2	3	4
Shift solenoid valve A	ON (Closed)	OFF (Open)	OFF (Open)	ON (Closed)
Shift solenoid valve B	ON (Closed)	ON (Closed)	OFF (Open)	OFF (Open)

TCM TERMINALS AND REFERENCE VALUE

Remarks: Specification data are reference values.

Terminal No.	Wire color	Item	Condition		Judgement standard (Approx.)
11	L/W	Shift solenoid valve A		When shift solenoid valve A operates. (When driving in “D1 ” or “D4 ”.)	Battery voltage
				When shift solenoid valve A does not operate. (When driving in “D2 ” or “D3 ”.)	0V
12	L/Y	Shift solenoid valve B		When shift solenoid valve B operates. (When driving in “D1 ” or “D2 ”.)	Battery voltage
				When shift solenoid valve B does not operate. (When driving in “D3 ” or “D4 ”.)	0V

ON BOARD DIAGNOSTIC LOGIC

This diagnosis monitors actual gear position by checking the torque converter slip ratio calculated by TCM as follows:
Torque converter slip ratio = A x C/B
A: Output shaft revolution signal from revolution sensor
B: Engine speed signal from ECM
C: Gear ratio determined as gear position which TCM supposes
If the actual gear position is higher than the position (1st) supposed by TCM, the slip ratio will be more than normal. In case the ratio exceeds the specified value, TCM judges this diagnosis malfunction.
This malfunction will be caused when either shift solenoid valve A is stuck open or shift solenoid valve B is stuck open.

Gear position supposed by TCM	1	2	3	4
In case of gear position with no malfunctions	1	2	3	4
In case of gear position with shift solenoid valve A stuck open	2*	2	3	3
In case of gear position with shift solenoid valve B stuck open	4*	3	3	4

*: P0731 is detected.

Diagnostic trouble code	Malfunction is detected when...	Check items (Possible cause)
: A/T 1ST GR FNCTN : P0731	A/T cannot be shifted to the 1st gear position even if electrical circuit is good.	● Shift solenoid valve A ● Shift solenoid valve B ● Each clutch ● Hydraulic control circuit

DIAGNOSTIC TROUBLE CODE (DTC) CONFIRMATION PROCEDURE

CAUTION:

- **Always drive vehicle at a safe speed.**
- **Be careful not to rev engine into the red zone on the tachometer.**

NOTE:
If "DIAGNOSTIC TROUBLE CODE CONFIRMATION PROCEDURE" has been previously conducted, always turn ignition switch "OFF" and wait at least 5 seconds before conducting the next test.

TESTING CONDITION:
Always drive vehicle on a level road to improve the accuracy of test.
After the repair, perform the following procedure to confirm the malfunction is eliminated.

With CONSULT-II

1. Start engine and select "DATA MONITOR" mode for "A/T" with CONSULT-II.

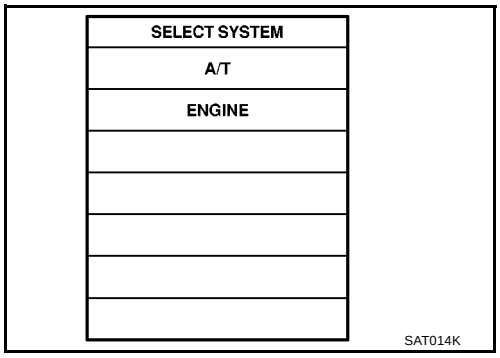

2. Make sure that output voltage of A/T fluid temperature sensor is within the range below.
   FLUID TEMP SEN: 0.4 - 1.5V

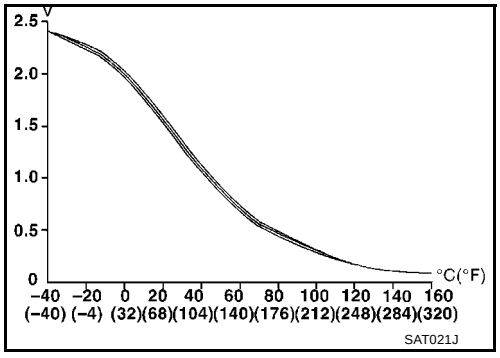

   If out of range, drive the vehicle to decrease the voltage (warm up the fluid) or stop engine to increase the voltage (cool down the fluid).

3. Select "1ST GR FNCTN P0731" of "DTC WORK SUPPORT" mode for "A/T" with CONSULT-II and touch "START".

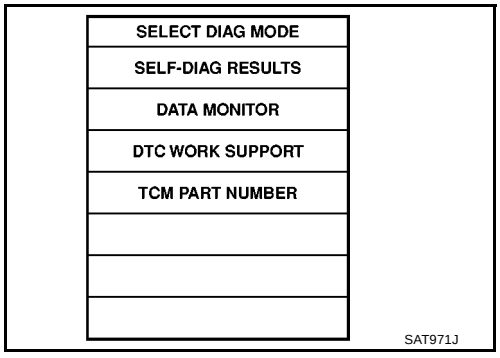

4. Accelerate vehicle to 15 to 20 km/h (9 to 12 MPH) under the following condition and release the accelerator pedal completely.
   THROTTLE POSI: Less than 1.0/8 (at all times during step 4)
   Selector lever: D position (OD "ON")

- **Check that "GEAR" shows "2" after releasing pedal.**

5. Depress accelerator pedal to WOT (more than 7.0/8 of "THROTTLE POSI") quickly from a speed of 15 to 20 km/h (9 to 12 MPH) until "TESTING" changes to "STOP VEHICLE" or "COMPLETED". (It will take approximately 3 seconds.)
   If the check result NG appears on CONSULT-II screen, go to AT-139, "Diagnostic Procedure" .
   If "STOP VEHICLE" appears on CONSULT-II screen, go to the following step.

- **Check that "GEAR" shows "1" when depressing accelerator pedal to WOT.**

- **If "TESTING" does not appear on CONSULT-II for a long time, select "SELF-DIAGNOSIS" for "ENGINE". In case a 1st trip DTC other than P0731 is shown, refer to applicable "TROUBLE DIAGNOSIS FOR DTC".**

6. Stop vehicle.
7. Follow the instruction displayed. (Check for normal shifting referring to the table below.)

Vehicle condition	Gear on actual transmission shift pattern when screen is changed to 1 → 2 → 3 → 4
No malfunction exists	1 → 2 → 3 → 4
Malfunction for P0731 exists.	2 → 2 → 3 → 3
	4 → 3 → 3 → 4

8. Make sure that "OK" is displayed. (If "NG" is displayed, refer to AT-139, "Diagnostic Procedure" .)
   Refer to AT-519, "Shift Schedule" .

With GST

Follow the procedure "With CONSULT-II".

Wiring Diagram — AT — 1ST

ECS0097Q

AT-1STSIG-01

: DETECTABLE LINE FOR DTC
: NON-DETECTABLE LINE FOR DTC

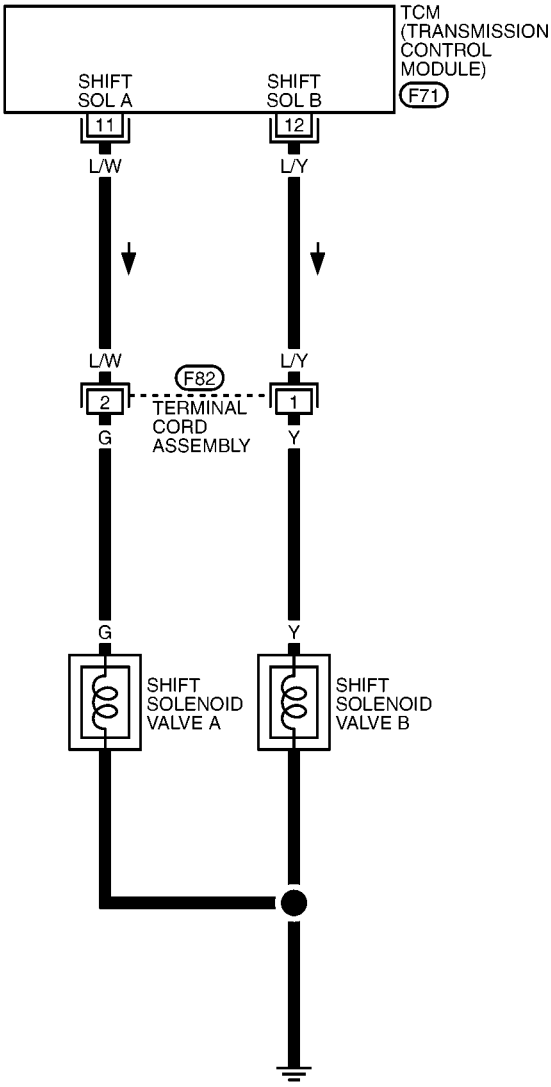

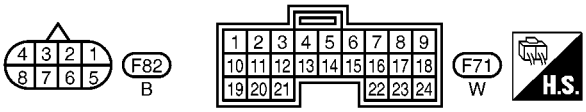

YAT373A

Diagnostic Procedure

ECS0097R

1. CHECK SHIFT SOLENOID VALVE

1. Remove control valve assembly. Refer to AT-410, "Control Valve Assembly and Accumulators"
2. Check shift solenoid valve operation.

- Shift solenoid valve A
- Shift solenoid valve B

Refer to AT-140, "Component Inspection" .

OK or NG

OK >> GO TO 2
NG >> Repair or replace shift solenoid valve assembly.

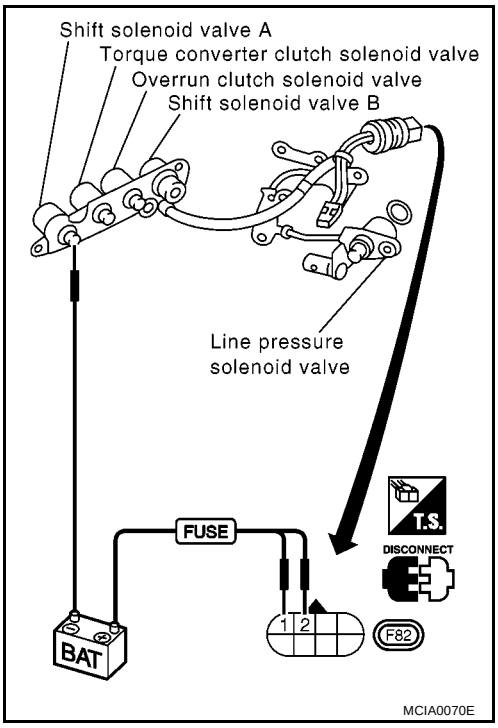

2. CHECK CONTROL VALVE

1. Disassemble control valve assembly. Refer to AT-443, "Control Valve Assembly" .
2. Check to ensure that:

- Valve, sleeve and plug slide along valve bore under their own weight.
- Valve, sleeve and plug are free from burrs, dents and scratches.
- Control valve springs are free from damage, deformation and fatigue.
- Hydraulic line is free from obstacles.

OK or NG

OK >> GO TO 3
NG >> Repair control valve assembly.

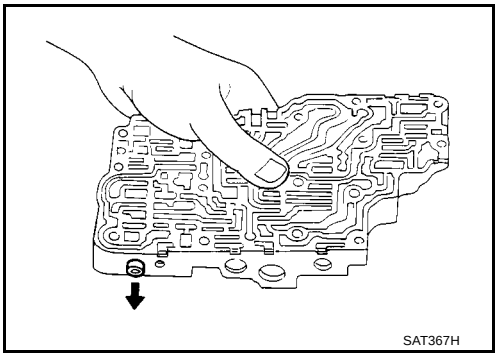

3. CHECK DTC

Perform AT-136, "DIAGNOSTIC TROUBLE CODE (DTC) CONFIRMATION PROCEDURE" .

OK or NG

OK >> **INSPECTION END**
NG >> Check control valve again. Repair or replace control valve assembly.

Component Inspection

ECS0097S

SHIFT SOLENOID VALVE A AND B

- For removal, refer to AT-410, "Control Valve Assembly and Accumulators" .

Resistance Check

- Check resistance between two terminals.

Solenoid valve	Terminal No.		Resistance (Approx.)
Shift solenoid valve A	2	Ground	20 - 30Ω
Shift solenoid valve B	1		5 - 20Ω

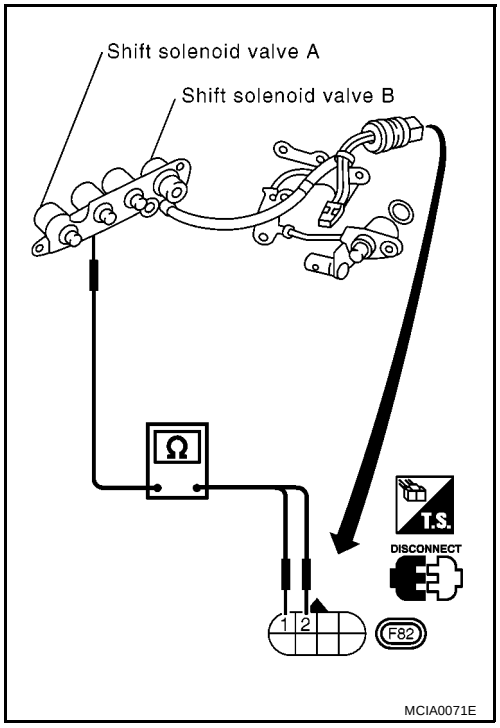

Operation Check

- Check solenoid valve by listening for its operating sound while applying battery voltage to the terminal and ground.

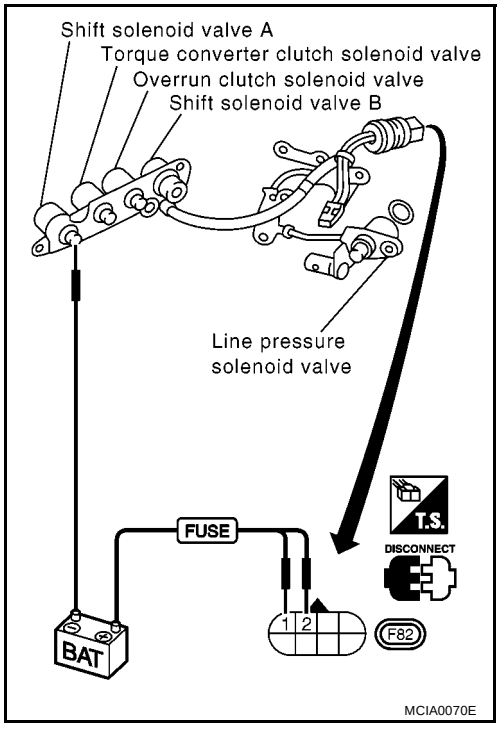

DTC P0732 A/T 2ND GEAR FUNCTION

PFP:31940

Description

ECS0097T

- This is an OBD-II self-diagnostic item and not available in TCM self-diagnosis.
- This malfunction will not be detected while the O/D OFF indicator lamp is indicating another self-diagnosis malfunction.
- This malfunction is detected when the A/T does not shift into second gear position as instructed by the TCM. This is not caused by electrical malfunction (circuits open or shorted) but by mechanical malfunction such as control valve sticking, improper solenoid valve operation, etc.

Gear position	1	2	3	4
Shift solenoid valve A	ON (Closed)	OFF (Open)	OFF (Open)	ON (Closed)
Shift solenoid valve B	ON (Closed)	ON (Closed)	OFF (Open)	OFF (Open)

TCM TERMINALS AND REFERENCE VALUE

Remarks: Specification data are reference values.

Terminal No.	Wire color	Item	Condition		Judgement standard (Approx.)
12	L/Y	Shift solenoid valve B		When shift solenoid valve B operates. (When driving in “D1 ” or “D2 ”.)	Battery voltage
				When shift solenoid valve B does not operate. (When driving in “D3 ” or “D4 ”.)	0V

ON BOARD DIAGNOSTIC LOGIC

This diagnosis monitors actual gear position by checking the torque converter slip ratio calculated by TCM as follows:
Torque converter slip ratio = A x C/B
A: Output shaft revolution signal from revolution sensor
B: Engine speed signal from ECM
C: Gear ratio determined as gear position which TCM supposes
If the actual gear position is higher than the position (2nd) supposed by TCM, the slip ratio will be more than normal. In case the ratio exceeds the specified value, TCM judges this diagnosis malfunction.
This malfunction will be caused when shift solenoid valve B is stuck open.

Gear position supposed by TCM	1	2	3	4
In case of gear position with no malfunctions	1	2	3	4
In case of gear position with shift solenoid valve B stuck open	4	3*	3	4

*: P0732 is detected.

Diagnostic trouble code	Malfunction is detected when...	Check items (Possible cause)
: A/T 2ND GR FNCTN	A/T cannot be shifted to the 2nd gear position even if electrical circuit is good.	● Shift solenoid valve B ● Each clutch ● Hydraulic control circuit
: P0732		

DIAGNOSTIC TROUBLE CODE (DTC) CONFIRMATION PROCEDURE

CAUTION:
- **Always drive vehicle at a safe speed.**
- **Be careful not to rev engine into the red zone on the tachometer.**

NOTE:
If "DIAGNOSTIC TROUBLE CODE CONFIRMATION PROCEDURE" has been previously conducted, always turn ignition switch "OFF" and wait at least 5 seconds before conducting the next test.
TESTING CONDITION:
Always drive vehicle on a level road to improve the accuracy of test.
After the repair, perform the following procedure to confirm the malfunction is eliminated.

With CONSULT-II

1. Start engine and select "DATA MONITOR" mode for "A/T" with CONSULT-II.

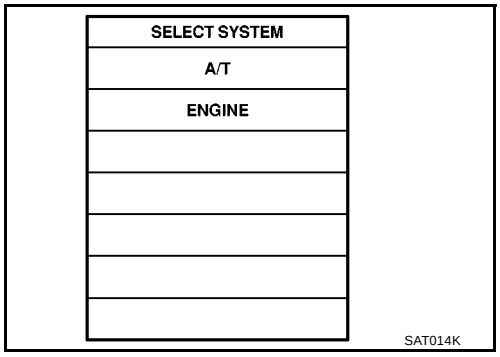

2. Make sure that output voltage of A/T fluid temperature sensor is within the range below.
   FLUID TEMP SEN: 0.4 - 1.5V

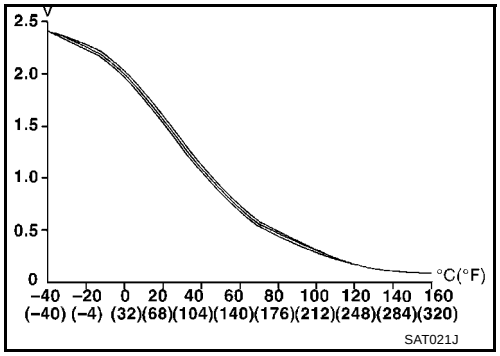

   If out of range, drive the vehicle to decrease the voltage (warm up the fluid) or stop engine to increase the voltage (cool down the fluid).

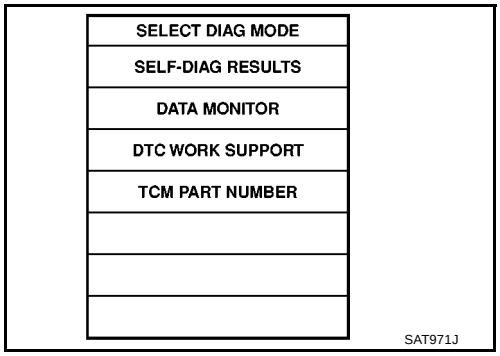

3. Select "2ND GR FNCTN P0732" of "DTC WORK SUPPORT" mode for "A/T" with CONSULT-II and touch "START".
4. Accelerate vehicle to 35 to 40 km/h (22 to 25 MPH) under the following condition and release the accelerator pedal completely.
   THROTTLE POSI: Less than 1.0/8 (at all times during step 4)
   Selector lever: D position (OD "ON")
- **Check that "GEAR" shows "3" or "4" after releasing pedal.**
5. Depress accelerator pedal to WOT (more than 7.0/8 of "THROTTLE POSI") quickly from a speed of 35 to 40 km/h (22 to 25 MPH) until "TESTING" changes to "STOP VEHICLE" or "COMPLETED". (It will take approximately 3 seconds.)
   If the check result NG appears on CONSULT-II screen, go to AT-145, "Diagnostic Procedure" .
   If "STOP VEHICLE" appears on CONSULT-II screen, go to following step.
- **Check that "GEAR" shows "2" when depressing accelerator pedal to WOT.**
- **If "TESTING" does not appear on CONSULT-II for a long time, select "SELF-DIAGNOSIS" for "ENGINE". In case a 1st trip DTC other than P0732 is shown, refer to applicable "TROUBLE DIAGNOSIS FOR DTC".**

6. Stop vehicle.
7. Follow the instruction displayed. (Check for normal shifting referring to the table below.)

Vehicle condition	Gear on actual transmission shift pattern when screen is changed to 1 → 2 → 3 → 4
No malfunction exists	1 → 2 → 3 → 4
Malfunction for P0732 exists.	4 → 3 → 3 → 4

8. Make sure that “OK” is displayed. (If “NG” is displayed, go to AT-145, "Diagnostic Procedure" .)
   Refer to AT-519, "Shift Schedule" .

With GST

Follow the procedure “With CONSULT-II”.

Wiring Diagram — AT — 2ND

ECS0097U

AT-2NDSIG-01

: DETECTABLE LINE FOR DTC
: NON-DETECTABLE LINE FOR DTC

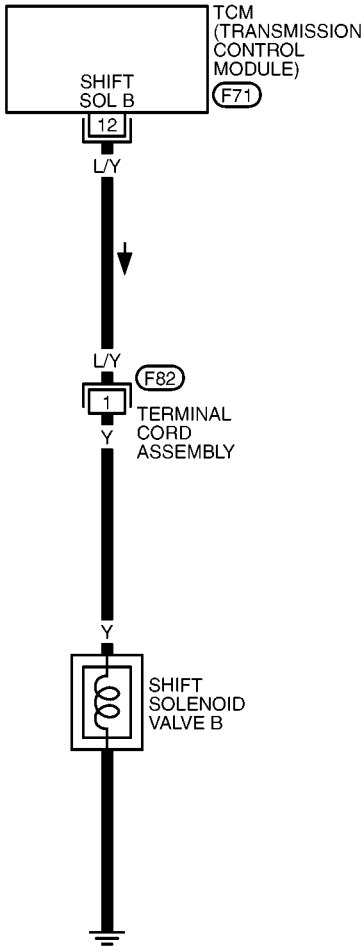

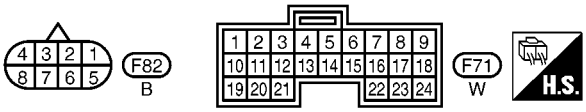

YAT374A

Diagnostic Procedure

ECS0097V

1. CHECK SHIFT SOLENOID VALVE

1. Remove control valve assembly. Refer to AT-410, "Control Valve Assembly and Accumulators" .
2. Check shift solenoid valve operation.

- Shift solenoid valve B

Refer to AT-146, "Component Inspection" .

OK or NG

OK >> GO TO 2
NG >> Repair or replace shift solenoid valve assembly.

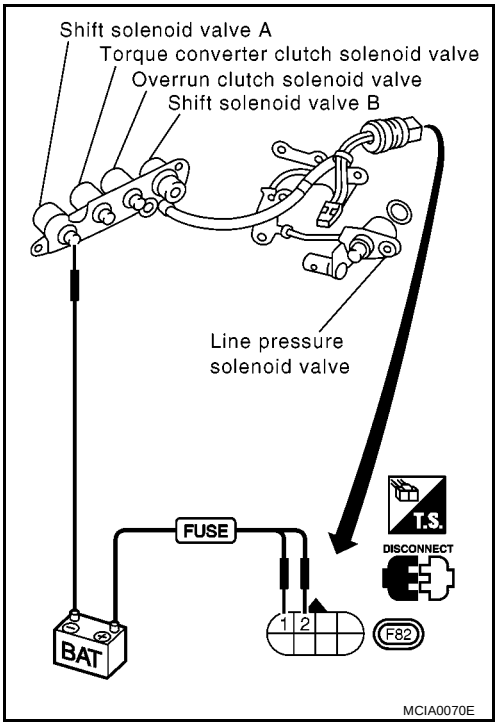

2. CHECK CONTROL VALVE

1. Disassemble control valve assembly. Refer to AT-443, "Control Valve Assembly" .
2. Check to ensure that:

- Valve, sleeve and plug slide along valve bore under their own weight.
- Valve, sleeve and plug are free from burrs, dents and scratches.
- Control valve springs are free from damage, deformation and fatigue.
- Hydraulic line is free from obstacles.

OK or NG

OK >> GO TO 3
NG >> Repair control valve assembly.

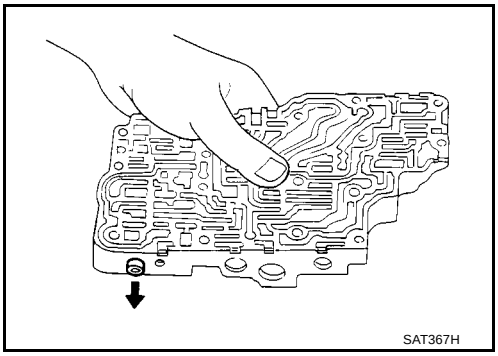

3. CHECK DTC

Perform AT-142, "DIAGNOSTIC TROUBLE CODE (DTC) CONFIRMATION PROCEDURE" .

OK or NG

OK >> **INSPECTION END**
NG >> Check control valve again. Repair or replace control valve assembly.

Component Inspection

ECS0097W

SHIFT SOLENOID VALVE B

- For removal, refer to AT-410, "Control Valve Assembly and Accumulators" .

Resistance Check

- Check resistance between two terminals.

Solenoid valve	Terminal No.		Resistance (Approx.)
Shift solenoid valve B	1	Ground	5 - 20Ω

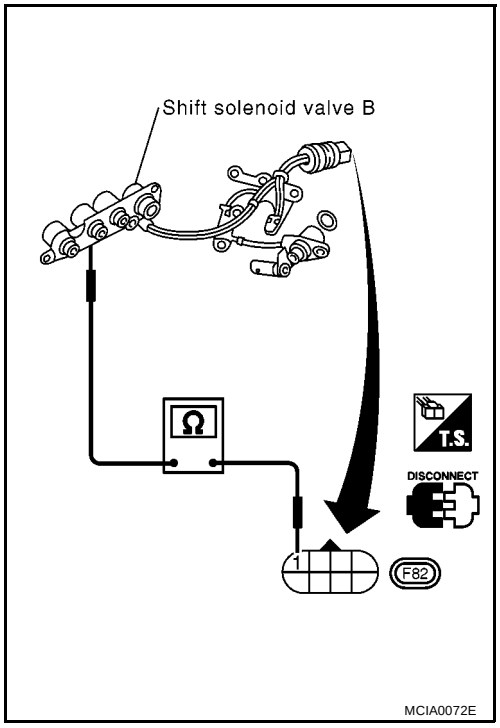

Operation Check

- Check solenoid valve by listening for its operating sound while applying battery voltage to the terminal and ground.

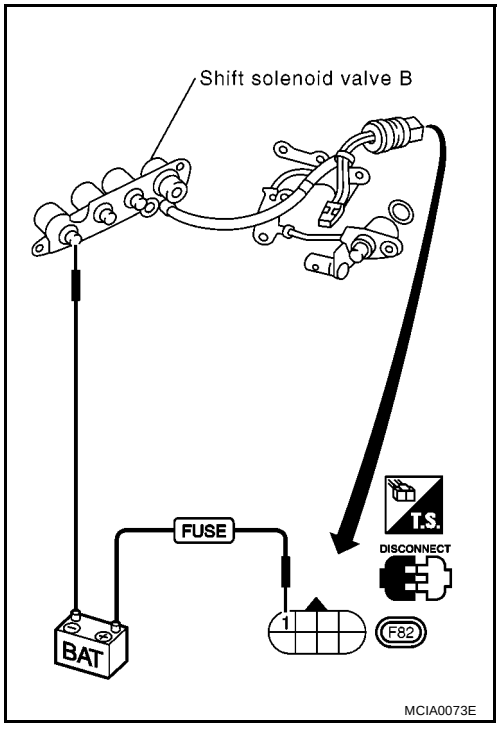

DTC P0733 A/T 3RD GEAR FUNCTION

PFP:31940

Description

ECS0097X

- This is an OBD-II self-diagnostic item and not available in TCM self-diagnosis.
- This malfunction will not be detected while the O/D OFF indicator lamp is indicating another self-diagnosis malfunction.
- This malfunction is detected when the A/T does not shift into third gear position as instructed by the TCM. This is not caused by electrical malfunction (circuits open or shorted) but by mechanical malfunction such as control valve sticking, improper solenoid valve operation, malfunctioning servo piston or brake band, etc.

Gear position	1	2	3	4
Shift solenoid valve A	ON (Closed)	OFF (Open)	OFF (Open)	ON (Closed)
Shift solenoid valve B	ON (Closed)	ON (Closed)	OFF (Open)	OFF (Open)

TCM TERMINALS AND REFERENCE VALUE

Remarks: Specification data are reference values.

Terminal No.	Wire color	Item	Condition		Judgement standard (Approx.)
11	L/W	Shift solenoid valve A		When shift solenoid valve A operates. (When driving in “D1 ” or “D4 ”.)	Battery voltage
				When shift solenoid valve A does not operate. (When driving in “D2 ” or “D3 ”.)	0V

ON BOARD DIAGNOSTIC LOGIC

This diagnosis monitors actual gear position by checking the torque converter slip ratio calculated by TCM as follows:
Torque converter slip ratio = A x C/B
A: Output shaft revolution signal from revolution sensor
B: Engine speed signal from ECM
C: Gear ratio determined as gear position which TCM supposes
If the actual gear position is higher than the position (3rd) supposed by TCM, the slip ratio will be more than normal. In case the ratio exceeds the specified value, TCM judges this diagnosis malfunction.
This malfunction will be caused when shift solenoid valve A is stuck closed.

Gear position supposed by TCM	1	2	3	4
In case of gear position with no malfunctions	1	2	3	4
In case of gear position with shift solenoid valve A stuck closed	1	1	4*	4

*: P0733 is detected.

Diagnostic trouble code	Malfunction is detected when...	Check items (Possible cause)
: A/T 3RD GR FNCTN	A/T cannot be shifted to the 3rd gear position even if electrical circuit is good.	● Shift solenoid valve A ● Each clutch ● Hydraulic control circuit
: P0733		

DIAGNOSTIC TROUBLE CODE (DTC) CONFIRMATION PROCEDURE

CAUTION:

- **Always drive vehicle at a safe speed.**
- **Be careful not to rev engine into the red zone on the tachometer.**

NOTE:
If "DIAGNOSTIC TROUBLE CODE CONFIRMATION PROCEDURE" has been previously conducted, always turn ignition switch "OFF" and wait at least 5 seconds before conducting the next test.

TESTING CONDITION:
Always drive vehicle on a level road to improve the accuracy of test.
After the repair, perform the following procedure to confirm the malfunction is eliminated.

With CONSULT-II

1. Start engine and select "DATA MONITOR" mode for "A/T" with CONSULT-II.

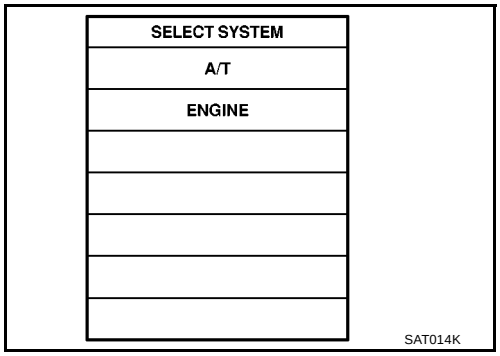

2. Make sure that output voltage of A/T fluid temperature sensor is within the range below.
   FLUID TEMP SEN: 0.4 - 1.5V
   If out of range, drive the vehicle to decrease the voltage (warm up the fluid) or stop engine to increase the voltage (cool down the fluid).

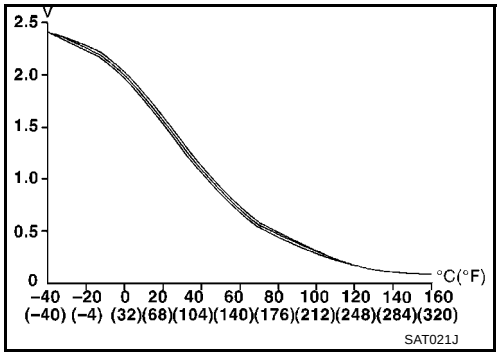

3. Select "3RD GR FNCTN P0733" of "DTC WORK SUPPORT" mode for "A/T" with CONSULT-II and touch "START".
4. Accelerate vehicle to 55 to 70 km/h (34 to 44 MPH) under the following condition and release the accelerator pedal completely.
   THROTTLE POSI: Less than 1.0/8 (at all times during step 4)
   Selector lever: D position (OD "ON")

- **Check that "GEAR" shows "4" after releasing pedal.**

5. Depress accelerator pedal steadily with 3.5/8 - 4.5/8 of "THROTTLE POSI" from a speed of 55 to 70 km/h (34 to 44 MPH) until "TESTING" changes to "STOP VEHICLE" or "COMPLETED". (It will take approximately 3 seconds.)
   If the check result NG appears on CONSULT-II screen, go to AT-151, "Diagnostic Procedure" .
   If "STOP VEHICLE" appears on CONSULT-II screen, go to following step.

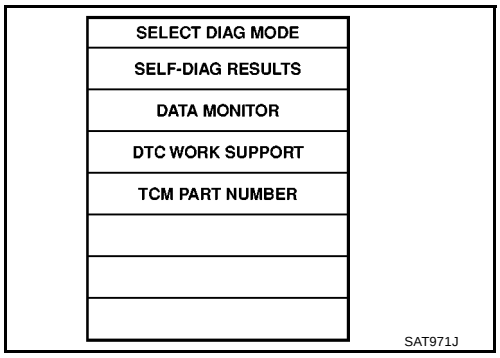

- **Check that "GEAR" shows "3" when depressing accelerator pedal with 3.5/8 - 4.5/8 of "THROTTLE POSI".**
- **If "TESTING" does not appear on CONSULT-II for a long time, select "SELF-DIAGNOSIS" for "ENGINE". In case a 1st trip DTC other than P0733 is shown, refer to applicable "TROUBLE DIAGNOSIS FOR DTC".**

6. Stop vehicle.

7. Follow the instruction displayed. (Check for normal shifting referring to the table below.)

Vehicle condition	Gear on actual transmission shift pattern when screen is changed to 1 → 2 → 3 → 4
No malfunction exists.	1 → 2 → 3 → 4
Malfunction for P0733 exists.	1 → 1 → 4 → 4

8. Make sure that “OK” is displayed. (If “NG” is displayed, refer to AT-151, "Diagnostic Procedure" .) Refer to AT-519, "Shift Schedule" .

With GST

Follow the procedure “With CONSULT-II”.

Wiring Diagram — AT — 3RD

ECS0097Y

AT-3RDSIG-01

: DETECTABLE LINE FOR DTC
: NON-DETECTABLE LINE FOR DTC

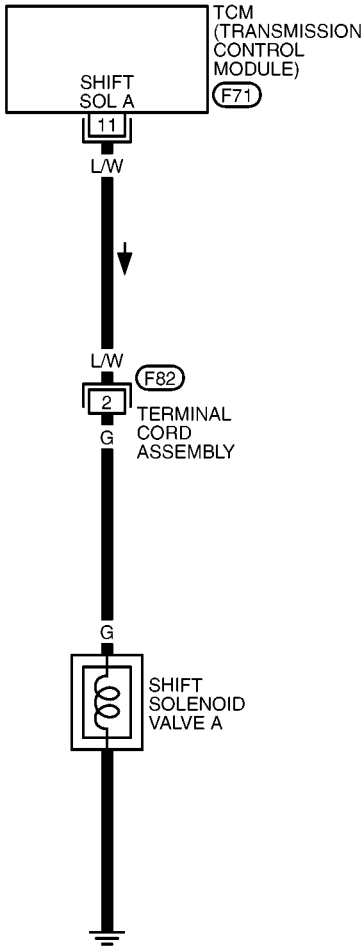

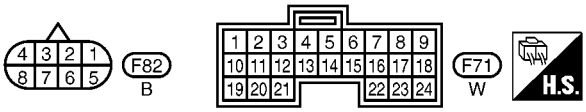

YAT375A

Diagnostic Procedure

ECS0097Z

1. CHECK SHIFT SOLENOID VALVE

1. Remove control valve assembly. Refer to AT-410, "Control Valve Assembly and Accumulators" .
2. Check shift solenoid valve operation.

- Shift solenoid valve A
  Refer to AT-152, "Component Inspection" .

OK or NG

OK >> GO TO 2
NG >> Repair or replace shift solenoid valve assembly.

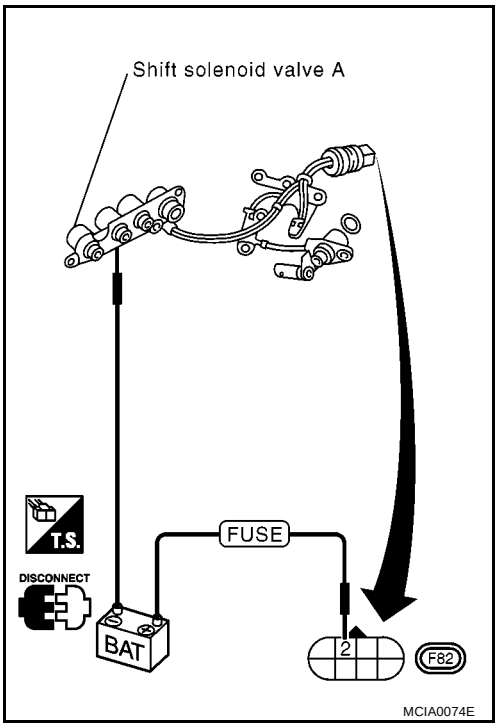

2. CHECK CONTROL VALVE

1. Disassemble control valve assembly. Refer to AT-443, "Control Valve Assembly" .
2. Check to ensure that:

- Valve, sleeve and plug slide along valve bore under their own weight.
- Valve, sleeve and plug are free from burrs, dents and scratches.
- Control valve springs are free from damage, deformation and fatigue.
- Hydraulic line is free from obstacles.

OK or NG

OK >> GO TO 3
NG >> Repair control valve assembly.

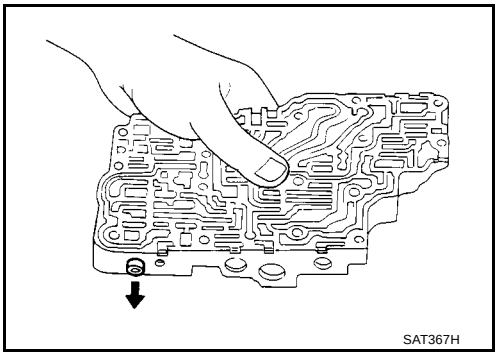

3. CHECK DTC

Perform AT-148, "DIAGNOSTIC TROUBLE CODE (DTC) CONFIRMATION PROCEDURE" .

OK or NG

OK >> **INSPECTION END**
NG >> Check control valve again. Repair or replace control valve assembly.

Component Inspection

ECS00980

SHIFT SOLENOID VALVE A

- For removal, refer to AT-410, "Control Valve Assembly and Accumulators" .

Resistance Check

- Check resistance between two terminals.

Solenoid valve	Terminal No.		Resistance (Approx.)
Shift solenoid valve A	2	Ground	20 - 30Ω

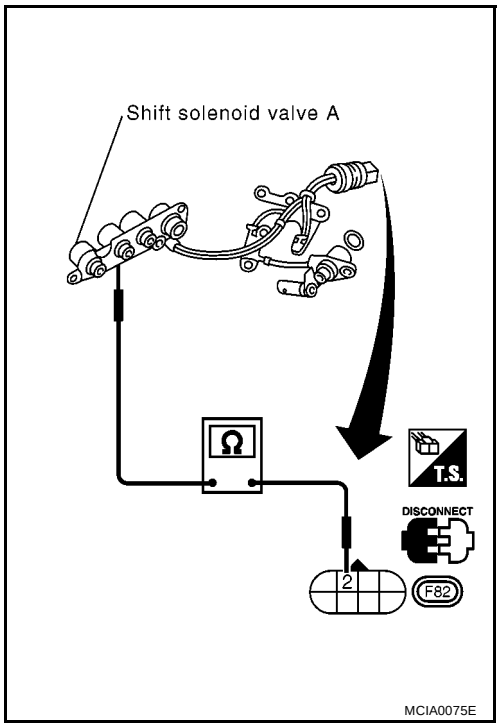

Operation Check

- Check solenoid valve by listening for its operating sound while applying battery voltage to the terminal and ground.

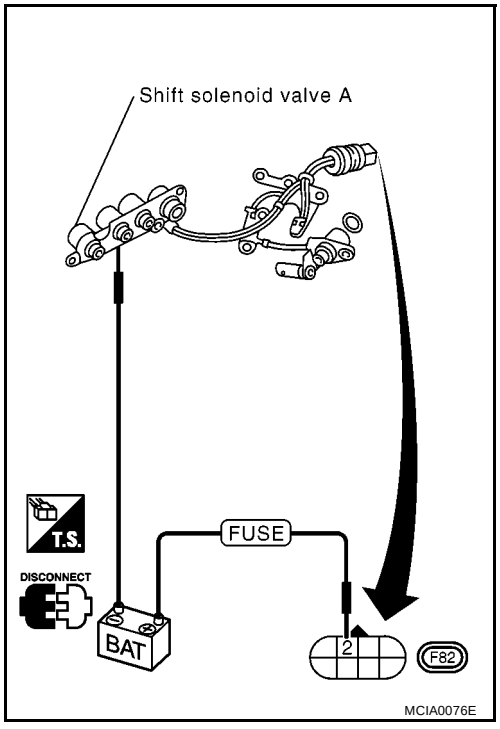

DTC P0734 A/T 4TH GEAR FUNCTION

PFP:31940

Description

ECS00981

- This is an OBD-II self-diagnostic item and not available in TCM self-diagnosis.
- This malfunction will not be detected while the O/D OFF indicator lamp is indicating another self-diagnosis malfunction.
- This malfunction is detected when the A/T does not shift into fourth gear position or the torque converter clutch does not lock up as instructed by the TCM. This is not caused by electrical malfunction (circuits open or shorted) but by mechanical malfunction such as control valve sticking, improper solenoid valve operation, malfunctioning oil pump or torque converter clutch, etc.

Gear position	1	2	3	4
Shift solenoid valve A	ON (Closed)	OFF (Open)	OFF (Open)	ON (Closed)
Shift solenoid valve B	ON (Closed)	ON (Closed)	OFF (Open)	OFF (Open)

CONSULT-II REFERENCE VALUE IN DATA MONITOR MODE

Remarks: Specification data are reference values.

Monitor item	Condition	Specification
Line pressure solenoid valve duty	Small throttle opening (Low line pressure) ↓ Large throttle opening (High line pressure)	Approximately 24% ↓ Approximately 95%

TCM TERMINALS AND REFERENCE VALUE

Remarks: Specification data are reference values.

Terminal No.	Wire color	Item	Condition		Judgement standard (Approx.)
1	R/W	Line pressure solenoid valve		When releasing accelerator pedal after warming up engine.	1.5 - 3.0V
				When depressing accelerator pedal fully after warming up engine.	0V
2	P/B	Line pressure solenoid valve (with dropping resistor)		When releasing accelerator pedal after warming up engine.	5 - 14V
				When depressing accelerator pedal fully after warming up engine.	0V
11	L/W	Shift solenoid valve A		When shift solenoid valve A operates. (When driving in “D1 ” or “D4 ”.)	Battery voltage
				When shift solenoid valve A does not operate. (When driving in “D2 ” or “D3 ”.)	0V
12	L/Y	Shift solenoid valve B		When shift solenoid valve B operates. (When driving in “D1 ” or “D2 ”.)	Battery voltage
				When shift solenoid valve B does not operate. (When driving in “D3 ” or “D4 ”.)	0V

ON BOARD DIAGNOSTIC LOGIC

This diagnosis monitors actual gear position by checking the torque converter slip ratio calculated by TCM as follows:

Torque converter slip ratio = A x C/B

A: Output shaft revolution signal from revolution sensor

B: Engine speed signal from ECM

C: Gear ratio determined as gear position which TCM supposes

If the actual gear position is much lower than the position (4th) supposed by TCM, the slip ratio will be much less than normal. In case the ratio does not reach the specified value, TCM judges this diagnosis malfunction.

This malfunction will be caused when shift solenoid valve B is stuck closed.

Gear position supposed by TCM	1	2	3	4
In case of gear position with no malfunctions	1	2	3	4
In case of gear position with shift solenoid valve B stuck closed	1	2	2	1*

*: P0734 is detected.

Diagnostic trouble code	Malfunction is detected when...	Check items (Possible cause)
: A/T 4TH GR FNCTN	A/T cannot be shifted to the 4th gear position even if electrical circuit is good.	● Shift solenoid valve A ● Shift solenoid valve B ● Line pressure solenoid valve ● Each clutch ● Hydraulic control circuit
: P0734		

DIAGNOSTIC TROUBLE CODE (DTC) CONFIRMATION PROCEDURE

CAUTION:

- **Always drive vehicle at a safe speed.**
- **If conducting this "DTC CONFIRMATION PROCEDURE" again, always turn ignition switch "OFF" and wait at least 5 seconds before continuing.**
- **Be careful not to rev engine into the red zone on the tachometer.**

NOTE:
If "DIAGNOSTIC TROUBLE CODE CONFIRMATION PROCEDURE" has been previously conducted, always turn ignition switch "OFF" and wait at least 5 seconds before conducting the next test.
TESTING CONDITION:
Always drive vehicle on a level road to improve the accuracy of test.
After the repair, perform the following procedure to confirm the malfunction is eliminated.

With CONSULT-II

1. Start engine and select "DATA MONITOR" mode for "A/T" with CONSULT-II.

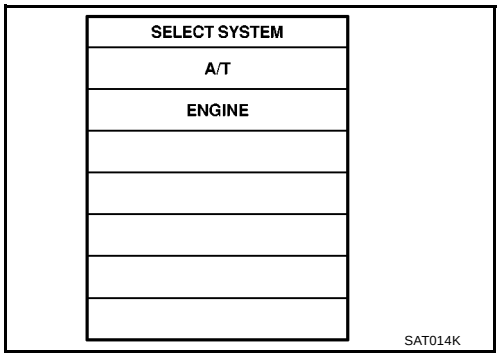

2. Make sure that output voltage of A/T fluid temperature sensor is within the range below.
   FLUID TEMP SEN: 0.4 - 1.5V
   If out of range, drive the vehicle to decrease the voltage (warm up the fluid) or stop engine to increase the voltage (cool down the fluid).

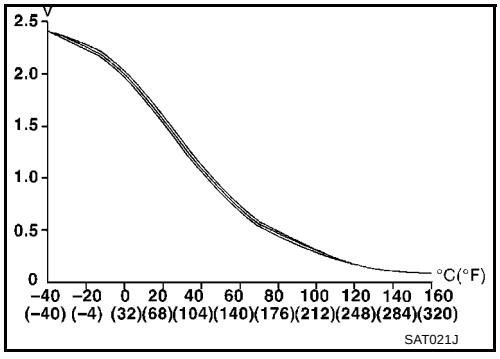

3. Select “4TH GR FNCTN P0734” of “DTC WORK SUPPORT” mode for “A/T” with CONSULT-II and touch “START”.
4. Accelerate vehicle to 55 to 65 km/h (34 to 40 MPH) under the following condition and release the accelerator pedal completely.
   THROTTLE POSI: Less than 5.5/8 (at all times during step 4)
   Selector lever: D position (OD “ON”)

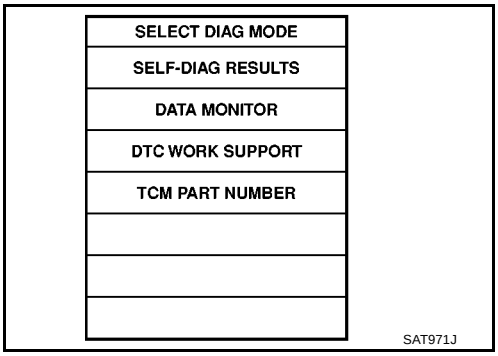

- **Check that “GEAR” shows “3” after releasing pedal.**

5. Depress accelerator pedal steadily with 1.0/8 - 2.0/8 of “THROTTLE POSI” from a speed of 55 to 65 km/h (34 to 40 MPH) until “TESTING” has turned to “STOP VEHICLE” or “COMPLETED”. (It will take approximately 3 seconds.)
   If the check result NG appears on CONSULT-II screen, go to AT-157, "Diagnostic Procedure" .
   If “STOP VEHICLE” appears on CONSULT-II screen, go to following step.

- **Check that “GEAR” shows “4” when depressing accelerator pedal with 1.0/8 - 2.0/8 of “THROTTLE POSI”.**
- **If “TESTING” does not appear on CONSULT-II for a long time, select “SELF-DIAGNOSIS” for “ENGINE”. In case a 1st trip DTC other than P0734 is shown, refer to applicable “TROUBLE DIAGNOSIS FOR DTC”.**

6. Stop vehicle.
7. Follow the instruction displayed. (Check for normal shifting referring to the table below.)

Vehicle condition	Gear on actual transmission shift pattern when screen is changed to 1 → 2 → 3 → 4
No malfunction exists	1 → 2 → 3 → 4
Malfunction for P0734 exists.	1 → 2 → 2 → 1

8. Make sure that “OK” is displayed. (If “NG” is displayed, go to AT-157, "Diagnostic Procedure" .)
   Refer to AT-519, "Shift Schedule" .

With GST

Follow the procedure “With CONSULT-II”.

Wiring Diagram — AT — 4TH

ECS00982

AT-4THSIG-01

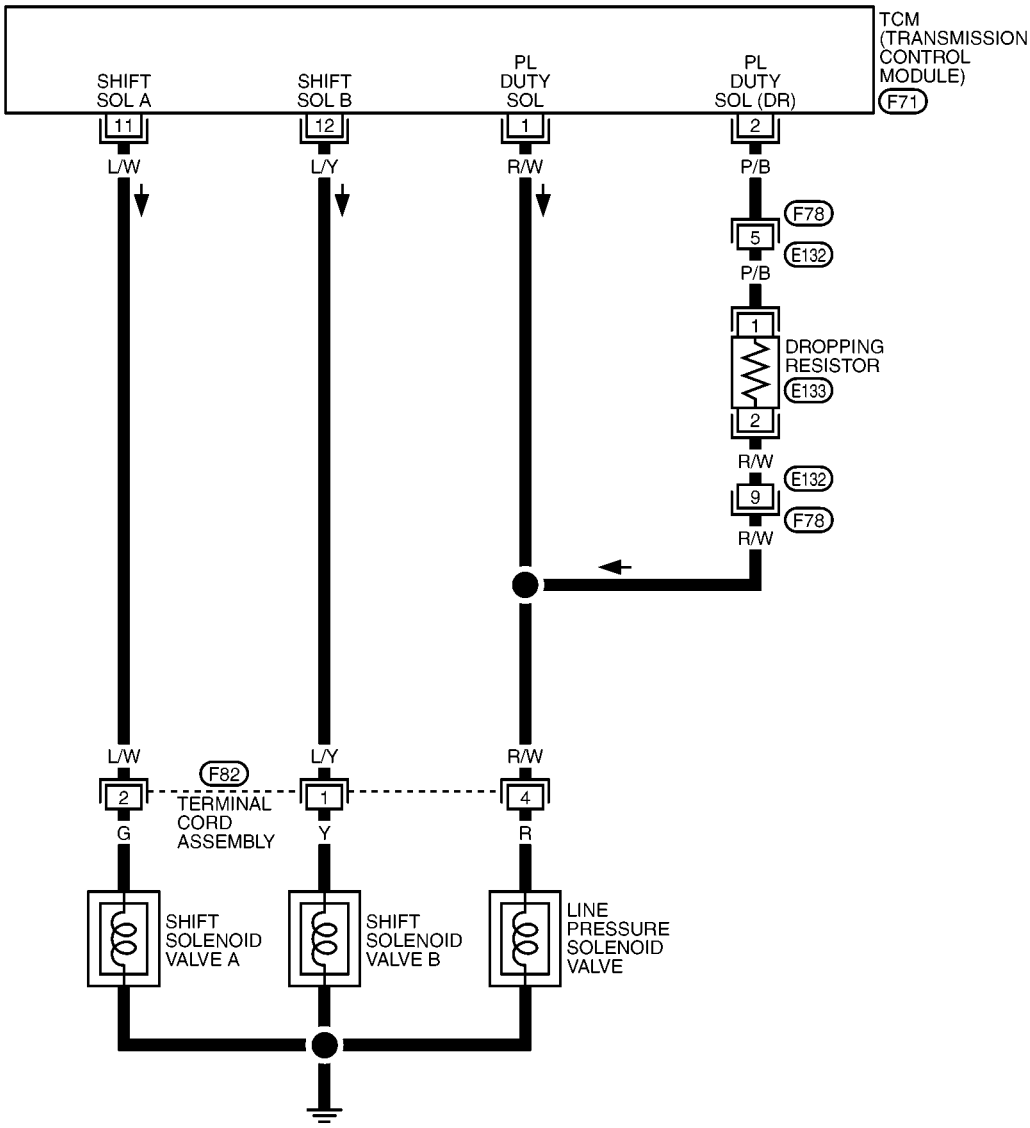

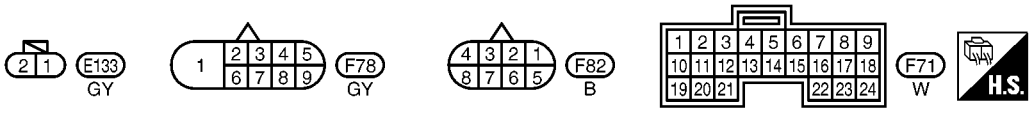

YAT376A

Diagnostic Procedure

ECS00983

1. CHECK SHIFT UP (D3 TO D4)

During “Cruise test — Part 1” (AT-78), does A/T shift from D3 to D4 at the specified speed?

Yes or No

Yes >> GO TO 9
No >> GO TO 2

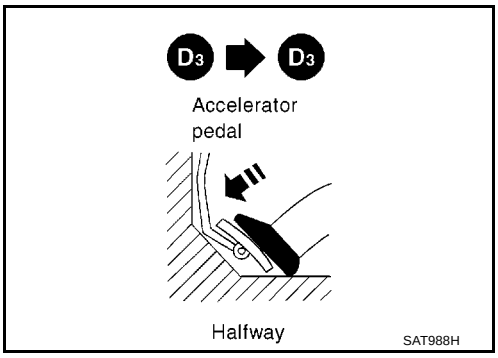

2. CHECK LINE PRESSURE

Perform line pressure test.

Engine speed rpm	Line pressure kPa (bar, kg/cm^2 , psi)	
	D, 2 and 1 positions	R position
Idle	500 (0.50, 5.1, 73)	778 (7.78, 7.9, 113)
Stall	1,165 (11.7, 11.9, 169)	1,813 (18.1, 18.5, 263)

Refer to AT-67, "Line Pressure Test" .

OK or NG

OK >> GO TO 3
NG >> GO TO 6

3. CHECK SOLENOID VALVES

1. Remove control valve assembly.
   Refer to AT-410, "Control Valve Assembly and Accumulators" .
2. Refer to AT-160, "Component Inspection" .

OK or NG

OK >> GO TO 4
NG >> Replace solenoid valve assembly.

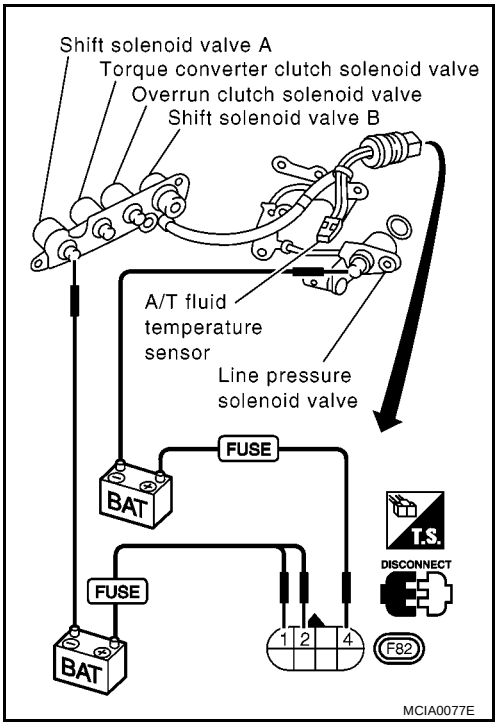

4. CHECK CONTROL VALVE

1. Disassemble control valve assembly.
   Refer to AT-443, "Control Valve Assembly" .
2. Check to ensure that:

- Valve, sleeve and plug slide along valve bore under their own weight.
- Valve, sleeve and plug are free from burrs, dents and scratches.
- Control valve springs are free from damage, deformation and fatigue.
- Hydraulic line is free from obstacles.

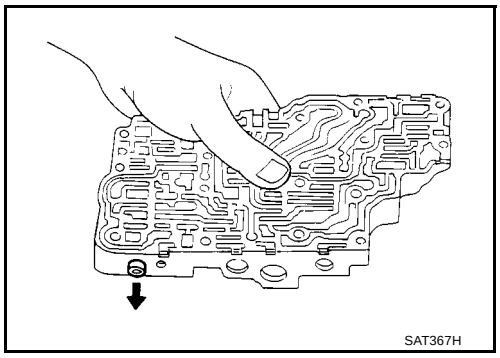

OK or NG

OK >> GO TO 5
NG >> Repair control valve.

5. CHECK SHIFT UP (D_3 TO D_4)

Does A/T shift from D_3 to D_4 at the specified speed?

OK or NG

OK >> GO TO 9
NG >> Check control valve again. Repair or replace control valve assembly.

6. CHECK LINE PRESSURE SOLENOID VALVE

1. Remove control valve assembly.
   Refer to AT-410, "Control Valve Assembly and Accumulators" .
2. Refer to AT-160, "Component Inspection" .

OK or NG

OK >> GO TO 7
NG >> Replace solenoid valve assembly.

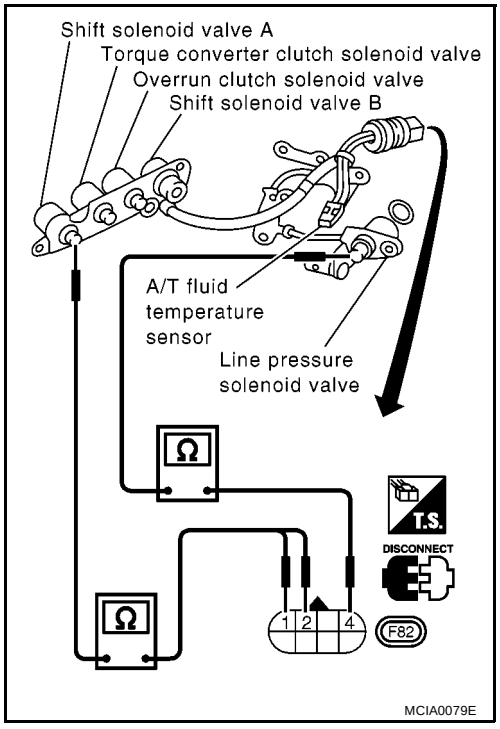

7. CHECK CONTROL VALVE

1. Disassemble control valve assembly.
   Refer to AT-443, "Control Valve Assembly" .
2. Check line pressure circuit valves for sticking.

- Pressure regulator valve
- Pilot valve
- Pressure modifier valve

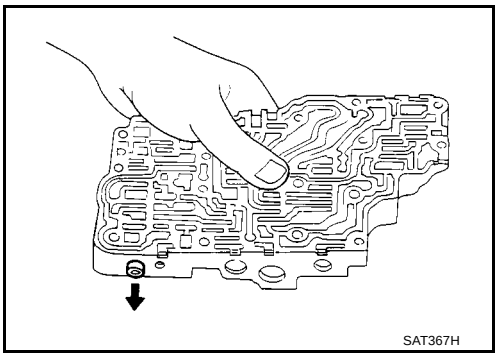

OK or NG

OK >> GO TO 8
NG >> Repair control valve.

8. CHECK SHIFT UP (D_3 TO D_4)

Does A/T shift from D_3 to D_4 at the specified speed?

Yes or No

Yes >> GO TO 9
No >> Check control valve again. Repair or replace control valve assembly.

9. CHECK DTC

Perform AT-154, "DIAGNOSTIC TROUBLE CODE (DTC) CONFIRMATION PROCEDURE" .

OK or NG

OK >> **INSPECTION END**
NG >> Perform “Cruise test — Part 1” again and return to the start point of this test group.

Component Inspection

ECS00984

SOLENOID VALVES

- For removal, refer to AT-410, "Control Valve Assembly and Accumulators" .

Resistance Check

- Check resistance between two terminals.

Solenoid valve	Terminal No.		Resistance (Approx.)
Shift solenoid valve A	2	Ground	20 - 30Ω
Shift solenoid valve B	1		5 - 20Ω
Line pressure solenoid valve	4		2.5 - 5Ω

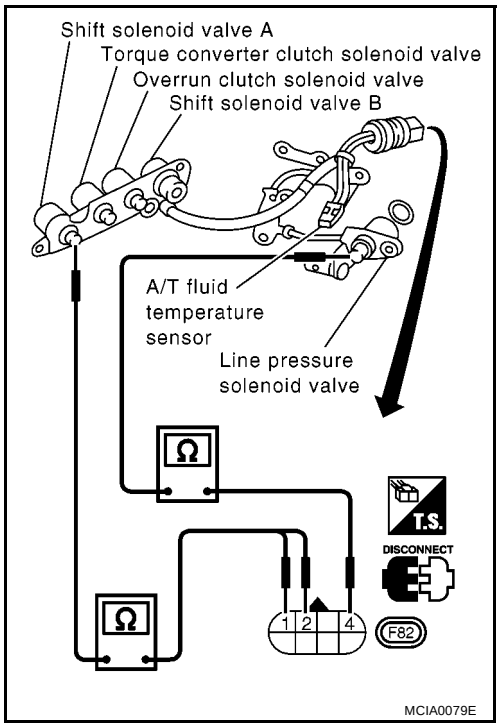

Operation Check

- Check solenoid valve by listening for its operating sound while applying battery voltage to the terminal and ground.

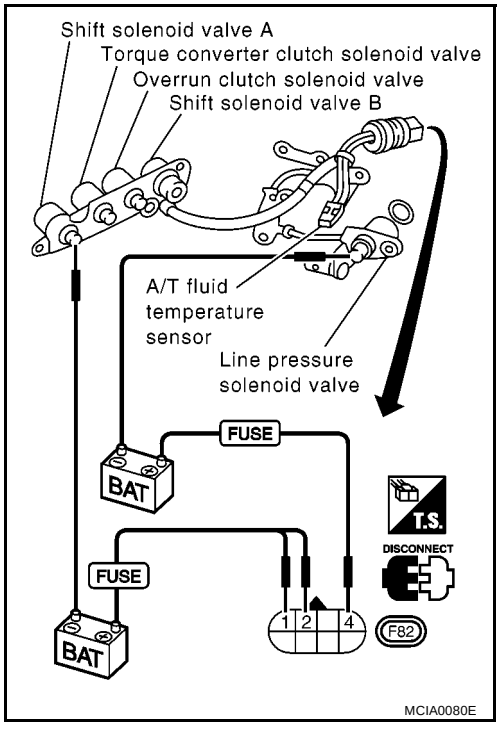

DTC P0740 TORQUE CONVERTER CLUTCH SOLENOID VALVE

PFP:31940

Description

ECS00985

The torque converter clutch solenoid valve is activated, with the gear in “D4 ”, by the TCM in response to signals sent from the vehicle speed and throttle position sensors. Lock-up piston operation will then be controlled.
Lock-up operation, however, is prohibited when A/T fluid temperature is too low.
When the accelerator pedal is depressed (less than 2/8) in lock-up condition, the engine speed should not change abruptly. If there is a big jump in engine speed, there is no lock-up.

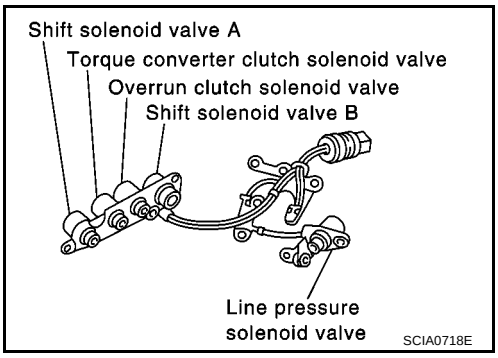

CONSULT-II REFERENCE VALUE IN DATA MONITOR MODE

Remarks: Specification data are reference values.

Monitor item	Condition	Specification
Torque converter clutch solenoid valve duty	Lock-up “OFF” ↓ Lock-up “ON”	Approximately 4% ↓ Approximately 94%

TCM TERMINALS AND REFERENCE VALUE

Remarks: Specification data are reference values.

Terminal No.	Wire color	Item	Condition		Judgement standard (Approx.)
3	GY/R	Torque converter clutch solenoid valve		When A/T performs lock-up.	8 - 15V
				When A/T does not perform lock-up.	0V

ON BOARD DIAGNOSIS LOGIC

Diagnostic trouble code	Malfunction is detected when...	Check items (Possible cause)
: TCC SOLENOID/CIRC : P0740	TCM detects an improper voltage drop when it tries to operate the solenoid valve.	● Harness or connectors (The solenoid circuit is open or shorted.) ● T/C clutch solenoid valve

DIAGNOSTIC TROUBLE CODE (DTC) CONFIRMATION PROCEDURE

NOTE:
If “DIAGNOSTIC TROUBLE CODE CONFIRMATION PROCEDURE” has been previously conducted, always turn ignition switch “OFF” and wait at least 5 seconds before conducting the next test.
After the repair, perform the following procedure to confirm the malfunction is eliminated.

With CONSULT-II

1. Turn ignition switch “ON”.
2. Select “DATA MONITOR” mode for “ENGINE” with CONSULT-II and wait at least 1 second.

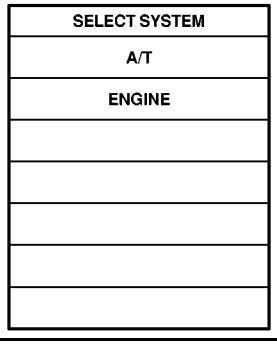

3. If DTC is detected, go to AT-164, "Diagnostic Procedure" .

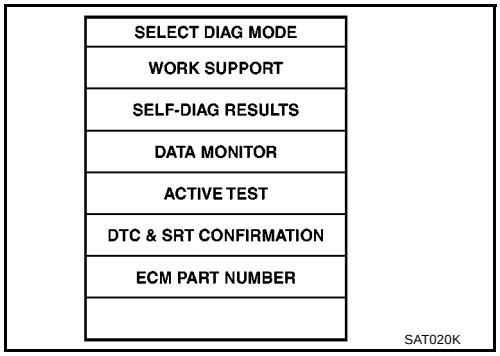

With GST

Follow the procedure “With CONSULT-II”.

Wiring Diagram — AT — TCV

ECS00986

AT-TCV-01

: DETECTABLE LINE FOR DTC
: NON-DETECTABLE LINE FOR DTC

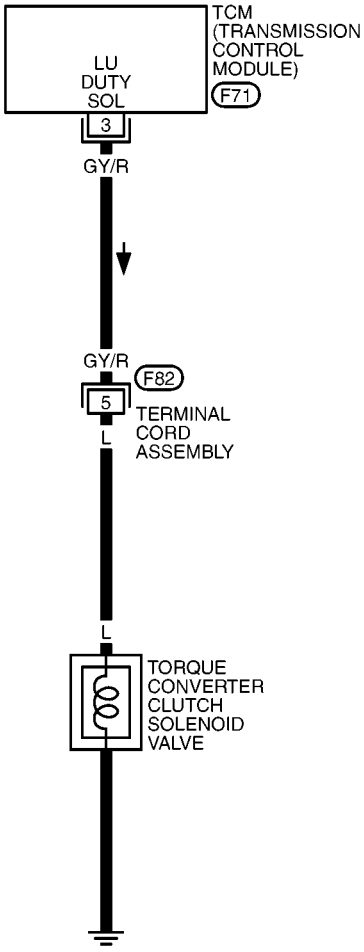

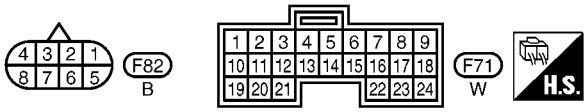

YAT377A

Diagnostic Procedure

ECS00987

1. CHECK VALVE RESISTANCE

1. Turn ignition switch to “OFF” position.
2. Disconnect terminal cord assembly connector in engine compartment.
3. Check resistance between terminal 5 and ground.

Resistance: 5 - 20Ω

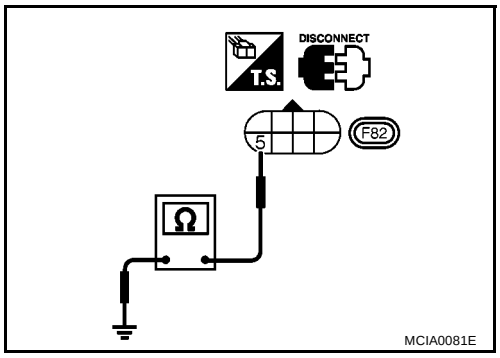

OK or NG

OK >> GO TO 2

NG >> 1. Remove oil pan. Refer to AT-410, "ON-VEHICLE SERVICE" .
2. Check the following items:
- Torque converter clutch solenoid valve
Refer to AT-164, "Component Inspection" .
- Harness of terminal cord assembly for short or open

2. CHECK POWER SOURCE CIRCUIT

1. Turn ignition switch to “OFF” position.
2. Disconnect TCM harness connector.
3. Check continuity between terminal 5 and TCM harness connector terminal 3.

Continuity should exist.

If OK, check harness for short to ground and short to power.

4. Reinstall any part removed.

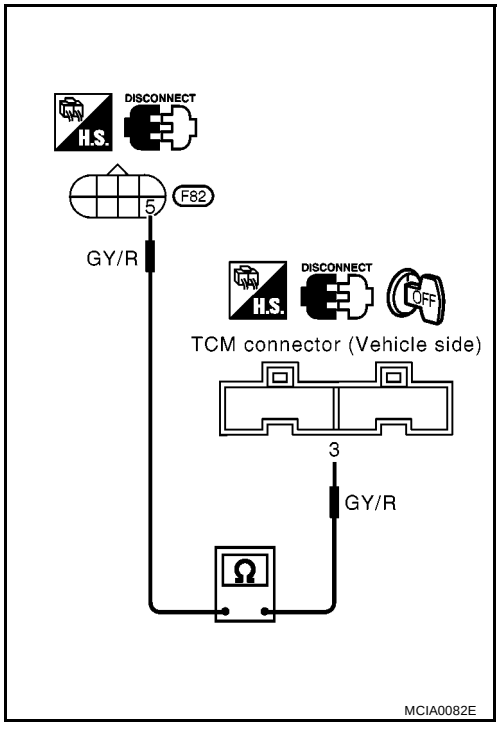

OK or NG

OK >> GO TO 3

NG >> Repair open circuit or short to ground or short to power in harness or connectors.

3. CHECK DTC

Perform AT-161, "DIAGNOSTIC TROUBLE CODE (DTC) CONFIRMATION PROCEDURE" .

OK or NG

OK >> **INSPECTION END**

NG >> 1. Perform TCM input/output signal inspection.
2. If NG, recheck TCM pin terminals for damage or loose connection with harness connector.

Component Inspection

ECS00988

TORQUE CONVERTER CLUTCH SOLENOID VALVE

- For removal, refer to AT-410, "Control Valve Assembly and Accumulators" .

Resistance Check

- Check resistance between two terminals.

Solenoid valve	Terminal No.		Resistance (Approx.)
Torque converter clutch solenoid valve	5	Ground	5 - 20Ω

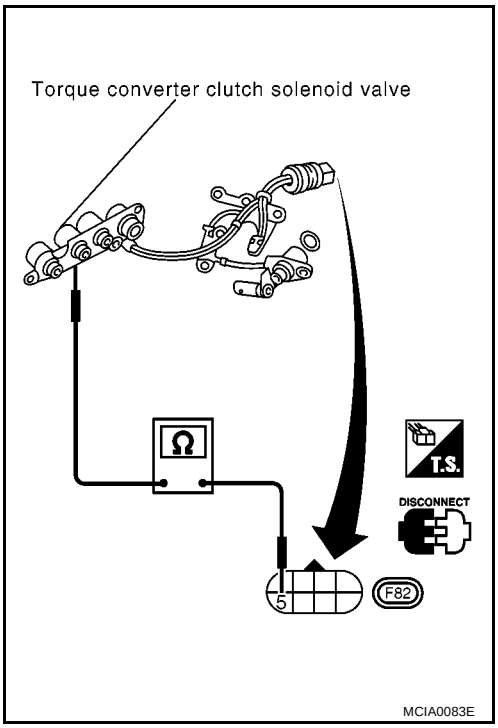

Operation Check

- Check solenoid valve by listening for its operating sound while applying battery voltage to the terminal and ground.

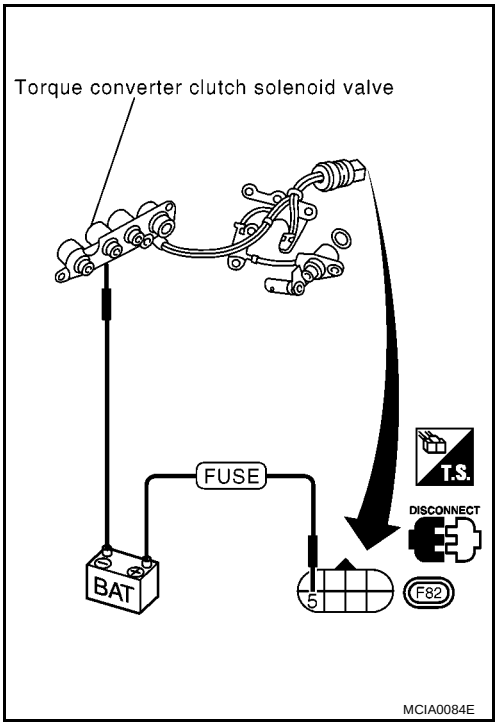

DTC P0745 LINE PRESSURE SOLENOID VALVE

PFP:31940

Description

ECS00989

The line pressure solenoid valve regulates the oil pump discharge pressure to suit the driving condition in response to a signal sent from the TCM.

NOTE:
The line pressure duty cycle value is not consistent when the closed throttle position switch is “ON”. To confirm the line pressure duty cycle at low pressure, the accelerator (throttle) should be open until the closed throttle position switch is “OFF”.

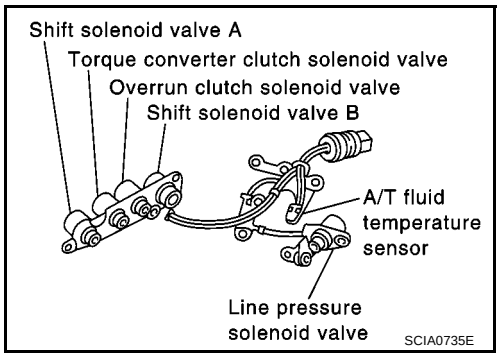

CONSULT-II REFERENCE VALUE IN DATA MONITOR MODE

Remarks: Specification data are reference values.

Monitor item	Condition	Specification
Line pressure solenoid valve duty	Small throttle opening (Low line pressure) ↓ Large throttle opening (High line pressure)	Approximately 24% ↓ Approximately 95%

NOTE:
The line pressure duty cycle value is not consistent when the closed throttle position switch is “ON”. To confirm the line pressure duty cycle at low pressure, the accelerator (throttle) should be open until the closed throttle position switch is “OFF”.

TCM TERMINALS AND REFERENCE VALUE

Remarks: Specification data are reference values.

Terminal No.	Wire color	Item	Condition		Judgement standard (Approx.)
1	R/W	Line pressure solenoid valve		When releasing accelerator pedal after warming up engine.	1.5 - 3.0V
				When depressing accelerator pedal fully after warming up engine.	0V
2	P/B	Line pressure solenoid valve (with dropping resistor)		When releasing accelerator pedal after warming up engine.	4 - 14V
				When depressing accelerator pedal fully after warming up engine.	0V

ON BOARD DIAGNOSIS LOGIC

Diagnostic trouble code	Malfunction is detected when...	Check items (Possible cause)
: L/PRESS SOL/CIRC	TCM detects an improper voltage drop when it tries to operate the solenoid valve.	● Harness or connectors (The solenoid circuit is open or shorted.) ● Line pressure solenoid valve
: P0745		

DIAGNOSTIC TROUBLE CODE (DTC) CONFIRMATION PROCEDURE

NOTE:
If "DIAGNOSTIC TROUBLE CODE CONFIRMATION PROCEDURE" has been previously conducted, always turn ignition switch "OFF" and wait at least 5 seconds before conducting the next test.
After the repair, perform the following procedure to confirm the malfunction is eliminated.

With CONSULT-II

1. Turn ignition switch "ON" and select "DATA MONITOR" mode for "ENGINE" with CONSULT-II.
2. Depress accelerator pedal completely and wait at least 1 second.
3. If DTC is detected, go to AT-169, "Diagnostic Procedure" .

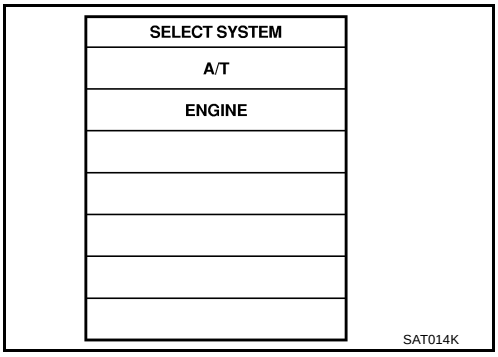

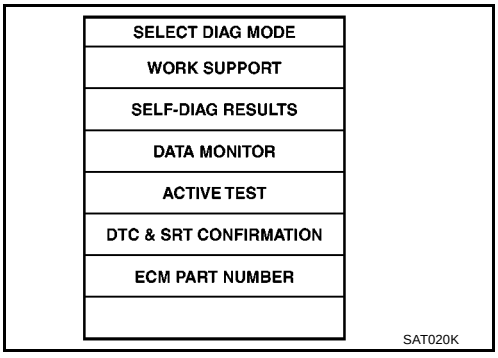

With GST

Follow the procedure "With CONSULT-II".

Wiring Diagram — AT — LPSV

ECS0098A

AT-LPSV-01

: DETECTABLE LINE FOR DTC
: NON-DETECTABLE LINE FOR DTC

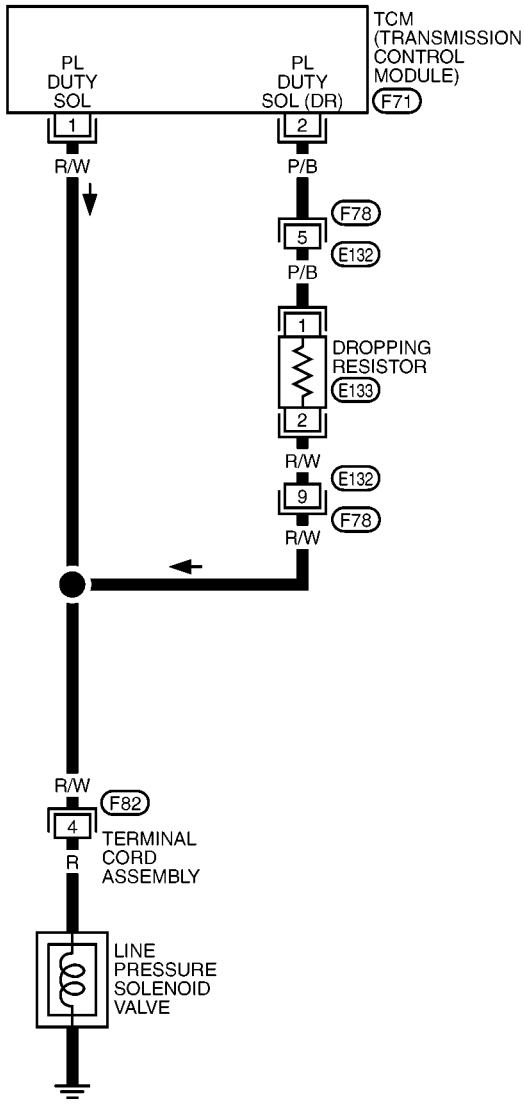

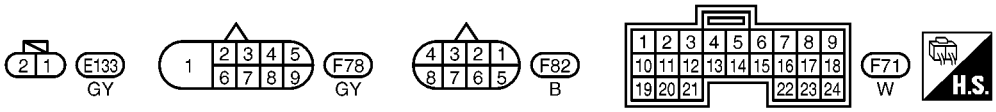

YAT378A

Diagnostic Procedure

ECS0098B

1. CHECK VALVE RESISTANCE

1. Turn ignition switch to “OFF” position.
2. Disconnect terminal cord assembly connector in engine compartment.
3. Check resistance between terminal 4 and ground.

Resistance: 2.5 - 5Ω

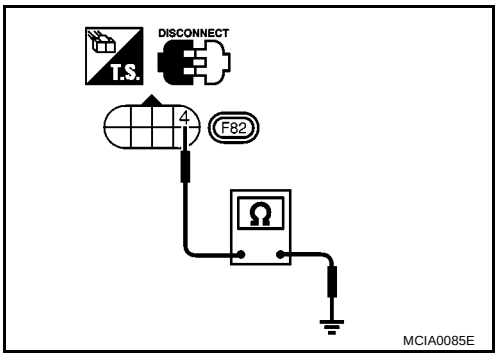

OK or NG

OK >> GO TO 2

NG >> 1. Remove control valve assembly. Refer to AT-410, "Control Valve Assembly and Accumulators" .

2. Check the following items:

– Line pressure solenoid valve
Refer to AT-171, "Component Inspection" .

– Harness of terminal cord assembly for short or open

2. CHECK POWER SOURCE CIRCUIT

1. Turn ignition switch to “OFF” position.
2. Disconnect TCM harness connector.
3. Check resistance between terminal 4 and TCM harness connector terminal 2.

Resistance: 10 - 15Ω

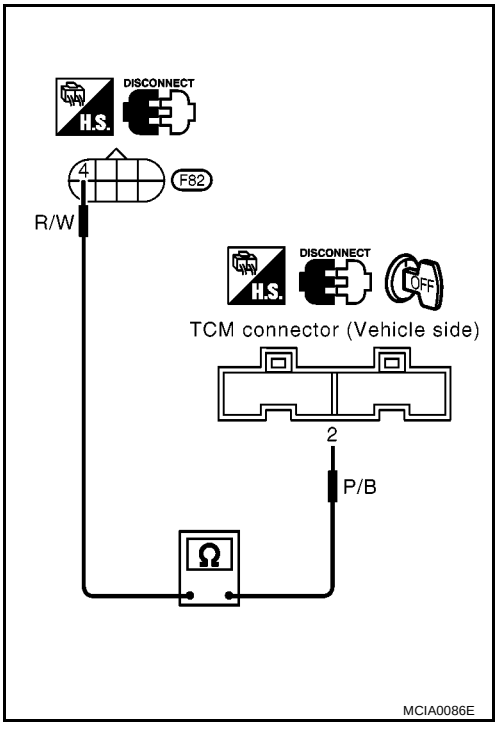

OK or NG

OK >> GO TO 3

NG >> Check the following items:

- Dropping resistor
Refer to AT-171, "Component Inspection" .
- Harness for short or open between TCM terminal 2 and terminal cord assembly (Main harness)

3. CHECK POWER SOURCE CIRCUIT

1. Turn ignition switch to “OFF” position.
2. Check resistance between terminal 4 and TCM harness connector terminal 1.

   Resistance: Approx. 0Ω

   If NG, check harness for short to ground and short to power.
3. Reinstall any part removed.

OK or NG

OK >> GO TO 4
NG >> Repair open circuit or short to ground or short to power in harness or connectors.

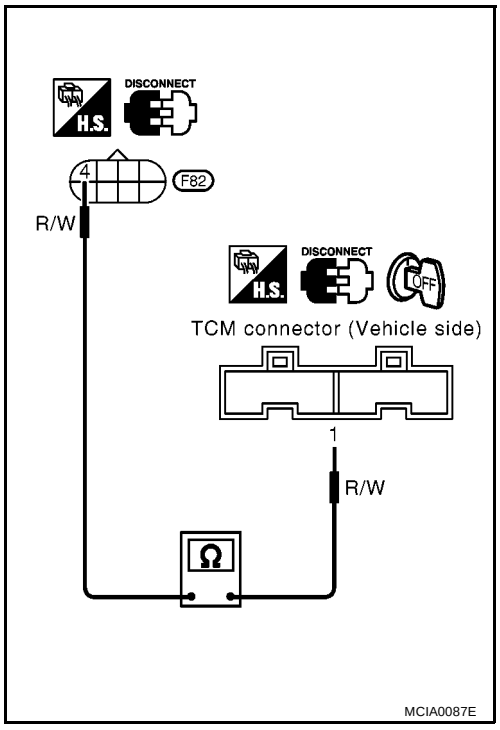

4. CHECK DTC

Perform AT-167, "DIAGNOSTIC TROUBLE CODE (DTC) CONFIRMATION PROCEDURE" .

OK or NG

OK >> **INSPECTION END**
NG >> 1. Perform TCM input/output signal inspection.
2. If NG, recheck TCM pin terminals for damage or loose connection with harness connector.

Component Inspection

ECS0098C

LINE PRESSURE SOLENOID VALVE

- For removal, refer to AT-410, "Control Valve Assembly and Accumulators" .

Resistance Check

- Check resistance between two terminals.

Solenoid valve	Terminal No.		Resistance (Approx.)
Line pressure solenoid valve	4	Ground	2.5 - 5Ω

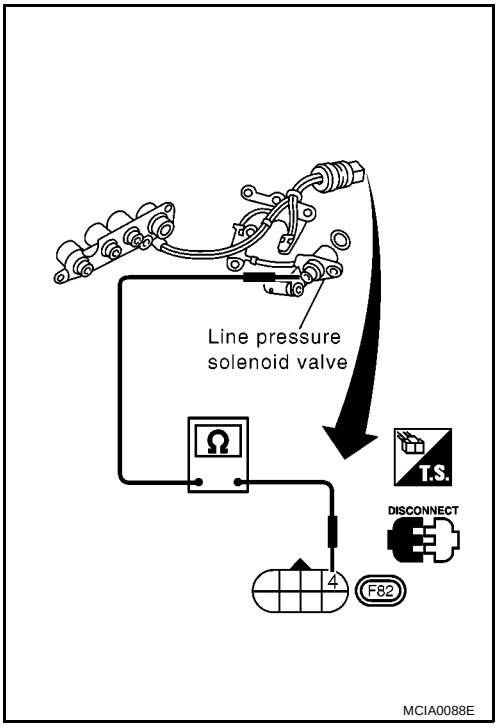

Operation Check

- Check solenoid valve by listening for its operating sound while applying battery voltage to the terminal and ground.

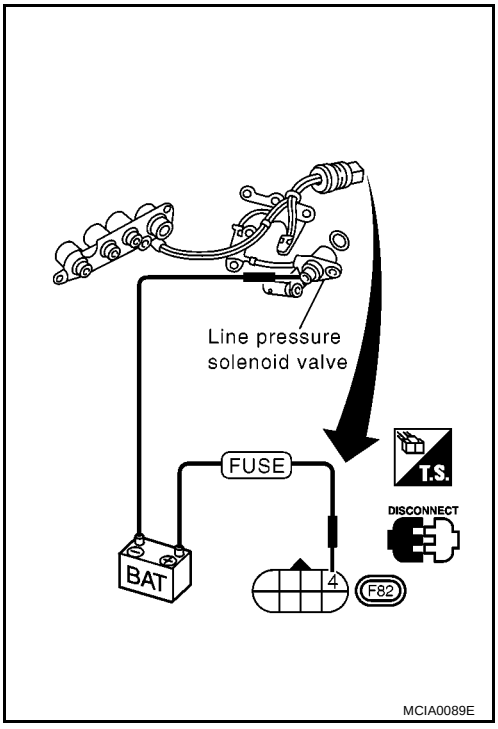

DROPPING RESISTOR

- Check resistance between two terminals.

  Resistance: 10 - 15Ω

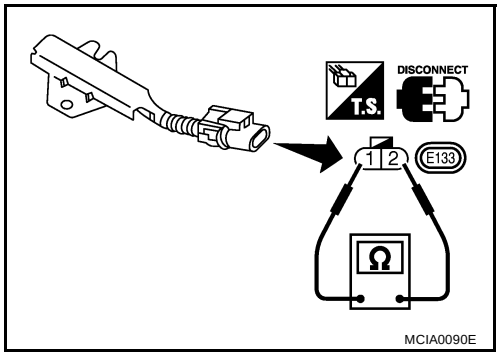

DTC P0750 SHIFT SOLENOID VALVE A

PFP:31940

Description

ECS0098D

Shift solenoid valves A and B are turned “ON” or “OFF” by the TCM in response to signals sent from the PNP switch, vehicle speed and throttle position sensors. Gears will then be shifted to the optimum position.

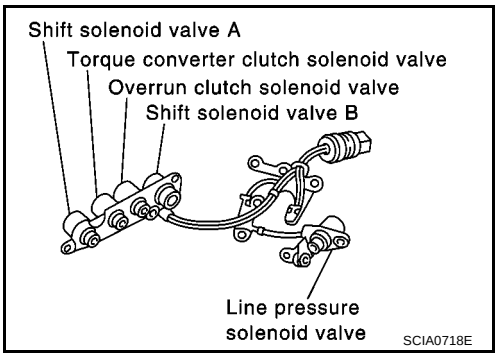

Gear position	1	2	3	4
Shift solenoid valve A	ON (Closed)	OFF (Open)	OFF (Open)	ON (Closed)
Shift solenoid valve B	ON (Closed)	ON (Closed)	OFF (Open)	OFF (Open)

TCM TERMINALS AND REFERENCE VALUE

Remarks: Specification data are reference values.

Terminal No.	Wire color	Item	Condition		Judgement standard (Approx.)
11	L/W	Shift solenoid valve A		When shift solenoid valve A operates. (When driving in “D1 ” or “D4 ”.)	Battery voltage
				When shift solenoid valve A does not operate. (When driving in “D2 ” or “D3 ”.)	0V

ON BOARD DIAGNOSIS LOGIC

Diagnostic trouble code	Malfunction is detected when...	Check items (Possible cause)
: SFT SOL A/CIRC	TCM detects an improper voltage drop when it tries to operate the solenoid valve.	● Harness or connectors (The solenoid circuit is open or shorted.) ● Shift solenoid valve A
: P0750		

DIAGNOSTIC TROUBLE CODE (DTC) CONFIRMATION PROCEDURE

CAUTION:
Always drive vehicle at a safe speed.

NOTE:
If "DIAGNOSTIC TROUBLE CODE CONFIRMATION PROCEDURE" has been previously conducted, always turn ignition switch "OFF" and wait at least 5 seconds before conducting the next test.
After the repair, perform the following procedure to confirm the malfunction is eliminated.

With CONSULT-II

1. Turn ignition switch "ON" and select "DATA MONITOR" mode for "ENGINE" with CONSULT-II.
2. Start engine.
3. Drive vehicle in D position and allow the transmission to shift "1" → "2" ("GEAR").
4. If DTC is detected, go to AT-176, "Diagnostic Procedure" .

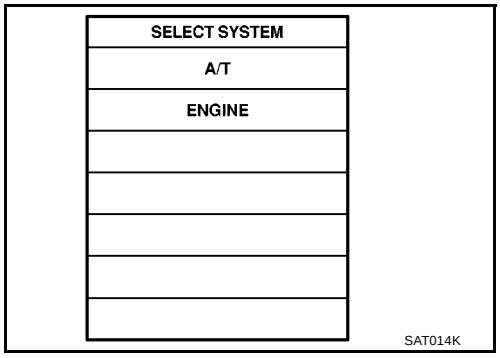

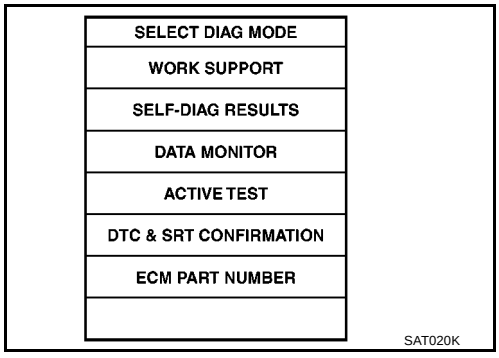

With GST

Follow the procedure "With CONSULT-II".

Wiring Diagram — AT — SSV/A

ECS0098E

AT-SSV/A-01

: DETECTABLE LINE FOR DTC
: NON-DETECTABLE LINE FOR DTC

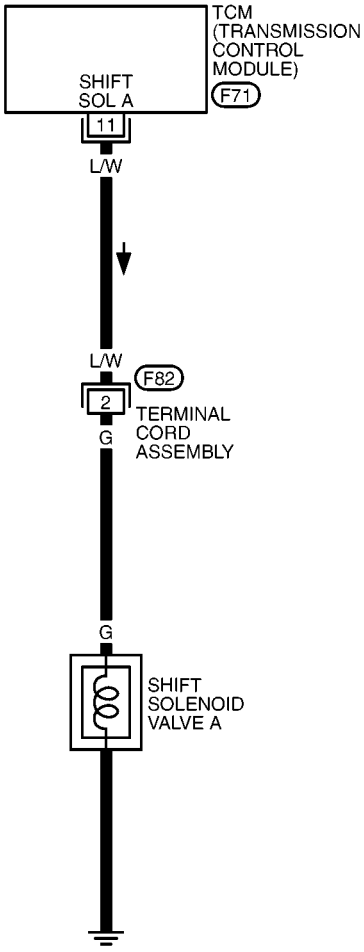

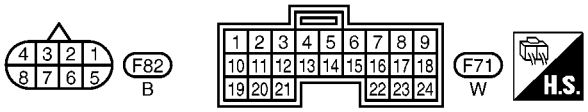

YAT379A

Diagnostic Procedure

ECS0098F

1. CHECK VALVE RESISTANCE

1. Turn ignition switch to “OFF” position.
2. Disconnect terminal cord assembly connector in engine compartment.
3. Check resistance between terminal 2 and ground.

Resistance: 20 - 30Ω

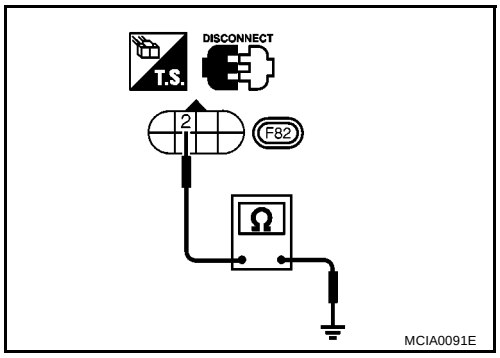

OK or NG

OK >> GO TO 2

NG >> 1. Remove control valve assembly. Refer to AT-410, "Control Valve Assembly and Accumulators" .
2. Check the following items:
- Shift solenoid valve A
Refer to AT-177, "Component Inspection" .
- Harness of terminal cord assembly for short or open

2. CHECK POWER SOURCE CIRCUIT

1. Turn ignition switch to “OFF” position.
2. Disconnect TCM harness connector.
3. Check continuity between terminal 2 and TCM harness connector terminal 11.

Continuity should exist.

If OK, check harness for short to ground and short to power.

4. Reinstall any part removed.

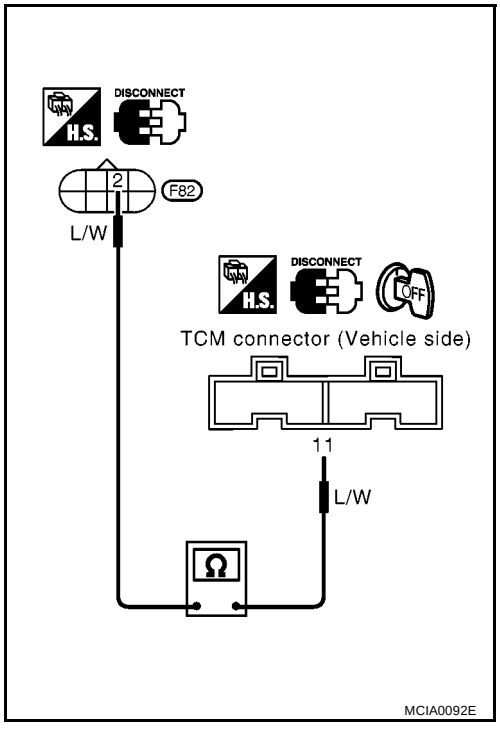

OK or NG

OK >> GO TO 3

NG >> Repair open circuit or short to ground or short to power in harness or connectors.

3. CHECK DTC

Perform AT-174, "DIAGNOSTIC TROUBLE CODE (DTC) CONFIRMATION PROCEDURE" .

OK or NG

OK >> **INSPECTION END**

NG >> 1. Perform TCM input/output signal inspection.
2. If NG, recheck TCM pin terminals for damage or loose connection with harness connector.

Component Inspection

ECS0098G

SHIFT SOLENOID VALVE A

- For removal, refer to AT-410, "Control Valve Assembly and Accumulators" .

Resistance Check

- Check resistance between two terminals.

Solenoid valve	Terminal No.		Resistance (Approx.)
Shift solenoid valve A	2	Ground	20 - 30Ω

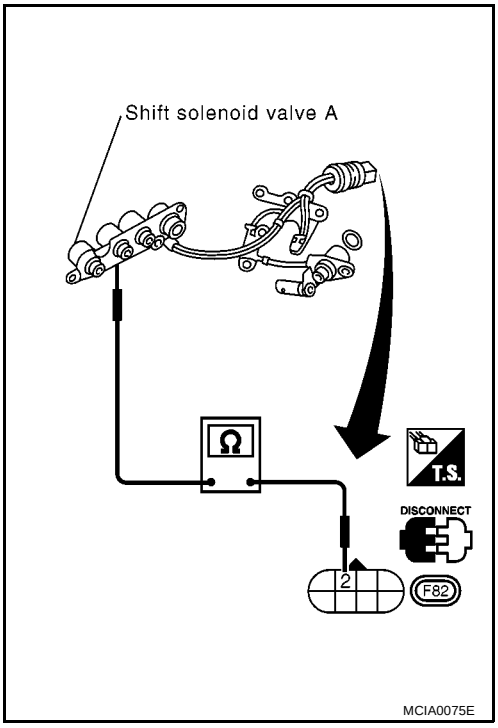

Operation Check

- Check solenoid valve by listening for its operating sound while applying battery voltage to the terminal and ground.

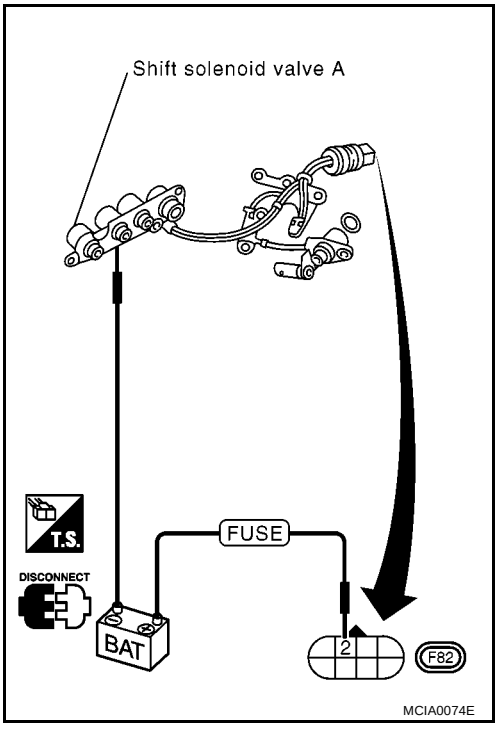

DTC P0755 SHIFT SOLENOID VALVE B

PFP:31940

Description

ECS0098H

Shift solenoid valves A and B are turned “ON” or “OFF” by the TCM in response to signals sent from the PNP switch, vehicle speed and throttle position sensors. Gears will then be shifted to the optimum position.

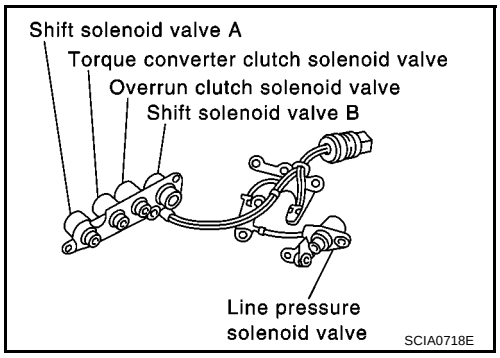

Gear position	1	2	3	4
Shift solenoid valve A	ON (Closed)	OFF (Open)	OFF (Open)	ON (Closed)
Shift solenoid valve B	ON (Closed)	ON (Closed)	OFF (Open)	OFF (Open)

TCM TERMINALS AND REFERENCE VALUE

Remarks: Specification data are reference values.

Terminal No.	Wire color	Item	Condition		Judgement standard (Approx.)
12	L/Y	Shift solenoid valve B		When shift solenoid valve B operates. (When driving in “D1 ” or “D2 ”.)	Battery voltage
				When shift solenoid valve B does not operate. (When driving in “D3 ” or “D4 ”.)	0V

ON BOARD DIAGNOSIS LOGIC

Diagnostic trouble code	Malfunction is detected when...	Check items (Possible cause)
: SFT SOL B/CIRC	TCM detects an improper voltage drop when it tries to operate the solenoid valve.	● Harness or connectors (The solenoid circuit is open or shorted.) ● Shift solenoid valve B
: P0755		

DIAGNOSTIC TROUBLE CODE (DTC) CONFIRMATION PROCEDURE

CAUTION:
Always drive vehicle at a safe speed.

NOTE:
If "DIAGNOSTIC TROUBLE CODE CONFIRMATION PROCEDURE" has been previously conducted, always turn ignition switch "OFF" and wait at least 5 seconds before conducting the next test.
After the repair, perform the following procedure to confirm the malfunction is eliminated.

With CONSULT-II

1. Turn ignition switch "ON" and select "DATA MONITOR" mode for "ENGINE" with CONSULT-II.
2. Start engine.
3. Drive vehicle in D position and allow the transmission to shift 1 → 2 → 3 ("GEAR").
4. If DTC is detected, go to AT-181, "Diagnostic Procedure" .

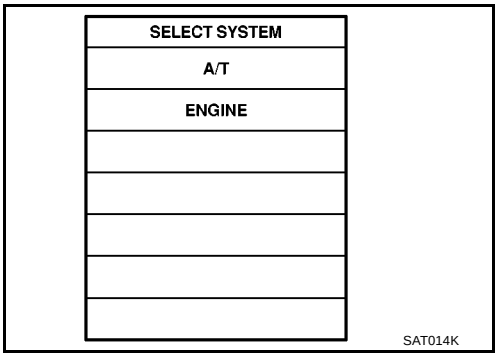

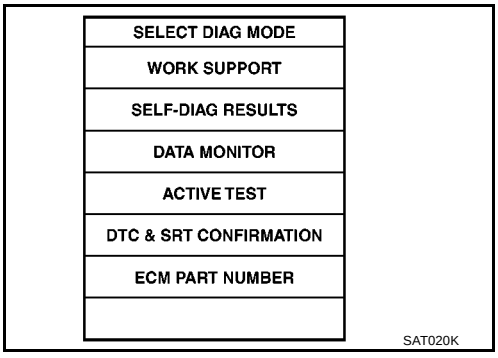

With GST

Follow the procedure "With CONSULT-II".

Wiring Diagram — AT — SSV/B

ECS0098I

AT-SSV/B-01

: DETECTABLE LINE FOR DTC

: NON-DETECTABLE LINE FOR DTC

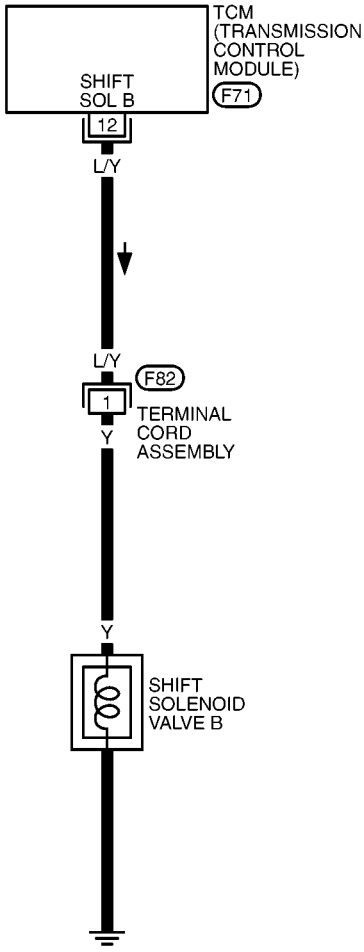

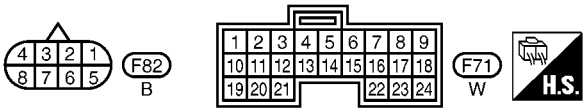

YAT380A

Diagnostic Procedure

ECS0098J

1. CHECK VALVE RESISTANCE

1. Turn ignition switch to “OFF” position.
2. Disconnect terminal cord assembly connector in engine compartment.
3. Check resistance between terminal 1 and ground.

Resistance: 5 - 20Ω

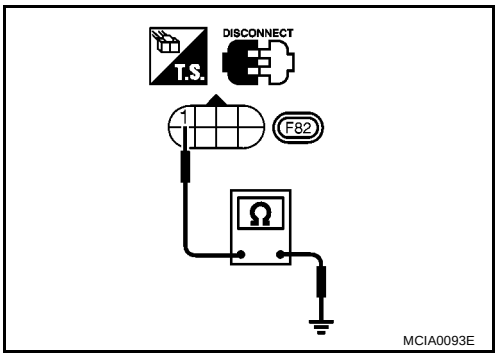

OK or NG

OK >> GO TO 2

NG >> 1. Remove control valve assembly. Refer to AT-410, "Control Valve Assembly and Accumulators" .
2. Check the following items:
- Shift solenoid valve B
  Refer to AT-182, "Component Inspection" .
- Harness of terminal cord assembly for short or open

2. CHECK POWER SOURCE CIRCUIT

1. Turn ignition switch to “OFF” position.
2. Disconnect TCM harness connector.
3. Check continuity between terminal 12 and TCM harness connector terminal 1.

Continuity should exist.

If OK, check harness for short to ground and short to power.

4. Reinstall any part removed.

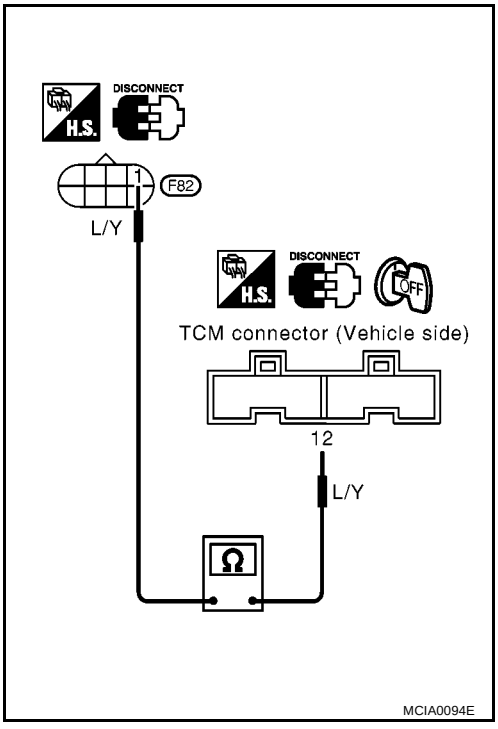

OK or NG

OK >> GO TO 3

NG >> Repair open circuit or short to ground or short to power in harness or connectors.

3. CHECK DTC

Perform AT-179, "DIAGNOSTIC TROUBLE CODE (DTC) CONFIRMATION PROCEDURE" .

OK or NG

OK >> **INSPECTION END**

NG >> 1. Perform TCM input/output signal inspection.
2. If NG, recheck TCM pin terminals for damage or loose connection with harness connector.

Component Inspection

ECS0098K

SHIFT SOLENOID VALVE B

- For removal, refer to AT-410, "Control Valve Assembly and Accumulators" .

Resistance Check

- Check resistance between two terminals.

Solenoid valve	Terminal No.		Resistance (Approx.)
Shift solenoid valve B	1	Ground	5 - 20Ω

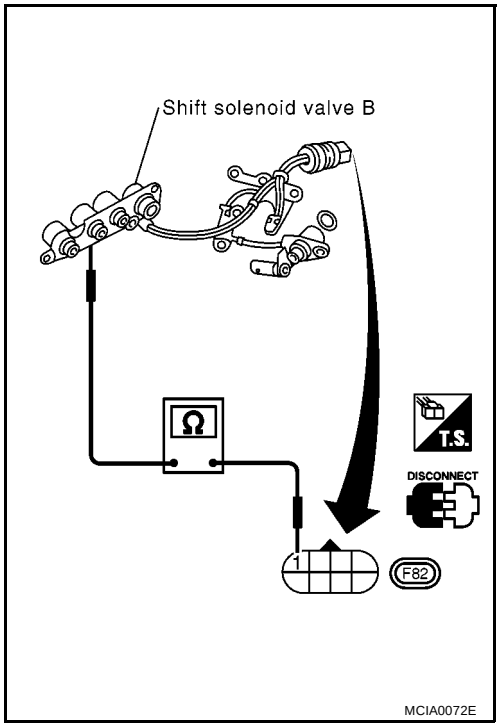

Operation Check

- Check solenoid valve by listening for its operating sound while applying battery voltage to the terminal and ground.

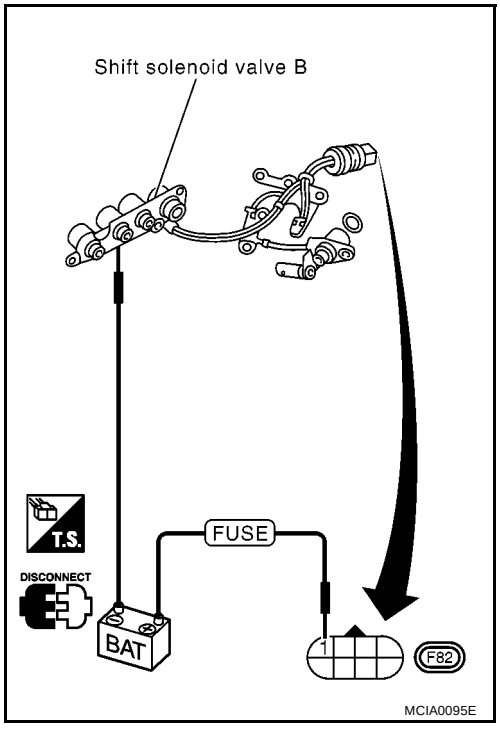

DTC P1705 ACCELERATOR PEDAL POSITION (APP) SENSOR

PFP:22620

Description

ECS0098L

- Accelerator pedal position (APP) sensor (throttle position sensor),

Electric throttle control actuator consists of throttle control motor, acceleration pedal position sensor, throttle position sensor, etc. The actuator sends a signal to the TCM.

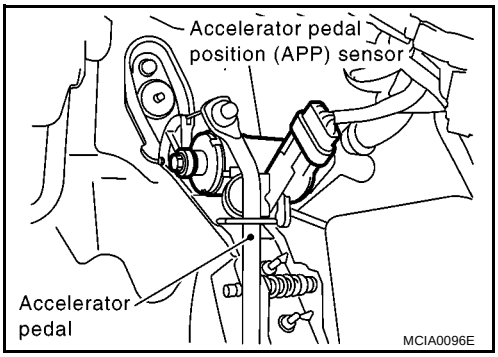

CONSULT-II REFERENCE VALUE IN DATA MONITOR MODE

Remarks: Specification data are reference values.

Monitor item	Condition	Specification
Throttle position sensor (Accelerator pedal position (APP) sensor)	Fully-closed throttle	Approximately 0.5V
	Fully-open throttle	Approximately 4V

TCM TERMINALS AND REFERENCE VALUE

Remarks: Specification data are reference values.

Terminal No.	Wire color	Item	Condition		Judgement standard (Approx.)
32	R	Throttle position sensor (Power source)	ON or OFF	When turning ignition switch to “ON”	4.5 - 5.5V
				When turning ignition switch to “OFF”	0V
41	GY	Throttle position sensor	ON	When depressing accelerator pedal slowly after warming up engine. (Voltage rises gradually in response to throttle position.)	Fully-closed throttle: 0.5V Fully-open throttle: 4V
42	B	Ground (Throttle position sensor)	—	—	—

ON BOARD DIAGNOSIS LOGIC

Diagnostic trouble code	Malfunction is detected when...	Check items (Possible cause)
: TP SEN/CIRC A/T : P1705	TCM receives an excessively low or high voltage from the sensor.	● Harness or connectors (The sensor circuit is open or shorted.) ● Accelerator pedal position (APP) sensor Throttle position sensor

DIAGNOSTIC TROUBLE CODE (DTC) CONFIRMATION PROCEDURE

CAUTION:
Always drive vehicle at a safe speed.

NOTE:
If "DIAGNOSTIC TROUBLE CODE CONFIRMATION PROCEDURE" has been previously conducted, always turn ignition switch "OFF" and wait at least 5 seconds before conducting the next test.
After the repair, perform the following procedure to confirm the malfunction is eliminated.

With CONSULT-II

1. Turn ignition switch "ON" and select "DATA MONITOR" mode for "A/T" with CONSULT-II.

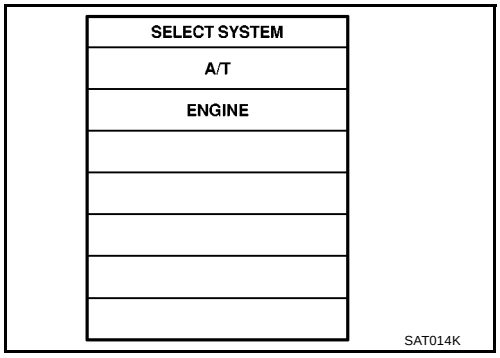

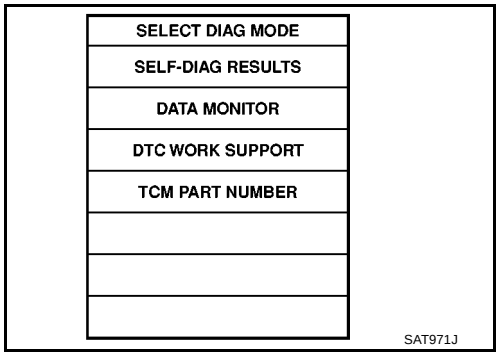

2. Check the following.

Accelerator pedal condition	THRTL POS SEN
Fully released	Less than 4.7V
Partially depressed	0.1 - 4.6V
Fully depressed	1.9 - 4.6V

If the check result is NG, go to AT-187, "Diagnostic Procedure" .
If the check result is OK, go to following step.

3. Turn ignition switch "ON" and select "DATA MONITOR" mode for "ENGINE" with CONSULT-II.
4. Start engine and maintain the following conditions for at least 3 consecutive seconds. Then release accelerator pedal completely.
VHCL SPEED SE: 10 km/h (6 MPH) or more
THRTL POS SEN: Approximately 3V or less
Selector lever: D position (OD "ON")
If the check result is NG, go to AT-187, "Diagnostic Procedure" .
If the check result is OK, go to following step.

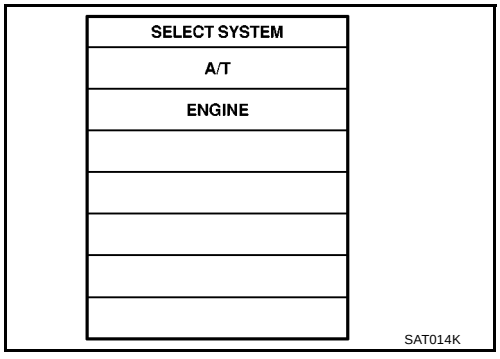

5. Maintain the following conditions for at least 3 consecutive seconds. Then release accelerator pedal completely.
   VHCL SPEED SE: 10 km/h (6 MPH) or more
   Accelerator pedal: Wide open throttle
   Selector lever: D position (OD “ON”)

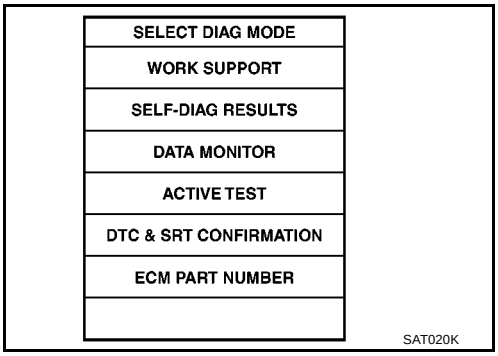

With GST

Follow the procedure “With CONSULT-II”.

Wiring Diagram — AT — TPS

ECS0098M

AT-TPS-01

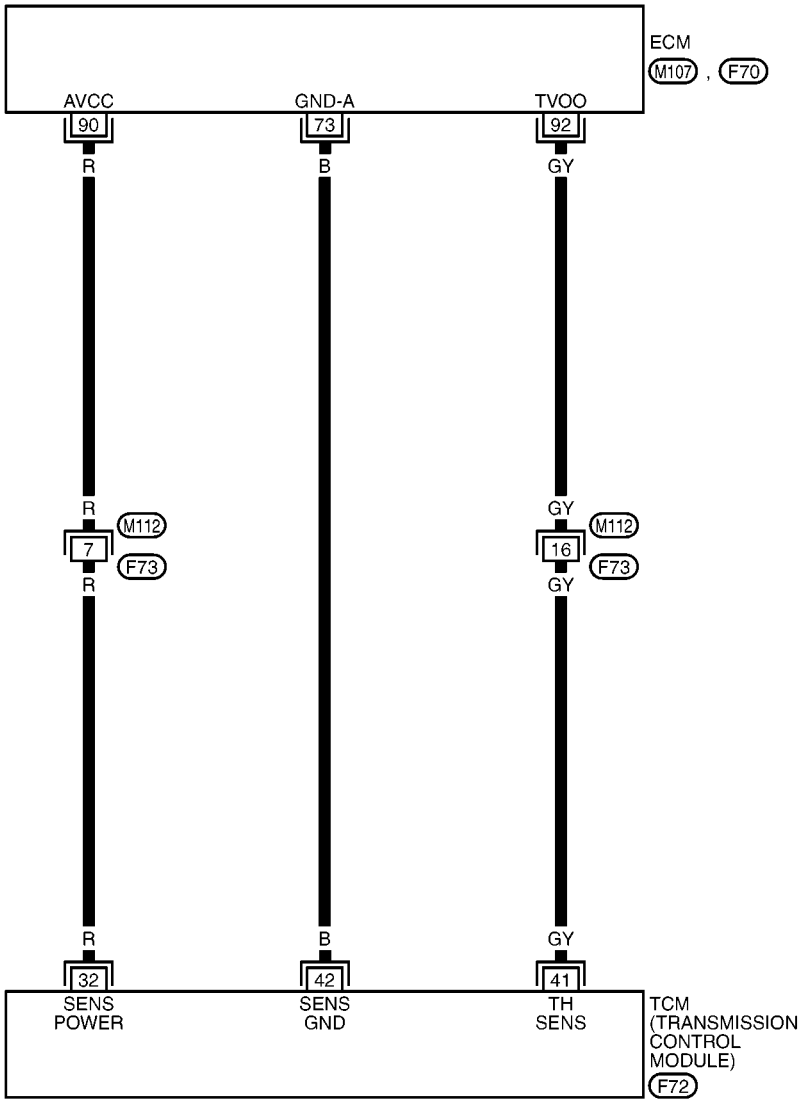

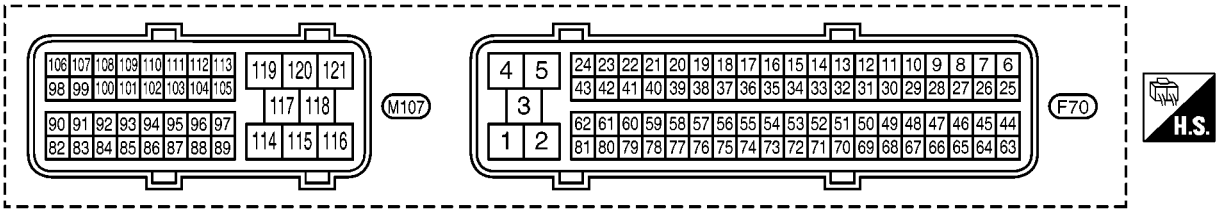

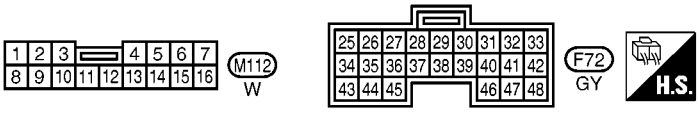

YAT381A

Diagnostic Procedure

ECS0098N

1. CHECK DTC WITH ECM

Refer to EC-55, "Emission-related Diagnostic Information" .

OK or NG

OK (With CONSULT-II)>>GO TO 2
OK (Without CONSULT-II)>>GO TO 3
NG >> Check accelerator pedal position sensor circuit for engine control. Refer to EC-79, "TROUBLE DIAGNOSIS" .

2. CHECK INPUT SIGNAL (WITH CONSULT-II)

With CONSULT-II

1. Turn ignition switch to “ON” position.
   (Do not start engine.)
2. Select “TCM INPUT SIGNALS” in “DATA MONITOR” mode for “A/T” with CONSULT-II.

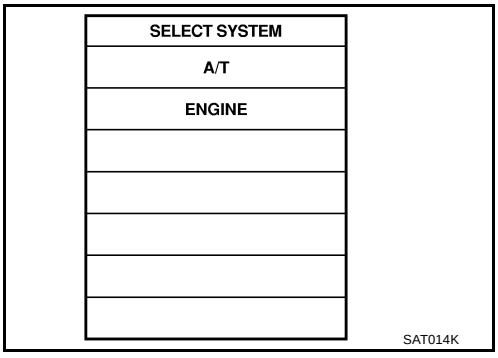

3. Read out the value of “THRTL POS SEN”.

   Voltage:
   Fully-closed throttle: Approximately 0.5V
   Fully-open throttle: Approximately 4V

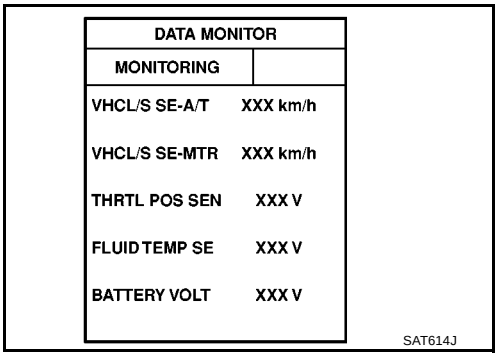

OK or NG

OK >> GO TO 4
NG >> Check harness for short or open between ECM and TCM regarding throttle position sensor circuit. (Main harness)

3. CHECK INPUT SIGNAL (WITHOUT CONSULT-II)

Without CONSULT-II

1. Turn ignition switch to “ON” position.
   (Do not start engine.)
2. Check voltage between TCM terminals 41 and 42 while accelerator pedal is depressed slowly.

   Voltage:

   Fully-closed throttle valve: Approximately 0.5V

   Fully-open throttle valve: Approximately 4V

   (Voltage rises gradually in response to throttle position)

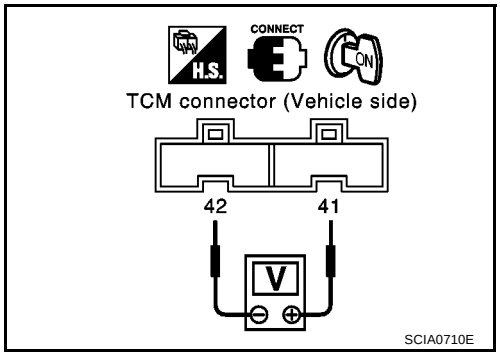

OK or NG

OK >> GO TO 4
NG >> Check harness for short or open between ECM and TCM regarding throttle position sensor circuit. (Main harness)

4. CHECK DTC

Perform AT-184, "DIAGNOSTIC TROUBLE CODE (DTC) CONFIRMATION PROCEDURE" .

OK or NG

OK >> **INSPECTION END**
NG >> 1. Perform TCM input/output signal inspection.
2. If NG, recheck TCM pin terminals for damage or loose connection with harness connector.

DTC P1760 OVERRUN CLUTCH SOLENOID VALVE

PFP:31940

Description

ECS0098O

The overrun clutch solenoid valve is activated by the TCM in response to signals sent from the inhibitor switch, overdrive control switch, vehicle speed and throttle position sensors. The overrun clutch operation will then be controlled.

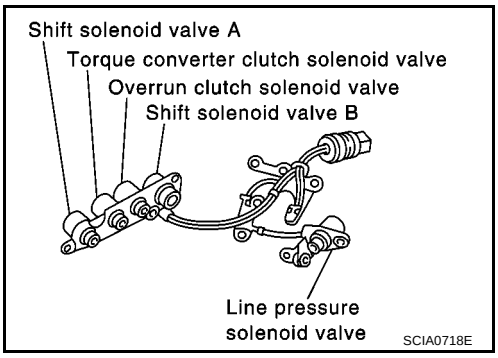

TCM TERMINALS AND REFERENCE VALUE

Remarks: Specification data are reference values.

Terminal No.	Wire color	Item	Condition		Judgement standard (Approx.)
20	L/B	Overrun clutch solenoid valve		When overrun clutch solenoid valve operates.	Battery voltage
				When overrun clutch solenoid valve does not operate.	0V

ON BOARD DIAGNOSIS LOGIC

Diagnostic trouble code	Malfunction is detected when...	Check items (Possible cause)
: O/R CLTCH SOL/CIRC	TCM detects an improper voltage drop when it tries to operate the solenoid valve.	● Harness or connectors (The solenoid circuit is open or shorted.) ● Overrun clutch solenoid valve
GST : P1760		

DIAGNOSTIC TROUBLE CODE (DTC) CONFIRMATION PROCEDURE

CAUTION:
Always drive vehicle at a safe speed.

NOTE:
If "DIAGNOSTIC TROUBLE CODE CONFIRMATION PROCEDURE" has been previously conducted, always turn ignition switch "OFF" and wait at least 5 seconds before conducting the next test.
TESTING CONDITION:
Always drive vehicle on a level road to improve accuracy of test.
After the repair, perform the following procedure to confirm the malfunction is eliminated.

With CONSULT-II

1. Turn ignition switch "ON" and select "DATA MONITOR" mode for "ENGINE" with CONSULT-II.
2. Start engine.
3. Accelerate vehicle to a speed of more than 10 km/h (6 MPH) with "D" position (OD "ON").
4. Release accelerator pedal completely with "D" position (OD "OFF").
5. If DTC is detected, go to AT-192, "Diagnostic Procedure" .

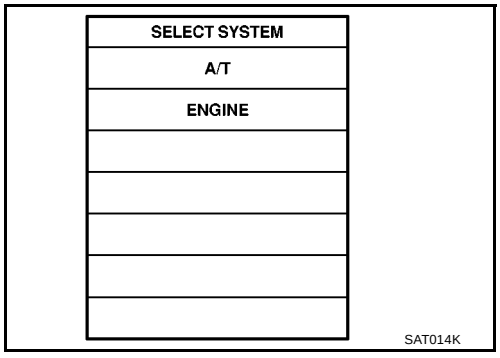

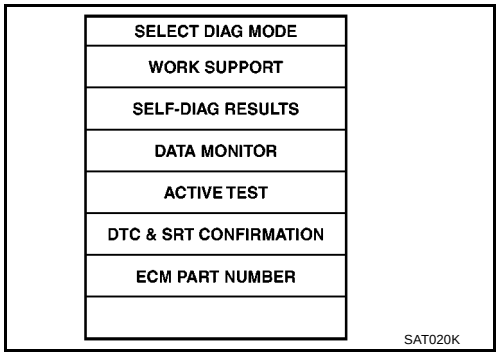

With GST

Follow the procedure "With CONSULT-II".

Wiring Diagram — AT — OVRCSV

ECS0098P

AT-OVRCSV-01

: DETECTABLE LINE FOR DTC
: NON-DETECTABLE LINE FOR DTC

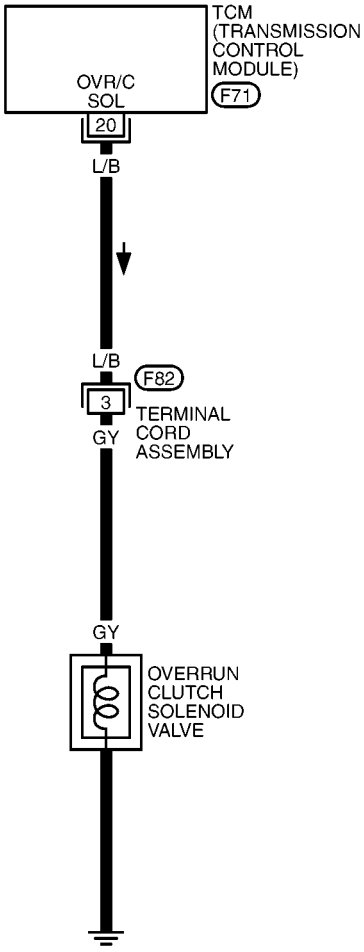

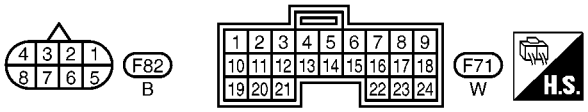

YAT382A

Diagnostic Procedure

ECS0098Q

1. CHECK VALVE RESISTANCE

1. Turn ignition switch to “OFF” position.
2. Disconnect terminal cord assembly connector in engine compartment.
3. Check resistance between terminal 3 and ground.

Resistance: 20 - 30Ω

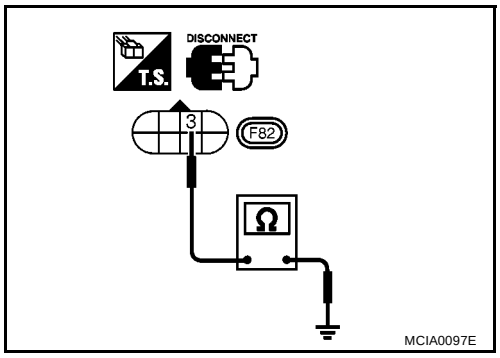

OK or NG

OK >> GO TO 2

NG >> 1. Remove control valve assembly. Refer to AT-410, "Control Valve Assembly and Accumulators" .
2. Check the following items:
- Overrun clutch solenoid valve
Refer to AT-193, "Component Inspection" .
- Harness of terminal cord assembly for short or open

2. CHECK POWER SOURCE CIRCUIT

1. Turn ignition switch to “OFF” position.
2. Disconnect TCM harness connector.
3. Check continuity between terminal 3 and TCM harness connector terminal 20.

Continuity should exist.

If OK, check harness for short to ground and short to power.

4. Reinstall any part removed.

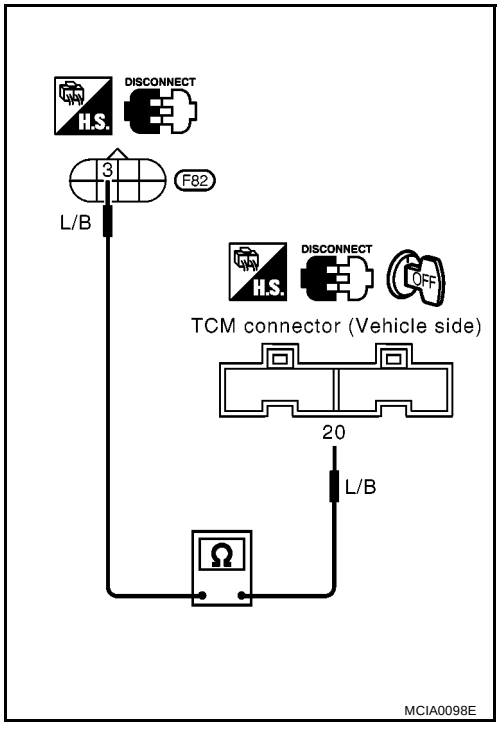

OK or NG

OK >> GO TO 3

NG >> Repair open circuit or short to ground or short to power in harness or connectors.

3. CHECK DTC

Perform AT-190, "DIAGNOSTIC TROUBLE CODE (DTC) CONFIRMATION PROCEDURE" .

OK or NG

OK >> **INSPECTION END**

NG >> 1. Perform TCM input/output signal inspection.
2. If NG, recheck TCM pin terminals for damage or loose connection with harness connector.

Component Inspection

ECS0098R

OVERRUN CLUTCH SOLENOID VALVE

- For removal, refer to AT-410, "Control Valve Assembly and Accumulators" .

Resistance Check

- Check resistance between two terminals.

Solenoid valve	Terminal No.		Resistance (Approx.)
Overrun clutch solenoid valve	3	Ground	20 - 30Ω

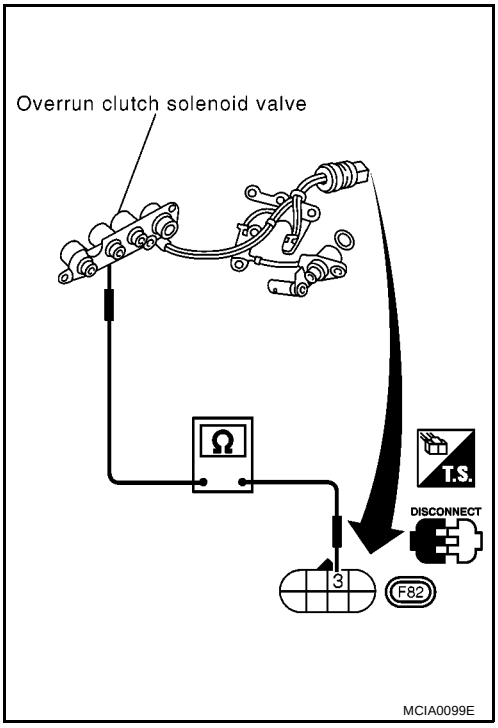

Operation Check

- Check solenoid valve by listening for its operating sound while applying battery voltage to the terminal and ground.

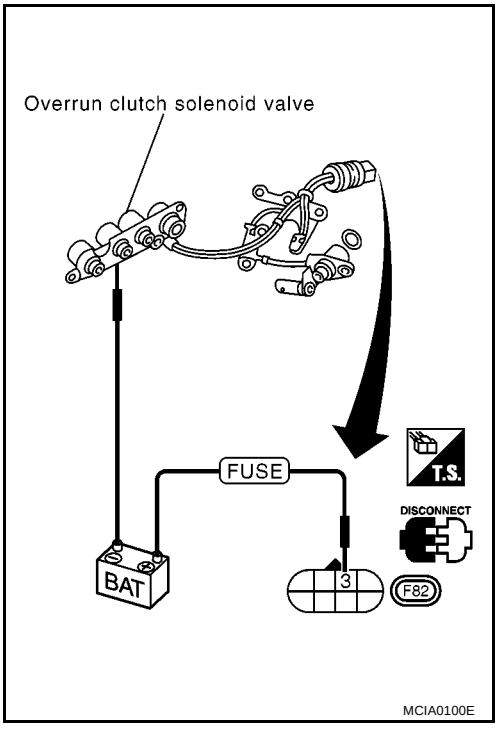

DTC U1000 CAN COMMUNICATION LINE

PFP:31940

Description

ECS0098S

CAN (Controller Area Network) is a serial communication line for real time application. It is an on-vehicle multiplex communication line with high data communication speed and excellent error detection ability. Many electronic control units are equipped onto a vehicle, and each control unit shares information and links with other control units during operation (not independent). In CAN communication, control units are connected with 2 communication lines (CAN H line, CAN L line) allowing a high rate of information transmission with less wiring. Each control unit transmits/receives data but selectively reads required data only.

TCM TERMINALS AND REFERENCE VALUE

Remarks: Specification data are reference values.

Terminal No.	Wire color	Item	Condition		Judgement standard (Approx.)
5	L	CAN(H)	—	—	—
6	R	CAN(L)	—	—	—

*: This terminal is connected to the ECM.

On Board Diagnosis Logic

ECS0098T

Diagnostic trouble code	Malfunction is detected when...	Check items (Possible cause)
:A/T COMM LINE**	The ECM-AT communication line is open or shorted.	● Harness or connectors (The solenoid circuit is open or shorted.) ● Overrun clutch solenoid valve
:Judgement flicker		

**:A/T COMMLINE means DTC U1000 CAN communication line.

DTC Confirmation Procedure

ECS0098U

After the repair, perform the following procedure to confirm the malfunction is eliminated.

WITH CONSULT-II

1. Turn ignition switch “ON”.
2. Select “DATA MONITOR” mode for “ENGINE” with CONSULT-II.
3. Wait at least 6 seconds or start engine and wait for at least 6 seconds.
4. If DTC is detected, go to AT-196, "Diagnostic Procedure" .

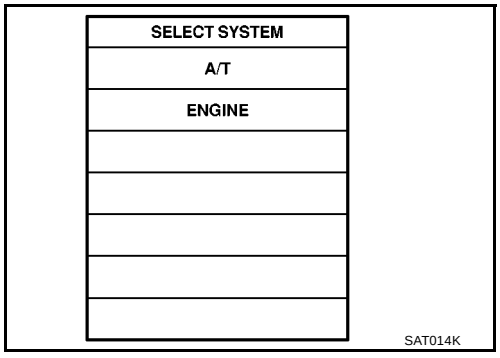

WITHOUT CONSULT-II

1. Turn ignition switch “ON”.
2. Wait at least 6 seconds or start engine and wait at least 6 seconds.
3. Perform self-diagnosis.
   Refer to AT-51, "TCM SELF-DIAGNOSTIC PROCEDURE (NO TOOLS)" .
4. If DTC is detected, go to AT-196, "Diagnostic Procedure" .

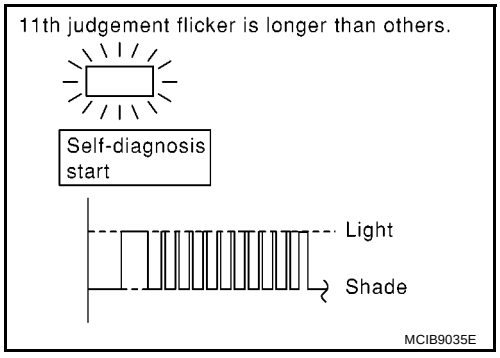

Wiring Diagram — AT

ECS0098V

AT-CAN-01

: DATA LINE

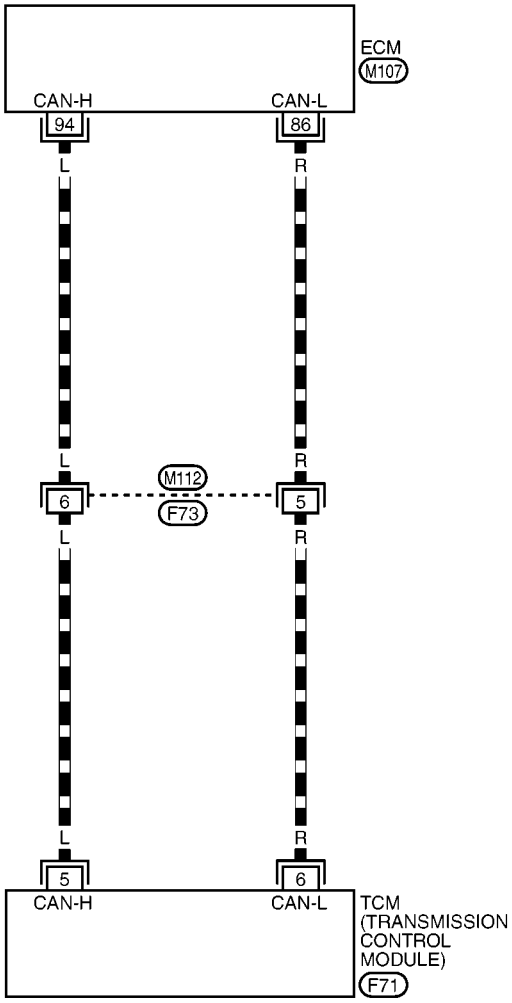

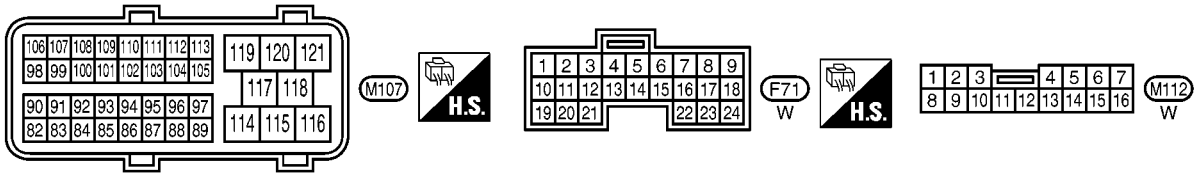

YAT383A

Diagnostic Procedure

ECS0098W

1. CHECK CAN COMMUNICATION CIRCUIT

With CONSULT-II

1. Turn ignition switch to “ON” position. (Do not start engine.)
2. Select “DATA MONITOR” mode for “A/T” with CONSULT-II.
3. The “CAN COMM CIRCUIT” is detected.

Yes or No?

Yes >> Print out CONSULT-II screen, GO TO 2.
No >> INSPECTION END

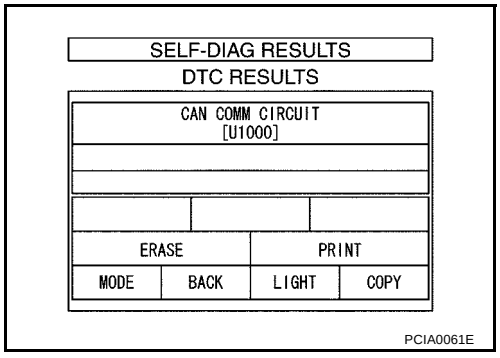

2. CHECK CAN COMMUNICATION SIGNALS

With CONSULT-II

1. Turn ignition switch to “ON” position. (Do not start engine.)
2. Select “CAN COMM SIGNALS” in “DATA MONITOR” mode for “A/T” with CONSULT-II.

CAN Communication Signals

Normal conditions	Abnormal conditions (examples)
CAN COMM: OK	CAN COMM: OK
CAN CIRC 1: OK	CAN CIRC 1: UNKWN
CAN CIRC 2: OK	CAN CIRC 2: UNKWN
CAN CIRC 3: UNKWN	CAN CIRC 3: UNKWN
CAN CIRC 4: OK	CAN CIRC 4: UNKWN
CAN CIRC 5: UNKWN	CAN CIRC 5: UNKWN

>> Print out CONSULT-II screen, go to EL-459, “CAN Communication”.

DTC BATT/FLUID TEMP SEN (A/T FLUID TEMP SENSOR CIRCUIT AND TCM POWER SOURCE)

PFP:31940

Description

ECS0098X

The A/T fluid temperature sensor detects the A/T fluid temperature and sends a signal to the TCM.

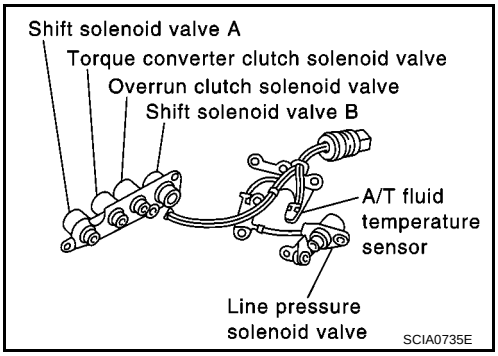

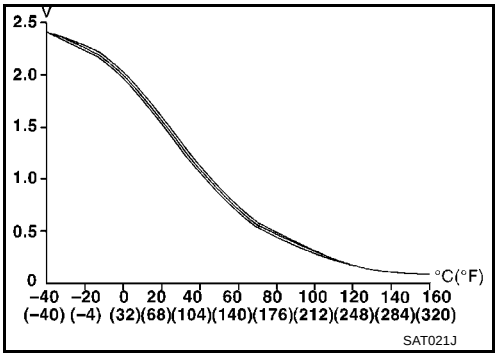

CONSULT-II REFERENCE VALUE IN DATA MONITOR MODE

Remarks: Specification data are reference values.

Monitor item	Condition	Specification (Approximately)	
A/T fluid temperature sensor	Cold [20°C (68°F)] ↓ Hot [80°C (176°F)]	1.5V ↓ 0.5V	2.5 kΩ ↓ 0.3 kΩ

TCM TERMINALS AND REFERENCE VALUE

Remarks: Specification data are reference values.

Terminal No.	Wire color	Item	Condition		Judgement standard (Approx.)
10	BR/R	Power source		When turning ignition switch to “ON”.	Battery voltage
				When turning ignition switch to “OFF”.	0V
19	BR/R	Power source		Same as No. 10	
28	R/B	Power source (Memory back-up)	or	When turning ignition switch to “OFF”.	Battery voltage
				When turning ignition switch to “ON”.	Battery voltage
42	B	Ground (A/T fluid temperature sensor)	—	—	—
47	BR	A/T fluid temperature sensor		When ATF temperature is 20°C (68°F).	1.5V
				When ATF temperature is 80°C (176°F).	0.5V

ON BOARD DIAGNOSIS LOGIC

Diagnostic trouble code	Malfunction is detected when...	Check items (Possible cause)
: BATT/FLUID TEMP SEN	TCM receives an excessively low or high voltage from the sensor.	● Harness or connectors (The sensor circuit is open or shorted.) ● A/T fluid temperature sensor
: 8th judgement flicker		

DIAGNOSTIC TROUBLE CODE (DTC) CONFIRMATION PROCEDURE

After the repair, perform the following procedure to confirm the malfunction is eliminated.

With CONSULT-II

1. Start engine.
2. Select “DATA MONITOR” mode for “A/T” with CONSULT-II.
3. Drive vehicle under the following conditions:
   Selector lever in “D”, vehicle speed higher than 20 km/h (12 MPH).
4. If DTC is detected, go to AT-200, "Diagnostic Procedure" .

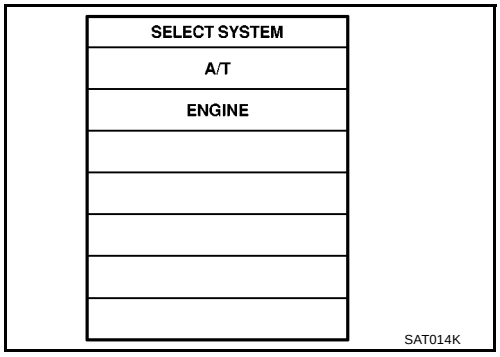

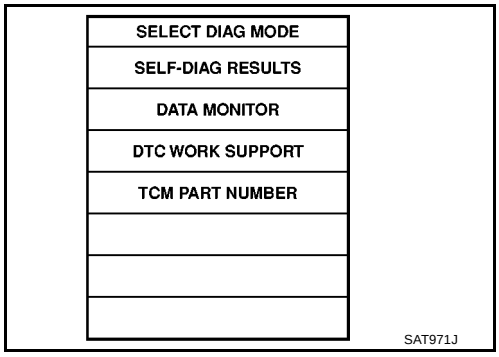

Without CONSULT-II

1. Start engine.
2. Drive vehicle under the following conditions:
   Selector lever in “D”, vehicle speed higher than 20 km/h (12 MPH).
3. Perform self-diagnosis.
   Refer to AT-51, "TCM SELF-DIAGNOSTIC PROCEDURE (NO TOOLS)" .
4. If DTC is detected, go to AT-200, "Diagnostic Procedure" .

Wiring Diagram — AT — BA/FTS

ECS0098Y

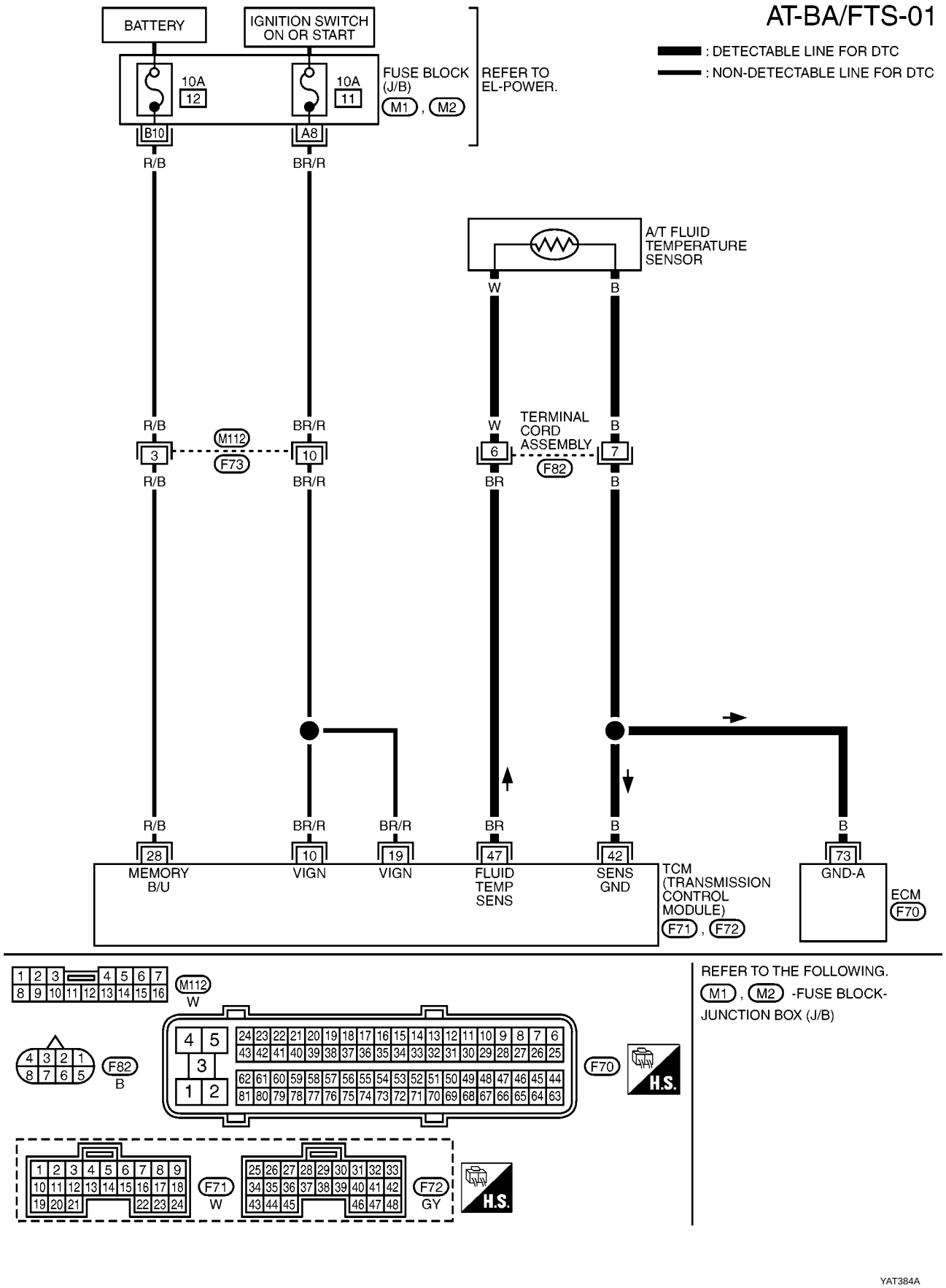

Diagnostic Procedure

ECS0098Z

1. CHECK TCM POWER SOURCE

1. Turn ignition switch to “ON” position.
   (Do not start engine.)
2. Check voltage between TCM terminals 10, 19, 28 and ground.

   Voltage: Battery voltage

3. Turn ignition switch to “OFF” position.
4. Check voltage between TCM terminal 28 and ground.

   Voltage: Battery voltage

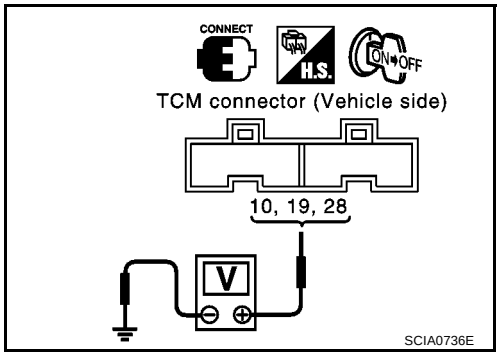

OK or NG

OK >> GO TO 2
NG >> Check the following items:

- Harness for short or open between ignition switch and TCM (Main harness)
- Ignition switch and fuse
  Refer to EL-11, “Power Supply Routing”.

2. CHECK A/T FLUID TEMPERATURE SENSOR WITH TERMINAL CORD ASSEMBLY

1. Turn ignition switch to “OFF” position.
2. Disconnect terminal cord assembly connector in engine compartment.
3. Check resistance between terminals 6 and 7 when A/T is cold.

   Resistance: Cold [20°C (68°F)]
   Approximately 2.5 kΩ

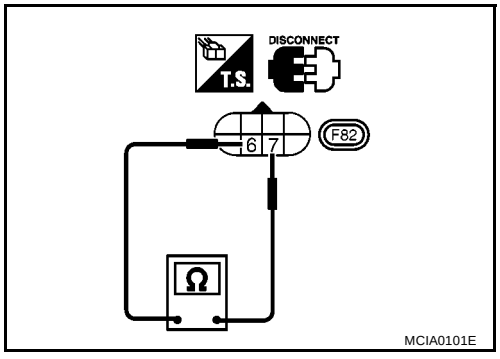

4. Reinstall any part removed.

OK or NG

OK (With CONSULT-II)>>GO TO 3
OK (Without CONSULT-II)>>GOTO4
NG >> 1. Remove oil pan refer to AT-410, "REMOVAL" .
2. Check the following items:
- A/T fluid temperature sensor
  Refer to AT-202, "Component Inspection" .
- Harness of terminal cord assembly for short or open

3. CHECK INPUT SIGNAL OF A/T FLUID TEMPERATURE SENSOR (WITH CONSULT-II)

With CONSULT-II

1. Start engine.
2. Select “TCM INPUT SIGNALS” in “DATA MONITOR” mode for “A/T” with CONSULT-II.
3. Read out the value of “FLUID TEMP SE”.

Voltage:

Cold [20°C (68°F)] → Hot [80°C (176°F)]

Approximately 1.5V → 0.5V

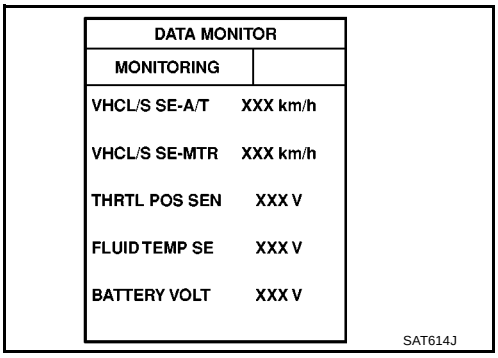

DATA MONITOR	
MONITORING	
VHCL/S SE-A/T	XXX km/h
VHCL/S SE-MTR	XXX km/h
THRTL POS SEN	XXX V
FLUID TEMP SE	XXX V
BATTERY VOLT	XXX V

SAT614J

OK or NG

OK >> GO TO 5

NG >> Check the following item:

- Harness for short or open between TCM, ECM and terminal cord assembly (Main harness)
- Ground circuit for ECM
  Refer to EC-139, "POWER SUPPLY CIRCUIT FOR ECM" .

4. CHECK INPUT SIGNAL OF A/T FLUID TEMPERATURE SENSOR (WITHOUT CONSULT-II)

Without CONSULT-II

1. Start engine.
2. Check voltage between TCM terminal 47 and ground while warming up A/T.

Voltage:

Cold [20°C (68°F)] → Hot [80°C (176°F)]

Approximately 1.5V → 0.5V

3. Turn ignition switch to “OFF” position.
4. Disconnect TCM harness connector.

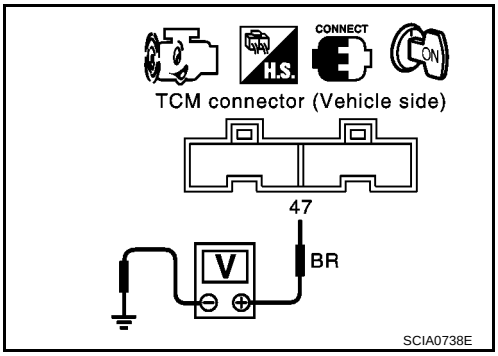

5. Check resistance between terminal 42 and ground.

Continuity should exist.

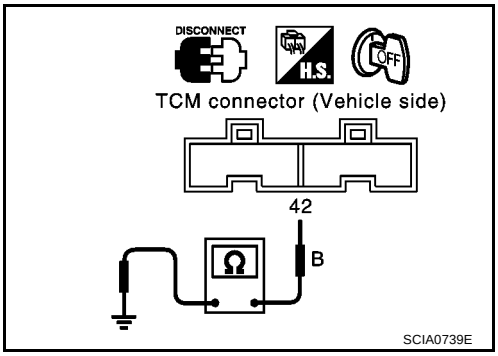

OK or NG

OK >> GO TO 5

NG >> Check the following item:

- Harness for short or open between TCM, ECM and terminal cord assembly (Main harness)
- Ground circuit for ECM
  Refer to EC-139, "POWER SUPPLY CIRCUIT FOR ECM" .

5. CHECK DTC

Perform AT-198, "DIAGNOSTIC TROUBLE CODE (DTC) CONFIRMATION PROCEDURE" .

OK or NG

OK >> **INSPECTION END**

NG >> 1. Perform TCM input/output signal inspection.

2. If NG, recheck TCM pin terminals for damage or loose connection with harness connector.

Component Inspection

ECS00990

A/T FLUID TEMPERATURE SENSOR

- For removal, refer to AT-410, "Control Valve Assembly and Accumulators" .
- Check resistance between two terminals while changing temperature as shown at right.

Temperature °C (°F)	Resistance
20 (68)	Approximately 2.5 kΩ
80 (176)	Approximately 0.3 kΩ

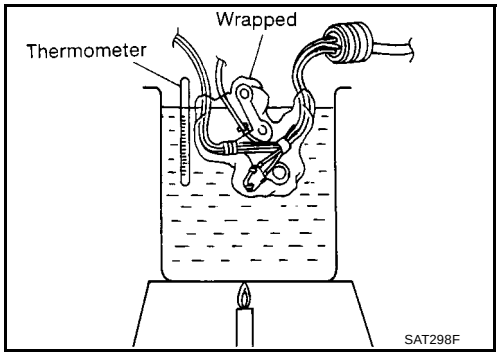

DTC VEHICLE SPEED SENSOR MTR

PFP:24814

Description

ECS00991

The vehicle speed sensor·MTR is built into the speedometer assembly. The sensor functions as an auxiliary device to the revolution sensor when it is malfunctioning. The TCM will then use a signal sent from the vehicle speed sensor·MTR.

TCM TERMINALS AND REFERENCE VALUE

Remarks: Specification data are reference values.

Terminal No.	Wire color	Item	Condition		Judgement standard (Approx.)
40	L/B	Vehicle speed sensor		When moving vehicle at 2 to 3 km/h (1 to 2 MPH) for 1 m (3 ft) or more.	Voltage varies between 0V and more than 4.5V

ON BOARD DIAGNOSIS LOGIC

Diagnostic trouble code	Malfunction is detected when...	Check items (Possible cause)
: VHCL SPEED SEN·MTR	TCM does not receive the proper voltage signal from the sensor.	● Harness or connectors (The sensor circuit is open or shorted.) ● Vehicle speed sensor
: 2nd judgement flicker		

DIAGNOSTIC TROUBLE CODE (DTC) CONFIRMATION PROCEDURE

CAUTION:

- **Always drive vehicle at a safe speed.**
- **If conducting this "DTC CONFIRMATION PROCEDURE" again, always turn ignition switch "OFF" and wait at least 5 seconds before continuing.**

After the repair, perform the following procedure to confirm the malfunction is eliminated.

With CONSULT-II

1. Turn ignition switch "ON" and select "DATA MONITOR" mode for "A/T" with CONSULT-II.

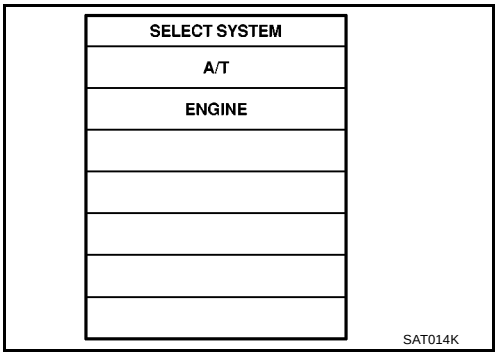

2. Start engine and accelerate vehicle from 0 to 25 km/h (0 to 16 MPH).
3. If DTC is detected, go to AT-206, "Diagnostic Procedure" .

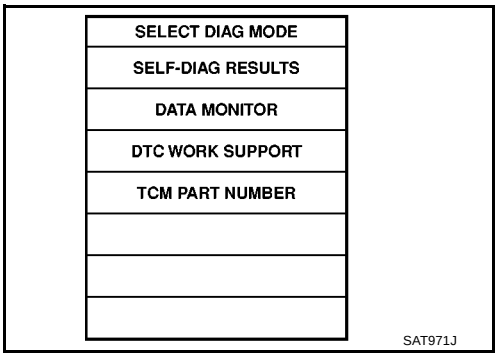

Without CONSULT-II

1. Start engine.
2. Drive vehicle under the following conditions:
   Selector lever in “D” and vehicle speed higher than 25 km/h (16 MPH).
3. Perform self-diagnosis.
   Refer to AT-51, "TCM SELF-DIAGNOSTIC PROCEDURE (NO TOOLS)" .
4. If DTC is detected, go to AT-206, "Diagnostic Procedure" .

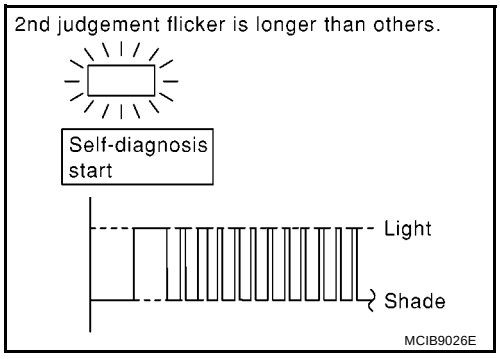

Wiring Diagram — AT — VSSMTR

ECS00992

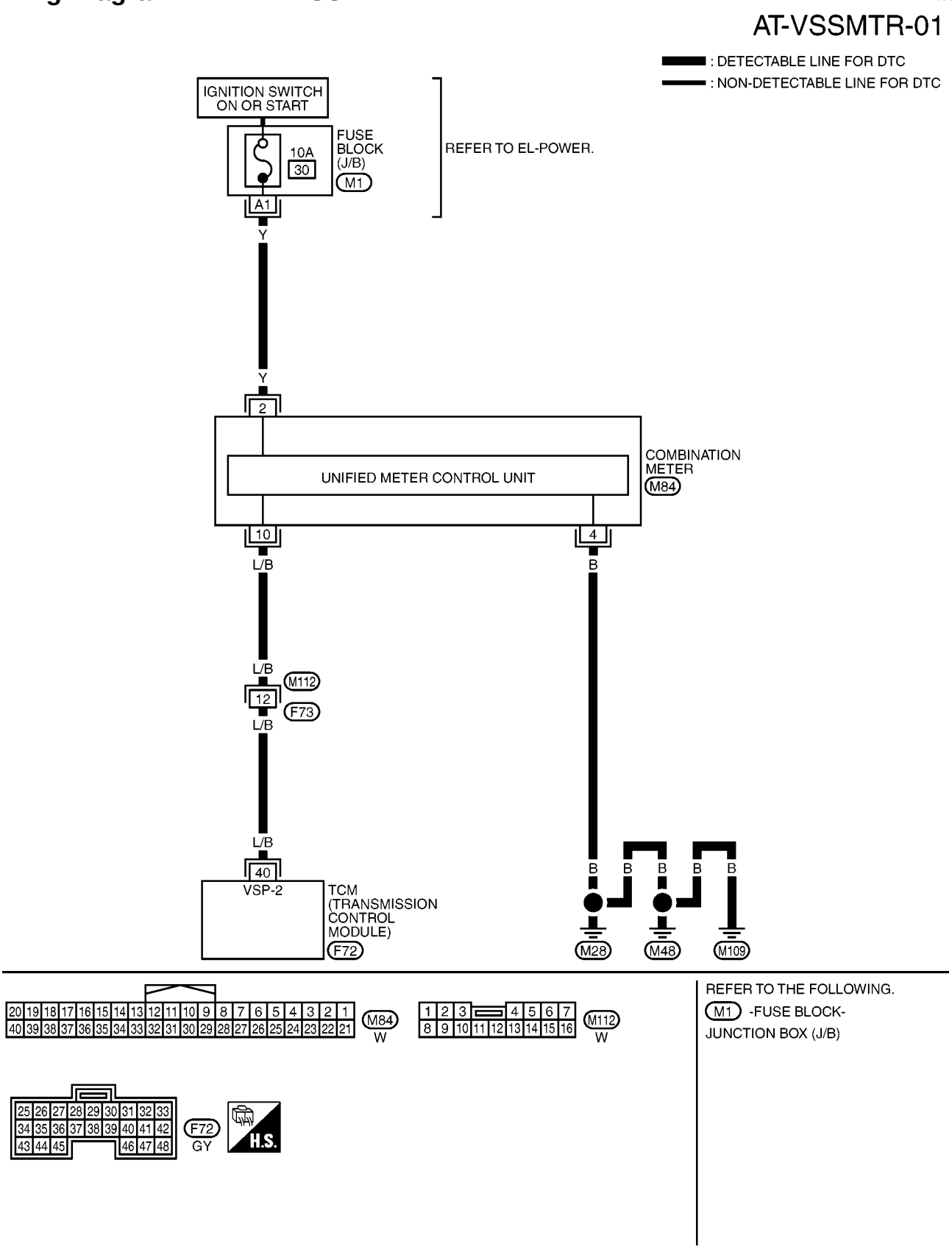

Diagnostic Procedure

ECS00993

1. CHECK INPUT SIGNAL

With CONSULT-II

1. Start engine.
2. Select “TCM INPUT SIGNALS” in “DATA MONITOR” mode for “A/T” with CONSULT-II.
3. Read out the value of “VHCL/S SE·MTR” while driving. Check the value changes according to driving speed.

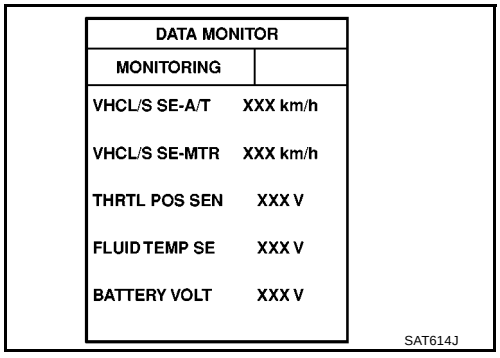

DATA MONITOR	
MONITORING	
VHCL/S SE-A/T	XXX km/h
VHCL/S SE-MTR	XXX km/h
THRTL POS SEN	XXX V
FLUID TEMP SE	XXX V
BATTERY VOLT	XXX V

SAT614J

Without CONSULT-II

1. Start engine.
2. Check voltage between TCM terminal 40 and ground while driving at 2 to 3 km/h (1 to 2 MPH) for 1 m (3 ft) or more.

Voltage: Voltage varies between less than 1V and more than 4.5V.

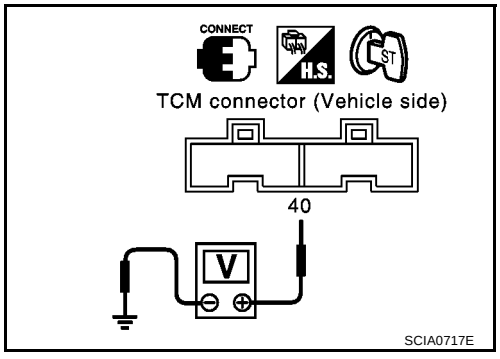

SCIA0717E

OK or NG

OK >> GO TO 2
NG >> Check the following items:

- Vehicle speed sensor and ground circuit for vehicle speed sensor
  Refer to EL-110, “Trouble Diagnosis”.
- Harness for short or open between TCM and vehicle speed sensor (Main harness)

2. CHECK DTC

Perform AT-203, "DIAGNOSTIC TROUBLE CODE (DTC) CONFIRMATION PROCEDURE" .

OK or NG

OK >> **INSPECTION END**
NG >> 1. Perform TCM input/output signal inspection.
2. If NG, recheck TCM pin terminals for damage or loose connection with harness connector.

DTC CONTROL UNIT (RAM), CONTROL UNIT (ROM)

PFP:31036

Description

ECS00994

The TCM consists of a microcomputer and connectors for signal input and output and for power supply. The unit controls the A/T.

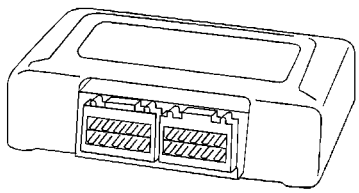

SAT574J

ON BOARD DIAGNOSIS LOGIC

Diagnostic Trouble Code No.	Malfunction is detected when....	Check Item (Possible Cause)
: CONTROL UNIT (RAM), CONTROL UNIT (ROM)	TCM memory (RAM) or (ROM) is malfunctioning.	● TCM

DIAGNOSTIC TROUBLE CODE (DTC) CONFIRMATION PROCEDURE

NOTE:
If "DIAGNOSTIC TROUBLE CODE CONFIRMATION PROCEDURE" has been previously conducted, always turn ignition switch "OFF" and wait at least 5 seconds before conducting the next test.

With CONSULT-II

1. Turn ignition switch "ON" and select "DATA MONITOR" mode for A/T with CONSULT-II.

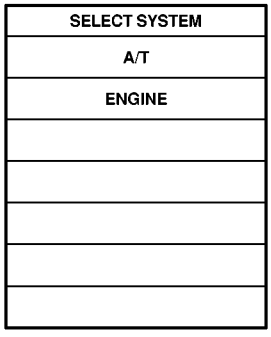

SAT014K

2. Start engine.
3. Run engine for at least 2 seconds at idle speed.
4. If DTC is detected, go to AT-208, "Diagnostic Procedure" .

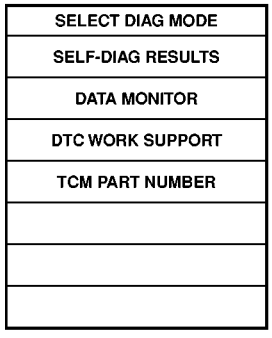

SAT971J

Without CONSULT-II

Follow the procedure "With CONSULT-II".

Diagnostic Procedure

ECS00995

1. INSPECTION START (WITH CONSULT-II)

With CONSULT-II

1. Turn ignition switch “ON” and select “SELF DIAGNOSIS” mode for A/T with CONSULT-II.
2. Touch “ERASE”.

>> GO TO 2

2. CHECK DTC

Perform AT-207, "DIAGNOSTIC TROUBLE CODE (DTC) CONFIRMATION PROCEDURE" .
See above.

>> GO TO 3

3. CHECK DTC AGAIN

Is the “CONTROL UNIT (RAM) or CONTROL UNIT (ROM)” displayed again?

Yes or No

Yes >> Replace TCM.
No >> **INSPECTION END**

DTC CONTROL UNIT (EEP ROM)

PFP:31036

Description

ECS00996

The TCM consists of a microcomputer and connectors for signal input and output and for power supply. The unit controls the A/T.

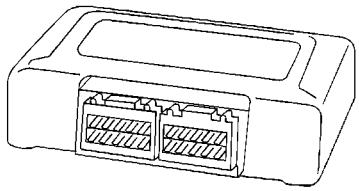

SAT574J

ON BOARD DIAGNOSIS LOGIC

Diagnostic trouble code	Malfunction is detected when...	Check item (Possible cause)
: CONT UNIT (EEP ROM)	TCM memory (EEP ROM) is malfunctioning.	● TCM

DIAGNOSTIC TROUBLE CODE (DTC) CONFIRMATION PROCEDURE

NOTE:
If "DIAGNOSTIC TROUBLE CODE CONFIRMATION PROCEDURE" has been previously conducted, always turn ignition switch "OFF" and wait at least 5 seconds before conducting the next test.

With CONSULT-II

1. Turn ignition switch "ON" and select "DATA MONITOR" mode for A/T with CONSULT-II.
2. Start engine.
3. Run engine for at least 2 seconds at idle speed.
4. If DTC is detected, go to AT-210, "Diagnostic Procedure" .

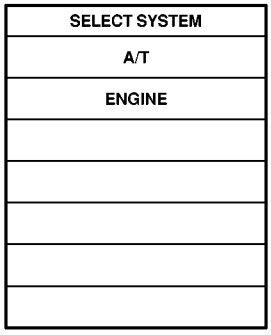

SAT014K

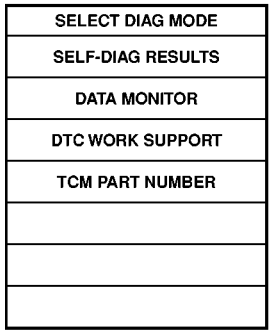

SAT971J

Without CONSULT-II

Follow the procedure "With CONSULT-II".

Diagnostic Procedure

ECS00997

1. CHECK DTC

With CONSULT-II

1. Turn ignition switch “ON” and select “SELF DIAGNOSIS” mode for A/T with CONSULT-II.
2. Move selector lever to “R” position.
3. Depress accelerator pedal (Full throttle position).
4. Touch “ERASE”.
5. Turn ignition switch “OFF” position for 10 seconds.

Perform AT-209, "DIAGNOSTIC TROUBLE CODE (DTC) CONFIRMATION PROCEDURE" .

Is the “CONT UNIT (EEP ROM)” displayed again?

Yes >> Replace TCM.
No >> **INSPECTION END**

TROUBLE DIAGNOSES FOR SYMPTOMS

PFP:00100

Wiring Diagram — AT — NONDTC

ECS00998

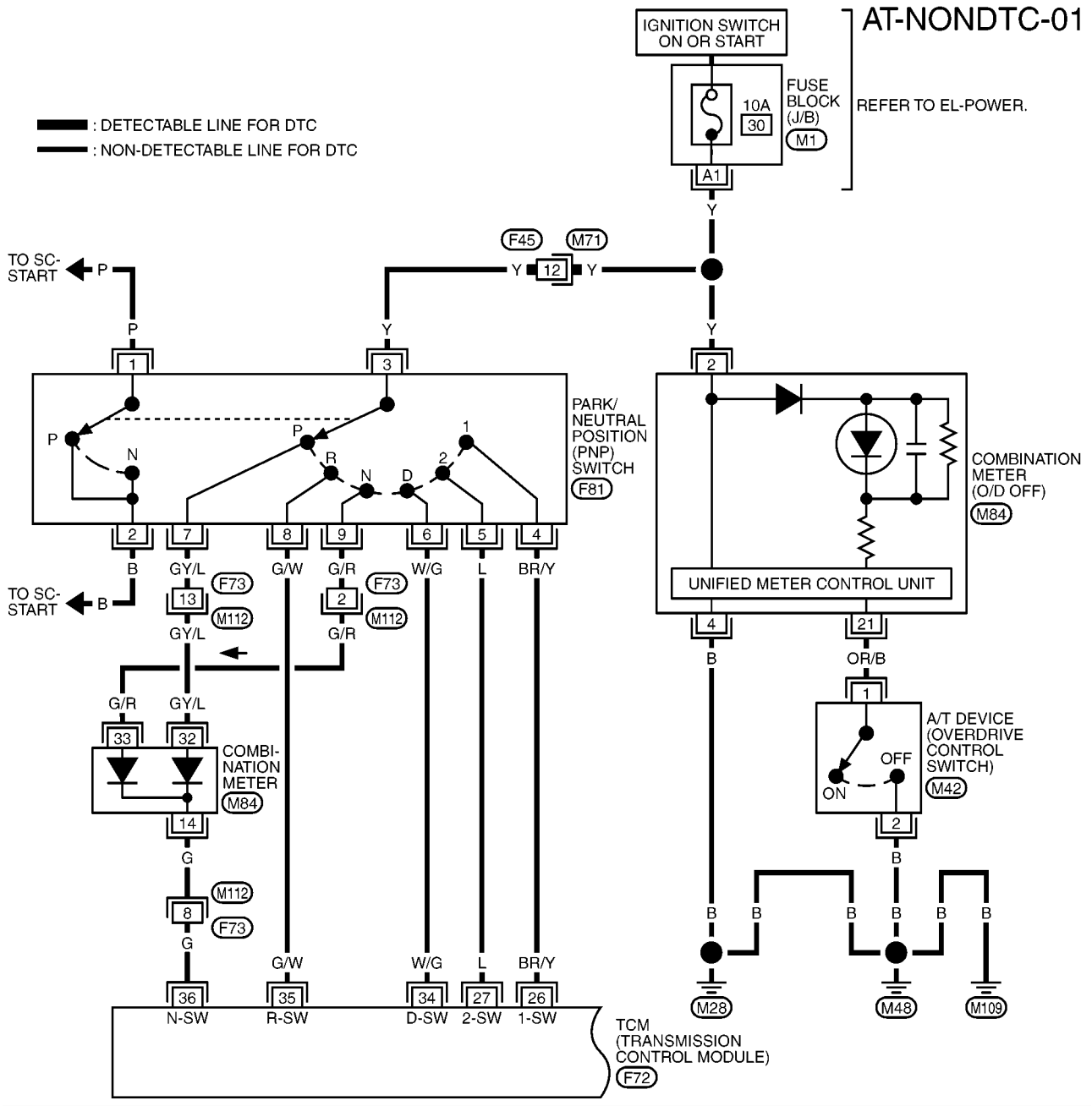

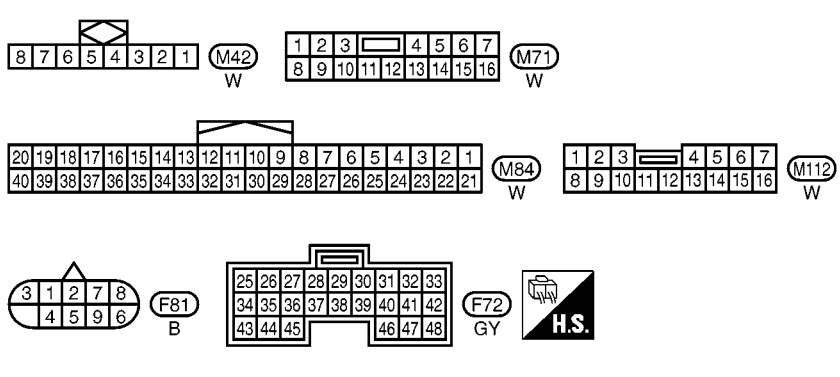

REFER TO THE FOLLOWING.
M1 -FUSE BLOCK-JUNCTION BOX (J/B)

YAT386A

AT-NONDTC-02

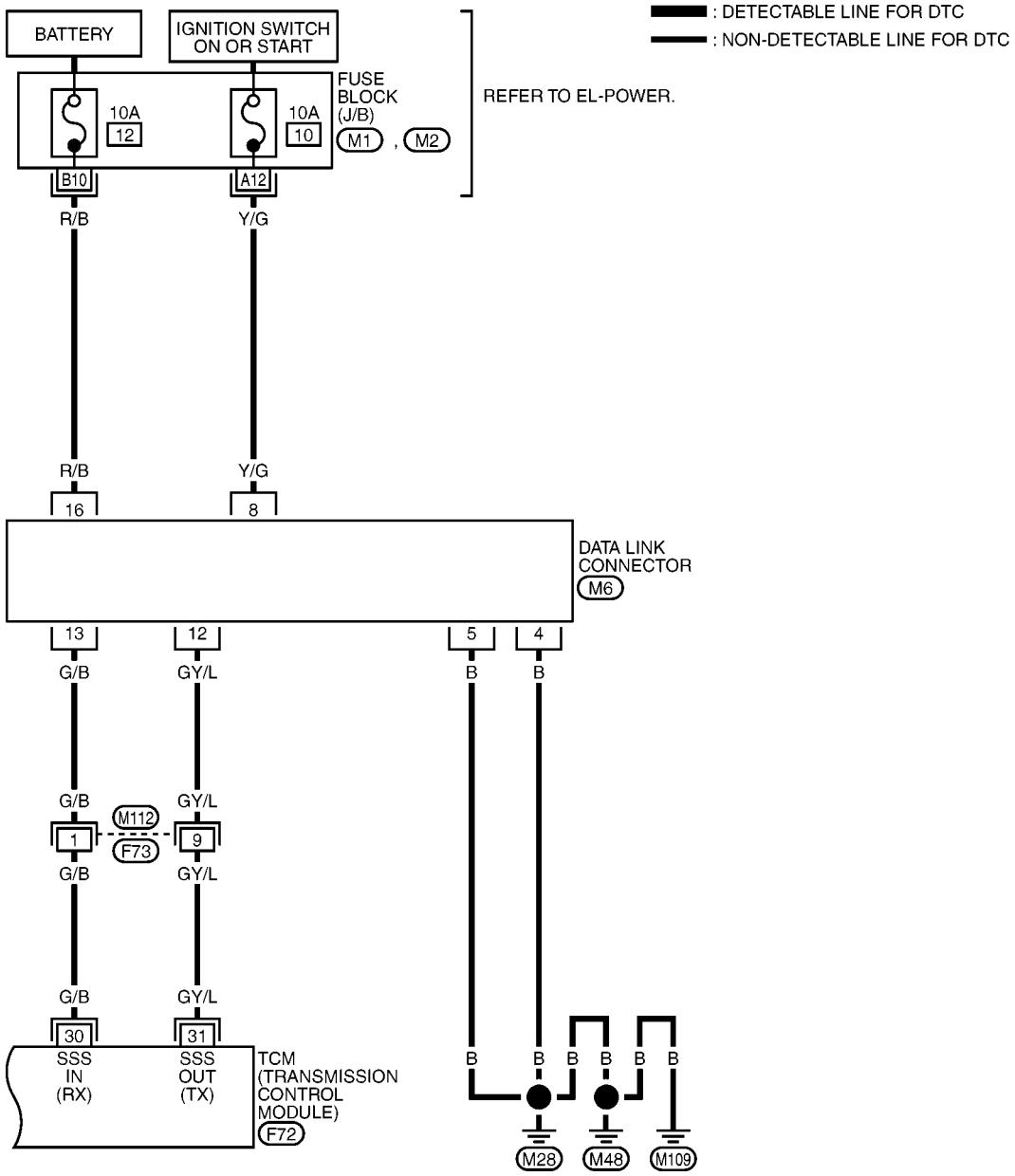

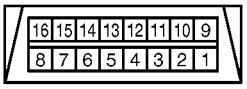

M6
W

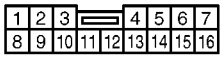

M112
W

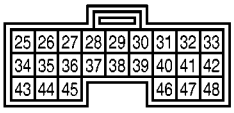

F72
GY

REFER TO THE FOLLOWING.
M1 , M2 -FUSE BLOCK-JUNCTION BOX (J/B)

YAT387A

1. O/D OFF Indicator Lamp Does Not Come On

ECS00999

SYMPTOM:
O/D OFF indicator lamp does not come on for about 2 seconds when turning ignition switch to “ON”.

1. CHECK TCM POWER SOURCE

1. Turn ignition switch to “ON” position.
   (Do not start engine.)
2. Check voltage between TCM terminals 10, 19, 28 and ground.

   Voltage: Battery voltage

3. Turn ignition switch to “OFF” position.
4. Check voltage between TCM terminal 28 and ground.

   Voltage: Battery voltage

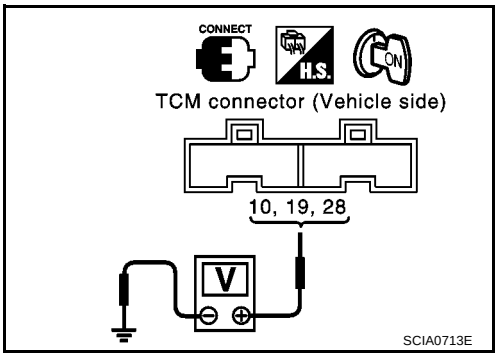

OK or NG

OK >> GO TO 2
NG >> Check the following items:
- Harness for short or open between ignition switch and TCM terminals 10, 19 and 28 (Main harness).
- Refer to AT-344, "Wiring Diagram — AT — MAIN" .
- Ignition switch and fuse Refer to EL-11, “Power Supply Routing”.

2. CHECK TCM GROUND CIRCUIT

1. Turn ignition switch to “OFF” position.
2. Disconnect TCM harness connector.
3. Check continuity between TCM terminals 25, 48 and ground.

   Continuity should exist.

   If OK, check harness for short to ground and short to power.

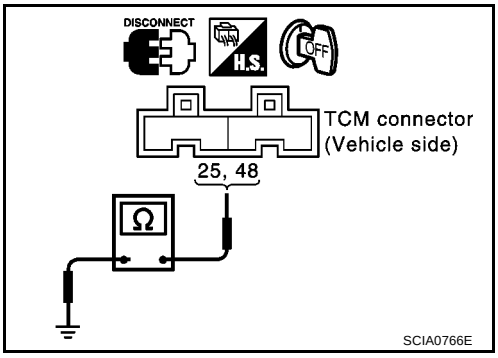

OK or NG

OK >> GO TO 3
NG >> Repair open circuit or short to ground or short to power in harness or connectors. Refer to AT-344, "Wiring Diagram — AT — MAIN" .

3. CHECK LAMP CIRCUIT

1. Turn ignition switch to “OFF” position.
2. Check resistance between TCM terminals 13 and 10, 19.

   Resistance: 50 - 100Ω

3. Reinstall any part removed.

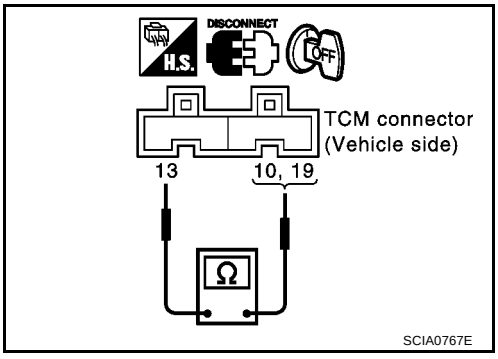

OK or NG

OK >> GO TO 4
NG >> Check the following items:
- O/D OFF indicator lamp.
  Refer to EL-102, “Combination Meter”.
- Harness and fuse for short or open between ignition switch and O/D OFF indicator lamp (Main harness)
  Refer to EL-11, “Power Supply Routing”.
- Harness for short or open between O/D OFF indicator lamp and TCM.

4. CHECK SYMPTOM

Check again.

OK or NG

OK >> **INSPECTION END**
NG >> 1. Perform TCM input/output signal inspection.
2. If NG, recheck TCM pin terminals for damage or loose connection with harness connector.

2. Engine Cannot Be Started In “P” and “N” Position

ECS0099A

SYMPTOM:

- **Engine cannot be started with selector lever in “P” or “N” position.**
- **Engine can be started with selector lever in “D”, “2”, “1” or “R” position.**

1. CHECK PNP SWITCH CIRCUIT

With CONSULT-II

Does “TCM INPUT SIGNALS” in “DATA MONITOR” show damage to PNP switch circuit?

Without CONSULT-II

Does self-diagnosis show damage to PNP switch circuit?

Yes or No

Yes >> Check PNP switch circuit. Refer to AT-239, "21. TCM Self-diagnosis Does Not Activate (PNP & Overdrive Control Switches, and Throttle Position Sensor Circuit Checks)" .
No >> GO TO 2

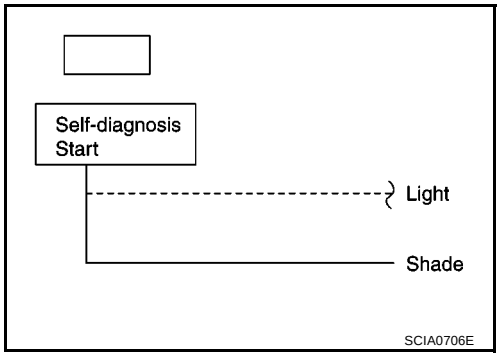

2. CHECK PNP SWITCH INSPECTION

Check for short or open of PNP switch harness connector terminals 1 and 2.
Refer to AT-239, "21. TCM Self-diagnosis Does Not Activate (PNP & Overdrive Control Switches, and Throttle Position Sensor Circuit Checks)" .

OK or NG

OK >> GO TO 3
NG >> Repair or replace PNP switch.

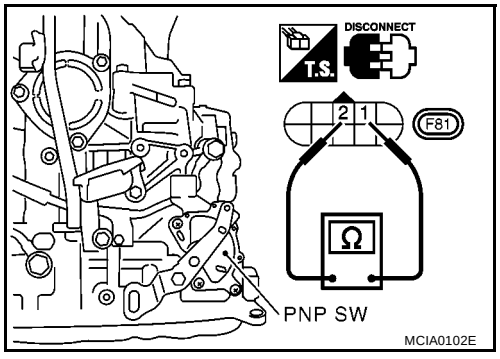

3. CHECK STARTING SYSTEM

Check starting system. Refer to SC-13, “Starting System”.

OK or NG

OK >> **INSPECTION END**
NG >> Repair or replace damaged parts.

3. In “P” Position, Vehicle Moves Forward Or Backward When Pushed

ECS0099B

SYMPTOM:

Vehicle moves when it is pushed forward or backward with selector lever in “P” position.

1. CHECK PARKING COMPONENTS

Check parking components. Refer to AT-417, "OVERHAUL" .

OK or NG

OK >> **INSPECTION END**
NG >> Repair or replace damaged parts.

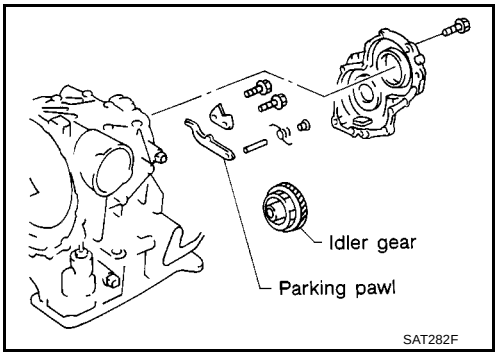

4. In “N” Position, Vehicle Moves

ECS0099C

SYMPTOM:
Vehicle moves forward or backward when selecting “N” position.

1. CHECK PNP SWITCH CIRCUIT

With CONSULT-II
Does “TCM INPUT SIGNALS” in “DATA MONITOR” show damage to PNP switch circuit?

Without CONSULT-II
Does self-diagnosis show damage to PNP switch circuit?

Yes or No

Yes >> Check PNP switch circuit. Refer to AT-239, "21. TCM Self-diagnosis Does Not Activate (PNP & Overdrive Control Switches, and Throttle Position Sensor Circuit Checks)" .
No >> GO TO 2

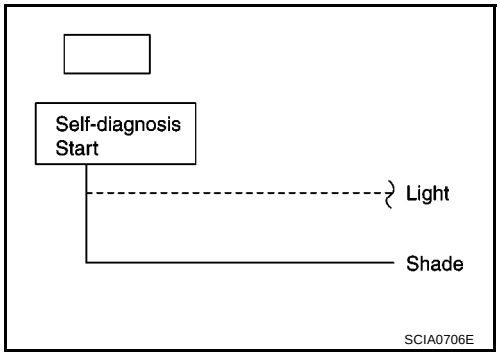

2. CHECK CONTROL CABLE

Check control cable. Refer to AT-412, "Control Cable Adjustment" .

OK or NG

OK >> GO TO 3
NG >> Adjust control cable. Refer to AT-412, "Control Cable Adjustment" .

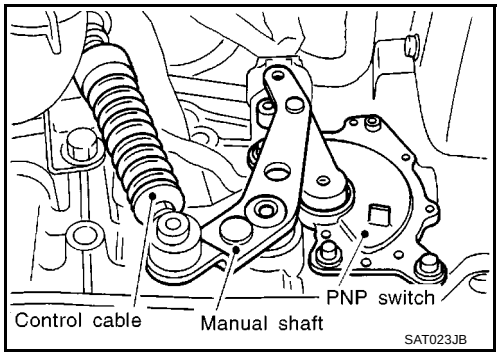

3. CHECK A/T FLUID LEVEL

Check A/T fluid level again.

OK or NG

OK >> GO TO 4
NG >> Refill ATF.

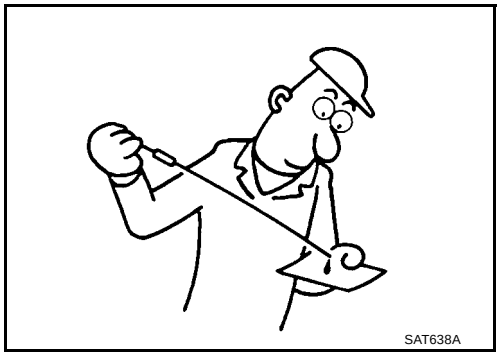

4. CHECK A/T FLUID CONDITION

1. Remove oil pan refer to AT-410, "REMOVAL" .
2. Check A/T fluid condition.

OK or NG

OK >> GO TO 5
NG >> 1. Disassemble A/T.
2. Check the following items:
- Forward clutch assembly
- Overrun clutch assembly
- Reverse clutch assembly

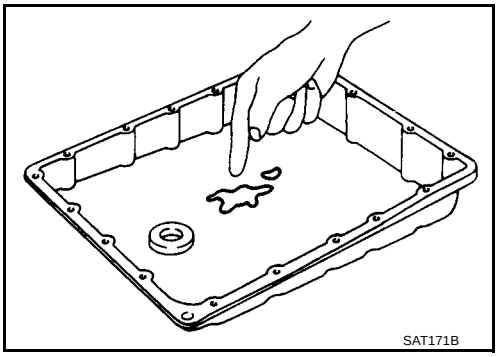

5. CHECK SYMPTOM

Check again.

OK or NG

OK >> **INSPECTION END**
NG >> 1. Perform TCM input/output signal inspection.
2. If NG, recheck TCM pin terminals for damage or loose connection with harness connector.

5. Large Shock. “N” → “R” Position

ECS0099D

SYMPTOM:
There is large shock when changing from “N” to “R” position.

1. CHECK SELF-DIAGNOSTIC RESULTS

Does self-diagnosis show damage to A/T fluid temperature sensor, line pressure solenoid valve or throttle position sensor circuit?

Yes or No

Yes >> ● Check damaged circuit. Refer to the following items.
EURO-OBD
- AT-166, "DTC P0745 LINE PRESSURE SOLENOID VALVE"
- AT-183, "DTC P1705 ACCELERATOR PEDAL POSITION (APP) SENSOR"
- AT-197, "DTC BATT/FLUID TEMP SEN (A/T FLUID TEMP SENSOR CIRCUIT AND TCM POWER SOURCE)"

No >> GO TO 2

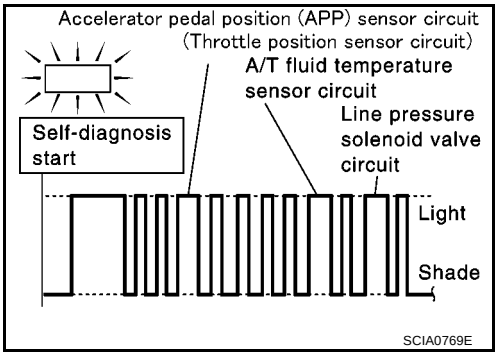

2. CHECK THROTTLE POSITION SENSOR*

*: This sensor means accelerator pedal position (APP) sensor.
Refer to AT-183, "DTC P1705 ACCELERATOR PEDAL POSITION (APP) SENSOR" .

OK or NG

OK >> GO TO 3
NG >> Repair or replace Accelerator pedal position (APP) sensor.

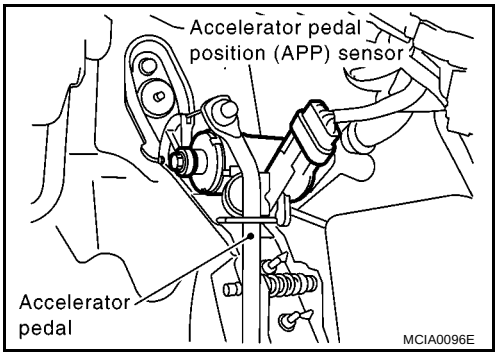

3. CHECK LINE PRESSURE

Check line pressure at idle with selector lever in “D” position. Refer to AT-67, "Line Pressure Test" .

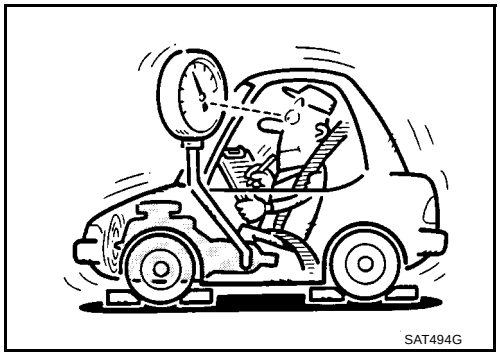

OK or NG

OK >> GO TO 4
NG >> 1. Remove control valve assembly. Refer to AT-410, "Control Valve Assembly and Accumulators" .
2. Check the following items:
– Valves to control line pressure (Pressure regulator valve, pressure modifier valve, pilot valve and pilot filter)
– Line pressure solenoid valve

4. CHECK SYMPTOM

Check again.

OK or NG

OK >> **INSPECTION END**
NG >> 1. Perform TCM input/output signal inspection.
2. If NG, recheck TCM pin terminals for damage or loose connection with harness connector.

6. Vehicle Does Not Creep Backward In “R” Position

ECS0099E

SYMPTOM:
Vehicle does not creep backward when selecting “R” position.

1. CHECK A/T FLUID LEVEL

Check A/T fluid level again.

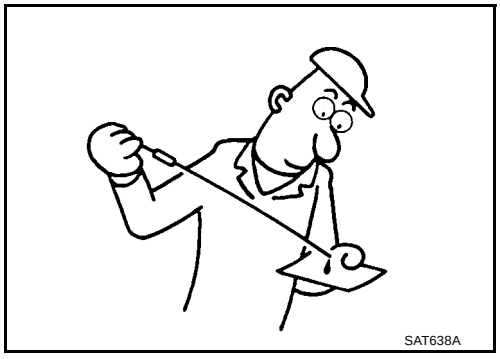

OK or NG

OK >> GO TO 2
NG >> Refill ATF.

2. CHECK STALL TEST

Check stall revolution with selector lever in “1” and “R” positions.
Refer to AT-64, "Stall Test" .

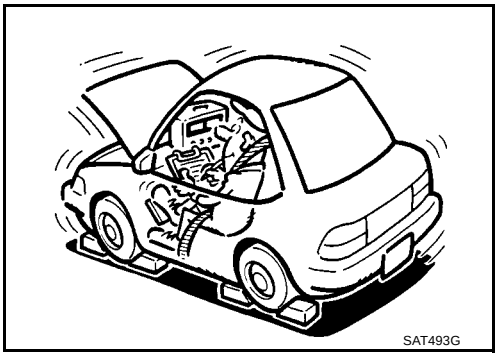

OK or NG

OK >> GO TO 3

OK in “1” position, NG in “R” position>>1.Remove control valve assembly. Refer to AT-410, "Control Valve Assembly and Accumulators" .

2. Check the following items:
- Valves to control line pressure (Pressure regulator valve, pressure modifier valve, pilot valve and pilot filter)
- Line pressure solenoid valve (AT-166, "DTC P0745 LINE PRESSURE SOLENOID VALVE" : EURO-OBD)
3. Disassemble A/T.
4. Check the following items:
- Oil pump assembly
- Torque converter
- Reverse clutch assembly
- High clutch assembly
- Low & reverse brake assembly
- Low one-way clutch

NG in both “1” and “R” positions>>GO TO 6

3. CHECK LINE PRESSURE

Check line pressure at idle with selector lever in “R” position. Refer to AT-67, "Line Pressure Test" .

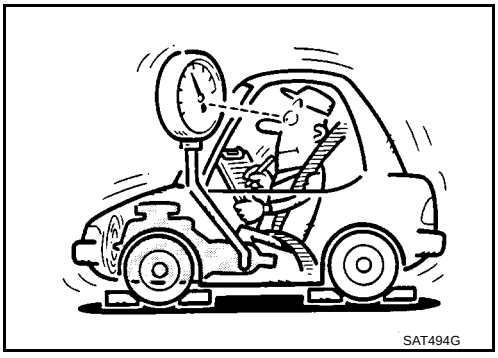

OK or NG

OK >> GO TO 4

NG >> 1. Remove control valve assembly. Refer to AT-410, "Control Valve Assembly and Accumulators" .

2. Check the following items:
- Valves to control line pressure (Pressure regulator valve, pressure modifier valve, pilot valve and pilot filter)
- Line pressure solenoid valve (AT-166, "DTC P0745 LINE PRESSURE SOLENOID VALVE" : EURO-OBD)
3. Disassemble A/T.
4. Check the following item:
- Oil pump assembly

4. CHECK A/T FLUID CONDITION

1. Remove oil pan, refer to AT-410, "REMOVAL" .
2. Check A/T fluid condition.

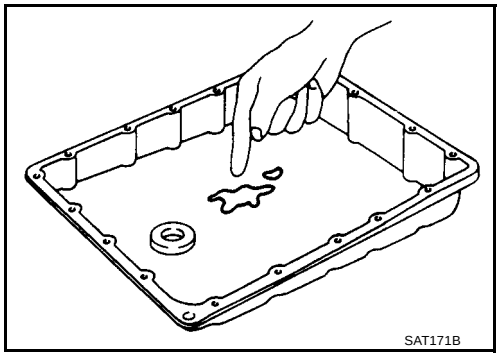

OK or NG

OK >> GO TO 5
NG >> GO TO 6

5. CHECK SYMPTOM

Check again.

OK or NG

OK >> **INSPECTION END**
NG >> 1. Perform TCM input/output signal inspection.
2. If NG, recheck TCM pin terminals for damage or loose connection with harness connector.

6. DETECT MALFUNCTIONING ITEM

1. Remove control valve assembly. Refer to AT-410, "Control Valve Assembly and Accumulators" .
2. Check the following items:
- Valves to control line pressure (Pressure regulator valve, pressure modifier valve, pilot valve and pilot filter)
- Line pressure solenoid valve (AT-166, "DTC P0745 LINE PRESSURE SOLENOID VALVE" : EURO-OBD)
3. Disassemble A/T.
4. Check the following items:
- Oil pump assembly
- Torque converter
- Reverse clutch assembly
- High clutch assembly
- Low & reverse brake assembly
- Low one-way clutch

OK or NG

OK >> GO TO 5
NG >> Repair or replace damaged parts.

7. Vehicle Does Not Creep Forward In “D”, “2” Or “1” Position

ECS0099F

SYMPTOM:
Vehicle does not creep forward when selecting “D”, “2” or “1” position.

1. CHECK A/T FLUID LEVEL

Check A/T fluid level again.

OK or NG

OK >> GO TO 2
NG >> Refill ATF.

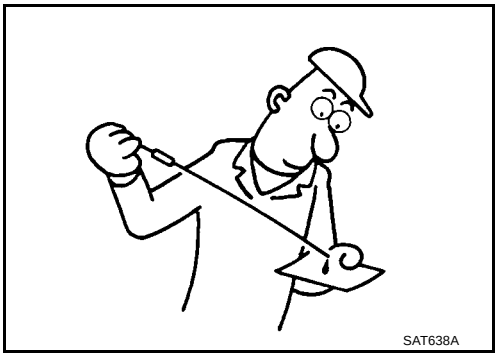

2. CHECK STALL TEST

Check stall revolution with selector lever in “D” position. Refer to AT-64, "Stall Test" .

OK or NG

OK >> GO TO 3
NG >> GO TO 6

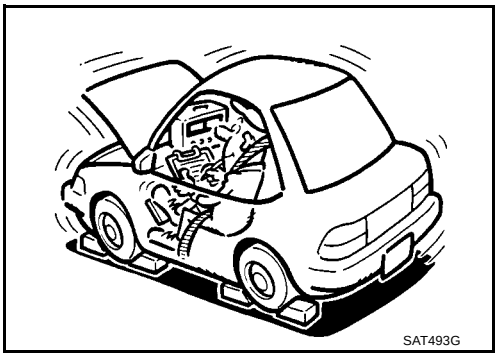

3. CHECK LINE PRESSURE

Check line pressure at idle with selector lever in “D” position. Refer to AT-67, "Line Pressure Test" .

OK or NG

OK >> GO TO 4
NG >> 1. Remove control valve assembly. Refer to AT-410, "Control Valve Assembly and Accumulators" .
2. Check the following items:
- Valves to control line pressure (Pressure regulator valve, pressure modifier valve, pilot valve and pilot filter)
- Line pressure solenoid valve (AT-166, "DTC P0745 LINE PRESSURE SOLENOID VALVE")
3. Disassemble A/T.
4. Check the following item:
- Oil pump assembly

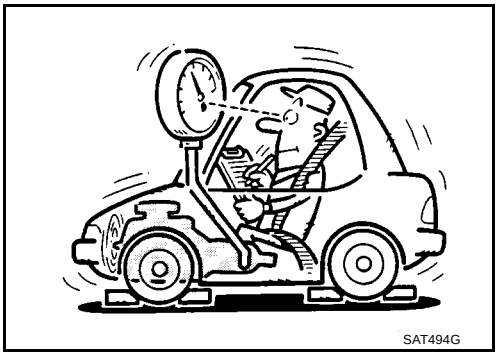

4. CHECK A/T FLUID CONDITION

1. Remove oil pan, refer to AT-410, "REMOVAL" .
2. Check A/T fluid condition.

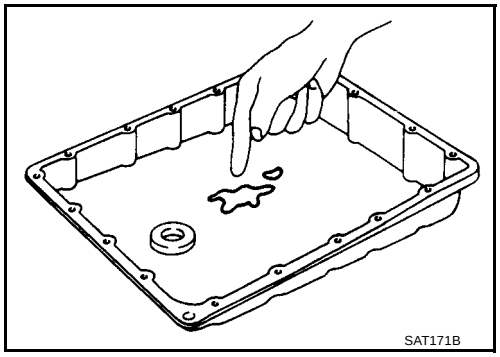

OK or NG

OK >> GO TO 5
NG >> GO TO 6

5. CHECK SYMPTOM

Check again.

OK or NG

OK >> **INSPECTION END**
NG >> 1. Perform TCM input/output signal inspection.
2. If NG, recheck TCM pin terminals for damage or loose connection with harness connector.

6. DETECT MALFUNCTIONING ITEM

1. Remove control valve assembly. Refer to AT-410, "Control Valve Assembly and Accumulators" .
2. Check the following items:
- Valves to control line pressure (Pressure regulator valve, pressure modifier valve, pilot valve and pilot filter)
- Line pressure solenoid valve (AT-166, "DTC P0745 LINE PRESSURE SOLENOID VALVE" : EURO-OBD)
3. Disassemble A/T.
4. Check the following items:
- Oil pump assembly
- Forward clutch assembly
- Forward one-way clutch
- Low one-way clutch
- Low & reverse brake assembly
- Torque converter

OK or NG

OK >> GO TO 5
NG >> Repair or replace damaged parts.

8. Vehicle Cannot Be Started From D1

ECS0099G

SYMPTOM:
Vehicle cannot be started from D1 on Cruise test — Part 1.

1. CHECK SYMPTOM

Is 6. Vehicle Does Not Creep Backward In “R” Position OK?

Yes or No

Yes >> GO TO 2
No >> Go to AT-218, "6. Vehicle Does Not Creep Backward In “R” Position" .

2. CHECK SELF-DIAGNOSTIC RESULTS

Does self-diagnosis show damage to vehicle speed sensor·A/T (revolution sensor), shift solenoid valve A, B or vehicle speed sensor·MTR after cruise test?

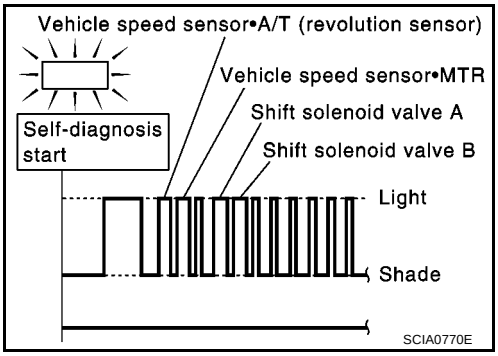

Yes or No

Yes >> ● Check damaged circuit. Refer to the following items.
EURO-OBD
- AT-125, "DTC P0720 VEHICLE SPEED SENSOR A/T (REVOLUTION SENSOR)"
- AT-173, "DTC P0750 SHIFT SOLENOID VALVE A"
- AT-178, "DTC P0755 SHIFT SOLENOID VALVE B"
- AT-203, "DTC VEHICLE SPEED SENSOR MTR"

No >> GO TO 3

3. CHECK THROTTLE POSITION SENSOR*

*: This sensor means accelerator pedal position (APP) sensor.
Refer to AT-183, "DTC P1705 ACCELERATOR PEDAL POSITION (APP) SENSOR" .

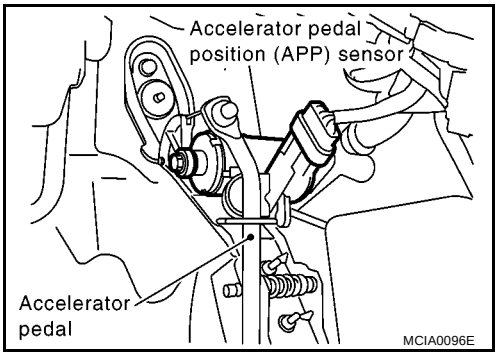

OK or NG

OK >> GO TO 4
NG >> Repair or replace accelerator pedal position (APP) sensor.

4. CHECK LINE PRESSURE

Check line pressure at stall point with selector lever in “D” position.
Refer to AT-67, "Line Pressure Test" .

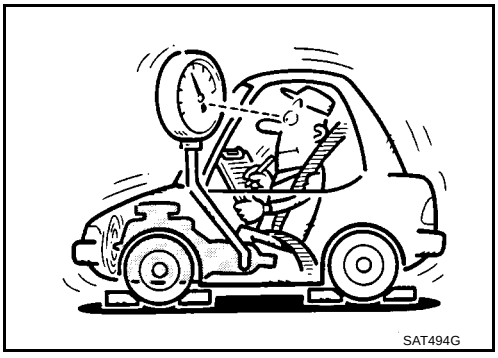

OK or NG

OK >> GO TO 5
NG >> GO TO 8

5. CHECK A/T FLUID CONDITION

1. Remove oil pan, refer to AT-410, "REMOVAL" .
2. Check A/T fluid condition.

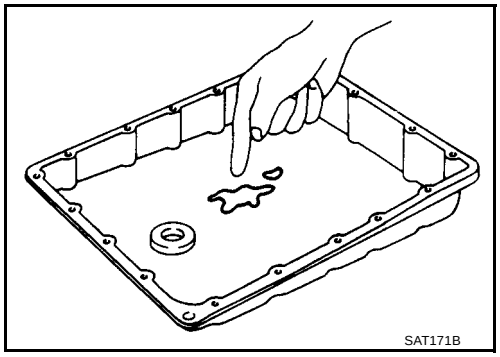

OK or NG

OK >> GO TO 6
NG >> GO TO 8

6. DETECT MALFUNCTIONING ITEM

1. Remove control valve assembly. Refer to AT-410, "Control Valve Assembly and Accumulators" .
2. Check the following items:

- Shift valve A
- Shift valve B
- Shift solenoid valve A
- Shift solenoid valve B
- Pilot valve
- Pilot filter

OK or NG

OK >> GO TO 7
NG >> Repair or replace damaged parts.

7. CHECK SYMPTOM

Check again.

OK or NG

OK >> **INSPECTION END**
NG >> 1. Perform TCM input/output signal inspection.
2. If NG, recheck TCM pin terminals for damage or loose connection with harness connector.

8. DETECT MALFUNCTIONING ITEM

1. Remove control valve assembly. Refer to AT-410, "Control Valve Assembly and Accumulators" .
2. Check the following items:
- Shift valve A
- Shift valve B
- Shift solenoid valve A
- Shift solenoid valve B
- Pilot valve
- Pilot filter
3. Disassemble A/T.
4. Check the following items:
- Forward clutch assembly
- Forward one-way clutch
- Low one-way clutch
- High clutch assembly
- Torque converter
- Oil pump assembly

OK or NG

OK >> GO TO 7
NG >> Repair or replace damaged parts.

9. A/T Does Not Shift: $D_1 \rightarrow D_2$ Or Does Not Kickdown: $D_4 \rightarrow D_2$

ECS0099H

SYMPTOM:
A/T does not shift from D_1 to D_2 at the specified speed.
A/T does not shift from D_4 to D_2 when depressing accelerator pedal fully at the specified speed.

1. CHECK SYMPTOM

Are 7. Vehicle Does Not Creep Forward In “D”, “2” Or “1” Position and 8. Vehicle Cannot Be Started From D_1 OK?

Yes or No

Yes >> GO TO 2
No >> Go to AT-221, "7. Vehicle Does Not Creep Forward In “D”, “2” Or “1” Position" , AT-223, "8. Vehicle Cannot Be Started From D_1" .

2. CHECK PNP SWITCH CIRCUIT

With CONSULT-II
Does “TCM INPUT SIGNALS” in “DATA MONITOR” show damage to PNP switch circuit?

Without CONSULT-II
Does self-diagnosis show damage to PNP switch circuit?

Yes or No

Yes >> Check PNP switch circuit. Refer to AT-239, "21. TCM Self-diagnosis Does Not Activate (PNP & Overdrive Control Switches, and Throttle Position Sensor Circuit Checks)" .
No >> GO TO 3

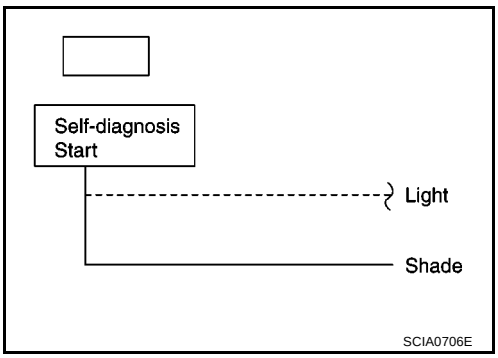

3. CHECK VEHICLE SPEED SENSOR·A/T (REVOLUTION SENSOR) AND CHECK VEHICLE SPEED SENSOR·MTR CIRCUIT

Check vehicle speed sensor·A/T (revolution sensor) and vehicle speed sensor·MTR circuit. Refer to AT-125, "DTC P0720 VEHICLE SPEED SENSOR A/T (REVOLUTION SENSOR)" and AT-203, "DTC VEHICLE SPEED SENSOR MTR" .

OK or NG

OK >> GO TO 4
NG >> Repair or replace vehicle speed sensor·A/T (revolution sensor) and vehicle speed sensor·MTR circuits.

4. CHECK THROTTLE POSITION SENSOR*

*: This sensor means accelerator pedal position (APP) sensor.
Refer to AT-183, "DTC P1705 ACCELERATOR PEDAL POSITION (APP) SENSOR" .

OK or NG

OK >> GO TO 5
NG >> Repair or replace accelerator pedal position (APP) sensor.

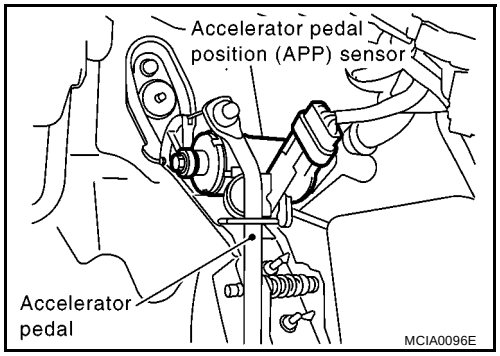

5. CHECK A/T FLUID CONIDITION

1. Remove oil pan, refer to AT-410, "REMOVAL" .
2. Check A/T fluid condition.

OK or NG

OK >> GO TO 6
NG >> GO TO 8

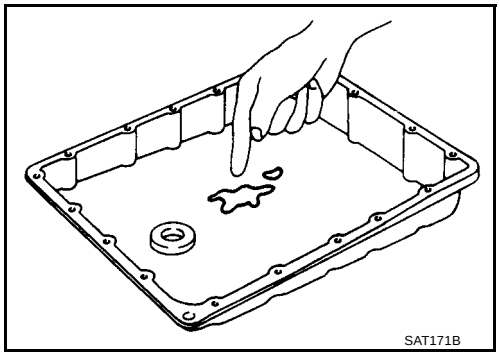

6. DETECT MALFUNCTIONING ITEM

1. Remove control valve. Refer to AT-410, "Control Valve Assembly and Accumulators" .
2. Check the following items:

- Shift valve A
- Shift solenoid valve A (AT-173, "DTC P0750 SHIFT SOLENOID VALVE A")
- Pilot valve
- Pilot filter

OK or NG

OK >> GO TO 7
NG >> Repair or replace damaged parts.

7. CHECK SYMPTOM

Check again.

OK or NG

OK >> **INSPECTION END**
NG >> 1. Perform TCM input/output signal inspection.
2. If NG, recheck TCM pin terminals for damage or loose connection with harness connector.

8. DETECT MALFUNCTIONING ITEM

1. Remove control valve. Refer to AT-410, "Control Valve Assembly and Accumulators" .
2. Check the following items:
- Shift valve A
- Shift solenoid valve A (AT-173, "DTC P0750 SHIFT SOLENOID VALVE A")
- Pilot valve
- Pilot filter
3. Disassemble A/T.
4. Check the following items:
- Servo piston assembly
- Brake band
- Oil pump assembly

OK or NG

OK >> GO TO 7
NG >> Repair or replace damaged parts.

10. A/T Does Not Shift: $D_2 \rightarrow D_3$

ECS0099I

SYMPTOM:
A/T does not shift from D_2 to D_3 at the specified speed.

1. CHECK SYMPTOM

Are 7. Vehicle Does Not Creep Forward In “D”, “2” Or “1” Position and 8. Vehicle Cannot Be Started From D_1 OK?

Yes or No

Yes >> GO TO 2
No >> Go to AT-221, "7. Vehicle Does Not Creep Forward In “D”, “2” Or “1” Position" , AT-223, "8. Vehicle Cannot Be Started From D_1" .

2. CHECK PNP SWITCH CIRCUIT

With CONSULT-II
Does “TCM INPUT SIGNALS” in “DATA MONITOR” show damage to PNP switch circuit?

Without CONSULT-II
Does self-diagnosis show damage to PNP switch circuit?

Yes or No

Yes >> Check PNP switch circuit. Refer to AT-239, "21. TCM Self-diagnosis Does Not Activate (PNP & Overdrive Control Switches, and Throttle Position Sensor Circuit Checks)" .
No >> GO TO 3

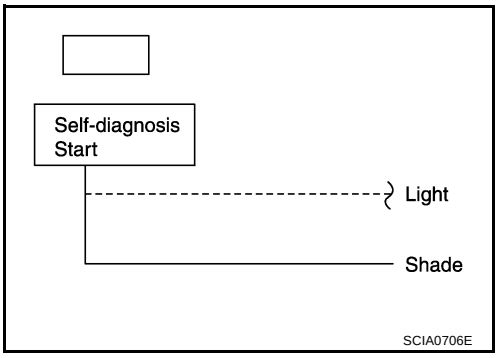

3. CHECK THROTTLE POSITION SENSOR*

*: This sensor means accelerator pedal position (APP) sensor.
Refer to AT-183, "DTC P1705 ACCELERATOR PEDAL POSITION (APP) SENSOR" .

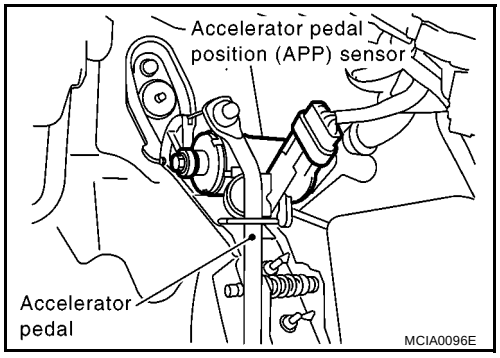

OK or NG

OK >> GO TO 4
NG >> Repair or replace throttle position sensor.

4. CHECK A/T FLUID CONDITION

1. Remove oil pan, refer to AT-410, "REMOVAL" .
2. Check A/T fluid condition.

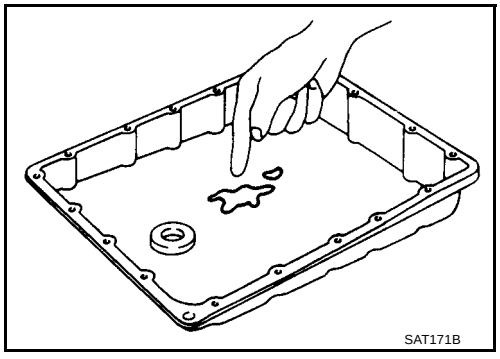

OK or NG

OK >> GO TO 5
NG >> GO TO 7

5. DETECT MALFUNCTIONING ITEM

1. Remove control valve assembly. Refer to AT-410, "Control Valve Assembly and Accumulators" .
2. Check the following items:

- Shift valve B
- Shift solenoid valve B (AT-178, "DTC P0755 SHIFT SOLENOID VALVE B")
- Pilot valve
- Pilot filter

OK or NG

OK >> GO TO 6
NG >> Repair or replace damaged parts.

6. CHECK SYMPTOM

Check again.

OK or NG

OK >> **INSPECTION END**
NG >> 1. Perform TCM input/output signal inspection.
2. If NG, recheck TCM pin terminals for damage or loose connection with harness connector.

7. DETECT MALFUNCTIONING ITEM

1. Remove control valve assembly. Refer to AT-410, "Control Valve Assembly and Accumulators" .
2. Check the following items:
- Shift valve B
- Shift solenoid valve B (AT-178, "DTC P0755 SHIFT SOLENOID VALVE B")
- Pilot valve
- Pilot filter
3. Disassemble A/T.
4. Check the following items:
- Servo piston assembly
- High clutch assembly
- Oil pump assembly

OK or NG

OK >> GO TO 6
NG >> Repair or replace damaged parts.

11. A/T Does Not Shift: D3 → D4

ECS0099J

SYMPTOM:

- **A/T does not shift from D3 to D4 at the specified speed.**
- **A/T must be warm before D3 to D4 shift will occur.**

1. CHECK SYMPTOM

Are 7. Vehicle Does Not Creep Forward In “D”, “2” Or “1” Position and 8. Vehicle Cannot Be Started From D1 OK?

Yes or No

Yes >> GO TO 2
No >> Go to AT-221, "7. Vehicle Does Not Creep Forward In “D”, “2” Or “1” Position" , AT-223, "8. Vehicle Cannot Be Started From D1" .

2. CHECK SELF-DIAGNOSTIC RESULTS

Does self-diagnosis, after cruise test, show damage to any of the following circuits?

- PNP switch
- Overdrive control switch
- A/T fluid temperature sensor
- Vehicle speed sensor·A/T (revolution sensor)
- Shift solenoid valve A or B
- Vehicle speed sensor·MTR

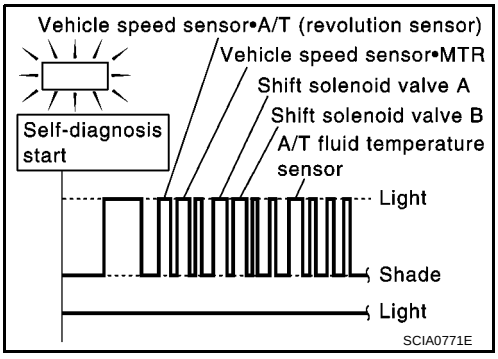

Yes or No

Yes >> ● Check damaged circuit. Refer to the following items.
EURO-OBD
- AT-125, "DTC P0720 VEHICLE SPEED SENSOR A/T (REVOLUTION SENSOR)"
- AT-173, "DTC P0750 SHIFT SOLENOID VALVE A"
- AT-178, "DTC P0755 SHIFT SOLENOID VALVE B"
- AT-197, "DTC BATT/FLUID TEMP SEN (A/T FLUID TEMP SENSOR CIRCUIT AND TCM POWER SOURCE)"
- AT-203, "DTC VEHICLE SPEED SENSOR MTR"
- AT-239, "21. TCM Self-diagnosis Does Not Activate (PNP & Overdrive Control Switches, and Throttle Position Sensor Circuit Checks)"

No >> GO TO 3

3. CHECK THROTTLE POSITION SENSOR*

*: This sensor means accelerator pedal position (APP) sensor.
Refer to AT-183, "DTC P1705 ACCELERATOR PEDAL POSITION (APP) SENSOR" .

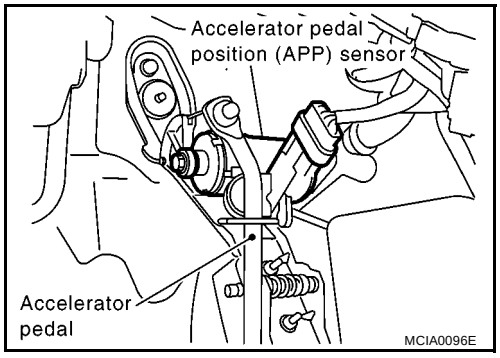

OK or NG

OK >> GO TO 4
NG >> Repair or replace throttle position sensor.

4. CHECK A/T FLUID CONDITION

1. Remove oil pan, refer to AT-410, "REMOVAL" .
2. Check A/T fluid condition.

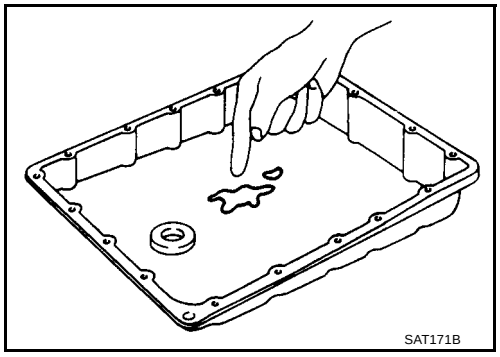

OK or NG

OK >> GO TO 5
NG >> GO TO 7

5. DETECT MALFUNCTIONING ITEM

1. Remove control valve assembly. Refer to AT-410, "Control Valve Assembly and Accumulators" .
2. Check the following items:

- Shift valve B
- Overrun clutch control valve
- Shift solenoid valve B
- Pilot valve
- Pilot filter

OK or NG

OK >> GO TO 6
NG >> Repair or replace damaged parts.

6. CHECK SYMPTOM

Check again.

OK or NG

OK >> **INSPECTION END**
NG >> 1. Perform TCM input/output signal inspection.
2. If NG, recheck TCM pin terminals for damage or loose connection with harness connector.

7. DETECT MALFUNCTIONING ITEM

1. Remove control valve assembly. Refer to AT-410, "Control Valve Assembly and Accumulators" .
2. Check the following items:
- Shift valve B
- Overrun clutch control valve
- Shift solenoid valve B
- Pilot valve
- Pilot filter
3. Disassemble A/T.
4. Check the following items:
- Servo piston assembly
- Brake band
- Torque converter
- Oil pump assembly

OK or NG

OK >> GO TO 6
NG >> Repair or replace damaged parts.

12. A/T Does Not Perform Lock-up

ECS0099K

SYMPTOM:
A/T does not perform lock-up at the specified speed.

1. CHECK SELF-DIAGNOSTIC RESULTS

Does self-diagnosis show damage to torque converter clutch solenoid valve circuit after cruise test?

Yes or No

Yes >> Check torque converter clutch solenoid valve circuit. Refer to AT-161, "DTC P0740 TORQUE CONVERTER CLUTCH SOLENOID VALVE" .

No >> GO TO 2

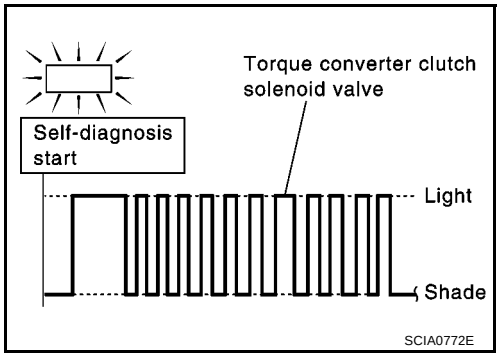

2. CHECK THROTTLE POSITION SENSOR*

*: This sensor means accelerator pedal position (APP) sensor.
Refer to AT-183, "DTC P1705 ACCELERATOR PEDAL POSITION (APP) SENSOR" .

OK or NG

OK >> GO TO 3

NG >> Repair or replace throttle position sensor.

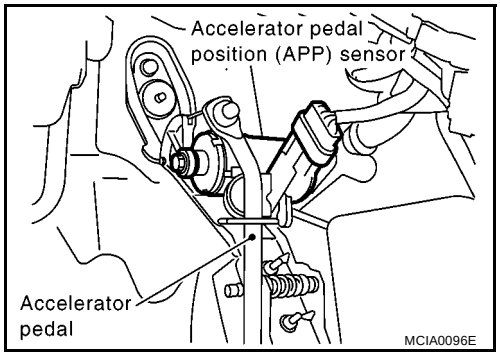

3. DETECT MALFUNCTIONING ITEM

1. Remove control valve. Refer to AT-410, "Control Valve Assembly and Accumulators" .
2. Check following items:

- Torque converter clutch control valve
- Torque converter relief valve
- Torque converter clutch solenoid valve
- Pilot valve
- Pilot filter

OK or NG

OK >> GO TO 4

NG >> Repair or replace damaged parts.

4. CHECK SYMPTOM

Check again.

OK or NG

OK >> **INSPECTION END**

NG >> 1. Perform TCM input/output signal inspection.
2. If NG, recheck TCM pin terminals for damage or loose connection with harness connector.

13. A/T Does Not Hold Lock-up Condition

ECS0099L

SYMPTOM:
A/T does not hold lock-up condition for more than 30 seconds.

1. CHECK DIAGNOSTIC RESULTS

Does self-diagnosis show damage to engine speed signal circuit after cruise test?

Yes or No

Yes >> Check engine speed signal circuit. Refer to AT-131, "DTC P0725 ENGINE SPEED SIGNAL" .
No >> GO TO 2

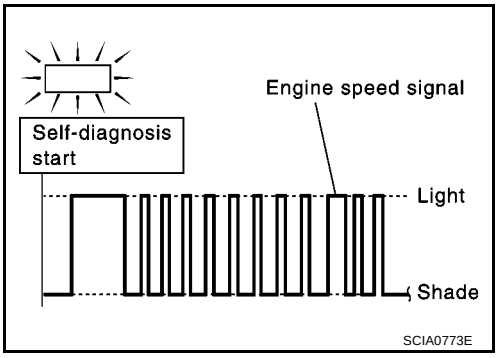

2. CHECK A/T FLUID CONDITION

1. Remove oil pan, refer to AT-410, "REMOVAL" .
2. Check A/T fluid condition.

OK or NG

OK >> GO TO 3
NG >> GO TO 5

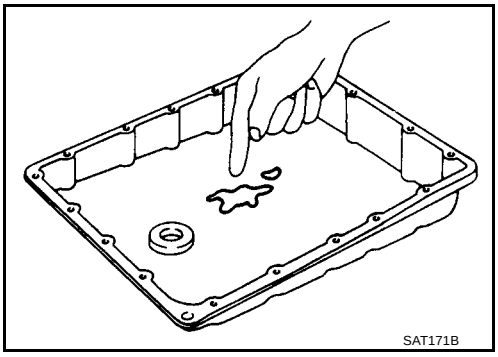

3. DETECT MALFUNCTIONING ITEM

1. Remove control valve assembly. Refer to AT-410, "Control Valve Assembly and Accumulators" .
2. Check the following items:

- Torque converter clutch control valve
- Pilot valve
- Pilot filter

OK or NG

OK >> GO TO 4
NG >> Repair or replace damaged parts.

4. CHECK SYMPTOM

Check again.

OK or NG

OK >> **INSPECTION END**
NG >> 1. Perform TCM input/output signal inspection.
2. If NG, recheck TCM pin terminals for damage or loose connection with harness connector.

5. DETECT MALFUNCTIONING ITEM

1. Remove control valve assembly. Refer to AT-410, "Control Valve Assembly and Accumulators" .
2. Check the following items:
- Torque converter clutch control valve
- Pilot valve
- Pilot filter
3. Disassemble A/T.
4. Check torque converter and oil pump assembly.

OK or NG

OK >> GO TO 4
NG >> Repair or replace damaged parts.

14. Lock-up Is Not Released

ECS0099M

SYMPTOM:
Lock-up is not released when accelerator pedal is released.

1. CHECK THROTTLE POSITION SENSOR* CIRCUIT

*: This sensor means accelerator pedal position (APP) sensor.

With CONSULT-II
Does “TCM INPUT SIGNALS” in “DATA MONITOR” show damage throttle position sensor circuit?

Without CONSULT-II
Does self-diagnosis show damage to throttle position sensor circuit?

Yes or No

Yes >> Check throttle position sensor circuit. Refer to AT-239, "21. TCM Self-diagnosis Does Not Activate (PNP & Overdrive Control Switches, and Throttle Position Sensor Circuit Checks)" .
No >> GO TO 2

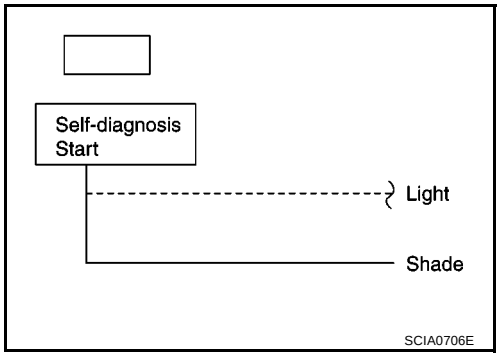

2. CHECK SYMPTOM

Check again.

OK or NG

OK >> **INSPECTION END**
NG >> 1. Perform TCM input/output signal inspection.
2. If NG, recheck TCM pin terminals for damage or loose connection with harness connector.

15. Engine Speed Does Not Return To Idle (Light Braking D4 → D3)

ECS0099N

SYMPTOM:

- **Engine speed does not smoothly return to idle when A/T shifts from D4 to D3 .**
- **Vehicle does not decelerate by engine brake when turning overdrive control switch OFF.**
- **Vehicle does not decelerate by engine brake when shifting A/T from “D” to “2” position.**

1. CHECK SELF-DIAGNOSTIC RESULTS

Does self-diagnosis show damage to overrun clutch solenoid valve circuit after cruise test?

Yes or NO

Yes >> Check overrun clutch solenoid valve circuit. Refer to AT-189, "DTC P1760 OVERRUN CLUTCH SOLENOID VALVE" .

No >> GO TO 2

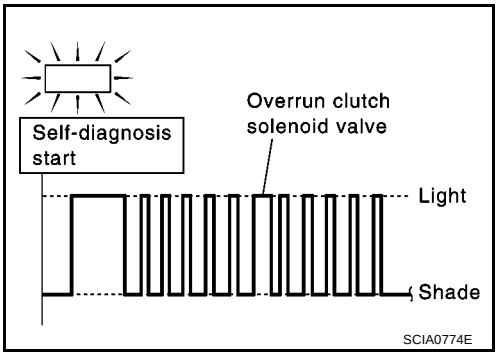

2. CHECK THROTTLE POSITION SENSOR*

*: This sensor means accelerator pedal position (APP) sensor.
Refer to AT-183, "DTC P1705 ACCELERATOR PEDAL POSITION (APP) SENSOR" .

OK or NG

OK >> GO TO 3

NG >> Repair or replace accelerator pedal position (APP) sensor. (AT-183, "DTC P1705 ACCELERATOR PEDAL POSITION (APP) SENSOR")

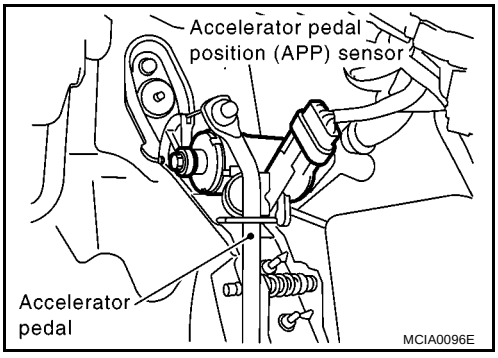

3. CHECK A/T FLUID CONDITION

1. Remove oil pan, refer to AT-410, "REMOVAL" .
2. Check A/T fluid condition.

OK or NG

OK >> GO TO 4

NG >> GO TO 6

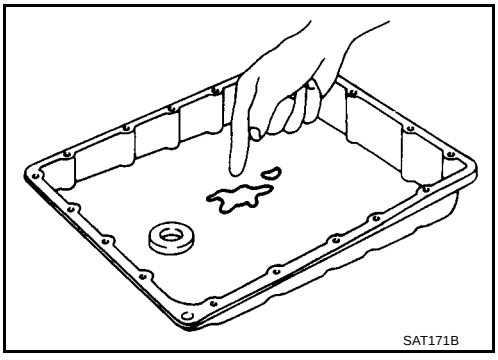

4. DETECT MALFUNCTIONING ITEM

1. Remove control valve assembly. Refer to AT-410, "Control Valve Assembly and Accumulators" .
2. Check the following items:
- Overrun clutch control valve
- Overrun clutch reducing valve
- Overrun clutch solenoid valve (AT-189, "DTC P1760 OVERRUN CLUTCH SOLENOID VALVE")

OK or NG

OK >> GO TO 5
NG >> Repair or replace damaged parts.

5. CHECK SYMPTOM

Check again.

OK or NG

OK >> **INSPECTION END**
NG >> 1. Perform TCM input/output signal inspection.
2. If NG, recheck TCM pin terminals for damage or loose connection with harness connector.

6. DETECT MALFUNCTIONING ITEM

1. Remove control valve assembly. Refer to AT-410, "Control Valve Assembly and Accumulators" .
2. Check the following items:
- Overrun clutch control valve
- Overrun clutch reducing valve
- Overrun clutch solenoid valve (AT-189, "DTC P1760 OVERRUN CLUTCH SOLENOID VALVE")
3. Disassemble A/T.
4. Check the following items:
- Overrun clutch assembly
- Oil pump assembly

OK or NG

OK >> GO TO 5
NG >> Repair or replace damaged parts.

16. Vehicle Does Not Start From D1

ECS0099O

SYMPTOM:
Vehicle does not start from D1 on Cruise test — Part 2.

1. CHECK SELF-DIAGNOSTIC RESULTS

Does self-diagnosis show damage to vehicle speed sensor·A/T (revolution sensor), shift solenoid valve A, B or vehicle speed sensor·MTR after cruise test?

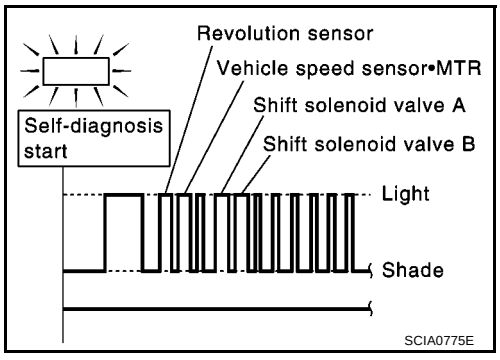

Yes or No

Yes >> ● Check damaged circuit. Refer to the following items.
EURO-OBD
- AT-125, "DTC P0720 VEHICLE SPEED SENSOR A/T (REVOLUTION SENSOR)"
- AT-173, "DTC P0750 SHIFT SOLENOID VALVE A"
- AT-178, "DTC P0755 SHIFT SOLENOID VALVE B"
- AT-203, "DTC VEHICLE SPEED SENSOR MTR"

No >> GO TO 2

2. CHECK SYMPTOM

Check again.

OK or NG

OK >> Go to AT-223, "8. Vehicle Cannot Be Started From D_1" .

NG >> 1. Perform TCM input/output signal inspection.

2. If NG, recheck TCM pin terminals for damage or loose connection with harness connector.

17. A/T Does Not Shift: $D_4 \rightarrow D_3$, When Overdrive Control Switch "ON" → "OFF"

ECS0099P

SYMPTOM:

A/T does not shift from D_4 to D_3 when changing overdrive control switch to "OFF" position.

1. CHECK OVERDRIVE CONTROL SWITCH CIRCUIT

With CONSULT-II

Does "TCM INPUT SIGNALS" in "DATA MONITOR" show damage to overdrive control switch circuit?

Without CONSULT-II

Does self-diagnosis show damage to overdrive control switch circuit?

Yes or No

Yes >> Check overdrive control switch circuit. Refer to AT-239, "21. TCM Self-diagnosis Does Not Activate (PNP & Overdrive Control Switches, and Throttle Position Sensor Circuit Checks)" .

No >> Go to 10. AT-227, "10. A/T Does Not Shift: $D_2 \rightarrow D_3$" .

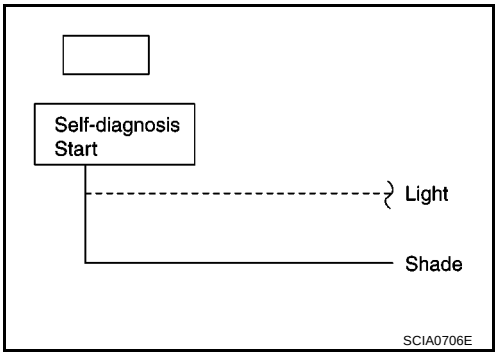

18. A/T Does Not Shift: $D_3 \rightarrow 2_2$, When Selector Lever "D" → "2" Position

ECS0099Q

SYMPTOM:

A/T does not shift from D_3 to 2_2 when changing selector lever from "D" to "2" position.

1. CHECK PNP SWITCH CIRCUIT

With CONSULT-II

Does "TCM INPUT SIGNALS" in "DATA MONITOR" show damage to PNP switch circuit?

Without CONSULT-II

Does self-diagnosis show damage to PNP switch circuit?

Yes or No

Yes >> Check PNP switch circuit. Refer to AT-239, "21. TCM Self-diagnosis Does Not Activate (PNP & Overdrive Control Switches, and Throttle Position Sensor Circuit Checks)" .

No >> Go to AT-225, "9. A/T Does Not Shift: $D_1 \rightarrow D_2$ Or Does Not Kickdown: $D_4 \rightarrow D_2$" .

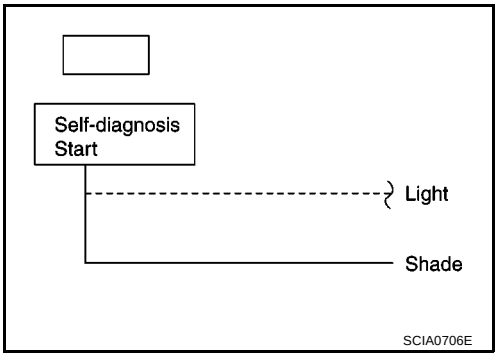

19. A/T Does Not Shift: $2_2 \rightarrow 1_1$, When Selector Lever “2” → “1” Position

ECS0099R

SYMPTOM:
A/T does not shift from 2_2 to 1_1 when changing selector lever from “2” to “1” position.

1. CHECK PNP SWITCH CIRCUIT

With CONSULT-II
Does “TCM INPUT SIGNALS” in “DATA MONITOR” show damage to PNP switch circuit?

Without CONSULT-II
Does self-diagnosis show damage to PNP switch circuit?

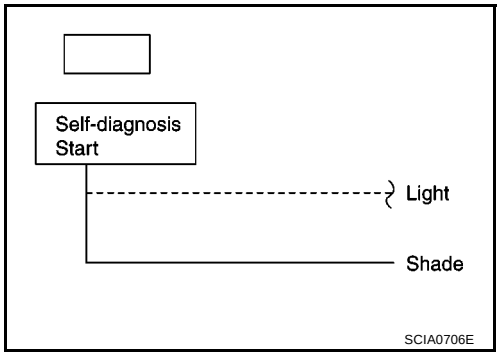

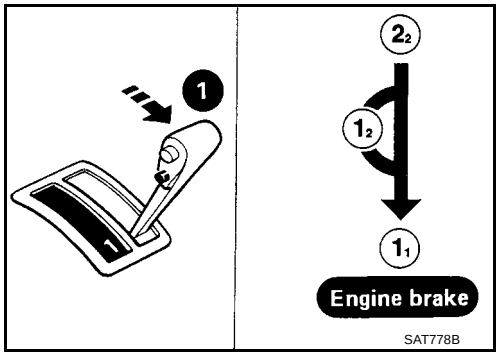

Yes or No

Yes >> Check PNP switch circuit. Refer to AT-239, "21. TCM Self-diagnosis Does Not Activate (PNP & Overdrive Control Switches, and Throttle Position Sensor Circuit Checks)" .

No >> GO TO 2

2. CHECK SYMPTOM

Check again.

OK or NG

OK >> **INSPECTION END**

NG >> 1. Perform TCM input/output signal inspection.
2. If NG, recheck TCM pin terminals for damage or loose connection with harness connector.

20. Vehicle Does Not Decelerate By Engine Brake

ECS0099S

SYMPTOM:
Vehicle does not decelerate by engine brake when shifting from 2_2 (1_2) to 1_1.

1. CHECK SYMPTOM

Is 6. Vehicle Does Not Creep Backward In “R” Position OK?

Yes or No

Yes >> Go to AT-235, "15. Engine Speed Does Not Return To Idle (Light Braking $D_4 \rightarrow D_3$)".
No >> Go to AT-218, "6. Vehicle Does Not Creep Backward In “R” Position".

21. TCM Self-diagnosis Does Not Activate (PNP & Overdrive Control Switches, and Throttle Position Sensor Circuit Checks)

ECS0099T

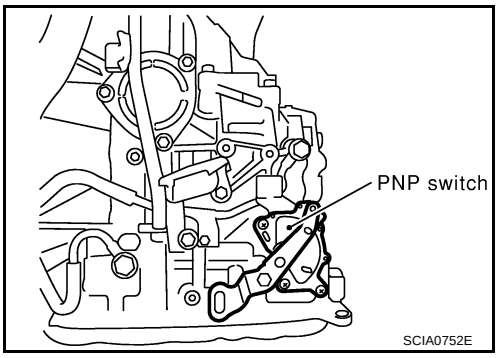

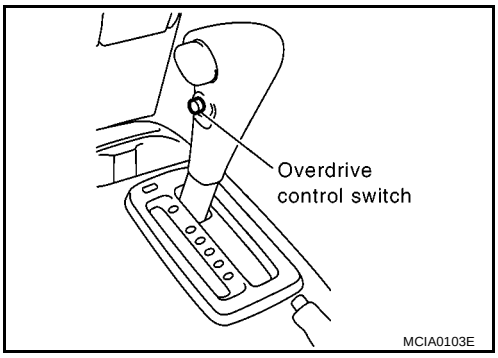

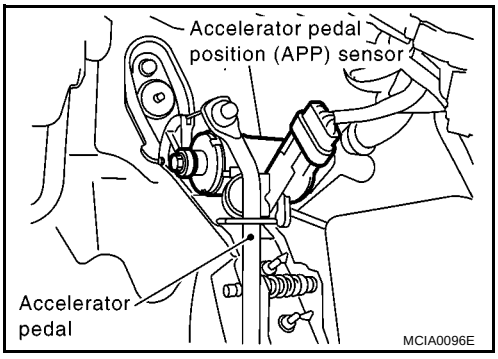

SYMPTOM:
O/D OFF indicator lamp does not come on in TCM self-diagnostic procedure even if the lamp circuit is good.

DESCRIPTION

- PNP switch
  The PNP switch assembly includes a transmission position switch. The transmission position switch detects the selector lever position and sends a signal to the TCM.
- Overdrive control switch

Detects the overdrive control switch position (ON or OFF) and sends a signal to the TCM.

- Throttle position sensor*
  *: This sensor means accelerator pedal position (APP) sensor.

  Electric throttle control actuator consists of throttle control motor, acceleration pedal position sensor, throttle position sensor, etc. The actuator sends a signal to the TCM.

DIAGNOSTIC PROCEDURE

1. CHECK PNP SWITCH CIRCUIT (WITH CONSULT-II)

With CONSULT-II

1. Turn ignition switch to “ON” position.
   (Do not start engine.)
2. Select “TCM INPUT SIGNALS” in “DATA MONITOR” mode for “A/T” with CONSULT-II.
3. Read out “P/N”, “R”, “D”, “2” and “1” position switches moving selector lever to each position.
   Check that the signal of the selector lever position is indicated properly.

DATA MONITOR	
MONITORING	
PN POSI SW	OFF
R POSITION SW	OFF
D POSITION SW	OFF
2 POSITION SW	ON
1 POSITION SW	OFF

SAT701J

OK or NG

OK >> GO TO 3
NG >> Check the following items:

- PNP switch (Refer to AT-244, "COMPONENT INSPECTION" .)
- Harness for short or open between ignition switch and PNP switch (Main harness)
- Harness for short or open between PNP switch and TCM (Main harness)
- Diode (P, N positions)

2. CHECK PNP SWITCH CIRCUIT (WITHOUT CONSULT-II)

Without CONSULT-II

1. Turn ignition switch to “ON” position. (Do not start engine.)
2. Check voltage between TCM terminals 26, 27, 34, 35, 36 and ground while moving selector lever through each position.

Voltage:
B: Battery voltage
0: 0V

Lever position	Terminal No.				
	36	35	34	27	26
P, N	B	0	0	0	0
R	0	B	0	0	0
D	0	0	B	0	0
2	0	0	0	B	0
1	0	0	0	0	B

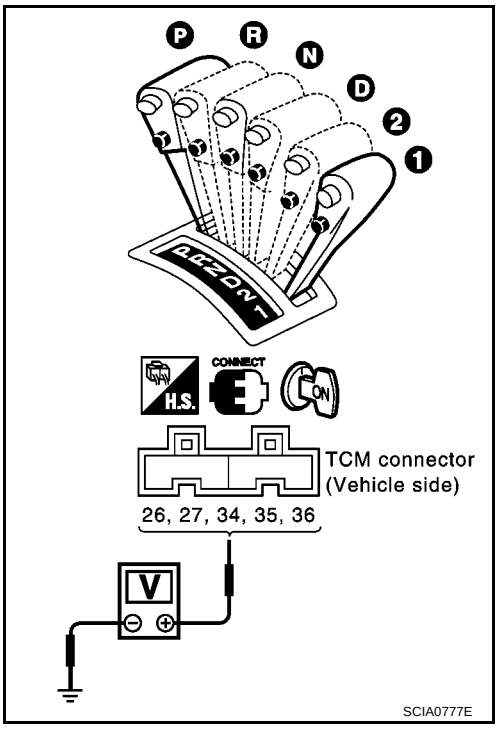

OK or NG

OK >> GO TO 4
NG >> Check the following items:
- PNP switch (Refer to AT-244, "COMPONENT INSPECTION" .)
- Harness for short or open between ignition switch and PNP switch (Main harness)
- Harness for short or open between PNP switch and TCM (Main harness)
- Diode (P, N positions)

3. CHECK OVERDRIVE CONTROL SWITCH CIRCUIT (WITH CONSULT-II)

With CONSULT-II

1. Turn ignition switch to “ON” position.
(Do not start engine.)
2. Select “TCM INPUT SIGNALS” in “DATA MONITOR” mode for “A/T” with CONSULT-II.
3. Read out “OVERDRIVE SWITCH”.
Check the signal of the overdrive control switch is indicated properly.
(Overdrive control switch “ON” displayed on CONSULT-II means overdrive “OFF”.)

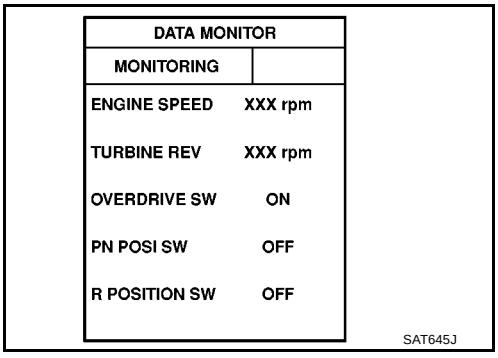

OK or NG

OK >> GO TO 5
NG >> Check the following items:
- Overdrive control switch (Refer to AT-244, "COMPONENT INSPECTION" .)
- Harness for short or open between TCM and overdrive control switch (Main harness)
- Harness of ground circuit for overdrive control switch (Main harness) for short or open

4. CHECK OVERDRIVE CONTROL SWITCH CIRCUIT (WITHOUT CONSULT-II)

Without CONSULT-II

1. Turn ignition switch to “ON” position.
   (Do not start engine.)
2. Check voltage between A/T device connector terminal 2 and ground when overdrive control switch is “ON” and “OFF”.

Voltage:

Switch position “ON” : Battery voltage

Switch position “OFF” : 1V or less

OK or NG

OK >> GO TO 6

NG >> Check the following items:

- Overdrive control switch (Refer to AT-244, "COMPONENT INSPECTION" .)
- Harness for short or open between TCM and overdrive control switch (Main harness)
- Harness of ground circuit for overdrive control switch (Main harness) for short or open

5. CHECK THROTTLE POSITION SENSOR* CIRCUIT (WITH CONSULT-II)

*:This sensor means accelerator pedal position (APP) sensor.

With CONSULT-II

1. Turn ignition switch to “ON” position.
   (Do not start engine.)
2. Select “TCM INPUT SIGNALS” in “DATA MONITOR” mode for “A/T” with CONSULT-II.
3. Read out “THRTL POS SEN” depressing and releasing accelerator pedal.
   Check the signal of throttle position sensor is indicated properly.

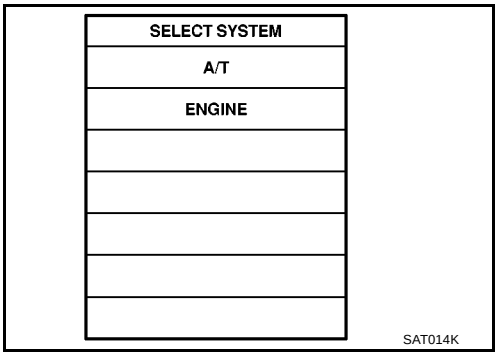

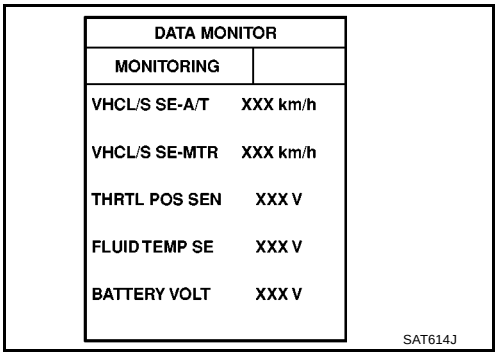

OK or NG

OK >> GO TO 7

NG >> Check the following items:

- Throttle position sensor — Refer to AT-244, "COMPONENT INSPECTION" .
- Harness for short or open between ignition switch and throttle position sensor (Main harness)
- Harness for short or open between throttle position sensor and TCM (Main harness)

6. CHECK THROTTLE POSITION SENSOR CIRCUIT (WITHOUT CONSULT-II)

Without CONSULT-II

1. Turn ignition switch to “ON” position.
   (Do not start engine.)
2. Check voltage between TCM terminals 41 and 42 while depressing, and releasing accelerator pedal slowly. (After warming up engine)

   Voltage:

   Fully-closed throttle valve : Approximately 0.5V

   Fully-open throttle valve : Approximately 4V

   (Voltage rises and drops gradually in response to throttle position)

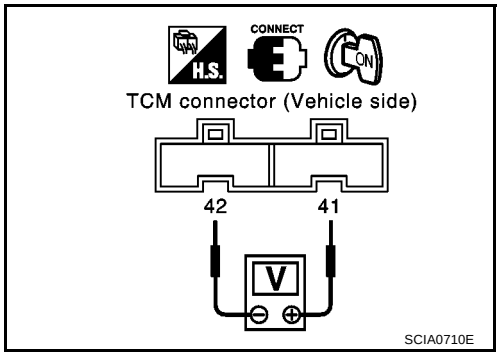

OK or NG

OK >> GO TO 7

NG >> Check the following items:

- Throttle position sensor — Refer to AT-244, "COMPONENT INSPECTION" .
- Harness for short or open between ignition switch and throttle position sensor (Main harness)
- Harness for short or open between throttle position sensor and TCM (Main harness)

7. CHECK DTC

Perform “DIAGNOSTIC PROCEDURE”.Refer to AT-240 .

OK or NG

OK >> **INSPECTION END**

NG >>
- Perform TCM input/output signal inspection.
- If NG, recheck TCM pin terminals for damage or loose connection with harness connector.

COMPONENT INSPECTION

Overdrive Control Switch

- Check continuity between two terminals 1 and 2.

Switch position	Continuity
ON	No
OFF	Yes

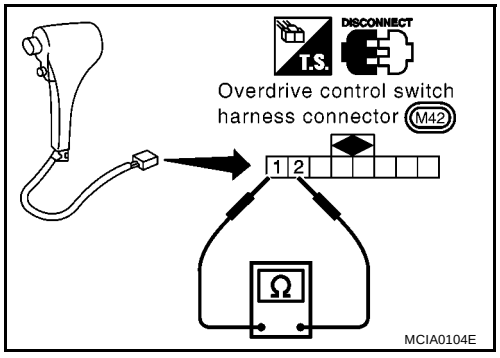

PNP Switch

1. Check continuity between terminals 1 and 3 and between terminals 2 and 4, 5, 6, 7, 8, 9 while moving manual shaft through each position.

Lever position	Terminal No.	
P	3 — 7	1 — 2
R	3 — 8	
N	3 — 9	1 — 2
D	3 — 6	
2	3 — 5	
1	3 — 4	

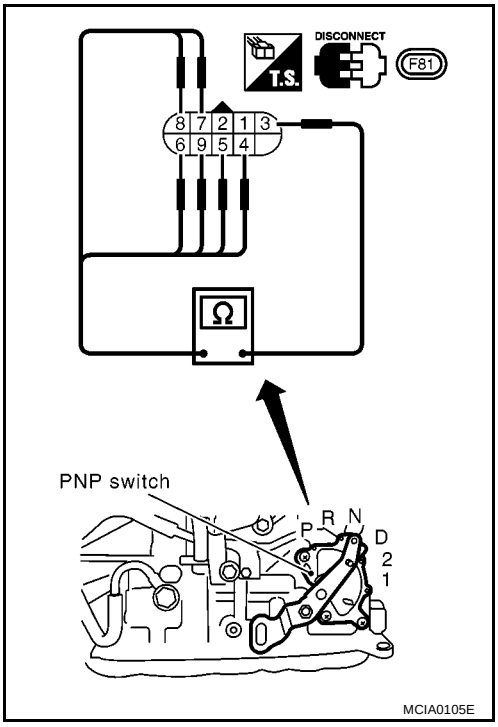

2. If NG, check again with manual control cable disconnected from manual shaft of A/T assembly. Refer to step 1.
3. If OK on step 2, adjust manual control cable. Refer to AT-412, "Control Cable Adjustment" .
4. If NG on step 2, remove PNP switch from A/T and check continuity of PNP switch terminals. Refer to step 1.
5. If OK on step 4, adjust PNP switch. Refer to AT-412, "Park/Neutral Position (PNP) Switch Adjustment" .
6. If NG on step 4, replace PNP switch.

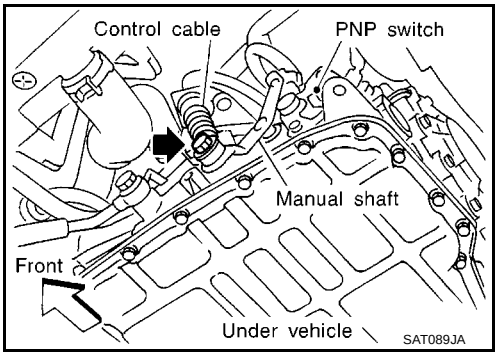

Throttle Position Sensor*

*: This sensor means accelerator pedal position (APP) sensor.
Refer to AT-183, "DTC P1705 ACCELERATOR PEDAL POSITION (APP) SENSOR" .

ON BOARD DIAGNOSTIC SYSTEM DESCRIPTION

PFP:00000

CONSULT-II

ECS0099U

After performing AT-246, "SELF-DIAGNOSTIC PROCEDURE (WITH CONSULT-II)" , place check marks for results on the AT-258, "DIAGNOSTIC WORKSHEET" . Reference pages are provided following the items.

NOTICE:

1. The CONSULT-II electrically displays shift timing and lock-up timing (that is, operation timing of each solenoid).
   Check for time difference between actual shift timing and the CONSULT-II display. If the difference is noticeable, mechanical parts (except solenoids, sensors, etc.) may be malfunctioning. Check mechanical parts using applicable diagnostic procedures.
2. Shift schedule (which implies gear position) displayed on CONSULT-II and that indicated in Service Manual may differ slightly. This occurs because of the following reasons:
   - Actual shift schedule has more or less tolerance or allowance,
   - Shift schedule indicated in Service Manual refers to the point where shifts start, and
   - Gear position displayed on CONSULT-II indicates the point where shifts are completed.
3. Shift solenoid valve “A” or “B” is displayed on CONSULT-II at the start of shifting. Gear position is displayed upon completion of shifting (which is computed by TCM).
4. Additional CONSULT-II information can be found in the Operation Manual supplied with the CONSULT-II unit.

SELF-DIAGNOSTIC PROCEDURE (WITH CONSULT-II)

1. Turn on CONSULT-II and touch “A/T” for TCM self-diagnosis.
   If A/T is not displayed, check TCM power supply and ground circuit. Refer to AT-304, "TCM Terminals and Reference Value" . If result is NG, refer to EL-11, “Power Supply Routing”.

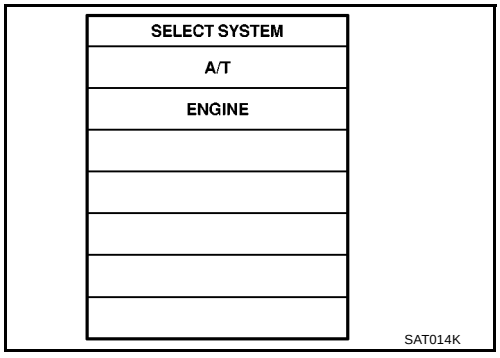

2. Touch “SELF-DIAG RESULTS”.
   Display shows malfunction experienced since the last erasing operation.
   CONSULT-II performs “REAL TIME DIAG”.
   Also, any malfunction detected while in this mode will be displayed at real time.

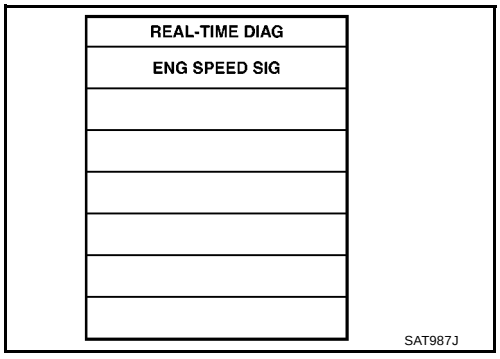

SELF-DIAGNOSTIC RESULT TEST MODE

Detected items (Screen terms for CONSULT-II, "SELF DIAGNOSIS" test mode)		Malfunction is detected when...	TCM self-diagnosis Available by O/D OFF Self-diagnosis indicator lamp or "A/T" on CONSULT-II	Remarks
"A/T"	"ENGINE"			
Revolution sensor		● TCM does not receive the proper voltage signal from the sensor.	X	—
VHCL SPEED SEN·A/T	VEH SPD SEN/ CIR AT			
Vehicle speed sensor (Meter)		● TCM does not receive the proper voltage signal from the sensor.	X	—
VHCL SPEED SEN·MTR	—			
Shift solenoid valve A		● TCM detects an improper voltage drop when it tries to operate the solenoid valve.	X	
SHIFT SOLENOID/V A	SFT SOL A/CIRC			
Shift solenoid valve B		● TCM detects an improper voltage drop when it tries to operate the solenoid valve.	X	
SHIFT SOLENOID/V B	SFT SOL B/CIRC			
Overrun clutch solenoid valve		● TCM detects an improper voltage drop when it tries to operate the solenoid valve.	X	
OVERRUN CLUTCH S/V	O/R CLUCH SOL/ CIRC			
T/C clutch solenoid valve		● TCM detects an improper voltage drop when it tries to operate the solenoid valve.	X	
T/C CLUTCH SOL/V	TCC SOLENOID/ CIRC			
Line pressure solenoid valve		● TCM detects an improper voltage drop when it tries to operate the solenoid valve.	X	
LINE PRESSURE S/V	L/PRESS SOL/ CIRC			
Throttle position sensor (Accelerator Pedal Position (APP) sensor)		● TCM receives an excessively low or high voltage from the sensor.	X	
THROTTLE POSI SEN	TP SEN/CIRC A/T			
Engine speed signal		● TCM does not receive the proper voltage signal from the ECM.	X	
ENGINE SPEED SIG				
A/T fluid temperature sensor		● TCM receives an excessively low or high voltage from the sensor.	X	To be displayed in case of abnormality and when no recording is made.
BATT/FLUID TEMP SEN	ATF TEMP SEN/ CIRC			
Engine control		● The ECM-A/T communication line is open or shorted.	X	
A/T COMM LINE*1	—			
TCM (RAM)		● TCM memory (RAM) is malfunctioning	—	Refer to AT-304, "TCM Terminals and Reference Value"
CONTROL UNIT (RAM)	—			
TCM (ROM)		● TCM memory (ROM) is malfunctioning	—	Refer to AT-304, "TCM Terminals and Reference Value"
CONTROL UNIT (ROM)	—			
TCM (EEP ROM)		● TCM memory (EEP ROM) is malfunctioning.	—	Refer to AT-304, "TCM Terminals and Reference Value"
CONT UNIT(EEP ROM)	—			

Detected items (Screen terms for CONSULT-II, “SELF DIAGNOSIS” test mode)		Malfunction is detected when...	TCM self-diagnosis	Remarks
			Available by O/D OFF	
“A/T”	“ENGINE”		Self-diagnosis indicator lamp or “A/T” on CONSULT-II	
Initial start		● This is not a malfunction message (Whenever shutting off a power supply to the TCM, this message appears on the screen.)	X	
INITIAL START	—			
No failure (NO SELF DIAGNOSTIC FAILURE INDICATED FURTHER TESTING MAY BE REQUIRED**)		● No failure has been detected.	X	

X: Applicable
–: Not applicable
*1: A/T COMM LINE means CAN COMM LINE in this model.

DATA MONITOR MODE (A/T)

Item	Display	move to center Monitor items				Description	Remarks
		TCM Input signals	CAN comm signals	Main signals	Selection from menu		
Vehicle speed sensor 1 (A/T) (Revolution sensor)	VHCL/S SE·A/T [km/h] or [mph]	X	—	—	▼	● Vehicle speed computed from signal of revolution sensor is displayed.	When racing engine in N or P with vehicle stationary, CONSULT-II data may not indicate 0 km/h (0 mph).
Vehicle speed sensor 2 (Meter)	VHCL/S SE·MTR [km/h] or [mph]	X	—	—	▼	● Vehicle speed computed from signal of vehicle speed sensor is displayed.	Vehicle speed display may not be accurate under approx. 10 km/h (6 mph). It may not indicate 0 km/h (0 mph) when vehicle is stationary.
Throttle position sensor	THRTL POS SEN [V]	X	—	—	▼	● Throttle position sensor signal voltage is displayed.	
A/T fluid temperature sensor	FLUID TEMP SE [V]	X	—	—	▼	● A/T fluid temperature sensor signal voltage is displayed. ● Signal voltage lowers as fluid temperature rises.	
Battery voltage	BATTERY VOLT [V]	X	—	—	▼	● Source voltage of TCM is displayed.	
Engine speed	ENGINE SPEED [rpm]	X	—	X	▼	● Engine speed, computed from engine speed signal, is displayed.	Engine speed display may not be accurate under approx. 800 rpm. It may not indicate 0 rpm even when engine is not running.

Item	Display	move to center Monitor items				Description	Remarks
		TCM Input signals	CAN comm sig-nals	Main signals	Selection from menu		
Overdrive control switch	OVERDRIVE SW [ON/OFF]	X	—	—	▼	● ON/OFF state computed from signal of overdrive control SW is displayed.	
PN position (PNP) switch	PN POSI SW [ON/OFF]	X	—	—	▼	● ON/OFF state computed from signal of PN position SW is displayed.	
R position switch	R POSITION SW [ON/OFF]	X	—	—	▼	● ON/OFF state computed from signal of R position SW is displayed.	
D position switch	D POSITION SW [ON/OFF]	X	—	—	▼	● ON/OFF state computed from signal of D position SW is displayed.	
2 position switch	2 POSITION SW [ON/OFF]	X	—	—	▼	● ON/OFF status, computed from signal of 2 position SW, is displayed.	
1 position switch	1 POSITION SW [ON/OFF]	X	—	—	▼	● ON/OFF status, computed from signal of 1 position SW, is displayed.	
Kickdown switch	KICKDOWN SW [ON/OFF]	X	—	—	▼	● ON/OFF status, computed from signal of kick down SW, is displayed.	● This is displayed even when no kick down switch is equipped.
Gear position	GEAR	—	—	X	▼	● Gear position data used for computation by TCM, is displayed.	
Selector lever position	SLCT LVR POSI	—	—	X	▼	● Selector lever position data, used for computation by TCM, is displayed.	● A specific value used for control is displayed if fail-safe is activated due to error.
Vehicle speed	VEHICLE SPEED [km/h] or [mph]	—	—	X	▼	● Vehicle speed data, used for computation by TCM, is displayed.	
Torque converter slip ratio	TC SLIP RATIO [0.000]	—	—	—	▼	● Ratio of engine revolution to input shaft revolution of torque converter	
Torque converter slip speed	TC SLIP SPEED [rpm]	—	—	—	▼	Difference in revolution between input shaft revolution and input shaft revolution of torque converter	Display doesn't indicate o rpm even if engine is stopped. But this isn't malfunction.
can communication	CAN COMM [OK/UNKWN]	—	X	—	▼		
can circuit 1	CAN CIRC 1 [OK/UNKWN]	—	X	—	▼		

Item	Display	move to center Monitor items				Description	Remarks
		TCM Input signals	CAN comm sig-nals	Main signals	Selection from menu		
can circuit 2	CAN CIRC 2 [OK/UNKWN]	—	X	—	▼		
can circuit 3	CAN CIRC 3 [OK/UNKWN]	—	X	—	▼		
can circuit 4	CAN CIRC 4 [OK/UNKWN]	—	X	—	▼		
can circuit 5	CAN CIRC 5 [OK/UNKWN]	—	X	—	▼		
Throttle position	THROTTLE POSI [/8]	—	—	X	▼	● Throttle position data, used for computation by TCM, is displayed.	● A specific value used for control is displayed if fail-safe is activated due to error.
Stop lamp switch	BRAKE SW [ON/OFF]	X	—	—	▼	● ON/OFF status is displayed. ON... Brake pedal is depressed. OFF... Brake pedal is released.	
Line pressure duty	LINE PRES DTY [%]	—	—	X	▼	● Control value of line pressure solenoid valve, computed by TCM from each input signal, is displayed.	
Torque converter clutch solenoid valve duty	TCC S/V DUTY [%]	—	—	X	▼	● Control value of torque converter clutch solenoid valve, computed by TCM from each input signal, is displayed.	
Shift solenoid valve A	SHIFT S/V A [ON/OFF]	—	—	X	▼	● Control value of shift solenoid valve A, computed by TCM from each input signal, is displayed.	Control value of solenoid is displayed even if solenoid circuit is disconnected. The OFF signal is displayed if solenoid circuit is shorted.
Shift solenoid valve B	SHIFT S/V B [ON/OFF]	—	—	X	▼	● Control value of shift solenoid valve B, computed by TCM from each input signal, is displayed.	
Overrun clutch solenoid valve	OVERRUN/C S/V [ON/OFF]	—	—	X	▼	● Control value of overrun clutch solenoid valve computed by TCM from each input signal is displayed.	
Self-diagnosis display lamp (O/D OFF indicator lamp)	SELF-D DP LMP [ON/OFF]	—	—	X	▼	● Control status of O/D OFF indicator lamp is displayed.	
Voltage [V]		—	—	—	▼	Value measured by voltage probe is displayed.	

Item	Display	move to center Monitor items				Description	Remarks
		TCM Input signals	CAN comm sig-nals	Main signals	Selection from menu		
Frequency [Hz]		—	—	—	▼	Value measured by pulse probe is displayed. If measurement is impossible, “#” sign is displayed. “#” sign is also displayed at the final data value until the measurement result is obtained.	
DUTY-HI		—	—	—	▼	Duty cycle value for measurement probe is displayed.	
DUTY-LOW		—	—	—	▼		
PLS WIDTH-HI		—	—	—	▼	Measured pulse width of measurement probe is displayed.	
PLS WIDTH-LOW		—	—	—	▼		

X: Applicable —: Not applicable ▼: Option

HOW TO ERASE SELF-DIAGNOSTIC RESULTS (WITH CONSULT-II)

1. If the ignition switch stays “ON” after repair work, be sure to turn ignition switch “OFF” once. Wait for at least 3 seconds and then turn it “ON” again.
2. Turn CONSULT-II “ON”, and touch “A/T”.

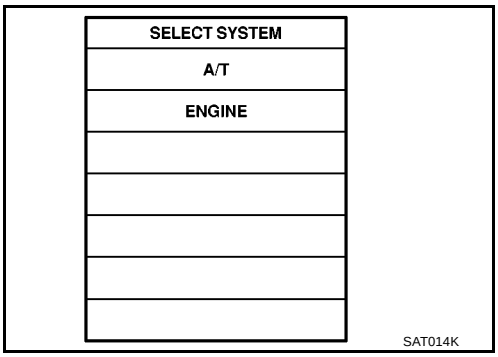

3. Touch “SELF-DIAG RESULTS”.

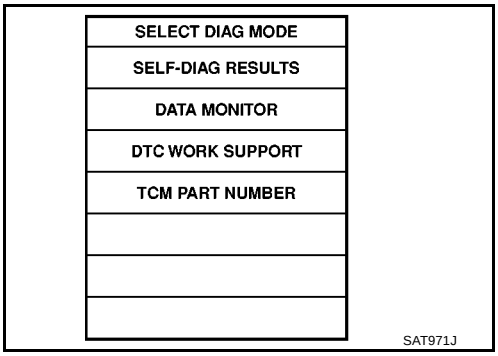

4. Touch “ERASE”. (The self-diagnostic results will be erased.)

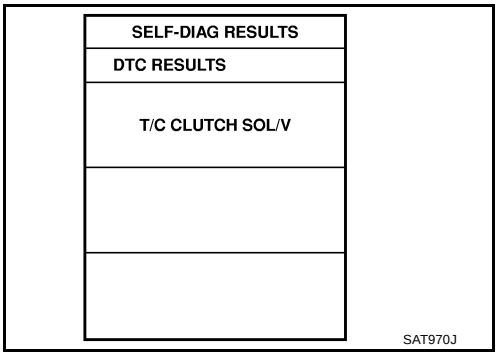

Diagnostic Procedure Without CONSULT-II

ECS0099V

SELF-DIAGNOSTIC PROCEDURE (WITHOUT CONSULT-II)

1. CHECK O/D OFF INDICATOR LAMP

1. Start engine and warm it up to normal operating temperature.
2. Turn ignition switch to “OFF” position.
   Wait 5 seconds.
3. Turn ignition switch to “ACC” position.
4. Set overdrive control switch to “ON” position.
5. Move selector lever to “P” position.
6. Turn ignition switch to “ON” position. (Do not start engine.)

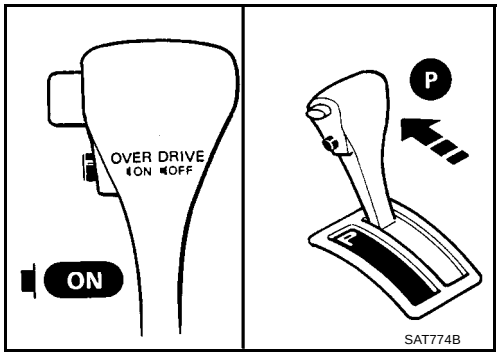

7. Does O/D OFF indicator lamp come on for about 2 seconds?

Yes or No

Yes >> GO TO 2.
No >> GO TO AT-312, "1. O/D OFF Indicator Lamp Does Not Come On" .

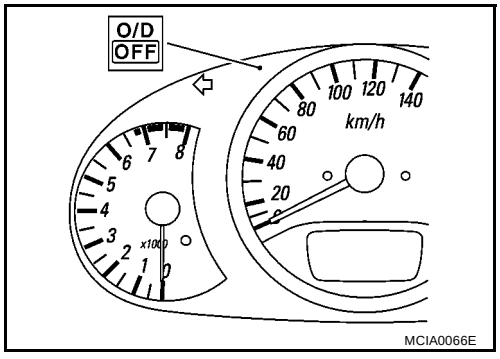

2. JUDGEMENT PROCEDURE STEP 1

1. Turn ignition switch to “OFF” position.
2. Turn ignition switch to “ACC” position.
3. Move selector lever to “D” position.
4. Set overdrive control switch to “OFF” position.
5. Turn ignition switch to “ON” position. (Do not start engine.)
   Wait more than 2 seconds after turning ignition switch “ON”.

>> GO TO 3

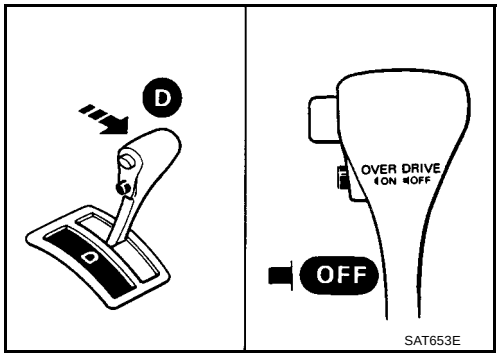

3. JUDGEMENT PROCEDURE STEP 2

1. Move selector lever to “2” position.
2. Set overdrive control switch to “ON” position.

>> GO TO 4

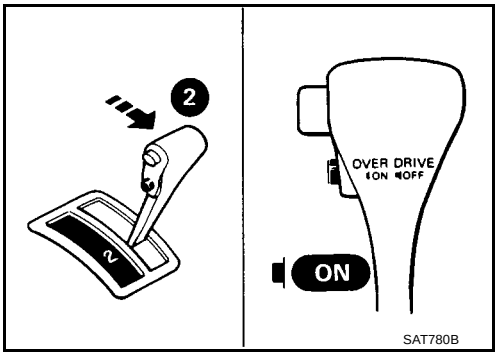

4. JUDGEMENT PROCEDURE STEP 3

1. Move selector lever to “1” position.
2. Set overdrive control switch to “OFF” position.

>> GO TO 5

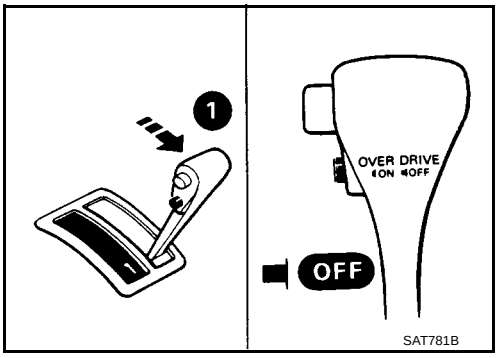

5. JUDGEMENT PROCEDURE STEP 4

1. Depress accelerator pedal fully and release it.

>> GO TO 6

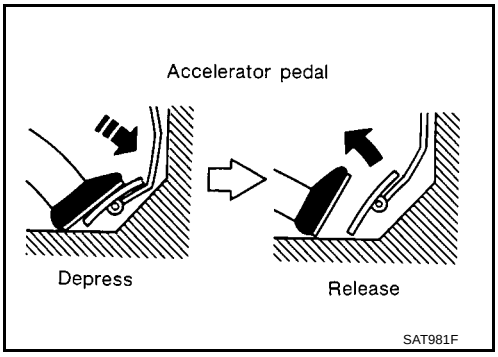

6. CHECK SELF-DIAGNOSIS CODE

Check O/D OFF indicator lamp. Refer to AT-254, "JUDGEMENT OF SELF-DIAGNOSIS CODE" .

>> **DIAGNOSIS END**

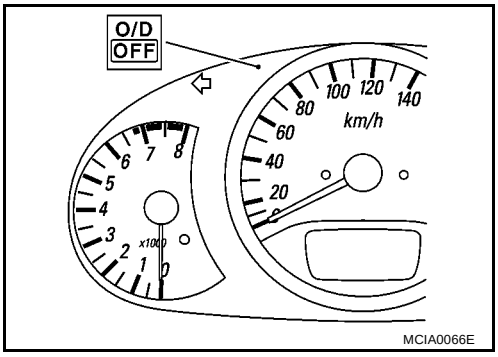

JUDGEMENT OF SELF-DIAGNOSIS CODE

O/D OFF indicator lamp:	
All judgement flickers are the same. 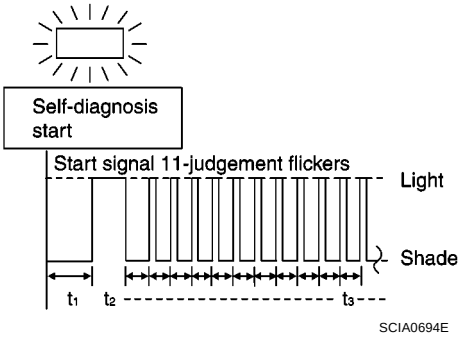 All circuits that can be confirmed by self-diagnosis are OK.	1st judgement flicker is longer than others. 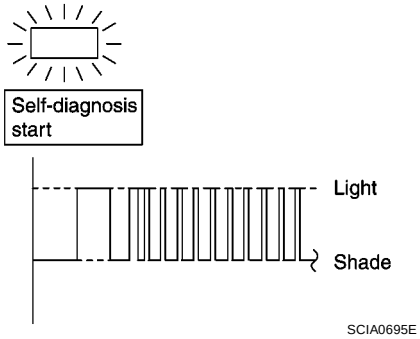 Revolution sensor circuit is short-circuited or disconnected. ⇒ **Go to VEHICLE SPEED SENSOR·A/T (REVOLUTION SENSOR).** Refer to AT-347
2nd judgement flicker is longer than others. 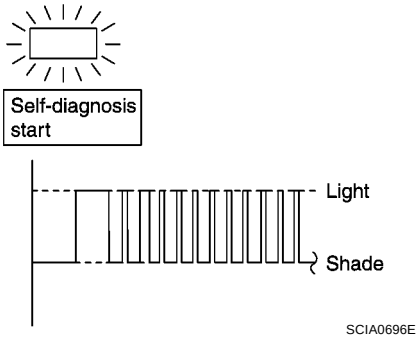 Vehicle speed sensor circuit is short-circuited or disconnected. ⇒ **Go to DTC VEHICLE SPEED SENSOR·MTR.** Refer to AT-352	3rd judgement flicker is longer than others. 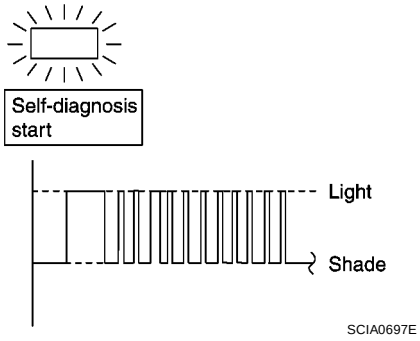 ⇒ **Go to ACCELERATOR PEDAL POSITION (APP) SENSOR.** Refer to AT-356
4th judgement flicker is longer than others. 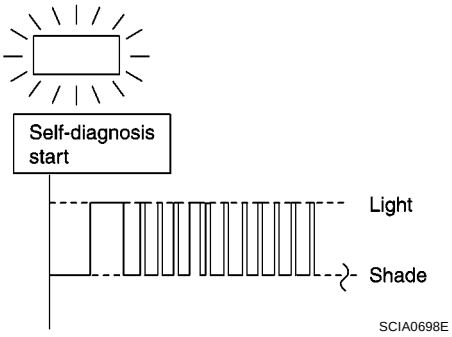 Shift solenoid valve A circuit is short-circuited or disconnected. ⇒ **Go to SHIFT SOLENOID VALVE A.** Refer to AT-361	5th judgement flicker is longer than others. 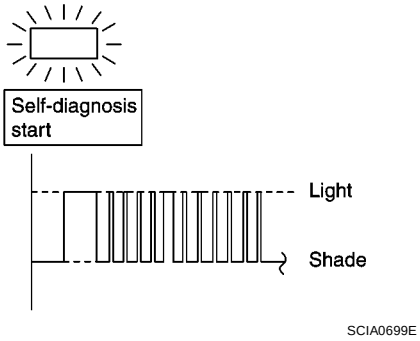 Shift solenoid valve B circuit is short-circuited or disconnected. ⇒ **Go to SHIFT SOLENOID VALVE B.** Refer to AT-366

O/D OFF indicator lamp:	
6th judgement flicker is longer than others. 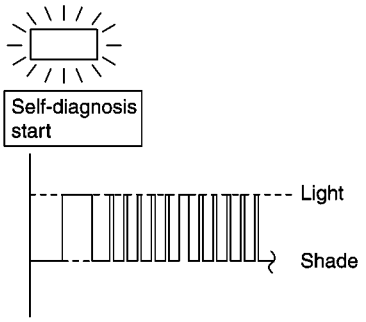 SCIA0700E Overrun clutch solenoid valve circuit is short-circuited or disconnected. ⇒ **Go to OVERRUN CLUTCH SOLENOID VALVE.** Refer to AT-371	7th judgement flicker is longer than others. 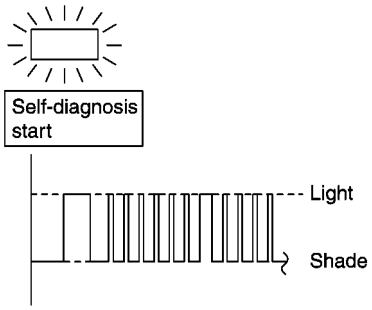 SCIA0701E Torque converter clutch solenoid valve circuit is short-circuited or disconnected. ⇒ **Go to TORQUE CONVERTER CLUTCH SOLENOID VALVE.** Refer to AT-376
8th judgement flicker is longer than others. 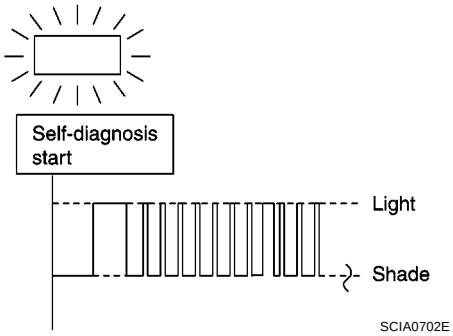 SCIA0702E A/T fluid temperature sensor is disconnected or TCM power source circuit is damaged. ⇒ **Go to BATT/FLUID TEMP SEN(A/T FLUID TEMP SENSOR CIRCUIT AND TCM POWER SOURCE).** Refer to AT-381	9th judgement flicker is longer than others. 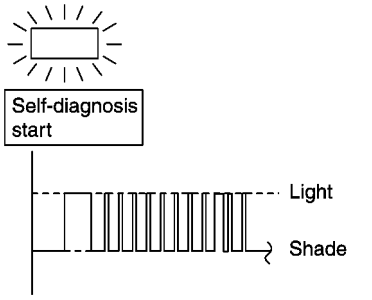 SCIA0703E Engine speed signal circuit is short-circuited or disconnected. ⇒ **Go to ENGINE SPEED SIGNAL.** Refer to AT-387

O/D OFF indicator lamp:	
10th judgement flicker is longer than others. 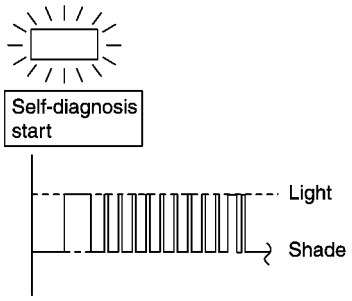 SCIA0704E Line pressure solenoid valve circuit is short-circuited or disconnected. ⇒ **Go to LINE PRESSURE SOLENOID VALVE.** Refer to AT-392	11th judgement flicker is longer than others. 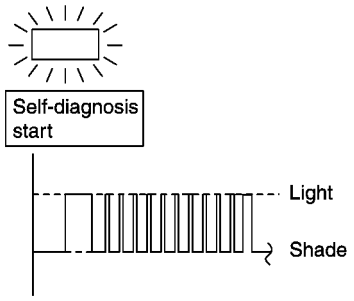 SCIA0705E The ECM-A/T communication line is open or shorted. ⇒**Go to CAN COMMUNICATION LINE.** Refer to AT-399
Lamp comes OFF. 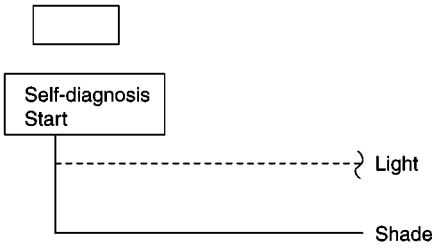 SCIA0706E PNP switch, overdrive control switch or throttle position switch circuit is disconnected or TCM is damaged. ⇒ **Go to 21. TCM Self-diagnosis Does Not Activate (PNP & Overdrive Control Switches, and Throttle Position Sensor).** Refer to AT-337	Flickers as shown below. 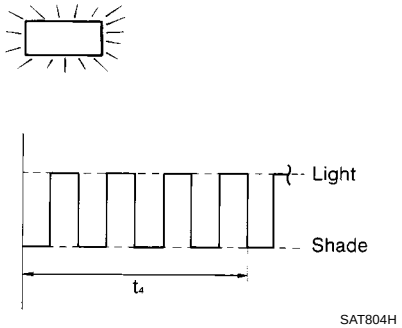 SAT804H Battery power is low. Battery has been disconnected for a long time. Battery is connected conversely. (When reconnecting TCM connectors.—This is a problem.)

t_1 = 2.5 seconds t_2 = 2.0 seconds t_3 = 1.0 second t_4 = 1.0 second

HOW TO ERASE SELF-DIAGNOSTIC RESULTS (WITHOUT CONSULT-II)

1. If the ignition switch stays “ON” after repair work, be sure to turn ignition switch “OFF” once. Wait for at least 3 seconds and then turn it “ON” again.
2. Perform “SELF-DIAGNOSTIC PROCEDURE (Without CONSULT-II)”. Refer to AT-252 .
3. Turn ignition switch “OFF”. (The self-diagnostic results will be erased.)

TROUBLE DIAGNOSIS — INTRODUCTION

PFP:00000

Introduction

ECS0099W

The TCM receives a signal from the vehicle speed sensor, throttle position sensor or PNP switch and provides shift control or lock-up control via A/T solenoid valves.

Input and output signals must always be correct and stable in the operation of the A/T system. The A/T system must be in good operating condition and be free of valve seizure, solenoid valve malfunction, etc.

It is much more difficult to diagnose a problem that occurs intermittently rather than continuously. Most intermittent problems are caused by poor electric connections or improper wiring. In this case, careful checking of suspected circuits may help prevent the replacement of good parts.

A visual check only, may not find the cause of the problems. A road test with CONSULT-II or a circuit tester connected should be performed. Follow the “Work Flow”. Refer to AT-261, "Work Flow" .

Before undertaking actual checks, take a few minutes to talk with a customer who approaches with a drive ability complaint. The customer can supply good information about such problems, especially intermittent ones. Find out what symptoms are present and under what conditions they occur. A “Diagnostic Worksheet” like the example (AT-258, "DIAGNOSTIC WORKSHEET") should be used.

Start your diagnosis by looking for “conventional” problems first. This will help troubleshoot drive ability problems on an electronically controlled engine vehicle.

Also check related Service bulletins for information.

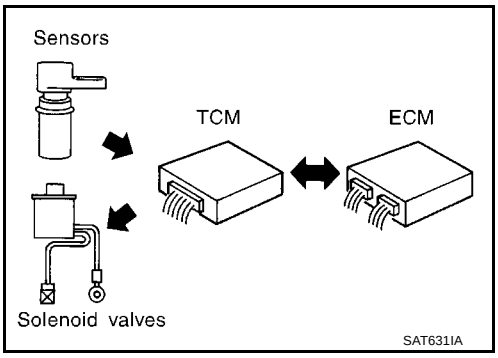

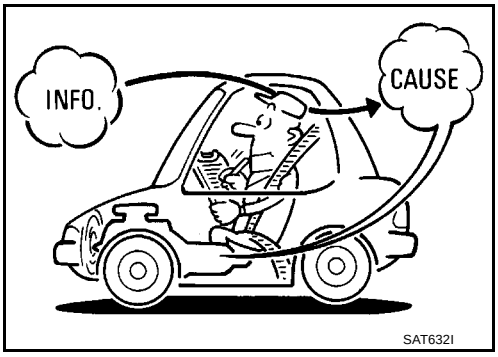

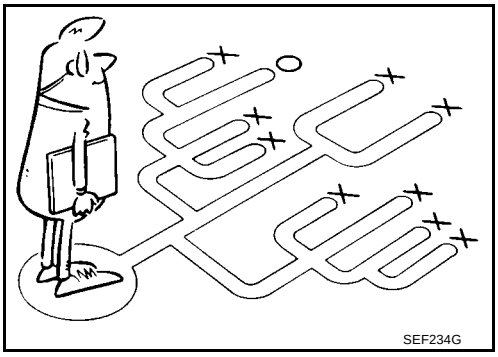

DIAGNOSTIC WORKSHEET

Information from Customer

KEY POINTS

- **WHAT**..... Vehicle & A/T model
- **WHEN**..... Date, Frequencies
- **WHERE**..... Road conditions
- **HOW**..... Operating conditions, Symptoms

Customer name MR/MS	Model & Year	VIN
Trans. model	Engine	Mileage
Incident Date	Manuf. Date	In Service Date
Frequency	❏ Continuous ❏ Intermittent (times a day)	
Symptoms	❏ Vehicle does not move. (❏ Any position ❏ Particular position)	
	❏ No up-shift (❏ 1st → 2nd ❏ 2nd → 3rd ❏ 3rd → O/D)	
	❏ No down-shift (❏ O/D → 3rd ❏ 3rd → 2nd ❏ 2nd → 1st)	
	❏ Lockup malfunction	
	❏ Shift point too high or too low.	
	❏ Shift shock or slip (❏ N → D ❏ Lockup ❏ Any drive position)	
	❏ Noise or vibration	
	❏ No kick down	
	❏ No pattern select	
	❏ Others ( )	
O/D OFF indicator lamp	Blinks for about 8 seconds.	
	❏ Continuously lit	❏ Not lit

Diagnostic Worksheet

1.	❏ Read the Fail-safe and listen to customer complaints.		AT-258, "Information from Customer"
2.	❏ CHECK A/T FLUID		AT-263, "A/T Fluid Check"
		❏ Leakage (Follow specified procedure) ❏ Fluid condition ❏ Fluid level	
3.	❏ Perform STALL TEST and LINE PRESSURE TEST.		AT-264, "Stall Test", AT-267, "Line Pressure Test"
		❏ Stall test — Mark possible damaged components/others.	
		❏ Torque converter one-way clutch ❏ Reverse clutch ❏ Forward clutch ❏ Overrun clutch ❏ Forward one-way clutch	❏ Low & reverse brake ❏ Low one-way clutch ❏ Engine ❏ Line pressure is low ❏ Clutches and brakes except high clutch and brake band are OK
		❏ Line Pressure test — Suspected parts:	
4.	❏ Perform all ROAD TEST and mark required procedures.		AT-268, "Road Test"
	4-1.	Check before engine is started.	AT-270, "1. CHECK BEFORE ENGINE IS STARTED"
		❏ SELF-DIAGNOSTIC CONFIRMATION PROCEDURE — Mark detected items.	
		❏ Vehicle speed sensor·A/T (Revolution sensor), AT-347 . ❏ Vehicle speed sensor·MTR, AT-352 . ❏ Accelerator pedal position (APP) sensor, AT-356 . ❏ Shift solenoid valve A, AT-361 . ❏ Shift solenoid valve B, AT-366 . ❏ Overrun clutch solenoid valve, AT-371 . ❏ Torque converter clutch solenoid valve, AT-376 . ❏ A/T fluid temperature sensor and TCM power source, AT-381 . ❏ Engine speed signal, AT-387 . ❏ Line pressure solenoid valve, AT-392 . ❏ CAN communication line, AT-399 . ❏ Control unit (RAM), control unit (ROM), AT-207 . ❏ Control unit (EEP ROM), AT-209 . ❏ PNP & overdrive control switches, and throttle position sensor, AT-337 . ❏ Battery ❏ Others	
	4-2.	Check at idle	AT-271, "2. CHECK AT IDLE"
		❏ 1. O/D OFF Indicator Lamp Does Not Come On, AT-312 . ❏ 2. Engine Cannot Be Started In “P” And “N” Position, AT-313 . ❏ 3. In “P” Position, Vehicle Moves Forward Or Backward When Pushed, AT-313 . ❏ 4. In “N” Position, Vehicle Moves, AT-315 . ❏ 5. Large Shock. “N” → “R” Position, AT-316 . ❏ 6. Vehicle Does Not Creep Backward In “R” Position, AT-317 . ❏ 7. Vehicle Does Not Creep Forward In “D”, “2” Or “1” Position, AT-320 .	

4.	4-3.	Cruise test	AT-273, "3. CRUISE TEST", AT-277, "Cruise Test — Part 1"
		Part-1	
		❏ 8. Vehicle Cannot Be Started From D_1 , AT-321 . ❏ 9. A/T Does Not Shift: $D_1 \rightarrow D_2$ Or Does Not Kickdown: $D_4 \rightarrow D_2$, AT-324 . ❏ 10. A/T Does Not Shift: $D_2 \rightarrow D_3$, AT-326 . ❏ 11. A/T Does Not Shift: $D_3 \rightarrow D_4$, AT-328 . ❏ 12. A/T Does Not Perform Lock-up,AT-330 . ❏ 13. A/T Does Not Hold Lock-up Condition, AT-330 . ❏ 14. Lock-up Is Not Released, AT-332 . ❏ 15. Engine Speed Does Not Return To Idle (Light Braking $D_4 \rightarrow D_3$), AT-332 .	
		Part-2	AT-280, "Cruise Test — Part 2"
		❏ 16. Vehicle Does Not Start From D_1 , AT-334 . ❏ 9. A/T Does Not Shift: $D_1 \rightarrow D_2$ Or Does Not Kickdown: $D_4 \rightarrow D_2$, AT-324 . ❏ 10. A/T Does Not Shift: $D_2 \rightarrow D_3$, AT-326 . ❏ 11. A/T Does Not Shift: $D_3 \rightarrow D_4$, AT-328 .	
		Part-3	AT-282, "Cruise Test — Part 3"
		❏ 17. A/T Does Not Shift: $D_4 \rightarrow D_3$ When Overdrive Control Switch “ON” → “OFF”, AT-334 . ❏ 15. Engine Speed Does Not Return To Idle (Engine Brake In D_3), AT-332 . ❏ 18. A/T Does Not Shift: $D_3 \rightarrow 2_2$, When Selector Lever “D” → “2” Position, AT-335 . ❏ 15. Engine Speed Does Not Return To Idle (Light Braking $D_4 \rightarrow D_3$),AT-332 . ❏ 19. A/T Does Not Shift: $2_2 \rightarrow 1_1$, When Selector Lever “2” → “1” Position, AT-336 . ❏ 20. Vehicle Does Not Decelerate By Engine Brake, AT-337 . ❏ 21. TCM Self-diagnosis Does Not Activate (PNP & Overdrive Control Switches, and throttle position sensor Circuit Checks), AT-337 . ❏ SELF-DIAGNOSTIC PROCEDURE — Mark detected items.	
		❏ Vehicle speed sensor·A/T (Revolution sensor), AT-347 . ❏ Vehicle speed sensor·MTR, AT-352 . ❏ Accelerator pedal position (APP) sensor, AT-356 . ❏ Shift solenoid valve A, AT-361 . ❏ Shift solenoid valve B, AT-366 . ❏ Overrun clutch solenoid valve, AT-371 . ❏ Torque converter clutch solenoid valve, AT-376 . ❏ Batt/fluid temp sen (A/T fluid temperature sensor and TCM power source), AT-381 . ❏ Engine speed signal, AT-387 . ❏ Line pressure solenoid valve, AT-392 . ❏ CAN communication line, AT-399 . ❏ Control unit (RAM), control unit (ROM), AT-207 . ❏ Control unit (EEP ROM), AT-209 . ❏ PNP & overdrive control switches, and throttle position sensor, AT-342 . ❏ Battery ❏ Others	
5.	❏ For self-diagnosis NG items, inspect each component. Repair or replace the damaged parts.		AT-252, "SELF-DIAGNOSTIC PROCEDURE (WITHOUT CONSULT-II)"
6.	❏ Perform all ROAD TEST and re-mark required procedures.		AT-268, "Road Test"

7.	❏ Perform the Diagnostic Procedures for all remaining items marked NG. Repair or replace the damaged parts. Refer to the Symptom Chart when you perform the procedures. (The chart also shows some other possible symptoms and the component inspection orders.)	AT-285, "TROUBLE DIAGNOSIS — GENERAL DESCRIPTION"
8.	❏ Erase self-diagnosis code from TCM memories.	AT-251, "HOW TO ERASE SELF-DIAGNOSTIC RESULTS (WITH CONSULT-II)", AT-256, "HOW TO ERASE SELF-DIAGNOSTIC RESULTS (WITHOUT CONSULT-II)"

Work Flow

ECS0099X

HOW TO PERFORM TROUBLE DIAGNOSES FOR QUICK AND ACCURATE REPAIR

A good understanding of the malfunction conditions can make troubleshooting faster and more accurate. In general, each customer feels differently about a problem. It is important to fully understand the symptoms or conditions for a customer complaint.

Make good use of the two sheets provided, “Information From Customer” (AT-258) and “Diagnostic Worksheet” (AT-259), to perform the best troubleshooting possible.

WORK FLOW CHART

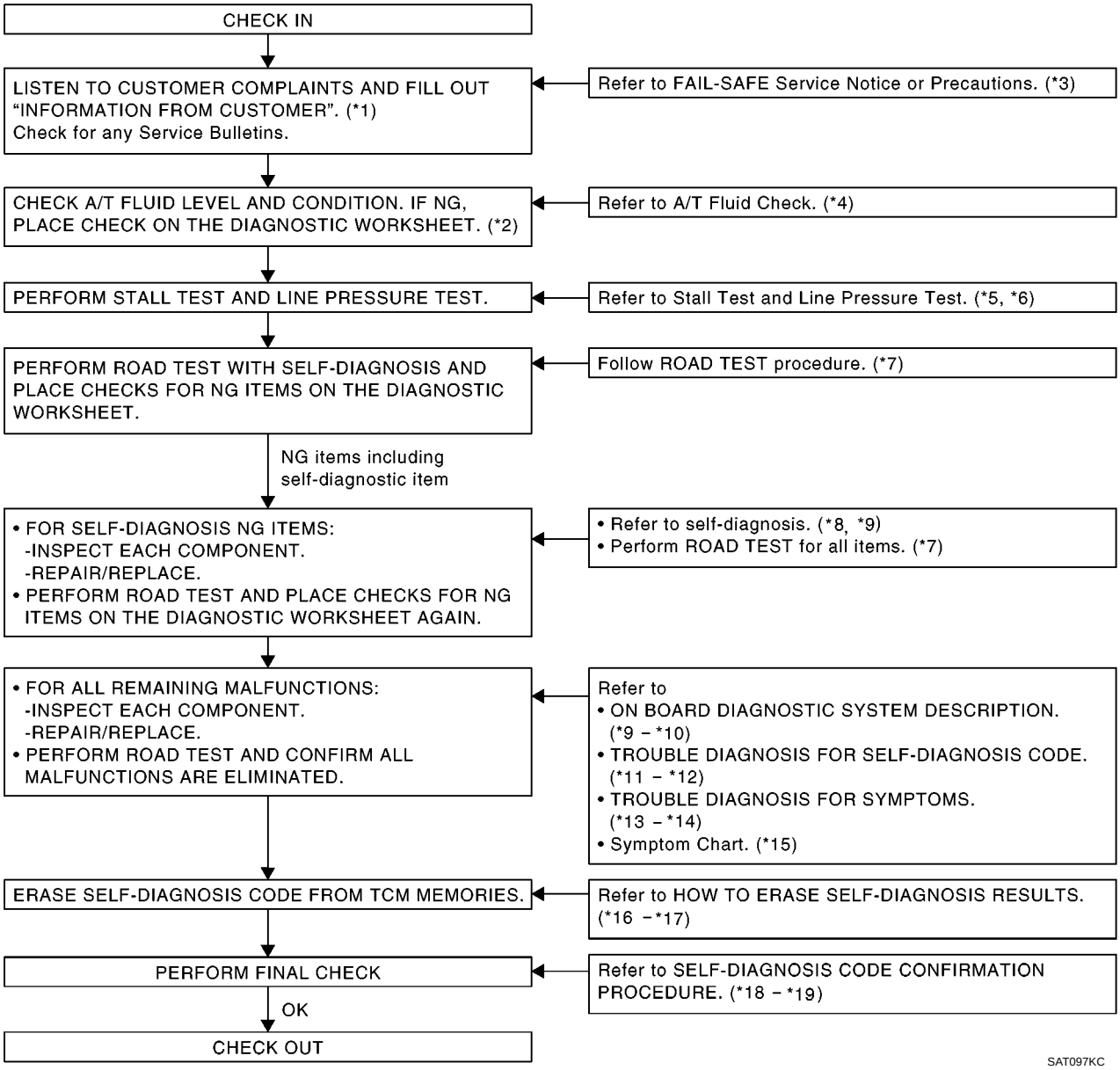

*1	AT-258	*2	AT-259	*3	AT-7
*4	AT-263	*5	AT-264	*6	AT-267
*7	AT-268	*8	AT-252	*9	AT-246
*10	AT-246	*11	AT-348	*12	AT-399
*13	AT-310	*14	AT-310	*15	AT-285
*16	AT-251	*17	AT-256	*18	AT-348
*19	AT-399				

TROUBLE DIAGNOSIS — BASIC INSPECTION

PFP:00000

A/T Fluid Check

ECS0099Y

FLUID LEAKAGE CHECK

1. Clean area suspected of leaking. — for example, mating surface of converter housing and transmission case.
2. Start engine, apply foot brake, place selector lever in “D” position and wait a few minutes.
3. Stop engine.

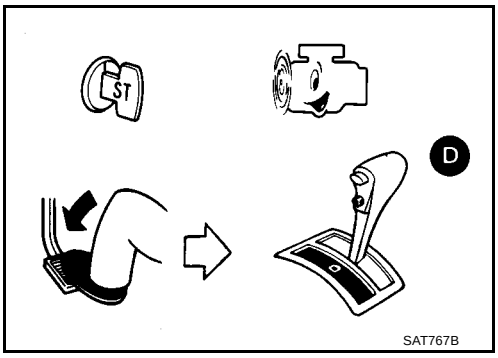

SAT767B

4. Check for fluid leakage.

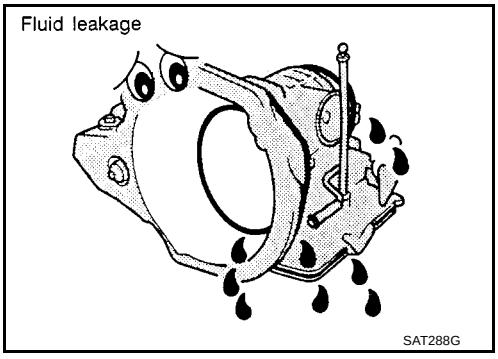

SAT288G

FLUID CONDITION CHECK

Fluid color	Suspected problem
Dark or black with burned odor	Wear of frictional material
Milky pink	Water contamination — Road water entering through filler tube or breather
Varnished fluid, light to dark brown and tacky	Oxidation — Over or under filling, — Overheating

FLUID LEVEL CHECK

Refer to AT-263, "A/T Fluid Check" .

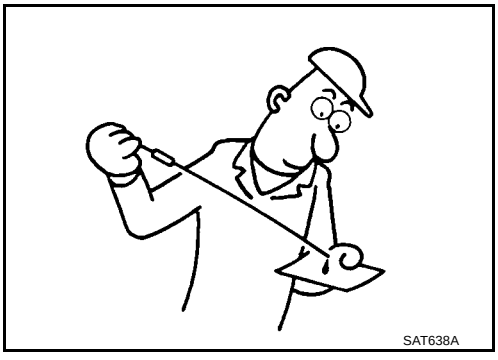
SAT638A

Stall Test

ECS0099Z

STALL TEST PROCEDURE

1. Check A/T fluid and engine oil levels. If necessary, add.
2. Drive vehicle for approx. 10 minutes or until fluid and oil reach operating temperature.

   ATF operating temperature:

   50 - 80°C (122 - 176°F)

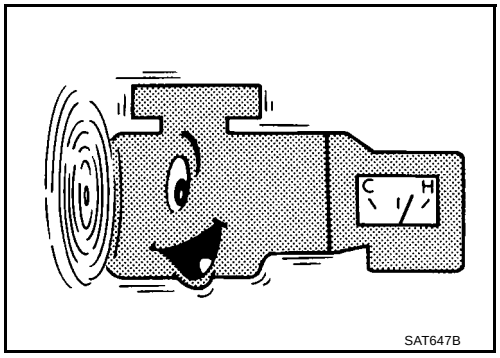

SAT647B

3. Set parking brake and block wheels.
4. Install a tachometer where it can be seen by driver during test.
   - **It is good practice to mark the point of specified engine rpm on indicator.**

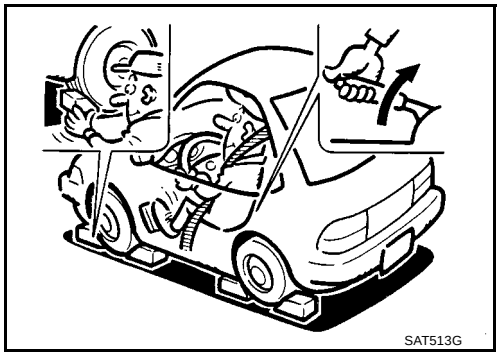
SAT513G

5. Start engine, apply foot brake, and place selector lever in D position.
6. Accelerate to wide open throttle gradually while applying foot brake.
7. Quickly note the engine stall revolution and immediately release throttle.
   - **During test, never hold throttle wide open for more than 5 seconds.**

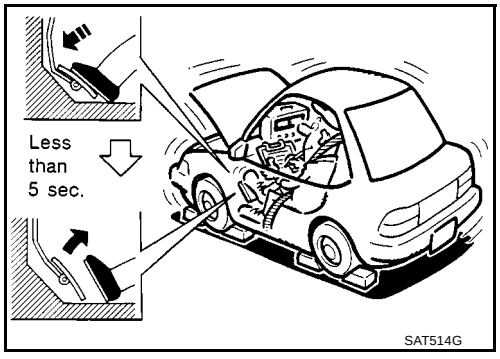

SAT514G

Stall revolution:

QG18DE	2,300 - 2,750 rpm

8. Move selector lever to “N” position.
9. Cool off ATF.
   - **Run engine at idle for at least one minute.**
10. Repeat steps 5 through 9 with selector lever in “2”, “1” and “R” positions.

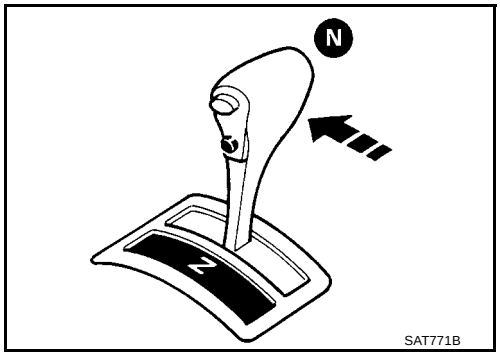

SAT771B

JUDGEMENT OF STALL TEST

The test result and possible damaged components relating to each result are shown in the illustrations on next page.
In order to pinpoint the possible damaged components, follow the WORK FLOW shown in AT-261, "Work Flow" .

NOTE:
Stall revolution is too high in “D”, “2” or “1” position:

- Slippage occurs in 1st gear but not in 2nd and 3rd gears..... Low one-way clutch slippage
- Slippage occurs in the following gears:
  1st through 3rd gears in “D” position and engine brake functions with overdrive control switch set to “OFF”.
  1st and 2nd gears in “2” position and engine brake functions with accelerator pedal released (fully closed throttle)..... Forward clutch or forward one-way clutch slippage

Stall revolution is too high in R position:

- Engine brake does not function in “1” position..... Low & reverse brake slippage
- Engine brake functions in “1” position..... Reverse clutch slippage

Stall revolution within specifications:

- Vehicle does not achieve speed of more than 80 km/h (50 MPH)..... One-way clutch seizure in torque converter housing

CAUTION:
Be careful since automatic fluid temperature increases abnormally.

- Slippage occurs in 3rd and 4th gears in “D” position..... High clutch slippage
- Slippage occurs in 2nd and 4th gear in “D” position..... Brake band slippage
- Engine brake does not function in 2nd and 3rd gears in “D” position, 2nd gear in “2” position, and 1st gear in “1” position with overdrive control switch set to “OFF”.

Stall revolution less than specifications:

- Poor acceleration during starts..... One-way clutch seizure in torque converter

Selector lever position	Judgement		
D	H	O	L
2	H	O	L
1	H	O	L
R	O	H	L

O : Stall revolution is normal.
H : Stall revolution is higher than specified.
L : Stall revolution is lower than specified.

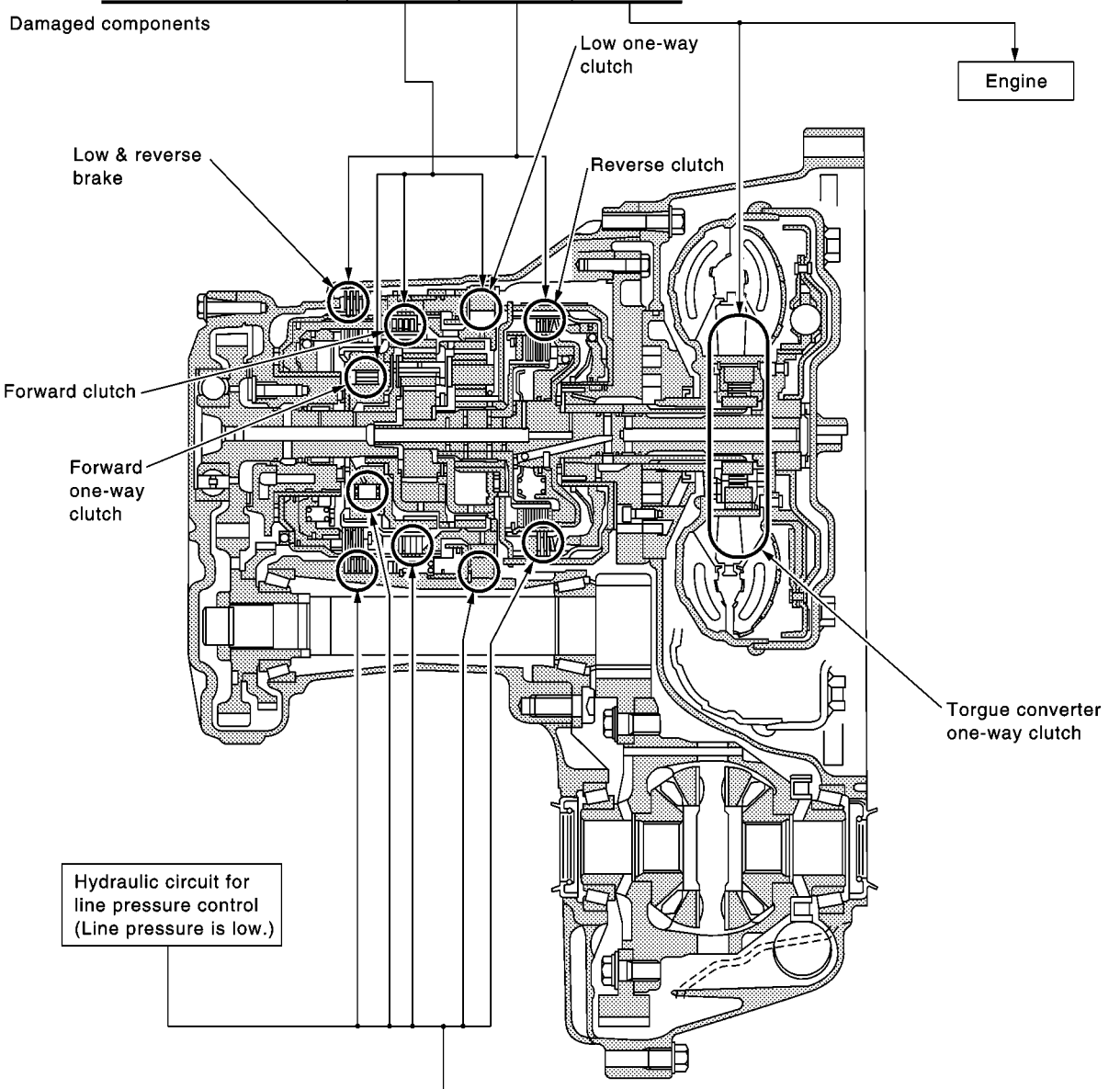

Clutches and brakes except high clutch, brake band and overrun clutch are OK. (Condition of high clutch, brake band and overrun clutch cannot be confirmed by stall test.)

D	H	O
2	H	O
1	H	O
R	H	O
Selector lever position	Judgement	

SCIA0707E

Line Pressure Test

ECS009A0

LINE PRESSURE TEST PORTS

Location of line pressure test ports are shown in the illustration.

- **Always replace pressure plugs as they are self-sealing bolts.**

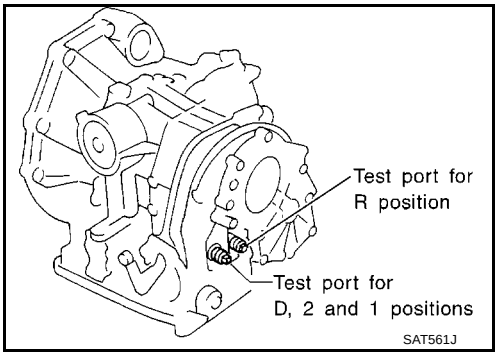

LINE PRESSURE TEST PROCEDURE

1. Check A/T fluid and engine oil levels. If necessary, add fluid or oil.
2. Drive vehicle for approx. 10 minutes or until engine oil and ATF reach operating temperature.

   ATF operating temperature: 50 - 80°C (122 -176°F)

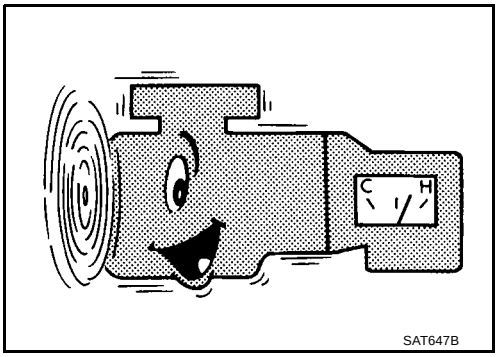

3. Install pressure gauge to corresponding line pressure port.

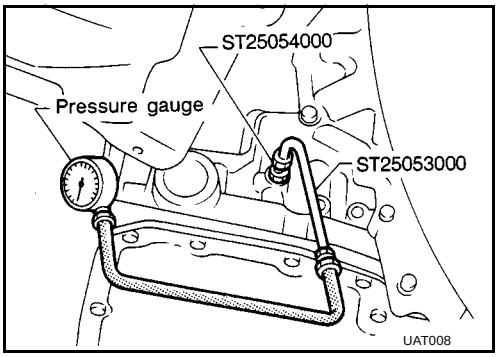

4. Set parking brake and block wheels.
   - **Continue to depress brake pedal fully while line pressure test is being performed at stall speed.**
5. Start engine and measure line pressure at idle and stall speed.
   - **When measuring line pressure at stall speed, follow the stall test procedure.**

Line pressure: Refer to **AT-519, "SERVICE DATA AND SPECIFICATIONS (SDS)"** **.**

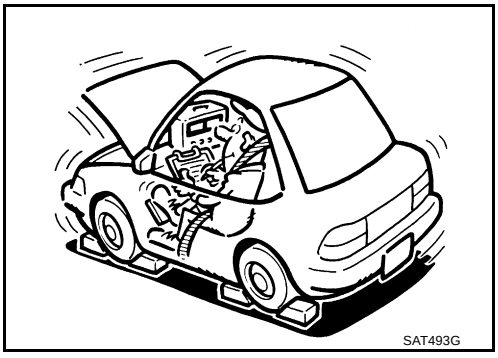

JUDGEMENT OF LINE PRESSURE TEST

Judgement		Suspected parts
At idle	Line pressure is low in all positions.	● Oil pump wear ● Control piston damage ● Pressure regulator valve or plug sticking ● Spring for pressure regulator valve damaged ● Fluid pressure leakage between oil strainer and pressure regulator valve ● Clogged strainer
	Line pressure is low in particular position.	● Fluid pressure leakage between manual valve and particular clutch ● For example, line pressure is: – Low in “R” and “1” positions, but – Normal in “D” and “2” positions. Therefore, fluid leakage exists at or around low and reverse brake circuit. Refer to AT-18, "CLUTCH AND BAND CHART" .
	Line pressure is high.	● Maladjustment of throttle position sensor ● A/T fluid temperature sensor damaged ● Line pressure solenoid valve sticking ● Short circuit of line pressure solenoid valve circuit ● Pressure modifier valve sticking ● Pressure regulator valve or plug sticking ● Open in dropping resistor circuit
At stall speed	Line pressure is low.	● Maladjustment of throttle position sensor ● Line pressure solenoid valve sticking ● Short circuit of line pressure solenoid valve circuit ● Pressure regulator valve or plug sticking ● Pressure modifier valve sticking ● Pilot valve sticking

Road Test

ECS009A1

DESCRIPTION

- The purpose of the test is to determine overall performance of A/T and analyze causes of problems.
- The road test consists of the following three parts:

1. Check before engine is started
2. Check at idle
3. Cruise test

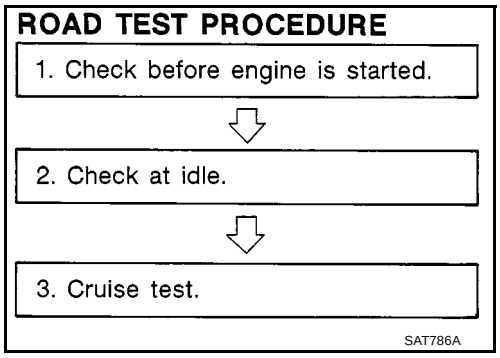

- Before road test, familiarize yourself with all test procedures and items to check.
- Conduct tests on all items until specified symptom is found. Troubleshoot items which check out No Good after road test. Refer to the following items.

	ON BOARD DIAGNOSTIC SYSTEM DESCRIPTION	TROUBLE DIAGNOSES FOR SYMPTOMS
Except for Euro-OBD	AT-246, "ON BOARD DIAGNOSTIC SYSTEM DESCRIPTION" to AT-252, "Diagnostic Procedure Without CONSULT-II"	AT-312, "1. O/D OFF Indicator Lamp Does Not Come On" to AT-337, "21. TCM Self-diagnosis Does Not Activate (PNP & Overdrive Control Switches, and Throttle Position Sensor Circuit Checks)"

1. CHECK BEFORE ENGINE IS STARTED

1. CHECK O/D OFF INDICATOR LAMP

1. Park vehicle on flat surface.
2. Turn ignition switch to “OFF” position.
3. Move selector lever to “P” position.
4. Set overdrive control switch to “ON” position.
5. Turn ignition switch to “ON” position. (Do not start engine.)

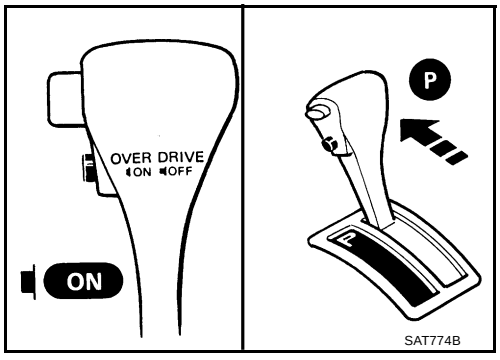

6. Does O/D OFF indicator lamp come on for about 2 seconds?

Yes or No

Yes >> GO TO 2
No >> Stop ROAD TEST. GO TO AT-312, "1. O/D OFF Indicator Lamp Does Not Come On" .

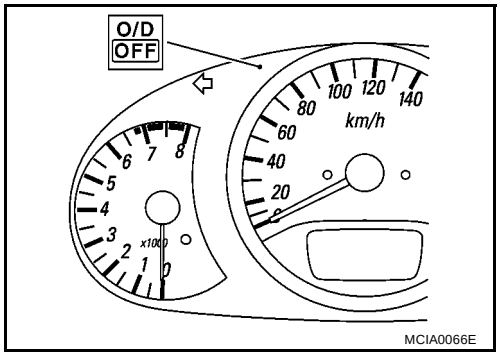

2. CHECK O/D OFF INDICATOR LAMP

Does O/D OFF indicator lamp flicker for about 8 seconds?

Yes or No

Yes >> Perform self-diagnosis and check NG items on the DIAGNOSTIC WORKSHEET. Refer to AT-258 and AT-252, "SELF-DIAGNOSTIC PROCEDURE (WITHOUT CONSULT-II)" .
No >> 1. Turn ignition switch to “OFF” position.
2. Perform self-diagnosis and note NG items. Refer to AT-252, "SELF-DIAGNOSTIC PROCEDURE (WITHOUT CONSULT-II)" .
3. GO TO AT-271, "2. CHECK AT IDLE" .

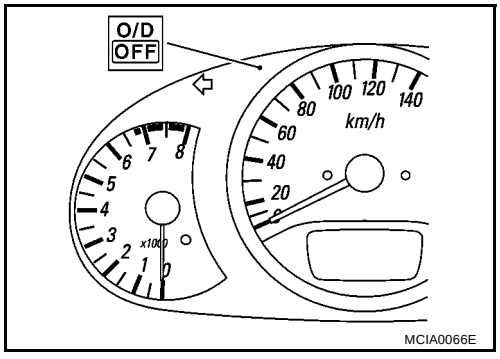

2. CHECK AT IDLE

1. CHECK ENGINE START

1. Park vehicle on flat surface.
2. Turn ignition switch to “OFF” position.
3. Move selector lever to “P” or “N” position.
4. Turn ignition switch to “START” position.
5. Is engine started?

Yes or No

Yes >> GO TO 2

No >>
- Mark the box on the DIAGNOSTIC WORKSHEET.
- GO TO AT-313, "2. Engine Cannot Be Started In “P” and “N” Position" .
- Continue ROAD TEST. Refer to AT-268, "Road Test" .

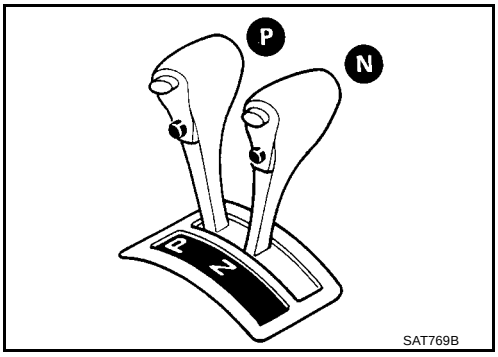

2. CHECK ENGINE START

1. Turn ignition switch to “OFF” position.
2. Move selector lever to “D”, “1”, “2” or “R” position.
3. Turn ignition switch to “START” position.
4. Is engine started?

Yes or No

Yes >>
- Mark the box on the DIAGNOSTIC WORKSHEET.
- GO TO AT-313, "2. Engine Cannot Be Started In “P” and “N” Position" .
- Continue ROAD TEST. Refer to AT-268, "Road Test" .

No >> GO TO 3

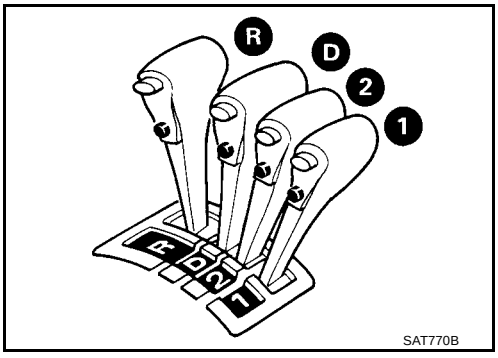

3. CHECK VEHICLE MOVE

1. Turn ignition switch to “OFF” position.
2. Move selector lever to “P” position.
3. Release parking brake.

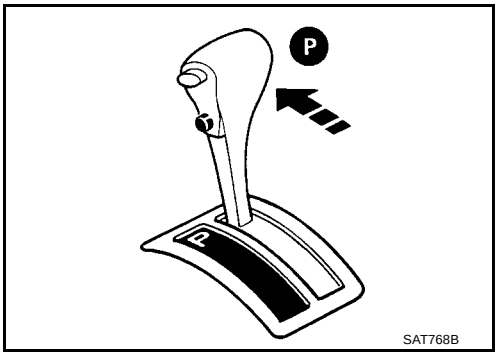

4. Push vehicle forward or backward.
5. Does vehicle move when it is pushed forward or backward?

Yes or No

Yes >>
- Mark the box on the DIAGNOSTIC WORKSHEET.
- GO TO AT-313, "3. In “P” Position, Vehicle Moves Forward Or Backward When Pushed" .
- Continue ROAD TEST. Refer to AT-268, "Road Test" .

No >> GO TO 4

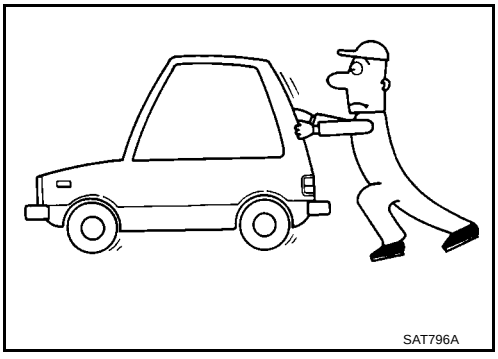

4. CHECK VEHICLE MOVE

1. Apply parking brake.
2. Move selector lever to “N” position.
3. Turn ignition switch to “START” position and start engine.
4. Release parking brake.
5. Does vehicle move forward or backward?

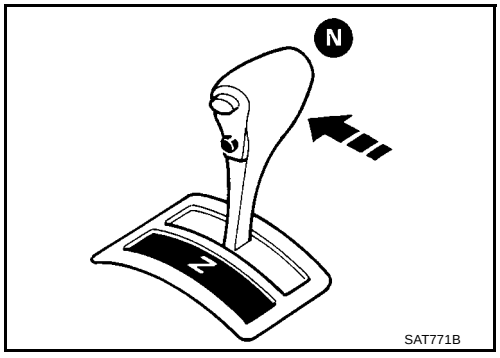

Yes or No

Yes >> ● Mark the box on the DIAGNOSTIC WORKSHEET.
● GO TO AT-315, "4. In “N” Position, Vehicle Moves" .
● Continue ROAD TEST. Refer to AT-268, "Road Test" .

No >> GO TO 5

5. CHECK SHIFT SHOCK

1. Apply foot brake.

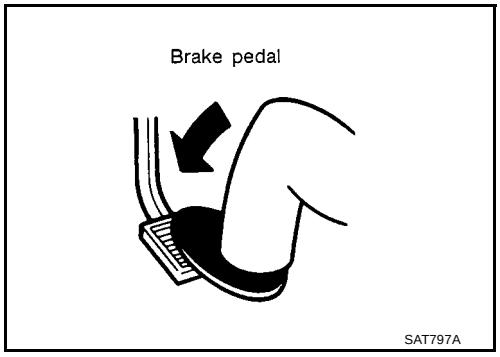

2. Move selector lever to “R” position.
3. Is there large shock when changing from “N” to “R” position?

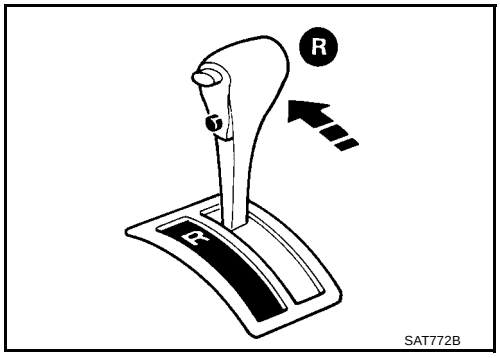

Yes or No

Yes >> ● Mark the box on the DIAGNOSTIC WORKSHEET.
● GO TO AT-316, "5. Large Shock. “N” → “R” Position" .
● Continue ROAD TEST. Refer to AT-268, "Road Test" .

No >> GO TO 6

6. CHECK VEHICLE MOVE

1. Release foot brake for several seconds.
2. Does vehicle creep backward when foot brake is released?

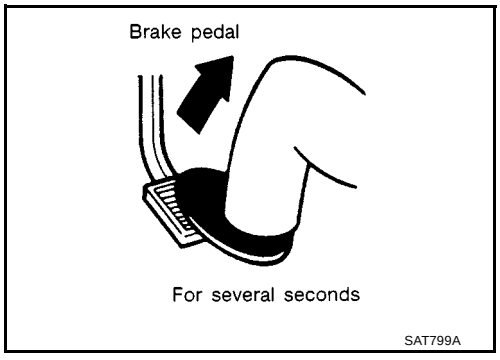

Yes or No

Yes >> GO TO 7

No >> ● Mark the box on the DIAGNOSTIC WORKSHEET.
● GO TO AT-317, "6. Vehicle Does Not Creep Backward In “R” Position" .
● Continue ROAD TEST. Refer to AT-268, "Road Test" .

7. CHECK VEHICLE MOVE

1. Move selector lever to “D”, “2” and “1” positions and check if vehicle creeps forward.
2. Does vehicle creep forward in all three positions?

Yes or No

Yes >> GO TO AT-273, "3. CRUISE TEST" .

No >>
- Mark the box on the DIAGNOSTIC WORKSHEET.
- GO TO AT-320, "7. Vehicle Does Not Creep Forward In “D”, “2” Or “1” Position" .
- Continue ROAD TEST. Refer to AT-268, "Road Test" .

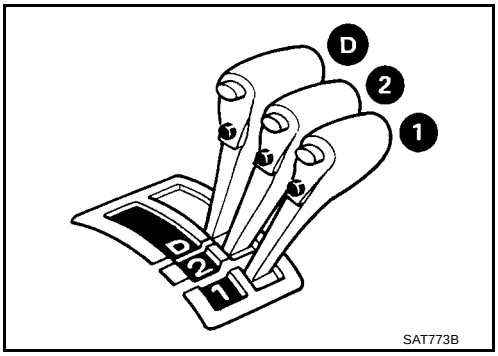

3. CRUISE TEST

- Check all items listed in Parts 1 through 3.

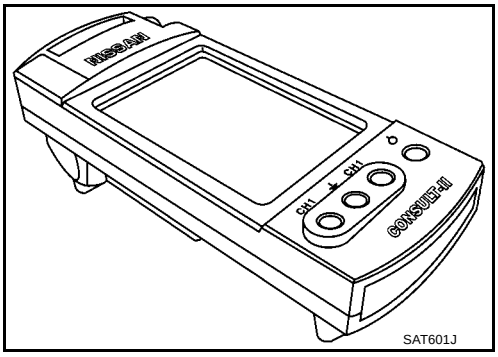

With CONSULT-II

- Using CONSULT-II, conduct a cruise test and record the result.
- Print the result and ensure that shifts and lock-ups take place as per Shift Schedule.

CONSULT-II Setting Procedure

1. Turn ignition switch “OFF”.
2. Connect CONSULT-II to data link connector, which is located in left side lower dash panel.

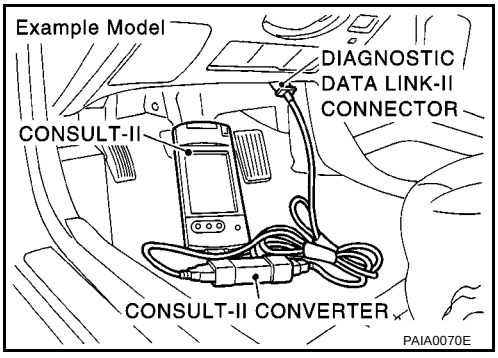

3. Turn ignition switch “ON”.
4. Touch “START (NISSAN BASED VHCL)”.

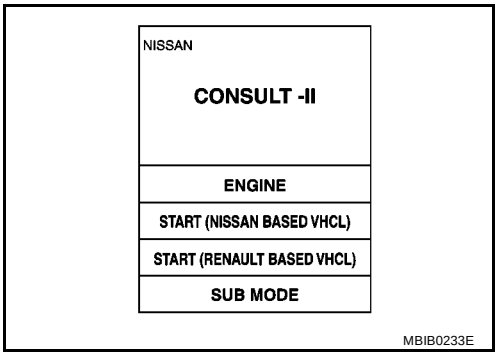

5. Touch “A/T”.

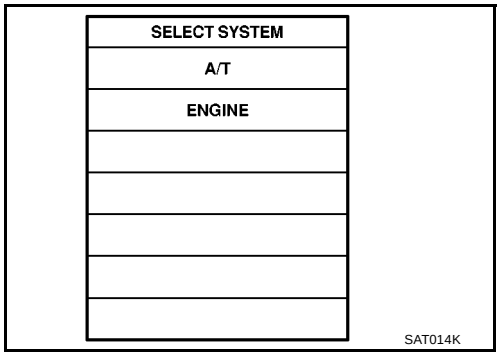

6. Touch “DATA MONITOR”.

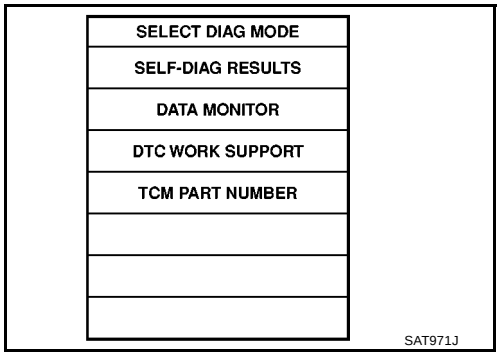

7. Touch “MAIN SIGNALS” or “TCM INPUT SIGNALS”.
8. Select “Numerical Display”, “Barchart Display” or “Line Graph Display”.

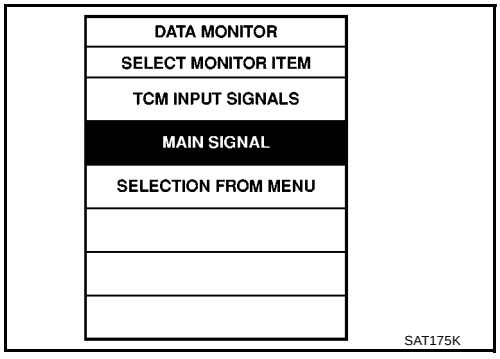

9. Touch “SETTING” to recording condition (“AUTO TRIG” or “MANU TRIG”) and touch “BACK”.
10. Touch “Start”.

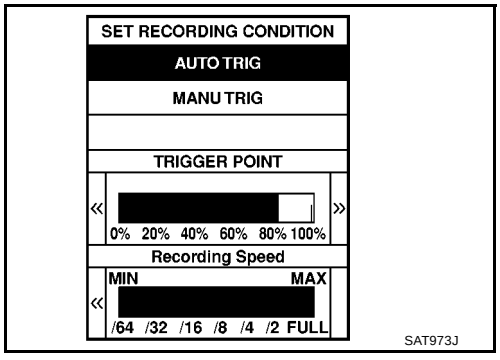

11. When performing cruise test, touch “RECORD”.

DATA MONITOR	
MONITOR	NO DTC
ENGINE SPEED	XXX rpm
GEAR	XXX
SLCT LVR POSI	N/P
VEHICLE SPEED	XXX km/h
THROTTLE POSI	XXX
LINE PRES DTY	XX%
TCC S/V DUTY	XX%
SHIFT S/V A	XX
SHIFT S/V B	XX

SAT134K

12. After finishing cruise test part 1, touch “STOP”.

DATA MONITOR	
Recording Data X%	DTC DETECTED
ENGINE SPEED	XXX rpm
GEAR	XXX
SLCT LVR POSI	N/P
VEHICLE SPEED	XXX km/h
THROTTLE POSI	XXX
LINE PRES DTY	XX%
TCC S/V DUTY	XX%
SHIFT S/V A	XX
SHIFT S/V B	XX

SAT135K

13. Touch “STORE” and touch “BACK”.

REAL-TIME DIAG
ENG SPEED SIG

SAT987J

STORE	
SYSTEM	SAVE REC DATA

SAT974J

14. Touch “DISPLAY”.
15. Touch “PRINT”.
16. Check the monitor data printed out.
17. Continue cruise test part 2 and 3.

Trigger	VHCL S/SEN A/T	VHCL S/SEN MTR	THRTL POSI SEN
	km/h	km/h	V

SAT975J

Without CONSULT-II

- Throttle position sensor can be checked by voltage across terminals 41 and 42 of TCM.

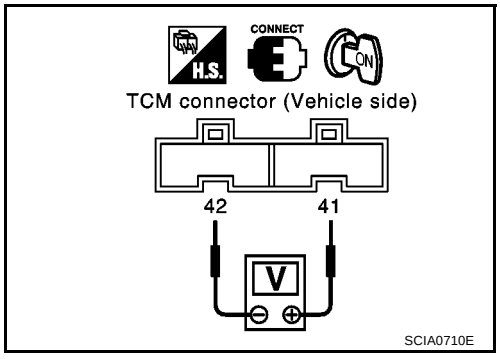

SCIA0710E

Cruise Test — Part 1

1. CHECK STARTING GEAR (D_1) POSITION

1. Drive vehicle for approx. 10 minutes to warm engine oil and ATF up to operating temperature.

   ATF operating temperature: 50 - 80°C (122 - 176°F)

2. Park vehicle on flat surface.
3. Set overdrive control switch to “ON” position.
4. Move selector lever to “P” position.
5. Start engine.

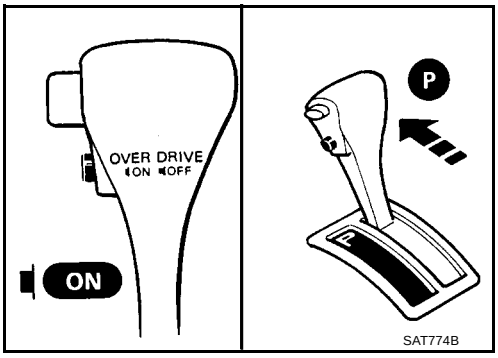

6. Move selector lever to “D” position.

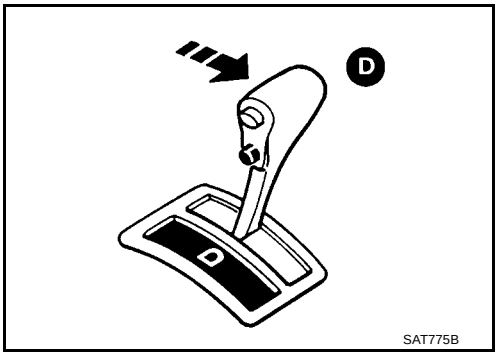

7. Accelerate vehicle by constantly depressing accelerator pedal halfway.
8. Does vehicle start from D_1 ?

   Read gear position.

Yes or No

Yes >> GO TO 2

No >> ● GO TO AT-321, "8. Vehicle Cannot Be Started From D_1" .
● Continue ROAD TEST. Refer to AT-268, "Road Test" .

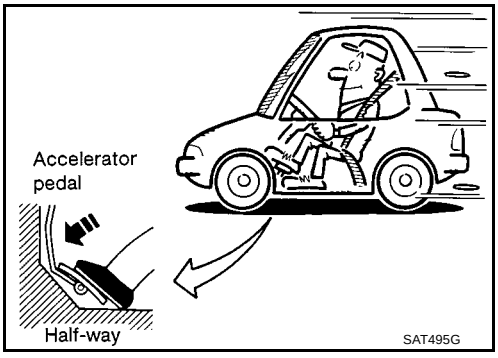

2. CHECK SHIFT UP (D_1 TO D_2)

Does A/T shift from D_1 to D_2 at the specified speed?

Read gear position, throttle opening and vehicle speed.

Specified speed when shifting from D_1 to D_2 :

Refer to AT-519, "Shift Schedule" .

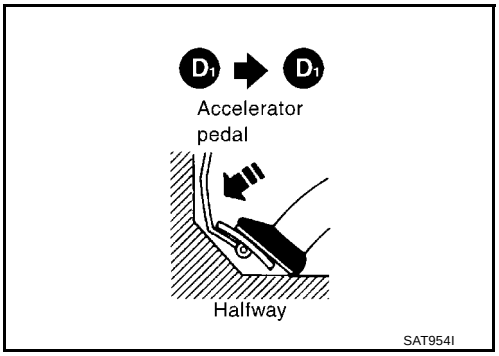

Yes or No

Yes >> GO TO 3

No >> ● GO TO AT-324, "9. A/T Does Not Shift: $D_1 \rightarrow D_2$ Or Does Not Kick down: $D_4 \rightarrow D_2$" .

● Continue ROAD TEST. Refer to AT-268, "Road Test" .

3. CHECK SHIFT UP (D_2 TO D_3)

Does A/T shift from D_2 to D_3 at the specified speed?

Read gear position, throttle position and vehicle speed.

Specified speed when shifting from D_2 to D_3 :

Refer to AT-519, "Shift Schedule" .

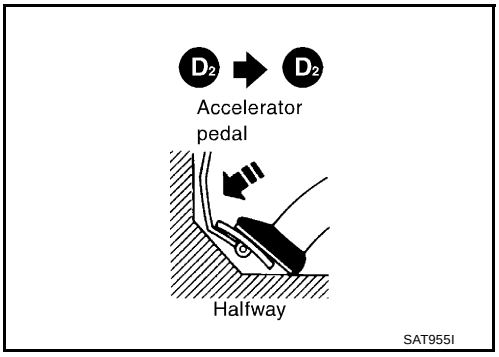

Yes or No

Yes >> GO TO 4

No >> ● GO TO AT-326, "10. A/T Does Not Shift: $D_2 \rightarrow D_3$" .

● Continue ROAD TEST. Refer to AT-268, "Road Test" .

4. CHECK SHIFT UP (D_3 TO D_4)

Does A/T shift from D_3 to D_4 at the specified speed?

Read gear position, throttle position and vehicle speed.

Specified speed when shifting from D_3 to D_4 :

Refer to AT-519, "Shift Schedule" .

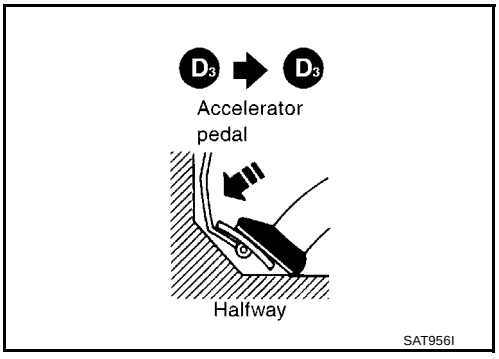

Yes or No

Yes >> GO TO 5

No >> ● GO TO AT-328, "11. A/T Does Not Shift: $D_3 \rightarrow D_4$" .

● Continue ROAD TEST. Refer to AT-268, "Road Test" .

5. CHECK LOCK-UP (D_4 TO D_4 L/U)

Does A/T perform lock-up at the specified speed?

Read vehicle speed, throttle position when lock-up duty becomes 94%.

Specified speed when lock-up occurs:

Refer to AT-519, "Shift Schedule" .

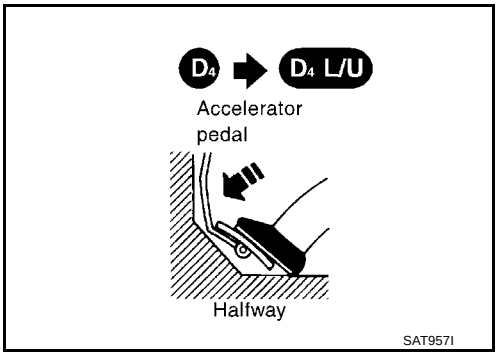

Yes or No

Yes >> GO TO 6

No >> ● GO TO AT-330, "12. A/T Does Not Perform Lock-up" .
● Continue ROAD TEST. Refer to AT-268, "Road Test" .

6. CHECK HOLD LOCK-UP

Does A/T hold lock-up condition for more than 30 seconds?

Yes or No

Yes >> GO TO 7

No >> ● GO TO AT-330, "13. A/T Does Not Hold Lock-up Condition" .
● Continue ROAD TEST. Refer to AT-268, "Road Test" .

7. CHECK SHIFT DOWN (D_4 L/U TO D_4)

1. Release accelerator pedal.
2. Is lock-up released when accelerator pedal is released?

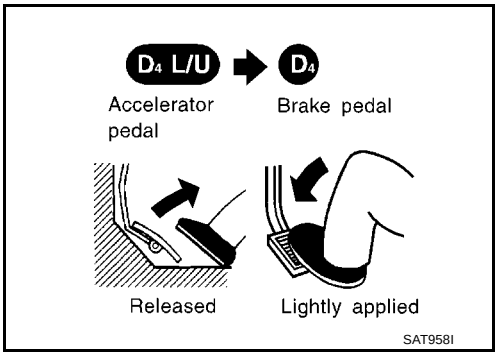

Yes or No

Yes >> GO TO 8

No >> ● GO TO AT-332, "14. Lock-up Is Not Released" .
● Continue ROAD TEST. Refer to AT-268, "Road Test" .

8. CHECK SHIFT DOWN (D_4 TO D_3)

1. Decelerate vehicle by applying foot brake lightly.
2. Does engine speed return to idle smoothly when A/T is shifted from D_4 to D_3 ?

Read gear position and engine speed.

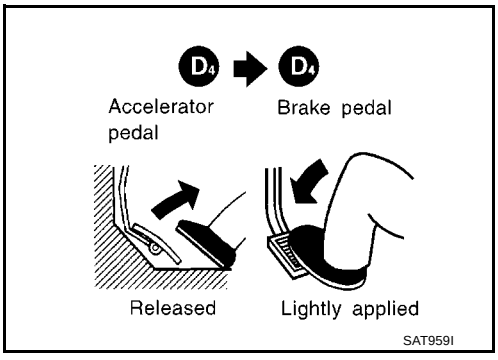

Yes or No

Yes >> 1. Stop vehicle.
2. GO TO AT-280, "Cruise Test — Part 2" .

No >> ● GO TO AT-332, "15. Engine Speed Does Not Return To Idle (Light Braking $D_4 \rightarrow D_3$)" .
● Continue ROAD TEST. Refer to AT-268, "Road Test" .

Cruise Test — Part 2

1. CHECK STARTING GEAR (D_1) POSITION

1. Confirm overdrive control switch is in “ON” position.
2. Confirm selector lever is in “D” position.
3. Accelerate vehicle by half throttle again.
4. Does vehicle start from D_1 ?

Read gear position.

Yes or No

Yes >> GO TO 2
No >> ● GO TO AT-334, "16. Vehicle Does Not Start From D_1" .
● Continue ROAD TEST. Refer to AT-268, "Road Test" .

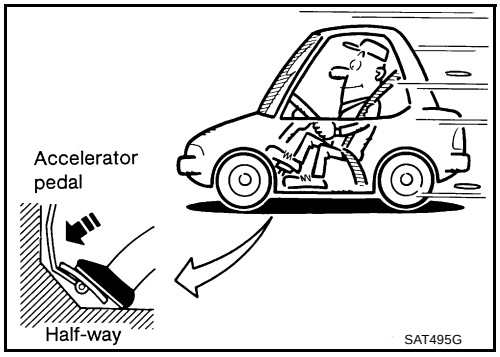

2. CHECK SHIFT UP AND SHIFT DOWN (D_3 TO D_4 TO D_2)

1. Accelerate vehicle to 80 km/h (50 MPH) as shown in illustration.
2. Release accelerator pedal and then quickly depress it fully.
3. Does A/T shift from D_4 to D_2 as soon as accelerator pedal is depressed fully?

Read gear position and throttle position.

Yes or No

Yes >> GO TO 3
No >> ● GO TO AT-324, "9. A/T Does Not Shift: $D_1 \rightarrow D_2$ Or Does Not Kick down: $D_4 \rightarrow D_2$" .
● Continue ROAD TEST. Refer to AT-268, "Road Test" .

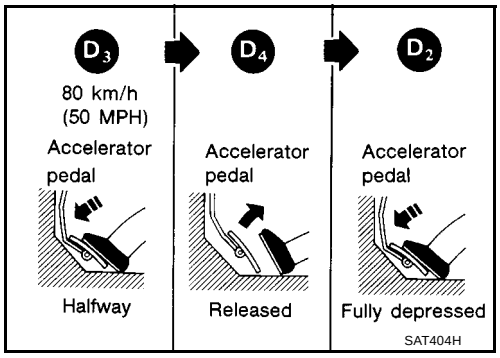

3. CHECK SHIFT UP (D_2 TO D_3)

Does A/T shift from D_2 to D_3 at the specified speed?

Read gear position, throttle position and vehicle speed.

Specified speed when shifting from D_2 to D_3 :

Refer to AT-519, "Shift Schedule" .

Yes or No

Yes >> GO TO 4
No >> ● GO TO AT-326, "10. A/T Does Not Shift: $D_2 \rightarrow D_3$" .
● Continue ROAD TEST. Refer to AT-268, "Road Test" .

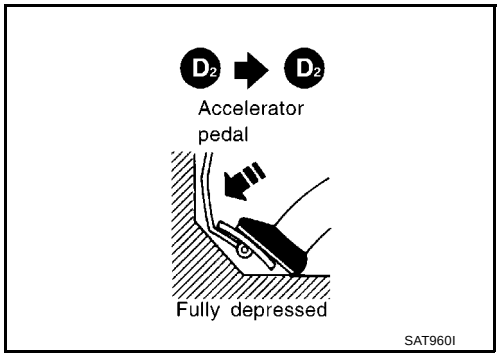

4. CHECK SHIFT UP (D_3 TO D_4) AND ENGINE BRAKE

Release accelerator pedal after shifting from D_2 to D_3.
Does A/T shift from D_3 to D_4 and does vehicle decelerate by engine brake?

Read gear position, throttle position and vehicle speed.

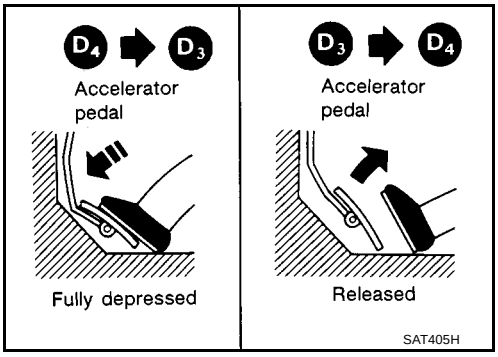

Yes or No

Yes >> 1. Stop vehicle.
2. GO TO AT-282, "Cruise Test — Part 3".

No >> ● GO TO AT-328, "11. A/T Does Not Shift: $D_3 \rightarrow D_4$".
● Continue ROAD TEST. Refer to AT-268, "Road Test".

Cruise Test — Part 3

1. CHECK SHIFT DOWN (D_4 TO D_3)

1. Confirm overdrive control switch is in “ON” position.
2. Confirm selector lever is in “D” position.
3. Accelerate vehicle using half-throttle to D_4 .

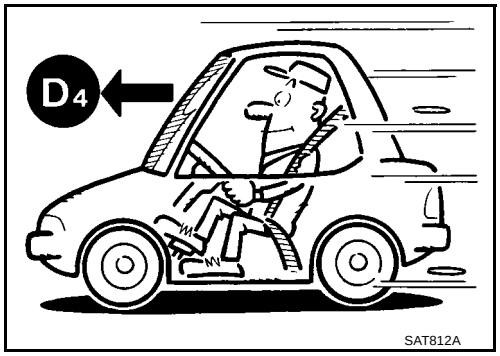

4. Release accelerator pedal.

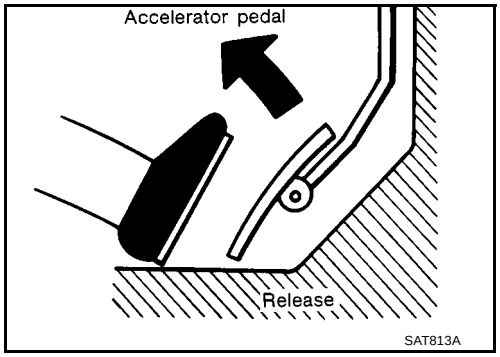

5. Set overdrive control switch to “OFF” position while driving in D_4 .

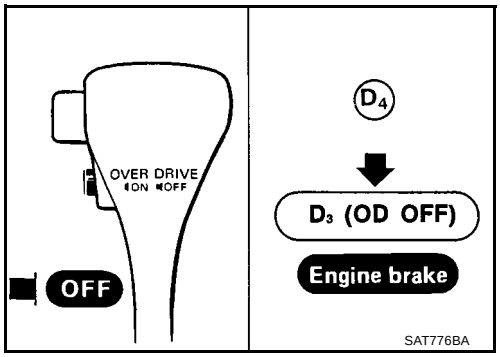

6. Does A/T shift from D_4 to D_3 (O/D OFF)?

Read gear position and vehicle speed.

Yes or No

Yes >> GO TO 2

No >> ● GO TO AT-334, "17. A/T Does Not Shift: $D_4 \rightarrow D_3$, When Overdrive Control Switch “ON” → “OFF”" .

● Continue ROAD TEST. Refer to AT-268, "Road Test" .

2. CHECK ENGINE BRAKE

Does vehicle decelerate by engine brake?

Yes or No

Yes >> GO TO 3

No >> ● GO TO AT-332, "15. Engine Speed Does Not Return To Idle (Light Braking $D_4 \rightarrow D_3$)".

● Continue ROAD TEST. Refer to AT-268, "Road Test".

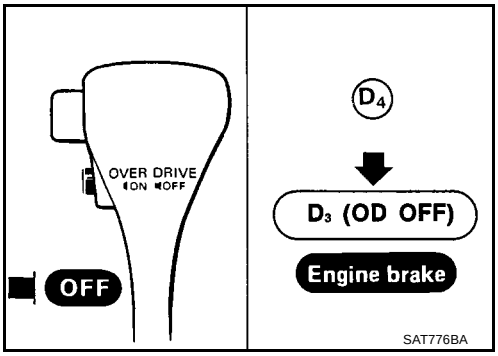

3. CHECK SHIFT DOWN (D_3 TO D_2)

1. Move selector lever from "D" to "2" position while driving in D_3 (O/D OFF).
2. Does A/T shift from D_3 (O/D OFF) to 2_2 ?

Read gear position.

Yes or No

Yes >> GO TO 4

No >> ● GO TO AT-335, "18. A/T Does Not Shift: $D_3 \rightarrow 2_2$, When Selector Lever "D" → "2" Position".

● Continue ROAD TEST. Refer to AT-268, "Road Test".

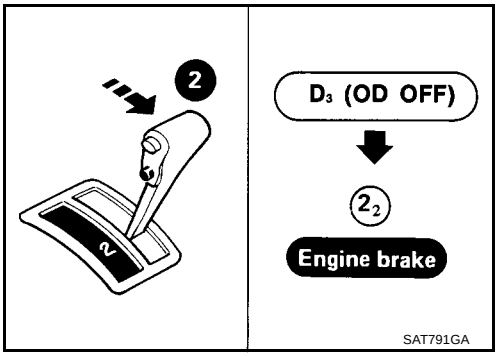

4. CHECK ENGINE BRAKE

Does vehicle decelerate by engine brake?

Yes or No

Yes >> GO TO 5

No >> ● GO TO AT-332, "15. Engine Speed Does Not Return To Idle (Light Braking $D_4 \rightarrow D_3$)".

● Continue ROAD TEST. Refer to AT-268, "Road Test".

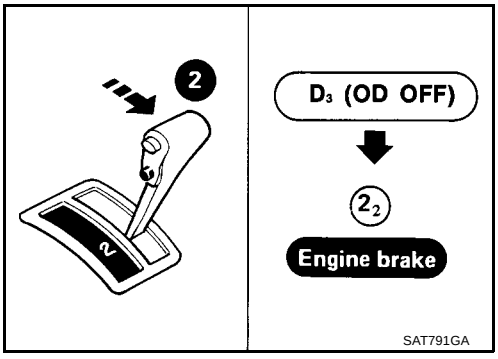

5. CHECK SHIFT DOWN

1. Move selector lever from "2" to "1" position while driving in 2_2.
2. Does A/T shift from 2_2 to 1_1 position?

Read gear position.

Yes or No

Yes >> GO TO 6

No >> ● GO TO AT-336, "19. A/T Does Not Shift: $2_2 \rightarrow 1_1$, When Selector Lever "2" → "1" Position".

● Continue ROAD TEST. Refer to AT-268, "Road Test".

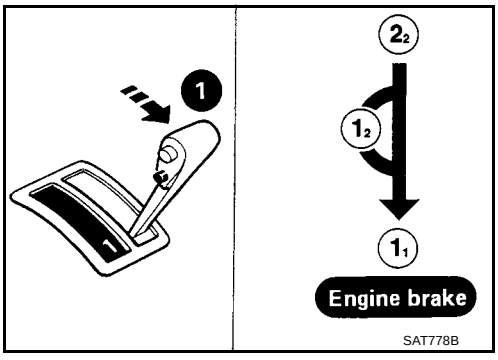

6. CHECK ENGINE BRAKE

Does vehicle decelerate by engine brake?

Yes or No

Yes >> 1. Stop vehicle.
2. Perform self-diagnosis.
Refer to AT-252, "SELF-DIAGNOSTIC PROCEDURE (WITHOUT CONSULT-II)" ,

No >> ● GO TO AT-337, "20. Vehicle Does Not Decelerate By Engine Brake" .
● Continue ROAD TEST. Refer to AT-268, "Road Test" .

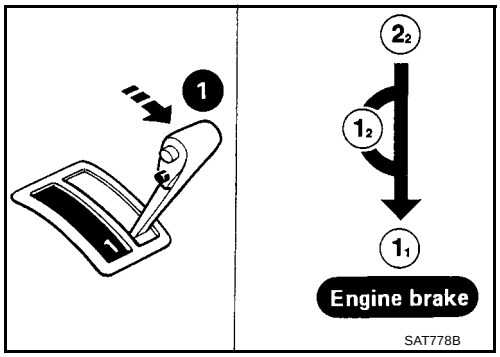

TROUBLE DIAGNOSIS — GENERAL DESCRIPTION

PFP:00000

Symptom Chart

ECS009A2

Numbers are arranged in order of inspection.
Perform inspections starting with number one and work up.

Symptom	Condition	Diagnostic Item	Reference Page
Engine cannot start in “P” and “N” positions. AT-313, "2. Engine Cannot Be Started In “P” and “N” Position"	ON vehicle	1. Ignition switch and starter	EL-11, “Power Supply Routing”, SC-13, “Starting System”.
		2. Control cable adjustment	AT-412, "Control Cable Adjustment"
		3. PNP switch adjustment	AT-412, "Park/Neutral Position (PNP) Switch Adjustment"
Engine starts in position other than “N” and “P” positions. AT-313, "2. Engine Cannot Be Started In “P” and “N” Position"	ON vehicle	1. Control cable adjustment	AT-412, "Control Cable Adjustment"
		2. PNP switch adjustment	AT-412, "Park/Neutral Position (PNP) Switch Adjustment"
Transaxle noise in “P” and “N” positions.	ON vehicle	1. Fluid level	AT-263, "FLUID LEVEL CHECK"
		2. Line pressure test	AT-267, "Line Pressure Test"
		3. Throttle position sensor (Accelerator pedal position (APP) sensor)	AT-356, "ACCELERATOR PEDAL POSITION (APP) SENSOR"
		4. Vehicle speed sensor·A/T (Revolution sensor) and vehicle speed sensor·MTR	AT-347, "VEHICLE SPEED SENSOR - A/T (REVOLUTION SENSOR)" AT-352, "DTC VEHICLE SPEED SENSOR MTR"
		5. Engine speed signal	AT-387, "ENGINE SPEED SIGNAL"
	OFF vehicle	6. Oil pump	AT-439, "Oil Pump"
		7. Torque converter	AT-421, "Locations of Adjusting Shims, Needle Bearings, Thrust Washers and Snap Rings"
Vehicle moves when changing into “P” position, or parking gear does not disengage when shifted out of “P” position. AT-313, "3. In “P” Position, Vehicle Moves Forward Or Backward When Pushed"	ON vehicle	1. Control cable adjustment	AT-412, "Control Cable Adjustment"
	OFF vehicle	2. Parking components	AT-482, "Output Shaft, Idler Gear, Reduction Pinion Gear and Bearing Retainer"
Vehicle runs in “N” position. AT-315, "4. In “N” Position, Vehicle Moves"	ON vehicle	1. Control cable adjustment	AT-412, "Control Cable Adjustment"
	OFF vehicle	2. Forward clutch	AT-468, "Forward and Overrun Clutches"
		3. Reverse clutch	AT-459, "Reverse Clutch"
		4. Overrun clutch	AT-468, "Forward and Overrun Clutches"

Symptom	Condition	Diagnostic Item	Reference Page
Vehicle will not run in “R” position (but runs in “D”, “2” and “1” positions). Clutch slips. Very poor acceleration. AT-317, "6. Vehicle Does Not Creep Backward In “R” Position"	ON vehicle	1. Control cable adjustment	AT-412, "Control Cable Adjustment"
		2. Line pressure test	AT-267, "Line Pressure Test"
		3. Line pressure solenoid valve	AT-392, "LINE PRESSURE SOLENOID VALVE"
		4. Control valve assembly	AT-410, "Control Valve Assembly and Accumulators"
	OFF vehicle	5. Reverse clutch	AT-459, "Reverse Clutch"
		6. High clutch	AT-463, "High Clutch"
		7. Forward clutch	AT-468, "Forward and Overrun Clutches"
		8. Overrun clutch	AT-468, "Forward and Overrun Clutches"
		9. Low & reverse brake	AT-474, "Low & Reverse Brake"
Vehicle braked when shifting into “R” position.	ON vehicle	1. Fluid level	AT-263, "A/T Fluid Check"
		2. Control cable adjustment	AT-412, "Control Cable Adjustment"
		3. Line pressure test	AT-267, "Line Pressure Test"
		4. Line pressure solenoid valve	AT-392, "LINE PRESSURE SOLENOID VALVE"
		5. Control valve assembly	AT-410, "Control Valve Assembly and Accumulators"
	OFF vehicle	6. High clutch	AT-463, "High Clutch"
		7. Brake band	AT-487, "Band Servo Piston Assembly"
		8. Forward clutch	AT-468, "Forward and Overrun Clutches"
		9. Overrun clutch	AT-468, "Forward and Overrun Clutches"

Symptom	Condition	Diagnostic Item	Reference Page
Sharp shock in shifting from “N” to “D” position.	ON vehicle	1. Engine idling rpm	EC-936, "Idle Speed and Ignition Timing"
		2. Throttle position sensor Accelerator pedal position (APP) sensor Adjustment	AT-356, "ACCELERATOR PEDAL POSITION (APP) SENSOR"
		3. Line pressure test	AT-267, "Line Pressure Test"
		4. A/T fluid temp sen circ and TCM pow sour	AT-381, "BATT/FLUID TEMP SEN (A/T FLUID TEMP SENSOR CIRCUIT AND TCM POWER SOURCE)"
		5. Engine speed signal	AT-387, "ENGINE SPEED SIGNAL"
		6. Line pressure solenoid valve	AT-392, "LINE PRESSURE SOLENOID VALVE"
		7. Control valve assembly	AT-410, "Control Valve Assembly and Accumulators"
		8. Accumulator N-D	AT-410, "Control Valve Assembly and Accumulators"
	OFF vehicle	9. Forward clutch	AT-468, "Forward and Overrun Clutches"
Vehicle will not run in “D” and “2” positions (but runs in “1” and “R” positions).	ON vehicle	1. Control cable adjustment	AT-412, "Control Cable Adjustment"
	OFF vehicle	2. Low one-way clutch	AT-417, "OVERHAUL", AT-421, "Locations of Adjusting Shims, Needle Bearings, Thrust Washers and Snap Rings"
Vehicle will not run in “D”, “1”, “2” positions (but runs in “R” position). Clutch slips. Very poor acceleration. AT-320, "7. Vehicle Does Not Creep Forward In “D”, “2” Or “1” Position"	ON vehicle	1. Fluid level	AT-263, "FLUID LEVEL CHECK"
		2. Line pressure test	AT-267, "Line Pressure Test"
		3. Line pressure solenoid valve	AT-392, "LINE PRESSURE SOLENOID VALVE"
		4. Control valve assembly	AT-410, "Control Valve Assembly and Accumulators"
		5. Accumulator N-D	AT-410, "Control Valve Assembly and Accumulators"
	OFF vehicle	6. Reverse clutch	AT-459, "Reverse Clutch"
		7. High clutch	AT-463, "High Clutch"
		8. Forward clutch	AT-468, "Forward and Overrun Clutches"
		9. Forward one-way clutch	AT-417, "OVERHAUL"
		10. Low one-way clutch	AT-417, "OVERHAUL", AT-421, "Locations of Adjusting Shims, Needle Bearings, Thrust Washers and Snap Rings"

Symptom	Condition	Diagnostic Item	Reference Page
Clutches or brakes slip somewhat in starting.	ON vehicle	1. Fluid level	AT-263, "FLUID LEVEL CHECK"
		2. Control cable adjustment	AT-412, "Control Cable Adjustment"
		3. Throttle position sensor (Accelerator pedal position (APP) sensor)	AT-356, "ACCELERATOR PEDAL POSITION (APP) SENSOR"
		4. Line pressure test	AT-267, "Line Pressure Test"
		5. Line pressure solenoid valve	AT-392, "LINE PRESSURE SOLENOID VALVE"
		6. Control valve assembly	AT-410, "Control Valve Assembly and Accumulators"
		7. Accumulator N-D	AT-410, "Control Valve Assembly and Accumulators"
	OFF vehicle	8. Forward clutch	AT-468, "Forward and Overrun Clutches"
		9. Reverse clutch	AT-459, "Reverse Clutch"
		10. Low & reverse brake	AT-474, "Low & Reverse Brake"
		11. Oil pump	AT-439, "Oil Pump"
		12. Torque converter	AT-421, "Locations of Adjusting Shims, Needle Bearings, Thrust Washers and Snap Rings"
Excessive creep.	ON vehicle	1. Engine idling rpm	EC-936, "Idle Speed and Ignition Timing"
No creep at all. AT-317, "6. Vehicle Does Not Creep Backward In “R” Position" and AT-320, "7. Vehicle Does Not Creep Forward In “D”, “2” Or “1” Position"	ON vehicle	1. Fluid level	AT-263, "FLUID LEVEL CHECK"
		2. Line pressure test	AT-267, "Line Pressure Test"
		3. Control valve assembly	AT-410, "Control Valve Assembly and Accumulators"
	OFF vehicle	4. Forward clutch	AT-468, "Forward and Overrun Clutches"
		5. Oil pump	AT-439, "Oil Pump"
		6. Torque converter	AT-421, "Locations of Adjusting Shims, Needle Bearings, Thrust Washers and Snap Rings"

Symptom	Condition	Diagnostic Item	Reference Page
Failure to change gear from “D1 ” to “D2 ”.	ON vehicle	1. PNP switch adjustment	AT-412, "Park/Neutral Position (PNP) Switch Adjustment"
		2. Control cable adjustment	AT-412, "Control Cable Adjustment"
		3. Shift solenoid valve A	AT-361, "SHIFT SOLENOID VALVE A"
		4. Control valve assembly	AT-410, "Control Valve Assembly and Accumulators"
		5. Vehicle speed sensor·A/T (Revolution sensor) and vehicle speed sensor·MTR	AT-347, "VEHICLE SPEED SENSOR - A/T (REVOLUTION SENSOR)", AT-352, "DTC VEHICLE SPEED SENSOR MTR"
	OFF vehicle	6. Brake band	AT-487, "Band Servo Piston Assembly"
Failure to change gear from “D2 ” to “D3 ”.	ON vehicle	1. PNP switch adjustment	AT-412, "Park/Neutral Position (PNP) Switch Adjustment"
		2. Control cable adjustment	AT-412, "Control Cable Adjustment"
		3. Shift solenoid valve B	AT-366, "SHIFT SOLENOID VALVE B"
		4. Control valve assembly	AT-410, "Control Valve Assembly and Accumulators"
		5. Vehicle speed sensor·A/T (Revolution sensor) and vehicle speed sensor·MTR	AT-347, "VEHICLE SPEED SENSOR - A/T (REVOLUTION SENSOR)", AT-352, "DTC VEHICLE SPEED SENSOR MTR"
	OFF vehicle	6. High clutch	AT-463, "High Clutch"
		7. Brake band	AT-487, "Band Servo Piston Assembly"
Failure to change gear from “D3 ” to “D4 ”.	ON vehicle	1. PNP switch adjustment	AT-412, "Park/Neutral Position (PNP) Switch Adjustment"
		2. Control cable adjustment	AT-412, "Control Cable Adjustment"
		3. Shift solenoid valve A	AT-361, "SHIFT SOLENOID VALVE A"
		4. Vehicle speed sensor·A/T (Revolution sensor) and vehicle speed sensor·MTR	AT-347, "VEHICLE SPEED SENSOR - A/T (REVOLUTION SENSOR)", AT-352, "DTC VEHICLE SPEED SENSOR MTR"
		5. A/T fluid temp sen circ and TCM pow sour	AT-381, "BATT/FLUID TEMP SEN (A/T FLUID TEMP SENSOR CIRCUIT AND TCM POWER SOURCE)"
	OFF vehicle	6. Brake band	AT-487, "Band Servo Piston Assembly"

Symptom	Condition	Diagnostic Item	Reference Page
Too high a gear change point from “D_1 ” to “D_2 ”, from “D_2 ” to “D_3 ”, from “D_3 ” to “D_4 ”. AT-324, "9. A/T Does Not Shift: $D_1 \rightarrow D_2$ Or Does Not Kick down: $D_4 \rightarrow D_2$", AT-326, "10. A/T Does Not Shift: $D_2 \rightarrow D_3$" and AT-328, "11. A/T Does Not Shift: $D_3 \rightarrow D_4$"	ON vehicle	1.Throttle position sensor (Accelerator pedal position (APP) sensor)	AT-356, "ACCELERATOR PEDAL POSITION (APP) SENSOR"
		2. Vehicle speed sensor·A/T (Revolution sensor) and vehicle speed sensor·MTR	AT-347, "VEHICLE SPEED SENSOR - A/T (REVOLUTION SENSOR)", AT-352, "DTC VEHICLE SPEED SENSOR MTR"
		3. Shift solenoid valve A	AT-361, "SHIFT SOLENOID VALVE A"
		4. Shift solenoid valve B	AT-366, "SHIFT SOLENOID VALVE B"
Gear change directly from “D_1 ” to “D_3 ” occurs.	ON vehicle	1. Fluid level	AT-263, "FLUID LEVEL CHECK"
		2. Accumulator servo release	AT-410, "Control Valve Assembly and Accumulators"
	OFF vehicle	3. Brake band	AT-487, "Band Servo Piston Assembly"
Engine stops when shifting lever into “R”, “D”, “2” and “1”.	ON vehicle	1. Engine idling rpm	EC-936, "Idle Speed and Ignition Timing"
		2. Torque converter clutch solenoid valve	AT-376, "TORQUE CONVERTER CLUTCH SOLENOID VALVE"
		3. Control valve assembly	AT-410, "Control Valve Assembly and Accumulators"
	OFF vehicle	4. Torque converter	AT-421, "Locations of Adjusting Shims, Needle Bearings, Thrust Washers and Snap Rings"
Too sharp a shock in change from “D_1 ” to “D_2 ”.	ON vehicle	1. Throttle position sensor (Accelerator pedal position (APP) sensor)	AT-356, "ACCELERATOR PEDAL POSITION (APP) SENSOR"
		2. Line pressure test	AT-267, "Line Pressure Test"
		3. Accumulator servo release	AT-410, "Control Valve Assembly and Accumulators"
		4. Control valve assembly	AT-410, "Control Valve Assembly and Accumulators"
		5. A/T fluid temp sen circ and TCM pow sour	AT-381, "BATT/FLUID TEMP SEN (A/T FLUID TEMP SENSOR CIRCUIT AND TCM POWER SOURCE)"
	OFF vehicle	6. Brake band	AT-487, "Band Servo Piston Assembly"

Symptom	Condition	Diagnostic Item	Reference Page
Too sharp a shock in change from “D_2 ” to “D_3 ”.	ON vehicle	1. Throttle position sensor (Accelerator pedal position (APP) sensor)	AT-356, "ACCELERATOR PEDAL POSITION (APP) SENSOR"
		2. Line pressure test	AT-267, "Line Pressure Test"
		3. Control valve assembly	AT-410, "Control Valve Assembly and Accumulators"
	OFF vehicle	4. High clutch	AT-463, "High Clutch"
		5. Brake band	AT-487, "Band Servo Piston Assembly"
Too sharp a shock in change from “D_3 ” to “D_4 ”.	ON vehicle	1. Throttle position sensor (Accelerator pedal position (APP) sensor)	AT-356, "ACCELERATOR PEDAL POSITION (APP) SENSOR"
		2. Line pressure test	AT-267, "Line Pressure Test"
		3. Control valve assembly	AT-410, "Control Valve Assembly and Accumulators"
	OFF vehicle	4. Brake band	AT-487, "Band Servo Piston Assembly"
		5. Overrun clutch	AT-468, "Forward and Overrun Clutches"
Almost no shock or clutches slipping in change from “D_1 ” to “D_2 ”.	ON vehicle	1. Fluid level	AT-263, "FLUID LEVEL CHECK"
		2. Throttle position sensor (Accelerator pedal position (APP) sensor)	AT-356, "ACCELERATOR PEDAL POSITION (APP) SENSOR"
		3. Line pressure test	AT-267, "Line Pressure Test"
		4. Accumulator servo release	AT-410, "Control Valve Assembly and Accumulators"
		5. Control valve assembly	AT-410, "Control Valve Assembly and Accumulators"
	OFF vehicle	6. Brake band	AT-487, "Band Servo Piston Assembly"
Almost no shock or slipping in change from “D_2 ” to “D_3 ”.	ON vehicle	1. Fluid level	AT-263, "FLUID LEVEL CHECK"
		2. Throttle position sensor (Accelerator pedal position (APP) sensor) Adjustment	AT-356, "ACCELERATOR PEDAL POSITION (APP) SENSOR"
		3. Line pressure test	AT-267, "Line Pressure Test"
		4. Control valve assembly	AT-410, "Control Valve Assembly and Accumulators"
	OFF vehicle	5. High clutch	AT-463, "High Clutch"
		6. Brake band	AT-487, "Band Servo Piston Assembly"

Symptom	Condition	Diagnostic Item	Reference Page
Almost no shock or slipping in change from “D3 ” to “D4 ”.	ON vehicle	1. Fluid level	AT-263, "FLUID LEVEL CHECK"
		2. Throttle position sensor (Accelerator pedal position (APP) sensor)	AT-356, "ACCELERATOR PEDAL POSITION (APP) SENSOR"
		3. Line pressure test	AT-267, "Line Pressure Test"
		4. Control valve assembly	AT-410, "Control Valve Assembly and Accumulators"
	OFF vehicle	5. High clutch	AT-463, "High Clutch"
		6. Brake band	AT-487, "Band Servo Piston Assembly"
Vehicle braked by gear change from “D1 ” to “D2 ”.	ON vehicle	1. Fluid level	AT-263, "FLUID LEVEL CHECK"
	OFF vehicle	2. Reverse clutch	AT-459, "Reverse Clutch"
		3. Low & reverse brake	AT-474, "Low & Reverse Brake"
		4. High clutch	AT-463, "High Clutch"
		5. Low one-way clutch	AT-417, "OVERHAUL", AT-421, "Locations of Adjusting Shims, Needle Bearings, Thrust Washers and Snap Rings"
Vehicle braked by gear change from “D2 ” to “D3 ”.	ON vehicle	1. Fluid level	AT-263, "FLUID LEVEL CHECK"
	OFF vehicle	2. Brake band	AT-487, "Band Servo Piston Assembly"
Vehicle braked by gear change from “D3 ” to “D4 ”.	ON vehicle	1. Fluid level	AT-263, "FLUID LEVEL CHECK"
	OFF vehicle	2. Overrun clutch	AT-468, "Forward and Overrun Clutches"
		3. Forward one-way clutch	AT-417, "OVERHAUL"
		4. Reverse clutch	AT-459, "Reverse Clutch"

Symptom	Condition	Diagnostic Item	Reference Page
Maximum speed not attained. Poor acceleration .	ON vehicle	1. Fluid level	AT-263, "FLUID LEVEL CHECK"
		2. PNP switch adjustment	AT-412, "Park/Neutral Position (PNP) Switch Adjustment"
		3. Shift solenoid valve A	AT-361, "SHIFT SOLENOID VALVE A"
		4. Shift solenoid valve B	AT-366, "SHIFT SOLENOID VALVE B"
		5. Control valve assembly	AT-410, "Control Valve Assembly and Accumulators"
	OFF vehicle	6. Reverse clutch	AT-459, "Reverse Clutch"
		7. High clutch	AT-463, "High Clutch"
		8. Brake band	AT-487, "Band Servo Piston Assembly"
		9. Low & reverse brake	AT-474, "Low & Reverse Brake"
		10. Oil pump	AT-439, "Oil Pump"
		11. Torque converter	AT-421, "Locations of Adjusting Shims, Needle Bearings, Thrust Washers and Snap Rings"
Failure to change gear from “D4 ” to “D3 ”.	ON vehicle	1. Fluid level	AT-263, "FLUID LEVEL CHECK"
		2. Throttle position sensor (Accelerator pedal position (APP) sensor)	AT-356, "ACCELERATOR PEDAL POSITION (APP) SENSOR"
		3. Overrun clutch solenoid valve	AT-371, "OVERRUN CLUTCH SOLENOID VALVE"
		4. Shift solenoid valve A	AT-361, "SHIFT SOLENOID VALVE A"
		5. Line pressure solenoid valve	AT-392, "LINE PRESSURE SOLENOID VALVE"
		6. Control valve assembly	AT-410, "Control Valve Assembly and Accumulators"
	OFF vehicle	7. Low & reverse brake	AT-474, "Low & Reverse Brake"
		8. Overrun clutch	AT-468, "Forward and Overrun Clutches"

Symptom	Condition	Diagnostic Item	Reference Page
Failure to change gear from “D3 ” to “D2 ” or from “D4 ” to “D2 ”.	ON vehicle	1. Fluid level	AT-263, "FLUID LEVEL CHECK"
		2. Throttle position sensor (Accelerator pedal position (APP) sensor)	AT-356, "ACCELERATOR PEDAL POSITION (APP) SENSOR"
		3. Shift solenoid valve A	AT-361, "SHIFT SOLENOID VALVE A"
		4. Shift solenoid valve B	AT-366, "SHIFT SOLENOID VALVE B"
		5. Control valve assembly	AT-410, "Control Valve Assembly and Accumulators"
	OFF vehicle	6. High clutch	AT-463, "High Clutch"
		7. Brake band	AT-487, "Band Servo Piston Assembly"
Failure to change gear from “D2 ” to “D1 ” or from “D3 ” to “D1 ”.	ON vehicle	1. Fluid level	AT-263, "FLUID LEVEL CHECK"
		2. Throttle position sensor (Accelerator pedal position (APP) sensor)	AT-356, "ACCELERATOR PEDAL POSITION (APP) SENSOR"
		3. Shift solenoid valve A	AT-361, "SHIFT SOLENOID VALVE A"
		4. Shift solenoid valve B	AT-366, "SHIFT SOLENOID VALVE B"
		5. Control valve assembly	AT-410, "Control Valve Assembly and Accumulators"
	OFF vehicle	6. Low one-way clutch	AT-417, "OVERHAUL", AT-421, "Locations of Adjusting Shims, Needle Bearings, Thrust Washers and Snap Rings"
		7. High clutch	AT-463, "High Clutch"
		8. Brake band	AT-487, "Band Servo Piston Assembly"
Gear change shock felt during deceleration by releasing accelerator pedal.	ON vehicle	1. Throttle position sensor (Accelerator pedal position (APP) sensor)	AT-356, "ACCELERATOR PEDAL POSITION (APP) SENSOR"
		2. Line pressure test	AT-267, "Line Pressure Test"
		3. Overrun clutch solenoid valve	AT-371, "OVERRUN CLUTCH SOLENOID VALVE"
		4. Control valve assembly	AT-410, "Control Valve Assembly and Accumulators"
Too high a change point from “D4 ” to “D3 ”, from “D3 ” to “D2 ”, from “D2 ” to “D1 ”.	ON vehicle	1. Throttle position sensor (Accelerator pedal position (APP) sensor)	AT-356, "ACCELERATOR PEDAL POSITION (APP) SENSOR"
		2. Vehicle speed sensor·A/T (Revolution sensor) and vehicle speed sensor·MTR	AT-347, "VEHICLE SPEED SENSOR - A/T (REVOLUTION SENSOR)", AT-352, "DTC VEHICLE SPEED SENSOR MTR"

Symptom	Condition	Diagnostic Item	Reference Page
Kickdown does not operate when depressing accelerator pedal in “D4 ” within kick down vehicle speed.	ON vehicle	1. Throttle position sensor (Accelerator pedal position (APP) sensor)	AT-356, "ACCELERATOR PEDAL POSITION (APP) SENSOR"
		2. Vehicle speed sensor·A/T (Revolution sensor) and vehicle speed sensor·MTR	AT-347, "VEHICLE SPEED SENSOR - A/T (REVOLUTION SENSOR)", AT-352, "DTC VEHICLE SPEED SENSOR MTR"
		3. Shift solenoid valve A	AT-361, "SHIFT SOLENOID VALVE A"
		4. Shift solenoid valve B	AT-366, "SHIFT SOLENOID VALVE B"
Kickdown operates or engine overruns when depressing accelerator pedal in “D4 ” beyond kick down vehicle speed limit.	ON vehicle	1. Vehicle speed sensor·A/T (Revolution sensor) and vehicle speed sensor·MTR	AT-347, "VEHICLE SPEED SENSOR - A/T (REVOLUTION SENSOR)", AT-352, "DTC VEHICLE SPEED SENSOR MTR"
		2. Throttle position sensor (Accelerator pedal position (APP) sensor)	AT-356, "ACCELERATOR PEDAL POSITION (APP) SENSOR"
		3. Shift solenoid valve A	AT-361, "SHIFT SOLENOID VALVE A"
		4. Shift solenoid valve B	AT-366, "SHIFT SOLENOID VALVE B"
Races extremely fast or slips in changing from “D4 ” to “D3 ” when depressing accelerator pedal.	ON vehicle	1. Fluid level	AT-263, "FLUID LEVEL CHECK"
		2. Throttle position sensor (Accelerator pedal position (APP) sensor)	AT-356, "ACCELERATOR PEDAL POSITION (APP) SENSOR"
		3. Line pressure test	AT-267, "Line Pressure Test"
		4. Line pressure solenoid valve	AT-392, "LINE PRESSURE SOLENOID VALVE"
		5. Control valve assembly	AT-410, "Control Valve Assembly and Accumulators"
	OFF vehicle	6. High clutch	AT-463, "High Clutch"
		7. Forward clutch	AT-468, "Forward and Overrun Clutches"

Symptom	Condition	Diagnostic Item	Reference Page
Races extremely fast or slips in changing from “D4 ” to “D2 ” when depressing accelerator pedal.	ON vehicle	1. Fluid level	AT-263, "FLUID LEVEL CHECK"
		2. Throttle position sensor (Accelerator pedal position (APP) sensor)	AT-356, "ACCELE RATOR PEDAL POSI-TION (APP) SENSOR"
		3. Line pressure test	AT-267, "Line Pressure Test"
		4. Line pressure solenoid valve	AT-392, "LINE PRES-SURE SOLENOID VALVE"
		5. Shift solenoid valve A	AT-361, "SHIFT SOLE-NOID VALVE A"
		6. Control valve assembly	AT-410, "Control Valve Assembly and Accumula-tors"
	OFF vehicle	7. Brake band	AT-487, "Band Servo Pis-ton Assembly"
		8. Forward clutch	AT-468, "Forward and Overrun Clutches"
Races extremely fast or slips in changing from “D3 ” to “D2 ” when depressing accelerator pedal.	ON vehicle	1. Fluid level	AT-263, "FLUID LEVEL CHECK"
		2. Throttle position sensor (Accelerator pedal position (APP) sensor)	AT-356, "ACCELE RATOR PEDAL POSI-TION (APP) SENSOR"
		3. Line pressure test	AT-267, "Line Pressure Test"
		4. Line pressure solenoid valve	AT-392, "LINE PRES-SURE SOLENOID VALVE"
		5. Control valve assembly	AT-410, "Control Valve Assembly and Accumula-tors"
		6. A/T fluid temp sen circ and TCM pow sour	AT-381, "BATT/FLUID TEMP SEN (A/T FLUID TEMP SENSOR CIR-CUIT AND TCM POWER SOURCE)"
	OFF vehicle	7. Brake band	AT-487, "Band Servo Pis-ton Assembly"
		8. Forward clutch	AT-468, "Forward and Overrun Clutches"
		9. High clutch	AT-463, "High Clutch"

Symptom	Condition	Diagnostic Item	Reference Page
Races extremely fast or slips in changing from “D4 ” or “D3 ” to “D1 ” when depressing accelerator pedal.	ON vehicle	1. Fluid level	AT-263, "FLUID LEVEL CHECK"
		2. Throttle position sensor (Accelerator pedal position (APP) sensor)	AT-356, "ACCELERATOR PEDAL POSITION (APP) SENSOR"
		3. Line pressure test	AT-267, "Line Pressure Test"
		4. Line pressure solenoid valve	AT-392, "LINE PRESSURE SOLENOID VALVE"
		5. Control valve assembly	AT-410, "Control Valve Assembly and Accumulators"
	OFF vehicle	6. Forward clutch	AT-468, "Forward and Overrun Clutches"
		7. Forward one-way clutch	AT-417, "OVERHAUL"
		8. Low one-way clutch	AT-417, "OVERHAUL", AT-421, "Locations of Adjusting Shims, Needle Bearings, Thrust Washers and Snap Rings"
Vehicle will not run in any position.	ON vehicle	1. Fluid level	AT-263, "FLUID LEVEL CHECK"
		2. Control cable adjustment	AT-412, "Control Cable Adjustment"
		3. Line pressure test	AT-267, "Line Pressure Test"
		4. Line pressure solenoid valve	AT-392, "LINE PRESSURE SOLENOID VALVE"
	OFF vehicle	5. Oil pump	AT-439, "Oil Pump"
		6. High clutch	AT-463, "High Clutch"
		7. Brake band	AT-487, "Band Servo Piston Assembly"
		8. Low & reverse brake	AT-474, "Low & Reverse Brake"
		9. Torque converter	AT-421, "Locations of Adjusting Shims, Needle Bearings, Thrust Washers and Snap Rings"
		10. Parking components	AT-482, "Output Shaft, Idler Gear, Reduction Pinion Gear and Bearing Retainer"
Transmission noise in “D”, “2”, “1” and “R” positions.	ON vehicle	1. Fluid level	AT-263, "FLUID LEVEL CHECK"
	OFF vehicle	2. Torque converter	AT-421, "Locations of Adjusting Shims, Needle Bearings, Thrust Washers and Snap Rings"

Symptom	Condition	Diagnostic Item	Reference Page
Failure to change from “D_3 ” to “2_2 ” when changing lever into “2” position. AT-335, "18. A/T Does Not Shift: $D_3 \rightarrow 2_2$, When Selector Lever “D” → “2” Position"	ON vehicle	1. PNP switch adjustment	AT-412, "Park/Neutral Position (PNP) Switch Adjustment"
		2. Throttle position sensor (Accelerator pedal position (APP) sensor)	AT-356, "ACCELERATOR PEDAL POSITION (APP) SENSOR"
		3. Overrun clutch solenoid valve	AT-371, "OVERRUN CLUTCH SOLENOID VALVE"
		4. Shift solenoid valve A	AT-361, "SHIFT SOLENOID VALVE A"
		5. Shift solenoid valve B	AT-366, "SHIFT SOLENOID VALVE B"
		6. Control valve assembly	AT-410, "Control Valve Assembly and Accumulators"
		7. Control cable adjustment	AT-412, "Control Cable Adjustment"
Failure to change from “D_3 ” to “2_2 ” when changing lever into “2” position. AT-335, "18. A/T Does Not Shift: $D_3 \rightarrow 2_2$, When Selector Lever “D” → “2” Position"	OFF vehicle	8. Brake band	AT-487, "Band Servo Piston Assembly"
		9. Overrun clutch	AT-468, "Forward and Overrun Clutches"
Gear change from “2_2 ” to “2_3 ” in “2” position.	ON vehicle	1. PNP switch adjustment	AT-412, "Park/Neutral Position (PNP) Switch Adjustment"
Engine brake does not operate in “1” position. AT-334, "16. Vehicle Does Not Start From D_1"	ON vehicle	1. PNP switch adjustment	AT-412, "Park/Neutral Position (PNP) Switch Adjustment"
		2. Control cable adjustment	AT-412, "Control Cable Adjustment"
		3. Throttle position sensor (Accelerator pedal position (APP) sensor)	AT-356, "ACCELERATOR PEDAL POSITION (APP) SENSOR"
		4. Vehicle speed sensor·A/T (Revolution sensor) and vehicle speed sensor·MTR	AT-347, "VEHICLE SPEED SENSOR - A/T (REVOLUTION SENSOR)", AT-352, "DTC VEHICLE SPEED SENSOR MTR"
		5. Shift solenoid valve A	AT-361, "SHIFT SOLENOID VALVE A"
		6. Control valve assembly	AT-410, "Control Valve Assembly and Accumulators"
		7. Overrun clutch solenoid valve	AT-371, "OVERRUN CLUTCH SOLENOID VALVE"
	OFF vehicle	8. Overrun clutch	AT-468, "Forward and Overrun Clutches"
		9. Low & reverse brake	AT-474, "Low & Reverse Brake"

Symptom	Condition	Diagnostic Item	Reference Page
Gear change from “1_1 ” to “1_2 ” in “1” position.	ON vehicle	1. PNP switch adjustment	AT-412, "Park/Neutral Position (PNP) Switch Adjustment"
		2. Control cable adjustment	AT-412, "Control Cable Adjustment"
Does not change from “1_2 ” to “1_1 ” in “1” position.	ON vehicle	1. PNP switch adjustment	AT-412, "Park/Neutral Position (PNP) Switch Adjustment"
		2. Vehicle speed sensor·A/T (Revolution sensor) and vehicle speed sensor·MTR	AT-347, "VEHICLE SPEED SENSOR - A/T (REVOLUTION SENSOR)", AT-352, "DTC VEHICLE SPEED SENSOR MTR"
		3. Shift solenoid valve A	AT-361, "SHIFT SOLENOID VALVE A"
		4. Control valve assembly	AT-410, "Control Valve Assembly and Accumulators"
		5. Overrun clutch solenoid valve	AT-371, "OVERRUN CLUTCH SOLENOID VALVE"
	OFF vehicle	6. Overrun clutch	AT-468, "Forward and Overrun Clutches"
		7. Low & reverse brake	AT-474, "Low & Reverse Brake"
Large shock changing from “1_2 ” to “1_1 ” in “1” position.	ON vehicle	1. Control valve assembly	AT-410, "Control Valve Assembly and Accumulators"
	OFF vehicle	2. Low & reverse brake	AT-474, "Low & Reverse Brake"

Symptom	Condition	Diagnostic Item	Reference Page
Transmission overheats.	ON vehicle	1. Fluid level	AT-263, "FLUID LEVEL CHECK"
		2. Engine idling rpm	EC-936, "Idle Speed and Ignition Timing"
		3. Throttle position sensor (Accelerator pedal position (APP) sensor)	AT-356, "ACCELERATOR PEDAL POSITION (APP) SENSOR"
		4. Line pressure test	AT-267, "Line Pressure Test"
		5. Line pressure solenoid valve	AT-392, "LINE PRESSURE SOLENOID VALVE"
		6. Control valve assembly	AT-410, "Control Valve Assembly and Accumulators"
	OFF vehicle	7. Oil pump	AT-439, "Oil Pump"
		8. Reverse clutch	AT-459, "Reverse Clutch"
		9. High clutch	AT-463, "High Clutch"
		10. Brake band	AT-487, "Band Servo Piston Assembly"
		11. Forward clutch	AT-468, "Forward and Overrun Clutches"
		12. Overrun clutch	AT-468, "Forward and Overrun Clutches"
		13. Low & reverse brake	AT-474, "Low & Reverse Brake"
		14. Torque converter	AT-421, "Locations of Adjusting Shims, Needle Bearings, Thrust Washers and Snap Rings"
ATF shoots out during operation. White smoke emitted from exhaust pipe during operation.	ON vehicle	1. Fluid level	AT-263, "FLUID LEVEL CHECK"
	OFF vehicle	2. Reverse clutch	AT-459, "Reverse Clutch"
		3. High clutch	AT-463, "High Clutch"
		4. Brake band	AT-487, "Band Servo Piston Assembly"
		5. Forward clutch	AT-468, "Forward and Overrun Clutches"
		6. Overrun clutch	AT-468, "Forward and Overrun Clutches"
		7. Low & reverse brake	AT-474, "Low & Reverse Brake"

Symptom	Condition	Diagnostic Item	Reference Page
Offensive smell at fluid charging pipe.	ON vehicle	1. Fluid level	AT-263, "FLUID LEVEL CHECK"
	OFF vehicle	2. Torque converter	AT-421, "Locations of Adjusting Shims, Needle Bearings, Thrust Washers and Snap Rings"
		3. Oil pump	AT-439, "Oil Pump"
		4. Reverse clutch	AT-459, "Reverse Clutch"
		5. High clutch	AT-463, "High Clutch"
		6. Brake band	AT-487, "Band Servo Piston Assembly"
		7. Forward clutch	AT-468, "Forward and Overrun Clutches"
		8. Overrun clutch	AT-468, "Forward and Overrun Clutches"
		9. Low & reverse brake	AT-474, "Low & Reverse Brake"
Torque converter is not locked up.	ON vehicle	1. Throttle position sensor (Accelerator pedal position (APP) sensor)	AT-356, "ACCELERATOR PEDAL POSITION (APP) SENSOR"
		2. Vehicle speed sensor·A/T (Revolution sensor) and vehicle speed sensor·MTR	AT-347, "VEHICLE SPEED SENSOR - A/T (REVOLUTION SENSOR)", AT-352, "DTC VEHICLE SPEED SENSOR MTR"
		3. PNP switch adjustment	AT-412, "Park/Neutral Position (PNP) Switch Adjustment"
		4. Engine speed signal	AT-387, "ENGINE SPEED SIGNAL"
		5. A/T fluid temp sen circ and TCM pow sour	AT-381, "BATT/FLUID TEMP SEN (A/T FLUID TEMP SENSOR CIRCUIT AND TCM POWER SOURCE)"
		6. Line pressure test	AT-267, "Line Pressure Test"
		7. Torque converter clutch solenoid valve	AT-376, "TORQUE CONVERTER CLUTCH SOLENOID VALVE"
		8. Control valve assembly	AT-410, "Control Valve Assembly and Accumulators"
	OFF vehicle	9. Torque converter	AT-421, "Locations of Adjusting Shims, Needle Bearings, Thrust Washers and Snap Rings"

Symptom	Condition	Diagnostic Item	Reference Page
Torque converter clutch piston slip.	ON vehicle	1. Fluid level	AT-263, "FLUID LEVEL CHECK"
		2. Throttle position sensor (Accelerator pedal position (APP) sensor)	AT-356, "ACCELERATOR PEDAL POSITION (APP) SENSOR"
		3. Line pressure test	AT-267, "Line Pressure Test"
		4. Torque converter clutch solenoid valve	AT-376, "TORQUE CONVERTER CLUTCH SOLENOID VALVE"
		5. Line pressure solenoid valve	AT-392, "LINE PRESSURE SOLENOID VALVE"
		6. Control valve assembly	AT-410, "Control Valve Assembly and Accumulators"
	OFF vehicle	7. Torque converter	AT-421, "Locations of Adjusting Shims, Needle Bearings, Thrust Washers and Snap Rings"
Lock-up point is extremely high or low. AT-330, "12. A/T Does Not Perform Lock-up"	ON vehicle	1. Throttle position sensor (Accelerator pedal position (APP) sensor) Adjustment	AT-356, "ACCELERATOR PEDAL POSITION (APP) SENSOR"
		2. Vehicle speed sensor·A/T (Revolution sensor) and vehicle speed sensor·MTR	AT-347, "VEHICLE SPEED SENSOR - A/T (REVOLUTION SENSOR)", AT-352, "DTC VEHICLE SPEED SENSOR MTR"
		3. Torque converter clutch solenoid valve	AT-376, "TORQUE CONVERTER CLUTCH SOLENOID VALVE"
		4. Control valve assembly	AT-410, "Control Valve Assembly and Accumulators"

Symptom	Condition	Diagnostic Item	Reference Page
A/T does not shift to “D4 ” when driving with overdrive control switch “ON”.	ON vehicle	1. Throttle position sensor (Accelerator pedal position (APP) sensor)	AT-356, "ACCELERATOR PEDAL POSITION (APP) SENSOR"
		2. PNP switch adjustment	AT-412, "Park/Neutral Position (PNP) Switch Adjustment"
		3. Vehicle speed sensor·A/T (Revolution sensor) and vehicle speed sensor·MTR	AT-347, "VEHICLE SPEED SENSOR - A/T (REVOLUTION SENSOR)", AT-352, "DTC VEHICLE SPEED SENSOR MTR"
		4. Shift solenoid valve A	AT-361, "SHIFT SOLENOID VALVE A"
		5. Overrun clutch solenoid valve	AT-371, "OVERRUN CLUTCH SOLENOID VALVE"
		6. Control valve assembly	AT-410, "Control Valve Assembly and Accumulators"
		7. A/T fluid temp sen circ and TCM pow sour	AT-381, "BATT/FLUID TEMP SEN (A/T FLUID TEMP SENSOR CIRCUIT AND TCM POWER SOURCE)"
		8. Line pressure test	AT-267, "Line Pressure Test"
	OFF vehicle	9. Brake band	AT-487, "Band Servo Piston Assembly"
		10. Overrun clutch	AT-468, "Forward and Overrun Clutches"
Engine is stopped at “R”, “D”, “2” and “1” positions.	ON vehicle	1. Fluid level	AT-263, "FLUID LEVEL CHECK"
		2. Torque converter clutch solenoid valve	AT-376, "TORQUE CONVERTER CLUTCH SOLENOID VALVE"
		3. Shift solenoid valve A	AT-361, "SHIFT SOLENOID VALVE A"
		4. Shift solenoid valve B	AT-366, "SHIFT SOLENOID VALVE B"
		5. Control valve assembly	AT-410, "Control Valve Assembly and Accumulators"

CONSULT-II REFERENCE VALUE IN DATA MONITOR MODE

Remarks: Specification data are reference values.

Monitor item	Condition	Specification (Approximately)	
A/T fluid temperature sensor	Cold [20°C (68°F)] ↓ Hot [80°C (176°F)]	1.5V ↓ 0.5V	2.5kΩ ↓ 0.3kΩ
Line pressure solenoid valve duty	Small throttle opening (Low line pressure) ↓ Large throttle opening (High line pressure)	Approximately 24% ↓ Approximately 95%	
Torque converter clutch solenoid valve duty	Lock-up “OFF” ↓ Lock-up “ON”	Approximately 4% ↓ Approximately 94%	
Throttle position sensor (Accelerator pedal position (APP) sensor)	Fully-closed throttle	Approximately 0.5V	
	Fully-open throttle	Approximately 4V	

TCM Terminals and Reference Value

ECS009A3

PREPARATION

- Measure voltage between each terminal and terminal 25 or 48 by following “TCM INSPECTION TABLE”.

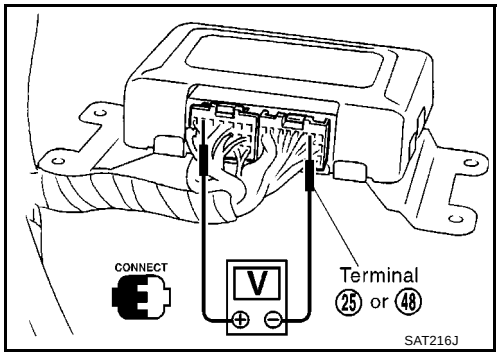

TCM HARNESS CONNECTOR TERMINAL LAYOUT

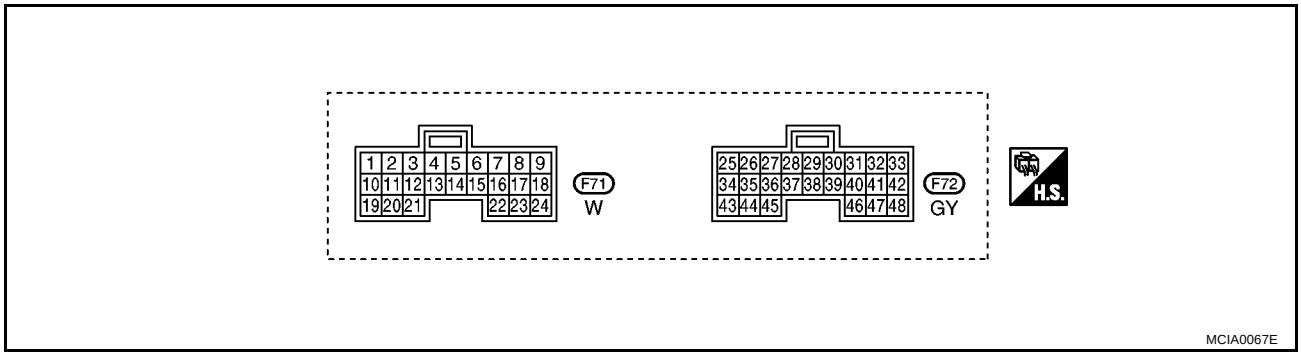

TCM INSPECTION TABLE

(Data are reference values.)

Terminal No.	Wire color	Item	Condition		Judgementstandard(Approx.)
1	R/W	Line pressure solenoid valve		When releasing accelerator pedal after warming up engine.	1.5 - 3.0V
				When depressing accelerator pedal fully after warming up engine.	0V
2	P/B	Line pressure solenoid valve (with dropping resistor)		When releasing accelerator pedal after warming up engine.	4 - 14V
				When depressing accelerator pedal fully after warming up engine.	0V

Terminal No.	Wire color	Item	Condition		Judgementstandard(Approx.)
3	GY/R	Torque converter clutch solenoid valve		When A/T performs lock-up.	8 - 15V
				When A/T does not perform lock-up.	0V
5*2	L	CAN (H)	—	—	—
6*2	R	CAN (L)	—	—	—
10	BR/R	Power source	ON or OFF	When turning ignition switch to “ON”.	Battery voltage
				When turning ignition switch to “OFF”.	0V
11	L/W	Shift solenoid valve A		When shift solenoid valve A operates. (When driving in “D1 ” or “D4 ”.)	Battery voltage
				When shift solenoid valve A does not operate. (When driving in “D2 ” or “D3 ”.)	0V
12	L/Y	Shift solenoid valve B		When shift solenoid valve B operates. (When driving in “D1 ” or “D2 ”.)	Battery voltage
				When shift solenoid valve B does not operate. (When driving in “D3 ” or “D4 ”.)	0V
19	BR/R	Power source	ON or OFF	Same as No. 10	
20	L/B	Overrun clutch solenoid valve		When overrun clutch solenoid valve operates.	Battery voltage
				When overrun clutch solenoid valve does not operate.	0V
25	B	Ground	—	—	0V
26	BR/Y	PNP switch “1” position	ON and	When setting selector lever to “1” position.	Battery voltage
				When setting selector lever to other positions.	0V
27	L	PNP switch “2” position		When setting selector lever to “2” position.	Battery voltage
				When setting selector lever to other positions.	0V
28	R/B	Power source (Memory back-up)	ON or OFF	When turning ignition switch to “OFF”.	Battery voltage
				When turning ignition switch to “ON”.	Battery voltage
29	W	Revolution sensor		When moving at 20 km/h (12 MPH), use the CONSULT-II pulse frequency measuring function.*1 **CAUTION: Connect the diagnosis data link cable to the vehicle diagnosis connector.**	150 Hz
				When vehicle parks.	Under 1.3V or over 4.5V

Terminal No.	Wire color	Item	Condition		Judgementstandard(Approx.)
30 *3	G/B	CONSULT- II (RX)		—	—
31 *3	GY/L	CONSULT- II (TX)		—	—
32 *2	R	Throttle position sensor (Power source)	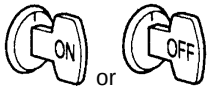	When turning ignition switch to “ON”.	4.5 - 5.5V
				When turning ignition switch to “OFF”.	0V
34	W/G	PNP switch “D” position	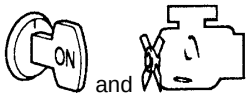	When setting selector lever to “D” position.	Battery voltage
				When setting selector lever to other positions.	0V
35	G/W	PNP switch “R” position		When setting selector lever to “R” position.	Battery voltage
				When setting selector lever to other positions.	0V
36	G	PNP switch “N” or “P” position		When setting selector lever to “N” or “P” position.	Battery voltage
				When setting selector lever to other positions.	0V
39 *2	L/OR	Engine speed signal	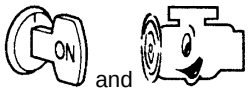	EC-XX, “ECM INSPECTION TABLE”.	
40	L/B	Vehicle speed sensor		When moving vehicle at 2 to 3 km/h (1 to 2 MPH) for 1 m (3 ft) or more.	Voltage varies between less than 0V and more than 4.5V
41*2	GY	Throttle position sensor		When depressing accelerator pedal slowly after warming up engine. (Voltage rises gradually in response to throttle position.)	Fully-closed throttle: 0.5V Fully-open throttle: 4V
42	B	Throttle position sensor (Ground)	—	—	—
47	BR	A/T fluid temperature sensor		When ATF temperature is 20°C (68°F).	1.5V
				When ATF temperature is 80°C (176°F).	0.5V
48	B	Ground	—	—	0V

*1: A circuit tester cannot be used to test this item.
*2: These terminals are connected to the ECM.
*3: These terminals are connected to the data link connector.

CAN COMMUNICATION

PFP:23710

System Description

ECS00A0J

CAN (Controller Area Network) is a serial communication line for real time application. It is an on-vehicle multiplex communication line with high data communication speed and excellent error detection ability. Many electronic control units are equipped onto a vehicle, and each control unit shares information and links with other control units during operation (not independent). In CAN communication, control units are connected with 2 communication lines (CAN H line, CAN L line) allowing a high rate of information transmission with less wiring. Each control unit transmits/receives data but selectively reads required data only.

CAN Communication Unit

ECS00A0K

CAN COMMUNICATION UNIT FOR MODELS WITH ESP

System diagram

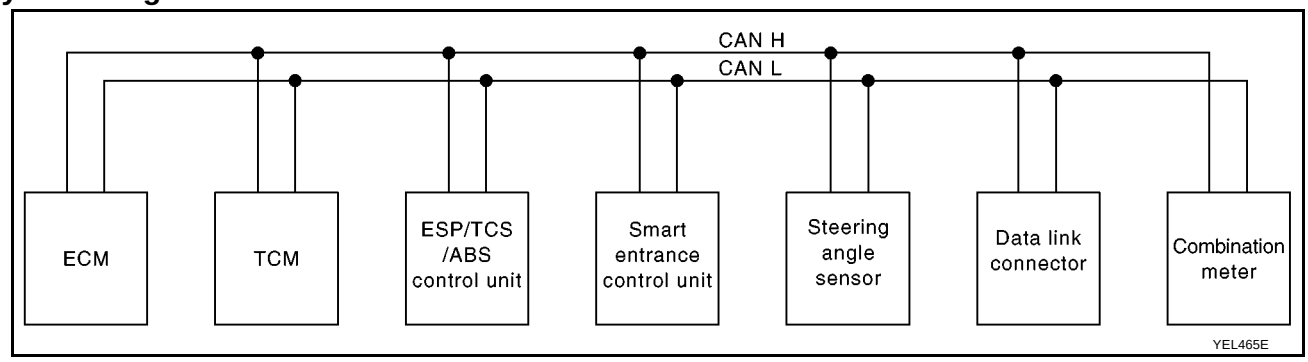

Input/output signal chart

T: Transmit R: Receive

Signals	ECM	TCM	ESP/TCS/ ABS control unit	Smart entrance control unit	Steering angle sensor	Combination meter
Engine speed signal	T		R			R
Brake switch signal		R				T
Rear window defogger signal	R			T		
Heater fan switch signal	R					T
Air conditioner switch signal	R					T
MI signal	T					R
Engine coolant temperature signal	T					R
Fuel consumption signal	T					R
Vehicle speed signal			T			R
	R					T
Seat belt reminder signal				R		T
Headlamp switch signal				T		R
Flashing indicator signal				T		R
Engine cooling fan speed signal	T			R		
Door switches state signal				T		R
A/C compressor signal	T			R		
A/C compressor feedback signal	T					R
Accelerator pedal position signal	T		R			
Output shaft revolution signal	R	T				
OD OFF switch signal		R				T
OD OFF indicator signal		T				R
A/T self-diagnosis signal	R	T				
P range signal		T	R			

Signals	ECM	TCM	ESP/TCS/ ABS control unit	Smart entrance control unit	Steering angle sensor	Combination meter
Steering angle sensor signal			R		T	
A/T position indicator signal	R	T	R			R
ABS warning lamp signal			T			R
Slip indicator lamp signal			T			R
VDC Off indicator lamp signal			T			R
Brake warning lamp signal			T			R
N range switch signal		R				T
P range switch signal		R				T

CAN COMMUNICATION UNIT FOR MODELS WITHOUT ESP

System diagram

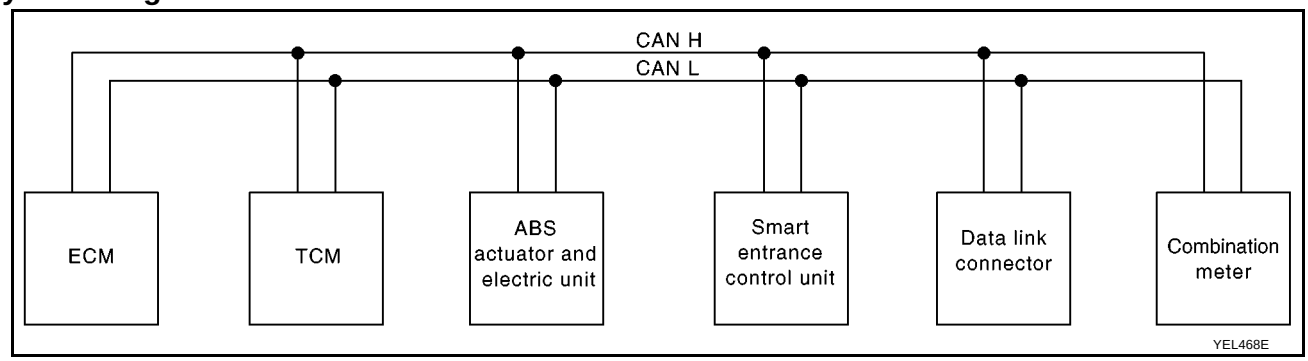

Input/output signal chart

T: Transmit R: Receive

Signals	ECM	TCM	ABS actuator and electric unit (control unit)	Smart entrance control unit	Combination meter
Engine speed signal	T				R
Brake switch signal		R			T
Rear window defogger signal	R			T	
Heater fan switch signal	R				T
Air conditioner switch signal	R				T
MI signal	T				R
Engine coolant temperature signal	T				R
Fuel consumption signal	T				R
Vehicle speed signal			T		R
	R				T
Seat belt reminder signal				R	T
Headlamp switch signal				T	R
Flashing indicator signal				T	R
Engine cooling fan speed signal	T			R	
Door switches state signal				T	R
A/C compressor signal	T			R	
A/C compressor feedback signal	T				R
Accelerator pedal position signal	T	R			
Output shaft revolution signal	R	T			

Signals	ECM	TCM	ABS actuator and electric unit (control unit)	Smart entrance control unit	Combination meter
ABS operation signal			T		R
OD OFF switch signal		R			T
OD OFF indicator signal		T			R
A/T self-diagnosis signal	R	T			
ABS warning lamp signal			T		R
N range switch signal		R			T
P range switch signal		R			T

TROUBLE DIAGNOSES FOR SYMPTOMS

PFP:00100

Wiring Diagram — AT — NONDTC

ECS009A6

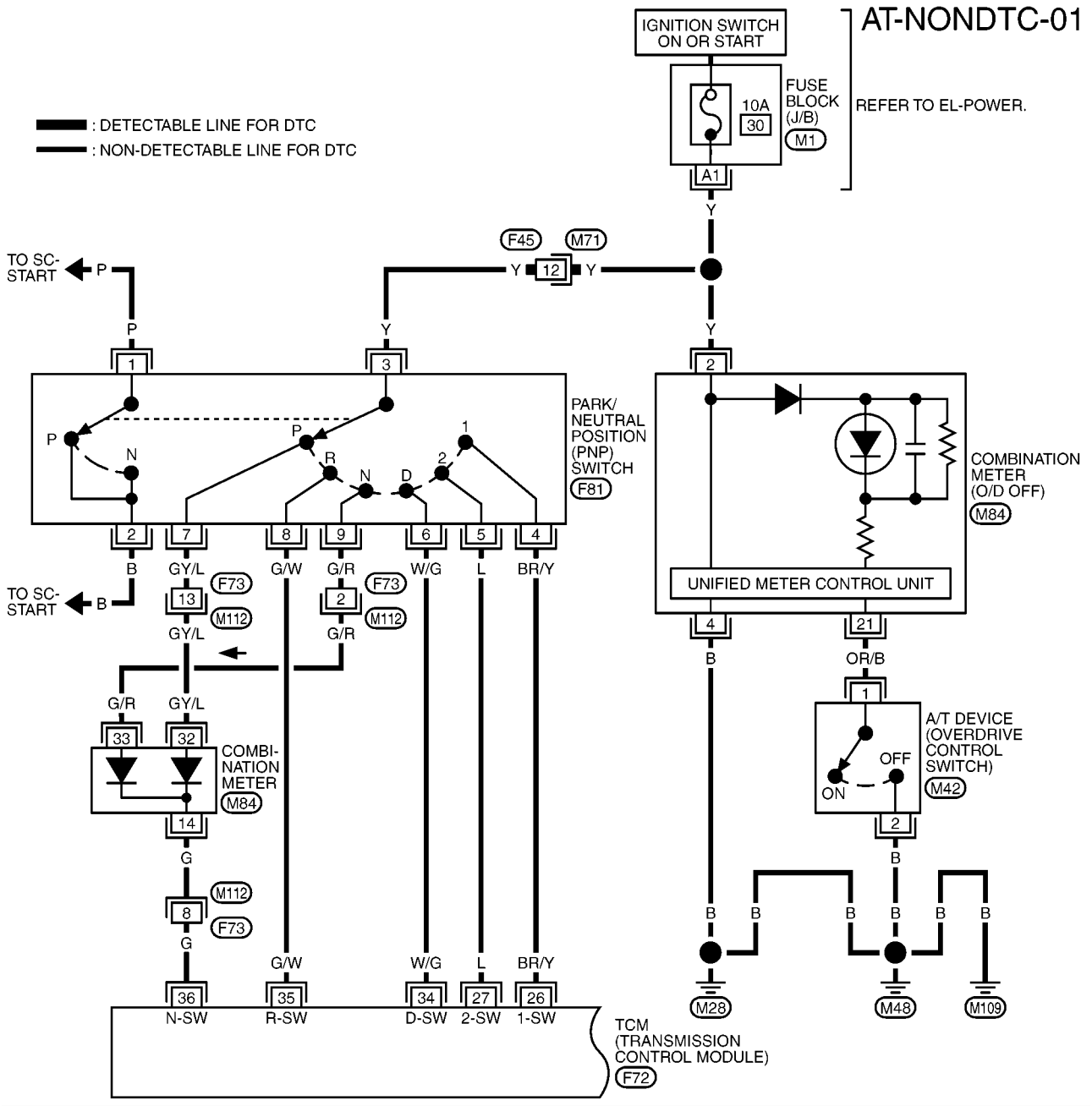

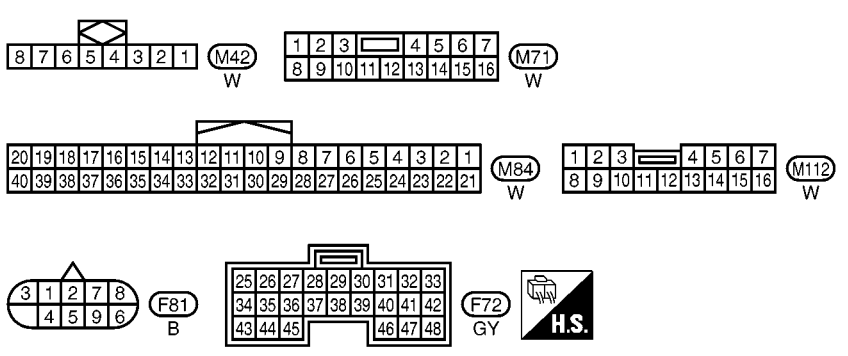

REFER TO THE FOLLOWING.
M1 -FUSE BLOCK-JUNCTION BOX (J/B)

YAT386A

AT-NONDTC-02

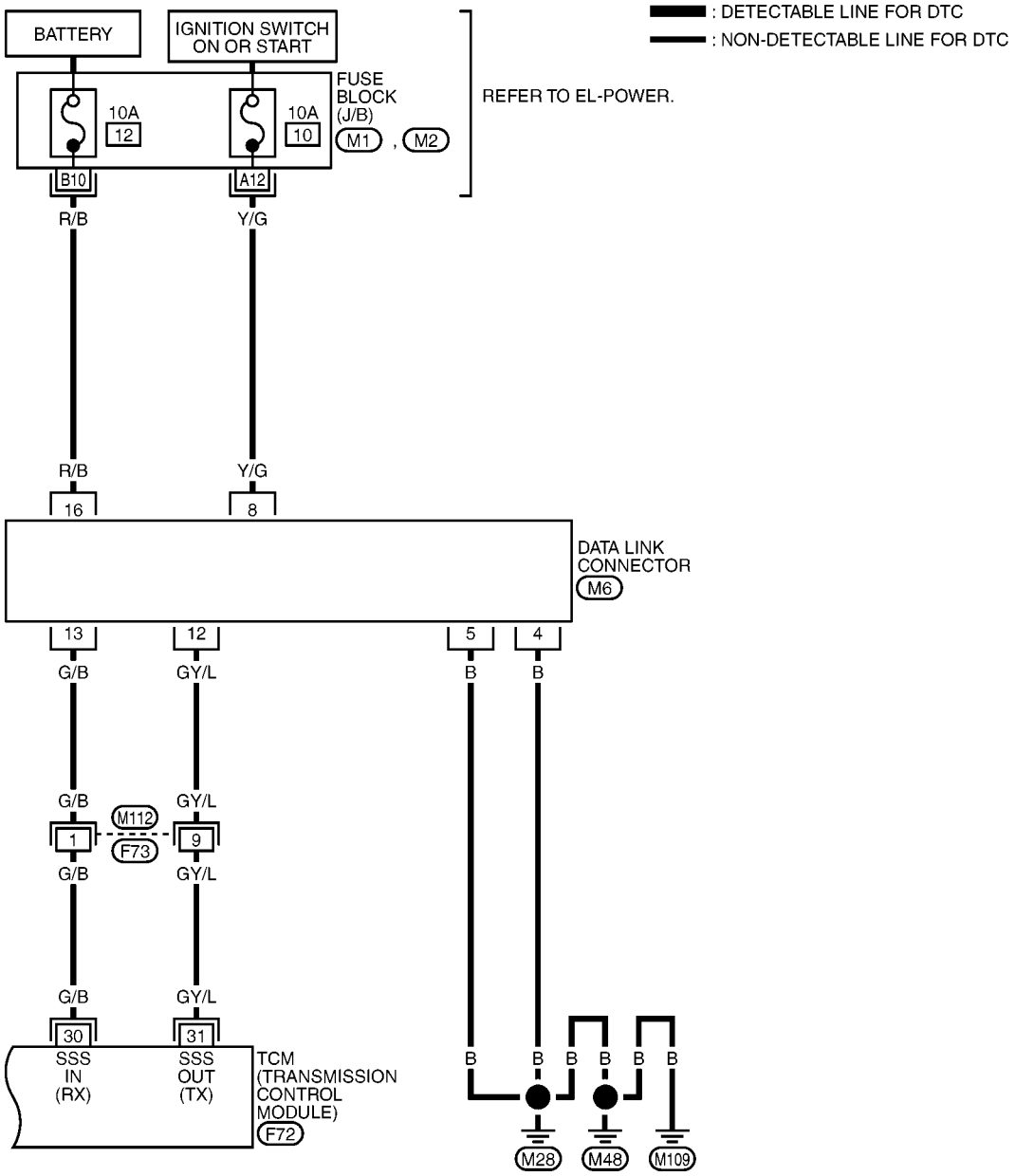

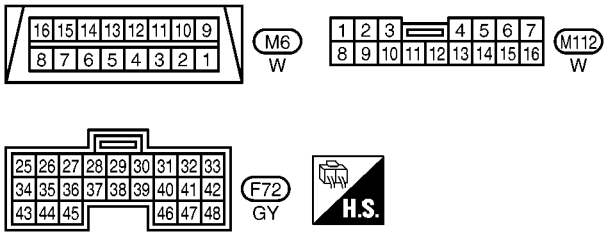

REFER TO THE FOLLOWING.
M1 , M2 -FUSE BLOCK-JUNCTION BOX (J/B)

YAT387A

1. O/D OFF Indicator Lamp Does Not Come On

ECS009A7

SYMPTOM:
O/D OFF indicator lamp does not come on for about 2 seconds when turning ignition switch to “ON”.

1. CHECK TCM POWER SOURCE

1. Turn ignition switch to “ON” position.
   (Do not start engine.)
2. Check voltage between TCM terminals 10, 19, 28 and ground.

   Voltage: Battery voltage

3. Turn ignition switch to “OFF” position.
4. Check voltage between TCM terminal 28 and ground.

   Voltage: Battery voltage

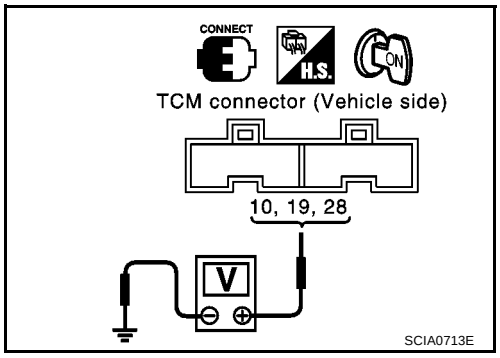

OK or NG

OK >> GO TO 2
NG >> Check the following items:
- Harness for short or open between ignition switch and TCM terminals 10, 19 and 28 (Main harness).
- Refer to AT-344, "Wiring Diagram — AT — MAIN" .
- Ignition switch and fuse. Refer to EL-11, “Power Supply Routing”.

2. CHECK TCM GROUND CIRCUIT

1. Turn ignition switch to “OFF” position.
2. Disconnect TCM harness connector.
3. Check continuity between TCM terminals 25, 48 and ground.

   Continuity should exist.

   If OK, check harness for short to ground and short to power.

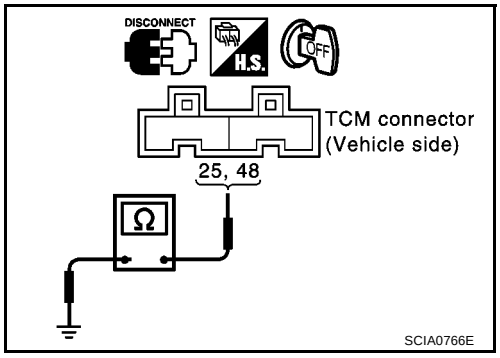

OK or NG

OK >> GO TO 3
NG >> Repair open circuit or short to ground or short to power in harness or connectors. Refer to AT-344, "Wiring Diagram — AT — MAIN" .

3. CHECK LAMP CIRCUIT

1. Turn ignition switch to “OFF” position.
2. Check resistance between TCM terminals 13 and 10, 19.

   Resistance: 50 - 100Ω

3. Reinstall any part removed.

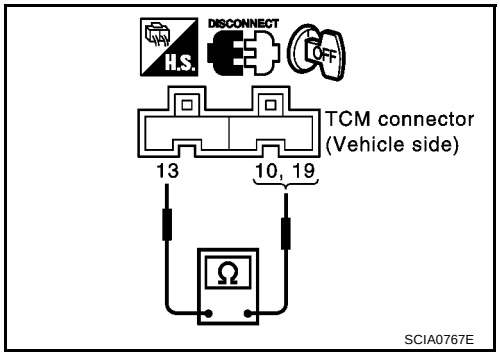

OK or NG

OK >> GO TO 4
NG >> Check the following items:
- O/D OFF indicator lamp.
  Refer to EL-102, ”Combination Meter”.
- Harness and fuse for short or open between ignition switch and O/D OFF indicator lamp (Main harness)
  Refer to EL-11, “Power Supply Routing”.
- Harness for short or open between O/D OFF indicator lamp and TCM.

4. CHECK SYMPTOM

Check again.

OK or NG

OK >> **INSPECTION END**
NG >> 1. Perform TCM input/output signal inspection.
2. If NG, recheck TCM pin terminals for damage or loose connection with harness connector.

2. Engine Cannot Be Started In “P” and “N” Position

ECS009A8

SYMPTOM:

- **Engine cannot be started with selector lever in “P” or “N” position.**
- **Engine can be started with selector lever in “D”, “2”, “1” or “R” position.**

1. CHECK PNP SWITCH CIRCUIT

With CONSULT-II

Does “TCM INPUT SIGNALS” in “DATA MONITOR” show damage to PNP switch circuit?

Without CONSULT-II

Does self-diagnosis show damage to PNP switch circuit?

Yes or No

Yes >> Check PNP switch circuit. Refer to AT-337, "21. TCM Self-diagnosis Does Not Activate (PNP & Overdrive Control Switches, and Throttle Position Sensor Circuit Checks)" .
No >> GO TO 2

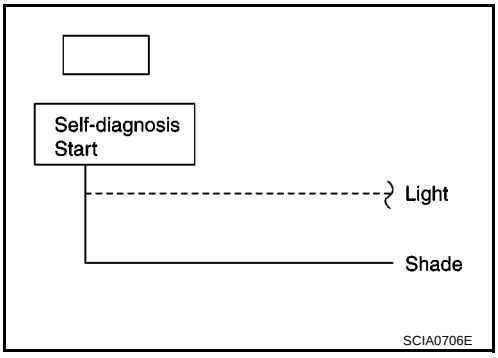

2. CHECK PNP SWITCH INSPECTION

Check for short or open of PNP switch harness connector terminals 1 and 2.
Refer to AT-337, "21. TCM Self-diagnosis Does Not Activate (PNP & Overdrive Control Switches, and Throttle Position Sensor Circuit Checks)" .

OK or NG

OK >> GO TO 3
NG >> Repair or replace PNP switch.

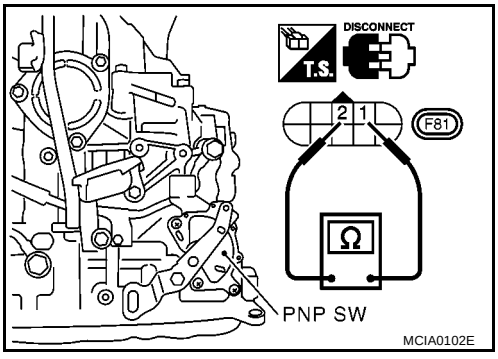

3. CHECK STARTING SYSTEM

Check starting system. Refer to SC-13, “Starting System”.

OK or NG

OK >> **INSPECTION END**
NG >> Repair or replace damaged parts.

3. In “P” Position, Vehicle Moves Forward Or Backward When Pushed

ECS009A9

SYMPTOM:
Vehicle moves when it is pushed forward or backward with selector lever in “P” position.

1. CHECK PARKING COMPONENTS

Check parking components. Refer to AT-417, "Output Shaft, Idler Gear, Reduction Pinion Gear and Bearing Retainer" .

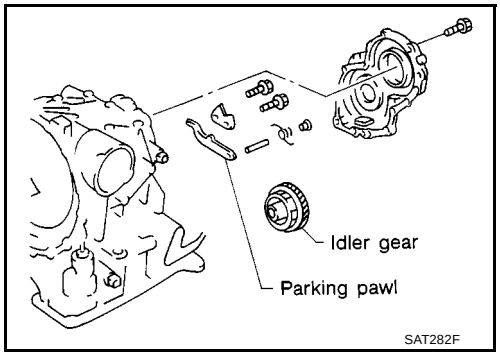

OK or NG

OK >> **INSPECTION END**
NG >> Repair or replace damaged parts.

4. In “N” Position, Vehicle Moves

ECS009AA

SYMPTOM:
Vehicle moves forward or backward when selecting “N” position.

1. CHECK PNP SWITCH CIRCUIT

With CONSULT-II
Does “TCM INPUT SIGNALS” in “DATA MONITOR” show damage to PNP switch circuit?

Without CONSULT-II
Does self-diagnosis show damage to PNP switch circuit?

Yes or No

Yes >> Check PNP switch circuit. Refer to AT-337, "21. TCM Self-diagnosis Does Not Activate (PNP & Overdrive Control Switches, and Throttle Position Sensor Circuit Checks)" .
No >> GO TO 2

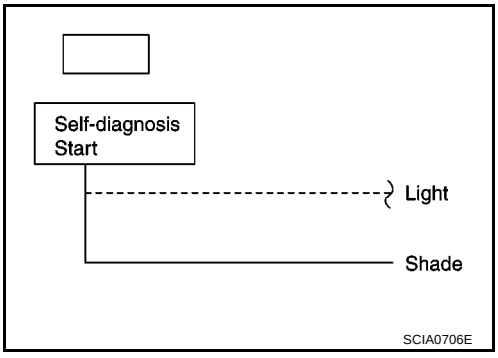

2. CHECK CONTROL CABLE

Check control cable. Refer to AT-412, "Control Cable Adjustment" .

OK or NG

OK >> GO TO 3
NG >> Adjust control cable. Refer to AT-412, "Control Cable Adjustment" .

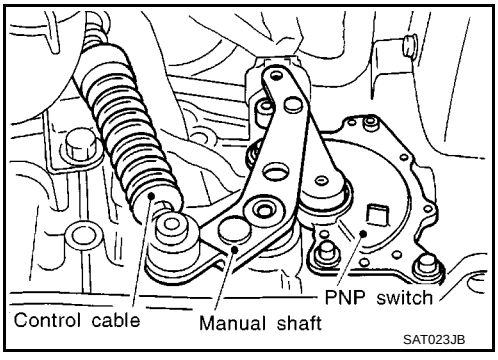

3. CHECK A/T FLUID LEVEL

Check A/T fluid level again.

OK or NG

OK >> GO TO 4
NG >> Refill ATF.

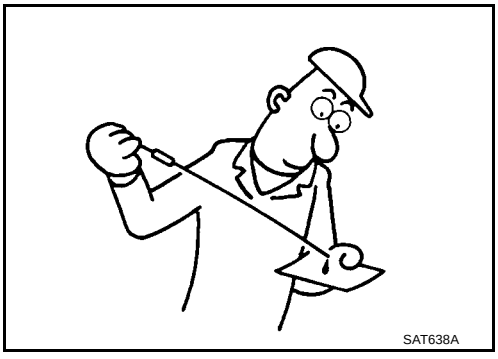

4. CHECK A/T FLUID CONDITION

1. Remove oil pan, refer to AT-410, "REMOVAL" .
2. Check A/T fluid condition.

OK or NG

OK >> GO TO 5
NG >> 1. Disassemble A/T.
2. Check the following items:
– Forward clutch assembly
– Overrun clutch assembly
– Reverse clutch assembly

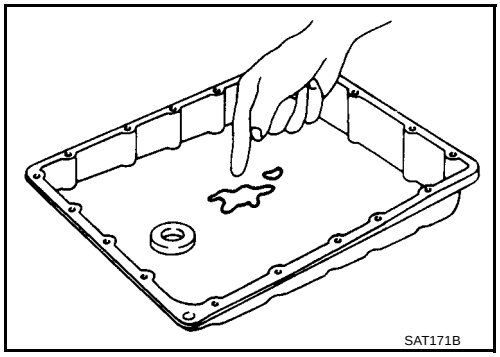

5. CHECK SYMPTOM

Check again.

OK or NG

OK >> **INSPECTION END**
NG >> 1. Perform TCM input/output signal inspection.
2. If NG, recheck TCM pin terminals for damage or loose connection with harness connector.

5. Large Shock. “N” → “R” Position

ECS009AB

SYMPTOM:
There is large shock when changing from “N” to “R” position.

1. CHECK SELF-DIAGNOSTIC RESULTS

Does self-diagnosis show damage to A/T fluid temperature sensor, line pressure solenoid valve or throttle position sensor circuit?

Yes or No

Yes >> ● Check damaged circuit. Refer to the following items.
– AT-392, "LINE PRESSURE SOLENOID VALVE"
– THROTTLE POSITION SENSOR: AT-356, "ACCELE RATOR PEDAL POSITION (APP) SENSOR"
– AT-381, "BATT/FLUID TEMP SEN (A/T FLUID TEMP SENSOR CIRCUIT AND TCM POWER SOURCE)"

No >> GO TO 2

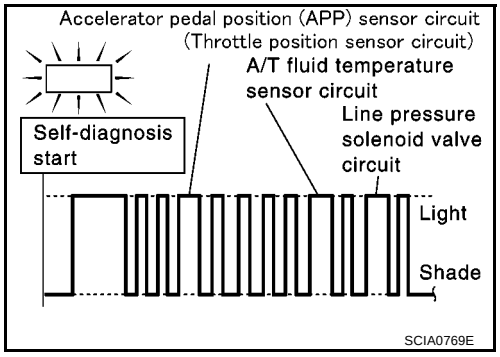

2. CHECK THROTTLE POSITION SENSOR*

*: This sensor means accelerator pedal position (APP) sensor.
Refer to AT-356, "ACCELE RATOR PEDAL POSITION (APP) SEN-SOR" .

OK or NG

OK >> GO TO 3
NG >> Repair or replace Accelerator pedal position(APP)sen-sor.

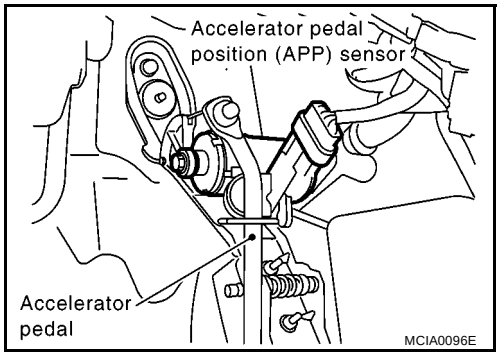

3. CHECK LINE PRESSURE

Check line pressure at idle with selector lever in “D” position. Refer to AT-267, "Line Pressure Test" .

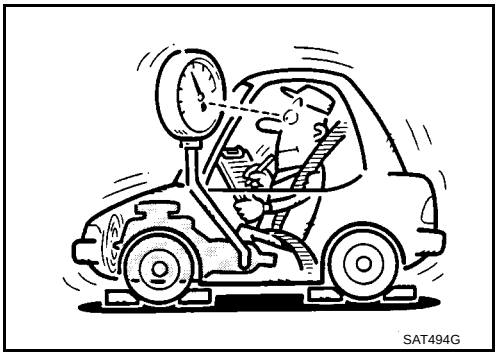

OK or NG

OK >> GO TO 4
NG >> 1. Remove control valve assembly. Refer to AT-410, "Control Valve Assembly and Accumulators" .
2. Check the following items:
– Valves to control line pressure (Pressure regulator valve, pressure modifier valve, pilot valve and pilot filter)
– Line pressure solenoid valve

4. CHECK SYMPTOM

Check again.

OK or NG

OK >> **INSPECTION END**
NG >> 1. Perform TCM input/output signal inspection.
2. If NG, recheck TCM pin terminals for damage or loose connection with harness connector.

6. Vehicle Does Not Creep Backward In “R” Position

ECS009AC

SYMPTOM:
Vehicle does not creep backward when selecting “R” position.

1. CHECK A/T FLUID LEVEL

Check A/T fluid level again.

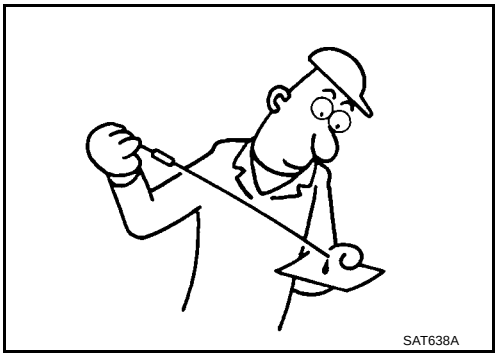

OK or NG

OK >> GO TO 2
NG >> Refill ATF.

2. CHECK STALL TEST

Check stall revolution with selector lever in “1” and “R” positions.
Refer to AT-264, "Stall Test" .

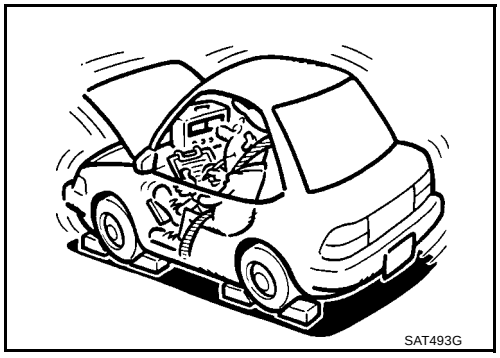

OK or NG

OK >> GO TO 3

OK in “1” position, NG in “R” position>>1.Remove control valve assembly. Refer to AT-410, "Control Valve Assembly and Accumulators" .

2. Check the following items:
- Valves to control line pressure (Pressure regulator valve, pressure modifier valve, pilot valve and pilot filter)
- Line pressure solenoid valve (AT-392, "LINE PRESSURE SOLENOID VALVE")
3. Disassemble A/T.
4. Check the following items:
- Oil pump assembly
- Torque converter
- Reverse clutch assembly
- High clutch assembly
- Low & reverse brake assembly
- Low one-way clutch

NG in both “1” and “R” positions>>GO TO 6

3. CHECK LINE PRESSURE

Check line pressure at idle with selector lever in “R” position. Refer to AT-267, "Line Pressure Test" .

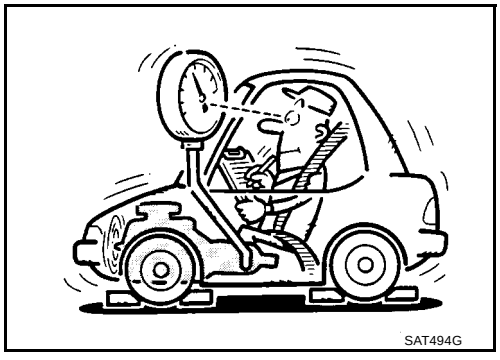

OK or NG

OK >> GO TO 4

NG >> 1. Remove control valve assembly. Refer to AT-410, "Control Valve Assembly and Accumulators" .

2. Check the following items:
- Valves to control line pressure (Pressure regulator valve, pressure modifier valve, pilot valve and pilot filter)
- Line pressure solenoid valve (AT-392, "LINE PRESSURE SOLENOID VALVE")
3. Disassemble A/T.
4. Check the following item:
- Oil pump assembly

4. CHECK A/T FLUID CONDITION

1. Remove oil pan, refer to AT-410, "REMOVAL" .
2. Check A/T fluid condition.

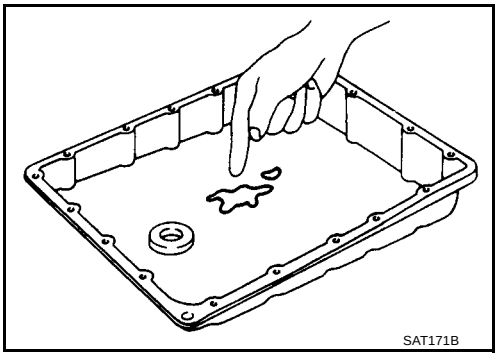

OK or NG

OK >> GO TO 5
NG >> GO TO 6

5. CHECK SYMPTOM

Check again.

OK or NG

OK >> **INSPECTION END**
NG >> 1. Perform TCM input/output signal inspection.
2. If NG, recheck TCM pin terminals for damage or loose connection with harness connector.

6. DETECT MALFUNCTIONING ITEM

1. Remove control valve assembly. Refer to AT-410, "Control Valve Assembly and Accumulators" .
2. Check the following items:
- Valves to control line pressure (Pressure regulator valve, pressure modifier valve, pilot valve and pilot filter)
- Line pressure solenoid valve (AT-392, "LINE PRESSURE SOLENOID VALVE")
3. Disassemble A/T.
4. Check the following items:
- Oil pump assembly
- Torque converter
- Reverse clutch assembly
- High clutch assembly
- Low & reverse brake assembly
- Low one-way clutch

OK or NG

OK >> GO TO 5
NG >> Repair or replace damaged parts.

7. Vehicle Does Not Creep Forward In “D”, “2” Or “1” Position

ECS009AD

SYMPTOM:
Vehicle does not creep forward when selecting “D”, “2” or “1” position.

1. CHECK A/T FLUID LEVEL

Check A/T fluid level again.

OK or NG

OK >> GO TO 2
NG >> Refill ATF.

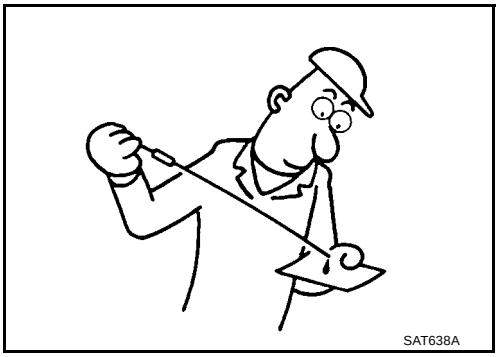
SAT638A

2. CHECK STALL TEST

Check stall revolution with selector lever in “D” position. Refer to AT-264, "Stall Test" .

OK or NG

OK >> GO TO 3
NG >> GO TO 6

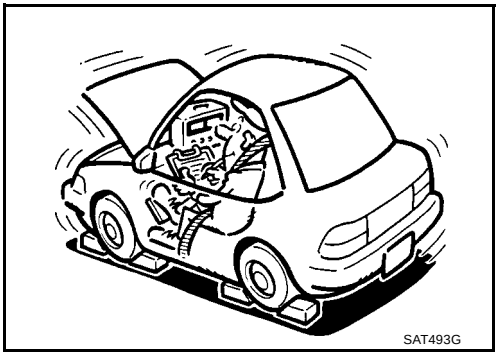
SAT493G

3. CHECK LINE PRESSURE

Check line pressure at idle with selector lever in “D” position. Refer to AT-267, "Line Pressure Test" .

OK or NG

OK >> GO TO 4
NG >> 1. Remove control valve assembly. Refer to AT-410, "Control Valve Assembly and Accumulators" .
2. Check the following items:
- Valves to control line pressure (Pressure regulator valve, pressure modifier valve, pilot valve and pilot filter)
- Line pressure solenoid valve (AT-392, "LINE PRESSURE SOLENOID VALVE")
3. Disassemble A/T.
4. Check the following item:
- Oil pump assembly

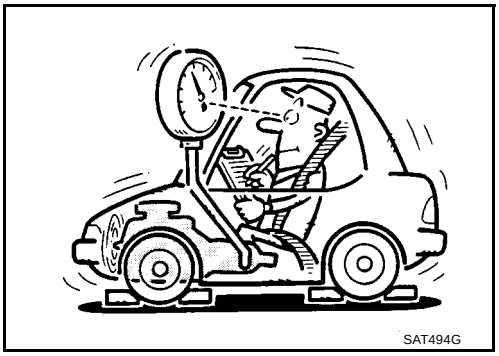
SAT494G

4. CHECK A/T FLUID CONDITION

1. Remove oil pan, refer to AT-410, "REMOVAL" .
2. Check A/T fluid condition.

OK or NG

OK >> GO TO 5
NG >> GO TO 6

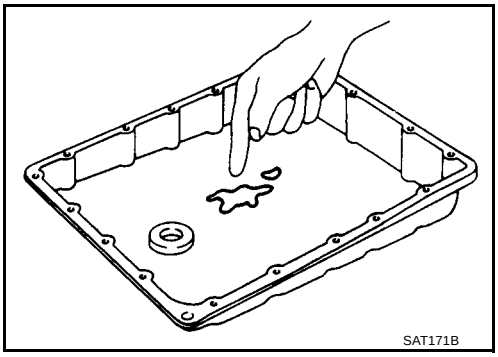

5. CHECK SYMPTOM

Check again.

OK or NG

OK >> **INSPECTION END**
NG >> 1. Perform TCM input/output signal inspection.
2. If NG, recheck TCM pin terminals for damage or loose connection with harness connector.

6. DETECT MALFUNCTIONING ITEM

1. Remove control valve assembly. Refer to AT-410, "Control Valve Assembly and Accumulators" .
2. Check the following items:
- Valves to control line pressure (Pressure regulator valve, pressure modifier valve, pilot valve and pilot filter)
- Line pressure solenoid valve (AT-392, "LINE PRESSURE SOLENOID VALVE")
3. Disassemble A/T.
4. Check the following items:
- Oil pump assembly
- Forward clutch assembly
- Forward one-way clutch
- Low one-way clutch
- Low & reverse brake assembly
- Torque converter

OK or NG

OK >> GO TO 5
NG >> Repair or replace damaged parts.

8. Vehicle Cannot Be Started From D1

ECS009AE

SYMPTOM:
Vehicle cannot be started from D1 on Cruise test — Part 1.

1. CHECK SYMPTOM

Is 6. Vehicle Does Not Creep Backward In “R” Position OK?

Yes or No

Yes >> GO TO 2
No >> Go to 6. AT-317, "6. Vehicle Does Not Creep Backward In “R” Position" .

2. CHECK SELF-DIAGNOSTIC RESULTS

Does self-diagnosis show damage to vehicle speed sensor·A/T (revolution sensor), shift solenoid valve A, B or vehicle speed sensor·MTR after cruise test?

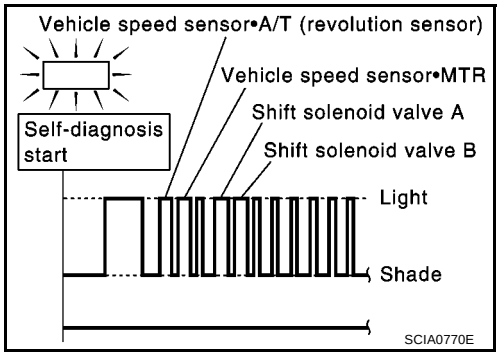

Yes or No

Yes >> ● Check damaged circuit. Refer to the following items.
- AT-347, "VEHICLE SPEED SENSOR - A/T (REVOLUTION SENSOR)"
- AT-361, "SHIFT SOLENOID VALVE A"
- AT-366, "SHIFT SOLENOID VALVE B"
- AT-352, "DTC VEHICLE SPEED SENSOR MTR"

No >> GO TO 3

3. CHECK THROTTLE POSITION SENSOR*

*: This sensor means accelerator pedal position (APP) sensor.
Refer to AT-356, "ACCELE RATOR PEDAL POSITION (APP) SENSOR" .

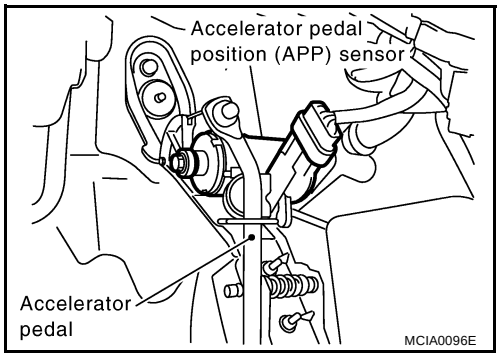

OK or NG

OK >> GO TO 4
NG >> Repair or replace accelerator pedal position (APP) sensor.

4. CHECK LINE PRESSURE

Check line pressure at stall point with selector lever in “D” position.
Refer to AT-267, "Line Pressure Test" .

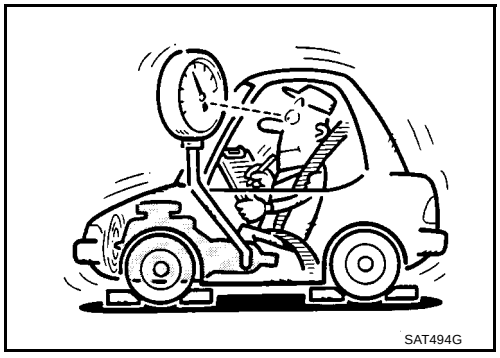

OK or NG

OK >> GO TO 5
NG >> GO TO 8

5. CHECK A/T FLUID CONDITION

1. Remove oil pan, refer to AT-410, "REMOVAL" .
2. Check A/T fluid condition.

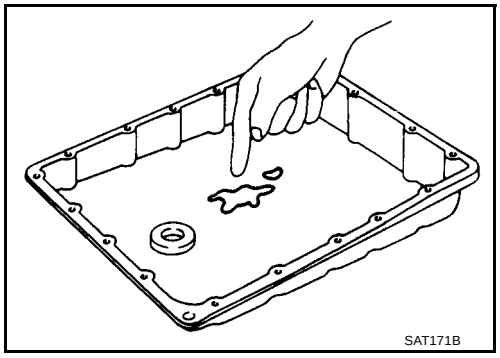

OK or NG

OK >> GO TO 6
NG >> GO TO 8

6. DETECT MALFUNCTIONING ITEM

1. Remove control valve assembly. Refer to AT-410, "Control Valve Assembly and Accumulators" .
2. Check the following items:
- Shift valve A
- Shift valve B
- Shift solenoid valve A
- Shift solenoid valve B
- Pilot valve
- Pilot filter

OK or NG

OK >> GO TO 7
NG >> Repair or replace damaged parts.

7. CHECK SYMPTOM

Check again.

OK or NG

OK >> **INSPECTION END**
NG >> 1. Perform TCM input/output signal inspection.
2. If NG, recheck TCM pin terminals for damage or loose connection with harness connector.

8. DETECT MALFUNCTIONING ITEM

1. Remove control valve assembly. Refer to AT-410, "Control Valve Assembly and Accumulators" .
2. Check the following items:
- Shift valve A
- Shift valve B
- Shift solenoid valve A
- Shift solenoid valve B
- Pilot valve
- Pilot filter
3. Disassemble A/T.
4. Check the following items:
- Forward clutch assembly
- Forward one-way clutch
- Low one-way clutch
- High clutch assembly
- Torque converter
- Oil pump assembly

OK or NG

OK >> GO TO 7
NG >> Repair or replace damaged parts.

9. A/T Does Not Shift: D1 → D2 Or Does Not Kick down: D4 → D2

ECS009AF

SYMPTOM:
A/T does not shift from D1 to D2 at the specified speed.
A/T does not shift from D4 to D2 when depressing accelerator pedal fully at the specified speed.

1. CHECK SYMPTOM

Are 7. Vehicle Does Not Creep Forward In “D”, “2” Or “1” Position and 8. Vehicle Cannot Be Started From D1 OK?

Yes or No

Yes >> GO TO 2
No >> Go to AT-320, "7. Vehicle Does Not Creep Forward In “D”, “2” Or “1” Position" , AT-321, "8. Vehicle Cannot Be Started From D1" .

2. CHECK PNP SWITCH CIRCUIT

With CONSULT-II
Does “TCM INPUT SIGNALS” in “DATA MONITOR” show damage to PNP switch circuit?

Without CONSULT-II
Does self-diagnosis show damage to PNP switch circuit?

Yes or No

Yes >> Check PNP switch circuit. Refer to AT-337, "21. TCM Self-diagnosis Does Not Activate (PNP & Overdrive Control Switches, and Throttle Position Sensor Circuit Checks)" .
No >> GO TO 3

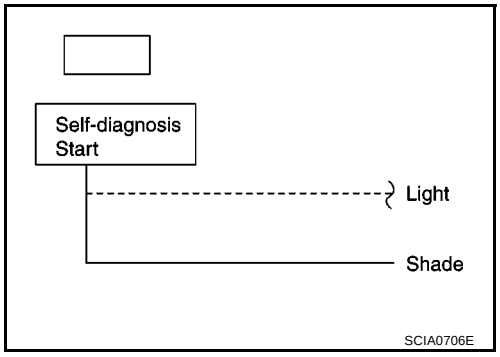

3. CHECK VEHICLE SPEED SENSOR·A/T (REVOLUTION SENSOR) AND CHECK VEHICLE SPEED SENSOR·MTR CIRCUIT

Check vehicle speed sensor·A/T (revolution sensor) and vehicle speed sensor·MTR circuit. Refer to AT-347, "VEHICLE SPEED SENSOR - A/T (REVOLUTION SENSOR)" and AT-352, "DTC VEHICLE SPEED SENSOR MTR" .

OK or NG

OK >> GO TO 4
NG >> Repair or replace vehicle speed sensor·A/T (revolution sensor) and vehicle speed sensor·MTR circuits.

4. CHECK THROTTLE POSITION SENSOR*

*: This sensor means accelerator pedal position (APP) sensor.
Refer to AT-356, "ACCELE RATOR PEDAL POSITION (APP) SENSOR" .

OK or NG

OK >> GO TO 5
NG >> Repair or replace accelerator pedal position (APP) sensor.

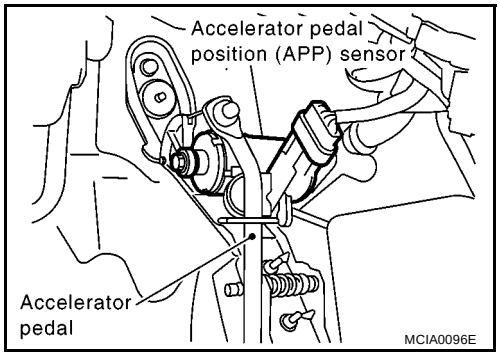

5. CHECK A/T FLUID CONIDITION

1. Remove oil pan, refer to AT-410, "REMOVAL" .
2. Check A/T fluid condition.

OK or NG

OK >> GO TO 6
NG >> GO TO 8

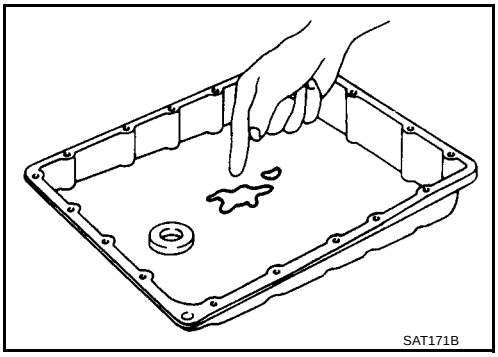

6. DETECT MALFUNCTIONING ITEM

1. Remove control valve. Refer to AT-410, "Control Valve Assembly and Accumulators" .
2. Check the following items:

- Shift valve A
- Shift solenoid valve A (AT-361, "SHIFT SOLENOID VALVE A")
- Pilot valve
- Pilot filter

OK or NG

OK >> GO TO 7
NG >> Repair or replace damaged parts.

7. CHECK SYMPTOM

Check again.

OK or NG

OK >> **INSPECTION END**
NG >> 1. Perform TCM input/output signal inspection.
2. If NG, recheck TCM pin terminals for damage or loose connection with harness connector.

8. DETECT MALFUNCTIONING ITEM

1. Remove control valve. Refer to AT-410, "Control Valve Assembly and Accumulators" .
2. Check the following items:

- Shift valve A
- Shift solenoid valve A (AT-361, "SHIFT SOLENOID VALVE A")
- Pilot valve
- Pilot filter

3. Disassemble A/T.
4. Check the following items:

- Servo piston assembly
- Brake band
- Oil pump assembly

OK or NG

OK >> GO TO 7
NG >> Repair or replace damaged parts.

10. A/T Does Not Shift: $D_2 \rightarrow D_3$

ECS009AG

SYMPTOM:
A/T does not shift from D_2 to D_3 at the specified speed.

1. CHECK SYMPTOM

Are 7. Vehicle Does Not Creep Forward In “D”, “2” Or “1” Position and 8. Vehicle Cannot Be Started From D_1 OK?

Yes or No

Yes >> GO TO 2
No >> Go to AT-320, "7. Vehicle Does Not Creep Forward In “D”, “2” Or “1” Position" , AT-321, "8. Vehicle Cannot Be Started From D_1" .

2. CHECK PNP SWITCH CIRCUIT

With CONSULT-II
Does “TCM INPUT SIGNALS” in “DATA MONITOR” show damage to PNP switch circuit?

Without CONSULT-II
Does self-diagnosis show damage to PNP switch circuit?

Yes or No

Yes >> Check PNP switch circuit. Refer toAT-337, "21. TCM Self-diagnosis Does Not Activate (PNP & Overdrive Control Switches, and Throttle Position Sensor Circuit Checks)" .
No >> GO TO 3

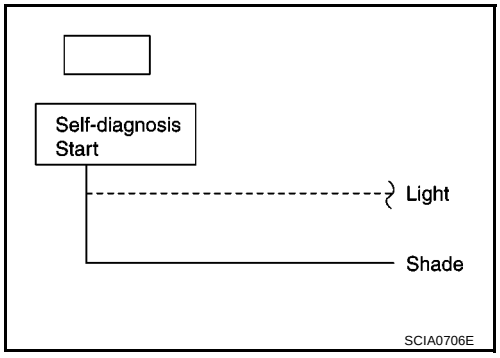

3. CHECK THROTTLE POSITION SENSOR*

*: This sensor means accelerator pedal position (APP) sensor.
Refer to AT-356, "ACCELE RATOR PEDAL POSITION (APP) SENSOR" .

OK or NG

OK >> GO TO 4
NG >> Repair or replace throttle position sensor.

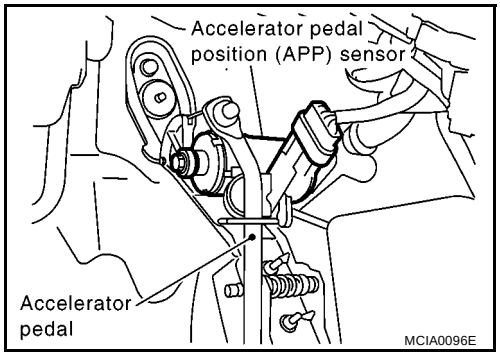

4. CHECK A/T FLUID CONDITION

1. Remove oil pan, refer to AT-410, "REMOVAL" .
2. Check A/T fluid condition.

OK or NG

OK >> GO TO 5
NG >> GO TO 7

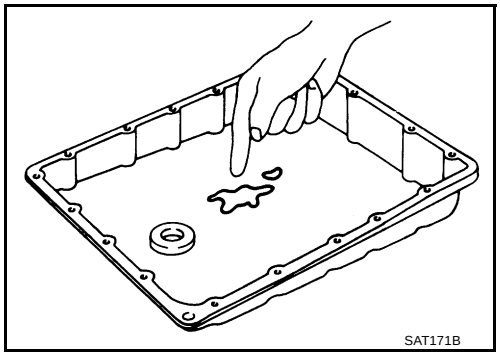

5. DETECT MALFUNCTIONING ITEM

1. Remove control valve assembly. Refer to AT-410, "Control Valve Assembly and Accumulators" .
2. Check the following items:
- Shift valve B
- Shift solenoid valve B (AT-366, "SHIFT SOLENOID VALVE B")
- Pilot valve
- Pilot filter

OK or NG

OK >> GO TO 6
NG >> Repair or replace damaged parts.

6. CHECK SYMPTOM

Check again.

OK or NG

OK >> **INSPECTION END**
NG >> 1. Perform TCM input/output signal inspection.
2. If NG, recheck TCM pin terminals for damage or loose connection with harness connector.

7. DETECT MALFUNCTIONING ITEM

1. Remove control valve assembly. Refer to AT-410, "Control Valve Assembly and Accumulators" .
2. Check the following items:
- Shift valve B
- Shift solenoid valve B (AT-366, "SHIFT SOLENOID VALVE B")
- Pilot valve
- Pilot filter
3. Disassemble A/T.
4. Check the following items:
- Servo piston assembly
- High clutch assembly
- Oil pump assembly

OK or NG

OK >> GO TO 6
NG >> Repair or replace damaged parts.

11. A/T Does Not Shift: D3 → D4

ECS009AH

SYMPTOM:

- **A/T does not shift from D3 to D4 at the specified speed.**
- **A/T must be warm before D3 to D4 shift will occur.**

1. CHECK SYMPTOM

Are 7. Vehicle Does Not Creep Forward In “D”, “2” Or “1” Position and 8. Vehicle Cannot Be Started From D1 OK?

Yes or No

Yes >> GO TO 2
No >> Go to AT-320, "7. Vehicle Does Not Creep Forward In “D”, “2” Or “1” Position" , AT-321, "8. Vehicle Cannot Be Started From D1" .

2. CHECK SELF-DIAGNOSTIC RESULTS

Does self-diagnosis, after cruise test, show damage to any of the following circuits?

- PNP switch
- Overdrive control switch
- A/T fluid temperature sensor
- Vehicle speed sensor·A/T (revolution sensor)
- Shift solenoid valve A or B
- Vehicle speed sensor·MTR

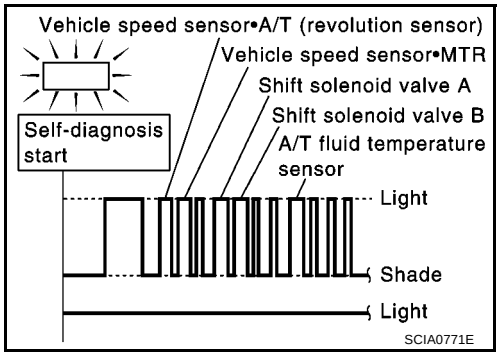

Yes or No

Yes >> ● Check damaged circuit. Refer to the following items.
- AT-347, "VEHICLE SPEED SENSOR - A/T (REVOLUTION SENSOR)"
- AT-361, "SHIFT SOLENOID VALVE A"
- AT-366, "SHIFT SOLENOID VALVE B"
- AT-381, "BATT/FLUID TEMP SEN (A/T FLUID TEMP SENSOR CIRCUIT AND TCM POWER SOURCE)"
- AT-352, "DTC VEHICLE SPEED SENSOR MTR"
- AT-337, "21. TCM Self-diagnosis Does Not Activate (PNP & Overdrive Control Switches, and Throttle Position Sensor Circuit Checks)"

No >> GO TO 3

3. CHECK THROTTLE POSITION SENSOR*

*: This sensor means accelerator pedal position (APP) sensor.
Refer to AT-356, "ACCELE RATOR PEDAL POSITION (APP) SENSOR" .

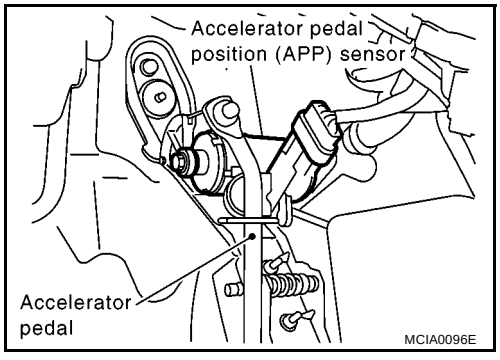

OK or NG

OK >> GO TO 4
NG >> Repair or replace throttle position sensor.

4. CHECK A/T FLUID CONDITION

1. Remove oil pan, refer to AT-410, "REMOVAL" .
2. Check A/T fluid condition.

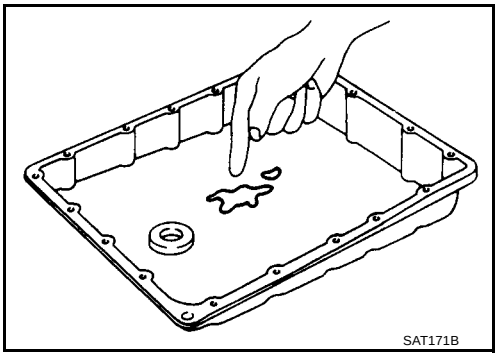

OK or NG

OK >> GO TO 5
NG >> GO TO 7

5. DETECT MALFUNCTIONING ITEM

1. Remove control valve assembly. Refer to AT-410, "Control Valve Assembly and Accumulators" .
2. Check the following items:

- Shift valve B
- Overrun clutch control valve
- Shift solenoid valve B
- Pilot valve
- Pilot filter

OK or NG

OK >> GO TO 6
NG >> Repair or replace damaged parts.

6. CHECK SYMPTOM

Check again.

OK or NG

OK >> **INSPECTION END**
NG >> 1. Perform TCM input/output signal inspection.
2. If NG, recheck TCM pin terminals for damage or loose connection with harness connector.

7. DETECT MALFUNCTIONING ITEM

1. Remove control valve assembly. Refer to AT-410, "Control Valve Assembly and Accumulators" .
2. Check the following items:

- Shift valve B
- Overrun clutch control valve
- Shift solenoid valve B
- Pilot valve
- Pilot filter

3. Disassemble A/T.
4. Check the following items:

- Servo piston assembly
- Brake band
- Torque converter
- Oil pump assembly

OK or NG

OK >> GO TO 6
NG >> Repair or replace damaged parts.

12. A/T Does Not Perform Lock-up

ECS009AI

SYMPTOM:
A/T does not perform lock-up at the specified speed.

1. CHECK SELF-DIAGNOSTIC RESULTS

Does self-diagnosis show damage to torque converter clutch solenoid valve circuit after cruise test?

Yes or No

Yes >> Check torque converter clutch solenoid valve circuit. Refer to AT-376, "TORQUE CONVERTER CLUTCH SOLENOID VALVE" .

No >> GO TO 2

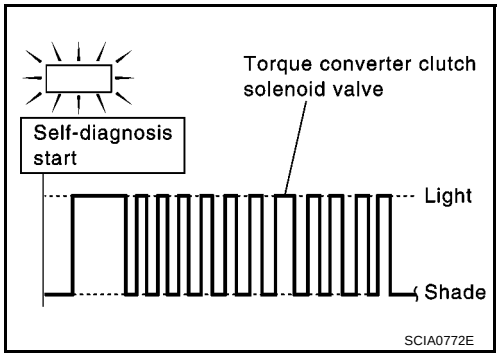

2. CHECK THROTTLE POSITION SENSOR*

*: This sensor means accelerator pedal position (APP) sensor.
Refer to AT-356, "ACCELE RATOR PEDAL POSITION (APP) SENSOR" .

OK or NG

OK >> GO TO 3

NG >> Repair or replace throttle position sensor.

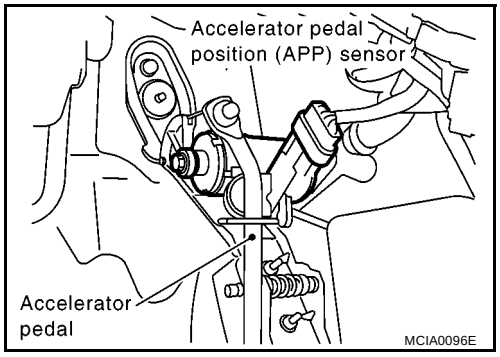

3. DETECT MALFUNCTIONING ITEM

1. Remove control valve. Refer to AT-410, "Control Valve Assembly and Accumulators" .
2. Check following items:

- Torque converter clutch control valve
- Torque converter relief valve
- Torque converter clutch solenoid valve
- Pilot valve
- Pilot filter

OK or NG

OK >> GO TO 4

NG >> Repair or replace damaged parts.

4. CHECK SYMPTOM

Check again.

OK or NG

OK >> **INSPECTION END**

NG >> 1. Perform TCM input/output signal inspection.
2. If NG, recheck TCM pin terminals for damage or loose connection with harness connector.

13. A/T Does Not Hold Lock-up Condition

ECS009AJ

SYMPTOM:
A/T does not hold lock-up condition for more than 30 seconds.

1. CHECK DIAGNOSTIC RESULTS

Does self-diagnosis show damage to engine speed signal circuit after cruise test?

Yes or No

Yes >> Check engine speed signal circuit. Refer to AT-387, "ENGINE SPEED SIGNAL" .

No >> GO TO 2

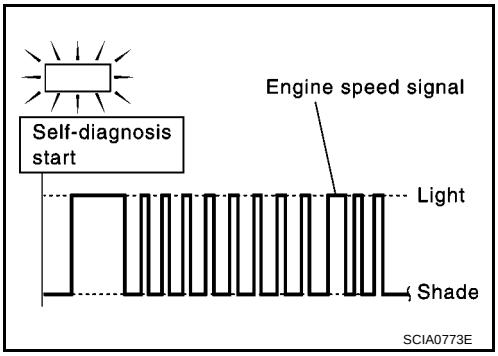

2. CHECK A/T FLUID CONDITION

1. Remove oil pan, refer to AT-410, "REMOVAL" .
2. Check A/T fluid condition.

OK or NG

OK >> GO TO 3

NG >> GO TO 5

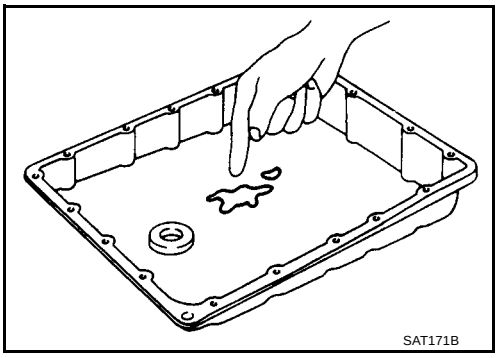

3. DETECT MALFUNCTIONING ITEM

1. Remove control valve assembly. Refer to AT-410, "Control Valve Assembly and Accumulators" .
2. Check the following items:

- Torque converter clutch control valve
- Pilot valve
- Pilot filter

OK or NG

OK >> GO TO 4

NG >> Repair or replace damaged parts.

4. CHECK SYMPTOM

Check again.

OK or NG

OK >> **INSPECTION END**

NG >> 1. Perform TCM input/output signal inspection.
2. If NG, recheck TCM pin terminals for damage or loose connection with harness connector.

5. DETECT MALFUNCTIONING ITEM

1. Remove control valve assembly. Refer to AT-410, "Control Valve Assembly and Accumulators" .
2. Check the following items:
- Torque converter clutch control valve
- Pilot valve
- Pilot filter
3. Disassemble A/T.
4. Check torque converter and oil pump assembly.

OK or NG

OK >> GO TO 4
NG >> Repair or replace damaged parts.

14. Lock-up Is Not Released

ECS009AK

SYMPTOM:
Lock-up is not released when accelerator pedal is released.

1. CHECK THROTTLE POSITION SENSOR* CIRCUIT

*: This sensor means accelerator pedal position (APP) sensor.

With CONSULT-II
Does “TCM INPUT SIGNALS” in “DATA MONITOR” show damage throttle position sensor circuit?

Without CONSULT-II
Does self-diagnosis show damage to throttle position sensor circuit?

Yes or No

Yes >> Check throttle position sensor circuit. Refer to AT-337, "21. TCM Self-diagnosis Does Not Activate (PNP & Overdrive Control Switches, and Throttle Position Sensor Circuit Checks)" .
No >> GO TO 2

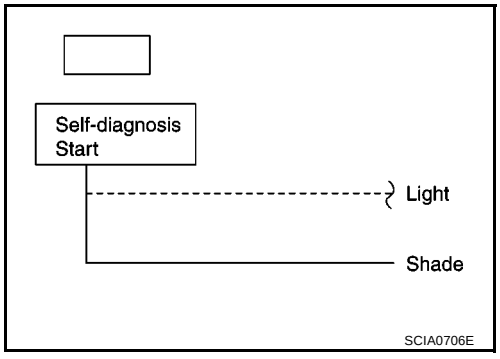

2. CHECK SYMPTOM

Check again.

OK or NG

OK >> **INSPECTION END**
NG >> 1. Perform TCM input/output signal inspection.
2. If NG, recheck TCM pin terminals for damage or loose connection with harness connector.

15. Engine Speed Does Not Return To Idle (Light Braking $D_4 \rightarrow D_3$)

ECS009AL

SYMPTOM:

- **Engine speed does not smoothly return to idle when A/T shifts from D_4 to D_3 .**
- **Vehicle does not decelerate by engine brake when turning overdrive control switch OFF.**
- **Vehicle does not decelerate by engine brake when shifting A/T from “D” to “2” position.**

1. CHECK SELF-DIAGNOSTIC RESULTS

Does self-diagnosis show damage to overrun clutch solenoid valve circuit after cruise test?

Yes or NO

Yes >> Check overrun clutch solenoid valve circuit. Refer to AT-371, "OVERRUN CLUTCH SOLENOID VALVE" .

No >> GO TO 2

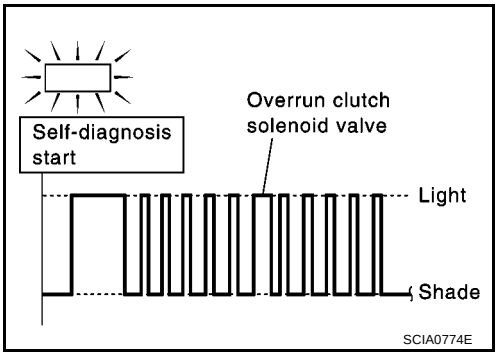

2. CHECK THROTTLE POSITION SENSOR*

*: This sensor means accelerator pedal position (APP) sensor.
Refer to AT-356, "ACCELE RATOR PEDAL POSITION (APP) SENSOR" .

OK or NG

OK >> GO TO 3

NG >> Repair or replace accelerator pedal position (APP) sensor. (AT-356, "ACCELE RATOR PEDAL POSITION (APP) SENSOR")

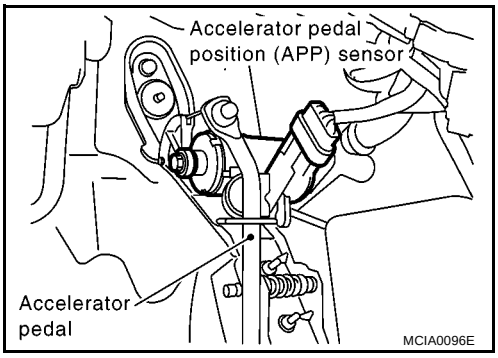

3. CHECK A/T FLUID CONDITION

1. Remove oil pan, refer to AT-410, "REMOVAL" .
2. Check A/T fluid condition.

OK or NG

OK >> GO TO 4

NG >> GO TO 6

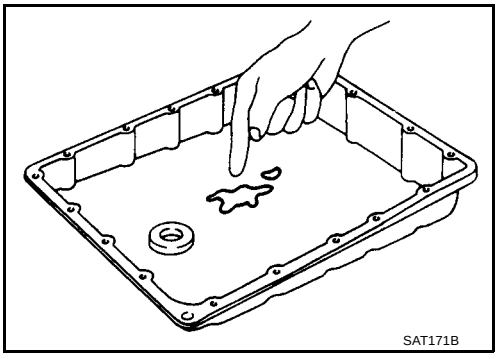

4. DETECT MALFUNCTIONING ITEM

1. Remove control valve assembly. Refer to AT-410, "Control Valve Assembly and Accumulators" .
2. Check the following items:

- Overrun clutch control valve
- Overrun clutch reducing valve
- Overrun clutch solenoid valve (AT-371, "OVERRUN CLUTCH SOLENOID VALVE").

OK or NG

OK >> GO TO 5

NG >> Repair or replace damaged parts.

5. CHECK SYMPTOM

Check again.

OK or NG

OK >> **INSPECTION END**
NG >> 1. Perform TCM input/output signal inspection.
2. If NG, recheck TCM pin terminals for damage or loose connection with harness connector.

6. DETECT MALFUNCTIONING ITEM

1. Remove control valve assembly. Refer to AT-410, "Control Valve Assembly and Accumulators" .
2. Check the following items:
- Overrun clutch control valve
- Overrun clutch reducing valve
- Overrun clutch solenoid valve (AT-371, "OVERRUN CLUTCH SOLENOID VALVE")
3. Disassemble A/T.
4. Check the following items:
- Overrun clutch assembly
- Oil pump assembly

OK or NG

OK >> GO TO 5
NG >> Repair or replace damaged parts.

16. Vehicle Does Not Start From D1

ECS009AM

SYMPTOM:
Vehicle does not start from D1 on Cruise test — Part 2.

1. CHECK SELF-DIAGNOSTIC RESULTS

Does self-diagnosis show damage to vehicle speed sensor·A/T (revolution sensor), shift solenoid valve A, B or vehicle speed sensor·MTR after cruise test?

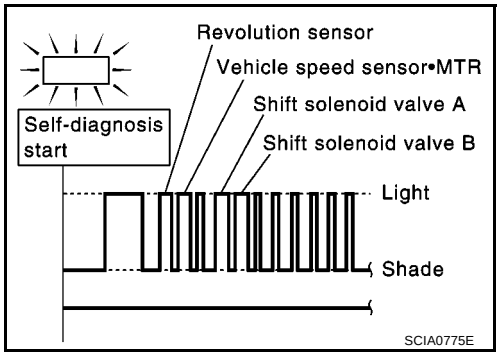

Yes or No

Yes >> ● Check damaged circuit. Refer to the following items.
- AT-347, "VEHICLE SPEED SENSOR - A/T (REVOLUTION SENSOR)"
- AT-361, "SHIFT SOLENOID VALVE A"
- AT-366, "SHIFT SOLENOID VALVE B"
- AT-352, "DTC VEHICLE SPEED SENSOR MTR"

No >> GO TO 2

2. CHECK SYMPTOM

Check again.

OK or NG

OK >> Go to AT-321, "8. Vehicle Cannot Be Started From D1" .
NG >> 1. Perform TCM input/output signal inspection.
2. If NG, recheck TCM pin terminals for damage or loose connection with harness connector.

17. A/T Does Not Shift: D4 → D3 , When Overdrive Control Switch “ON” → “OFF”

ECS009AN

SYMPTOM:
A/T does not shift from D4 to D3 when changing overdrive control switch to “OFF” position.

1. CHECK OVERDRIVE CONTROL SWITCH CIRCUIT

With CONSULT-II
Does “TCM INPUT SIGNALS” in “DATA MONITOR” show damage to overdrive control switch circuit?

Without CONSULT-II
Does self-diagnosis show damage to overdrive control switch circuit?

Yes or No

Yes >> Check overdrive control switch circuit. Refer to AT-337, "21. TCM Self-diagnosis Does Not Activate (PNP & Overdrive Control Switches, and Throttle Position Sensor Circuit Checks)" .

No >> Go to AT-326, "10. A/T Does Not Shift: $D_2 \rightarrow D_3$" .

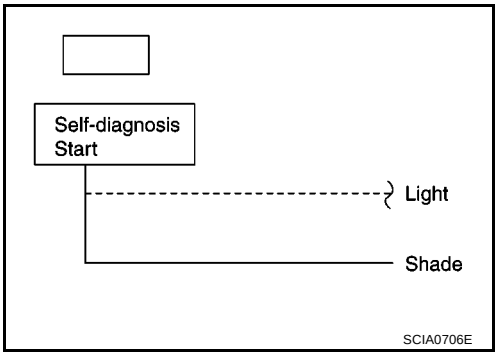

18. A/T Does Not Shift: $D_3 \rightarrow 2_2$, When Selector Lever “D” → “2” Position

ECS009AO

SYMPTOM:
A/T does not shift from D_3 to 2_2 when changing selector lever from “D” to “2” position.

1. CHECK PNP SWITCH CIRCUIT

With CONSULT-II
Does “TCM INPUT SIGNALS” in “DATA MONITOR” show damage to PNP switch circuit?

Without CONSULT-II
Does self-diagnosis show damage to PNP switch circuit?

Yes or No

Yes >> Check PNP switch circuit. Refer to AT-337, "21. TCM Self-diagnosis Does Not Activate (PNP & Overdrive Control Switches, and Throttle Position Sensor Circuit Checks)" .

No >> Go to AT-324, "9. A/T Does Not Shift: $D_1 \rightarrow D_2$ Or Does Not Kick down: $D_4 \rightarrow D_2$" .

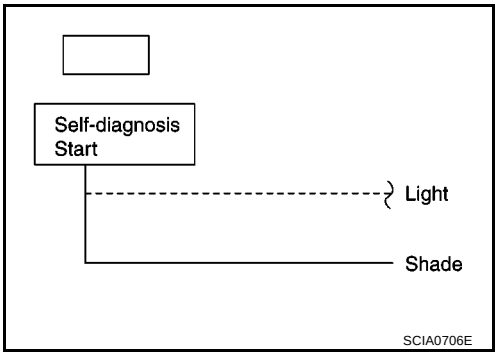

19. A/T Does Not Shift: $2_2 \rightarrow 1_1$, When Selector Lever “2” → “1” Position

ECS009AP

SYMPTOM:
A/T does not shift from 2_2 to 1_1 when changing selector lever from “2” to “1” position.

1. CHECK PNP SWITCH CIRCUIT

With CONSULT-II
Does “TCM INPUT SIGNALS” in “DATA MONITOR” show damage to PNP switch circuit?

Without CONSULT-II
Does self-diagnosis show damage to PNP switch circuit?

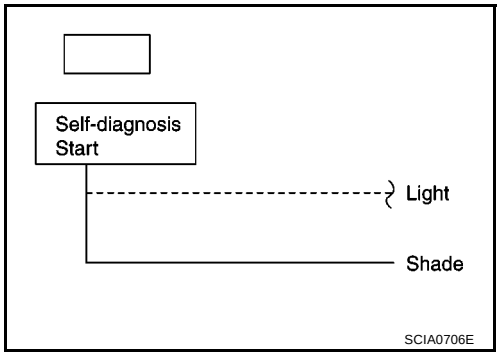

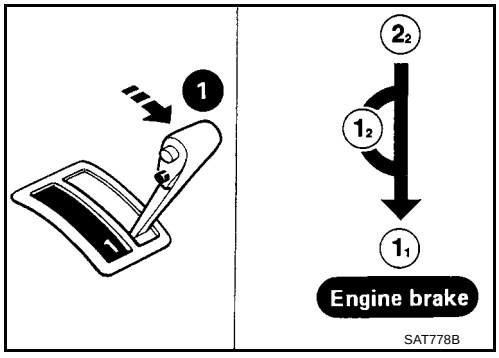

Yes or No

Yes >> Check PNP switch circuit. Refer to AT-337, "21. TCM Self-diagnosis Does Not Activate (PNP & Overdrive Control Switches, and Throttle Position Sensor Circuit Checks)" .

No >> GO TO 2

2. CHECK SYMPTOM

Check again.

OK or NG

OK >> **INSPECTION END**

NG >> 1. Perform TCM input/output signal inspection.
2. If NG, recheck TCM pin terminals for damage or loose connection with harness connector.

20. Vehicle Does Not Decelerate By Engine Brake

ECS009AQ

SYMPTOM:
Vehicle does not decelerate by engine brake when shifting from 2_2 (1_2) to 1_1.

1. CHECK SYMPTOM

Is 6. Vehicle Does Not Creep Backward In “R” Position OK?

Yes or No

Yes >> Go to AT-332, "15. Engine Speed Does Not Return To Idle (Light Braking $D_4 \rightarrow D_3$)".
No >> Go to AT-317, "6. Vehicle Does Not Creep Backward In “R” Position".

21. TCM Self-diagnosis Does Not Activate (PNP & Overdrive Control Switches, and Throttle Position Sensor Circuit Checks)

ECS009AR

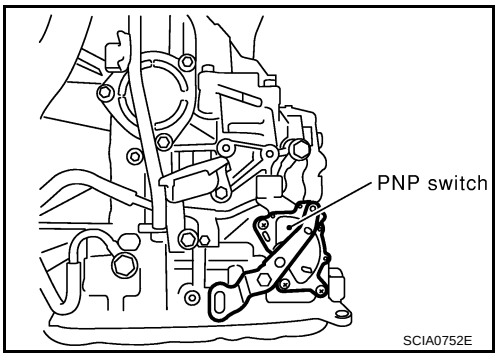

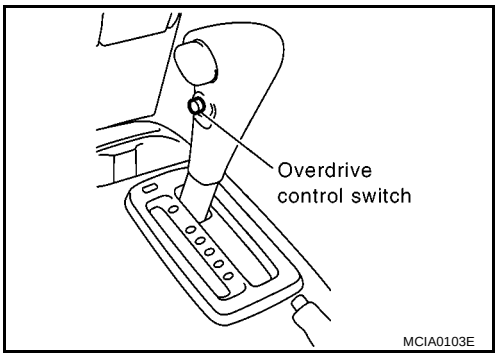

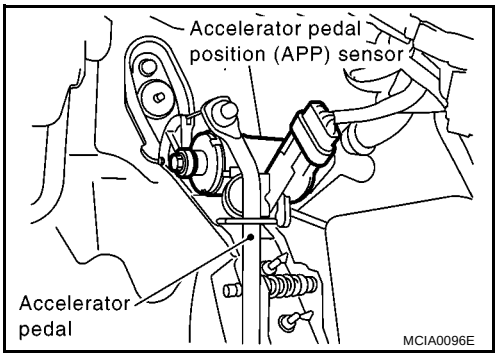

SYMPTOM:
O/D OFF indicator lamp does not come on in TCM self-diagnostic procedure even if the lamp circuit is good.

DESCRIPTION

- PNP switch
  The PNP switch assembly includes a transmission position switch. The transmission position switch detects the selector lever position and sends a signal to the TCM.
- Overdrive control switch

Detects the overdrive control switch position (ON or OFF) and sends a signal to the TCM.

- Throttle position sensor *
  *: This sensor means accelerator pedal position (APP) sensor.

  Electric throttle control actuator consists of throttle control motor, acceleration pedal position sensor, throttle position sensor, etc. The actuator sends a signal to the TCM.

DIAGNOSTIC PROCEDURE

1. CHECK PNP SWITCH CIRCUIT (WITH CONSULT-II)

With CONSULT-II

1. Turn ignition switch to “ON” position.
   (Do not start engine.)
2. Select “TCM INPUT SIGNALS” in “DATA MONITOR” mode for “A/T” with CONSULT-II.
3. Read out “P/N”, “R”, “D”, “2” and “1” position switches moving selector lever to each position.
   Check that the signal of the selector lever position is indicated properly.

DATA MONITOR	
MONITORING	
PN POSI SW	OFF
R POSITION SW	OFF
D POSITION SW	OFF
2 POSITION SW	ON
1 POSITION SW	OFF

SAT701J

OK or NG

OK >> GO TO 3
NG >> Check the following items:

- PNP switch (Refer to AT-342, "COMPONENT INSPECTION" .)
- Harness for short or open between ignition switch and PNP switch (Main harness)
- Harness for short or open between PNP switch and TCM (Main harness)
- Diode (P, N positions)

2. CHECK PNP SWITCH CIRCUIT (WITHOUT CONSULT-II)

Without CONSULT-II

1. Turn ignition switch to “ON” position. (Do not start engine.)
2. Check voltage between TCM terminals 26, 27, 34, 35, 36 and ground while moving selector lever through each position.

Voltage:
B: Battery voltage
0: 0V

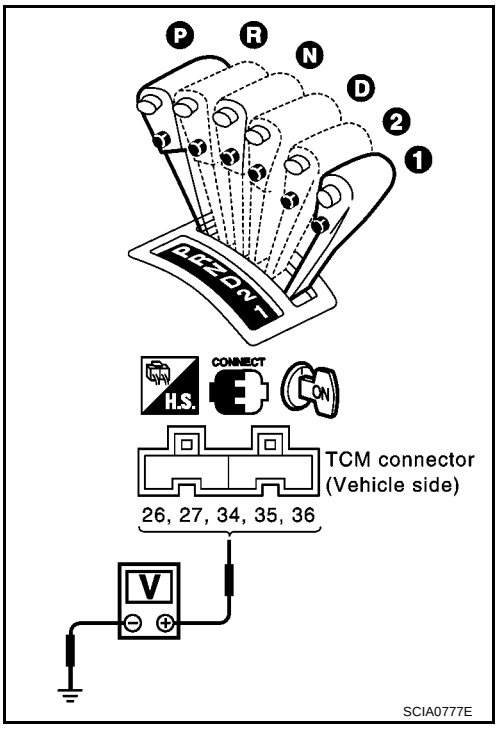

Lever position	Terminal No.				
	36	35	34	27	26
P, N	B	0	0	0	0
R	0	B	0	0	0
D	0	0	B	0	0
2	0	0	0	B	0
1	0	0	0	0	B

OK or NG

OK >> GO TO 4
NG >> Check the following items:
- PNP switch (Refer to AT-342, "COMPONENT INSPECTION" .)
- Harness for short or open between ignition switch and PNP switch (Main harness)
- Harness for short or open between PNP switch and TCM (Main harness)
- Diode (P, N positions)

3. CHECK OVERDRIVE CONTROL SWITCH CIRCUIT (WITH CONSULT-II)

With CONSULT-II

1. Turn ignition switch to “ON” position.
   (Do not start engine.)
2. Select “TCM INPUT SIGNALS” in “DATA MONITOR” mode for “A/T” with CONSULT-II.
3. Read out “OVERDRIVE SWITCH”.
   Check the signal of the overdrive control switch is indicated properly.
   (Overdrive control switch “ON” displayed on CONSULT-II means overdrive “OFF”.)

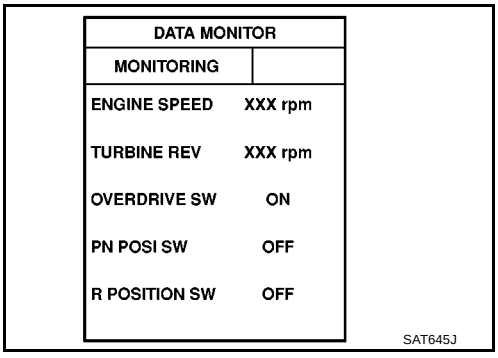

DATA MONITOR	
MONITORING	
ENGINE SPEED	XXX rpm
TURBINE REV	XXX rpm
OVERDRIVE SW	ON
PN POSI SW	OFF
R POSITION SW	OFF

SAT645J

OK or NG

OK >> GO TO 5
NG >> Check the following items:
- Overdrive control switch (Refer to AT-342, "COMPONENT INSPECTION" .)
- Harness for short or open between TCM and overdrive control switch (Main harness)
- Harness of ground circuit for overdrive control switch (Main harness) for short or open

4. CHECK OVERDRIVE CONTROL SWITCH CIRCUIT (WITHOUT CONSULT-II)

Without CONSULT-II

1. Turn ignition switch to “ON” position.
   (Do not start engine.)
2. Check voltage between A/T device connector terminal 2 and ground when overdrive control switch is “ON” and “OFF”.

Voltage:

Switch position “ON”:

Battery voltage

Switch position “OFF”:

1V or less

OK or NG

OK >> GO TO 6
NG >> Check the following items:

- Overdrive control switch (Refer to AT-342, "COMPONENT INSPECTION" .)
- Harness for short or open between TCM and overdrive control switch (Main harness)
- Harness of ground circuit for overdrive control switch (Main harness) for short or open

5. CHECK THROTTLE POSITION SENSOR* CIRCUIT (WITH CONSULT-II)

*:This sensor means accelerator pedal position (APP) sensor.

With CONSULT-II

1. Turn ignition switch to “ON” position.
   (Do not start engine.)
2. Select “TCM INPUT SIGNALS” in “DATA MONITOR” mode for A/T with CONSULT-II.
3. Read out “THRTL POS SEN” sensor depressing and releasing accelerator pedal.
   Check the signal of throttle position sensor is indicated properly.

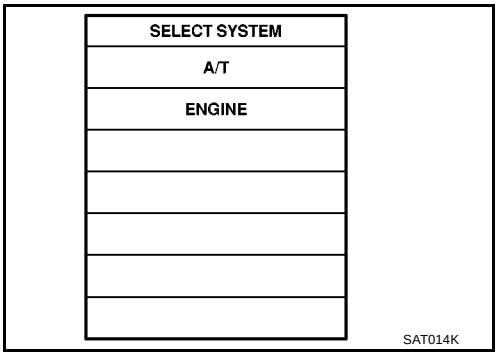

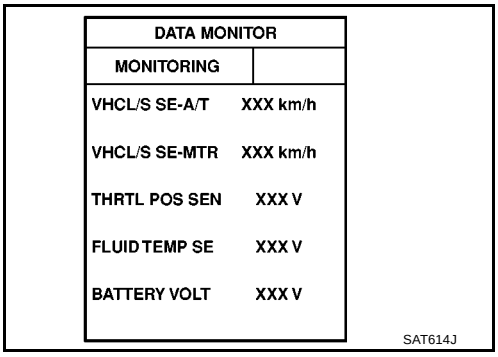

OK or NG

OK >> GO TO 7
NG >> Check the following items:

- Throttle position sensor — Refer to AT-342, "COMPONENT INSPECTION" .
- Harness for short or open between ignition switch and throttle position sensor (Main harness)
- Harness for short or open between throttle position sensor and TCM (Main harness)

6. CHECK THROTTLE POSITION SENSOR CIRCUIT (WITHOUT CONSULT-II)

Without CONSULT-II

1. Turn ignition switch to “ON” position.
   (Do not start engine.)
2. Check voltage between TCM terminals 41 and 42 while depressing, and releasing accelerator pedal slowly. (After warming up engine)

   Voltage:

   Fully-closed throttle valve : Approximately 0.5V

   Fully-open throttle valve : Approximately 4V

   (Voltage rises and drops gradually in response to throttle position)

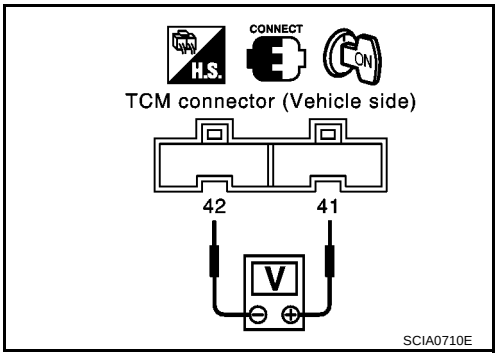

OK or NG

OK >> GO TO 7
NG >> Check the following items:
- Throttle position sensor — Refer to AT-342, "COMPONENT INSPECTION" .
- Harness for short or open between ignition switch and throttle position sensor (Main harness)
- Harness for short or open between throttle position sensor and TCM (Main harness)

7. CHECK DTC

Perform “DIAGNOSTIC PROCEDURE”. Refer to AT-338, "DIAGNOSTIC PROCEDURE" .

OK or NG

OK >> **INSPECTION END**
NG >>
- Perform TCM input/output signal inspection.
- If NG, recheck TCM pin terminals for damage or loose connection with harness connector.

COMPONENT INSPECTION

Overdrive Control Switch

- Check continuity between two terminals 1 and 2.

Switch position	Continuity
ON	No
OFF	Yes

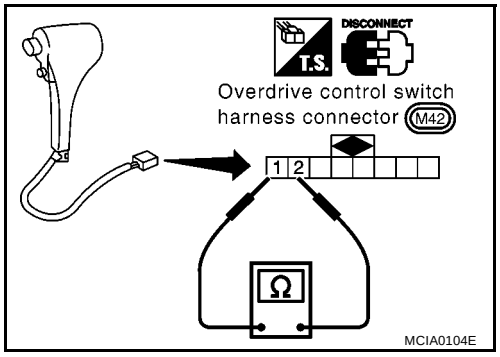

PNP Switch

1. Check continuity between terminals 1 and 3 and between terminals 2 and 4, 5, 6, 7, 8, 9 while moving manual shaft through each position.

Lever position	Terminal No.	
P	3 — 7	1 — 2
R	3 — 8	
N	3 — 9	1 — 2
D	3 — 6	
2	3 — 5	
1	3 — 4	

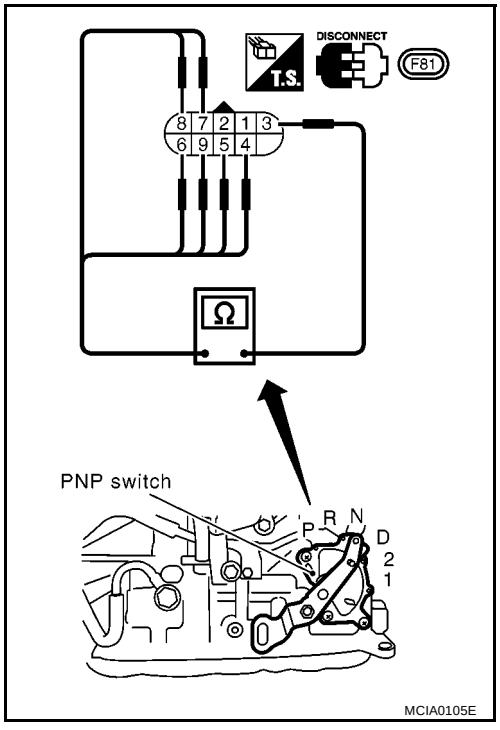

2. If NG, check again with manual control cable disconnected from manual shaft of A/T assembly. Refer to step 1.
3. If OK on step 2, adjust manual control cable. Refer to AT-412, "Control Cable Adjustment" .
4. If NG on step 2, remove PNP switch from A/T and check continuity of PNP switch terminals. Refer to step 1.
5. If OK on step 4, adjust PNP switch. Refer to AT-412, "Park/Neutral Position (PNP) Switch Adjustment" .
6. If NG on step 4, replace PNP switch.

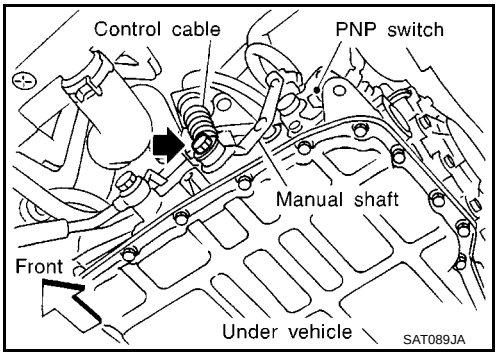

Throttle Position Sensor*

*: This sensor means accelerator pedal position (APP) sensor.
Refer to AT-356, "ACCELE RATOR PEDAL POSITION (APP) SENSOR" .

MAIN POWER SUPPLY AND GROUND CIRCUIT

PFP:00100

Wiring Diagram — AT — MAIN

ECS009AS

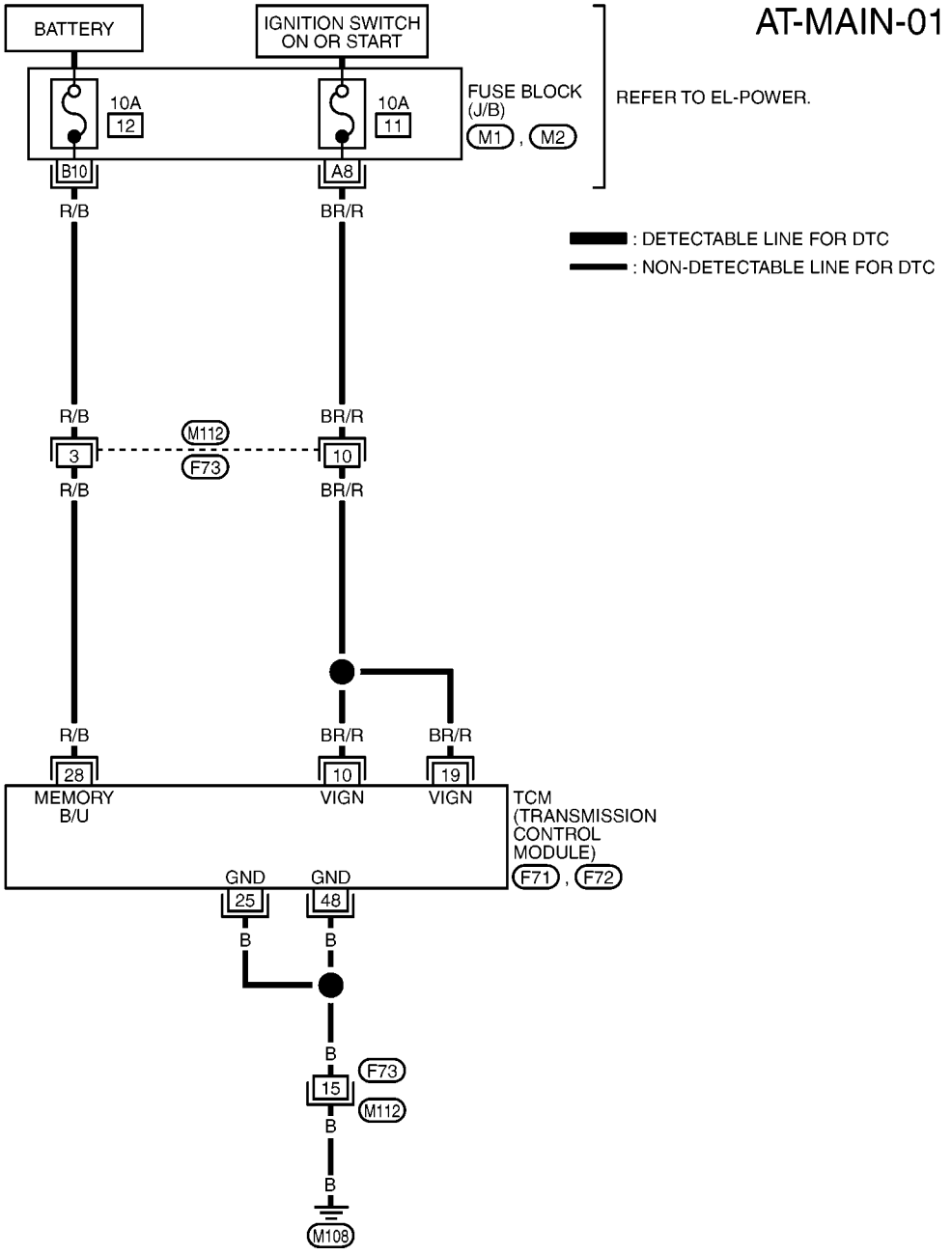

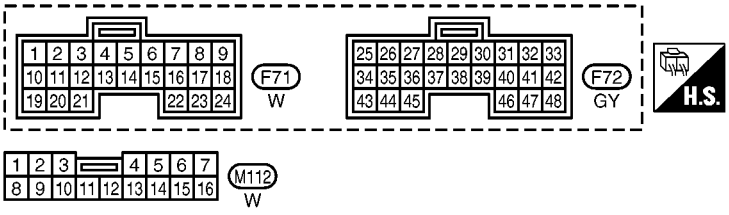

REFER TO THE FOLLOWING.
M1 , M2 -FUSE BLOCK-JUNCTION BOX (J/B)

YAT388A

TCM TERMINALS AND REFERENCE VALUE

Remarks: Specification data are reference values.

Terminal No.	Wire color	Item	Condition		Judgement standard (Approx.)
10	BR/R	Power source	ON or OFF	When turning ignition switch to “ON”.	Battery voltage
				When turning ignition switch to “OFF”.	0V
19	BR/R	Power source		Same as No. 10	
25	B	Ground	—	—	0V
28	R/B	Power source (Memory back-up)	ON or OFF	When turning ignition switch to “OFF”.	Battery voltage
				When turning ignition switch to “ON”.	Battery voltage
48	B	Ground	—	—	0V

Diagnostic Procedure

ECS009AT

1. CHECK TCM POWER SOURCE STEP 1

1. Turn ignition switch to ON position.
   (Do not start engine.)
2. Check voltage between TCM terminals 10, 19, 28 and ground.

OK or NG

OK >> GO TO 2
NG >> GO TO 3

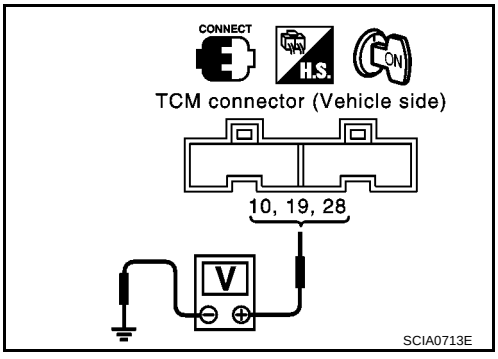

2. CHECK TCM POWER SOURCE STEP 2

1. Turn ignition switch to OFF position.
2. Check voltage between TCM terminal 28 and ground.

OK or NG

OK >> GO TO 4
NG >> GO TO 3

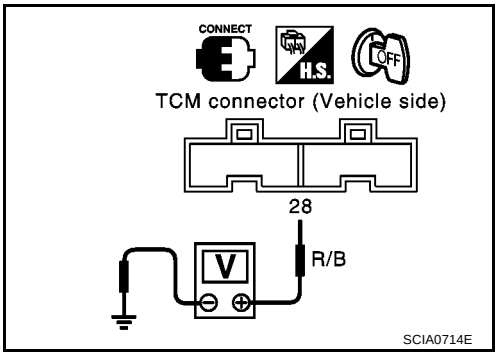

3. DETECT MALFUNCTIONING ITEM

Check the following items:

- Harness for short or open between ignition switch and TCM terminals 10, 19 and 28 (Main harness)
- Fuse
- Ignition switch
  Refer to EL-11, “Power Supply Routing”.

OK or NG

OK >> GO TO 4
NG >> Repair or replace damaged parts.

4. CHECK TCM GROUND CIRCUIT

1. Turn ignition switch to OFF position.
2. Disconnect TCM harness connector.
3. Check continuity between TCM terminals 25, 48 and ground. Refer to AT-344, "Wiring Diagram — AT — MAIN" .

   Continuity should exist.

   If OK, check harness for short to ground and short to power.

OK or NG

OK >> **INSPECTION END**
NG >> Repair open circuit or short to ground or short to power in harness or connectors.

VEHICLE SPEED SENSOR - A/T (REVOLUTION SENSOR)

PFP:32702

Description

ECS009AU

The revolution sensor detects the revolution of the idler gear parking pawl lock gear and emits a pulse signal. The pulse signal is sent to the TCM which converts it into vehicle speed.

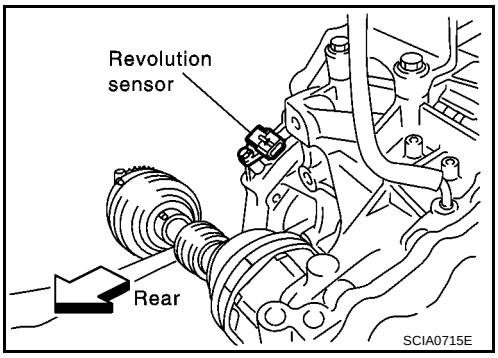

TCM TERMINALS AND REFERENCE VALUE

Remarks: Specification data are reference values.

Terminal No.	Wire color	Item	Condition		Judgement standard (Approx.)
29	W	Revolution sensor		When moving at 20 km/h (12 MPH), use the CONSULT-II pulse frequency measuring function.*1 **CAUTION:** **Connect the diagnosis data link cable to the vehicle diagnosis connector.** *1: A circuit tester cannot be used to test this item.	150 Hz
				When vehicle parks.	Under 1.3V or over 4.5V
42	B	Throttle position sensor (Ground)	—	—	—

ON BOARD DIAGNOSIS LOGIC

Diagnostic trouble code	Malfunction is detected when...	Check items (Possible cause)
: VHCL SPEED SEN·AT	TCM does not receive the proper voltage signal from the sensor.	● Harness or connectors (The sensor circuit is open or shorted.) ● Revolution sensor
: 1st judgement flicker		

SELF-DIAGNOSIS CODE CONFIRMATION PROCEDURE

After the repair, perform the following procedure to confirm the malfunction is eliminated.

With CONSULT-II

1. Start engine.
2. Select “SELF-DIAG RESULTS” mode for A/T with CONSULT-II.
3. Drive vehicle under the following conditions:
   Selector lever in “D” position, vehicle speed higher than 30 km/h (19 MPH), throttle opening greater than 1/8 of the full throttle position and driving for more than 5 seconds.
4. If DTC is detected, go to AT-350, "Diagnostic Procedure" .

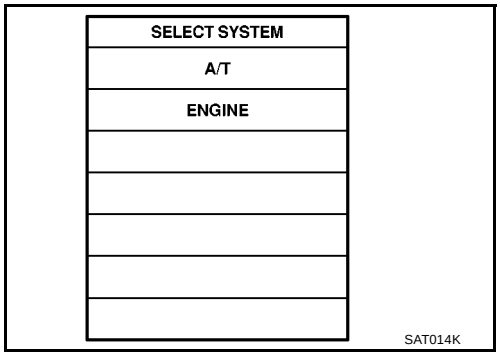

Without CONSULT-II

1. Start engine.
2. Drive vehicle under the following conditions:
   Selector lever in “D” position, vehicle speed higher than 30 km/h (19 MPH), throttle opening greater than 1/8 of the full throttle position and driving for more than 5 seconds.
3. Perform self-diagnosis.
   Refer to AT-252, "Diagnostic Procedure Without CONSULT-II" .
4. If DTC is detected, go to AT-350, "Diagnostic Procedure" .

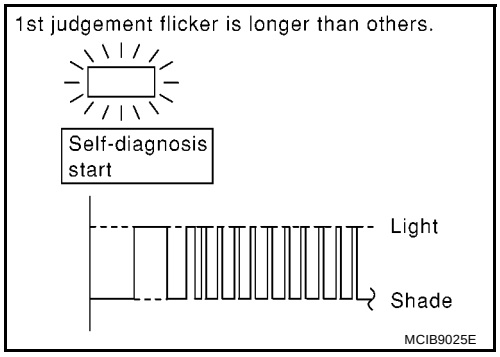

Wiring Diagram — AT — VSSAT

ECS009AV

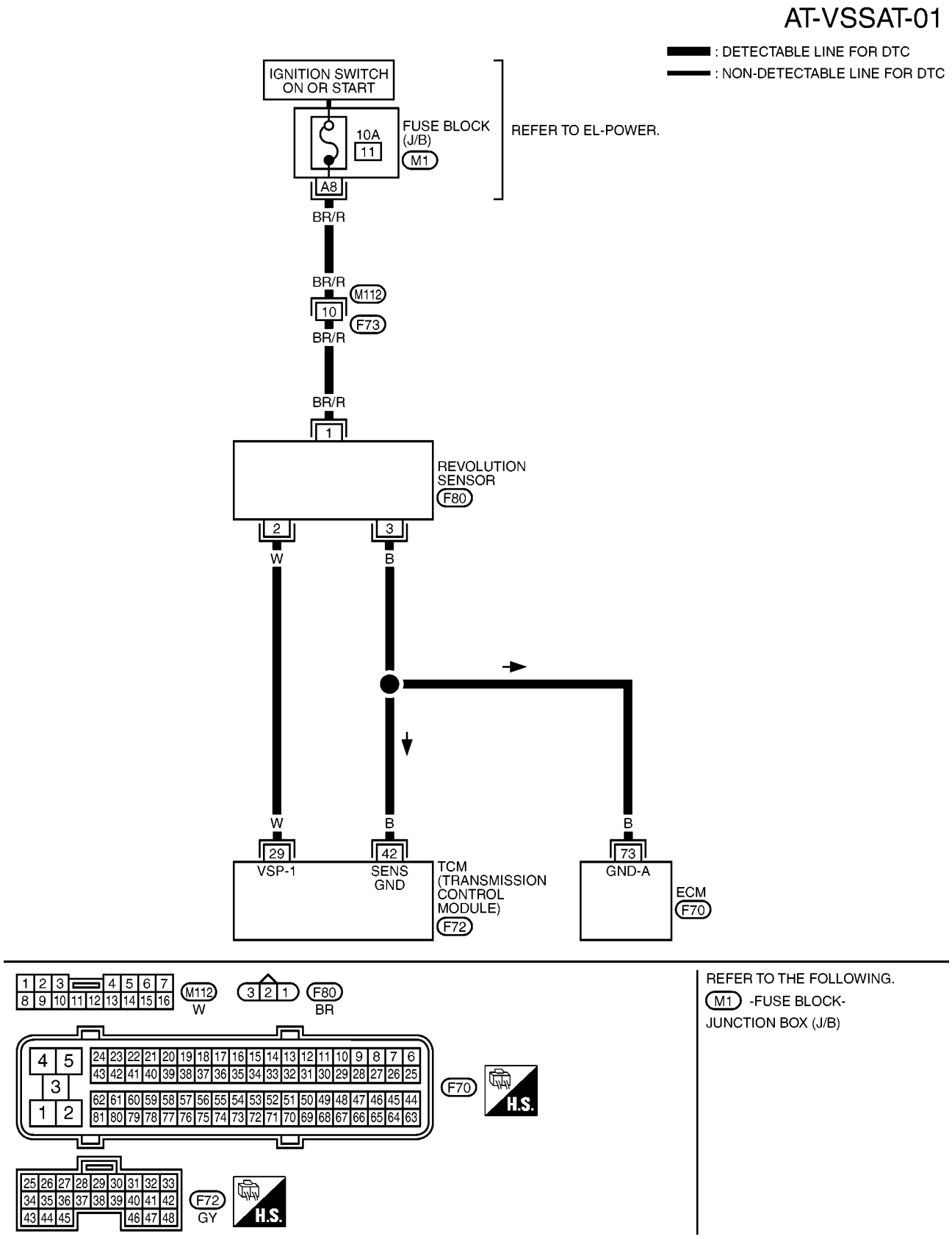

Diagnostic Procedure

ECS009AW

1. CHECK INPUT SIGNAL (WITH CONSULT-II)

With CONSULT-II

1. Start engine.
2. Select “TCM INPUT SIGNALS” in “DATA MONITOR” mode for “A/T” with CONSULT-II.
3. Read out the value of “VHCL/S SE·A/T” while driving.

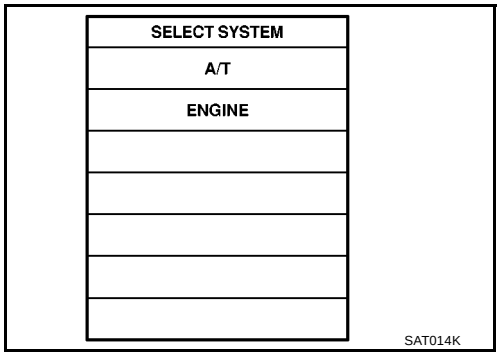

Check the value changes according to driving speed.

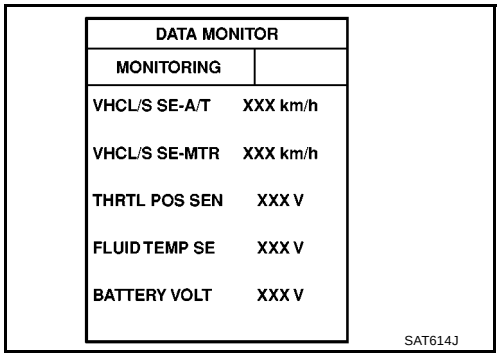

OK or NG

OK >> GO TO 3
NG >> GO TO 2

2. CHECK REVOLUTION SENSOR (WITH CONSULT-II)

With CONSULT-II

Condition	Judgement standard (Approx.)
When moving at 20 km/h (12 MPH), use the CONSULT-II pulse frequency measuring function. *1 **CAUTION:** **Connect the diagnosis data link cable to the vehicle diagnosis connector.** *1: A circuit tester cannot be used to test this item.	150 Hz
When vehicle parks.	Under 1.3V or over 4.5V

MTBL0575

1. Start engine.
   Harness for short or open between TCM, ECM and revolution sensor (Main harness)

OK or NG

OK >> GO TO 3
NG >> Repair or replace damaged parts.

3. CHECK DTC

Perform AT-348, "SELF-DIAGNOSIS CODE CONFIRMATION PROCEDURE" .

OK or NG

OK >> **INSPECTION END**
NG >> GO TO 4

4. CHECK TCM INSPECTION

1. Perform TCM input/output signal inspection.
2. If NG, recheck TCM pin terminals for damage or loose connection with harness connector.

OK or NG

OK >> **INSPECTION END**
NG >> Repair or replace damaged parts.

DTC VEHICLE SPEED SENSOR MTR

PFP:24814

Description

ECS009AX

The vehicle speed sensor·MTR is built into the speedometer assembly. The sensor functions as an auxiliary device to the revolution sensor when it is malfunctioning. The TCM will then use a signal sent from the vehicle speed sensor·MTR.

TCM TERMINALS AND REFERENCE VALUE

Remarks: Specification data are reference values.

Terminal No.	Wire color	Item	Condition		Judgement standard (Approx.)
40	L/B	Vehicle speed sensor		When moving vehicle at 2 to 3 km/h (1 to 2 MPH) for 1 m (3 ft) or more.	Voltage varies between less than 0V and more than 4.5V

ON BOARD DIAGNOSIS LOGIC

Diagnostic trouble code	Malfunction is detected when...	Check items (Possible cause)
: VHCL SPEED SEN·MTR	TCM does not receive the proper voltage signal from the sensor.	● Harness or connectors (The sensor circuit is open or shorted.) ● Vehicle speed sensor
: 2nd judgement flicker		

SELF-DIAGNOSIS CODE CONFIRMATION PROCEDURE

After the repair, perform the following procedure to confirm the malfunction is eliminated.

With CONSULT-II

1. Start engine.
2. Select “SELF-DIAG RESULTS” mode for A/T with CONSULT-II.
3. Drive vehicle under the following conditions:
   Selector lever in “D” position and vehicle speed higher than 20 km/h (12 MPH).
4. If DTC is detected, go to AT-355, "Diagnostic Procedure" .

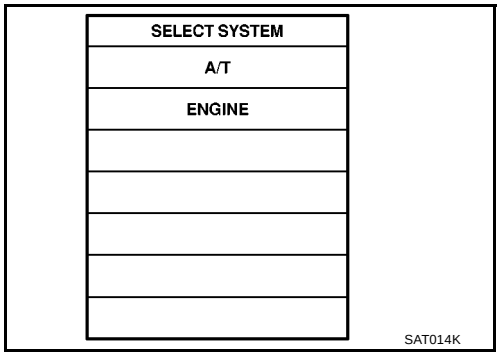

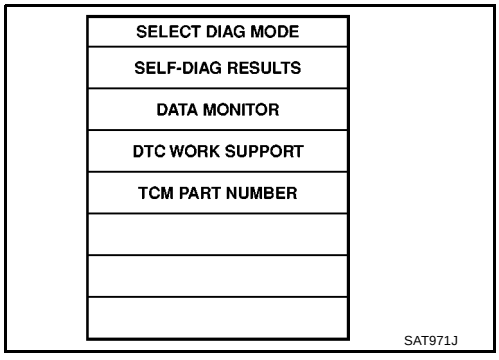

Without CONSULT-II

1. Start engine.
2. Drive vehicle under the following conditions:
   Selector lever in “D” position and vehicle speed higher than 20 km/h (12 MPH).
3. Perform self-diagnosis.
   Refer to AT-252, "Diagnostic Procedure Without CONSULT-II" .
4. If DTC is detected, go to AT-355, "Diagnostic Procedure" .

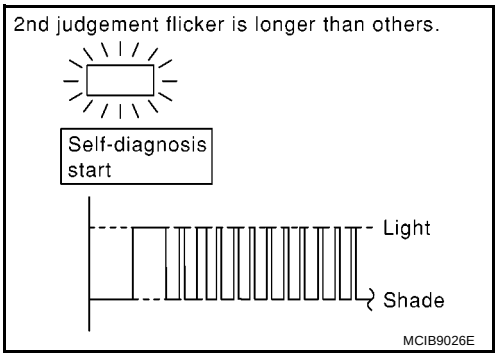

Wiring Diagram — AT — VSSMTR

ECS009AY

AT-VSSMTR-01

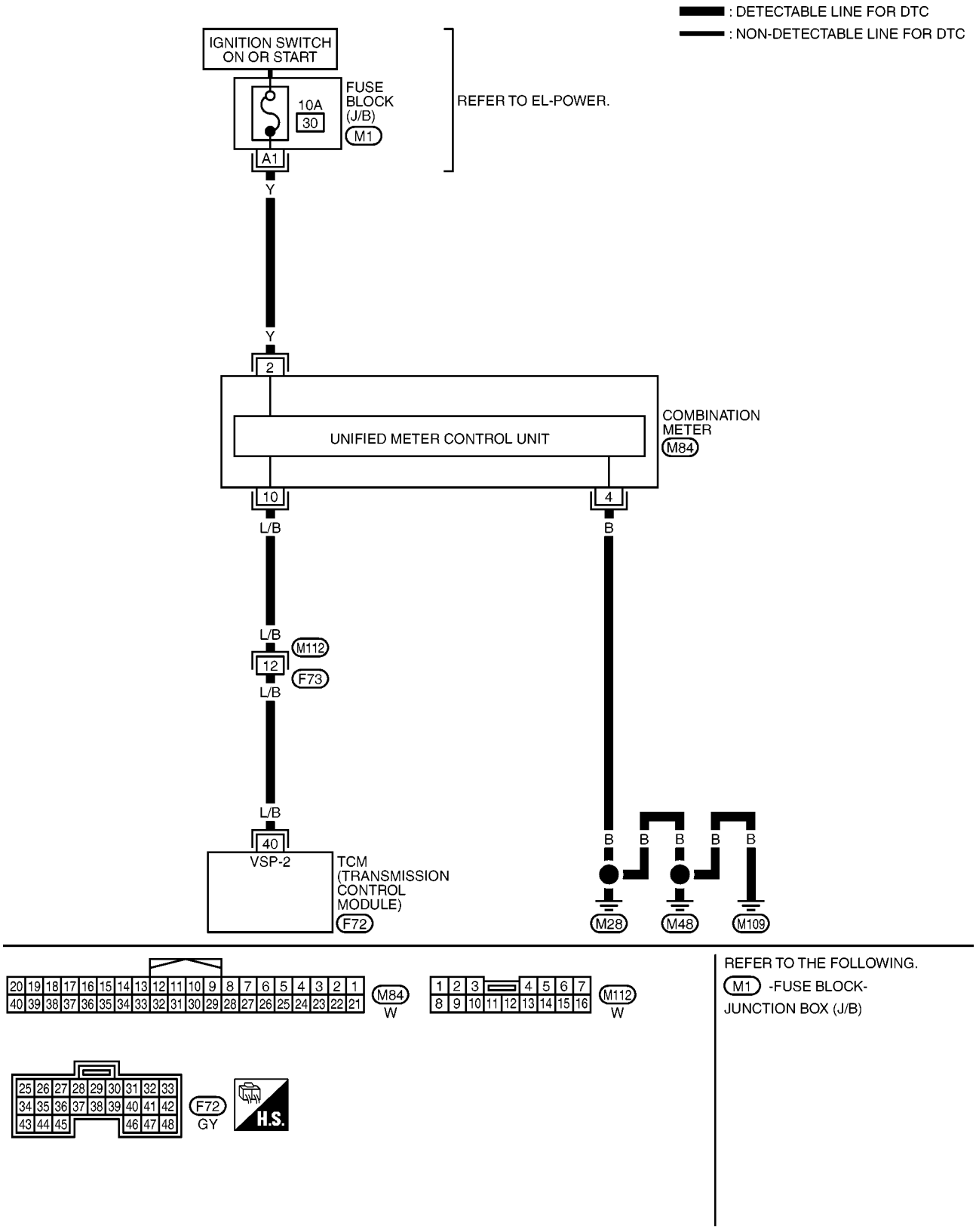

Diagnostic Procedure

ECS009AZ

1. CHECK INPUT SIGNAL

With CONSULT-II

1. Start engine.
2. Select “TCM INPUT SIGNALS” in “DATA MONITOR” mode for “A/T” with CONSULT-II.
3. Read out the value of “VHCL/S SE·MTR” while driving. Check the value changes according to driving speed.

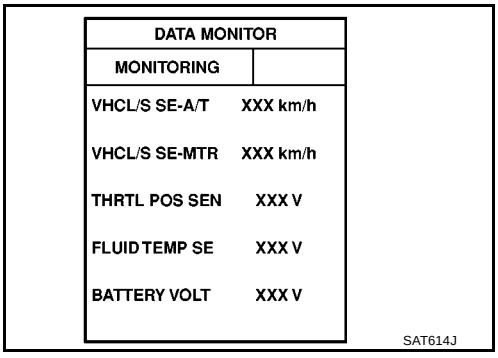

DATA MONITOR	
MONITORING	
VHCL/S SE-A/T	XXX km/h
VHCL/S SE-MTR	XXX km/h
THRTL POS SEN	XXX V
FLUID TEMP SE	XXX V
BATTERY VOLT	XXX V

SAT614J

Without CONSULT-II

1. Start engine.
2. Check voltage between TCM terminal 40 and ground while driving at 2 to 3 km/h (1 to 2 MPH) for 1 m (3 ft) or more.

Voltage: Voltage varies between less than 1V and more than 4.5V.

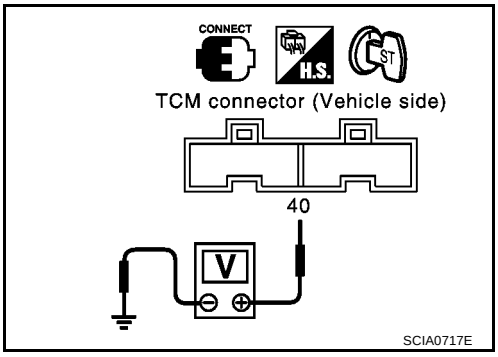

SCIA0717E

OK or NG

OK >> GO TO 2

NG >> Check the following items:

- Vehicle speed sensor and ground circuit for vehicle speed sensor
  Refer to EL-110, “Trouble Diagnosis”.
- Harness for short or open between TCM and vehicle speed sensor (Main harness)

2. CHECK DTC

Perform AT-352, "SELF-DIAGNOSIS CODE CONFIRMATION PROCEDURE" .

OK or NG

OK >> **INSPECTION END**

NG >> 1. Perform TCM input/output signal inspection.
2. If NG, recheck TCM pin terminals for damage or loose connection with harness connector.

ACCELE RATOR PEDAL POSITION (APP) SENSOR

PFP:22620

Description

ECS009B0

Accelerator pedal position (APP) sensor (Throttle position sensor)
Electric throttle control actuator consists of throttle control motor, acceleration pedal position sensor, throttle position sensor, etc. The actuator sends a signal to the TCM.

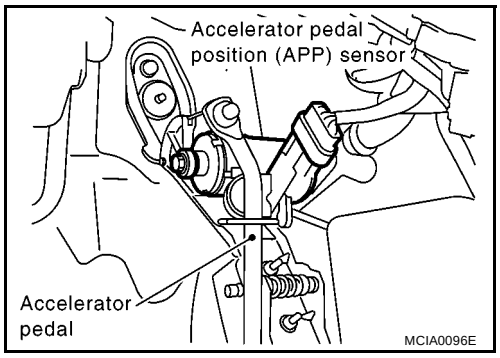

CONSULT-II REFERENCE VALUE IN DATA MONITOR MODE

Remarks: Specification data are reference values.

Monitor item	Condition	Specification
Accelerator pedal position (APP) sensor (Throttle position sensor)	Fully-closed throttle	Approximately 0.5V
	Fully-open throttle	Approximately 4V

TCM TERMINALS AND REFERENCE VALUE

Remarks: Specification data are reference values.

Terminal No.	Wire color	Item	Condition		Judgement standard (Approx.)
32	R	Throttle position sensor (Power source)	ON or OFF	When turning ignition switch “ON”.	4.5 - 5.5V
				When turning ignition switch “OFF”.	0V
41	GY	Throttle position sensor	ON	When depressing accelerator pedal slowly after warming up engine. (Voltage rises gradually in response to throttle position.)	Fully-closed throttle: 0.5V Fully-open throttle: 4V
42	B	Sensor ground	—	—	—

ON BOARD DIAGNOSIS LOGIC

Diagnostic trouble code	Malfunction is detected when...	Check items (Possible cause)
: THROTTLE POSI SEN*	TCM receives an excessively low or high voltage from the sensor.	● Harness or connectors (The sensor circuit is open or shorted.) ● Accelerator pedal position (APP) sensor (Throttle position sensor)
: 3rd judgement flicker		

*:This code means Accelerator pedal position (APP) sensor in reality.

SELF-DIAGNOSIS CODE CONFIRMATION PROCEDURE

After the repair, perform the following procedure to confirm the malfunction is eliminated.

With CONSULT-II

1. Start engine.
2. Select “SELF-DIAG RESULTS” mode for A/T with CONSULT-II.
3. Drive vehicle under the following conditions:
   Selector lever in “D” position, vehicle speed higher than 10 km/h (6 MPH), throttle opening greater than 1/2 of the full throttle position and driving for more than 3 seconds.
4. If DTC is detected, go to AT-359, "Diagnostic Procedure" .

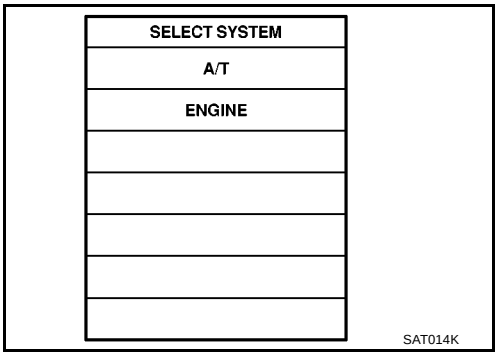

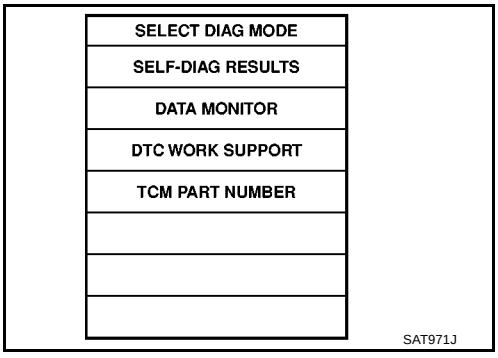

Without CONSULT-II

1. Start engine.
2. Drive vehicle under the following conditions:
   Selector lever in “D” position, vehicle speed higher than 10 km/h (6 MPH), throttle opening greater than 1/2 of the full throttle position and driving for more than 3 seconds.
3. Perform self-diagnosis.
   Refer to AT-252, "Diagnostic Procedure Without CONSULT-II" .
4. If DTC is detected, go to AT-359, "Diagnostic Procedure" .

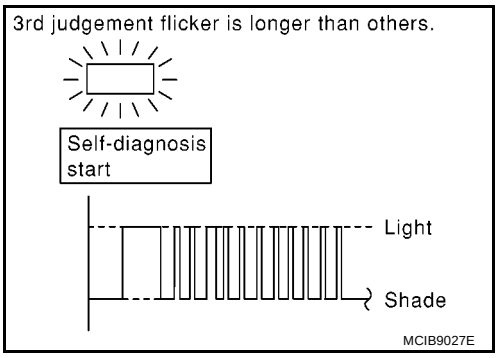

Wiring Diagram — AT — TPS

ECS009B1

AT-TPS-01

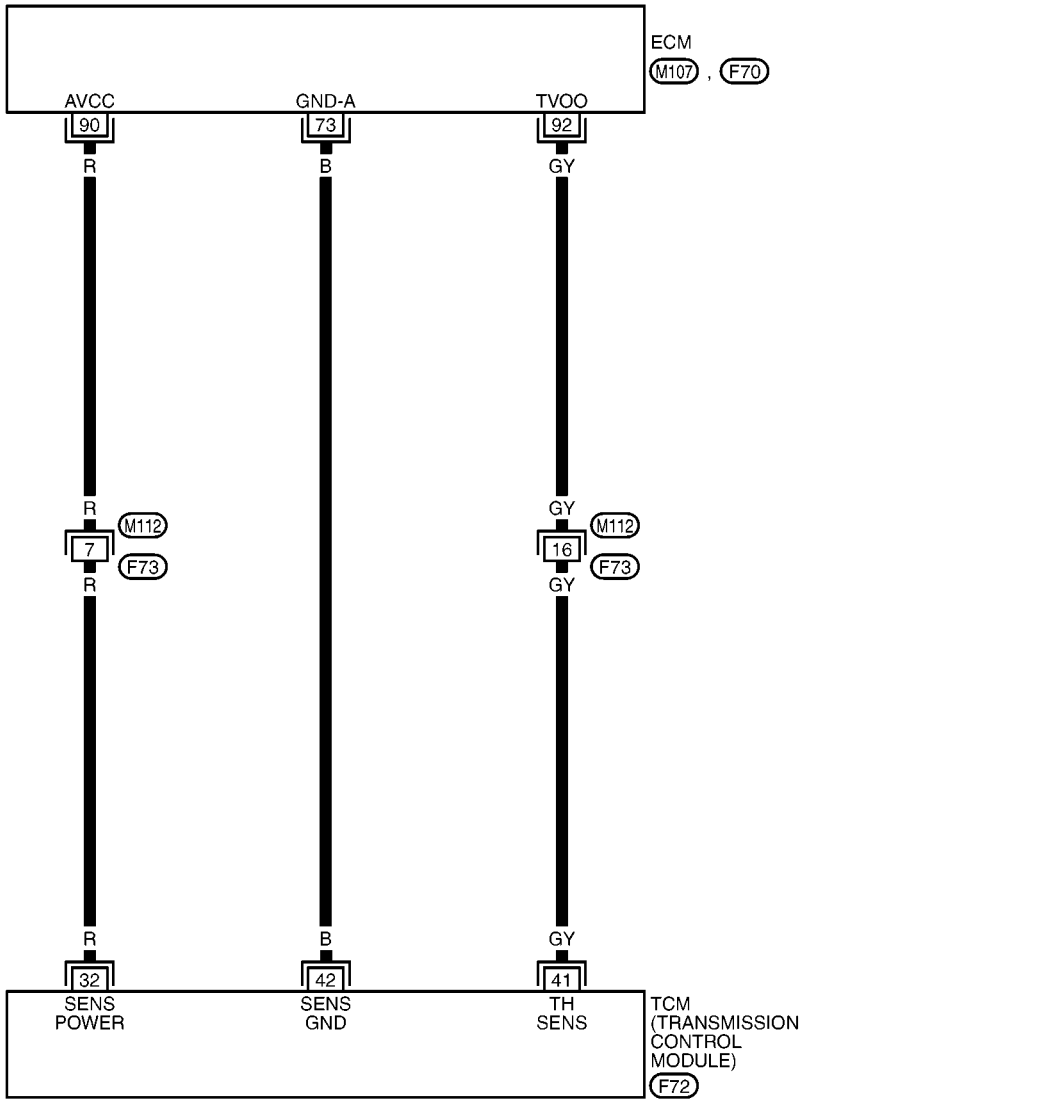

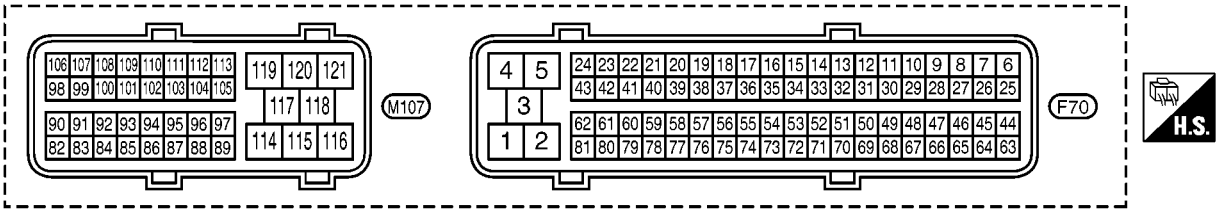

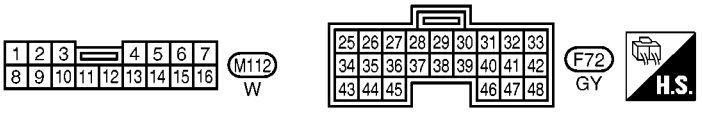

YAT381A

Diagnostic Procedure

ECS009B2

1. CHECK DTC WITH ECM

- Check DTC with CONSULT-II “ENGINE”.

Turn ignition switch ON and select “SELF DIAGNOSTIC RESULTS” mode for “ENGINE” with CONSULT-II. Refer to EC-55, "Emission-related Diagnostic Information" (EURO OBD) or EC-581, "Emission-related Diagnostic Information" (Except EURO OBD).

OK or NG

OK (With CONSULT-II)>>GO TO 2
OK (Without CONSULT-II)>>GO TO 3
NG >> Perform trouble diagnosis for the DTC for engine control.

2. CHECK INPUT SIGNAL (WITH CONSULT-II)

With CONSULT-II

1. Turn ignition switch to “ON” position.
   (Do not start engine.)
2. Select “TCM INPUT SIGNALS” in “DATA MONITOR” mode for “A/T” with CONSULT-II.

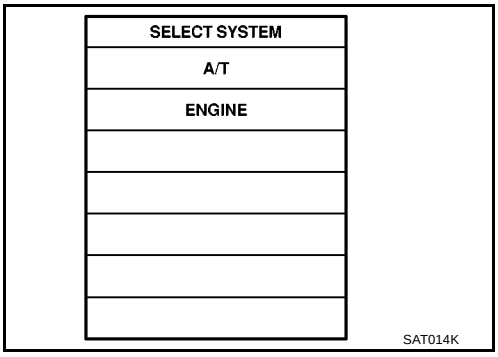

3. Read out the value of “THRTL POS SEN”.

   Voltage:
   Fully-closed throttle :Approximately 0.5V
   Fully-open throttle :Approximately 4V

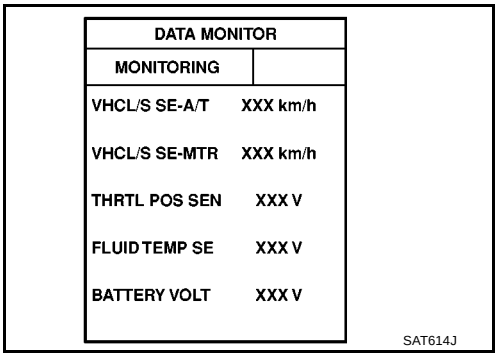

OK or NG

OK >> GO TO 4
NG >> Check harness for short or open between ECM and TCM regarding throttle position sensor circuit. (Main harness)

3. CHECK INPUT SIGNAL (WITHOUT CONSULT-II)

Without CONSULT-II

1. Turn ignition switch to “ON” position.
   (Do not start engine.)
2. Check voltage between TCM terminals 41 and 42 while accelerator pedal is depressed slowly.

   Voltage:

   Fully-closed throttle valve :Approximately 0.5V

   Fully-open throttle valve :Approximately 4V

   (Voltage rises gradually in response to throttle position.)

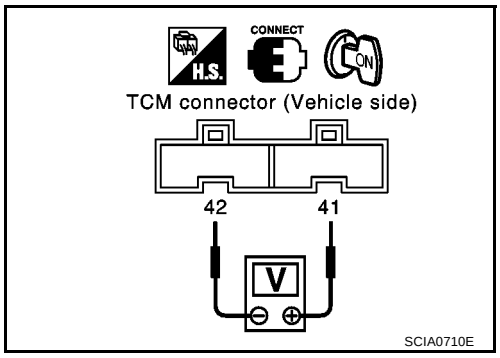

OK or NG

OK >> GO TO 4

NG >> Check harness for short or open between ECM and TCM regarding throttle position sensor circuit. (Main harness)

4. CHECK DTC

Perform AT-357, "SELF-DIAGNOSIS CODE CONFIRMATION PROCEDURE" .

OK or NG

OK >> **INSPECTION END**

NG >> 1. Perform TCM input/output signal inspection.
2. If NG, recheck TCM pin terminals for damage or loose connection with harness connector.

SHIFT SOLENOID VALVE A

PFP:31940

Description

ECS009B3

Shift solenoid valves A and B are turned “ON” or “OFF” by the TCM in response to signals sent from the PNP switch, vehicle speed and throttle position sensors. Gears will then be shifted to the optimum position.

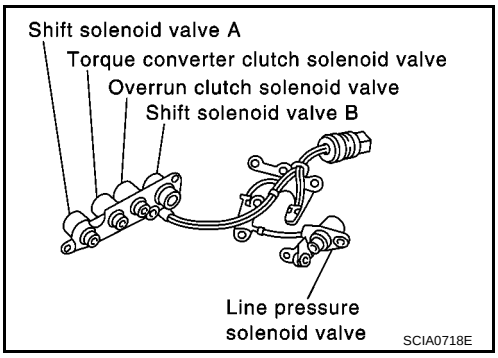

Gear position	1	2	3	4
Shift solenoid valve A	ON (Closed)	OFF (Open)	OFF (Open)	ON (Closed)
Shift solenoid valve B	ON (Closed)	ON (Closed)	OFF (Open)	OFF (Open)

TCM TERMINALS AND REFERENCE VALUE

Remarks: Specification data are reference values.

Terminal No.	Wire color	Item	Condition		Judgement standard (Approx.)
11	L/W	Shift solenoid valve A		When shift solenoid valve A operates. (When driving in “D1 ” or “D4 ”.)	Battery voltage
				When shift solenoid valve A does not operate. (When driving in “D2 ” or “D3 ”.)	0V

ON BOARD DIAGNOSIS LOGIC

Diagnostic trouble code	Malfunction is detected when...	Check items (Possible cause)
: SHIFT SOLENOID/VA	TCM detects an improper voltage drop when it tries to operate the solenoid valve.	● Harness or connectors (The solenoid circuit is open or shorted.) ● Shift solenoid valve A
: 4th judgement flicker		

SELF-DIAGNOSIS CODE CONFIRMATION PROCEDURE

After the repair, perform the following procedure to confirm the malfunction is eliminated.

With CONSULT-II

1. Start engine.
2. Select “SELF-DIAG RESULTS” mode for A/T with CONSULT-II.
3. Drive vehicle in D1 → D2 position.
4. IF DTC is detected, go to AT-364, "Diagnostic Procedure" .

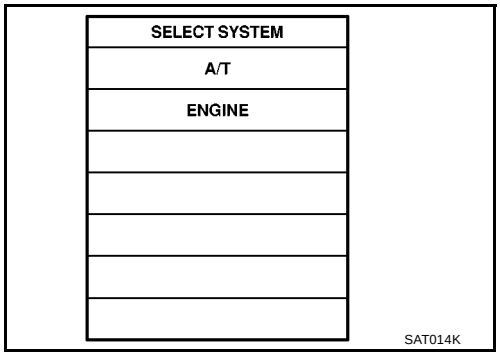

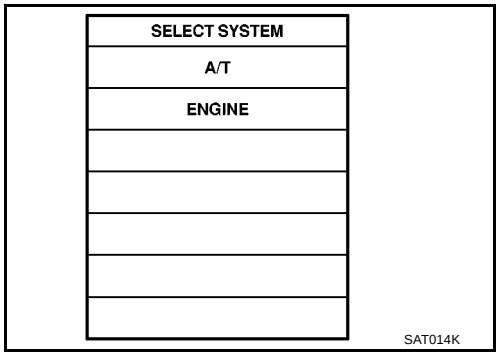

Without CONSULT-II

1. Start engine.
2. Drive vehicle in D1 → D2 position.
3. Perform self-diagnosis.
   Refer to AT-252, "Diagnostic Procedure Without CONSULT-II" .
4. If DTC is detected, go to AT-364, "Diagnostic Procedure" .

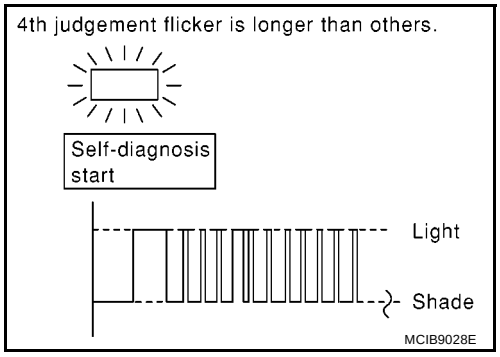

Wiring Diagram — AT — SSV/A

ECS009B4

AT-SSV/A-01

: DETECTABLE LINE FOR DTC
: NON-DETECTABLE LINE FOR DTC

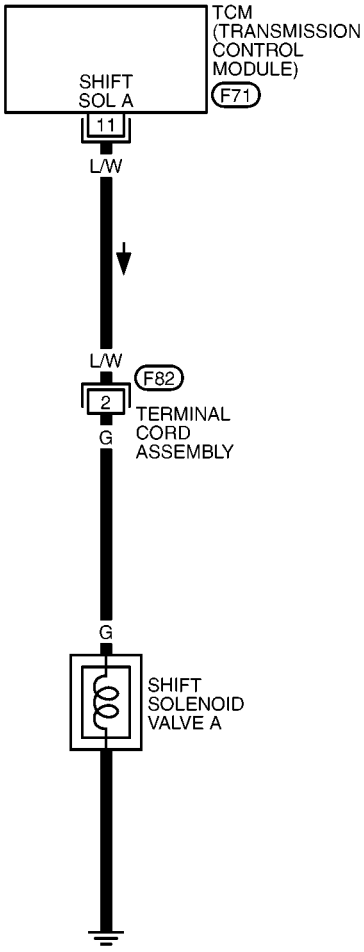

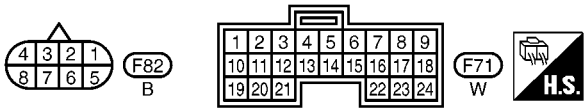

YAT379A

Diagnostic Procedure

ECS009B5

1. CHECK VALVE RESISTANCE

1. Turn ignition switch to “OFF” position.
2. Disconnect terminal cord assembly connector in engine compartment.
3. Check resistance between terminal 2 and ground.

Resistance : 20 - 30Ω

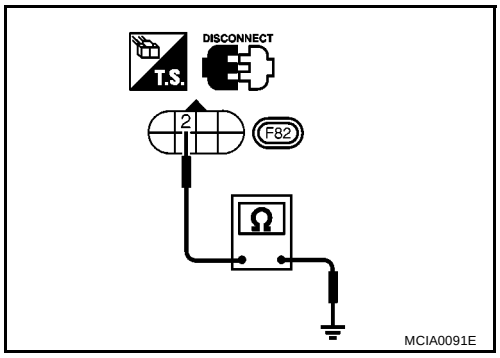

OK or NG

OK >> GO TO 2

NG >> 1. Remove control valve assembly. Refer to AT-410, "Control Valve Assembly and Accumulators" .

2. Check the following items:
Shift solenoid valve A
Refer to AT-365, "Component Inspection" .
Harness of terminal cord assembly for short or open

2. CHECK POWER SOURCE CIRCUIT

1. Turn ignition switch to “OFF” position.
2. Disconnect TCM harness connector.
3. Check continuity between terminal 2 and TCM harness connector terminal 11.

Continuity should exist.

If OK, check harness for short to ground and short to power.

4. Reinstall any part removed.

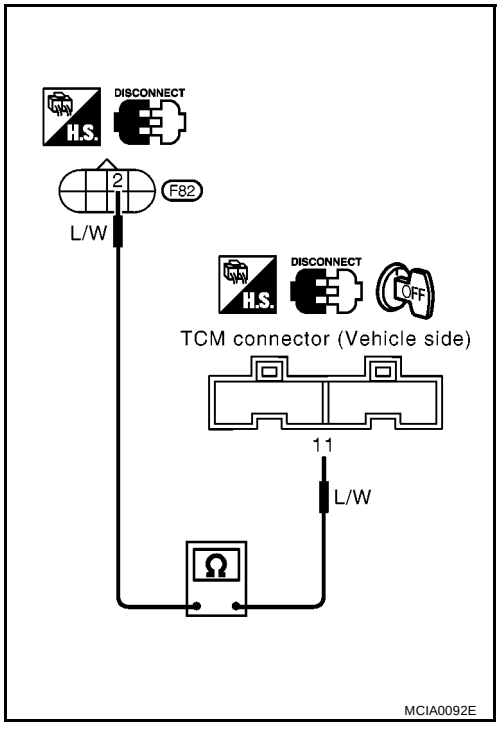

OK or NG

OK >> GO TO 3

NG >> Repair open circuit or short to ground or short to power in harness or connectors.

3. CHECK DTC

Perform AT-362, "SELF-DIAGNOSIS CODE CONFIRMATION PROCEDURE" .

OK or NG

OK >> **INSPECTION END**

NG >> 1. Perform TCM input/output signal inspection.

2. If NG, recheck TCM pin terminals for damage or loose connection with harness connector.

Component Inspection

ECS009B6

SHIFT SOLENOID VALVE A

- For removal, refer to AT-410, "Control Valve Assembly and Accumulators" .

Resistance Check

- Check resistance between two terminals.

Solenoid valve	Terminal No.		Resistance (Approx.)
Shift solenoid valve A	2	Ground	20 - 30Ω

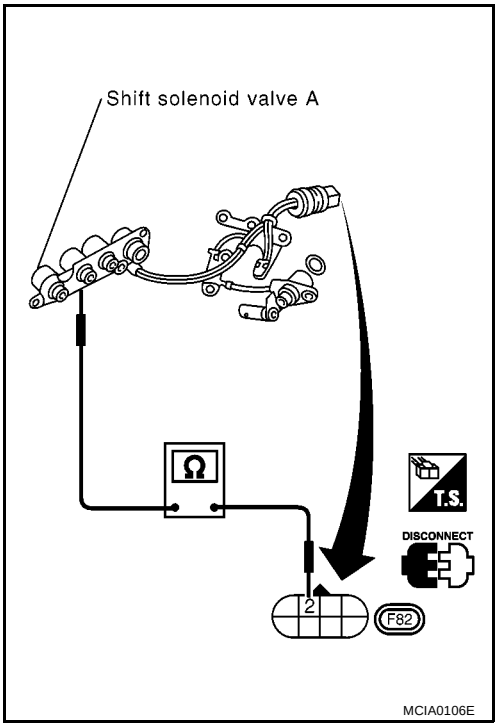

Operation Check

- Check solenoid valve by listening for its operating sound while applying battery voltage to the terminal and ground.

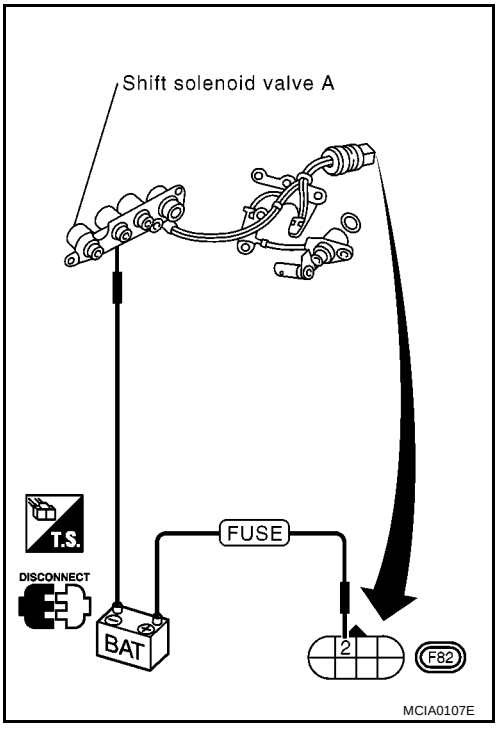

SHIFT SOLENOID VALVE B

PFP:31940

Description

ECS009B7

Shift solenoid valves A and B are turned “ON” or “OFF” by the TCM in response to signals sent from the PNP switch, vehicle speed and throttle position sensors. Gears will then be shifted to the optimum position.

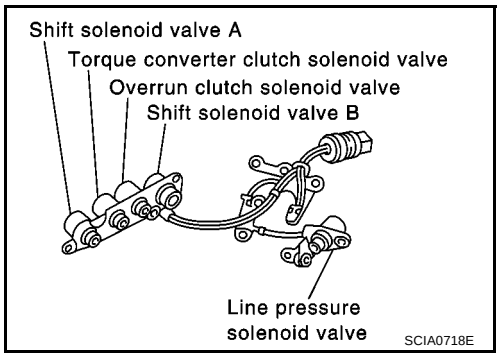

Gear position	1	2	3	4
Shift solenoid valve A	ON (Closed)	OFF (Open)	OFF (Open)	ON (Closed)
Shift solenoid valve B	ON (Closed)	ON (Closed)	OFF (Open)	OFF (Open)

TCM TERMINALS AND REFERENCE VALUE

Remarks: Specification data are reference values.

Terminal No.	Wire color	Item	Condition		Judgement standard (Approx.)
12	L/Y	Shift solenoid valve B		When shift solenoid valve B operates. (When driving in “D_1 ” or “D_2 ”.)	Battery voltage
				When shift solenoid valve B does not operate. (When driving in “D_3 ” or “D_4 ”.)	0V

ON BOARD DIAGNOSIS LOGIC

Diagnostic trouble code	Malfunction is detected when...	Check items (Possible cause)
: SHIFT SOLENOID/VB	TCM detects an improper voltage drop when it tries to operate the solenoid valve.	● Harness or connectors (The solenoid circuit is open or shorted.) ● Shift solenoid valve B
: 5th judgement flicker		

SELF-DIAGNOSIS CODE CONFIRMATION PROCEDURE

After the repair, perform the following procedure to confirm the malfunction is eliminated.

With CONSULT-II

1. Start engine.
2. Select “SELF-DIAG RESULTS” mode for A/T with CONSULT-II.
3. Drive vehicle in $D_1 \rightarrow D_2 \rightarrow D_3$ position.
4. IF DTC is detected, go to AT-369, "Diagnostic Procedure" .

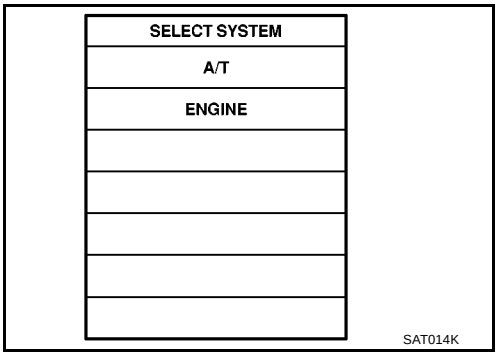

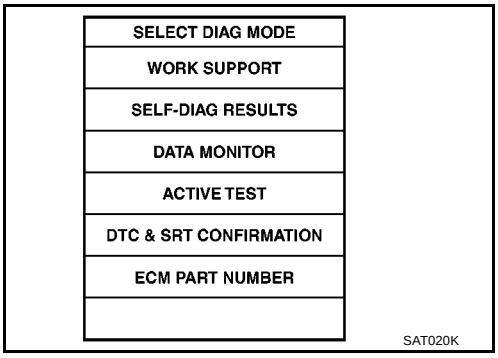

Without CONSULT-II

1. Start engine.
2. Drive vehicle in $D_1 \rightarrow D_2 \rightarrow D_3$ position.
3. Perform self-diagnosis.
   Refer to AT-252, "Diagnostic Procedure Without CONSULT-II" .
4. If DTC is detected, go to AT-369, "Diagnostic Procedure" .

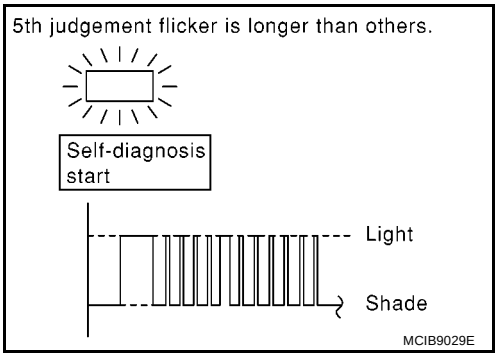

Wiring Diagram — AT — SSV/B

ECS009B8

AT-SSV/B-01

: DETECTABLE LINE FOR DTC

: NON-DETECTABLE LINE FOR DTC

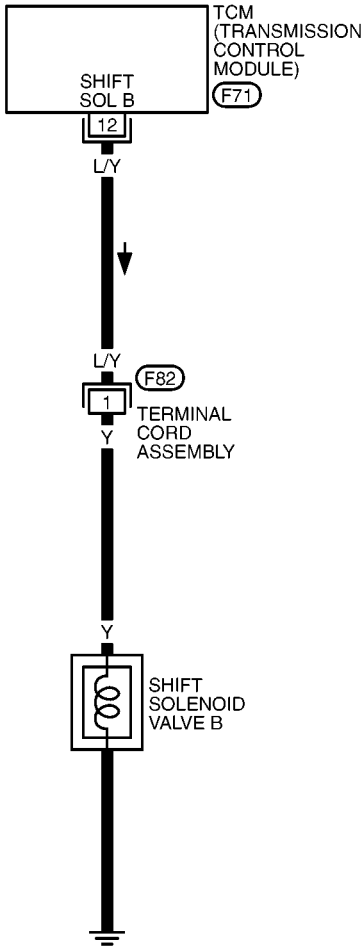

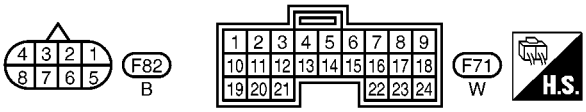

YAT380A

Diagnostic Procedure

ECS009B9

1. CHECK VALVE RESISTANCE

1. Turn ignition switch to “OFF” position.
2. Disconnect terminal cord assembly connector in engine compartment.
3. Check resistance between terminal 1 and ground.

Resistance : 5 - 20Ω

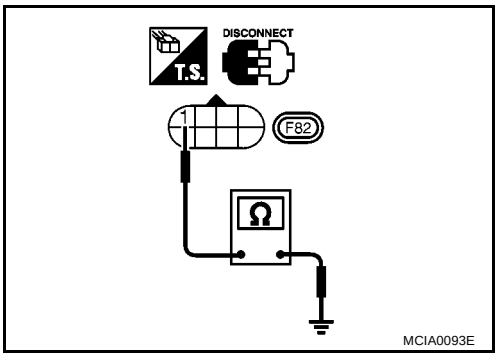

OK or NG

OK >> GO TO 2

NG >> 1. Remove control valve assembly. Refer to AT-410, "Control Valve Assembly and Accumulators" .

2. Check the following items:
Shift solenoid valve B
Refer to AT-370, "Component Inspection" .
Harness of terminal cord assembly for short or open

2. CHECK POWER SOURCE CIRCUIT

1. Turn ignition switch to “OFF” position.
2. Disconnect TCM harness connector.
3. Check continuity between terminal 12 and TCM harness connector terminal 1.

Continuity should exist.

If OK, check harness for short to ground and short to power.

4. Reinstall any part removed.

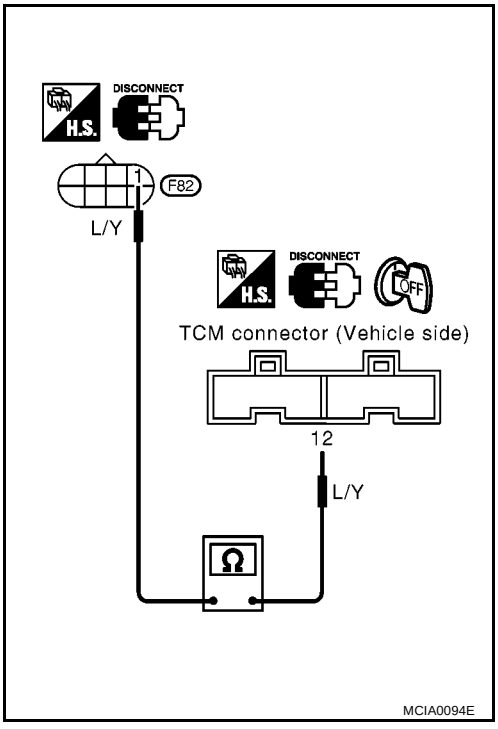

OK or NG

OK >> GO TO 3

NG >> Repair open circuit or short to ground or short to power in harness or connectors.

3. CHECK DTC

Perform AT-367, "SELF-DIAGNOSIS CODE CONFIRMATION PROCEDURE" .

OK or NG

OK >> **INSPECTION END**

NG >> 1. Perform TCM input/output signal inspection.

2. If NG, recheck TCM pin terminals for damage or loose connection with harness connector.

Component Inspection

ECS009BA

SHIFT SOLENOID VALVE B

- For removal, refer to AT-410, "Control Valve Assembly and Accumulators" .

Resistance Check

- Check resistance between two terminals.

Solenoid valve	Terminal No.		Resistance (Approx.)
Shift solenoid valve B	1	Ground	5 - 20Ω

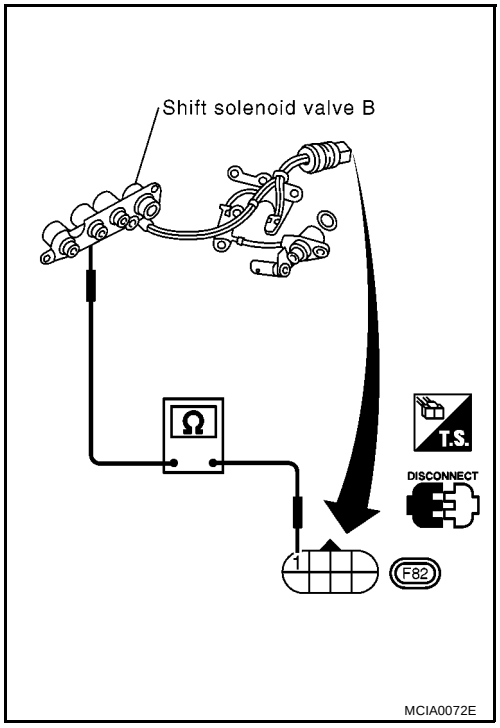

Operation Check

- Check solenoid valve by listening for its operating sound while applying battery voltage to the terminal and ground.

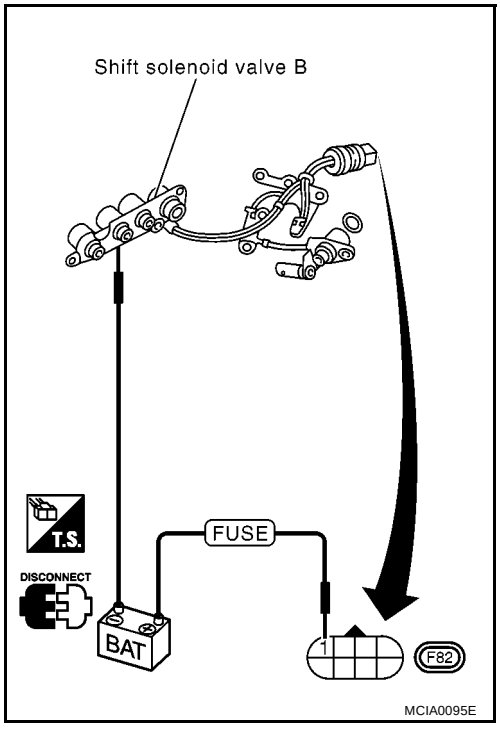

OVERRUN CLUTCH SOLENOID VALVE

PFP:31940

Description

ECS009BB

The overrun clutch solenoid valve is activated by the TCM in response to signals sent from the inhibitor switch, overdrive control switch, vehicle speed and throttle position sensors. The overrun clutch operation will then be controlled.

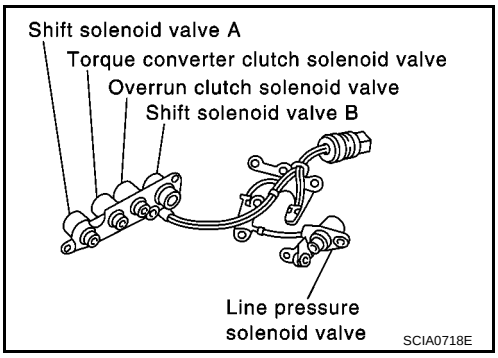

TCM TERMINALS AND REFERENCE VALUE

Remarks: Specification data are reference values.

Terminal No.	Wire color	Item	Condition		Judgement standard (Approx.)
20	L/B	Overrun clutch solenoid valve		When overrun clutch solenoid valve operates.	Battery voltage
				When overrun clutch solenoid valve does not operate.	0V

ON BOARD DIAGNOSIS LOGIC

Diagnostic trouble code	Malfunction is detected when...	Check items (Possible cause)
: OVERRUN CLUTCH S/V	TCM detects an improper voltage drop when it tries to operate the solenoid valve.	● Harness or connectors (The solenoid circuit is open or shorted.) ● Overrun clutch solenoid valve
: 6th judgement flicker		

SELF-DIAGNOSIS CODE CONFIRMATION PROCEDURE

After the repair, perform the following procedure to confirm the malfunction is eliminated.

With CONSULT-II

1. Start engine.
2. Select “SELF-DIAG RESULTS” mode for A/T with CONSULT-II.
3. Drive vehicle under the following conditions:
   Selector lever in “D” position, overdrive control switch in “OFF” position and vehicle speed higher than 10 km/h (6 MPH).
4. If DTC is detected, go to AT-374, "Diagnostic Procedure" .

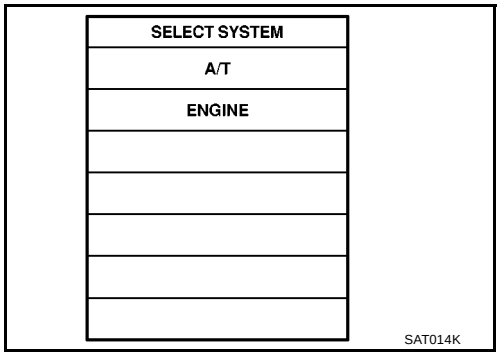

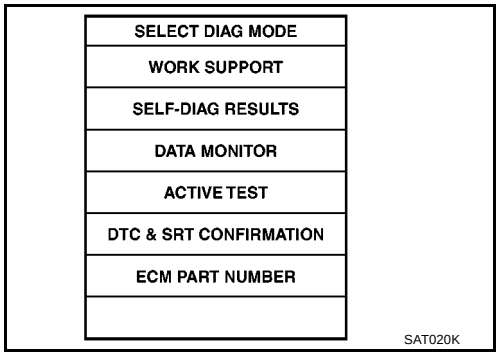

Without CONSULT-II

1. Start engine.
2. Drive vehicle under the following conditions:
   Selector lever in “D” position, overdrive control switch in “OFF” position and vehicle speed higher than 10 km/h (6 MPH).
3. Perform self-diagnosis.
   Refer to AT-252, "Diagnostic Procedure Without CONSULT-II" for EXC. F/EURO-OBD, AT-51, "TCM SELF-DIAGNOSTIC PROCEDURE (NO TOOLS)" for EURO-OBD.
4. If DTC is detected, go to AT-374, "Diagnostic Procedure" .

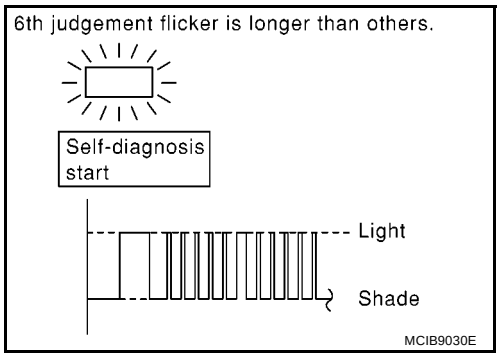

Wiring Diagram — AT — OVRCSV

ECS009BC

AT-OVRCSV-01

: DETECTABLE LINE FOR DTC

: NON-DETECTABLE LINE FOR DTC

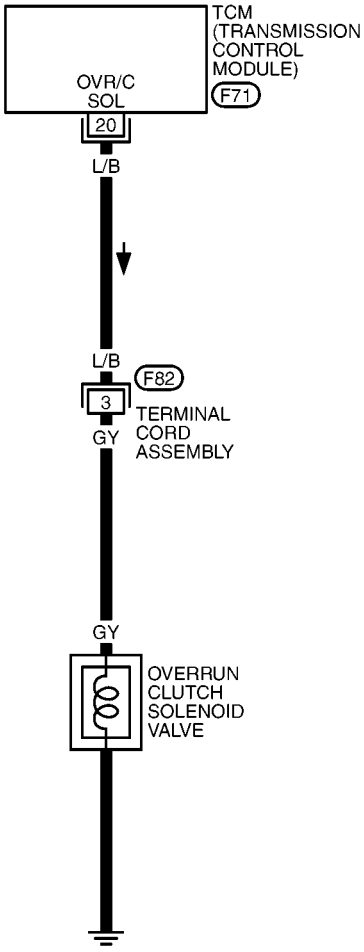

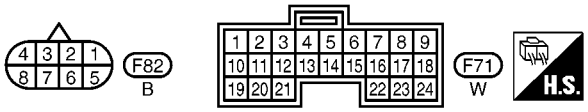

YAT382A

Diagnostic Procedure

ECS009BD

1. CHECK VALVE RESISTANCE

1. Turn ignition switch to “OFF” position.
2. Disconnect terminal cord assembly connector in engine compartment.
3. Check resistance between terminal 3 and ground.

Resistance : 20 - 30Ω

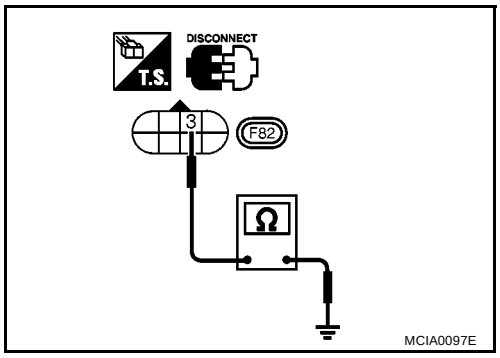

OK or NG

OK >> GO TO 2

NG >> 1. Remove control valve assembly. Refer to AT-410, "Control Valve Assembly and Accumulators" .

2. Check the following items:
Overrun clutch solenoid valve
Refer to AT-375, "Component Inspection" .
Harness of terminal cord assembly for short or open

2. CHECK POWER SOURCE CIRCUIT

1. Turn ignition switch to “OFF” position.
2. Disconnect TCM harness connector.
3. Check continuity between terminal 3 and TCM harness connector terminal 20.

Continuity should exist.

If OK, check harness for short to ground and short to power.

4. Reinstall any part removed.

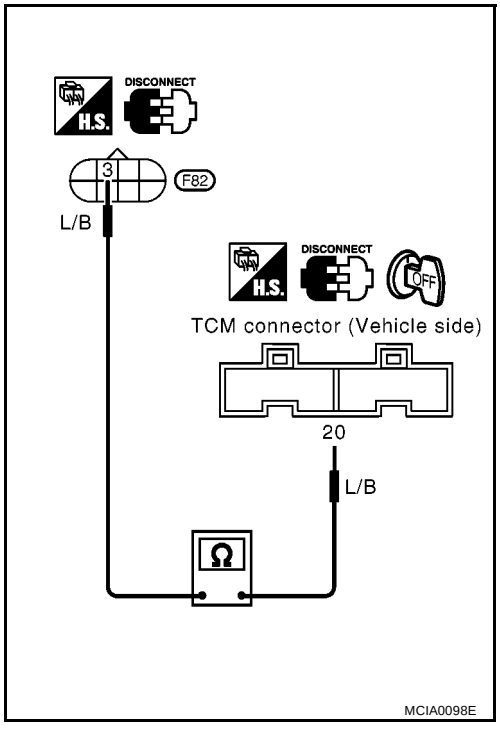

OK or NG

OK >> GO TO 3

NG >> Repair open circuit or short to ground or short to power in harness or connectors.

3. CHECK DTC

Perform AT-372, "SELF-DIAGNOSIS CODE CONFIRMATION PROCEDURE" .

OK or NG

OK >> **INSPECTION END**

NG >> 1. Perform TCM input/output signal inspection.

2. If NG, recheck TCM pin terminals for damage or loose connection with harness connector.

Component Inspection

ECS009BE

OVERRUN CLUTCH SOLENOID VALVE

- For removal, refer to AT-410, "Control Valve Assembly and Accumulators" .

Resistance Check

- Check resistance between two terminals.

Solenoid valve	Terminal No.		Resistance (Approx.)
Overrun clutch solenoid valve	3	Ground	20 - 30Ω

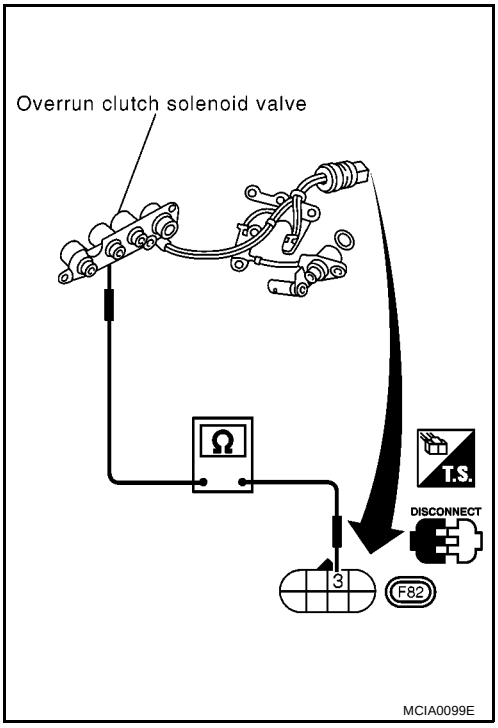

Operation Check

- Check solenoid valve by listening for its operating sound while applying battery voltage to the terminal and ground.

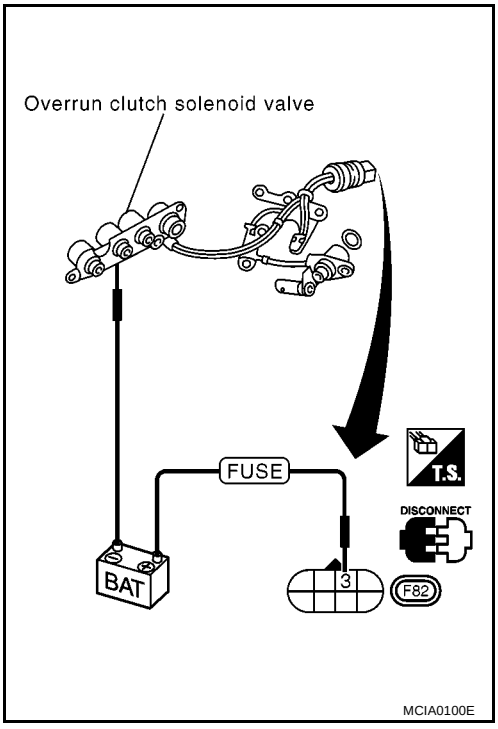

TORQUE CONVERTER CLUTCH SOLENOID VALVE

PFP:31940

Description

ECS009BF

The torque converter clutch solenoid valve is activated, with the gear in “D4 ”, by the TCM in response to signals sent from the vehicle speed and throttle position sensors. Lock-up piston operation will then be controlled.
Lock-up operation, however, is prohibited when A/T fluid temperature is too low.
When the accelerator pedal is depressed (less than 2/8) in lock-up condition, the engine speed should not change abruptly. If there is a big jump in engine speed, there is no lock-up.

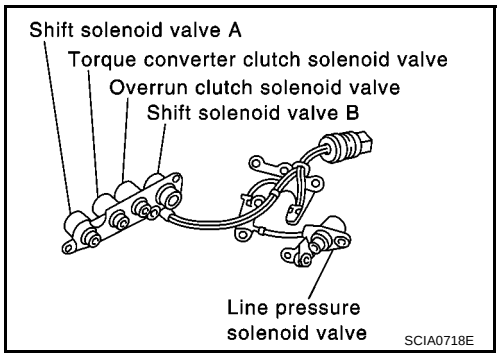

CONSULT-II REFERENCE VALUE IN DATA MONITOR MODE

Remarks: Specification data are reference values.

Monitor item	Condition	Specification
Torque converter clutch solenoid valve duty	Lock-up “OFF” ↓ Lock-up “ON”	Approximately 4% ↓ Approximately 94%

TCM TERMINALS AND REFERENCE VALUE

Remarks: Specification data are reference values.

Terminal No.	Wire color	Item	Condition		Judgement standard (Approx.)
3	GY/R	Torque converter clutch solenoid valve		When A/T performs lock-up.	8 - 15V
				When A/T does not perform lock-up.	0V

ON BOARD DIAGNOSIS LOGIC

Diagnostic trouble code	Malfunction is detected when...	Check items (Possible cause)
: T/C CLUTCH SOL/V	TCM detects an improper voltage drop when it tries to operate the solenoid valve.	● Harness or connectors (The solenoid circuit is open or shorted.) ● T/C clutch solenoid valve
: 7th judgement flicker		

SELF-DIAGNOSIS CODE CONFIRMATION PROCEDURE

After the repair, perform the following procedure to confirm the malfunction is eliminated.

With CONSULT-II

1. Start engine.
2. Select “SELF-DIAG RESULTS” mode for A/T with CONSULT-II.
3. Drive vehicle in $D_1 \rightarrow D_2 \rightarrow D_3 \rightarrow D_4 \rightarrow D_4$ lock-up position.
4. If DTC is detected, go to AT-379, "Diagnostic Procedure" .

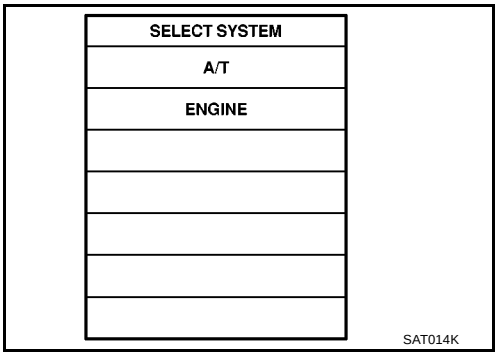

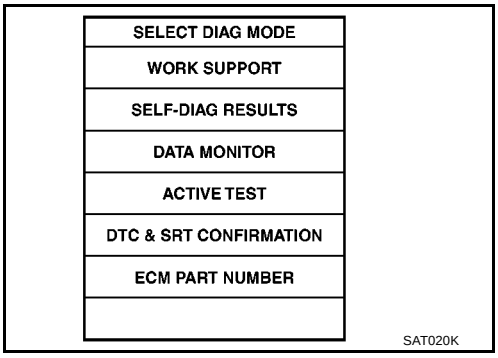

Without CONSULT-II

1. Start engine.
2. Drive vehicle in $D_1 \rightarrow D_2 \rightarrow D_3 \rightarrow D_4 \rightarrow D_4$ lock-up position.
3. Perform self-diagnosis.
   Refer to AT-252, "Diagnostic Procedure Without CONSULT-II" .
4. If DTC is detected, go to AT-379, "Diagnostic Procedure" .

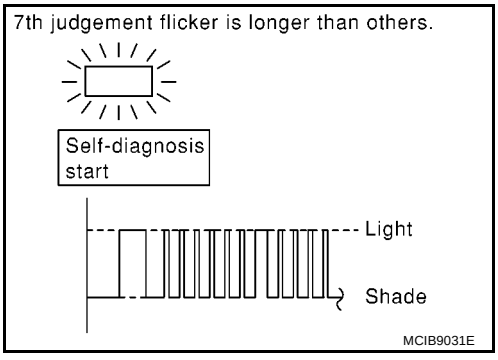

Wiring Diagram — AT — TCV

ECS009BG

AT-TCV-01

: DETECTABLE LINE FOR DTC

: NON-DETECTABLE LINE FOR DTC

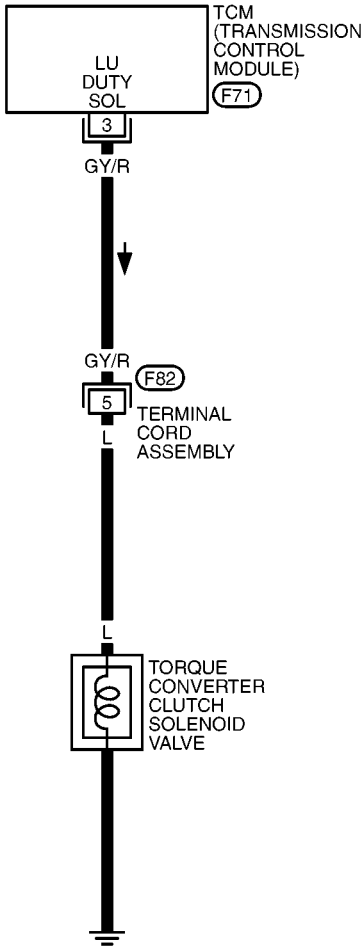

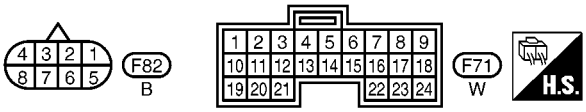

YAT377A

Diagnostic Procedure

ECS009BH

1. CHECK VALVE RESISTANCE

1. Turn ignition switch to “OFF” position.
2. Disconnect terminal cord assembly connector in engine compartment.
3. Check resistance between terminal 5 and ground.

Resistance: 5 - 20Ω

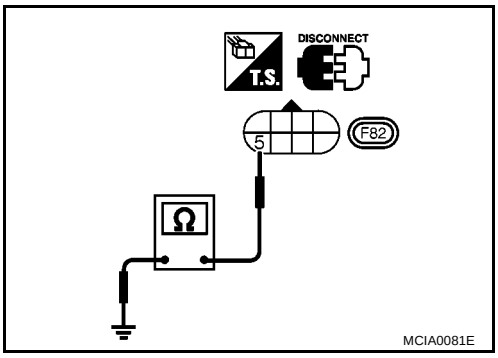

OK or NG

OK >> GO TO 2

NG >> 1. Remove oil pan. Refer to AT-410, "Control Valve Assembly and Accumulators" .
2. Check the following items:
Torque converter clutch solenoid valve
Refer to AT-380, "Component Inspection" .
Harness of terminal cord assembly for short or open

2. CHECK POWER SOURCE CIRCUIT

1. Turn ignition switch to “OFF” position.
2. Disconnect TCM harness connector.
3. Check continuity between terminal 5 and TCM harness connector terminal 3.

Continuity should exist.

If OK, check harness for short to ground and short to power.

4. Reinstall any part removed.

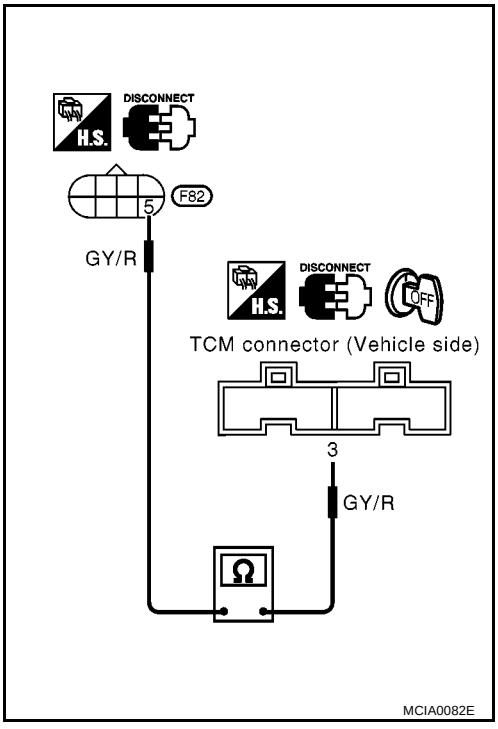

OK or NG

OK >> GO TO 3

NG >> Repair open circuit or short to ground or short to power in harness or connectors.

3. CHECK DTC

Perform AT-377, "SELF-DIAGNOSIS CODE CONFIRMATION PROCEDURE" .

OK or NG

OK >> **INSPECTION END**

NG >> 1. Perform TCM input/output signal inspection.
2. If NG, recheck TCM pin terminals for damage or loose connection with harness connector.

Component Inspection

ECS009BI

TORQUE CONVERTER CLUTCH SOLENOID VALVE

- For removal, refer to AT-410, "Control Valve Assembly and Accumulators" .

Resistance Check

- Check resistance between two terminals.

Solenoid valve	Terminal No.		Resistance (Approx.)
Torque converter clutch solenoid valve	5	Ground	5 - 20Ω

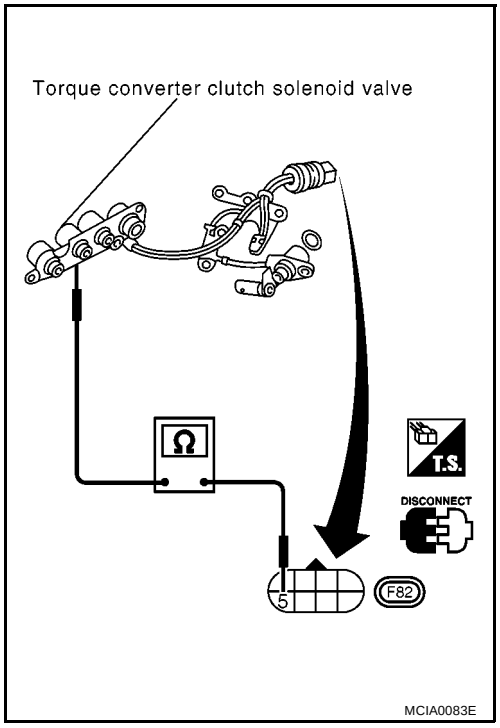

Operation Check

- Check solenoid valve by listening for its operating sound while applying battery voltage to the terminal and ground.

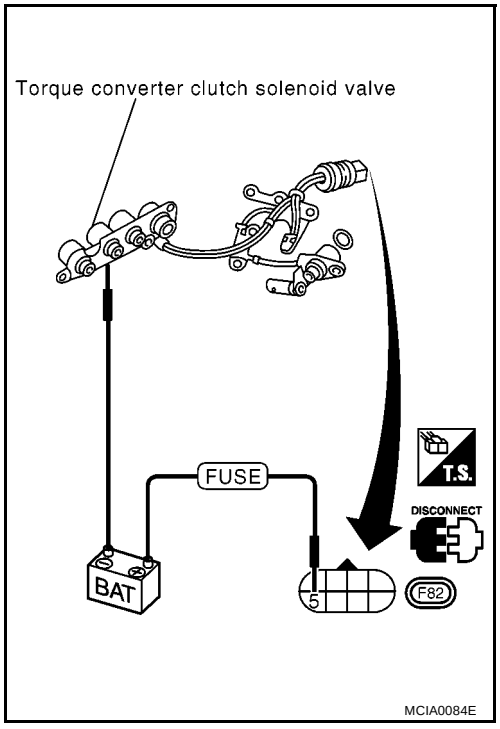

BATT/FLUID TEMP SEN (A/T FLUID TEMP SENSOR CIRCUIT AND TCM POWER SOURCE)

PFP:31940

Description

ECS009BJ

The A/T fluid temperature sensor detects the A/T fluid temperature and sends a signal to the TCM.

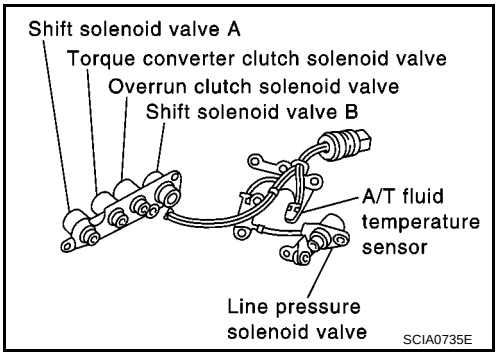

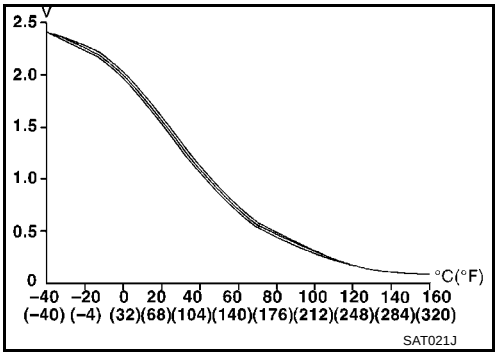

CONSULT-II REFERENCE VALUE IN DATA MONITOR MODE

Remarks: Specification data are reference values.

Monitor item	Condition	Specification (Approximately)	
A/T fluid temperature sensor	Cold [20°C (68°F)] ↓ Hot [80°C (176°F)]	1.5V ↓ 0.5V	2.5 kΩ ↓ 0.3 kΩ

TCM TERMINALS AND REFERENCE VALUE

Remarks: Specification data are reference values.

Terminal No.	Wire color	Item	Condition		Judgement standard (Approx.)
10	BR/R	Power source	ON or OFF	When turning ignition switch to “ON”.	Battery voltage
				When turning ignition switch to “OFF”.	0V
19	BR/R	Power source		Same as No. 10	
28	R/B	Power source (Memory back-up)		When turning ignition switch to “OFF”.	Battery voltage
				When turning ignition switch to “ON”.	Battery voltage
42	B	Ground (A/T fluid temperature sensor)	—	—	—
47	BR	A/T fluid temperature sensor	ON	When ATF temperature is 20°C (68°F).	1.5V
				When ATF temperature is 80°C (176°F).	0.5V

ON BOARD DIAGNOSIS LOGIC

Diagnostic trouble code	Malfunction is detected when...	Check items (Possible cause)
: BATT/FLUID TEMP SEN	TCM receives an excessively low or high voltage from the sensor.	● Harness or connectors (The sensor circuit is open or shorted.) ● A/T fluid temperature sensor
: 8th judgement flicker		

SELF-DIAGNOSIS CODE CONFIRMATION PROCEDURE

After the repair, perform the following procedure to confirm the malfunction is eliminated.

With CONSULT-II

1. Start engine.
2. Select “SELF-DIAG RESULTS” mode for A/T with CONSULT-II.
3. Drive vehicle under the following conditions:
   Selector lever in “D” position, vehicle speed higher than 10 km/h (6 MPH), throttle opening greater than 1/8 of the full open position, engine speed higher than 450 rpm and driving for more than 10 minutes.
4. If DTC is detected, go to AT-384, "Diagnostic Procedure" .

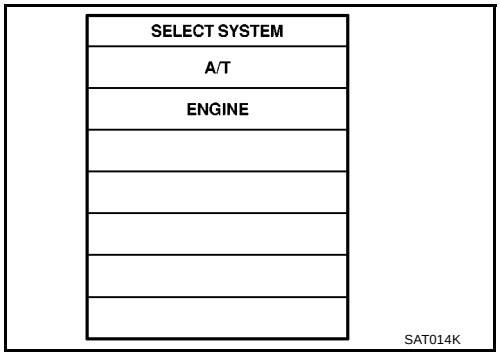

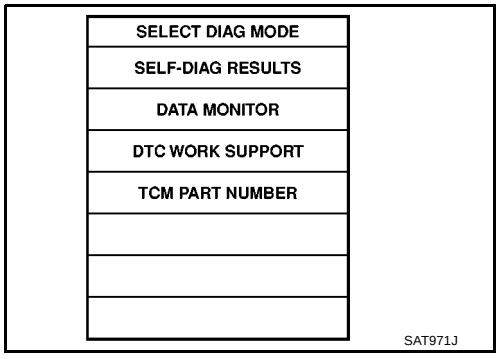

Without CONSULT-II

1. Start engine.
2. Drive vehicle under the following conditions:
   Selector lever in “D” position, vehicle speed higher than 10 km/h (6 MPH), throttle opening greater than 1/8 of the full open position, engine speed higher than 450 rpm and driving for more than 10 minutes.
3. Perform self-diagnosis.
   Refer to AT-51, "TCM SELF-DIAGNOSTIC PROCEDURE (NO TOOLS)" (EURO OBD) or AT-252, "Diagnostic Procedure Without CONSULT-II" (Except EURO OBD).
4. If DTC is detected, go to AT-384, "Diagnostic Procedure" .

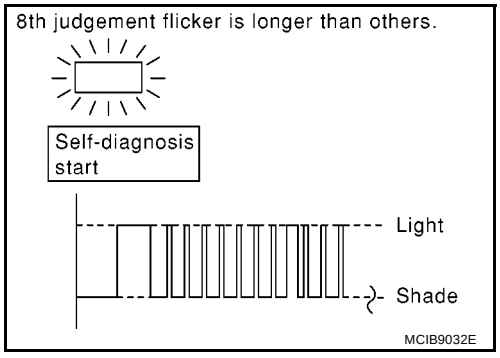

Wiring Diagram — AT — BA/FTS

ECS009BK

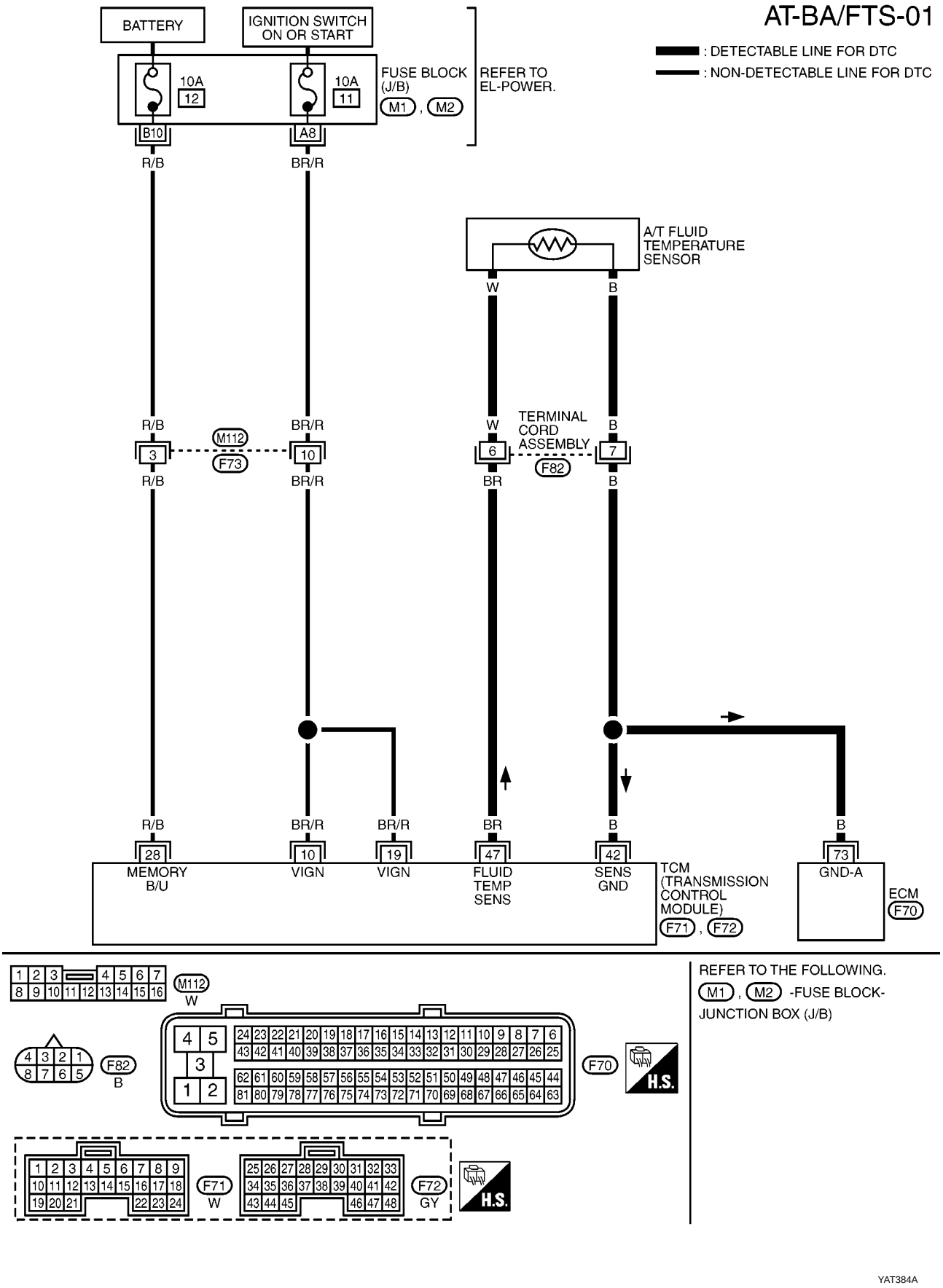

Diagnostic Procedure

ECS009BL

1. CHECK TCM POWER SOURCE

1. Turn ignition switch to “ON” position.
   (Do not start engine.)
2. Check voltage between TCM terminals 10, 19, 28 and ground.

   Voltage: Battery voltage

3. Turn ignition switch to “OFF” position.
4. Check voltage between TCM terminal 28 and ground.

   Voltage: Battery voltage

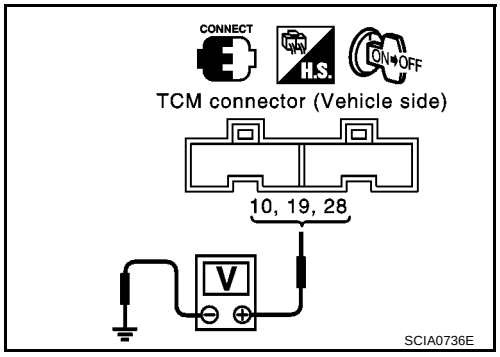

OK or NG

OK >> GO TO 2
NG >> Check the following items:

- Harness for short or open between ignition switch and TCM (Main harness)
- Ignition switch and fuse
  Refer to EL-11, “Power Supply Routing”.

2. CHECK A/T FLUID TEMPERATURE SENSOR WITH TERMINAL CORD ASSEMBLY

1. Turn ignition switch to “OFF” position.
2. Disconnect terminal cord assembly connector in engine compartment.
3. Check resistance between terminals 6 and 7 when A/T is cold.

   Resistance: Cold[20°C(68°F)]
   Approximately 2.5 kΩ

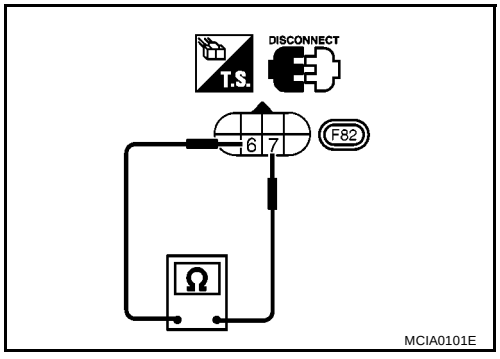

4. Reinstall any part removed.

OK or NG

OK (With CONSULT-II)>>GO TO 3
OK (Without CONSULT-II)>>GO TO 4
NG >> 1. Remove oil pan, refer to AT-410, "Control Valve Assembly and Accumulators" .
2. Check the following items:
A/T fluid temperature sensor
Refer to AT-386, "Component Inspection" .
Harness of terminal cord assembly for short or open

3. CHECK INPUT SIGNAL OF A/T FLUID TEMPERATURE SENSOR (WITH CONSULT-II)

With CONSULT-II

1. Start engine.
2. Select “TCM INPUT SIGNALS” in “DATA MONITOR” mode for “A/T” with CONSULT-II.
3. Read out the value of “FLUID TEMP SE”.

Voltage

Cold [20°C (68°F)] → Hot [80°C (176°F)]:

Approximately 1.5V→0.5V

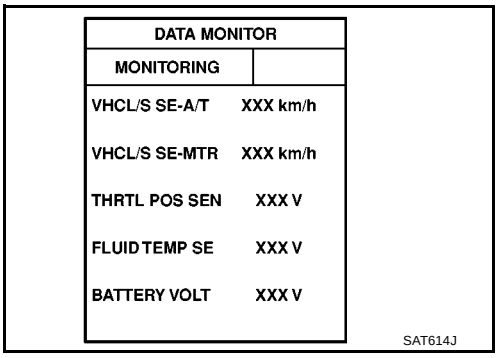

DATA MONITOR	
MONITORING	
VHCL/S SE-A/T	XXX km/h
VHCL/S SE-MTR	XXX km/h
THRTL POS SEN	XXX V
FLUID TEMP SE	XXX V
BATTERY VOLT	XXX V

SAT614J

OK or NG

OK >> GO TO 5

NG >> Check the following item:

- Harness for short or open between TCM, ECM and terminal cord assembly (Main harness)
- Ground circuit for ECM
  Refer to EC-139, "POWER SUPPLY CIRCUIT FOR ECM" (With EURO-OBD) and EC-645, "POWER SUPPLY CIRCUIT FOR ECM" (Without EURO-OBD).

4. CHECK INPUT SIGNAL OF A/T FLUID TEMPERATURE SENSOR (WITHOUT CONSULT-II)

Without CONSULT-II

1. Start engine.
2. Check voltage between TCM terminal 47 and ground while warming up A/T.

Voltage

Cold [20°C (68°F)] → Hot [80°C (176°F)]:

Approximately 1.5V→0.5V

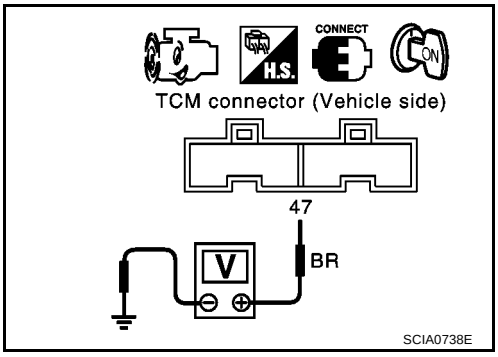

3. Turn ignition switch to “OFF” position.
4. Disconnect TCM harness connector.
5. Check resistance between terminal 42 and ground.

Continuity should exist.

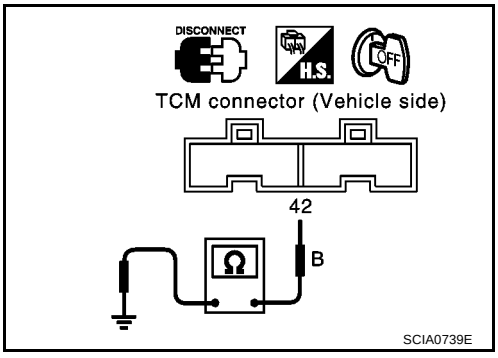

OK or NG

OK >> GO TO 5

NG >> Check the following item:

- Harness for short or open between TCM, ECM and terminal cord assembly (Main harness)
- Ground circuit for ECM
  Refer to EC-139, "POWER SUPPLY CIRCUIT FOR ECM" (With EURO-OBD) and EC-645, "POWER SUPPLY CIRCUIT FOR ECM" (Without EURO-OBD).

5. CHECK DTC

Perform AT-382, "SELF-DIAGNOSIS CODE CONFIRMATION PROCEDURE" .

OK or NG

OK >> **INSPECTION END**

NG >> 1. Perform TCM input/output signal inspection.

2. If NG, recheck TCM pin terminals for damage or loose connection with harness connector.

Component Inspection

ECS009BM

A/T FLUID TEMPERATURE SENSOR

- For removal, refer to AT-410, "Control Valve Assembly and Accumulators" .
- Check resistance between two terminals while changing temperature as shown at left.

Temperature °C (°F)	Resistance
20 (68)	Approximately 2.5 kΩ
80 (176)	Approximately 0.3 kΩ

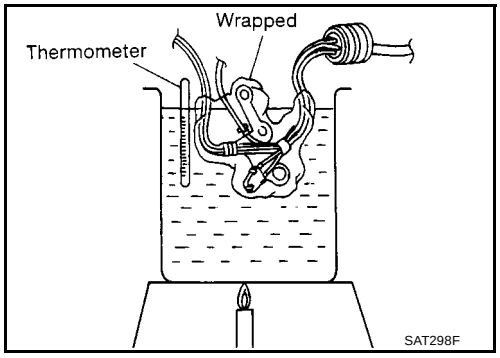

ENGINE SPEED SIGNAL

PFP:24825

Description

ECS009BN

The engine speed signal is sent from the ECM to the TCM.

TCM TERMINALS AND REFERENCE VALUE

Remarks: Specification data are reference values.

Terminal No.	Wire color	Item	Condition		Judgement standard (Approx.)
39	L/OR	Engine speed signal	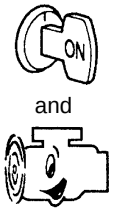	Refer to EC-102, "ECM INSPECTION TABLE" (EURO-OBD), EC-610, "ECM INSPECTION TABLE" (EXCEPT FOR EURO-OBD).	—

ON BOARD DIAGNOSIS LOGIC

Diagnostic trouble code	Malfunction is detected when...	Check item (Possible cause)
: ENGINE SPEED SIG : 9th judgement flicker	TCM does not receive the proper voltage signal from ECM.	● Harness or connectors (The sensor circuit is open or shorted.)

SELF-DIAGNOSIS CODE CONFIRMATION PROCEDURE

After the repair, perform the following procedure to confirm the malfunction is eliminated.

With CONSULT-II

1. Start engine.
2. Select “SELF-DIAG RESULTS” mode for A/T with CONSULT-II.
3. Drive vehicle under the following conditions:
   Selector lever in “D” position, vehicle speed higher than 10 km/h (6 MPH), throttle opening greater than 1/8 of the full throttle position and driving for more than 10 seconds.
4. If DTC is detected, go to AT-390, "Diagnostic Procedure" .

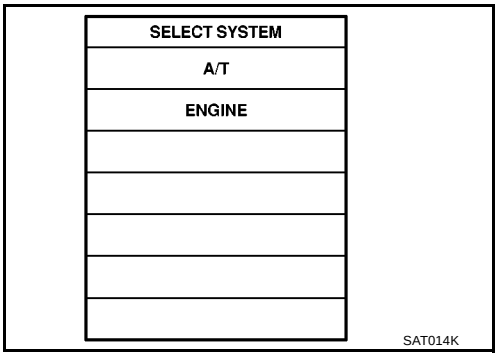

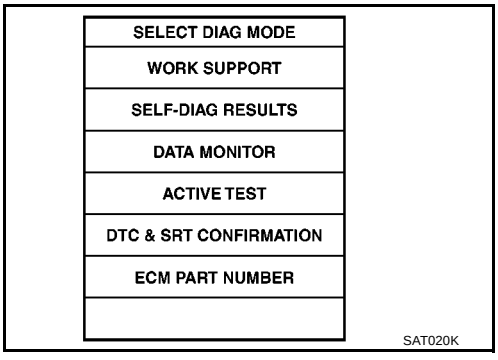

Without CONSULT-II

1. Start engine.
2. Drive vehicle under the following conditions:
   Selector lever in “D” position, vehicle speed higher than 10 km/h (6 MPH), throttle opening greater than 1/8 of the full throttle position and driving for more than 10 seconds.
3. Perform self-diagnosis.
   Refer to AT-252, "Diagnostic Procedure Without CONSULT-II" .
4. If DTC is detected, go to AT-390, "Diagnostic Procedure" .

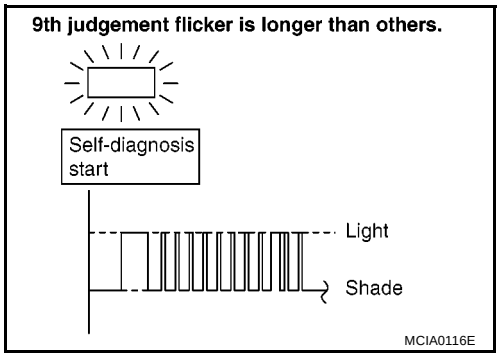

Wiring Diagram — AT — ENGSS

ECS009BO

AT-ENGSS-01

: DETECTABLE LINE FOR DTC

: NON-DETECTABLE LINE FOR DTC

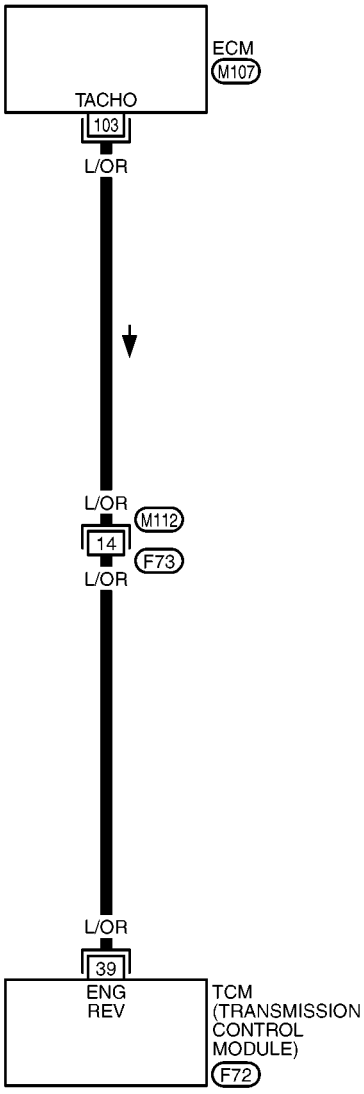

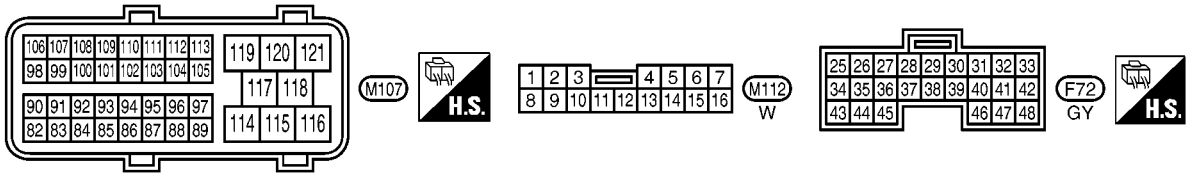

YAT372A

Diagnostic Procedure

ECS009BP

1. CHECK DTC WITH ECM

Perform “Overall function check” for ignition signal. Refer to EC-518, "Diagnostic Procedure" .

OK or NG

OK (With CONSULT-II)>>GO TO 2
OK (Without CONSULT-II)>>GO TO 3
NG >> Follow the construction of EC-518, "Diagnostic Procedure" .

2. CHECK INPUT SIGNAL (WITH CONSULT-II)

With CONSULT-II

1. Start engine.
2. Select “TCM INPUT SIGNALS” in “DATA MONITOR” mode for “A/T” with CONSULT-II.

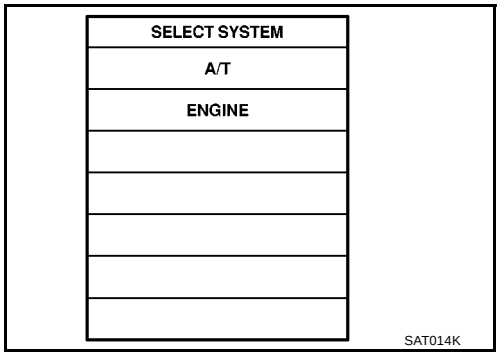

3. Read out the value of “ENGINE SPEED”.
   Check engine speed changes according to throttle position.

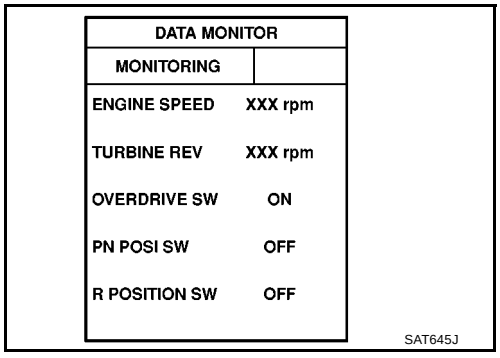

OK or NG

OK >> GO TO 4
NG >> Check the following items:

- Harness for short or open between TCM and ECM
- Resistor and ignition coil
  Refer to EC-514, "IGNITION SIGNAL" .

3. CHECK INPUT SIGNAL (WITHOUT CONSULT-II)

Without CONSULT-II

1. Start engine.
2. Check voltage between TCM terminal 39 and ground.

Voltage (Idle speed):

Refer to EC-514, "IGNITION SIGNAL" .

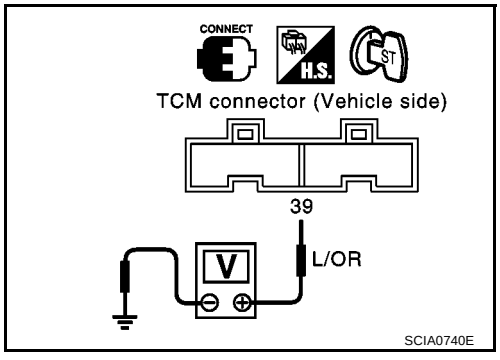

OK or NG

OK >> GO TO 4
NG >> Check the following items:

- Harness for short or open between TCM and ECM
- Resistor and ignition coil
  Refer to EC-514, "IGNITION SIGNAL" .

4. CHECK DTC

Perform AT-387, "SELF-DIAGNOSIS CODE CONFIRMATION PROCEDURE" .

OK or NG

OK >> **INSPECTION END**

NG >> 1. Perform TCM input/output signal inspection.

2. If NG, recheck TCM pin terminals for damage or loose connection with harness connector.

LINE PRESSURE SOLENOID VALVE

PFP:31940

Description

ECS009BQ

The line pressure solenoid valve regulates the oil pump discharge pressure to suit the driving condition in response to a signal sent from the TCM.

NOTE:
The line pressure duty cycle value is not consistent when the closed throttle position switch is “ON”. To confirm the line pressure duty cycle at low pressure, the accelerator (throttle) should be open until the closed throttle position switch is “OFF”.

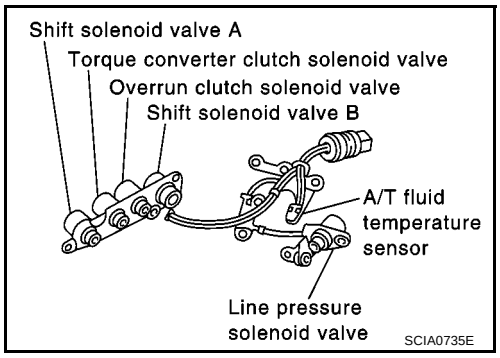

CONSULT-II REFERENCE VALUE IN DATA MONITOR MODE

Remarks: Specification data are reference values.

Monitor item	Condition	Specification
Line pressure solenoid valve duty	Small throttle opening (Low line pressure) ↓ Large throttle opening (High line pressure)	Approximately 24% ↓ Approximately 95%

NOTE:
The line pressure duty cycle value is not consistent when the closed throttle position switch is “ON”. To confirm the line pressure duty cycle at low pressure, the accelerator (throttle) should be open until the closed throttle position switch is “OFF”.

TCM TERMINALS AND REFERENCE VALUE

Remarks: Specification data are reference values.

Terminal No.	Wire color	Item	Condition		Judgement standard (Approx.)
1	R/W	Line pressure solenoid valve		When releasing accelerator pedal after warming up engine.	1.5 - 3.0V
				When depressing accelerator pedal fully after warming up engine.	0V
2	P/B	Line pressure solenoid valve (with dropping resistor)		When releasing accelerator pedal after warming up engine.	4 - 14V
				When depressing accelerator pedal fully after warming up engine.	0V

ON BOARD DIAGNOSIS LOGIC

Diagnostic trouble code	Malfunction is detected when...	Check items (Possible cause)
: LINE PRESSURE S/V	TCM detects an improper voltage drop when it tries to operate the solenoid valve.	● Harness or connectors (The solenoid circuit is open or shorted.) ● Line pressure solenoid valve
: 10th judgement flicker		

SELF-DIAGNOSIS CODE CONFIRMATION PROCEDURE

After the repair, perform the following procedure to confirm the malfunction is eliminated.

With CONSULT-II

1. Start engine.
2. Select “SELF-DIAG RESULTS” mode for A/T with CONSULT-II.
3. With brake pedal depressed, shift the lever from “P” → “N” → “D” → “N” → “P” positions.
4. If DTC is detected, go to AT-395, "Diagnostic Procedure" .

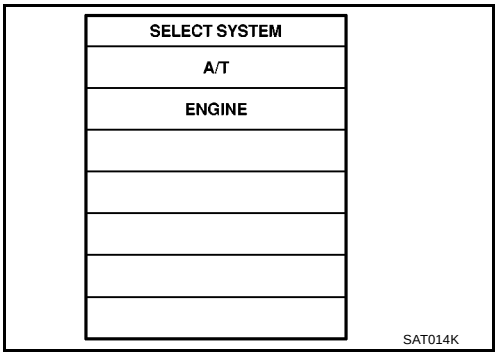

Without CONSULT-II

1. Start engine.
2. With brake pedal depressed, shift the lever from “P” → “N” → “D” → “N” → “P” positions.
3. Perform self-diagnosis.
   Refer to AT-252, "Diagnostic Procedure Without CONSULT-II" .
4. If DTC is detected, go to AT-395, "Diagnostic Procedure" .

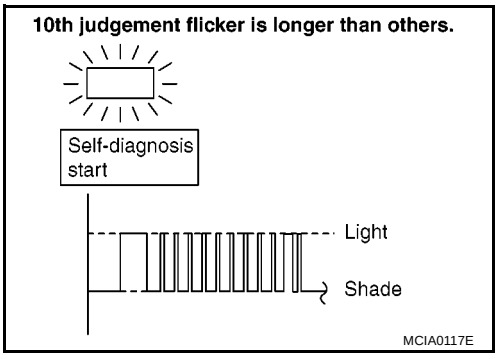

Wiring Diagram — AT — LPSV

ECS009BR

AT-LPSV-01

: DETECTABLE LINE FOR DTC
: NON-DETECTABLE LINE FOR DTC

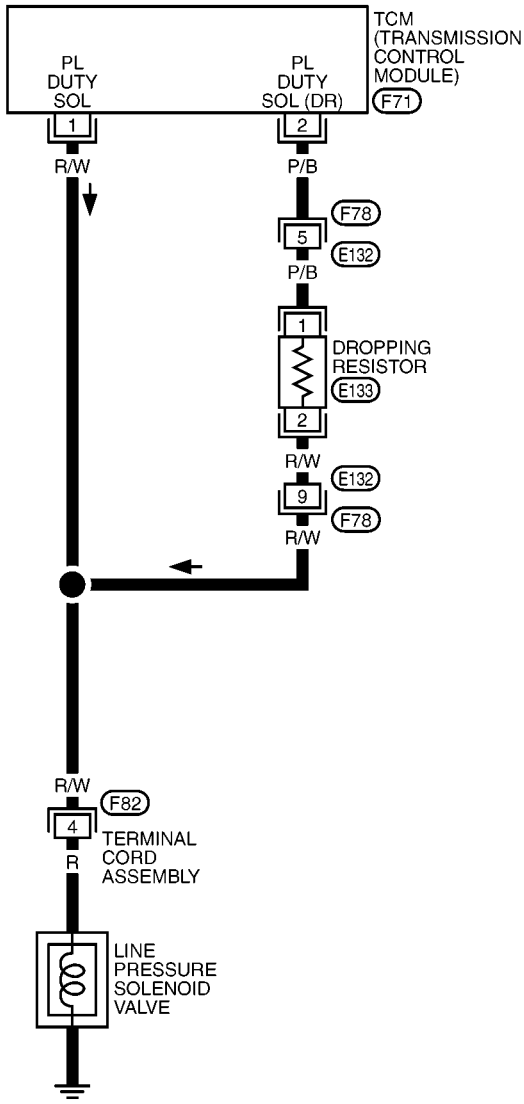

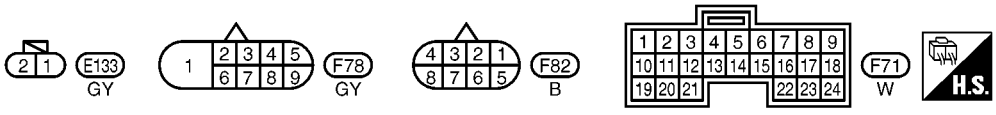

YAT378A

Diagnostic Procedure

ECS009BS

1. CHECK VALVE RESISTANCE

1. Turn ignition switch to “OFF” position.
2. Disconnect terminal cord assembly connector in engine compartment.
3. Check resistance between terminal 4 and ground.

Resistance: 2.5 - 5Ω

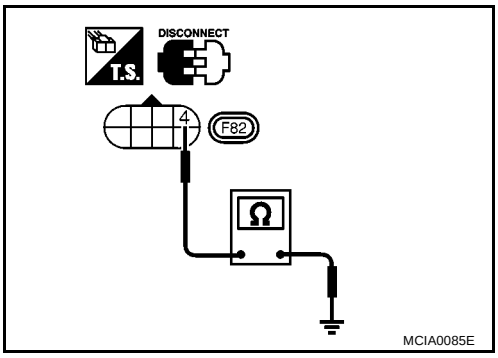

OK or NG

OK >> GO TO 2

NG >> 1. Remove control valve assembly. Refer to AT-410, "Control Valve Assembly and Accumulators" .

2. Check the following items:
   - Line pressure solenoid valve
     Refer to AT-397, "Component Inspection" .
   - Harness of terminal cord assembly for short or open

2. CHECK POWER SOURCE CIRCUIT

1. Turn ignition switch to “OFF” position.
2. Disconnect TCM harness connector.
3. Check resistance between terminal 4 and TCM harness connector terminal 2.

Resistance: 10 - 15Ω

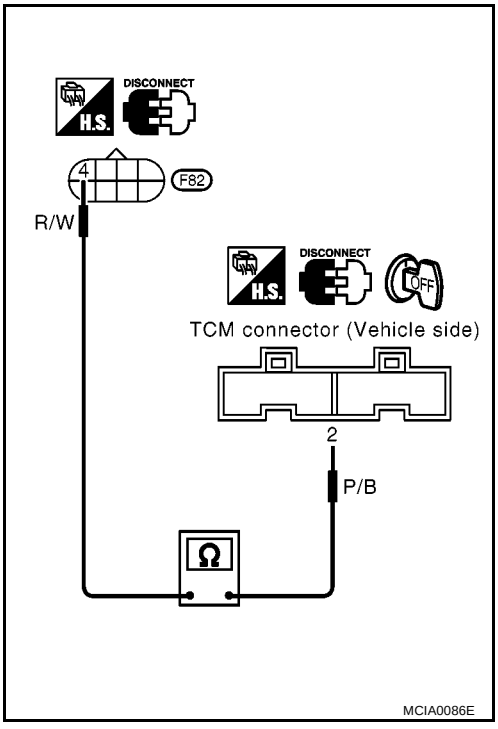

OK or NG

OK >> GO TO 3

NG >> Check the following items:

- Dropping resistor
  Refer to AT-397, "Component Inspection" .
- Harness for short or open between TCM terminal 2 and terminal cord assembly (Main harness)

3. CHECK POWER SOURCE CIRCUIT

1. Turn ignition switch to “OFF” position.
2. Check resistance between terminal 4 and TCM harness connector terminal 1.

   Resistance: Approx. 0Ω

   If NG, check harness for short to ground and short to power.
3. Reinstall any part removed.

OK or NG

OK >> GO TO 4
NG >> Repair open circuit or short to ground or short to power in harness or connectors.

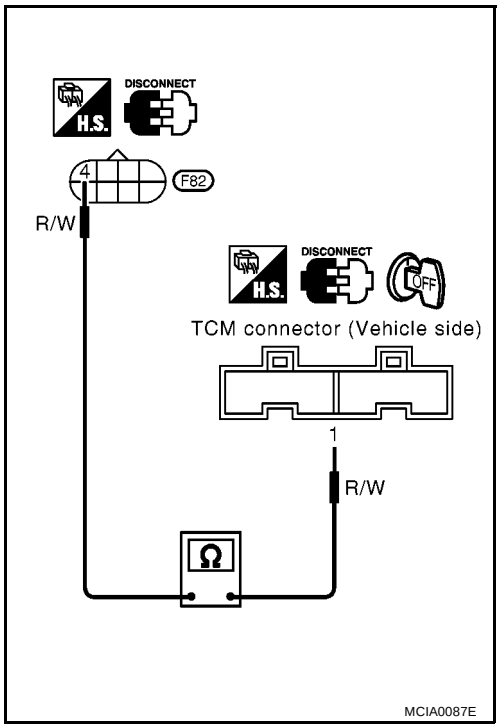

4. CHECK DTC

Perform AT-393, "SELF-DIAGNOSIS CODE CONFIRMATION PROCEDURE" .

OK or NG

OK >> **INSPECTION END**
NG >> 1. Perform TCM input/output signal inspection.
2. If NG, recheck TCM pin terminals for damage or loose connection with harness connector.

Component Inspection

ECS009BT

LINE PRESSURE SOLENOID VALVE

- For removal, refer to AT-410, "Control Valve Assembly and Accumulators" .

Resistance Check

- Check resistance between two terminals.

Solenoid valve	Terminal No.		Resistance (Approx.)
Line pressure solenoid valve	4	Ground	2.5 - 5Ω

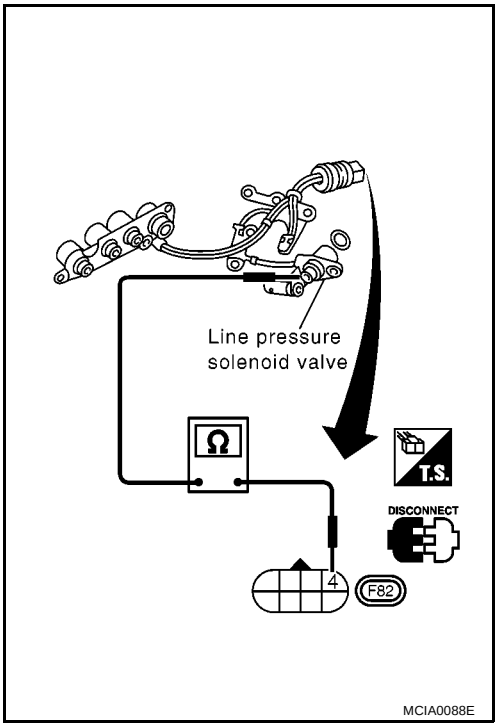

Operation Check

- Check solenoid valve by listening for its operating sound while applying battery voltage to the terminal and ground.

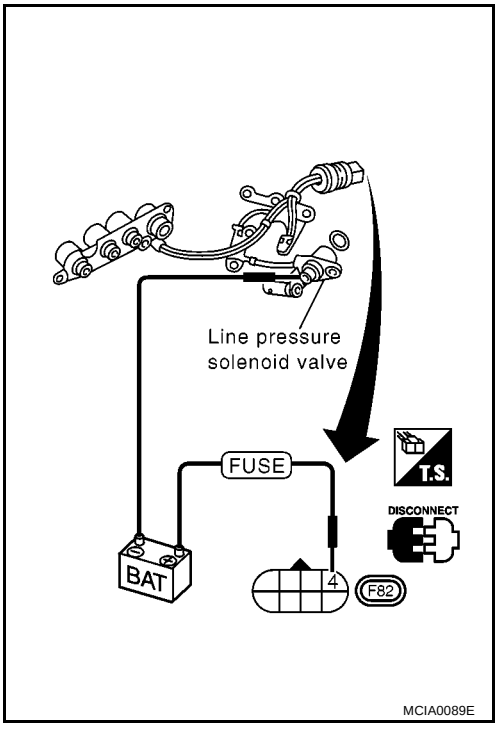

DROPPING RESISTOR

- Check resistance between two terminals.

  Resistance: 10 - 15Ω

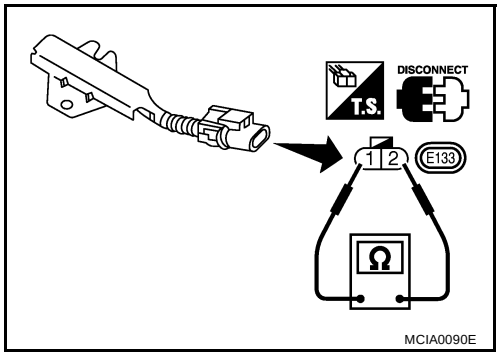

CAN COMMUNICATION LINE

PFP:31940

Description

ECS009BU

CAN (Controller Area Network) is a serial communication line for real time application. It is an on-vehicle multiplex communication line with high data communication speed and excellent error detection ability. Many electronic control units are equipped onto a vehicle, and each control unit shares information and links with other control units during operation (not independent). In CAN communication, control units are connected with 2 communication lines (CAN H line, CAN L line) allowing a high rate of information transmission with less wiring. Each control unit transmits/receives data but selectively reads required data only.

TCM TERMINALS AND REFERENCE VALUE

Remarks: Specification data are reference values.

Terminal No.	Wire color	Item	Condition		Judgement standard (Approx.)
5	L	CAN (H)	—	—	—
6	R	CAN (L)	—	—	—

*: This terminal is connected to the ECM.

On Board Diagnosis Logic

ECS009BV

Diagnostic trouble code	Malfunction is detected when...	Check items (Possible cause)
: A/T COMM LINE**	The ECM-AT communication line is open or shorted.	● Harness or connectors (The solenoid circuit is open or shorted.) ● Line pressure solenoid valve
: 11th judgement flicker		

**: A/T COMM LINE means CAN communication line.

Self-Diagnosis Code Confirmation Procedure

ECS009BW

After the repair, perform the following procedure to confirm the malfunction is eliminated.

WITH CONSULT-II

1. Turn ignition switch “ON”.
2. Select “DATA MONITOR” mode for “A/T” with CONSULT-II.
3. Wait at least 6 seconds or start engine and wait for at least 6 seconds.
4. If DTC is detected, go to AT-401, "Diagnostic Procedure" .

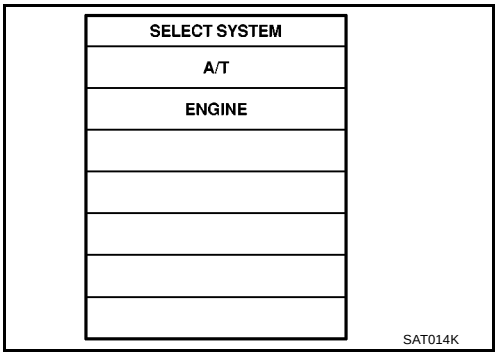

WITHOUT CONSULT-II

1. Turn ignition switch “ON”.
2. Wait at least 6 seconds or start engine and wait at least 6 seconds.
3. Perform self-diagnosis.
   Refer to AT-252, "Diagnostic Procedure Without CONSULT-II" .
4. If DTC is detected, go to AT-401, "Diagnostic Procedure" .

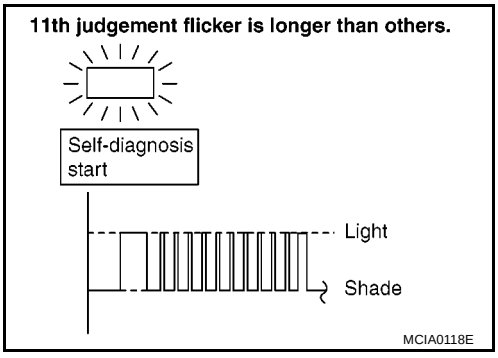

Wiring Diagram — AT — CAN

ECS009BX

AT-CAN-01

: DATA LINE

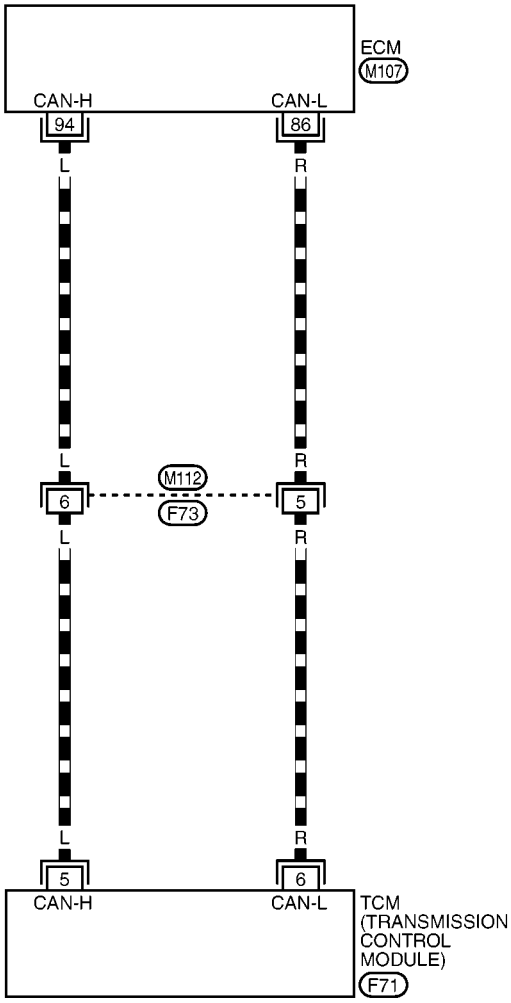

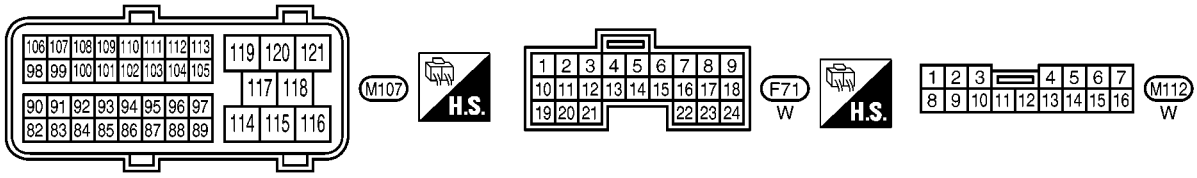

YAT383A

Diagnostic Procedure

ECS009BY

1. CHECK CAN COMMUNICATION CIRCUIT

With CONSULT-II

1. Turn ignition switch to “ON” position. (Do not start engine.)
2. Select “DATA MONITOR” mode for “A/T” with CONSULT-II.
3. The “CON COMM CIRCUIT” is detected.

Yes or No?

Yes >> Print out CONSULT-II screen, GO TO 2.
NG >> INSPECTION END

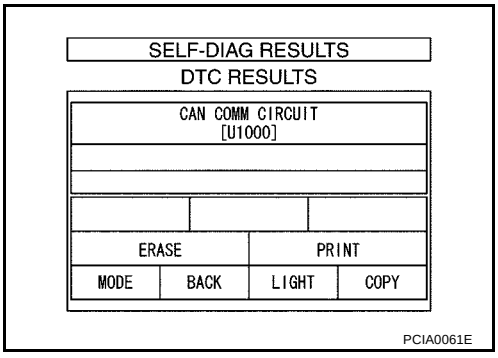

2. CHECK CAN COMMUNICATION SIGNALS

With CONSULT-II

1. Turn ignition switch to “ON” position. (Do not start engine.)
2. Select “CAN COMM SIGNALS” in “DATA MONITOR” mode for “A/T” with CONSULT-II.

CAN Communication Signals

Normal conditions	Abnormal conditions (examples)
CAN COMM: OK	CAN COMM: OK
CAN CIRC 1: OK	CAN CIRC 1: UNKWN
CAN CIRC 2: OK	CAN CIRC 2: UNKWN
CAN CIRC 3: UNKWN	CAN CIRC 3: UNKWN
CAN CIRC 4: OK	CAN CIRC 4: UNKWN
CAN CIRC 5: UNKWN	CAN CIRC 5: UNKWN

>> Print out CONSULT-II screen, go to EL-459, “CAN Communication”.

A/T SHIFT LOCK SYSTEM

PFP:34950

Description

ECS009BZ

- The mechanical key interlock mechanism also operates as a shift lock:
  With the key switch turned to ON, the selector lever cannot be shifted from “P” (parking) to any other position unless the brake pedal is depressed.
  With the key removed, the selector lever cannot be shifted from “P” to any other position.
  The key cannot be removed unless the selector lever is placed in “P”.
- The shift lock and key interlock mechanisms are controlled by the ON-OFF operation of the shift lock solenoid and by the operation of the rotator and slider located inside the key cylinder.

Shift Lock System Electrical Parts Location

ECS009C0

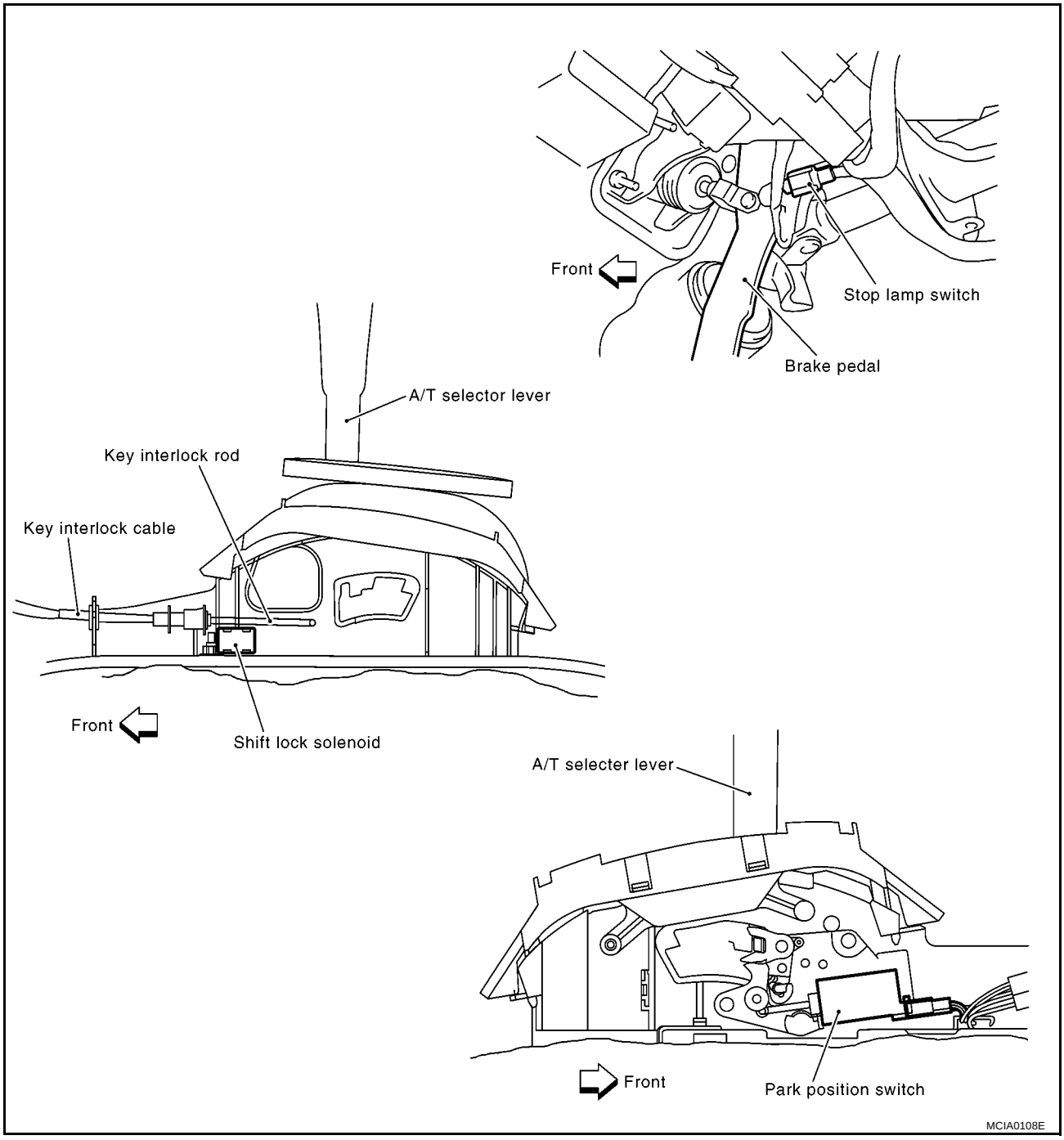

Wiring Diagram — SHIFT —

ECS009C1

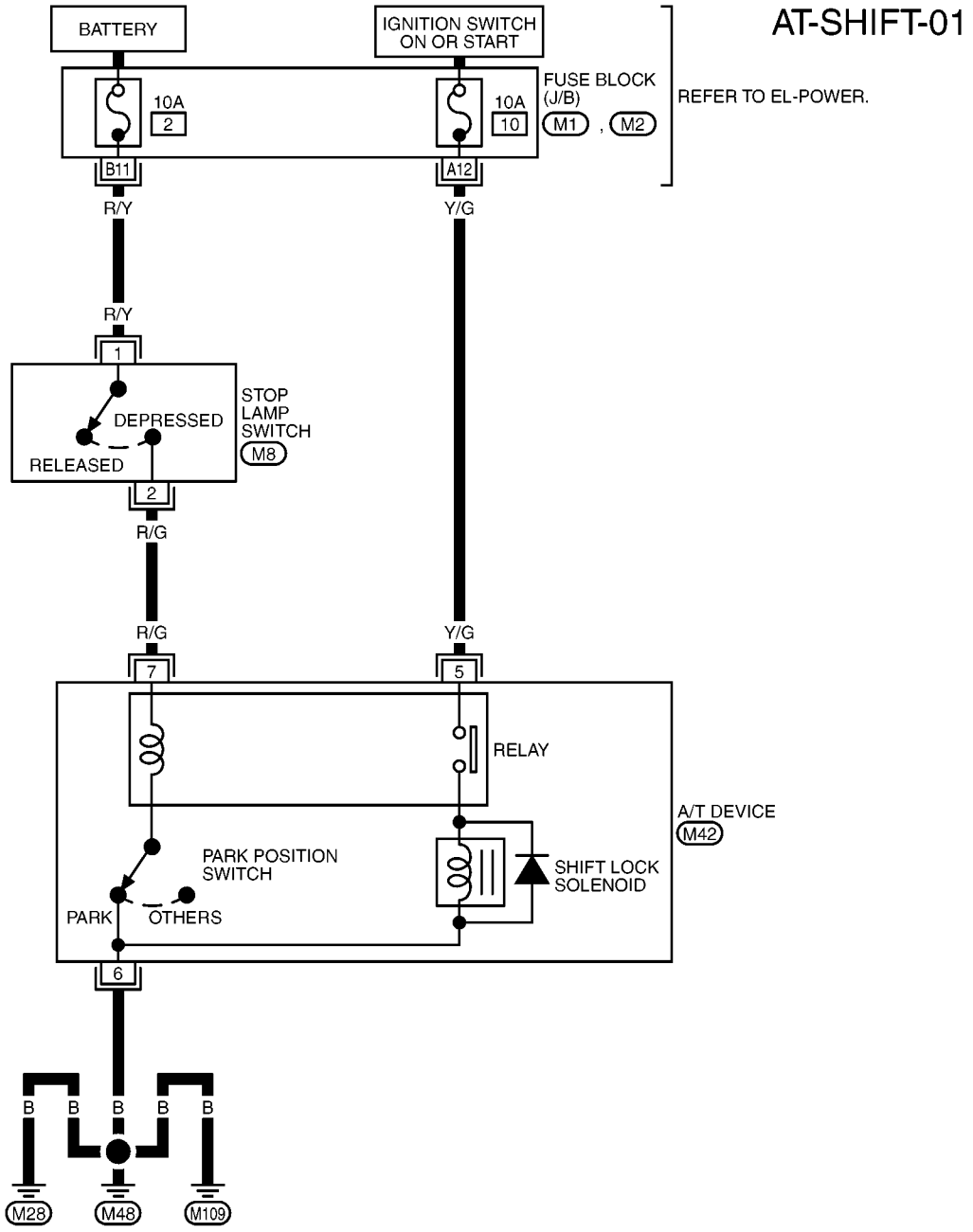

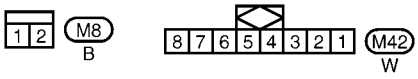

REFER TO THE FOLLOWING.
M1 , M2 -FUSE BLOCK-JUNCTION BOX (J/B)

YAT389A

Diagnostic Procedure

ECS009C2

SYMPTOM 1:

- **Selector lever cannot be moved from “P” position with key in ON position and brake pedal applied.**
- **Selector lever can be moved from “P” position with key in ON position and brake pedal released.**
- **Selector lever can be moved from “P” position when key is removed from key cylinder.**

SYMPTOM 2:
Ignition key cannot be removed when selector lever is set to “P” position. It can be removed when selector lever is set to any position except “P”.

1. CHECK KEY INTERLOCK CABLE

Check key interlock cable for damage.

OK or NG

OK >> GO TO 2
NG >> Repair key interlock cable. Refer to AT-408, "KEY INTERLOCK CABLE" .

2. CHECK SELECTOR LEVER POSITION

Check selector lever position for damage.

OK or NG

OK >> GO TO 3
NG >> Check selector lever. Refer to AT-412, "Park/Neutral Position (PNP) Switch Adjustment" .

3. CHECK POWER SOURCE

1. Turn ignition switch to “ON” position.
   (Do not start engine.)
2. Check voltage between stop lamp switch harness terminal 1 and ground.

   Voltage: Battery voltage

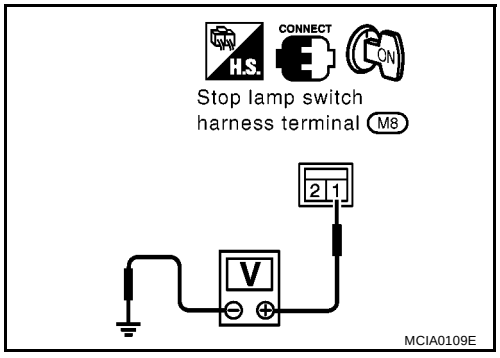

OK or NG

OK >> GO TO 4
NG >> Check the following items:
   1. Harness for short or open between battery and stop lamp switch harness terminal 1
   2. Fuse
   3. Ignition switch (Refer to EL-11, “Power Supply Routing”.)

4. CHECK INPUT SIGNAL (A/T DEVICE)

Turn ignition switch to “ON” position.
(Do not start engine.)

- Check voltage between A/T device harness terminal 7 and ground.

Voltage:

Brake pedal depressed:

Battery voltage

Brake pedal released:

0V

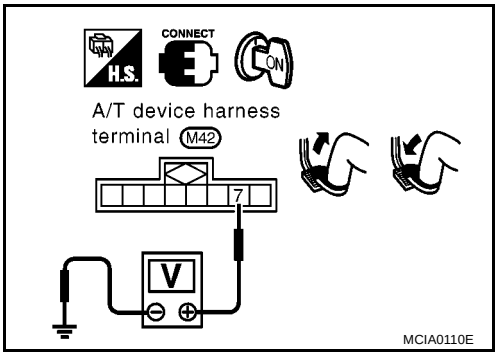

OK or NG

OK >> GO TO 5
NG >> Check the following items:

1. Harness for short and open between battery and stop lamp switch harness connector 1.
2. Harness for short or open between stop lamp switch harness connector 2 and A/T device harness connector 7.
3. Fuse
4. Stop lamp switch (Refer to AT-407, "A/T DEVICE CHECK" .)

5. CHECK GROUND CIRCUIT

1. Turn ignition switch to “OFF” position.
2. Disconnect A/T device harness connector.
3. Check continuity between A/T device harness terminal 6 and ground.

Continuity should exist.

If OK, check harness for short to ground and short to power.

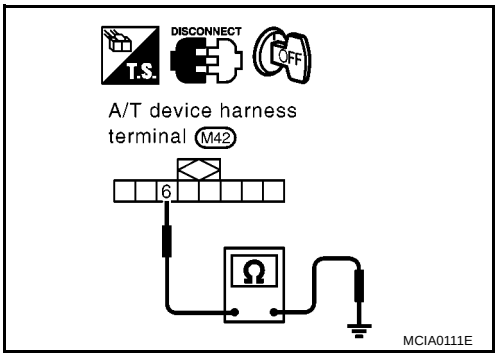

OK or NG

OK >> GO TO 6
NG >> Repair open circuit or short to ground or short to power in harness or connectors.

6. CHECK RELAY CIRCUIT

1. Turn ignition switch to ON.
   Check voltage between terminal 7 - 6 and 5 - 6.

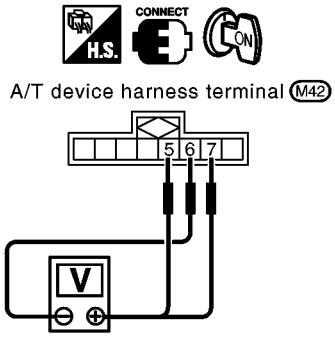

Condition	Ignition switch	Terminal No.	Voltage
When selector lever is set in “P” position and depressed brake pedal.	ON	7 - 6	Battery voltage
		5 - 6	Battery voltage

MCIA0112E

OK or NG

OK >> GO TO 7
NG >> Replace A/T device.

7. CHECK PARK POSITION SWITCH

Refer to AT-407, "A/T DEVICE CHECK" .

OK or NG

OK >> GO TO 8
NG >> Replace A/T device.

8. CHECK SHIFT LOCK SOLENOID

Refer to AT-407, "A/T DEVICE CHECK" .

OK or NG

OK >> GO TO 9
NG >> Replace A/T device.

9. SHIFT LOCK OPERATION

1. Reconnect shift lock harness connector.
2. Turn ignition switch from “OFF” to “ON” position. (Do not start engine.)
3. Recheck shift lock operation.

OK or NG

OK >> **INSPECTION END**
NG >> 1. Perform A/T device input/output signal inspection test.
2. If NG, recheck harness connector connection.

A/T DEVICE CHECK

1. Shift Lock Solenoid

- Check operation sound.
  When ignition switch is turned to “ON” position and selector lever is set in “P” position.

Brake pedal	Operation sound
Depressed	Yes
Released	No

2. Park Position Switch

- Check resistance between A/T device harness terminal 6 and 7.

Condition	Resistance
When selector lever is set in “P” position and selector lever button is released	111Ω
When selector lever is not set in “P” position and selector lever button is released	0Ω

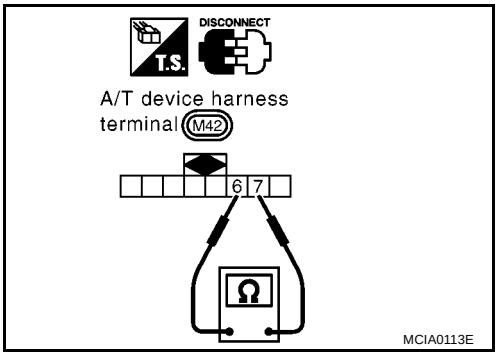

STOP LAMP SWITCH

- Check continuity between terminals 1 and 2.

Condition	Continuity
When brake pedal is depressed	Yes
When brake pedal is released	No

Check stop lamp switch after adjusting brake pedal — refer to BR-14, “Brake Pedal and Bracket”.

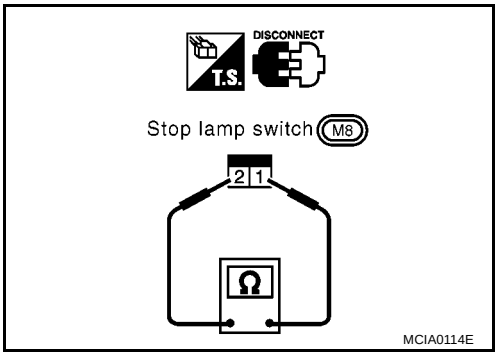

KEY INTERLOCK CABLE

PFP:34908

Components

ECS009C3

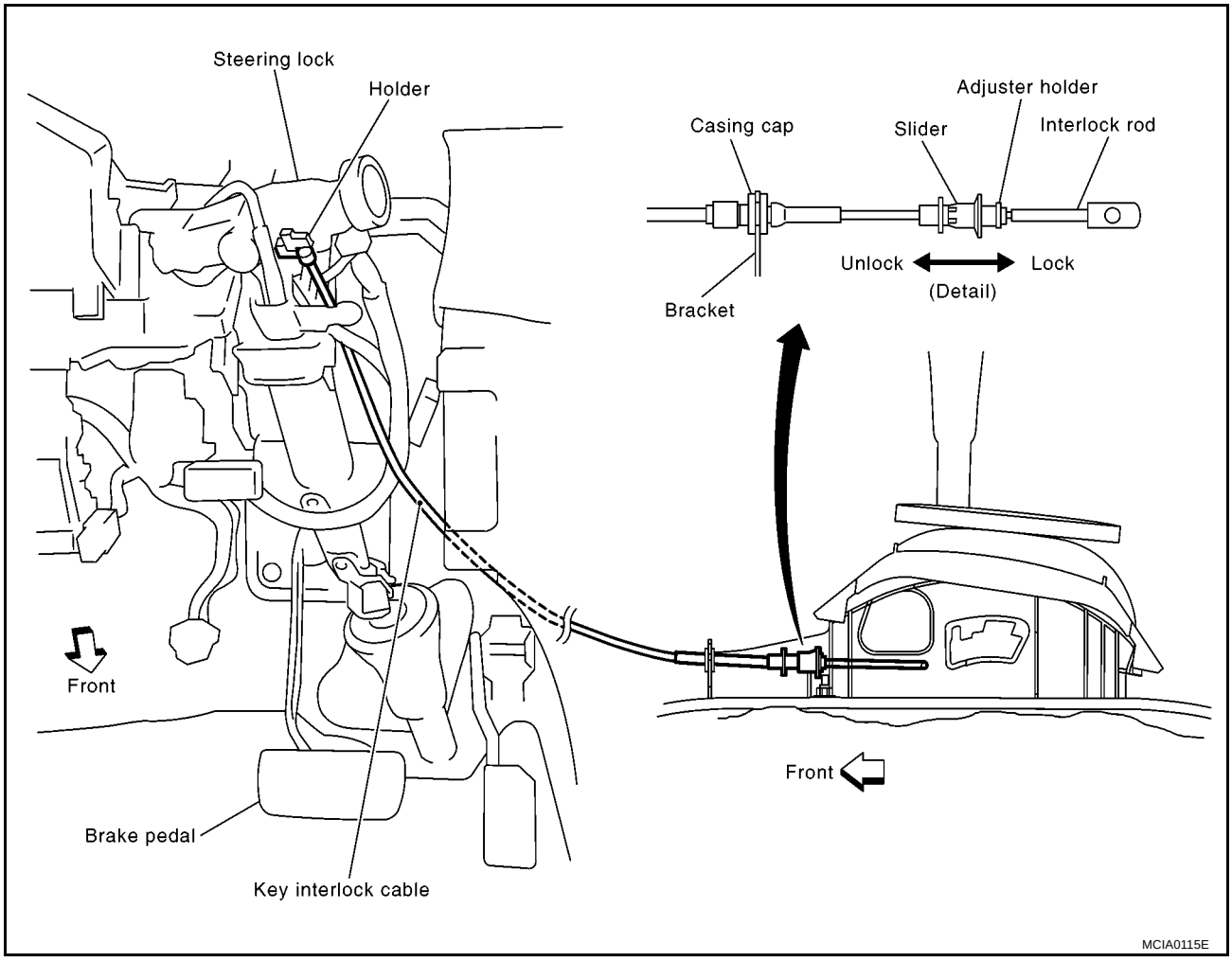

CAUTION:

- **Install key interlock cable in such a way that it will not be damaged by sharp bends, twists or interference with adjacent parts.**
- **After installing key interlock cable to control device, make sure that casing cap and bracket are firmly secured in their positions.**

Removal

ECS009C4

1. Unlock slider by squeezing lock tabs on slider from adjuster holder and remove interlock rod from cable.

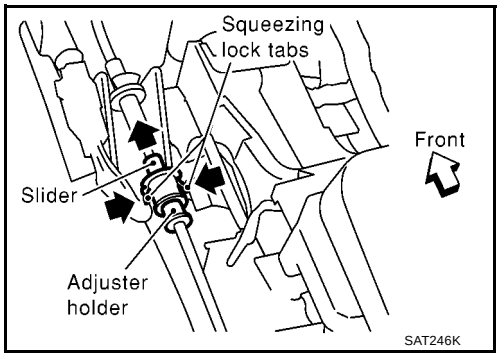

2. Remove lock plate from steering lock assembly and remove key interlock cable.

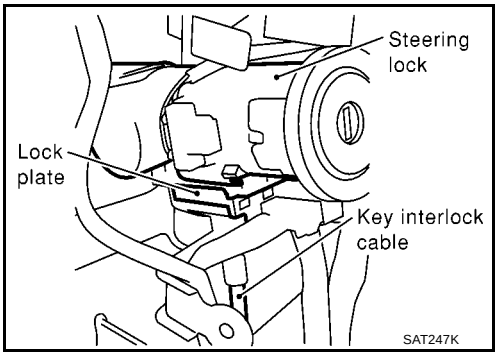

Installation

ECS009C5

1. Turn ignition key to lock position.
2. Set A/T selector lever to P position.
3. Set key interlock cable to steering lock assembly and install lock plate.
4. Clamp cable to steering column and fix to control cable with band.

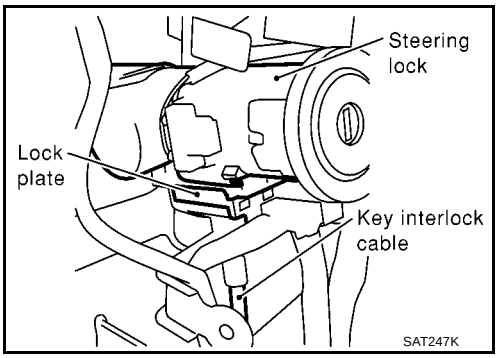

5. Insert interlock rod into adjuster holder.

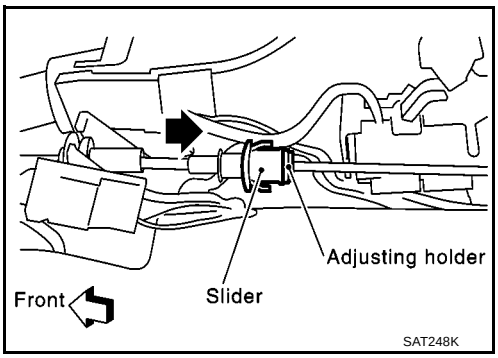

6. Install casing cap to bracket.
7. Move slider in order to fix adjuster holder to interlock rod.

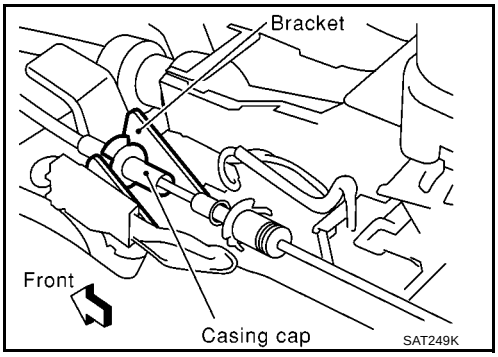

ON-VEHICLE SERVICE

PFP:00000

Control Valve Assembly and Accumulators

ECS009C6

REMOVAL

1. Drain ATF from transaxle.
2. Remove oil pan and gasket.

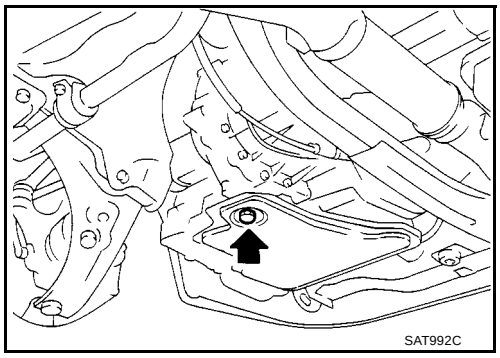

3. Disconnect A/T solenoid valve harness connector.

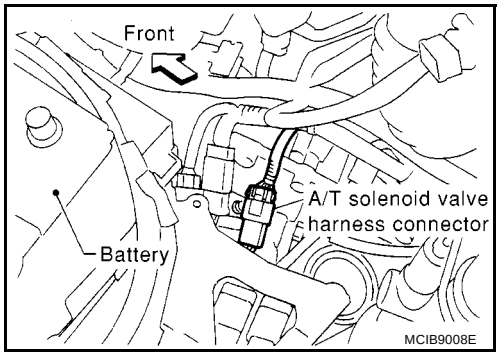

4. Remove snap ring from A/T solenoid valve harness terminal body.
5. Remove A/T solenoid valve harness by pushing terminal body into transmission case.

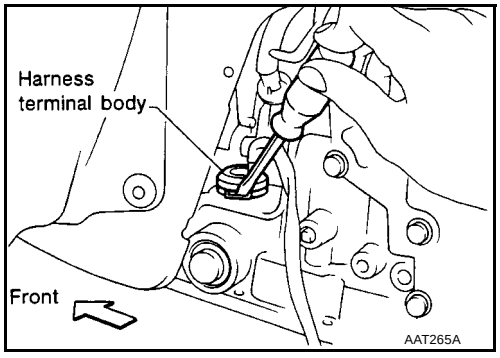

6. Remove control valve assembly by removing fixing bolts.

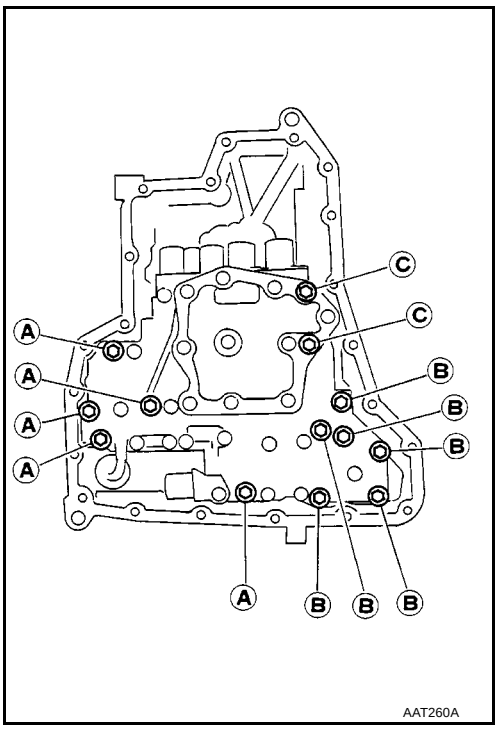

Bolt length, number and location:

Bolt symbol	A	B	C
Bolt length " ℓ " mm (in)	40.0 mm (1.575 in)	33.0 mm (1.299 in)	43.5 mm (1.713 in)
Number of bolts	5	6	2

- **Be careful not to drop manual valve and servo release accumulator return springs.**

7. Disassemble and inspect control valve assembly if necessary. Refer to AT-410, "Control Valve Assembly and Accumulators" .
8. Remove servo release and N-D accumulators by applying compressed air if necessary.
   - **Hold each piston with a rag.**

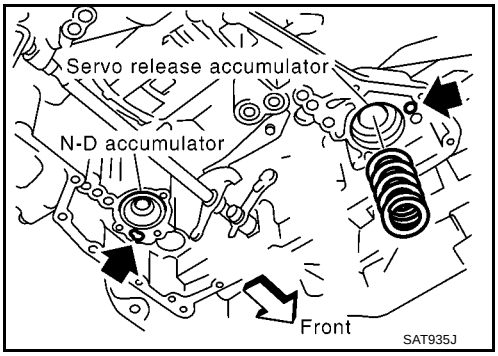

INSTALLATION

- **Tighten fixing bolts to specification.**

  : 7 - 9 N-m (0.7 - 0.9 kg-m, 61 - 78 in-lb)

- **Set manual shaft in Neutral position, then align manual plate with groove in manual valve.**
- **After installing control valve assembly to transmission case, make sure that selector lever can be moved to all positions.**

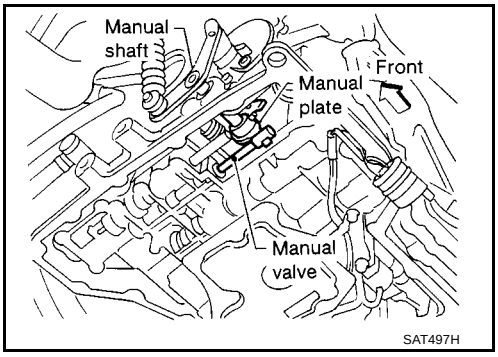

Control Cable Adjustment

ECS009C7

Move selector lever from the “P” position to the “1” position. You should be able to feel the detentes in each position. If the detentes cannot be felt or if the pointer indicating the position is improperly aligned, the control cable needs adjustment.

1. Place selector lever in “P” position.
2. Loosen control cable lock nut and place manual shaft in “P” position.
3. Pull control cable, by specified force, in the direction of the arrow shown in the illustration.

   Specified force: 6.9 N (0.7 kg, 1.5 lb)

4. Return control cable in the opposite direction of the arrow for 1.0 mm (0.039 in).
5. Tighten control cable lock nut.
6. Move selector lever from “P” to “1” position again. Make sure that selector lever moves smoothly.
7. Apply grease to contacting areas of selector lever and control cable. Install any part removed.

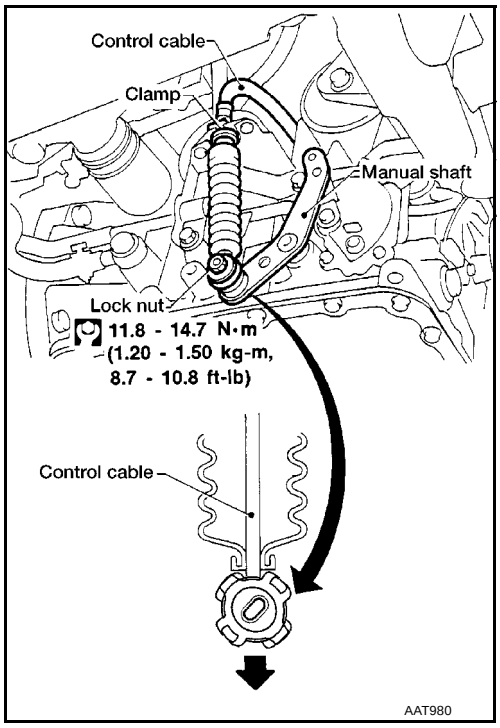

Park/Neutral Position (PNP) Switch Adjustment

ECS009C8

1. Remove control cable end from manual shaft.
2. Set manual shaft in “N” position.
3. Loosen PNP switch fixing bolts.

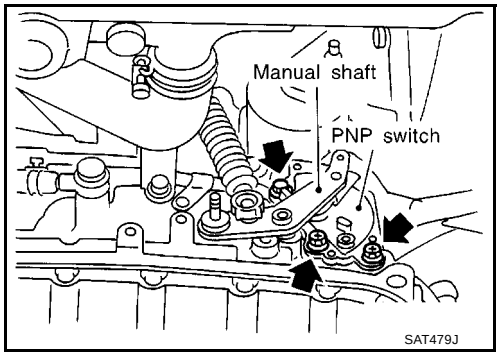

4. Use a 4 mm (0.157 in) pin for this adjustment.
   a. Insert the pin straight into the manual shaft adjustment hole.
   b. Rotate PNP switch until the pin can also be inserted straight into hole in PNP switch.
5. Tighten PNP switch fixing bolts.
6. Remove pin from adjustment hole after adjusting PNP switch.
7. Reinstall any part removed.
8. Adjust control cable. Refer to AT-412, "Control Cable Adjustment" .
9. Check continuity of PNP switch. Refer to AT-113, "DTC P0705 PARK/NEUTRAL POSITION (PNP) SWITCH" .

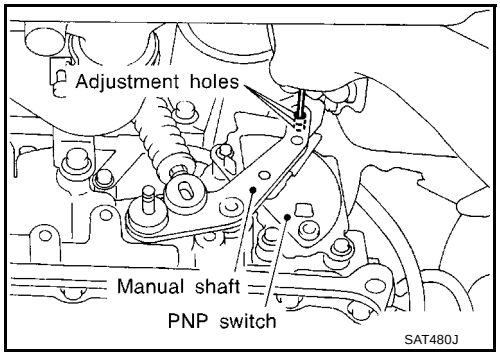

Differential Side Oil Seal Replacement

ECS009C9

1. Remove drive shaft assemblies. Refer to AX-10, “Drive Shaft”.
2. Remove oil seals.

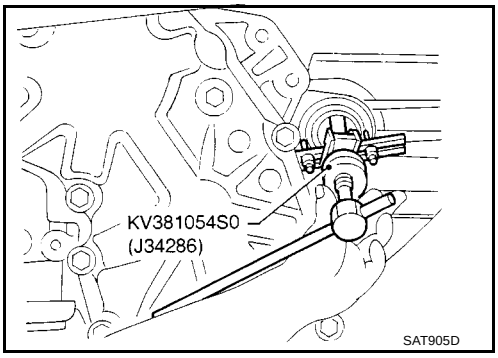

3. Install oil seals.
   - **Apply ATF to oil seal surface before installing.**
   - **Drift for installing**

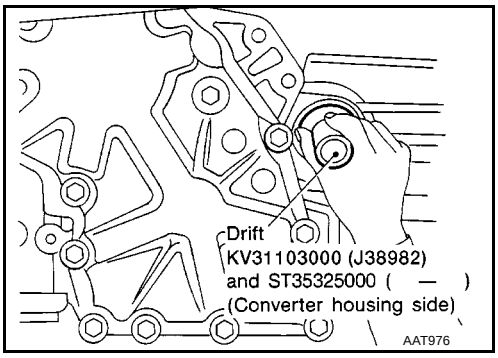

   - **Install oil seals so that dimensions “A” and “B” are within specifications.**

Unit: mm (in)

A	B
5.5 to 6.5 (0.217 to 0.256)	–0.5 to 0.5 (–0.020 to 0.020)

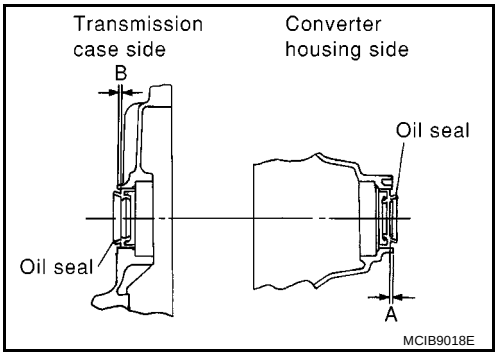

4. Reinstall any part removed.

Revolution Sensor Replacement

ECS009CA

1. Disconnect revolution sensor harness connector.
2. Remove harness bracket from A/T.
3. Remove revolution sensor from A/T.
4. Reinstall any part removed.

Always use new sealing parts.

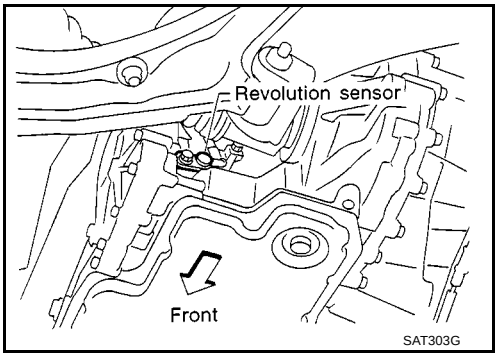

REMOVAL AND INSTALLATION

PFP:00000

Removal

ECS009CB

CAUTION:
Before separating transaxle from engine, remove the crankshaft position sensor (OBD) from transaxle. Be careful not to damage sensor.

1. Remove battery and bracket.
2. Remove air duct between throttle body and air cleaner.
3. Disconnect A/T solenoid harness connector, PNP switch harness connector and revolution sensor harness connector.
4. Remove crankshaft position sensor (OBD) from transaxle.

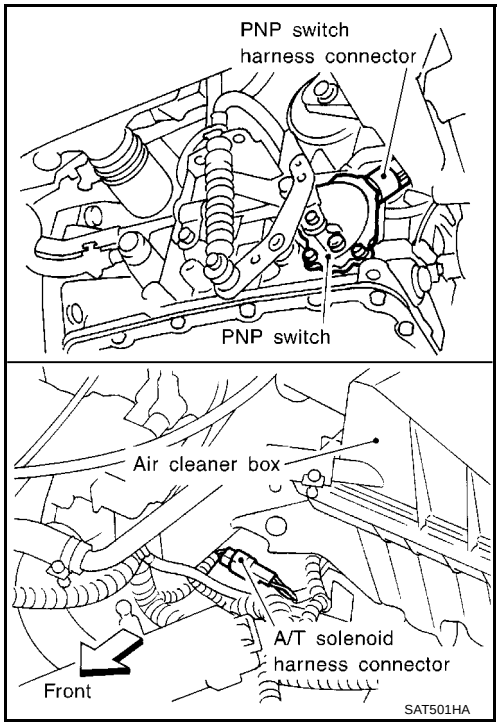

5. Drain ATF from transaxle.
6. Disconnect control cable from transaxle.
7. Disconnect fluid cooler hoses.
8. Remove drive shafts. Refer to AX-10, “Drive Shaft”.
9. Remove the intake manifold support bracket.
10. Remove starter motor from transaxle.

    Tighten bolts to specified torque.

    : 41 - 52 N-m (4.2 - 5.3 kg-m, 30 - 38 ft-lb)

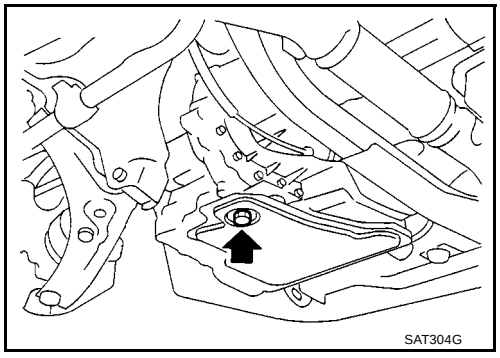

11. Remove upper bolts fixing transaxle to engine.
12. Support transaxle with a jack.
13. Remove center member.

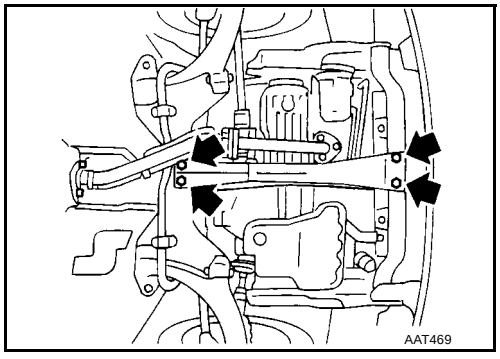

14. Remove center member, engine insulator and engine mounting bracket.

15. Remove dust cover from converter housing.
    Rotate crankshaft to gain access to securing bolts.
16. Remove securing bolts between drive plate and torque converter. when crank shaft rotates, turn to right at the front side of engine.
17. Support engine with a jack.
18. Remove bolts fixing transaxle to engine.
19. Lower transaxle while supporting it with a jack.

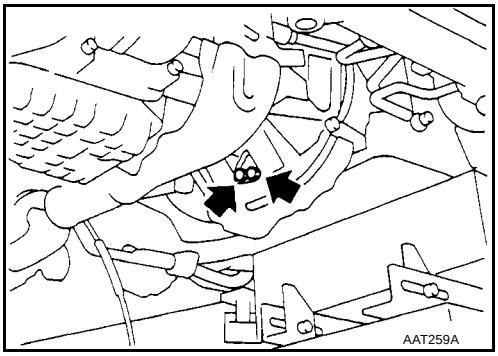

ECS009CC

Installation

1. Check drive plate runout.

   CAUTION:
   Do not allow any magnetic materials to contact the ring gear teeth.

   Maximum allowable runout :

   Refer to EM-95, "FLYWHEEL RUNOUT" .

   - If this runout is out of allowance, replace drive plate with ring gear.

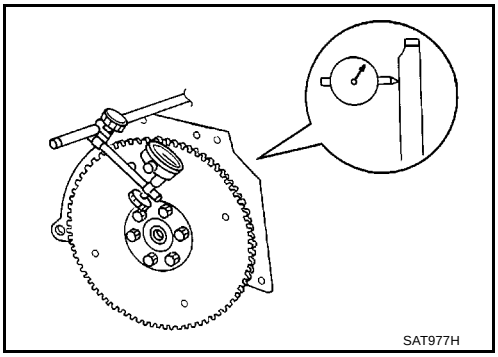

2. When connecting torque converter to transaxle, measure distance “A” to be certain that they are correctly assembled.

   Distance “A”: 21.1 mm (0.831 in) or more

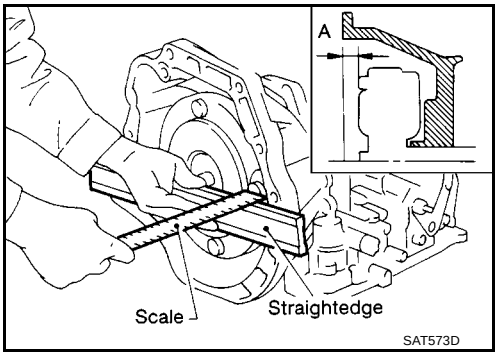

3. Install torque converter to drive plate.
   - **With converter installed, rotate crankshaft several turns to check that transaxle rotates freely without binding.**

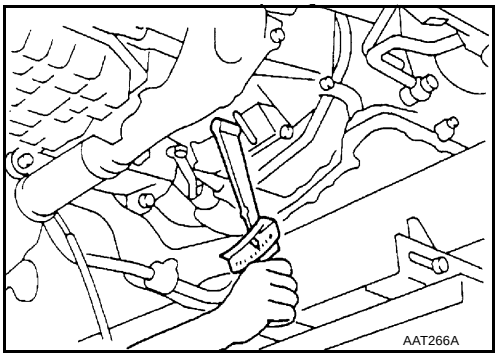

4. Tighten bolts fixing transaxle.

Bolt No.	Tightening torque N-m (kg-m, ft-lb)	Bolt length " L " mm (in)
1	70 - 79 (7.1 - 8.1, 51 - 59)	55 (2.17)
2	70 - 79 (7.1 - 8.1, 51 - 59)	50 (1.97)
3	70 - 79 (7.1 - 8.1, 51 - 59)	65 (2.56)
4	16 - 21 (1.6 - 2.1, 12 - 15)	35 (1.38)
5	16 - 21 (1.6 - 2.1, 12 - 15)	47 (1.85)

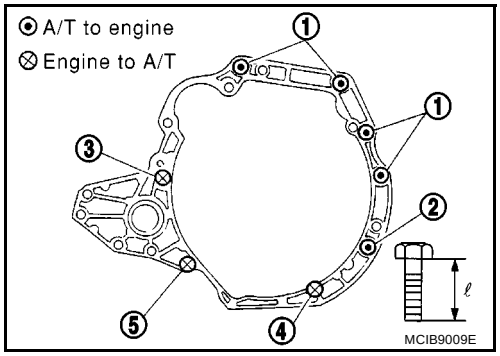

5. Reinstall any part removed.
6. Adjust control cable. Refer to AT-412, "Control Cable Adjustment" .
7. Check continuity of PNP switch. Refer to AT-113, "DTC P0705 PARK/NEUTRAL POSITION (PNP) SWITCH" .
8. Refill transaxle with ATF and check fluid level.
9. Move selector lever through all positions to be sure that transaxle operates correctly. With parking brake applied, idle engine. Move selector lever through "N" to "D", to "2", to "1" and "R" positions. A slight shock should be felt through the hand gripping the selector each time the transaxle is shifted.
10. Perform road test. Refer to AT-268, "Road Test" .

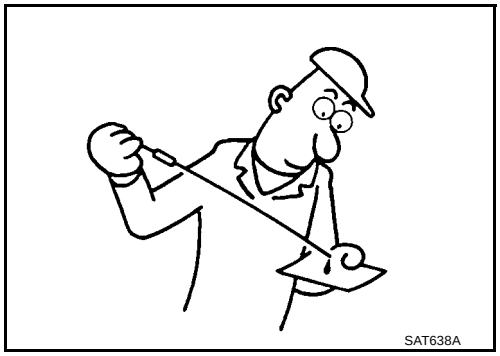

OVERHAUL

PFP:00000

Output Shaft, Idler Gear, Reduction Pinion Gear and Bearing Retainer

ECS009CD

COMPONENTS

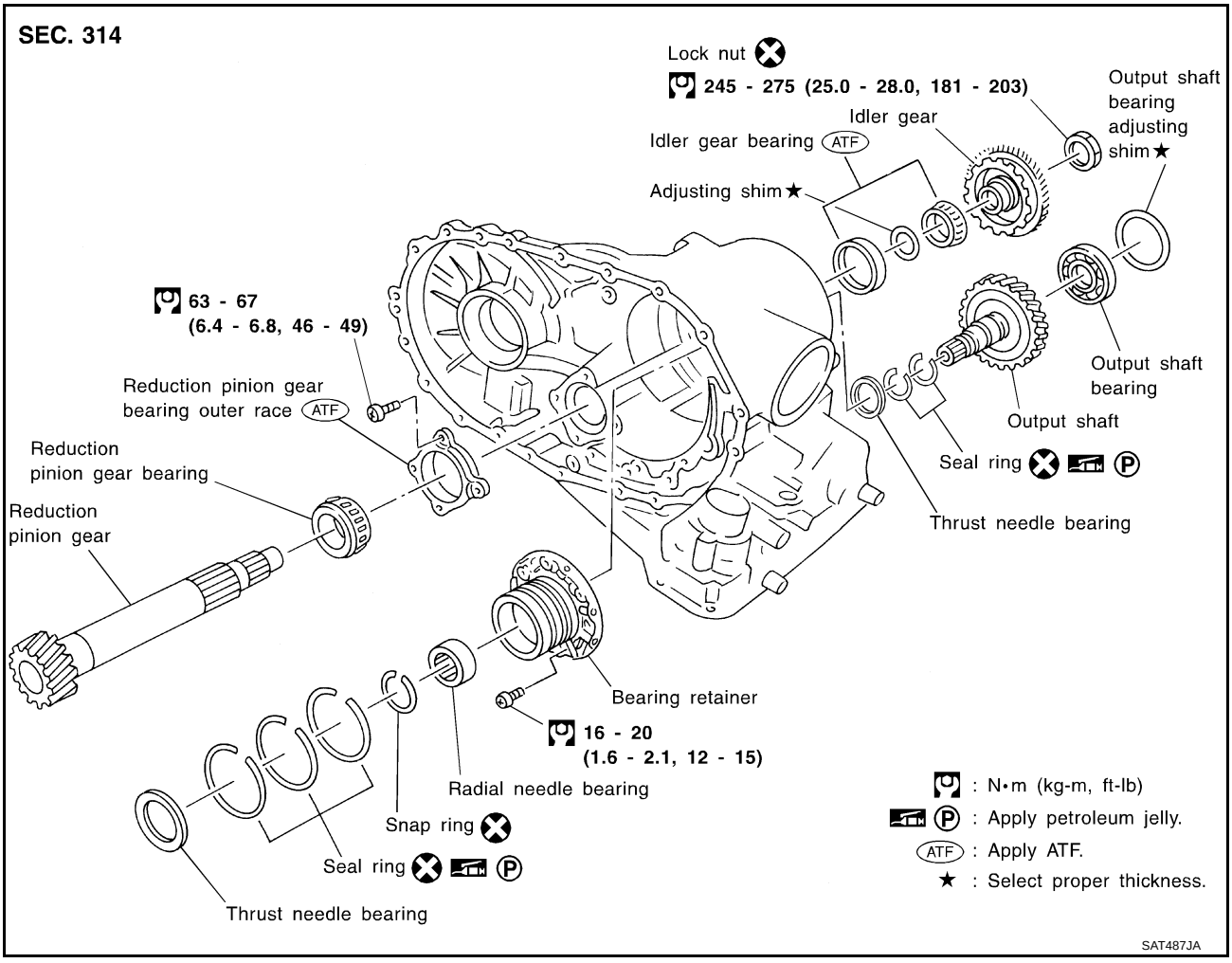

DISASSEMBLY

1. Remove seal rings from output shaft and bearing retainer.

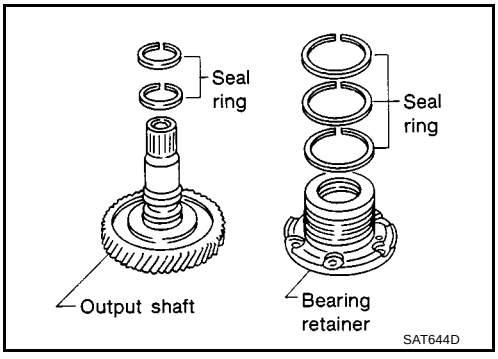

SEC. 315

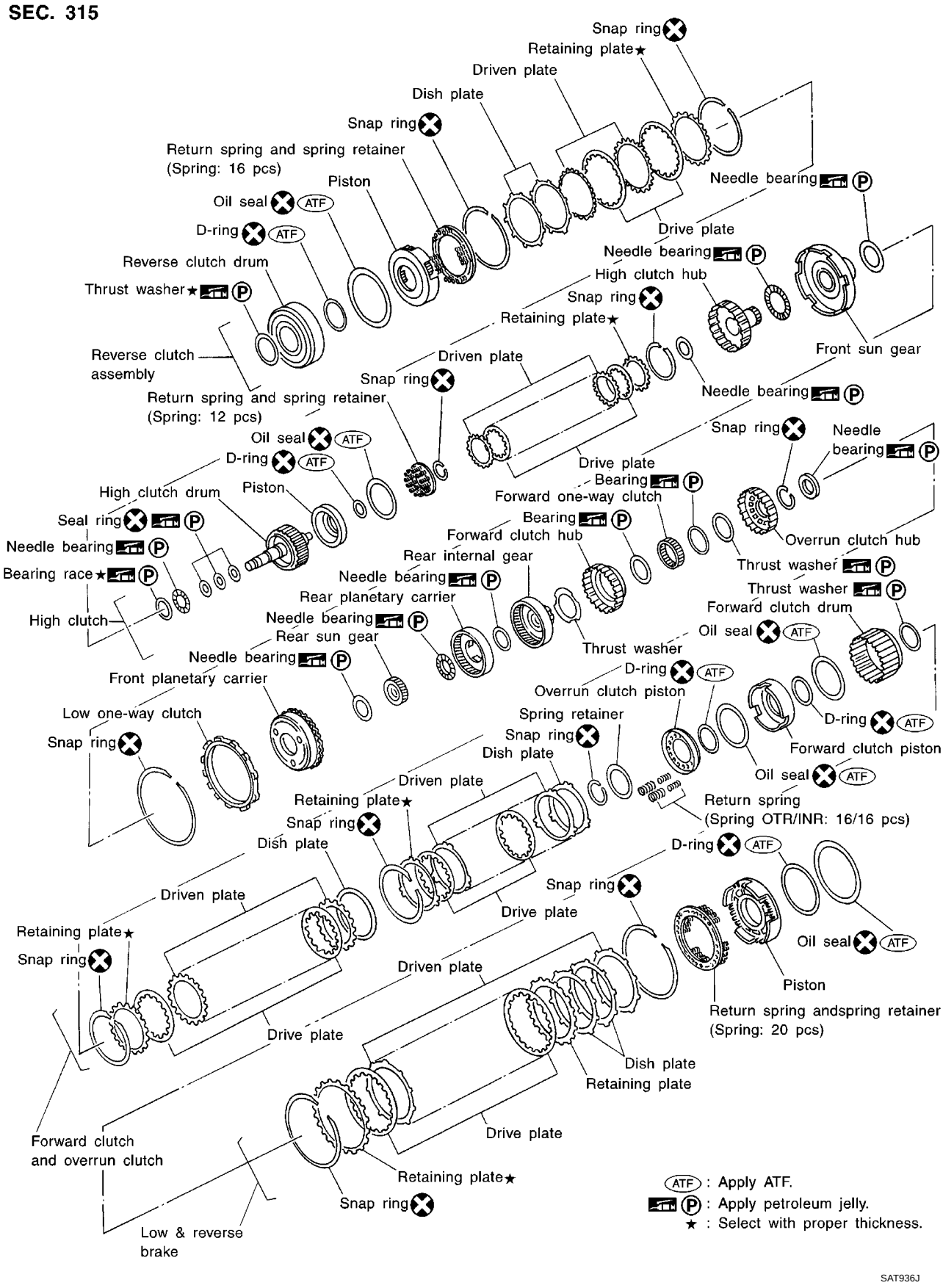
Snap ring
Retaining plate★
Driven plate
Dish plate
Snap ring
Return spring and spring retainer
(Spring: 16 pcs)
Piston
Oil seal ATF
D-ring ATF
Reverse clutch drum
Thrust washer★
Reverse clutch
assembly
Return spring and spring retainer
(Spring: 12 pcs)
Needle bearing
Drive plate
Needle bearing
High clutch hub
Snap ring
Retaining plate★
Front sun gear
Driven plate
Snap ring
Needle bearing
Snap ring
Needle
bearing
Oil seal ATF
D-ring ATF
Drive plate
Bearing
Forward one-way clutch
High clutch drum
Piston
Seal ring
Bearing
Needle bearing
Forward clutch hub
Overrun clutch hub
Bearing race★
Rear internal gear
Thrust washer
Needle bearing
Thrust washer
Rear planetary carrier
Forward clutch drum
High clutch
Needle bearing
Rear sun gear
Oil seal ATF
Needle bearing
Thrust washer
D-ring ATF
Front planetary carrier
Overrun clutch piston
Low one-way clutch
Spring retainer
D-ring ATF
Snap ring
Snap ring
Dish plate
Forward clutch piston
Oil seal ATF
Driven plate
Return spring
(Spring OTR/INR: 16/16 pcs)
Retaining plate★
Snap ring
Dish plate
D-ring ATF
Driven plate
Snap ring
Drive plate
Retaining plate★
Oil seal ATF
Snap ring
Driven plate
Piston
Return spring andspring retainer
(Spring: 20 pcs)
Drive plate
Dish plate
Retaining plate
Forward clutch
and overrun clutch
Drive plate
Retaining plate★
Snap ring
Low & reverse
brake
ATF : Apply ATF.
P : Apply petroleum jelly.
★ : Select with proper thickness.
SAT936J

SEC. 310•315•317•319

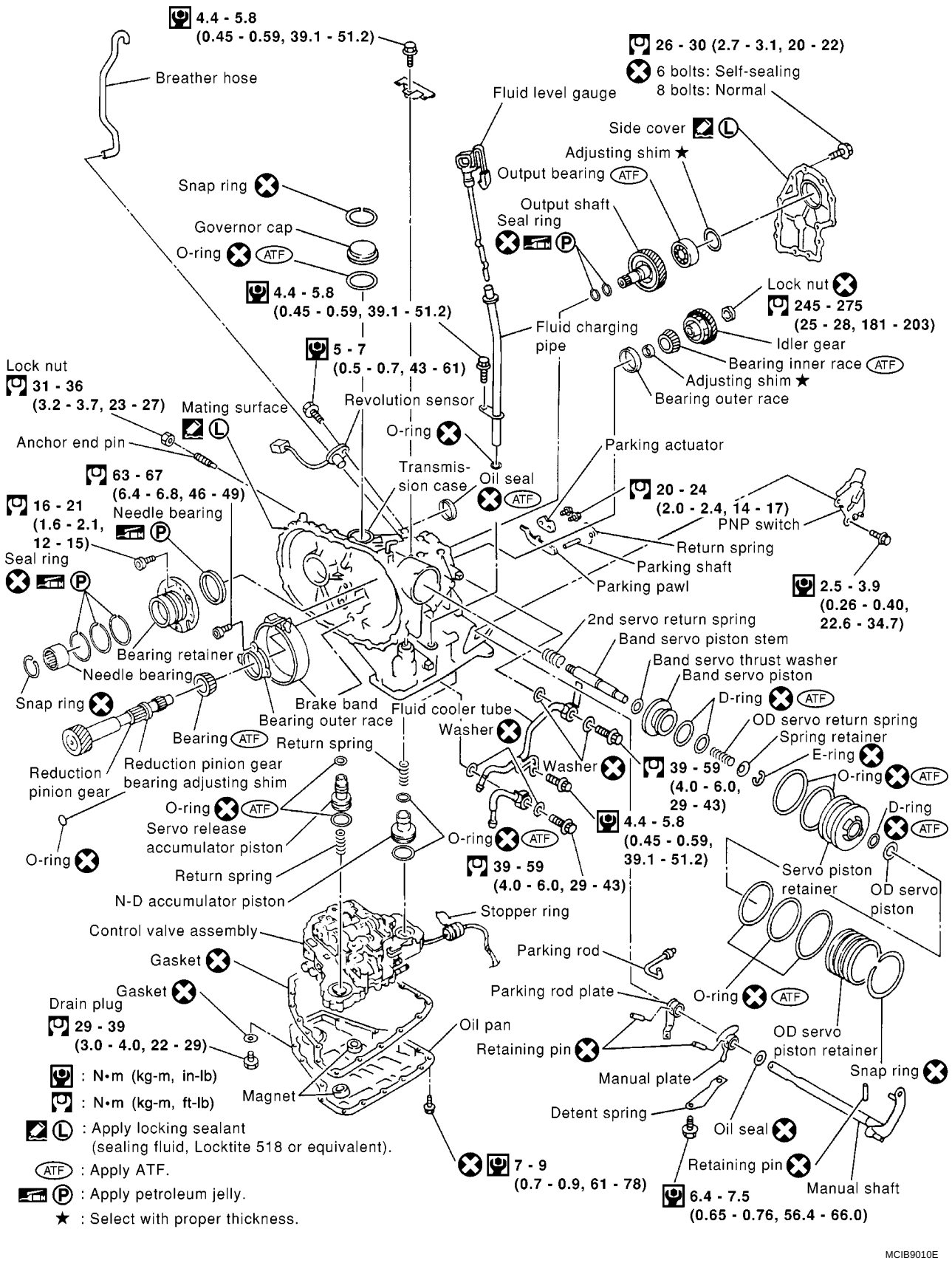

Oil Channel

ECS009CE

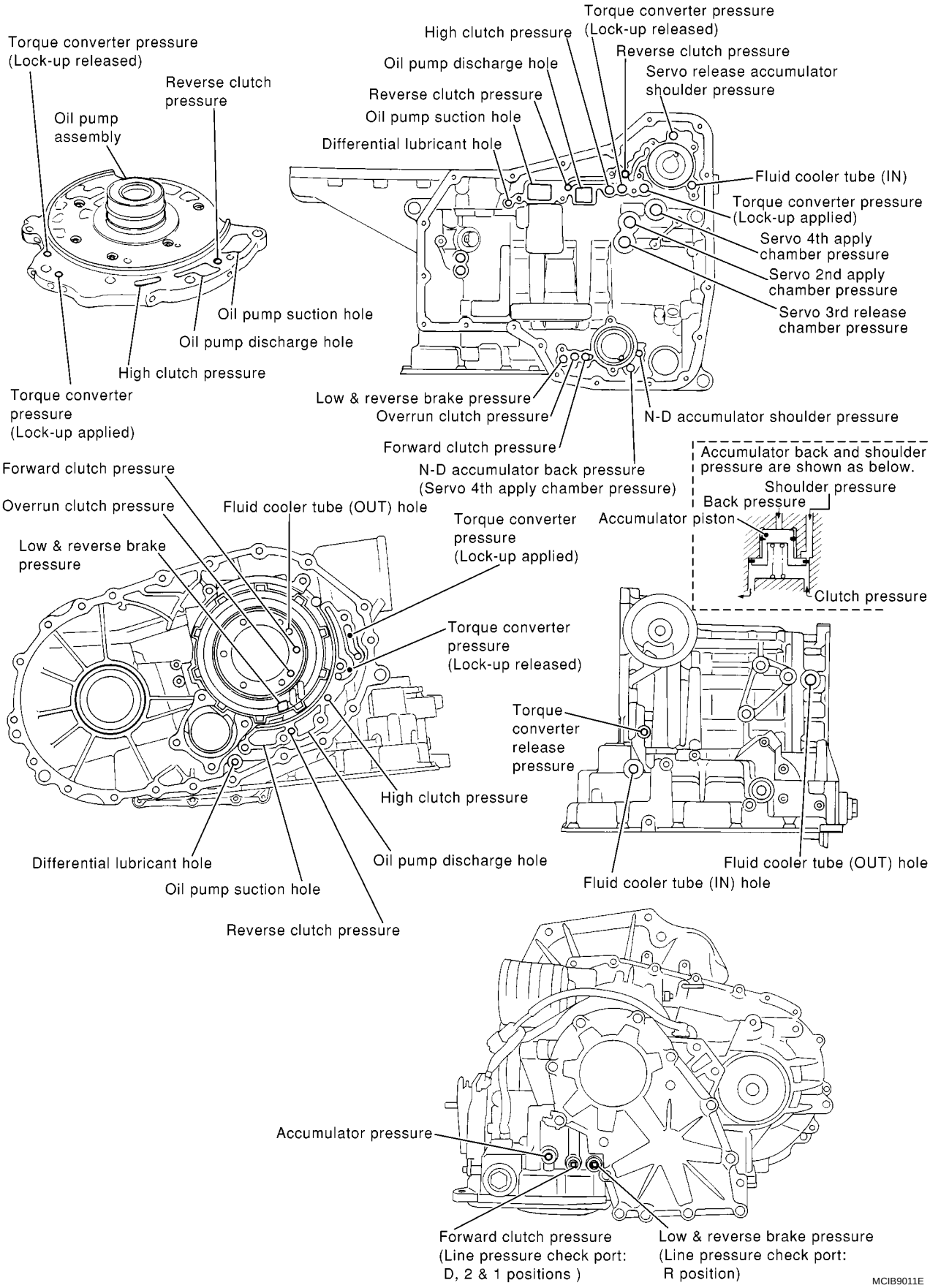

Locations of Adjusting Shims, Needle Bearings, Thrust Washers and Snap Rings

ECS009CF

Outer diameter and color of thrust washers

Item number	Outer diameter mm (in)	Color
⑰	72.0 (2.835)	Black
⑱	78.5 (3.091)	

Outer & inner diameter of needle bearings

Item number	Outer diameter mm (in)	Inner diameter mm (in)
⑧	47.0 (1.850)	32.0 (1.260)
⑨	35.0 (1.378)	20.1 (0.791)
⑩	60.0 (2.362)	42.1 (1.657)
⑪	60.0 (2.362)	45.0 (1.772)
⑫	47.0 (1.850)	30.0 (1.181)
⑬	42.6 (1.677)	26.0 (1.024)
⑭	48.0 (1.890)	33.5 (1.319)
⑮	55.0 (2.165)	40.5 (1.594)
⑯	60.0 (2.362)	40.1 (1.579)

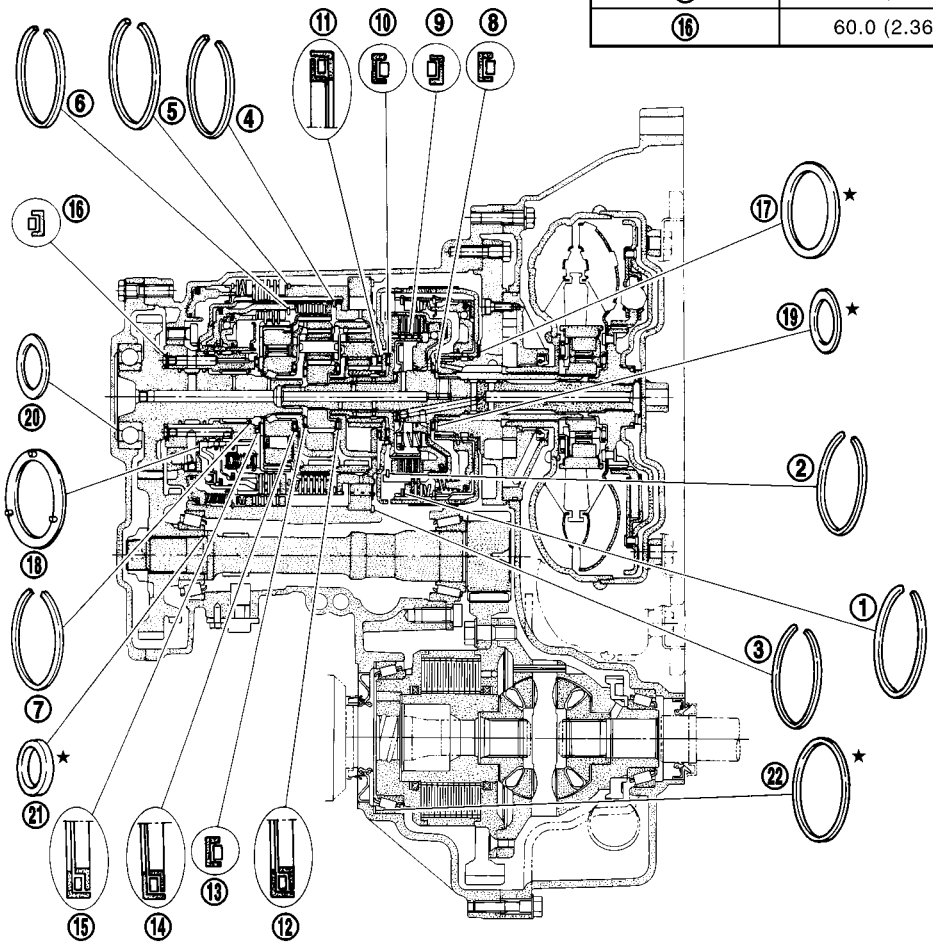

★ : Select proper thickness.

Outer & inner diameter of bearing race and adjusting shims

Item number		Outer diameter mm (in)	Inner diameter mm (in)
⑲		48.0 (1.890)	33.0 (1.299)
⑳		72.0 (2.835)	61.0 (2.402)
㉑		34.5 (1.358)	26.1 (1.028)
㉒	Viscous type	105.0 (4.13)	96.0 (3.78)
	Conventional type	68.0 (2.677)	60.0 (2.362)

Outer diameter of snap rings

Item number	Outer diameter mm (in)
①	142.0 (5.59)
②	113.0 (4.45)
③	162.4 (6.39)
④	135.4 (5.33)
⑤	162.3 (6.39)
⑥	126.0 (4.96)
⑦	40.5 (1.594)

SAT325GC

DISASSEMBLY

PFP:31020

Disassembly

ECS009CG

1. Drain ATF through drain plug.

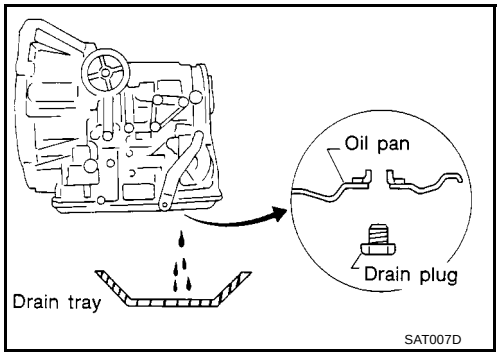

2. Remove torque converter.

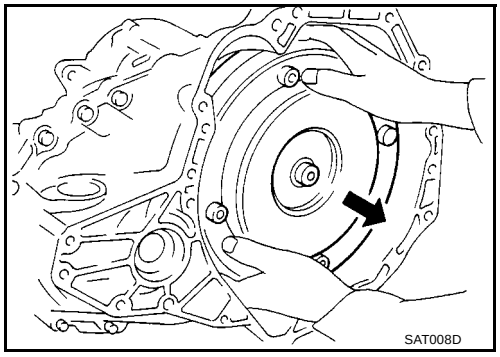

3. Check torque converter one-way clutch using check tool as shown at right.

a. Insert check tool into the groove of bearing support built into one-way clutch outer race.

b. When fixing bearing support with check tool, rotate one-way clutch spline using screwdriver.

c. Check that inner race rotates clockwise only. If not, replace torque converter assembly.

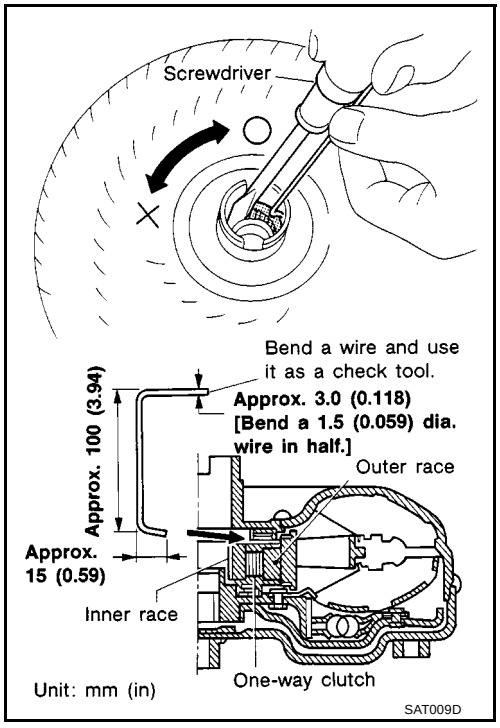

4. Remove A/T fluid charging pipe and fluid cooler tube.

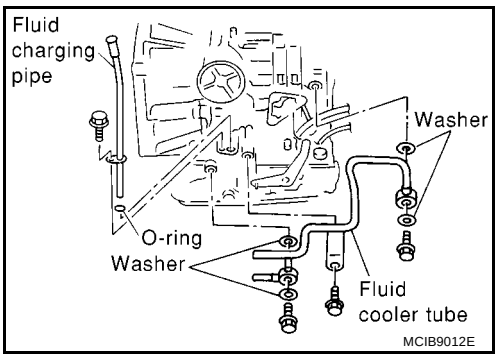

5. Set manual shaft to position P.
6. Remove park/neutral position (PNP) switch.

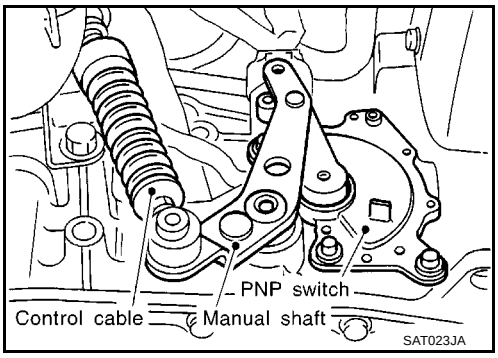

7. Remove oil pan and oil pan gasket.
   - **Do not reuse oil pan bolts.**
8. Check foreign materials in oil pan to help determine causes of malfunction. If the fluid is very dark, smells burned, or contains foreign particles, the frictional material (clutches, band) may need replacement. A tacky film that will not wipe clean indicates varnish build up. Varnish can cause valves, servo, and clutches to stick and can inhibit pump pressure.
   - **If frictional material is detected, replace radiator after repair of A/T. Refer to LC-16, “Radiator”.**

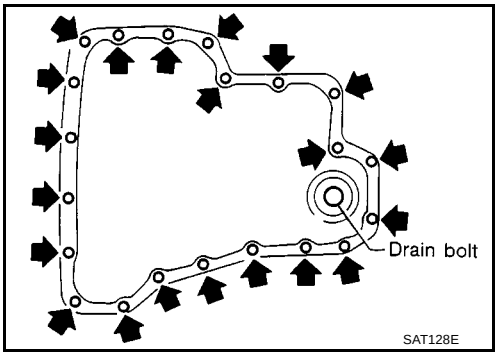

9. Remove control valve assembly according to the following procedures.

a. Remove control valve assembly mounting bolts A, B and C.

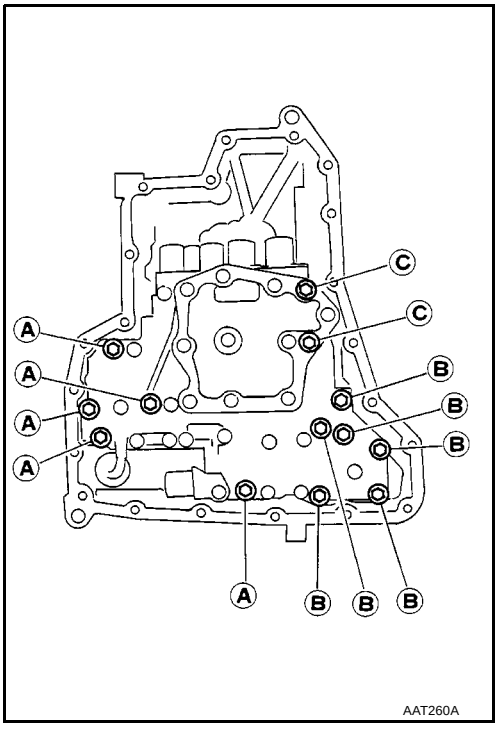

b. Remove snap ring from terminal body.

c. Push terminal body into transmission case and draw out solenoid valve harness.

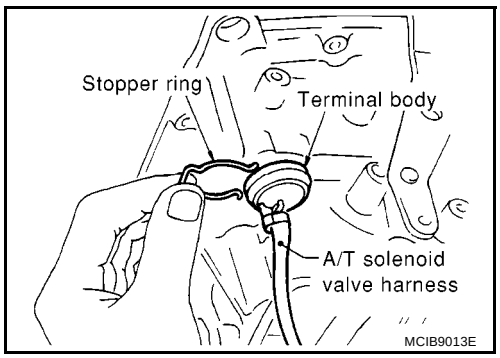

10. Remove manual valve from control valve assembly as a precaution.

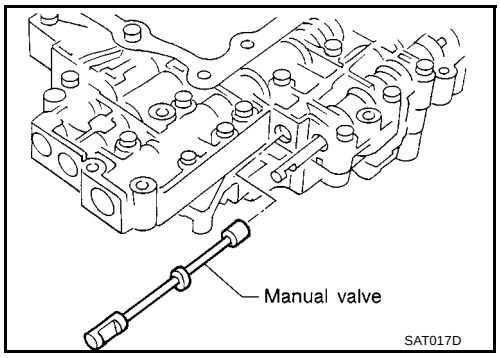

11. Remove return spring from servo release accumulator piston.

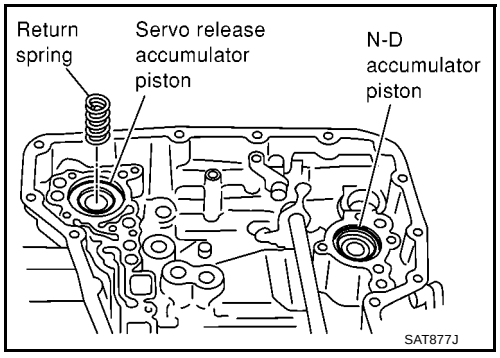

12. Remove servo release accumulator piston with compressed air.

13. Remove O-rings from servo release accumulator piston.

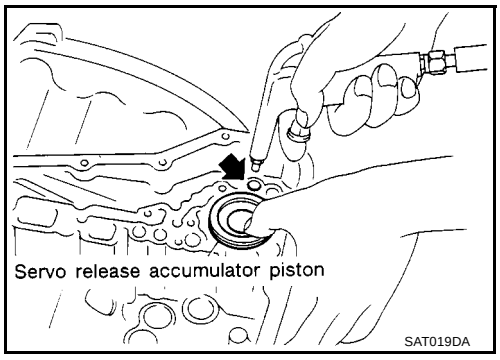

14. Remove N-D accumulator piston and return spring with compressed air.

15. Remove O-rings from N-D accumulator piston.

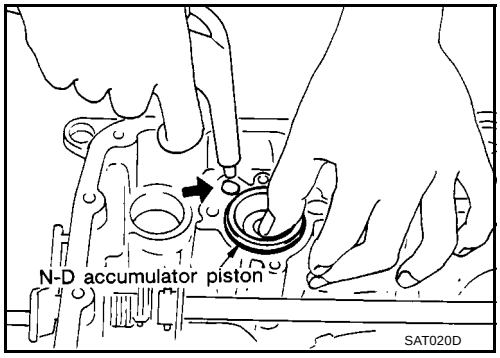

16. Check accumulator pistons and contact surface of transmission case for damage.
17. Check accumulator return springs for damage and free length.

Return spring:

Refer to AT-519, "SERVICE DATA AND SPECIFICATIONS (SDS)" .

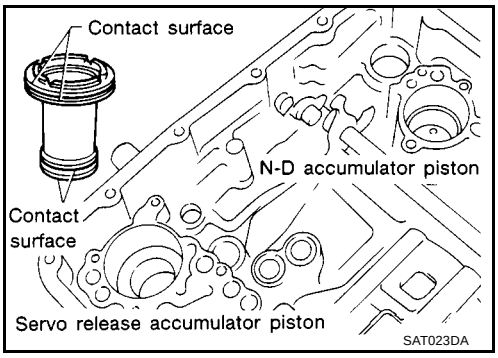

18. Remove lip seals from band servo oil port.

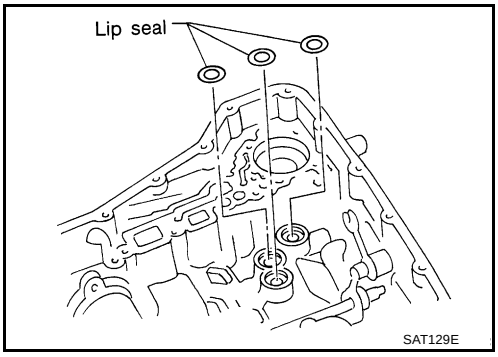

19. Remove converter housing according to the following procedures.

a. Remove converter housing mounting bolts A and B.

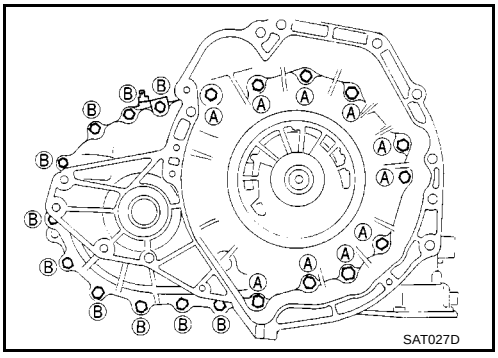

b. Remove converter housing by tapping it lightly.

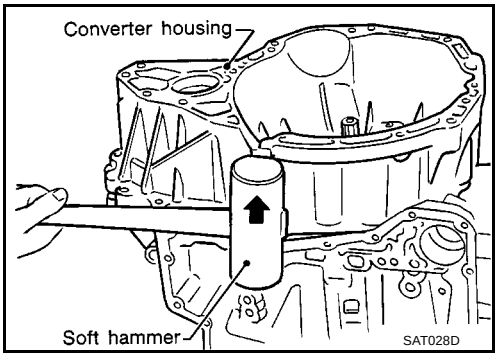

c. Remove O-ring from differential oil port.

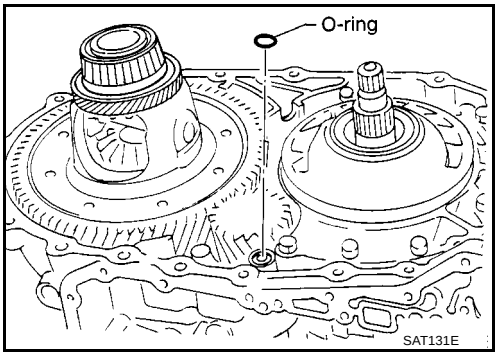

20. Remove final drive assembly from transmission case.

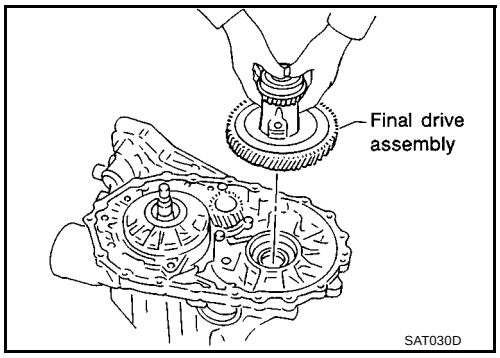

21. Remove differential side bearing outer race and side bearing adjusting shim from transmission case.

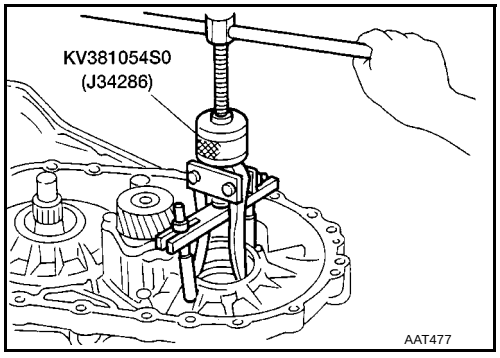

22. Remove differential side bearing adjusting shim from transmission case.

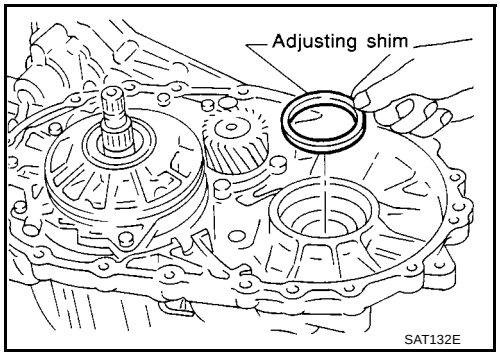

23. Remove differential side bearing outer race from converter housing.

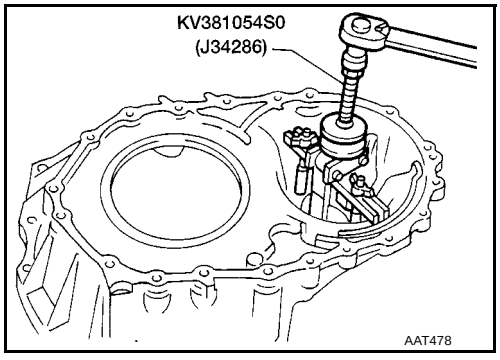

24. Remove oil seal with screwdriver from converter housing.
    - **Be careful not to damage case.**

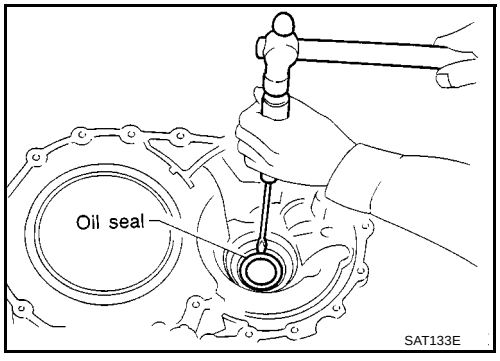

25. Remove side oil seal from trans mission case using a screw driver.

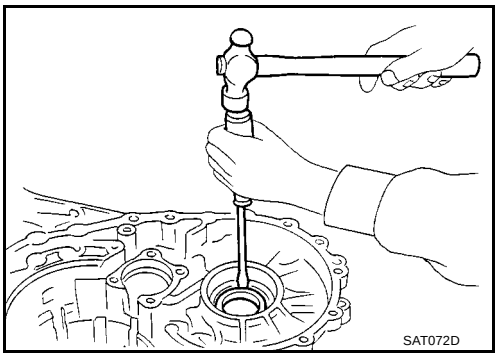

26. Remove differential lubricant tube from converter housing.

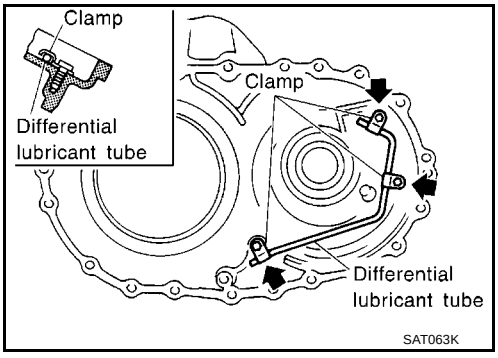

27. Remove oil pump according to the following procedures.

a. Remove O-ring from input shaft.

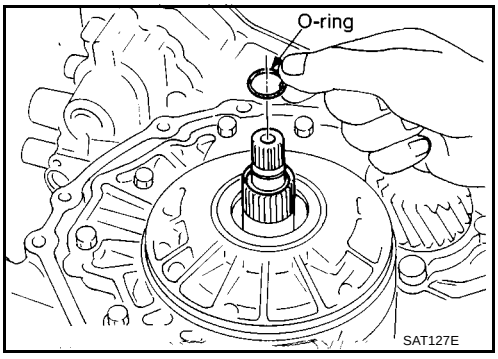

b. Remove oil pump assembly from transmission case.

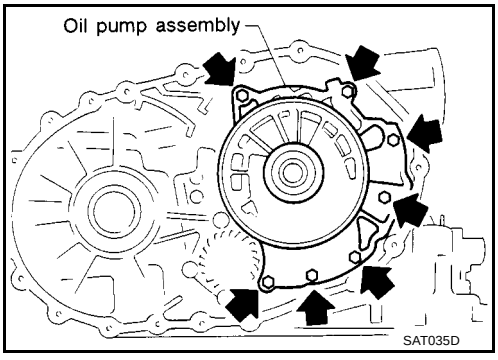

c. Remove thrust washer and bearing race from oil pump assembly.

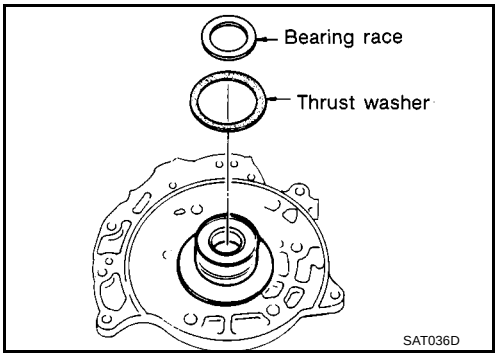

28. Remove brake band according to the following procedures.

a. Loosen lock nut, then back off anchor end pin.

- **Do not reuse anchor end pin.**

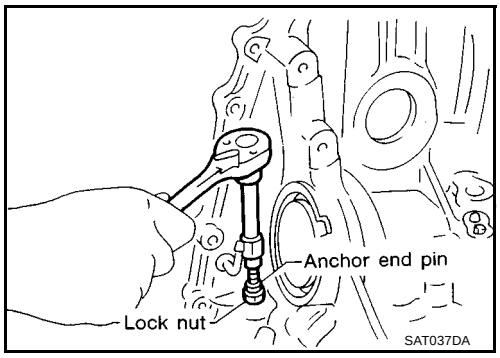

b. Remove brake band and strut from transmission case.

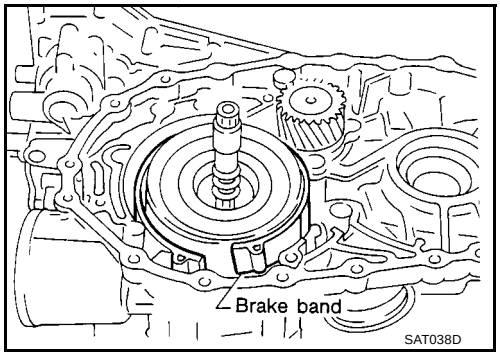

- **To prevent brake linings from cracking or peeling, do not stretch the flexible band unnecessarily. When removing the brake band, always secure it with a clip as shown in the figure at right.**
  Leave the clip in position after removing the brake band.

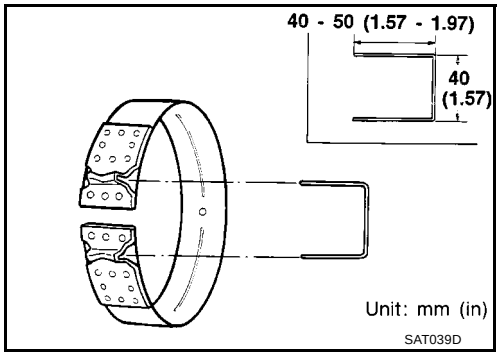

c. Check brake band facing for damage, cracks, wear or burns.

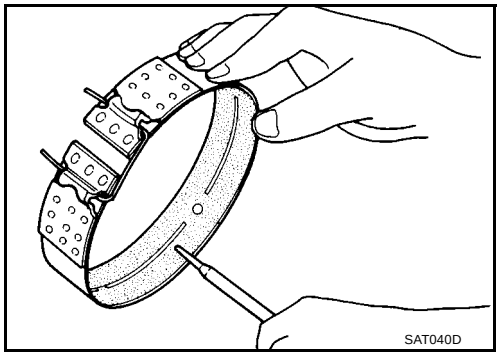

29. Remove input shaft assembly (high clutch) and reverse clutch according to the following procedures.

a. Remove input shaft assembly (high clutch) with reverse clutch.

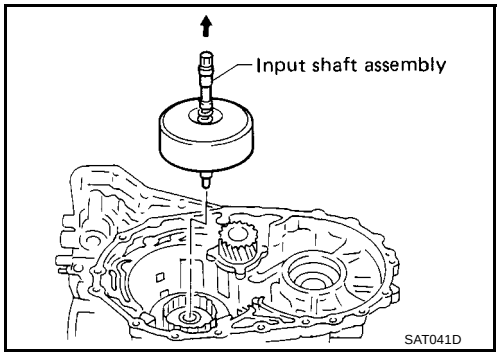

b. Remove input shaft assembly (high clutch) from reverse clutch.

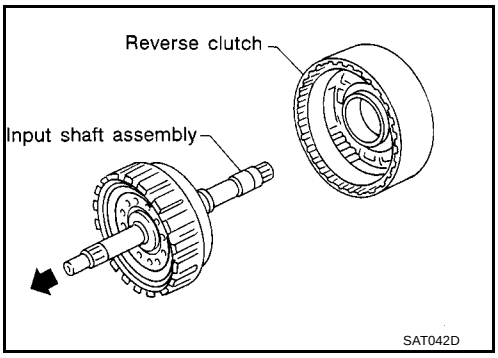

c. Remove needle bearings from high clutch drum.
d. Check input shaft assembly and needle bearing for damage or wear.

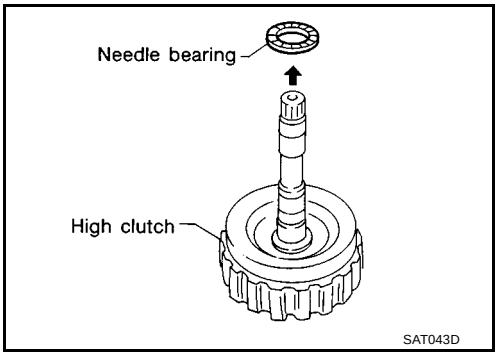

30. Remove high clutch hub and needle bearing from trans mission case.

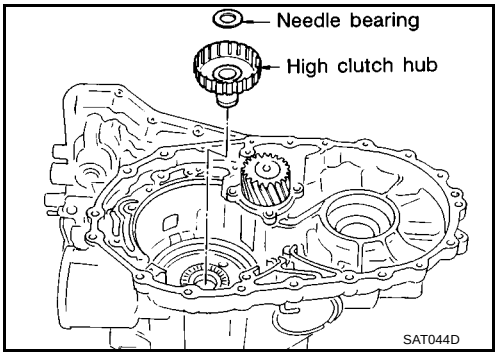

31. Check high clutch hub and needle bearing for damage or wear.
32. Remove high clutch hub and front sun gear from transmission case.

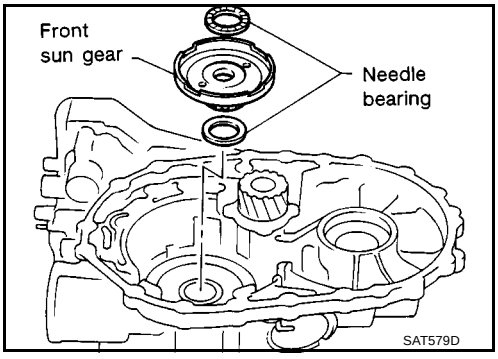

33. Check front sun gear and needle bearings for damage or wear.

34. Remove low one-way clutch and front planetary carrier assembly according to the following procedures.

a. Remove snap ring with flat-bladed screwdriver.

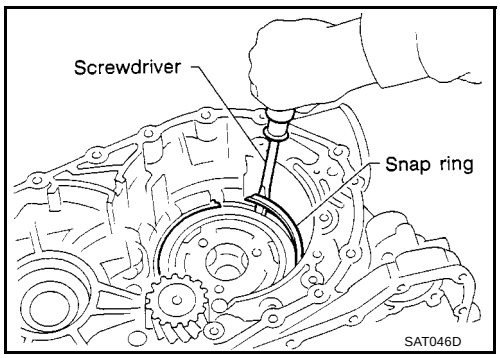

b. Remove front planetary carrier with low one-way clutch.

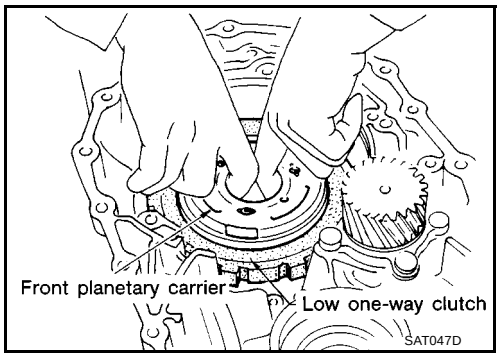

c. Check that low one-way clutch rotates in the direction of the arrow and lochs in the opposite direction.

d. Remove low one-way clutch front planetary carrier by rotating it in the direction of arrow.

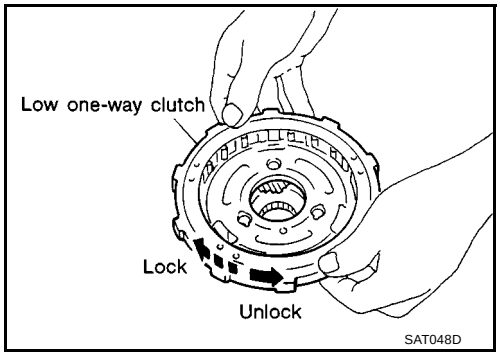

e. Remove needle bearing front planetary carrier.

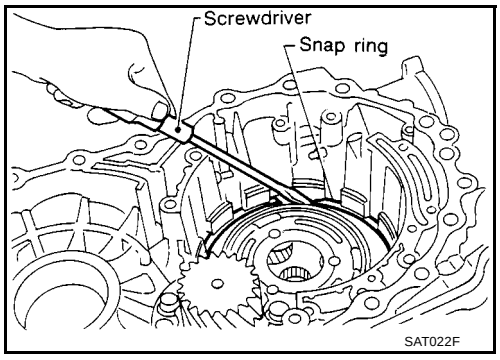

f. Check front planetary carrier, low one-way clutch and needle bearing for damage or wear.

g. Check clearance between pinion washer and planetary carrier using feeler gauge.

Standard clearance: 0.15 - 0.70 mm (0.0059 - 0.0276 in)

Allowable limit: 0.80 mm (0.0315 in)

Replace front planetary carrier if the clearance exceeds allowable limit.

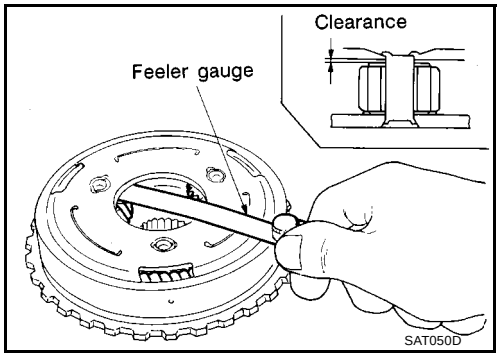

35. Remove rear planetary carrier assembly and rear sun gear according to the following procedures.

a. Remove rear planetary carrier assembly from transmission case.

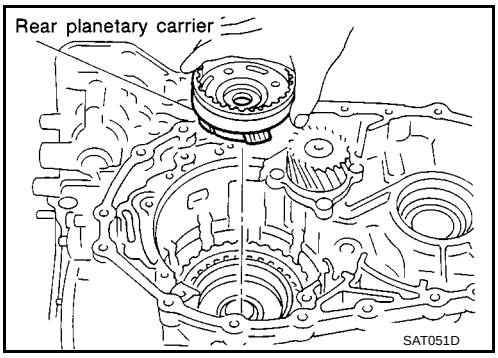

b. Remove rear sun gear from rear planetary carrier.

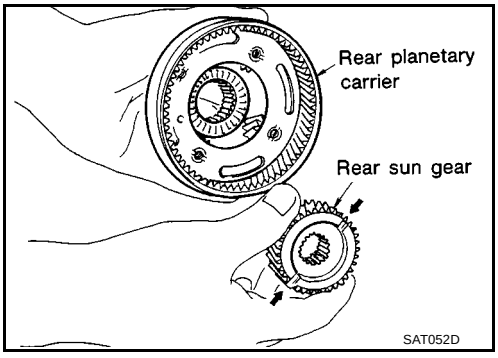

c. Remove needle bearings from rear planetary carrier assembly.

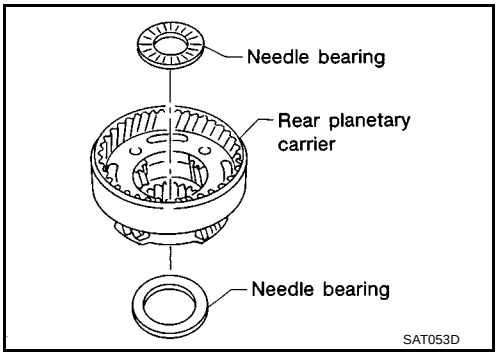

d. Check rear planetary carrier, rear sun gear and needle bearings for damage or wear.

e. Check clearance between pinion washer and rear planetary carrier with feeler gauge.

Standard clearance: 0.15 - 0.70 mm (0.0059 - 0.0276 in)

Allowable limit: 0.80 mm (0.0315 in)

Replace rear planetary carrier if the clearance exceeds allowable limit.

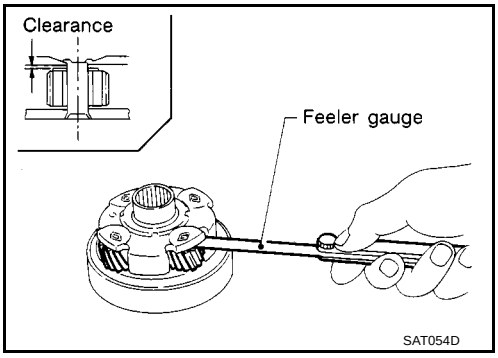

36. Remove rear internal gear from transmission case.

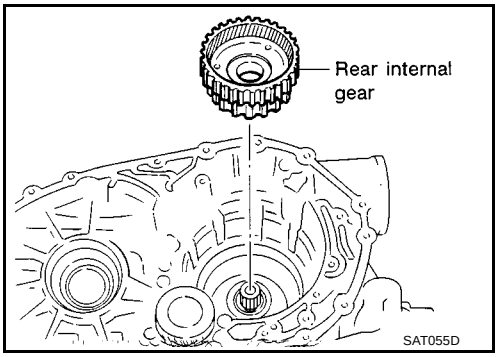

37. Remove needle bearing from rear internal gear.
    - Check needle bearing for damage or wear.

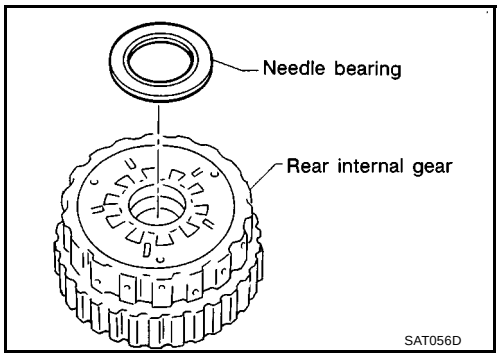

38. Remove forward clutch assembly from transmission case.

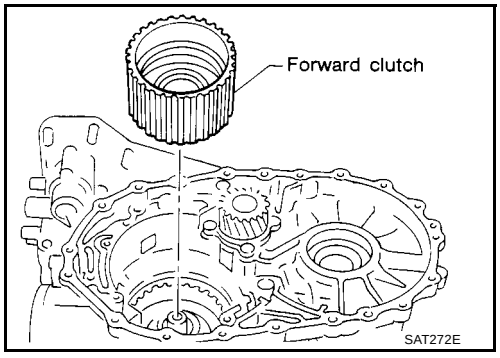

39. Remove thrust washer from transmission case.

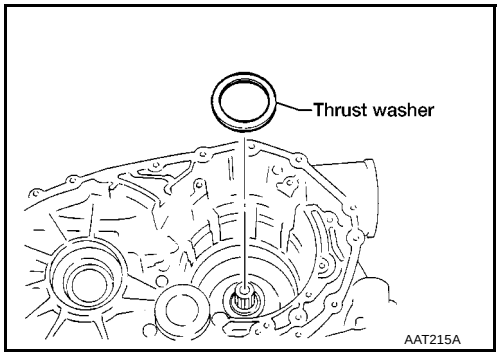

40. Remove output shaft assembly according to the following procedures.

a. Remove side cover bolts.

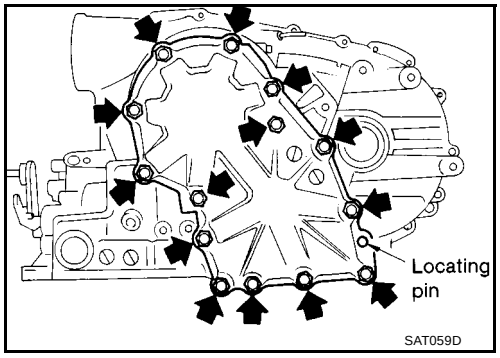

b. Remove side cover by lightly tapping it with a soft hammer.
    - **Be careful not to drop output shaft assembly. It might come out when removing side cover.**

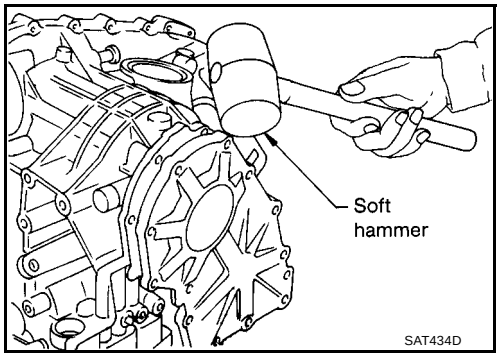

c. Remove adjusting shim.

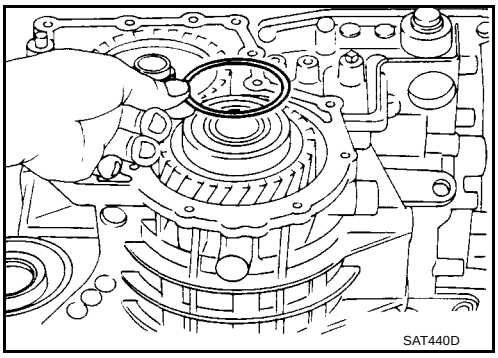

d. Remove output shaft assembly.

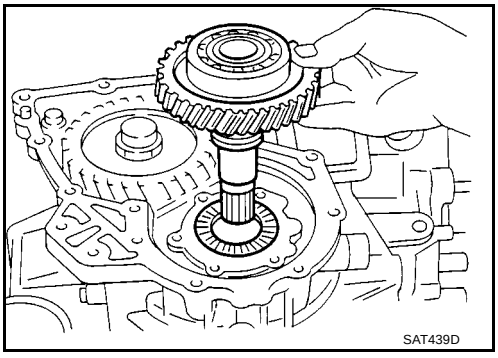

- If output shaft assembly came off with side cover, tap cover with a soft hammer to separate.

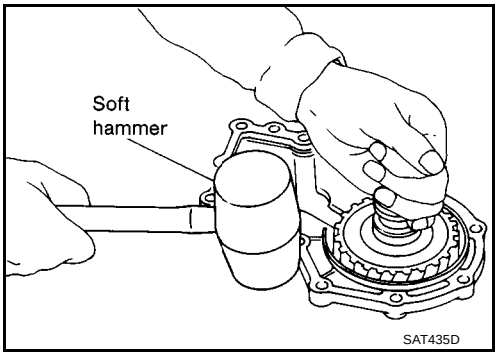

e. Remove needle bearing.

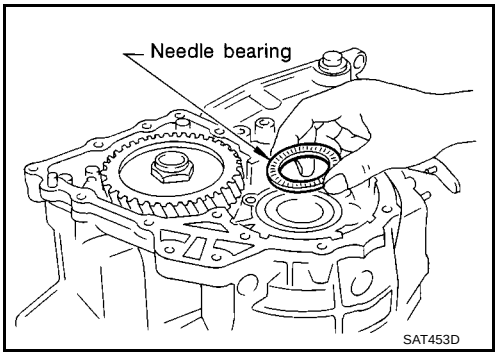

41. Disassemble reduction pinion gear according to the following procedures.

a. Set manual shaft to position “P” to fix idler gear.

b. Unlock idler gear lock nut using a pin punch.

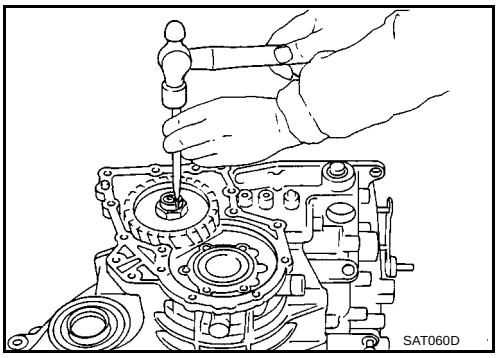

c. Remove idler gear lock nut.
   - **Do not reuse idler gear lock nut.**

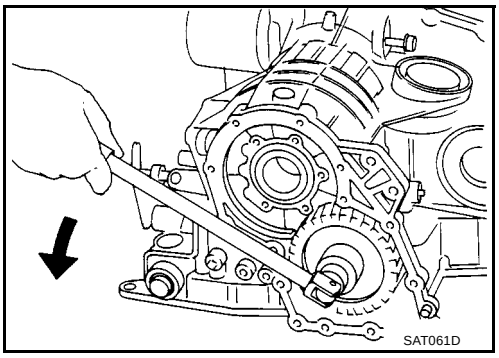

d. Remove idler gear with puller.

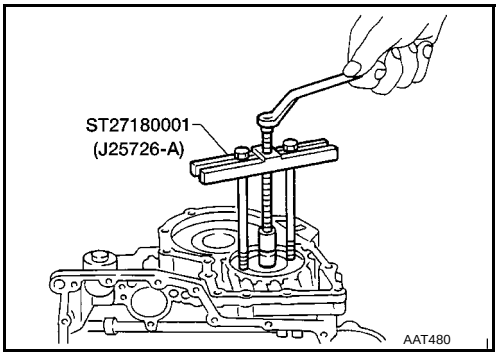

e. Remove reduction pinion gear.
f. Remove adjusting shim from reduction pinion gear.

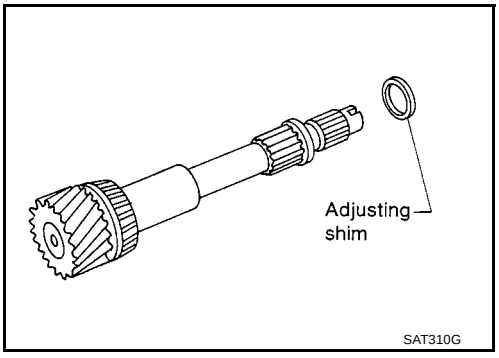

42. Remove return spring from parking shaft with screwdriver.

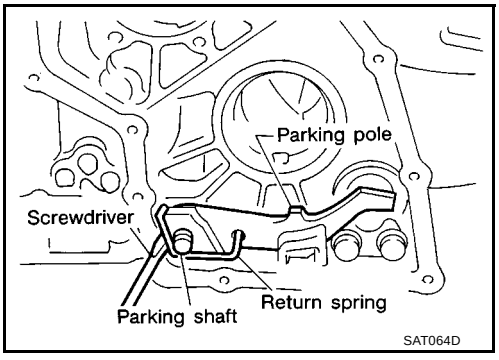

43. Draw out parking shaft and remove parking pawl from transmission case.

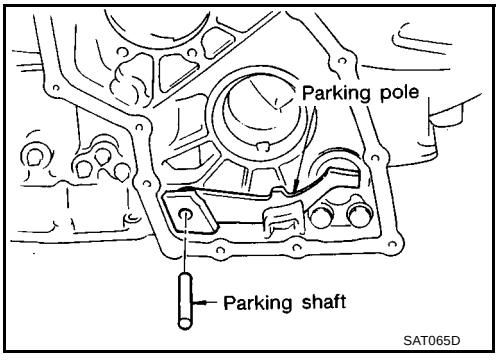

44. Check parking pawl and shaft for damage or wear.

45. Remove parking actuator support from transmission case.
    - Check parking actuator support for damage or wear.

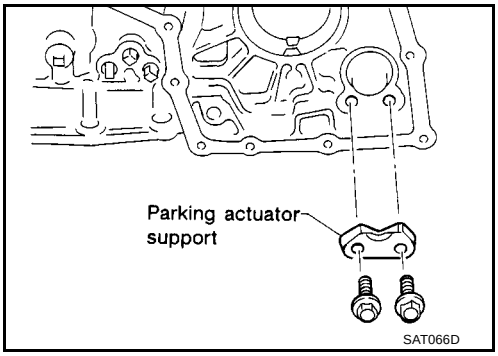

46. Remove revolution sensor from transmission case.

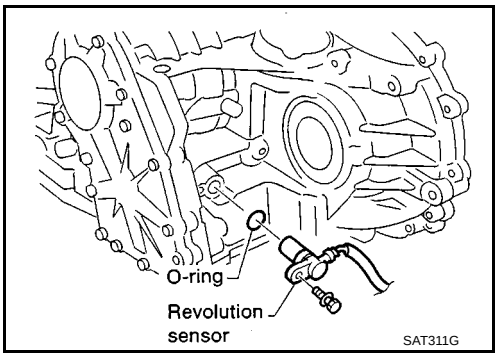

REPAIR FOR COMPONENT PARTS

PFP:00000

Manual Shaft

ECS009CH

COMPONENTS

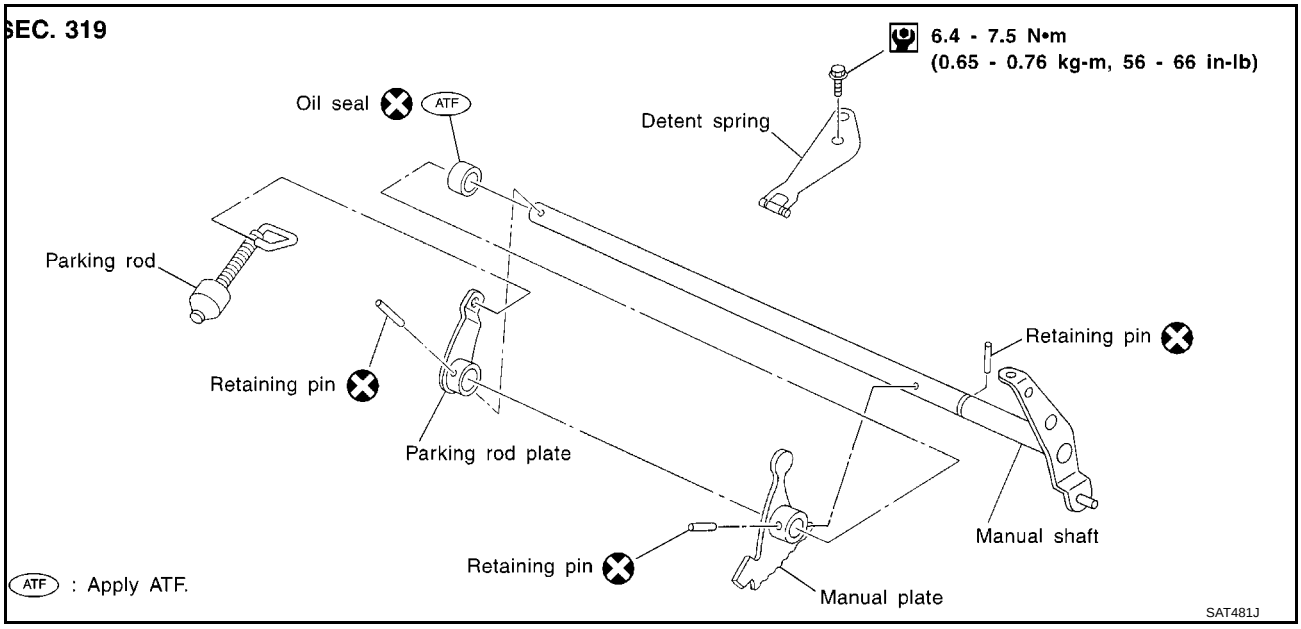

REMOVAL

1. Remove detent spring from transmission case.

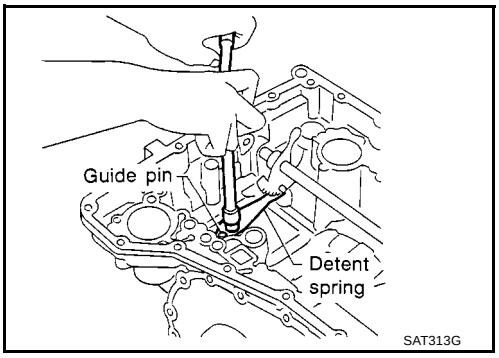

2. Drive out manual plate retaining pin.

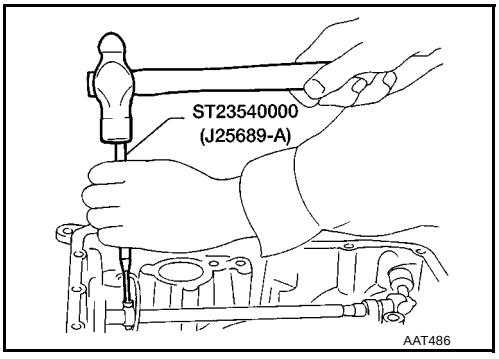

3. Drive and pull out parking rod plate retaining pin.
4. Remove parking rod plate from manual shaft.
5. Draw out parking rod from transmission case.

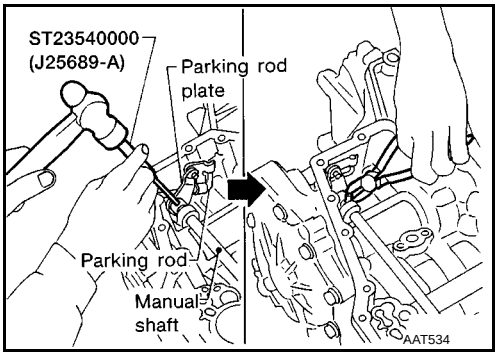

6. Pull out manual shaft retaining pin.
7. Remove manual shaft and manual plate from transmission case.

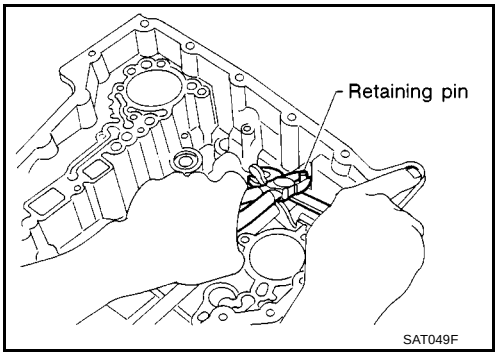

8. Remove manual shaft oil seal.

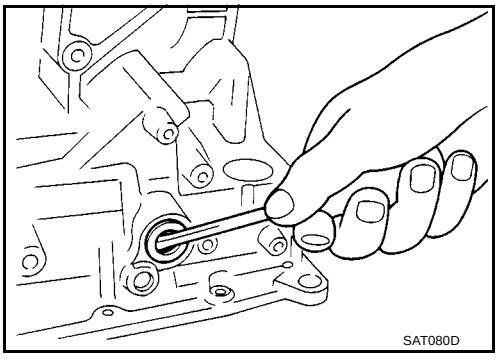

INSPECTION

- Check component parts for wear or damage. Replace if necessary.

INSTALLATION

1. Install manual shaft oil seal.
   - **Apply ATF to outer surface of oil seal.**

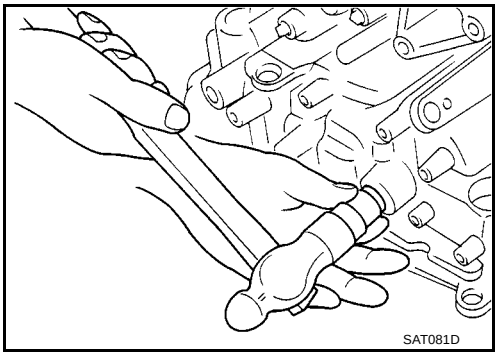

2. Install manual shaft and manual plate.

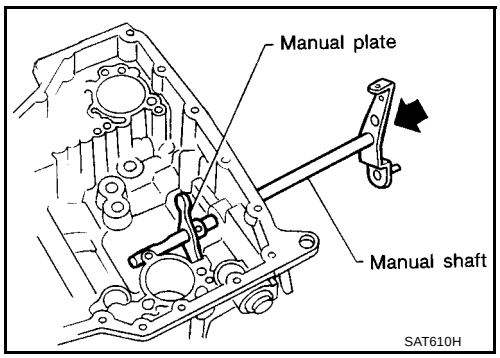

3. Align groove of manual shaft and hole of transmission case.
4. Install manual shaft retaining pin.

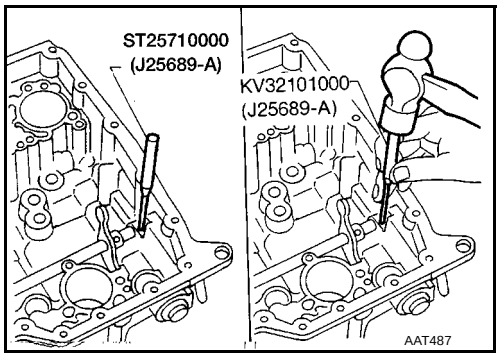

5. Install parking rod to parking rod plate.
6. Set parking rod assembly onto manual shaft.

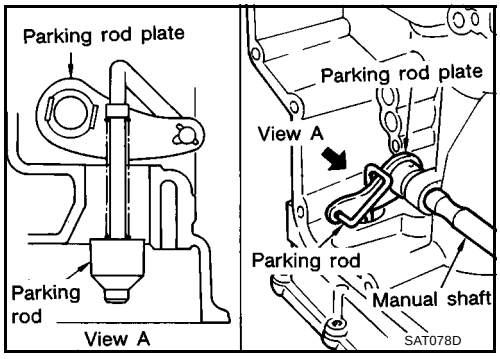

7. Drive manual plate retaining pin and parking rod plate retaining pin.
   - **Both ends of pin should protrude.**

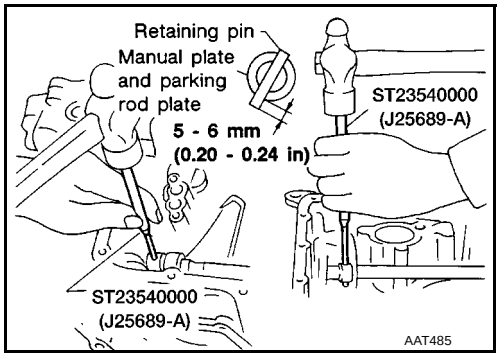

8. Install detent spring.

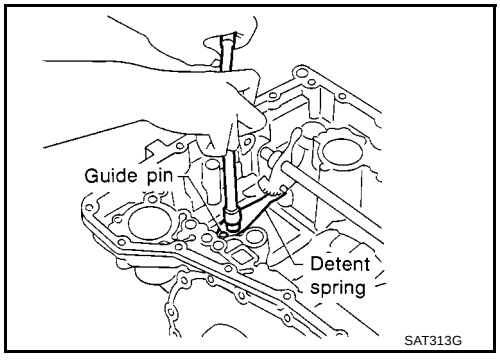

Oil Pump

ECS009CI

COMPONENTS

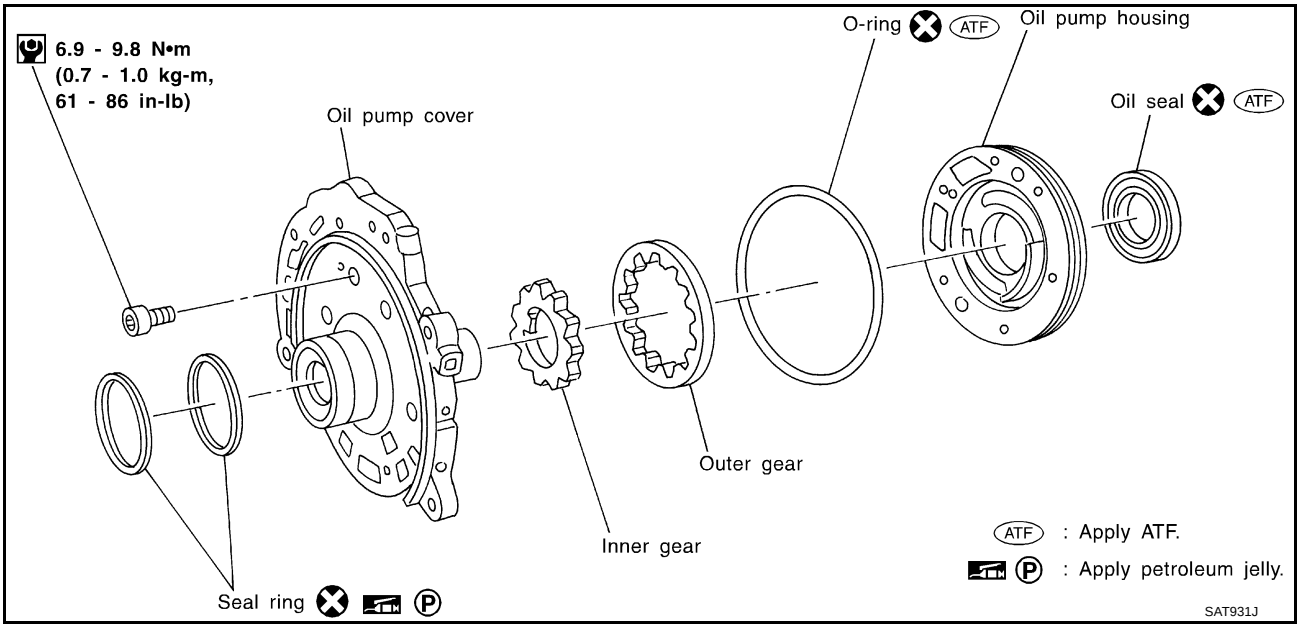

DISASSEMBLY

1. Remove seal rings.

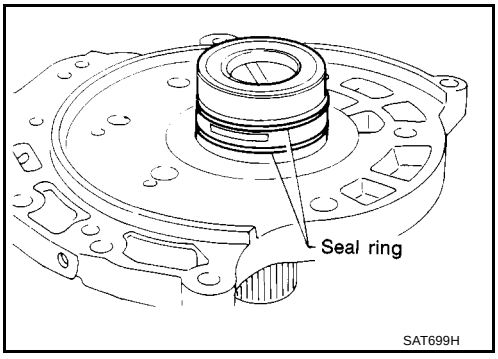

2. Loosen bolts in a crisscross pattern and remove oil pump cover.

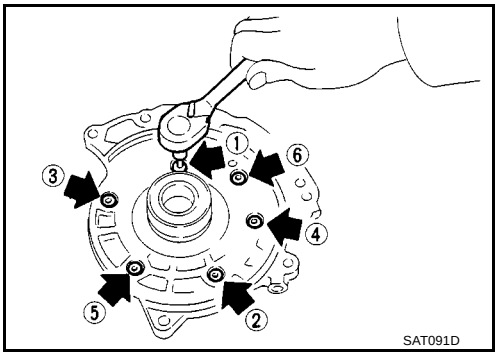

3. Remove inner and outer gear from oil pump housing.

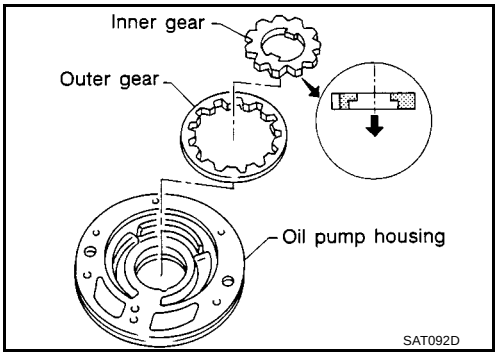

4. Remove O-ring from oil pump housing.

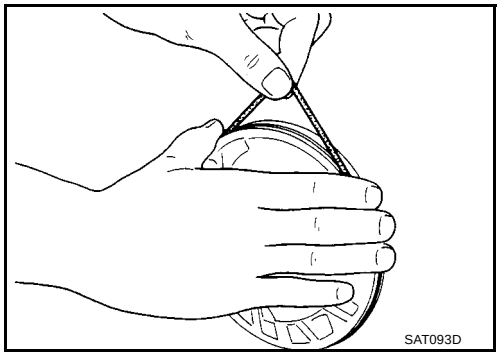

5. Remove oil pump housing oil seal.

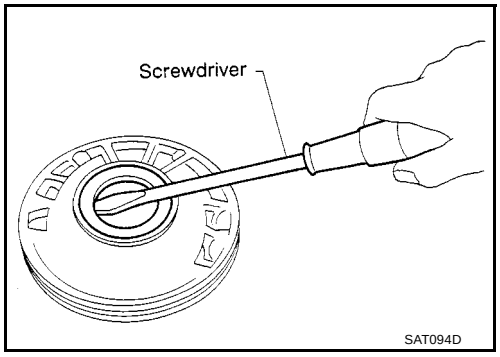

INSPECTION

Oil Pump Housing, Oil Pump Cover, Inner Gear and Outer Gear

- Check for wear or damage.

Side Clearances

- Measure side clearance of inner and outer gears in at least four places around each outside edge. Maximum measured values should be within specified positions.

  Standard clearance: 0.02 - 0.04 mm (0.0008 - 0.0016 in)

- If clearance is less than standard, select inner and outer gear as a set so that clearance is within specifications.

  Inner and outer gear:

  Refer to **AT-519, "SERVICE DATA AND SPECIFICATIONS (SDS)"**

- If clearance is more than standard, replace whole oil pump assembly except oil pump cover.

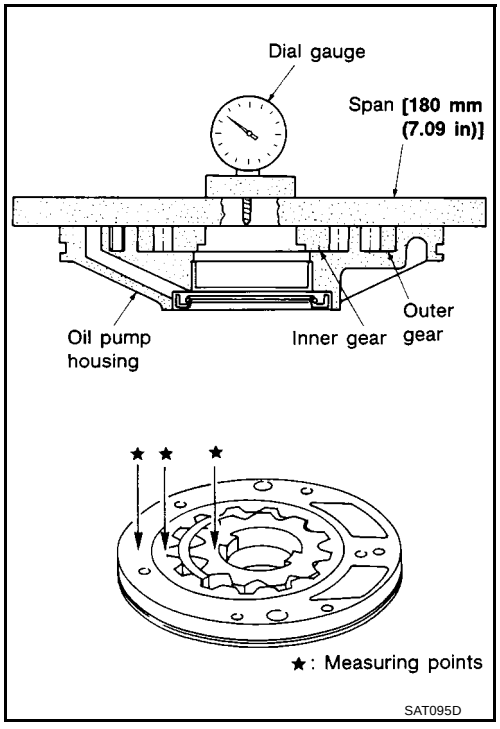

- Measure clearance between outer gear and oil pump housing.

  Standard clearance: 0.08 - 0.15 mm (0.0031 - 0.0059 in)

  Allowable limit: 0.15 mm (0.0059 in)

- If not within allowable limit, replace whole oil pump assembly except oil pump cover.

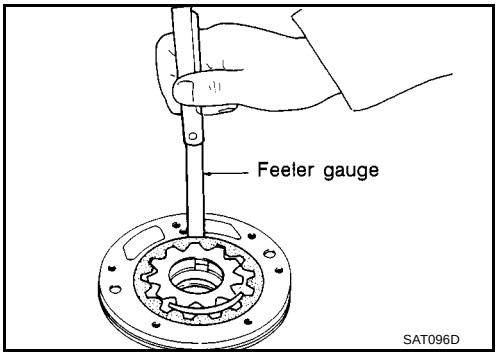

Seal Ring Clearance

- Install new seal rings onto oil pump cover.
- Measure clearance between seal ring and ring groove.

  Standard clearance: 0.1 - 0.25 mm (0.0039 - 0.0098 in)

  Allowable limit: 0.25 mm (0.0098 in)

- If not within allowable limit, replace oil pump cover assembly.

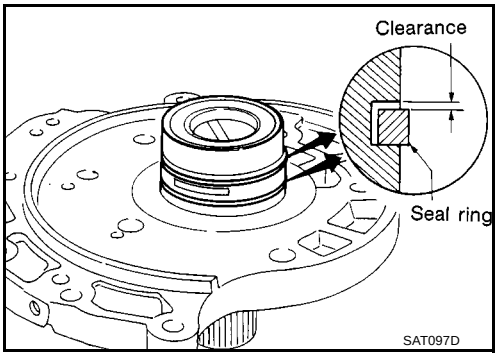

ASSEMBLY

1. Install oil seal on oil pump housing.
   - Apply ATF to oil seal.

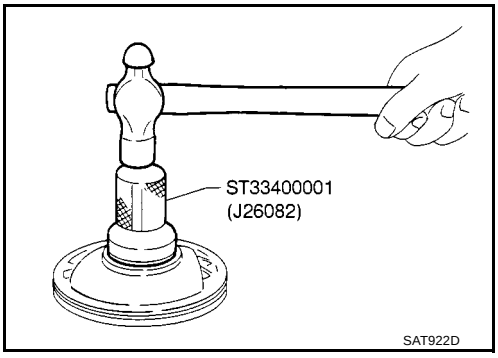

2. Install O-ring on oil pump housing.
   - **Apply ATF to O-ring.**

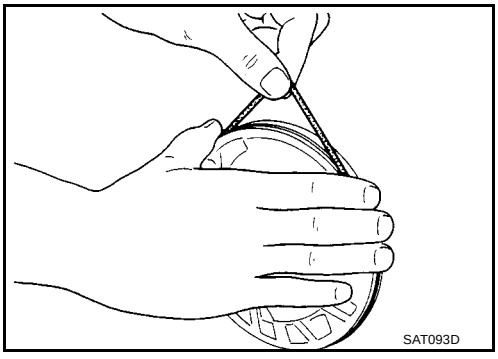

3. Install inner and outer gears on oil pump housing.
   - **Take care with the direction of inner gear.**

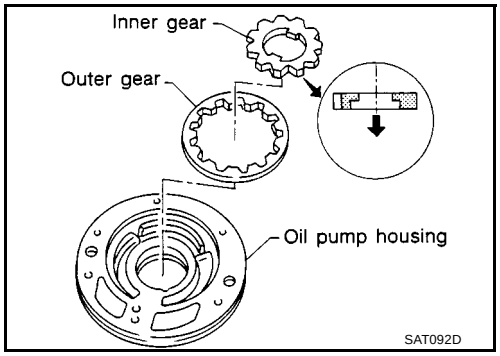

4. Install oil pump cover on oil pump housing.

a. Wrap masking tape around splines of oil pump cover assembly to protect seal. Position oil pump cover assembly on oil pump housing assembly, then remove masking tape.

b. Tighten bolts in a crisscross pattern. Tighten oil pump cover bolts to the specified torque. Refer to AT-439, "COMPONENTS".

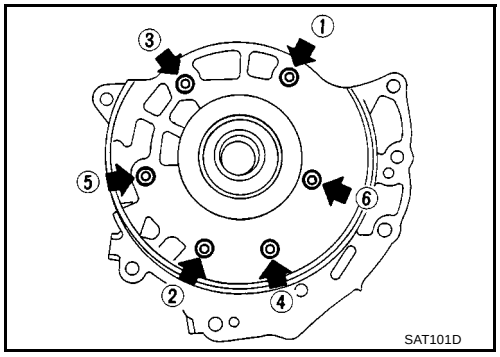

5. Install new seal rings carefully after packing ring groove with petroleum jelly.
   - **Do not spread gap of seal ring excessively while installing. The ring may be deformed.**

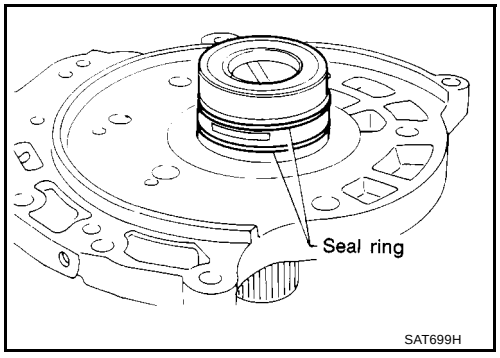

Control Valve Assembly

ECS009CJ

COMPONENTS

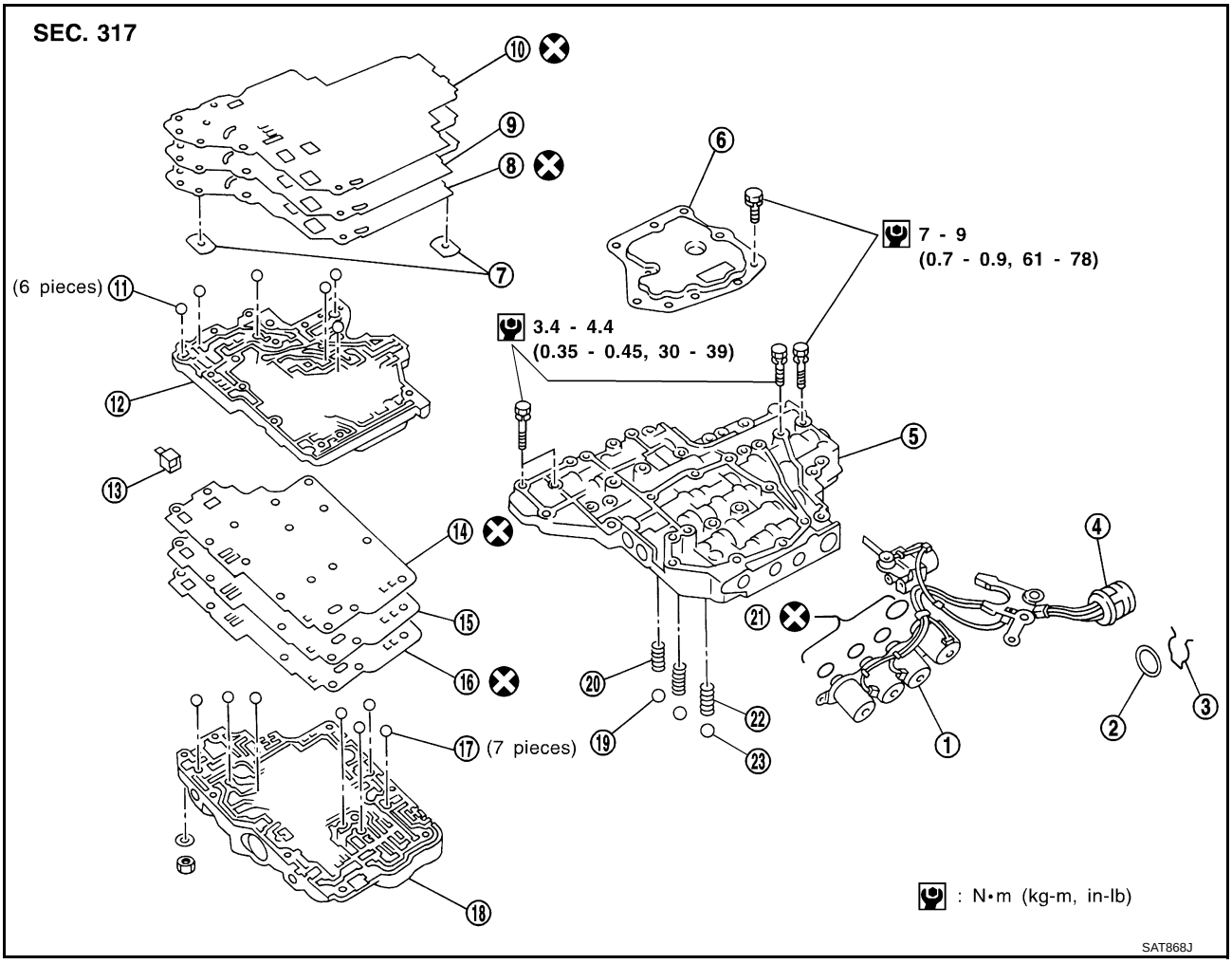

1. Solenoid valve assembly	2. O-ring	3. Clip
4. Terminal body	5. Control valve lower body	6. Oil strainer
7. Support plate	8. Lower inter separating gasket	9. Separating plate
10. Lower separating gasket	11. Steel ball	12. Control valve inter body
13. Pilot filter	14. Upper inter separating gasket	15. Separating plate
16. Upper separating gasket	17 Steel ball	18. Control valve upper body
19. Check ball	20. Fluid cooler relief valve spring	21. O-ring
22. T/C pressure holding spring	23. Check ball	

DISASSEMBLY

- Disassemble upper, inter and lower bodies.

Bolt length, number and location:

Bolt symbol	A	B	C	D	E	F	G
Bolt length "ℓ"	13.5 mm (0.531 in)	58.0 mm (2.283 in)	40.0 mm (1.575 in)	66.0 mm (2.598 in)	33.0 mm (1.299 in)	78.0 mm (3.071 in)	18.0 mm (0.709 in)
Number of bolts	6	3	6	11	2	2	1

F: Reamer bolt and nut

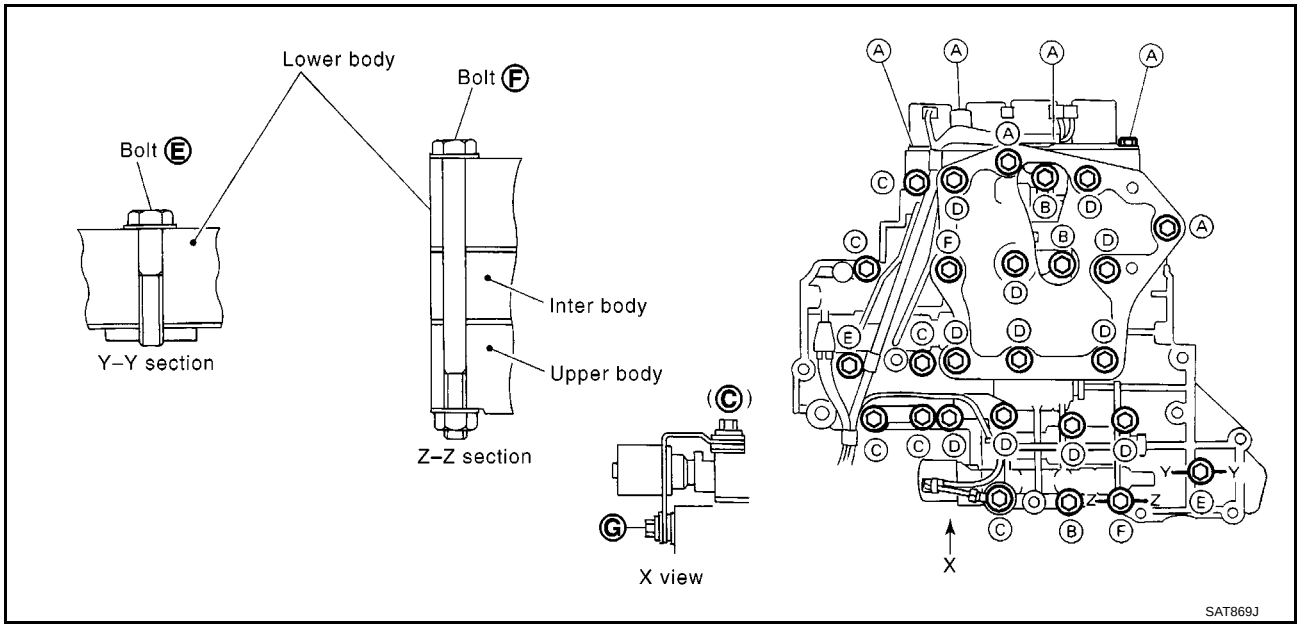

1. Remove bolts A, D and F, and remove oil strainer from control valve assembly.

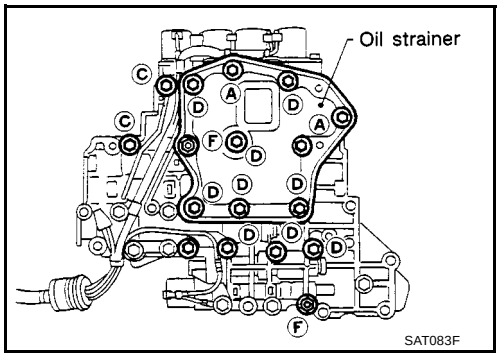

2. Remove solenoid valve assembly and line pressure solenoid valve from control valve assembly.
   - **Be careful not to lose the line pressure solenoid valve spring**.

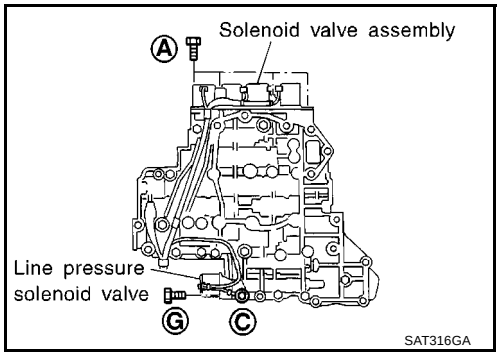

3. Remove O-rings from solenoid valves and terminal body.

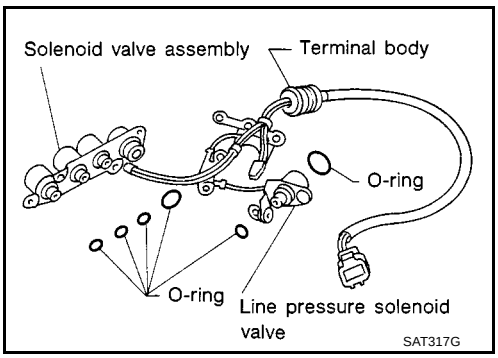

4. Place upper body facedown, and remove bolts B, C and F.

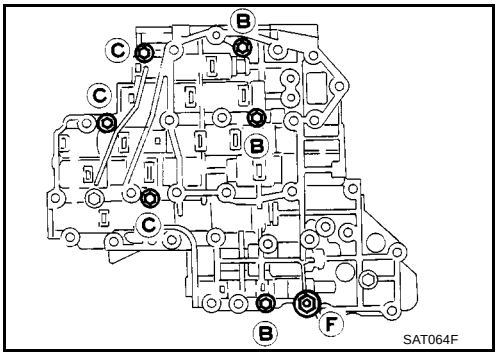

5. Remove lower body from inter body.

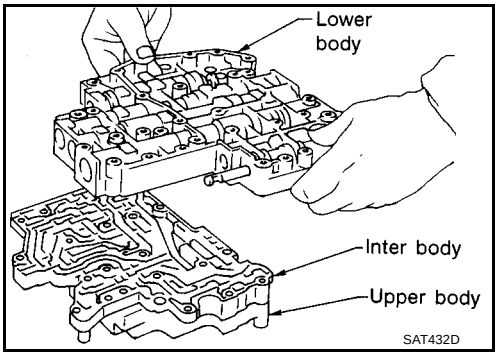

6. Turn over lower body, and accumulator support plates.

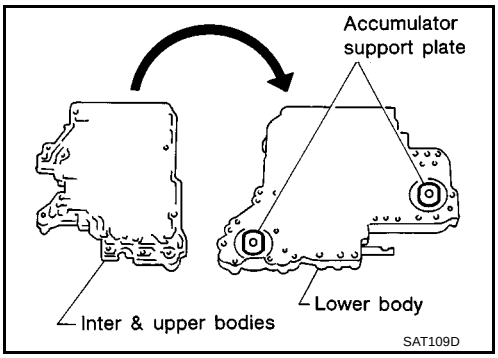

7. Remove bolts E, separating plate and separating gaskets from lower body.
8. Remove check balls, fluid cooler relief valve springs and T/C pressure holding spring from lower body.
   - **Be careful not to lose steel balls and relief valve springs.**

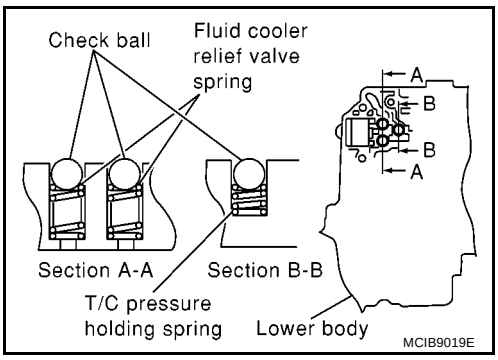

9. Remove inter body from upper body.
10. Remove pilot filter, separating plate and gaskets from upper body.

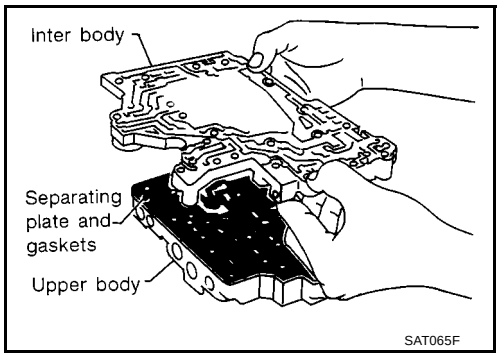

11. Check to see that steel balls are properly positioned in inter body and then remove them.
    - **Be careful not to lose steel balls.**

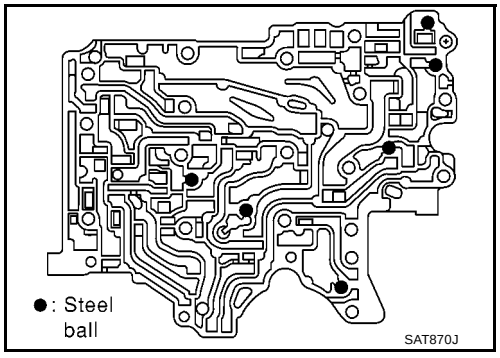

12. Check to see that steel balls are properly positioned in upper body and then remove them.
    - **Be careful not to lose steel balls.**

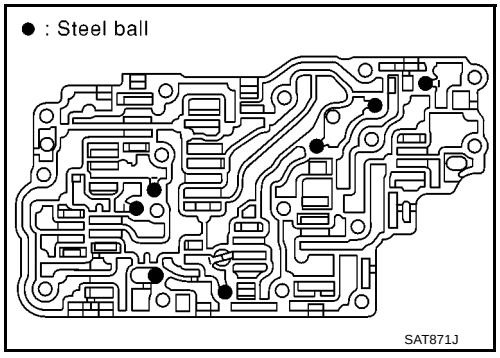

INSPECTION

Lower and Upper Bodies

- Check to see that retainer plates are properly positioned in lower body.

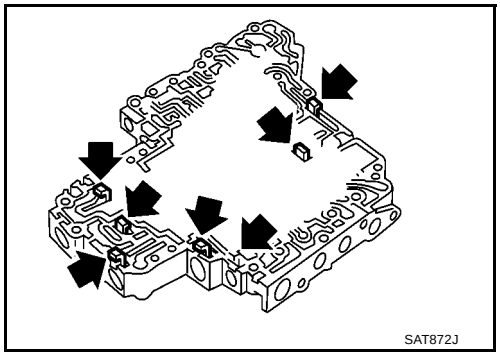

- Check to see that retainer plates are properly positioned in upper body.
- **Be careful not to lose these parts.**

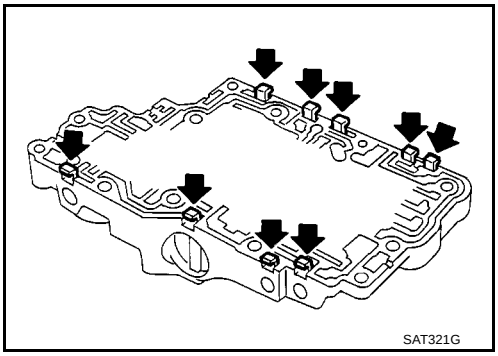

Oil Strainer

- Check wire netting of oil strainer for damage.

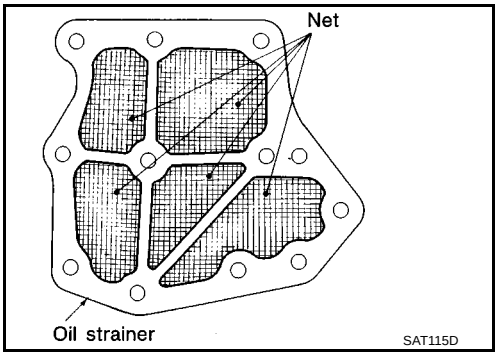

Shift Solenoid Valves “A” and “B”, Line Pressure Solenoid Valve, Torque Converter Clutch Solenoid Valve and Overrun Clutch Solenoid Valve

- Measure resistance.
- Except for EURO-OBD:
- For shift solenoid valve A, refer to AT-361, "SHIFT SOLENOID VALVE A" .
- For shift solenoid valve B, refer to AT-366, "SHIFT SOLENOID VALVE B" .
- For line pressure solenoid valve, refer to AT-392, "LINE PRESSURE SOLENOID VALVE" .
- For torque converter clutch solenoid valve, refer to AT-376, "TORQUE CONVERTER CLUTCH SOLENOID VALVE" .
- For overrun clutch solenoid valve, refer to AT-371, "OVERRUN CLUTCH SOLENOID VALVE" .

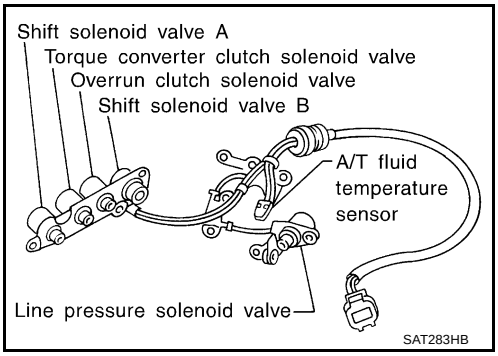

- EURO-OBD:
- For shift solenoid valve A, refer to AT-173, "DTC P0750 SHIFT SOLENOID VALVE A" .
- For shift solenoid valve B, refer to AT-178, "DTC P0755 SHIFT SOLENOID VALVE B" .
- For line pressure solenoid valve, refer to AT-166, "DTC P0745 LINE PRESSURE SOLENOID VALVE" .
- For torque converter clutch solenoid valve, refer to AT-161, "DTC P0740 TORQUE CONVERTER CLUTCH SOLENOID VALVE" .
- For overrun clutch solenoid valve, refer to AT-189, "DTC P1760 OVERRUN CLUTCH SOLENOID VALVE" .

Fluid Cooler Relief Valve Spring

- Check springs for damage or deformation.
- Measure free length and outer diameter.

Inspection standard: Refer to AT-519, "SERVICE DATA AND SPECIFICATIONS (SDS)" .

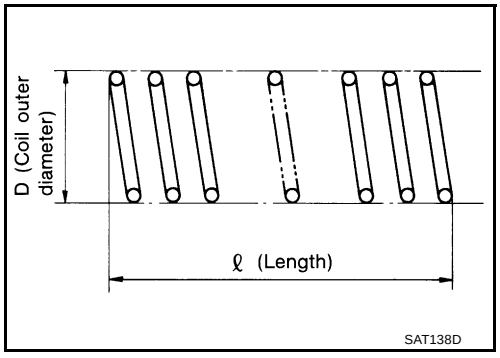

ASSEMBLY

1. Install upper, inter and lower body.

a. Place oil circuit of upper body face up. Install steel balls in their proper positions.

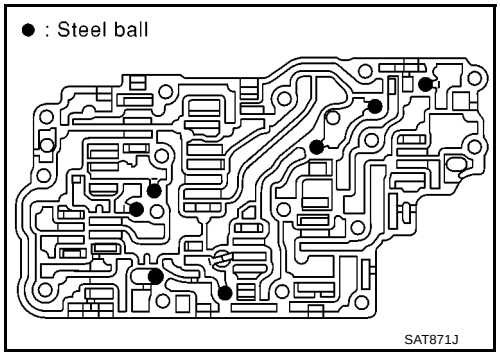

b. Install upper separating gasket, upper inter separating gasket and upper separating plate in order shown in illustration.
   - **Always use new gaskets.**

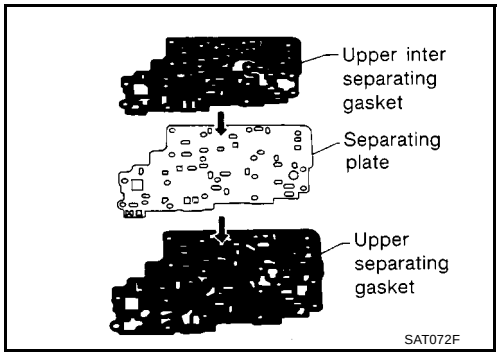

c. Install reamer bolts "**F** " from bottom of upper body. Using reamer bolts as guides, install separating plate and gaskets as a set.

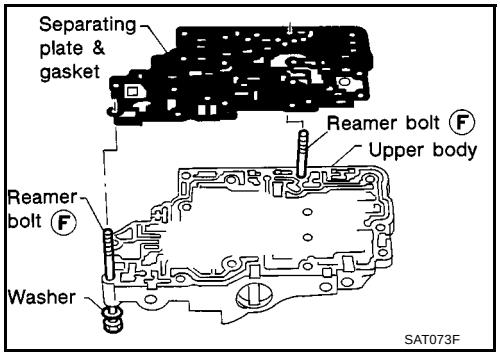

d. Install pilot filter.

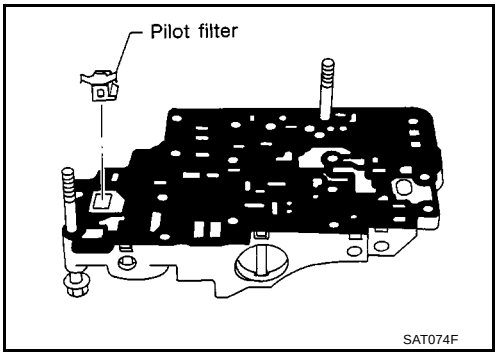

e. Place lower body as shown in illustration (side of inter body face up). Install steel balls in their proper positions.

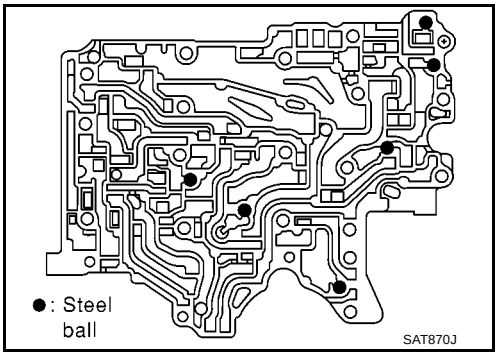

f. Install inter body on upper body using reamer bolts **"F"** as guides.

- **Be careful not to dislocate or drop steel balls.**

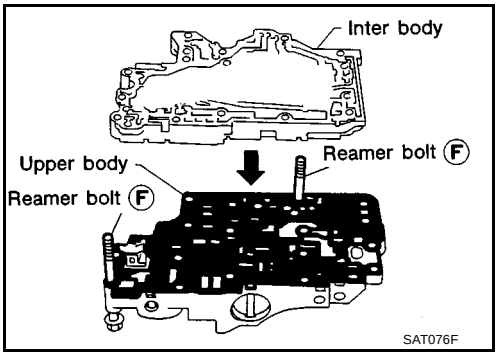

g. Install check balls, fluid cooler relief valve springs and T/C pressure holding spring in their proper positions in lower body.

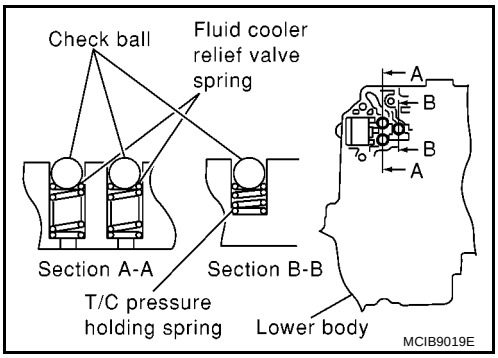

h. Install lower separating gasket, lower inter separating gasket and lower separating plate in order shown in illustration.

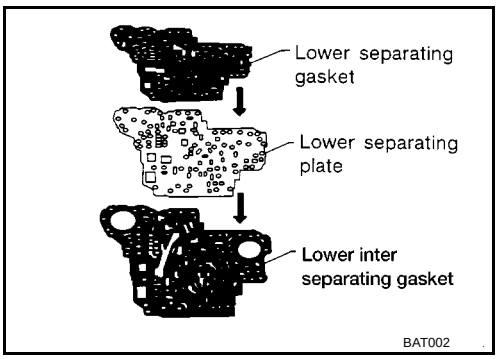

i. Install bolts **"E"** from bottom of lower body. Using bolts **"E"** as guides, install separating plate and gaskets as a set.

j. Temporarily install support plates on lower body.

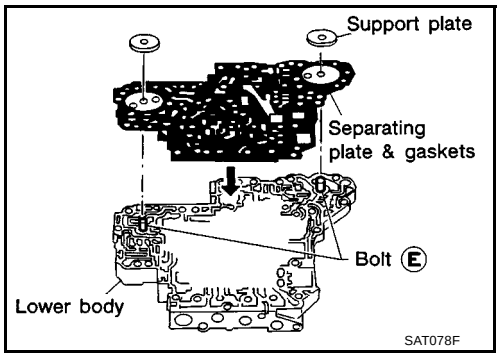

k. Install lower body on inter body using reamer bolts "**F**" as guides and tighten reamer bolts **"F"** slightly.

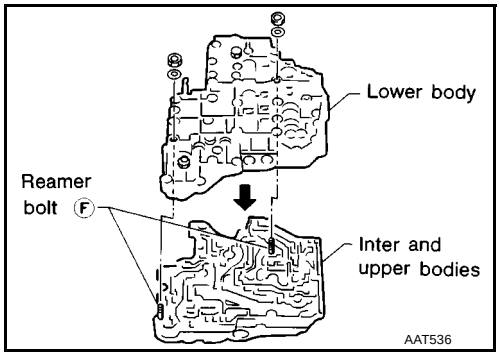

2. Install O-rings to solenoid valves and terminal body.
   - **Apply ATF to O-rings.**

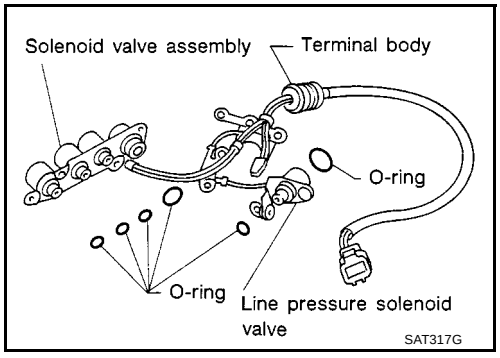

3. Install and tighten bolts.

Bolt length, number and location:

Bolt symbol	A	B	C	D	E	F	G
Bolt length "ℓ" ℓ	13.5 mm (0.531 in)	58.0 mm (2.283 in)	40.0 mm (1.575 in)	66.0 mm (2.598 in)	33.0 mm (1.299 in)	78.0 mm (3.071 in)	18.0 mm (0.709 in)
Number of bolts	6	3	6	11	2	2	1

F: Reamer bolt and nut

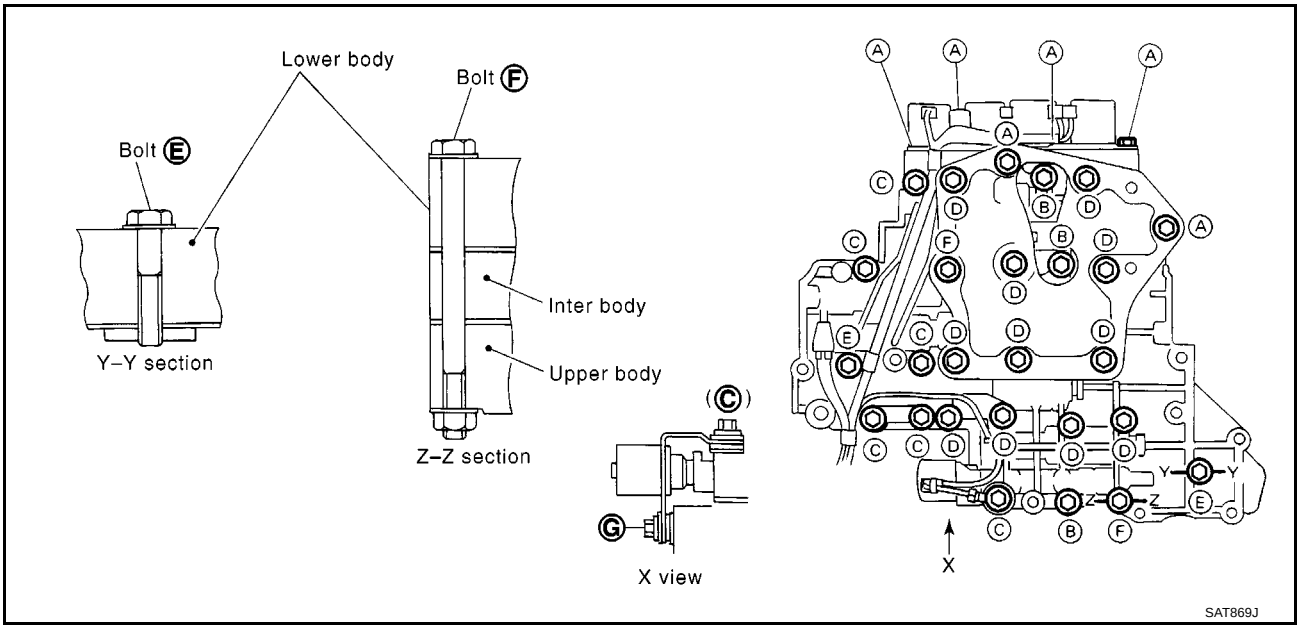

a. Install and tighten bolts **B** to specified torque.

: 7 - 9 N-m (0.7 - 0.9 kg-m, 61 - 78 in-lb)

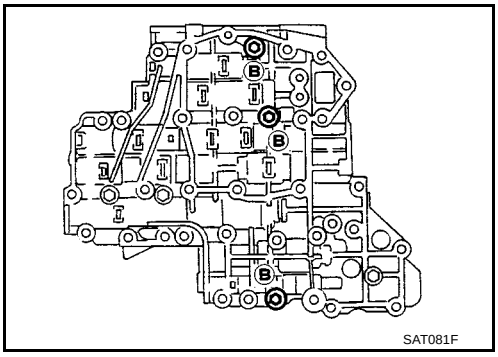

b. Install solenoid valve assembly and line pressure solenoid valve to lower body.

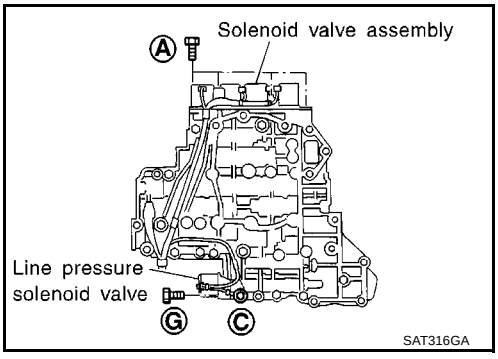

c. Remove reamer bolts **F** and set oil strainer on control valve assembly.

d. Reinstall reamer bolt **F** from lower body side.

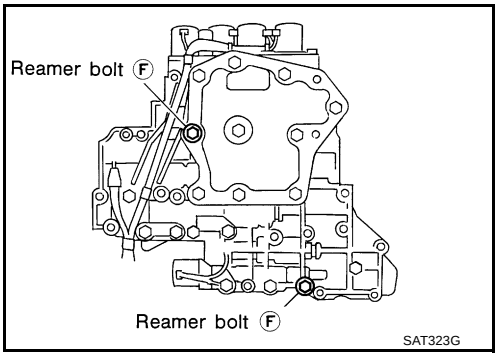

e. Set oil strainer, then tighten bolts **A** , **C** , **D** and nuts **F** to specified torque.

: 7 - 9 N-m (0.7 - 0.9 kg-m, 61 - 78 in-lb)

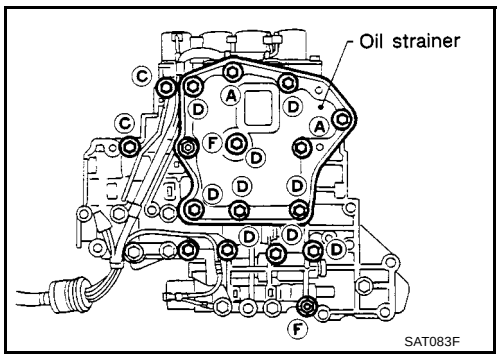

f. Tighten bolts **e** to specified torque.

: 3.4 - 4.4 N-m (0.35 - 0.45 kg-m, 30 - 39 in-lb)

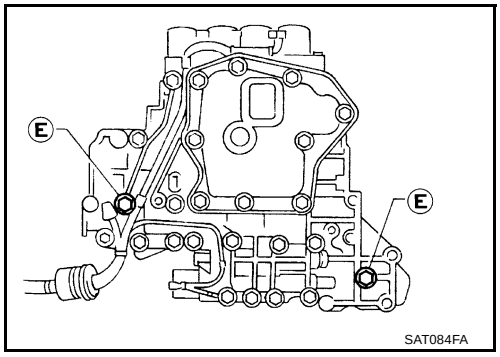

Control Valve Upper Body

ECS009CK

COMPONENTS

Numbers preceding valve springs correspond with those shown in AT-519, "SERVICE DATA AND SPECIFICATIONS (SDS)" .

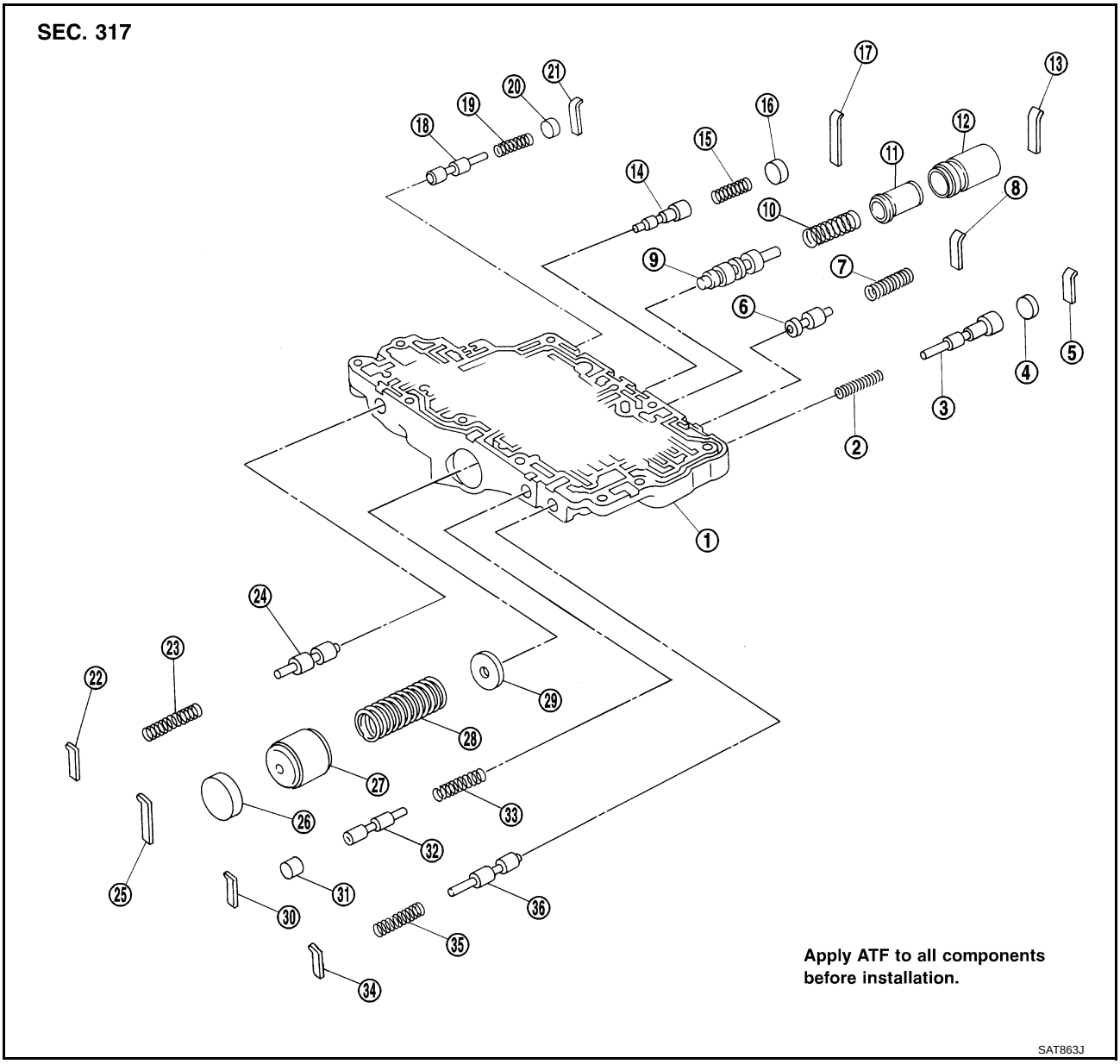

1.	Control valve upper body	2.	Return spring	3.	Overrun clutch reducing valve
4.	Plug	5.	Retainer plate	6.	Torque converter relief valve
7.	Return spring	8.	Retainer plate	9.	Torque converter clutch control valve
10.	Return spring	11.	Plug	12.	Sleeve
13.	Retainer plate	14.	1-2 accumulator valve	15.	Return spring
16.	Plug	17.	Retainer plate	18.	Cooler check valve
19.	Return spring	20.	Plug	21.	Retainer plate
22.	Retainer plate	23.	Return spring	24.	Pilot valve
25.	Retainer plate	26.	Plug	27.	1-2 accumulator piston
28.	Return spring	29.	1-2 accumulator retainer plate	30.	Retainer plate
31.	Plug	32.	1st reducing valve	33.	Return spring
34.	Retainer plate	35.	Return spring	36.	3-2 timing valve

DISASSEMBLY

1. Remove valves at retainer plates.
   - **Do not use a magnetic pick-up tool.**

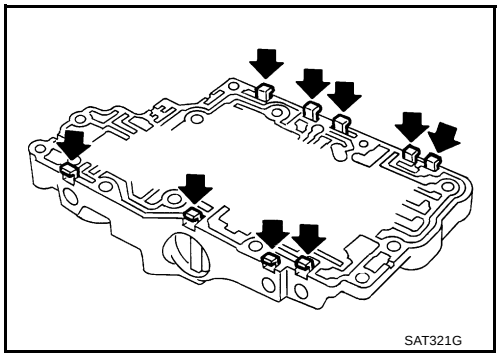

a. Use a screwdriver to remove retainer plates.

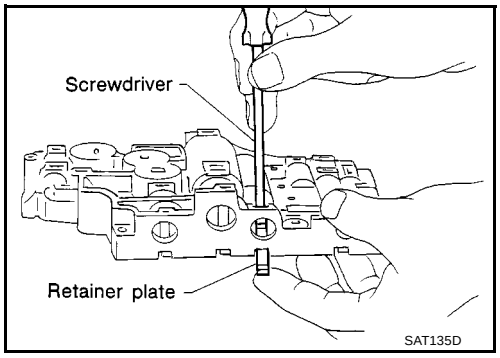

b. Remove retainer plates while holding spring, plugs or sleeves.
   - **Remove plugs slowly to prevent internal parts from jumping out.**

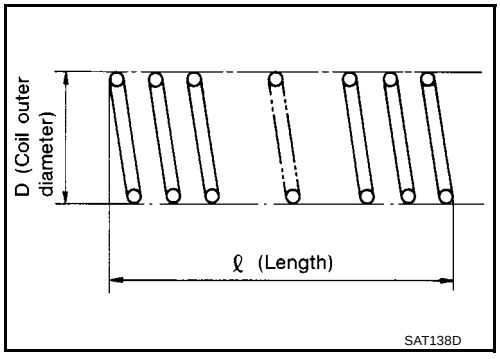

c. Place mating surface of valve body face down, and remove internal parts.
   - **If a valve is hard to remove, place valve body face down and lightly tap it with a soft hammer.**
   - **Be careful not to drop or damage valves and sleeves.**

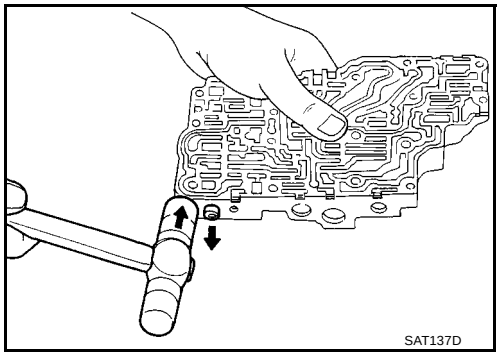

INSPECTION

Valve Spring

- Measure free length and outer diameter of each valve spring. Also check for damage or deformation.

  Inspection standard :Refer to AT-519, "SERVICE DATA AND SPECIFICATIONS (SDS)" .

- Replace valve springs if deformed or fatigued.

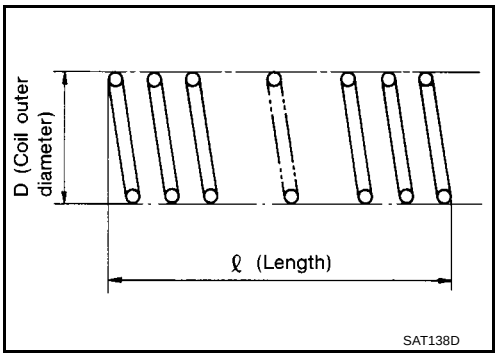

Control Valves

- Check sliding surfaces of valves, sleeves and plugs.

ASSEMBLY

- **Lay control valve body down when installing valves. Do not stand the control valve body upright.**

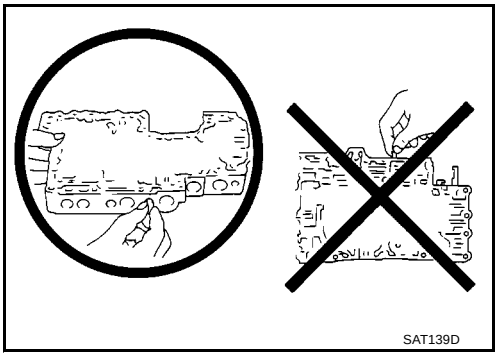

1. Lubricate the control valve body and all valves with ATF. Install control valves by sliding them carefully into their bores.
   - **Be careful not to scratch or damage valve body.**

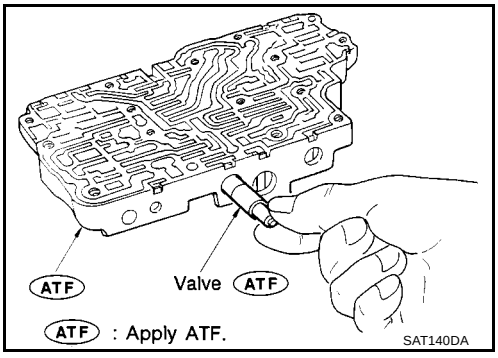

   - Wrap a small screwdriver with vinyl tape and use it to insert the valves into their proper positions.

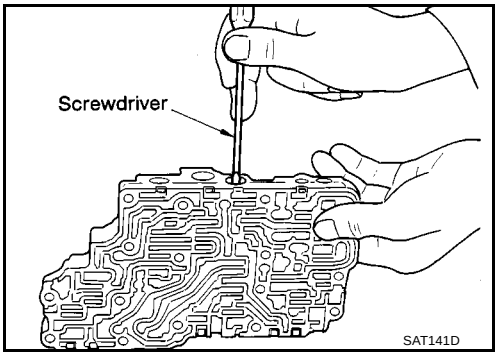

1-2 Accumulator Valve

- Install 1-2 accumulator valve. Align 1-2 accumulator retainer plate from opposite side of control valve body.
- Install return spring, 1-2 accumulator piston and plug.

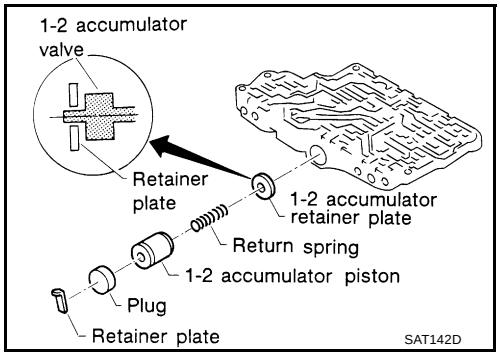

1. Install retainer plates.
   - Install retainer plate while pushing plug or return spring.

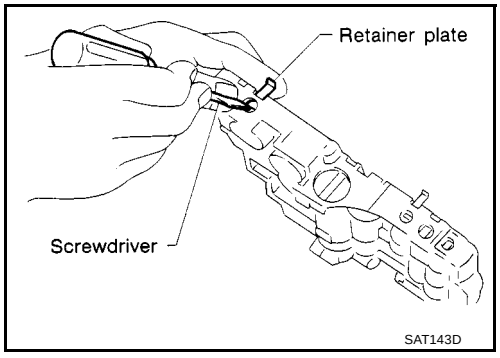

Retainer Plate (Upper Body)

Unit: mm (in)

No.	Name of control valve	Width A	Length B
22	Pilot valve	6.0 (0.236)	21.5 (0.846)
30	1st reducing valve		
34	3-2 timing valve		
8	Torque converter relief valve		
17	1-2 accumulator valve		38.5 (1.516)
25	1-2 accumulator piston		
5	Overrun clutch reducing valve		24.0 (0.945)
21	Cooler check valve		
13	Torque converter clutch control valve		28.0 (1.102)

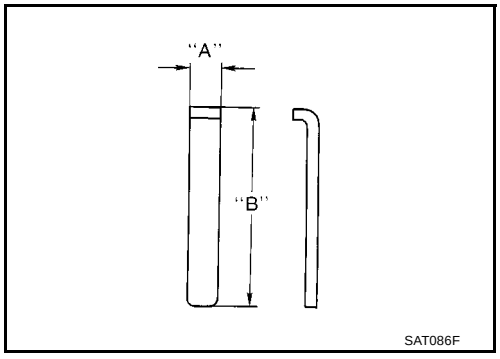

- Install proper retainer plates.
  Refer to AT-453, "Control Valve Upper Body" .

Control Valve Lower Body

ECS009CL

COMPONENTS

Numbers preceding valve springs correspond with those shown in AT-519, "SERVICE DATA AND SPECIFICATIONS (SDS)" .

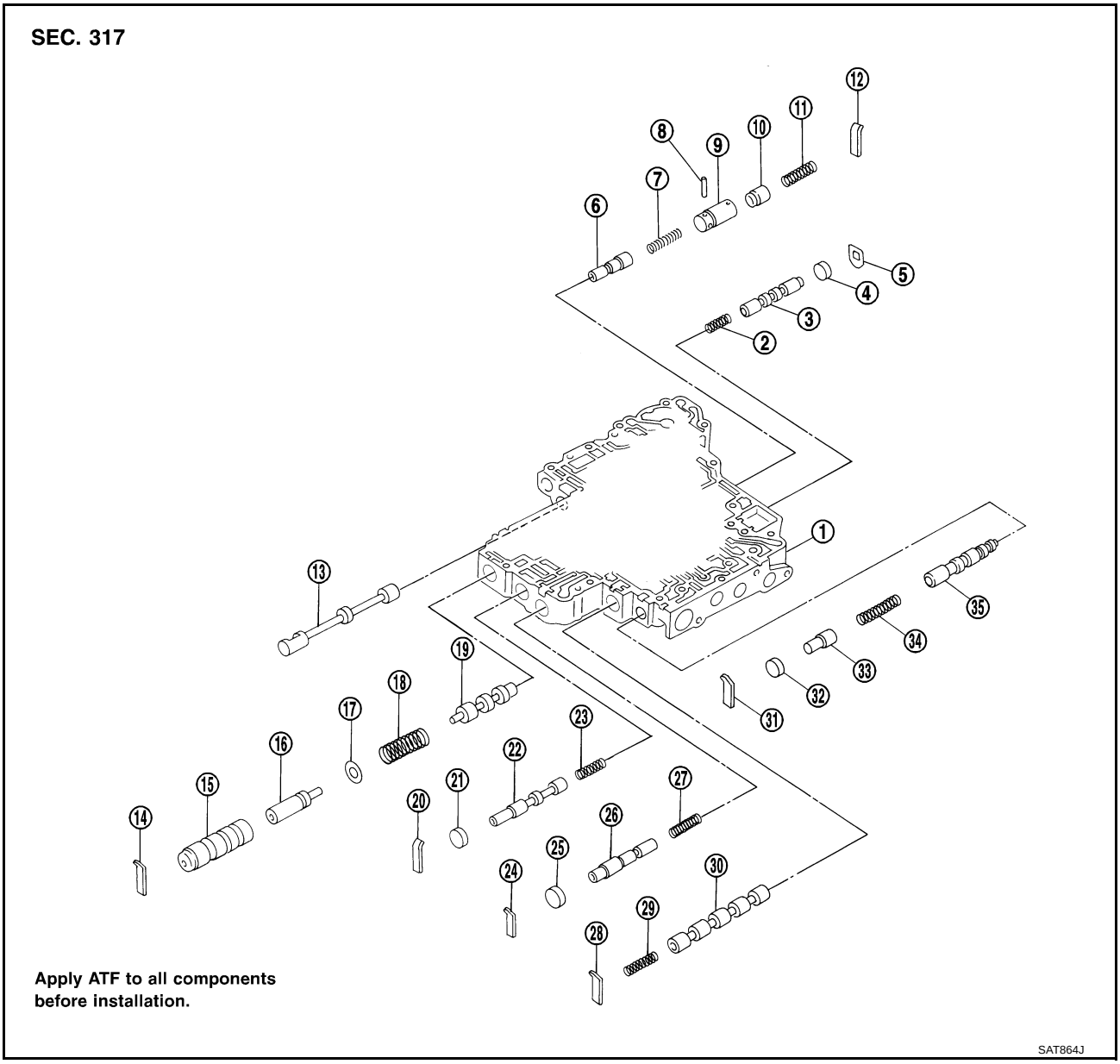

1.	Control valve lower body	2.	Return spring	3.	Shift valve B
4.	Plug	5.	Retainer plate	6.	Pressure modifier valve
7.	Return spring	8.	Parallel pin	9.	Sleeve
10.	Piston	11.	Return spring	12.	Retainer plate
13.	Manual valve	14.	Retainer plate	15.	Sleeve
16.	Plug	17.	Spring seat	18.	Return spring
19.	Pressure regulator valve	20.	Retainer plate	21.	Plug
22.	Overrun clutch control valve	23.	Return spring	24.	Retainer plate
25.	Plug	26.	Accumulator control valve	27.	Return spring
28.	Retainer plate	29.	Return spring	30.	Shift valve A
31.	Retainer plate	32.	Plug	33.	Plug
34.	Return spring	35.	Shuttle control valve		

DISASSEMBLY

- Remove valves at retainer plate.
  For removal procedures, refer to AT-454, "DISASSEMBLY" .

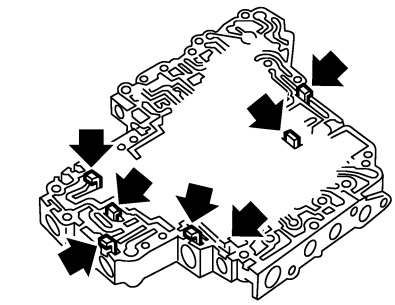

INSPECTION

Valve Springs

- Check each valve spring for damage or deformation. Also measure free length and outer diameter.

  Inspection standard :**Refer to AT-519, "SERVICE DATA AND SPECIFICATIONS (SDS)" .**

- Replace valve springs if deformed or fatigued.

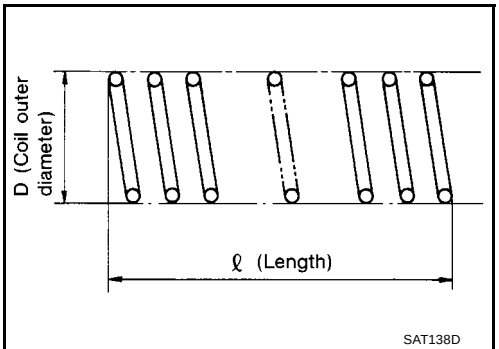

Control Valves

- Check sliding surfaces of control valves, sleeves and plugs for damage.

ASSEMBLY

- Install control valves.
  For installation procedures, refer to AT-455, "ASSEMBLY" .

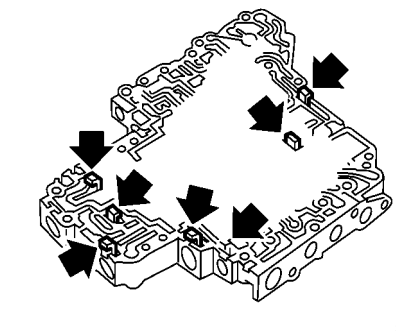

Retainer Plate (for control valve lower body)

Unit: mm (in)

Name of control valve	No.	Length A	Length B	Type
Pressure regulator valve	14	6.0 (0.236)	28.0 (1.102)	I
Accumulator control valve	24			
Shift valve A	28			
Overrun clutch control valve	20			
Pressure modifier valve	12			
Shuttle control valve	31			
Shift valve B	5	—	—	II

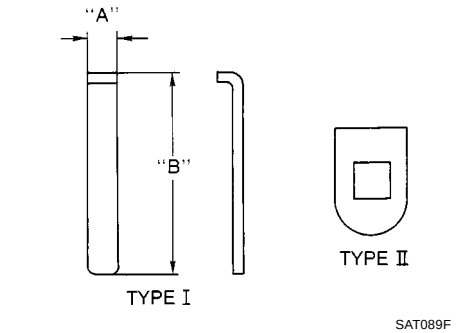

- Install proper retainer plates.
  Refer to AT-457, "Control Valve Lower Body" .

Reverse Clutch

ECS009CM

COMPONENTS

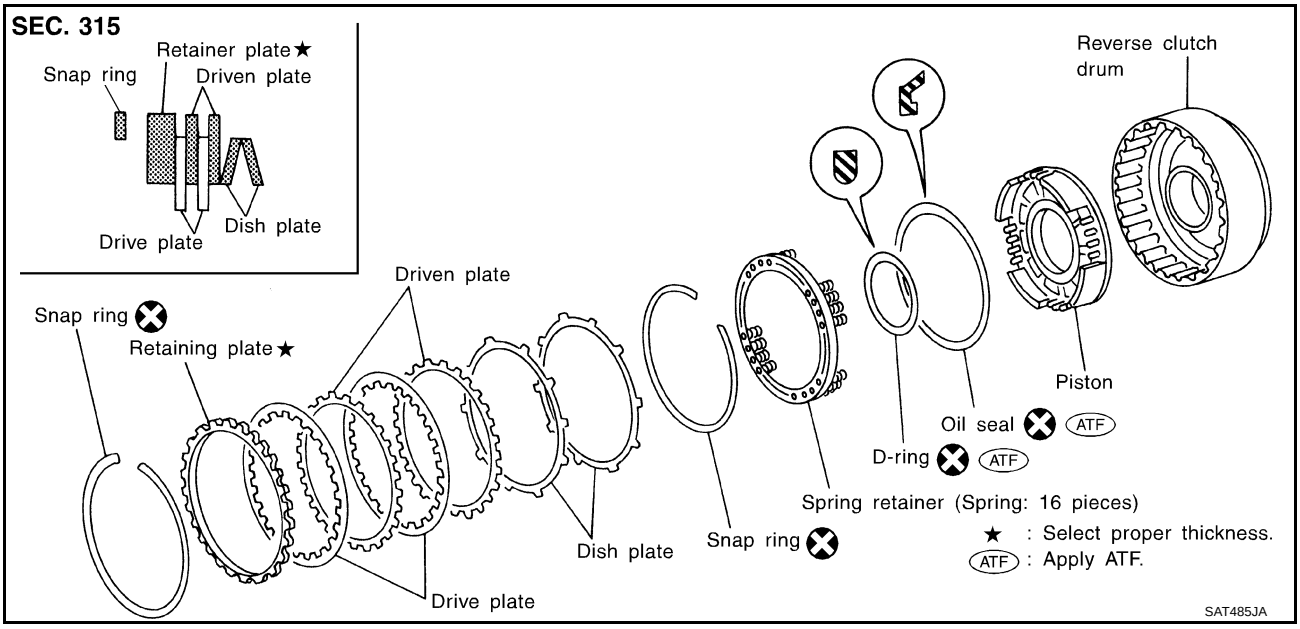

DISASSEMBLY

1. Check operation of reverse clutch

a. Install seal ring onto drum support of oil pump cover and install reverse clutch assembly. Apply compressed air to oil hole.

b. Check to see that retaining plate moves to snap ring.

c. If retaining plate does not contact snap ring:
   - D-ring might be damaged.
   - Oil seal might be damaged.
   - Fluid might be leaking past piston check ball.

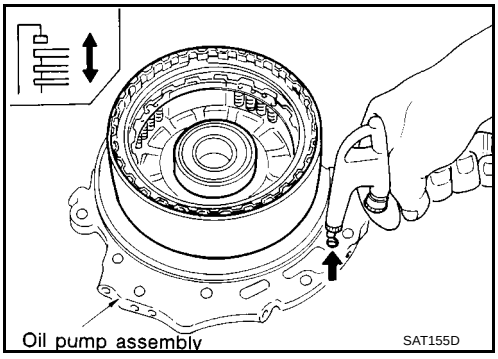

2. Remove snap ring.
3. Remove drive plates, driven plates, retaining plate, and dish plates.

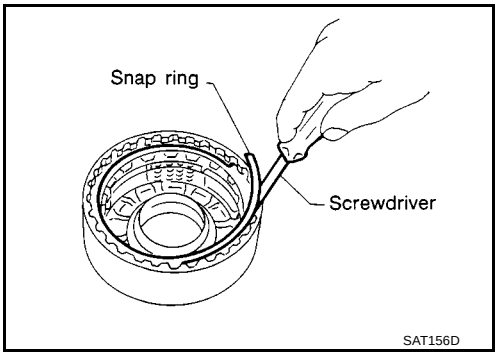

4. Set Tool on spring retainer and remove snap ring from reverse clutch drum while compressing return springs.
   - **Set Tool directly over springs.**
   - **Do not expand snap ring excessively.**
5. Remove spring retainer and return springs.

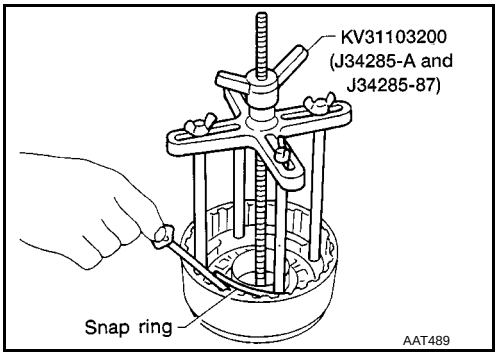

- **Do not remove return spring from spring retainer.**

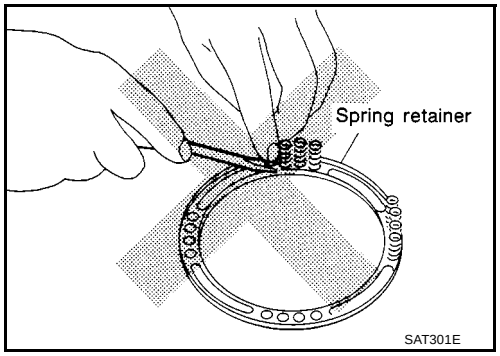

6. Remove piston from reverse clutch drum by turning it.

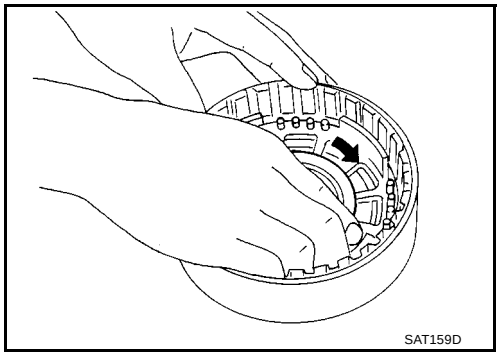

7. Remove D-ring and oil seal from piston.

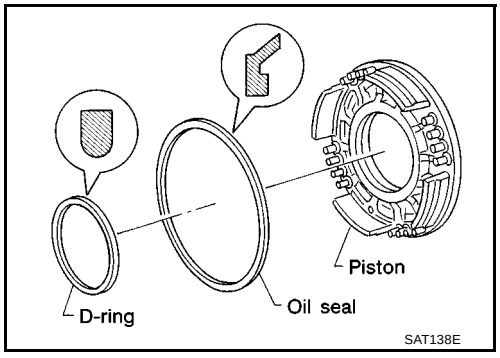

INSPECTION

Reverse Clutch Snap Ring, Spring Retainer and Return Springs

- Check for deformation, fatigue or damage.
- If necessary, replace.
- When replacing spring retainer and return springs, replace them as a set.

Reverse Clutch Drive Plates

- Check facing for burns, cracks or damage.
- Measure thickness of facing.

  Thickness of drive plate:
  Standard value: 2.0 mm (0.079 in)
  Wear limit: 1.8 mm (0.071 in)

- If not within wear limit, replace.

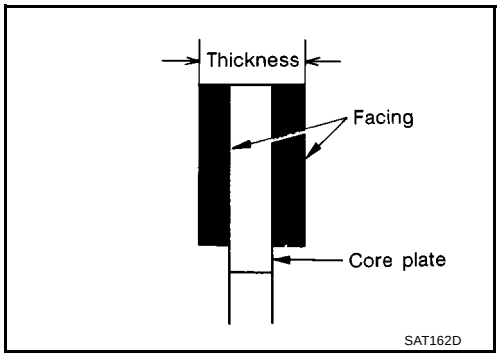

Reverse Clutch Dish Plates

- Check for deformation or damage.
- Measure thickness of dish plate.

Thickness of dish plate "T": 2.8 mm (0.110 in)

- If deformed or fatigued, replace.

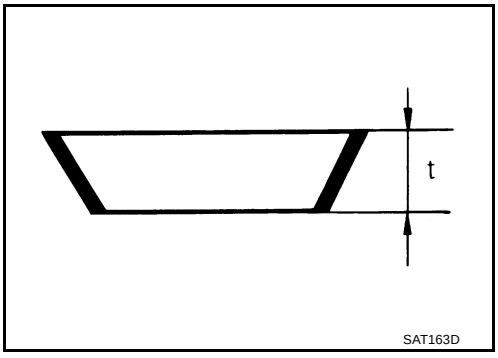

Reverse Clutch Piston

- Make sure that check balls are not fixed.
- Apply compressed air to check ball oil hole opposite the return spring. Make sure there is no air leakage.
- Apply compressed air to oil hole on return spring side to make sure that air leaks past ball.

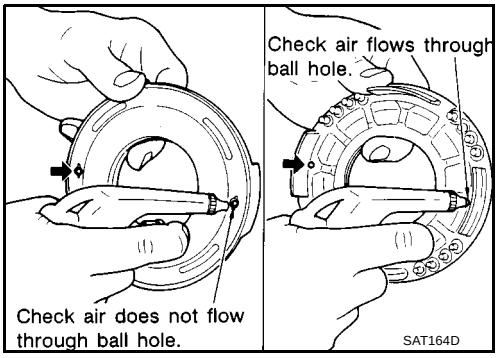

ASSEMBLY

1. Install D-ring and oil seal on piston.
   - **Take care with the direction of oil seal.**
   - **Apply ATF to both parts.**

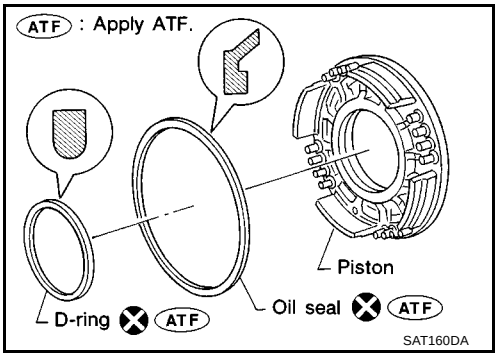

2. Install piston assembly by turning it slowly.
   - **Apply ATF to inner surface of drum.**

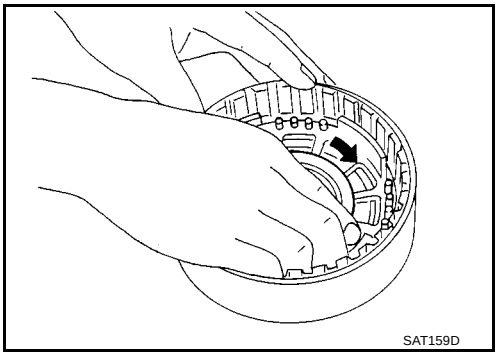

3. Install return springs and spring retainer on piston.

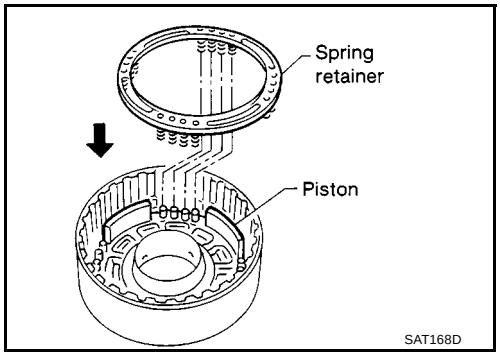

4. Set Tool on spring retainer and install snap ring while compressing return springs.
   - **Set Tool directly over return springs.**

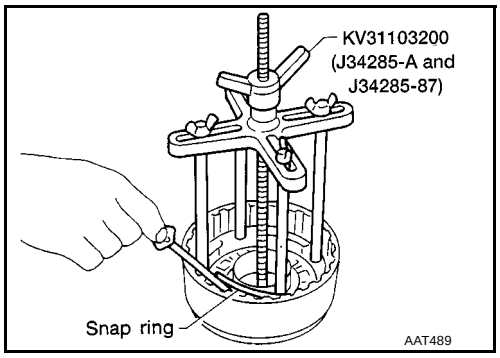

5. Install drive plates, driven plates, retaining plate and dish plates.
   - **Do not align the projections of any two dish plates.**
   - **Take care with order and direction of plates.**
6. Install snap ring.

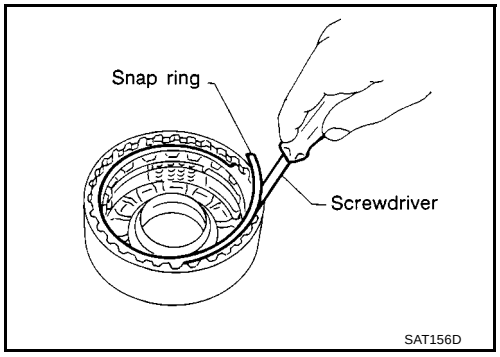

7. Measure clearance between retaining plate and snap ring. If not within allowable limit, select proper retaining plate.

   Specified clearance:

   Standard: 0.5 - 0.8mm (0.020 - 0.031 in)

   Allowable limit: 1.2 mm (0.047 in)

   Retaining plate:

   Refer to AT-519, "SERVICE DATA AND SPECIFICATIONS (SDS)" .

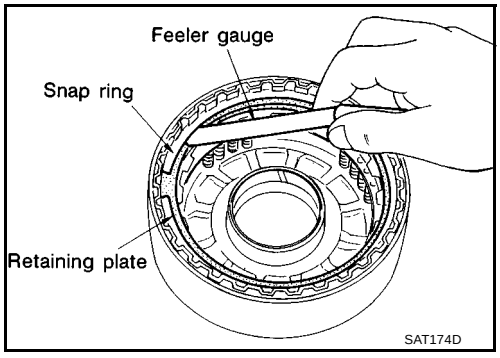

8. Check operation of reverse clutch.
   Refer to AT-459, "Reverse Clutch" .

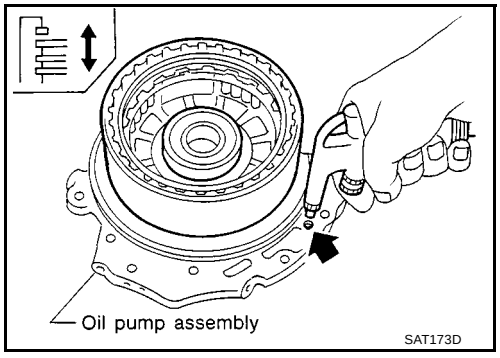

High Clutch

ECS009CN

COMPONENTS

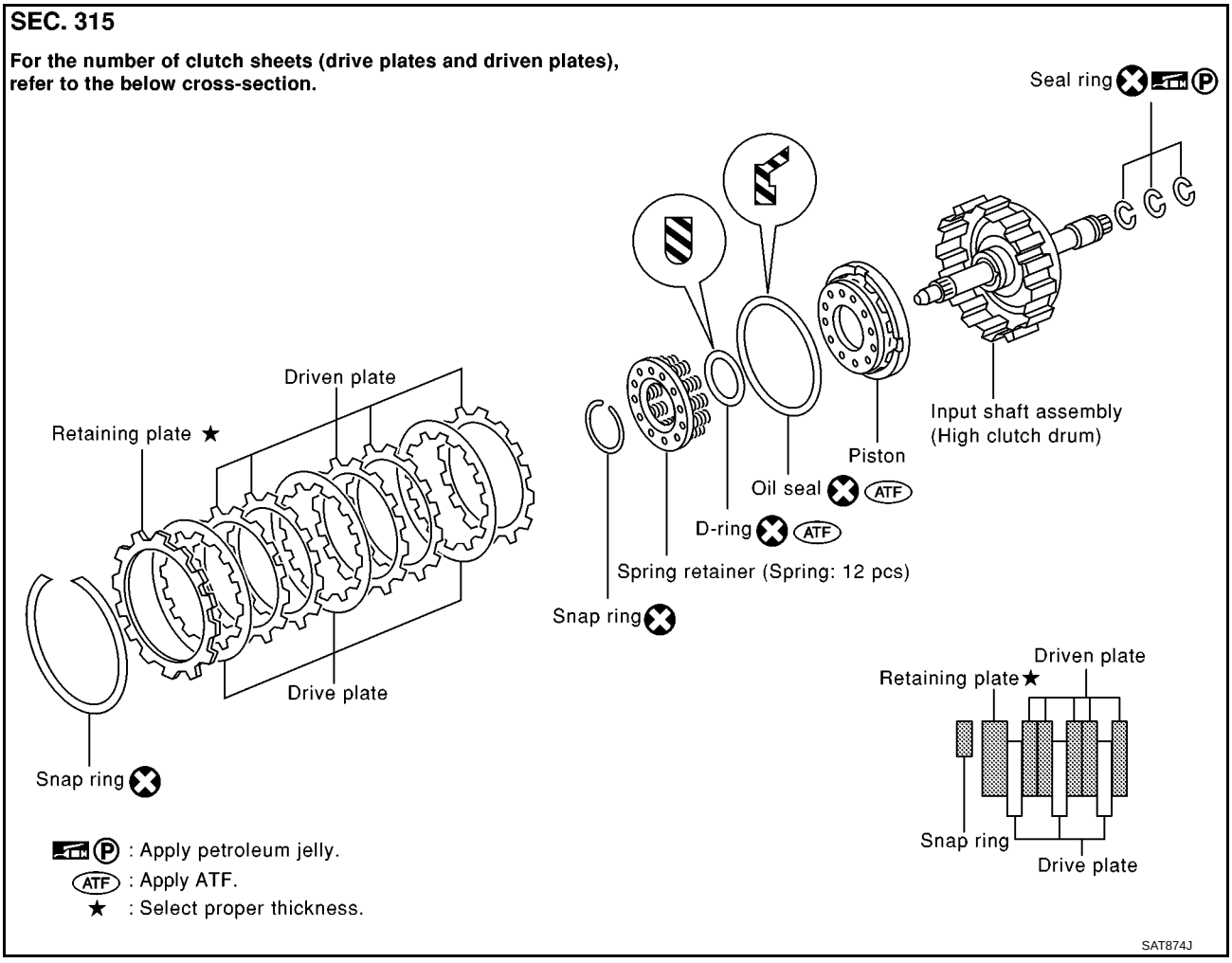

DISASSEMBLY

1. Check operation of high clutch.

a. Apply compressed air to oil hole of input shaft with nylon cloth.
   - **Stop up hole on opposite side of input shaft with nylon cloth.**

b. Check to see that retaining plate moves to snap ring.

c. If retaining plate does not contact snap ring:
   - D-ring might be damaged.
   - Oil seal might be damaged.
   - Fluid might be leaking past piston check ball.

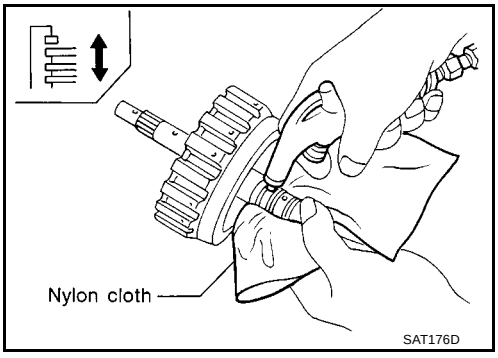

2. Remove seal rings from input shaft.
   - **Always replace when removed.**

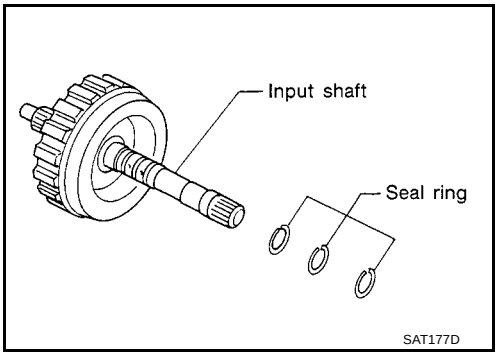

3. Remove snap ring.
4. Remove drive plates, driven plates and retaining plate.

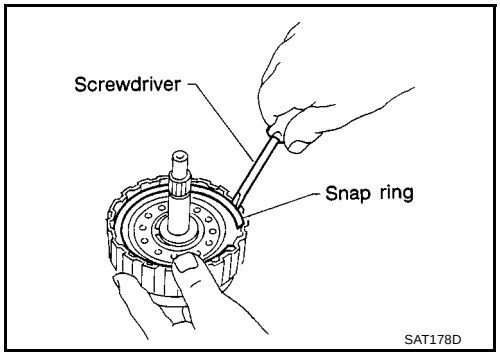

5. Set Tool on spring retainer and remove snap ring from high clutch drum while compressing return springs.
   - **Set Tool directly over springs.**
   - **Do not expand snap ring excessively.**
6. Remove spring retainer and return springs.

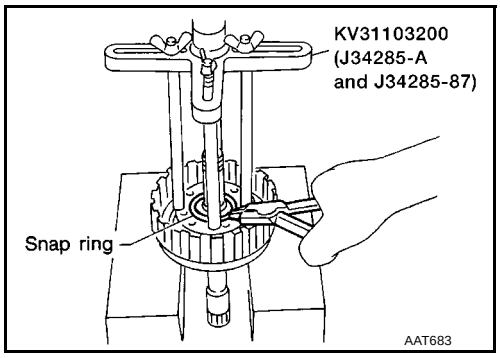

   - **Do not remove return spring from spring retainer.**

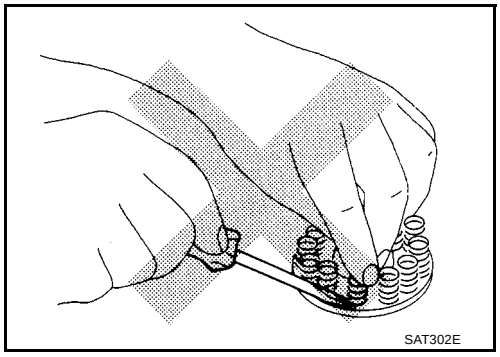

7. Remove piston from high clutch drum by turning it.

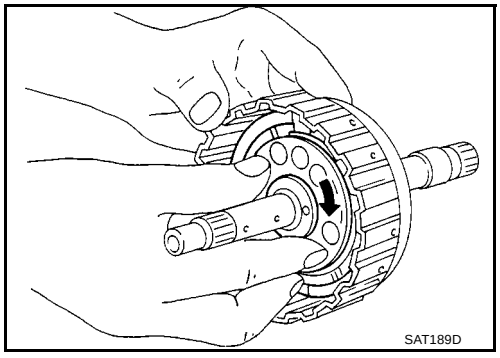

8. Remove D-ring and oil seal from piston.

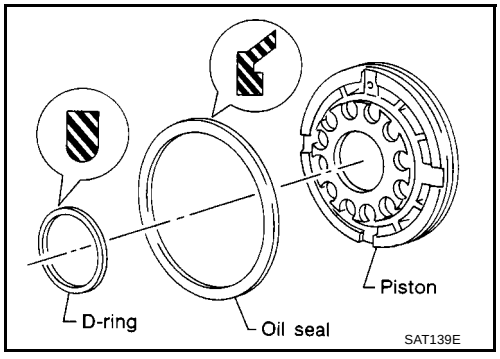

INSPECTION

High Clutch Snap Ring, Spring Retainer and Return Springs

- Check for deformation, fatigue or damage.
- If necessary, replace.
- **When replacing spring retainer and return springs, replace them as a set.**

High Clutch Drive Plates

- Check facing for burns, cracks or damage.
- Measure thickness of facing.

  Thickness of drive plate:
  Standard value 2.0 mm (0.079 in)
  Wear limit 1.8 mm (0.071 in)

- If not within wear limit, replace.

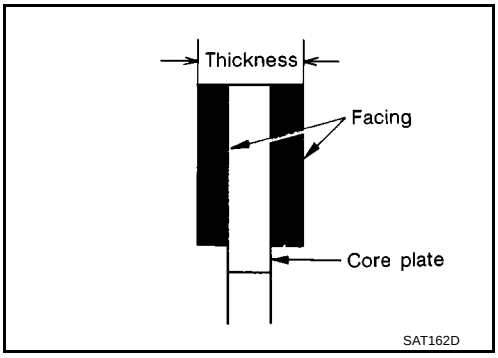

High Clutch Piston

- Make sure that check balls are not fixed.
- Apply compressed air to check ball oil hole opposite the return spring. Make sure there is no air leakage.
- Apply compressed air to oil hole on return spring side to make sure that air leaks past ball.

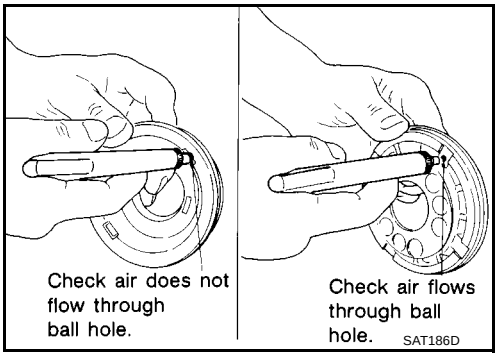

Seal Ring Clearance

- Install new seal rings onto input shaft.
- Measure clearance between seal ring and ring groove.

  Standard clearance: 0.08 - 0.23 mm (0.0031 - 0.0091 in)
  Allowable limit: 0.23 mm (0.0091 in)

- If not within allowable limit, replace input shaft assembly.

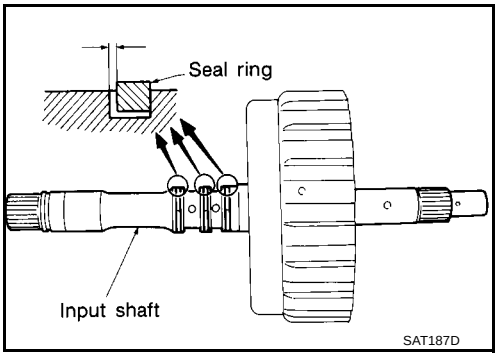

ASSEMBLY

1. Install D-ring and oil seal on piston.
   - **Take care with the direction of the oil seal.**
   - **Apply ATF to both parts.**

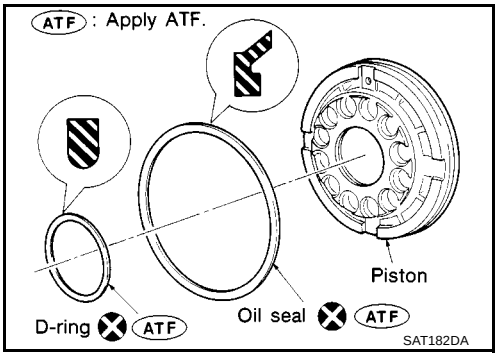

2. Install piston assembly by turning it slowly.
   - **Apply ATF to inner surface of drum.**

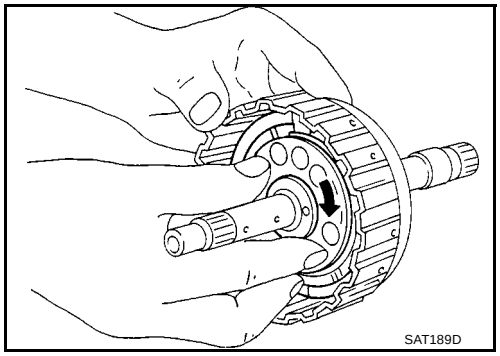

3. Install return springs and spring retainer on piston.

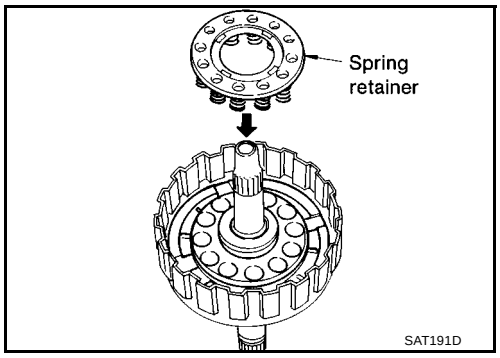

4. Set Tool on spring retainer and install snap ring while compressing return springs.
   - **Set Tool directly over return springs.**

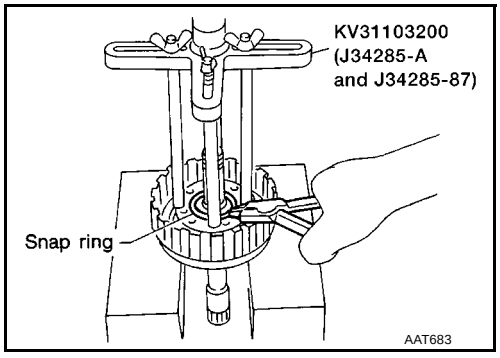

   - **Do not align snap ring gap with spring retainer stopper.**

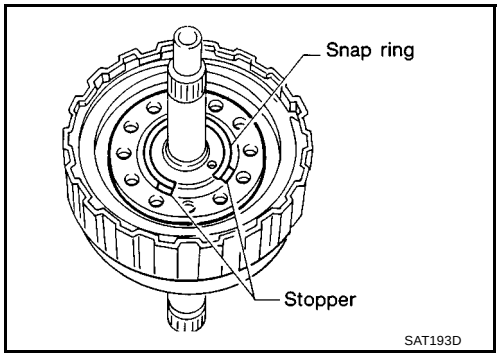

5. Install drive plates, driven plates and retaining plate.
   - **Take care with the order and direction of plates.**
6. Install snap ring.

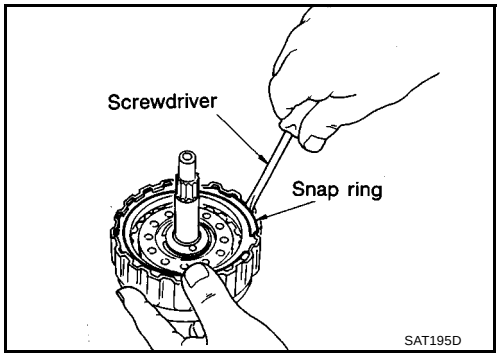

7. Measure clearance between retaining plate and snap ring. If not within allowable limit, select proper retaining plate.

Specified clearance:

Standard 1.4 - 1.8 mm (0.055 - 0.071 in)

Allowable limit 2.4 mm (0.094 in)

Retaining plate:

Refer to AT-519, "SERVICE DATA AND SPECIFICATIONS (SDS)" .

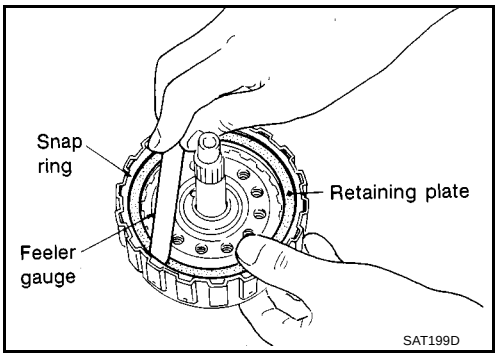

8. Check operation of high clutch.
Refer to AT-463, "High Clutch" .

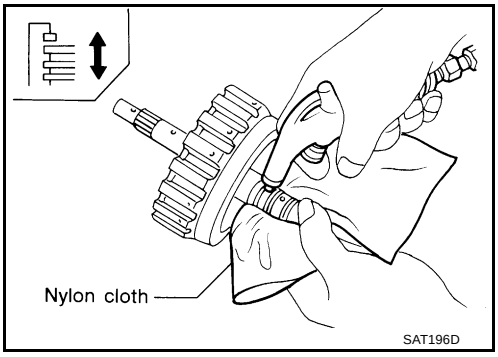

9. Install seal rings to input shaft.
- **Apply petroleum jelly to seal rings.**
- **Always replace when removed.**

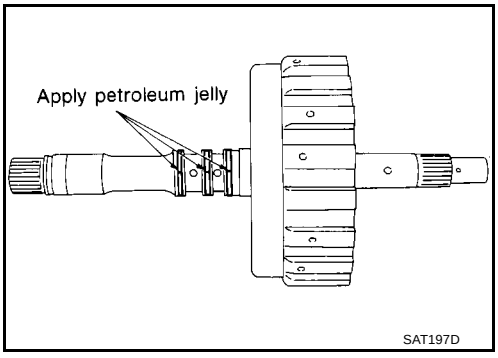

- **Roll paper around seal rings to prevent seal rings from spreading.**

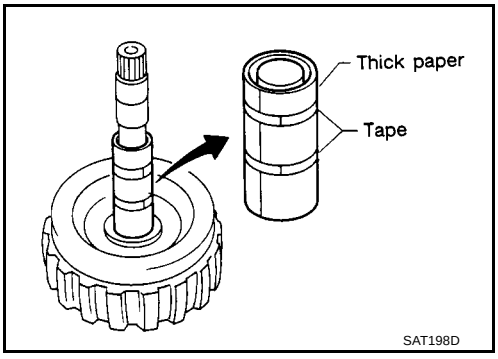

Forward and Overrun Clutches

ECS009CO

COMPONENTS

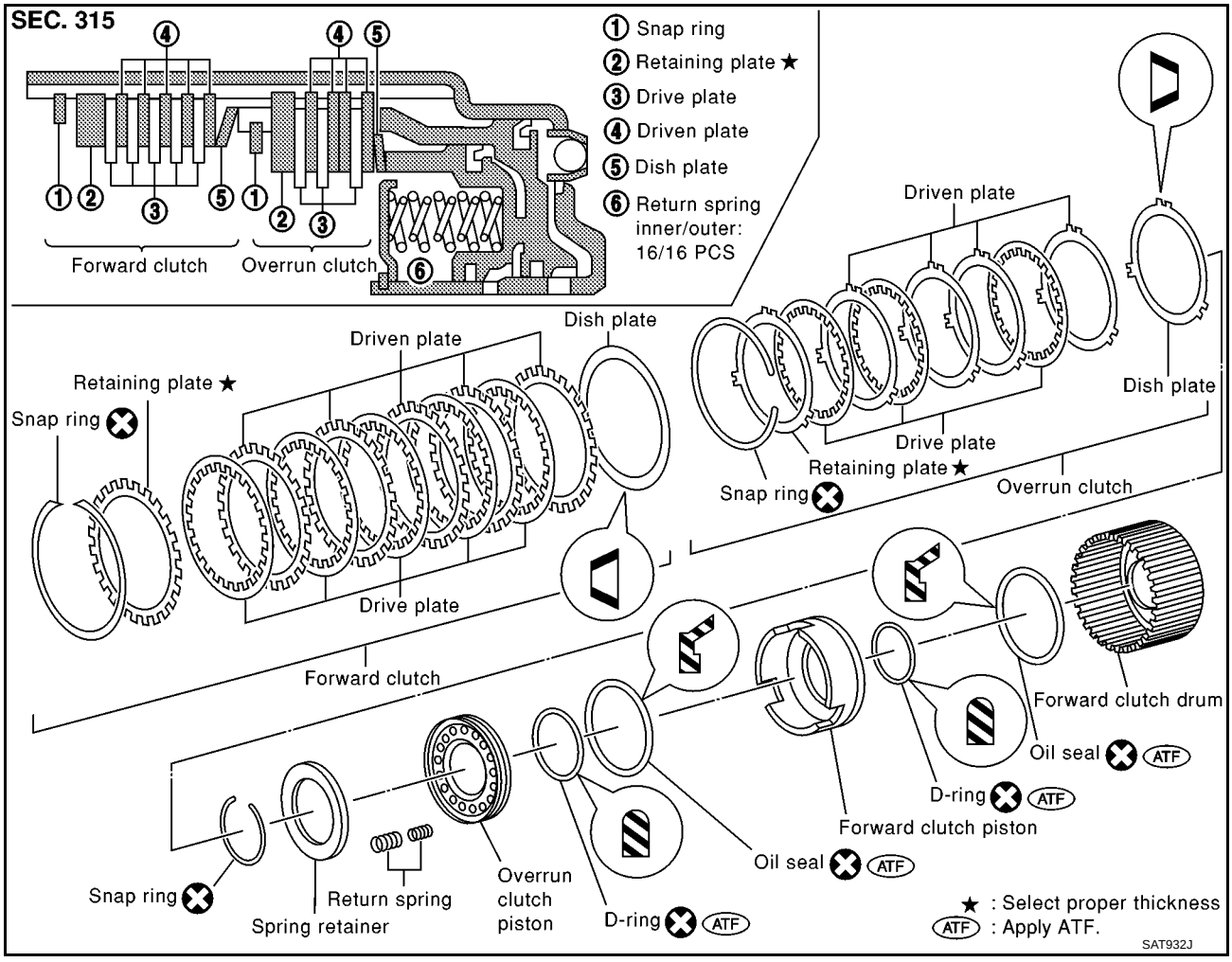

DISASSEMBLY

1. Check operation of forward clutch and overrun clutch.

a. Install bearing retainer on forward clutch drum.

b. Apply compressed air to oil hole of forward clutch drum.

c. Check to see that retaining plate moves to snap ring.

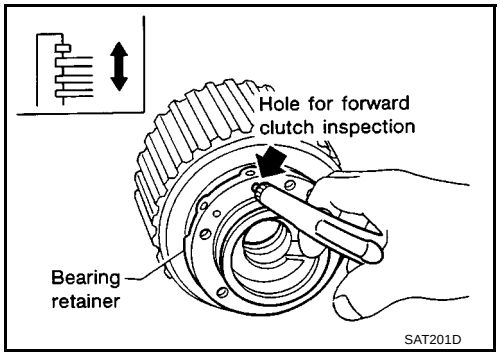

d. If retaining plate does not contact snap ring:
   - D-ring might be damaged.
   - Oil seal might be damaged.
   - Fluid might be leaking past piston check ball.

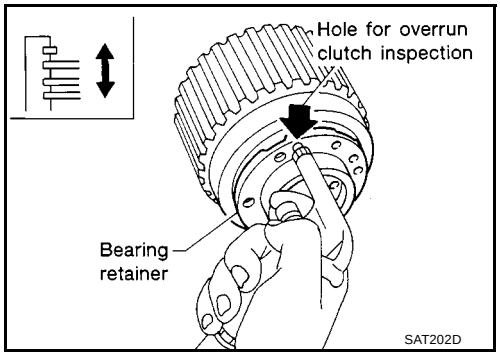

2. Remove snap ring for forward clutch.
3. Remove drive plates, driven plates, retaining plate and dish plate for forward clutch.

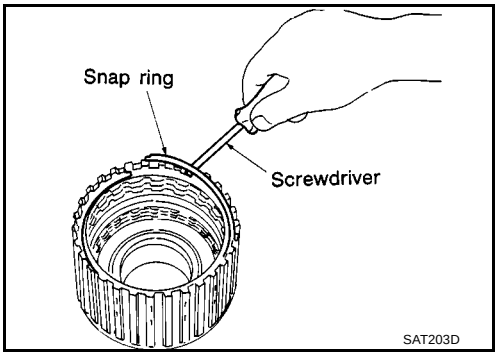

4. Remove snap ring for overrun clutch.
5. Remove drive plates, driven plates, retaining plate and dish plate for overrun clutch.

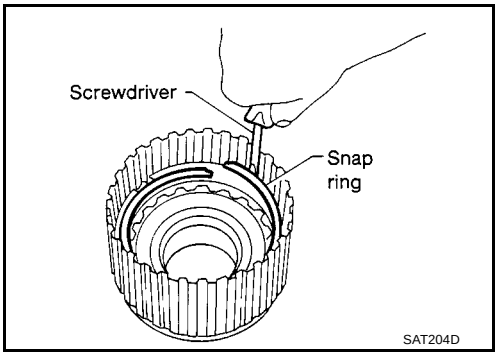

6. Set Tool on spring retainer and remove snap ring from forward clutch drum while compressing return springs.
   - **Set Tool directly over return springs.**
   - **Do not expand snap ring excessively.**
7. Remove spring retainer and return springs.
   - **Do not remove return springs from spring retainer.**

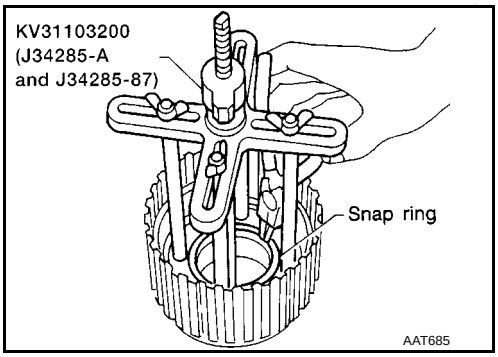

8. Remove forward clutch piston with overrun clutch piston from forward clutch drum by turning it.

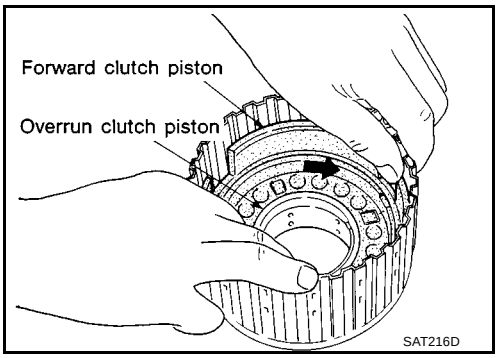

9. Remove overrun clutch piston from forward clutch piston by turning it.

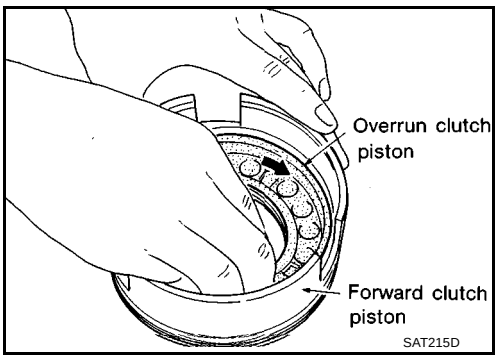

10. Remove D-rings and oil seals from forward clutch piston and overrun clutch piston.

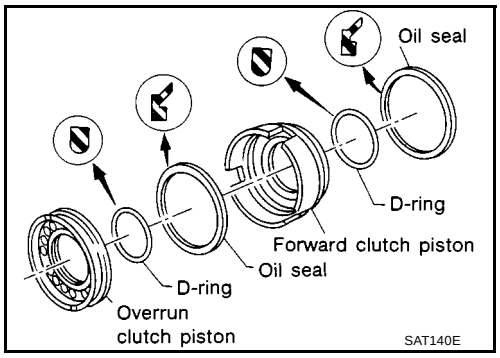

INSPECTION

Snap Rings, Spring Retainer

- Check for deformation, fatigue or damage.
- Replace if necessary.

Forward Clutch and Overrun Clutch Return

- Check for deformation or damage.
- Measure free length and outer diameter.

Inspection standard:

Refer to AT-519, "SERVICE DATA AND SPECIFICATIONS (SDS)" .

- Replace if deformed or fatigued.

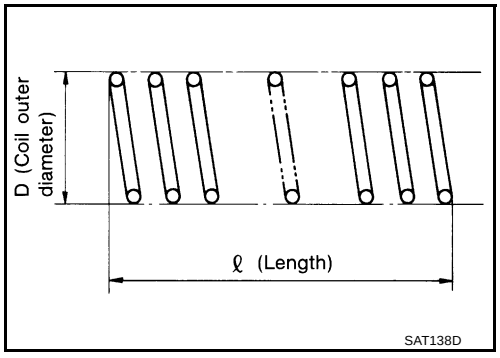

Forward Clutch and Overrun Clutch Drive Plates

- Check facing for burns, cracks or damage.
- Measure thickness of facing.

Thickness of drive plate:

Forward clutch

Standard value: 1.8 mm (0.071 in)

Wear limit: 1.6 mm (0.063 in)

Overrun clutch

Standard value: 1.6 mm (0.063 in)

Wear limit: 1.4 mm (0.055 in)

- If not within wear limit, replace.

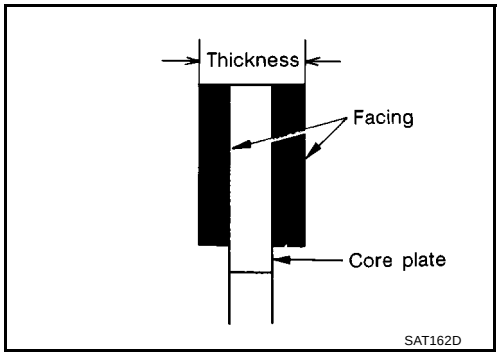

Forward Clutch and Overrun Clutch Dish Plates

- Check for deformation or damage.
- Measure thickness of dish plate.

Thickness of dish plate "t":

Forward clutch 2.5 mm (0.098 in)

Overrun clutch 2.15 mm (0.0846 in)

- If deformed or fatigued, replace.

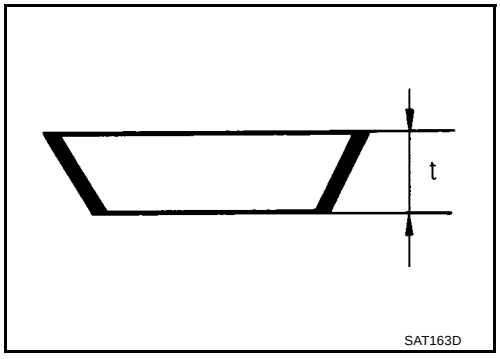

Forward Clutch Drum

- Make sure that check balls are not fixed.
- Apply compressed air to check ball oil hole from outside of forward clutch drum. Make sure air leaks past ball.
- Apply compressed air to oil hole from inside of forward clutch drum. Make sure there is no air leakage.

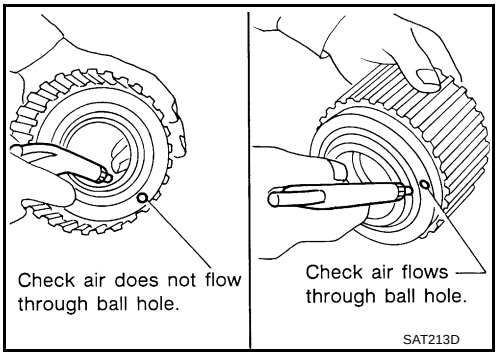

Overrun Clutch Piston

- Make sure that check balls are not fixed.
- Apply compressed air to check ball oil hole opposite the return spring. Make sure there is no air leakage.
- Apply compressed air to oil hole on return spring side. Make sure that air leaks past ball.

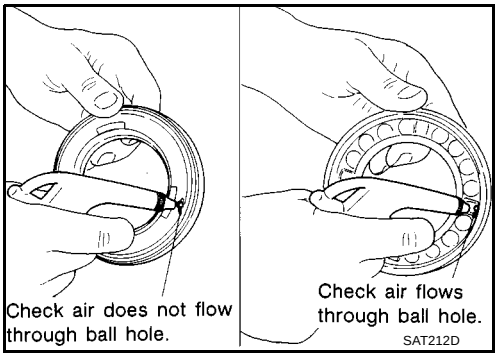

ASSEMBLY

1. Install D-rings and oil seals on forward clutch piston and overrun clutch piston.
   - **Take care with direction of oil seal.**
   - **Apply ATF to both parts.**

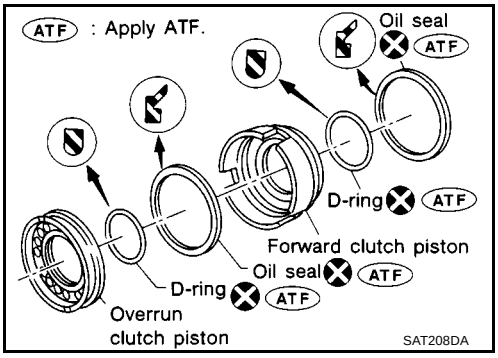

2. Install overrun clutch piston assembly on forward clutch piston by turning it slowly.
   - **Apply ATF to inner surface of forward clutch piston.**

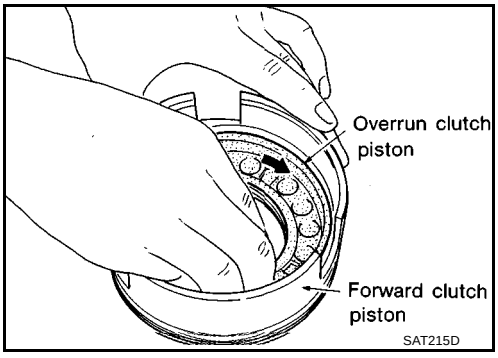

3. Install forward clutch piston assembly on forward clutch drum by turning it slowly.
   - **Apply ATF to inner surface of drum.**

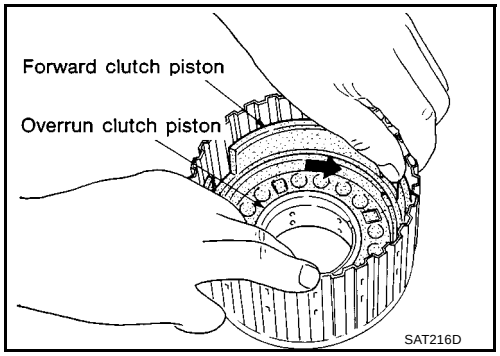

4. Align notch in forward clutch piston with groove in forward clutch drum.

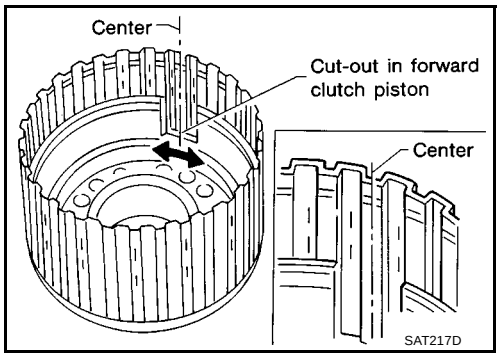

5. Install return spring on piston.
6. Install spring retainer on return springs.

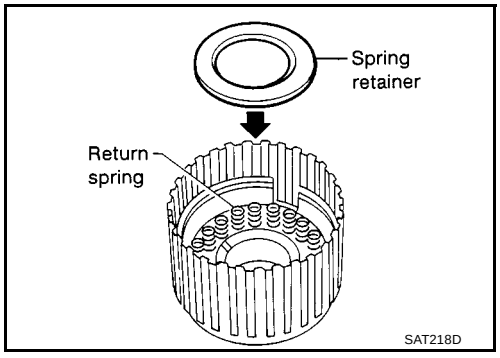

7. Set Tool on spring retainer and install snap ring while compressing return springs.
   - **Set Tool directly over return springs.**

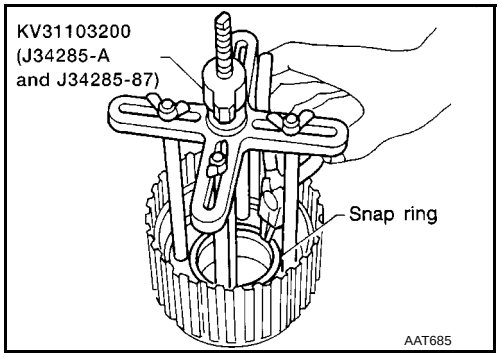

   - **Do not align snap ring gap with spring retainer stopper.**

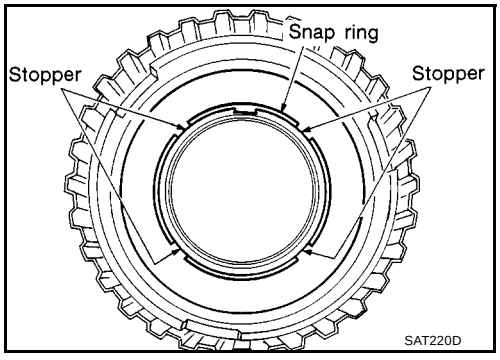

8. Install drive plates, driven plates, retaining plate and dish plate for overrun clutch.
   - **Take care with order of plates.**
9. Install snap ring for overrun clutch.

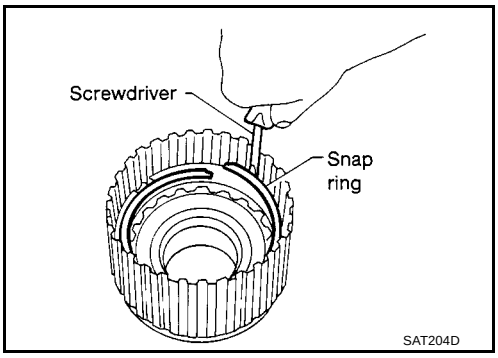

10. Measure clearance between overrun clutch retaining plate and snap ring.
    If not within allowable limit, select proper retaining plate.

    Specified clearance:

    Standard 1.0 - 1.4 mm (0.039 - 0.055 in)

    Allowable limit 2.0 mm (0.079 in)

    Overrun clutch retaining plate:

    Refer to AT-519, "SERVICE DATA AND SPECIFICATIONS (SDS)" .

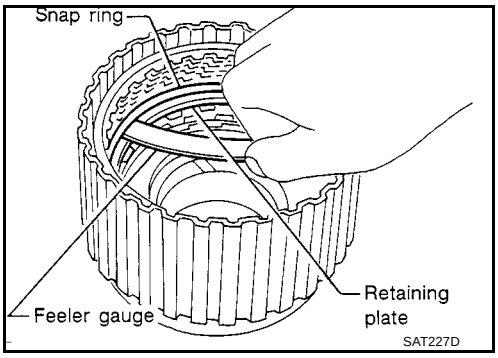

11. Install drive plates, driven plates, retaining plate and dish plate for forward clutch.
    - **Take care with order and direction of plates.**
12. Install snap ring for forward clutch.

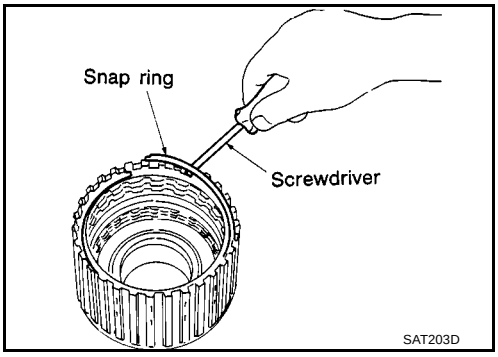

13. Measure clearance between forward clutch retaining plate and snap ring.
    If not within allowable limit, select proper retaining plate.

    Specified clearance:

    Standard 0.45 - 0.85 mm (0.0177 - 0.0335 in)

    Allowable limit 1.85 mm (0.0728 in)

    Forward clutch retaining plate:

    Refer to AT-519, "SERVICE DATA AND SPECIFICATIONS (SDS)" .

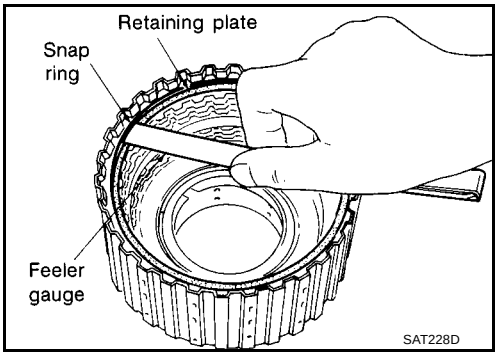

14. Check operation of forward clutch.
    Refer to AT-468, "Forward and Overrun Clutches" .

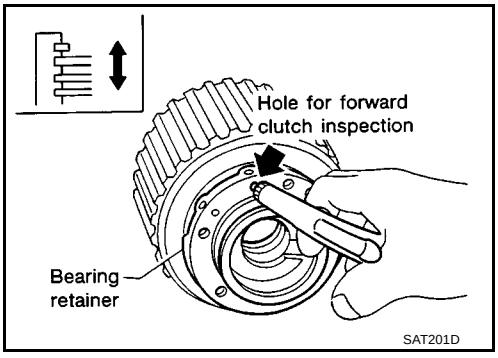

15. Check operation of overrun clutch.
    Refer to AT-468, "Forward and Overrun Clutches" .

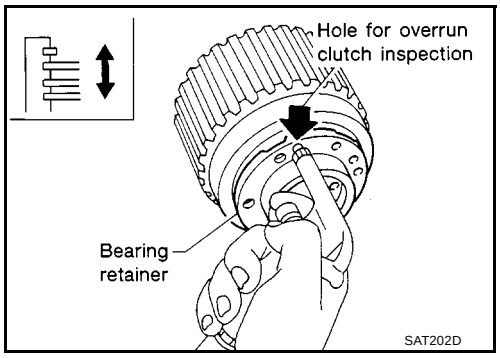

Low & Reverse Brake

ECS009CP

COMPONENTS

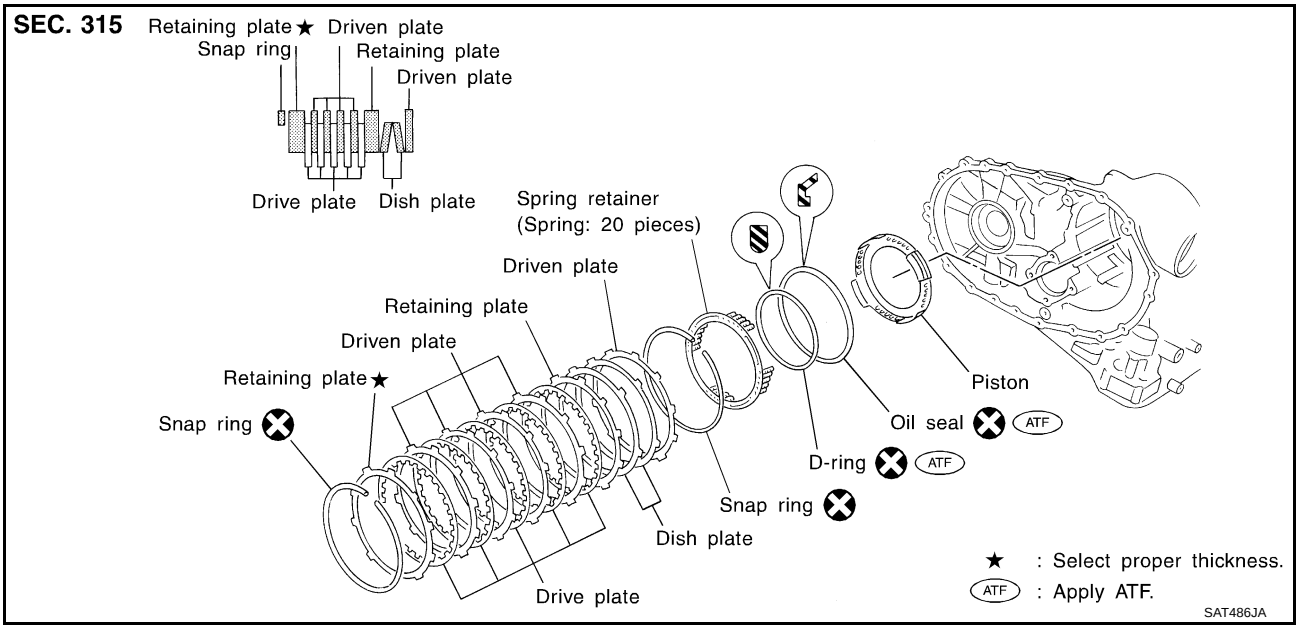

DISASSEMBLY

1. Check operation of low & reverse brake.

a. Apply compressed air to oil hole of transmission case.
b. Check to see that retaining plate moves to snap ring.
c. If retaining plate does not contact snap ring:
   - D-ring might be damaged.
   - Oil seal might be damaged.
   - Fluid might be leaking past piston check ball.

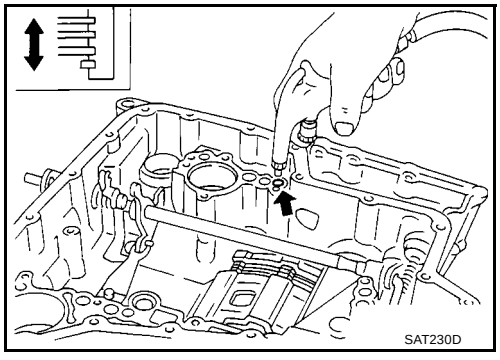

2. Stand transmission case.
3. Remove snap ring.
4. Remove drive plates, driven plates, retaining plate from transmission case.

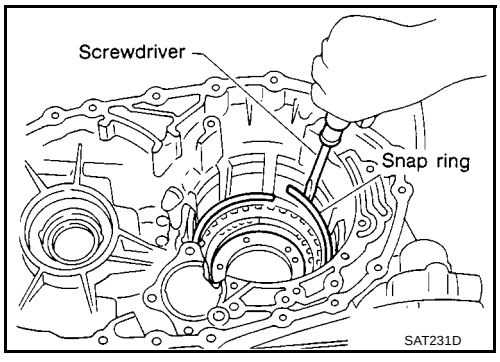

5. Set Tool on spring retainer and remove snap ring while compressing return springs.
   - **Set Tool directly above return springs.**
   - **Do not expand snap ring excessively.**
6. Remove spring retainer and return springs.

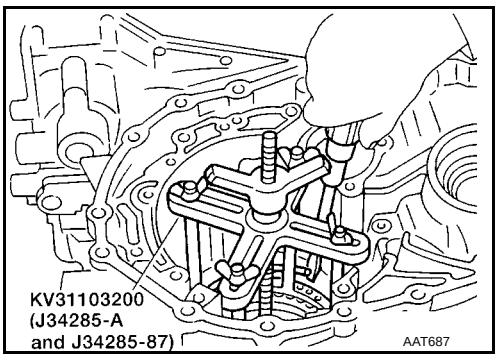

   - **Do not remove return springs from spring retainer.**

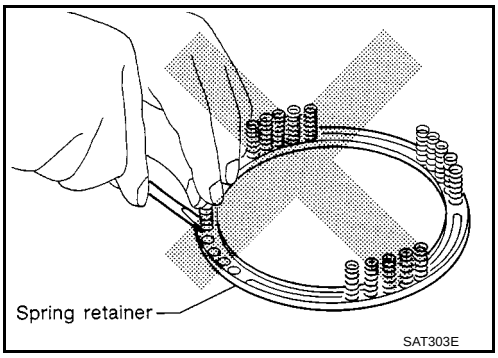

7. Apply compressed air to oil hole of transmission case while holding piston.
8. Remove piston from transmission case by turning it.

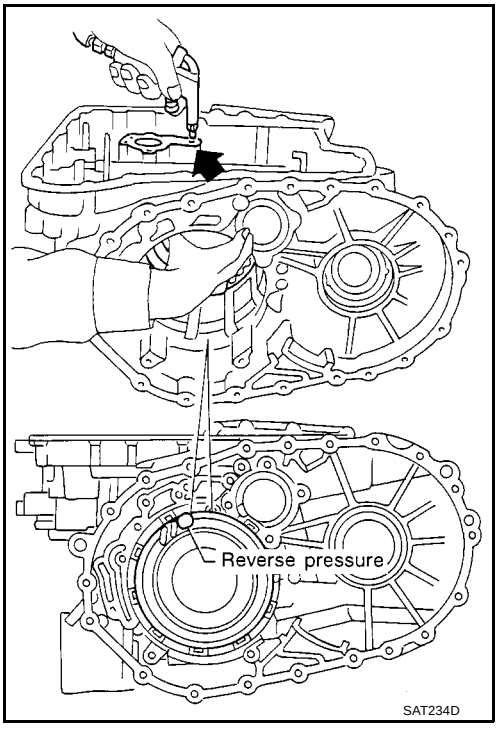

9. Remove D-ring and oil seal from piston.

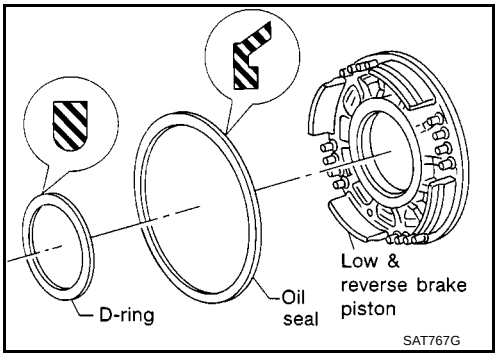

INSPECTION

Low & Reverse Brake Snap Ring, Spring Retainer and Return Springs

- Check for deformation, fatigue or damage.
- If necessary, replace.
- **When replacing spring retainer and return springs, replace them as a set.**

Low & Reverse Brake Drive Plate

- Check facing for burns, cracks or damage.
- Measure thickness of facing.

  Thickness of drive plate:
  Standard value 2.0 mm (0.079 in)
  Wear limit 1.8 mm (0.071 in)

- If not within wear limit, replace.

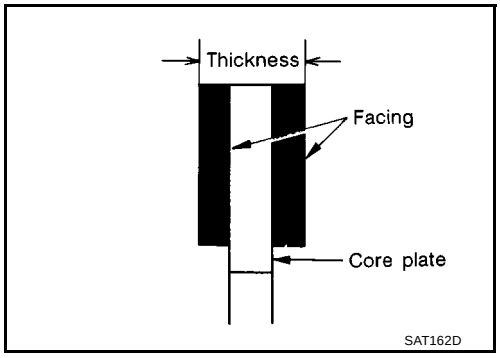

ASSEMBLY

1. Install D-ring and oil seal on piston.
   - **Take care with the direction of the oil seal.**
   - **Apply ATF to both parts.**

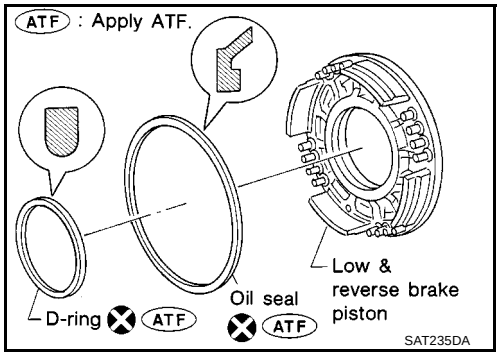

2. Stand transmission case.
3. Install piston assembly on transmission case while turning it slowly.
   - **Apply ATF to inner surface of transmission case.**

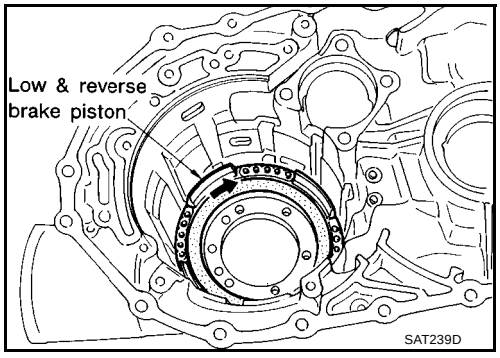

4. Install return springs and spring retainer on piston.

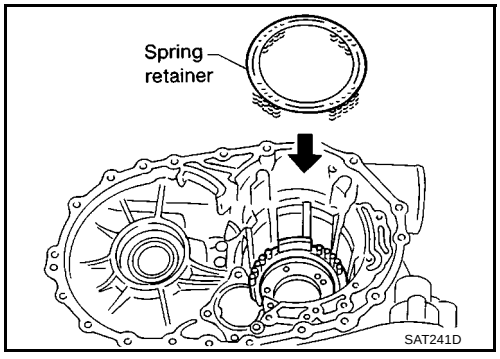

5. Install snap ring while compressing return springs.
   - **Set Tool directly above return springs.**

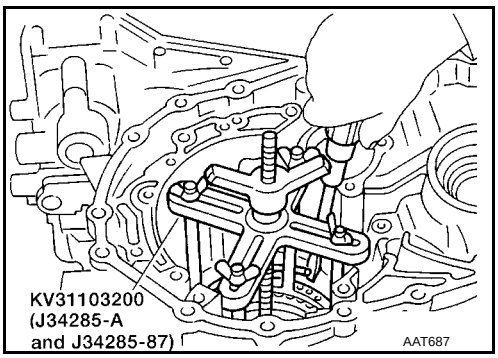

6. Install drive plates, driven plates, retaining plates and dished plates.
   - **Do not align the projections on the two dished plates.**
   - **Make sure to put the plates in the correct order and direction.**

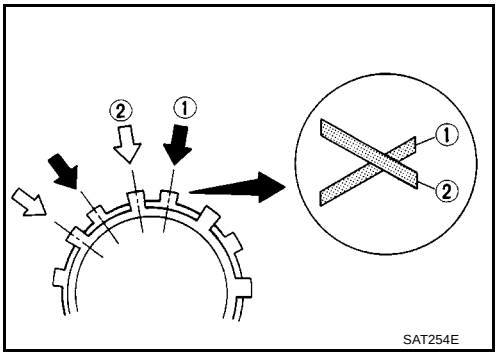

7. Install snap ring.

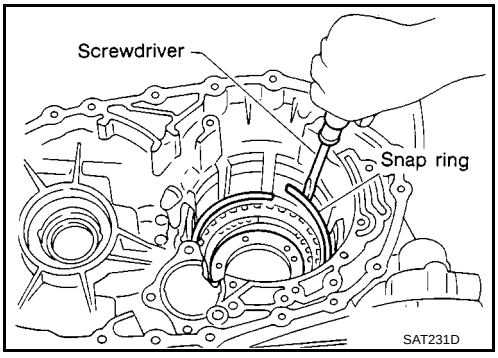

8. Measure clearance between retaining plate and snap ring. If not within allowable limit, select proper retaining plate (front side).

   Specified clearance:

   Standard 1.4 - 1.8 mm (0.055 - 0.071 in)

   Allowable limit 2.8 mm (0.110 in)

   Retaining plate:

   Refer to **AT-519, "SERVICE DATA AND SPECIFICATIONS (SDS)"** **.**

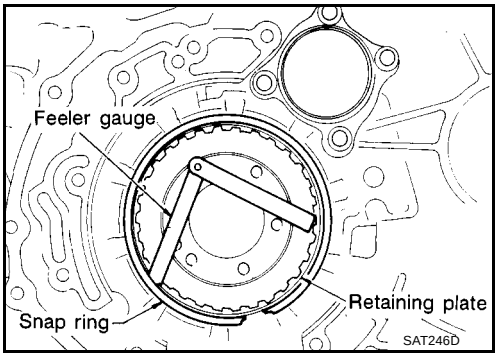

9. Check operation of low & reverse brake. Refer to AT-474, "DISASSEMBLY" .

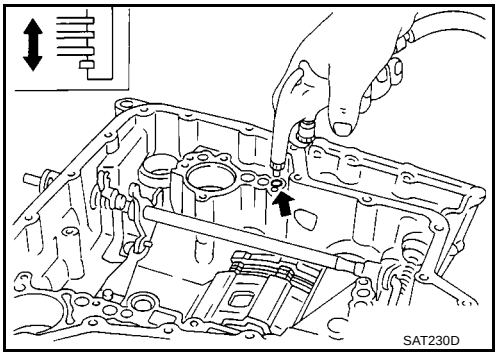

Rear Internal Gear, Forward Clutch Hub and Overrun Clutch Hub

ECS009CQ

COMPONENTS

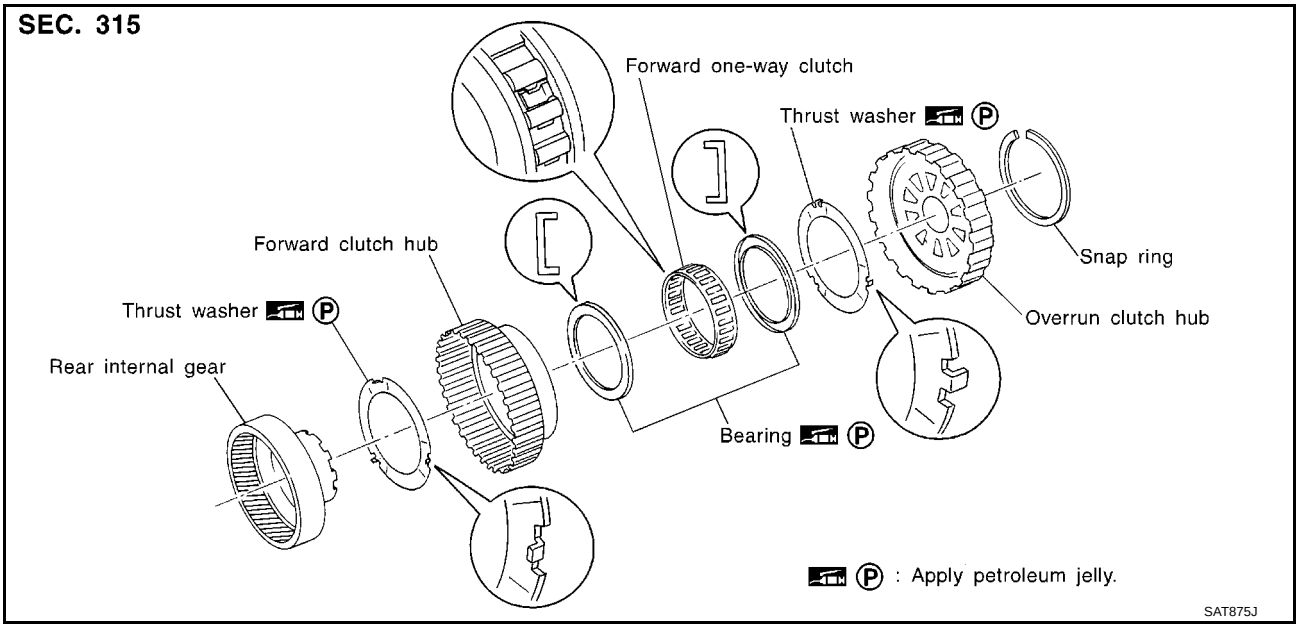

DISASSEMBLY

1. Remove snap ring from overrun clutch hub.
2. Remove overrun clutch hub from forward clutch hub.

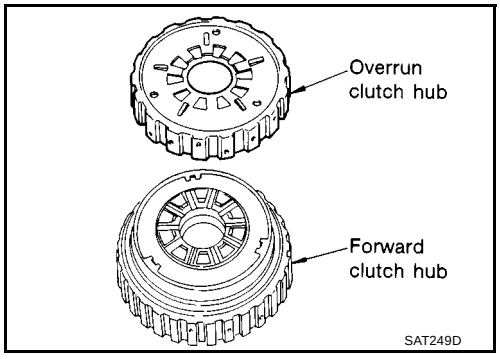

3. Remove thrust washer from forward clutch hub.

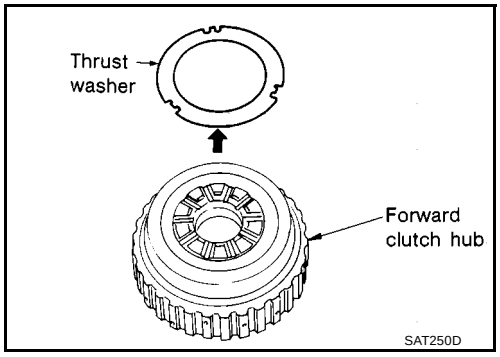

4. Remove forward clutch hub from rear internal gear.

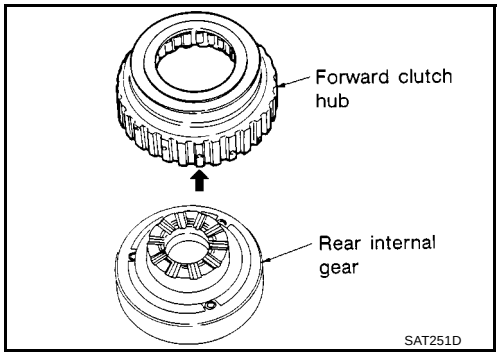

5. Remove end bearing from rear internal gear.

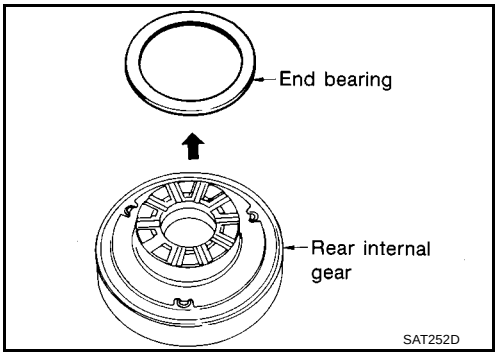

6. Remove thrust washer from rear internal gear.

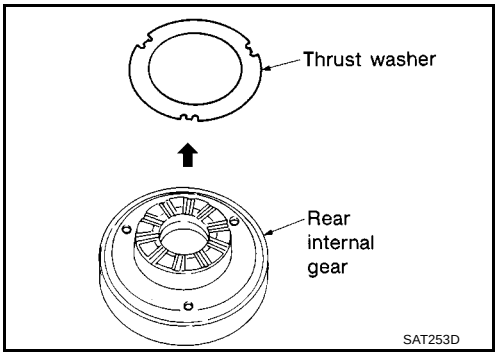

7. Remove end bearing from forward one-way clutch.

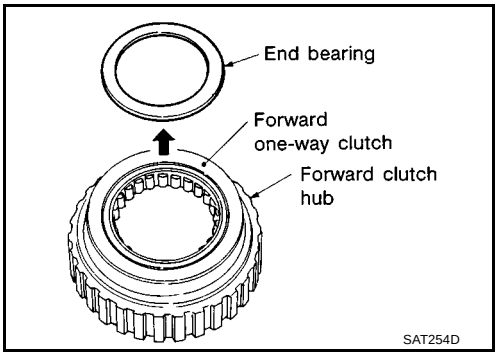

8. Remove forward one-way clutch from forward clutch hub.

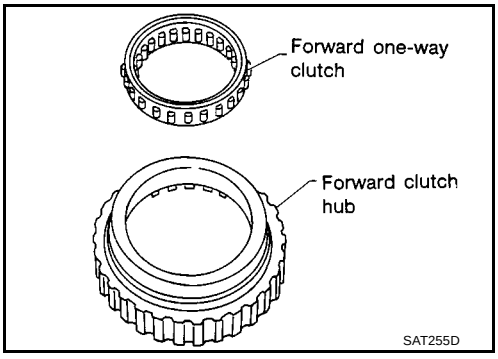

INSPECTION

Rear Internal Gear, Forward Clutch Hub and Overrun Clutch Hub

- Check rubbing surfaces for wear or damage.

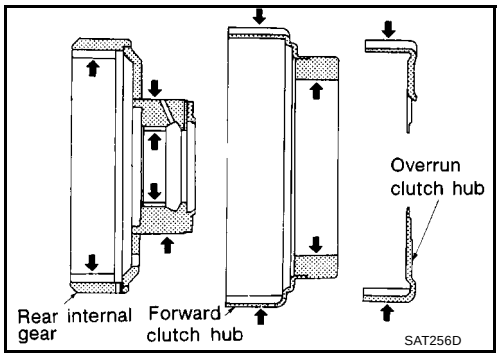

Snap Ring, End Bearings and Forward One-way Clutch

- Check snap ring and end bearings for deformation and damage.
- Check forward one-way clutch for wear and damage.

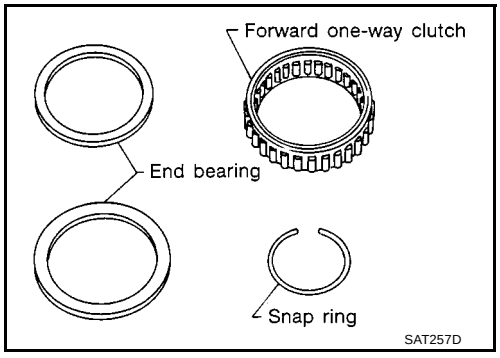

ASSEMBLY

1. Install forward one-way clutch on forward clutch.
   - **Take care with the direction of forward one-way clutch.**

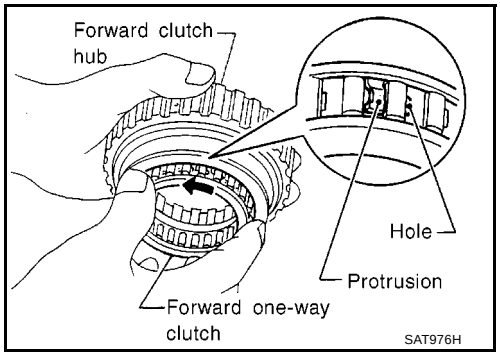

2. Install end bearing on forward one-way clutch.
   - **Apply petroleum jelly to bearing.**

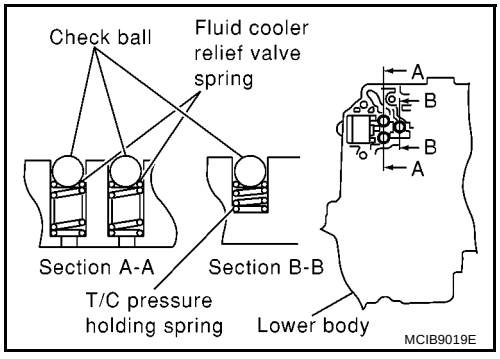

3. Install thrust washer on rear internal gear.
   - **Apply petroleum jelly to thrust washer.**
   - **Align hooks of thrust washer with holes of rear internal gear.**

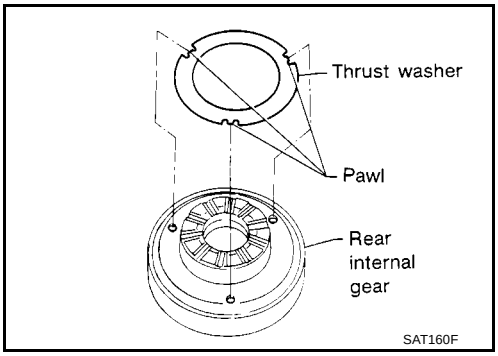

4. Install end bearing on rear internal gear.
   - **Apply petroleum jelly to end bearing.**

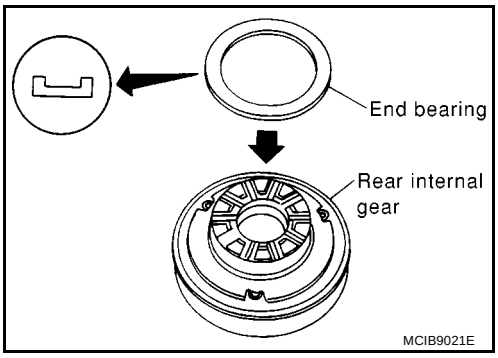

5. Install forward clutch hub on rear internal gear.
   - **Check operation of forward one-way clutch.**
     Hold rear internal gear and turn forward clutch hub.
     Check forward clutch hub for correct locking and unlocking directions.
   - **If not as shown in illustration, check installation direction of forward one-way clutch.**

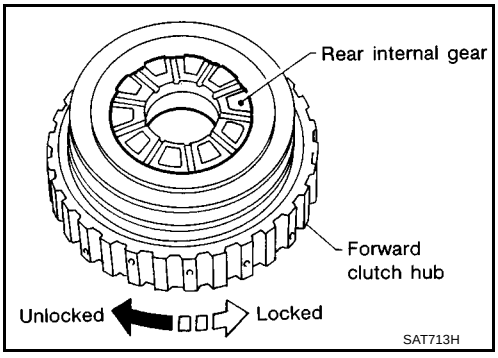

6. Install thrust washer and overrun clutch hub.
   - **Apply petroleum jelly to thrust washer.**
   - **Align pawls of thrust washer with holes of overrun clutch hub.**

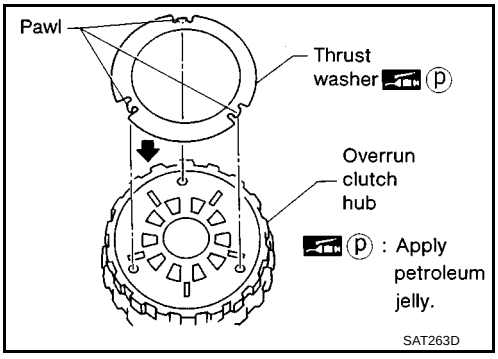

7. Install overrun clutch hub on rear internal gear.
   - **Align projections of rear internal gear with holes of overrun clutch hub.**

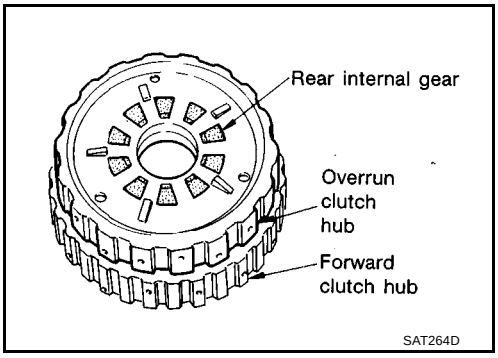

8. Install snap ring to groove of rear internal gear.

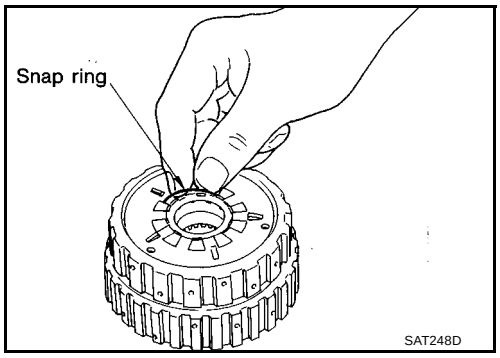

Output Shaft, Idler Gear, Reduction Pinion Gear and Bearing Retainer

ECS009CR

COMPONENTS

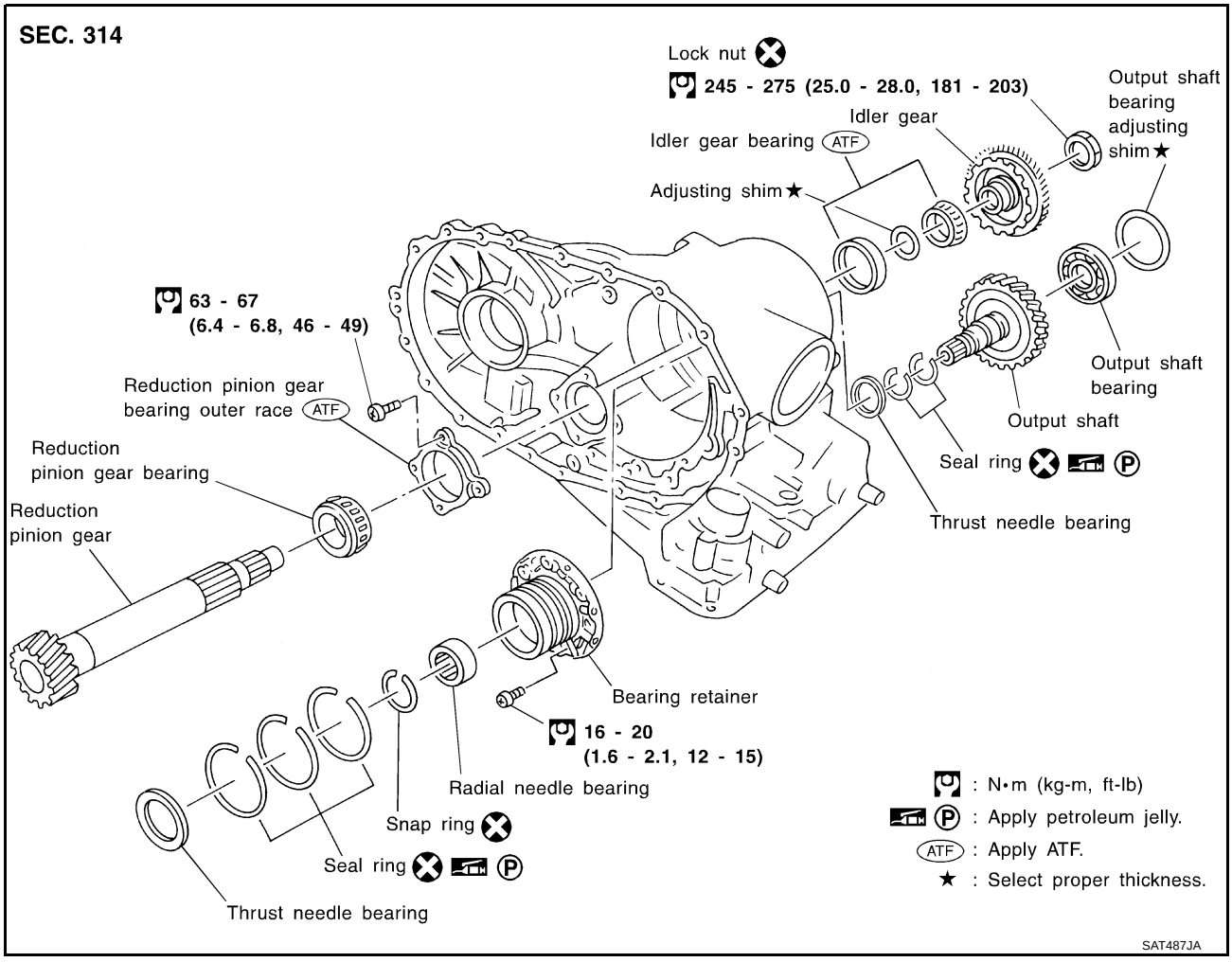

DISASSEMBLY

1. Remove seal rings from output shaft and bearing retainer.

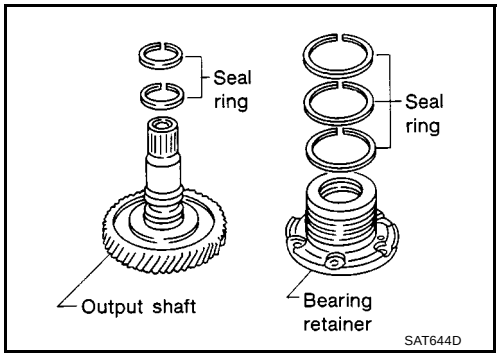

2. Remove output shaft bearing with screwdrivers.
   - **Always replace bearing with a new one when removed.**
   - **Do not damage output shaft.**

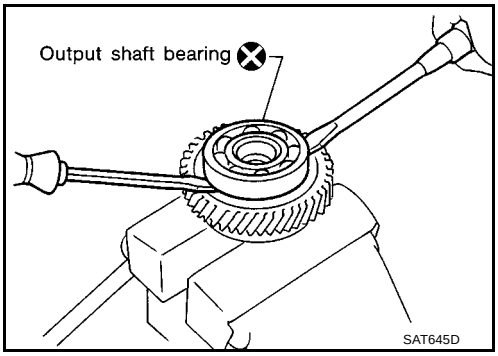

3. Remove snap ring from bearing retainer.

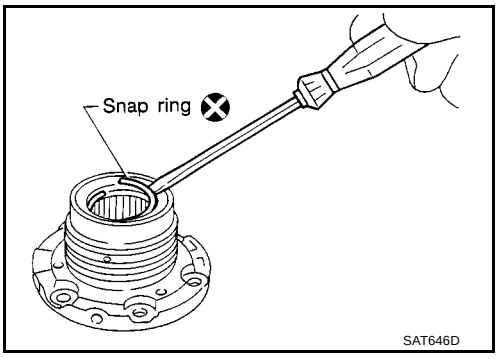

4. Remove needle bearing from bearing retainer.

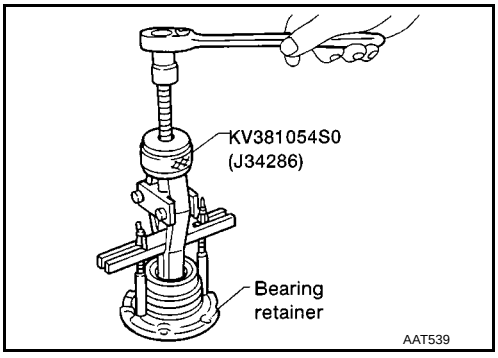

5. Remove idler gear bearing inner race from idler gear.

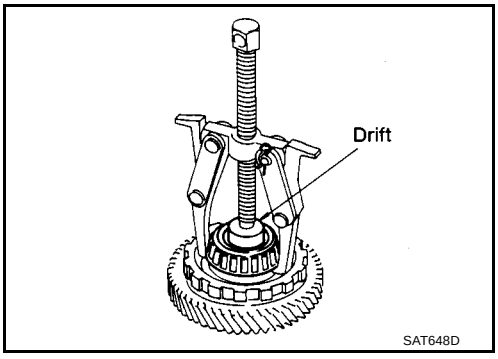

6. Remove idler gear bearing outer race from transmission case.

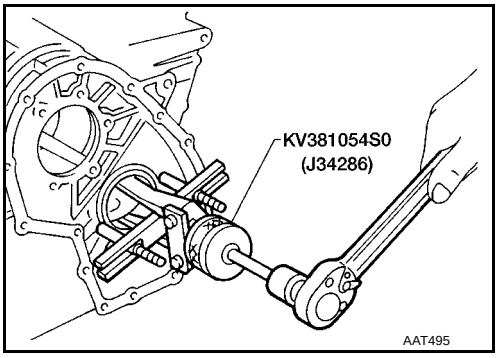

7. Press out reduction pinion gear bearing from reduction pinion gear.

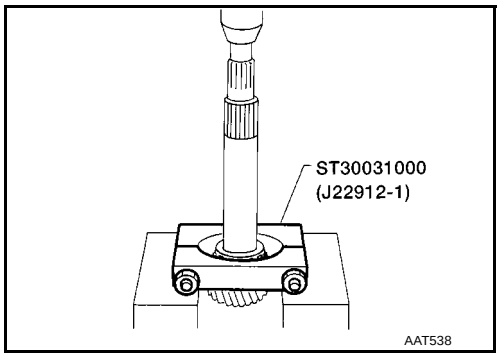

8. Remove reduction pinion gear bearing outer race from transmission case.

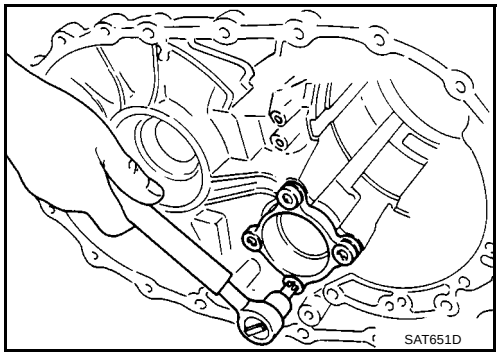

INSPECTION

Output Shaft, Idler Gear and Reduction Pinion Gear

- Check shafts for cracks, wear or bending.
- Check gears for wear, chips and cracks.

Bearing

- Make sure bearings roll freely and are free from noise, cracks, pitting or wear.
- **When replacing taper roller bearing, replace outer and inner race as a set.**

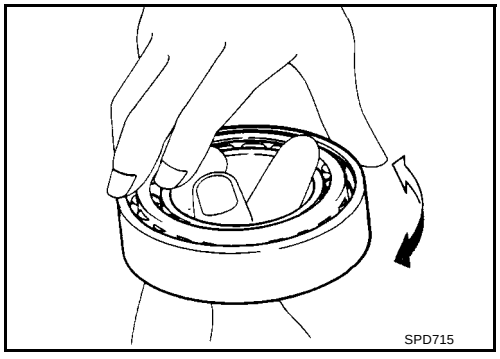

Seal Ring Clearance

- Install new seal rings to output shaft.
- Measure clearance between seal ring and ring groove of output shaft.

  Standard clearance:

  0.10 - 0.25 mm (0.0039 - 0.0098 in)

  Allowable limit:

  0.25 mm (0.0098 in)

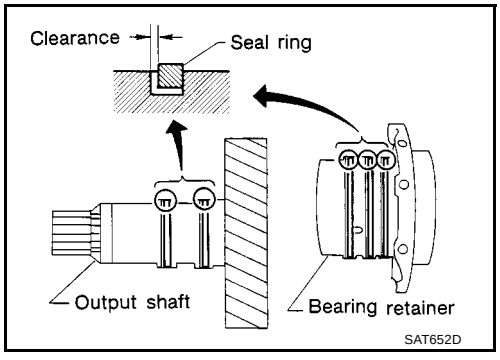

- If not within allowable limit, replace output shaft.
- Install new seal rings to bearing retainer.
- Measure clearance between seal ring and ring groove of bearing retainer.

  Standard clearance:

  0.10 - 0.25 mm (0.0039 - 0.0098 in)

Allowable limit:
0.25 mm (0.0098 in)

- If not within allowable limit, replace bearing retainer.

ASSEMBLY

1. Press reduction pinion gear bearing on reduction pinion gear.

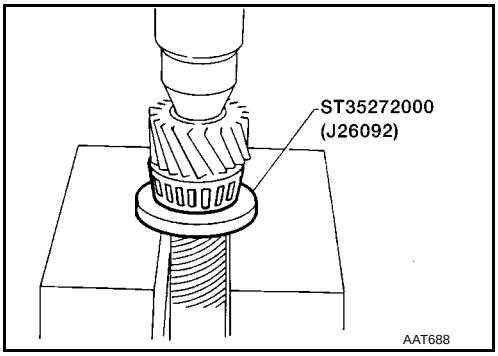

2. Install reduction pinion gear bearing outer race on transmission case.

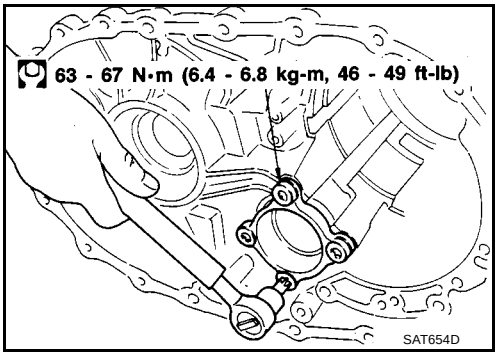

3. Press idler gear bearing inner race on idler gear.

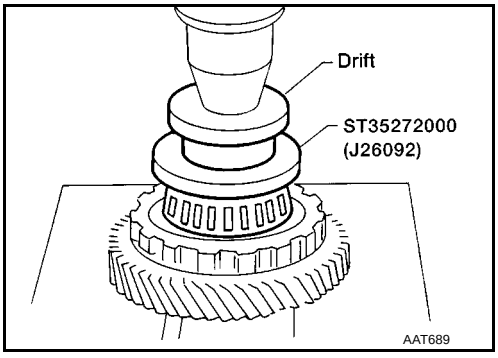

4. Install idler gear bearing outer race on transmission case.

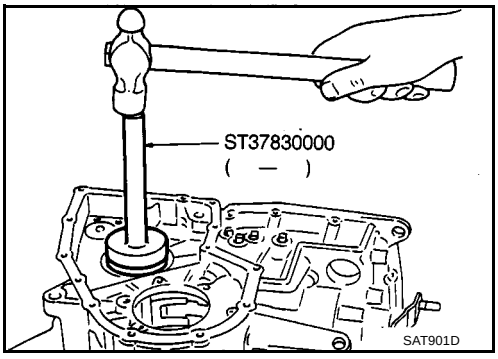

5. Press output shaft bearing on output shaft.

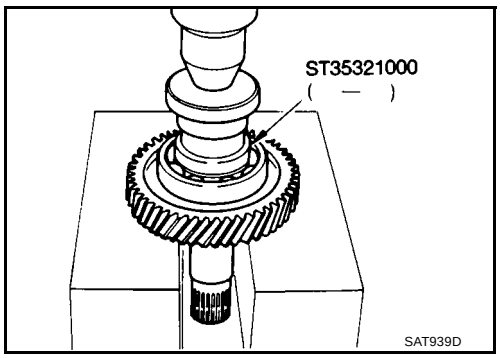

6. Press needle bearing on bearing retainer.

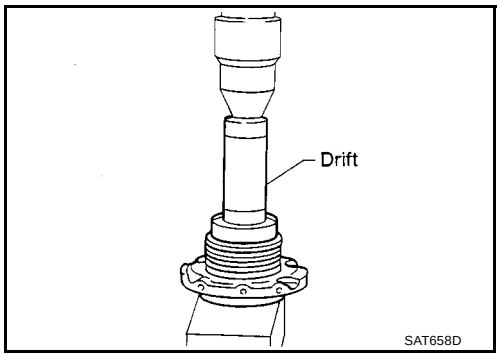

7. Install snap ring to bearing retainer.

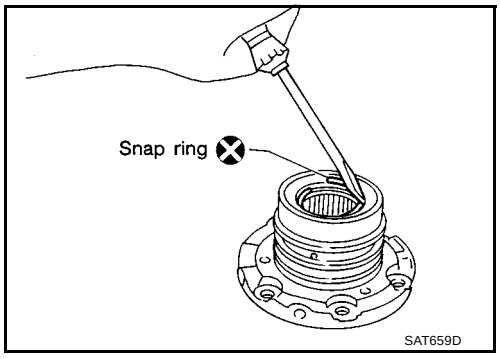

8. After packing ring grooves with petroleum jelly, carefully install new seal rings on output shaft and bearing retainer.

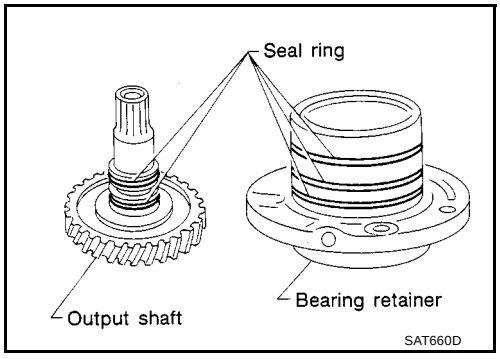

- **Roll paper around seal rings to prevent seal rings from spreading.**

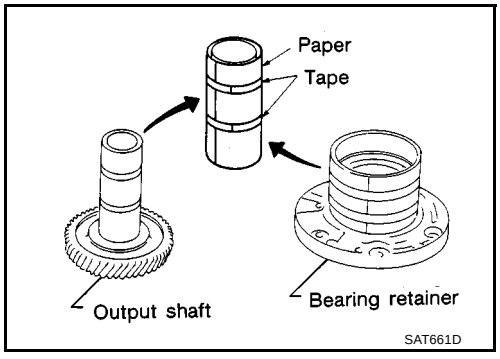

Band Servo Piston Assembly

ECS009CS

COMPONENT

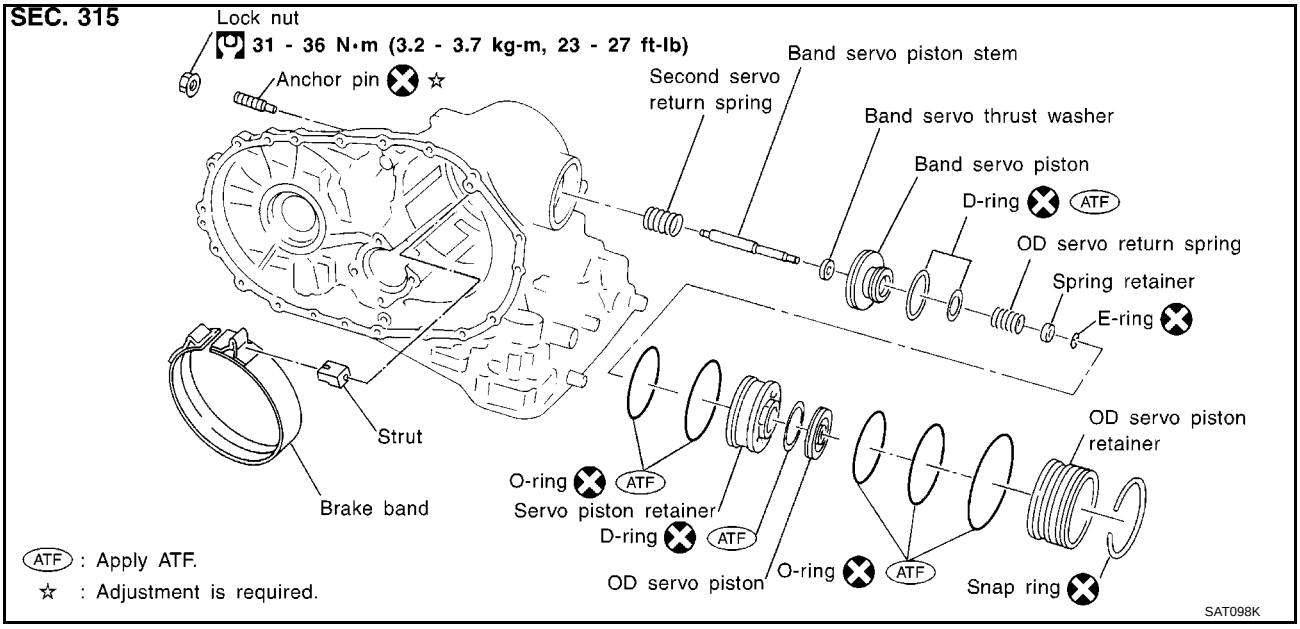

DISASSEMBLY

1. Remove band servo piston snap ring.

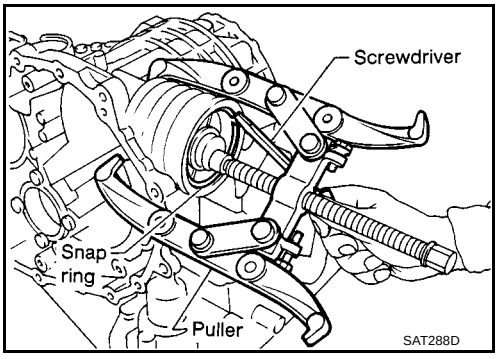

2. Apply compressed air to oil hole in transmission case to remove OD servo piston retainer and band servo piston assembly.
   - **Hold band servo piston assembly with a rag or nylon waste.**

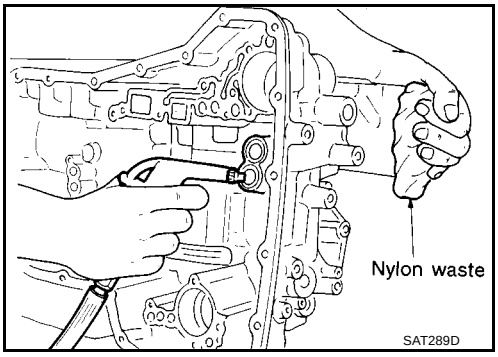

3. Apply compressed air to oil hole in OD servo piston retainer to remove O/D servo piston from retainer.
   - **Hold OD band servo piston while applying compressed air.**

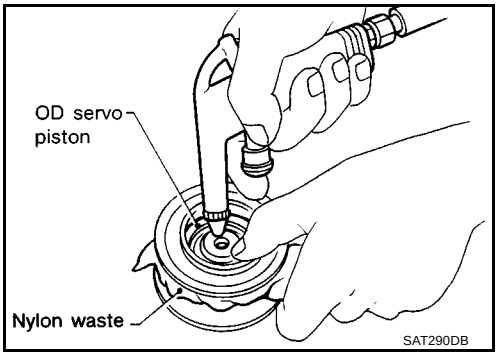

4. Remove D-ring from OD servo piston.

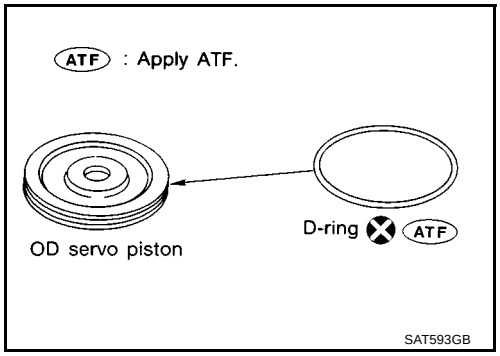

5. Remove O-rings from OD servo piston retainer.

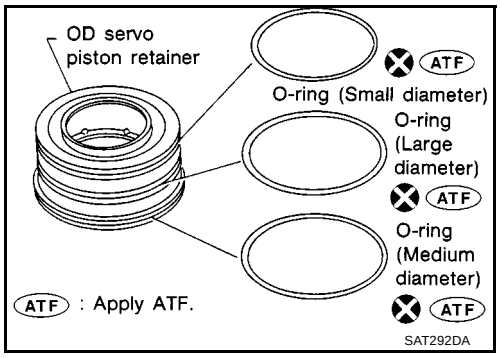

6. Remove band servo piston assembly from servo piston retainer by pushing it forward.

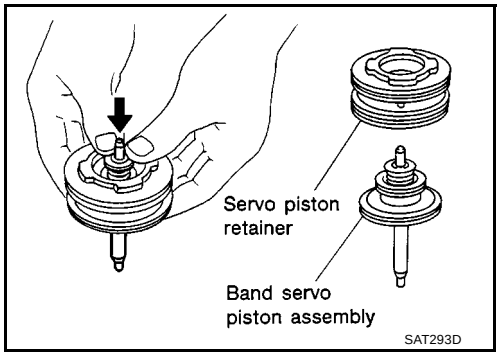

7. Place piston stem end on a wooden block. While pushing servo piston spring retainer down, remove E-ring.

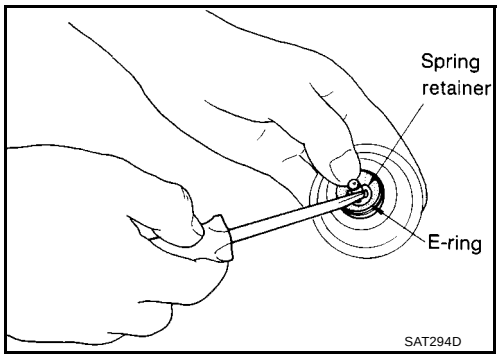

8. Remove OD servo return spring, band servo thrust washer and band servo piston stem from band servo piston.

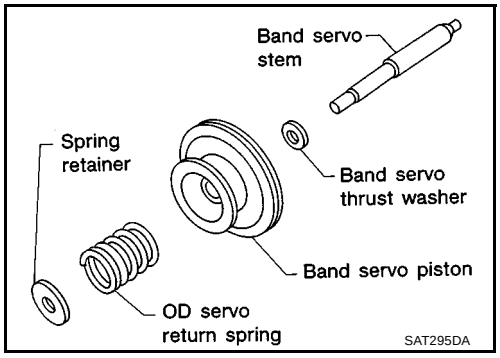

9. Remove O-rings from servo piston retainer.

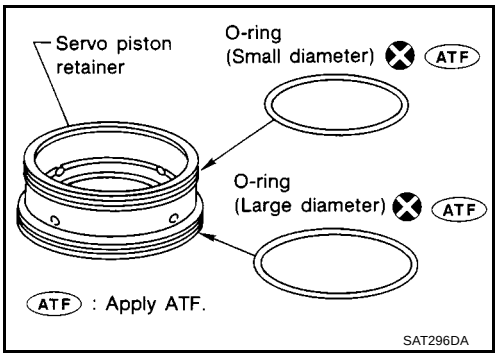

10. Remove D-rings from band servo piston.

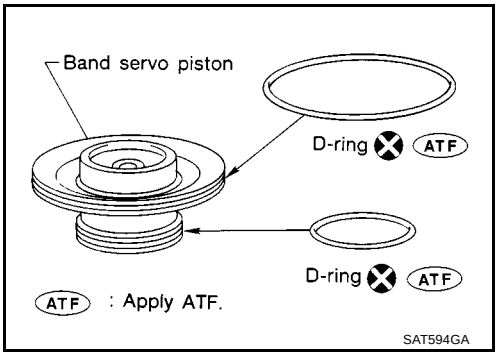

INSPECTION

Pistons, Retainers and Piston Stem

- Check frictional surfaces for abnormal wear or damage.

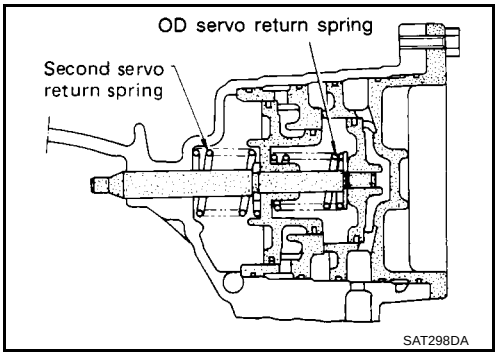

Return Springs

- Check for deformation or damage.
- Measure free length and outer diameter.

Inspection standard:

Refer to **AT-519, "SERVICE DATA AND SPECIFICATIONS (SDS)"**

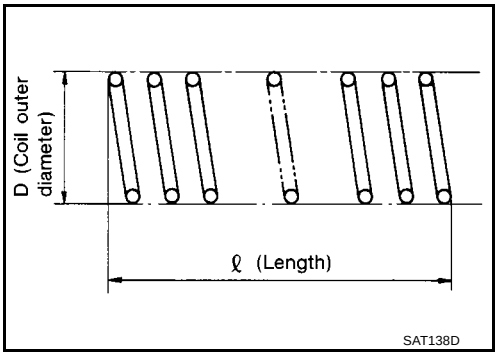

ASSEMBLY

1. Install D-rings to servo piston retainer.
   - **Apply ATF to D-rings.**
   - **Pay attention to position of each D-ring.**

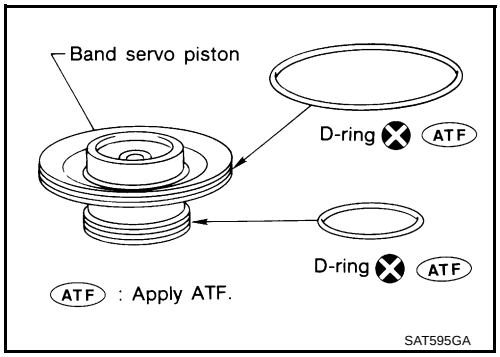

2. Install band servo piston stem, band servo thrust washer, OD servo return spring and spring retainer to band servo piston.

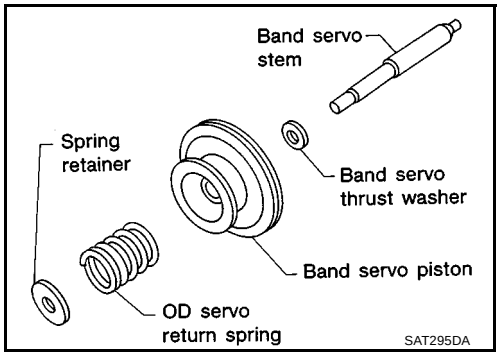

3. Place piston stem end on a wooden block. While pushing servo piston spring retainer down, install E-ring.

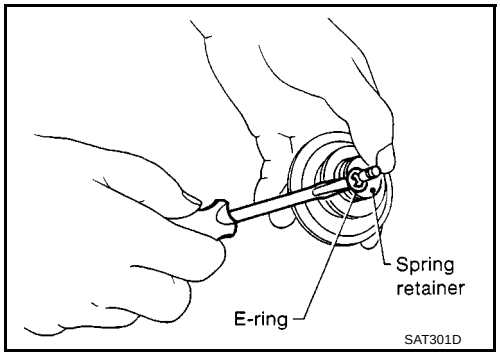

4. Install O-rings to servo piston retainer.
   - **Apply ATF to O-rings.**
   - **Pay attention to position of each O-ring.**

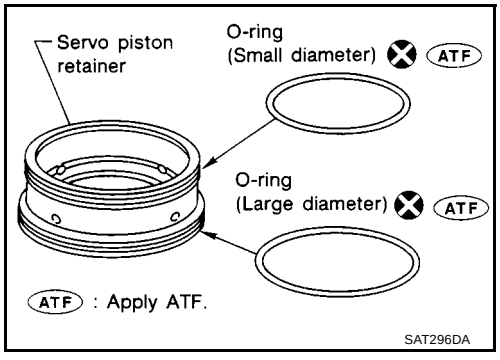

5. Install band servo piston assembly to servo piston retainer by pushing it inward.

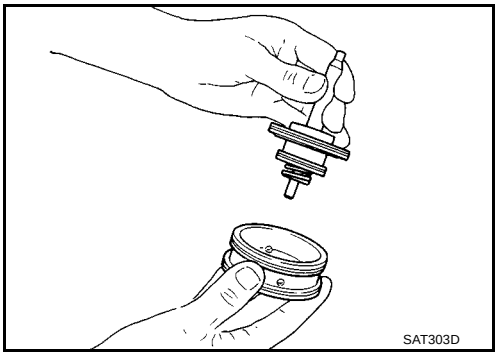

6. Install D-ring to OD servo piston.
   - **Apply ATF to D-ring.**

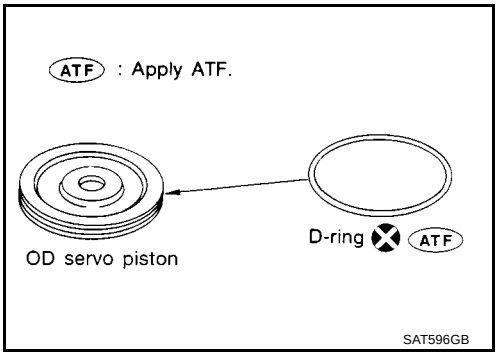

7. Install O-rings to OD servo piston retainer.
   - **Apply ATF to O-rings.**
   - **Pay attention to position of each O-ring.**

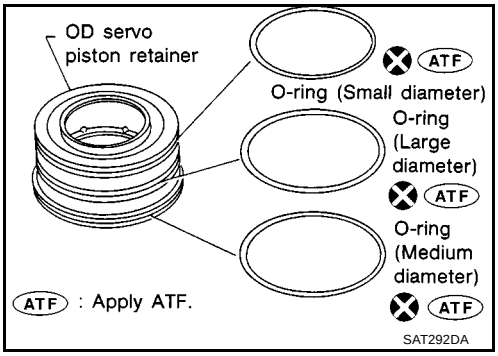

8. Install OD servo piston to OD servo piston retainer.

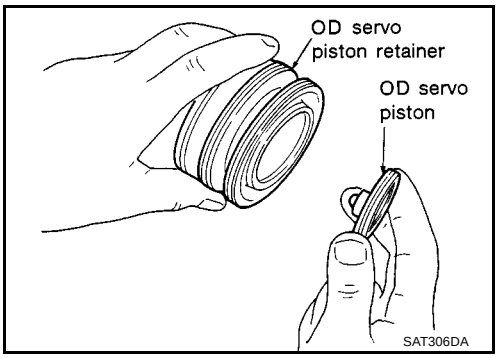

9. Install band servo piston assembly and second servo return spring to transmission case.
   - **Apply ATF to O-ring of band servo piston and transmission case.**

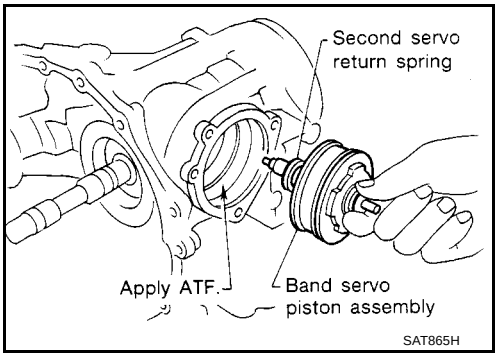

10. Install OD servo piston assembly to transmission case.
    - **Apply ATF to O-ring of band servo piston and transmission case.**

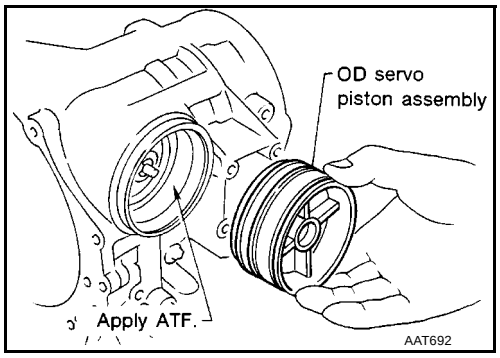

11. Install band servo piston snap ring to transmission case.

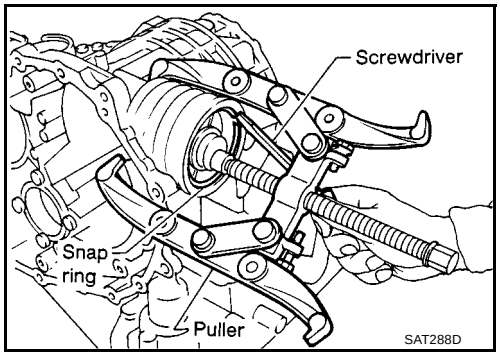

Final Drive

ECS009CT

COMPONENTS

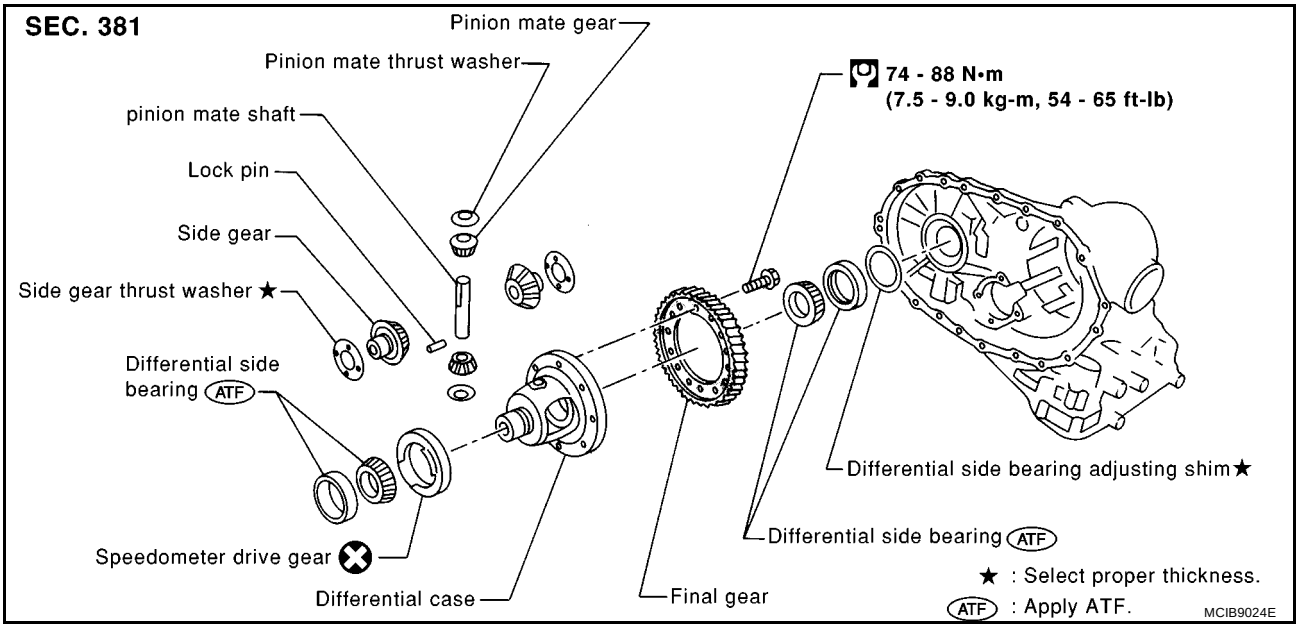

DISASSEMBLY

1. Remove final gear.

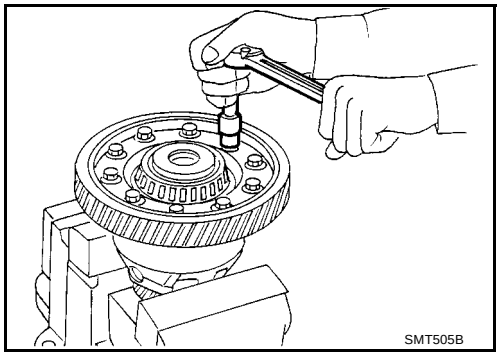

2. Press out differential side bearings.
   - **Be careful not to mix up the right and left bearings.**

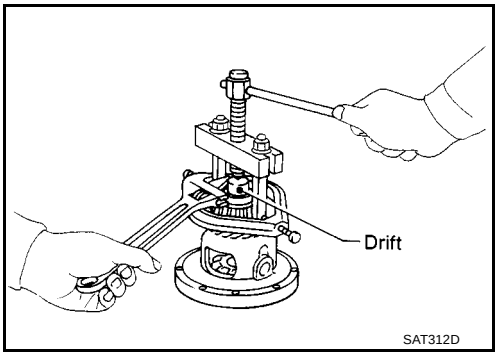

3. Remove speedometer drive gear.

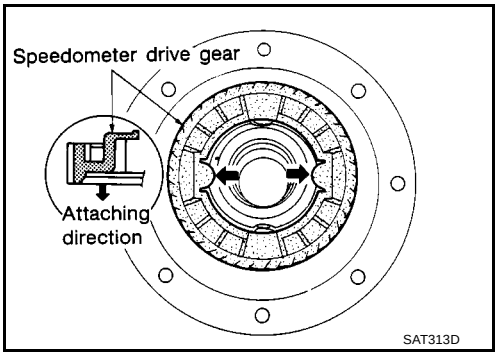

4. Drive out pinion mate shaft lock pin.

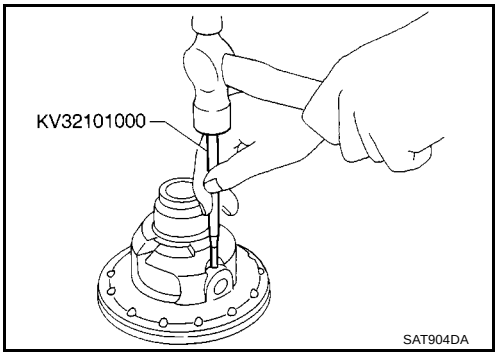

5. Draw out pinion mate shaft lock pin.
6. Remove pinion mate gears and from differential case.

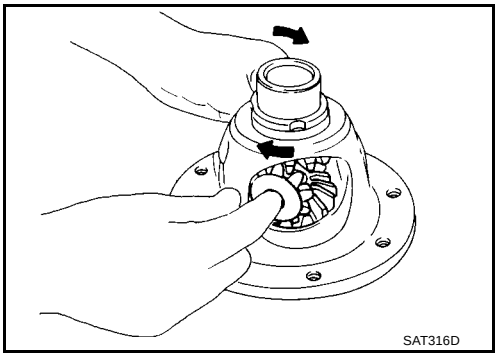

INSPECTION

Gear, Washer, Shaft and Case

- Check mating surfaces of differential case, side gears and pinion mate gears.
- Check washers for wear.

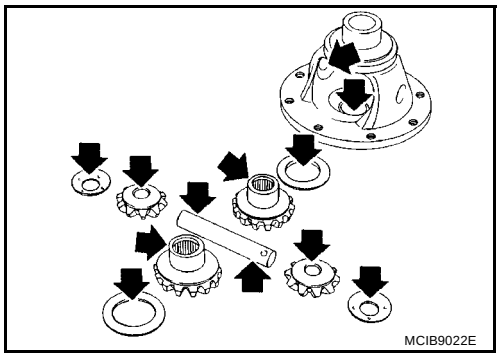

Bearings

- Make sure bearings roll freely and are free from noise, cracks, pitting or wear.
- **When replacing taper roller bearing, replace outer and inner race as a set.**

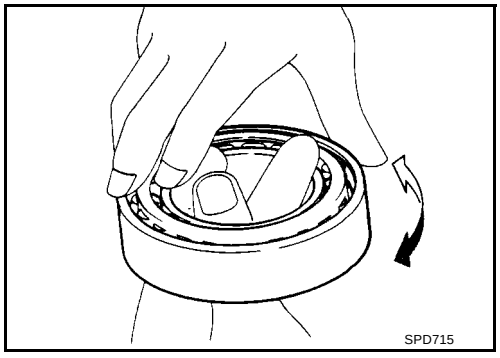

ASSEMBLY

1. Install side gear and thrust washers in differential case.
2. Install pinion mate gears and thrust washers in differential case while rotating them.
   - **When inserting, be careful not to damage pinion mate gear washers.**
   - **Apply ATF to any parts.**

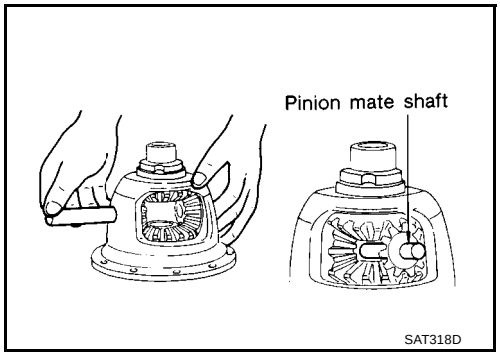

3. Measure clearance between side gear and differential case with washers using the following procedure:

a. Set Tool and dial indicator on side gear.

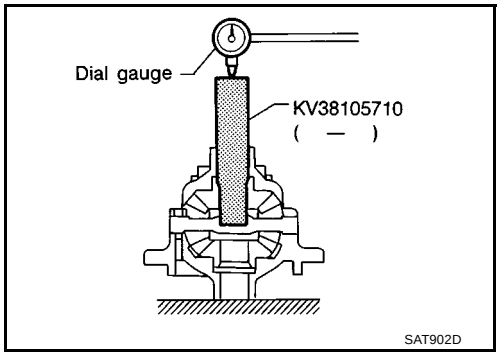

b. Move side gear up and down to measure dial indicator deflection. Always measure indicator deflection on both side gears.

Clearance between side gear and differential case with washer:

0.1 - 0.2 mm (0.004 - 0.008 in)

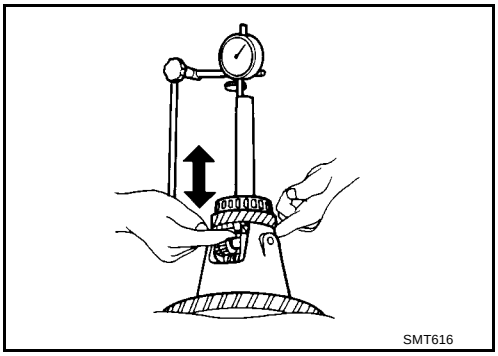

c. If not within specification, adjust clearance by changing thickness of differential side gear thrust washers.

Differential side gear thrust washers:

Refer to **AT-519, "SERVICE DATA AND SPECIFICATIONS (SDS)"** **.**

4. Install lock pin.
   - **Make sure that lock pin is flush with case.**

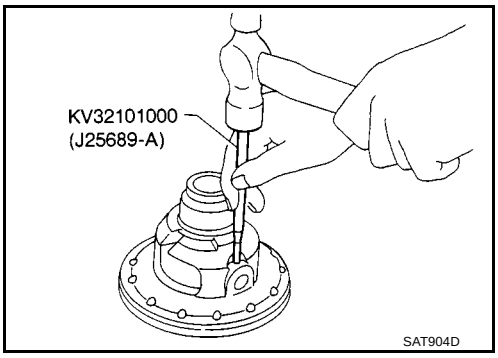

5. Install speedometer drive gear on differential case.
   - **Align the projection of speedometer drive gear with the groove of differential case.**

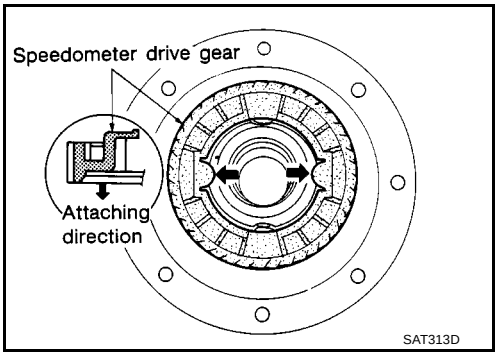

6. Install final gear and tighten fixing bolts in a numerical order.

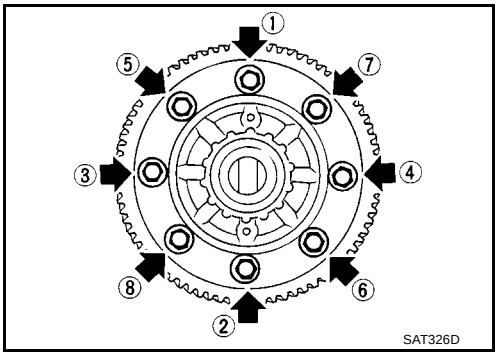

7. Press on differential side bearings.

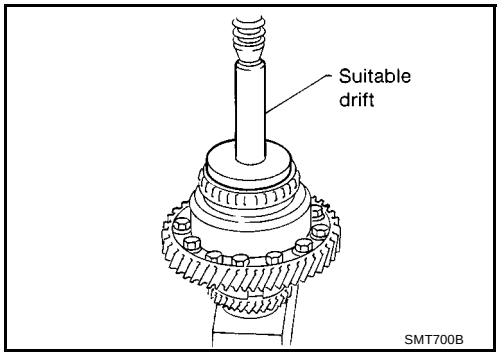

ASSEMBLY

PFP:00000

Assembly (1)

ECS009CU

1. Install revolution sensor onto transmission case.
   Always use new sealing parts.
2. Install differential side oil seals on transmission case and converter housing, so that “A” and “B” are with in specification.

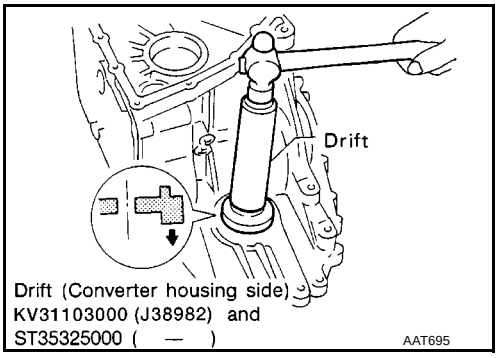

Unit: mm (in)

A	B
5.5 - 6.5 (0.217 - 0.256)	–0.5 to 0.5 (–0.020 to 0.020)

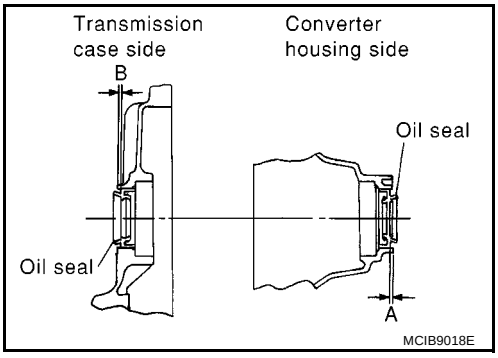

3. Install parking actuator support to transmission case.
   - **Pay attention to direction of parking actuator support.**

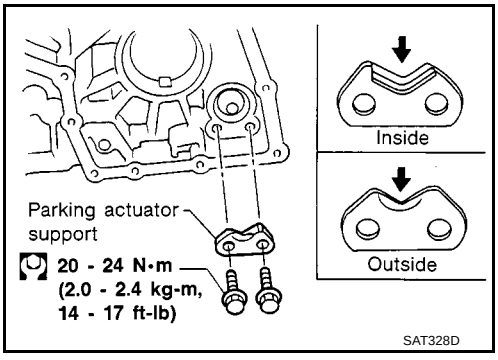

4. Install parking pawl on transmission case and fix it with parking shaft.

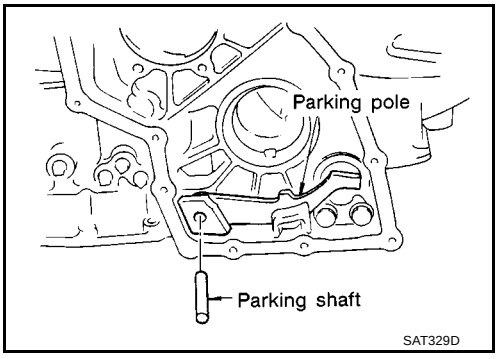

5. Install return spring.

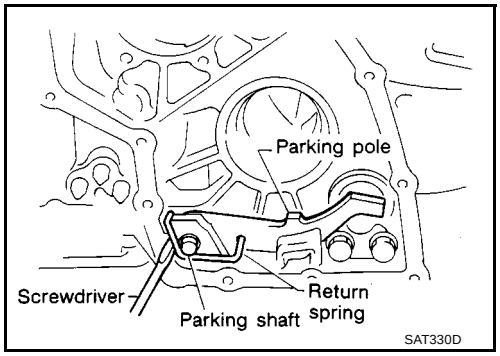

Adjustment (1)

ECS009CV

DIFFERENTIAL SIDE BEARING PRELOAD

1. Install differential side bearing outer race without adjusting shim on transmission case.
2. Install differential side bearing outer race on converter housing.

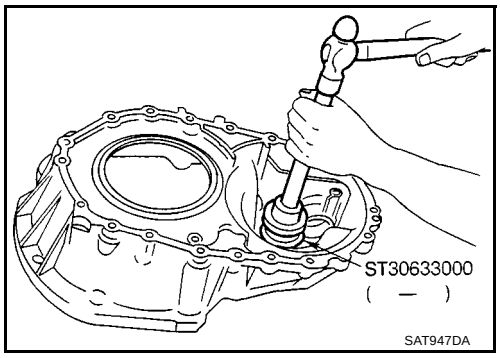

3. Place final drive assembly on transmission case.
4. Install transmission case on converter housing. Tighten transmission case fixing bolts A and B to the specified torque. Refer to AT-417, "OVERHAUL" .

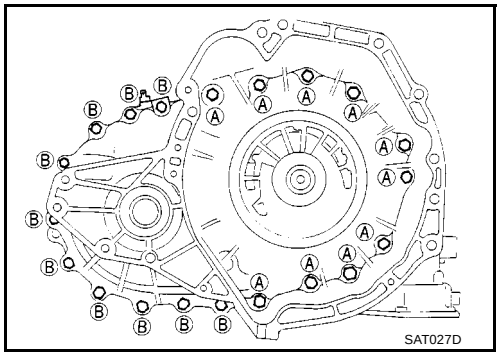

5. Attach dial indicator on differential case at transmission case side.
6. Insert Tool into differential side gear from converter housing.
7. Move Tool up and down and measure dial indicator deflection.

Differential side bearing preload "T":

0.04 - 0.09 mm (0.0016 - 0.0035 in)

8. Select proper thickness of differential side bearing adjusting shim(s) using SDS table as a guide.

Differential side bearing adjusting shim:

Refer to **AT-519, "SERVICE DATA AND SPECIFICATIONS (SDS)"** **.**

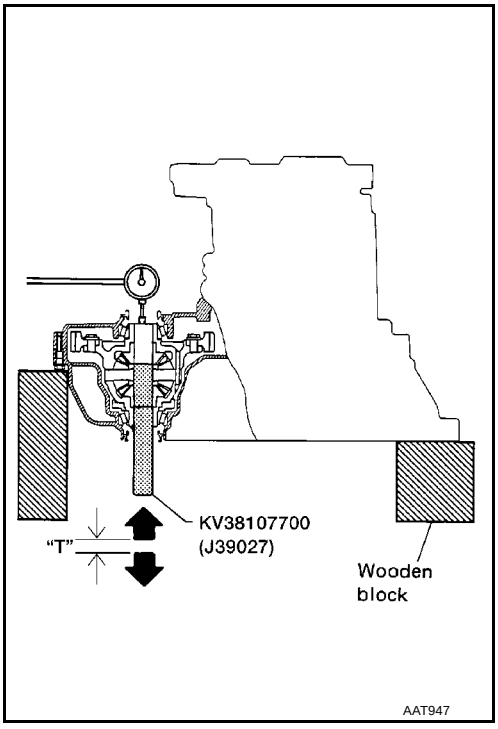

9. Remove converter housing from transmission case.
10. Remove final drive assembly from transmission case.
11. Remove differential side bearing outer race from transmission case.
12. Reinstall differential side bearing outer race and shim(s) selected from SDS table on transmission case.
13. Reinstall converter housing on transmission case and tighten transmission case fixing bolts to the specified torque. Refer to AT-417, "OVERHAUL" .

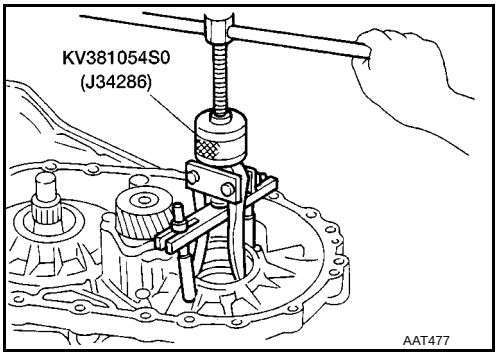

14. Insert Tool into differential case and measure turning torque of final drive assembly.
    - **Turn final drive assembly in both directions several times to seat bearing rollers correctly.**

Turning torque of final drive assembly (New bearing):

0.49 - 1.08 N-m (5.0 - 11.0 kg-cm, 4.3 - 9.5 in-lb)

- **When old bearing is used again, turning torque will be slightly less than the above.**
- **Make sure torque is close to the specified range.**

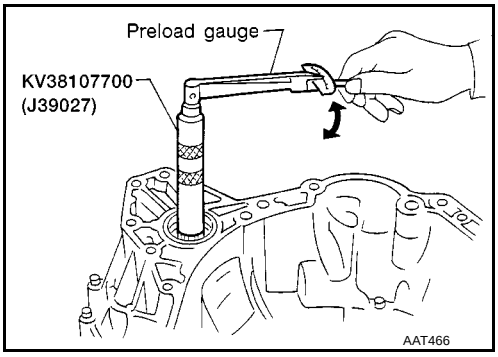

REDUCTION PINION GEAR BEARING PRELOAD

- Be sure to remove final drive assembly before doing this procedure.
- Using caliper and straightedge, calculate a dimension "T" (adjuster shim thickness) in the right figure by the following formula and adjust the inspection standard for pre load (rotating slide torque) as shown below.

T = A – E

Inspection standard for preload:

0.1 - 0.69 N-m (1.1 - 7.0 kg-cm, 0.95 - 6.08 in-lb)

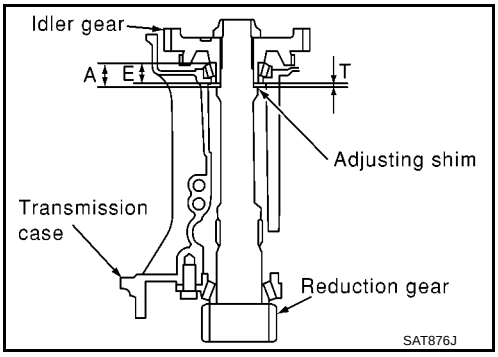

1. Remove transmission case and final drive assembly from converter housing.
2. Select proper thickness of reduction pinion gear bearing adjusting shim using the following procedures.

a. Place reduction pinion gear on transmission case as shown.

b. Place idler gear bearing on transmission case.

c. Measure dimensions “B” “C” and “D” and calculate dimension “A”.

A = D – (B + C)

“A”: Distance between the surface of idler gear bearing inner race and the adjusting shim mating surface of reduction pinion gear.

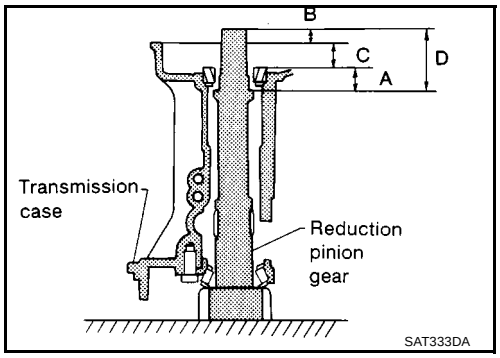

- Measure dimension “B” between the end of reduction pinion gear and the surface of transmission case.
- **Measure dimension “B” in at least two places.**

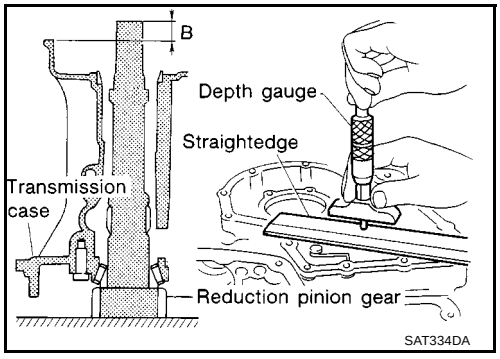

- Measure dimension “C” between the surface of idler gear bearing inner race and the surface of transmission case.
- **Measure dimension “C” in at least two places.**

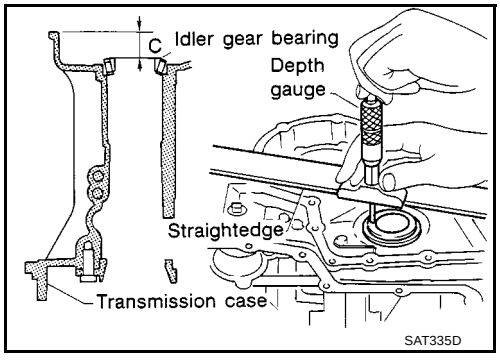

- Measure dimension “D” between the end of reduction pinion gear and the adjusting shim mating surface of reduction pinion gear.
- **Measure dimension “D” in at least two places.**
- Calculate dimension “A”.

A = D – (B + C)

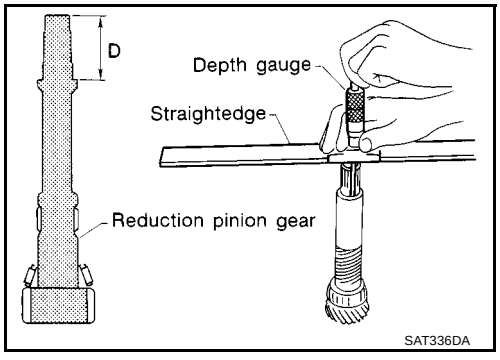

d. Measure dimension “E” between the end of idler gear and the idler gear bearing inner race mating surface of idler gear.
   - **Measure dimension “E” in at least two places.**

e. Select proper thickness of reduction pinion gear bearing adjusting shim.

   Proper shim thickness = A – E – 0.05 mm (0.0020 in)*

   (*... Bearing preload)

   Reduction pinion gear bearing adjusting shim:

   Refer to AT-519, "SERVICE DATA AND SPECIFICATIONS (SDS)" .

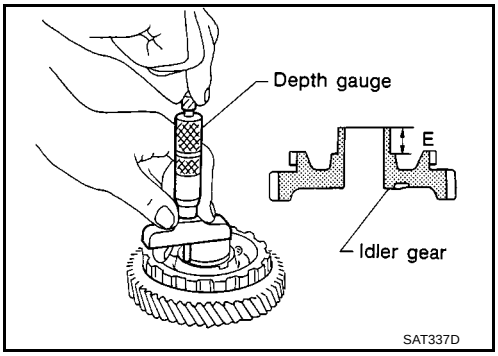

3. Install reduction gear and reduction pinion gear bearing adjusting shim selected in step 2-e on transmission case.
4. Press idler gear bearing inner race on idler gear.
5. Press idler gear on reduction gear.
   - **Press idler gear so-that idler gear can be locked by parking pawl.**

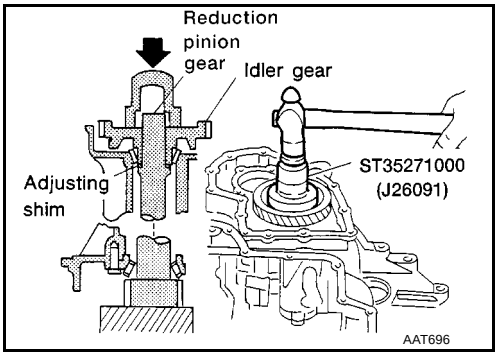

6. Tighten idler gear lock nut to the specified torque.
   - **Lock idler gear with parking pawl when tightening lock nut.**

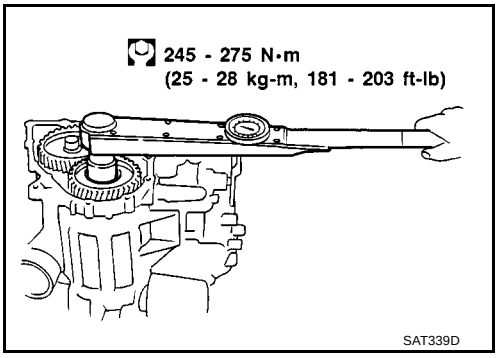

7. Measure turning torque of reduction pinion gear.
   - **When measuring turning torque, turn reduction pinion gear in both directions several times to seat bearing rollers correctly.**

   Turning torque of reduction pinion gear:

   0.1 - 0.69 N-m (1.1 - 7.0 kg-cm, 0.95 - 6.08 in-lb)

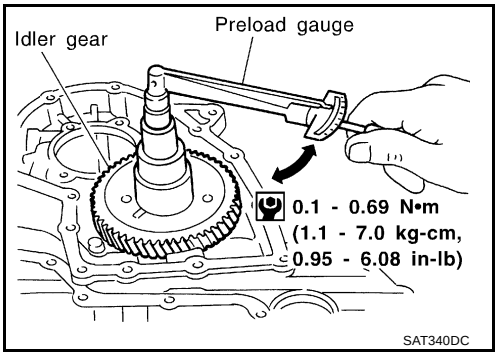

OUTPUT SHAFT END PLAY

- Measure clearance between side cover and the end of the output shaft bearing.
- Select proper thickness of adjusting shim so that clearance is within specifications.

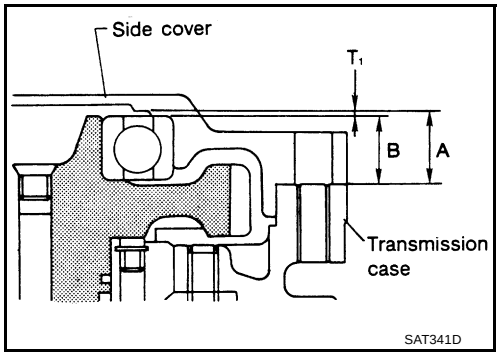

1. Install bearing retainer for output shaft.

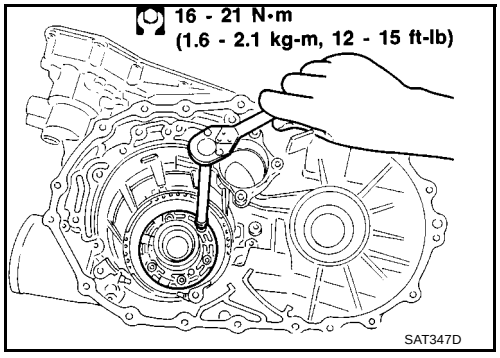

2. Install output shaft thrust needle bearing on bearing retainer.

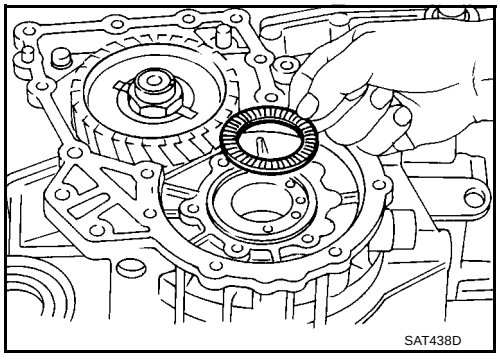

3. Install output shaft on transmission case.

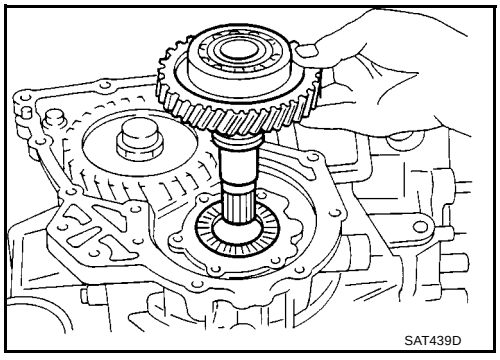

4. Measure dimensions "ℓ1" and "ℓ2" at side cover and then calculate dimension "A".
   - **Measure dimension "ℓ1" and "ℓ2" in at least two places.**

     "A": Distance between transmission case fitting surface and adjusting shim mating surface.

     A = ℓ1 − ℓ2

     ℓ2: Height of gauge

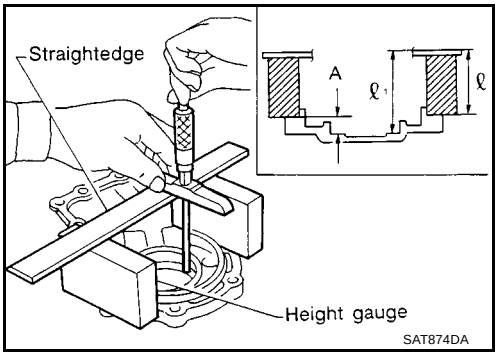

5. Measure dimensions "ℓ2" and "ℓ3" and then calculate dimension "B".
   - **Measure "ℓ2" and "ℓ3" in at least two places.**

     "B": Distance between the end of output shaft bearing outer race and the side cover fitting surface of transmission case.

     B = ℓ2 − ℓ3

     ℓ2: Height of gauge

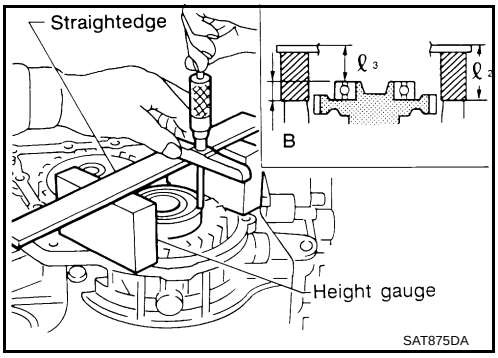

6. Select proper thickness of adjusting shim so that output shaft end play (clearance between side cover and output shaft bearing) is within specifications.

   Output shaft end play (A − B):

   0 - 0.5 mm (0 - 0.020 in)

   Output shaft end play adjusting shims:

   Refer to AT-519, "SERVICE DATA AND SPECIFICATIONS (SDS)" .

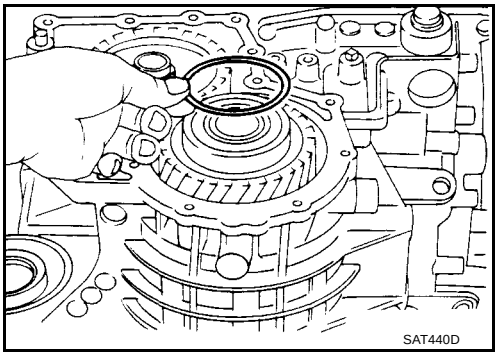

7. Install adjusting shim on output shaft bearing.
8. Apply locking sealant to transmission case as shown in illustration.

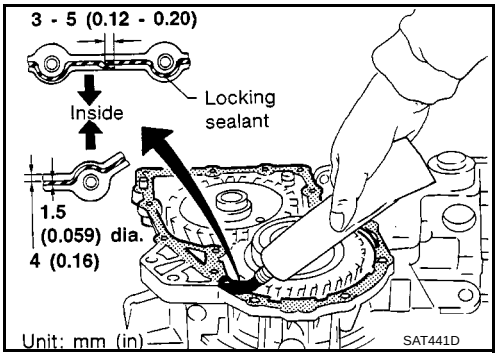

9. Install side cover on transmission case.
   - **Apply locking sealant to the mating surface of transmission case.**

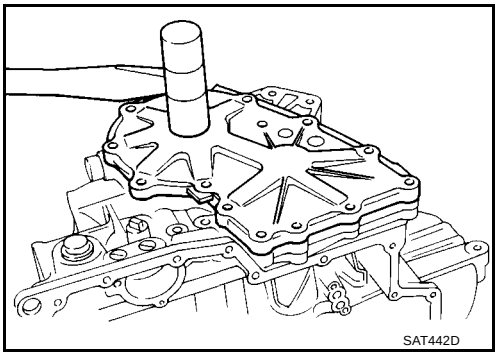

10. Tighten side cover fixing bolts to specified torque.
    - **Do not mix bolts A and B.**
    - **Always replace bolts A as they are self-sealing bolts.**

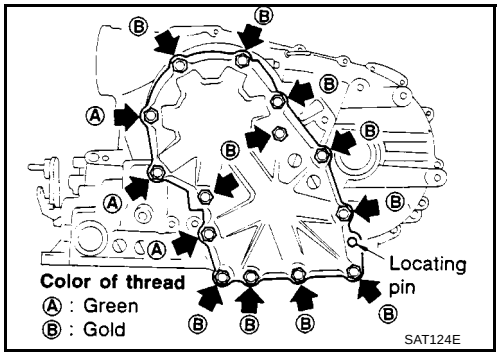

Assembly (2)

ECS009CW

1. Remove paper rolled around bearing retainer.
2. Install thrust washer on bearing retainer.
    - **Apply petroleum jelly to thrust washer.**

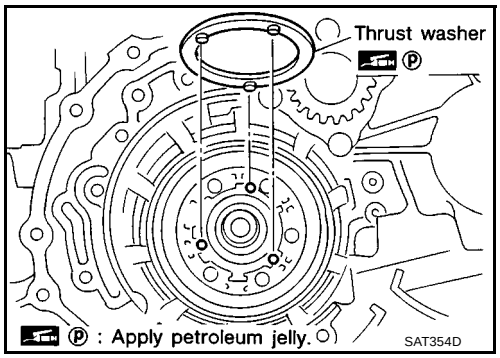

3. Install forward clutch assembly.
    - **Align teeth of low & reverse brake drive plates before installing.**
    - **Make sure that bearing retainer seal rings are not spread.**

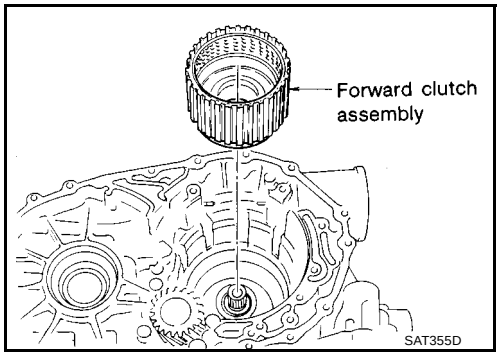

4. Install thrust needle bearing on bearing retainer.
    - **Apply petroleum jelly to thrust bearing.**
    - **Pay attention to direction of thrust needle bearing.**

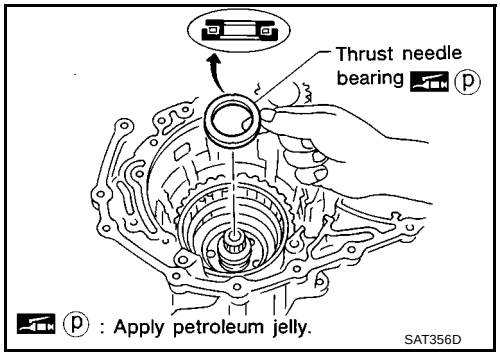

5. Install thrust needle bearing on rear internal gear.
   - **Apply petroleum jelly to thrust needle bearing.**
   - **Pay attention to direction of thrust needle bearing.**

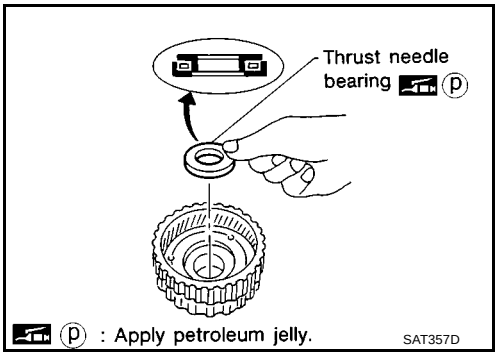

6. Hold forward clutch hub and turn overrun clutch hub.
   Check overrun clutch hub for directions of lock and unlock.
   - If not as shown in illustration, check installed direction of forward one-way clutch.

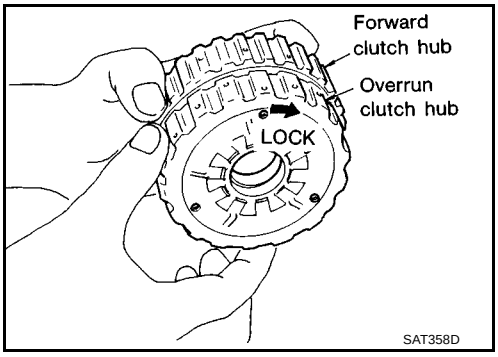

7. Install rear internal gear assembly.
   - **Align teeth of forward clutch and overrun clutch drive plate.**

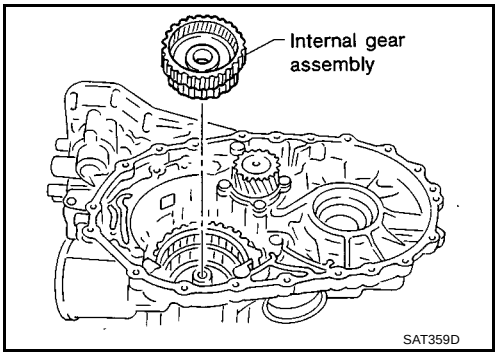

8. Install needle bearing on rear planetary carrier.
   - **Apply petroleum jelly to needle bearing.**
   - **Pay attention to direction of needle bearing.**

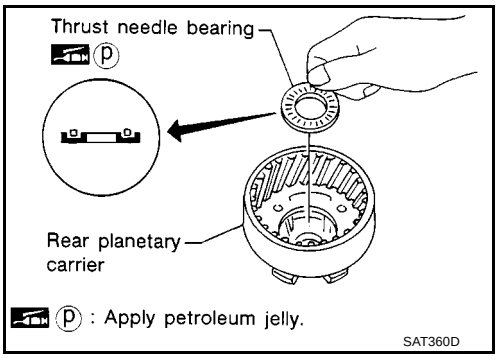

9. Install rear sun gear on rear planetary carrier.
   - **Pay attention to direction of rear sun gear.**

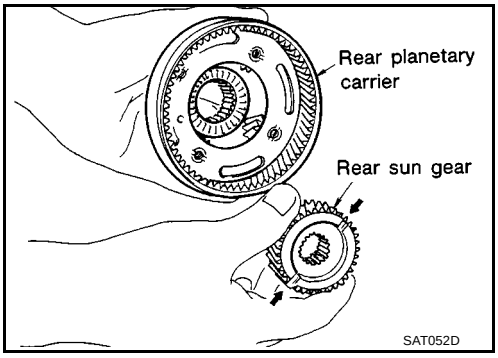

10. Install rear planetary carrier on transmission case.

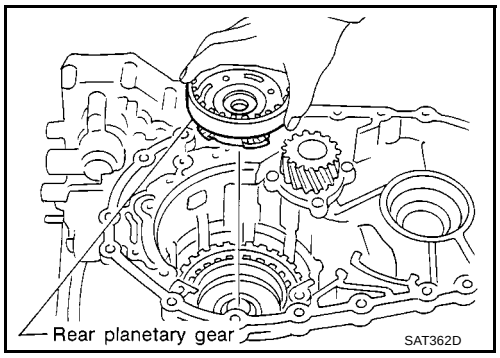

11. Install thrust needle bearing on front planetary carrier.
    - **Apply petroleum jelly to thrust needle bearing.**
    - **Pay attention to direction of thrust needle bearing.**

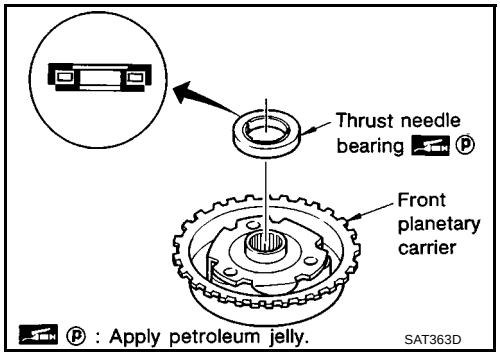

12. Install low one-way clutch to front planetary carrier by turning it in the direction of the arrow as shown.
13. While holding front planetary carrier, turn low one-way clutch. Check low one-way clutch for correct directions of lock and unlock.

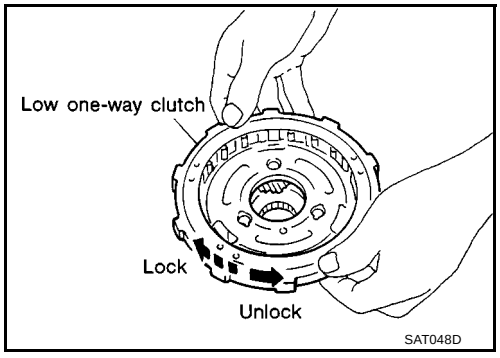

14. Install front planetary carrier assembly on transmission case.

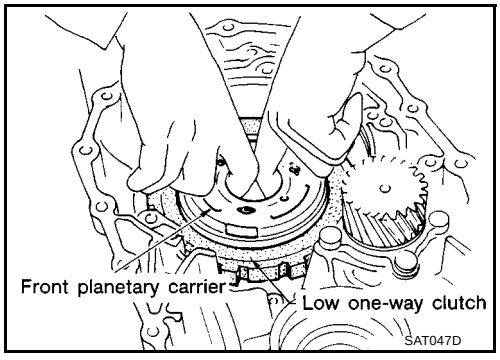

15. Install snap ring with screwdriver.
    - **Forward clutch and bearings must be correctly installed for snap ring to fit groove of transmission case.**

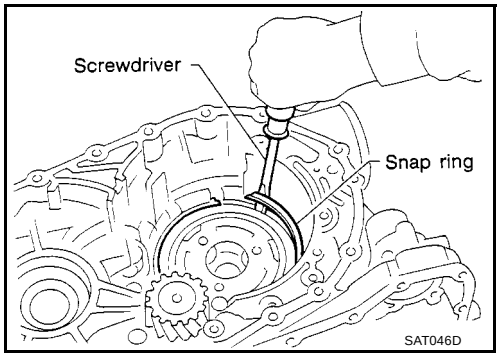

16. Install needle bearing on front sun gear.
    - **Apply petroleum jelly to needle bearing.**
    - **Pay attention to direction of needle bearing.**

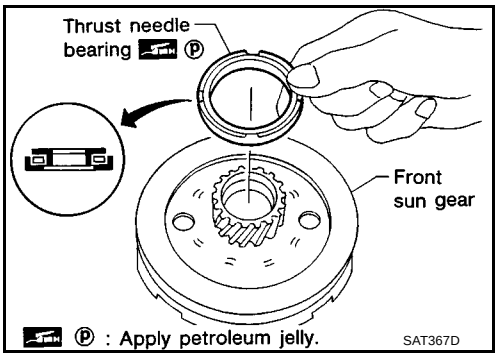

17. Install front sun gear on front planetary carrier.

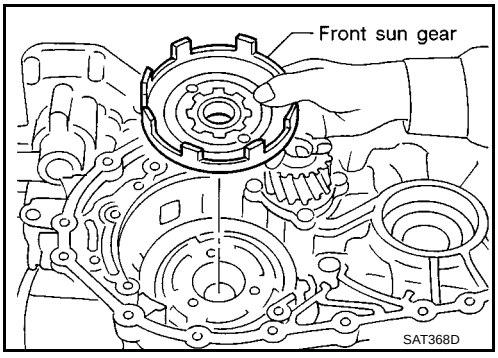

18. Install needle bearing on front sun gear.
    - **Apply petroleum jelly to needle bearing.**
    - **Pay attention to direction of needle bearing.**

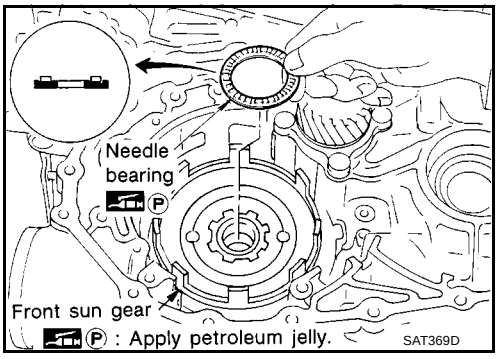

19. Install high clutch hub on front sun gear.

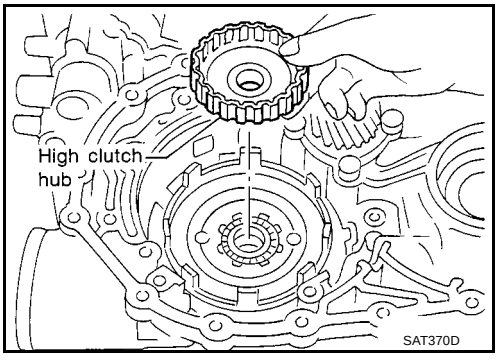

20. Install needle bearing on high clutch hub.
    - **Apply petroleum jelly to needle bearing.**
    - **Pay attention to direction of needle bearing.**

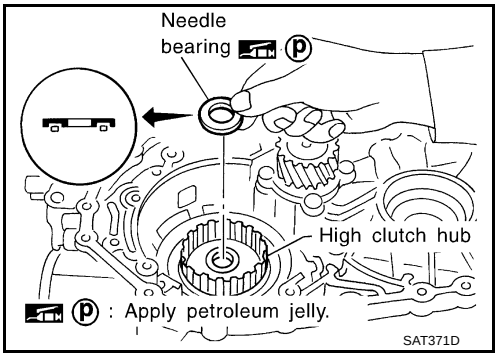

21. Remove paper rolled around input shaft.
22. Install reverse clutch assembly.
    - **Align teeth of high clutch drive plates before installing.**

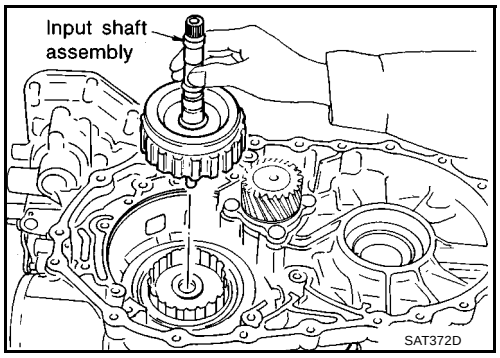

23. Install reverse clutch assembly.
    - **Align teeth of high clutch drive plates before installing.**

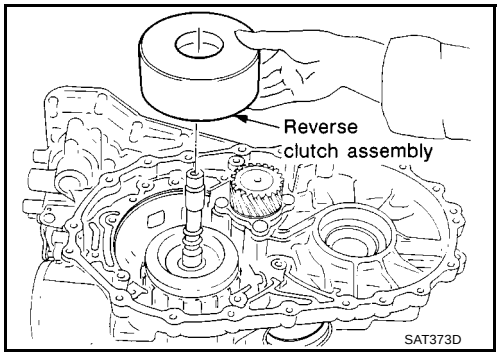

Adjustment (2)

ECS009CX

When any parts listed below are replaced, adjust total end play and reverse clutch end play.

Part name	Total end play	Reverse clutch end play
Transmission case	●	●
Overrun clutch hub	●	●
Rear internal gear	●	●
Rear planetary carrier	●	●
Rear sun gear	●	●
Front planetary carrier	●	●
Front sun gear	●	●
High clutch hub	●	●
High clutch drum	●	●
Oil pump cover	●	●
Reverse clutch drum	—	●

TOTAL END PLAY

- Measure clearance between reverse clutch drum and needle bearing for oil pump cover.
- Select proper thickness of bearing race so that end play is within specifications.

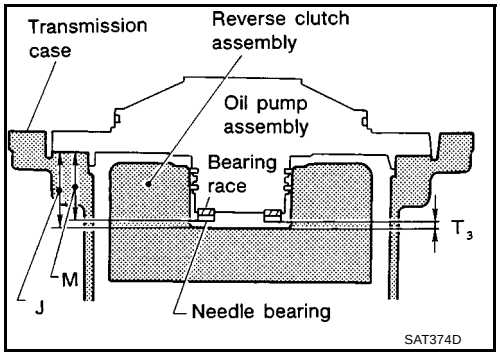

1. Measure dimensions “K” and “L” and then calculate dimension “J”.

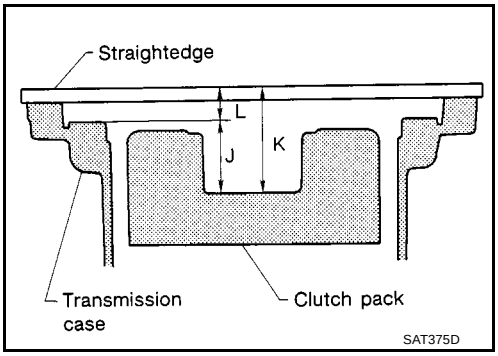

a. Measure dimension “K”.

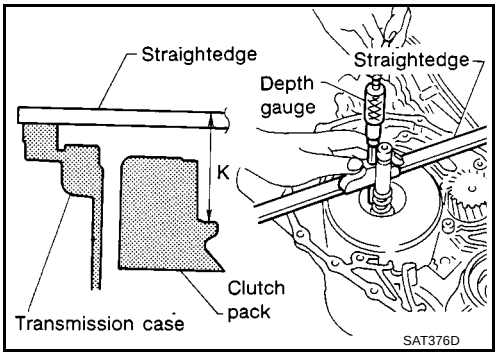

b. Measure dimension “L”.

c. Calculate dimension “J”.

“J”: Distance between oil pump fitting surface of transmission case and needle bearing mating surface of high clutch drum.

J = K – L

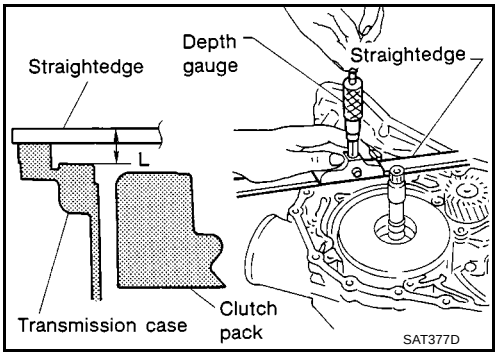

2. Measure dimension “M”.

a. Place bearing race and needle bearing on oil pump assembly.

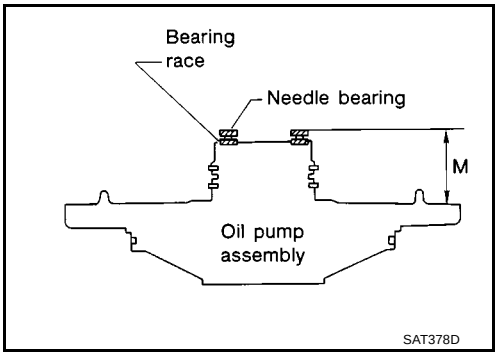

b. Measure dimension “M”.

“M”: Distance between transmission case fitting surface of oil pump cover and needle bearing on oil pump cover.

“M_1 ”: Indication of gauge.

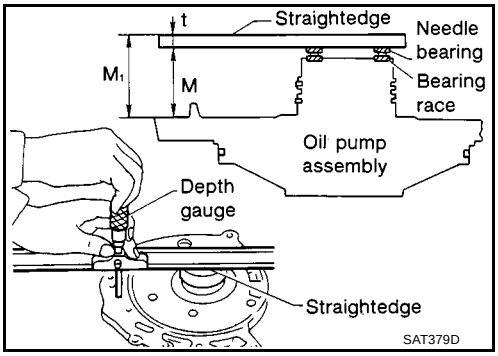

c. Measure thickness of straightedge “t”.

$M = M_1 - t$

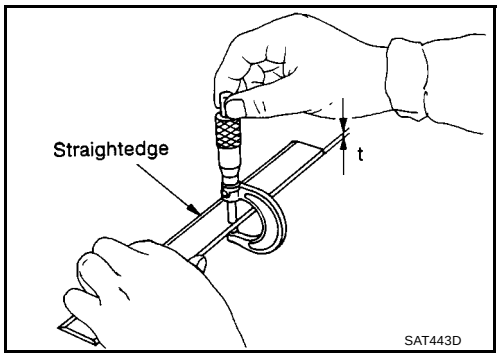

3. Adjust total end play “T_3 ”.

$T_3 = J - M$

Total end play “T_3 ”:

0.25 - 0.55 mm (0.0098 - 0.0217 in)

- Select proper thickness of bearing race so that total end play is within specifications.

Bearing races: **Refer to** **AT-519, "SERVICE DATA AND SPECIFICATIONS (SDS)"**

.

REVERSE CLUTCH END PLAY

- Measure clearance between oil pump cover and thrust washer for reverse clutch drum.
- Select proper thickness of thrust washer so that end play is within specification.

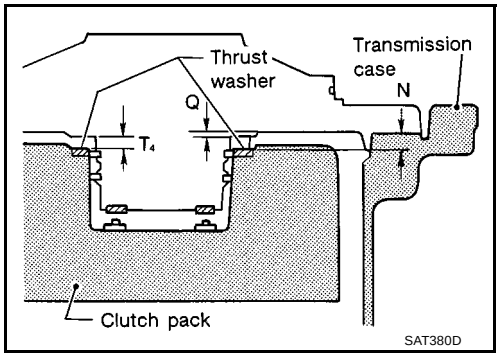

1. Measure dimensions “O” and “P” and then calculate dimension “N”.

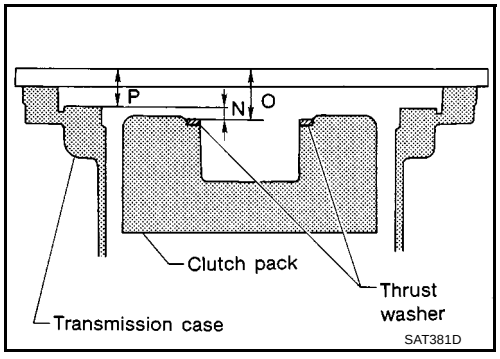

a. Place thrust washer on reverse clutch drum.
b. Measure dimension “O”.

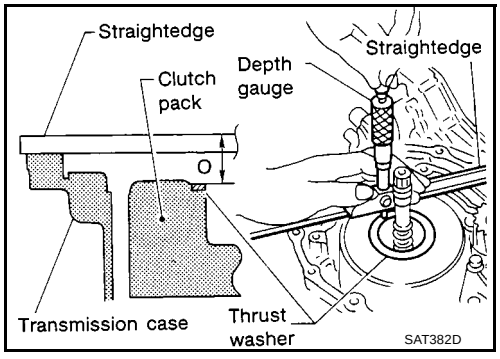

c. Measure dimension “P”.
d. Calculate dimension “N”.

“N”: Distance between oil pump fitting surface of transmission case and thrust washer on reverse clutch drum.

N = O – P

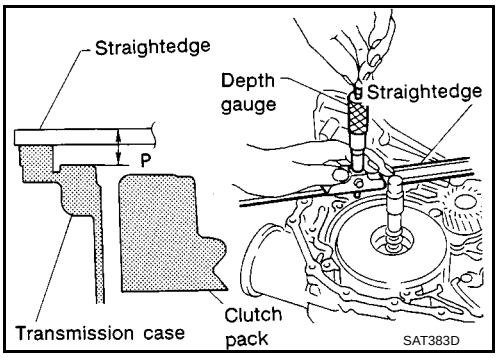

2. Measure dimensions “R” and “S” and then calculate dimension “Q”.

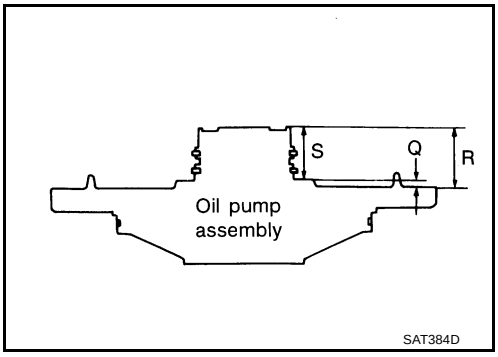

a. Measure dimension “R”.

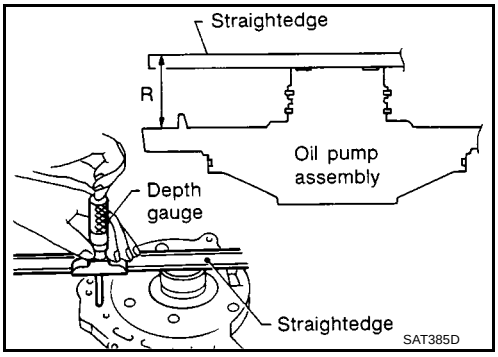

b. Measure dimension “S”.
c. Calculate dimension “Q”.

“Q”: Distance between transmission case fitting surface and thrust washer mating surface.

Q = R – S

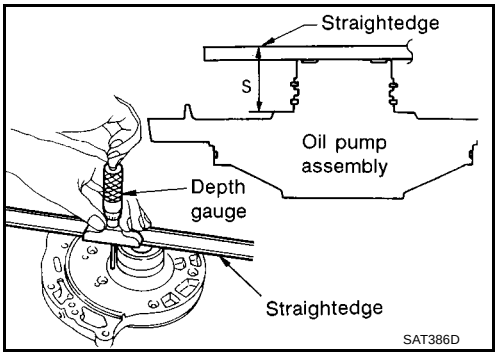

3. Adjust reverse clutch end play “T_4 ”.

T_4 = N – Q

Reverse clutch end play:

0.65 - 1.00 mm (0.0256 - 0.0394 in)

- Select proper thickness of thrust washer so that reverse clutch end play is within specifications.

Thrust washer: Refer to AT-519, "SERVICE DATA AND SPECIFICATIONS (SDS)" .

Assembly (3)

ECS009CY

1. Remove reverse clutch assembly and install needle bearing on high clutch assembly.
   - **Pay attention to direction of needle bearing.**
2. Install reverse clutch assembly

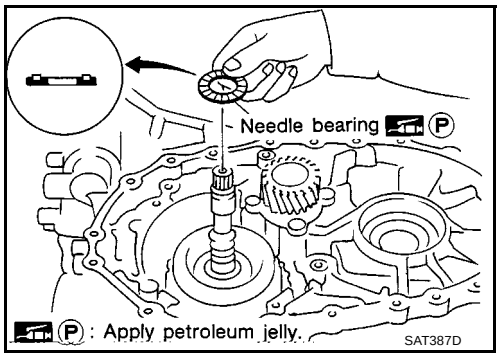

3. Install anchor end pin and lock nut on transmission case.
4. Place brake band on outside of reverse clutch drum. Tighten anchor end pin just enough so that brake band is evenly fitted on reverse clutch drum.

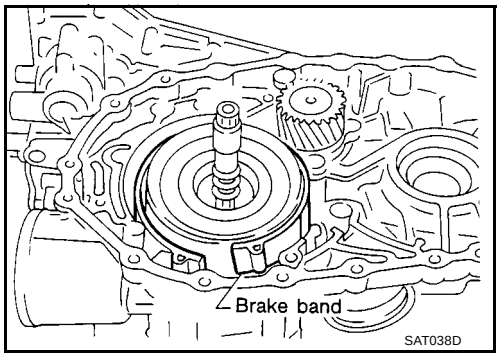

5. Place bearing race selected in total end play adjustment step on oil pump cover.
   - **Apply petroleum jelly to bearing race.**

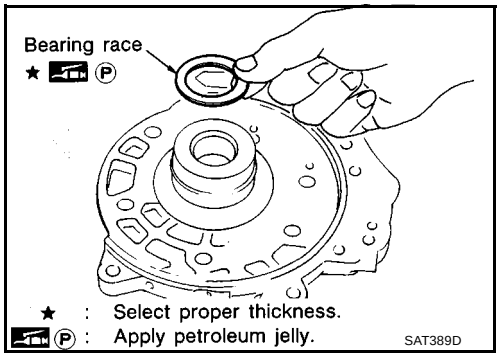

6. Place thrust washer selected in reverse clutch end play step on reverse clutch drum.
   - **Apply petroleum jelly to thrust washer.**

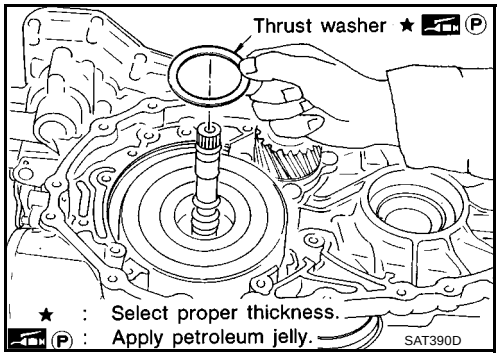

7. Install oil pump assembly on transmission case.

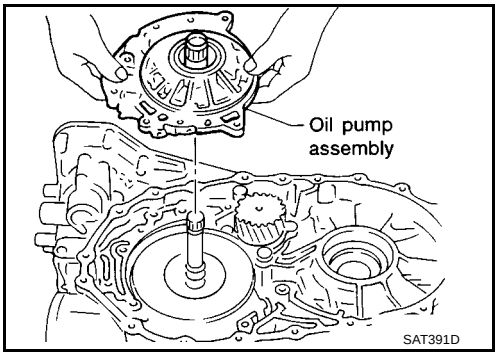

8. Tighten oil pump fixing bolts to the specified torque.

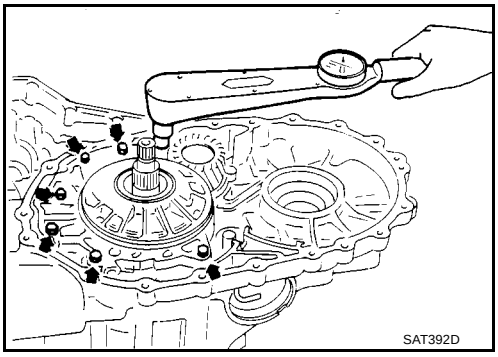

9. Install O-ring to input shaft.
   - **Apply ATF to O-ring.**

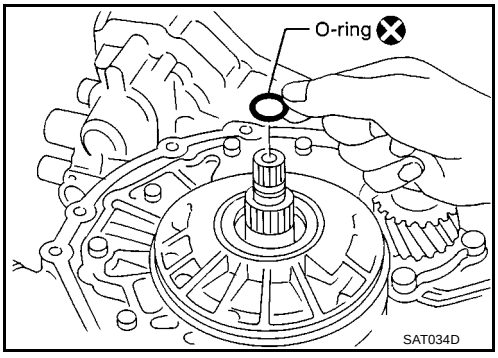

10. Adjust brake band.

a. Tighten anchor end pin to the specified torque.

Anchor end pin:

Refer to **AT-519, "SERVICE DATA AND SPECIFICATIONS (SDS)"** **.**

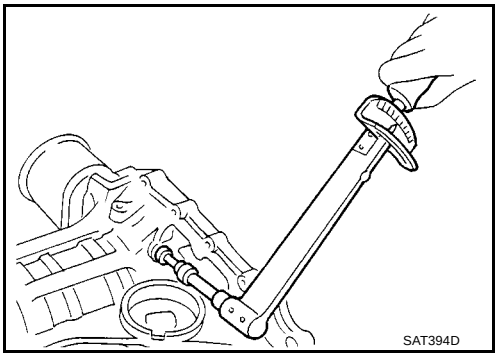

b. Back off anchor end pin two and a half turns.

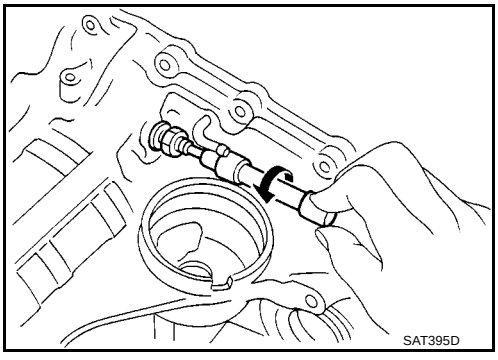

c. While holding anchor end pin, tighten lock nut.

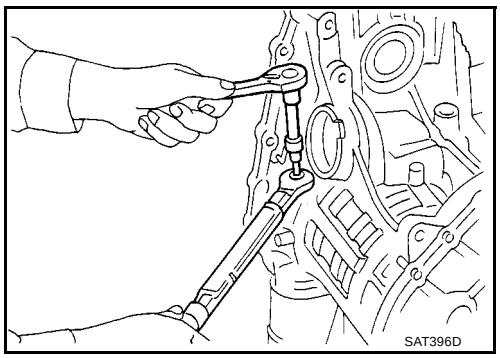

11. Apply compressed air to oil holes of transmission case and check operation of brake band.

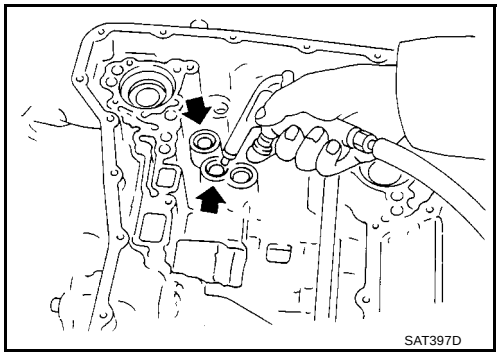

12. Install final drive assembly on transmission case.

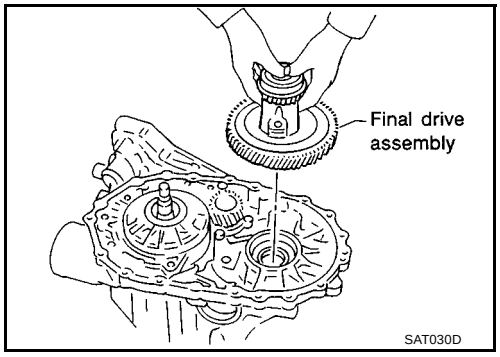

13. Install differential lubricant tube on converter housing. Tighten differential lubricant tube bolts to the specified torque. Refer to AT-417, "OVERHAUL" .

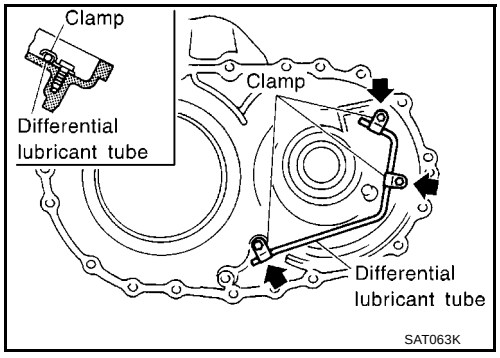

14. Install O-ring on differential oil port of transmission case.
15. Install converter housing on transmission case.
    - **Apply locking sealant to mating surface of converter housing.**

Bolt	Length mm (in)
A	32.8 (1.291)
B	40 (1.57)

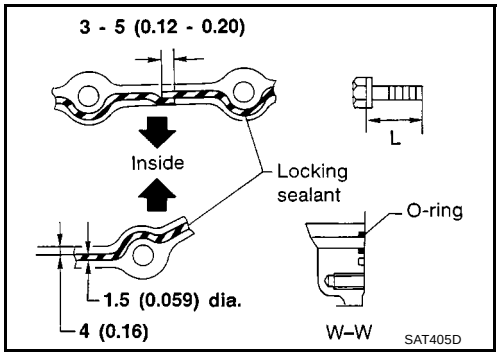

16. Install accumulator piston.

a. Check contact surface of accumulator piston for damage.

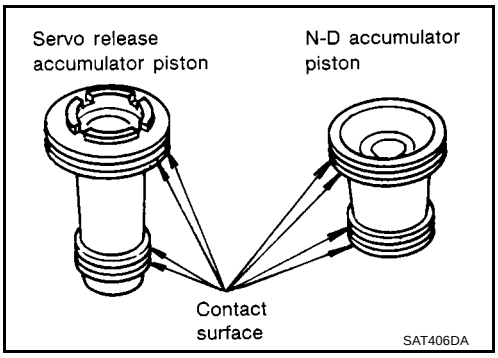

b. Install O-rings on accumulator piston.

- **Apply ATF to O-rings.**

Accumulator piston O-rings:

Refer to AT-519, "SERVICE DATA AND SPECIFICATIONS (SDS)" .

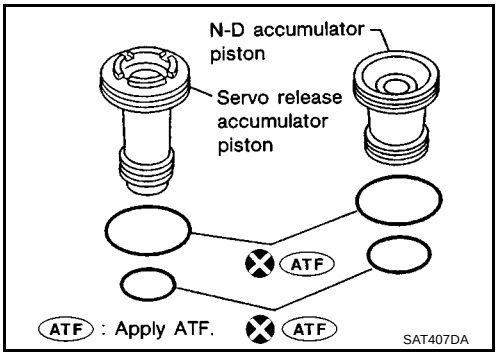

c. Install accumulator pistons and return springs on transmission case.

- **Apply ATF to inner surface of transmission case.**

Return springs:

Refer to AT-519, "SERVICE DATA AND SPECIFICATIONS (SDS)" .

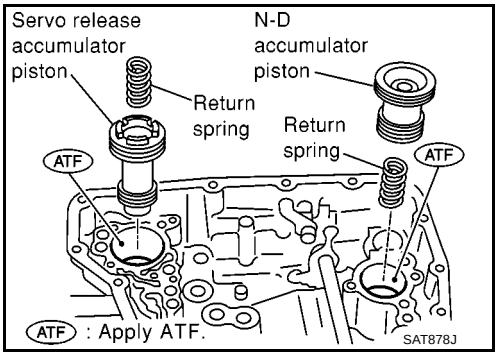

17. Install lip seals for band servo oil holes on transmission case.

- **Apply petroleum jelly to lip seals.**

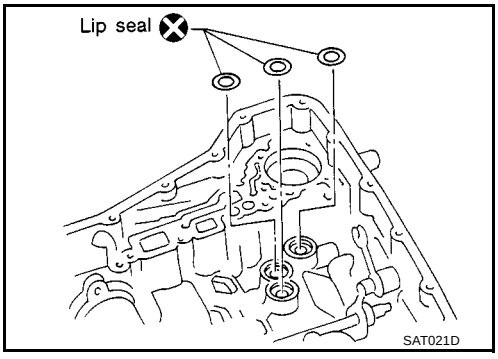

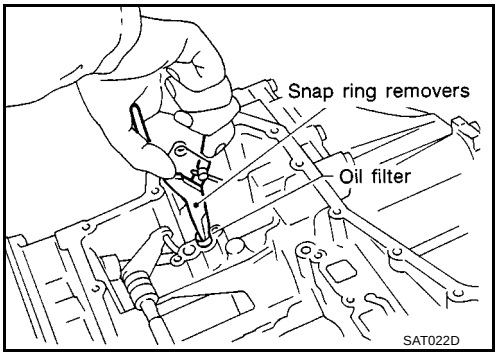

18. Install control valve assembly.

a. Insert manual valve into control valve assembly.

- **Apply ATF to manual valve.**

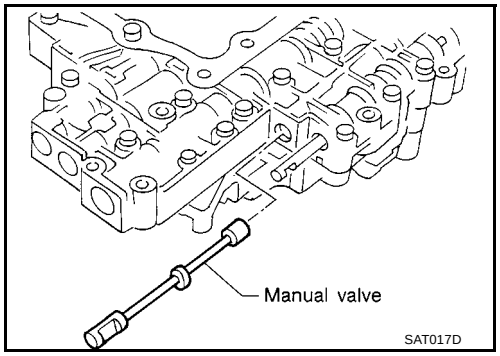

b. Pass solenoid harness through transmission case and install terminal body on transmission case by pushing it.

c. Install stopper ring to terminal body.

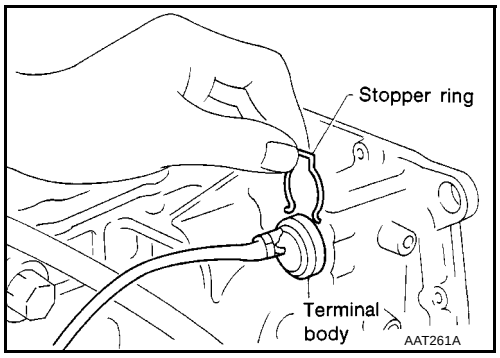

d. Tighten bolts **A** , **B** and **C** .

: 7 - 9N·m (0.7 - 0.9 kg-m, 61 - 78 in-lb)

Bolt length, number and location:

Bolt	A	B	C
Bolt length " ℓ "	40 mm (1.57 in)	33 mm (1.30 in)	43.5 mm (1.713 in)
Number of bolts	5	6	2

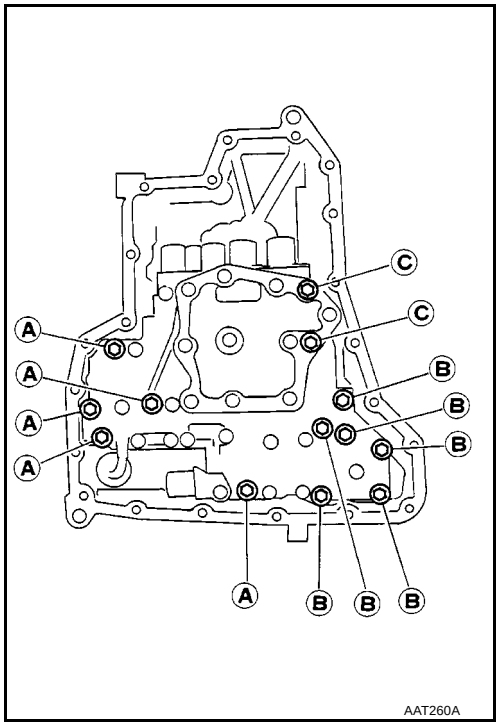

19. Install oil pan.

a. Attach a magnet to oil pan.

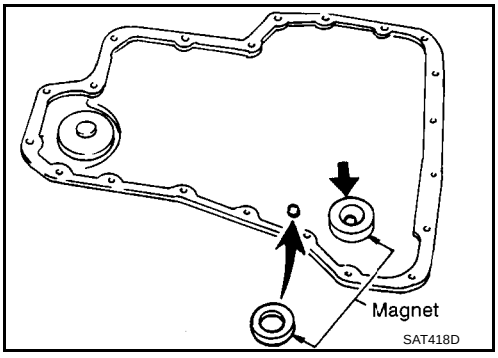

b. Install new oil pan gasket on transmission case.

c. Install oil pan on transmission case.

- **Always replace oil pan bolts as they are self-sealing bolts.**
- **Tighten four bolts in a criss-cross pattern to prevent dislocation of gasket.**

d. Tighten drain plug to specified torque.

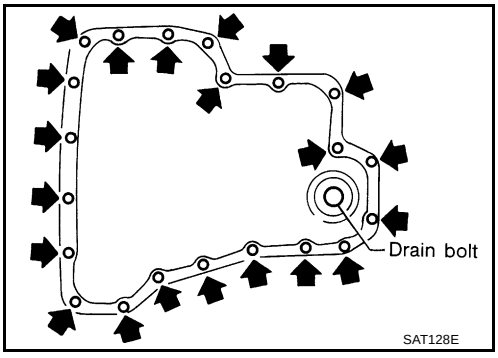

20. Install park/neutral position (PNP) switch.

a. Set manual shaft in P position.

b. Temporarily install park/neutral position (PNP) switch on manual shaft.

c. Move selector lever to N position.

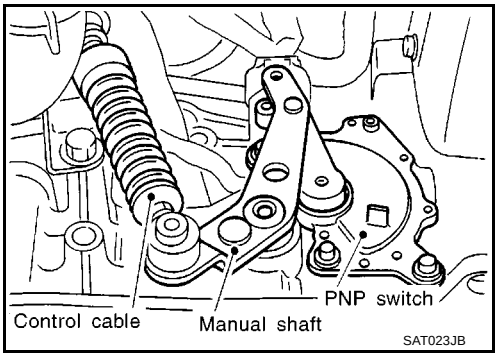

d. Use a 4 mm (0.16 in) pin for this adjustment.

i. Insert the pin straight into the manual shaft adjustment hole.

ii. Rotate park/neutral position (PNP) switch until the pin can also be inserted straight into hole in park/neutral position (PNP) switch.

e. Tighten park/neutral position (PNP) switch fixing bolts. Refer to AT-417, "OVERHAUL" .

f. Remove pin from adjustment hole after adjusting park/neutral position (PNP) switch.

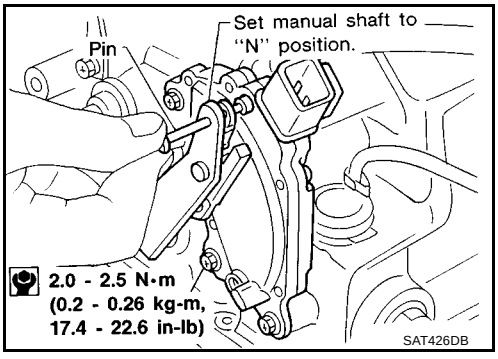

21. Install A/T fluid charging pipe and fluid cooler tube to transmission case. Tighten A/T fluid charging pipe and fluid cooler tube bolts to the specified torque. Refer to AT-417, "OVERHAUL" .

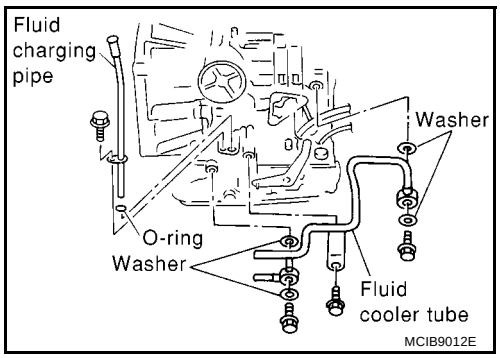

22. Install torque converter.

a. Pour ATF into torque converter.

- **Approximately 1 liter (1-3/4 Imp pt) of fluid is required for a new torque converter.**
- **When reusing old torque converter, add the same amount of fluid as was drained.**

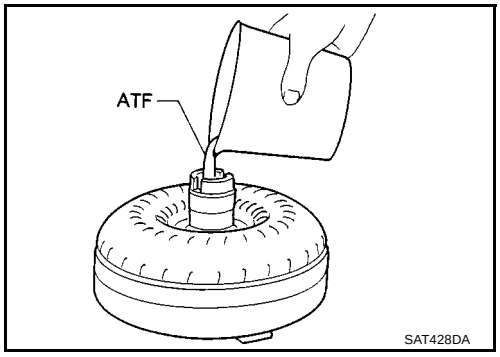

b. Install torque converter while aligning notches of torque converter with notches of oil pump.

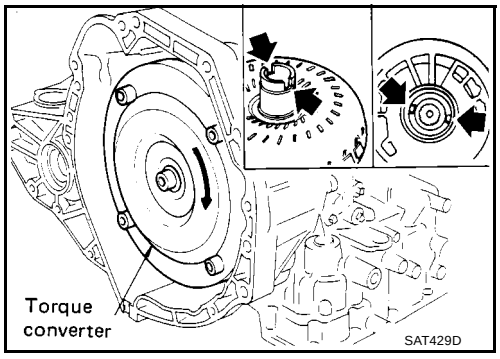

c. Measure distance “A” to check that torque converter is in proper position.

Distance A:

Refer to AT-519, "SERVICE DATA AND SPECIFICATIONS (SDS)" .

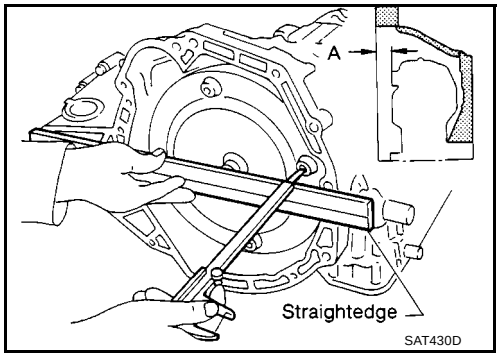

SERVICE DATA AND SPECIFICATIONS (SDS)

PFP:00030

General Specifications

ECS009CZ

Engine		QG18DE
Automatic transaxle model		RE4F03B
Automatic transaxle assembly	Model code number	3AX70
Transaxle gear ratio	1st	2.861
	2nd	1.562
	3rd	1.000
	4th	0.697
	Reverse	2.310
	Final drive	4.072
Recommended fluid		Genuine Nissan Automatic Transmission Fluid or equivalent*
Fluid capacity		7.7 ℓ (6-3/4 Imp qt)

*: Refer to MA-13, “Recommended Fluids and Lubricants”.

Shift Schedule

ECS009D0

VEHICLE SPEED WHEN SHIFTING GEARS

Throttle position	Shift pattern	Vehicle speed km/h (MPH)						
		$D_1 \rightarrow D_2$	$D_2 \rightarrow D_3$	$D_3 \rightarrow D_4$	$D_4 \rightarrow D_3$	$D_3 \rightarrow D_2$	$D_2 \rightarrow D_1$	$1_2 \rightarrow 1_1$
Full throttle	Comfort	54 - 62 (20 - 23)	102 - 110 (64 - 69)	162 - 170 (96 - 100)	158 - 166 (99 - 104)	92 - 100 (57 - 63)	41 - 49 (25 - 30)	54 - 62 (34 - 39)
Half throttle	Comfort	29 - 37 (18 - 23)	51 - 59 (32 - 37)	123 - 131 (77 - 80)	69 - 77 (43 - 48)	34 - 42 (21 - 26)	5 - 13 (3 - 8)	54 - 62 (34 - 39)

VEHICLE SPEED WHEN PERFORMING LOCK-UP

Throttle opening	OD switch	Shift pattern	Vehicle speed km/h (MPH)	
			Lock-up ON	Lock-up OFF
2/8	ON (D_4)	Comfort	96 - 104 (60 - 65)	65 - 73 (41 - 46)
	OFF (D_3)	Comfort	96 - 104 (60 - 65)	93 - 101 (58 - 63)

Stall Revolution

ECS009D1

Engine model	Stall revolution rpm
QG18DE	2,300 - 2,750

Line Pressure

ECS009D2

Engine speed rpm	Line pressure kPa (bar, kg/cm^2, psi)			
	R position	D position	2 position	1 position
Idle	778 (7.8, 7.9, 113)	500 (5.0, 5.1, 73)	500 (5.0, 5.1, 73)	500 (5.0, 5.1, 73)
Stall	1,813 (18.1, 18.5, 263)	1,165 (11.7, 11.9, 169)	1,165 (11.7, 11.9, 169)	1,165 (11.7, 11.9, 169)

Control Valves

ECS009D3

CONTROL VALVE AND PLUG RETURN SPRINGS

Unit: mm (in)

	No.	Parts	Part No.*	Free length	Outer diameter
Upper body Refer to “Control Valve Upper Body”, AT-453 .	35	3-2 timing valve spring	31736-01X00	23.0 (0.906)	6.65 (0.2618)
	19	Cooler check valve spring	31742-3AX05	28.04 (1.1039)	7.15 (0.2815)
	23	Pilot valve spring	31742-3AX03	38.98 (1.5346)	8.9 (0.350)
	15	1-2 accumulator valve spring	31742-3AX00	20.5 (0.807)	6.95 (0.2736)
	28	1-2 accumulator piston spring	31742-3AX09	55.66 (2.1913)	19.5 (0.7677)
	33	1st reducing valve spring	31742-80X05	27.0 (1.063)	7.0 (0.276)
	2	Overrun clutch reducing valve spring	31742-80X06	37.5 (1.476)	7.0 (0.276)
	7	Torque converter relief valve spring	31742-3AX04	33.3 (1.3110)	9.0 (0.354)
	10	Torque converter clutch control valve spring	31742-3AX02	53.01 (2.0870)	6.5 (0.256)
Lower body Refer to “Control Valve Lower Body”, AT-457 .	34	Shuttle valve spring	31762-41X04	51.0 (2.0079)	5.65 (0.2224)
	18	Pressure regulator valve spring	31742-80X13	45.0 (1.772)	15.0 (0.591)
	23	Overrun clutch control valve spring	31762-80X00	21.7 (0.854)	7.0 (0.276)
	27	Accumulator control valve spring	31742-80X02	22.0 (0.866)	6.5 (0.256)
	29	Shift valve A spring	31762-80X00	21.7 (0.854)	7.0 (0.276)
	2	Shift valve B spring	31762-80X00	21.7 (0.854)	7.0 (0.276)
	11	Pressure modifier valve spring	31742-41X15	30.5 (1.201)	9.8 (0.386)
	7		31742-80X16	32.0 (1.260)	6.9 (0.272)
	—	Fluid cooler relief valve spring	31872-31X00	17.02 (0.670)	8.0 (0.315)
	—	T/C pressure spring	31742-3AX07	9.0 (0.354)	7.3 (0.287)

*: Always check with the Parts Department for the latest parts information.

Clutch and Brakes

ECS009D4

REVERSE CLUTCH

Number of drive plates		2	
Number of driven plates		2	
Drive plate thickness mm (in)	Standard	2.0 (0.079)	
	Allowable limit	1.8 (0.071)	
Clearance mm (in)	Standard	0.5 - 0.8 (0.020 - 0.031)	
	Allowable limit	1.2 (0.047)	
Thickness of retaining plates		Thickness mm (in)	Part number*
		4.4 (0.173)	31537-31X00
		4.6 (0.181)	31537-31X01
		4.8 (0.189)	31537-31X02
		5.0 (0.197)	31537-31X03
		5.2 (0.205)	31537-31X04

*: Always check with the Parts Department for the latest parts information.

HIGH CLUTCH

Number of drive plates		3
Number of driven plates		5
Drive plate thickness mm (in)	Standard	1.6 (0.063)
	Allowable limit	1.5 (0.059)
Clearance mm (in)	Standard	1.4 - 1.8 (0.055 - 0.071)
	Allowable limit	2.4 (0.094)

	Thickness mm (in)	Part number*
Thickness of retaining plates	4.8 (0.189)	31537-32X05
	5.0 (0.197)	31537-32X06
	5.2 (0.205)	31537-32X07
	5.4 (0.213)	31537-32X08
	5.6 (0.220)	31537-32X09
	5.8 (0.228)	31537-32X10
	6.0 (0.236)	31537-32X11

*: Always check with the Parts Department for the latest parts information.

FORWARD CLUTCH

Number of drive plates		5	
Number of driven plates		5	
Drive plate thickness mm (in)	Standard	1.8 (0.071)	
	Allowable limit	1.6 (0.063)	
Clearance mm (in)	Standard	0.45 - 0.85 (0.0177 - 0.0335)	
	Allowable limit	1.85 (0.0728)	
Thickness of retaining plates		Thickness mm (in)	Part number*
		3.6 (0.142)	31537-31X60
		3.8 (0.150)	31537-31X61
		4.0 (0.157)	31537-31X62
		4.2 (0.165)	31537-31X63
		4.4 (0.173)	31537-31X64
		4.6 (0.181)	31537-31X65

*: Always check with the Parts Department for the latest parts information.

OVERRUN CLUTCH

Number of drive plates		3	
Number of driven plates		5	
Drive plate thickness mm (in)	Standard	1.6 (0.063)	
	Allowable limit	1.4 (0.055)	
Clearance mm (in)	Standard	1.0 - 1.4 (0.039 - 0.055)	
	Allowable limit	2.0 (0.079)	
Thickness of retaining plates		Thickness mm (in)	Part number*
		3.6 (0.142)	31567-31X79
		3.8 (0.150)	31567-31X80
		4.0 (0.157)	31567-31X81
		4.2 (0.165)	31567-31X82
		4.4 (0.173)	31567-31X83

*: Always check with the Parts Department for the latest parts information.

LOW & REVERSE BRAKE

Number of drive plates		5
Number of driven plates		4 + 1
Drive plate thickness mm (in)	Standard	2.0 (0.079)
	Allowable limit	1.8 (0.071)
Clearance mm (in)	Standard	1.4 - 1.8 (0.055 - 0.071)
	Allowable limit	2.8 (0.110)

	Thickness mm (in)	Part number*
Thickness of retaining plates	3.6 (0.142)	31667-31X16
	3.8 (0.150)	31667-31X17
	4.0 (0.157)	31667-31X18
	4.2 (0.165)	31667-31X19
	4.4 (0.173)	31667-31X20
	4.6 (0.181)	31667-31X21

*: Always check with the Parts Department for the latest parts information.

BRAKE BAND

Anchor end pin tightening torque	3.5 - 5.8 N-m (0.35 - 0.6 kg-m, 31 - 52 in-lb)
Number of returning revolutions for anchor end pin	2.5±0.125
Lock nut tightening torque	31 - 36 N-m (3.2 - 3.7 kg-m, 23 - 27 ft-lb)

Clutch and Brake Return Springs

ECS009D5

Unit: mm (in)

Parts		Free length	Outer diameter	Part number*
Forward clutch (Overrun clutch)	Outer (16 pcs)	26.6 (1.047)	10.6 (0.417)	31505-31X02
	Inner (16 pcs)	26.3 (1.035)	7.7 (0.303)	31505-31X03
Reverse clutch (16 pcs)		18.6 (0.732)	8.0 (0.315)	31505-31X00
High clutch (12 pcs)		19.7 (0.776)	11.1 (0.437)	31505-31X01
Low reverse brake (20 pcs)		25.1 (0.988)	7.6 (0.299)	31505-31X04

*: Always check with the Parts Department for the latest parts information.

Oil Pump

ECS009D6

Oil pump side clearance mm (in)		0.02 - 0.04 (0.0008 - 0.0016)	
Thickness of inner gears and outer gears		Inner gear	
		Thickness mm (in)	Part number*
		9.99 - 10.00 (0.3933 - 0.3937)	31346-31X00
		9.98 - 9.99 (0.3929 - 0.3933)	31346-31X01
		9.97 - 9.98 (0.3925 - 0.3929)	31346-31X02
		Outer gear	
		Thickness mm (in)	Part number*
		9.99 - 10.00 (0.3933 - 0.3937)	31347-31X00
		9.98 - 9.99 (0.3929 - 0.3933)	31347-31X01
		9.97 - 9.98 (0.3925 - 0.3929)	31347-31X02
Clearance between oil pump housing and outer gear mm (in)	Standard	0.08 - 0.15 (0.0031 - 0.0059)	
	Allowable limit	0.15 (0.0059)	
Oil pump cover seal ring clearance mm (in)	Standard	0.1 - 0.25 (0.0039 - 0.0098)	
	Allowable limit	0.25 (0.0098)	

*: Always check with the Parts Department for the latest parts information.

Input Shaft

ECS009D7

Unit: mm (in)

Input shaft seal ring clearance	Standard	0.08 - 0.23 (0.0031 - 0.0091)
	Allowable limit	0.23 (0.0091)

Planetary carrier

ECS009D8

Unit: mm (in)

Clearance between planetary carrier and pinion washer	Standard	0.15 - 0.70 (0.0059 - 0.0276)
	Allowable limit	0.80 (0.0315)

Final Drive

ECS009D9

DIFFERENTIAL SIDE GEAR CLEARANCE

Clearance between side gear and differential case with washer	0.1 - 0.2 mm (0.004 - 0.008 in)

DIFFERENTIAL SIDE GEAR THRUST WASHERS

Thickness mm (in)	Part number*
0.75 - 0.80 (0.0295 - 0.0315)	38424-D2111
0.80 - 0.85 (0.0315 - 0.0335)	38424-D2112
0.85 - 0.90 (0.0335 - 0.0354)	38424-D2113
0.90 - 0.95 (0.0354 - 0.0374)	38424-D2114
0.95 - 1.00 (0.0374 - 0.0394)	38424-D2115

*: Always check with the Parts Department for the latest parts information.

BEARING PRELOAD

Differential side bearing preload “T”	0.04 - 0.09 mm (0.0016 - 0.0035 in)

TURNING TORQUE

Turning torque of final drive assembly	0.49 - 1.08 N-m (5.0 - 11.0 kg-cm, 4.3 - 9.5 in-lb)

DIFFERENTIAL SIDE BEARING ADJUSTING SHIMS

Thickness mm (in)	Part number*
0.40 (0.0157)	31499-21X07
0.44 (0.0173)	31499-21X08
0.48 (0.0189)	31499-21X09
0.52 (0.0205)	31499-21X10
0.56 (0.0220)	31499-21X11
0.60 (0.0236)	31499-21X12
0.64 (0.0252)	31499-21X13
0.68 (0.0268)	31499-21X14
0.72 (0.0283)	31499-21X15
0.76 (0.0299)	31499-21X16
0.80 (0.0315)	31499-21X17
0.84 (0.0331)	31499-21X18
0.88 (0.0346)	31499-21X19
0.92 (0.0362)	31499-21X20
1.44 (0.0567)	31499-21X21

*: Always check with the Parts Department for the latest parts information.

TABLE FOR SELECTING DIFFERENTIAL SIDE BEARING ADJUSTING SHIMS (FOR RE4F03B)

Unit: mm (in)

Dial indicator deflection	Suitable shim(s)
0.31 - 0.35 (0.0122 - 0.0138)	0.40 (0.0157)
0.35 - 0.39 (0.0138 - 0.0154)	0.44 (0.0173)
0.39 - 0.43 (0.0154 - 0.0169)	0.48 (0.0189)
0.43 - 0.47 (0.0169 - 0.0185)	0.52 (0.0205)
0.47 - 0.51 (0.0185 - 0.0201)	0.56 (0.0220)
0.51 - 0.55 (0.0201 - 0.0217)	0.60 (0.0236)
0.55 - 0.59 (0.0217 - 0.0232)	0.64 (0.0252)
0.59 - 0.63 (0.0232 - 0.0248)	0.68 (0.0268)
0.63 - 0.67 (0.0248 - 0.0264)	0.72 (0.0283)
0.67 - 0.71 (0.0264 - 0.0280)	0.76 (0.0299)
0.71 - 0.75 (0.0280 - 0.0295)	0.80 (0.0315)
0.75 - 0.79 (0.0295 - 0.0311)	0.84 (0.0331)
0.79 - 0.83 (0.0311 - 0.0327)	0.88 (0.0346)
0.83 - 0.87 (0.0327 - 0.0343)	0.92 (0.0362)
0.87 - 0.91 (0.0343 - 0.0358)	0.48 (0.0189) + 0.48 (0.0189)
0.91 - 0.95 (0.0358 - 0.0374)	0.48 (0.0189) + 0.52 (0.0205)
0.95 - 0.99 (0.0374 - 0.0390)	0.52 (0.0205) + 0.52 (0.0205)
0.99 - 1.03 (0.0390 - 0.0406)	0.52 (0.0205) + 0.56 (0.0220)
1.03 - 1.07 (0.0406 - 0.0421)	0.56 (0.0220) + 0.56 (0.0220)
1.07 - 1.11 (0.0421 - 0.0437)	0.56 (0.0220) + 0.60 (0.0236)
1.11 - 1.15 (0.0437 - 0.0453)	0.60 (0.0236) + 0.60 (0.0236)
1.15 - 1.19 (0.0453 - 0.0469)	0.60 (0.0236) + 0.64 (0.0252)
1.19 - 1.23 (0.0469 - 0.0484)	0.64 (0.0252) + 0.64 (0.0252)
1.23 - 1.27 (0.0484 - 0.0500)	0.64 (0.0252) + 0.68 (0.0268)
1.27 - 1.31 (0.0500 - 0.0516)	0.68 (0.0268) + 0.68 (0.0268)
1.31 - 1.35 (0.0516 - 0.0531)	0.68 (0.0268) + 0.72 (0.0283)
1.35 - 1.39 (0.0531 - 0.0547)	1.44 (0.0567)
1.39 - 1.43 (0.0547 - 0.0563)	0.72 (0.0283) + 0.76 (0.0299)
1.43 - 1.47 (0.0563 - 0.0579)	0.76 (0.0299) + 0.76 (0.0299)
1.47 - 1.51 (0.0579 - 0.0594)	0.76 (0.0299) + 0.80 (0.0315)
1.51 - 1.55 (0.0594 - 0.0610)	0.80 (0.0315) + 0.80 (0.0315)
1.55 - 1.59 (0.0610 - 0.0626)	0.80 (0.0315) + 0.84 (0.0331)
1.59 - 1.63 (0.0626 - 0.0642)	0.84 (0.0331) + 0.84 (0.0331)
1.63 - 1.67 (0.0642 - 0.0657)	0.84 (0.0331) + 0.88 (0.0346)
1.67 - 1.71 (0.0657 - 0.0673)	0.88 (0.0346) + 0.88 (0.0346)
1.71 - 1.75 (0.0673 - 0.0689)	0.88 (0.0346) + 0.92 (0.0362)
1.75 - 1.79 (0.0689 - 0.0705)	0.92 (0.0362) + 0.92 (0.0362)
1.79 - 1.83 (0.0705 - 0.0720)	0.92 (0.0362) + 0.96 (0.0378)
1.83 - 1.87 (0.0720 - 0.0736)	0.96 (0.0378) + 0.96 (0.0378)
1.87 - 1.91 (0.0736 - 0.0752)	0.52 (0.0205) + 1.44 (0.0567)
1.91 - 1.95 (0.0752 - 0.0768)	0.56 (0.0220) + 1.44 (0.0567)

Reduction Pinion Gear

ECS009DA

BEARING PRELOAD

Reduction pinion gear bearing preload	0.05 mm (0.0020 in)

TURNING TORQUE

Turning torque of reduction pinion gear	0.1 - 0.69 N-m (1.1 - 7.0 kg-cm, 0.95 - 6.08 in-lb)

REDUCTION PINION GEAR BEARING ADJUSTING SHIMS

Thickness mm (in)	Part number*
1.74 (0.0685)	31438-31X16
1.78 (0.0701)	31438-31X17
1.82 (0.0717)	31438-31X18
1.86 (0.0732)	31438-31X19
1.90 (0.0748)	31438-31X20
1.92 (0.0756)	31439-31X60
1.94 (0.0764)	31438-31X21
1.96 (0.0772)	31439-31X61
1.98 (0.0780)	31438-31X22
2.00 (0.0787)	31439-31X62
2.02 (0.0795)	31438-31X23
2.04 (0.0803)	31439-31X63
2.06 (0.0811)	31438-31X24
2.08 (0.0819)	31439-31X64
2.10 (0.0827)	31438-31X60
2.12 (0.0835)	31439-31X65
2.14 (0.0843)	31438-31X61
2.16 (0.0850)	31439-31X66
2.18 (0.0858)	31438-31X62
2.20 (0.0866)	31439-31X67
2.22 (0.0874)	31438-31X63
2.24 (0.0882)	31439-31X68
2.26 (0.0890)	31438-31X64
2.28 (0.0898)	31439-31X69
2.30 (0.0906)	31438-31X65
2.34 (0.0921)	31438-31X66
2.38 (0.0937)	31438-31X67
2.42 (0.0953)	31438-31X68
2.46 (0.0969)	31438-31X69
2.50 (0.0984)	31438-31X70
2.54 (0.1000)	31438-31X71
2.58 (0.1016)	31438-31X72
2.62 (0.1031)	31438-31X73
2.66 (0.1047)	31438-31X74

*: Always check with the Parts Department for the latest parts information.

TABLE FOR SELECTING REDUCTION PINION GEAR BEARING ADJUSTING SHIM

Unit: mm (in)

Dimension “T”	Suitable shim(s)
1.77 - 1.81 (0.0697 - 0.0713)	1.74 (0.0685)
1.81 - 1.85 (0.0713 - 0.0728)	1.78 (0.0701)
1.85 - 1.89 (0.0728 - 0.0744)	1.82 (0.0717)
1.89 - 1.93 (0.0744 - 0.0760)	1.86 (0.0732)
1.93 - 1.96 (0.0760 - 0.0772)	1.90 (0.0748)
1.96 - 1.98 (0.0772 - 0.0780)	1.92 (0.0756)
1.98 - 2.00 (0.0780 - 0.0787)	1.94 (0.0764)
2.00 - 2.02 (0.0787 - 0.0795)	1.96 (0.0772)
2.02 - 2.04 (0.0795 - 0.0803)	1.98 (0.0780)
2.04 - 2.06 (0.0803 - 0.0811)	2.00 (0.0787)
2.06 - 2.08 (0.0811 - 0.0819)	2.02 (0.0795)
2.08 - 2.10 (0.0819 - 0.0827)	2.04 (0.0803)
2.10 - 2.12 (0.0827 - 0.0835)	2.06 (0.0811)
2.12 - 2.14 (0.0835 - 0.0843)	2.08 (0.0819)
2.14 - 2.16 (0.0843 - 0.0850)	2.10 (0.0827)
2.16 - 2.18 (0.0850 - 0.0858)	2.12 (0.0835)
2.18 - 2.20 (0.0858 - 0.0866)	2.14 (0.0843)
2.20 - 2.22 (0.0866 - 0.0874)	2.16 (0.0850)
2.22 - 2.24 (0.0874 - 0.0888)	2.18 (0.0858)
2.24 - 2.26 (0.0882 - 0.0890)	2.20 (0.0866)
2.26 - 2.28 (0.0890 - 0.0898)	2.22 (0.0874)
2.28 - 2.30 (0.0898 - 0.0906)	2.24 (0.0882)
2.30 - 2.32 (0.0906 - 0.0913)	2.26 (0.0890)
2.32 - 2.34 (0.0913 - 0.0921)	2.28 (0.0898)
2.34 - 2.37 (0.0921 - 0.0933)	2.30 (0.0906)
2.37 - 2.41 (0.0933 - 0.0949)	2.34 (0.0921)
2.41 - 2.45 (0.0949 - 0.0965)	2.38 (0.0937)
2.45 - 2.49 (0.0965 - 0.0980)	2.42 (0.0953)
2.49 - 2.53 (0.0980 - 0.0996)	2.46 (0.0969)
2.53 - 2.57 (0.0996 - 0.1012)	2.50 (0.0984)
2.57 - 2.61 (0.1012 - 0.1028)	2.54 (0.1000)
2.61 - 2.65 (0.1028 - 0.1043)	2.58 (0.1016)
2.65 - 2.69 (0.1043 - 0.1059)	2.62 (0.1031)
2.69 - 2.73 (0.1059 - 0.1075)	2.66 (0.1047)

Output Shaft

ECS009DB

SEAL RING CLEARANCE

Unit: mm (in)

Output shaft seal ring clearance	Standard	0.10 - 0.25 (0.0039 - 0.0098)
	Allowable limit	0.25 (0.0098)

END PLAY

Output shaft end play	0 - 0.5 mm (0 - 0.020 in)

SEAL RING

Outer diameter mm (in)	Inner diameter mm (in)	Width mm (in)	Part number*
33.71 (1.327)	30.25 (1.191)	1.95 (0.077)	31525 80X09

*: Always check with the Parts Department for the latest parts information.

OUTPUT SHAFT END PLAY ADJUSTING SHIMS

Thickness mm (in)	Part number*
0.56 (0.0220)	31438-31X46
0.96 (0.0378)	31438-31X47
1.36 (0.0535)	31438-31X48

*: Always check with the Parts Department for the latest parts information.

Bearing Retainer

ECS009DC

SEAL RING CLEARANCE

Unit: mm (in)

Bearing retainer seal ring clearance	Standard	0.10 - 0.25 (0.0039 - 0.0098)
	Allowable limit	0.25 (0.0098)

Total End Play

ECS009DD

Total end play “T3 ”	0.25 - 0.55 mm (0.0098 - 0.0217 in)

BEARING RACE FOR ADJUSTING TOTAL END PLAY

Thickness mm (in)	Part number*
0.6 (0.024)	31435-31X01
0.8 (0.031)	31435-31X02
1.0 (0.039)	31435-31X03
1.2 (0.047)	31435-31X04
1.4 (0.055)	31435-31X05
1.6 (0.063)	31435-31X06
1.8 (0.071)	31435-31X07
2.0 (0.079)	31435-31X08

*: Always check with the Parts Department for the latest parts information.

Reverse Clutch End Play

ECS009DE

Reverse clutch end play “T4”	0.65 - 1.00 mm (0.0256 - 0.0394 in)

THRUST WASHERS FOR ADJUSTING REVERSE CLUTCH END PLAY

Thickness mm (in)	Part number*
0.65 (0.0256)	31508-31X10
0.80 (0.0315)	31508-31X11
0.95 (0.0374)	31508-31X12
1.10 (0.0433)	31508-31X13
1.25 (0.0492)	31508-31X14
1.40 (0.0551)	31508-31X15

*: Always check with the Parts Department for the latest parts information.

Accumulator

ECS009DF

O-RING

Unit: mm (in)

Accumulator	Diameter (Small)	Part number*	Diameter (Large)	Part number*
Servo release accumulator	26.9 (1.059)	31526-41X03	44.2 (1.740)	31526-41X02
N-D accumulator	34.6 (1.362)	31526-31X08	39.4 (1.551)	31672-21X00

*: Always check with the Parts Department for the latest parts information.

RETURN SPRING

Unit: mm (in)

Accumulator	Free length	Outer diameter	Part number*
Servo release accumulator spring	52.5 (2.067)	20.1 (0.791)	31605-80X00
N-D accumulator spring	45.0 (1.772)	27.6 (1.087)	31605-33X01

*: Always check with the Parts Department for the latest parts information.

Band Servo

ECS009DG

RETURN SPRING

Unit: mm (in)

Return spring	Free length	Outer diameter	Part number*
2nd servo return spring	32.5 (1.280)	25.9 (1.020)	31605-31X20
OD servo return spring	38.52 (1.5165)	22.0 (0.866)	31605-31X21

*: Always check with the Parts Department for the latest parts information.

Removal and Installation

ECS009DH

Unit: mm (in)

Distance between end of converter housing and torque converter	21.1 (0.831) or more

Shift Solenoid Valves

ECS009DI

Gear	Solenoid A	Solenoid B
1st	ON	ON
2nd	OFF	ON
3rd	OFF	OFF
4th	ON	OFF

Solenoid Valves

ECS009DJ

Solenoid valve	Resistance (Approx.)	Terminal number
Shift solenoid A	20 - 30Ω	2
Shift solenoid B	5 - 20Ω	1
Ovr. clutch sol.	20 - 30Ω	3
Line pres. sol.	2.5 - 5Ω	4
T/conv. clutch sol.	5 - 20Ω	5

A/T Fluid Temperature Sensor

ECS009DK

Remarks: Specification data are reference values.

Monitor item	Condition	Specification (Approximately)	
A/T fluid temperature sensor	Cold [20°C (68°F)] ↓ Hot [80°C (176°F)]	1.5V ↓ 0.5V	2.5 kΩ ↓ 0.3 kΩ

Revolution Sensor

ECS009DL

Condition	Judgement standard
When moving at 20 km/h (12 MPH), use the CONSULT-II pulse frequency measuring function.*1 **CAUTION:** **Connect the diagnosis data link cable to the vehicle diagnosis connector.** *1: A circuit tester cannot be used to test this item.	150 Hz (Approx.)
When vehicle parks.	Under 1.3V or over 4.5V

Dropping Resistor

ECS009DM

Resistance	10 - 15Ω