# 2005 Pontiac GTO Owner Manual


**Seats and Restraint Systems** ..... 1-1
Front Seats ..... 1-2
Safety Belts ..... 1-6
Child Restraints ..... 1-25
Airbag System ..... 1-44
Restraint System Check ..... 1-50

**Features and Controls** ..... 2-1
Keys ..... 2-2
Doors and Locks ..... 2-7
Windows ..... 2-11
Theft-Deterrent Systems ..... 2-13
Starting and Operating Your Vehicle ..... 2-15
Mirrors ..... 2-28
Storage Areas ..... 2-29
Vehicle Personalization ..... 2-30

**Instrument Panel** ..... 3-1
Instrument Panel Overview ..... 3-4
Climate Controls ..... 3-19
Warning Lights, Gages, and Indicators ..... 3-22
Trip Computer ..... 3-33
Audio System(s) ..... 3-45

**Driving Your Vehicle** ..... 4-1
Your Driving, the Road, and Your Vehicle ..... 4-2
Towing ..... 4-34

**Service and Appearance Care** ..... 5-1
Service ..... 5-3
Fuel ..... 5-5
Checking Things Under the Hood ..... 5-10
Headlamp Aiming ..... 5-45
Bulb Replacement ..... 5-47
Windshield Wiper Blade Replacement ..... 5-52
Tires ..... 5-52
Appearance Care ..... 5-76
Vehicle Identification ..... 5-85
Electrical System ..... 5-85
Capacities and Specifications ..... 5-90

**Maintenance Schedule** ..... 6-1
Maintenance Schedule ..... 6-2

**Customer Assistance and Information** ..... 7-1
Customer Assistance and Information ..... 7-2
Reporting Safety Defects ..... 7-10

**Index** ..... 1


Downloaded from www.Manualslib.com manuals search engine

GENERAL MOTORS, GM, the GM Emblem, PONTIAC, and the PONTIAC Emblem, are registered trademarks; and the name GTO is a trademark of General Motors Corporation.

This manual includes the latest information at the time it was printed. We reserve the right to make changes after that time without further notice. For vehicles first sold in Canada, substitute the name General Motors of Canada Limited for Pontiac Division wherever it appears in the manual.

Keep this manual in the vehicle, so it will be there if it is needed while you are on the road. If the vehicle is sold, leave this manual in the vehicle.

## How to Use This Manual

Many people read the owner manual from beginning to end when they first receive their new vehicle. If this is done, it can help you learn about the features and controls for the vehicle. Pictures and words work together in the owner manual to explain things.

## Index

A good place to quickly locate information about the vehicle is the Index in the back of the manual. It is an alphabetical list of what is in the manual and the page number where it can be found.

Litho in U.S.A.
Part No. 05GTO A First Edition

©2004 General Motors Corporation. All Rights Reserved.



Downloaded from www.Manualslib.com manuals search engine

## Safety Warnings and Symbols

There are a number of safety cautions in this book. We use a box and the word CAUTION to tell about things that could hurt you if you were to ignore the warning.

**⚠ CAUTION:**

**These mean there is something that could hurt you or other people.**

In the caution area, we tell you what the hazard is. Then we tell you what to do to help avoid or reduce the hazard. Please read these cautions. If you do not, you or others could be hurt.

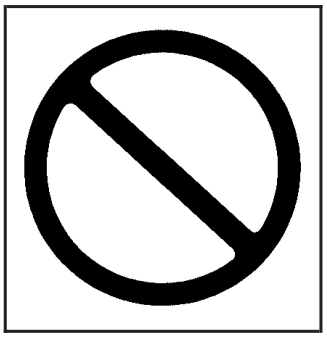

You will also find a circle with a slash through it in this book. This safety symbol means “Do Not,” “Do Not do this” or “Do Not let this happen.”



Downloaded from www.Manualslib.com manuals search engine

## Vehicle Damage Warnings

Also, in this manual you will find these notices:

***Notice:*** **These mean there is something that could damage your vehicle.**

A notice tells about something that can damage the vehicle. Many times, this damage would not be covered by your vehicle's warranty, and it could be costly. But the notice will tell what to do to help avoid the damage.

When you read other manuals, you might see CAUTION and NOTICE warnings in different colors or in different words.

There are also warning labels on the vehicle. They use the same words, CAUTION or NOTICE.

## Vehicle Symbols

The vehicle has components and labels that use symbols instead of text. Symbols are shown along with the text describing the operation or information relating to a specific component, control, message, gage, or indicator.

If you need help figuring out a specific name of a component, gage, or indicator, reference the following topics:

- Seats and Restraint Systems in Section 1
- Features and Controls in Section 2
- Instrument Panel Overview in Section 3
- Climate Controls in Section 3
- Warning Lights, Gages, and Indicators in Section 3
- Audio System(s) in Section 3
- Engine Compartment Overview in Section 5



Downloaded from www.Manualslib.com manuals search engine

These are some examples of symbols that may be found on the vehicle:

| | | | | | |
|---|---|---|---|---|---|
| CAUTION POSSIBLE INJURY | LATCH BOTH LAP AND SHOULDER BELTS TO PROTECT OCCUPANT DO NOT TWIST SAFETY BELT WHEN ATTACHING | | MASTER LIGHTING SWITCH | ENGINE COOLANT TEMP | FUSE BOX ACCESS |
| PROTECT EYES BY SHIELDING | FASTEN SEAT BELTS | AIRBAG | TURN SIGNALS | BATTERY CHARGING SYSTEM | ENGINE COOLANT FAN |
| CAUSTIC BATTERY ACID COULD CAUSE BURNS | MOVE SEAT FULLY REARWARD SECURE CHILD SEAT | DO NOT INSTALL A REAR-FACING CHILD RESTRAINT IN THIS SEATING POSITION | PARKING LAMPS | BRAKE | FUEL |
| AVOID SPARKS OR FLAMES | PULL BELT OUT COMPLETELY THEN SECURE CHILD SEAT | DO NOT INSTALL A FORWARD-FACING CHILD RESTRAINT IN THIS SEATING POSITION | HAZARD WARNING FLASHER | COOLANT | OWNER'S MANUAL |
| SPARK OR FLAME COULD EXPLODE BATTERY | POWER WINDOW | DOOR LOCK UNLOCK | DAYTIME RUNNING LAMPS | ENGINE OIL PRESSURE | SERVICE MANUAL |
| | | | FOG LAMPS | ANTI-LOCK BRAKES | |



Downloaded from www.Manualslib.com manuals search engine

## ✍ NOTES



Downloaded from www.Manualslib.com manuals search engine

# Section 1 Seats and Restraint Systems


**Front Seats** .....1-2
Power Seats .....1-2
Manual Lumbar .....1-2
Reclining Seatbacks .....1-3
Head Restraints .....1-4
Seatback Latches .....1-4

**Safety Belts** .....1-6
Safety Belts: They Are for Everyone .....1-6
Questions and Answers About Safety Belts .....1-10
How to Wear Safety Belts Properly .....1-11
Driver Position .....1-12
Shoulder Belt Height Adjustment .....1-18
Safety Belt Use During Pregnancy .....1-19
Right Front Passenger Position .....1-19
Rear Seat Passengers .....1-19
Rear Safety Belt Comfort Guides for Children and Small Adults .....1-22
Safety Belt Pretensioners .....1-24

**Child Restraints** .....1-25
Older Children .....1-25
Infants and Young Children .....1-28
Child Restraint Systems .....1-31
Where to Put the Restraint .....1-34
Top Strap .....1-35
Top Strap Anchor Location .....1-36
Lower Anchorages and Top Tethers for Children (LATCH System) .....1-37
Securing a Child Restraint Designed for the LATCH System .....1-39
Securing a Child Restraint in a Rear Seat Position .....1-39
Securing a Child Restraint in the Right Front Seat Position .....1-41

**Airbag System** .....1-44
Where Are the Airbags? .....1-46
When Should an Airbag Inflate? .....1-47
What Makes an Airbag Inflate? .....1-48
How Does an Airbag Restrain? .....1-48
What Will You See After an Airbag Inflates? .....1-48
Servicing Your Airbag-Equipped Vehicle .....1-50

**Restraint System Check** .....1-50
Checking the Restraint Systems .....1-50
Replacing Restraint System Parts After a Crash .....1-51




Downloaded from www.Manualslib.com manuals search engine

# Front Seats

## Power Seats

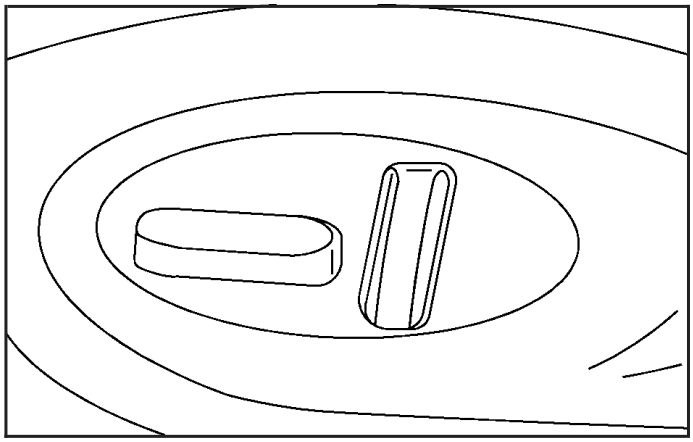

The power seat controls are located on the outboard side of the driver's and passenger's seat.

The horizontal switch is used to adjust the height, the tilt, and the movement of the seat forward and rearward. The vertical switch is used to adjust the seatback.

- To move the entire seat forward or rearward, move the horizontal control forward or rearward.
- To raise or lower the entire seat, move the horizontal control up or down.
- To raise or lower the front of the seat, move the front of the horizontal control up or down.
- To raise or lower the rear of the seat, move the rear of the horizontal control up or down.
- To raise or recline the seatback, move the vertical control forward or rearward. See *Reclining Seatbacks on page 1-3*.

## Manual Lumbar

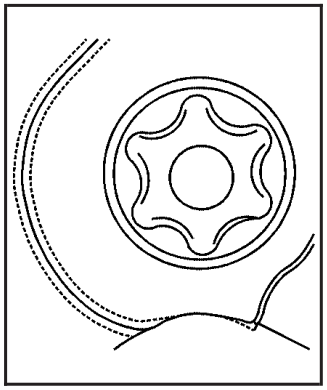

The manual lumbar control lets you adjust the amount of support in the lower seatback.

The control is located on the outboard side of the seat cushion.

To increase or decrease lumbar support, turn the knob.



Downloaded from www.Manualslib.com manuals search engine

## Reclining Seatbacks

Use the vertical switch on the outboard side of the front seat cushion to recline the seatbacks.

Press the switch forward or rearward to recline or raise the seatback to the desired position. See *Power Seats on page 1-2*.

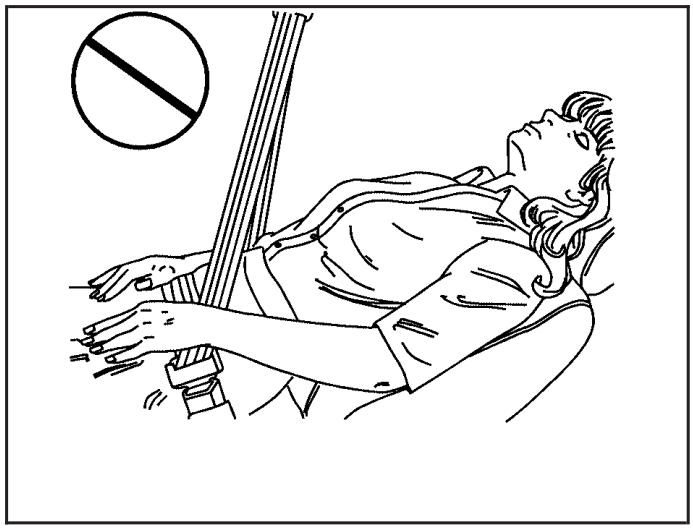

But do not have a seatback reclined if your vehicle is moving.

**⚠ CAUTION:**

**Sitting in a reclined position when your vehicle is in motion can be dangerous. Even if you buckle up, your safety belts cannot do their job when you are reclined like this.**

**The shoulder belt cannot do its job because it will not be against your body. Instead, it will be in front of you. In a crash you could go into it, receiving neck or other injuries.**

**The lap belt cannot do its job either. In a crash the belt could go up over your abdomen. The belt forces would be there, not at your pelvic bones. This could cause serious internal injuries.**

**For proper protection when the vehicle is in motion, have the seatback upright. Then sit well back in the seat and wear your safety belt properly.**



Downloaded from www.Manualslib.com manuals search engine

## Head Restraints

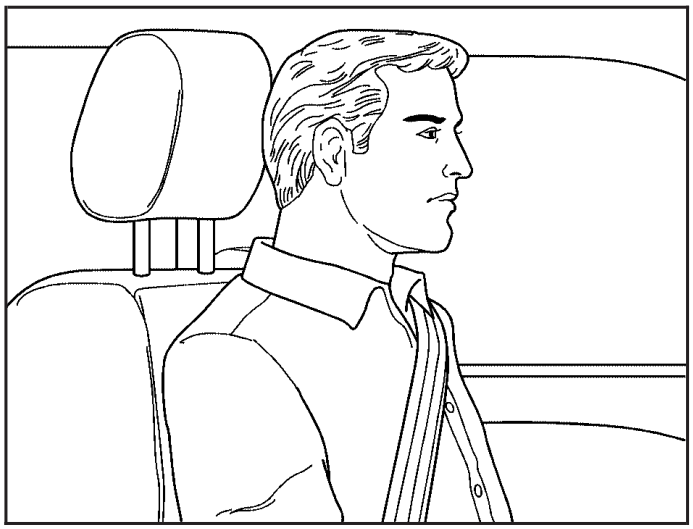

The head restraints on both the front and rear seats are adjustable. Press the button at the base of the head restraint to lower it. Pull up on the restraint to raise it. Adjust the head restraint so that the top of the restraint is closest to the top of your head. This position reduces the chance of a neck injury in a crash.

## Seatback Latches

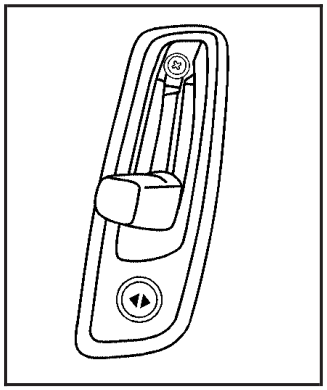

The front seatbacks fold forward to let people get into the back seat.

To fold a front seatback, lift the lever located near the top of either front seat to tilt the seatback forward. Press and hold the button located below the seatback lever to move the entire seat forward all the way.

A weight sensor has been built into the front seats. The seat will not move forward if there is more than 27 lbs (12 kg) on the seat sensor.



Downloaded from www.Manualslib.com manuals search engine

## ⚠ CAUTION:

**If the seatback is not locked, it could move forward in a sudden stop or crash. That could cause injury to the person sitting there. Always press rearward on the seatback to be sure it is locked.**

To return the seat to the original position after it has been moved forward, do the following:

1. Make sure there are no objects in front of or behind the seat.

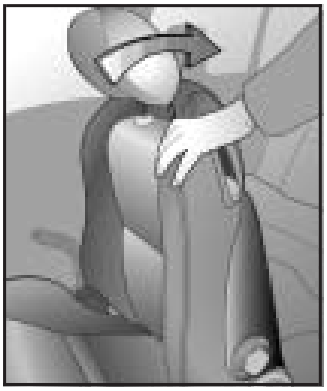

2. Tilt the seatback rearward until the seatback latches upright.

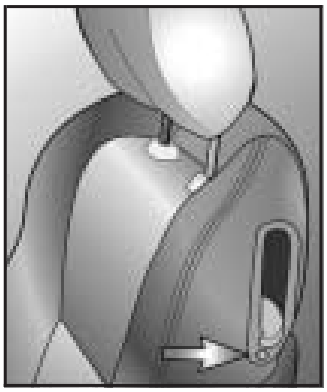

3. Press and hold the button under the front seat lever to return the seat to its original position. The seat will pause for two seconds when it reaches its original position.

The seatback must first be returned upright before pressing the button, otherwise it will not pause for two seconds at the original position, and instead will continue rearward until the button is released.

When rear seat passengers are entering or exiting the vehicle, it may be helpful to move the seat belt anchor arm toward the rear of the vehicle.



Downloaded from www.Manualslib.com manuals search engine

# Safety Belts

## Safety Belts: They Are for Everyone

This part of the manual tells you how to use safety belts properly. It also tells you some things you should not do with safety belts.

**⚠ CAUTION:**

**Do not let anyone ride where he or she can not wear a safety belt properly. If you are in a crash and you are not wearing a safety belt, your injuries can be much worse. You can hit things inside the vehicle or be ejected from it. You can be seriously injured or killed. In the same crash, you might not be, if you are buckled up. Always fasten your safety belt, and check that your passengers' belts are fastened properly too.**

**⚠ CAUTION:**

**It is extremely dangerous to ride in a cargo area, inside or outside of a vehicle. In a collision, people riding in these areas are more likely to be seriously injured or killed. Do not allow people to ride in any area of your vehicle that is not equipped with seats and safety belts. Be sure everyone in your vehicle is in a seat and using a safety belt properly.**

Your vehicle has a light that comes on as a reminder to buckle up. See *Safety Belt Reminder Light on page 3-24*.



Downloaded from www.Manualslib.com manuals search engine

In most states and in all Canadian provinces, the law says to wear safety belts. Here is why: *They work*.

You never know if you will be in a crash. If you do have a crash, you do not know if it will be a bad one.

A few crashes are mild, and some crashes can be so serious that even buckled up, a person would not survive. But most crashes are in between. In many of them, people who buckle up can survive and sometimes walk away. Without belts they could have been badly hurt or killed.

After more than 30 years of safety belts in vehicles, the facts are clear. In most crashes buckling up does matter...a lot!

## Why Safety Belts Work

When you ride in or on anything, you go as fast as it goes.

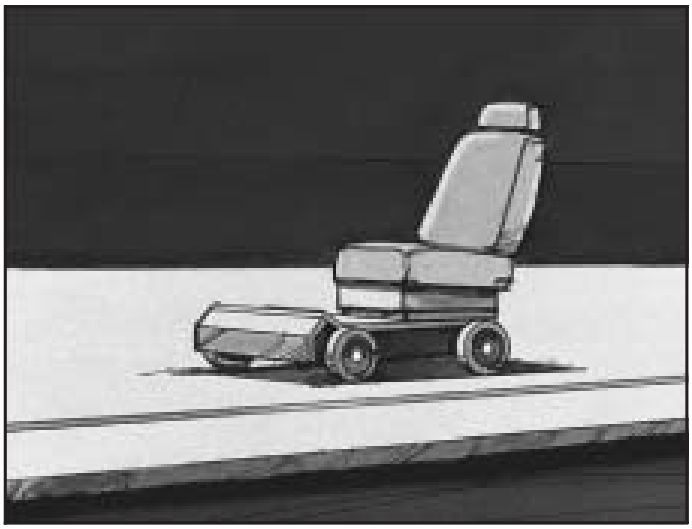

Take the simplest vehicle. Suppose it is just a seat on wheels.



Downloaded from www.Manualslib.com manuals search engine

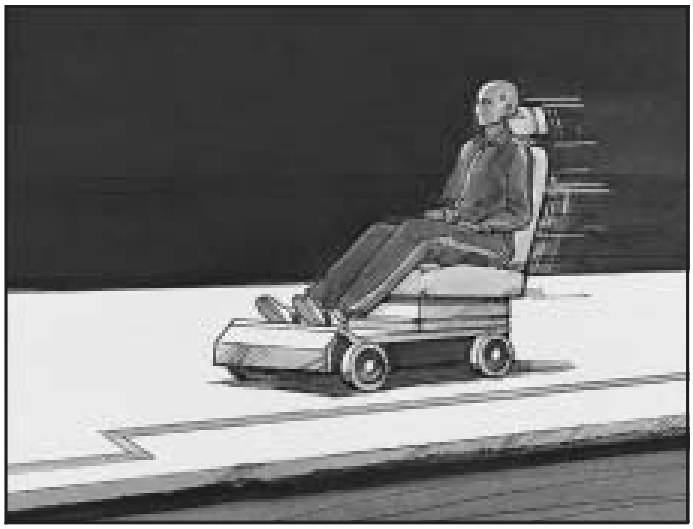

Put someone on it.

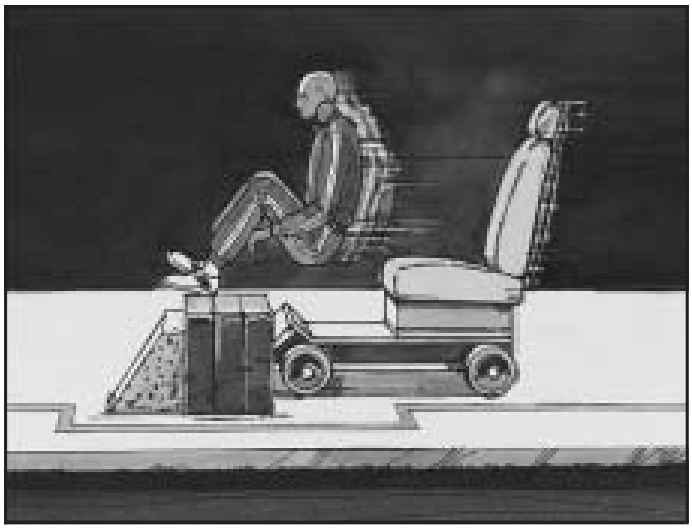

Get it up to speed. Then stop the vehicle. The rider does not stop.



Downloaded from www.Manualslib.com manuals search engine

The person keeps going until stopped by something. In a real vehicle, it could be the windshield...

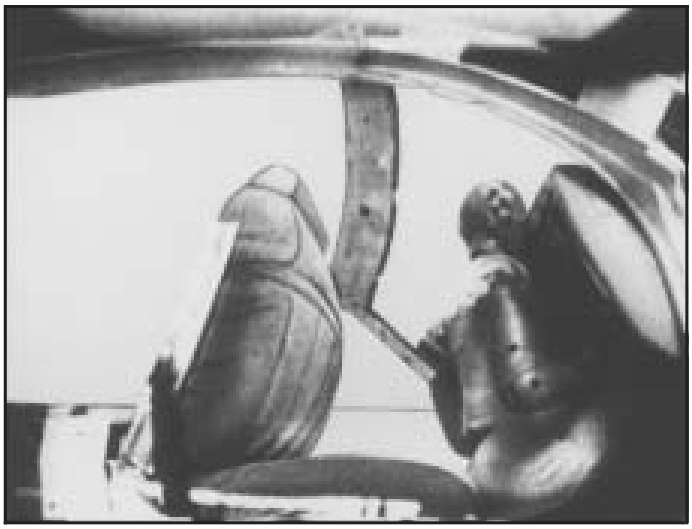

or the instrument panel...



Downloaded from www.Manualslib.com manuals search engine

or the safety belts!

With safety belts, you slow down as the vehicle does. You get more time to stop. You stop over more distance, and your strongest bones take the forces. That is why safety belts make such good sense.

## Questions and Answers About Safety Belts

**Q: Will I be trapped in the vehicle after an accident if I am wearing a safety belt?**

**A:** You *could* be — whether you are wearing a safety belt or not. But you can unbuckle a safety belt, even if you are upside down. And your chance of being conscious during and after an accident, so you *can* unbuckle and get out, is *much* greater if you are belted.

**Q: If my vehicle has airbags, why should I have to wear safety belts?**

**A:** Airbags are in many vehicles today and will be in most of them in the future. But they are supplemental systems only; so they work *with* safety belts — not instead of them. Every airbag system ever offered for sale has required the use of safety belts. Even if you are in a vehicle that has airbags, you still have to buckle up to get the most protection. That is true not only in frontal collisions, but especially in side and other collisions.



Downloaded from www.Manualslib.com manuals search engine

**Q: If I am a good driver, and I never drive far from home, why should I wear safety belts?**

**A:** You may be an excellent driver, but if you are in an accident — even one that is not your fault — you and your passengers can be hurt. Being a good driver does not protect you from things beyond your control, such as bad drivers.

Most accidents occur within 25 miles (40 km) of home. And the greatest number of serious injuries and deaths occur at speeds of less than 40 mph (65 km/h).

Safety belts are for everyone.

## How to Wear Safety Belts Properly

This part is only for people of adult size.

Be aware that there are special things to know about safety belts and children. And there are different rules for smaller children and babies. If a child will be riding in your vehicle, see *Older Children on page 1-25* or *Infants and Young Children on page 1-28*. Follow those rules for everyone's protection.

First, you will want to know which restraint systems your vehicle has.

We will start with the driver position.



Downloaded from www.Manualslib.com manuals search engine

# Driver Position

## Lap-Shoulder Belt

The driver has a lap-shoulder belt. Here is how to wear it properly.

1. Close and lock the door.
2. Adjust the seat so you can sit up straight. To see how, see “Seats” in the Index.

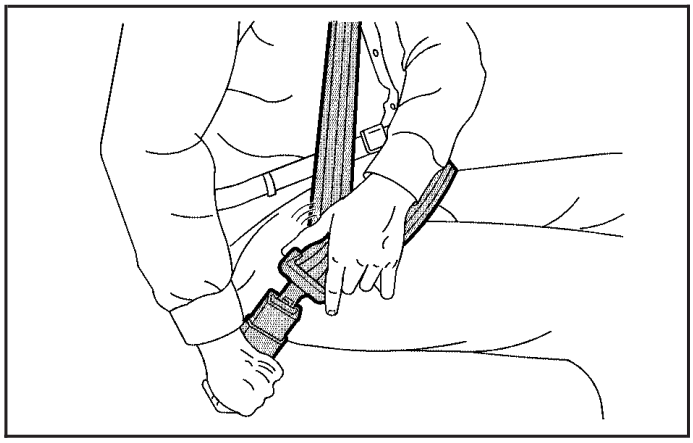

3. Pick up the latch plate and pull the belt across you. Do not let it get twisted.

   The shoulder belt may lock if you pull the belt across you very quickly. If this happens, let the belt go back slightly to unlock it. Then pull the belt across you more slowly.

4. Push the latch plate into the buckle until it clicks.

   Pull up on the latch plate to make sure it is secure.

   Make sure the release button on the buckle is positioned so you would be able to unbuckle the safety belt quickly if you ever had to.

5. Move the shoulder belt height adjuster to the height that is right for you. See *Shoulder Belt Height Adjustment on page 1-18*.



Downloaded from www.Manualslib.com manuals search engine

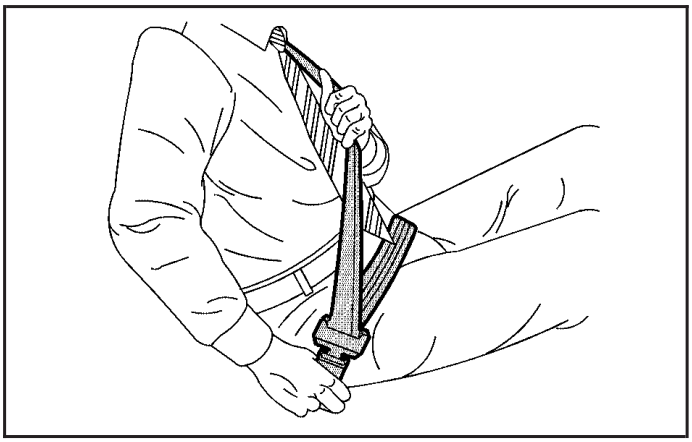

6. To make the lap part tight, pull down on the buckle end of the belt as you pull up on the shoulder belt.

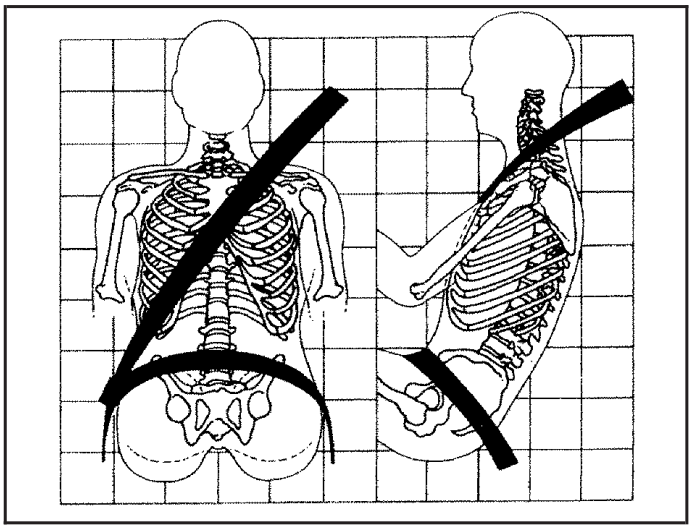

The lap part of the belt should be worn low and snug on the hips, just touching the thighs. In a crash, this applies force to the strong pelvic bones. And you would be less likely to slide under the lap belt. If you slid under it, the belt would apply force at your abdomen. This could cause serious or even fatal injuries. The shoulder belt should go over the shoulder and across the chest. These parts of the body are best able to take belt restraining forces.

The safety belt locks if there is a sudden stop or crash, or if you pull the belt very quickly out of the retractor.



Downloaded from www.Manualslib.com manuals search engine

**Q:** **What is wrong with this?**

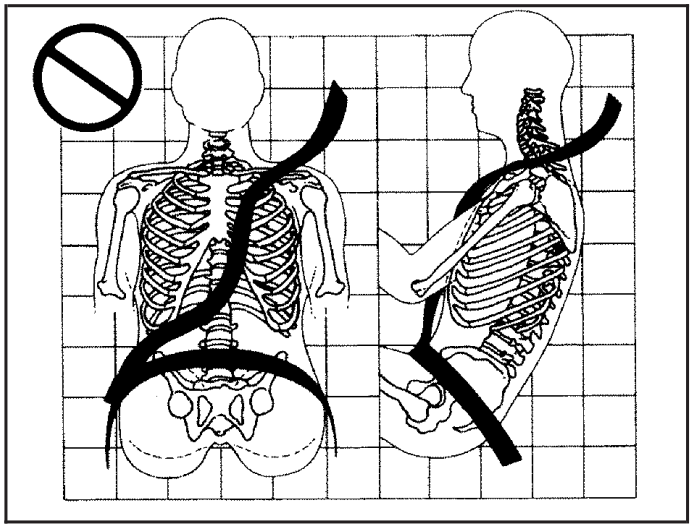

**A:** The shoulder belt is too loose. It will not give nearly as much protection this way.

**⚠ CAUTION:**

**You can be seriously hurt if your shoulder belt is too loose. In a crash, you would move forward too much, which could increase injury. The shoulder belt should fit against your body.**



Downloaded from www.Manualslib.com manuals search engine

**Q: What is wrong with this?**

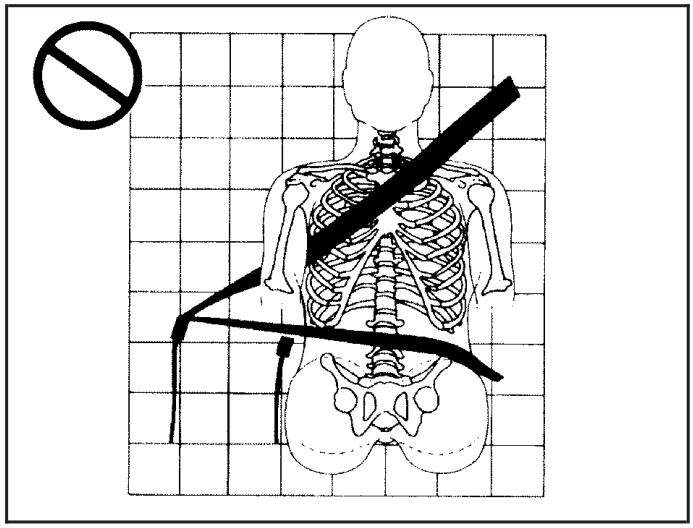

**A:** The belt is buckled in the wrong place.

**⚠ CAUTION:**

**You can be seriously injured if your belt is buckled in the wrong place like this. In a crash, the belt would go up over your abdomen. The belt forces would be there, not at the pelvic bones. This could cause serious internal injuries. Always buckle your belt into the buckle nearest you.**



Downloaded from www.Manualslib.com manuals search engine

**Q: What is wrong with this?**

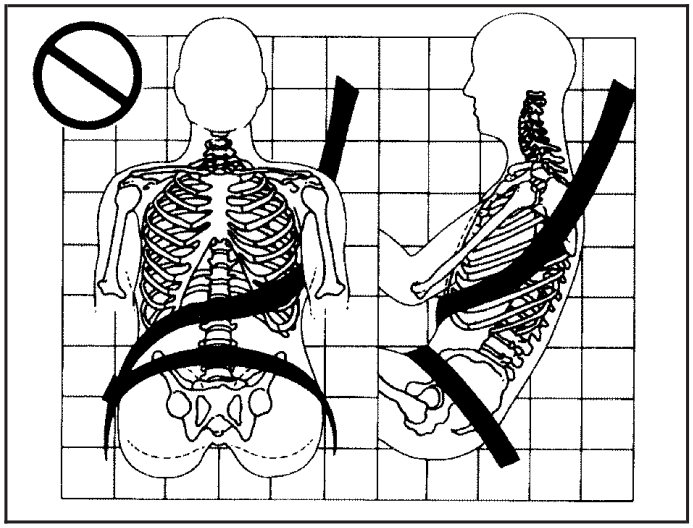

**A:** The shoulder belt is worn under the arm. It should be worn over the shoulder at all times.

**⚠ CAUTION:**

**You can be seriously injured if you wear the shoulder belt under your arm. In a crash, your body would move too far forward, which would increase the chance of head and neck injury. Also, the belt would apply too much force to the ribs, which are not as strong as shoulder bones. You could also severely injure internal organs like your liver or spleen.**



Downloaded from www.Manualslib.com manuals search engine

**Q: What is wrong with this?**

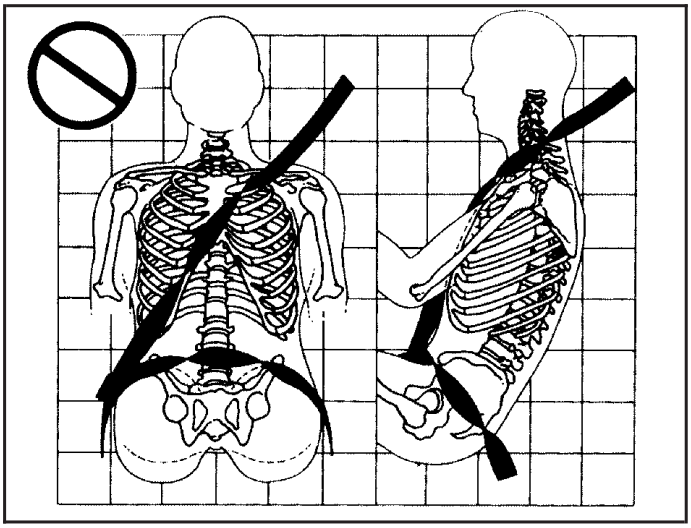

**A:** The belt is twisted across the body.

**⚠ CAUTION:**

**You can be seriously injured by a twisted belt. In a crash, you would not have the full width of the belt to spread impact forces. If a belt is twisted, make it straight so it can work properly, or ask your dealer to fix it.**



Downloaded from www.Manualslib.com manuals search engine

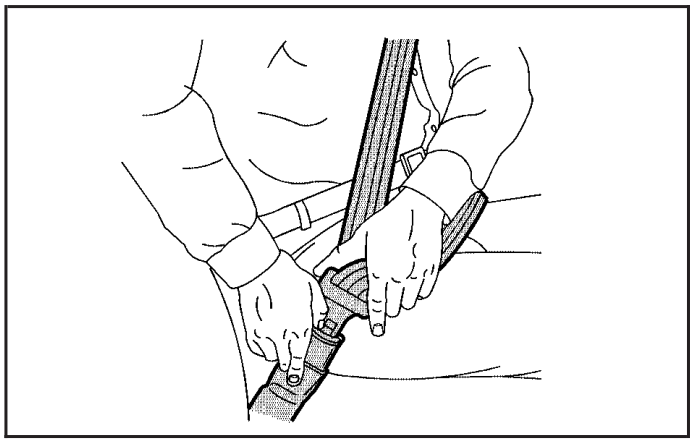

To unlatch the belt, just push the button on the buckle. The belt should go back out of the way.

Before you close the door, be sure the belt is out of the way. If you slam the door on it, you can damage both the belt and your vehicle.

## Shoulder Belt Height Adjustment

Before you begin to drive, move the shoulder belt height adjuster to the height that is right for you.

Adjust the height so that the shoulder portion of the belt is centered on your shoulder. The belt should be away from your face and neck, but not falling off your shoulder.

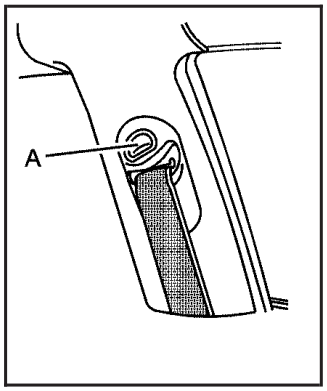


To move it up or down, press the release button (A) and move the height adjuster to the desired position. After you move the height adjuster to where you want it, try to move it without pressing the release button to make sure it has locked into position.



Downloaded from www.Manualslib.com manuals search engine

## Safety Belt Use During Pregnancy

Safety belts work for everyone, including pregnant women. Like all occupants, they are more likely to be seriously injured if they do not wear safety belts.

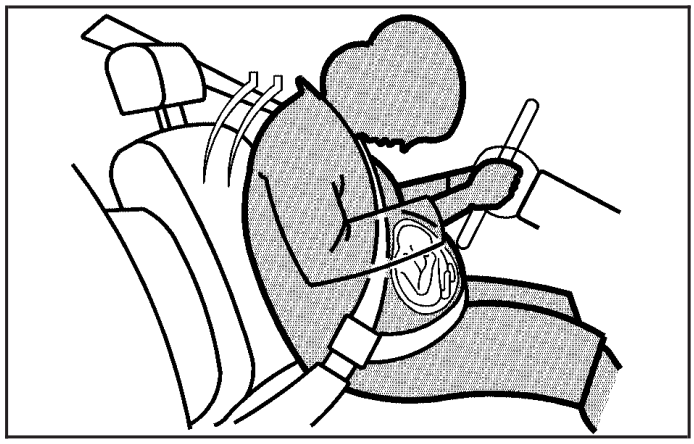

A pregnant woman should wear a lap-shoulder belt, and the lap portion should be worn as low as possible, below the rounding, throughout the pregnancy.

The best way to protect the fetus is to protect the mother. When a safety belt is worn properly, it is more likely that the fetus will not be hurt in a crash. For pregnant women, as for anyone, the key to making safety belts effective is wearing them properly.

## Right Front Passenger Position

To learn how to wear the right front passenger's safety belt properly, see *Driver Position on page 1-12*.

The right front passenger's safety belt works the same way as the driver's safety belt — except for one thing. If you ever pull the shoulder portion of the belt out all the way, you will engage the child restraint locking feature. If this happens, just let the belt go back all the way and start again.

## Rear Seat Passengers

It is very important for rear seat passengers to buckle up! Accident statistics show that unbelted people in the rear seat are hurt more often in crashes than those who are wearing safety belts.

Rear passengers who are not safety belted can be thrown out of the vehicle in a crash. And they can strike others in the vehicle who are wearing safety belts.



Downloaded from www.Manualslib.com manuals search engine

## Lap-Shoulder Belt

All rear seat positions have lap-shoulder belts. Here is how to wear one properly.

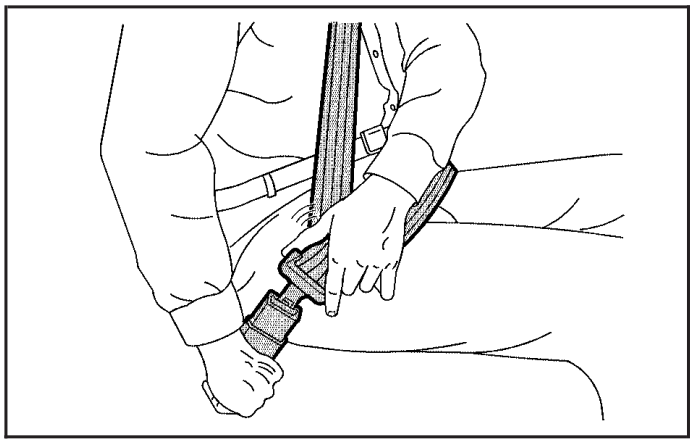

1. Pick up the latch plate and pull the belt across you. Do not let it get twisted.

   The shoulder belt may lock if you pull the belt across you very quickly. If this happens, let the belt go back slightly to unlock it. Then pull the belt across you more slowly.

2. Push the latch plate into the buckle until it clicks.

   Pull up on the latch plate to make sure it is secure.

   When the shoulder belt is pulled out all the way, it will lock. If it does, let it go back all the way and start again.

   Make sure the release button on the buckle is positioned so you would be able to unbuckle the safety belt quickly if you ever had to.

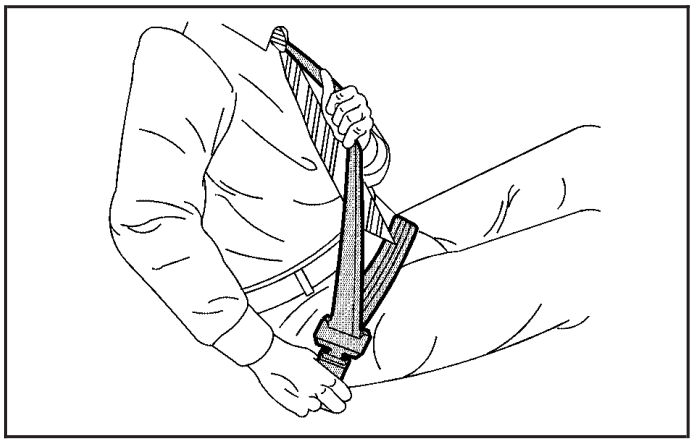

3. To make the lap part tight, pull down on the buckle end of the belt as you pull up on the shoulder part.



Downloaded from www.Manualslib.com manuals search engine

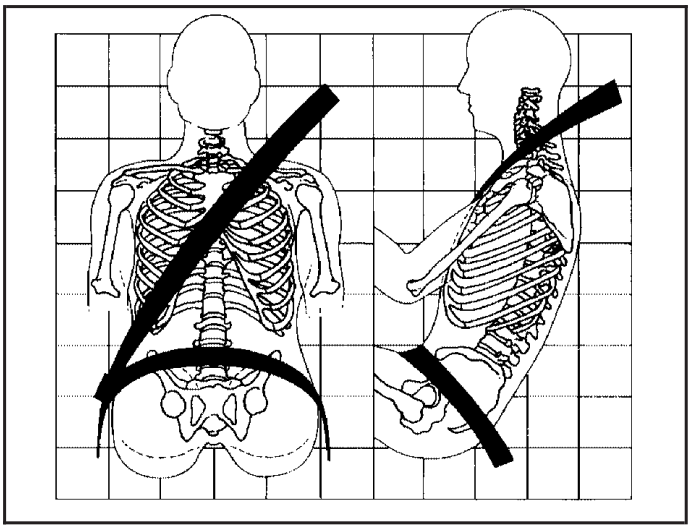

The lap part of the belt should be worn low and snug on the hips, just touching the thighs. In a crash this applies force to the strong pelvic bones. And you would be less likely to slide under the lap belt. If you slid under it, the belt would apply force at your abdomen. This could cause serious or even fatal injuries. The shoulder belt should go over the shoulder and across the chest. These parts of the body are best able to take belt restraining forces.

The safety belt locks if there is a sudden stop or a crash, or if you pull the belt very quickly out of the retractor.

**⚠ CAUTION:**

**You can be seriously hurt if your shoulder belt is too loose. In a crash, you would move forward too much, which could increase injury. The shoulder belt should fit against your body.**



Downloaded from www.Manualslib.com manuals search engine

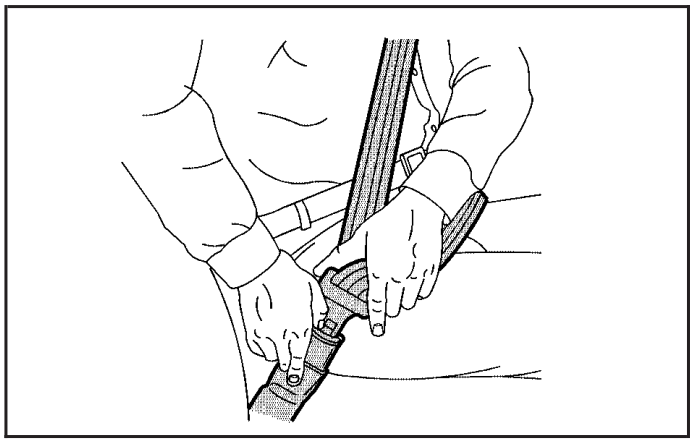

To unlatch the belt, just push the button on the buckle.

## Rear Safety Belt Comfort Guides for Children and Small Adults

Rear shoulder belt comfort guides may provide added safety belt comfort for older children who have outgrown booster seats and for some adults. When installed on a shoulder belt, the comfort guide better positions the belt away from the neck and head.

There is one guide for each passenger in the rear seat. Here is how to install a comfort guide and use the safety belt:

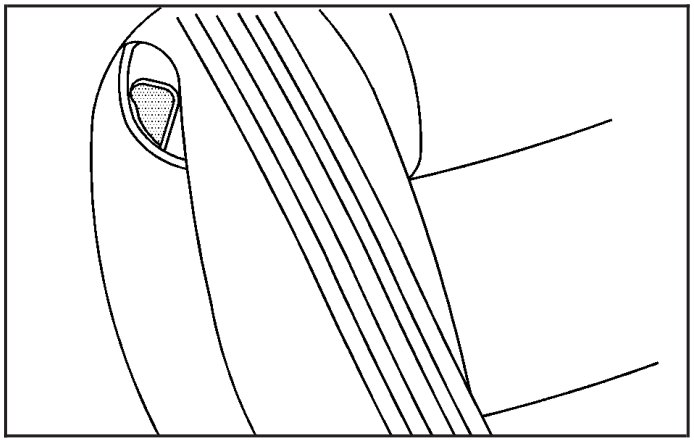

1. Remove the guide from its storage pocket on the side of the seatback.



Downloaded from www.Manualslib.com manuals search engine

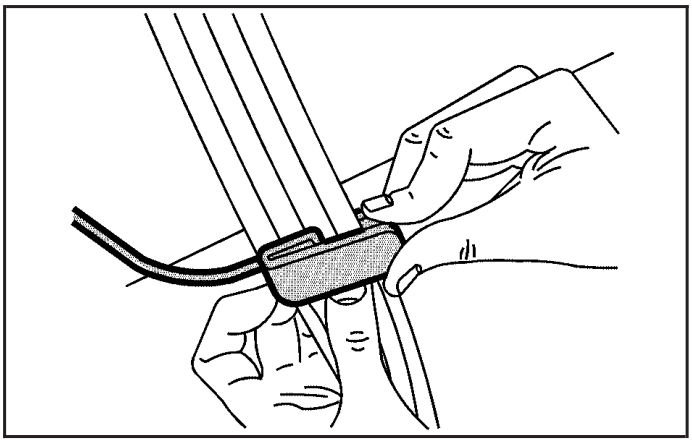

2. Slide the guide under and past the belt. The elastic cord must be under the belt. Then, place the guide over the belt, and insert the two edges of the belt into the slots of the guide.

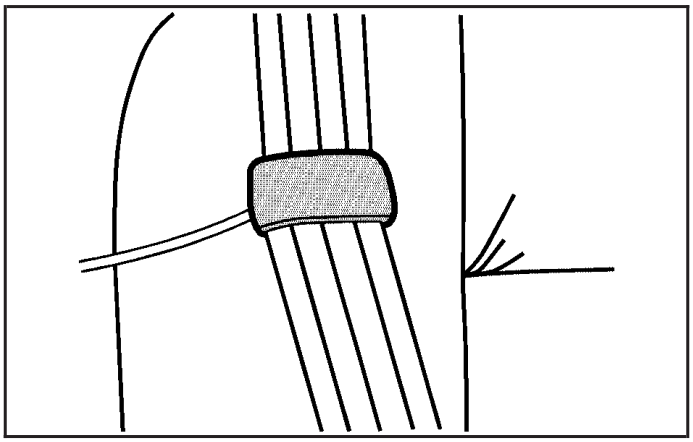

3. Be sure that the belt is not twisted and it lies flat. The elastic cord must be under the belt and the guide on top.



Downloaded from www.Manualslib.com manuals search engine

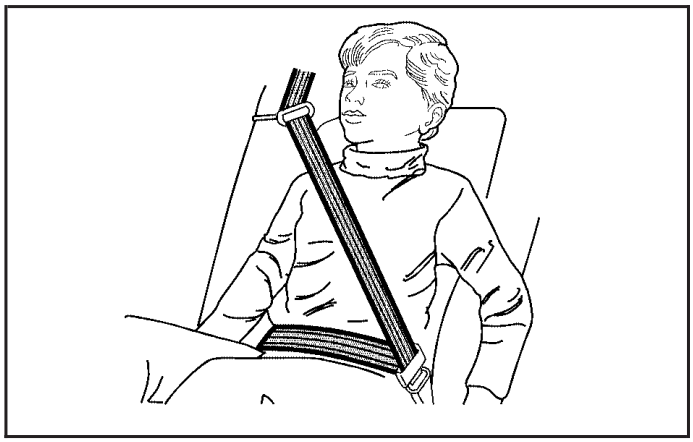

**⚠ CAUTION:**

**A safety belt that is not properly worn may not provide the protection needed in a crash. The person wearing the belt could be seriously injured. The shoulder belt should go over the shoulder and across the chest. These parts of the body are best able to take belt restraining forces.**

4. Buckle, position, and release the safety belt as described in *Rear Seat Passengers on page 1-19*. Make sure that the shoulder belt crosses the shoulder.

To remove and store the comfort guides, squeeze the belt edges together so that you can take them out of the guides. Slide the guide into the storage pocket.

## Safety Belt Pretensioners

Your vehicle has safety belt pretensioners for the driver and right front passenger. Although you can not see them, they are located on the buckle end of the safety belts. They help the safety belts reduce a person's forward movement in a moderate to severe frontal and near frontal crash.

Pretensioners work only once. If they activate in a crash, you will need to get new ones, and probably other new parts for your safety belt system. See *Replacing Restraint System Parts After a Crash on page 1-51*.



Downloaded from www.Manualslib.com manuals search engine

# Child Restraints

## Older Children

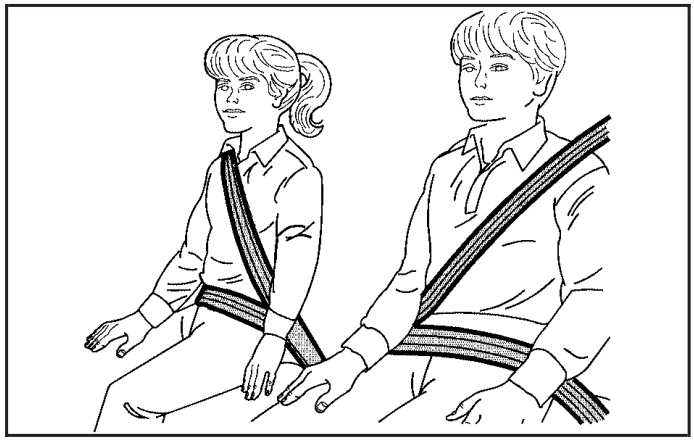

Older children who have outgrown booster seats should wear the vehicle's safety belts.

**Q: What is the proper way to wear safety belts?**

**A:** If possible, an older child should wear a lap-shoulder belt and get the additional restraint a shoulder belt can provide. The shoulder belt should not cross the face or neck. The lap belt should fit snugly below the hips, just touching the top of the thighs. It should never be worn over the abdomen, which could cause severe or even fatal internal injuries in a crash.

Accident statistics show that children are safer if they are restrained in the rear seat.

In a crash, children who are not buckled up can strike other people who are buckled up, or can be thrown out of the vehicle. Older children need to use safety belts properly.



Downloaded from www.Manualslib.com manuals search engine

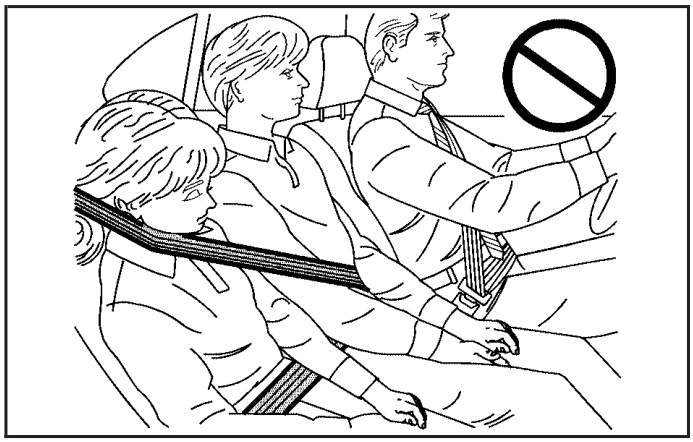

**⚠ CAUTION:**

**Never do this.**

**Here two children are wearing the same belt. The belt can not properly spread the impact forces. In a crash, the two children can be crushed together and seriously injured. A belt must be used by only one person at a time.**

**Q: What if a child is wearing a lap-shoulder belt, but the child is so small that the shoulder belt is very close to the child's face or neck?**

**A:** Move the child toward the center of the vehicle. Be sure that the shoulder belt still is on the child's shoulder, so that in a crash the child's upper body would have the restraint that belts provide. If the child is sitting in a rear seat position, see *Rear Safety Belt Comfort Guides for Children and Small Adults on page 1-22*.



Downloaded from www.Manualslib.com manuals search engine

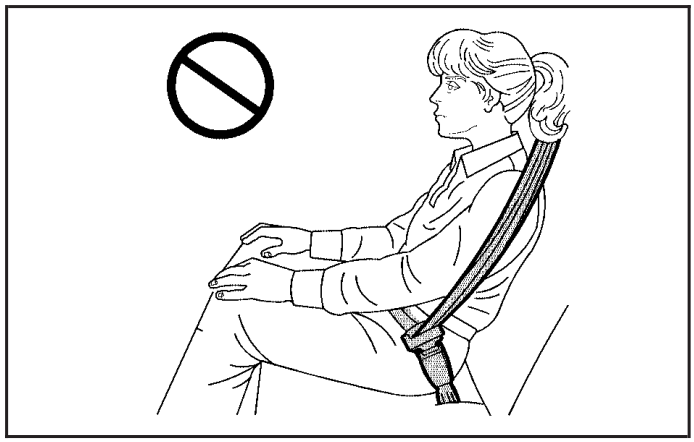

**⚠ CAUTION:**

**Never do this.**

**Here a child is sitting in a seat that has a lap-shoulder belt, but the shoulder part is behind the child. If the child wears the belt in this way, in a crash the child might slide under the belt. The belt's force would then be applied right on the child's abdomen. That could cause serious or fatal injuries.**

Wherever the child sits, the lap portion of the belt should be worn low and snug on the hips, just touching the child's thighs. This applies belt force to the child's pelvic bones in a crash.



Downloaded from www.Manualslib.com manuals search engine

## Infants and Young Children

Everyone in a vehicle needs protection! This includes infants and all other children. Neither the distance traveled nor the age and size of the traveler changes the need, for everyone, to use safety restraints. In fact, the law in every state in the United States and in every Canadian province says children up to some age must be restrained while in a vehicle.

Every time infants and young children ride in vehicles, they should have the protection provided by appropriate restraints. Young children should not use the vehicle's adult safety belts alone, unless there is no other choice. Instead, they need to use a child restraint.

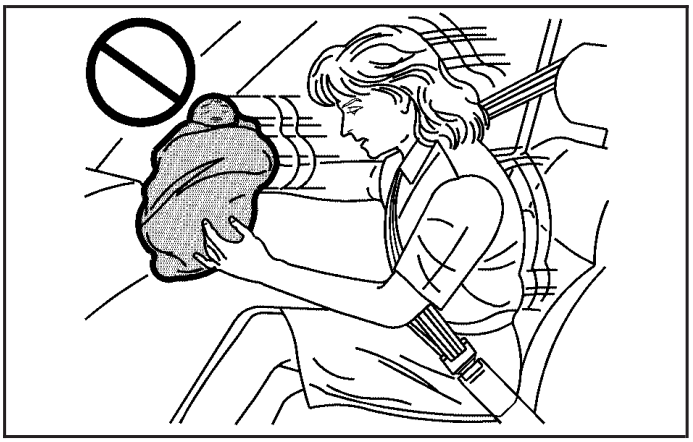

**⚠ CAUTION:**

**People should never hold a baby in their arms while riding in a vehicle. A baby does not weigh much — until a crash. During a crash a baby will become so heavy it is not possible to hold it. For example, in a crash at only 25 mph (40 km/h), a 12 lb (5.5 kg) baby will suddenly become a 240 lb (110 kg) force on a person's arms. A baby should be secured in an appropriate restraint.**



Downloaded from www.Manualslib.com manuals search engine

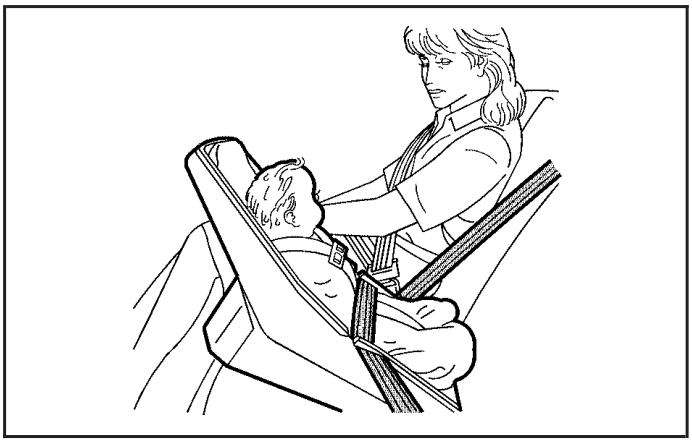

**⚠ CAUTION:**

**Children who are up against, or very close to, any airbag when it inflates can be seriously injured or killed. Airbags plus lap-shoulder belts offer protection for adults and older children, but not for young children and infants. Neither the vehicle's safety belt system nor its airbag system is designed for them. Young children and infants need the protection that a child restraint system can provide.**



Downloaded from www.Manualslib.com manuals search engine

**Q: What are the different types of add-on child restraints?**

**A:** Add-on child restraints, which are purchased by the vehicle's owner, are available in four basic types. Selection of a particular restraint should take into consideration not only the child's weight, height and age but also whether or not the restraint will be compatible with the motor vehicle in which it will be used.

For most basic types of child restraints, there are many different models available. When purchasing a child restraint, be sure it is designed to be used in a motor vehicle. If it is, the restraint will have a label saying that it meets federal motor vehicle safety standards.

The restraint manufacturer's instructions that come with the restraint, state the weight and height limitations for a particular child restraint. In addition, there are many kinds of restraints available for children with special needs.

**⚠ CAUTION:**

**Newborn infants need complete support, including support for the head and neck. This is necessary because a newborn infant's neck is weak and its head weighs so much compared with the rest of its body. In a crash, an infant in a rear-facing seat settles into the restraint, so the crash forces can be distributed across the strongest part of an infant's body, the back and shoulders. Infants always should be secured in appropriate infant restraints.**



Downloaded from www.Manualslib.com manuals search engine

## ⚠ CAUTION:

**The body structure of a young child is quite unlike that of an adult or older child, for whom the safety belts are designed. A young child's hip bones are still so small that the vehicle's regular safety belt may not remain low on the hip bones, as it should. Instead, it may settle up around the child's abdomen. In a crash, the belt would apply force on a body area that is unprotected by any bony structure. This alone could cause serious or fatal injuries. Young children always should be secured in appropriate child restraints.**

## Child Restraint Systems

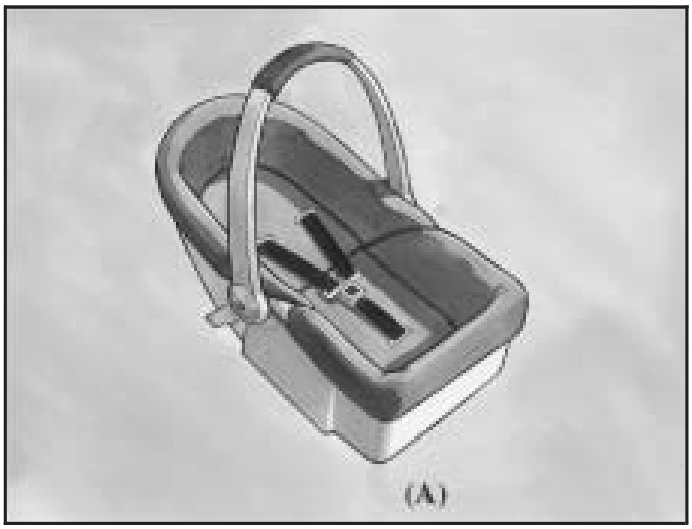


An infant car bed (A), a special bed made for use in a motor vehicle, is an infant restraint system designed to restrain or position a child on a continuous flat surface. Make sure that the infant's head rests toward the center of the vehicle.



Downloaded from www.Manualslib.com manuals search engine

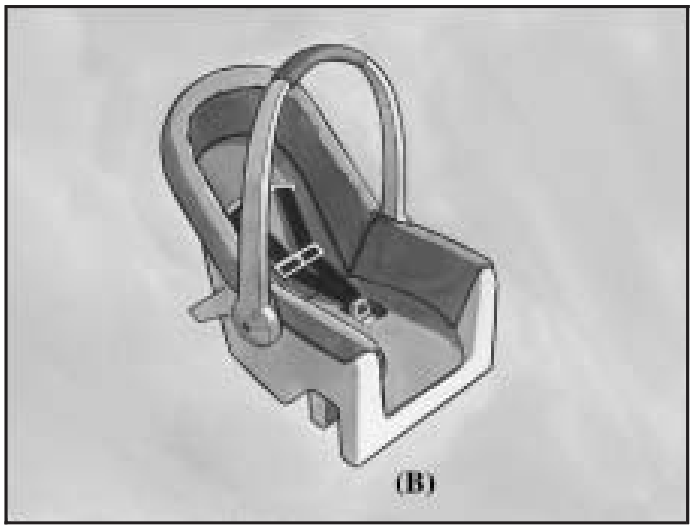


A rear-facing infant seat (B) provides restraint with the seating surface against the back of the infant. The harness system holds the infant in place and, in a crash, acts to keep the infant positioned in the restraint.

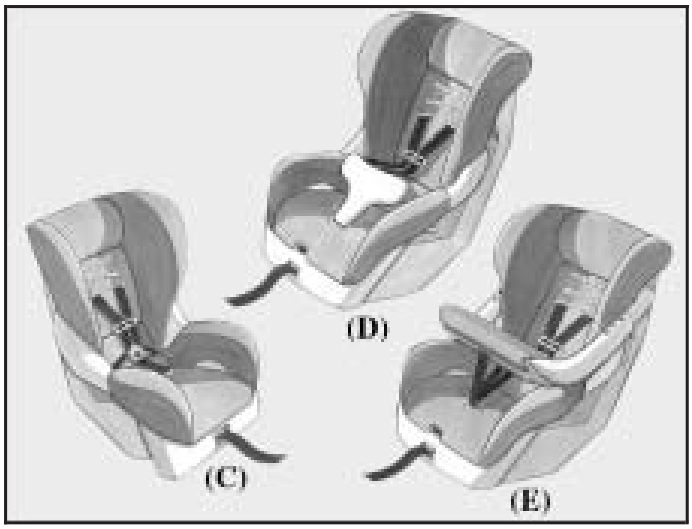


A forward-facing child seat (C-E) provides restraint for the child's body with the harness and also sometimes with surfaces such as T-shaped or shelf-like shields.



Downloaded from www.Manualslib.com manuals search engine

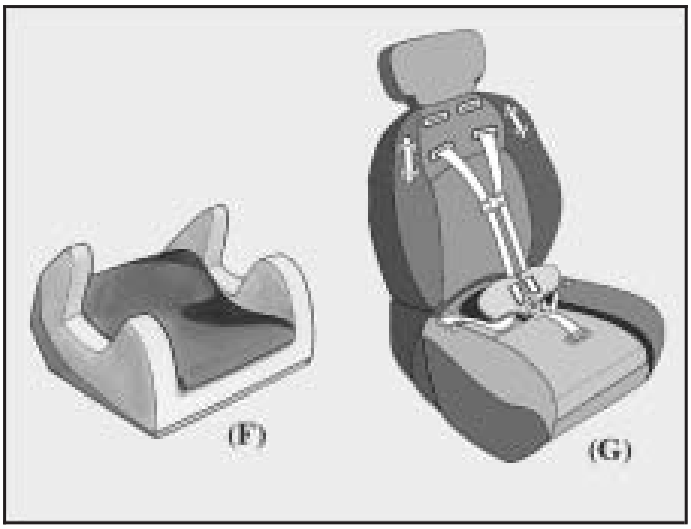


A booster seat (F-G) is a child restraint designed to improve the fit of the vehicle's safety belt system. Some booster seats have a shoulder belt positioner, and some high-back booster seats have a five-point harness. A booster seat can also help a child to see out the window.

**Q: How do child restraints work?**

**A:** A child restraint system is any device designed for use in a motor vehicle to restrain, seat, or position children. A built-in child restraint system is a permanent part of the motor vehicle. An add-on child restraint system is a portable one, which is purchased by the vehicle's owner.

For many years, add-on child restraints have used the adult belt system in the vehicle. To help reduce the chance of injury, the child also has to be secured within the restraint. The vehicle's belt system secures the add-on child restraint in the vehicle, and the add-on child restraint's harness system holds the child in place within the restraint.

One system, the three-point harness, has straps that come down over each of the infant's shoulders and buckle together at the crotch. The five-point harness system has two shoulder straps, two hip straps and a crotch strap. A shield may take the place of hip straps. A T-shaped shield has shoulder straps that are attached to a flat pad which rests low against the child's body. A shelf- or armrest-type shield has straps that are attached to a wide, shelf-like shield that swings up or to the side.



Downloaded from www.Manualslib.com manuals search engine

When choosing a child restraint, be sure the child restraint is designed to be used in a vehicle. If it is, it will have a label saying that it meets federal motor vehicle safety standards.

Then follow the instructions for the restraint. You may find these instructions on the restraint itself or in a booklet, or both. These restraints use the belt system or the LATCH system in your vehicle, but the child also has to be secured within the restraint to help reduce the chance of personal injury. When securing an add-on child restraint, refer to the instructions that come with the restraint which may be on the restraint itself or in a booklet, or both, and to this manual. The child restraint instructions are important, so if they are not available, obtain a replacement copy from the manufacturer.

## Where to Put the Restraint

Accident statistics show that children are safer if they are restrained in the rear rather than the front seat. We, therefore, recommend that child restraints be secured in a rear seat, including an infant riding in a rear-facing infant seat, a child riding in a forward-facing child seat and an older child riding in a booster seat. *Never* put a rear-facing child restraint in the front passenger seat.

Here is why:

**⚠ CAUTION:**

**A child in a rear-facing child restraint can be seriously injured or killed if the right front passenger's airbag inflates. This is because the back of the rear-facing child restraint would be very close to the inflating airbag. Always secure a rear-facing child restraint in a rear seat.**

**If you need to secure a forward-facing child restraint in the right front seat, always move the front passenger seat as far back as it will go. It is better to secure the child restraint in a rear seat.**

Wherever you install it, be sure to secure the child restraint properly.

Keep in mind that an unsecured child restraint can move around in a collision or sudden stop and injure people in the vehicle. Be sure to properly secure any child restraint in your vehicle — even when no child is in it.



Downloaded from www.Manualslib.com manuals search engine

## Top Strap

Some child restraints have a top strap, or “top tether.” It can help restrain the child restraint during a collision. For it to work, a top strap must be properly anchored to the vehicle. Some top strap-equipped child restraints are designed for use with or without the top strap being anchored. Others require the top strap always to be anchored. Be sure to read and follow the instructions for your child restraint. If yours requires that the top strap be anchored, do not use the restraint unless it is anchored properly.

If the child restraint does not have a top strap, one can be obtained, in kit form, for many child restraints. Ask the child restraint manufacturer whether or not a kit is available.

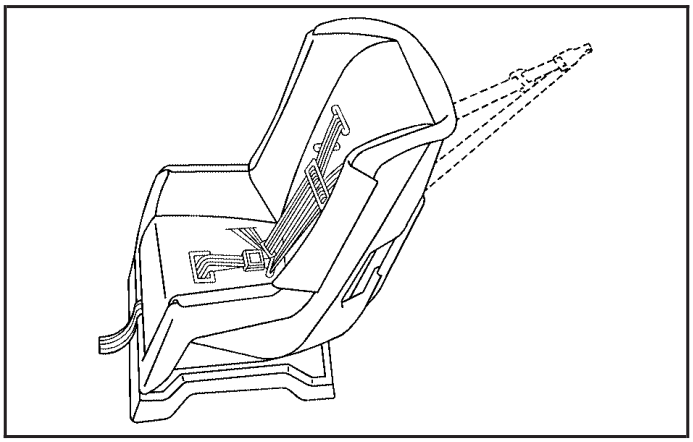

In Canada, the law requires that forward-facing child restraints have a top strap, and that the strap be anchored. In the United States, some child restraints also have a top strap. If your child restraint has a top strap, it should be anchored.



Downloaded from www.Manualslib.com manuals search engine

Anchor the top strap to an anchor point specified in *Top Strap Anchor Location on page 1-36*. Be sure to use an anchor point located on the same side of the vehicle as the seating position where the child restraint will be placed.

**⚠ CAUTION:**

**Each top tether bracket is designed to anchor only one child restraint. Attaching more than one child restraint to a single bracket could cause the anchor to come loose or even break during a crash. A child or others could be injured if this happens. To help prevent injury to people and damage to your vehicle, attach only one child restraint per bracket.**

Once you have the top strap anchored, you will be ready to secure the child restraint itself. Tighten the top strap when and as the child restraint manufacturer's instructions say.

## Top Strap Anchor Location

Your vehicle has top strap anchors already installed for the rear seating positions. You'll find them behind the rear seat head restraints. Pull up the head restraint to access the anchors.

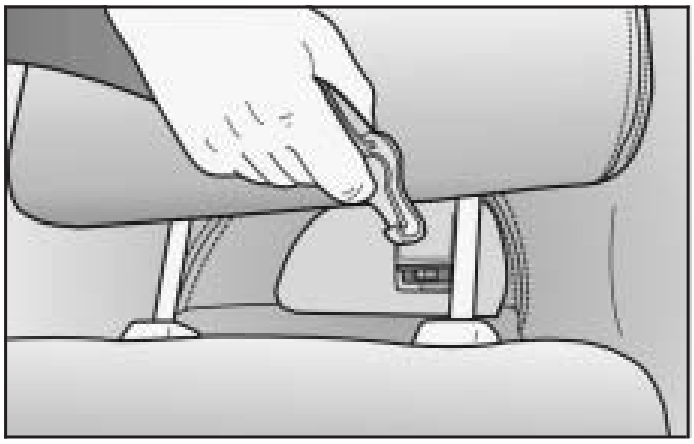

The straps from the child restraint must be threaded between the poles of the head restraint on the seat. The strap must not go around the head restraint.



Downloaded from www.Manualslib.com manuals search engine

Do not secure a child restraint in the right front passenger's position if a national or local law requires that the top strap be anchored, or if the instructions that come with the child restraint say that the top strap must be anchored. There is no place to anchor the top strap in this position.

## Lower Anchorages and Top Tethers for Children (LATCH System)

Your vehicle has the LATCH system. You will find anchors for each rear seating position.

This system, designed to make installation of child restraints easier, does not use the vehicle's safety belts. Instead, it uses vehicle anchors and child restraint attachments to secure the restraints. Some restraints also use another vehicle anchor to secure a top tether strap.

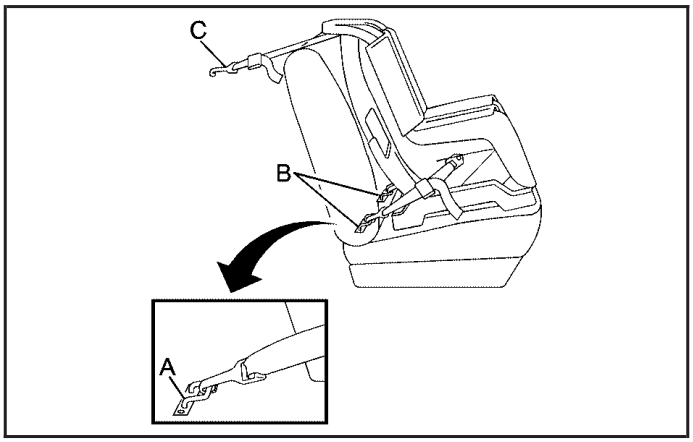


A. Lower Anchorage
B. Lower Anchorage
C. Top Tether



Downloaded from www.Manualslib.com manuals search engine

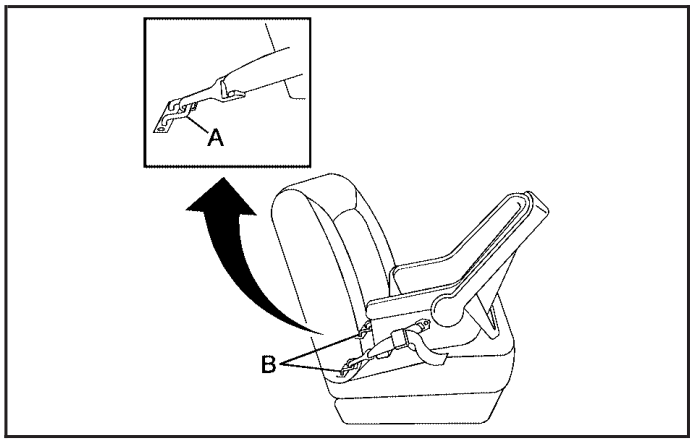


A. Lower Anchorage

B. Lower Anchorage

In order to use the LATCH system in your vehicle, you need a child restraint designed for that system.

To assist you in locating the lower anchorages for this child restraint system, each seating position with the LATCH system has a visible metal anchorage point in the seat where the seatback meets the seat cushion.

**⚠ CAUTION:**

**If a LATCH-type child restraint is not attached to its anchorage points, the restraint will not be able to protect the child correctly. In a crash, the child could be seriously injured or killed. Make sure that a LATCH-type child restraint is properly installed using the anchorage points, or use the vehicle's safety belts to secure the restraint, following the instructions that came with that restraint, and also the instructions in this manual.**



Downloaded from www.Manualslib.com manuals search engine

## Securing a Child Restraint Designed for the LATCH System

1. Find the LATCH anchorages for the seating position you want to use, where the bottom of the seatback meets the back of the seat cushion. See *Lower Anchorages and Top Tethers for Children (LATCH System) on page 1-37*.
2. Put the child restraint on the seat.
3. Attach and tighten the LATCH attachments on the child restraint to the LATCH anchorages in the vehicle. The child restraint instructions will show you how.
4. If the child restraint is forward-facing, attach and tighten the top tether to the top tether anchorage. The child restraint instructions will show you how. Also see *Top Strap on page 1-35*.
5. Push and pull the child restraint in different directions to be sure it is secure.

To remove the child restraint, simply unhook the top tether from the top tether anchorage and then disconnect the LATCH attachments from the LATCH anchorages.

## Securing a Child Restraint in a Rear Seat Position

If your child restraint is equipped with the LATCH system, see *Lower Anchorages and Top Tethers for Children (LATCH System) on page 1-37*. See *Top Strap on page 1-35* if the child restraint has one.

If your child restraint does not have the LATCH system, you will be using the lap-shoulder belt to secure the child restraint in this position. Be sure to follow the instructions that came with the child restraint. Secure the child in the child restraint when and as the instructions say.

1. Put the child restraint on the seat.
2. Pick up the latch plate, and run the lap and shoulder portions of the vehicle's safety belt through or around the restraint. The child restraint instructions will show you how.



Downloaded from www.Manualslib.com manuals search engine

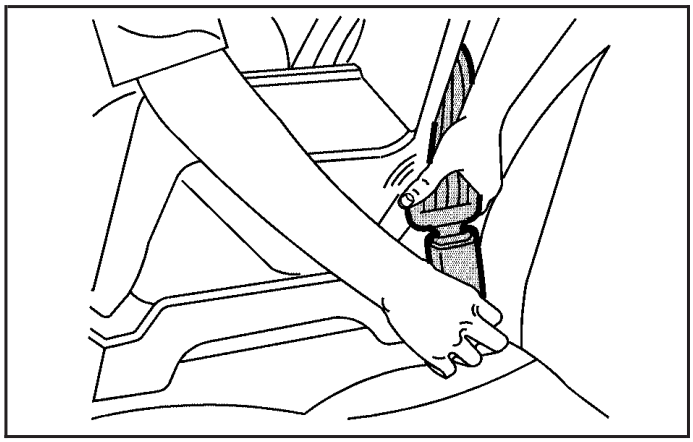

3. Buckle the belt. Make sure the release button is positioned so you would be able to unbuckle the safety belt quickly if you ever had to.

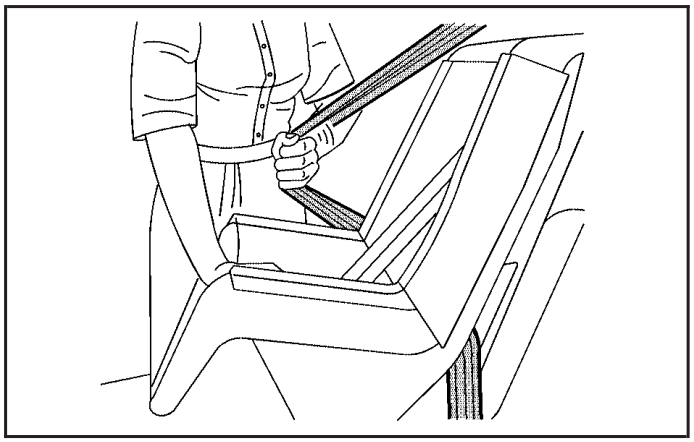

4. Pull the rest of the shoulder belt all the way out of the retractor to set the lock.



Downloaded from www.Manualslib.com manuals search engine

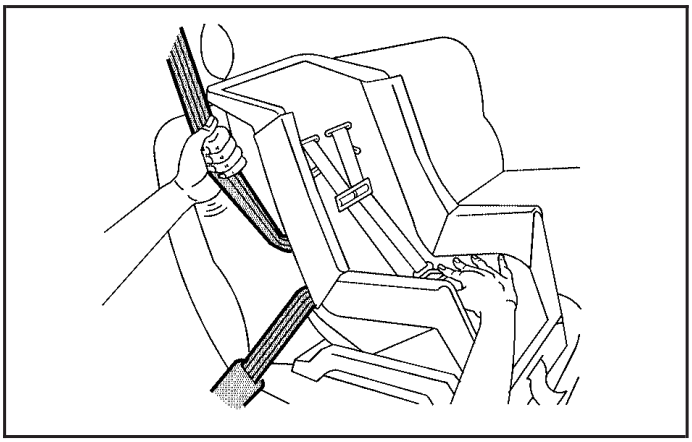

5. To tighten the belt, push down on the child restraint, pull the shoulder portion of the belt to tighten the lap portion of the belt and feed the shoulder belt back into the retractor. If you are using a forward-facing child restraint, you may find it helpful to use your knee to push down on the child restraint as you tighten the belt.
6. Push and pull the child restraint in different directions to be sure it is secure.

To remove the child restraint, just unbuckle the vehicle's safety belt and let it go back all the way. The safety belt will move freely again and be ready to work for an adult or larger child passenger.

## Securing a Child Restraint in the Right Front Seat Position

If your child restraint is equipped with the LATCH system, see *Lower Anchorages and Top Tethers for Children (LATCH System) on page 1-37*.

There is no top strap anchor in the right front passenger's position. Do not secure a child seat in this position if a national or local law requires that the top strap be anchored, or if the instructions that come with the child restraint say that the top strap must be anchored. See *Top Strap on page 1-35* if the child restraint has one.



Downloaded from www.Manualslib.com manuals search engine

Your vehicle has a right front passenger airbag. *Never* put a rear-facing child restraint in this seat. Here is why:

**⚠ CAUTION:**

**A child in a rear-facing child restraint can be seriously injured or killed if the right front passenger's airbag inflates. This is because the back of the rear-facing child restraint would be very close to the inflating airbag. Always secure a rear-facing child restraint in a rear seat.**

A rear seat is a safer place to secure a forward-facing child restraint. If you need to secure a forward-facing child restraint in the right front seat, you will be using the lap-shoulder belt. Be sure to follow the instructions that came with the child restraint. Secure the child in the child restraint when and as the instructions say.

1. Because your vehicle has a right front passenger airbag, always move the seat as far back as it will go before securing a forward-facing child restraint. See *Power Seats on page 1-2*.
2. Put the child restraint on the seat.
3. Pick up the latch plate, and run the lap and shoulder portions of the vehicle's safety belt through or around the restraint. The child restraint instructions will show you how.

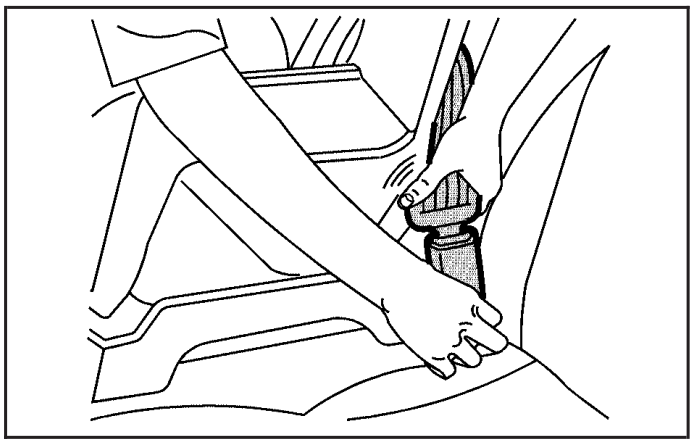

4. Buckle the belt. Make sure the release button is positioned so you would be able to unbuckle the safety belt quickly if you ever had to.



Downloaded from www.Manualslib.com manuals search engine

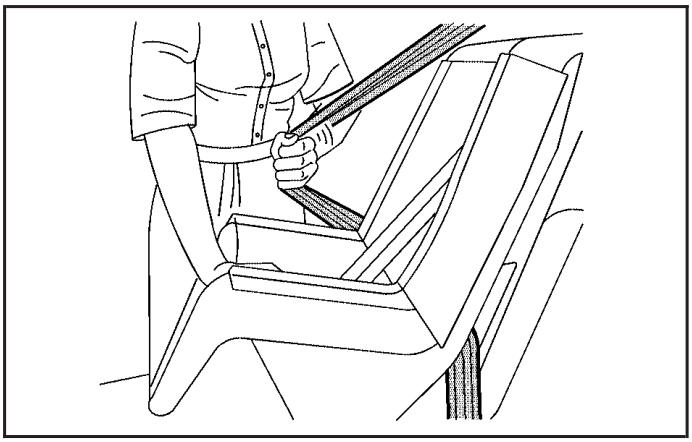

5. Pull the rest of the shoulder belt all the way out of the retractor to set the lock.

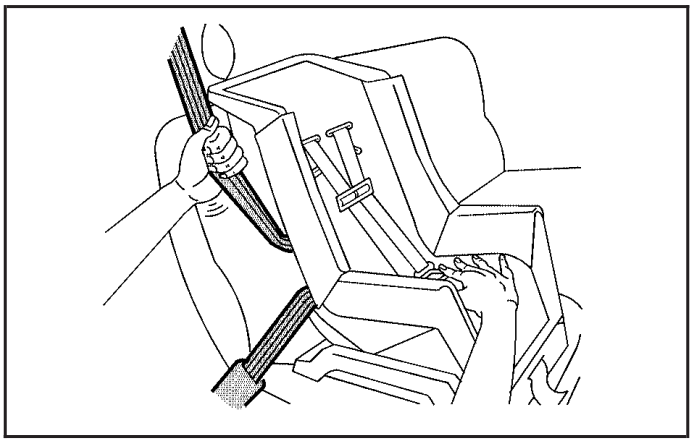

6. To tighten the belt, push down on the child restraint, pull the shoulder portion of the belt to tighten the lap portion of the belt and feed the shoulder belt back into the retractor. You may find it helpful to use your knee to push down on the child restraint as you tighten the belt.
7. Push and pull the child restraint in different directions to be sure it is secure.

To remove the child restraint, just unbuckle the vehicle's safety belt and let it go back all the way. The safety belt will move freely again and be ready to work for an adult or larger child passenger.



Downloaded from www.Manualslib.com manuals search engine

## Airbag System

Your vehicle has airbags — one airbag for the driver and another airbag for the right front passenger.

Frontal airbags are designed to help reduce the risk of injury from the force of an inflating airbag. But these airbags must inflate very quickly to do their job and comply with federal regulations.

Here are the most important things to know about the airbag system:

**⚠ CAUTION:**

**You can be severely injured or killed in a crash if you are not wearing your safety belt — even if you have airbags. Wearing your safety belt during a crash helps reduce your chance of hitting things inside the vehicle or being ejected from it. Airbags are designed to work with safety belts, but do not replace them.**

**CAUTION: (Continued)**

**CAUTION: (Continued)**

**Airbags are designed to deploy only in moderate to severe frontal and near frontal crashes. They are not designed to inflate in rollover, rear or low-speed frontal crashes, or in many side crashes. And, for some unrestrained occupants, airbags may provide less protection in frontal crashes than more forceful airbags have provided in the past. Everyone in your vehicle should wear a safety belt properly — whether or not there is an airbag for that person.**



Downloaded from www.Manualslib.com manuals search engine

**⚠ CAUTION:**

**Airbags inflate with great force, faster than the blink of an eye. If you are too close to an inflating airbag, as you would be if you were leaning forward, it could seriously injure you. Safety belts help keep you in position before and during a crash. Always wear your safety belt, even with airbags. The driver should sit as far back as possible while still maintaining control of the vehicle.**

**⚠ CAUTION:**

**Anyone who is up against, or very close to, any airbag when it inflates can be seriously injured or killed. Airbags plus lap-shoulder belts offer the best protection for adults, but not for young children and infants. Neither the**

**CAUTION: (Continued)**

**CAUTION: (Continued)**

**vehicle's safety belt system nor its airbag system is designed for them. Young children and infants need the protection that a child restraint system can provide. Always secure children properly in your vehicle. To read how, see *Older Children on page 1-25* and *Infants and Young Children on page 1-28*.**

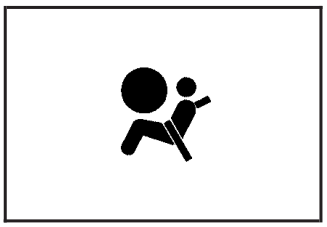

There is an airbag readiness light on the instrument panel, which shows the airbag symbol.

The system checks the airbag electrical system for malfunctions. The light tells you if there is an electrical problem. See *Airbag Readiness Light on page 3-25*.



Downloaded from www.Manualslib.com manuals search engine

## Where Are the Airbags?

The driver's airbag is in the middle of the steering wheel.

The right front passenger's airbag is in the instrument panel on the passenger's side.



Downloaded from www.Manualslib.com manuals search engine

**⚠ CAUTION:**

**If something is between an occupant and an airbag, the bag might not inflate properly or it might force the object into that person causing severe injury or even death. The path of an inflating airbag must be kept clear. Do not put anything between an occupant and an airbag, and do not attach or put anything on the steering wheel hub or on or near any other airbag covering.**

## When Should an Airbag Inflate?

The driver's and right front passenger's frontal airbags are designed to inflate in moderate to severe frontal or near-frontal crashes. But they are designed to inflate only if the impact exceeds a predetermined deployment threshold. Deployment thresholds take into account a variety of desired deployment and non-deployment events and are used to predict how severe a crash is likely to be in time for the airbags to inflate and help restrain the occupants. Whether your frontal airbags will or should deploy is not based on how fast your vehicle is traveling. It depends largely on what you hit, the direction of the impact and how quickly your vehicle slows down.

If your vehicle goes straight into a wall that does not move or deform, the threshold level is about 11 to 17 mph (18 to 28 km/h). (The threshold level can vary, however, with specific vehicle design, so that it can be somewhat above or below this range.)

Airbags may inflate at different crash speeds. For example:

- If the vehicle hits a stationary object, the airbag could inflate at a different crash speed than if the object were moving.
- If the object deforms, the airbag could inflate at a different crash speed than if the object does not deform.
- If the vehicle hits a narrow object (like a pole) the airbag could inflate at a different crash speed than if the vehicle hits a wide object (like a wall).
- If the vehicle goes into an object at an angle the airbag could inflate at a different crash speed than if the vehicle goes straight into the object.

The frontal airbags (driver and right front passenger) are not intended to inflate during vehicle rollovers, rear impacts, or in many side impacts.



Downloaded from www.Manualslib.com manuals search engine

In any particular crash, no one can say whether an airbag should have inflated simply because of the damage to a vehicle or because of what the repair costs were. Inflation is determined by the angle of the impact and how quickly the vehicle slows down in frontal and near-frontal impacts.

## What Makes an Airbag Inflate?

In an impact of sufficient severity, the airbag sensing system detects that the vehicle is in a crash. The sensing system triggers a release of gas from the inflator, which inflates the airbag. The inflator, airbag, and related hardware are all part of the airbag modules inside the steering wheel and in the instrument panel in front of the right front passenger.

## How Does an Airbag Restrain?

In moderate to severe frontal or near-frontal collisions, even belted occupants can contact the steering wheel or the instrument panel. Airbags supplement the protection provided by safety belts. Airbags distribute the force of the impact more evenly over the occupant's upper body, stopping the occupant more gradually.

But airbags would not help you in many types of collisions, including rollovers, rear impacts and many side impacts, primarily because an occupant's motion is not toward those airbags. Airbags should never be regarded as anything more than a supplement to safety belts, and then only in moderate to severe frontal or near-frontal collisions.

## What Will You See After an Airbag Inflates?

After the airbag inflates, it quickly deflates, so quickly that some people may not even realize the airbag inflated. Some components of the airbag module will be hot for a short time. These components include the steering wheel hub for the driver's frontal airbag and the instrument panel for the right front passenger's frontal airbag. The parts of the bag that come into contact with you may be warm, but not too hot to touch. There will be some smoke and dust coming from the vents in the deflated airbags. Airbag inflation does not prevent the driver from seeing or being able to steer the vehicle, nor does it stop people from leaving the vehicle.



Downloaded from www.Manualslib.com manuals search engine

## ⚠ CAUTION:

**When an airbag inflates, there is dust in the air. This dust could cause breathing problems for people with a history of asthma or other breathing trouble. To avoid this, everyone in the vehicle should get out as soon as it is safe to do so. If you have breathing problems but cannot get out of the vehicle after an airbag inflates, then get fresh air by opening a window or a door. If you experience breathing problems following an airbag deployment, you should seek medical attention.**

Your vehicle has a feature that will automatically unlock the doors, turn off the engine, turn off the fuel pump, and turn the interior lamps on when the airbags inflate (if battery power is available). You can operate these features by switching the ignition off and then on.

In many crashes severe enough to inflate an airbag, windshields are broken by vehicle deformation. Additional windshield breakage may also occur from the right front passenger airbag.

- Airbags are designed to inflate only once. After an airbag inflates, you will need some new parts for your airbag system. If you do not get them, the airbag system will not be there to help protect you in another crash. A new system will include airbag modules and possibly other parts. The service manual for your vehicle covers the need to replace other parts.
- Your vehicle is equipped with a crash sensing and diagnostic module, which records information after a crash. See *Vehicle Data Collection and Event Data Recorders on page 7-9*.
- Let only qualified technicians work on your airbag system. Improper service can mean that an airbag system will not work properly. See your dealer for service.

***Notice:*** **If you damage the covering for the driver's or the right front passenger's airbag, the airbag may not work properly. You may have to replace the airbag module in the steering wheel or both the airbag module and the instrument panel for the right front passenger's airbag. Do not open or break the airbag coverings.**



Downloaded from www.Manualslib.com manuals search engine

## Servicing Your Airbag-Equipped Vehicle

Airbags affect how your vehicle should be serviced. There are parts of the airbag system in several places around your vehicle. You do not want the system to inflate while someone is working on your vehicle. Your dealer and the service manual have information about servicing your vehicle and the airbag system. To purchase a service manual, see *Service Publications Ordering Information on page 7-11*.

**⚠ CAUTION:**

**For up to 10 seconds after the ignition key is turned off and the battery is disconnected, an airbag can still inflate during improper service. You can be injured if you are close to an airbag when it inflates. Avoid yellow wires, wires wrapped with yellow tape or yellow connectors. They are probably part of the airbag system. Be sure to follow proper service procedures, and make sure the person performing work for you is qualified to do so.**

The airbag system does not need regular maintenance.

# Restraint System Check

## Checking the Restraint Systems

Now and then, make sure the safety belt reminder light and all your belts, buckles, latch plates, retractors and anchorages are working properly. Look for any other loose or damaged safety belt system parts. If you see anything that might keep a safety belt system from doing its job, have it repaired.

Torn or frayed safety belts may not protect you in a crash. They can rip apart under impact forces. If a belt is torn or frayed, get a new one right away.

Also look for any opened or broken airbag covers, and have them repaired or replaced. (The airbag system does not need regular maintenance.)



Downloaded from www.Manualslib.com manuals search engine

## Replacing Restraint System Parts After a Crash

**⚠ CAUTION:**

**A crash can damage the restraint systems in your vehicle. A damaged restraint system may not properly protect the person using it, resulting in serious injury or even death in a crash. To help make sure your restraint systems are working properly after a crash, have them inspected and any necessary replacements made as soon as possible.**

If you have had a crash, do you need new belts or LATCH system parts?

After a very minor collision, nothing may be necessary. But if the belts were stretched, as they would be if worn during a more severe crash, then you need new parts.

If the LATCH system was being used during a more severe crash, you may need new LATCH system parts.

If belts are cut or damaged, replace them. Collision damage also may mean you will need to have LATCH system, safety belt or seat parts repaired or replaced. New parts and repairs may be necessary even if the belt or LATCH system was not being used at the time of the collision.

If an airbag inflates, you will need to replace airbag system parts. See the part on the airbag system earlier in this section.

If the frontal airbags inflate, you will also need to replace the driver's and right front passenger's safety belt buckle assembly. Be sure to do so. Then the new buckle assembly will be there to help protect you in a collision.

After a crash you may need to replace the driver and front passenger's safety belt buckle assemblies, even if the frontal airbags have not deployed. The driver and front passenger's safety belt buckle assemblies contain the safety belt pretensioners. Have your safety belt pretensioners checked if your vehicle has been in a collision, or if your airbag readiness light stays on after you start your vehicle or while you are driving. See *Airbag Readiness Light on page 3-25*.



Downloaded from www.Manualslib.com manuals search engine

## ✍ NOTES



Downloaded from www.Manualslib.com manuals search engine

# Section 2 Features and Controls

**Keys** .....2-2
Remote Keyless Entry System .....2-4
Remote Keyless Entry System Operation .....2-5

**Doors and Locks** .....2-7
Door Locks .....2-7
Programmable Automatic Door Locks .....2-8
Trunk .....2-8

**Windows** .....2-11
Power Windows .....2-12
Sun Visors .....2-12

**Theft-Deterrent Systems** .....2-13
Immobilizer .....2-13
Immobilizer Operation .....2-13
Content Theft-Deterrent .....2-14

**Starting and Operating Your Vehicle** .....2-15
New Vehicle Break-In .....2-15
Ignition Positions .....2-16
Retained Accessory Power (RAP) .....2-17
Starting the Engine .....2-17
Racing or Other Competitive Driving .....2-18
Automatic Transmission Operation .....2-18
Manual Transmission Operation .....2-21
Parking Brake .....2-23
Shifting Into Park (P)
(Automatic Transmission) .....2-24
Shifting Out of Park (P)
(Automatic Transmission) .....2-25
Parking Over Things That Burn .....2-26
Engine Exhaust .....2-26
Running the Engine While Parked .....2-27

**Mirrors** .....2-28
Manual Rearview Mirror .....2-28
Outside Power Mirrors .....2-28
Outside Convex Mirror .....2-28

**Storage Areas** .....2-29
Glove Box .....2-29
Cupholder(s) .....2-29
Front Storage Area .....2-29
Center Console Storage Area .....2-29

**Vehicle Personalization** .....2-30



Downloaded from www.Manualslib.com manuals search engine

## Keys

**⚠ CAUTION:**

**Leaving children in a vehicle with the ignition key is dangerous for many reasons. They could operate the power windows or other controls or even make the vehicle move. The children or others could be badly injured or even killed. Do not leave the keys in a vehicle with children.**

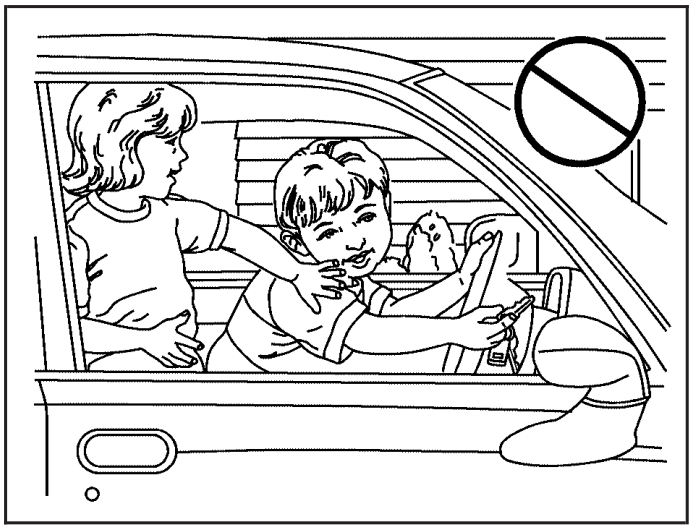



Downloaded from www.Manualslib.com manuals search engine

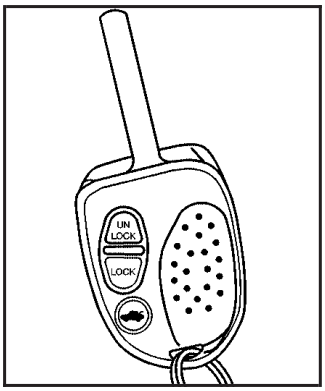


The main key can be used for the ignition and the driver's door lock.

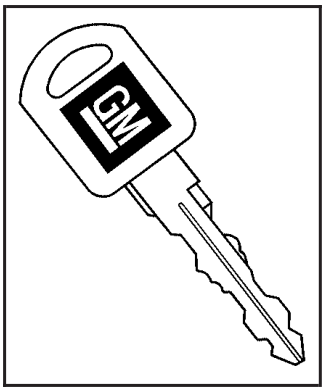


There is another key that locks and unlocks the glove box.

This key can usually be kept in the unlocked glove box. Then, when leaving your vehicle and main key with a car park attendant, you can lock valuables in the glove box and take the glove box key with you.

The vehicle comes with a security card that lists various security numbers for your vehicle, including key numbers, and the radio PIN. Please keep the card in a safe place, away from your vehicle.

If a replacement key is needed, you will have to go to the dealership to purchase one.

In an emergency, contact Pontiac Roadside Assistance. See *Roadside Assistance Program on page 7-6* for more information.

***Notice:*** **If you ever lock your keys in your vehicle, you may have to damage the vehicle to get in. Be sure you have spare keys.**



Downloaded from www.Manualslib.com manuals search engine

## Remote Keyless Entry System

Your keyless entry system operates on a radio frequency subject to Federal Communications Commission (FCC) Rules.

This device complies with Part 15 of the FCC Rules. Operation is subject to the following two conditions:

1. This device may not cause interference.
2. This device must accept any interference received, including interference that may cause undesired operation of the device.

Changes or modifications to this system by other than an authorized service facility could void authorization to use this equipment.

At times you may notice a decrease in range. This is normal for any remote keyless entry system. If the transmitter does not work or if you have to stand closer to your vehicle for the transmitter to work, try this:

- Check the distance. You may be too far from your vehicle. You may need to stand closer during rainy or snowy weather.
- Check the location. Other vehicles or objects may be blocking the signal. Take a few steps to the left or right, hold the transmitter higher, and try again.
- If you have to get close to your vehicle before the key works, the battery may be weak or discharged. The battery in the remote key should last about five years. When the battery is weak or discharged, the remote key will need to be replaced. There is no battery replacement for the remote key transmitter. See *Remote Keyless Entry System Operation on page 2-5*.
- If you are still having trouble, see your dealer or a qualified technician for service.



Downloaded from www.Manualslib.com manuals search engine

## Remote Keyless Entry System Operation

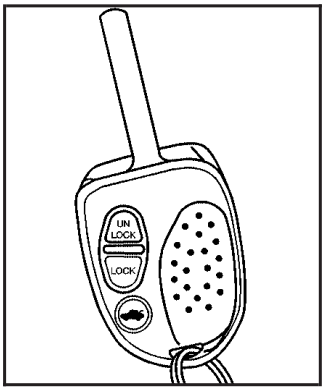


The buttons on your key allow you to lock and unlock your doors or unlock your trunk.

When pressing the key buttons, ensure that other keys on the key ring are not between the main key and the vehicle. Other keys can obscure the signal being transmitted to the vehicle.

When a button on the key is pressed, it sends a signal to the vehicle. The receiver of the signal is a small rectangle centered on top of the dashboard.
The receiver is also used to measure sunlight. It is important that the receiver is clean, not covered, and that there are no metal objects close by, as this may block the signals.

**LOCK:** Press this button on the key to lock all the doors, disable the engine, and set the alarm. The vehicle's turn signals will briefly flash.

If you prefer to have the turn signals flash accompanied by the horn sounding, the LOCK feature can be changed. See *Vehicle Personalization on page 2-30*.

The LOCK button on the key will not work if the ignition is turned on, or if the driver's and/or passenger's door is open.

Prior to locking your vehicle, make sure all the doors are closed completely. If the LOCK button is pressed when a door is open, the horn will sound three times to indicate that a door has not locked. Close the open door and reset the remote system by first pressing the UNLOCK button and then the LOCK button on the key.



Downloaded from www.Manualslib.com manuals search engine

**UNLOCK:** Press this button on the key to unlock the doors. The turn signal lamps will flash twice, and the horn will chirp twice, if this unlocking option is selected through vehicle personalization. The interior light will also turn on for a short time. If UNLOCK is pressed once, the driver's door will unlock. If UNLOCK is pressed a second time, or is held down for more than half a second, all the doors will unlock. If you prefer to have all the doors unlock with a single press, the unlock feature can be changed to unlock all doors. See "Two Stage Unlock" under *Vehicle Personalization on page 2-30*.

If the lock system is overloaded as a result of repeated use in a short time interval, the power supply is cut off for about 30 seconds. The door lock system has been designed to make the vehicle horn chirp rapidly five times if it detects a fault in the lock system when the LOCK button is pressed. You should check to see that the doors have locked.

**(Trunk):** Press the button with the opened trunk symbol to release the trunk lid.

The trunk button on the key will not work if you are travelling over 12 mph (20 km/h).

## Battery

The key has a non-removable battery. Under normal use, the battery in your key should last about five years.

You can tell the battery is weak if the key will not work at the normal range in any location. If you have to get close to your vehicle before the key buttons work, it is probably time for a replacement key. See your dealership to purchase a replacement key.

If the buttons on the key are not working at the normal range in any location, insert the key into the ignition and turn it ON and then OFF. Remove the key from the ignition and try pressing the LOCK and UNLOCK buttons again. If it still does not work a replacement key may be needed. You will have to go to the dealership to purchase a replacement key.



Downloaded from www.Manualslib.com manuals search engine

# Doors and Locks

## Door Locks

**⚠ CAUTION:**

**Unlocked doors can be dangerous.**

- **Passengers — especially children — can easily open the doors and fall out of a moving vehicle. When a door is locked, the handle will not open it. You increase the chance of being thrown out of the vehicle in a crash if the doors are not locked. So, wear safety belts properly and lock the doors whenever you drive.**
- **Young children who get into unlocked vehicles may be unable to get out. A child can be overcome by extreme heat and can suffer permanent injuries or even death from heat stroke. Always lock your vehicle whenever you leave it.**
- **Outsiders can easily enter through an unlocked door when you slow down or stop your vehicle. Locking your doors can help prevent this from happening.**

There are several ways to unlock and lock your vehicle.

To unlock the doors from inside the vehicle, pull up on either the driver's or passenger's door lock knob. To lock the doors, press either knob down.

To lock or unlock your vehicle from the outside, use your key in the driver's lock or press the lock and unlock buttons on the remote key.

To lock the doors from the outside using the key in the lock, do the following:

1. Insert the key in the driver's door lock.
2. Turn the key clockwise.
3. Turn the key back to the vertical position and remove.

The alarm system is not set using this method. See *Content Theft-Deterrent on page 2-14* for information.

To unlock the doors from the outside using the key in the lock, do the following:

1. Insert the key in the driver's door lock.
2. Turn the key counterclockwise.
3. Then turn the key back to the vertical position and remove.

The alarm system will go off as soon as a door is opened. To turn off the alarm, turn the key in the ignition to ON or press the unlock button on the remote key. See *Content Theft-Deterrent on page 2-14* for information.



Downloaded from www.Manualslib.com manuals search engine

Your vehicle cannot be locked using the remote key if the key is in the ignition and the ignition is ON. The vehicle also cannot be locked if the driver's door is open.

To use the remote key to lock the doors, both doors must be closed. If only the passenger's door is open when the lock button is pressed, the driver's door will lock but the passenger's door will not. The horn will honk three times to indicate that the passenger's door has not locked. The passenger's door must be closed and the system must be reset in order to lock both doors. To reset the system, press the unlock button and then press the lock button on the remote key.

## Programmable Automatic Door Locks

Your vehicle is equipped with an automatic door locking feature which can be programmed through the trip computer buttons and instrument panel center display. It can be programmed to be on or off. See *Vehicle Personalization on page 2-30* for more information.

Your vehicle was programmed from the factory to automatically lock when the shift lever is moved out of PARK (P).

## Trunk

**⚠ CAUTION:**

**It can be dangerous to drive with the trunk lid open because carbon monoxide (CO) gas can come into your vehicle. You cannot see or smell CO. It can cause unconsciousness and even death. If you must drive with the trunk lid open or if electrical wiring or other cable connections must pass through the seal between the body and the trunk lid:**

- **Make sure all other windows are shut.**
- **Turn the fan on your heating or cooling system to its highest speed and select the control setting that will force outside air into your vehicle. See Climate Control System in the Index.**
- **If you have air outlets on or under the instrument panel, open them all the way.**

**See *Engine Exhaust on page 2-26*.**



Downloaded from www.Manualslib.com manuals search engine

## Trunk Lock

To unlock the trunk, press and hold the button with the trunk symbol on the key. The vehicle must be moving at less than 12 mph (20 km/h) for the trunk to open. See *Remote Keyless Entry System Operation on page 2-5*.

When the trunk is unlocked, it can then be opened from the outside. After partially opening the trunk lid, it will automatically open the rest of the way on its own. The trunk locks automatically when closed, so be careful not to leave your key in the trunk.

## Remote Trunk Release

This feature is used to unlock the trunk from inside the vehicle.

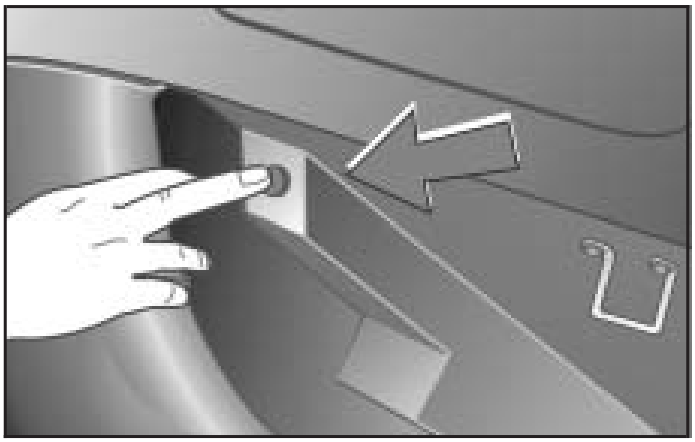

Press the button inside the glovebox to unlock the trunk. The vehicle must not be moving over 12 mph (20 km/h) and the alarm system must be off. See *Content Theft-Deterrent on page 2-14*. For added security, the remote trunk release button will not operate when the doors are locked, the engine is off, and the key is removed from the ignition.



Downloaded from www.Manualslib.com manuals search engine

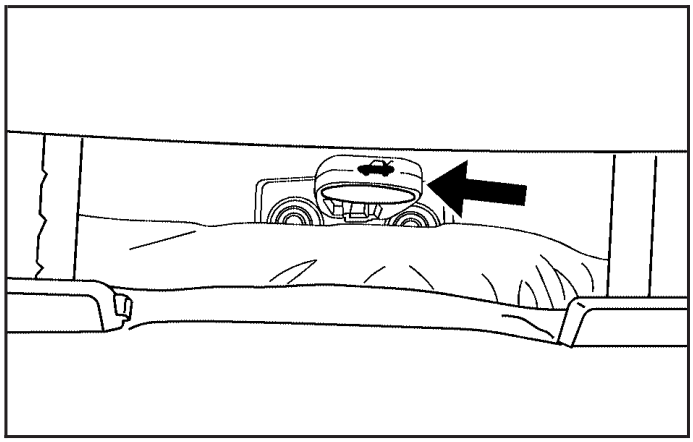

There is also a secondary trunk release handle located under the passenger side rear seat head restraint. To access this handle, lift the head restraint and then pull the yellow ring. The vehicle must not moving.

## Emergency Trunk Release Handle

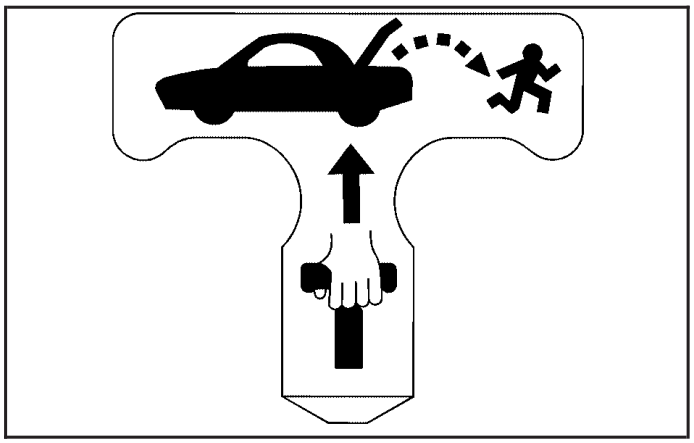

***Notice:*** **Using the emergency trunk release handle as a tie-down or anchor point when securing items in the trunk may damage it. Use the emergency trunk release handle only to help you open the trunk lid.**

There is a glow-in-the-dark emergency trunk release handle located inside the trunk on the trunk lid. This handle will glow following exposure to light. Pull the release handle to open the trunk from the inside.



Downloaded from www.Manualslib.com manuals search engine

## Windows

**⚠ CAUTION:**

**Leaving children, helpless adults, or pets in a vehicle with the windows closed is dangerous. They can be overcome by the extreme heat and suffer permanent injuries or even death from heat stroke. Never leave a child, a helpless adult, or a pet alone in a vehicle, especially with the windows closed in warm or hot weather.**

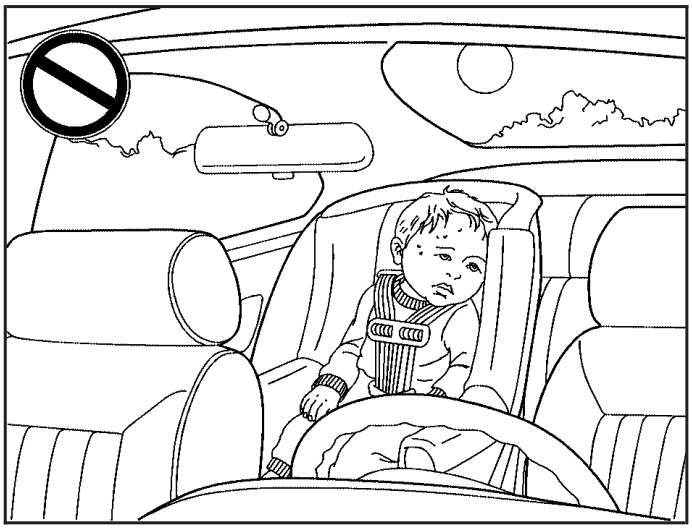



Downloaded from www.Manualslib.com manuals search engine

## Power Windows

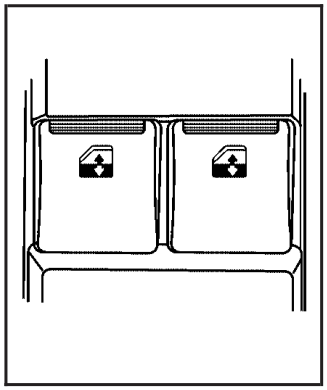

Use the switches located between the seats to operate the windows.

To raise the window, pull the switch up. To lower the window, press the switch down.

The windows will operate while the ignition is turned to ON, or while Retained Accessory Power (RAP) is active. See *Retained Accessory Power (RAP) on page 2-17*.

When the doors are opened, the power windows are deactivated and will not operate until the ignition is turned to ON again.

## Express-Down Window

Both window switches have an express-down feature. Hold the switch down briefly and then release it. To stop the express-down feature, move the switch up or down again.

## Sun Visors

To help block out glare, pull the sun visors down. Pull on the inside edges of the sun visors to swing them from the front windshield to the side window.

## Lighted Visor Vanity Mirrors

Both the driver and passenger's side sun visors have lighted vanity mirrors.

Raise the cover on the top of the sun visor to expose the vanity mirror. The lights at either side of the vanity mirror automatically turn on and off when the cover is opened and closed.



Downloaded from www.Manualslib.com manuals search engine

# Theft-Deterrent Systems

Vehicle theft is big business, especially in some cities. Although your vehicle has a number of theft-deterrent features, we know that nothing we put on it can make it impossible to steal.

## Immobilizer

This device complies with Part 15 of the FCC Rules. Operation is subject to the following two conditions:

1. This device may not cause interference.
2. This device must accept any interference received, including interference that may cause undesired operation.

Changes or modifications to this system by other than an authorized service facility could void authorization to use this equipment.

## Immobilizer Operation

Your vehicle may have a passive theft-deterrent system.

The system is an electronic engine immobilizer, which disables the car, when the key is removed from the ignition.

The system works when you turn the key to ON. The key uses a transponder that matches an immobilizer control unit in your vehicle. The correct key will start the vehicle.

Your vehicle has a special key that works with the theft-deterrent system. There is a transponder in the key head. If the key is ever damaged, you may not be able to start your vehicle.

When trying to start the vehicle, if the engine does not start and the security light comes on, the key may have a damaged transponder. Turn the ignition off and try again.



Downloaded from www.Manualslib.com manuals search engine

If the engine still does not start, and the key appears to be undamaged, try another ignition key. At this time, you may also want to check the fuse. See *Fuses and Circuit Breakers on page 5-86* for more information on fuses. If the engine still does not start with the other key, your vehicle needs service. If your vehicle does start, the first key may be faulty. See your dealer who can service the theft-deterrent system to have a new key made.

If you are ever driving and the security light comes on and stays on, you will be able to restart your engine if you turn it off. The theft-deterrent system, however, is not working properly and must be serviced by your dealer. Your vehicle is not protected by the theft-deterrent system at this time.

In an emergency, contact Roadside Assistance. See *Roadside Assistance Program on page 7-6*.

## Content Theft-Deterrent

Your vehicle has a theft-deterrent alarm system.

### Arming the System

The alarm system is turned on when the LOCK button on the key is pressed. Therefore, locking the doors by pressing LOCK not only locks all the doors but, after a short delay, also sets the alarm system. When the system is armed, the alarm is triggered when any of the doors, hood or trunk are opened or a hot-wire attempted. The alarm system thinks a break-in has occurred. An alarm sounds and the turn signals and dome light will flash.

When the alarm system is turned on, you may open the trunk by pressing the trunk symbol button on the key. This does not set off the alarm, but leaves the alarm system on and undisturbed. Closing the trunk re-arms the trunk alarm after a short delay.

The LOCK button on the key will not function when the ignition is turned ON or the driver's door is open.

### Disarming the System

To disarm the system, press UNLOCK on the key or turn the ignition to ON.



Downloaded from www.Manualslib.com manuals search engine

### How to Detect a Tamper Condition

The exterior turn signals should flash twice when returning to your vehicle and pressing UNLOCK on the key. If they flash three times, an attempted break-in has occurred while the vehicle was armed. If you wish to find out what set the alarm off, turn the ignition on and look at the trip computer display for the ALARM ACTIVATED message being shown. See “Trip Computer Warning Messages” under *Trip Computer on page 3-33*. The ALARM ACTIVATED message will be displayed first for one second, followed by the trigger point screens. The trigger point screens will also be displayed for one second. If more than one trigger point has been activated, the display will show each trigger point screen in sequence for one second, returning back to the ALARM ACTIVATED screen. The alarm screens will be shown in a continuous cycle until the trip computer MODE button is pressed. The center display then reverts to the last screen shown prior to the ignition being off.

The possible trigger points are the following:

- The hood has been opened.
- The trunk has been opened.
- One of the doors has been opened.
- Hot wiring of the vehicle was attempted (ignition on without key inserted).

# Starting and Operating Your Vehicle

## New Vehicle Break-In

***Notice:*** **Your vehicle does not need an elaborate break-in. But it will perform better in the long run if you follow these guidelines:**

- **Keep your speed at 55 mph (88 km/h) or less for the first 500 miles (805 km).**
- **Do not drive at any one speed, fast or slow, for the first 500 miles (805 km). Do not make full-throttle starts.**
- **Avoid making hard stops for the first 200 miles (322 km) or so. During this time your new brake linings are not yet broken in. Hard stops with new linings can mean premature wear and earlier replacement. Follow this breaking-in guideline every time you get new brake linings.**



Downloaded from www.Manualslib.com manuals search engine

## Ignition Positions

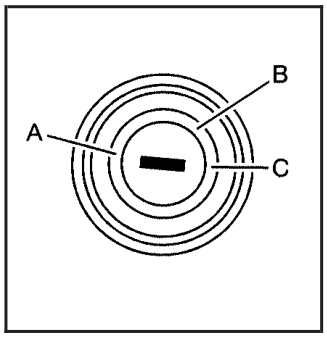


The key can be turned to one of three positions while in the ignition switch.

**A (LOCK):** This is the only position from which you can insert or remove the key. When the key is inserted and is in this position, the radio, wipers, and accessory power outlet will continue to work until the key is removed. Once the key is removed these accessories will turn off. By selecting the ON switch on the radio these accessories will continue to work for one hour or until either door is opened. If the key is left inserted in this position, a chime will sound when the driver's door is opened to remind you the key has been left in the ignition. If the key is left in the ignition, it can drain the battery. Make sure to remove the key when leaving the vehicle.

The key can only be turned to this position if the vehicle's automatic transmission is in PARK (P). To help guard against theft, your vehicle's engine is automatically disabled shortly after turning the key to this position. A flashing padlock symbol on the bottom left corner of the instrument panel indicates this.

The steering column is automatically locked when the key is removed. To release the steering wheel, insert the key again and turn it towards the front of the vehicle.

***Notice:*** **Using a tool to force the key from the ignition switch could cause damage or break the key. Use the correct key and turn the key only with your hand. Make sure the key is all the way in. If it is, turn the steering wheel left and right while you turn the key hard. If none of this works, then your vehicle needs service.**

**B (ON):** This position is where the key returns to after you start your engine and release the key. The ignition switch stays in ON when the engine is running. But even when the engine is not running, you can use ON to operate your electrical accessories and to display some instrument panel warning lights.

**C (START):** This position starts the engine. When the engine starts, release the key. The ignition switch will return to ON for normal driving.



Downloaded from www.Manualslib.com manuals search engine

## Retained Accessory Power (RAP)

Your vehicle is equipped with a Retained Accessory Power (RAP) feature that enables the radio, power windows, windshield wipers, and accessory power outlet to continue to work after the ignition key has been turned to LOCK and removed from the ignition.

The radio, wipers and accessory power outlet will turn off when the ignition key is turned to LOCK and removed. By turning the radio back on, you will be able to operate it, the windshield wipers, and the accessory power outlet for up to one hour or until:

- The radio is turned off
- Either door is opened

The windows will also operate for 15 minutes or until either door is opened.

## Starting the Engine

### Automatic Transmission

Move your shift lever to PARK (P) or NEUTRAL (N). Your engine will not start in any other position — that is a safety feature. To restart when you are already moving, use NEUTRAL (N) only.

***Notice:*** **Do not try to shift to PARK (P) if your vehicle is moving. If you do, you could damage the transmission. Shift to PARK (P) only when your vehicle is stopped.**

### Manual Transmission

The shift lever should be in neutral and the parking brake engaged. Hold the clutch pedal to the floor and start the engine. Your vehicle will not start if the clutch pedal is not all the way down — that is a safety feature.



Downloaded from www.Manualslib.com manuals search engine

## Starting Your Engine

1. With your foot off the accelerator pedal and the parking brake firmly applied, turn your ignition key to START. When the engine starts, let go of the key. The idle speed will go down as your engine gets warm.

***Notice:*** **Holding your key in START for longer than 15 seconds at a time will cause your battery to be drained much sooner. And the excessive heat can damage your starter motor. Wait about 15 seconds between each try to help avoid draining your battery or damaging your starter.**

2. If it does not start, wait about 15 seconds and try again to start the engine by turning the ignition key to START. Wait about 15 seconds between each try.

   When your engine has run about 10 seconds to warm up, your vehicle is ready to be driven. Do not run your engine at high speeds when it is cold.

   If the weather is below freezing (32°F or 0°C), let the engine run for a few minutes to warm up.

***Notice:*** **Your engine is designed to work with the electronics in your vehicle. If you add electrical parts or accessories, you could change the way the engine operates. Before adding electrical equipment, check with your dealer. If you do not, your engine might not perform properly.**

## Racing or Other Competitive Driving

See your warranty book before using your vehicle for racing or other competitive driving.

***Notice:*** **If you use your vehicle for racing or other competitive driving, the engine may use more oil than it would with normal use. Low oil levels can damage the engine. Be sure to check the oil level often during racing or other competitive driving and keep the level at or near the upper mark that shows the proper operating range on the engine oil dipstick. For information on how to add oil, see *Engine Oil on page 5-13*.**

## Automatic Transmission Operation

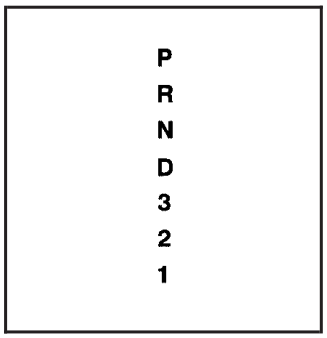


There are several different positions for your shift lever. Push in the button on top of the shift lever when shifting into position.



Downloaded from www.Manualslib.com manuals search engine

**PARK (P):** The engine can be started in this position. This position prevents the rear wheels from turning and so should be selected, together with the parking brake, when leaving the vehicle.

## ⚠ CAUTION:

**It is dangerous to get out of your vehicle if the shift lever is not fully in PARK (P) with the parking brake firmly set. Your vehicle can roll.**

**Do not leave your vehicle when the engine is running unless you have to. If you have left the engine running, the vehicle can move suddenly. You or others could be injured. To be sure your vehicle will not move, even when you are on fairly level ground, always set your parking brake and move the shift lever to PARK (P). See *Shifting Into Park (P) (Automatic Transmission) on page 2-24*. If you are pulling a trailer, see *Towing a Trailer on page 4-34*.**

Ensure the shift lever is fully in PARK (P) before starting the engine. Your vehicle has an automatic transmission shift lock control system. You must have your foot on the regular brakes before you can shift from PARK (P) when the ignition key is in ON. The vehicle will not shift from PARK (P) if the button is pressed before the brake is applied. If you cannot shift out of PARK (P), ease pressure on the shift lever, push the shift lever all the way into PARK (P), and release the shift lever button as you maintain brake application. Then press the shift lever button and move the shift lever into the desired gear. See *Shifting Out of Park (P) (Automatic Transmission) on page 2-25*.

**REVERSE (R):** Use this gear to back up.

***Notice:*** **Shifting to REVERSE (R) while your vehicle is moving forward could damage the transmission. The repairs would not be covered by your warranty. Shift to REVERSE (R) only after your vehicle is stopped.**

To rock your vehicle back and forth to get out of snow, ice or sand without damaging your transmission, see *If Your Vehicle is Stuck in Sand, Mud, Ice or Snow on page 4-28*.



Downloaded from www.Manualslib.com manuals search engine

**NEUTRAL (N):** In this position, your engine does not connect with the wheels. To restart when you are already moving, use NEUTRAL (N) only. Also, use NEUTRAL (N) when your vehicle is being towed.

**⚠ CAUTION:**

**Shifting into a drive gear while your engine is running at high speed is dangerous. Unless your foot is firmly on the brake pedal, your vehicle could move very rapidly. You could lose control and hit people or objects. Do not shift into a drive gear while your engine is running at high speed.**

***Notice:*** **Shifting out of PARK (P) or NEUTRAL (N) with the engine running at high speed may damage the transmission. The repairs would not be covered by your warranty. Be sure the engine is not running at high speed when shifting your vehicle.**

**DRIVE (D):** This is the most effective position for normal or freeway driving. This position gives maximum fuel efficiency, as the transmission can choose the appropriate gear (1 through 4) for the existing load and driving conditions.

**THIRD (3):** This position is also used for normal driving. However, it offers more power and lower fuel economy than DRIVE (D). Here are some times you might choose THIRD (3) instead of DRIVE (D):

- When driving on hilly, winding roads.
- When towing a trailer, so there is less shifting between gears.
- When going down a steep hill.

**SECOND (2):** This position gives you more power but lower fuel economy than THIRD (3). You can use SECOND (2) on hills. It can help control your speed as you go down steep mountain roads, but then you would also want to use your brakes off and on.

**FIRST (1):** This position gives you even more power but lower fuel economy than SECOND (2). You can use it on very steep hills, or in deep snow or mud. If the shift lever is put in FIRST (1), the transmission will not shift into first gear until the vehicle is going slowly enough.

Remember to move the shift lever back to DRIVE (D) so that the transmission again upshifts into higher gears. Even though the shift lever may be in FIRST (1), the transmission does not select first gear until vehicle speed is less that 35 mph (56 km/h).



Downloaded from www.Manualslib.com manuals search engine

## Manual Transmission Operation

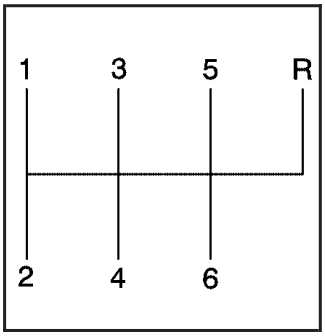


This is the shift pattern for the six-speed manual transmission.

Here is how to operate your transmission:

**FIRST (1):** Press the clutch pedal and shift into FIRST (1). Then slowly let up on the clutch pedal as you press the accelerator pedal.

You can shift into FIRST (1) when you are going less than 40 mph (64 km/h). If you come to a complete stop and it is hard to shift into FIRST (1), put the shift lever in NEUTRAL and let up on the clutch. Press the clutch pedal back down. Then shift into FIRST (1).

**SECOND (2):** Press the clutch pedal as you let up on the accelerator pedal and shift into SECOND (2). Then, slowly let up on the clutch pedal as you press the accelerator pedal.

**THIRD (3), FOURTH (4), FIFTH (5) and SIXTH (6):** Shift into THIRD (3), FOURTH (4), FIFTH (5) and SIXTH (6) the same way you do for SECOND (2). Slowly let up on the clutch pedal as you press the accelerator pedal.

To stop, let up on the accelerator pedal and press the brake pedal. Just before the vehicle stops, press the clutch pedal and the brake pedal, and shift to NEUTRAL.

**NEUTRAL:** Use this position when you start or idle your engine. Your shift lever is in NEUTRAL when it is centered in the shift pattern, not in any gear.

**REVERSE (R):** To back up, press down the clutch pedal and shift into REVERSE (R). Apply pressure to get the lever past FIFTH (5) and SIXTH (6) into REVERSE (R). Let up on the clutch pedal slowly while pressing the accelerator pedal.



Downloaded from www.Manualslib.com manuals search engine

## Shift Speeds

**⚠ CAUTION:**

**If you skip a gear when you downshift, you could lose control of your vehicle. You could injure yourself or others. Do not shift down more than one gear at a time when you downshift.**

This chart shows when to shift to the next gear for the best fuel economy.

### Manual Transmission Recommended Shift Speeds

| 1 to 2 | 2 to 3 | 3 to 4 | 4 to 5 | 5 to 6 |
|---|---|---|---|---|
| 16 mph (25 km/h) | 22 mph (35 km/h) | 30 mph (48 km/h) | 40 mph (65 km/h) | 50 mph (80 km/h) |

If your speed drops below 20 mph (32 km/h), or if the engine is not running smoothly, you should downshift to the next lower gear.

## One to Four Shift Light (Manual Transmission)

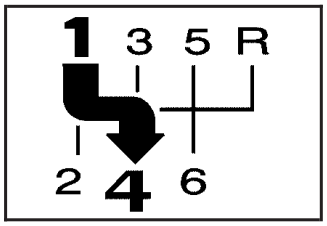


**Trip Computer**

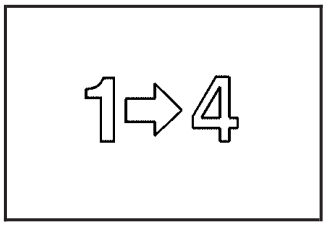


**Instrument Panel Cluster**

When this light comes on, you can only shift from FIRST (1) to FOURTH (4) instead of FIRST (1) to SECOND (2). The light will be displayed on the instrument panel cluster and a message will be displayed on the trip computer.

You must complete the shift into FOURTH (4) to turn off this feature. This helps you get the best possible fuel economy.



Downloaded from www.Manualslib.com manuals search engine

After shifting to FOURTH (4), you may downshift to a lower gear if you prefer.

***Notice:*** **Forcing the shift lever into any gear except FOURTH (4) when the 1 TO 4 SHIFT light comes on may damage the transmission. Shift only from FIRST (1) to FOURTH (4) when the light comes on.**

This light will come on when:

- The engine coolant temperature is higher than 169°F (76°C),
- you are going 15 to 19 mph (24 to 31 km/h) and
- you are 21 percent throttle or less.

See *One-to-Four Shift Light (Manual Transmission) on page 3-26* and *Trip Computer on page 3-33* for more information.

## Parking Brake

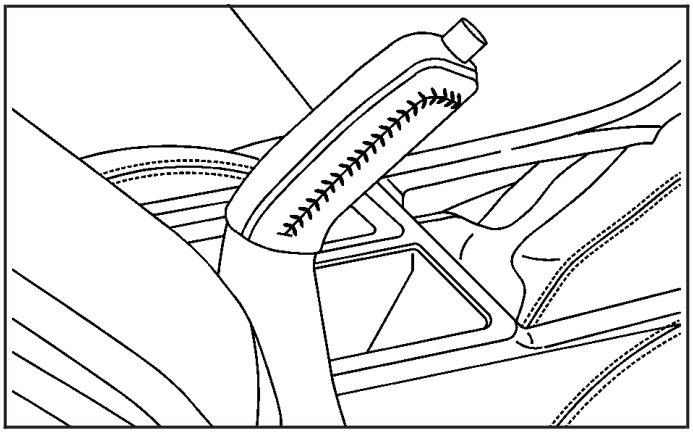

To set the parking brake, pull up on the parking brake handle without pressing the release button. If the ignition is on, the brake system warning light will come on. See *Brake System Warning Light on page 3-27*.

To release the parking brake, hold the regular brake pedal down. Pull the parking brake handle up until you can press the release button. Hold the release button in as you move the brake handle all the way down.

***Notice:*** **Driving with the parking brake on can overheat the brake system and cause premature wear or damage to brake system parts. Verify that the parking brake is fully released and the brake warning light is off before driving.**



Downloaded from www.Manualslib.com manuals search engine

## Shifting Into Park (P) (Automatic Transmission)

**⚠ CAUTION:**

**It can be dangerous to get out of your vehicle if the shift lever is not fully in PARK (P) with the parking brake firmly set. Your vehicle can roll. If you have left the engine running, the vehicle can move suddenly. You or others could be injured. To be sure your vehicle will not move, even when you are on fairly level ground, use the steps that follow. If you are pulling a trailer, see *Towing a Trailer on page 4-34*.**

1. Hold the brake pedal down with your right foot and set the parking brake.
2. Move the shift lever into PARK (P).
   - Press in and hold the shift lever button, located on the top of the shift lever.
   - Push the lever all the way toward the front of the vehicle.
3. Turn the ignition key to LOCK.
4. Remove the key and take it with you. If you can leave your vehicle with the ignition key in your hand, your vehicle is in PARK (P).

## Leaving Your Vehicle With the Engine Running (Automatic Transmission)

**⚠ CAUTION:**

**It can be dangerous to leave your vehicle with the engine running. Your vehicle could move suddenly if the shift lever is not fully in PARK (P) with the parking brake firmly set. And, if you leave the vehicle with the engine running, it could overheat and even catch fire. You or others could be injured. Do not leave your vehicle with the engine running.**

If you have to leave your vehicle with the engine running, be sure the vehicle is in PARK (P) and the parking brake is firmly set before you leave it.
After you have moved the shift lever into PARK (P), hold the regular brake pedal down. Then, see if you can move the shift lever away from PARK (P), without first pushing the shift lever button. If you can, it means that the shift lever was not fully locked into PARK (P).



Downloaded from www.Manualslib.com manuals search engine

## Torque Lock (Automatic Transmission)

If you are parking on a hill and you do not shift your transmission into PARK (P) properly, the weight of the vehicle may put too much force on the parking pawl in the transmission. You may find it difficult to move the shift lever out of PARK (P). This is called torque lock. To prevent torque lock, set the parking brake and then shift into PARK (P) properly before you leave the driver's seat. To find out how, see *Shifting Into Park (P) (Automatic Transmission) on page 2-24*.

When you are ready to drive, move the shift lever out of PARK (P) before you release the parking brake.

If torque lock does occur, you may need to have another vehicle push your vehicle uphill. This should take some of the pressure from the parking pawl in the transmission, so you can move the shift lever out of PARK (P).

## Shifting Out of Park (P) (Automatic Transmission)

Your vehicle has an automatic transmission shift lock control system. You must fully apply your regular brakes before you can press the button on the shift lever to shift from PARK (P) while the ignition is ON. See *Automatic Transmission Operation on page 2-18*.

If you cannot shift out of PARK (P), ease pressure on the shift lever by pushing it all the way into PARK (P) while keeping the brake pedal down. Release the shift lever button. Then move the shift lever out of PARK (P), being sure to press the shift lever button.

## Shift Lock Release

If you ever hold the brake pedal down but still cannot shift out of PARK (P), try this:

1. Turn the ignition to LOCK to remove the key.
2. Remove the front console rubber insert, located in front of the shift lever, by lifting upwards.
3. Remove the screw slightly to the right of the front center.
4. Open the console storage compartment and pry the console cover assembly from the console. The cover is attached in six places.
5. Insert a tool into the opening in front of the shift lever and move the yellow release lever forward.
6. Press the button on the shift lever to move lever out of park.
7. Replace the console cap.
8. Have the vehicle fixed as soon as possible.



Downloaded from www.Manualslib.com manuals search engine

## Parking Over Things That Burn

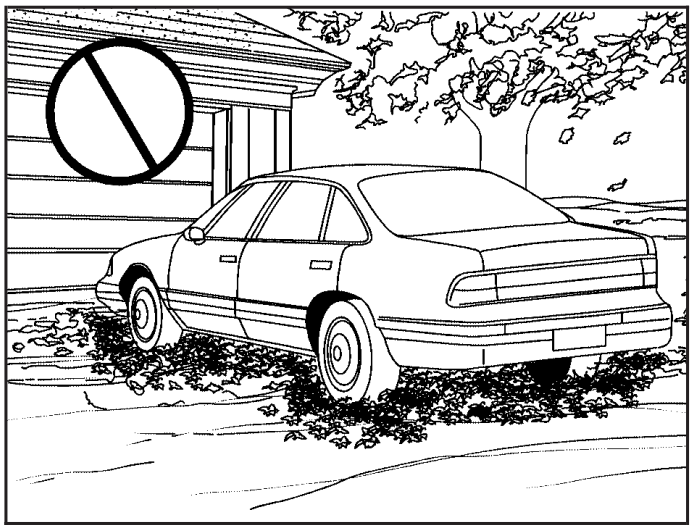

**⚠ CAUTION:**

**Things that can burn could touch hot exhaust parts under your vehicle and ignite. Do not park over papers, leaves, dry grass or other things that can burn.**

## Engine Exhaust

**⚠ CAUTION:**

**Engine exhaust can kill. It contains the gas carbon monoxide (CO), which you cannot see or smell. It can cause unconsciousness and death.**

**You might have exhaust coming in if:**

- **Your exhaust system sounds strange or different.**
- **Your vehicle gets rusty underneath.**
- **Your vehicle was damaged in a collision.**
- **Your vehicle was damaged when driving over high points on the road or over road debris.**
- **Repairs were not done correctly.**
- **Your vehicle or exhaust system had been modified improperly.**

**If you ever suspect exhaust is coming into your vehicle:**

- **Drive it only with all the windows down to blow out any CO; and**
- **Have your vehicle fixed immediately.**



Downloaded from www.Manualslib.com manuals search engine

## Running the Engine While Parked

It is better not to park with the engine running. But if you ever have to, here are some things to know.

**⚠ CAUTION:**

**Idling the engine with the climate control system off could allow dangerous exhaust into your vehicle. See the earlier caution under *Engine Exhaust on page 2-26*.**

**Also, idling in a closed-in place can let deadly carbon monoxide (CO) into your vehicle even if the climate control fan is at the highest setting. One place this can happen is a garage. Exhaust — with CO — can come in easily. NEVER park in a garage with the engine running.**

**Another closed-in place can be a blizzard. See *Winter Driving on page 4-24*.**

**⚠ CAUTION:**

**It can be dangerous to get out of your vehicle if the shift lever is not fully in PARK (P) with the parking brake firmly set. Your vehicle can roll. Do not leave your vehicle when the engine is running unless you have to. If you have left the engine running, the vehicle can move suddenly. You or others could be injured. To be sure your vehicle will not move, even when you are on fairly level ground, always set your parking brake and move the shift lever to PARK (P).**

Follow the proper steps to be sure your vehicle will not move. See *Shifting Into Park (P) (Automatic Transmission) on page 2-24*.



Downloaded from www.Manualslib.com manuals search engine

# Mirrors

## Manual Rearview Mirror

The mirror can be adjusted two ways. First, to adjust the height of the mirror, adjust the arm that connects the mirror to the windshield. Second, adjust the angle of the mirror by moving the mirror to a position that allows you to see out of the back window.

To reduce glare from headlamps behind you, move the lever toward you to the night position. To return the mirror to the daytime position, move the lever away from you.

## Outside Power Mirrors

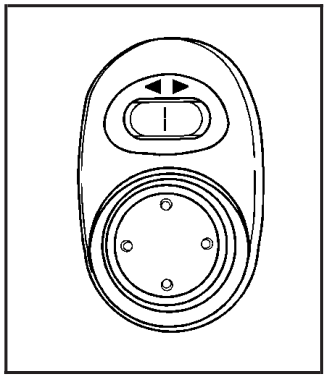

The controls for the power mirrors are located on the driver's door armrest.

You can adjust the angle of the mirrors when the ignition is on.

Move the selector switch located above the four-way control pad to choose the right or left mirror. To adjust a mirror, use the four-way control pad to move the mirror in the direction that you want it to go.

## Outside Convex Mirror

Your passenger's side mirror is convex. A convex mirror's surface is curved so you can see more from the driver's seat.

**⚠ CAUTION:**

**A convex mirror can make things (like other vehicles) look farther away than they really are. If you cut too sharply into the right lane, you could hit a vehicle on your right. Check your inside mirror or glance over your shoulder before changing lanes.**



Downloaded from www.Manualslib.com manuals search engine

# Storage Areas

## Glove Box

Use the glovebox key to lock and unlock the glovebox. For security, the master key is designed not to operate the glovebox lock. See *Keys on page 2-2*.

To lock, insert the key, turn clockwise and then remove. To unlock, insert the key and turn counterclockwise and remove.

To open, pull the handle to the left and pull the glove box door down until it stops and is fully open.

## Cupholder(s)

The two cupholders are located in front of the center console storage area.

## Front Storage Area

There is one storage compartment located under the audio system and one located in the rear of the center console. Push the cover once to open them.

An open bin is also provided under the front storage compartment.

## Center Console Storage Area

Your vehicle has a center console storage area. To open the storage area, pull up on the latch at the front edge of the cover.



Downloaded from www.Manualslib.com manuals search engine

## Vehicle Personalization

The vehicle personalization mode enables the driver to customize some of the vehicle features using the trip computer buttons and instrument panel center display. Only features that are equipped on the vehicle will be displayed.

The following list shows features that can be reset or customized:

- RESTORE TO FACTORY SETTINGS
- UNDERSPEED CHIME
- DIST (Distance) TO ARRIVAL DISPLAY
- DIST (Distance) TO ARRIVAL DEFAULT
- TRIP COMPUTER A & B
- DIGITAL SPEEDO (Speedometer)
- REST REMINDER
- STOP WATCH
- RADIO DISPLAY
- CONFIRMATION BEEPS
- SPEED–DEPENDENT VOLUME
- AUDIO DISTORTION LIMITER
- HEADLIGHTS OFF DELAY TIME
- HEADLIGHTS APPROACH TIME
- AUTO HEADLIGHTS SENSITIVITY
- COURTESY LAMP TIMEOUT
- IGNITION OFF COURTESY LAMP
- TWO STAGE UNLOCK
- AUTO LOCK IN DRIVE (Automatic Transmission Only)
- DOOR LOCK INDICATION



Downloaded from www.Manualslib.com manuals search engine

## Entering Programming Mode

The vehicle programming mode is accessed through the Options Menu. To access the Options Menu, do one of the following:

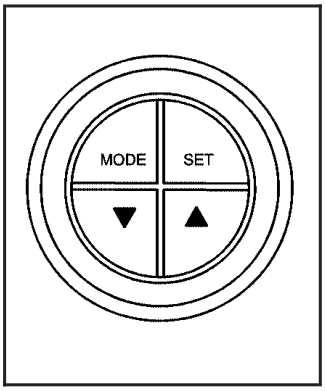


- When the vehicle is stopped, hold down the MODE button while turning the ignition from LOCK to ON. The MODE button is located on the instrument panel, to the right of the instrument panel cluster. The Options Menu will then display.
- When the vehicle has been started, the system check completed, and the vehicle speed is less than 6 mph (10 km/h), the Options Menu will display for three seconds.

  If the vehicle speed exceeds 6 mph (10 km/h), the Options Menu will disappear, and the display will return to the previous trip computer function.

The programming mode is not accessible if an alarm warning has been activated or a warning symbol on the instrument panel cluster has been triggered.

▼ ▲ **(Programming Mode Selection):** When the Options Menu is displayed, use the trip computer up or down arrows to enter the programming mode.

There are help screens available to assist you in understanding the feature that you are adjusting. If a menu item is selected and the screen is left for more than five seconds before making a selection, a help screen displays to inform you how to operate the selected feature.



Downloaded from www.Manualslib.com manuals search engine

## Navigating the Menu

To scroll through the different personalization features, press the MODE button. To change the setting, use the up or down arrows. To continue, press the MODE button.

The following information shows how to reset or customize features after entering the main menu:

## RESTORE TO FACTORY SETTINGS

This option restores the instrument panel, audio system, and other general vehicle systems to the factory default settings. Use the up or down arrows to select Yes or No. The default selection is No. If Yes is selected, the next feature will be displayed after a two second delay. This delay is to allow time for the default parameters to be set. Press the MODE button to continue.

## UNDERSPEED CHIME

This option is used to enable or disable the underspeed chime. Overspeed provides a chime when your vehicle's travelling speed exceeds the overspeed chosen value, whereas underspeed provides an additional chime to indicate when your vehicle's travelling speed drops below the overspeed. Use the up or down arrows to select Yes or No. The default selection is No. If Yes is selected, the underspeed chime is activated. Press the MODE button to continue. See "O/SPEED (Overspeed)" under *Trip Computer on page 3-33* for more information.

## DIST (Distance) TO ARRIVAL DISPLAY

This option is used to enable or disable the Time to Arrival/Distance to Arrival/Remaining Fuel set of displays. Use the up or down arrows to select Yes or No. The default selection is No. If Yes is selected, the Time to Arrival/Distance to Arrival/Remaining Fuel set of displays is activated. Press the MODE button to continue.



Downloaded from www.Manualslib.com manuals search engine

## DIST (Distance) TO ARRIVAL DEFAULT

This option displays only if the DIST TO ARRIVAL DISPLAY is set to Yes. The Distance to Arrival, can be reset, when not in personalization mode, by pressing the SET button for less than two seconds. The distance resets to 300 miles (500 km), which is the default setting. When in personalization mode, the default setting can be increased or decreased by tapping the up or down arrows. When the desired distance is set, press the MODE button to continue.

## TRIP COMPUTER A & B

This option is used to select either one or two Trip Time/Trip Distance/Fuel Used set of displays. Use the up or down arrows to select Trip A or Trip A & B. The default selection is Trip A. Press the MODE button to continue.

## DIGITAL SPEEDO (Speedometer)

This option allows you to turn on a digital speedometer that will appear on the center display. Use the up or down arrows to select Yes or No. The default selection is Yes. Press the MODE button to continue.

## REST REMINDER

This option is to alert the driver that they may have been travelling for too long without a break. Use the up or down arrows to select No or Yes. The default selection is Yes. Press the MODE button to continue.

## STOP WATCH

This option is used to enable or disable the Stop Watch display. Use the up or down arrows to select Yes or No. The default selection is No. If Yes is selected, the Stop Watch display is activated. Press the MODE button to continue.

## RADIO DISPLAY

This option is used to enable or disable the audio system display on the instrument panel cluster. Detailed information on the operation of the radio and CD is provided in the audio section. Use the up or down arrows to select On or Off. The default selection is On. If On is selected, the Radio display is activated. Press the MODE button to continue. See *Radio with Six-Disc CD on page 3-46*.



Downloaded from www.Manualslib.com manuals search engine

## CONFIRMATION BEEPS

This option is used to enable or disable the audio system confirmation beeps function. This function is explained further in the audio section. The audio system option level fitted to your vehicle determines the menu choices available. Use the up or down arrows to select Beeps On, CD Load & Eject Only, or Beeps Off. The default selection is On. If On is selected, the audio system confirmation beeps function is activated. Press the MODE button to continue. See *Radio with Six-Disc CD on page 3-46*.

## SPEED-DEPENDENT VOLUME

This option is used to enable or disable the audio system speed–dependent volume function. This function is explained further in the audio section. Use the up or down arrows to adjust the setting to Off, 1, 2, 3, 4, or Max (maximum). The default selection is 2. Press the MODE button to continue. See *Radio with Six-Disc CD on page 3-46*.

## AUDIO DISTORTION LIMITER

This option is used to enable or disable the audio system distortion limiting function. This function is explained further in the audio section. Use the up or down arrows to select On or Off. The default selection is On. If On is selected, the audio distortion limiting function is activated. Press the MODE button to continue. See *Radio with Six-Disc CD on page 3-46*.

## HEADLIGHTS OFF DELAY TIME

This option is used to adjust the headlights off delay time. Use the up or down arrows to adjust the delay setting between zero and 180 seconds. The default selection is one second. Press the MODE button to continue.

## HEADLIGHTS APPROACH TIME

This option is used to adjust the headlights approach time. Use the up or down arrows to adjust the delay setting between zero and 90 seconds. The default selection is 30 seconds. Press the MODE button to continue. See *Headlamps on page 3-13*.



Downloaded from www.Manualslib.com manuals search engine

## AUTO HEADLIGHTS SENSITIVITY

This option is used to adjust the automatic headlights on sensitivity. Use the up or down arrows to adjust the sensitivity setting to Early, Normal, or Late. The default selection is Normal. Press the MODE button to continue. See *Headlamps on page 3-13*.

## COURTESY LAMP TIMEOUT

This option is used to adjust the length of time that the interior courtesy lamp remains illuminated after opening a door or unlocking the vehicle at night. Use the up or down arrows to adjust the time setting between zero and 255 seconds. The default selection is 30 seconds. Press the MODE button to continue.

## IGNITION OFF COURTESY LAMP

This option is used to adjust the length of time that the interior courtesy lamp remains illuminated after the ignition is turned off, at night only. Use the up or down arrows to adjust the time setting between zero and 255 seconds. The default selection is 30 seconds. Press the MODE button to continue.

## TWO STAGE UNLOCK

This option is used to enable or disable the two stage door unlock function. Use the up or down arrows to select Yes or No. The default selection is Yes. If Yes is selected, the Two Stage Unlock function is activated. This means that only the driver's door will unlock on the first press of the UNLOCK button on the key. If UNLOCK is pressed and held a second time, or is held down for more than half a second, all the doors will unlock. If No is selected, all of the doors will unlock on the first press of the UNLOCK button. See *Remote Keyless Entry System Operation on page 2-5* for more information.

## AUTO LOCK IN DRIVE (Automatic Transmission Only)

This option is used to enable or disable the automatic door locking when in Drive function. Use the up or down arrows to select Yes or No. The default selection is Yes. If Yes is selected, the Auto Lock In Drive function is activated. This means that the doors will automatically lock when the shift lever is moved out of PARK (P). If No is selected, the doors will not automatically lock. Press the MODE button to continue. See *Programmable Automatic Door Locks on page 2-8* for more information.



Downloaded from www.Manualslib.com manuals search engine

## DOOR LOCK INDICATION

This option is used to select the type of indication provided to the driver upon locking and unlocking the vehicle's doors. Use the up or down arrows to select Indicators or Indicators & Horn. The default selection is Indicators. Press the MODE button to continue. See *Remote Keyless Entry System Operation on page 2-5* and *Door Locks on page 2-7* for more information.

## EXIT OPTIONS MENU

This option is used to either exit the personalization mode options menu or to return to the start of the options menu. Use the up or down arrows to select Yes or No. If Yes is selected, the trip computer exits calibration mode and returns to the previous trip computer display. If No is selected, the menu returns to the start of the options menu, RESTORE TO FACTORY SETTINGS display. Press the MODE button to continue.

## Exiting Programming Mode

To exit, do one of the following:

- Press the MODE button to scroll through to the exit screen.
- Drive the vehicle at more than 6 mph (10 km/h).
- Turn the ignition to LOCK if the vehicle is stopped.



Downloaded from www.Manualslib.com manuals search engine

# Section 3 Instrument Panel

**Instrument Panel Overview** .....3-4
Hazard Warning Flashers .....3-6
Other Warning Devices .....3-6
Horn .....3-6
Tilt Wheel .....3-6
Turn Signal/Multifunction Lever .....3-7
Turn and Lane-Change Signals .....3-8
Headlamp High/Low-Beam Changer .....3-8
Flash-to-Pass .....3-9
Windshield Wipers .....3-9
Windshield Washer .....3-10
Cruise Control .....3-10
Exterior Lamps .....3-13
Headlamps .....3-13
Daytime Running Lamps (DRL) .....3-14
Automatic Headlamp System .....3-14
Fog Lamps .....3-15
Instrument Panel Brightness .....3-15
Courtesy Lamps .....3-15
Dome Lamp .....3-16
Entry Lighting .....3-16
Front Reading Lamps .....3-16
Trunk Lamp .....3-16
Battery Run-Down Protection .....3-16
Accessory Power Outlets .....3-17
Ashtrays and Cigarette Lighter .....3-18

**Climate Controls** .....3-19
Climate Control System .....3-19
Outlet Adjustment .....3-21

**Warning Lights, Gages, and Indicators** .....3-22
Instrument Panel Cluster .....3-23
Speedometer .....3-24
Tachometer .....3-24
Safety Belt Reminder Light .....3-24
Airbag Readiness Light .....3-25
Charging System Light .....3-26
One-to-Four Shift Light
(Manual Transmission) .....3-26
Brake System Warning Light .....3-27
Anti-Lock Brake System Warning Light .....3-27
Engine Coolant Temperature Gage .....3-28
Malfunction Indicator Lamp .....3-28
Security Light .....3-31
Fog Lamp Light .....3-31
Highbeam On Light .....3-31
Daytime Running Lamps (DRL)
Indicator Light .....3-32
Fuel Gage .....3-32

**Trip Computer** .....3-33



Downloaded from www.Manualslib.com manuals search engine

# Section 3 Instrument Panel

**Audio System(s)** .....3-45
Setting the Time .....3-45
Radio with Six-Disc CD .....3-46
Theft-Deterrent Feature .....3-55
Audio Steering Wheel Controls .....3-56
Radio Reception .....3-57
Care of Your CDs .....3-57
Care of the CD Player .....3-57
Backglass Antenna .....3-58



Downloaded from www.Manualslib.com manuals search engine

## ✍ NOTES



Downloaded from www.Manualslib.com manuals search engine

# Instrument Panel Overview

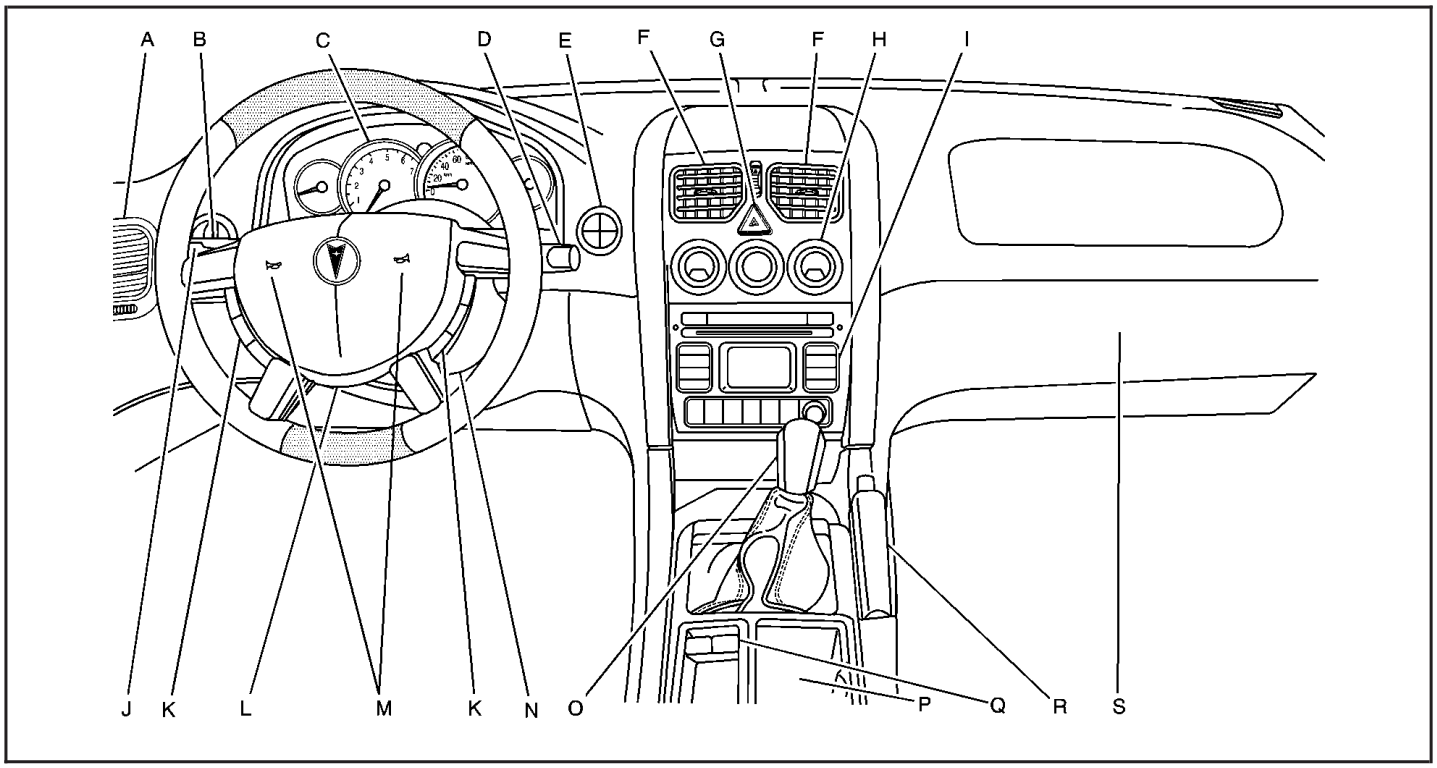




Downloaded from www.Manualslib.com manuals search engine

The main components of the instrument panel are the following:

A. Side Outlets. See *Outlet Adjustment on page 3-21*.

B. Exterior Lamp Controls. See *Instrument Panel Brightness on page 3-15* and *Exterior Lamps on page 3-13*.

C. Instrument Panel Cluster. See *Instrument Panel Cluster on page 3-23*.

D. Windshield Wiper Lever. See *Windshield Wipers on page 3-9*.

E. Trip Computer Control. See *Trip Computer on page 3-33*.

F. Outlets. See *Outlet Adjustment on page 3-21*.

G. Hazard Warning Flasher Button. See *Hazard Warning Flashers on page 3-6*.

H. Climate Controls. See *Climate Control System on page 3-19*.

I. Audio System Controls. See *Audio System(s) on page 3-45*.

J. Cruise Control Lever. See *Cruise Control on page 3-10*.

K. Audio Steering Wheel Controls. See *Audio Steering Wheel Controls on page 3-56*.

L. Tilt Wheel. See *Tilt Wheel on page 3-6*.

M. Horn. See *Horn on page 3-6*.

N. Ignition Switch. See *Ignition Positions on page 2-16*.

O. Shift Lever. See *Automatic Transmission Operation on page 2-18* or *Manual Transmission Operation on page 2-21*.

P. Cupholders. See *Cupholder(s) on page 2-29*.

Q. Power Window Switches. See *Power Windows on page 2-12*.

R. Parking Brake. See *Parking Brake on page 2-23*.

S. Glove Box. See *Glove Box on page 2-29*.



Downloaded from www.Manualslib.com manuals search engine

## Hazard Warning Flashers

Your hazard warning flashers let you warn others. They also let police know you have a problem. Your front and rear turn signal lamps will flash on and off.

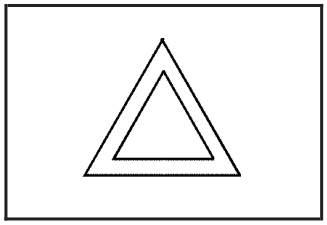

The hazard warning flasher button is located near the center of the instrument panel.

Your hazard warning flashers work no matter what position your key is in, and even if the key is not in.

Press the button to make the front and rear turn signal lamps flash on and off. Press the button again to turn the flashers off.

When the hazard warning flashers are on, your turn signals will not work.

## Other Warning Devices

If you carry reflective triangles, you can set them up at the side of the road about 300 feet (100 m) behind your vehicle.

## Horn

Press near or on the horn symbols on your steering wheel pad to sound the horn.

## Tilt Wheel

A tilt wheel allows you to adjust the steering wheel before you drive. You can raise the steering wheel to the highest level to give your legs more room when you enter and exit the vehicle.

The lever that allows you to tilt the steering wheel is located under the steering column.



Downloaded from www.Manualslib.com manuals search engine

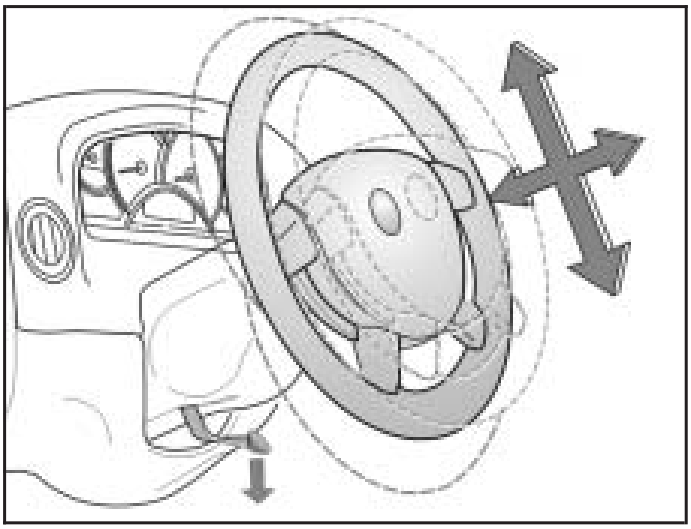

To tilt the wheel, pull the lever down. Then move the wheel to a comfortable position and release the lever to lock the wheel in place.

## Telescopic Steering Column

The steering column also has a telescopic function which allows the steering wheel to move closer or further away from the driver.

## Turn Signal/Multifunction Lever

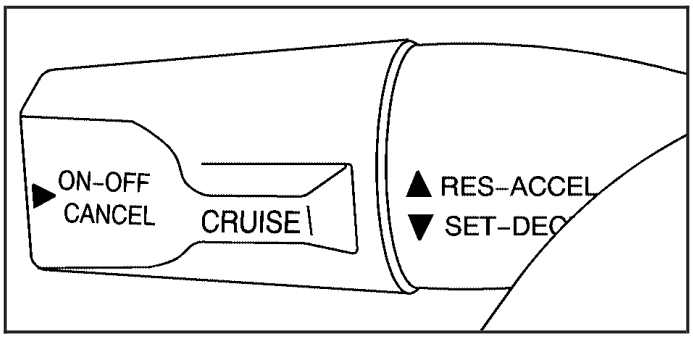


The lever on the left side of the steering column includes the following:

- Turn and Lane-Change Signals. See *Turn Signal/Multifunction Lever on page 3-7*.
- Headlamp High/Low-Beam Changer. See *Headlamp High/Low-Beam Changer on page 3-8*.
- Flash-to-Pass. See *Flash-to-Pass on page 3-9*.
- Cruise Control. See *Cruise Control on page 3-10*.



Downloaded from www.Manualslib.com manuals search engine

## Turn and Lane-Change Signals

To signal a turn, move the lever all the way up to signal right turn and all the way down to signal a left turn. When the turn is finished, the lever will return automatically.

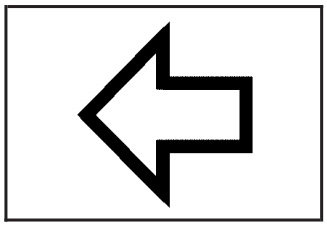

An arrow on the instrument panel cluster will flash in the direction of the turn or lane change.

To signal a lane change, just raise or lower the lever until the arrow starts to flash. Hold it there until you complete your lane change. The lever will return by itself when you release it.

As you signal a turn or a lane change, if the arrows flash rapidly, a signal bulb may be burned out and other drivers won't see your turn signal.

If a bulb is burned out, replace it to help avoid an accident. If the arrows don't go on at all when you signal a turn, check for burned-out bulbs and then check the fuse. See *Fuses and Circuit Breakers on page 5-86*.

## Headlamp High/Low-Beam Changer

To change the headlamps from low beam to high beam with the headlamps on, push the turn signal/multifunction lever away from you. The headlamps will change from low beam to high beam.

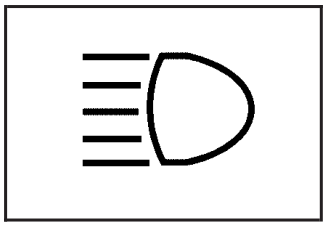

When the high beams are on, a light on the instrument panel cluster also will be on if the ignition is on.

If the fog lamps are on when the high-beam headlamps are activated, the fog lamps will turn off. The fog lamp indicator in the instrument panel cluster will turn off.



Downloaded from www.Manualslib.com manuals search engine

## Flash-to-Pass

This feature lets you use your high-beam headlamps to signal a driver in front of you that you want to pass, even if the headlamps and ignition are turned off.

To use it, pull the turn signal/multifunction lever toward you until the high-beam headlamps come on, then release the lever to turn them off.

If flash-to-pass is activated, then the headlamp high/low-beam changer indicator will display on the instrument panel cluster. The fog lamps are turned off while this feature is active.

## Windshield Wipers

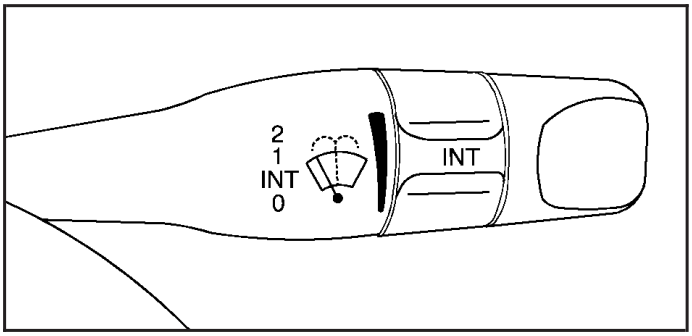


The lever on the right side of the steering column operates the windshield wipers and washer.

These functions operate when the ignition is turned to ON, LOCK, or when the Retained Accessory Power is in operation. See *Retained Accessory Power (RAP) on page 2-17*.

**INT (Intermittent):** Push the lever up to turn on the wipers. Put the lever in the first position for intermittent wiping cycles. The delay will change as your vehicle's speed changes. The delay will decrease as you go faster and increase as you go slower.

**1 (Low Speed):** Put the lever in the second position for slow, steady wiping cycles.

**2 (High Speed):** Put the lever in the third position for rapid wiping cycles.

**(Mist):** Move the lever to this position for a single wiping cycle. Hold it there until the windshield wipers start; then let go. The windshield wipers will stop after one wipe. If you want more wipes, hold the lever down longer.

**0 (Off):** Turn the lever to this position to turn off the wipers.

Be sure to clear ice and snow from the wiper blades before using them. If they're frozen to the windshield, gently loosen or thaw them. If the blades do become damaged, install new blades or blade inserts.

Heavy snow or ice can overload the wiper motor. A circuit breaker will stop the motor until it cools down. Clear away snow or ice to prevent an overload.



Downloaded from www.Manualslib.com manuals search engine

## Windshield Washer

**⚠ CAUTION:**

**In freezing weather, do not use your washer until the windshield is warmed. Otherwise the washer fluid can form ice on the windshield, blocking your vision.**

**(Washer Fluid):** Pull the lever towards you to spray water onto the windshield. Washer fluid will squirt onto the windshield and the wipers will run for a few cycles to clear the windshield.

## Cruise Control

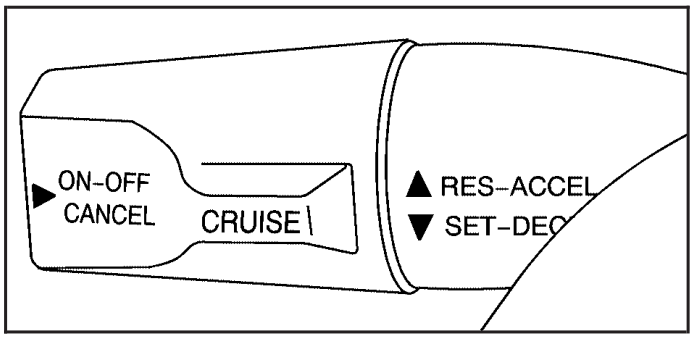


With cruise control, you can maintain a speed without keeping your foot on the accelerator. This can really help on long trips. Cruise control does not work unless the vehicle speed is at least 25 mph (40 km/h). The Driver Information Center (DIC) will display a message when cruise control is enabled. See *Trip Computer on page 3-33*.



Downloaded from www.Manualslib.com manuals search engine

**⚠ CAUTION:**

**Cruise control can be dangerous where you cannot drive safely at a steady speed. So, do not use your cruise control on winding roads or in heavy traffic.**

**Cruise control can be dangerous on slippery roads. On such roads, fast changes in tire traction can cause needless wheel spinning, and you could lose control. Do not use cruise control on slippery roads.**

## Setting Cruise Control

**⚠ CAUTION:**

**If you leave your cruise control on when you are not using cruise, you might hit a button and go into cruise when you do not want to. You could be startled and even lose control. Keep the cruise control switch off until you want to use cruise control.**

The cruise control lever is on the left side of the steering column. The ON-OFF/CANCEL switch is at the end of the lever and is activated by pushing in towards the direction of the steering column.

To set cruise control, do the following:

1. Turn on the ignition.
2. Press the ON-OFF/CANCEL switch. The CRUISE message appears on the trip computer.
3. Get up to the speed you want.
4. Rotate the lever down to SET-DECEL. The CRUISE ACTIVE message appears on the trip computer.
5. Take your foot off the accelerator pedal and release the cruise control lever.

## Adjusting Speed While Using Cruise Control

You may do one of the following:

- Turn the lever down to SET-DECEL until the car slows down to the desired speed, then release it.
- Turn the lever up to RES-ACCEL until the car accelerates up to the desired speed, then release it.

Minor changes in speed can be achieved by momentarily turning the lever up or down. When reducing speed, remember that the cruise control is not designed to operate under 25 mph (40 km/h).



Downloaded from www.Manualslib.com manuals search engine

## Pausing Cruise Control

To pause cruise control, press the brake pedal on either an automatic or manual transmission, or the clutch pedal on a manual transmission, or press the ON-OFF/CANCEL switch once.

This deactivates the cruise control but retains the speed in its memory. The CRUISE ACTIVE message and cruise control symbol on the trip computer will turn off. To regain the memory speed, momentarily turn the lever up to the RES-ACCEL position, provided you are travelling over 25 mph (40 km/h). Holding the lever in the RES-ACCEL position for longer than one second causes the vehicle to accelerate.

## Passing Another Vehicle While Using Cruise Control

Use the accelerator pedal to increase your speed. When you take your foot off the pedal, your vehicle will slow down to the cruise control speed you set earlier.

## Using Cruise Control on Hills

How well your cruise control will work on hills depends upon your speed, load, and the steepness of the hills. When going up steep hills, you may have to step on the accelerator pedal to maintain your speed.

When going downhill, you may have to brake or shift to a lower gear to keep your speed down. Of course, applying the brake takes you out of cruise control. Many drivers find this to be too much trouble and do not use cruise control on steep hills.

## Ending Cruise Control

Pressing the ON-OFF/CANCEL switch once pauses the cruise control but keeps the system ready and the speed in memory.

Press the ON-OFF/CANCEL switch twice to turn off cruise control completely. The cruise control symbol and message will turn off.

A third press turns the system back on to ready, without any speed memory.

Turning off the ignition completely turns off cruise control and wipes the speed memory clear.

Cruise control will be canceled if the Traction Control System (TCS) becomes active. See *Traction Control System (TCS) on page 4-8*.

## Erasing Speed Memory

Pressing the ON-OFF/CANCEL switch twice to turn off the cruise control or turning off the ignition will erase the cruise control set speed memory.



Downloaded from www.Manualslib.com manuals search engine

## Exterior Lamps

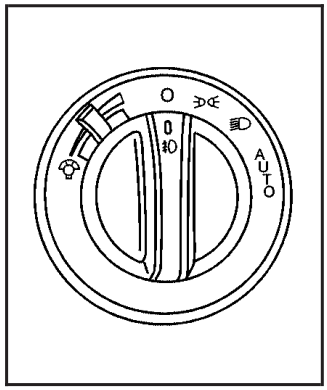


The switch to the left of the steering wheel on the instrument panel controls the following:

**(Parking Lamps):** Turn the switch to this position to turn on the parking lamps, together with the taillamps, sidemarker lamps, license plate lamps, and instrument panel lights.

**(Headlamps):** Turn the switch to this position to turn on the headlamps, together with the parking lamps, taillamps, sidemarker lamps, and license plate lamps.

**AUTO (Automatic Headlamps):** Turn the switch to AUTO to provide for automatic operation of the headlamps, taillamps, sidemarker lamps, and parking lamps. For more information see *Automatic Headlamp System on page 3-14*.

**(Off):** Turn the switch to this position to turn all lamps off.

## Headlamps

When the headlamps are switched on, the instrument panel is automatically illuminated. Once illuminated, you can adjust their brightness. Some illuminated areas of the vehicle have been linked to the brightness control, such as the trip computer, headlamp switch, radio, etc. This means that the interior lights can be adjusted to your preference. When the headlamps are turned off and back on again, the brightness level reverts to the last adjusted setting.

Your vehicle is designed to provide additional security, when returning to the vehicle at night. When the UNLOCK or LOCK button on the key is used, the car's exterior lights will come on for a preset time or until the car is relocked. This feature only works if the headlamp control is in the AUTO or headlamp positions.

To set or adjust the time the headlamps stay on after the UNLOCK button has been pressed, see *Vehicle Personalization on page 2-30*.



Downloaded from www.Manualslib.com manuals search engine

## Daytime Running Lamps (DRL)

Daytime Running Lamps (DRL) can make it easier for others to see the front of your vehicle during the day. DRL can be helpful in many different driving conditions, but they can be especially helpful in the short periods after dawn and before sunset.

The DRL system will make your low-beam headlamps come on at a reduced brightness when the following conditions are met:

- The ignition is on.
- The exterior lamp control is turned to AUTO and the light sensor detects daytime light.
- The exterior lamp control is turned to the off position.
- The parking brake is released.
- For vehicles with automatic transmissions, the shift lever is not in PARK (P).

When the DRL system is on, the taillamps, sidemarker lamps, parking lamps, and instrument panel lights will not be illuminated unless you have turned the exterior lamps control to the parking lamp or headlamp position.

The DRL system will remain off any time your vehicle is in PARK (P) or the parking brake is engaged the first time the ignition is turned on.

As with any vehicle, you should turn on the regular headlamp system when you need it.

## Automatic Headlamp System

When it is dark enough outside, your Automatic Headlamp System will turn on your headlamps at the normal brightness along with other lamps such as the taillamps, sidemarker, parking lamps, and the instrument panel lights. The radio lights will also be dim.

Your vehicle is equipped with a light sensor on the top of the instrument panel under the defroster grill. Make sure it is not covered, which will cause the system to be on whenever the ignition is on.

The system may also be on when driving through a parking garage, heavy overcast weather, or a tunnel. This is normal.

If you start your vehicle in a dark garage, the automatic headlamp system will come on immediately.

As with any vehicle, you should turn on the regular headlamps when you need them.

The headlamps can be set to come on at different levels. The sensitivity can be adjusted to Early, Normal, or Late. See *Vehicle Personalization on page 2-30*.

Leaving the headlamps and parking lamps on when the engine is not running will eventually drain the battery.



Downloaded from www.Manualslib.com manuals search engine

To prevent the battery from draining, the headlamp and parking lamps will turn off when the ignition has been turned off and the driver's door is opened, because the vehicle senses that the driver has forgotten to turn off the lights. The lights stay off until the ignition is again turned on, or the lights are turned back on manually by the headlamp switch. The headlamps can be set to automatically turn off after you have locked the vehicle and walked away. To set or adjust the time delay from when the driver's door is opened to when the lights automatically turn off, see *Vehicle Personalization on page 2-30*. If you wish to have the lights on when leaving the vehicle, wait until they have been automatically turned off, then turn the light control first to off, then to parking lamps or headlamps.

## Fog Lamps

The control to the left of the steering wheel on the instrument panel also controls the fog lamps.

**(Fog Lamp):** When using the fog lamps, the ignition must be on and the parking lamps or the low-beam headlamps. If the high-beam headlamps are activated or flashed, the fog lamps will turn off.

Pull the exterior lamp adjuster control out to turn the fog lamps on, and push the control in to turn the fog lamps off. The indicator light in the knob will come on when the fog lamps are working.

## Instrument Panel Brightness

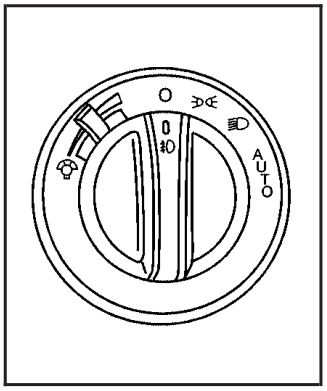


Slide the control to increase or decrease the instrument panel brightness.

## Courtesy Lamps

When a door is open, the courtesy lamps will automatically come on.



Downloaded from www.Manualslib.com manuals search engine

## Dome Lamp

The dome lamp has three positions.

**ON:** In this position, the dome lamp is always on.

**DOOR:** In this position, the light automatically comes on when a door is opened. It will turn off 30 seconds after the last door is closed. If the ignition is turned on, the light turns off immediately unless a door is open.

**OFF:** In this position, the dome lamp is always off, even when a door is opened.

The dome lamp can be set to remain on for a preset amount of time after the ignition has been turned off. See *Vehicle Personalization on page 2-30*.

## Entry Lighting

The entry lighting feature illuminates the interior of the vehicle before you enter. The interior lamps will come on for 40 seconds when you unlock the doors using the remote key buttons. After 40 seconds have elapsed, the interior lamps will turn off. The lamps will turn off before 40 seconds have elapsed if you do either of the following:

- Lock all doors using the remote key buttons.
- Lock the doors manually using the lock knob.

Entry lighting is canceled when any door is opened, but the interior lights will stay on until all doors are closed. The interior lamps may stay on for up to 25 seconds after all doors have been closed if they have not been locked.

## Front Reading Lamps

Your vehicle has reading lamps located in the dome lamp. The lamps can be turned on and off manually by pressing the side of each reading lamp.

## Trunk Lamp

The trunk lamp comes on when you open your trunk.

## Battery Run-Down Protection

Your vehicle has a battery run-down protection feature designed to protect your vehicle's battery.

It will activate when there has been no electrical change for one hour, nothing has been turned on or off, after the ignition has been turned to ON or LOCK.

Once activated, all the interior lamps will turn off including dome, reading, glovebox, trunk.



Downloaded from www.Manualslib.com manuals search engine

The system is turned on if a door is opened, the vehicle is unlocked, or the trunk is opened. Once the system is turned on, the one hour battery protection time resets to zero and the interior lamps will continue to operate for another hour, or until the vehicle is locked.

The interior lamp system will shut down 10 seconds after your vehicle is locked using either the key or the remote key locking system. However, if an interior lamp, such as the dome lamp, has been turned on manually and is on at the time the vehicle is locked, the system will not shut down after the normal 10 seconds. The one hour battery protection will be activated instead.

The vehicle's hazard lights will continue to operate at all times.

## Accessory Control

If you want the accessories to operate once the key has been removed from the ignition, you must turn the system on by either manually starting an accessory, such as turning the radio on again. This will activate a one hour timer that will operate accessories such as the radio, accessory power outlet, and windshield wipers before turning off. These actions will reset the timer to zero. Likewise, if an accessory such as the radio is turned on at any time during the one hour period, the timer is reset to zero and all accessories will continue to operate for another hour. To enable accessory control after the system has been reset, you must turn the ignition on and then off again.

## Accessory Power Outlets

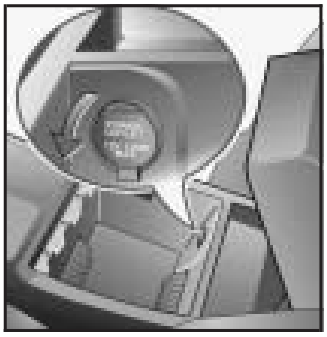

The vehicle has an accessory power outlet which can be used to plug in electrical equipment.

The accessory power outlet is located inside the center console. The power outlet is operational when the ignition is turned to ON, LOCK, or when Retained Accessories Power is in operation. See *Retained Accessory Power (RAP) on page 2-17*.

Remove the tethered cap to use the outlet. When not using the outlet, be sure to cover it with the protective cap.

***Notice:*** **Leaving electrical equipment on for extended periods will drain the battery. Always turn off electrical equipment when not in use and do not plug in equipment that exceeds the maximum amperage rating.**



Downloaded from www.Manualslib.com manuals search engine

Certain electrical accessories may not be compatible with the accessory power outlet and could result in blown vehicle or adapter fuses. If you experience a problem, see your dealer for additional information on accessory power outlets.

***Notice:*** **Adding any electrical equipment to your vehicle may damage it or keep other components from working as they should. The repairs would not be covered by your warranty. Check with your dealer before adding electrical equipment.**

When adding electrical equipment, be sure to follow the proper installation instructions included with the electrical equipment you install.

***Notice:*** **Improper use of the power outlet can cause damage not covered by your warranty. Do not hang any type of accessory or accessory bracket from the plug because the power outlets are designed for accessory power plugs only.**

## Ashtrays and Cigarette Lighter

***Notice:*** **If you put papers, pins, or other flammable items in the ashtray, hot cigarettes or other smoking materials could ignite them and possibly damage your vehicle. Never put flammable items in the ashtray.**

### Ashtray

If your vehicle has this accessory, the front ashtray is located in the center of the instrument panel under the audio controls. The rear ashtray is located at the rear of the center console. To use the ashtray, push the cover inwards and the ashtray will slide open.

To empty the ashtray, open it and grip it at the depressions located on each side. Then pull the ashtray out.

### Cigarette Lighter

***Notice:*** **Holding a cigarette lighter in while it is heating will not allow the lighter to back away from the heating element when it is hot. Damage from overheating may occur to the lighter or heating element, or a fuse could be blown. Do not hold a cigarette lighter in while it is heating.**

If your vehicle has this accessory, the cigarette lighter is located inside the ashtray and can be operated whenever the ignition is turned on.

Press the lighter all the way in and release it. It will pop back out once the element is ready for use.

The cigarette lighter should not be used as an accessory power outlet. Use the accessory power outlet provided in the center console.



Downloaded from www.Manualslib.com manuals search engine

# Climate Controls

## Climate Control System

With this system you can control the heating, cooling, and ventilation for your vehicle.

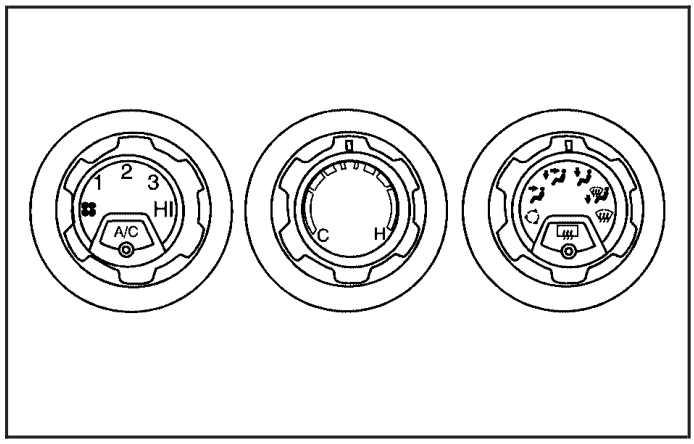


## Operation

To change the current mode, turn the right control to select one of the following:

**(Vent):** This mode directs air to the instrument panel outlets.

**(Bi-Level):** This mode directs the air to the instrument panel outlets and the floor outlets. This position can be used for most winter driving.

**(Floor):** This mode directs the air to the floor outlets.

The right control can also be used to select defog or defrost modes. Information on defogging and defrosting can be found later in this section.

**(Fan):** Turn the left control clockwise or counterclockwise to increase or decrease the fan speed. The fan must be on to run the air-conditioning compressor.

**(Recirculation):** This mode keeps outside air from coming into the vehicle. It can be used to prevent outside air and odors from entering your vehicle or to help heat or cool the air inside your vehicle more quickly. Move the right control to this position to turn recirculation on. Turn the air conditioning on when using recirculation. Recirculation is not recommended for use over long periods of time.

**Temperature Control:** Turn the center control clockwise or counterclockwise to increase or decrease the temperature inside your vehicle.



Downloaded from www.Manualslib.com manuals search engine

**A/C (Air Conditioning):** Press this button on the left dial to turn the air-conditioning system on or off. When A/C is pressed, an indicator light in the button will come on to let you know that air conditioning is activated.

On hot days, open the windows to let hot inside air escape; then close them. This helps to reduce the time it takes for your vehicle to cool down. It also helps the system to operate more efficiently.

For quick cool down on hot days, do the following:

1. Select the vent mode.
2. Select the highest fan speed.
3. Select A/C.
4. Select the coolest temperature.

The air-conditioning system removes moisture from the air, so you may sometimes notice a small amount of water dripping underneath your vehicle while idling or after turning off the engine. This is normal.

## Defogging and Defrosting

Fog on the inside of windows is a result of high humidity (moisture) condensing on the cool window glass. This can be minimized if the climate control system is used properly. There are two modes to choose from to clear fog or frost from your windshield. Use the defog mode to clear the windows of fog or moisture and warm the passengers. Use the defrost mode to remove fog or frost from the windshield more quickly.

Turn the right control to select the defog or defrost modes.

**(Defog):** This mode directs the air to the windshield and to the floor outlets. When you select this mode, the system turns off recirculation automatically. The recirculation mode cannot be selected while in the defog mode. Do not drive the vehicle until all the windows are clear.

To help clear the side windows quickly while using air conditioning, do the following:

1. Select the bi-level mode.
2. Select the highest fan speed.
3. Select A/C.
4. Select the temperature.



Downloaded from www.Manualslib.com manuals search engine

**(Defrost):** This mode directs the air to the windshield. When you select this mode, the system turns off recirculation automatically. The recirculation mode cannot be selected while in the defrost mode. Do not drive the vehicle until the windscreen is clear

To help clear the windscreen quickly, do the following:

1. Select the defrost mode.
2. Select the highest temperature.
3. Select the highest fan speed.
4. Select A/C.

## Rear Window Defogger

The rear window defogger uses a warming grid to remove fog or frost from the rear window.

**(Rear Defogger):** Press this button on the right dial to turn the rear window defogger on or off. An indicator light in the button will come on to let your know that the rear window defogger is activated. Be sure to clear as much snow from the rear window as possible.

The rear window defogger will turn off about 15 minutes after the button is pressed. The defogger can also be turned off by pressing the button again or by turning off the engine.

***Notice:*** **Do not use anything sharp on the inside of the rear window. If you do, you could cut or damage the warming grid, and the repairs would not be covered by your warranty. Do not attach a temporary vehicle license, tape, a decal or anything similar to the defogger grid.**

## Outlet Adjustment

Move the thumbwheel on the vents to change the direction of the airflow. The center thumbwheel adjusts the volume of the airflow.

There are also similar vents for the rear of the vehicle. They are located at the rear of the center console.

## Operation Tips

- Clear away any ice, snow or leaves from the air inlets at the base of the windshield that may block the flow of air into your vehicle.
- Use of non-GM approved hood deflectors may adversely affect performance of the system.
- When an objectionable odor outside the vehicle is encountered, use the recirculation mode, with the temperature knob at a comfortable setting to prevent the odor from entering the vehicle through the ventilation system. This can be helpful when driving through a long tunnel with poor ventilation. However, extended usage of this mode in cold or cool weather can cause window fogging.



Downloaded from www.Manualslib.com manuals search engine

# Warning Lights, Gages, and Indicators

This part describes the warning lights and gages that may be on your vehicle. The pictures will help you locate them.

Warning lights and gages can signal that something is wrong before it becomes serious enough to cause an expensive repair or replacement. Paying attention to your warning lights and gages could also save you or others from injury.

Warning lights come on when there may be or is a problem with one of your vehicle's functions. As you will see in the details on the next few pages, some warning lights come on briefly when you start the engine just to let you know they're working. If you are familiar with this section, you should not be alarmed when this happens.

Gages can indicate when there may be or is a problem with one of your vehicle's functions. Often gages and warning lights work together to let you know when there's a problem with your vehicle.

When one of the warning lights comes on and stays on when you are driving, or when one of the gages shows there may be a problem, check the section that tells you what to do about it. Please follow this manual's advice. Waiting to do repairs can be costly – and even dangerous. So please get to know your warning lights and gages. They're a big help.

Your vehicle also has a trip computer that works along with the warning lights and gages. The trip computer display provides visual information. See *Trip Computer on page 3-33*. The warning message are displayed through the trip computer or as an illuminated symbol or sometimes both ways.

If a Service Error Contact Dealer message appears on the trip computer display while driving, a fault in the instrument panel is indicated. Contact your dealer as soon as possible. This message will remain until the MODE button on the trip computer is pressed.



Downloaded from www.Manualslib.com manuals search engine

## Instrument Panel Cluster

The instrument panel cluster is designed to let you know at a glance how your vehicle is running. You'll know how fast you're going, how much fuel you're using, and many other things you'll need to drive safely and economically.

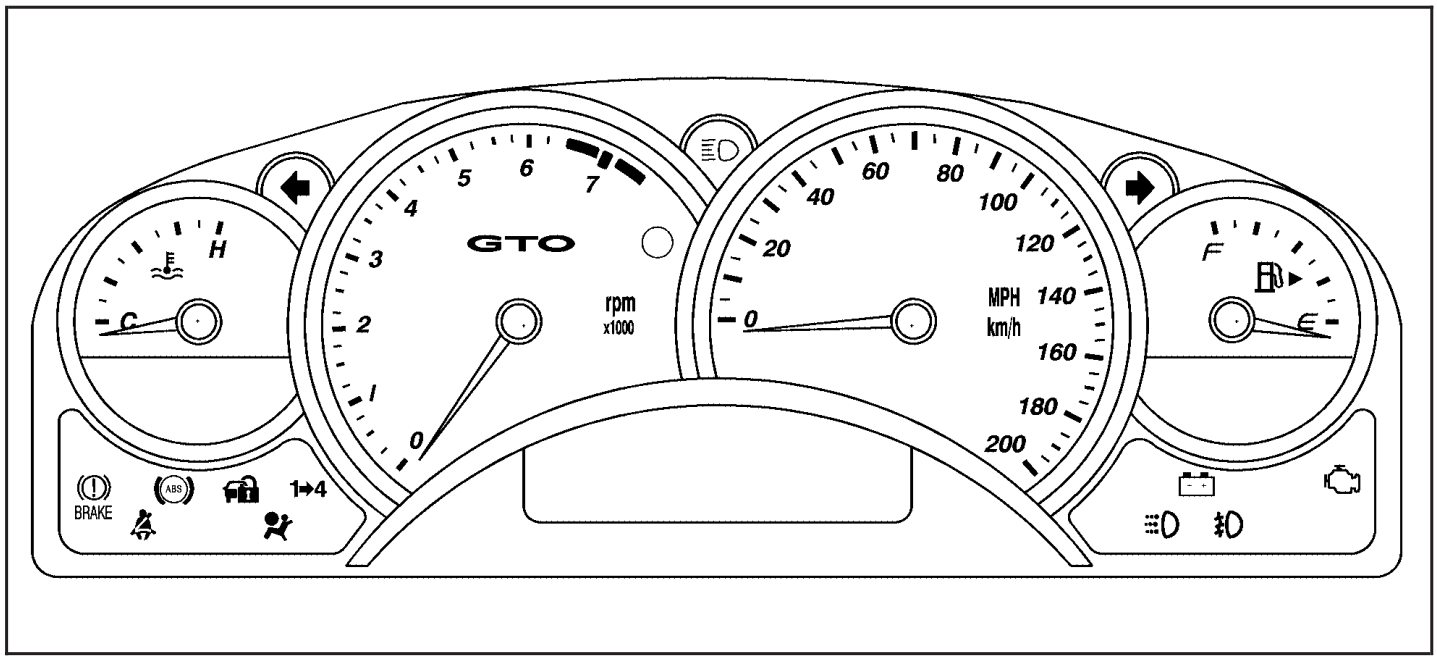




Downloaded from www.Manualslib.com manuals search engine

## Speedometer

The speedometer shows vehicle speed in both miles per hour (mph) and kilometers per hour (km/h).

## Tachometer

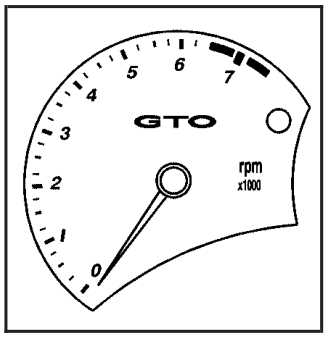


The tachometer shows engine speed in revolutions per minute (rpm).

For automatic transmission vehicle's, under wide open throttle acceleration, when the accelerator pedal is pushed flat to the floor, it is possible that the tachometer needle may briefly enter the lower end of the tachometer's red zone just prior to automatically upshifting into a higher gear. This is normal during wide open throttle acceleration and will not harm the engine.

***Notice:*** **If you operate the engine with the tachometer in the shaded warning area, your vehicle could be damaged, and the damages would not be covered by your warranty. Do not operate the engine with the tachometer in the shaded warning area.**

## Safety Belt Reminder Light

When the key is turned to ON, the safety belt light will come on and stay on for several seconds and a chime will be sounded for eight seconds, then it will flash continuously until the driver's belt is buckled.

If the driver's belt is already buckled, the light will not come on.



Downloaded from www.Manualslib.com manuals search engine

## Airbag Readiness Light

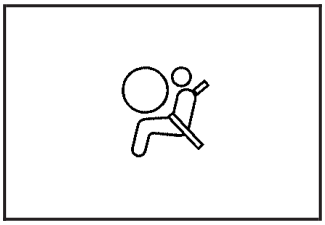

There is an airbag readiness light on the instrument panel which shows the airbag symbol.

This light will come on when you start your vehicle, and it will flash for a few seconds. Then the light should go out. This means the system is ready.

The system checks the airbag's electrical system for malfunctions. The light tells you if there is an electrical problem. The system check includes the airbag sensors, the airbag modules, the wiring and the diagnostic module. See *Airbag System on page 1-44* for more information.

If the airbag readiness light stays on after you start the vehicle or comes on when you are driving, your airbag system may not work properly. Have your vehicle serviced right away. The light comes on after an accident where the airbags were activated.

**⚠ CAUTION:**

**If the airbag readiness light stays on after you start your vehicle, it means the airbag system may not be working properly. The airbags in your vehicle may not inflate in a crash, or they could even inflate without a crash. To help avoid injury to yourself or others, have your vehicle serviced right away if the airbag readiness light stays on after you start your vehicle.**



Downloaded from www.Manualslib.com manuals search engine

## Charging System Light

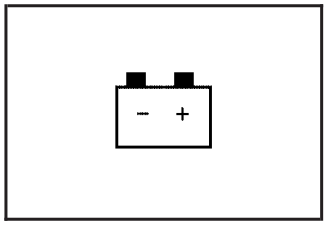


The charging system light will come on when you turn on the ignition, until the engine is started, as a check to show you it is working.

When the engine is running, the light should go out.

If the light illuminates and the Check Alternator message on the trip computer stays on, or comes on while you are driving you may have a problem with the electrical charging system. It could indicate that you have a loose generator drive belt or another electrical problem. Have it checked right away. Driving while this light is on could drain your battery.

If you must drive a short distance with the light on, be certain to turn off all your accessories, such as the radio and air conditioner.

The Check Alternator message will remain until the MODE button on the trip computer is pressed, but the symbol will remain until the problem is fixed.

## One-to-Four Shift Light (Manual Transmission)

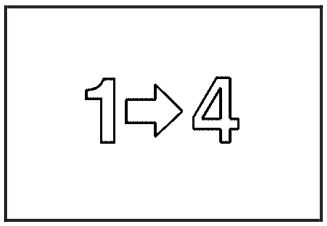


When this light comes on, you can only shift from FIRST (1) to FOURTH (4) instead of FIRST (1) to SECOND (2).

You must complete the shift into FOURTH (4) to turn off this feature. This helps you get the best possible fuel economy.

After shifting to FOURTH (4), you may downshift to a lower gear if you prefer.



Downloaded from www.Manualslib.com manuals search engine

## Brake System Warning Light

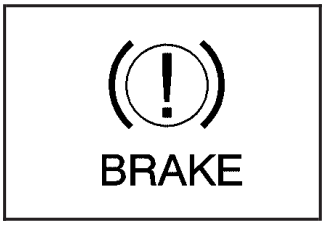


This light will come on when the ignition is turned ON and when the parking brake is applied.

If this light comes on and the Brake message appears on the trip computer display while driving and the parking brake is released, a fault with the brakes is indicated. You should immediately stop the car on the side of the road as carefully as possible. Do not proceed until satisfied that braking is possible or that the cause of the problem has been fixed.

A warning will chime if you attempt to drive off without releasing the parking brake.

The Brake message will remain until the MODE button on the trip computer is pressed, but the symbol will remain until the problem is fixed.

This light will also come on to indicate low brake fluid.

## Anti-Lock Brake System Warning Light

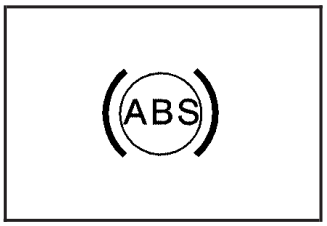


This light will come on briefly when the ignition is turned to ON.

If the light does not come on then, have it fixed so it will be ready to warn you if there is a problem.

If there is a problem with the anti-lock brake system, this light will come on and the ABS Fault message will appear on the trip computer display. See your GM dealer for service. The vehicle's brake system will still operate without ABS.

The ABS Fault message will stay on until the MODE button on the trip computer is pressed, but the light will stay on until the problem is fixed.



Downloaded from www.Manualslib.com manuals search engine

## Engine Coolant Temperature Gage

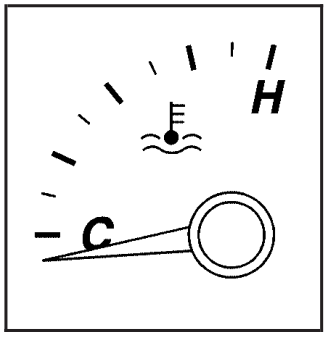


The temperature gage shows the engine coolant temperature when the ignition is on.

If the gage pointer moves into the red area, the light comes on and you hear a chime, your engine is too hot! It means that your engine coolant has overheated.

If you have been operating your vehicle under normal driving conditions, you should pull off the road, stop your vehicle and turn off the engine as soon as possible.

## Malfunction Indicator Lamp

### Check Engine Light

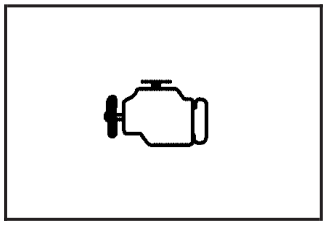

Your vehicle is equipped with a computer which monitors operation of the fuel, ignition, and emission control systems.

This system is called OBD II (On-Board Diagnostics-Second Generation) and is intended to assure that emissions are at acceptable levels for the life of the vehicle, helping to produce a cleaner environment. The check engine light comes on to indicate that there is a problem and service is required. Malfunctions often will be indicated by the system before any problem is apparent. This may prevent more serious damage to your vehicle. This system is also designed to assist your service technician in correctly diagnosing any malfunction.

***Notice:*** **If you keep driving your vehicle with this light on, after awhile, your emission controls may not work as well, your fuel economy may not be as good, and your engine may not run as smoothly. This could lead to costly repairs that may not be covered by your warranty.**



Downloaded from www.Manualslib.com manuals search engine

***Notice:*** **Modifications made to the engine, transmission, exhaust, intake or fuel system of your vehicle or replacement tires that do not match your vehicle's original tires can affect your vehicle's emission controls and may cause this light to come on. Modifications to these systems could lead to costly repairs not covered by your warranty. This may also result in a failure to pass a required Emission Inspection/Maintenance test.**

This light should come on, as a check to show you it is working, when the ignition is on and the engine is not running. If the light does not come on, have it repaired. This light will also come on during a malfunction in one of two ways:

- **Light Flashing** — A misfire condition has been detected. A misfire increases vehicle emissions and may damage the emission control system on your vehicle. Diagnosis and service may be required.
- **Light On Steady** — An emission control system malfunction has been detected on your vehicle. Diagnosis and service may be required.

## If the Light is Flashing

The following may prevent more serious damage to your vehicle:

- Reducing vehicle speed
- Avoiding hard accelerations
- Avoiding steep uphill grades
- If you are towing a trailer, reduce the amount of cargo being hauled as soon as it is possible

If the light stops flashing and remains on steady, see "If the Light Is On Steady" following.

If the light continues to flash, when it is safe to do so, stop the vehicle. Find a safe place to park your vehicle. Turn the key off, wait at least 10 seconds and restart the engine. If the light remains on steady, see "If the Light Is On Steady" following. If the light is still flashing, follow the previous steps, and see your dealer for service as soon as possible.



Downloaded from www.Manualslib.com manuals search engine

## If the Light Is On Steady

You may be able to correct the emission system malfunction by considering the following:

Did you recently put fuel into your vehicle?

If so, reinstall the fuel cap, making sure to fully install the cap. See *Filling the Tank on page 5-8*. The diagnostic system can determine if the fuel cap has been left off or improperly installed. A loose or missing fuel cap will allow fuel to evaporate into the atmosphere. A few driving trips with the cap properly installed should turn the light off.

Did you just drive through a deep puddle of water?

If so, your electrical system may be wet. The condition will usually be corrected when the electrical system dries out. A few driving trips should turn the light off.

Have you recently changed brands of fuel?

If so, be sure to fuel your vehicle with quality fuel. See *Gasoline Octane on page 5-5*. Poor fuel quality will cause your engine not to run as efficiently as designed. You may notice this as stalling after start-up, stalling when you put the vehicle into gear, misfiring, hesitation on acceleration, or stumbling on acceleration. (These conditions may go away once the engine is warmed up.) This will be detected by the system and cause the light to turn on.

If you experience one or more of these conditions, change the fuel brand you use. It will require at least one full tank of the proper fuel to turn the light off.

If none of the above steps have made the light turn off, your dealer can check the vehicle. Your dealer has the proper test equipment and diagnostic tools to fix any mechanical or electrical problems that may have developed.

## Emissions Inspection and Maintenance Programs

Some state/provincial and local governments have or may begin programs to inspect the emission control equipment on your vehicle. Failure to pass this inspection could prevent you from getting a vehicle registration.

Here are some things you need to know to help your vehicle pass an inspection:

Your vehicle will not pass this inspection if the check engine light is on or not working properly.



Downloaded from www.Manualslib.com manuals search engine

Your vehicle will not pass this inspection if the OBD (on-board diagnostic) system determines that critical emission control systems have not been completely diagnosed by the system. The vehicle would be considered not ready for inspection. This can happen if you have recently replaced your battery or if your battery has run down. The diagnostic system is designed to evaluate critical emission control systems during normal driving. This may take several days of routine driving. If you have done this and your vehicle still does not pass the inspection for lack of OBD system readiness, your GM dealer can prepare the vehicle for inspection.

## Security Light

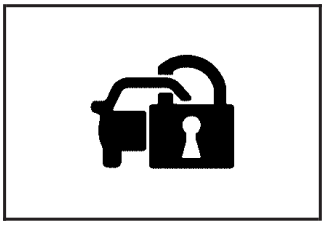

This light flashes when the vehicle security system is activated.

Please see *Theft-Deterrent Systems on page 2-13* for more information.

## Fog Lamp Light

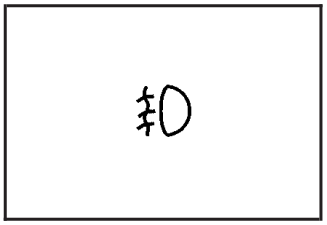

This light will come on when the fog lamps are in use.

The light will go out when the fog lamps are turned off. See *Fog Lamps on page 3-15* for more information.

## Highbeam On Light

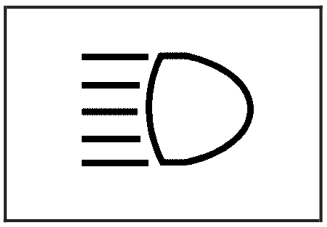

This light will come on when the high-beam headlamps are in use.

See *Headlamp High/Low-Beam Changer on page 3-8*.



Downloaded from www.Manualslib.com manuals search engine

## Daytime Running Lamps (DRL) Indicator Light

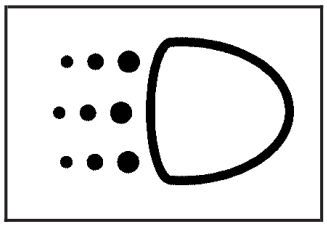

This light will come on when the Daytime Running Lamps (DRL) are activated. See *Daytime Running Lamps (DRL) on page 3-14*.

## Fuel Gage

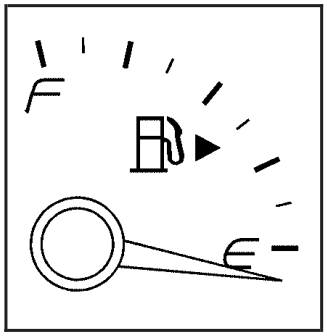


Your fuel gage tells you about how much fuel you have left, when the ignition is on.

When the indicator nears empty, the light will come on and you will hear a chime. You still have a little fuel left, but you should get more soon. If less than two gallons of fuel is added to an empty tank, the gage may take up to 15 minutes to register it.

Here are three things that some owners ask about. None of these show a problem with your fuel gage:

- At the service station, the gas pump shuts off before the gage reads full.
- It takes a little more or less fuel to fill up than the gage indicated. For example, the gage may have indicated the tank was half full, but it actually took a little more or less than half the tank's capacity to fill the tank.
- The gage returns below the empty mark when the ignition is off.



Downloaded from www.Manualslib.com manuals search engine

# Trip Computer

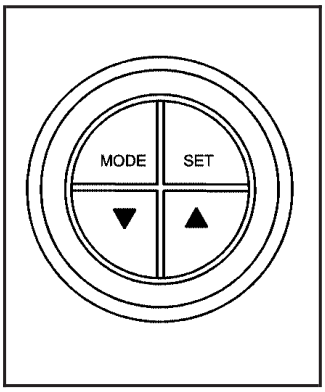


The buttons for the trip computer are located on the instrument panel, to the right of the instrument panel cluster.

The trip computer displays are located directly beneath the instrument panel cluster gages. Speed related information appears in the left display, distance related information appears in the center display, and fuel related information appears in the right display.

The basic, more commonly used functions of the trip computer are shown following. Tap the MODE button to scroll between the different sets of displays.

When the ignition is turned to ON, the trip computer displays the same functions as when the ignition was last turned off.

The trip computer can be reset when AVG SPEED or TRIP TIME are shown on the left display. To reset, press the SET button for less than two seconds. Resetting does not affect the Odometer, Overspeed, Range, Time to Arrival, Distance to Arrival, Instantaneous Fuel, or Fuel Remaining.

Vehicle personalization is available through the trip computer controls and display. See *Vehicle Personalization on page 2-30*.

## AVG (Average) SPEED

This function shows the average speed, while the engine is running, since the trip computer was reset.

## Odometer

This function records miles travelled since the car was built.

## AVG (Average) FUEL

This function shows the average fuel used since the trip computer was reset. After resetting, a high number may initially be shown, due to the short distance travelled and the high fuel used when accelerating.



Downloaded from www.Manualslib.com manuals search engine

## TRIP TIME

This function shows the engine running time since the trip computer was reset. If this exceeds 99 hours and 59 minutes, the trip time is displayed in hours only.

### Trip Distance

This function shows the miles travelled from the start of a particular trip. Reset the reading to zero by pressing and holding the SET button down for eight seconds.

## FUEL USED

This function shows the total gallons or liters of fuel used since the trip computer was reset.

## TIME TO ARRIVAL

This function shows trip time to arrival in hours and minutes, based on distance to arrival. If this exceeds 99 hours and 59 minutes, the time to arrival is displayed in hours only.

### Dist (Distance) to Arrival

At the start of a trip, estimate your distance to arrival. Tap the up or down arrows until the display shows your estimated trip distance. When you drive, the computer constantly updates your time to arrival, based on changing driving speeds. You can use the up or down arrows to adjust the miles (kilometers) any time this display is shown.

## FUEL REMAINING

This function shows the gallons (liters) of fuel left in the fuel tank, rounded to the nearest one gallon (liter). When the fuel level is down to about 2 gallons (7.5 liters), LO is displayed instead of gallons (liters).

If the Low Fuel message in the trip computer comes on when driving, it indicates that the fuel level is low. The Low Fuel message is displayed until the MODE button is pressed. The trip computer then displays its calculation of Range, which is how far you can drive with your current fuel level, for 10 seconds before returning to the original trip computer display with a small low fuel symbol on the left. The symbol will remain until the fuel tank is filled above the low fuel level.

If the Very Low Fuel message in the trip computer comes on when driving, it indicates that the fuel level is very low. The Very Low Fuel message is displayed until the MODE button is pressed. The trip computer then displays its calculation of Range, which is how far you can drive with your current fuel level, for 10 seconds before returning to the original trip computer display with a small flashing low fuel symbol on the left. The symbol will remain until the fuel tank is filled above the low fuel level.



Downloaded from www.Manualslib.com manuals search engine

## O/SPEED (Overspeed)

Overspeed sets the speed you do not want to exceed. For example, if driving in a 45 mph zone, set OVERSPEED to 45 mph by tapping the up or down arrows. The overspeed setting is shown in the left display. When your vehicle's speed exceeds the setting, the overspeed warning message and an audible chime warn you that you are speeding. At that time, the trip computer automatically shows the overspeed display, allowing you to make adjustments if desired. If in the Overspeed preset mode, press and hold the MODE button for two seconds to make adjustments.

## Preset O/Speed (Overspeed)

Instead of adjusting overspeed up and down in increments of 3 mph (5 km/h), you can set four commonly used speeds. Hold down the MODE button for two seconds when the overspeed display is shown. The display changes from normal overspeed operation to preset overspeed. Preset 1 has a default setting of 25 mph (40 km/h). Tap the up arrow to see the other three presets.

The overspeed preset display has now replaced the normal overspeed display. Tap the MODE button to scroll through the other displays.

To change the display back to normal overspeed, hold down the MODE button for two seconds while the overspeed preset display is shown.

## Altering Overspeed Presets

The default overspeed settings can be changed for your individual preference.

The vehicle must be stopped when changing a preset. Ensure the preset you wish to change is showing. Then briefly press the SET button. The display will start to flash. Use the up or down arrows to adjust the setting. When at the desired speed, briefly press the SET button. Each PRESET can be changed in this way.

The presets are automatically arranged in ascending order.

One or more presets can be assigned to OFF, by reducing the preset down to 0 (OFF). When driving, you then only have three or less presets to choose from. To turn back on, select the OFF preset when the vehicle is stopped, briefly press the SET button, and use the up arrow to increase the number.

If the up or down arrows are briefly pressed while driving, the overspeed setting is changed to the speed at which you are travelling.

If the SET button is pressed for two seconds, either while driving or stopped, overspeed is turned completely off or on.



Downloaded from www.Manualslib.com manuals search engine

## Underspeed Chime

Overspeed provides a chime when your vehicle's travelling speed exceeds the overspeed value, whereas underspeed provides a chime to indicate when your vehicle's travelling speed drops below the overspeed.

## Range

Range is an estimate of how far your current fuel level will last. It is based on your previous fuel usage and is frequently updated. Therefore, as conditions become suited to more economical driving, the range may actually increase, for example from city to highway driving.

## INST (Instantaneous) FUEL

This function shows instantaneous fuel usage in miles per gallon or liters per 100 km when driving. When speed drops below 6 mph (10 km/h) the usage is shown in gallons per hour or liters per hour.

## Display Units

Display units allows you to select the units of measurement in which the trip computer and instrument panel cluster will display information. Tap the up or down arrows to select between ENG (English) or MET (metric) units.

## DIGITAL SPEEDO (Speedometer)

If digital speedo mode is activated, the mph (km/h) are shown in a large digital mode.

## Stop Watch

The stop watch function, when enabled, records elapsed time. It can be used, for example, to measure the time taken to travel between two points on a trip. If you will be starting and stopping your vehicle, the stop watch will automatically start timing where it left off when you last stopped.

To start or stop the stop watch, press the SET button. To reset the stop watch, press and hold the MODE button for more than three seconds. The trip computer must be on Trip Time for this function to work.



Downloaded from www.Manualslib.com manuals search engine

## Trip A/B

When the Time to Arrival/Distance to Arrival/Fuel Remaining set of displays are turned on, using vehicle personalization, and are showing on the display, hold the MODE button down for two seconds. Now, instead of the Time to Arrival set of displays, the trip computer shows Trip B details.

Press the MODE button to view your displays. You now have two different sets of trip displays counting, your original set of trip displays — labelled A while B is turned on — and a new set of trip displays, labelled B. This is useful on a long trip, as Trip B can be reset at the beginning of the journey and then locked away by pressing the MODE button for two seconds when Trip B is shown. Time to Arrival/Distance to Arrival/Fuel Remaining will again be shown on the display, but Trip B is still counting away in the background and the original trip display can be used for short distances during the journey. Trip B can be viewed at any time by pressing the MODE button for two seconds when Distance to Arrival is shown.

Trip A/B can also be enabled/disabled in vehicle personalization. See *Vehicle Personalization on page 2-30*. If the Trip A and B function is selected, the Average Speed and Average Fuel displays indicate Trip A.

## Trip Computer Notes:

- If the wrong buttons are accidentally pressed, causing the display to show a display other than normal, turn the ignition off and then on again when the vehicle is stopped.
- Several warning lights are linked to the trip computer displays. See *Warning Lights, Gages, and Indicators on page 3-22*.
- When the overspeed warning symbol is first shown, the overspeed trip computer display is automatically shown for 10 seconds. This is to show what your pre-selected speed is and allow you to adjust it if desired. After 10 seconds, the trip computer returns to its previous display.
- Some displays change the units of measurement over time. For example, the Time to Arrival shows hours only above 99 hours and 59 minutes, and hours and minutes below. Time to Arrival also shows 10 minute units above 2 hours, 5 minute units below 2 hours and 1 minute units below 10 minutes.



Downloaded from www.Manualslib.com manuals search engine

## Trip Computer Warning Messages

The following messages may appear on the center trip computer display located on the instrument panel cluster. If a message is active, it will appear on the display for 10 seconds, unless the trip computer MODE button is pressed. Pressing the MODE button will acknowledge and clear messages from the display.

### ABS (Anti-Lock Brake System) Fault

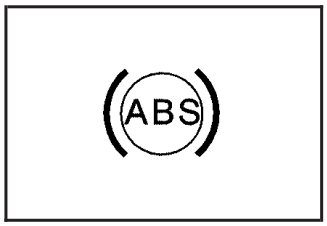


If this symbol and the ABS Fault message come on, there is a malfunction of the anti-lock brake system. See your GM dealer for service.

Your vehicle's brake system will still operate without ABS. The ABS Fault message will remain until the MODE button is pressed, but the symbol will remain until the condition is repaired.

### ALARM ACTIVATED

If the ALARM ACTIVATED message comes on, it indicates that the content theft-deterrent alarm has been set off because a door, the hood, or the trunk has been opened, or that your vehicle's electrical system has been tampered with. See "How to Detect a Tamper Condition" under *Content Theft-Deterrent on page 2-14* for more information.

### Brake

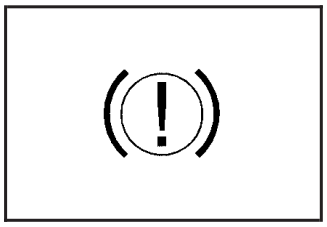

If this symbol and the Brake message come on while driving and the park brake is released, a fault with the brakes is indicated.

You should immediately stop your vehicle on the side of the road as carefully as possible. Do not proceed until satisfied that braking is possible or the condition is repaired. A warning will chime if you attempt to drive off without releasing the park brake. The Brake message will remain until the MODE button is pressed, but the symbol will remain until the condition is repaired.

This message will also come on to indicate low brake fluid.



Downloaded from www.Manualslib.com manuals search engine

## Check Alternator

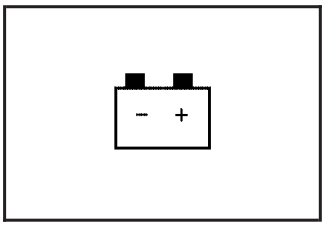


If this symbol and the Check Alternator message stay on, or come on while you are driving you may have a problem with the electrical charging system.

It could indicate that your vehicle has a loose generator drive belt or another electrical problem. Have your vehicle checked right away by your GM dealer. Driving while this symbol is on could drain your battery. If you must drive a short distance with the symbol on, be certain to turn off all your accessories, such as the radio and air conditioner. The Check Alternator message will remain until the MODE button is pressed, but the symbol will remain until the condition is repaired.

## Check Oil

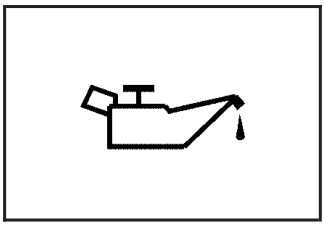

If this symbol and the Check Oil message stay on after you start the engine, or come on when you are driving, there is a low engine oil pressure problem.

This indicates that the engine is not receiving enough oil. The engine could be low on oil, or could have some other oil problem. Have it repaired immediately by your GM dealer. The Check Oil message will remain until the MODE button is pressed, but the symbol will remain until the condition is repaired.

**⚠ CAUTION:**

**Do not keep driving if the oil pressure is low. If you do, your engine can become so hot that it catches fire. You or others could be burned. Check your oil as soon as possible and have your vehicle serviced.**

***Notice:*** **Lack of proper engine oil maintenance may damage the engine. The repairs would not be covered by your warranty. Always follow the maintenance schedule in this manual for changing engine oil.**

## CRUISE ACTIVE

The CRUISE ACTIVE message comes on whenever you set the cruise control. See *Cruise Control on page 3-10* for more information.



Downloaded from www.Manualslib.com manuals search engine

## Cruise Enabled

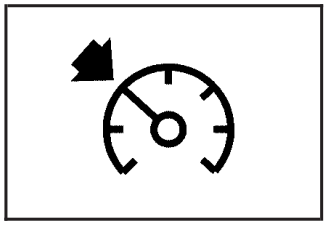

This symbol, the Cruise Enabled message, and the CRUISE message come on for a few seconds whenever you turn on the cruise control.

The message then returns to the original trip computer display with a small CRUISE message on the right. The CRUISE message will remain until the cruise control is set or turned off. See *Cruise Control on page 3-10* for more information.

## Cruise Off

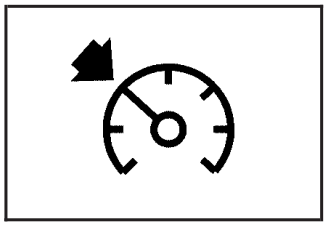

This symbol and the Cruise Off message come on for a few seconds whenever you turn off the cruise control.

The message then returns to the original trip computer display. See *Cruise Control on page 3-10* for more information.

## Engine Temp (Temperature) Hot

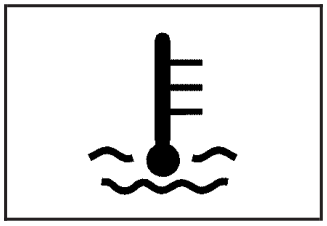

If the Engine Temp Hot message and this symbol come on while driving, it indicates that the engine coolant temperature is dangerously hot.

You should stop your vehicle as soon as it is safe to do so.

The Engine Temp Hot message will display until the MODE button is pressed. The message then returns to the original trip computer display with a small over temperature symbol on the left. The symbol will remain until the condition is repaired. See *Engine Overheating on page 5-26* for more information.

## Low Fuel

If the Low Fuel message comes on when driving, it indicates that the fuel level is low. The Low Fuel message is displayed until the MODE button is pressed. The trip computer then displays its calculation of miles to empty for 10 seconds.



Downloaded from www.Manualslib.com manuals search engine

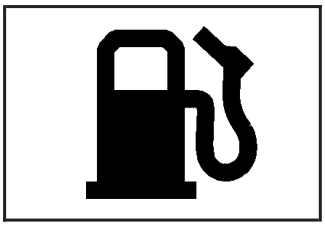

The display then returns to the original trip computer display with a small low fuel symbol on the left.

The symbol will remain until the fuel tank is filled above the low fuel level.

## Low Traction

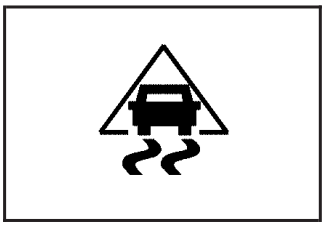

If this symbol and the Low Traction message come on while driving, the traction control system is limiting wheel spin.

The Low Traction message displays as long as a low traction event is occurring. If the MODE button is pressed while the message is still displayed, then the message returns to the original trip computer display with a small low traction symbol on the left. The symbol will remain as long as the low traction situation exits. See *Traction Control System (TCS) on page 4-8*.

## O/Speed (Overspeed)

When your vehicle's speed exceeds the pre-selected overspeed setting, the overspeed warning message and an audible chime warn you that you are speeding.

If the overspeed is maintained for longer than 10 seconds, but is less than 9 mph (15 km/h) over the set overspeed value, the overspeed returns to the original trip computer display with an O/SPEED message on the left.

If the overspeed is maintained for longer than 10 seconds and is more than 9 mph (15 km/h) over the set overspeed value, the overspeed returns to a flashing O/SPEED message.

See "O/SPEED (Overspeed)" earlier in this section for more information.



Downloaded from www.Manualslib.com manuals search engine

## Rest Reminder

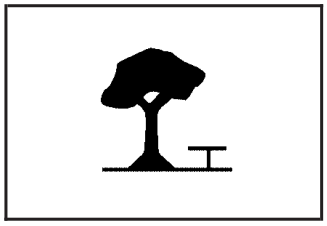

This symbol and message alert you when you may have been travelling for too long without a break.

After the ignition is turned to ON, a timer will start. After two hours of continuous driving, the trip computer automatically shows the rest reminder display. See “REST REMINDER” under *Vehicle Personalization on page 2-30* for more information.

## Service Engine Oil

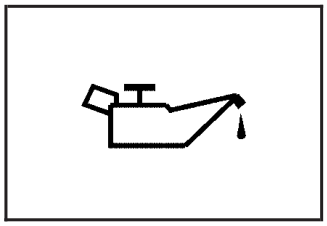

If this symbol and the Service Engine Oil message come on after you start the engine, it means that service is required for your vehicle. See your GM dealer.

See *Scheduled Maintenance on page 6-4* and *Engine Oil on page 5-13* for more information.

## Service Error (X Symbol)

If the Service Error message or the X symbol comes on, it indicates a fault in the trip computer. See your GM dealer for service.

## Service Vehicle Soon

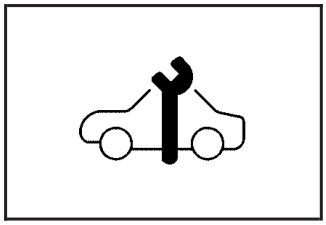

This symbol and the Service Vehicle Soon message will come on and a chime will sound if there is a problem with your vehicle.

When this message displays, see your GM dealer as soon as possible.

The Service Vehicle Soon message will display until the MODE button is pressed. The message then returns to the original trip computer display with a small SVS message on the right. The SVS message will remain until the condition is repaired.



Downloaded from www.Manualslib.com manuals search engine

## Shift

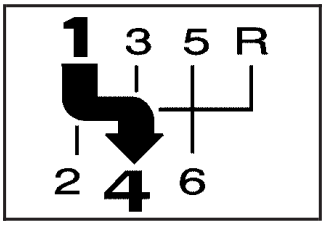


If you have a manual transmission vehicle, this symbol, the Shift message, and the One-to-Four Shift light come on when you can only shift from FIRST (1) to FOURTH (4).

You will not be able to shift from FIRST (1) to SECOND (2). You must complete the shift into FOURTH (4) to turn off this feature. This helps you get the best possible fuel economy. After shifting to FOURTH (4), you may downshift to a lower gear if you prefer. See *One-to-Four Shift Light (Manual Transmission) on page 3-26* and *Manual Transmission Operation on page 2-21* for more information.

## Traction Ctrl (Control) Off

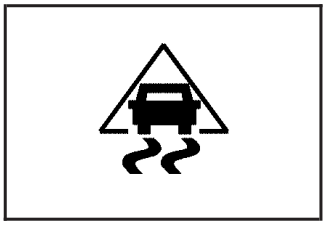

If this symbol and the Traction Ctrl Off message come on while driving, without the traction control being turned off by the driver, the traction control system is not working.

See your GM dealer for service.

The Traction Ctrl Off message is displayed for two seconds. The message then returns to the original trip computer display with a small TRAC OFF message on the right. The TRAC OFF message will remain until the condition is repaired. See *Traction Control System (TCS) on page 4-8* for more information.



Downloaded from www.Manualslib.com manuals search engine

## Traction Ctrl (Control) On

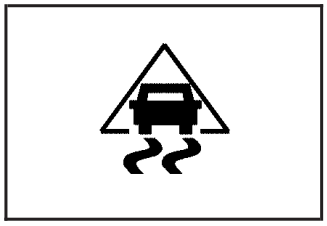

This symbol and the Traction Ctrl On message will come on when the driver turns on the traction control system.

The traction control system is automatically on after the next time the ignition is turned on.

After two seconds, the display returns to the original trip computer display and the TRAC OFF message will turn off. See *Traction Control System (TCS) on page 4-8* for more information.

## Very Low Fuel

If the Very Low Fuel message comes on when driving, it indicates that the fuel level is very low. The Very Low Fuel message is displayed until the MODE button is pressed. The trip computer then displays its calculation of miles to empty for 10 seconds.

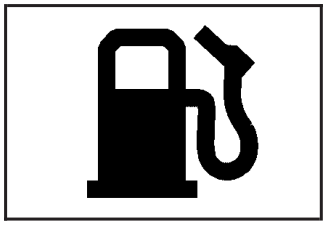

The display then returns to the original trip computer display with a small flashing low fuel symbol on the left.

The symbol will remain until the fuel tank is filled above the low fuel level.



Downloaded from www.Manualslib.com manuals search engine

## Audio System(s)

***Notice:*** **Before adding any sound equipment to your vehicle, such as an audio system, CD player, CB radio, mobile telephone, or two-way radio, make sure that it can be added by checking with your dealer. Also, check federal rules covering mobile radio and telephone units. If sound equipment can be added, it is very important to do it properly. Added sound equipment may interfere with the operation of your vehicle's engine, radio, or other systems, and even damage them. Your vehicle's systems may interfere with the operation of sound equipment that has been added.**

Figure out which audio system is in your vehicle, find out what your audio system can do, and how to operate all of its controls.

## Setting the Time

To change the time, perform the following:

1. Turn the radio on and wait for the time to appear on the display.
2. Press the TIME button for more than two seconds. TIME ADJ will appear on the display and the time will flash.
3. Press either SEEK arrow to adjust the hour.
4. Press either TUNE arrow to adjust the minutes.
5. Press the TIME button again to save the new time.

The radio will automatically exit the time setting mode if no adjustments are made for eight seconds.



Downloaded from www.Manualslib.com manuals search engine

## Radio with Six-Disc CD

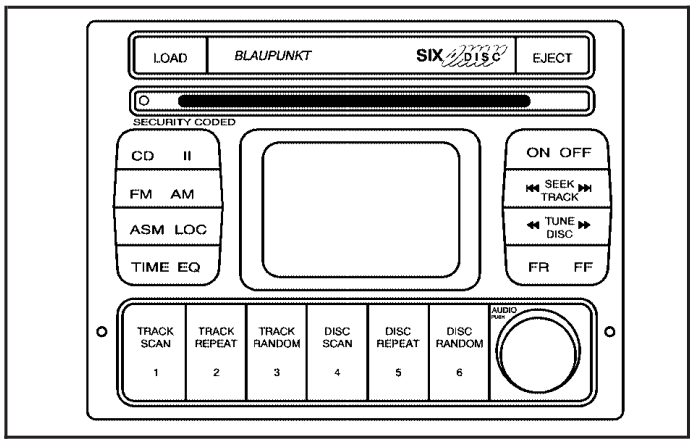


## Playing the Radio

**ON OFF:** Press this button to turn the system on and off.

**AUDIO (Volume):** Turn this knob to increase or to decrease the volume. The radio has a feature that limits the amount of amplifier distortion that you can hear, see “Dynamic Distortion Limiting (DDL)” later in this section for more information.

## Finding a Station

**FM AM:** Press this button to switch between FM1, FM2, and AM. The display will show the selection.

**TUNE DISC :** Press the right or the left arrow to select radio stations.

**SEEK TRACK :** Press the right or the left arrow to go to the next or to the previous station and stay there.

The radio will only seek stations with a strong signal that are in the selected band.

**LOC (Local):** Press this button to switch the radio to local mode. LOCAL will appear on the display and you will only be able to listen and search for local stations. This feature is useful when using seek for searching for strong signals with good reception and clear sound quality.



Downloaded from www.Manualslib.com manuals search engine

## Setting Preset Stations

Up to 18 stations, six FM1, six FM2, and six AM, can be programmed on the six numbered pushbuttons, by performing the following steps:

1. Turn the radio on.
2. Press FM AM to select FM1, FM2, or AM.
3. Tune in the desired station.
4. Press EQ to select the equalization.
5. Press and hold one of the six numbered pushbuttons until you hear a beep. Whenever that numbered pushbutton is pressed, the station that was set will return and the equalization that was selected will be stored for that pushbutton.
6. Repeat the steps for each pushbutton.

**ASM (Automatic Station Memory):** The radio will automatically store the six strongest AM and FM radio stations for the current area, without deleting the preset stations that are stored.

To activate ASM do the following:

1. Turn the radio on.
2. Press FM AM to select FM1, FM2, or AM.
3. Press the ASM button for more than two seconds. The sound will briefly mute and SEARCH will appear on the display, while the radio is in the process of finding and storing radio stations.

   When storing is complete, ASM will appear on the display. The radio station now stored on pushbutton 1 will begin to play.
4. Press any of the pushbuttons to listen to the station stored on that pushbutton.
5. To stop listening to the stations stored by ASM, press the ASM button and ASM will go off the display.
6. Repeat the above steps if you have driven out of the stored stations' range to select new stations.

## Setting the Tone (Bass/Treble)

**AUDIO:** The audio system must be out of EQ mode to adjust the bass and treble. To turn equalization off, press this button until EQ OFF appears on the display.

Push and release the AUDIO knob until BASS or TREBLE appears on the display. Turn the knob to increase or to decrease. If a station is weak or noisy, decrease the treble.



Downloaded from www.Manualslib.com manuals search engine

To adjust bass or treble to the middle position, select BASS or TREB and push and hold the AUDIO knob. The radio will produce one beep and adjust the display level to the middle position.

To adjust all tone and speaker controls to the middle position, push and hold the AUDIO knob when no tone or speaker control is displayed. STD will appear on the display and you will hear a beep.

**EQ (Equalization):** Press this button to select customized equalization settings designed for rock, pop, jazz, classical, and vocal.

To turn equalization off, press this button until EQ OFF appears on the display.

To give an equalization setting a boost, push the AUDIO knob once while in any equalization setting. BOOST will appear on the display. Turn the AUDIO knob to select one of the available boost levels. Different levels of boost can be set for each of the equalization settings.

## Adjusting the Speakers (Balance/Fade)

**AUDIO:** To adjust the balance between the right and the left speakers, push and release the AUDIO knob until BALANCE appears on the display. Turn the knob to move the sound toward the right or the left speakers.

To adjust the fade between the front and the rear speakers, push and release the AUDIO knob until FADER appears on the display. Turn the knob to move the sound toward the front or the rear speakers.

## Playing a CD

If the ignition or radio is turned off, with a CD in the player, it will stay in the player. When the ignition or radio is turned on, the CD will start playing where it stopped, if it was the last selected audio source.

When a CD is inserted, the CD number will appear in the CD symbol on the display. As each new track starts to play, the track number will appear on the display.

The CD player can play the smaller 3 inch (8 cm) single CDs with an adapter ring. Full-size CDs and the smaller CDs are loaded in the same manner.



Downloaded from www.Manualslib.com manuals search engine

If playing a CD-R the sound quality may be reduced due to CD-R quality, the method of recording, the quality of the music that has been recorded, and the way the CD-R has been handled. There may be an increase in skipping, difficulty in finding tracks, and/or difficulty in loading and ejecting. If these problems occur try a known good CD.

Do not add paper labels to CDs, they could get caught in the CD player.

If an error appears on the display, see “CD Messages” later in this section.

**LOAD:** Press the LOAD button to load CDs into the CD player. This CD player will hold up to six CDs.

To insert one CD, do the following:

1. Turn the ignition on.
2. Press and release the LOAD button.
3. Wait for INSERT CD to appear on the display, the indicator light, located to the left of the slot, to flash, and for the radio to produce a beep, if beeps are turned on. See “Confirmation Beeps” later in this section for information about turning beeps on and off.
4. Load a CD. Insert the CD partway into the slot, label side up. The player will pull the CD in.

To insert multiple CDs, do the following:

1. Turn the ignition on.
2. Press and hold the LOAD button for two seconds.
3. Wait for LOAD ALL to appear on the display, the indicator light, located to the left of the slot, to flash, and for the radio to produce a beep, if beeps are turned on. See “Confirmation Beeps” later in this section for information about turning beeps on and off.
4. Once the light stops flashing and turns green, load a CD. Insert the CD partway into the slot, label side up. The player will pull the CD in.

   Once the CD is loaded, the light will begin flashing again. Once the light stops flashing and turns green, you can load another CD. The CD player takes up to six CDs. Do not try to load more than six.

To load more than one CD but less than six, complete Steps 1 through 3. When finished loading CDs, press the EJECT button to cancel the loading function. The radio will begin to play the last CD loaded.

For every CD loaded, a number will appear on the display. To play a specific CD, press the numbered pushbutton that corresponds to the CD you want to play. The CD number that is playing will flash, and the track number will appear.



Downloaded from www.Manualslib.com manuals search engine

**TRACK SCAN:** Press this button to listen to the first 10 seconds of each track on the CD that is playing. Press this button again to stop scanning.

**TRACK REPEAT:** Press this button to repeat the track that is playing. Press this button again to turn off repeat play.

**TRACK RANDOM:** Press this button to listen to the tracks, on the CD that is playing, in random, rather than sequential order. Press this button again to turn off random play.

**DISC SCAN:** If more than one CD is loaded, press this button to listen to the first 10 seconds of the first track on each loaded CD. Press this button again to stop scanning.

**DISC REPEAT:** Press this button to repeat the CD that is currently playing. Press this button again to turn off repeat play.

**DISC RANDOM:** If more than one CD is loaded, press this button to play all of the CDs in random, rather than sequential order. Press this button again to turn off random play.

**II (Pause):** Press this button to pause a CD. CD PAUSE will appear on the display. Press this button again to play the CD.

**FM AM:** Press this button to listen to the radio when a CD is playing. The inactive CD(s) will remain safely inside the radio for future listening.

**EQ (Equalization):** Press EQ to select the desired equalization setting while playing a CD. The equalization will be stored whenever a CD is played. For more information on EQ, see “EQ” listed previously in this section.

**⏮ SEEK TRACK ⏭ :** Press the left arrow to go to the start of the current track, if more than 10 seconds have played. Press the right arrow to go to the next track. If either arrow is held or pressed more than once, the player will continue moving backward or forward through the CD. If the audio system is in random mode, pressing the left arrow will only go to the start of the current track.



Downloaded from www.Manualslib.com manuals search engine

**◀◀ TUNE DISC ▶▶ :** When more than one CD is loaded, press the left or right arrow to go to the previous or next CD loaded. If the audio system is in random mode, pressing the left arrow will only go to the start of the current track.

**FR FF (Fast Reverse/ Fast Forward):** Press and hold FR to reverse quickly within a track. Press and hold FF to advance quickly within a track. You will hear sound at a reduced volume. Release this button to play the passage. The elapsed time of the track will appear on the display.

**EJECT:** Press this button to eject a single CD or multiple CDs.

To eject the CD that is currently playing, press and release this button. EJECTING CD # will appear on the display, the indicator light, located to the left of the slot, will flash, and the radio will produce a beep, if beeps are turned on. See “Confirmation Beeps” later in this section for information about turning beeps on and off. You can now remove the CD. Press the LOAD button to cancel the eject function.

To eject multiple CDs, press and hold this button for two seconds. EJECTING ALL will appear on the display, the indicator light, located to the left of the slot, will flash, and the radio will produce a beep, if beeps are turned on. See “Confirmation Beeps” later in this section for information about turning beeps on and off. You can now remove the CD. Press the LOAD button to cancel the eject function.

If the CD is not removed, after 25 seconds, the CD will be automatically pulled back into the player. If you try to push the CD back into the player before the 25 second time period is complete, the player will sense an error and will try to eject the CD several times before stopping.

Do not repeatedly press the EJECT button to eject a CD after you have tried to push it in manually. The player’s 25-second eject timer will reset at each press of eject, which will cause the player to not eject the CD until the 25-second time period has elapsed.

Once the player stops and the CD is ejected, remove the CD. After removing the CD, press the ON OFF button, off and then on again. This will clear the CD-sensing feature and enable CDs to be loaded into the player again.



Downloaded from www.Manualslib.com manuals search engine

## CD Messages

**CD ERROR PLAY:** The CD cannot be read. The CD is dirty, scratched, wet, or upside down.

**CD ERROR MECH (Mechanism):** If this message appears on the display, it could be for one of the following reasons:

- The CD is stuck in the player and cannot be played, loaded, or ejected.
- It is very hot. When the temperature returns to normal, the CD should play.
- You are driving on a very rough road. When the road becomes smoother, the CD should play.
- The air is very humid. If so, wait about an hour and try again.
- There may have been a problem while burning the CD.
- The label may be caught in the CD player.

If the CD is not playing correctly, for any other reason, try a known good CD.

If any error occurs repeatedly or if an error cannot be corrected, contact your dealer. If the radio displays an error message, write it down and provide it to your dealer when reporting the problem.

## Options Menu

The following features can be adjusted through the vehicle's options menu located in the instrument panel cluster in the trip computer display window.

### Confirmation Beeps

Beeps are used to confirm various actions of the radio such as storing a preset. The beeps can be turned on or off using the options menu. See "Options Menu Adjustment" later in this section to adjust the confirmation beeps.

**BEEPS ON:** The radio will make a beep sound when storing radio stations, when it is time to insert or remove a CD from the CD changer, or to confirm that the LOAD ALL or EJECT ALL functions have started.

**BEEP ONLY:** The radio will make a beep sound when it is time to insert or remove a CD from the CD changer or to confirm that the LOAD ALL or EJECT ALL functions have started.

**BEEPS OFF:** The radio will not produce any beeps.



Downloaded from www.Manualslib.com manuals search engine

## Speed-Dependent Volume (SDV)

With SDV, the audio system adjusts automatically to make up for road or wind noise as you drive.

This feature will never completely compensate for driving noise. There are other factors such as road surface, wind noise, windows open, and engine speed that may alter the interior noise for any given road speed.

You can select compensation rates between 0 (off) and 5 (maximum compensation) in the options menu. See “Options Menu Adjustment” later in this section to adjust SDV.

## Dynamic Distortion Limiting (DDL)

The radio has a feature that limits the amount of amplifier distortion that you can hear. When this feature is turned on, it continuously monitors the quality of the signal to the speakers. When the signal distortion exceeds the preset limits the radio will automatically limit or reduce the volume until the distortion is minimized. Under some circumstances, distortion may be heard for a very short period of time until the system has taken the necessary steps to limit it.

The speakers may go off when the volume level is set at a high or full volume for a long period of time in order to protect the amplifier from overheating. When the amplifier cools down, the radio will reset and you will again hear sound through the speakers.

The main source of distortion in music is the low frequency bass caused by drums or large instruments. Music that features very strong bass may trigger the distortion limiting system and the system will then reduce the volume to minimize the distortion. Increasing the bass control or the EQ boost may also result in a reduced volume level due to the emphasized bass. See “Setting the Tone (Bass/Treble)” previously in this section. The DDL can be turned off so that the radio will deliver a higher volume level, but distortion will also be increased.

See “Options Menu Adjustment” later in this section to adjust DDL.



Downloaded from www.Manualslib.com manuals search engine

## Options Menu Adjustment

Confirmation beeps, SDV, and DDL can all be adjusted by doing the following:

1. Turn off the radio by pressing the OFF button.
2. Press and hold pushbutton 1, then press the ON button until OPTION MENU appears on the display.
3. Push the AUDIO knob until the correct option appears on the display.
4. Turn the AUDIO knob to adjust the setting of the option being displayed.
5. Push the AUDIO knob to select another option or press the OFF button to exit the options menu. The selection will be saved.

   If no buttons are pressed or turned for eight seconds, the radio will automatically exit the menu and the radio will turn on.

## Master Reset

The radio has a reset feature that allows you to return certain settings back to the factory default settings. Use this feature when adjustments have been made that affect the sound quality or operation of the radio and you are unsure of how to return to the original settings.

This master reset feature will reset the following:

- Bass, Treble, Fade, and Balance
- Confirmation beeps to on
- SDV to setting 2
- DDL to on
- EQ to off.

To perform the master reset, do the following:

1. Turn off the radio by pressing the OFF button.
2. Press the ON button and pushbutton 4 at the same time for about two seconds.

   After the radio has finished resetting, the radio will turn on with the original settings and no message will appear on the display.



Downloaded from www.Manualslib.com manuals search engine

## Theft-Deterrent Feature

Your vehicle's radio has an electronically coded security system. The system recognizes the vehicle which the radio has been installed. If the radio is kept in the vehicle, the PIN should not be required, even if the battery or the radio has been removed and reinstalled.

If the link between your vehicle and the radio is disrupted, the radio will prompt you for a four-digit PIN code to be entered.

The PIN is supplied on the security card. As the pin is the only means of enabling operation of the radio, place the security card in a safe place. Do not leave the security card in the glovebox. The PIN should also be written down and kept with other important documents.

If the security card is lost and the PIN is not recorded, the PIN can be requested from your GM dealer, after supplying proof of ownership. There may be a charge for this service.

When the radio and vehicle are turned off, the blinking red light indicates that the radio is armed.

## Security Release Procedure

To type in the PIN code, do the following:

1. Turn the ignition to ON.
2. Turn the radio on. CODE_ _ _ _ will appear on the display.
3. Use the preset buttons to enter the PIN code.

If the wrong PIN code is entered, the radio will display CODE ERR WAIT.

After a few seconds, the radio will display CODE 2_ _ _ _, indicating that this is the second attempt. The correct code should now be entered. After three attempts, the radio will display LOCK OUT 1 HR. After 1 hour, the radio will allow another three attempts to enter the PIN.



Downloaded from www.Manualslib.com manuals search engine

## Audio Steering Wheel Controls

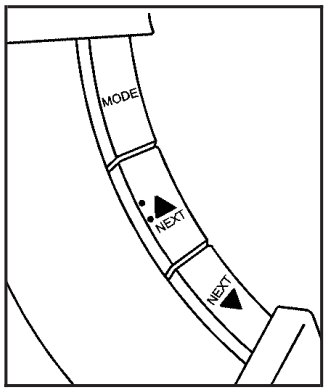


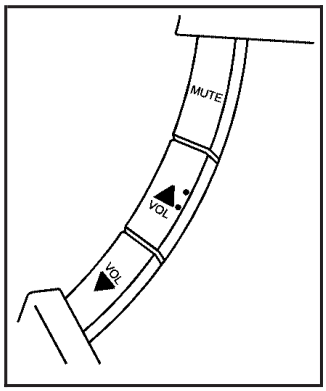


If your vehicle has this feature, some audio controls can be adjusted at the steering wheel. They include the following:

**MODE:** Press this button to switch between FM1, FM2, AM, or CD.

▲ **NEXT:** Press this button to go to the next radio station and stay there. The radio will only seek stations with a strong signal that are in the selected band.

When a CD is playing, press and release this button to go to the next track. Press and hold this button to go to the next CD, if multiple CDs are loaded.

**NEXT ▼:** Press this button to go to the previous radio station and stay there. The radio will only seek stations with a strong signal that are in the selected band.

When a CD is playing, press and release this button to go to the previous track. Press and hold this button to go to the previous CD, if multiple CDs are loaded.

**MUTE:** Press this button to silence the system. Press it again, or any other radio button, to turn on the sound.

▲ **VOL (Volume):** Press this button to increase the volume.

**VOL ▼ (Volume):** Press this button to decrease the volume.



Downloaded from www.Manualslib.com manuals search engine

## Radio Reception

### AM

The range for most AM stations is greater than for FM, especially at night. The longer range, however, can cause stations to interfere with each other. AM can pick up noise from things like storms and power lines. Try reducing the treble to reduce this noise.

### FM

FM stereo will give you the best sound, but FM signals will reach only about 10 to 40 miles (16 to 65 km). Tall buildings or hills can interfere with FM signals, causing the sound to come and go.

## Care of Your CDs

Handle CDs carefully. Store them in their original cases or other protective cases and away from direct sunlight and dust. If the surface of a CD is soiled, dampen a clean, soft cloth in a mild, neutral detergent solution and clean it, wiping from the center to the edge.

Be sure never to touch the side without writing when handling CDs. Pick up CDs by grasping the outer edges or the edge of the hole and the outer edge.

## Care of the CD Player

The use of CD lens cleaners for CD players is not advised, due to the risk of contaminating the lens of the CD optics with lubricants internal to the CD mechanism.



Downloaded from www.Manualslib.com manuals search engine

## Backglass Antenna

The AM-FM antenna is integrated with the rear window defogger, located in the rear window. Be sure that the inside surface of the rear window is not scratched and that the lines on the glass are not damaged. If the inside surface is damaged, it could interfere with radio reception. Also, for proper radio reception, the antenna connector at the top-center of the rear window needs to be properly attached to the post on the glass.

***Notice:*** **Using a razor blade or sharp object to clear the inside rear window may damage the rear window antenna and/or the rear window defogger. Repairs would not be covered by your warranty. Do not clear the inside rear window with sharp objects.**

***Notice:*** **Do not apply aftermarket glass tinting with metallic film. The metallic film in some tinting materials will interfere with or distort the incoming radio reception. Any damage caused to your backglass antenna due to metallic tinting materials will not be covered by your warranty.**

Because this antenna is built into your rear window, there is a reduced risk of damage caused by car washes and vandals.

If you choose to add a cellular telephone to your vehicle, and the antenna needs to be attached to the glass, be sure that you do not damage the grid lines for the AM-FM antenna. There is enough space between the lines to attach a cellular telephone antenna without interfering with radio reception.

Do not apply aftermarket glass tinting to the back glass. The metallic film in some tinting materials will interfere with or distort the incoming radio reception. Care must be taken when cleaning the rear window because it breaks in the resistive material heating element and will adversely affect radio and defogger performance. See your dealer for details.



Downloaded from www.Manualslib.com manuals search engine

# Section 4 Driving Your Vehicle

**Your Driving, the Road, and Your Vehicle** .....4-2
Defensive Driving .....4-2
Drunken Driving .....4-2
Control of a Vehicle .....4-5
Braking .....4-5
Anti-Lock Brake System (ABS) .....4-6
Braking in Emergencies .....4-8
Traction Control System (TCS) .....4-8
Steering .....4-9
Off-Road Recovery .....4-11
Passing .....4-12
Loss of Control .....4-13
Driving at Night .....4-14
Driving in Rain and on Wet Roads .....4-16
City Driving .....4-18
Freeway Driving .....4-19
Before Leaving on a Long Trip .....4-20
Highway Hypnosis .....4-21
Hill and Mountain Roads .....4-22
Winter Driving .....4-24
If Your Vehicle is Stuck in Sand, Mud, Ice or Snow .....4-28
Rocking Your Vehicle to Get It Out .....4-28
Loading Your Vehicle .....4-29
**Towing** .....4-34
Towing Your Vehicle .....4-34
Recreational Vehicle Towing .....4-34
Towing a Trailer .....4-34



Downloaded from www.Manualslib.com manuals search engine

# Your Driving, the Road, and Your Vehicle

## Defensive Driving

The best advice anyone can give about driving is: Drive defensively.

Please start with a very important safety device in your vehicle: Buckle up. See *Safety Belts: They Are for Everyone on page 1-6*.

Defensive driving really means “be ready for anything.” On city streets, rural roads, or freeways, it means “always expect the unexpected.”

Assume that pedestrians or other drivers are going to be careless and make mistakes. Anticipate what they might do. Be ready for their mistakes.

Rear-end collisions are about the most preventable of accidents. Yet they are common. Allow enough following distance. It is the best defensive driving maneuver, in both city and rural driving. You never know when the vehicle in front of you is going to brake or turn suddenly.

Defensive driving requires that a driver concentrate on the driving task. Anything that distracts from the driving task — such as concentrating on a cellular telephone call, reading, or reaching for something on the floor — makes proper defensive driving more difficult and can even cause a collision, with resulting injury. Ask a passenger to help do things like this, or pull off the road in a safe place to do them yourself. These simple defensive driving techniques could save your life.

## Drunken Driving

Death and injury associated with drinking and driving is a national tragedy. It is the number one contributor to the highway death toll, claiming thousands of victims every year.

Alcohol affects four things that anyone needs to drive a vehicle:

- Judgment
- Muscular Coordination
- Vision
- Attentiveness

Police records show that almost half of all motor vehicle-related deaths involve alcohol. In most cases, these deaths are the result of someone who was drinking and driving. In recent years, more than 16,000 annual motor vehicle-related deaths have been associated with the use of alcohol, with more than 300,000 people injured.



Downloaded from www.Manualslib.com manuals search engine

Many adults — by some estimates, nearly half the adult population — choose never to drink alcohol, so they never drive after drinking. For persons under 21, it is against the law in every U.S. state to drink alcohol. There are good medical, psychological and developmental reasons for these laws.

The obvious way to eliminate the leading highway safety problem is for people never to drink alcohol and then drive. But what if people do? How much is "too much" if someone plans to drive? It is a lot less than many might think. Although it depends on each person and situation, here is some general information on the problem.

The Blood Alcohol Concentration (BAC) of someone who is drinking depends upon four things:

- The amount of alcohol consumed
- The drinker's body weight
- The amount of food that is consumed before and during drinking
- The length of time it has taken the drinker to consume the alcohol

According to the American Medical Association, a 180 lb (82 kg) person who drinks three 12 ounce (355 ml) bottles of beer in an hour will end up with a BAC of about 0.06 percent. The person would reach the same BAC by drinking three 4 ounce (120 ml) glasses of wine or three mixed drinks if each had 1-1/2 ounces (45 ml) of liquors like whiskey, gin, or vodka.

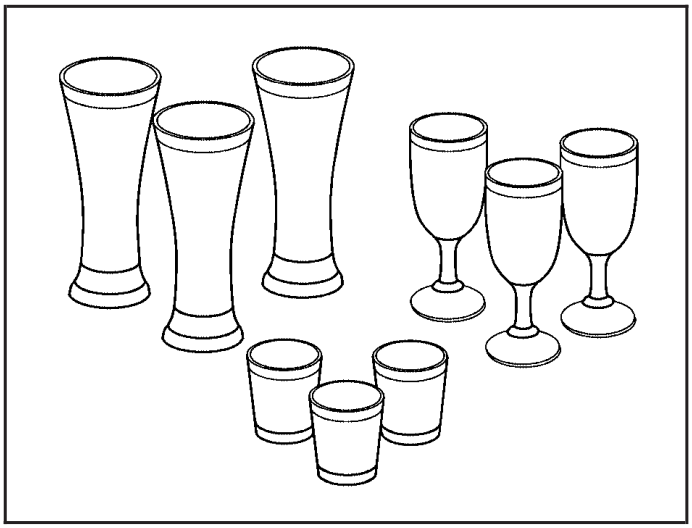

It is the amount of alcohol that counts. For example, if the same person drank three double martinis (3 ounces or 90 ml of liquor each) within an hour, the person's BAC would be close to 0.12 percent. A person who consumes food just before or during drinking will have a somewhat lower BAC level.



Downloaded from www.Manualslib.com manuals search engine

There is a gender difference, too. Women generally have a lower relative percentage of body water than men. Since alcohol is carried in body water, this means that a woman generally will reach a higher BAC level than a man of her same body weight will when each has the same number of drinks.

The law in most U.S. states, and throughout Canada, sets the legal limit at 0.08 percent. In some other countries, the limit is even lower. For example, it is 0.05 percent in both France and Germany. The BAC limit for all commercial drivers in the United States is 0.04 percent.

The BAC will be over 0.10 percent after three to six drinks (in one hour). Of course, as we have seen, it depends on how much alcohol is in the drinks, and how quickly the person drinks them.

But the ability to drive is affected well below a BAC of 0.10 percent. Research shows that the driving skills of many people are impaired at a BAC approaching 0.05 percent, and that the effects are worse at night. All drivers are impaired at BAC levels above 0.05 percent.

Statistics show that the chance of being in a collision increases sharply for drivers who have a BAC of 0.05 percent or above. A driver with a BAC level of 0.06 percent has doubled his or her chance of having a collision. At a BAC level of 0.10 percent, the chance of this driver having a collision is 12 times greater; at a level of 0.15 percent, the chance is 25 times greater!

The body takes about an hour to rid itself of the alcohol in one drink. No amount of coffee or number of cold showers will speed that up. “I will be careful” is not the right answer. What if there is an emergency, a need to take sudden action, as when a child darts into the street? A person with even a moderate BAC might not be able to react quickly enough to avoid the collision.

There is something else about drinking and driving that many people do not know. Medical research shows that alcohol in a person’s system can make crash injuries worse, especially injuries to the brain, spinal cord, or heart. This means that when anyone who has been drinking — driver or passenger — is in a crash, that person’s chance of being killed or permanently disabled is higher than if the person had not been drinking.



Downloaded from www.Manualslib.com manuals search engine

**⚠ CAUTION:**

**Drinking and then driving is very dangerous. Your reflexes, perceptions, attentiveness, and judgment can be affected by even a small amount of alcohol. You can have a serious — or even fatal — collision if you drive after drinking. Please do not drink and drive or ride with a driver who has been drinking. Ride home in a cab; or if you are with a group, designate a driver who will not drink.**

## Control of a Vehicle

You have three systems that make your vehicle go where you want it to go. They are the brakes, the steering, and the accelerator. All three systems have to do their work at the places where the tires meet the road.

Sometimes, as when you are driving on snow or ice, it is easy to ask more of those control systems than the tires and road can provide. That means you can lose control of your vehicle. See *Traction Control System (TCS) on page 4-8*.

## Braking

Braking action involves perception time and reaction time.

First, you have to decide to push on the brake pedal. That is perception time. Then you have to bring up your foot and do it. That is reaction time.

Average reaction time is about three-fourths of a second. But that is only an average. It might be less with one driver and as long as two or three seconds or more with another. Age, physical condition, alertness, coordination, and eyesight all play a part. So do alcohol, drugs, and frustration. But even in three-fourths of a second, a vehicle moving at 60 mph (100 km/h) travels 66 feet (20 m). That could be a lot of distance in an emergency, so keeping enough space between your vehicle and others is important.

And, of course, actual stopping distances vary greatly with the surface of the road, whether it is pavement or gravel; the condition of the road, whether it is wet, dry, or icy; tire tread; the condition of your brakes; the weight of the vehicle; and the amount of brake force applied.



Downloaded from www.Manualslib.com manuals search engine

Avoid needless heavy braking. Some people drive in spurts — heavy acceleration followed by heavy braking — rather than keeping pace with traffic. This is a mistake. Your brakes may not have time to cool between hard stops. Your brakes will wear out much faster if you do a lot of heavy braking. If you keep pace with the traffic and allow realistic following distances, you will eliminate a lot of unnecessary braking. That means better braking and longer brake life.

If your engine ever stops while you are driving, brake normally but do not pump your brakes. If you do, the pedal may get harder to push down. If your engine stops, you will still have some power brake assist. But you will use it when you brake. Once the power assist is used up, it may take longer to stop and the brake pedal will be harder to push.

## Anti-Lock Brake System (ABS)

Your vehicle has anti-lock brakes. ABS is an advanced electronic braking system that will help prevent a braking skid.

When you start your engine and begin to drive away, your anti-lock brake system will check itself. You may hear a momentary motor or clicking noise while this test is going on, and you may even notice that your brake pedal moves a little. This is normal.

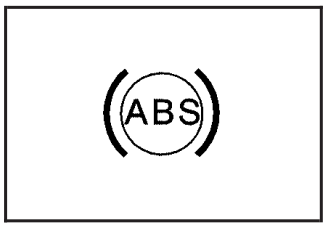


If there is a problem with the anti-lock brake system, this warning light will stay on. See *Anti-Lock Brake System Warning Light on page 3-27*.



Downloaded from www.Manualslib.com manuals search engine

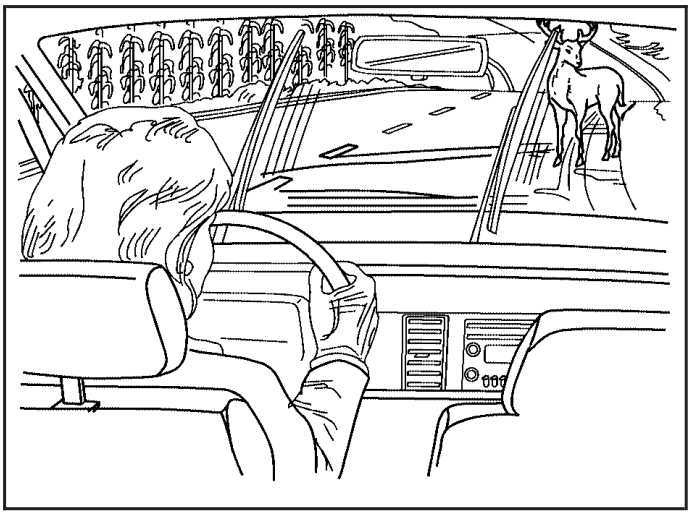

Let us say the road is wet and you are driving safely. Suddenly, an animal jumps out in front of you. You slam on the brakes and continue braking. Here is what happens with ABS:

A computer senses that wheels are slowing down. If one of the wheels is about to stop rolling, the computer will separately work the brakes at each wheel.

The anti-lock system can change the brake pressure faster than any driver could. The computer is programmed to make the most of available tire and road conditions. This can help you steer around the obstacle while braking hard.

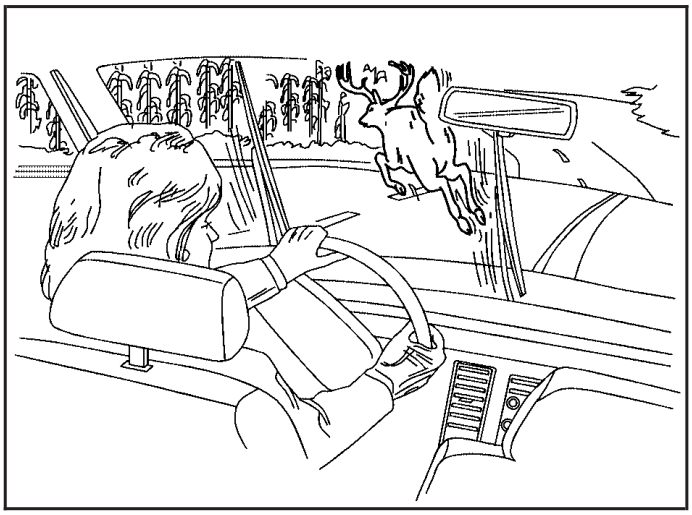

As you brake, your computer keeps receiving updates on wheel speed and controls braking pressure accordingly.

Remember: Anti-lock does not change the time you need to get your foot up to the brake pedal or always decrease stopping distance. If you get too close to the vehicle in front of you, you will not have time to apply your brakes if that vehicle suddenly slows or stops. Always leave enough room up ahead to stop, even though you have anti-lock brakes.



Downloaded from www.Manualslib.com manuals search engine

### Using Anti-Lock

Do not pump the brakes. Just hold the brake pedal down firmly and let anti-lock work for you. You may hear the anti-lock pump or motor operate, and feel the brake pedal pulsate, but this is normal.

## Braking in Emergencies

With anti-lock brakes, you can steer and brake at the same time. In many emergencies, steering can help you more than even the very best braking.

## Traction Control System (TCS)

Your vehicle has a Traction Control System (TCS) that limits wheel spin. This is especially useful in slippery road conditions. The system operates only if it senses that one or both of the rear wheels are spinning or beginning to lose traction. When this happens, the system reduces engine power and applies the brakes, as necessary.

Traction control helps you to keep control of the vehicle and reminds you to match your speed to the road conditions.

You may feel or hear the system working, but this is normal. The TCS is automatically turned on whenever the ignition is turned from off to on. A Low Traction message is displayed on the trip computer, indicating traction control is limiting wheel spin, until the MODE button on the trip computer is pressed. The message then goes back to the original trip computer display with a small low traction symbol on the left. The symbol will remain as long as the low traction situation exists.

To limit wheel spin, especially in slippery road conditions, you should always leave the TCS on. But you can turn the system off if you prefer.



Downloaded from www.Manualslib.com manuals search engine

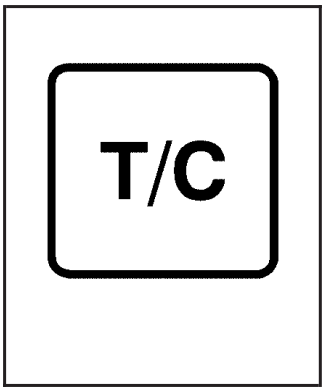


To turn the system off, press the T/C button. On manual transmission vehicles, the button is located on the driver's side of the center console. On automatic transmission vehicles, the button is located on the passenger's side of the shift lever.

When you turn the system off, a Traction Ctrl Off message is displayed on the trip computer. After two seconds, the display goes back to the original trip computer display with a small TRAC OFF message on the right.

If the Traction Ctrl Off message does not display when the button is pressed, or if it comes on during driving, a problem is indicated in the system and traction control is no longer operational. You should contact your dealer for service.

Pressing the T/C button again or the next time the ignition is turned on, will turn the system back on. The Traction Ctrl On message is displayed on the trip computer. After two seconds, the display goes back to the original trip computer display.

# Steering

## Power Steering

If you lose power steering assist because the engine stops or the system is not functioning, you can steer but it will take much more effort.

## Steering Tips

### Driving on Curves

It is important to take curves at a reasonable speed.

A lot of the "driver lost control" accidents mentioned on the news happen on curves. Here is why:

Experienced driver or beginner, each of us is subject to the same laws of physics when driving on curves. The traction of the tires against the road surface makes it possible for the vehicle to change its path when you turn the front wheels. If there is no traction, inertia will keep the vehicle going in the same direction. If you have ever tried to steer a vehicle on wet ice, you will understand this.

The traction you can get in a curve depends on the condition of your tires and the road surface, the angle at which the curve is banked, and your speed. While you are in a curve, speed is the one factor you can control.



Downloaded from www.Manualslib.com manuals search engine

Suppose you are steering through a sharp curve. Then you suddenly apply the brakes. Both control systems — steering and braking — have to do their work where the tires meet the road. Unless you have four-wheel anti-lock brakes, adding the hard braking can demand too much of those places. You can lose control.

The same thing can happen if you are steering through a sharp curve and you suddenly accelerate. Those two control systems — steering and acceleration — can overwhelm those places where the tires meet the road and make you lose control. See *Traction Control System (TCS) on page 4-8*.

What should you do if this ever happens? Ease up on the brake or accelerator pedal, steer the vehicle the way you want it to go, and slow down.

Speed limit signs near curves warn that you should adjust your speed. Of course, the posted speeds are based on good weather and road conditions. Under less favorable conditions you will want to go slower.

If you need to reduce your speed as you approach a curve, do it before you enter the curve, while your front wheels are straight ahead.

Try to adjust your speed so you can “drive” through the curve. Maintain a reasonable, steady speed. Wait to accelerate until you are out of the curve, and then accelerate gently into the straightaway.

## Steering in Emergencies

There are times when steering can be more effective than braking. For example, you come over a hill and find a truck stopped in your lane, or a car suddenly pulls out from nowhere, or a child darts out from between parked cars and stops right in front of you. You can avoid these problems by braking — if you can stop in time. But sometimes you cannot; there is not room. That is the time for evasive action — steering around the problem.

Your vehicle can perform very well in emergencies like these. First apply your brakes — but, unless you have anti-lock, not enough to lock your wheels.

See *Braking on page 4-5*. It is better to remove as much speed as you can from a possible collision. Then steer around the problem, to the left or right depending on the space available.



Downloaded from www.Manualslib.com manuals search engine

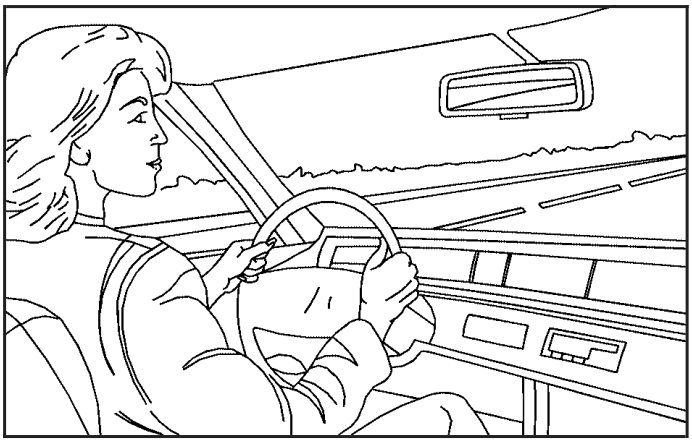

An emergency like this requires close attention and a quick decision. If you are holding the steering wheel at the recommended 9 and 3 o'clock positions, you can turn it a full 180 degrees very quickly without removing either hand. But you have to act fast, steer quickly, and just as quickly straighten the wheel once you have avoided the object.

The fact that such emergency situations are always possible is a good reason to practice defensive driving at all times and wear safety belts properly.

## Off-Road Recovery

You may find that your right wheels have dropped off the edge of a road onto the shoulder while you're driving.

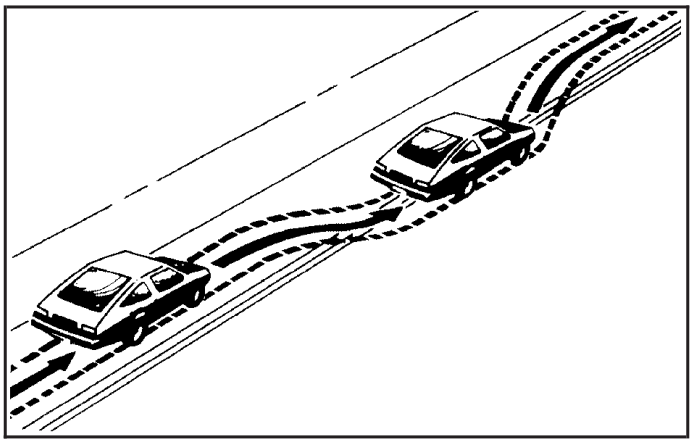

If the level of the shoulder is only slightly below the pavement, recovery should be fairly easy. Ease off the accelerator and then, if there is nothing in the way, steer so that your vehicle straddles the edge of the pavement. You can turn the steering wheel up to one-quarter turn until the right front tire contacts the pavement edge. Then turn your steering wheel to go straight down the roadway.



Downloaded from www.Manualslib.com manuals search engine

## Passing

The driver of a vehicle about to pass another on a two-lane highway waits for just the right moment, accelerates, moves around the vehicle ahead, then goes back into the right lane again. A simple maneuver?

Not necessarily! Passing another vehicle on a two-lane highway is a potentially dangerous move, since the passing vehicle occupies the same lane as oncoming traffic for several seconds. A miscalculation, an error in judgment, or a brief surrender to frustration or anger can suddenly put the passing driver face to face with the worst of all traffic accidents — the head-on collision.

So here are some tips for passing:

- Drive ahead. Look down the road, to the sides and to crossroads for situations that might affect your passing patterns. If you have any doubt whatsoever about making a successful pass, wait for a better time.
- Watch for traffic signs, pavement markings and lines. If you can see a sign up ahead that might indicate a turn or an intersection, delay your pass. A broken center line usually indicates it is all right to pass, providing the road ahead is clear. Never cross a solid line on your side of the lane or a double solid line, even if the road seems empty of approaching traffic.
- Do not get too close to the vehicle you want to pass while you are awaiting an opportunity. For one thing, following too closely reduces your area of vision, especially if you are following a larger vehicle. Also, you will not have adequate space if the vehicle ahead suddenly slows or stops. Keep back a reasonable distance.
- When it looks like a chance to pass is coming up, start to accelerate but stay in the right lane and do not get too close. Time your move so you will be increasing speed as the time comes to move into the other lane. If the way is clear to pass, you will have a running start that more than makes up for the distance you would lose by dropping back. And if something happens to cause you to cancel your pass, you need only slow down and drop back again and wait for another opportunity.
- If other vehicles are lined up to pass a slow vehicle, wait your turn. But take care that someone is not trying to pass you as you pull out to pass the slow vehicle. Remember to glance over your shoulder and check the blind spot.



Downloaded from www.Manualslib.com manuals search engine

- Check your mirrors, glance over your shoulder, and start your left lane change signal before moving out of the right lane to pass. When you are far enough ahead of the passed vehicle to see its front in your inside mirror, activate your right lane change signal and move back into the right lane. Remember that your right outside mirror is convex. The vehicle you just passed may seem to be farther away from you than it really is.
- Try not to pass more than one vehicle at a time on two-lane roads. Reconsider before passing the next vehicle.
- Do not overtake a slowly moving vehicle too rapidly. Even though the brake lamps are not flashing, it may be slowing down or starting to turn.
- If you are being passed, make it easy for the following driver to get ahead of you. Perhaps you can ease a little to the right.

## Loss of Control

Let us review what driving experts say about what happens when the three control systems — brakes, steering, and acceleration — do not have enough friction where the tires meet the road to do what the driver has asked.

In any emergency, do not give up. Keep trying to steer and constantly seek an escape route or area of less danger.

### Skidding

In a skid, a driver can lose control of the vehicle. Defensive drivers avoid most skids by taking reasonable care suited to existing conditions, and by not overdriving those conditions. But skids are always possible.

The three types of skids correspond to your vehicle's three control systems. In the braking skid, your wheels are not rolling. In the steering or cornering skid, too much speed or steering in a curve causes tires to slip and lose cornering force. And in the acceleration skid, too much throttle causes the driving wheels to spin.



Downloaded from www.Manualslib.com manuals search engine

A cornering skid is best handled by easing your foot off the accelerator pedal.

Remember: Any traction control system helps avoid only the acceleration skid. If your traction control system is off, then an acceleration skid is also best handled by easing your foot off the accelerator pedal.

If your vehicle starts to slide, ease your foot off the accelerator pedal and quickly steer the way you want the vehicle to go. If you start steering quickly enough, your vehicle may straighten out. Always be ready for a second skid if it occurs.

Of course, traction is reduced when water, snow, ice, gravel, or other material is on the road. For safety, you will want to slow down and adjust your driving to these conditions. It is important to slow down on slippery surfaces because stopping distance will be longer and vehicle control more limited.

While driving on a surface with reduced traction, try your best to avoid sudden steering, acceleration, or braking, including engine braking by shifting to a lower gear. Any sudden changes could cause the tires to slide. You may not realize the surface is slippery until your vehicle is skidding. Learn to recognize warning clues — such as enough water, ice, or packed snow on the road to make a mirrored surface — and slow down when you have any doubt.

Remember: Any anti-lock brake system (ABS) helps avoid only the braking skid.

## Driving at Night

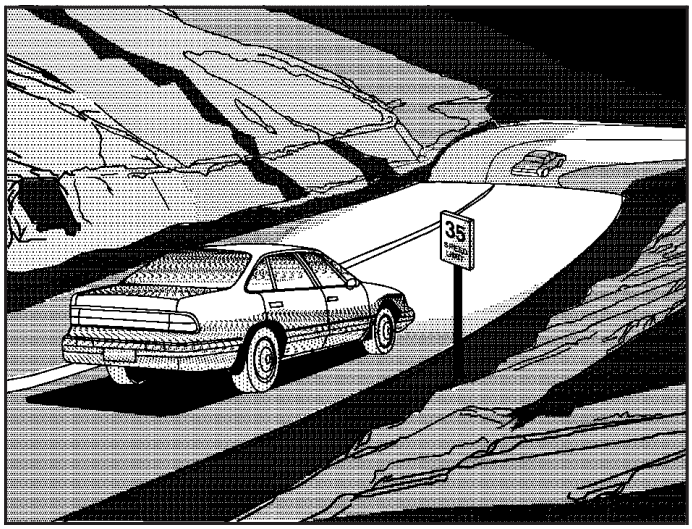


Night driving is more dangerous than day driving. One reason is that some drivers are likely to be impaired — by alcohol or drugs, with night vision problems, or by fatigue.



Downloaded from www.Manualslib.com manuals search engine

Here are some tips on night driving.

- Drive defensively.
- Do not drink and drive.
- Adjust your inside rearview mirror to reduce the glare from headlamps behind you.
- Since you cannot see as well, you may need to slow down and keep more space between you and other vehicles.
- Slow down, especially on higher speed roads. Your headlamps can light up only so much road ahead.
- In remote areas, watch for animals.
- If you are tired, pull off the road in a safe place and rest.

No one can see as well at night as in the daytime. But as we get older these differences increase. A 50-year-old driver may require at least twice as much light to see the same thing at night as a 20-year-old.

What you do in the daytime can also affect your night vision. For example, if you spend the day in bright sunshine you are wise to wear sunglasses. Your eyes will have less trouble adjusting to night. But if you are driving, do not wear sunglasses at night. They may cut down on glare from headlamps, but they also make a lot of things invisible.

You can be temporarily blinded by approaching headlamps. It can take a second or two, or even several seconds, for your eyes to re-adjust to the dark. When you are faced with severe glare, as from a driver who does not lower the high beams, or a vehicle with misaimed headlamps, slow down a little. Avoid staring directly into the approaching headlamps.

Keep your windshield and all the glass on your vehicle clean — inside and out. Glare at night is made much worse by dirt on the glass. Even the inside of the glass can build up a film caused by dust. Dirty glass makes lights dazzle and flash more than clean glass would, making the pupils of your eyes contract repeatedly.

Remember that your headlamps light up far less of a roadway when you are in a turn or curve. Keep your eyes moving; that way, it is easier to pick out dimly lighted objects. Just as your headlamps should be checked regularly for proper aim, so should your eyes be examined regularly. Some drivers suffer from night blindness — the inability to see in dim light — and are not even aware of it.



Downloaded from www.Manualslib.com manuals search engine

## Driving in Rain and on Wet Roads

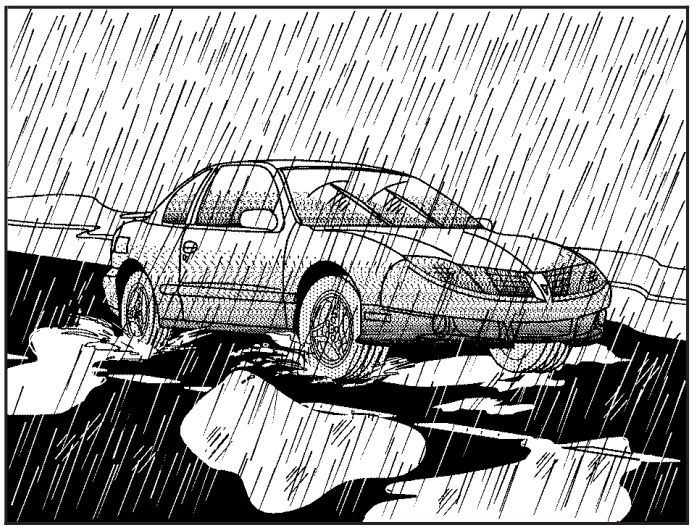

Rain and wet roads can mean driving trouble. On a wet road, you cannot stop, accelerate, or turn as well because your tire-to-road traction is not as good as on dry roads. And, if your tires do not have much tread left, you will get even less traction.

It is always wise to go slower and be cautious if rain starts to fall while you are driving. The surface may get wet suddenly when your reflexes are tuned for driving on dry pavement.

The heavier the rain, the harder it is to see. Even if your windshield wiper blades are in good shape, a heavy rain can make it harder to see road signs and traffic signals, pavement markings, the edge of the road, and even people walking.

It is wise to keep your windshield wiping equipment in good shape and keep your windshield washer tank filled with washer fluid. Replace your windshield wiper inserts when they show signs of streaking or missing areas on the windshield, or when strips of rubber start to separate from the inserts.

Driving too fast through large water puddles or even going through some car washes can cause problems, too. The water may affect your brakes. Try to avoid puddles. But if you cannot, try to slow down before you hit them.



Downloaded from www.Manualslib.com manuals search engine

**⚠ CAUTION:**

**Wet brakes can cause accidents. They will not work as well in a quick stop and may cause pulling to one side. You could lose control of the vehicle.**

**After driving through a large puddle of water or a car wash, apply your brake pedal lightly until your brakes work normally.**

## Hydroplaning

Hydroplaning is dangerous. So much water can build up under your tires that they can actually ride on the water. This can happen if the road is wet enough and you are going fast enough. When your vehicle is hydroplaning, it has little or no contact with the road.

Hydroplaning does not happen often. But it can if your tires do not have much tread or if the pressure in one or more is low. It can happen if a lot of water is standing on the road. If you can see reflections from trees, telephone poles, or other vehicles, and raindrops dimple the water's surface, there could be hydroplaning.

Hydroplaning usually happens at higher speeds. There just is not a hard and fast rule about hydroplaning. The best advice is to slow down when it is raining.

## Driving Through Deep Standing Water

***Notice:*** **If you drive too quickly through deep puddles or standing water, water can come in through your engine's air intake and badly damage your engine. Never drive through water that is slightly lower than the underbody of your vehicle. If you cannot avoid deep puddles or standing water, drive through them very slowly.**



Downloaded from www.Manualslib.com manuals search engine

## Driving Through Flowing Water

**⚠ CAUTION:**

**Flowing or rushing water creates strong forces. If you try to drive through flowing water, as you might at a low water crossing, your vehicle can be carried away. As little as six inches of flowing water can carry away a smaller vehicle. If this happens, you and other vehicle occupants could drown. Do not ignore police warning signs, and otherwise be very cautious about trying to drive through flowing water.**

## Some Other Rainy Weather Tips

- Besides slowing down, allow some extra following distance. And be especially careful when you pass another vehicle. Allow yourself more clear room ahead, and be prepared to have your view restricted by road spray.
- Have good tires with proper tread depth. See *Tires on page 5-52*.

## City Driving

One of the biggest problems with city streets is the amount of traffic on them. You will want to watch out for what the other drivers are doing and pay attention to traffic signals.



Downloaded from www.Manualslib.com manuals search engine

Here are ways to increase your safety in city driving:

- Know the best way to get to where you are going. Get a city map and plan your trip into an unknown part of the city just as you would for a cross-country trip.
- Try to use the freeways that rim and crisscross most large cities. You will save time and energy. See *Freeway Driving on page 4-19*.
- Treat a green light as a warning signal. A traffic light is there because the corner is busy enough to need it. When a light turns green, and just before you start to move, check both ways for vehicles that have not cleared the intersection or may be running the red light.

## Freeway Driving

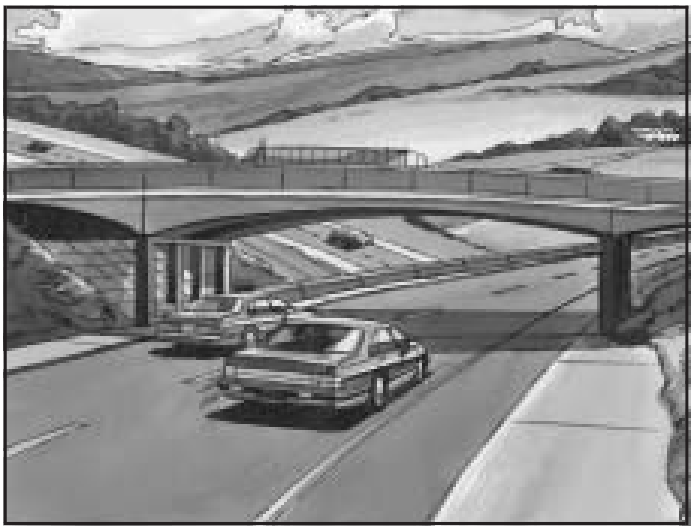

Mile for mile, freeways — also called thruways, parkways, expressways, turnpikes, or superhighways — are the safest of all roads. But they have their own special rules.



Downloaded from www.Manualslib.com manuals search engine

The most important advice on freeway driving is: Keep up with traffic and keep to the right. Drive at the same speed most of the other drivers are driving. Too-fast or too-slow driving breaks a smooth traffic flow. Treat the left lane on a freeway as a passing lane.

At the entrance, there is usually a ramp that leads to the freeway. If you have a clear view of the freeway as you drive along the entrance ramp, you should begin to check traffic. Try to determine where you expect to blend with the flow. Try to merge into the gap at close to the prevailing speed. Switch on your turn signal, check your mirrors, and glance over your shoulder as often as necessary. Try to blend smoothly with the traffic flow.

Once you are on the freeway, adjust your speed to the posted limit or to the prevailing rate if it is slower. Stay in the right lane unless you want to pass.

Before changing lanes, check your mirrors. Then use your turn signal.

Just before you leave the lane, glance quickly over your shoulder to make sure there is not another vehicle in your blind spot.

Once you are moving on the freeway, make certain you allow a reasonable following distance.

Expect to move slightly slower at night.

When you want to leave the freeway, move to the proper lane well in advance. If you miss your exit, do not, under any circumstances, stop and back up. Drive on to the next exit.

The exit ramp can be curved, sometimes quite sharply. The exit speed is usually posted. Reduce your speed according to your speedometer, not to your sense of motion. After driving for any distance at higher speeds, you may tend to think you are going slower than you actually are.

## Before Leaving on a Long Trip

Make sure you are ready. Try to be well rested. If you must start when you are not fresh — such as after a day's work — do not plan to make too many miles that first part of the journey. Wear comfortable clothing and shoes you can easily drive in.

Is your vehicle ready for a long trip? If you keep it serviced and maintained, it is ready to go. If it needs service, have it done before starting out. Of course, you will find experienced and able service experts in GM dealerships all across North America. They will be ready and willing to help if you need it.



Downloaded from www.Manualslib.com manuals search engine

Here are some things you can check before a trip:

- *Windshield Washer Fluid:* Is the reservoir full? Are all windows clean inside and outside?
- *Wiper Blades:* Are they in good shape?
- *Fuel, Engine Oil, Other Fluids:* Have you checked all levels?
- *Lamps:* Are they all working? Are the lenses clean?
- *Tires:* They are vitally important to a safe, trouble-free trip. Is the tread good enough for long-distance driving? Are the tires all inflated to the recommended pressure?
- *Weather Forecasts:* What is the weather outlook along your route? Should you delay your trip a short time to avoid a major storm system?
- *Maps:* Do you have up-to-date maps?

## Highway Hypnosis

Is there actually such a condition as highway hypnosis? Or is it just plain falling asleep at the wheel? Call it highway hypnosis, lack of awareness, or whatever.

There is something about an easy stretch of road with the same scenery, along with the hum of the tires on the road, the drone of the engine, and the rush of the wind against the vehicle that can make you sleepy. Do not let it happen to you! If it does, your vehicle can leave the road in less than a second, and you could crash and be injured.

What can you do about highway hypnosis? First, be aware that it can happen.

Then here are some tips:

- Make sure your vehicle is well ventilated, with a comfortably cool interior.
- Keep your eyes moving. Scan the road ahead and to the sides. Check your rearview mirrors and your instruments frequently.
- If you get sleepy, pull off the road into a rest, service, or parking area and take a nap, get some exercise, or both. For safety, treat drowsiness on the highway as an emergency.



Downloaded from www.Manualslib.com manuals search engine

## Hill and Mountain Roads

Driving on steep hills or mountains is different from driving in flat or rolling terrain.

If you drive regularly in steep country, or if you are planning to visit there, here are some tips that can make your trips safer and more enjoyable.

- Keep your vehicle in good shape. Check all fluid levels and also the brakes, tires, cooling system, and transmission. These parts can work hard on mountain roads.
- Know how to go down hills. The most important thing to know is this: let your engine do some of the slowing down. Shift to a lower gear when you go down a steep or long hill.

**⚠ CAUTION:**

**If you do not shift down, your brakes could get so hot that they would not work well. You would then have poor braking or even none going down a hill. You could crash. Shift down to let your engine assist your brakes on a steep downhill slope.**



Downloaded from www.Manualslib.com manuals search engine

**⚠ CAUTION:**

**Coasting downhill in NEUTRAL (N) or with the ignition off is dangerous. Your brakes will have to do all the work of slowing down. They could get so hot that they would not work well. You would then have poor braking or even none going down a hill. You could crash. Always have your engine running and your vehicle in gear when you go downhill.**

- Know how to go uphill. You may want to shift down to a lower gear. The lower gears help cool your engine and transmission, and you can climb the hill better.
- Stay in your own lane when driving on two-lane roads in hills or mountains. Do not swing wide or cut across the center of the road. Drive at speeds that let you stay in your own lane.
- As you go over the top of a hill, be alert. There could be something in your lane, like a stalled car or an accident.
- You may see highway signs on mountains that warn of special problems. Examples are long grades, passing or no-passing zones, a falling rocks area, or winding roads. Be alert to these and take appropriate action.



Downloaded from www.Manualslib.com manuals search engine

## Winter Driving

Here are some tips for winter driving:

- Have your vehicle in good shape for winter.
- You may want to put winter emergency supplies in your trunk.

Also see *Tires on page 5-52*.

Include an ice scraper, a small brush or broom, a supply of windshield washer fluid, a rag, some winter outer clothing, a small shovel, a flashlight, a red cloth, and a couple of reflective warning triangles. And, if you will be driving under severe conditions, include a small bag of sand, a piece of old carpet, or a couple of burlap bags to help provide traction. Be sure you properly secure these items in your vehicle.



Downloaded from www.Manualslib.com manuals search engine

## Driving on Snow or Ice

Most of the time, those places where your tires meet the road probably have good traction.

However, if there is snow or ice between your tires and the road, you can have a very slippery situation. You will have a lot less traction, or grip, and will need to be very careful.

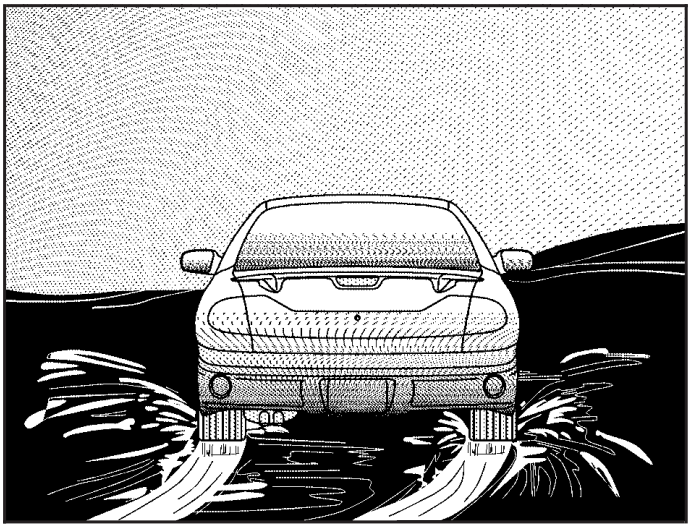

What is the worst time for this? Wet ice. Very cold snow or ice can be slick and hard to drive on. But wet ice can be even more trouble because it may offer the least traction of all. You can get wet ice when it is about freezing, 32°F (0°C), and freezing rain begins to fall. Try to avoid driving on wet ice until salt and sand crews can get there.

Whatever the condition — smooth ice, packed, blowing, or loose snow — drive with caution.

Traction control improves your ability to accelerate when driving on a slippery road. Even though your vehicle has a traction control system (TCS), you will want to slow down and adjust your driving to the road conditions. Under certain conditions, you may want to turn the TCS off, such as when driving through deep snow and loose gravel, to help maintain vehicle motion at lower speeds. See *Traction Control System (TCS) on page 4-8*. Also see “Winter Tires” under *Tires on page 5-52*.



Downloaded from www.Manualslib.com manuals search engine

Your anti-lock brake system (ABS) improves your vehicle's stability when you make a hard stop on a slippery road. Even though you have ABS, you will want to begin stopping sooner than you would on dry pavement. See *Anti-Lock Brake System (ABS) on page 4-6*.

- Allow greater following distance on any slippery road.
- Watch for slippery spots. The road might be fine until you hit a spot that is covered with ice. On an otherwise clear road, ice patches may appear in shaded areas where the sun cannot reach, such as around clumps of trees, behind buildings, or under bridges. Sometimes the surface of a curve or an overpass may remain icy when the surrounding roads are clear. If you see a patch of ice ahead of you, brake before you are on it. Try not to brake while you are actually on the ice, and avoid sudden steering maneuvers.

## If You Are Caught in a Blizzard

If you are stopped by heavy snow, you could be in a serious situation. You should probably stay with your vehicle unless you know for sure that you are near help and you can hike through the snow. Here are some things to do to summon help and keep yourself and your passengers safe:

- Turn on your hazard flashers.
- Tie a red cloth to your vehicle to alert police that you have been stopped by the snow.
- Put on extra clothing or wrap a blanket around you. If you do not have blankets or extra clothing, make body insulators from newspapers, burlap bags, rags, floor mats — anything you can wrap around yourself or tuck under your clothing to keep warm.



Downloaded from www.Manualslib.com manuals search engine

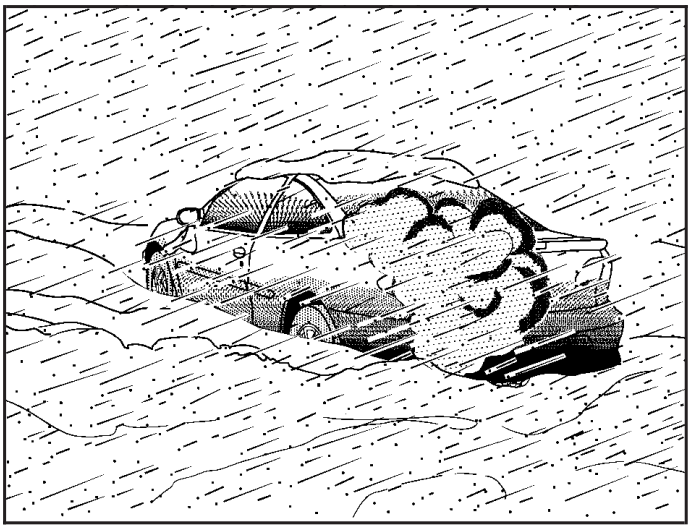

You can run the engine to keep warm, but be careful.

**⚠ CAUTION:**

**Snow can trap exhaust gases under your vehicle. This can cause deadly CO (carbon monoxide) gas to get inside. CO could overcome you and kill you. You cannot see it or**

**CAUTION: (Continued)**

**CAUTION: (Continued)**

**smell it, so you might not know it is in your vehicle. Clear away snow from around the base of your vehicle, especially any that is blocking your exhaust pipe. And check around again from time to time to be sure snow does not collect there.**

**Open a window just a little on the side of the vehicle that is away from the wind. This will help keep CO out.**

Run your engine only as long as you must. This saves fuel. When you run the engine, make it go a little faster than just idle. That is, push the accelerator slightly. This uses less fuel for the heat that you get and it keeps the battery charged. You will need a well-charged battery to restart the vehicle, and possibly for signaling later on with your headlamps. Let the heater run for a while.

Then, shut the engine off and close the window almost all the way to preserve the heat. Start the engine again and repeat this only when you feel really uncomfortable from the cold. But do it as little as possible. Preserve the fuel as long as you can. To help keep warm, you can get out of the vehicle and do some fairly vigorous exercises every half hour or so until help comes.



Downloaded from www.Manualslib.com manuals search engine

## If Your Vehicle is Stuck in Sand, Mud, Ice or Snow

In order to free your vehicle when it is stuck, you will need to spin the wheels, but you do not want to spin your wheels too fast. The method known as rocking can help you get out when you are stuck, but you must use caution.

**⚠ CAUTION:**

**If you let your tires spin at high speed, they can explode, and you or others could be injured. And, the transmission or other parts of the vehicle can overheat. That could cause an engine compartment fire or other damage. When you are stuck, spin the wheels as little as possible. Do not spin the wheels above 35 mph (55 km/h) as shown on the speedometer.**

***Notice:*** **Spinning your wheels can destroy parts of your vehicle as well as the tires. If you spin the wheels too fast while shifting your transmission back and forth, you can destroy your transmission.**

For more information about using tire chains on your vehicle, see *Tire Chains on page 5-67*.

## Rocking Your Vehicle to Get It Out

First, turn your steering wheel left and right. That will clear the area around your front wheels. If your vehicle has traction control, you should turn the system off. See *Traction Control System (TCS) on page 4-8*. Then shift back and forth between REVERSE (R) and a forward gear, spinning the wheels as little as possible. For a manual transmission, shift slowly between either FIRST (1) or SECOND (2) and REVERSE (R), allowing the wheels to stop before shifting into gear. Release the accelerator pedal while you shift, and press lightly on the accelerator pedal when the transmission is in gear. By slowly spinning your wheels in the forward and reverse directions, you will cause a rocking motion that may free your vehicle. If that does not get you out after a few tries, you may need to be towed out. If you do need to be towed out, see *Towing Your Vehicle on page 4-34*.



Downloaded from www.Manualslib.com manuals search engine

## Loading Your Vehicle

It is very important to know how much weight your vehicle can carry. This weight is called the vehicle capacity weight and includes the weight of all occupants, cargo and all nonfactory-installed options. Two labels on your vehicle show how much weight it may properly carry, the Tire and Loading Information label and the Certification label.

**⚠ CAUTION:**

**Do not load your vehicle any heavier than the Gross Vehicle Weight Rating (GVWR), or either the maximum front or rear Gross Axle Weight Rating (GAWR). If you do, parts on your vehicle can break, and it can change the way your vehicle handles. These could cause you to lose control and crash. Also, overloading can shorten the life of your vehicle.**

### Tire and Loading Information Label

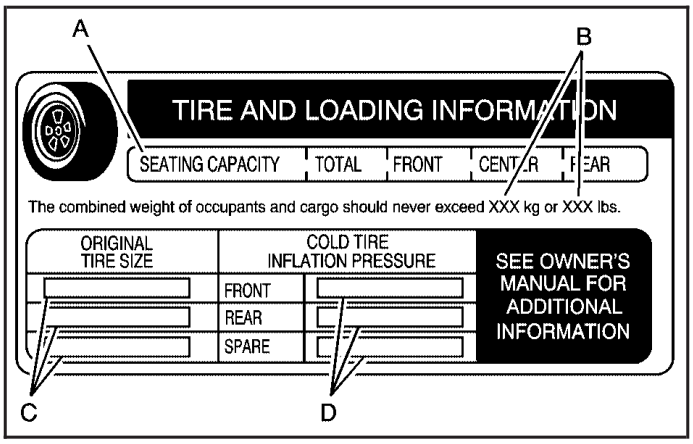


**Label Example**

A vehicle specific Tire and Loading Information label is attached to the vehicle's center pillar (B-pillar). With the driver's door open, you will find the label attached below the door lock post (striker). The tire and loading information label shows the number of occupant seating positions (A), and the maximum vehicle capacity weight (B) in kilograms and pounds.



Downloaded from www.Manualslib.com manuals search engine

The Tire and Loading Information label also shows the tire size of the original equipment tires (C) and the recommended cold tire inflation pressures (D). For more information on tires and inflation see *Tires on page 5-52* and *Inflation - Tire Pressure on page 5-59*.

There is also important loading information on the Certification label. It tells you the Gross Vehicle Weight Rating (GVWR) and the Gross Axle Weight Rating (GAWR) for the front and rear axle; see “Certification Label” later in this section.

## Steps for Determining Correct Load Limit

1. Locate the statement “The combined weight of occupants and cargo should never exceed XXX kg or XXX pounds” on your vehicle placard.
2. Determine the combined weight of the driver and passengers that will be riding in your vehicle.
3. Subtract the combined weight of the driver and passengers from XXX kilograms or XXX pounds.
4. The resulting figure equals the available amount of cargo and luggage load capacity. For example, if the “XXX” amount equals 1400 lbs and there will be five 150 lb passengers in your vehicle, the amount of available cargo and luggage load capacity is 650 lbs (1400 – 750  (5 x 150) = 650 lbs).
5. Determine the combined weight of luggage and cargo being loaded on the vehicle. That weight may not safely exceed the available cargo and luggage load capacity calculated in Step 4.
6. If your vehicle will be towing a trailer, the load from your trailer will be transferred to your vehicle. Consult this manual to determine how this reduces the available cargo and luggage load capacity of your vehicle.

   If your vehicle can tow a trailer, see *Towing a Trailer on page 4-34* for important information on towing a trailer, towing safety rules, and trailering tips.



Downloaded from www.Manualslib.com manuals search engine

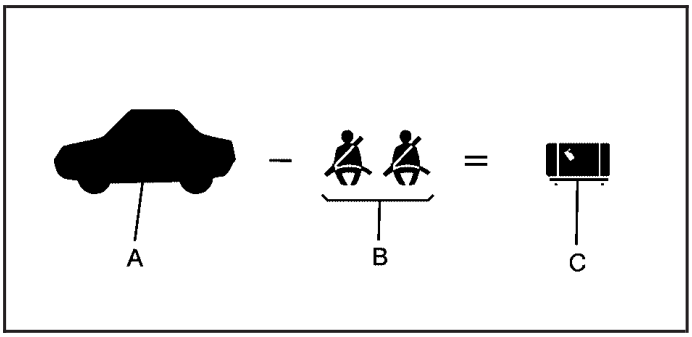


**Example 1**

| Item | Description | Total |
|---|---|---|
| A | Vehicle Capacity Weight for Example 1 = | 1,000 lbs (453 kg) |
| B | Subtract Occupant Weight 150 lbs (68 kg) × 2 = | 300 lbs (136 kg) |
| C | Available Occupant and Cargo Weight = | 700 lbs (317 kg) |

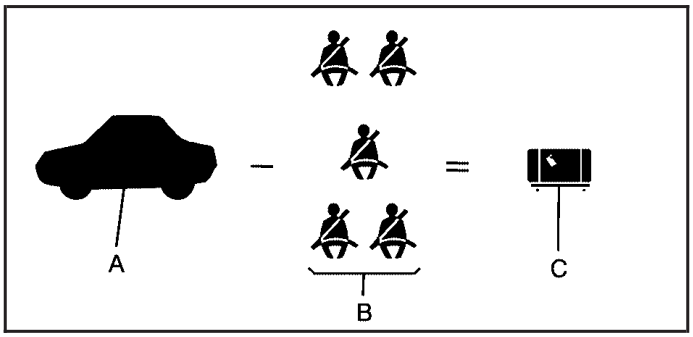


**Example 2**

| Item | Description | Total |
|---|---|---|
| A | Vehicle Capacity Weight for Example 2 = | 1,000 lbs (453 kg) |
| B | Subtract Occupant Weight 150 lbs (68 kg) × 5 = | 750 lbs (340 kg) |
| C | Available Cargo Weight = | 250 lbs (113 kg) |



Downloaded from www.Manualslib.com manuals search engine

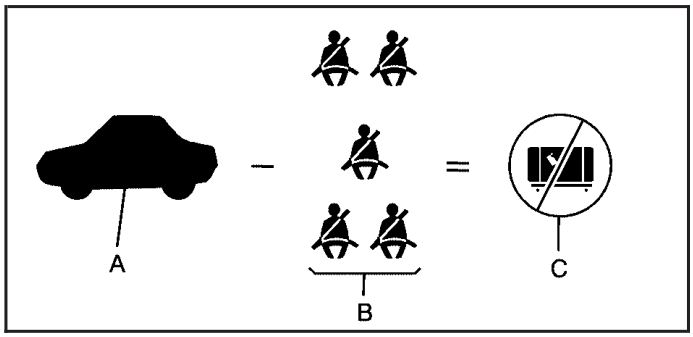


**Example 3**

| Item | Description | Total |
|---|---|---|
| A | Vehicle Capacity Weight for Example 3 = | 1,000 lbs (453 kg) |
| B | Subtract Occupant Weight 200 lbs (91 kg) × 5 = | 1,000 lbs (453 kg) |
| C | Available Cargo Weight = | 0 lbs (0 kg) |

Refer to your vehicle's Tire and Loading Information label for specific information about your vehicle's capacity weight and seating positions. The combined weight of the driver, passengers, and cargo should never exceed your vehicle's capacity weight.

## Certification Label

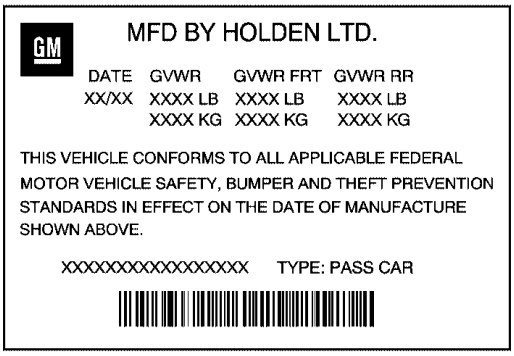


**Label Example**

A vehicle specific Certification label is attached to the rear edge of the driver's door. It tells you the gross weight capacity of your vehicle, called the Gross Vehicle Weight Rating (GVWR). The GVWR includes the weight of the vehicle, all occupants, fuel and cargo. Never exceed the GVWR for your vehicle, or the Gross Axle Weight Rating (GAWR) for either the front or rear axle.



Downloaded from www.Manualslib.com manuals search engine

And, if you do have a heavy load, you should spread it out.

**⚠ CAUTION:**

**Do not load your vehicle any heavier than the Gross Vehicle Weight Rating (GVWR), or either the maximum front or rear Gross Axle Weight Rating (GAWR). If you do, parts on your vehicle can break, and it can change the way your vehicle handles. These could cause you to lose control and crash. Also, overloading can shorten the life of your vehicle.**

If you put things inside your vehicle — like suitcases, tools, packages, or anything else — they will go as fast as the vehicle goes. If you have to stop or turn quickly, or if there is a crash, they will keep going.

**⚠ CAUTION:**

**Things you put inside your vehicle can strike and injure people in a sudden stop or turn, or in a crash.**

- **Put things in the rear area of your vehicle. Try to spread the weight evenly. If you have fold-down rear seats, you will find four anchors on the back wall of your trunk. You can use these anchors to tie down lighter loads. They are not strong enough for heavy things, however, so put them as far forward as you can in the trunk or rear area.**
- **Never stack heavier things, like suitcases, inside the vehicle so that some of them are above the tops of the seats.**
- **Do not leave an unsecured child restraint in your vehicle.**
- **When you carry something inside the vehicle, secure it whenever you can.**
- **Do not leave a seat folded down unless you need to.**



Downloaded from www.Manualslib.com manuals search engine

# Towing

## Towing Your Vehicle

Consult your dealer or a professional towing service if you need to have your disabled vehicle towed. See *Roadside Assistance Program on page 7-6*.

If you want to tow your vehicle behind another vehicle for recreational purposes (such as behind a motorhome), see “Recreational Vehicle Towing” following.

## Recreational Vehicle Towing

Recreational vehicle towing means towing your vehicle behind another vehicle — such as behind a motorhome. The two most common types of recreational vehicle towing are known as “dinghy towing”, which is towing your vehicle with all four wheels on the ground, and “dolly towing” which is towing your vehicle with two wheels on the ground and two wheels up on a device known as a “dolly”.

Your vehicle was not designed to be towed with any of its wheels on the ground. If your vehicle must be towed, see “Towing Your Vehicle” earlier in this section.

## Towing a Trailer

Your vehicle is neither designed nor intended to tow a trailer.



Downloaded from www.Manualslib.com manuals search engine

# Section 5 Service and Appearance Care


**Service** .....5-3
Doing Your Own Service Work .....5-4
Adding Equipment to the Outside of Your Vehicle .....5-5

**Fuel** .....5-5
Gasoline Octane .....5-5
Gasoline Specifications .....5-5
California Fuel .....5-6
Additives .....5-6
Fuels in Foreign Countries .....5-7
Filling the Tank .....5-8
Filling a Portable Fuel Container .....5-10

**Checking Things Under the Hood** .....5-10
Hood Release .....5-11
Engine Compartment Overview .....5-12
Engine Oil .....5-13
Engine Oil Life System .....5-16
Engine Air Cleaner/Filter .....5-18
Automatic Transmission Fluid .....5-19
Manual Transmission Fluid .....5-21
Hydraulic Clutch .....5-22
Engine Coolant .....5-23
Radiator Pressure Cap .....5-26
Engine Overheating .....5-26
Cooling System .....5-29
Power Steering Fluid .....5-34
Windshield Washer Fluid .....5-35
Brakes .....5-36
Battery .....5-39
Jump Starting .....5-40

**Headlamp Aiming** .....5-45

**Bulb Replacement** .....5-47
Halogen Bulbs .....5-47
Headlamps .....5-47
Front Turn Signal and Parking Lamps .....5-49
Taillamps, Turn Signal, Stoplamps and Back-up Lamps .....5-50
Replacement Bulbs .....5-51

**Windshield Wiper Blade Replacement** .....5-52

**Tires** .....5-52
Tire Sidewall Labelling .....5-54
Tire Terminology and Definitions .....5-56
Inflation - Tire Pressure .....5-59
Tire Inspection and Rotation .....5-62
When It Is Time for New Tires .....5-63
Buying New Tires .....5-64
Uniform Tire Quality Grading .....5-64
Wheel Alignment and Tire Balance .....5-66
Wheel Replacement .....5-66




Downloaded from www.Manualslib.com manuals search engine

# Section 5 Service and Appearance Care


Tire Chains .....5-67
If a Tire Goes Flat .....5-68
Changing a Flat Tire .....5-68
Removing the Spare Tire and Tools .....5-70
Removing the Flat Tire and Installing the Spare Tire .....5-71
Storing a Flat or Spare Tire and Tools .....5-75
Compact Spare Tire .....5-76

**Appearance Care** .....5-76
Fabric/Carpet .....5-77
Vinyl .....5-78
Leather .....5-79
Instrument Panel .....5-79
Interior Plastic Components .....5-79
Glass Surfaces .....5-79
Care of Safety Belts .....5-79
Weatherstrips .....5-80
Washing Your Vehicle .....5-80
Cleaning Exterior Lamps/Lenses .....5-80
Finish Care .....5-80
Windshield and Wiper Blades .....5-81
Aluminum Wheels .....5-81
Tires .....5-82
Sheet Metal Damage .....5-82
Finish Damage .....5-82
Underbody Maintenance .....5-83
Chemical Paint Spotting .....5-83
Vehicle Care/Appearance Materials .....5-84

**Vehicle Identification** .....5-85
Vehicle Identification Number (VIN) .....5-85
Service Parts Identification Label .....5-85

**Electrical System** .....5-85
Add-On Electrical Equipment .....5-85
Fuses and Circuit Breakers .....5-86
Instrument Panel Fuse Block .....5-86
Engine Compartment Fuse Block .....5-88

**Capacities and Specifications** .....5-90




Downloaded from www.Manualslib.com manuals search engine

## Service

Your dealer knows your vehicle best and wants you to be happy with it. We hope you will go to your dealer for all your service needs. You will get genuine GM parts and GM-trained and supported service people.

We hope you will want to keep your GM vehicle all GM. Genuine GM parts have one of these marks:

ACDelco®

GM Parts®

GM® Goodwrench

GM® Accessories

### California Proposition 65 Warning

Most motor vehicles, including this one, contain and/or emit chemicals known to the State of California to cause cancer and birth defects or other reproductive harm. Engine exhaust, many parts and systems (including some inside the vehicle), many fluids, and some component wear by-products contain and/or emit these chemicals.



Downloaded from www.Manualslib.com manuals search engine

## Doing Your Own Service Work

If you want to do some of your own service work, you will want to use the proper service manual. It tells you much more about how to service your vehicle than this manual can. To order the proper service manual, see *Service Publications Ordering Information on page 7-11*.

Your vehicle has an airbag system. Before attempting to do your own service work, see *Servicing Your Airbag-Equipped Vehicle on page 1-50*.

You should keep a record with all parts receipts and list the mileage and the date of any service work you perform. See *Maintenance Record on page 6-15*.

**⚠ CAUTION:**

**You can be injured and your vehicle could be damaged if you try to do service work on a vehicle without knowing enough about it.**

- **Be sure you have sufficient knowledge, experience, the proper replacement parts, and tools before you attempt any vehicle maintenance task.**
- **Be sure to use the proper nuts, bolts, and other fasteners. English and metric fasteners can be easily confused. If you use the wrong fasteners, parts can later break or fall off. You could be hurt.**



Downloaded from www.Manualslib.com manuals search engine

## Adding Equipment to the Outside of Your Vehicle

Things you might add to the outside of your vehicle can affect the airflow around it. This may cause wind noise and affect windshield washer performance. Check with your dealer before adding equipment to the outside of your vehicle.

# Fuel

Use of the recommended fuel is an important part of the proper maintenance of your vehicle.

## Gasoline Octane

Use premium unleaded gasoline with a posted octane of 91 or higher for best performance. You may also use middle grade or regular unleaded gasoline rated at 87 octane or higher, but your vehicle's acceleration may be slightly reduced. If the octane is less than 87, you may get a heavy knocking noise when you drive. If this occurs, use a gasoline rated at 87 octane or higher as soon as possible. Otherwise, you might damage your engine.

## Gasoline Specifications

It is recommended that gasoline meet specifications which were developed by automobile manufacturers around the world and contained in the World-Wide Fuel Charter which is available from the Alliance of Automobile Manufacturers at www.autoalliance.org/fuel_charter.htm. Gasoline meeting these specifications could provide improved driveability and emission control system performance compared to other gasoline.



Downloaded from www.Manualslib.com manuals search engine

## California Fuel

If your vehicle is certified to meet California Emission Standards, it is designed to operate on fuels that meet California specifications. See the underhood emission control label. If this fuel is not available in states adopting California emissions standards, your vehicle will operate satisfactorily on fuels meeting federal specifications, but emission control system performance may be affected. The malfunction indicator lamp may turn on and your vehicle may fail a smog-check test. See *Malfunction Indicator Lamp on page 3-28*. If this occurs, return to your authorized GM dealer for diagnosis. If it is determined that the condition is caused by the type of fuel used, repairs may not be covered by your warranty.

## Additives

To provide cleaner air, all gasolines in the United States are now required to contain additives that will help prevent engine and fuel system deposits from forming, allowing your emission control system to work properly. In most cases, you should not have to add anything to your fuel. However, some gasolines contain only the minimum amount of additive required to meet U.S. Environmental Protection Agency regulations. General Motors recommends that you buy gasolines that are advertised to help keep fuel injectors and intake valves clean. If your vehicle experiences problems due to dirty injectors or valves, try a different brand of gasoline. Also, your GM dealer has additives that will help correct and prevent most deposit-related problems.

Gasolines containing oxygenates, such as ethers and ethanol, and reformulated gasolines may be available in your area to contribute to clean air. General Motors recommends that you use these gasolines, particularly if they comply with the specifications described earlier.



Downloaded from www.Manualslib.com manuals search engine

***Notice:*** **Your vehicle was not designed for fuel that contains methanol. Do not use fuel containing methanol. It can corrode metal parts in your fuel system and also damage the plastic and rubber parts. That damage would not be covered under your warranty.**

Some gasolines that are not reformulated for low emissions may contain an octane-enhancing additive called methylcyclopentadienyl manganese tricarbonyl (MMT); ask the attendant where you buy gasoline whether the fuel contains MMT. General Motors does not recommend the use of such gasolines. Fuels containing MMT can reduce the life of spark plugs and the performance of the emission control system may be affected. The malfunction indicator lamp may turn on. If this occurs, return to your authorized GM dealer for service.

## Fuels in Foreign Countries

If you plan on driving in another country outside the United States or Canada, the proper fuel may be hard to find. Never use leaded gasoline or any other fuel not recommended in the previous text on fuel. Costly repairs caused by use of improper fuel would not be covered by your warranty.

To check the fuel availability, ask an auto club, or contact a major oil company that does business in the country where you will be driving.



Downloaded from www.Manualslib.com manuals search engine

## Filling the Tank

**⚠ CAUTION:**

**Fuel vapor burns violently and a fuel fire can cause bad injuries. To help avoid injuries to you and others, read and follow all the instructions on the pump island. Turn off your engine when you are refueling. Do not smoke if you are near fuel or refueling your vehicle. Keep sparks, flames, and smoking materials away from fuel. Do not leave the fuel pump unattended when refueling your vehicle — this is against the law in some places. Keep children away from the fuel pump; never let children pump fuel.**

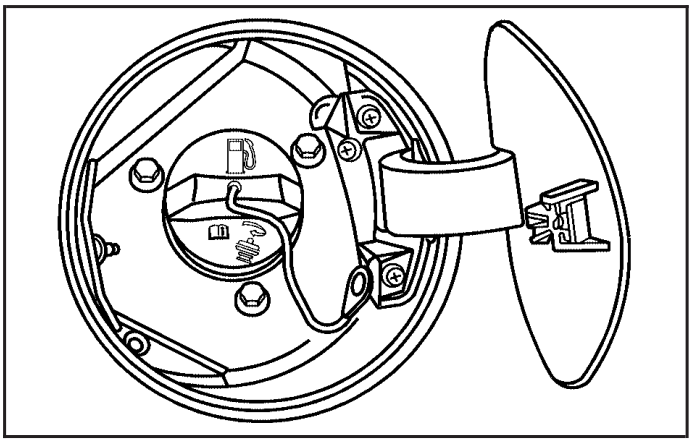

The tethered fuel cap is located behind a hinged fuel door on the passenger's side of the vehicle.

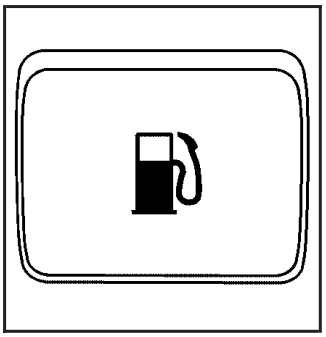

The fuel release button is located on the instrument panel to the left of the steering wheel. Push the button to release the fuel door.



Downloaded from www.Manualslib.com manuals search engine

To remove the fuel cap, turn it slowly counterclockwise. The fuel cap has a spring in it; if the cap is released too soon, it will spring back to the right.

**⚠ CAUTION:**

**If you spill fuel and then something ignites it, you could be badly burned. Fuel can spray out on you if you open the fuel cap too quickly. This spray can happen if your tank is nearly full, and is more likely in hot weather. Open the fuel cap slowly and wait for any hiss noise to stop. Then unscrew the cap all the way.**

Be careful not to spill fuel. Do not top off or overfill the tank and wait a few seconds after you have finished pumping before removing the nozzle. Clean fuel from painted surfaces as soon as possible. See *Washing Your Vehicle on page 5-80*.

When replacing the fuel cap, turn it clockwise until it clicks. Make sure the cap is fully installed. The diagnostic system can determine if the fuel cap has been left off or improperly installed. This would allow fuel to evaporate into the atmosphere. See *Malfunction Indicator Lamp on page 3-28*.

**⚠ CAUTION:**

**If a fire starts while you are refueling, do not remove the nozzle. Shut off the flow of fuel by shutting off the pump or by notifying the station attendant. Leave the area immediately.**

***Notice:*** **If you need a new fuel cap, be sure to get the right type. Your dealer can get one for you. If you get the wrong type, it may not fit properly. This may cause your malfunction indicator lamp to light and may damage your fuel tank and emissions system. See *Malfunction Indicator Lamp on page 3-28*.**



Downloaded from www.Manualslib.com manuals search engine

## Filling a Portable Fuel Container

**⚠ CAUTION:**

**Never fill a portable fuel container while it is in your vehicle. Static electricity discharge from the container can ignite the gasoline vapor. You can be badly burned and your vehicle damaged if this occurs. To help avoid injury to you and others:**

- **Dispense gasoline only into approved containers.**
- **Do not fill a container while it is inside a vehicle, in a vehicle's trunk, pickup bed, or on any surface other than the ground.**
- **Bring the fill nozzle in contact with the inside of the fill opening before operating the nozzle. Contact should be maintained until the filling is complete.**
- **Do not smoke while pumping gasoline.**

# Checking Things Under the Hood

**⚠ CAUTION:**

**An electric fan under the hood can start up and injure you even when the engine is not running. Keep hands, clothing and tools away from any underhood electric fan.**

**⚠ CAUTION:**

**Things that burn can get on hot engine parts and start a fire. These include liquids like fuel, oil, coolant, brake fluid, windshield washer and other fluids, and plastic or rubber. You or others could be burned. Be careful not to drop or spill things that will burn onto a hot engine.**



Downloaded from www.Manualslib.com manuals search engine

## Hood Release

To open the hood, do the following:

1. Pull the handle with this symbol on it. It is located under the instrument panel on the driver's side of the vehicle.

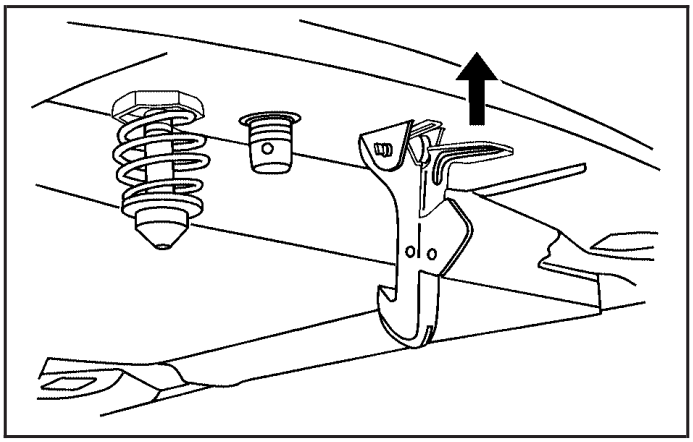

2. Then go to the front of the vehicle and pull up on the secondary hood release.
3. After you have partially lifted the hood, gas struts will automatically take over to lift and hold the hood in the fully open position.

Before closing the hood, be sure all the filler caps are on properly. Then pull the hood down and close it firmly.



Downloaded from www.Manualslib.com manuals search engine

## Engine Compartment Overview

When you open the hood on the engine, here is what you will see:

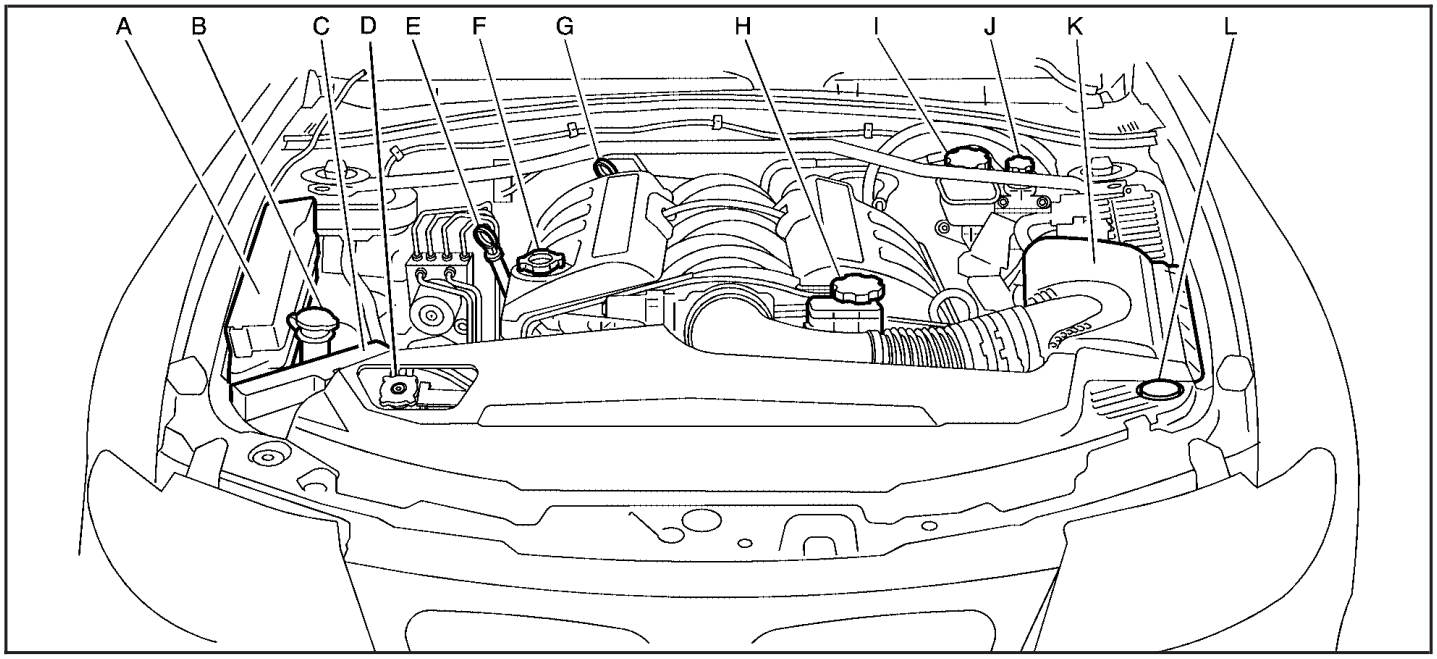




Downloaded from www.Manualslib.com manuals search engine

A. Engine Compartment Fuse Block. See *Engine Compartment Fuse Block on page 5-88*.

B. Windshield Washer Fluid Reservoir. See “Adding Washer Fluid” under *Windshield Washer Fluid on page 5-35*.

C. Battery. See *Battery on page 5-39*.

D. Radiator Pressure Cap. See *Radiator Pressure Cap on page 5-26*.

E. Engine Oil Dipstick. See “Checking Engine Oil” under *Engine Oil on page 5-13*.

F. Engine Oil Fill Cap. See “When to Add Engine Oil” under *Engine Oil on page 5-13*.

G. Automatic Transmission Dipstick (If Equipped). See “Checking the Fluid Level” under *Automatic Transmission Fluid on page 5-19*.

H. Power Steering Fluid Reservoir. See *Power Steering Fluid on page 5-34*.

I. Brake Fluid Reservoir. See “Brake Fluid” under *Brakes on page 5-36*.

J. Hydraulic Clutch Fluid Reservoir (If Equipped). See *Hydraulic Clutch on page 5-22*.

K. Engine Air Cleaner/Filter. See *Engine Air Cleaner/Filter on page 5-18*.

L. Engine Coolant Overflow Reservoir. See *Engine Coolant on page 5-23*.

## Engine Oil

If the Check Oil message appears on the trip computer display, it means you need to check your engine oil level right away. For more information, see *Trip Computer on page 3-33*. You should check your engine oil level regularly; this is an added reminder.

### Checking Engine Oil

It is a good idea to check your engine oil every time you get fuel. In order to get an accurate reading, the oil must be warm and the vehicle must be on level ground.

The engine oil dipstick handle is a yellow loop. See *Engine Compartment Overview on page 5-12* for the location of the engine oil dipstick.

1. Turn off the engine and give the oil several minutes to drain back into the oil pan. If you do not do this, the oil dipstick might not show the actual level.
2. Pull out the dipstick and clean it with a paper towel or cloth, then push it back in all the way. Remove it again, keeping the tip down, and check the level.



Downloaded from www.Manualslib.com manuals search engine

## When to Add Engine Oil

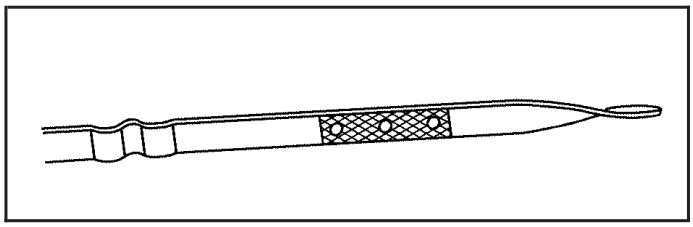

If the oil is at or below the cross-hatched area at the tip of the dipstick, then you will need to add at least one quart of oil. But you must use the right kind. This section explains what kind of oil to use. For engine oil crankcase capacity, see *Capacities and Specifications on page 5-90*.

***Notice:*** **Do not add too much oil. If the engine has so much oil that the oil level gets above the cross-hatched area that shows the proper operating range, the engine could be damaged.**

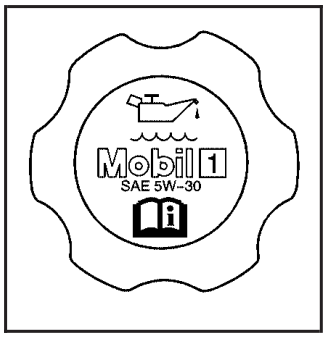


See *Engine Compartment Overview on page 5-12* for the location of the engine oil fill cap.

Be sure to add enough oil to put the level somewhere in the proper operating range in the cross-hatched area. Push the dipstick all the way back in when you are through.



Downloaded from www.Manualslib.com manuals search engine

## What Kind of Engine Oil to Use

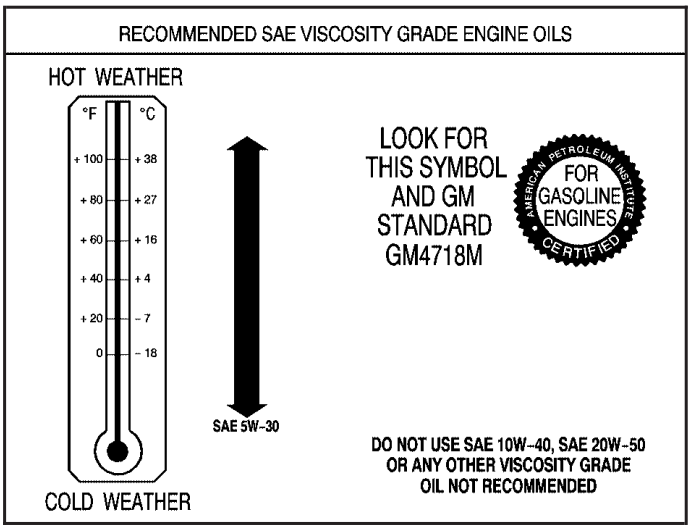


Look for two things:

- GM4718M

  Your vehicle's engine requires a special oil meeting GM Standard GM4718M. Oils meeting this standard may be identified as synthetic. However, not all *synthetic* oils will meet this GM standard. You should look for and use only an oil that meets GM Standard GM4718M.

***Notice:*** **If you use oils that do not have the GM4718M Standard designation, you can cause engine damage not covered by your warranty.**

- SAE 5W-30

  As shown in the viscosity chart, SAE 5W-30 is best for your vehicle.

  These numbers on an oil container show its viscosity, or thickness. Do not use other viscosity oils such as SAE 20W-50.

Oils meeting these requirements should also have the starburst symbol on the container. This symbol indicates that the oil has been certified by the American Petroleum Institute (API).

You should look for this on the oil container, and use *only* those oils that are identified as meeting GM Standard GM4718M and have the starburst symbol on the front of the oil container.



Downloaded from www.Manualslib.com manuals search engine

Your vehicle's engine is filled at the factory with a Mobil 1® synthetic oil, which meets all requirements for your vehicle.

Substitute Engine Oil: When adding oil to maintain engine oil level, oil meeting GM Standard GM4718M may not be available. You can add substitute oil designated SAE 5W-30 with the starburst symbol at all temperatures. Substitute oil not meeting GM Standard GM4718M should not be used for an oil change.

## Engine Oil Additives

Do not add anything to the oil. The recommended oils with the starburst symbol that meet GM Standard GM4718M are all you will need for good performance and engine protection.

# Engine Oil Life System

## When to Change Engine Oil

Your vehicle has a computer system that lets you know when to change the engine oil and filter. This is based on engine revolutions and engine temperature, and not on mileage. Based on driving conditions, the mileage at which an oil change will be indicated can vary considerably. For the oil life system to work properly, you must reset the system every time the oil is changed.

When the system has calculated that oil life has been diminished, it will indicate that an oil change is necessary. A Service Engine Oil light on the trip computer display will come on. See *Trip Computer on page 3-33*. Change engine oil as soon as possible within the next 600 miles (1 000 km). It is possible that, if you are driving under the best conditions, the oil life system may not indicate that an oil change is necessary for over a year. However, the engine oil and filter must be changed at least once a year and at this time the system must be reset. Your dealer has GM-trained service people who will perform this work using genuine GM parts and reset the system. It is also important to check engine oil regularly and keep it at the proper level.



Downloaded from www.Manualslib.com manuals search engine

If the system is ever reset accidentally, you must change the oil at 3,000 miles (5 000 km) since your last oil change. Remember to reset the oil life system whenever the oil is changed.

After changing the engine oil, reset the system by performing the following steps:

## How to Reset the Engine Oil Life System

The Engine Oil Life System calculates when to change the engine oil and filter based on vehicle use. Anytime engine oil is changed, reset the system so it can calculate when the next oil change is required. If a situation occurs where you change your oil prior to the Service Engine Oil light being turned on, reset the system.

1. With the engine off, turn the ignition key to ON.
2. Fully press and release the accelerator pedal slowly two times within five seconds.
3. Turn the key to LOCK.

   If the Service Engine Oil light comes back on when you start your vehicle, the engine oil life system has not reset. Repeat the procedure.

## What to Do with Used Oil

Used engine oil contains certain elements that may be unhealthy for your skin and could even cause cancer. Do not let used oil stay on your skin for very long. Clean your skin and nails with soap and water, or a good hand cleaner. Wash or properly dispose of clothing or rags containing used engine oil. See the manufacturer's warnings about the use and disposal of oil products.

Used oil can be a threat to the environment. If you change your own oil, be sure to drain all the oil from the filter before disposal. Never dispose of oil by putting it in the trash, pouring it on the ground, into sewers, or into streams or bodies of water. Instead, recycle it by taking it to a place that collects used oil. If you have a problem properly disposing of used oil, ask your dealer, a service station, or a local recycling center for help.



Downloaded from www.Manualslib.com manuals search engine

## Engine Air Cleaner/Filter

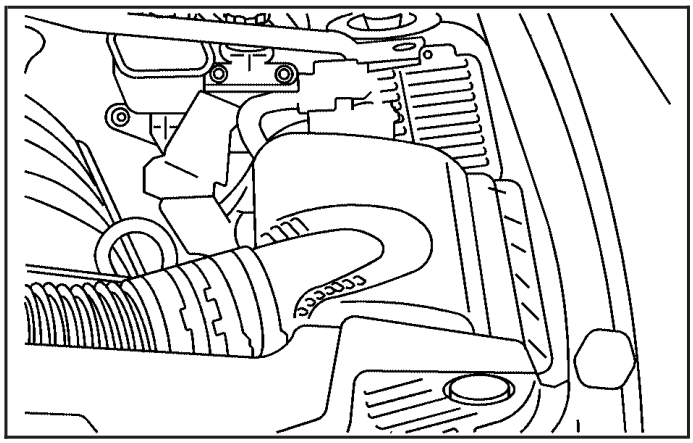

See *Engine Compartment Overview on page 5-12* for more information on the location of the engine air cleaner/filter.

### When to Inspect the Engine Air Cleaner/Filter

Inspect the air cleaner/filter at every oil change and replace at the first oil change after 25,000 miles (41 500 km). See *Scheduled Maintenance on page 6-4* for more information.

### How to Inspect the Engine Air Cleaner/Filter

To inspect the air cleaner/filter, remove the filter from the vehicle and lightly shake the filter to release loose dust and dirt. If the filter remains caked with dirt, a new filter is required.

To inspect or replace the engine air cleaner/filter, do the following:

1. Remove the screws that hold the cover on.
2. Lift off the cover.
3. Inspect or replace the engine air cleaner/filter.
4. Put the cover back on tightly.



Downloaded from www.Manualslib.com manuals search engine

**⚠ CAUTION:**

**Operating the engine with the air cleaner/filter off can cause you or others to be burned. The air cleaner not only cleans the air; it helps to stop flame if the engine backfires. If it is not there and the engine backfires, you could be burned. Do not drive with it off, and be careful working on the engine with the air cleaner/filter off.**

***Notice:*** **If the air cleaner/filter is off, a backfire can cause a damaging engine fire. And, dirt can easily get into your engine, which will damage it. Always have the air cleaner/filter in place when you are driving.**

# Automatic Transmission Fluid

## When to Check and Change

A good time to check your automatic transmission fluid level is when the engine oil is changed.

Change the fluid and filter at the intervals listed in *Additional Required Services on page 6-6*, and be sure to use the transmission fluid listed in *Recommended Fluids and Lubricants on page 6-12*.

## How to Check

Because this operation can be a little difficult, you may choose to have this done at the dealership service department.

If you do it yourself, be sure to follow all the instructions here, or you could get a false reading on the dipstick.

***Notice:*** **Too much or too little fluid can damage your transmission. Too much can mean that some of the fluid could come out and fall on hot engine part or exhaust system parts, starting a fire. Too little fluid could cause the transmission to overheat. Be sure to get an accurate reading if you check your transmission fluid.**

Wait at least 30 minutes before checking the transmission fluid level if you have been driving in the following conditions:

- When outside temperatures are above 90°F (32°C).
- At high speed for quite a while.
- In heavy traffic — especially in hot weather.

To get the right reading, the fluid should be at normal operating temperature, which is 180°F to 200°F (82°C to 93°C).



Downloaded from www.Manualslib.com manuals search engine

Get the vehicle warmed up by driving about 15 miles (24 km) when outside temperatures are above 50°F (10°C). If it is colder than 50°F (10°C), drive the vehicle in DRIVE (D) until the engine temperature gage moves and then remains steady for 10 minutes.

A cold fluid check can be made after the vehicle has been sitting for eight hours or more with the engine off, but this is used only as a reference. Let the engine run at idle for five minutes if outside temperatures are 50°F (10°C) or more. If it is colder than 50°F (10°C), you may have to idle the engine longer. Should the fluid level be low during this cold check, you must check the fluid hot before adding fluid. Checking the fluid hot will give you a more accurate reading of the fluid level.

## Checking the Fluid Level

Prepare your vehicle as follows:

- Park your vehicle on a level place. Keep the engine running.
- With the parking brake applied, place the shift lever in PARK (P).
- With your foot on the brake pedal, move the shift lever through each gear range, pausing for about three seconds in each range. Then, position the shift lever in PARK (P).
- Let the engine run at idle for three minutes or more.

Then, without shutting off the engine, follow these steps:

The automatic transmission dipstick is located at the rear of the engine compartment, on the passenger's side of the vehicle. See *Engine Compartment Overview on page 5-12* for more information on location.

1. Unclip the handle and remove the dipstick; wipe it clean with a clean rag or paper towel and re-insert it fully. Remove it again and read the fluid level.
2. Check both sides of the dipstick, and read the lower level. The fluid level must be in the COLD area for a cold check or in the cross-hatched HOT area for a hot check.
3. If the fluid level is in the acceptable range, push the dipstick back in all the way.

   Remember to always replace the dipstick and lock the handle down.

## How to Add Fluid

Refer to the Maintenance Schedule to determine what kind of transmission fluid to use. See *Recommended Fluids and Lubricants on page 6-12*.

Add fluid only after checking the transmission fluid while it is hot. A cold check is used only as a reference. If the fluid level is low, add only enough of the proper fluid to bring the level up to the HOT area for a hot check.



Downloaded from www.Manualslib.com manuals search engine

The level should never read over the HOT mark, so be careful not to add too much. It does not take much fluid, generally less than 0.6 pints (0.3 L). Do not overfill.

***Notice:*** **Use of the incorrect automatic transmission fluid may damage your vehicle, and the damages may not be covered by your warranty. Always use the automatic transmission fluid listed in *Recommended Fluids and Lubricants on page 6-12*.**

- After adding fluid, recheck the fluid level as described under “How to Check,” earlier in this section.
- When the correct fluid level is obtained, push the dipstick back in all the way.

  Remember to always replace the dipstick and lock the handle down.
- If fluid has to be added often, there may be a problem or leak and you should see your dealer.

# Manual Transmission Fluid

## When to Check

A good time to have your manual transmission fluid checked is when the engine oil is changed. However, the fluid in your manual transmission does not require changing.

## How to Check

Because this operation can be difficult, you may choose to have this done at your dealership service department.

If you do it yourself, be sure to follow all the instructions here, or you could get a false reading.

***Notice:*** **Too much or too little fluid can damage your transmission. Too much can mean that some of the fluid could come out and fall on hot engine part or exhaust system parts, starting a fire. Too little fluid could cause the transmission to overheat. Be sure to get an accurate reading if you check your transmission fluid.**

Check the fluid level only when your engine is off, the vehicle is parked on a level place and the transmission is cool enough for you to rest your fingers on the transmission case.

Then, follow these steps:

1. Remove the reverse light switch.
2. Check that the lubricant level is up to the bottom of the switch hole.
3. If the fluid level is good, install the switch and be sure it is fully seated. If the fluid level is low, add more fluid as described in the next steps.



Downloaded from www.Manualslib.com manuals search engine

## How to Add Fluid

Here is how to add fluid. Refer to the Maintenance Schedule to determine what kind of fluid to use. See *Recommended Fluids and Lubricants on page 6-12*.

1. Remove the reverse light switch.
2. Add fluid at the switch hole. Add only enough fluid to bring the fluid level up to the bottom of the switch hole.
3. Install the reverse light switch. Be sure the switch is fully seated.

## Hydraulic Clutch

The clutch fluid level should be checked weekly. A fluid loss in this system could indicate a problem. If the clutch fluid requires constant filling it could indicate a leak. Have the system inspected and repaired by your dealer. Adding fluid will not correct a leak.

## When to Check and What to Use

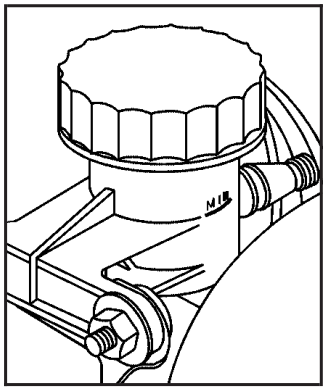


Refer to the Maintenance Schedule to determine the proper fluid. See *Owner Checks and Services on page 6-8* and *Recommended Fluids and Lubricants on page 6-12*.



Downloaded from www.Manualslib.com manuals search engine

## How to Check and Add Fluid

To check the fluid level, look at the markings on the reservoir. If the fluid level is between the MIN and the MAX line, the fluid level is correct. If the fluid level is between these marks do not remove the cap, as the fluid will quickly absorb moisture. See *Engine Compartment Overview on page 5-12* for more information on reservoir location.

If fluid does need to be added, first turn the vehicle off. Remove the cap and add the proper fluid. Remember to replace the cap and clean up any spilled fluid.

## Engine Coolant

The cooling system in your vehicle is filled with DEX-COOL® engine coolant. This coolant is designed to remain in the vehicle for five years or 150,000 miles (240 000 km), whichever occurs first, if only DEX-COOL® extended life coolant is added.

The following explains the cooling system and how to add coolant when it is low. If there is a problem with engine overheating or if coolant needs to be added to the radiator, see *Engine Overheating on page 5-26*.

A 50/50 mixture of clean, drinkable water and DEX-COOL® coolant will:

- Give freezing protection down to –34°F (–37°C).
- Give boiling protection up to 265°F (129°C).
- Protect against rust and corrosion.
- Help keep the proper engine temperature.
- Let the warning lights and gages work as they should.

***Notice:*** **Using coolant other than DEX-COOL® may cause premature engine, heater core or radiator corrosion. In addition, the engine coolant may require changing sooner, at 30,000 miles (50 000 km) or 24 months, whichever occurs first. Any repairs would not be covered by your warranty. Always use DEX-COOL® (silicate-free) coolant in your vehicle.**



Downloaded from www.Manualslib.com manuals search engine

## What to Use

Use a mixture of one-half clean, drinkable water and one-half DEX-COOL® coolant which will not damage aluminum parts. If this coolant mixture is used, nothing else needs to be added.

**⚠ CAUTION:**

**Adding only plain water to your cooling system can be dangerous. Plain water, or some other liquid such as alcohol, can boil before the proper coolant mixture will. Your vehicle's coolant warning system is set for the proper coolant mixture. With plain water or the wrong mixture, your engine could get too hot but you would not get the overheat warning. Your engine could catch fire and you or others could be burned. Use a 50/50 mixture of clean, drinkable water and DEX-COOL® coolant.**

***Notice:*** **If you use an improper coolant mixture, your engine could overheat and be badly damaged. The repair cost would not be covered by your warranty. Too much water in the mixture can freeze and crack the engine, radiator, heater core and other parts.**

If coolant needs to be added more than four times a year, have your dealer check the cooling system.

***Notice:*** **If you use the proper coolant, you do not have to add extra inhibitors or additives which claim to improve the system. These can be harmful.**

## Checking Coolant

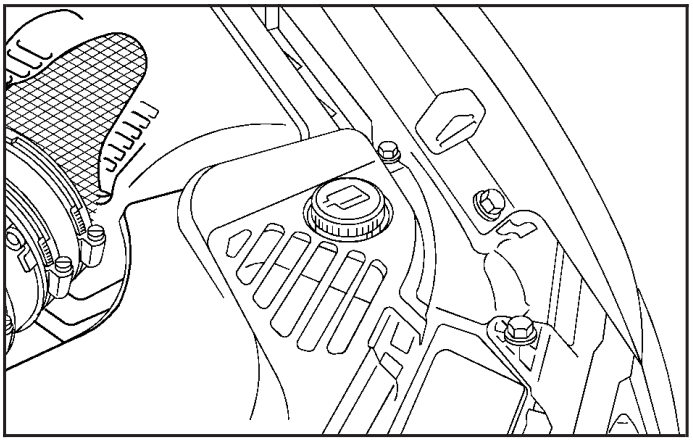

The coolant overflow reservoir is located in the engine compartment on the driver's side of the vehicle. See *Engine Compartment Overview on page 5-12* for more information on location.



Downloaded from www.Manualslib.com manuals search engine

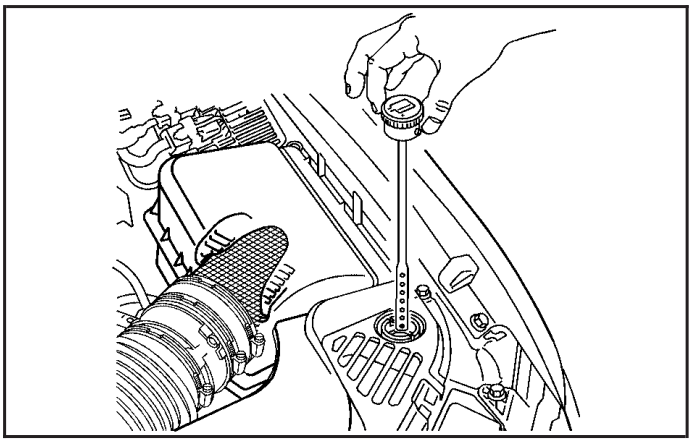

The coolant level should be checked at each fuel fill, by looking at the dipstick in the coolant overflow reservoir. To remove the dipstick, push down on the coolant reservoir cap while turning it counterclockwise.

When your engine is cold, the coolant level should be at or above the bottom arrow on the dipstick. After the vehicle has been driven and the engine is at normal operating temperature, the level should be somewhere between the two arrows on the dipstick.

If the coolant level is correct, replace the dipstick then push down on the coolant reservoir cap while turning it clockwise until it stops, to lock it into position.

## Adding Coolant

If you need more coolant, add the proper DEX-COOL® coolant mixture at the coolant overflow reservoir, but be careful not to spill it. Check the level with the dipstick and keep adding fluid until the level is correct.

**⚠ CAUTION:**

**You can be burned if you spill coolant on hot engine parts. Coolant contains ethylene glycol, and it will burn if the engine parts are hot enough. Do not spill coolant on a hot engine.**

When the level is correct, replace the dipstick then push down on the coolant reservoir cap while turning it clockwise until it stops, to lock it into position.



Downloaded from www.Manualslib.com manuals search engine

If the coolant overflow reservoir is completely empty, add coolant to the radiator. See *Engine Overheating on page 5-26*.

**⚠ CAUTION:**

**Turning the radiator pressure cap when the engine and radiator are hot can allow steam and scalding liquids to blow out and burn you badly. With the coolant recovery tank, you will almost never have to add coolant at the radiator. Never turn the radiator pressure cap — even a little — when the engine and radiator are hot.**

Occasionally check the coolant in the radiator. For information on how to add coolant to the radiator, see *Cooling System on page 5-29*.

## Radiator Pressure Cap

***Notice:*** **If the pressure cap is not tightly installed, coolant loss and possible engine damage may occur. Be sure the cap is properly and tightly secured.**

See *Engine Compartment Overview on page 5-12* for information on location.

## Engine Overheating

Immediate action is required if your engine overheats. This is indicated by the coolant temperature gage and the Engine Temp Hot message on the trip computer display. See *Engine Coolant Temperature Gage on page 3-28* and *Trip Computer on page 3-33* for more information.



Downloaded from www.Manualslib.com manuals search engine

## If Steam Is Coming From Your Engine

**⚠ CAUTION:**

**Steam from an overheated engine can burn you badly, even if you just open the hood. Stay away from the engine if you see or hear steam coming from it. Just turn it off and get everyone away from the vehicle until it cools down. Wait until there is no sign of steam or coolant before you open the hood.**

**If you keep driving when your engine is overheated, the liquids in it can catch fire. You or others could be badly burned. Stop your engine if it overheats, and get out of the vehicle until the engine is cool.**

***Notice:*** **If your engine catches fire because you keep driving with no coolant, your vehicle can be badly damaged. The costly repairs would not be covered by your warranty.**

## If No Steam Is Coming From Your Engine

An overheat warning, along with an Engine Temp Hot message can indicate a serious problem.

If you get an engine overheat warning, but see or hear no steam, the problem may not be too serious. Sometimes the engine can get a little too hot when you:

- Climb a long hill on a hot day.
- Stop after high-speed driving.
- Idle for long periods in traffic.

If you get the overheat warning with no sign of steam, try this for a minute or so:

1. In heavy traffic, let the engine idle in NEUTRAL (N) while stopped. If it is safe to do so, pull off the road, apply the parking brake, shift to PARK (P) or NEUTRAL (N) and let the engine idle while you get out and check that the cooling fan is working.



Downloaded from www.Manualslib.com manuals search engine

2. If the fan is working and the temperature gage needle has not returned to its normal position within a few minutes, stop the engine and remove the ignition key.

   Look for leaks at the radiator hoses and connections, heater hoses and connections, radiator, and water pump. Be careful when checking these areas as they will probably still be hot. If you find a major leak or other problems that may have caused the engine to overheat, do not run the engine until these problems have been corrected. If you do not find anything wrong, you should check the engine coolant level. See *Engine Coolant on page 5-23*. You should also check the air intake area below the front bumper to ensure that it is clear of leaves and road grime.

3. Turn off your air conditioning and turn on your heater to full hot at the highest fan speed and open the windows as necessary.

If you no longer have the overheat warning, you can drive. Just to be safe, drive slower for about 10 minutes. If the warning does not come back on, you can drive normally.

If the warning continues and you have not stopped, pull over, stop, and park your vehicle right away.

If there is still no sign of steam, you can idle the engine for three minutes while you are parked. If you still have the warning, turn off the engine and get everyone out of the vehicle until it cools down.

You may decide not to lift the hood but to get service help right away.



Downloaded from www.Manualslib.com manuals search engine

## Cooling System

When you decide it is safe to lift the hood, here is what you will see:

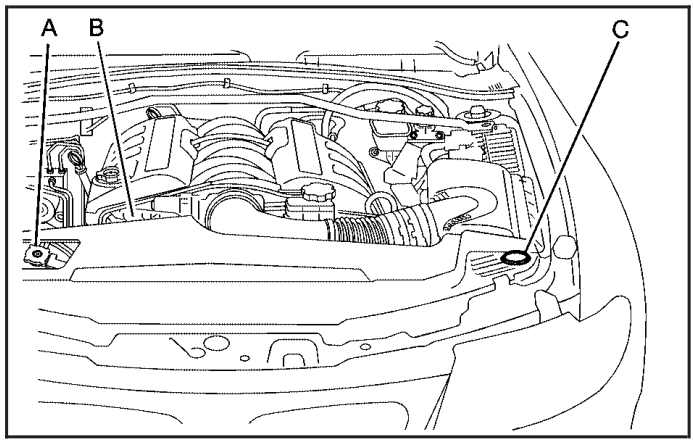


A. Radiator Pressure Cap
B. Electric Engine Cooling Fan
C. Engine Coolant Overflow Reservoir

**⚠ CAUTION:**

**An electric engine cooling fan under the hood can start up even when the engine is not running and can injure you. Keep hands, clothing and tools away from any underhood electric fan.**

If you can hear the coolant inside the coolant overflow reservoir bubbling or boiling, do not do anything else until it cools down. The vehicle should be parked on a level surface.



Downloaded from www.Manualslib.com manuals search engine

The coolant level should be at or above the bottom arrow on the dipstick. If it is not, you may have a leak at the pressure cap or in the radiator hoses, heater hoses, radiator, water pump, or somewhere else in the cooling system.

**⚠ CAUTION:**

**Heater and radiator hoses, and other engine parts, can be very hot. Do not touch them. If you do, you can be burned.**

**Do not run the engine if there is a leak. If you run the engine, it could lose all coolant. That could cause an engine fire, and you could be burned. Get any leak fixed before you drive the vehicle.**

If there seems to be no leak, with the engine on, check to see if the electric engine cooling fan is running. If the engine is overheating, the fan should be running. If it is not, your vehicle needs service.

***Notice:*** **If you operate the engine without coolant or fail to maintain the cooling system properly, you could damage the engine. The repairs would not be covered by your warranty. Always follow the maintenance schedule in this manual for maintaining your cooling system. See *Cooling System on page 5-29* for more information.**

***Notice:*** **Using coolant other than DEX-COOL® may cause premature engine, heater core or radiator corrosion. In addition, the engine coolant may require changing sooner, at 30,000 miles (50 000 km) or 24 months, whichever occurs first. Any repairs would not be covered by your warranty. Always use DEX-COOL® (silicate-free) coolant in your vehicle.**



Downloaded from www.Manualslib.com manuals search engine

## How to Add Coolant to the Coolant Overflow Reservoir

**⚠ CAUTION:**

**Adding only plain water to your cooling system can be dangerous. Plain water, or some other liquid such as alcohol, can boil before the proper coolant mixture will. Your vehicle's coolant warning system is set for the proper coolant mixture. With plain water or the wrong mixture, your engine could get too hot but you would not get the overheat warning. Your engine could catch fire and you or others could be burned. Use a 50/50 mixture of clean, drinkable water and DEX-COOL® coolant.**

If you have not found a problem yet, check the coolant level on the coolant overflow reservoir dipstick. If the coolant level is not at or above the bottom arrow on the dipstick, add a 50/50 mixture of clean, drinkable water and DEX-COOL® coolant at the coolant overflow reservoir. See *Engine Coolant on page 5-23* for more information.

***Notice:*** **In cold weather, water can freeze and crack the engine, radiator, heater core and other parts. Use the recommended coolant and the proper coolant mixture.**

**⚠ CAUTION:**

**You can be burned if you spill coolant on hot engine parts. Coolant contains ethylene glycol and it will burn if the engine parts are hot enough. Do not spill coolant on a hot engine.**



Downloaded from www.Manualslib.com manuals search engine

To add coolant to the overflow reservoir, do the following:

1. Remove the coolant overflow reservoir cap when the cooling system is no longer hot.

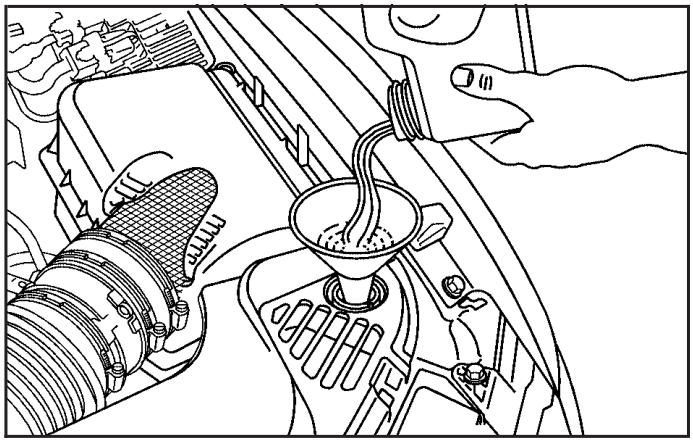

2. Fill the coolant overflow reservoir with the proper mixture, until it reaches the bottom arrow on the dipstick.
3. Replace the dipstick, then press down on the coolant reservoir cap while turning it clockwise until it stops, to lock it into position.

If there is still no coolant visible on the dipstick, there is one more thing you can try. You can add the proper coolant mixture directly to the radiator, but be sure the system is cool before you do it.

**⚠ CAUTION:**

**Steam and scalding liquids from a hot cooling system can blow out and burn you badly. They are under pressure, and if you turn the radiator pressure cap — even a little — they can come out at high speed. Never turn the cap when the cooling system, including the radiator pressure cap, is hot. Wait for the cooling system and radiator pressure cap to cool if you ever have to turn the pressure cap.**



Downloaded from www.Manualslib.com manuals search engine

## How to Add Coolant to the Radiator

***Notice:*** **Your engine has a specific radiator fill procedure. Failure to follow this procedure could cause your engine to overheat and be severely damaged.**

1. You can remove the radiator pressure cap when the cooling system, including the radiator pressure cap and upper radiator hose, is no longer hot. See *Engine Compartment Overview on page 5-12* for more information on the location of the radiator pressure cap.

   Turn the pressure cap slowly counterclockwise until it first stops. Do not press down while turning the pressure cap. If you hear a hiss, wait for that to stop. A hiss means there is still some pressure left.

2. Then keep turning the pressure cap, but now push down as you turn it. Remove the pressure cap.

3. Fill the radiator with the proper DEX-COOL® coolant mixture, up to the base of the filler neck. See *Engine Coolant on page 5-23* for more information about the proper coolant mixture.

4. Rinse or wipe any spilled coolant from the engine and the compartment.

5. Then fill the coolant overflow reservoir to the bottom arrow on the dipstick.

6. Put the cap back on the coolant overflow reservoir, but leave the radiator pressure cap off.

7. Start the engine and let it run until you can feel the upper radiator hose getting hot. Watch out for the engine cooling fan.

8. By this time, the coolant level inside the radiator fill neck may be lower. If the level is lower, add more of the proper DEX-COOL® coolant mixture through the filler neck until the level reaches the base of the filler neck.

9. Then replace the radiator pressure cap. At any time during this procedure, if coolant begins to flow out of the filler neck, reinstall the pressure cap. Be sure the pressure cap is hand-tight and fully seated.

10. Check the coolant in the overflow reservoir. The level should be at the bottom arrow on the dipstick when the engine is cold.

    See your dealer, if necessary.



Downloaded from www.Manualslib.com manuals search engine

## Power Steering Fluid

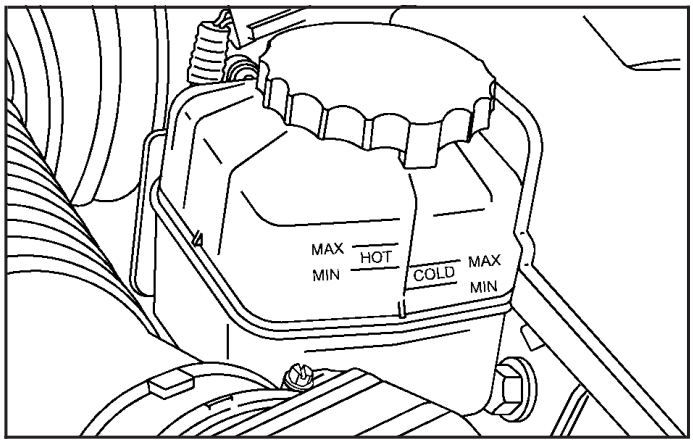


The power steering fluid reservoir is located toward the front of the engine compartment on the driver's side of the vehicle. See *Engine Compartment Overview on page 5-12* for reservoir location.

## When to Check Power Steering Fluid

It is not necessary to regularly check power steering fluid unless you suspect there is a leak in the system or you hear an unusual noise. A fluid loss in this system could indicate a problem. Have the system inspected and repaired.

## How to Check Power Steering Fluid

The fluid level should be checked after the vehicle has been driven for at least 20 minutes, so that the fluid is warm. A cold level check can be done after the engine has been off for at least five hours. However, the hot level check is recommended.

The fluid level can be viewed through the reservoir. The level markings are next to the fluid window. When the fluid is cold, the level should be between the COLD MIN (Minimum) and MAX (Maximum) marks. When the vehicle has been driven for at least 20 minutes and the fluid is hot, the level should be between the HOT MIN and MAX marks.

If fluid must be added, turn the cap counterclockwise to the stop; then the cap can be lifted off. Do not overfill the reservoir and remember to replace the cap tightly when you are finished and clean up any spilled fluid.

If you often need to add fluid, you should see your dealer.

## What to Use

To determine what kind of fluid to use, see *Recommended Fluids and Lubricants on page 6-12*. Always use the proper fluid. Failure to use the proper fluid can cause leaks and damage hoses and seals.



Downloaded from www.Manualslib.com manuals search engine

# Windshield Washer Fluid

## What to Use

When you need windshield washer fluid, be sure to read the manufacturer's instructions before use. If you will be operating your vehicle in an area where the temperature may fall below freezing, use a fluid that has sufficient protection against freezing.

## Adding Washer Fluid

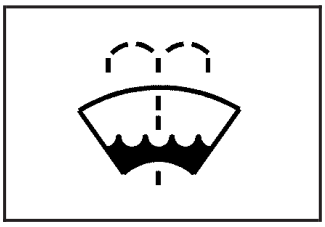

Open the cap with the washer symbol on it. Add washer fluid until the tank is full. See *Engine Compartment Overview on page 5-12* for reservoir location.

***Notice:***

- **When using concentrated washer fluid, follow the manufacturer's instructions for adding water.**
- **Do not mix water with ready-to-use washer fluid. Water can cause the solution to freeze and damage your washer fluid tank and other parts of the washer system. Also, water does not clean as well as washer fluid.**
- **Fill your washer fluid tank only three-quarters full when it is very cold. This allows for expansion if freezing occurs, which could damage the tank if it is completely full.**
- **Do not use engine coolant (antifreeze) in your windshield washer. It can damage your washer system and paint.**



Downloaded from www.Manualslib.com manuals search engine

# Brakes

## Brake Fluid

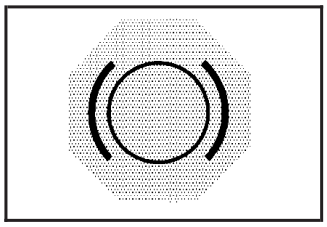

Your brake master cylinder reservoir is filled with DOT-4 brake fluid. See *Engine Compartment Overview on page 5-12* for the location of the reservoir.

There are only two reasons why the brake fluid level in the reservoir might go down. The first is that the brake fluid goes down to an acceptable level during normal brake lining wear. When new linings are put in, the fluid level goes back up. The other reason is that fluid is leaking out of the brake system. If it is, you should have your brake system fixed, since a leak means that sooner or later your brakes will not work well, or will not work at all.

So, it is not a good idea to top off your brake fluid. Adding brake fluid will not correct a leak. If you add fluid when your linings are worn, then you will have too much fluid when you get new brake linings. You should add or remove brake fluid, as necessary, only when work is done on the brake hydraulic system.

**⚠ CAUTION:**

**If you have too much brake fluid, it can spill on the engine. The fluid will burn if the engine is hot enough. You or others could be burned, and your vehicle could be damaged. Add brake fluid only when work is done on the brake hydraulic system. See "Checking Brake Fluid" in this section.**

When your brake fluid falls to a low level, your brake warning light will come on. See *Brake System Warning Light on page 3-27*.



Downloaded from www.Manualslib.com manuals search engine

## Checking Brake Fluid

You can check the brake fluid without taking off the cap. Look at the brake fluid reservoir.

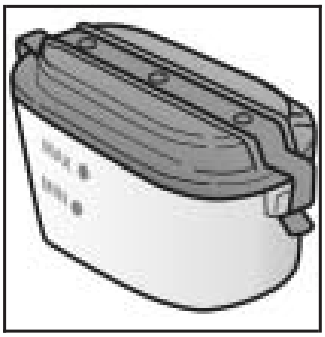

The fluid level should be between the MIN and MAX marks on the reservoir. If it is not, have your brake system checked to see if there is a leak.

After work is done on the brake hydraulic system, make sure the level is between the MIN and MAX marks.

## What to Add

When you do need brake fluid, use only DOT-4 brake fluid. Use new brake fluid from a sealed container only. See *Recommended Fluids and Lubricants on page 6-12*.

Always clean the brake fluid reservoir cap and the area around the cap before removing it. This will help keep dirt from entering the reservoir.

**⚠ CAUTION:**

**With the wrong kind of fluid in your brake system, your brakes may not work well, or they may not even work at all. This could cause a crash. Always use the proper brake fluid.**

***Notice:***

- **Using the wrong fluid can badly damage brake system parts. For example, just a few drops of mineral-based oil, such as engine oil, in your brake system can damage brake system parts so badly that they will have to be replaced. Do not let someone put in the wrong kind of fluid.**
- **If you spill brake fluid on your vehicle's painted surfaces, the paint finish can be damaged. Be careful not to spill brake fluid on your vehicle. If you do, wash it off immediately. See *Appearance Care on page 5-76*.**



Downloaded from www.Manualslib.com manuals search engine

## Brake Wear

Your vehicle has four-wheel disc brakes.

Some driving conditions or climates may cause a brake squeal when the brakes are first applied or lightly applied. This does not mean something is wrong with your brakes.

Properly torqued wheel nuts are necessary to help prevent brake pulsation. When tires are rotated, inspect brake pads for wear and evenly tighten wheel nuts in the proper sequence to GM torque specifications.

Brake linings should always be replaced as complete axle sets.

## Brake Pedal Travel

See your dealer if the brake pedal does not return to normal height, or if there is a rapid increase in pedal travel. This could be a sign of brake trouble.

## Brake Adjustment

Every time you make a moderate brake stop, your disc brakes adjust for wear. If you rarely make a moderate or heavier stop, then your brakes might not adjust correctly. If you drive in that way, then — very carefully — make a few moderate brake stops about every 1,000 miles (1 600 km), so your brakes will adjust properly.

## Replacing Brake System Parts

The braking system on a vehicle is complex. Its many parts have to be of top quality and work well together if the vehicle is to have really good braking. Your vehicle was designed and tested with top-quality GM brake parts. When you replace parts of your braking system — for example, when your brake linings wear down and you need new ones put in — be sure you get new approved GM replacement parts. If you do not, your brakes may no longer work properly. For example, if someone puts in brake linings that are wrong for your vehicle, the balance between your front and rear brakes can change — for the worse. The braking performance you have come to expect can change in many other ways if someone puts in the wrong replacement brake parts.



Downloaded from www.Manualslib.com manuals search engine

## Battery

Your vehicle has a maintenance free battery. When it is time for a new battery, get one that has the replacement number shown on the original battery's label. We recommend an ACDelco® replacement battery.
See *Engine Compartment Overview on page 5-12* for battery location.

***Warning:*** Battery posts, terminals and related accessories contain lead and lead compounds, chemicals known to the State of California to cause cancer and reproductive harm. Wash hands after handling.

## Vehicle Storage

If you are not going to drive your vehicle for 25 days or more, remove the black, negative (–) cable from the battery. This will help keep your battery from running down.

**⚠ CAUTION:**

**Batteries have acid that can burn you and gas that can explode. You can be badly hurt if you are not careful. See *Jump Starting on page 5-40* for tips on working around a battery without getting hurt.**



Downloaded from www.Manualslib.com manuals search engine

## Jump Starting

If your battery has run down, you may want to use another vehicle and some jumper cables to start your vehicle. Be sure to use the following steps to do it safely.

**⚠ CAUTION:**

**Batteries can hurt you. They can be dangerous because:**

- **They contain acid that can burn you.**
- **They contain gas that can explode or ignite.**
- **They contain enough electricity to burn you.**

**If you do not follow these steps exactly, some or all of these things can hurt you.**

***Notice:*** **Ignoring these steps could result in costly damage to your vehicle that would not be covered by your warranty.**

**Trying to start your vehicle by pushing or pulling it will not work, and it could damage your vehicle.**

1. Check the other vehicle. It must have a 12-volt battery with a negative ground system. Remove any battery covers.

***Notice:*** **If the other vehicle's system is not a 12-volt system with a negative ground, both vehicles can be damaged. Only use vehicles with 12-volt systems with negative grounds to jump start your vehicle.**

2. Get the vehicles close enough so the jumper cables can reach, but be sure the vehicles are not touching each other. If they are, it could cause a ground connection you do not want. You would not be able to start your vehicle, and the bad grounding could damage the electrical systems.

   To avoid the possibility of the vehicles rolling, set the parking brake firmly on both vehicles involved in the jump start procedure. Put an automatic transmission in PARK (P) or a manual transmission in NEUTRAL before setting the parking brake.



Downloaded from www.Manualslib.com manuals search engine

***Notice:*** **If you leave your radio or other accessories on during the jump starting procedure, they could be damaged. The repairs would not be covered by your warranty. Always turn off your radio and other accessories when jump starting your vehicle.**

3. Turn off the ignition on both vehicles. Unplug unnecessary accessories plugged into the cigarette lighter. Turn off the radio and all lamps that are not needed. This will avoid sparks and help save both batteries. And it could save the radio!
4. Open the hoods and locate the batteries. Find the positive (+) and negative (–) terminal locations on each vehicle. See *Engine Compartment Overview on page 5-12* for more information on location.

**⚠ CAUTION:**

**An electric fan can start up even when the engine is not running and can injure you. Keep hands, clothing and tools away from any underhood electric fan.**

**⚠ CAUTION:**

**Using a match near a battery can cause battery gas to explode. People have been hurt doing this, and some have been blinded. Use a flashlight if you need more light. Be sure the battery has enough water. You do not need to add water to the battery installed in your new vehicle. But if a battery has filler caps, be sure the right amount of fluid is there. If it is low, add water to take care of that first. If you don't, explosive gas could be present.**

**Battery fluid contains acid that can burn you. Do not get it on you. If you accidentally get it in your eyes or on your skin, flush the place with water and get medical help immediately.**



Downloaded from www.Manualslib.com manuals search engine

**⚠ CAUTION:**

**Fans or other moving engine parts can injure you badly. Keep your hands away from moving parts once the engine is running.**

5. Check that the jumper cables do not have loose or missing insulation. If they do, you could get a shock. The vehicles could be damaged too.

   Before you connect the cables, here are some basic things you should know. Positive (+) will go to positive (+) or to a remote positive (+) terminal if the vehicle has one. Negative (–) will go to a heavy, unpainted metal engine part or to a remote negative (–) terminal if the vehicle has one.

   Do not connect positive (+) to negative (–) or you will get a short that would damage the battery and maybe other parts too. And do not connect the negative (–) cable to the negative (–) terminal on the dead battery because this can cause sparks.

6. Connect the red positive (+) cable to the positive (+) terminal of the dead battery. Use a remote positive (+) terminal if the vehicle has one.

7. Do not let the other end touch metal. Connect it to the positive (+) terminal of the good battery. Use a remote positive (+) terminal if the vehicle has one.



Downloaded from www.Manualslib.com manuals search engine

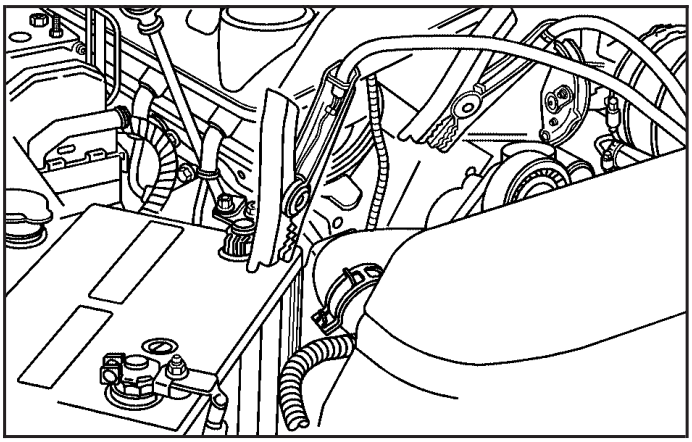

8. Now connect the black negative (–) cable to the negative (–) terminal of the good battery. Use a remote negative (–) terminal if the vehicle has one.

   Do not let the other end touch anything until the next step. The other end of the negative (–) cable *does not* go to the dead battery. It goes to a heavy, unpainted metal engine part or to a remote negative (–) terminal on the vehicle with the dead battery.

9. Connect the other end of the negative (–) cable at least 18 inches (45 cm) away from the dead battery, but not near engine parts that move. The electrical connection is just as good there, and the chance of sparks getting back to the battery is much less.

10. Now start the vehicle with the good battery and run the engine for a while.

***Notice:*** **If the jumper cables are removed too quickly after starting the vehicle with the dead battery, a momentary spike in voltage may occur, damaging electrical components. The repairs would not be covered by your warranty. Always allow both vehicles involved in the jump start procedure to run for at least one minute after starting the vehicle with the dead battery, before removing the jumper cables.**

11. Try to start the vehicle that had the dead battery. If it will not start after a few tries, it probably needs service. If the vehicle does start, be sure to allow both vehicles to run for at least one minute before removing the jumper cables.



Downloaded from www.Manualslib.com manuals search engine

***Notice:*** **If the jumper cables are connected or removed in the wrong order, electrical shorting may occur and damage the vehicle. The repairs would not be covered by your warranty. Always connect and remove the jumper cables in the correct order, making sure that the cables do not touch each other or other metal.**

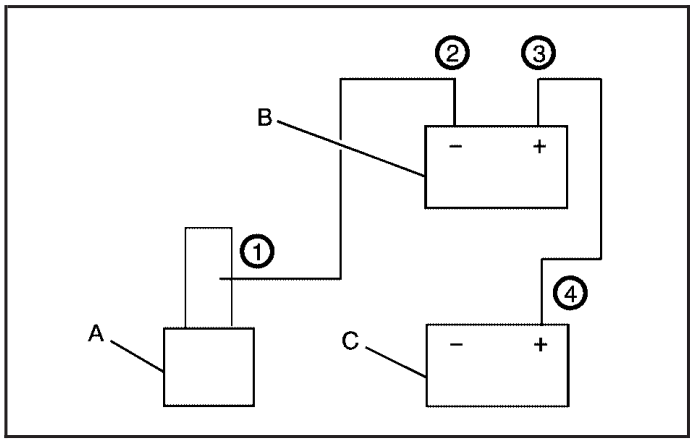


**Jumper Cable Removal**

A. Heavy, Unpainted Metal Engine Part

B. Good Battery

C. Dead Battery

To disconnect the jumper cables from both vehicles, do the following:

1. Disconnect the black negative (–) cable from the vehicle that had the dead battery.
2. Disconnect the black negative (–) cable from the vehicle with the good battery.
3. Disconnect the red positive (+) cable from the vehicle with the good battery.
4. Disconnect the red positive (+) cable from the other vehicle.
5. Replace any battery covers.



Downloaded from www.Manualslib.com manuals search engine

## Headlamp Aiming

The vehicle has a visual optical headlamp aiming system. The aim has been preset at the factory and should need no further adjustment

However, if the vehicle is damaged in an accident, the headlamp aim may be affected and adjustment may be necessary.

If oncoming vehicles flash their high beams at you, this may also mean the vertical aim needs to be adjusted.

It is recommended that the vehicle is taken to your dealer for service if the headlamps need to be re-aimed. It is possible however, to re-aim the headlamps as described in the following procedure.

The vehicle should be properly prepared as follows:

- The vehicle should be placed so the headlamps are 15 ft. (4.6 m) from a light colored wall or other flat surface.
- The vehicle must have all four tires on a perfectly level surface which is level all the way to the wall or other flat surface.
- The vehicle should be placed so it is perpendicular to the wall or other flat surface.
- The vehicle should not have any snow, ice, or mud on it.
- The vehicle should be fully assembled and all other work stopped while headlamp aiming is being performed.
- The vehicle should be normally loaded with a full tank of fuel and one person or 160 lbs (75 kg) sitting on the driver's seat.
- Tires should be properly inflated.
- The spare tire is in its original location in the vehicle.

Headlamp aiming is done with the vehicle's low-beam headlamps. The high-beam headlamps will be correctly aimed if the low-beam headlamps are aimed properly.



Downloaded from www.Manualslib.com manuals search engine

To adjust the vertical aim on the headlamps, do the following:

1. Open the hood. See *Hood Release on page 5-11* for more information.

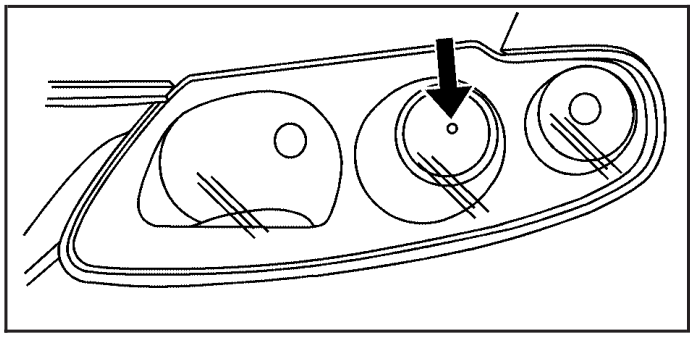

2. Find the aim dot on the lens of the low-beam headlamp.
3. Measure the distance from the ground to the aim dot on the low-beam headlamp. Record the distance.
4. At the wall or other flat surface, measure from the ground upward the recorded distance from Step 2 and mark it.
5. Draw or tape a horizontal line the width of the vehicle at the wall or other flat surface where it was marked it Step 4.

***Notice:*** **Do not cover a headlamp to improve beam cut-off when aiming. Covering a headlamp may cause excessive heat build-up which may cause damage to the headlamp.**

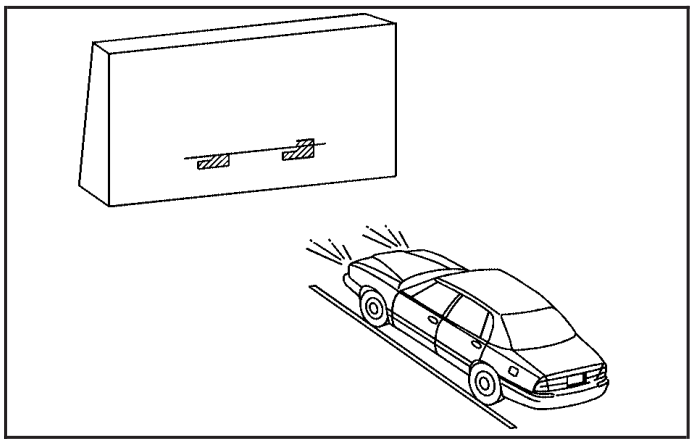

6. Turn on the low-beam headlamps and place a piece of cardboard or equivalent in front of the headlamp not being aimed. This should allow only the beam of light from the headlamp being aimed to be seen on the flat surface.
7. Locate the vertical headlamp aiming screws, which are under the hood near each headlamp assembly.

   The adjustment screw can be turned with a No. 2 Phillips head screwdriver.



Downloaded from www.Manualslib.com manuals search engine

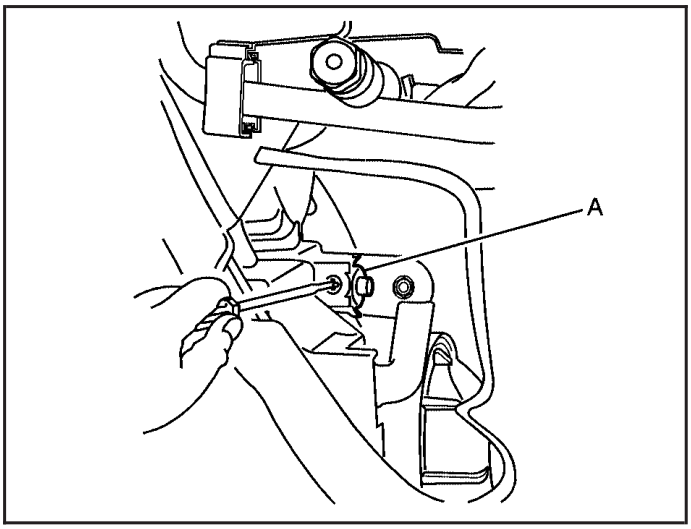


**Passenger's Side Shown**

8. Turn the vertical aiming screw (A) until the headlamp beam is aimed to the horizontal tape line. If you turn it clockwise, it will raise the beam and if you turn it counterclockwise, it will lower the beam.

   The top edge of the cut-off should be positioned at the bottom edge of the horizontal tape line.

9. Repeat Steps 7 and 8 for the opposite headlamp.

# Bulb Replacement

For the type of bulbs, see *Replacement Bulbs on page 5-51*.

For any bulb changing procedure not listed in this section, contact your dealer.

## Halogen Bulbs

**⚠ CAUTION:**

**Halogen bulbs have pressurized gas inside and can burst if you drop or scratch the bulb. You or others could be injured. Be sure to read and follow the instructions on the bulb package.**

## Headlamps

### Driver's Side

To replace the driver's side headlamp bulbs, first do the following:

1. Open the hood. See *Hood Release on page 5-11* for more information.



Downloaded from www.Manualslib.com manuals search engine

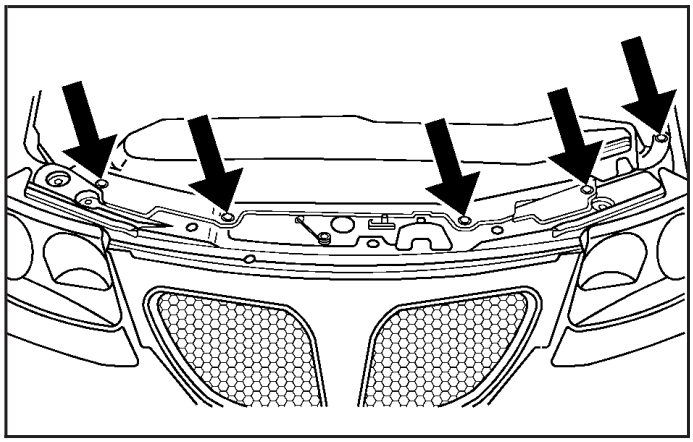

2. Remove the five screws in the radiator cover.
3. Unclip and remove the radiator cover.

   A hole is provided in the air intake duct so that the bulbs can be accessed for replacement.

After following the procedure to replace the bulbs, clip the radiator cover to the radiator fan shroud and reinstall the five screws.

## Passenger's Side

To replace the passenger's side headlamp bulbs, first do the following:

1. Open the hood. See *Hood Release on page 5-11* for more information.
2. Disconnect the battery clamp.
3. Remove the battery retaining plate and slide the battery out of the way toward the rear of the vehicle.
4. Disconnect the battery terminals. If your vehicle is equipped with a larger battery, it must be completely removed from the vehicle.

After following the procedure to replace the bulbs, reinstall and reconnect the battery.

1. Access the bulbs by following the previous instructions for either the driver's side or passenger's side of the vehicle.

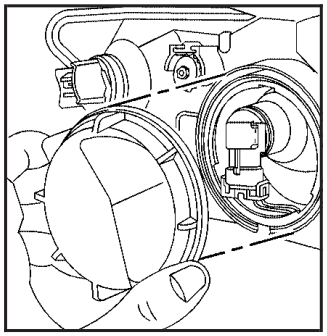

2. Turn the dust caps counterclockwise and remove from the rear of the headlamp assembly to gain access to the bulb.



Downloaded from www.Manualslib.com manuals search engine

3. Remove the wiring harness connector by squeezing the two tabs on the connector and pulling the connector down.

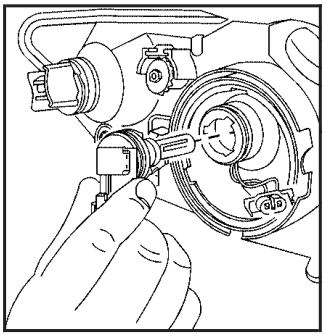

4. Remove the old bulb by twisting the bulb counterclockwise.

5. Install the new bulb without touching it.
6. Reverse the steps to reinstall the headlamp assembly.

## Front Turn Signal and Parking Lamps

To replace a front turn signal or parking lamp bulb, do the following:

1. Open the hood. See *Hood Release on page 5-11* for more information.
2. Follow the removal procedure for either the driver's side or passenger's side of the vehicle to access the bulbs. See *Headlamps on page 5-47* for more information.
3. Disconnect the wiring harness connector from the bulb assembly.
4. Turn the bulb socket counterclockwise and remove.
5. Lightly press the bulb and twist counterclockwise out of the socket.
6. Insert the new bulb and install the bulb socket. The bulb should be colored orange.
7. Reconnect the wiring harness connector.
8. Reinstall the battery or radiator cover. See *Headlamps on page 5-47* for more information.



Downloaded from www.Manualslib.com manuals search engine

## Taillamps, Turn Signal, Stoplamps and Back-up Lamps

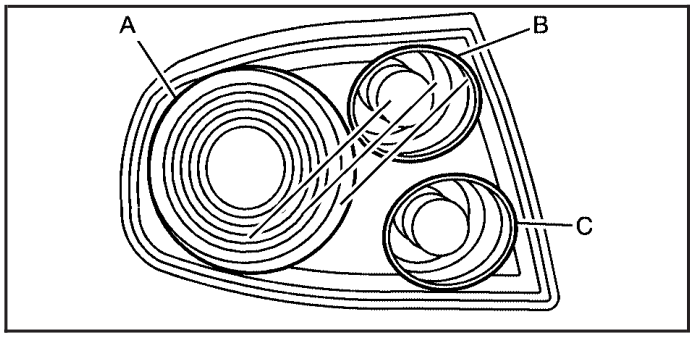


A. Stoplamp/Taillamp
B. Back-up Lamp
C. Turn Signal Lamp

To replace one of these bulbs, do the following:

1. Open the trunk. See *Trunk on page 2-8* for more information.

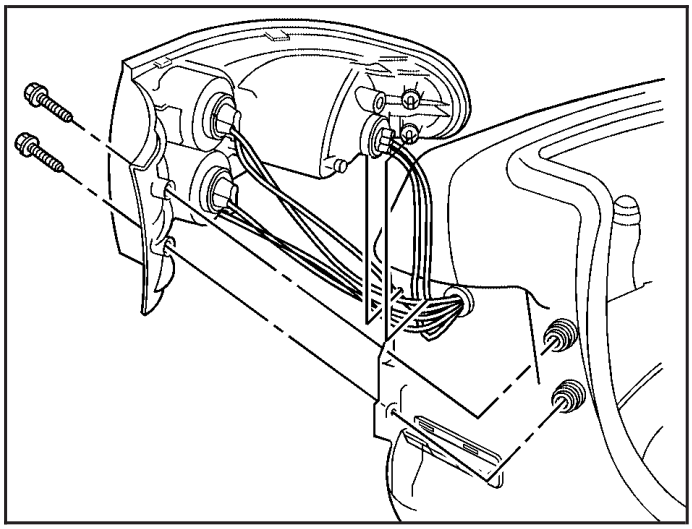

2. Remove the two screws that attach the taillamp assembly to the vehicle.
3. Pull the assembly sideways out from the panel so that the locating pegs on the side of the lamp assembly snap free from the clips.



Downloaded from www.Manualslib.com manuals search engine

4. Turn the appropriate bulb socket counterclockwise while holding the assembly, to release it from the housing.
5. Remove the bulb from the socket by pushing it in and turning it counterclockwise. The turn signal bulb must have amber colored glass.
6. Install the new bulb into the bulb socket by pushing it into the socket and turning it clockwise.
7. Install the bulb socket into the lamp housing, ensuring that the socket locks securely into place.
8. Reinstall the lamp assembly so that the clips are seated correctly. Fit the housing to the body, so that the locating pegs snap into the clips.
9. Install and tighten the screws to secure.

## Replacement Bulbs

| Exterior Lamp | Bulb Number |
|---|---|
| Back-up Lamp | 1156 |
| Front Turn Signal and Parking Lamp | 1157NA |
| Headlamps | |
| High-Beam | H9 |
| Low-Beam | H11LL |
| Rear Turn Signal | 1156NA |
| Stoplamp and Taillamp | 1157 |

For replacement bulbs not listed here, contact your dealer.



Downloaded from www.Manualslib.com manuals search engine

## Windshield Wiper Blade Replacement

Windshield wiper blades should be inspected at least twice a year for wear or cracking. See *Owner Checks and Services on page 6-8* for more information.

To replace the wiper blade assembly:

1. Lift the wiper up from the windshield and set into the vertically-locked position.
2. Press the tab that holds the wiper blade to the arm.
3. Slide the blade down and off the arm.
4. Slide in the new blade and snap into place.

## Tires

Your new vehicle comes with high-quality tires made by a leading tire manufacturer. If you ever have questions about your tire warranty and where to obtain service, see your GM Warranty booklet for details. For additional information refer to the tire manufacturer's booklet included with your vehicle's Owner's Manual.

**⚠ CAUTION:**

- **Poorly maintained and improperly used tires are dangerous.**
- **Overloading your tires can cause overheating as a result of too much friction. You could have an air-out and a serious accident. See *Loading Your Vehicle on page 4-29*.**
- **Underinflated tires pose the same danger as overloaded tires. The resulting accident could cause serious injury. Check all tires frequently to maintain the recommended pressure. Tire pressure should be checked when your tires are cold.**

**CAUTION: (Continued)**



Downloaded from www.Manualslib.com manuals search engine

**CAUTION: (Continued)**

- **Overinflated tires are more likely to be cut, punctured, or broken by a sudden impact — such as when you hit a pothole. Keep tires at the recommended pressure.**
- **Worn, old tires can cause accidents. If your tread is badly worn, or if your tires have been damaged, replace them.**

**See *Inflation - Tire Pressure on page 5-59* for inflation pressure adjustment for high speed driving.**

***Notice:*** **If your vehicle has low-profile tires, they are more susceptible to damage from road hazards or curb impact than standard profile tires. Tire and/or wheel assembly damage can occur when coming into contact with road hazards like, potholes, or sharp edged objects or when sliding into a curb. Your GM warranty does not cover this type of damage. Keep tires set to the correct inflation pressure and, when possible avoid contact with curbs, potholes and other road hazards.**

## Winter Tires

If you expect to drive on snow or ice covered roads often, you may want to get winter tires for your vehicle. High performance tires, like the original equipment tires installed on your vehicle, are designed for very responsive driving on wet or dry pavement and may not offer the traction you would like or the same level of performance as winter tires on snow or ice covered roads. If you choose to use winter tires:

- Use tires of the same brand and tread type on all four wheel positions.
- Use only radial ply tires of the same size as your original equipment tires.

See your Pontiac dealer for details regarding winter tire availability and proper tire selection. Also, see *Buying New Tires on page 5-64*.



Downloaded from www.Manualslib.com manuals search engine

## Tire Sidewall Labelling

Useful information about a tire is molded into its sidewall. The examples below show a typical passenger vehicle tire and a compact spare tire sidewall.

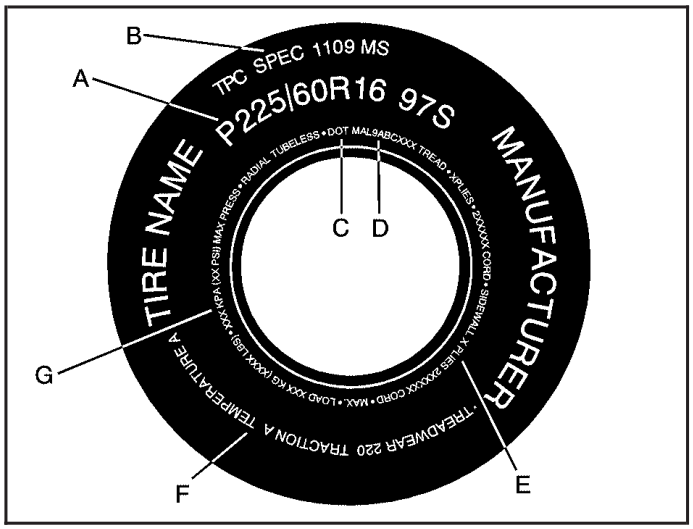


**Passenger (P-Metric) Tire Example**

**(A) Tire Size:** The tire size is a combination of letters and numbers used to define a particular tire's width, height, aspect ratio, construction type and service description. See the "Tire Size" illustration later in this section for more detail.

**(B) TPC Spec (Tire Performance Criteria Specification):** Original equipment tires designed to GM's specific tire performance criteria have a TPC specification code molded onto the sidewall. GM's TPC specifications meet or exceed all federal safety guidelines.

**(C) DOT (Department of Transportation):** The Department of Transportation (DOT) code indicates that the tire is in compliance with the U.S. Department of Transportation Motor Vehicle Safety Standards.

**(D) Tire Identification Number (TIN):** The letters and numbers following DOT (Department of Transportation) code is the Tire Identification Number (TIN). The TIN shows the manufacturer and plant code, tire size, and date the tire was manufactured. The TIN is molded onto both sides of the tire, although only one side may have the date of manufacture.

**(E) Tire Ply Material:** The type of cord and number of plies in the sidewall and under the tread.

**(F) Uniform Tire Quality Grading (UTQG):** Tire manufacturers are required to grade tires based on three performance factors: treadwear, traction and temperature resistance. For more information see *Uniform Tire Quality Grading on page 5-64*.

**(G) Maximum Cold Inflation Load Limit:** Maximum load that can be carried and the maximum pressure needed to support that load.



Downloaded from www.Manualslib.com manuals search engine

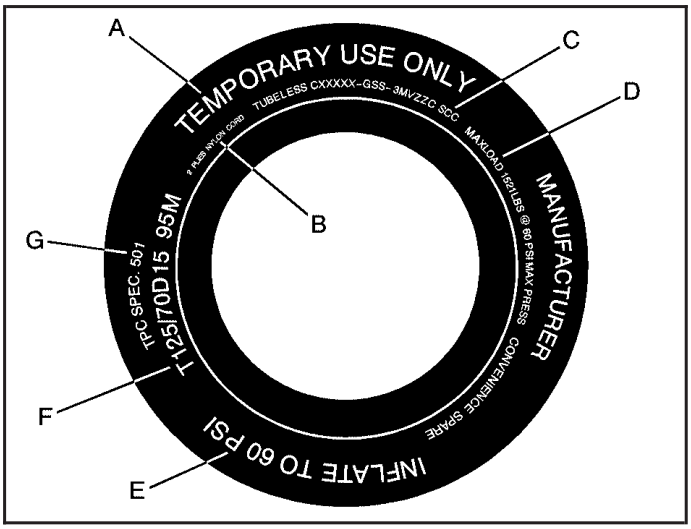


**Compact Spare Tire Example**

**(A) Temporary Use Only:** The compact spare tire or temporary use tire has a tread life of approximately 3,000 miles (5 000 km) and should not be driven at speeds over 65 mph (105 km/h). The compact spare tire is for emergency use when a regular road tire has lost air and gone flat. If your vehicle has a compact spare tire, see *Compact Spare Tire on page 5-76* and *If a Tire Goes Flat on page 5-68*.

**(B) Tire Ply Material:** The type of cord and number of plies in the sidewall and under the tread.

**(C) Tire Identification Number (TIN):** The letters and numbers following the DOT (Department of Transportation) code is the Tire Identification Number (TIN). The TIN shows the manufacturer and plant code, tire size, and date the tire was manufactured. The TIN is molded onto both sides of the tire, although only one side may have the date of manufacture.

**(D) Maximum Cold Inflation Load Limit:** Maximum load that can be carried and the maximum pressure needed to support that load.

**(E) Tire Inflation:** The temporary use tire or compact spare tire should be inflated to 60 psi (420 kPa). For more information on tire pressure and inflation see *Inflation - Tire Pressure on page 5-59*.

**(F) Tire Size:** A combination of letters and numbers define a tire's width, height, aspect ratio, construction type and service description. The letter T as the first character in the tire size means the tire is for temporary use only.

**(G) TPC Spec (Tire Performance Criteria Specification):** Original equipment tires designed to GM's specific tire performance criteria have a TPC specification code molded onto the sidewall. GM's TPC specifications meet or exceed all federal safety guidelines.



Downloaded from www.Manualslib.com manuals search engine

## Tire Size

The following illustration shows an example of a typical passenger vehicle tire size.

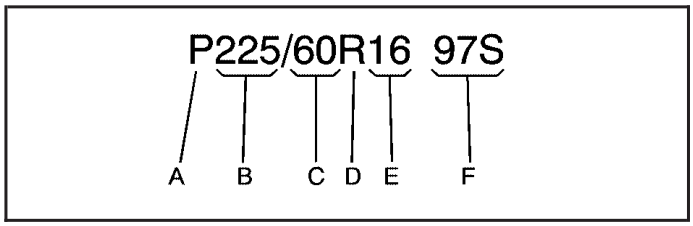


**(A) Passenger (P-Metric) Tire:** The United States version of a metric tire sizing system. The letter P as the first character in the tire size means a passenger vehicle tire engineered to standards set by the U.S. Tire and Rim Association.

**(B) Tire Width:** The three-digit number indicates the tire section width in millimeters from sidewall to sidewall.

**(C) Aspect Ratio:** A two-digit number that indicates the tire height-to-width measurements. For example, if the tire size aspect ratio is 60, as shown in item C of the illustration, it would mean that the tire's sidewall is 60 percent as high as it is wide.

**(D) Construction Code:** A letter code is used to indicate the type of ply construction in the tire. The letter R means radial ply construction; the letter D means diagonal or bias ply construction; and the letter B means belted-bias ply construction.

**(E) Rim Diameter:** Diameter of the wheel in inches.

**(F) Service Description:** These characters represent the load range and speed rating of the tire. The load index represents the load carry capacity a tire is certified to carry. The load index can range from 1 to 279. The speed rating is the maximum speed a tire is certified to carry a load. Speed ratings range from A to Z.

## Tire Terminology and Definitions

**Air Pressure:** The amount of air inside the tire pressing outward on each square inch of the tire. Air pressure is expressed in pounds per square inch (psi) or kilopascal (kPa).

**Accessory Weight:** This means the combined weight of optional accessories. Some examples of optional accessories are, automatic transmission, power steering, power brakes, power windows, power seats, and air conditioning.

**Aspect Ratio:** The relationship of a tire's height to its width.

**Belt:** A rubber coated layer of cords that is located between the plies and the tread. Cords may be made from steel or other reinforcing materials.

**Bead:** The tire bead contains steel wires wrapped by steel cords that hold the tire onto the rim.



Downloaded from www.Manualslib.com manuals search engine

**Bias Ply Tire:** A pneumatic tire in which the plies are laid at alternate angles less than 90 degrees to the centerline of the tread.

**Cold Inflation Pressure:** The amount of air pressure in a tire, measured in pounds per square inch (psi) or kilopascals (kPa) before a tire has built up heat from driving. See *Inflation - Tire Pressure on page 5-59*.

**Curb Weight:** This means the weight of a motor vehicle with standard and optional equipment including the maximum capacity of fuel, oil and coolant, but without passengers and cargo.

**DOT Markings:** A code molded into the sidewall of a tire signifying that the tire is in compliance with the U.S. Department of Transportation (DOT) motor vehicle safety standards. The DOT code includes the Tire Identification Number (TIN), an alphanumeric designator which can also identify the tire manufacturer, production plant, brand and date of production.

**GVWR:** Gross Vehicle Weight Rating, see *Loading Your Vehicle on page 4-29*.

**GAWR FRT:** Gross Axle Weight Rating for the front axle, see *Loading Your Vehicle on page 4-29*.

**GAWR RR:** Gross Axle Weight Rating for the rear axle, see *Loading Your Vehicle on page 4-29*.

**Intended Outboard Sidewall:** The side of an asymmetrical tire, that must always face outward when mounted on a vehicle.

**Kilopascal (kPa):** The metric unit for air pressure.

**Light Truck (LT-Metric) Tire:** A tire used on light duty trucks and some multipurpose passenger vehicles.

**Load Index:** An assigned number ranging from 1 to 279 that corresponds to the load carrying capacity of a tire.

**Maximum Inflation Pressure:** The maximum air pressure to which a cold tire may be inflated. The maximum air pressure is molded onto the sidewall.

**Maximum Load Rating:** The load rating for a tire at the maximum permissible inflation pressure for that tire.

**Maximum Loaded Vehicle Weight:** The sum of curb weight; accessory weight; vehicle capacity weight; and production options weight.

**Normal Occupant Weight:** The number of occupants a vehicle is designed to seat multiplied by 150 lbs (68 kg). See *Loading Your Vehicle on page 4-29*.

**Occupant Distribution:** Designated seating positions.



Downloaded from www.Manualslib.com manuals search engine

**Outward Facing Sidewall:** The side of an asymmetrical tire that has a particular side that faces outward when mounted on a vehicle. The side of the tire that contains a whitewall, bears white lettering or bears manufacturer, brand, and/or model name molding that is higher or deeper than the same moldings on the other sidewall of the tire.

**Passenger (P-Metric) Tire:** A tire used on passenger cars and some light duty trucks and multipurpose vehicles.

**Recommended Inflation Pressure:** Vehicle manufacturer's recommended tire inflation pressure and shown on the tire placard. See *Inflation - Tire Pressure on page 5-59* and *Loading Your Vehicle on page 4-29*.

**Radial Ply Tire:** A pneumatic tire in which the ply cords that extend to the beads are laid at 90 degrees to the centerline of the tread.

**Rim:** A metal support for a tire and upon which the tire beads are seated.

**Sidewall:** The portion of a tire between the tread and the bead.

**Speed Rating:** An alphanumeric code assigned to a tire indicating the maximum speed at which a tire can operate.

**Traction:** The friction between the tire and the road surface. The amount of grip provided.

**Tread:** The portion of a tire that comes into contact with the road.

**Treadwear Indicators:** Narrow bands, sometimes called "wear bars," that show across the tread of a tire when only 1/16 inch (1.6 mm) of tread remains. See *When It Is Time for New Tires on page 5-63*.

**UTQGS (Uniform Tire Quality Grading Standards):** A tire information system that provides consumers with ratings for a tire's traction, temperature, and treadwear. Ratings are determined by tire manufacturers using government testing procedures. The ratings are molded into the sidewall of the tire. See *Uniform Tire Quality Grading on page 5-64*.

**Vehicle Capacity Weight:** The number of designated seating positions multiplied by 150 lbs (68 kg) plus the rated cargo load. See *Loading Your Vehicle on page 4-29*.

**Vehicle Maximum Load on the Tire:** Load on an individual tire due to curb weight, accessory weight, occupant weight, and cargo weight.

**Vehicle Placard:** A label permanently attached to a vehicle showing the vehicle's capacity weight and the original equipment tire size and recommended inflation pressure. See "Tire and Loading Information Label" under *Loading Your Vehicle on page 4-29*.



Downloaded from www.Manualslib.com manuals search engine

## Inflation - Tire Pressure

Tires need the correct amount of air pressure to operate effectively.

***Notice:*** **Do not let anyone tell you that under-inflation or over-inflation is all right. It is not. If your tires do not have enough air (under-inflation), you can get the following:**

- **Too much flexing**
- **Too much heat**
- **Tire overloading**
- **Premature or irregular wear**
- **Poor handling**
- **Reduced fuel economy**

**If your tires have too much air (over-inflation), you can get the following:**

- **Unusual wear**
- **Poor handling**
- **Rough ride**
- **Needless damage from road hazards**

A Tire and Loading Information label is attached to your vehicle's center pillar, below the driver's door latch. This label lists your vehicle's original equipment tires and their recommended cold tire inflation pressures. The recommended cold tire inflation pressure, shown on the label, is the minimum amount of air pressure needed to support your vehicle's maximum load carrying capacity. For more information regarding how much weight your vehicle can carry, see *Loading Your Vehicle on page 4-29*.



Downloaded from www.Manualslib.com manuals search engine

How you load your vehicle affects vehicle handling and ride comfort. When driving with less than the maximum load capacity allowed for your vehicle, you can set tire inflation pressure to the recommended amounts shown in the following chart. Never load your vehicle with more weight than it was designed to carry.

| Tire Size | Recommended Cold Tire Inflation | | | |
|---|---|---|---|---|
| | Occupant and Cargo Weight: 470 lbs (210 kg) or Less | | Occupant and Cargo Weight: Up to 740 lbs (330 kg) (Vehicle Capacity Weight) | |
| | Front Tires | Rear Tires | Front Tires | Rear Tires |
| 245/45ZR17 95W | 30 psi (210 kPa) | 30 psi (210 kPa) | 35 psi (240 kPa) | 35 psi (240 kPa) |
| 235/40ZR18 91W | 33 psi (230 kPa) | 33 psi (230 kPa) | 33 psi (230 kPa) | 39 psi (270 kPa) |
| T145/70R17 96M (Compact Spare) | 60 psi (420 kPa) | 60 psi (420 kPa) | 60 psi (420 kPa) | 60 psi (420 kPa) |

## When to Check

Check your tires once a month or more.

Do not forget your compact spare tire. It should be at 60 psi (420 kPa). For more information about your vehicle's compact spare tire, see *Compact Spare Tire on page 5-76*.

## How to Check

Use a good quality pocket-type gage to check tire pressure. You can't tell if your tires are properly inflated simply by looking at them. Radial tires may look properly inflated even when they're underinflated.

Check the tire's inflation pressure when the tires are cold. Cold means your vehicle has been sitting for at least three hours or driven no more than 1 mile (1.6 km).

Remove the valve cap from the tire valve stem. Press the tire gage firmly onto the valve to get a pressure measurement. If the cold tire inflation pressure matches the recommended pressure on the Tire and Loading Information label, no further adjustment is necessary. If the inflation pressure is low, add air until you reach the recommended amount.

If you overfill the tire, release air by pushing on the metal stem in the center of the tire valve. Recheck the tire pressure with the tire gage.



Downloaded from www.Manualslib.com manuals search engine

Be sure to put the valve caps back on the valve stems. They help prevent leaks by keeping out dirt and moisture.

## High Speed Operation

**⚠ CAUTION:**

**Driving at high speeds, 100 mph (160 km/h) or higher, puts an additional strain on tires. Sustained high-speed driving causes excessive heat build up and can cause sudden tire failure. You could have a crash and you or others could be killed. Some high-speed rated tires require inflation pressure adjustment for high speed operation. When speed limits and road conditions are such that a vehicle can be driven at high speeds, make sure the tires are rated for high speed operation, in excellent condition, and set to the correct cold tire inflation pressure for the vehicle load.**

Vehicles equipped with 245/45ZR17 95W size tires, do not require additional air pressure for high-speed operation. If your vehicle has 235/40ZR18 91W size tires, use the following chart to determine the cold tire inflation pressure when operating your vehicle under high-speed conditions.

| Tire Size: 235/40ZR18 91W Recommended Cold Tire Inflation Pressure for High Speed Operation | | | |
|---|---|---|---|
| Occupant and Cargo Weight: 470 lbs (210 kg) or less | | Occupant and Cargo Weight: Up to 740 lbs (330 kg) (Vehicle Capacity Weight) | |
| Front Tires | Rear Tires | Front Tires | Rear Tires |
| 36 psi (250 kPa) | 36 psi (250 kPa) | 39 psi (270 kPa) | 44 psi (300 kPa) |

When you end high-speed driving, return the tires to the cold inflation pressure shown on the tire and loading information label.



Downloaded from www.Manualslib.com manuals search engine

## Tire Inspection and Rotation

Tires should be rotated every 5,000 to 8,000 miles (8 000 to 13 000 km).

Any time you notice unusual wear, rotate your tires as soon as possible and check wheel alignment. Also check for damaged tires or wheels. See *When It Is Time for New Tires on page 5-63* and *Wheel Replacement on page 5-66* for more information.

The purpose of regular rotation is to achieve more uniform wear for all tires on the vehicle. The first rotation is the most important. See *Scheduled Maintenance on page 6-4*.

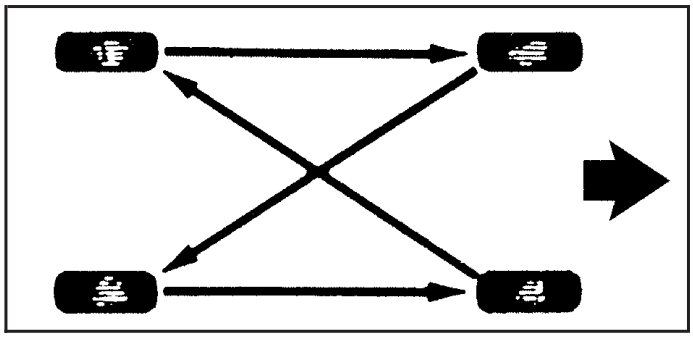

When rotating non-directional tires, always use the correct rotation pattern shown here.

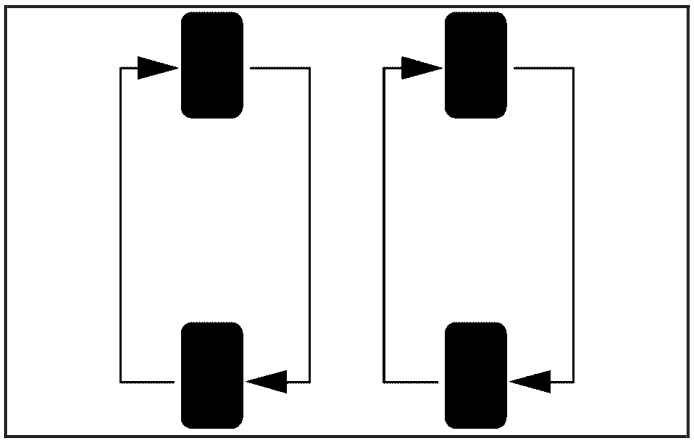

If your vehicle has 235/40ZR18 tires, they must roll in a certain direction for the best overall performance. The direction is shown by an arrow on the tire sidewall. Because these tires are uni-directional, they should be rotated as shown here. These tires should only be moved from front to rear and rear to front on the same side of the vehicle.

Don't include the compact spare tire in your tire rotation.



Downloaded from www.Manualslib.com manuals search engine

After the tires have been rotated, adjust the front and rear inflation pressures as shown on the Tire and Loading Information label. Make certain that all wheel nuts are properly tightened. See “Wheel Nut Torque” under *Capacities and Specifications on page 5-90*.

**⚠ CAUTION:**

**Rust or dirt on a wheel, or on the parts to which it is fastened, can make wheel nuts become loose after a time. The wheel could come off and cause an accident. When you change a wheel, remove any rust or dirt from places where the wheel attaches to the vehicle. In an emergency, you can use a cloth or a paper towel to do this; but be sure to use a scraper or wire brush later, if needed, to get all the rust or dirt off. See *Changing a Flat Tire on page 5-68*.**

## When It Is Time for New Tires

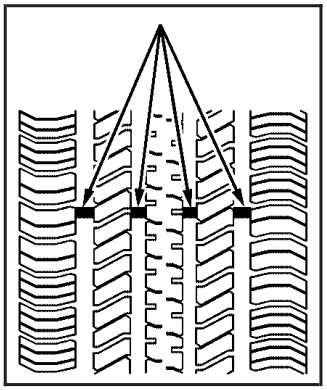

One way to tell when it’s time for new tires is to check the treadwear indicators, which will appear when your tires have only 1/16 inch (1.6 mm) or less of tread remaining.

You need a new tire if any of the following statements are true:

- You can see the indicators at three or more places around the tire.
- You can see cord or fabric showing through the tire’s rubber.
- The tread or sidewall is cracked, cut or snagged deep enough to show cord or fabric.
- The tire has a bump, bulge or split.
- The tire has a puncture, cut or other damage that can’t be repaired well because of the size or location of the damage.



Downloaded from www.Manualslib.com manuals search engine

## Buying New Tires

To find out what kind and size of tires you need, look at the Tire and Loading Information label. For more information about this label and where to find it, see *Loading Your Vehicle on page 4-29*.

Make sure the replacements are the same size, load capacity, speed rating and construction type (bias, bias-belted or radial) as your original tires.

**⚠ CAUTION:**

**Mixing tires could cause you to lose control while driving. If you mix tires of different sizes or types (radial and bias-belted tires), the vehicle may not handle properly, and you could have a crash. Using tires of different sizes may also cause damage to your vehicle. Be sure to use the same size and type tires on all wheels. It's all right to drive with your compact spare temporarily, it was developed for use on your vehicle. See *Compact Spare Tire on page 5-76*.**

**⚠ CAUTION:**

**If you use bias-ply tires on your vehicle, the wheel rim flanges could develop cracks after many miles of driving. A tire and/or wheel could fail suddenly, causing a crash. Use only radial-ply tires with the wheels on your vehicle.**

## Uniform Tire Quality Grading

Quality grades can be found where applicable on the tire sidewall between tread shoulder and maximum section width. For example:

### Treadwear 200 Traction AA Temperature A

The following information relates to the system developed by the United States National Highway Traffic Safety Administration, which grades tires by treadwear, traction and temperature performance. (This applies only to vehicles sold in the United States.)



Downloaded from www.Manualslib.com manuals search engine

The grades are molded on the sidewalls of most passenger car tires. The Uniform Tire Quality Grading system does not apply to deep tread, winter-type snow tires, space-saver or temporary use spare tires, tires with nominal rim diameters of 10 to 12 inches (25 to 30 cm), or to some limited-production tires.

While the tires available on General Motors passenger cars and light trucks may vary with respect to these grades, they must also conform to federal safety requirements and additional General Motors Tire Performance Criteria (TPC) standards.

## Treadwear

The treadwear grade is a comparative rating based on the wear rate of the tire when tested under controlled conditions on a specified government test course. For example, a tire graded 150 would wear one and a half (1.5) times as well on the government course as a tire graded 100. The relative performance of tires depends upon the actual conditions of their use, however, and may depart significantly from the norm due to variations in driving habits, service practices and differences in road characteristics and climate.

## Traction – AA, A, B, C

The traction grades, from highest to lowest, are AA, A, B, and C. Those grades represent the tire's ability to stop on wet pavement as measured under controlled conditions on specified government test surfaces of asphalt and concrete. A tire marked C may have poor traction performance. Warning: The traction grade assigned to this tire is based on straight-ahead braking traction tests, and does not include acceleration, cornering, hydroplaning, or peak traction characteristics.

## Temperature – A, B, C

The temperature grades are A (the highest), B, and C, representing the tire's resistance to the generation of heat and its ability to dissipate heat when tested under controlled conditions on a specified indoor laboratory test wheel. Sustained high temperature can cause the material of the tire to degenerate and reduce tire life, and excessive temperature can lead to sudden tire failure. The grade C corresponds to a level of performance which all passenger car tires must meet under the Federal Motor Vehicle Safety Standard No. 109. Grades B and A represent higher levels of performance on the laboratory test wheel than the minimum required by law.

Warning: The temperature grade for this tire is established for a tire that is properly inflated and not overloaded. Excessive speed, underinflation, or excessive loading, either separately or in combination, can cause heat buildup and possible tire failure.



Downloaded from www.Manualslib.com manuals search engine

## Wheel Alignment and Tire Balance

The tires and wheels on your vehicle were aligned and balanced carefully at the factory to give you the longest tire life and best overall performance. Adjustments to wheel alignment and tire balancing will not be necessary on a regular basis. However, if you notice unusual tire wear or your vehicle pulling to one side or the other, the alignment may need to be checked. If you notice your vehicle vibrating when driving on a smooth road, your tires and wheels may need to be rebalanced. See your dealer for proper diagnosis.

## Wheel Replacement

Replace any wheel that is bent, cracked or badly rusted or corroded. If wheel nuts keep coming loose, the wheel, wheel bolts and wheel nuts should be replaced. If the wheel leaks air, replace it (except some aluminum wheels, which can sometimes be repaired). See your dealer if any of these conditions exist.

Your dealer will know the kind of wheel you need.

Each new wheel should have the same load-carrying capacity, diameter, width, offset and be mounted the same way as the one it replaces.

If you need to replace any of your wheels, wheel bolts or wheel nuts, replace them only with new GM original equipment parts. This way, you will be sure to have the right wheel, wheel bolts and wheel nuts for your vehicle.

**⚠ CAUTION:**

**Using the wrong replacement wheels, wheel bolts or wheel nuts on your vehicle can be dangerous. It could affect the braking and handling of your vehicle, make your tires lose air and make you lose control. You could have a collision in which you or others could be injured. Always use the correct wheel, wheel bolts and wheel nuts for replacement.**

***Notice:*** **The wrong wheel can also cause problems with bearing life, brake cooling, speedometer or odometer calibration, headlamp aim, bumper height, vehicle ground clearance and tire or tire chain clearance to the body and chassis.**

See *Changing a Flat Tire on page 5-68* for more information.



Downloaded from www.Manualslib.com manuals search engine

## Used Replacement Wheels

**⚠ CAUTION:**

**Putting a used wheel on your vehicle is dangerous. You can't know how it's been used or how far it's been driven. It could fail suddenly and cause a crash. If you have to replace a wheel, use a new GM original equipment wheel.**

## Tire Chains

**⚠ CAUTION:**

**Do not use tire chains. There is not enough clearance. Tire chains used on a vehicle without the proper amount of clearance can cause damage to the brakes, suspension or other vehicle parts. The area damaged by the tire chains could cause you to lose control of your vehicle and you or others may be injured in a crash. Use another type of traction device only if its manufacturer recommends it for use on your vehicle and tire size combination and road conditions. Follow that manufacturer's instructions. To help avoid damage to your vehicle, drive slowly, re-adjust or remove the device if it is contacting your vehicle, and do not spin your wheels. If you do find traction devices that will fit, install them on the rear tires.**



Downloaded from www.Manualslib.com manuals search engine

## If a Tire Goes Flat

It is unusual for a tire to blowout while you're driving, especially if you maintain your tires properly. If air goes out of a tire, it is much more likely to leak out slowly. But if you should ever have a blowout, here are a few tips about what to expect and what to do:

If a front tire fails, the flat tire will create a drag that pulls the vehicle toward that side. Take your foot off the accelerator pedal and grip the steering wheel firmly. Steer to maintain lane position, and then gently brake to a stop well out of the traffic lane.

A rear blowout, particularly on a curve, acts much like a skid and may require the same correction you would; use in a skid. In any rear blowout, remove your foot from the accelerator pedal. Get the vehicle under control by steering the way you want the vehicle to go. It may be very bumpy and noisy, but you can still steer. Gently brake to a stop, well off the road if possible.

**⚠ CAUTION:**

**Lifting a vehicle and getting under it to do maintenance or repairs is dangerous without the appropriate safety equipment and training. The jack provided with your vehicle is designed only for changing a flat tire. If it is used for anything else, you or others could be badly injured or killed if the vehicle slips off the jack. Use the jack provided with your vehicle only for changing a flat tire.**

If a tire goes flat, the next part shows how to use your jacking equipment to change a flat tire safely.

## Changing a Flat Tire

If a tire goes flat, avoid further tire and wheel damage by driving slowly to a level place. Turn on your hazard warning flashers.



Downloaded from www.Manualslib.com manuals search engine

## ⚠ CAUTION:

**Changing a tire can be dangerous. The vehicle can slip off the jack and roll over or fall on you or other people. You and they could be badly injured or even killed. Find a level place to change your tire. To help prevent the vehicle from moving:**

1. **Set the parking brake firmly.**
2. **Put an automatic transmission shift lever in PARK (P), or shift a manual transmission to FIRST (1) or REVERSE (R).**
3. **Turn off the engine and do not restart while the vehicle is raised.**
4. **Do not allow passengers to remain in the vehicle.**

**Put the wheel blocks at the front and rear of the tire farthest away from the one being changed. That would be the tire on the other side, at the opposite end of the vehicle.**

When you have a flat tire, use the following example as a guide to assist you in the placement of wheel blocks.

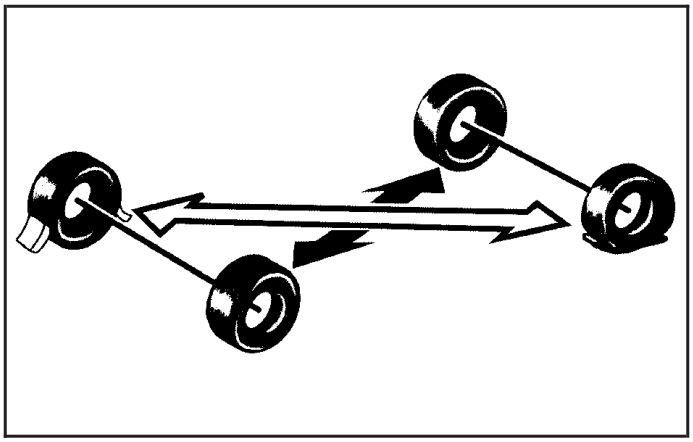

The following information will tell you next how to use the jack and change a tire.



Downloaded from www.Manualslib.com manuals search engine

## Removing the Spare Tire and Tools

The equipment you will need is located in the trunk. The compact spare tire is stored in a compartment, in the trunk.

1. Open the trunk. See *Trunk on page 2-8* for more information.

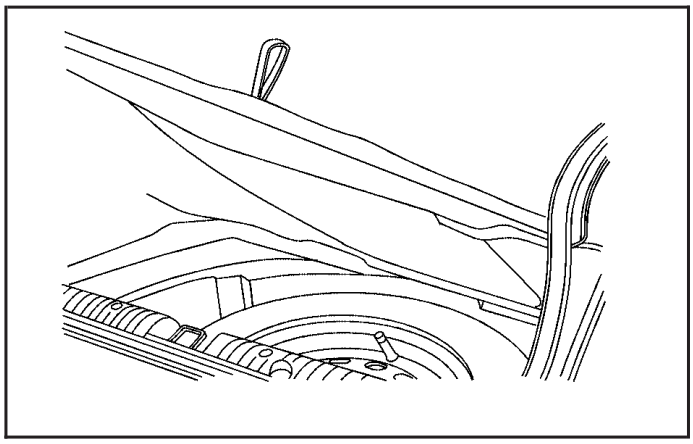

2. Lift the cover to access the compact spare tire and tools.

3. Turn the wing nut on the compact spare tire counterclockwise and remove it. Then lift the compact spare tire out of the vehicle. See *Compact Spare Tire on page 5-76* for more information.

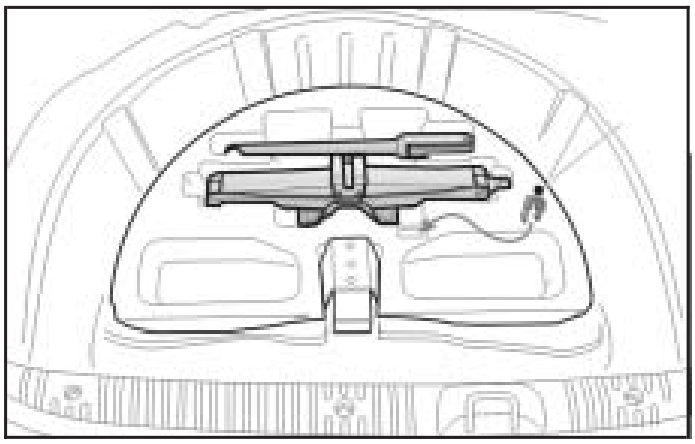

4. Remove the jack, wheel wrench, and nut cap removal tool from storage. They are stored in a container in the trunk, under the compact spare tire.



Downloaded from www.Manualslib.com manuals search engine

## Removing the Flat Tire and Installing the Spare Tire

To remove the wheel nut caps, do the following:

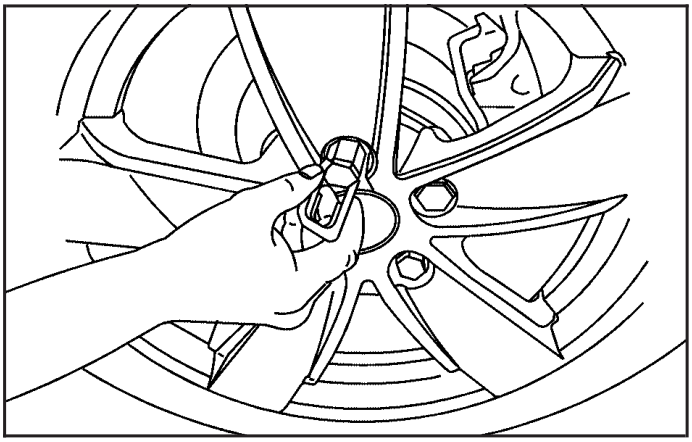

1. Remove each wheel nut cap with the wheel nut cap tool provided. Insert the nut cap tool into the nut cavity, squeeze the tool to grasp the nut cap, and pull out to remove it.

   If the nut caps are hard to remove, use the tip of the wheel wrench to remove the nut caps.

2. Use the wheel wrench to loosen all the wheel nuts. Don't remove them yet.
3. Fit the jack handle onto the jack by sliding the open end of the handle over the nut end of the jack.

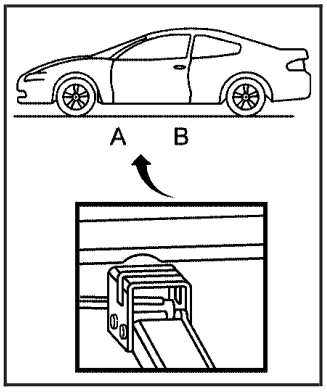


4. Position the jack and raise the jack head until it fits firmly into notches, A and B, in the vehicle's frame closest to the tire being changed.



Downloaded from www.Manualslib.com manuals search engine

5. Put the compact spare tire near you.

**⚠ CAUTION:**

**Getting under a vehicle when it is jacked up is dangerous. If the vehicle slips off the jack you could be badly injured or killed. Never get under a vehicle when it is supported only by a jack.**

**⚠ CAUTION:**

**Raising your vehicle with the jack improperly positioned can damage the vehicle and even make the vehicle fall. To help avoid personal injury and vehicle damage, be sure to fit the jack lift head into the proper location before raising the vehicle.**

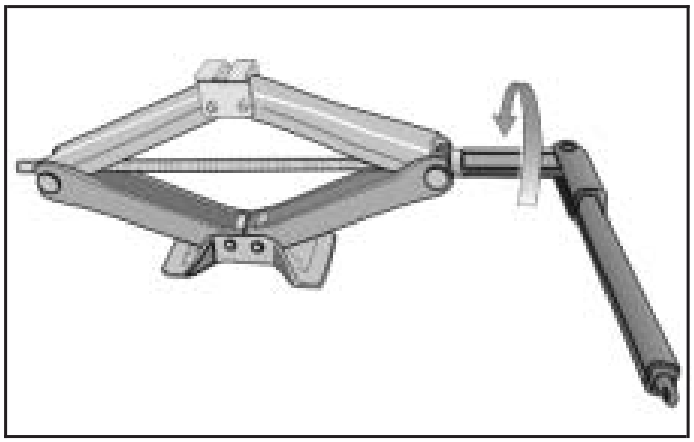

6. Raise the vehicle by turning the wheel wrench clockwise. Raise the vehicle far enough off the ground so there is enough room for the compact spare tire to fit underneath the wheel well.

   The jack handle must be unfolded to a right angle before it is used.
7. Remove all of the wheel nuts.
8. Remove the flat tire.



Downloaded from www.Manualslib.com manuals search engine

## ⚠ CAUTION:

**Rust or dirt on the wheel, or on the parts to which it is fastened, can make the wheel nuts become loose after a time. The wheel could come off and cause an accident. When you change a wheel, remove any rust or dirt from the places where the wheel attaches to the vehicle. In an emergency, you can use a cloth or a paper towel to do this; but be sure to use a scraper or wire brush later, if you need to, to get all the rust or dirt off.**

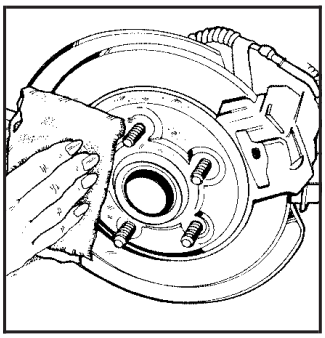

9. Remove any rust or dirt from the wheel bolts, mounting surfaces, and spare tire.

10. Install the compact spare tire.

## ⚠ CAUTION:

**Never use oil or grease on studs or nuts. If you do, the nuts might come loose. Your wheel could fall off, causing a serious accident.**

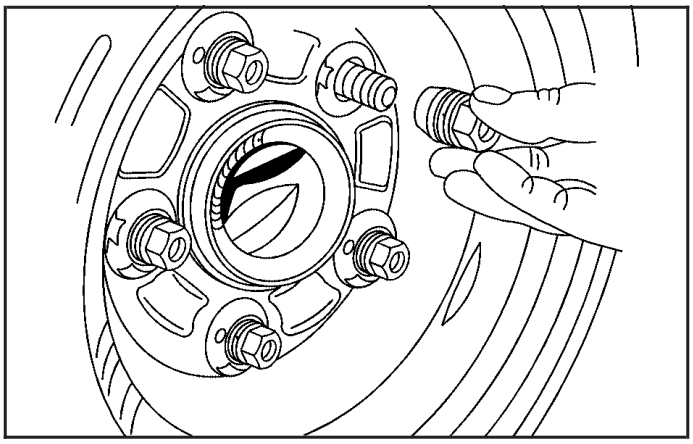

11. Put the wheel nuts back on with the rounded end of the nuts toward the wheel. Tighten each nut by hand until the wheel is held against the hub.



Downloaded from www.Manualslib.com manuals search engine

12. Lower the vehicle by turning the wheel wrench counterclockwise. Lower the jack completely.

**⚠ CAUTION:**

**Incorrect wheel nuts or improperly tightened wheel nuts can cause the wheel to come loose and even come off. This could lead to an accident. Be sure to use the correct wheel nuts. If you have to replace them, be sure to get new GM original equipment wheel nuts. Stop somewhere as soon as you can and have the nuts tightened with a torque wrench to the proper torque specification. See *Capacities and Specifications on page 5-90* for wheel nut torque specification.**

***Notice:*** **Improperly tightened wheel nuts can lead to brake pulsation and rotor damage. To avoid expensive brake repairs, evenly tighten the wheel nuts in the proper sequence and to the proper torque specification. See *Capacities and Specifications on page 5-90* for the wheel nut torque specification.**

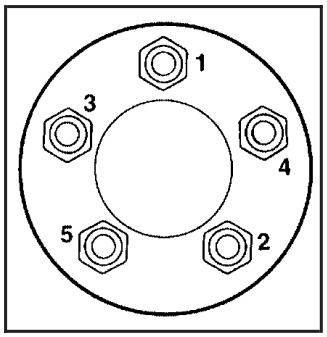


13. Tighten the wheel nuts firmly in a crisscross sequence, as shown.

***Notice:*** **Wheel covers will not fit on your compact spare. If you try to put a wheel cover on the compact spare, you could damage the cover or the spare.**

Do not try to put a wheel cover on your compact spare tire. It will not fit. Store a wheel cover in the trunk until you have the flat tire repaired or replaced.



Downloaded from www.Manualslib.com manuals search engine

## Storing a Flat or Spare Tire and Tools

**⚠ CAUTION:**

**Storing a jack, a tire, or other equipment in the passenger compartment of the vehicle could cause injury. In a sudden stop or collision, loose equipment could strike someone. Store all these in the proper place.**

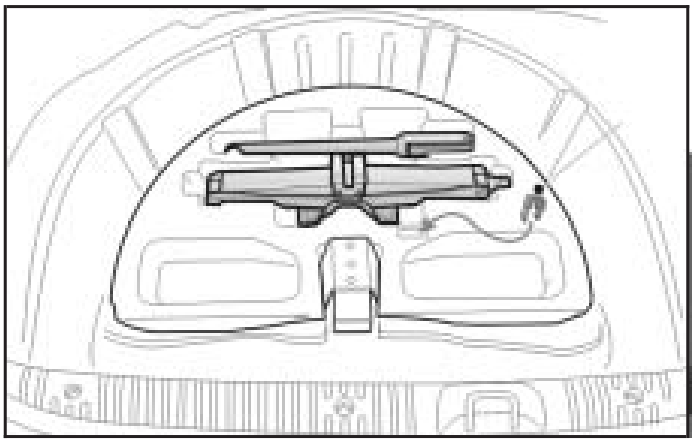

Store the tools as shown. Place the flat tire in the compact spare tire well in the compartment in the trunk floor. Then place the compact spare tire cover over the flat tire.

The compact spare is for temporary use only. Replace the compact spare tire with a full-size tire as soon as you can. See *Compact Spare Tire on page 5-76*. See the storage instructions label to replace your compact spare into your trunk properly.



Downloaded from www.Manualslib.com manuals search engine

## Compact Spare Tire

Although the compact spare tire was fully inflated when the vehicle was new, it can lose air after a time. Check the inflation pressure regularly. It should be 60 psi (420 kPa).

After installing the compact spare on the vehicle, stop as soon as possible and make sure the spare tire is correctly inflated. The compact spare is made to perform well at speeds up to 65 mph (105 km/h) for distances up to 3,000 miles (5 000 km), so you can finish your trip and have the full-size tire repaired or replaced at your convenience. Of course, it is best to replace the spare with a full-size tire as soon as possible. The spare tire will last longer and be in good shape in case it is needed again.

***Notice:*** **When the compact spare is installed, do not take your vehicle through an automatic car wash with guide rails. The compact spare can get caught on the rails. That can damage the tire and wheel, and maybe other parts of your vehicle.**

Do not use the compact spare on other vehicles.

And do not mix the compact spare tire or wheel with other wheels or tires. They will not fit. Keep the spare tire and its wheel together.

***Notice:*** **Tire chains will not fit your compact spare. Using them can damage your vehicle and can damage the chains too. Do not use tire chains on your compact spare.**

# Appearance Care

Cleaning products can be hazardous. Some are toxic. Other cleaning products can burst into flames if a match is struck near them or if they get on a hot part of the vehicle. Some are dangerous if their fumes are inhaled in an enclosed space. When anything from a container is used to clean the vehicle, be sure to follow the manufacturer's warnings and instructions. Always open the doors or windows of the vehicle when cleaning the inside.

Never use these to clean the vehicle:

- Gasoline
- Benzene
- Naphtha
- Carbon Tetrachloride
- Acetone
- Paint Thinner
- Turpentine
- Lacquer Thinner
- Nail Polish Remover



Downloaded from www.Manualslib.com manuals search engine

They can all be hazardous — some more than others — and they can all damage the vehicle, too.

Do not use any of these products unless this manual says you can. In many uses, these will damage the vehicle:

- Alcohol
- Laundry Soap
- Bleach
- Reducing Agents

## Fabric/Carpet

Use a vacuum cleaner often to get rid of dust and loose dirt. Wipe vinyl, leather, plastic, and painted surfaces with a clean, damp cloth.

GM-approved cleaning products can be obtained from your dealer.

Here are some cleaning tips:

- Always read the instructions on the cleaner label.
- Clean up stains as soon as you can before they set.
- Carefully scrape off any excess stain.
- Use a clean cloth or sponge, and change to a clean area often. A soft brush may be used if stains are stubborn.
- To avoid forming a ring on the fabric after spot cleaning, clean the entire area immediately or it will set.

Most stains can be removed with club soda water. To clean, use the following instructions:

1. For liquids: blot with a clean, soft, white cloth. For solids: remove as much as possible and then vacuum or brush.
2. Apply club soda water to a clean, soft, white cloth. Do not over-saturate; the cloth should not drip water.
3. Clean the entire area. Avoid getting the fabric too wet.
4. Start cleaning from the seams into the stain to avoid a ring effect.
5. Continue cleaning, using a clean area of the cloth each time it becomes soiled.
6. When the stain is removed, blot the cleaned area with another dry, clean, soft, white cloth.



Downloaded from www.Manualslib.com manuals search engine

## Using Cleaner on Fabric

1. First, try the cleaner on an area of the fabric that is not easily seen to make sure the cleaner does not affect the color of the fabric.
2. For liquids: blot with a clean, soft, white cloth. For solids: remove as much as possible and then vacuum or brush.
3. Spray a small amount of the cleaner onto a clean soft, white, cloth. Do not apply spray directly to the fabric.
4. Start cleaning from the seams into the stain to avoid a ring effect.
5. Continue cleaning, using a clean area of the cloth each time it becomes soiled.
6. When the stain is removed, blot the cleaned area with another dry, clean, soft, white cloth.
7. If the cleaner leaves a ring effect, follow up with the club soda water instructions given earlier in this section.

## Special Fabric Cleaning Problems

Stains caused by such things as catsup, black coffee, egg, fruit, fruit juice, milk, soft drinks, vomit, urine, and blood can be removed using the club soda water instructions given earlier in this section. If an odor lingers after cleaning vomit or urine, treat the area with a water and baking soda solution: 1 teaspoon (5 ml) of baking soda to 1 cup (250 ml) of lukewarm water. Let dry.

Stains caused by oil and grease can be cleaned with an approved GM cleaner and a clean, white cloth.

1. Carefully scrape off excess stain.
2. Clean with cool water and allow to dry completely.
3. If a stain remains, follow the “Using Cleaner on Fabric” instructions described earlier.

## Vinyl

Use warm water and a clean cloth.

- Rub with a clean, damp cloth to remove dirt. This may have to be done more than once.
- Things like tar, asphalt, and shoe polish will stain if they are not removed quickly. Use a clean cloth and vinyl cleaner. See your dealer for this product.



Downloaded from www.Manualslib.com manuals search engine

## Leather

Use a soft cloth with lukewarm water and a mild soap or saddle soap and wipe dry with a soft cloth. Then, let the leather dry naturally. Do not use heat to dry.

- For stubborn stains, use a leather cleaner.
- Never use oils, varnishes, solvent-based or abrasive cleaners, furniture polish, or shoe polish on leather.
- Soiled or stained leather should be cleaned immediately. If dirt is allowed to work into the finish, it can harm the leather.

## Instrument Panel

Use only mild soap and water to clean the top surfaces of the instrument panel. Sprays containing silicones or waxes may cause annoying reflections in the windshield and even make it difficult to see through the windshield under certain conditions.

## Interior Plastic Components

Use only a mild soap and water solution on a soft cloth or sponge. Commercial cleaners may affect the surface finish.

## Glass Surfaces

***Notice:*** **If you use abrasive cleaners when cleaning glass surfaces on your vehicle, you could scratch the glass. When cleaning the glass on your vehicle, use only a soft cloth and glass cleaner.**

Glass should be cleaned often. Your GM dealer can provide an approved cleaner, or a liquid household glass cleaner will remove normal tobacco smoke and dust films on interior glass. See *Vehicle Care/Appearance Materials on page 5-84*.

## Care of Safety Belts

Keep belts clean and dry.

**⚠ CAUTION:**

**Do not bleach or dye safety belts. If you do, it may severely weaken them. In a crash, they might not be able to provide adequate protection. Clean safety belts only with mild soap and lukewarm water.**



Downloaded from www.Manualslib.com manuals search engine

## Weatherstrips

Silicone grease on weatherstrips will make them last longer, seal better, and not stick or squeak. Apply silicone grease with a clean cloth. During very cold, damp weather frequent application may be required. See *Recommended Fluids and Lubricants on page 6-12*.

## Washing Your Vehicle

The paint finish on the vehicle provides beauty, depth of color, gloss retention, and durability.

The best way to preserve the vehicle's finish is to keep it clean by washing it often with lukewarm or cold water.

Do not wash the vehicle in the direct rays of the sun. Use a car washing soap. Do not use strong soaps or chemical detergents. Be sure to rinse the vehicle well, removing all soap residue completely. GM-approved cleaning products can be obtained from your dealer. See *Vehicle Care/Appearance Materials on page 5-84*. Do not use cleaning agents that are petroleum based, or that contain acid or abrasives. All cleaning agents should be flushed promptly and not allowed to dry on the surface, or they could stain. Dry the finish with a soft, clean chamois or an all-cotton towel to avoid surface scratches and water spotting.

High pressure car washes may cause water to enter the vehicle.

## Cleaning Exterior Lamps/Lenses

Use only lukewarm or cold water, a soft cloth and a car washing soap to clean exterior lamps and lenses. Follow instructions under *Washing Your Vehicle on page 5-80*.

## Finish Care

Occasional waxing or mild polishing of the vehicle by hand may be necessary to remove residue from the paint finish. GM-approved cleaning products can be obtained from your dealer. See *Vehicle Care/Appearance Materials on page 5-84*.

***Notice:*** **Machine compounding or aggressive polishing on a basecoat/clearcoat paint finish may damage it. Use only non-abrasive waxes and polishes that are made for a basecoat/clearcoat paint finish on your vehicle.**

The vehicle has a "basecoat/clearcoat" paint finish. The clearcoat gives more depth and gloss to the colored basecoat. Always use waxes and polishes that are non-abrasive and made for a basecoat/clearcoat paint finish.



Downloaded from www.Manualslib.com manuals search engine

Foreign materials such as calcium chloride and other salts, ice melting agents, road oil and tar, tree sap, bird droppings, chemicals from industrial chimneys, etc., can damage the vehicle's finish if they remain on painted surfaces. Wash the vehicle as soon as possible. If necessary, use non-abrasive cleaners that are marked safe for painted surfaces to remove foreign matter.

Exterior painted surfaces are subject to aging, weather, and chemical fallout that can take their toll over a period of years. To help keep the paint finish looking new, keep the vehicle in a garage or covered whenever possible.

## Windshield and Wiper Blades

If the windshield is not clear after using the windshield washer, or if the wiper blade chatters when running, wax, sap, or other material may be on the blade or windshield.

Clean the outside of the windshield with a glass cleaning liquid or powder and water solution. The windshield is clean if beads do not form when it is rinsed with water.

Grime from the windshield will stick to the wiper blades and affect their performance. Clean the blade by wiping vigorously with a cloth soaked in full-strength windshield washer solvent. Then rinse the blade with water.

Check the wiper blades and clean them as necessary; replace blades that look worn.

## Aluminum Wheels

***Notice:*** **If you use strong soaps, chemicals, abrasive polishes, cleaners, brushes, or cleaners that contain acid on aluminum or chrome-plated wheels, you could damage the surface of the wheel(s). The repairs would not be covered by your warranty. Use only GM-approved cleaners on aluminum or chrome-plated wheels.**

Keep the wheels clean using a soft clean cloth with mild soap and water. Rinse with clean water. After rinsing thoroughly, dry with a soft clean towel. A wax may then be applied.

***Notice:*** **Using chrome polish on aluminum wheels could damage the wheels. The repairs would not be covered by your warranty. Use chrome polish on chrome wheels only.**

The surface of these wheels is similar to the painted surface of the vehicle. Do not use strong soaps, chemicals, abrasive polishes, abrasive cleaners, cleaners with acid, or abrasive cleaning brushes on them because the surface could be damaged. Do not use chrome polish on aluminum wheels.



Downloaded from www.Manualslib.com manuals search engine

***Notice:*** **If you drive your vehicle through an automatic car wash that has silicone carbide tire cleaning brushes, you could damage the aluminum or chrome-plated wheels. The repairs would not be covered by your warranty. Never drive a vehicle equipped with aluminum or chrome-plated wheels through an automatic car wash that uses silicone carbide tire cleaning brushes.**

Do not take the vehicle through an automatic car wash that has silicone carbide tire cleaning brushes. These brushes can also damage the surface of these wheels.

## Tires

To clean the tires, use a stiff brush with tire cleaner.

***Notice:*** **Using petroleum-based tire dressing products on your vehicle may damage the paint finish and/or tires. When applying a tire dressing, always wipe off any overspray from all painted surfaces on your vehicle.**

## Sheet Metal Damage

If the vehicle is damaged and requires sheet metal repair or replacement, make sure the body repair shop applies anti-corrosion material to parts repaired or replaced to restore corrosion protection.

Original manufacturer replacement parts will provide the corrosion protection while maintaining the warranty.

## Finish Damage

Any stone chips, fractures or deep scratches in the finish should be repaired right away. Bare metal will corrode quickly and may develop into major repair expense.

Minor chips and scratches can be repaired with touch-up materials available from your GM dealer. Larger areas of finish damage can be corrected in your GM dealer's body and paint shop.



Downloaded from www.Manualslib.com manuals search engine

## Underbody Maintenance

Chemicals used for ice and snow removal and dust control can collect on the underbody. If these are not removed, corrosion and rust can develop on the underbody parts such as fuel lines, frame, floor pan, and exhaust system even though they have corrosion protection.

At least every spring, flush these materials from the underbody with plain water. Clean any areas where mud and debris can collect. Dirt packed in close areas of the frame should be loosened before being flushed. Your GM dealer or an underbody car washing system can do this for you.

## Chemical Paint Spotting

Some weather and atmospheric conditions can create a chemical fallout. Airborne pollutants can fall upon and attack painted surfaces on the vehicle. This damage can take two forms: blotchy, ring-shaped discolorations, and small, irregular dark spots etched into the paint surface.

Although no defect in the paint job causes this, GM will repair, at no charge to the owner, the surfaces of new vehicles damaged by this fallout condition within 12 months or 12,000 miles (20 000 km) of purchase, whichever occurs first.



Downloaded from www.Manualslib.com manuals search engine

## Vehicle Care/Appearance Materials

See your GM dealer for more information on purchasing the following products.

| Description | Usage |
|---|---|
| Polishing Cloth Wax-Treated | Interior and exterior polishing cloth. |
| Tar and Road Oil Remover | Removes tar, road oil, and asphalt. |
| Chrome Cleaner and Polish | Use on chrome or stainless steel. |
| White Sidewall Tire Cleaner | Removes soil and black marks from whitewalls. |
| Vinyl Cleaner | Cleans vinyl. |
| Glass Cleaner | Removes dirt, grime, smoke and fingerprints. |
| Chrome and Wire Wheel Cleaner | Removes dirt and grime from chrome wheels and wire wheel covers. |
| Finish Enhancer | Removes dust, fingerprints, and surface contaminants. Spray on and wipe off. |
| Swirl Remover Polish | Removes swirl marks, fine scratches, and other light surface contamination. |
| Cleaner Wax | Removes light scratches and protects finish. |
| Foaming Tire Shine Low Gloss | Cleans, shines, and protects in one step. No wiping necessary. |
| Wash Wax Concentrate | Medium foaming shampoo. Cleans and lightly waxes. Biodegradable and phosphate free. |
| Spot Lifter | Quickly removes spots and stains from carpets, vinyl, and cloth upholstery. |
| Odor Eliminator | Odorless spray odor eliminator used on fabrics, vinyl, leather and carpet. |
| See your General Motors parts department for these products. See *Recommended Fluids and Lubricants on page 6-12*. | |



Downloaded from www.Manualslib.com manuals search engine

# Vehicle Identification

## Vehicle Identification Number (VIN)

6H8U2X37F2L000000

This is the legal identifier for your vehicle. It appears on a plate in the front corner of the instrument panel, on the driver's side. You can see it if you look through the windshield from outside your vehicle. The VIN also appears on the Vehicle Certification and Service Parts labels and the certificates of title and registration.

### Engine Identification

The eighth character in your VIN is the engine code. This code will help you identify your engine, specifications and replacement parts.

## Service Parts Identification Label

You will find this label on your spare tire cover. It is very helpful if you ever need to order parts. On this label, you will find the following:

- VIN
- Model designation
- Paint information
- Production options and special equipment

Be sure that this label is not removed from the vehicle.

# Electrical System

## Add-On Electrical Equipment

***Notice:*** **Don't add anything electrical to your vehicle unless you check with your dealer first. Some electrical equipment can damage your vehicle and the damage wouldn't be covered by your warranty. Some add-on electrical equipment can keep other components from working as they should.**

Your vehicle has an airbag system. Before attempting to add anything electrical to your vehicle, see *Servicing Your Airbag-Equipped Vehicle on page 1-50*.



Downloaded from www.Manualslib.com manuals search engine

## Fuses and Circuit Breakers

The wiring circuits in your vehicle are protected from short circuits by fuses, circuit breakers and thermal links in the wiring itself. This greatly reduces the chance of fires caused by electrical problems.

Look at the metallic band inside the fuse. If the band is broken or melted, replace the fuse. Be sure you replace a bad fuse with a new one of the correct size.

If you ever have a problem on the road and don't have a spare fuse, you can borrow one. Just pick some feature of your vehicle that you can get along without — like the radio or cigarette lighter — and use its fuse, if it is the size you need. Replace it as soon as you can.

Before replacing a fuse, turn every vehicle electrical switch off.

There are two fuse blocks in your vehicle: the instrument panel fuse block and the engine compartment fuse block.

## Instrument Panel Fuse Block

This fuse block is located under the driver's side of the instrument panel. The fuses here protect each separate circuit including headlamps. There are spare fuses inside the fuse box. If you have electrical failure, check here first.

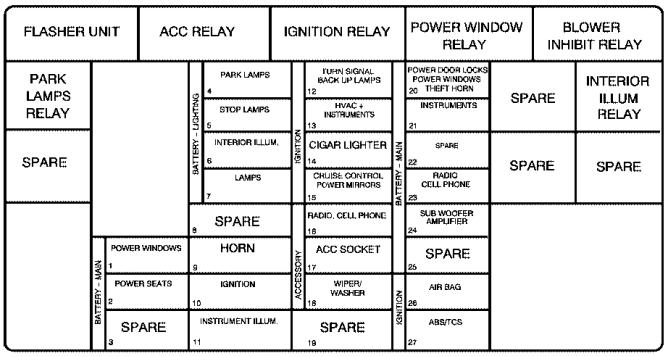


| Fuses | Usage |
|---|---|
| FLASHER UNIT | Hazard Warning Flashers |
| POWER WINDOWS | Power Window Switches |



Downloaded from www.Manualslib.com manuals search engine

| Fuses | Usage |
|---|---|
| POWER SEATS | Power Seat Controls |
| FRONT WIPER WASHER | Front Windshield Wiper Washer |
| PARK LAMPS | Parking Lamps |
| STOP LAMPS | Stop Lamps |
| INTERIOR ILLUM. | Interior light Controls |
| HAZARD WARNING | Hazard Warning Flashers |
| SPARE | Spare |
| HORN | Horn |
| IGNITION | Ignition Switch |
| INSTRUMENT ILLUM. | Instrument Panel Lighting |
| TURN SIGNAL, BACK UP LAMPS | Turn Signal Lamp, Back-Up Lamps |
| HVAC CONT. HEAT, REAR WINDOW, INSTRUMENTS | Heater Controls, Rear Window, Trip Computer |
| CIGAR LIGHTER | Cigarette Lighter |

| Fuses | Usage |
|---|---|
| CRUISE CONT. POWER MIRRORS | Cruise Control, Power Mirror |
| RADIO, CELL PHONE | Radio System, Cell Phone |
| ACC. SOCKET | Accessory Power Outlet |
| SPARE | Spare |
| ENG. CONT. SIGNAL | Engine Control Signal |
| POWER DOOR LOCKS, WINDOWS & THEFT HORN | Power Door Locks, Power Windows, Theft System, Horn |
| INSTRUMENTS | Instruments |
| SPARE | Spare |
| RADIO & CELL PHONE | Radio System, Cell Phone |
| SUB WOOFER & AMPLIFIER | Sub Woofer and Amplifier |
| SPARE | Spare |
| AIRBAG | Airbag |
| ABS & TRACTION CONT. | Anti-Lock Brake System, Traction Control System |



Downloaded from www.Manualslib.com manuals search engine

| Relays | Usage |
|---|---|
| ACC RELAY | Accessory Power Outlet |
| IGNITION RELAY | Ignition Switch |
| POWER WINDOW RELAY | Power Windows |
| BLOWER INHIBIT RELAY | Blower |
| PARK LAMPS RELAY | Parking Lamps |
| SPARE | Spare |
| INTERIOR ILLUM RELAY | Interior Light Controls |
| ECM/TCM CONTROL RELAY 1 | Engine Control Module, Transmission Control Module 1 |
| ECM/TCM CONTROL RELAY 2 | Engine Control Module, Transmission Control Module 2 |
| SPARE | Spare |

## Engine Compartment Fuse Block

The engine compartment fuse block is located in the engine compartment and protects all electrical loads. See *Engine Compartment Overview on page 5-12* for more information on location.

For access to the main fuses, pull off the cover.

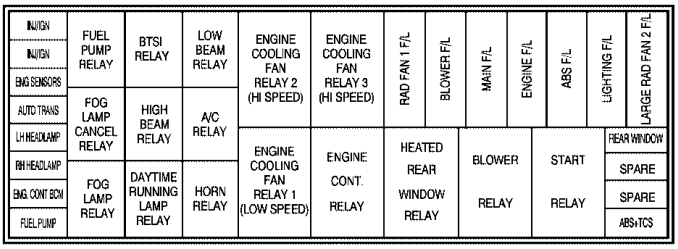


| Fuses | Usage |
|---|---|
| INJ/IGN | Fuel Injectors and Ignition Modules |
| INJ/IGN | Fuel Injectors and Ignition Modules |
| ENG SENSORS | Engine Sensors |
| AUTO TRANS | Automatic Transmission |
| LH HEADLAMP | Left Headlamp |
| RH HEADLAMP | Right Headlamp |



Downloaded from www.Manualslib.com manuals search engine

| Fuses | Usage |
|---|---|
| ENG CONT. BCM | Engine, Body Control Module |
| FUEL PUMP | Fuel Pump |
| RAD FAN 1 F/L | Engine Cooling Fan 1 |
| BLOWER F/L | Blower Fan |
| MAIN F/L | Main |
| ENGINE F/L | Engine |
| ABS F/L | Anti-lock Brakes |
| LIGHTING F/L | Lighting |
| RAD FAN 2 F/L | Engine Cooling Fan 2 |
| REAR WINDOW | Heated Rear Window |
| SPARE | Spare |
| SPARE | Spare |
| ABS/TCS | Anti-lock Brake System, Traction Control System |

| Relays | Usage |
|---|---|
| FUEL PUMP RELAY | Fuel Pump |
| FOG LAMP CANCEL RELAY | Fog Lamp Cancel |
| FOG LAMP RELAY | Fog Lamp |

| Relays | Usage |
|---|---|
| BTSI RELAY | Brake Transmission Shift Interlock |
| HIGH BEAM RELAY | High-Beam Headlamp |
| DAYTIME RUNNING LAMP RELAY | Daytime Running Lamps |
| LOW BEAM RELAY | Low-Beam Headlamp |
| A/C RELAY | Air Conditioning |
| HORN RELAY | Horn |
| ENGINE COOL FAN 2 RELAY | Engine Cooling Fan 2 |
| ENGINE COOL FAN 1 RELAY | Engine Cooling Fan 1 |
| ENGINE COOL FAN 3 RELAY | Engine Cooling Fan 3 |
| ENGINE CONT. RELAY | Engine Controls |
| HEATED REAR WINDOW RELAY | Rear Window Defogger |
| BLOWER RELAY | Blower |
| START RELAY | Start |



Downloaded from www.Manualslib.com manuals search engine

# Capacities and Specifications

The following approximate capacities are given in English and metric conversions. See *Recommended Fluids and Lubricants on page 6-12* for more information.

| Application | Capacities | |
|---|---|---|
| | English | Metric |
| Air Conditioning Refrigerant R134a | 1.8 lbs | 0.8 kg |
| Automatic Transmission (Drain and Refill) | 5.3 quarts | 5.0 L |
| Cooling System | 12.7 quarts | 12.0 L |
| Engine Oil with Filter (Drain and Refill) | 6.5 quarts | 6.2 L |
| Fuel Tank | 18.5 gallons | 70.0 L |
| Manual Transmission | 4.6 quarts | 4.4 L |
| Wheel Nut Torque | 100 ft lb | 140 N•m |
| All capacities are approximate. When adding, be sure to fill to the appropriate level, as recommended in this manual. Recheck fluid level after filling | | |

## Engine Specifications

| Engine | VIN Code | Transmission | Spark Plug Gap | Firing Order |
|---|---|---|---|---|
| 6.0L V8 (LS2) | U | Automatic<br>Manual | 0.040 inch<br>(1.016 mm) | 1–8–7–2–6–5–4–3 |



Downloaded from www.Manualslib.com manuals search engine

# Section 6 Maintenance Schedule

**Maintenance Schedule** .....6-2
Introduction .....6-2
Maintenance Requirements .....6-2
Your Vehicle and the Environment .....6-2
Using the Maintenance Schedule .....6-2
Scheduled Maintenance .....6-4
Additional Required Services .....6-6
Maintenance Footnotes .....6-7
Owner Checks and Services .....6-8
At Each Fuel Fill .....6-8
At Least Once a Month .....6-9
At Least Once a Year .....6-9
Recommended Fluids and Lubricants .....6-12
Normal Maintenance Replacement Parts .....6-14
Maintenance Record .....6-15



Downloaded from www.Manualslib.com manuals search engine

# Maintenance Schedule

## Introduction

**Important: Keep engine oil at the proper level and change as recommended.**

*Have you purchased the GM Protection Plan? The Plan supplements your new vehicle warranties. See your Warranty and Owner Assistance booklet or your dealer for details.*

## Maintenance Requirements

***Notice:*** **Maintenance intervals, checks, inspections, replacement parts, and recommended fluids and lubricants as prescribed in this manual are necessary to keep your vehicle in good working condition. Any damage caused by failure to follow scheduled maintenance may not be covered by warranty.**

## Your Vehicle and the Environment

Proper vehicle maintenance not only helps to keep your vehicle in good working condition, but also helps the environment. All recommended maintenance is important. Improper vehicle maintenance can even affect the quality of the air we breathe. Improper fluid levels or the wrong tire inflation can increase the level of emissions from your vehicle. To help protect our environment, and to keep your vehicle in good condition, be sure to maintain your vehicle properly.

## Using the Maintenance Schedule

We at General Motors want to help you keep your vehicle in good working condition. But we do not know exactly how you will drive it. You may drive very short distances only a few times a week. Or you may drive long distances all the time in very hot, dusty weather. You may use your vehicle in making deliveries. Or you may drive it to work, to do errands or in many other ways.

Because of all the different ways people use their vehicles, maintenance needs vary. You may need more frequent checks and replacements. So please read the following and note how you drive. If you have any questions on how to keep your vehicle in good condition, see your GM Goodwrench® dealer.



Downloaded from www.Manualslib.com manuals search engine

This schedule is for vehicles that:

- carry passengers and cargo within recommended limits. You will find these limits on the tire and loading information label. See *Loading Your Vehicle on page 4-29*.
- are driven on reasonable road surfaces within legal driving limits.
- use the recommended fuel. See *Gasoline Octane on page 5-5*.

The services in *Scheduled Maintenance on page 6-4* should be performed when indicated. See *Additional Required Services on page 6-6* and *Maintenance Footnotes on page 6-7* for further information.

**⚠ CAUTION:**

**Performing maintenance work on a vehicle can be dangerous. In trying to do some jobs, you can be seriously injured. Do your own maintenance work only if you have the required know-how and the proper tools and equipment for the job. If you have any doubt, see your GM Goodwrench® dealer to have a qualified technician do the work.**

Some maintenance services can be complex. So, unless you are technically qualified and have the necessary equipment, you should have your GM Goodwrench® dealer do these jobs.

When you go to your GM Goodwrench® dealer for your service needs, you will know that GM-trained and supported service technicians will perform the work using genuine GM parts.

If you want to purchase service information, see *Service Publications Ordering Information on page 7-11*.

*Owner Checks and Services on page 6-8* tells you what should be checked, when to check it and what you can easily do to help keep your vehicle in good condition.

The proper replacement parts, fluids and lubricants to use are listed in *Recommended Fluids and Lubricants on page 6-12* and *Normal Maintenance Replacement Parts on page 6-14*. When your vehicle is serviced, make sure these are used. All parts should be replaced and all necessary repairs done before you or anyone else drives the vehicle. We recommend the use of genuine GM parts.



Downloaded from www.Manualslib.com manuals search engine

## Scheduled Maintenance

When the Service Engine Oil light on the trip computer display comes on, it means that service is required for your vehicle. See *Trip Computer on page 3-33*. Have your vehicle serviced as soon as possible within the next 600 miles (1 000 km). It is possible that, if you are driving under the best conditions, the engine oil life system may not indicate that vehicle service is necessary for over a year. However, the engine oil and filter must be changed at least once a year and at this time the system must be reset. Your GM Goodwrench® dealer has GM-trained service technicians who will perform this work using genuine GM parts and reset the system.

If the engine oil life system is ever reset accidentally, you must service your vehicle within 3,000 miles (5 000 km) since your last service. Remember to reset the oil life system whenever the oil is changed. See *Engine Oil Life System on page 5-16* for information on the Engine Oil Life System and resetting the system.

When the Service Engine Oil light appears, certain services, checks, and inspections are required. Required services are described in the following for "Maintenance I" and "Maintenance II." Generally, it is recommended that your first service be Maintenance I, your second service be Maintenance II, and that you alternate Maintenance I and Maintenance II thereafter. However, in some cases, Maintenance II may be required more often.

**Maintenance I** — Use Maintenance I if the light comes on within 10 months since the vehicle was purchased or Maintenance II was performed.

**Maintenance II** — Use Maintenance II if the previous service performed was Maintenance I. Always use Maintenance II whenever the light comes on 10 months or more since the last service or if the light has not come on at all for one year.



Downloaded from www.Manualslib.com manuals search engine

## Scheduled Maintenance

| Service | Maintenance I | Maintenance II |
|---|---|---|
| Change engine oil and filter. See *Engine Oil on page 5-13*. Reset oil life system. See *Engine Oil Life System on page 5-16*. *An Emission Control Service.* | • | • |
| Visually check for any leaks or damage. *See footnote (j).* | • | • |
| Inspect engine air cleaner filter. If necessary, replace filter. See *Engine Air Cleaner/Filter on page 5-18*. | • | • |
| Rotate tires and check inflation pressures and wear. See *Tire Inspection and Rotation on page 5-62* and “Tire Wear Inspection” in *At Least Once a Month on page 6-9*. | • | • |
| Inspect brake system. *See footnote (a).* | • | • |
| Check engine coolant and windshield washer fluid levels and add fluid as needed. | • | • |
| Perform any needed additional services. See “Additional Required Services” in this section. | • | • |
| Inspect suspension and steering components. *See footnote (b).* | | • |
| Inspect engine cooling system. *See footnote (c).* | | • |
| Inspect wiper blades. *See footnote (d).* | | • |
| Inspect restraint system components. *See footnote (e).* | | • |
| Lubricate body components. *See footnote (f).* | | • |
| Check transmission fluid level and add fluid as needed. See *Recommended Fluids and Lubricants on page 6-12* for what to use. | | • |



Downloaded from www.Manualslib.com manuals search engine

## Additional Required Services

The following services should be performed at the first maintenance service (I or II) after the indicated miles (kilometers) shown for each item.

### Additional Required Services

| Service and Miles (Kilometers) | 25,000 (41 500) | 50,000 (83 000) | 75,000 (125 000) | 100,000 (166 000) | 125,000 (207 500) | 150,000 (240 000) |
|---|---|---|---|---|---|---|
| Inspect fuel system for damage or leaks. | • | • | • | • | • | • |
| Inspect exhaust system for loose or damaged components. | • | • | • | • | • | • |
| Replace engine air cleaner filter. See *Engine Air Cleaner/Filter on page 5-18*. | • | • | • | • | • | • |
| Change automatic transmission fluid and filter (severe service). *See footnote (h).* | • | • | • | • | • | • |
| Change automatic transmission fluid and filter (normal service). | | • | | • | | • |
| Replace spark plugs. Inspect spark plug wires. *An Emission Control Service.* | | | | • | | |
| Engine cooling system service (or every five years, whichever occurs first). *An Emission Control Service. See footnote (i).* | | | | | | • |
| Inspect engine accessory drive belt. *An Emission Control Service.* | | | | | | • |



Downloaded from www.Manualslib.com manuals search engine

## Maintenance Footnotes

(a) *Visually inspect brake lines and hoses for proper hook-up, binding, leaks, cracks, chafing, etc. Inspect disc brake pads for wear and rotors for surface condition. Inspect other brake parts, including calipers, parking brake, etc.*

(b) *Visually inspect front and rear suspension and steering system for damaged, loose, or missing parts or signs of wear. Inspect power steering lines and hoses for proper hook-up, binding, leaks, cracks, chafing, etc.*

(c) *Visually inspect hoses and have them replaced if they are cracked, swollen, or deteriorated. Inspect all pipes, fittings and clamps; replace with genuine GM parts as needed. To help ensure proper operation, a pressure test of the cooling system and pressure cap and cleaning the outside of the radiator and air conditioning condenser is recommended at least once a year.*

(d) *Visually inspect wiper blades for wear or cracking. Replace blade inserts that appear worn or damaged or that streak or miss areas of the windshield.*

(e) *Make sure the safety belt reminder light and all your belts, buckles, latch plates, retractors, and anchorages are working properly. Look for any other loose or damaged safety belt system parts. If you see anything that might keep a safety belt system from doing its job, have it repaired. Have any torn or frayed safety belts replaced. Also look for any opened or broken airbag coverings, and have them repaired or replaced. The airbag system does not need regular maintenance.*

(f) *Lubricate all key lock cylinders, door hinges and latches, hood hinges and latches, and trunk lid hinges and latches. More frequent lubrication may be required when exposed to a corrosive environment. Applying silicone grease on weatherstrips with a clean cloth will make them last longer, seal better, and not stick or squeak.*



Downloaded from www.Manualslib.com manuals search engine

(h) *Change automatic transmission fluid and filter if the vehicle is mainly driven under one or more of these conditions:*

- *In heavy city traffic where the outside temperature regularly reaches 90°F (32°C) or higher.*
- *In hilly or mountainous terrain.*
- *When doing frequent trailer towing.*
- *Uses such as found in taxi, police, or delivery service.*
- *Uses such as high performance operation.*

(i) *Drain, flush, and refill cooling system. This service can be complex; you should have your dealer perform this service. See Engine Coolant on page 5-23* for what to use. Inspect hoses. Clean radiator, condenser, pressure cap, and filler neck. Pressure test the cooling system and pressure cap.

(j) *A fluid loss in any vehicle system could indicate a problem. Have the system inspected and repaired and the fluid level checked. Add fluid if needed.*

## Owner Checks and Services

These owner checks and services should be performed at the intervals specified to help ensure the safety, dependability and emission control performance of your vehicle. Your GM Goodwrench® dealer can assist you with these checks and services.

Be sure any necessary repairs are completed at once. Whenever any fluids or lubricants are added to your vehicle, make sure they are the proper ones, as shown in *Recommended Fluids and Lubricants on page 6-12*.

## At Each Fuel Fill

*It is important to perform these underhood checks at each fuel fill.*

### Engine Oil Level Check

Check the engine oil level and add the proper oil if necessary. See *Engine Oil on page 5-13* for further details.

***Notice:*** **It is important to check your oil regularly and keep it at the proper level. Failure to keep your engine oil at the proper level can cause damage to your engine not covered by your warranty.**



Downloaded from www.Manualslib.com manuals search engine

### Engine Coolant Level Check

Check the engine coolant level and add DEX-COOL® coolant mixture if necessary. See *Engine Coolant on page 5-23* for further details.

### Windshield Washer Fluid Level Check

Check the windshield washer fluid level in the windshield washer tank and add the proper fluid if necessary.

## At Least Once a Month

### Tire Inflation Check

Visually inspect your vehicle's tires and make sure they are inflated to the correct pressures. Do not forget to check the spare tire. See *Tires on page 5-52* for further details. Check to make sure the spare tire is stored securely. See *Changing a Flat Tire on page 5-68*.

### Tire Wear Inspection

Tire rotation may be required for high mileage highway drivers prior to the Engine Oil Life System service notification. Check the tires for wear and, if necessary, rotate the tires. See *Tire Inspection and Rotation on page 5-62*.

## At Least Once a Year

### Starter Switch Check

**⚠ CAUTION:**

**When you are doing this inspection, the vehicle could move suddenly. If the vehicle moves, you or others could be injured.**

1. Before you start, be sure you have enough room around the vehicle.
2. Firmly apply both the parking brake and the regular brake. See *Parking Brake on page 2-23*.

   Do not use the accelerator pedal, and be ready to turn off the engine immediately if it starts.
3. Try to start the engine in each gear. The vehicle should start only in PARK (P) or NEUTRAL (N). If the vehicle starts in any other position, contact your GM Goodwrench® dealer for service.



Downloaded from www.Manualslib.com manuals search engine

## Automatic Transmission Shift Lock Control System Check

**⚠ CAUTION:**

**When you are doing this inspection, the vehicle could move suddenly. If the vehicle moves, you or others could be injured.**

1. Before you start, be sure you have enough room around the vehicle. It should be parked on a level surface.
2. Firmly apply the parking brake. See *Parking Brake on page 2-23*.

   Be ready to apply the regular brake immediately if the vehicle begins to move.
3. With the engine off, turn the ignition to ON, but do not start the engine. Without applying the regular brake, try to move the shift lever out of PARK (P) with normal effort. If the shift lever moves out of PARK (P), contact your GM Goodwrench® dealer for service.

## Ignition Transmission Lock Check

While parked, and with the parking brake set, try to turn the ignition to LOCK in each shift lever position.

- With an automatic transmission, the ignition should turn to LOCK only when the shift lever is in PARK (P). The key should come out only in LOCK.
- With a manual transmission, the key should come out only in LOCK.

Contact your GM Goodwrench® dealer if service is required.



Downloaded from www.Manualslib.com manuals search engine

## Parking Brake and Automatic Transmission Park (P) Mechanism Check

**⚠ CAUTION:**

**When you are doing this check, your vehicle could begin to move. You or others could be injured and property could be damaged. Make sure there is room in front of your vehicle in case it begins to roll. Be ready to apply the regular brake at once should the vehicle begin to move.**

Park on a fairly steep hill, with the vehicle facing downhill. Keeping your foot on the regular brake, set the parking brake.

- To check the parking brake's holding ability: With the engine running and transaxle in NEUTRAL (N), slowly remove foot pressure from the regular brake pedal. Do this until the vehicle is held by the parking brake only.
- To check the PARK (P) mechanism's holding ability: With the engine running, shift to PARK (P). Then release the parking brake followed by the regular brake.

Contact your GM Goodwrench® dealer if service is required.

## Underbody Flushing Service

At least every spring, use plain water to flush any corrosive materials from the underbody. Take care to clean thoroughly any areas where mud and other debris can collect.



Downloaded from www.Manualslib.com manuals search engine

## Recommended Fluids and Lubricants

Fluids and lubricants identified below by name, part number or specification may be obtained from your dealer.

| Usage | Fluid/Lubricant |
|---|---|
| Engine Oil | The engine requires a special engine oil meeting GM Standard GM4718M. Oils meeting this standard may be identified as synthetic, and should also be identified with the American Petroleum Institute Certified for Gasoline Engines starburst symbol. However, not all synthetic API oils with the starburst symbol will meet this GM standard. You should look for and use only an oil that meets GM Standard GM4718M. GM Goodwrench® oil meets all the requirements for your vehicle. For the proper viscosity, see *Engine Oil on page 5-13*. |
| Engine Coolant | 50/50 mixture of clean, drinkable water and use only DEX-COOL® Coolant. See *Engine Coolant on page 5-23*. |
| Hydraulic Brake System | Hydraulic Brake Fluid. Use only GM Part No. U.S. 88958860, in Canada 88901244, Super DOT-4 brake fluid. |
| Windshield Washer Solvent | GM Optikleen® Washer Solvent. |
| Hydraulic Clutch System | Hydraulic Clutch Fluid. Use only GM Part No. U.S. 88958860, in Canada 88901244, Super DOT-4 brake fluid. |
| Parking Brake Cable Guides | Chassis Lubricant (GM Part No. U.S. 12377985, in Canada 88901242) or lubricant meeting requirements of NLGI #2, Category LB or GC-LB. |
| Power Steering System | DEXRON®-III Automatic Transmission Fluid. Look for “Approved for the H-Specification” on the label. |



Downloaded from www.Manualslib.com manuals search engine

| Usage | Fluid/Lubricant |
|---|---|
| Manual Transmission | DEXRON®-III Automatic Transmission Fluid. Look for “Approved for the H-Specification” on the label. |
| Automatic Transmission | DEXRON®-III Automatic Transmission Fluid. Look for “Approved for the H-Specification” on the label. |
| Key Lock Cylinders | Multi-Purpose Lubricant, Superlube (GM Part No. U.S. 12346241, in Canada 10953474). |
| Rear Axle | SAE 75W-140 GL-5 Synthetic Gear Oil (GM Part No. 89021809). With a complete drain and refill add 1 oz. (25 ml) of Limited-Slip Differential Friction Modifier 7098 (GM Part No. 89021958). |

| Usage | Fluid/Lubricant |
|---|---|
| Hood Latch Assembly, Secondary Latch, Pivots, Spring Anchor and Release Pawl | Lubriplate Lubricant Aerosol (GM Part No. U.S. 12346293, in Canada 992723) or lubricant meeting requirements of NLGI #2, Category LB or GC-LB. |
| Hood and Door Hinges | Multi-Purpose Lubricant, Superlube (GM Part No. U.S. 12346241, in Canada 10953474). |
| Weatherstrip Conditioning | Dielectric Silicone Grease (GM Part No. U.S. 12345579, in Canada 992887). |



Downloaded from www.Manualslib.com manuals search engine

## Normal Maintenance Replacement Parts

Replacement parts identified below by name, part number, or specification can be obtained from your GM dealer.

| Part | GM Part Numbers | ACDelco® Part Numbers |
|---|---|---|
| Engine Air Cleaner/Filter | 92082656 | — |
| Engine Oil Filter | 88984215 | PF46 |
| Spark Plugs | 12571164 | 41-985 |
| Wiper Blades (Hook Type) | | |
| Driver's Side – 22.0 inches (55.0 cm) | 92076914 | — |
| Passenger's Side – 20.0 inches (50.0 cm) | 92057198 | — |



Downloaded from www.Manualslib.com manuals search engine

## Maintenance Record

After the scheduled services are performed, record the date, odometer reading, who performed the service and the type of services performed in the boxes provided. See *Maintenance Requirements on page 6-2*. Any additional information from *Owner Checks and Services on page 6-8* can be added on the following record pages. You should retain all maintenance receipts.

### Maintenance Record

| Date | Odometer Reading | Serviced By | Maintenance I or Maintenance II | Services Performed |
|---|---|---|---|---|
| | | | | |
| | | | | |
| | | | | |
| | | | | |
| | | | | |
| | | | | |
| | | | | |
| | | | | |



Downloaded from www.Manualslib.com manuals search engine

## Maintenance Record (cont'd)

| Date | Odometer Reading | Serviced By | Maintenance I or Maintenance II | Services Performed |
|---|---|---|---|---|
| | | | | |
| | | | | |
| | | | | |
| | | | | |
| | | | | |
| | | | | |
| | | | | |
| | | | | |
| | | | | |
| | | | | |
| | | | | |



Downloaded from www.Manualslib.com manuals search engine

## Maintenance Record (cont'd)

| Date | Odometer Reading | Serviced By | Maintenance I or Maintenance II | Services Performed |
|---|---|---|---|---|
| | | | | |
| | | | | |
| | | | | |
| | | | | |
| | | | | |
| | | | | |
| | | | | |
| | | | | |
| | | | | |
| | | | | |
| | | | | |



Downloaded from www.Manualslib.com manuals search engine

## Maintenance Record (cont'd)

| Date | Odometer Reading | Serviced By | Maintenance I or Maintenance II | Services Performed |
|---|---|---|---|---|
| | | | | |
| | | | | |
| | | | | |
| | | | | |
| | | | | |
| | | | | |
| | | | | |
| | | | | |
| | | | | |
| | | | | |
| | | | | |



Downloaded from www.Manualslib.com manuals search engine

# Section 7 Customer Assistance and Information

**Customer Assistance and Information** .....7-2
Customer Satisfaction Procedure .....7-2
Online Owner Center .....7-3
Customer Assistance for Text Telephone (TTY) Users .....7-4
Customer Assistance Offices .....7-4
GM Mobility Reimbursement Program .....7-5
Roadside Assistance Program .....7-6
Courtesy Transportation .....7-7
Vehicle Data Collection and Event Data Recorders .....7-9
**Reporting Safety Defects** .....7-10
Reporting Safety Defects to the United States Government .....7-10
Reporting Safety Defects to General Motors .....7-11
Service Publications Ordering Information .....7-11



Downloaded from www.Manualslib.com manuals search engine

# Customer Assistance and Information

## Customer Satisfaction Procedure

Your satisfaction and goodwill are important to your dealer and to Pontiac. Normally, any concerns with the sales transaction or the operation of your vehicle will be resolved by your dealer's sales or service departments. Sometimes, however, despite the best intentions of all concerned, misunderstandings can occur. If your concern has not been resolved to your satisfaction, the following steps should be taken:

**STEP ONE:** Discuss your concern with a member of dealership management. Normally, concerns can be quickly resolved at that level. If the matter has already been reviewed with the sales, service or parts manager, contact the owner of the dealership or the general manager.

**STEP TWO:** If after contacting a member of dealership management, it appears your concern cannot be resolved by the dealership without further help, contact the Pontiac Customer Assistance Center by calling 1-800-762-2737. In Canada, contact GM of Canada Customer Communication Centre in Oshawa by calling 1-800-263-3777 (English) or 1-800-263-7854 (French).

We encourage you to call the toll-free number in order to give your inquiry prompt attention. Please have the following information available to give the Customer Assistance Representative:

- Vehicle Identification Number (VIN). This is available from the vehicle registration or title, or the plate at the top left of the instrument panel and visible through the windshield.
- Dealership name and location.
- Vehicle delivery date and present mileage.

When contacting Pontiac, please remember that your concern will likely be resolved at a dealer's facility. That is why we suggest you follow Step One first if you have a concern.

**STEP THREE:** Both General Motors and your dealer are committed to making sure you are completely satisfied with your new vehicle. However, if you continue to remain unsatisfied after following the procedure outlined in Steps One and Two, you should file with the BBB Auto Line Program to enforce any additional rights you may have. Canadian owners refer to your Warranty and Owner Assistance Information booklet for information on the Canadian Motor Vehicle Arbitration Plan (CAMVAP).



Downloaded from www.Manualslib.com manuals search engine

The BBB Auto Line Program is an out of court program administered by the Council of Better Business Bureaus to settle automotive disputes regarding vehicle repairs or the interpretation of the New Vehicle Limited Warranty. Although you may be required to resort to this informal dispute resolution program prior to filing a court action, use of the program is free of charge and your case will generally be heard within 40 days. If you do not agree with the decision given in your case, you may reject it and proceed with any other venue for relief available to you.

You may contact the BBB Auto Line Program using the toll-free telephone number or write them at the following address:

BBB Auto Line Program
Council of Better Business Bureaus, Inc.
4200 Wilson Boulevard
Suite 800
Arlington, VA 22203-1838

Telephone: 1-800-955-5100

This program is available in all 50 states and the District of Columbia. Eligibility is limited by vehicle age, mileage and other factors. General Motors reserves the right to change eligibility limitations and/or discontinue its participation in this program.

## Online Owner Center

The Owner Center is a resource for your GM ownership needs. Specific vehicle information can be found in one place.

**The Online Owner Center allows you to:**

- Get e-mail service reminders.
- Access information about your specific vehicle, including tips and videos and an electronic version of this owner's manual (United States only).
- Keep track of your vehicle's service history and maintenance schedule.
- Find GM dealers for service nationwide.
- Receive special promotions and privileges only available to members (United States only).

Refer to the web for updated information.

To register your vehicle, visit www.MyGMLink.com (United States) or My GM Canada within www.gmcanada.com (Canada).



Downloaded from www.Manualslib.com manuals search engine

## Customer Assistance for Text Telephone (TTY) Users

To assist customers who are deaf, hard of hearing, or speech-impaired and who use Text Telephones (TTYs), Pontiac has TTY equipment available at its Customer Assistance Center. Any TTY user can communicate with Pontiac by dialing: 1-800-833-PONT (7668). (TTY users in Canada can dial 1-800-263-3830.)

## Customer Assistance Offices

Pontiac encourages customers to call the toll-free number for assistance. If a U.S. customer wishes to write to Pontiac, the letter should be addressed to Pontiac's Customer Assistance Center.

## United States — Customer Assistance

Pontiac Customer Assistance Center
P.O. Box 33172
Detroit, MI 48232-5172

1-800-762-2737 or
1-800-833-7668 (For Text Telephone devices (TTYs))
Roadside Assistance: 1-800-ROADSIDE (762-3743)
Fax Number: 313-381-0022

From Puerto Rico:
1-800-496-9992 (English)
1-800-496-9993 (Spanish)
Fax Number: 313-381-0022

From U.S. Virgin Islands:
1-800-496-9994
Fax Number: 313-381-0022



Downloaded from www.Manualslib.com manuals search engine

## Canada — Customer Assistance

General Motors of Canada Limited
Customer Communication Centre, 163-005
1908 Colonel Sam Drive
Oshawa, Ontario L1H 8P7

1-800-263-3777 (English)
1-800-263-7854 (French)
1-800-263-3830 (For Text Telephone devices (TTYs))
Roadside Assistance: 1-800-268-6800

## Overseas — Customer Assistance

Please contact the local General Motors Business Unit.

## Mexico, Central America and Caribbean Islands/Countries (Except Puerto Rico and U.S. Virgin Islands) — Customer Assistance

General Motors de Mexico, S. de R.L. de C.V.
Customer Assistance Center
Paseo de la Reforma #2740
Col. Lomas de Bezares
C.P. 11910, Mexico, D.F.
01-800-508-0000
Long Distance: 011-52-53 29 0 800

## GM Mobility Reimbursement Program

This program, available to qualified applicants, can reimburse you up to $1,000 toward eligible aftermarket driver's or passenger's adaptive equipment you may require for your vehicle, such as hand controls and wheelchair/scooter lifts.

The offer is available for a limited period of time from the date of vehicle purchase/lease. For more details, or to determine your vehicle's eligibility, visit gmmobility.com or call the GM Mobility Assistance Center at 1-800-323-9935. Text telephone (TTY) users, call 1-800-833-9935.

GM of Canada also has a Mobility Program. Call 1-800-GM-DRIVE (463-7483) for details. TTY users call 1-800-263-3830.



Downloaded from www.Manualslib.com manuals search engine

## Roadside Assistance Program

As the owner of a new Pontiac vehicle, you are automatically enrolled in the Pontiac Roadside Assistance program. This value-added service is intended to provide you with peace of mind as you drive in the city or travel the open road. Contact Pontiac's Roadside Assistance toll-free at 1-800-ROADSIDE (762-3743). Roadside Assistance Representatives are available 24 hours a day, 365 days a year.

We will provide the following services during the Bumper-to-Bumper warranty period, at no expense to you:

- **Fuel Delivery:** Delivery of enough fuel ($5 maximum) for the customer to get to the nearest service station.
- **Emergency Tow:** Tow to the nearest dealership for warranty service or in the event of a vehicle-disabling accident. Assistance when the vehicle is mired in sand, mud or snow.
- **Flat Tire Change:** Installation of a spare tire will be covered at no charge. (The customer is responsible for the repair or replacement of the tire if not covered by a warrantable failure.)
- **Jump Start:** No-start occurrences which require a battery jump start will be covered at no charge.
- **Dealer Locator Service**

In many instances, mechanical failures are covered under Pontiac's Bumper-to-Bumper warranty. However, when other services are utilized, our Roadside Assistance Representatives will explain any payment obligations you might incur.

For prompt and efficient assistance when calling, please provide the following to the Roadside Assistance Representative:

- Your name, home address, and home telephone number
- Telephone number of your location
- Location of the vehicle
- Model, year, color, and license plate number
- Mileage, Vehicle Identification Number (VIN), and delivery date of the vehicle
- Description of the problem



Downloaded from www.Manualslib.com manuals search engine

While we hope you never have the occasion to use our service, it is added security while traveling for you and your family. Remember, we are only a phone call away. Pontiac Roadside Assistance: 1-800-ROADSIDE (762-3743), text telephone (TTY) users, call 1-888-889-2438.

Pontiac reserves the right to limit services or reimbursement to an owner or driver when, in Pontiac's judgement, the claims become excessive in frequency or type of occurrence.

Roadside Assistance is not part of or included in the coverage provided by the New Vehicle Limited Warranty. Pontiac reserves the right to make any changes or discontinue the Roadside Assistance program at any time without notification.

## Courtesy Transportation

Pontiac has always exemplified quality and value in its offering of motor vehicles. To enhance your ownership experience, we and our participating dealers are proud to offer Courtesy Transportation, a customer support program for new vehicles.

The Courtesy Transportation program is offered to retail purchase/lease customers in conjunction with the Bumper-to-Bumper coverage provided by the New Vehicle Limited Warranty. Several transportation options are available when warranty repairs are required. This will reduce your inconvenience during warranty repairs.

## Scheduling Service Appointments

When your vehicle requires warranty service, you should contact your dealer and request an appointment. By scheduling a service appointment and advising your service consultant of your transportation needs, your dealer can help minimize your inconvenience.

If your vehicle cannot be scheduled into the service department immediately, keep driving it until it can be scheduled for service, unless, of course, the problem is safety-related. If it is, please call your dealership, let them know this, and ask for instructions.

If the dealer requests that you simply drop the vehicle off for service, you are urged to do so as early in the work day as possible to allow for same day repair.



Downloaded from www.Manualslib.com manuals search engine

## Transportation Options

Warranty service can generally be completed while you wait. However, if you are unable to wait Pontiac helps minimize your inconvenience by providing several transportation options. Depending on the circumstances, your dealer can offer you one of the following:

### Shuttle Service

Participating dealers can provide you with shuttle service to get you to your destination with minimal interruption of your daily schedule. This includes a one way or round trip shuttle ride to a destination up to 10 miles (16 km) from the dealership.

### Public Transportation or Fuel Reimbursement

If your vehicle requires overnight warranty repairs, reimbursement of up to a five-day maximum may be available for the use of public transportation such as a taxi or bus. In addition, should you arrange transportation through a friend or relative, reimbursement for reasonable fuel expenses of up to a five-day maximum may be available. Claim amounts should reflect actual costs and be supported by original receipts.

### Courtesy Rental Vehicle

Your dealer may arrange to provide you with a courtesy rental vehicle or reimburse you for a rental vehicle that you obtain if your vehicle is kept for a warranty repair. Reimbursement will be limited to a maximum of $30 a day and must be supported by receipts. This requires that you sign and complete a rental agreement and meet state, local and rental vehicle provider requirements. Requirements vary and may include minimum age requirements, insurance coverage, credit card, etc. You are responsible for fuel usage charges and may also be responsible for taxes, levies, usage fees, excessive mileage or rental usage beyond the completion of the repair.

Generally it is not possible to provide a like-vehicle as a courtesy rental.

## Additional Program Information

Courtesy Transportation is available during the Bumper-to-Bumper warranty coverage period, but it is not part of the New Vehicle Limited Warranty. A separate booklet entitled *Warranty and Owner Assistance Information* furnished with each new vehicle provides detailed warranty coverage information.



Downloaded from www.Manualslib.com manuals search engine

Courtesy Transportation is available only at participating dealers and all program options, such as shuttle service, may not be available at every dealer. Please contact your dealer for specific information about availability. All Courtesy Transportation arrangements will be administered by appropriate dealer personnel.

**Canadian Vehicles:** For warranty repairs during the Complete Vehicle Coverage period of the General Motors of Canada New Vehicle Limited Warranty, alternative transportation may be available under the Courtesy Transportation Program. Please consult your dealer for details.

General Motors reserves the right to unilaterally modify, change or discontinue Courtesy Transportation at any time and to resolve all questions of claim eligibility pursuant to terms and conditions described herein at its sole discretion.

## Vehicle Data Collection and Event Data Recorders

Your vehicle, like other modern motor vehicles, has a number of sophisticated computer systems that monitor and control several aspects of the vehicle's performance. Your vehicle uses on-board vehicle computers to monitor emission control components to optimize fuel economy, to monitor conditions for airbag deployment and, if so equipped, to provide anti-lock braking and to help the driver control the vehicle in difficult driving situations. Some information may be stored during regular operations to facilitate repair of detected malfunctions; other information is stored only in a crash event by computer systems, such as those commonly called event data recorders (EDR).

In a crash event, computer systems, such as the Airbag Sensing and Diagnostic Module (SDM) in your vehicle may record information about the condition of the vehicle and how it was operated, such as data related to engine speed, brake application, throttle position, vehicle speed, safety belt usage, airbag readiness, airbag performance, and the severity of a collision. If your vehicle is equipped with Quadrasteer, steering performance, including yaw rate, steering wheel angle, and lateral acceleration, is also recorded. This information has been used to improve vehicle crash performance and may be used to improve crash performance of future vehicles and driving safety. Unlike the data recorders on many airplanes, these on-board systems do not record sounds, such as conversation of vehicle occupants.



Downloaded from www.Manualslib.com manuals search engine

To read this information, special equipment is needed and access to the vehicle or the device that stores the data is required. GM will not access information about a crash event or share it with others other than:

- with the consent of the vehicle owner or, if the vehicle is leased, with the consent of the lessee,
- in response to an official request of police or similar government office,
- as part of GM's defense of litigation through the discovery process, or
- as required by law.

In addition, once GM collects or receives data, GM may:

- use the data for GM research needs,
- make it available for research where appropriate confidentiality is to be maintained and need is shown, or
- share summary data which is not tied to a specific vehicle with non-GM organizations for research purposes.

Others, such as law enforcement, may have access to the special equipment that can read the information if they have access to the vehicle or the device that stores the data.

# Reporting Safety Defects

## Reporting Safety Defects to the United States Government

If you believe that your vehicle has a defect which could cause a crash or could cause injury or death, you should immediately inform the National Highway Traffic Safety Administration (NHTSA), in addition to notifying General Motors.

If NHTSA receives similar complaints, it may open an investigation, and if it finds that a safety defect exists in a group of vehicles, it may order a recall and remedy campaign. However, NHTSA cannot become involved in individual problems between you, your dealer, or General Motors.

To contact NHTSA, you may either call the Auto Safety Hotline toll-free at 1-800-424-9393 (or 366-0123 in the Washington, D.C. area) or write to:

NHTSA, U.S. Department of Transportation
Washington, D.C. 20590

You can also obtain other information about motor vehicle safety from the hotline.



Downloaded from www.Manualslib.com manuals search engine

## Reporting Safety Defects to General Motors

In addition to notifying NHTSA (or Transport Canada) in a situation like this, we certainly hope you'll notify us. Please call us at 1-800-762-2737, or write:

Pontiac Customer Assistance Center
P.O. Box 33172
Detroit, MI 48232-5172

In Canada, please call us at 1-800-263-3777 (English) or 1-800-263-7854 (French). Or, write:

General Motors of Canada Limited
Customer Communication Centre, 163-005
1908 Colonel Sam Drive
Oshawa, Ontario L1H 8P7

## Service Publications Ordering Information

### Service Manuals

Service Manuals have the diagnosis and repair information on engines, transmission, axle suspension, brakes, electrical, steering, body, etc.

### Transmission, Transaxle, Transfer Case Unit Repair Manual

This manual provides information on unit repair service procedures, adjustments, and specifications for GM transmissions, transaxles, and transfer cases.



Downloaded from www.Manualslib.com manuals search engine

## Service Bulletins

Service Bulletins give technical service information needed to knowledgeably service General Motors cars and trucks. Each bulletin contains instructions to assist in the diagnosis and service of your vehicle.

In Canada, information pertaining to Product Service Bulletins can be obtained by contacting your General Motors dealer or by calling 1-800-GM-DRIVE (1-800-463-7483).

## Owner's Information

Owner publications are written specifically for owners and intended to provide basic operational information about the vehicle. The owner's manual will include the Maintenance Schedule for all models.

In-Portfolio: Includes a Portfolio, Owner's Manual, and Warranty Booklet.

RETAIL SELL PRICE: $35.00

Without Portfolio: Owner's Manual only.

RETAIL SELL PRICE: $25.00

## Current and Past Model Order Forms

Service Publications are available for current and past model GM vehicles. To request an order form, please specify year and model name of the vehicle.

### ORDER TOLL FREE: 1-800-551-4123 Monday-Friday 8:00 AM - 6:00 PM Eastern Time

For Credit Card Orders Only
(VISA-MasterCard-Discover), visit Helm, Inc. on the World Wide Web at: www.helminc.com

Or you can write to:

Helm, Incorporated
P.O. Box 07130
Detroit, MI 48207

Prices are subject to change without notice and without incurring obligation. Allow ample time for delivery.

Note to Canadian Customers: All listed prices are quoted in U.S. funds. Canadian residents are to make checks payable in U.S. funds.



Downloaded from www.Manualslib.com manuals search engine

# A


Accessory Power Outlets ..... 3-17
Additives, Fuel ..... 5-6
Add-On Electrical Equipment ..... 5-85
Air Cleaner/Filter, Engine ..... 5-18
Air Conditioning ..... 3-19
Airbag
  Readiness Light ..... 3-25
Airbag Sensing and Diagnostic Module (SDM) ..... 7-9
Airbag System ..... 1-44
  How Does an Airbag Restrain? ..... 1-48
  Servicing Your Airbag-Equipped Vehicle ..... 1-50
  What Makes an Airbag Inflate? ..... 1-48
  What Will You See After an Airbag Inflates? .... 1-48
  When Should an Airbag Inflate? ..... 1-47
  Where Are the Airbags? ..... 1-46
Antenna, Backglass ..... 3-58
Anti-Lock Brake System (ABS) ..... 4-6
Anti-Lock Brake, System Warning Light ..... 3-27
Appearance Care ..... 5-76
  Aluminum Wheels ..... 5-81
  Care of Safety Belts ..... 5-79
  Chemical Paint Spotting ..... 5-83
  Cleaning Exterior Lamps/Lenses ..... 5-80
  Fabric/Carpet ..... 5-77
  Finish Care ..... 5-80
  Finish Damage ..... 5-82
Appearance Care (cont.)
  Glass Surfaces ..... 5-79
  Instrument Panel ..... 5-79
  Interior Plastic Components ..... 5-79
  Leather ..... 5-79
  Sheet Metal Damage ..... 5-82
  Tires ..... 5-82
  Underbody Maintenance ..... 5-83
  Vehicle Care/Appearance Materials ..... 5-84
  Vinyl ..... 5-78
  Washing Your Vehicle ..... 5-80
  Weatherstrips ..... 5-80
  Windshield and Wiper Blades ..... 5-81
Ashtrays ..... 3-18
Audio System(s) ..... 3-45
  Audio Steering Wheel Controls ..... 3-56
  Backglass Antenna ..... 3-58
  Care of Your CD Player ..... 3-57
  Care of Your CDs ..... 3-57
  Radio with Six-Disc CD ..... 3-46
  Setting the Time ..... 3-45
  Theft-Deterrent Feature ..... 3-55
  Understanding Radio Reception ..... 3-57
Automatic Headlamp System ..... 3-14
Automatic Transmission
  Fluid ..... 5-19
  Operation ..... 2-18




Downloaded from www.Manualslib.com manuals search engine

## B


Backglass Antenna ..... 3-58
Battery ..... 5-39
  Run-Down Protection ..... 3-16
Before Leaving on a Long Trip ..... 4-20
Brake
  Anti-Lock Brake System (ABS) ..... 4-6
  Emergencies ..... 4-8
  Parking ..... 2-23
  System Warning Light ..... 3-27
Brakes ..... 5-36
Braking ..... 4-5
Braking in Emergencies ..... 4-8
Break-In, New Vehicle ..... 2-15
Bulb Replacement ..... 5-47
  Front Turn Signal and Parking Lamps ..... 5-49
  Halogen Bulbs ..... 5-47
  Headlamp Aiming ..... 5-45
  Headlamps ..... 5-47
  Replacement Bulbs ..... 5-51
  Taillamps, Turn Signal, Stoplamps and
    Back-up Lamps ..... 5-50
Buying New Tires ..... 5-64


## C


California Fuel ..... 5-6
Capacities and Specifications ..... 5-90
Carbon Monoxide ..... 2-8, 2-26, 4-24, 4-34
Care of
  Safety Belts ..... 5-79
  Your CD Player ..... 3-57
  Your CDs ..... 3-57
Center Console Storage Area ..... 2-29
Chains, Tire ..... 5-67
Charging System Light ..... 3-26
Check
  Engine Light ..... 3-28
Checking Things Under the Hood ..... 5-10
Chemical Paint Spotting ..... 5-83
Child Restraints
  Child Restraint Systems ..... 1-31
  Infants and Young Children ..... 1-28
  Lower Anchorages and Top Tethers for
    Children (LATCH System) ..... 1-37
  Older Children ..... 1-25
  Securing a Child Restraint Designed for the
    LATCH System ..... 1-39




Downloaded from www.Manualslib.com manuals search engine

Child Restraints (cont.)
Securing a Child Restraint in a Rear Seat Position ..... 1-39
Securing a Child Restraint in the Right Front Seat Position ..... 1-41
Top Strap ..... 1-35
Top Strap Anchor Location ..... 1-36
Where to Put the Restraint ..... 1-34
Cigarette Lighter ..... 3-18
Cleaning
Aluminum Wheels ..... 5-81
Exterior Lamps/Lenses ..... 5-80
Fabric/Carpet ..... 5-77
Finish Care ..... 5-80
Glass Surfaces ..... 5-79
Instrument Panel ..... 5-79
Interior Plastic Components ..... 5-79
Leather ..... 5-79
Tires ..... 5-82
Underbody Maintenance ..... 5-83
Vinyl ..... 5-78
Washing Your Vehicle ..... 5-80
Weatherstrips ..... 5-80
Windshield and Wiper Blades ..... 5-81
Climate Control System ..... 3-19
Outlet Adjustment ..... 3-21
Clutch, Hydraulic ..... 5-22
Comfort Guides, Rear Safety Belt ..... 1-22
Compact Spare Tire ..... 5-76
Content Theft-Deterrent ..... 2-14
Control of a Vehicle ..... 4-5
Coolant
Engine Temperature Gage ..... 3-28
Cooling System ..... 5-29
Courtesy Lamps ..... 3-15
Cruise Control Lever ..... 3-10
Cupholder(s) ..... 2-29
Customer Assistance Information
Courtesy Transportation ..... 7-7
Customer Assistance for Text Telephone (TTY) Users ..... 7-4
Customer Assistance Offices ..... 7-4
Customer Satisfaction Procedure ..... 7-2
GM Mobility Reimbursement Program ..... 7-5
Reporting Safety Defects to General Motors .... 7-11
Reporting Safety Defects to the United States Government ..... 7-10
Roadside Assistance Program ..... 7-6
Service Publications Ordering Information ..... 7-11

# D

Daytime Running Lamps ..... 3-14
Daytime Running Lamps Indicator Light ..... 3-32
Defensive Driving ..... 4-2



Downloaded from www.Manualslib.com manuals search engine

Doing Your Own Service Work ..... 5-4
Dome Lamp ..... 3-16
Door
Locks ..... 2-7
Programmable Automatic Door Locks ..... 2-8
Driver
Position, Safety Belt ..... 1-12
Driving
At Night ..... 4-14
City ..... 4-18
Defensive ..... 4-2
Drunken ..... 4-2
Freeway ..... 4-19
Hill and Mountain Roads ..... 4-22
In Rain and on Wet Roads ..... 4-16
Racing or Other Competitive Driving ..... 2-18
Rocking Your Vehicle to Get it Out ..... 4-28
Winter ..... 4-24

## E

Electrical System
Add-On Equipment ..... 5-85
Engine Compartment Fuse Block ..... 5-88
Fuses and Circuit Breakers ..... 5-86
Instrument Panel Fuse Block ..... 5-86
Engine
Air Cleaner/Filter ..... 5-18
Battery ..... 5-39
Check and Service Engine Soon Light ..... 3-28
Coolant ..... 5-23
Coolant Temperature Gage ..... 3-28
Engine Compartment Overview ..... 5-12
Exhaust ..... 2-26
Oil ..... 5-13
Oil Life System ..... 5-16
Overheating ..... 5-26
Racing or Other Competitive Driving ..... 2-18
Starting ..... 2-17
Entry Lighting ..... 3-16
Event Data Recorders (EDR) ..... 7-9
Exterior Lamps ..... 3-13

## F

Filter
Engine Air Cleaner ..... 5-18
Finish Damage ..... 5-82
Flash-to-Pass ..... 3-9
Flat Tire ..... 5-68
Flat Tire, Changing ..... 5-68
Flat Tire, Storing ..... 5-75



Downloaded from www.Manualslib.com manuals search engine

Fluid
Automatic Transmission ..... 5-19
Manual Transmission ..... 5-21
Power Steering ..... 5-34
Windshield Washer ..... 5-35
Fog Lamp Light ..... 3-31
Fog Lamps ..... 3-15
Front Reading Lamps ..... 3-16
Front Storage Area ..... 2-29
Fuel ..... 5-5
Additives ..... 5-6
California Fuel ..... 5-6
Filling a Portable Fuel Container ..... 5-10
Filling Your Tank ..... 5-8
Fuels in Foreign Countries ..... 5-7
Gage ..... 3-32
Gasoline Octane ..... 5-5
Gasoline Specifications ..... 5-5
Fuses
Engine Compartment Fuse Block ..... 5-88
Fuses and Circuit Breakers ..... 5-86
Instrument Panel Fuse Block ..... 5-86

# G

Gage
Engine Coolant Temperature ..... 3-28
Fuel ..... 3-32
Gage (cont.)
Speedometer ..... 3-24
Tachometer ..... 3-24
Gasoline
Octane ..... 5-5
Specifications ..... 5-5
Glove Box ..... 2-29
GM Mobility Reimbursement Program ..... 7-5

# H

Hazard Warning Flashers ..... 3-6
Head Restraints ..... 1-4
Headlamp
Aiming ..... 5-45
Headlamps ..... 3-13, 5-47
Automatic Headlamp System ..... 3-14
Bulb Replacement ..... 5-47
Daytime Running Lamps ..... 3-14
Flash-to-Pass ..... 3-9
Front Turn Signal and Parking Lamps ..... 5-49
Halogen Bulbs ..... 5-47
High/Low Beam Changer ..... 3-8
Heater ..... 3-19
Highbeam On Light ..... 3-31
Highway Hypnosis ..... 4-21
Hill and Mountain Roads ..... 4-22



Downloaded from www.Manualslib.com manuals search engine

Hood
Checking Things Under ..... 5-10
Release ..... 5-11
Horn ..... 3-6
How to Use This Manual ..... ii
How to Wear Safety Belts Properly ..... 1-11
Hydraulic Clutch ..... 5-22

# I

Ignition Positions ..... 2-16
Immobilizer ..... 2-13
Immobilizer Operation ..... 2-13
Infants and Young Children, Restraints ..... 1-28
Inflation -- Tire Pressure ..... 5-59
Instrument Panel
Brightness ..... 3-15
Cluster ..... 3-23
Overview ..... 3-4

# J

Jump Starting ..... 5-40

# K

Keyless Entry System ..... 2-4
Keys ..... 2-2

# L

Labelling, Tire Sidewall ..... 5-54
Lamps
Battery Run-Down Protection ..... 3-16
Courtesy ..... 3-15
Dome ..... 3-16
Exterior ..... 3-13
Fog ..... 3-15
Front Reading ..... 3-16
Trunk ..... 3-16
LATCH System
Child Restraints ..... 1-37
Securing a Child Restraint Designed for the LATCH System ..... 1-39
Latches, Seatback ..... 1-4
Light
Airbag Readiness ..... 3-25
Anti-Lock Brake System Warning ..... 3-27
Brake System Warning ..... 3-27



Downloaded from www.Manualslib.com manuals search engine

Light (cont.)
Charging System ..... 3-26
Daytime Running Lamps Indicator ..... 3-32
Fog Lamp ..... 3-31
Highbeam On ..... 3-31
Malfunction Indicator ..... 3-28
One-to-Four Shift ..... 3-26
Safety Belt Reminder ..... 3-24
Security ..... 3-31
Lighting
Entry ..... 3-16
Loading Your Vehicle ..... 4-29
Locks
Door ..... 2-7
Programmable Automatic Door Locks ..... 2-8
Loss of Control ..... 4-13
Lumbar
Manual Controls ..... 1-2

# M

Maintenance Schedule
Additional Required Services ..... 6-6
At Each Fuel Fill ..... 6-8
At Least Once a Month ..... 6-9
At Least Once a Year ..... 6-9
Maintenance Schedule (cont.)
Introduction ..... 6-2
Maintenance Footnotes ..... 6-7
Maintenance Record ..... 6-15
Maintenance Requirements ..... 6-2
Normal Maintenance Replacement Parts ..... 6-14
Owner Checks and Services ..... 6-8
Recommended Fluids and Lubricants ..... 6-12
Scheduled Maintenance ..... 6-4
Using ..... 6-2
Your Vehicle and the Environment ..... 6-2
Malfunction Indicator Light ..... 3-28
Manual Lumbar Controls ..... 1-2
Manual Transmission
Fluid ..... 5-21
Operation ..... 2-21
Mirrors
Manual Rearview Mirror ..... 2-28
Outside Convex Mirror ..... 2-28
Outside Power Mirrors ..... 2-28
MyGMLink.com ..... 7-3

# N

New Vehicle Break-In ..... 2-15
Normal Maintenance Replacement Parts ..... 6-14



Downloaded from www.Manualslib.com manuals search engine

## O


Off-Road Recovery ..... 4-11
Oil
  Engine ..... 5-13
Oil, Engine Oil Life System ..... 5-16
Older Children, Restraints ..... 1-25
One-to-Four Shift Light ..... 3-26
Online Owner Center ..... 7-3
Other Warning Devices ..... 3-6
Outlet Adjustment ..... 3-21
Outside
  Convex Mirror ..... 2-28
  Power Mirrors ..... 2-28
Owner Checks and Services ..... 6-8


## P


Park (P)
  Shifting Into ..... 2-24
  Shifting Out of ..... 2-25
Parking
  Brake ..... 2-23
  Over Things That Burn ..... 2-26
Passing ..... 4-12
Power
  Accessory Outlets ..... 3-17
  Retained Accessory (RAP) ..... 2-17
Power (cont.)
  Seat ..... 1-2
  Steering Fluid ..... 5-34
  Windows ..... 2-12
Pretensioners, Safety Belt ..... 1-24
Programmable Automatic Door Locks ..... 2-8


## Q


Questions and Answers About Safety Belts ..... 1-10


## R


Radiator Pressure Cap ..... 5-26
Radios ..... 3-45
  Care of Your CD Player ..... 3-57
  Care of Your CDs ..... 3-57
  Radio with Six-Disc CD ..... 3-46
  Setting the Time ..... 3-45
  Theft-Deterrent ..... 3-55
  Understanding Reception ..... 3-57
Rear Safety Belt Comfort Guides ..... 1-22
Rear Seat Passengers, Safety Belts ..... 1-19
Rearview Mirrors ..... 2-28
Reclining Seatbacks ..... 1-3
Recommended Fluids and Lubricants ..... 6-12
Recreational Vehicle Towing ..... 4-34




Downloaded from www.Manualslib.com manuals search engine

Remote Keyless Entry System ..... 2-4
Remote Keyless Entry System, Operation ..... 2-5
Removing the Flat Tire and Installing the
Spare Tire ..... 5-71
Removing the Spare Tire and Tools ..... 5-70
Replacement Bulbs ..... 5-51
Reporting Safety Defects
General Motors ..... 7-11
United States Government ..... 7-10
Restraint System Check
Checking the Restraint Systems ..... 1-50
Replacing Restraint System Parts
After a Crash ..... 1-51
Retained Accessory Power (RAP) ..... 2-17
Right Front Passenger Position, Safety Belts ..... 1-19
Roadside
Assistance Program ..... 7-6
Rocking Your Vehicle to Get it Out ..... 4-28
Running the Engine While Parked ..... 2-27

# S

Safety Belt
Pretensioners ..... 1-24
Reminder Light ..... 3-24
Safety Belts
Care of ..... 5-79
Driver Position ..... 1-12
Safety Belts (cont.)
How to Wear Safety Belts Properly ..... 1-11
Questions and Answers About Safety Belts ..... 1-10
Rear Safety Belt Comfort Guides for
Children and Small Adults ..... 1-22
Rear Seat Passengers ..... 1-19
Right Front Passenger Position ..... 1-19
Safety Belt Use During Pregnancy ..... 1-19
Safety Belts Are for Everyone ..... 1-6
Shoulder Belt Height Adjuster ..... 1-18
Safety Warnings and Symbols ..... iii
Scheduled Maintenance ..... 6-4
Seatback Latches ..... 1-4
Seats
Head Restraints ..... 1-4
Manual Lumbar ..... 1-2
Power Seats ..... 1-2
Reclining Seatbacks ..... 1-3
Seatback Latches ..... 1-4
Securing a Child Restraint
Designed for the LATCH System ..... 1-39
Rear Seat Position ..... 1-39
Right Front Seat Position ..... 1-41
Security Light ..... 3-31
Service ..... 5-3
Adding Equipment to the Outside of Your
Vehicle ..... 5-5
Doing Your Own Work ..... 5-4



Downloaded from www.Manualslib.com manuals search engine

Service (cont.)
Engine Soon Light ..... 3-28
Publications Ordering Information ..... 7-11
Servicing Your Airbag-Equipped Vehicle ..... 1-50
Setting the Time ..... 3-45
Sheet Metal Damage ..... 5-82
Shifting Into Park (P) ..... 2-24
Shifting Out of Park (P) ..... 2-25
Shoulder Belt Height Adjuster ..... 1-18
Signals, Turn and Lane-Change ..... 3-8
Spare Tire
Compact ..... 5-76
Installing ..... 5-71
Removing ..... 5-70
Storing ..... 5-75
Specifications, Capacities ..... 5-90
Speedometer ..... 3-24
Starting Your Engine ..... 2-17
Steering ..... 4-9
Steering Wheel Controls, Audio ..... 3-56
Steering Wheel, Tilt Wheel ..... 3-6
Storage Areas
Center Console Storage Area ..... 2-29
Cupholder(s) ..... 2-29
Front Storage Area ..... 2-29
Glove Box ..... 2-29
Stuck in Sand, Mud, Ice or Snow ..... 4-28
Sun Visors ..... 2-12

# T

Tachometer ..... 3-24
Taillamps
Turn Signal, Stoplamps and Back-up Lamps .... 5-50
Theft-Deterrent, Radio ..... 3-55
Theft-Deterrent Systems ..... 2-13
Content Theft-Deterrent ..... 2-14
Immobilizer ..... 2-13
Immobilizer Operation ..... 2-13
Tilt Wheel ..... 3-6
Tires ..... 5-52
Aluminum Wheels, Cleaning ..... 5-81
Buying New Tires ..... 5-64
Chains ..... 5-67
Changing a Flat Tire ..... 5-68
Cleaning ..... 5-82
Compact Spare Tire ..... 5-76
If a Tire Goes Flat ..... 5-68
Inflation -- Tire Pressure ..... 5-59
Inspection and Rotation ..... 5-62
Installing the Spare Tire ..... 5-71
Removing the Flat Tire ..... 5-71
Removing the Spare Tire and Tools ..... 5-70
Storing a Flat or Spare Tire and Tools ..... 5-75
Tire Sidewall Labelling ..... 5-54
Tire Terminology and Definitions ..... 5-56
Uniform Tire Quality Grading ..... 5-64



Downloaded from www.Manualslib.com manuals search engine

Tires (cont.)
Wheel Alignment and Tire Balance ..... 5-66
Wheel Replacement ..... 5-66
When It Is Time for New Tires ..... 5-63
Top Strap ..... 1-35
Top Strap Anchor Location ..... 1-36
Towing
Recreational Vehicle ..... 4-34
Towing a Trailer ..... 4-34
Your Vehicle ..... 4-34
Traction
Control System (TCS) ..... 4-8
Transmission
Fluid, Automatic ..... 5-19
Fluid, Manual ..... 5-21
One-to-Four Shift Light ..... 3-26
Transmission Operation, Automatic ..... 2-18
Transmission Operation, Manual ..... 2-21
Trip Computer ..... 3-33
Trunk ..... 2-8
Trunk Lamps ..... 3-16
Turn and Lane-Change Signals ..... 3-8
Turn Signal/Multifunction Lever ..... 3-7

## U

Understanding Radio Reception ..... 3-57
Uniform Tire Quality Grading ..... 5-64

## V

Vehicle
Control ..... 4-5
Damage Warnings ..... iv
Loading ..... 4-29
Symbols ..... iv
Vehicle Data Collection and Event Data
Recorders ..... 7-9
Vehicle Identification
Number (VIN) ..... 5-85
Service Parts Identification Label ..... 5-85
Vehicle Personalization ..... 2-30
Ventilation Adjustment ..... 3-21
Visors ..... 2-12



Downloaded from www.Manualslib.com manuals search engine

## W

Warning Lights, Gages and Indicators ..... 3-22
Warnings
  Hazard Warning Flashers ..... 3-6
  Other Warning Devices ..... 3-6
  Safety and Symbols ..... iii
  Vehicle Damage ..... iv
Wheels
  Alignment and Tire Balance ..... 5-66
  Replacement ..... 5-66
Where to Put the Restraint ..... 1-34
Windows ..... 2-11
  Power ..... 2-12
Windshield
  Wiper Blades, Cleaning ..... 5-81
Windshield Washer ..... 3-10
  Fluid ..... 5-35
Windshield Wiper
  Blade Replacement ..... 5-52
  Windshield Wipers ..... 3-9
Winter Driving ..... 4-24

## Y

Your Vehicle and the Environment ..... 6-2



Downloaded from www.Manualslib.com manuals search engine