SECTION RF
ROOF

A B C D E F G H I J RF L M N O P

CONTENTS

BASIC INSPECTION 3

DIAGNOSIS AND REPAIR WORKFLOW 3
Work Flow 3

INSPECTION AND ADJUSTMENT 5

ADDITIONAL SERVICE WHEN REPLACING CONTROL UNIT 5
ADDITIONAL SERVICE WHEN REPLACING CONTROL UNIT : Description 5
ADDITIONAL SERVICE WHEN REPLACING CONTROL UNIT : Special Repair Requirement 5

BASIC INSPECTION 5
BASIC INSPECTION : Special Repair Requirement 5

SYSTEM DESCRIPTION 6

SUNROOF SYSTEM 6
System Diagram 6
System Description 6
Component Parts Location 7
Component Description 7

DIAGNOSIS SYSTEM (BCM) 8

COMMON ITEM 8
COMMON ITEM : CONSULT Function (BCM - COMMON ITEM) 8

RETAINED PWR 8
RETAINED PWR : CONSULT Function (BCM - RETAINED PWR) 9

DTC/CIRCUIT DIAGNOSIS 10

POWER SUPPLY AND GROUND CIRCUIT 10

SUNROOF MOTOR ASSEMBLY 10
SUNROOF MOTOR ASSEMBLY : Diagnosis Procedure 10
SUNROOF MOTOR ASSEMBLY : Special Repair Requirement 12

SUNROOF SWITCH CIRCUIT 13
Description 13
Component Function Check 13
Diagnosis Procedure 13

VEHICLE SPEED SIGNAL CIRCUIT 15
Component Function Check 15
Diagnosis Procedure 15

DOOR SWITCH 16
Description 16
Component Function Check 16
Diagnosis Procedure 16

ECU DIAGNOSIS INFORMATION 18

BCM (BODY CONTROL MODULE) 18
Reference Value 18
Terminal Layout 21
Physical Values 21
Fail Safe 26
DTC Inspection Priority Chart 26
DTC Index 27

SUNROOF MOTOR ASSEMBLY 29
Reference Value 29

WIRING DIAGRAM 30

SUNROOF 30
Wiring Diagram 30

SYMPTOM DIAGNOSIS 35

SUNROOF DOES NOT OPERATE PROPERLY 35
Diagnosis Procedure 35

AUTO OPERATION DOES NOT OPERATE 36
Diagnosis Procedure 36

DOES NOT STOP FULLY-OPEN OR FULLY-CLOSED POSITION **37**
Diagnosis Procedure 37

RETAINED POWER OPERATION DOES NOT OPERATE PROPERLY **38**
Diagnosis Procedure 38

SUNROOF DOES NOT OPERATE ANTI-PINCH FUNCTION **39**
Diagnosis Procedure 39

SQUEAK AND RATTLE TROUBLE DIAGNOSES **40**
Work Flow 40
Generic Squeak and Rattle Troubleshooting 41
Diagnostic Worksheet 44

PRECAUTION **46**

PRECAUTIONS **46**
Precaution for Supplemental Restraint System (SRS) "AIR BAG" and "SEAT BELT PRE-TENSIONER" 46
Precaution for Work 46

PREPARATION **47**

PREPARATION **47**
Special Service Tool 47
Commercial Service Tools 47

REMOVAL AND INSTALLATION **48**

SUNROOF SYSTEM **48**
Adjustment 48
Removal and Installation 49

BASIC INSPECTION

DIAGNOSIS AND REPAIR WORKFLOW

Work Flow

INFOID:0000000009482334

OVERALL SEQUENCE

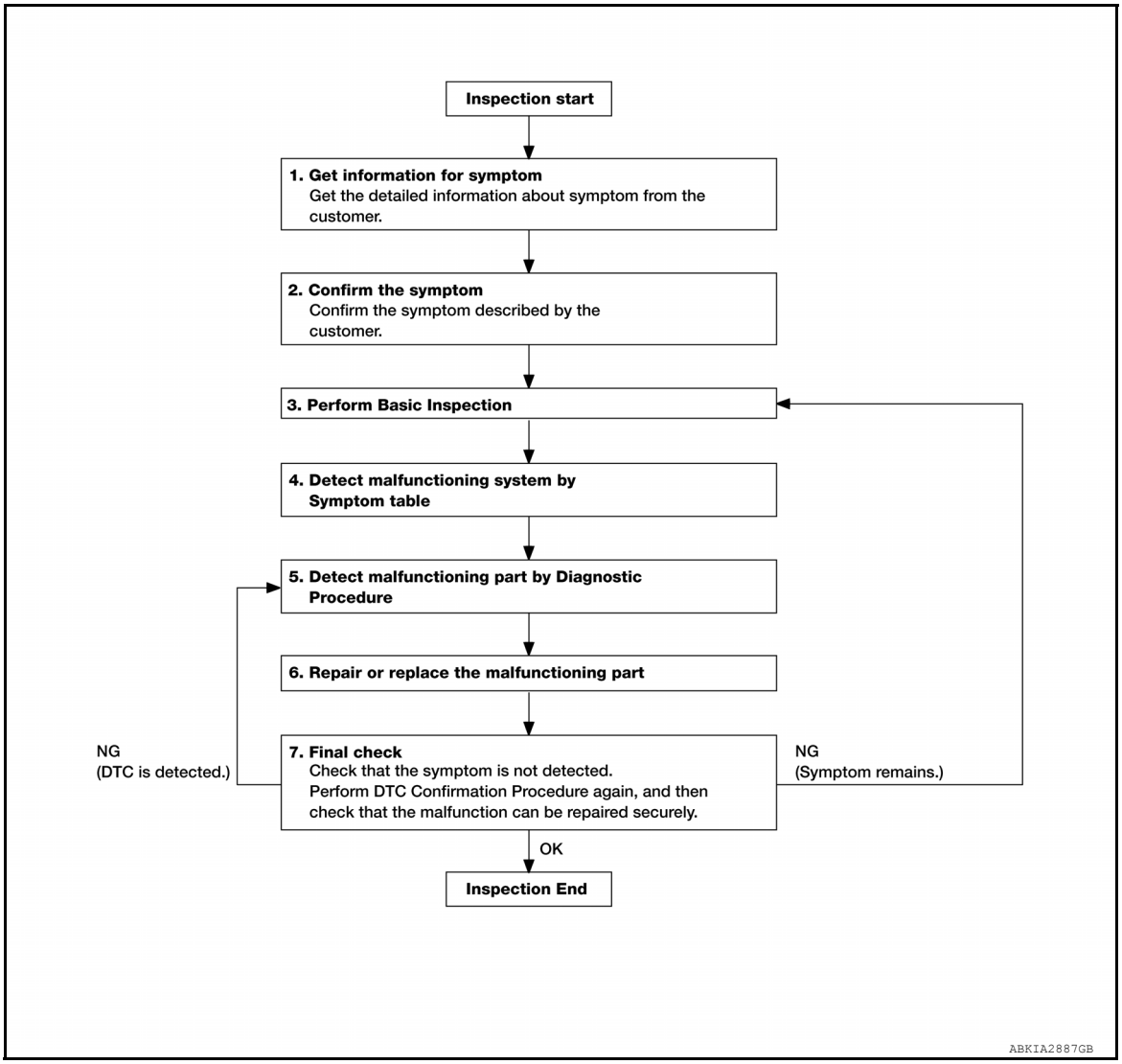

DETAILED FLOW

1. GET INFORMATION FOR SYMPTOM

Get the detailed information from the customer about the symptom (the condition and the environment when the incident/malfunction occurred).

>> GO TO 2

2. CONFIRM THE SYMPTOM

Confirm the symptom described by the customer.
Verify relation between the symptom and the condition when the symptom is detected.

>> GO TO 3

3. PERFORM BASIC INSPECTION

Perform RF-5, "BASIC INSPECTION : Special Repair Requirement".

>> GO TO 4

4. DETECT MALFUNCTIONING SYSTEM BY SYMPTOM DIAGNOSIS

Detect malfunctioning system according to symptom diagnosis based on the confirmed symptom in step 2, and determine the trouble diagnosis order based on possible causes and symptom.

>> GO TO 5

5. DETECT MALFUNCTIONING PART BY DIAGNOSTIC PROCEDURE

Inspect according to Diagnostic Procedure of the system.

NOTE:

The Diagnostic Procedure described is based on open circuit inspection. A short circuit inspection is also required for the circuit check in the Diagnostic Procedure.

Is malfunctioning part detected?

YES >> GO TO 6
NO >> Check voltage of related BCM terminals using CONSULT.

6. REPAIR OR REPLACE THE MALFUNCTIONING PART

1. Repair or replace the malfunctioning part.
2. Reconnect parts or connectors disconnected during Diagnostic Procedure.

>> GO TO 7

7. FINAL CHECK

Check that symptom described from the customer is not detected, refer to confirmed symptom in step 2.

Does the symptom reappear?

YES (DTC is detected)>>GO TO 5
YES (Symptom remains)>>GO TO 3
NO >> Inspection End.

INSPECTION AND ADJUSTMENT

ADDITIONAL SERVICE WHEN REPLACING CONTROL UNIT

ADDITIONAL SERVICE WHEN REPLACING CONTROL UNIT : Description

INFOID:0000000009482335

MEMORY RESET PROCEDURE

1. Please observe the following instructions at confirming the sunroof operation.
   NOTE:
   Do not disconnect the electronic power while the sunroof is operating or within 5 seconds after the sunroof stops (to wipe-out the memory of lid position and operating friction).
2. Initialization of system should be conducted after the following conditions.
   - When the battery has been disconnected or discharged.
   - When the sunroof motor has been disconnected from power.
   - When the sunroof motor is changed.
   - When the sunroof does not operate normally (Incomplete initialization conditions).

ADDITIONAL SERVICE WHEN REPLACING CONTROL UNIT : Special Repair Requirement

INFOID:0000000009482336

INITIALIZATION PROCEDURE

If the sunroof does not close or open automatically, use the following procedure to return sunroof operation to normal.

1. Turn ignition switch ON.
2. Push and hold the sunroof tilt switch in the forward (DOWN) position until the sunroof is fully closed.
3. After the sunroof has closed all the way, push and hold the tilt switch forward (DOWN) again for more than 2 seconds to re-learn motor position.
4. Initialization is complete if the sunroof operates normally.

ANTI-PINCH FUNCTION

1. Fully open the sunroof.
2. Place a piece of wood near fully closed position.
3. Close the sunroof completely with auto-slide close.

Check that sunroof lowers for approximately 150mm (5.91 in) or 2 seconds without pinching a piece of wood and stops.

CAUTION:

- **Do not check with hands and other part of body because they may be pinched. Do not get pinched.**
- **Depending on environment and driving conditions, if a similar impact or load is applied to the sunroof it may lower.**
- **Check that auto-slide operates before inspection when system initialization is performed.**
- **Perform initial setting when auto-slide operation or anti-pinch function does not operate normally.**

BASIC INSPECTION

BASIC INSPECTION : Special Repair Requirement

INFOID:0000000009482337

BASIC INSPECTION

1. INSPECTION START

1. Check the service history.
2. Check the following parts.

- Fuse/circuit breaker blown.
- Poor connection, open or short circuit of harness connector.
- Battery voltage.

Is the inspection result normal?

YES >> Inspection End.
NO >> Repair or replace the malfunctioning parts.

SYSTEM DESCRIPTION

SUNROOF SYSTEM

System Diagram

INFOID:0000000009482338

SUNROOF

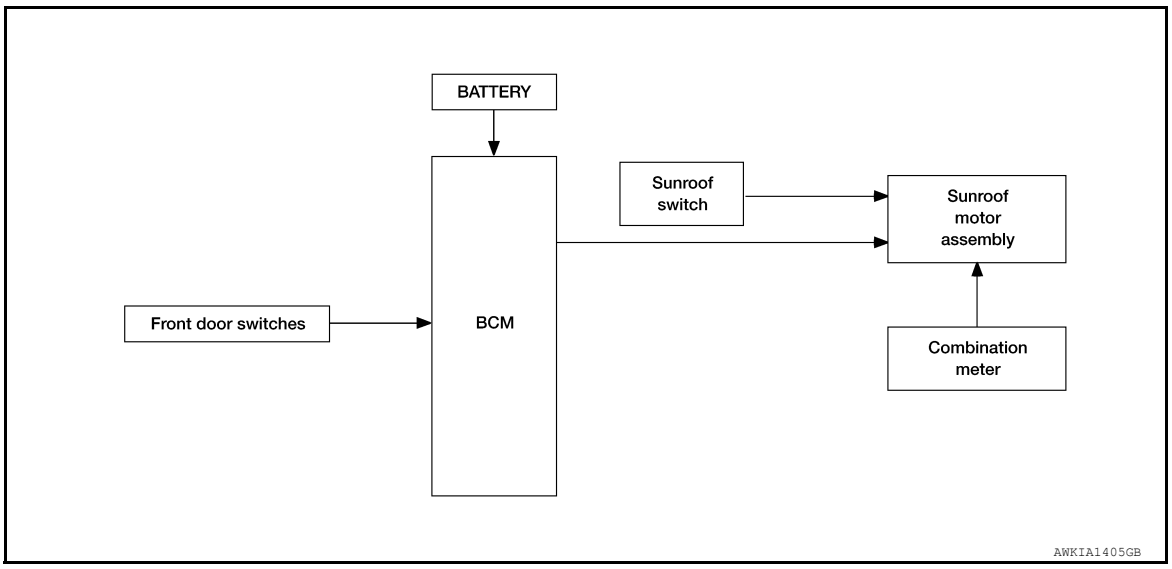

System Description

INFOID:0000000009482339

SUNROOF SYSTEM
INPUT/OUTPUT SIGNAL CHART

Item	Input signal to sunroof motor assembly	Sunroof motor function	Actuator
Sunroof switch	Sunroof switch signal (tilt down or slide open)	Sunroof control	Sunroof motor
	Sunroof switch signal (tilt up or slide close)		
BCM	RAP signal		
Combination meter	Vehicle speed signal		

SUNROOF OPERATION
- The sunroof motor assembly operates with a power supply that is output from the BCM while the ignition switch is ON or retained power is operating.
- The tilt up/down & slide open/close signals from the sunroof switch enable the sunroof motor to move arbitrarily.

AUTO OPERATION
The sunroof AUTO feature makes it possible to slide open and slide close or tilt up and tilt down the sunroof without holding the sunroof switch in the slide open/tilt down or slide close/tilt up position.

RETAINED POWER OPERATION
Retained power operation is an additional power supply function that enables the sunroof system to operate up to 45 seconds after the ignition switch is turned OFF.

Retained power function cancel conditions
- When a front door is opened (door switch ON)
- When ignition switch is turned ON again.
- When 45 seconds elapse on the timer.

Component Parts Location

INFOID:0000000009482340

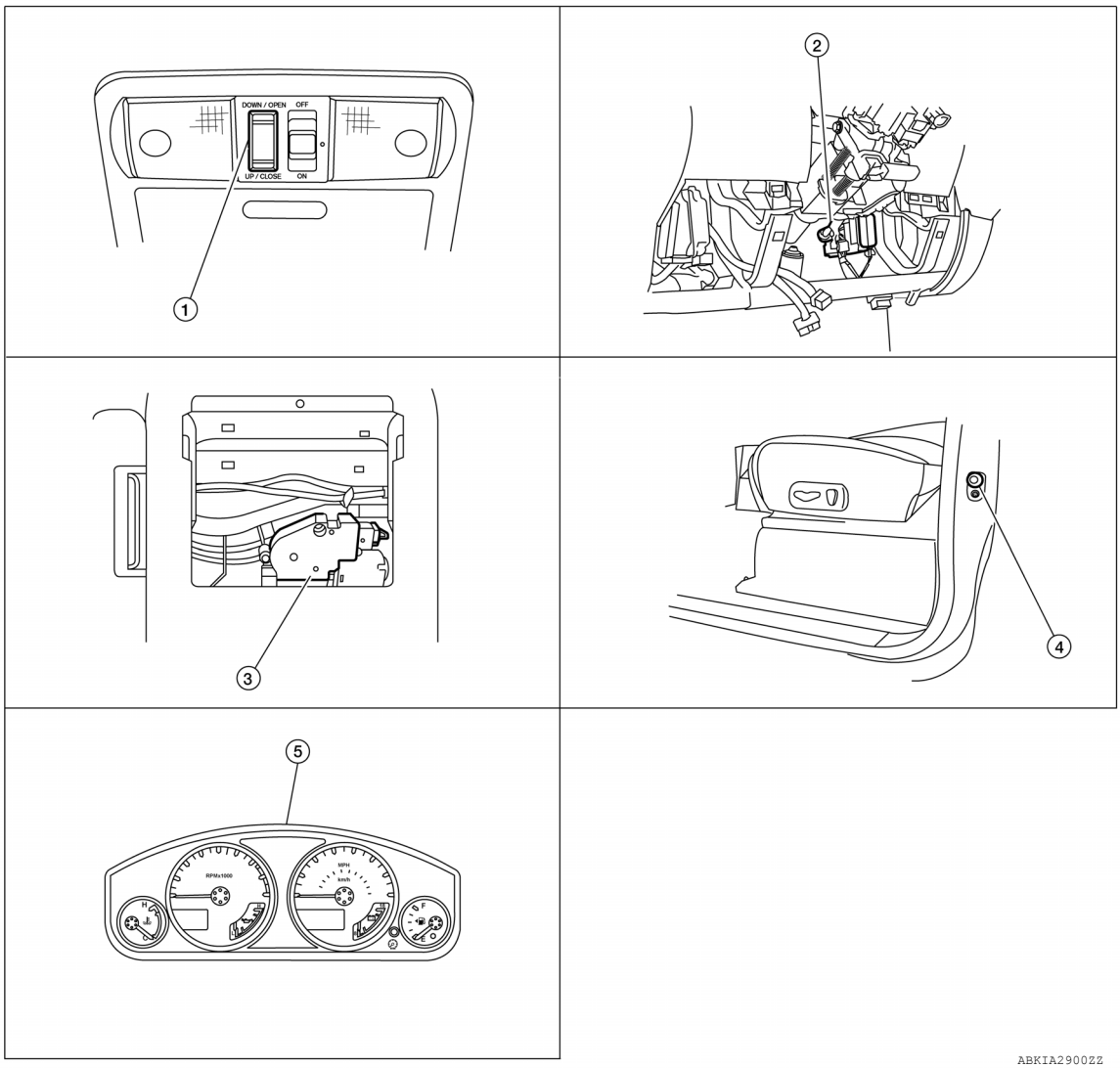

ABKIA2900ZZ

1. Sunroof switch R4
2. BCM M18, M19, M20 (View with lower instrument panel LH removed)
3. Sunroof motor assembly B83
4. Front door switch LH B8, RH B108
5. Combination meter M24

Component Description

INFOID:0000000009482341

Component	Function
BCM	Supplies power to the sunroof motor assembly.
Sunroof switch	Transmits tilt up/down & slide open/close operation signal to sunroof motor assembly.
Sunroof motor assembly	The sunroof motor and integrated CPU enables tilt up/down & slide open/close as requested by the sunroof switch.
Front door switch	Detects door open/close condition and transmits to BCM.
Combination meter	Transmits vehicle speed signal to sunroof motor assembly.

DIAGNOSIS SYSTEM (BCM)

COMMON ITEM

COMMON ITEM : CONSULT Function (BCM - COMMON ITEM)

INFOID:0000000010217274

APPLICATION ITEM

CONSULT performs the following functions via CAN communication with BCM.

Direct Diagnostic Mode	Description
ECU Identification	The BCM part number is displayed.
Self Diagnostic Result	The BCM self diagnostic results are displayed.
Data Monitor	The BCM input/output data is displayed in real time.
Active Test	The BCM activates outputs to test components.
Work support	The settings for BCM functions can be changed.
Configuration	• The vehicle specification can be read and saved. • The vehicle specification can be written when replacing BCM.
CAN Diag Support Mntr	The result of transmit/receive diagnosis of CAN communication is displayed.

SYSTEM APPLICATION

BCM can perform the following functions.

System	Sub System	Direct Diagnostic Mode						
		ECU Identification	Self Diagnostic Result	Data Monitor	Active Test	Work support	Configuration	CAN Diag Support Mntr
Door lock	DOOR LOCK			×	×	×		
Rear window defogger	REAR DEFOGGER			×	×			
Warning chime	BUZZER			×	×			
Interior room lamp timer	INT LAMP			×	×	×		
Remote keyless entry system	MULTI REMOTE ENT			×	×	×		
Exterior lamp	HEAD LAMP			×	×	×		
Wiper and washer	WIPER			×	×	×		
Turn signal and hazard warning lamps	FLASHER			×	×			
Air conditioner	AIR CONDITIONER			×				
Combination switch	COMB SW			×				
BCM	BCM	×	×			×	×	×
Immobilizer	IMMU		×	×	×			
Interior room lamp battery saver	BATTERY SAVER			×	×	×		
Vehicle security system	THEFT ALM			×	×	×		
RAP system	RETAINED PWR			×	×	×		
Signal buffer system	SIGNAL BUFFER			×	×			
TPMS	AIR PRESSURE MONITOR		×	×	×	×		
Panic alarm system	PANIC ALARM				×			

RETAINED PWR

RETAINED PWR : CONSULT Function (BCM - RETAINED PWR)

INFOID:0000000010217275

DATA MONITOR

Monitor Item [Unit]	Description
IGN ON SW [On/Off]	Indicates condition of ignition switch ON position.
DOOR SW-DR [On/Off]	Indicates condition of front door switch LH.
DOOR SW-AS [On/Off]	Indicates condition of front door switch RH.

ACTIVE TEST

Test Item	Description
RETAINED PWR	This test is able to check retained power operation [Off/On].

WORK SUPPORT

Support Item	Setting		Description
RETAINED PWR SET	MODE3	2 min	Sets the retained accessory power operating time.
	MODE2	OFF	
	MODE1*	45 sec	

*: Initial setting

DTC/CIRCUIT DIAGNOSIS

POWER SUPPLY AND GROUND CIRCUIT

SUNROOF MOTOR ASSEMBLY

SUNROOF MOTOR ASSEMBLY : Diagnosis Procedure

INFOID:0000000009482344

Regarding Wiring Diagram information, refer to RF-30, "Wiring Diagram".

SUNROOF MOTOR ASSEMBLY

1. CHECK SUNROOF MOTOR POWER SUPPLY

1. Turn ignition switch OFF.
2. Disconnect sunroof motor assembly connector B83.
3. Turn ignition switch ON.
4. Check voltage between sunroof motor assembly connector B83 terminals 7 and 9 and ground.

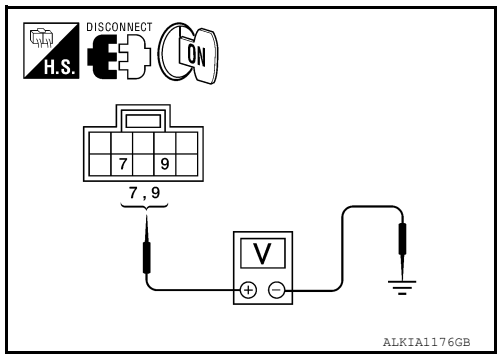

(+)		(–)	Voltage
Connector	Terminal		
B83	7	Ground	Battery voltage
	9		

Is the voltage as specified?

YES >> GO TO 7
NO (With power seats) >>GO TO 2
NO (Without power seats) >>GO TO 5

2. CHECK SUNROOF MOTOR POWER SUPPLY CIRCUITS

1. Turn ignition switch OFF.
2. Disconnect BCM connector M20 and circuit breaker-2 connector M82.
3. Check continuity between BCM connector M20, circuit breaker-2 connector M82 and sunroof motor assembly connector B83.

Connector	Terminal	Connector	Terminal	Continuity
M20	68	B83	9	Yes
M82	1		7	

4. Check continuity between BCM connector M20, circuit breaker-2 and ground.

Connector	Terminal	—	Continuity
M20	68	Ground	No
M82	1		

Are the continuity test results as specified?

YES >> GO TO 3
NO >> Repair or replace harness.

3. CHECK BCM OUTPUT SIGNAL

1. Connect BCM connector M20.
2. Turn ignition switch ON.
3. Check voltage between BCM connector M20 and ground.

(+)		(–)	Voltage
Connector	Terminal		
M20	68	Ground	Battery voltage

Is the voltage reading as specified?

YES >> GO TO 4
NO >> Replace BCM. Refer to BCS-49, "Removal and Installation".

4. CHECK SUNROOF MOTOR POWER SUPPLY CIRCUITS

1. Check voltage between circuit breaker-2 connector M82 and ground.

(+)		(–)	Voltage
Connector	Terminal		
M82	2	Ground	Battery voltage

Is the voltage reading as specified?

YES >> Replace circuit breaker-2
NO >> Repair or replace harness.

5. CHECK SUNROOF MOTOR POWER SUPPLY CIRCUITS

1. Turn ignition switch OFF.
2. Disconnect BCM connector M20.
3. Check continuity between BCM connector M20 and sunroof motor assembly connector B83.

Connector	Terminal	Connector	Terminal	Continuity
M20	68	B83	9	Yes
	69		7	

4. Check continuity between BCM connector M20 and ground.

Connector	Terminal	—	Continuity
M20	68	Ground	No
	69		

Are the continuity test results as specified?

YES >> GO TO 6
NO >> Repair or replace harness.

6. CHECK BCM OUTPUT SIGNAL

1. Connect BCM connector M20.
2. Turn ignition switch ON.
3. Check voltage between BCM connector M20 and ground.

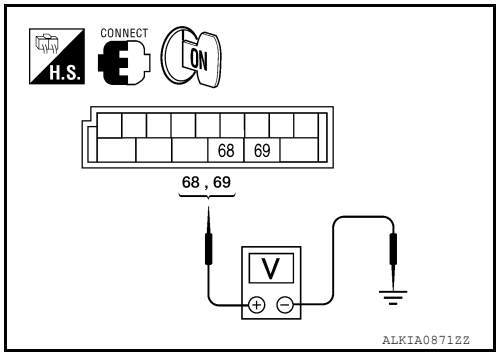

(+)		(–)	Voltage
Connector	Terminal		
M20	68	Ground	Battery voltage
	69		

Is the voltage reading as specified?

YES >> Check condition of harness and connector.
NO >> Replace BCM. Refer to BCS-49, "Removal and Installation".

7. CHECK GROUND CIRCUIT

1. Turn ignition switch OFF.
2. Check continuity between sunroof motor assembly connector B83 terminal 10 and ground.

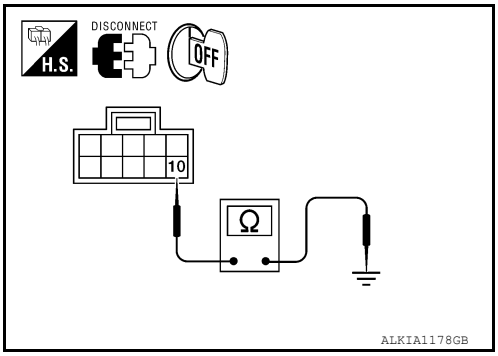

Connector	Terminal	—	Continuity
B83	10	Ground	Yes

Is the continuity test result as specified?

YES >> Inspection End.
NO >> Repair or replace harness.

SUNROOF MOTOR ASSEMBLY : Special Repair Requirement

INFOID:0000000009482345

1. PERFORM INITIALIZATION PROCEDURE

Perform initialization procedure.
Refer to RF-5, "ADDITIONAL SERVICE WHEN REPLACING CONTROL UNIT : Special Repair Requirement".

Does the sunroof motor assembly operate properly?

YES >> Repair is complete.
NO >> Check fitting adjustment.

SUNROOF SWITCH CIRCUIT

Description

INFOID:0000000009482346

The BCM supplies power to the integrated CPU of the sunroof motor assembly. The tilt and slide functions of the sunroof motor assembly is controlled by the sunroof switch.

Component Function Check

INFOID:0000000009482347

1. CHECK SUNROOF MOTOR FUNCTION

Do tilt up/down & slide open/close functions operate normally with sunroof switch?

Is the inspection result normal?

YES >> Sunroof motor assembly is OK.
NO >> Refer to RF-13, "Diagnosis Procedure".

Diagnosis Procedure

INFOID:0000000009482348

Regarding Wiring Diagram information, refer to RF-30, "Wiring Diagram".

1. CHECK SUNROOF SWITCH INPUT SIGNAL

1. Turn ignition switch ON.
2. Check voltage between sunroof switch connector and ground.

Connector	Terminals (+)	Terminals (–)	Sunroof switch position	Voltage (V) (Approx.)
R4	1	2	DOWN/OPEN	0V
			Other than above	Battery voltage
	3		UP/CLOSE	0V
			Other than above	Battery voltage

Are the voltage measurements as specified?

YES >> Sunroof switch is operating normally.
NO >> GO TO 2

2. CHECK SUNROOF SWITCH CIRCUITS

1. Turn ignition switch OFF.
2. Disconnect sunroof motor assembly connector B83 and sunroof switch connector R4.
3. Check continuity between sunroof motor assembly connector B83 (A) and sunroof switch connector R4 (B).

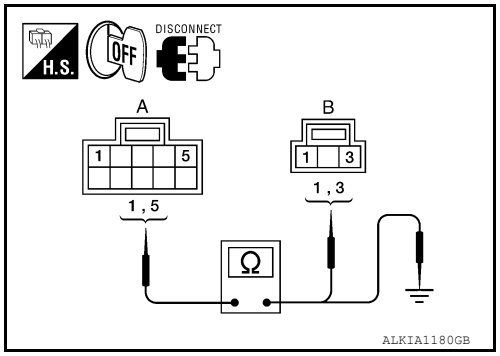

A Connector	A Terminal	B Connector	B Terminal	Continuity
B83	1	R4	3	Yes
	5		1	

4. Check continuity between sunroof motor assembly connector B83 (A) and ground.

A Connector	A Terminal	—	Continuity
B83	5	Ground	No
	1		

Are the continuity test results as specified?

YES >> GO TO 3
NO >> Repair harness or connector.

3. CHECK SUNROOF SWITCH GROUND CIRCUIT

1. Connect sunroof motor assembly.
2. Check continuity between sunroof switch connector R4 and ground.

Sunroof switch connector	Terminal	Ground	Continuity
R4	2		Yes

Is the continuity test result as specified?

YES >> GO to 4
NO >> Repair or replace harness.

4. CHECK SUNROOF SWITCH

1. Check continuity between sunroof switch terminals.

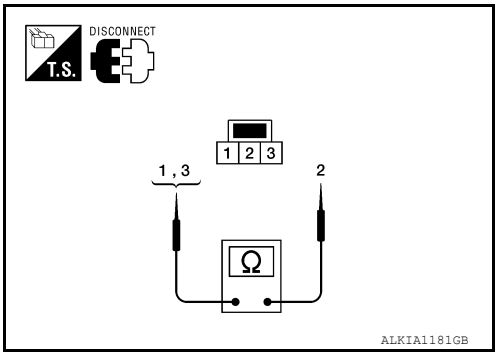

Terminals		Sunroof switch position	Continuity
1	2	DOWN/OPEN	Yes
		Other than above	No
3		UP/CLOSE	Yes
		Other than above	No

Are the continuity test results as specified?

YES >> Sunroof switch is operating normally.
NO >> Replace sunroof switch (map lamp assembly). Refer to INT-25, "Removal and Installation".

VEHICLE SPEED SIGNAL CIRCUIT

Component Function Check

INFOID:0000000009482349

1. CHECK SUNROOF MOTOR ASSEMBLY INPUT SIGNAL

1. Start engine.
2. Drive the vehicle at more than 40 km/h (25 MPH).
   CAUTION:
   Always drive vehicle at a safe speed.
   NOTE:
   This procedure may be conducted with the drive wheels lifted in the shop or by driving the vehicle. If a road test is expected to be easier, it is unnecessary to lift the vehicle.
3. Check tilt up/down & slide open/close operations with sunroof switch.

Is the inspection result normal?

YES >> Inspection End.
NO >> Refer to RF-15, "Diagnosis Procedure".

Diagnosis Procedure

INFOID:0000000009482350

SUNROOF MOTOR ASSEMBLY

1. CHECK SUNROOF MOTOR ASSEMBLY INPUT SIGNAL

1. Turn ignition switch OFF.
2. Disconnect combination meter connector and sunroof motor assembly connector.
3. Check continuity between combination meter connector and sunroof motor assembly connector.

Combination meter		Sunroof motor assembly		Continuity
Connector	Terminal	Connector	Terminal	
M24	5	B83	8	Yes

4. Check continuity between sunroof motor assembly connector and ground.

Sunroof motor assembly		Ground	Continuity
Connector	Terminal		
B83	8		No

Is the inspection result normal?

YES >> Check combination meter. Refer to MWI-30, "Diagnosis Procedure".
NO >> Repair or replace harness or connector.

DOOR SWITCH

Description

INFOID:0000000009482351

Detects door open/close condition.

Component Function Check

INFOID:0000000009482352

1.CHECK FUNCTION

With CONSULT
Check door switches in Data Monitor mode with CONSULT.

Monitor item	Condition
DOOR SW-DR	CLOSE → OPEN: OFF → ON
DOOR SW-AS	

Is the inspection result normal?

YES >> Door switch is OK.
NO >> Refer to RF-16, "Diagnosis Procedure".

Diagnosis Procedure

INFOID:0000000009482353

Regarding Wiring Diagram information, refer to DLK-87, "Wiring Diagram - Crew Cab".

1.CHECK DOOR SWITCHES INPUT SIGNAL

With CONSULT
Check door switches ("DOOR SW-DR", "DOOR SW-AS") in DATA MONITOR mode with CONSULT. Refer to BCS-15, "DOOR LOCK : CONSULT Function (BCM - DOOR LOCK)".

- When any doors are open:

DOOR SW-DR : ON
DOOR SW-AS : ON

- When any doors are closed:

DOOR SW-DR : OFF
DOOR SW-AS : OFF

Without CONSULT
Check voltage between BCM connector M18 or M19 terminals 12, 47 and ground.

Connec-tor	Item	Terminals		Condition	Voltage (V) (Approx.)
		(+)	(–)		
M19	Front door switch LH	47	Ground	Open ↓ Closed	0 ↓ Battery voltage
M18	Front door switch RH	12			

Is the inspection result normal?

YES >> Door switch circuit is OK.
NO >> GO TO 2

2.CHECK BCM OUTPUT VOLTAGE

1. Turn ignition switch OFF.

2. Disconnect door switches.
3. Check voltage between BCM connector M18, M19 terminals 12, 47 and ground.

12 - Ground : Battery voltage
47 - Ground : Battery voltage

Is the inspection result normal?

YES >> GO TO 3
NO >> Replace BCM. Refer to BCS-49, "Removal and Installation".

3. CHECK DOOR SWITCH CIRCUIT

1. Disconnect door switch and BCM.
2. Check continuity between door switch connector B8 (Front LH), B108 (Front RH), terminal 2 and BCM connector M18, M19 terminals 12, 47.

2 - 47 : Continuity should exist.
2 - 12 : Continuity should exist.

3. Check continuity between door switch connector B8 (Front LH), B108 (Front RH), terminal 2 and ground.

2 - Ground : Continuity should not exist.

Is the inspection result normal?

YES >> GO TO 4
NO >> Repair or replace harness.

4. CHECK DOOR SWITCHES

1. Disconnect door switch.
2. Check continuity between door switch terminals.

	Terminal	Condition	Continuity
Door switch	2 – Ground	Open	Yes
		Closed	No

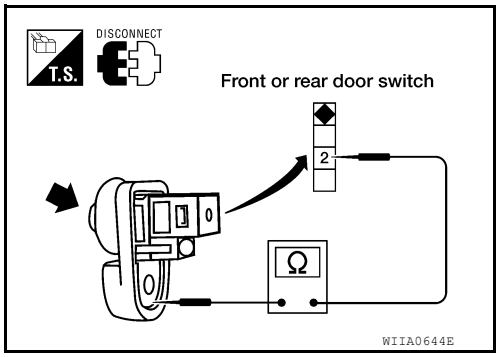

Is the inspection result normal?

YES >> Check switch case ground condition.
NO >> Replace door switch.

ECU DIAGNOSIS INFORMATION

BCM (BODY CONTROL MODULE)

Reference Value

INFOID:0000000010217366

NOTE:
The Signal Tech II Tool (J-50190) can be used to perform the following functions. Refer to the Signal Tech II User Guide for additional information.
- Activate and display TPMS transmitter IDs
- Display tire pressure reported by the TPMS transmitter
- Read TPMS DTCs
- Register TPMS transmitter IDs
- Test remote keyless entry keyfob relative signal strength

VALUES ON THE DIAGNOSIS TOOL

Monitor Item	Condition	Value/Status
ACC ON SW	Ignition switch OFF or ON	Off
	Ignition switch ACC	On
AIR COND SW	A/C switch OFF	Off
	A/C switch ON	On
AIR PRESS FL	Front left tire air pressure value	kPa, kg/cm^2, psi
AIR PRESS FR	Front right tire air pressure value	kPa, kg/cm^2, psi
AIR PRESS RL	Rear left tire air pressure value	kPa, kg/cm^2, psi
AIR PRESS RR	Rear right tire air pressure value	kPa, kg/cm^2, psi
AUTO LIGHT SW	Lighting switch OFF	Off
	Lighting switch AUTO	On
BRAKE SW	Brake pedal released	Off
	Brake pedal applied	On
BUCKLE SW	Seat belt buckle unfastened	Off
	Seat belt buckle fastened	On
BUZZER	Buzzer in combination meter OFF	Off
	Buzzer in combination meter ON	On
CARGO LAMP SW	Cargo lamp switch OFF	Off
	Cargo lamp switch ON	On
CDL LOCK SW	Door lock/unlock switch does not operate	Off
	Press door lock/unlock switch to the LOCK side	On
CDL UNLOCK SW	Door lock/unlock switch does not operate	Off
	Press door lock/unlock switch to the UNLOCK side	On
DOOR SW-AS	Front door RH closed	Off
	Front door RH opened	On
DOOR SW-DR	Front door LH closed	Off
	Front door LH opened	On
DOOR SW-RL	Rear door LH closed	Off
	Rear door LH opened	On
DOOR SW-RR	Rear door RH closed	Off
	Rear door RH opened	On

Monitor Item	Condition	Value/Status
FAN ON SIG	Blower motor fan switch OFF	Off
	Blower motor fan switch ON	On
FR FOG SW	Front fog lamp switch OFF	Off
	Front fog lamp switch ON	On
FR WASHER SW	Front washer switch OFF	Off
	Front washer switch ON	On
FR WIPER LOW	Front wiper switch OFF	Off
	Front wiper switch LO	On
FR WIPER HI	Front wiper switch OFF	Off
	Front wiper switch HI	On
FR WIPER INT	Front wiper switch OFF	Off
	Front wiper switch INT	On
FR WIPER STOP	Any position other than front wiper stop position	Off
	Front wiper stop position	On
HAZARD SW	When hazard switch is not pressed	Off
	When hazard switch is pressed	On
HEAD LAMP SW 1	Headlamp switch OFF	Off
	Headlamp switch 1st	On
HEAD LAMP SW 2	Headlamp switch OFF	Off
	Headlamp switch 1st	On
HI BEAM SW	High beam switch OFF	Off
	High beam switch HI	On
ID REGST FL1	ID registration of front left tire incomplete	YET
	ID registration of front left tire complete	DONE
ID REGST FR1	ID registration of front right tire incomplete	YET
	ID registration of front right tire complete	DONE
ID REGST RL1	ID registration of rear left tire incomplete	YET
	ID registration of rear left tire complete	DONE
ID REGST RR1	ID registration of rear right tire incomplete	YET
	ID registration of rear right tire complete	DONE
IGN ON SW	Ignition switch OFF or ACC	Off
	Ignition switch ON	On
IGN SW CAN	Ignition switch OFF or ACC	Off
	Ignition switch ON	On
INT VOLUME	Wiper intermittent dial is in a dial position 1 - 7	1 - 7
KEY CYL LK-SW	Door key cylinder LOCK position	Off
	Door key cylinder other than LOCK position	On
KEY CYL UN-SW	Door key cylinder UNLOCK position	Off
	Door key cylinder other than UNLOCK position	On
KEY ON SW	Mechanical key is removed from key cylinder	Off
	Mechanical key is inserted to key cylinder	On
KEYLESS LOCK	LOCK button of key fob is not pressed	Off
	LOCK button of key fob is pressed	On

Monitor Item	Condition	Value/Status
KEYLESS PANIC	PANIC button of key fob is not pressed	Off
	PANIC button of key fob is pressed	On
KEYLESS UNLOCK	UNLOCK button of key fob is not pressed	Off
	UNLOCK button of key fob is pressed	On
LIGHT SW 1ST	Lighting switch OFF	Off
	Lighting switch 1st	On
OIL PRESS SW	• Ignition switch OFF or ACC • Engine running	Off
	Ignition switch ON	On
OPTICAL SENSOR	Bright outside of the vehicle	Close to 5V
	Dark outside of the vehicle	Close to 0V
PASSING SW	Other than lighting switch PASS	Off
	Lighting switch PASS	On
REAR DEF SW	Rear window defogger switch OFF	Off
	Rear window defogger switch ON	On
TURN SIGNAL L	Turn signal switch OFF	Off
	Turn signal switch LH	On
TURN SIGNAL R	Turn signal switch OFF	Off
	Turn signal switch RH	On
VEHICLE SPEED	While driving	Equivalent to speedometer reading
WARNING LAMP	Low tire pressure warning lamp in combination meter OFF	Off
	Low tire pressure warning lamp in combination meter ON	On

Terminal Layout

INFOID:0000000010217368

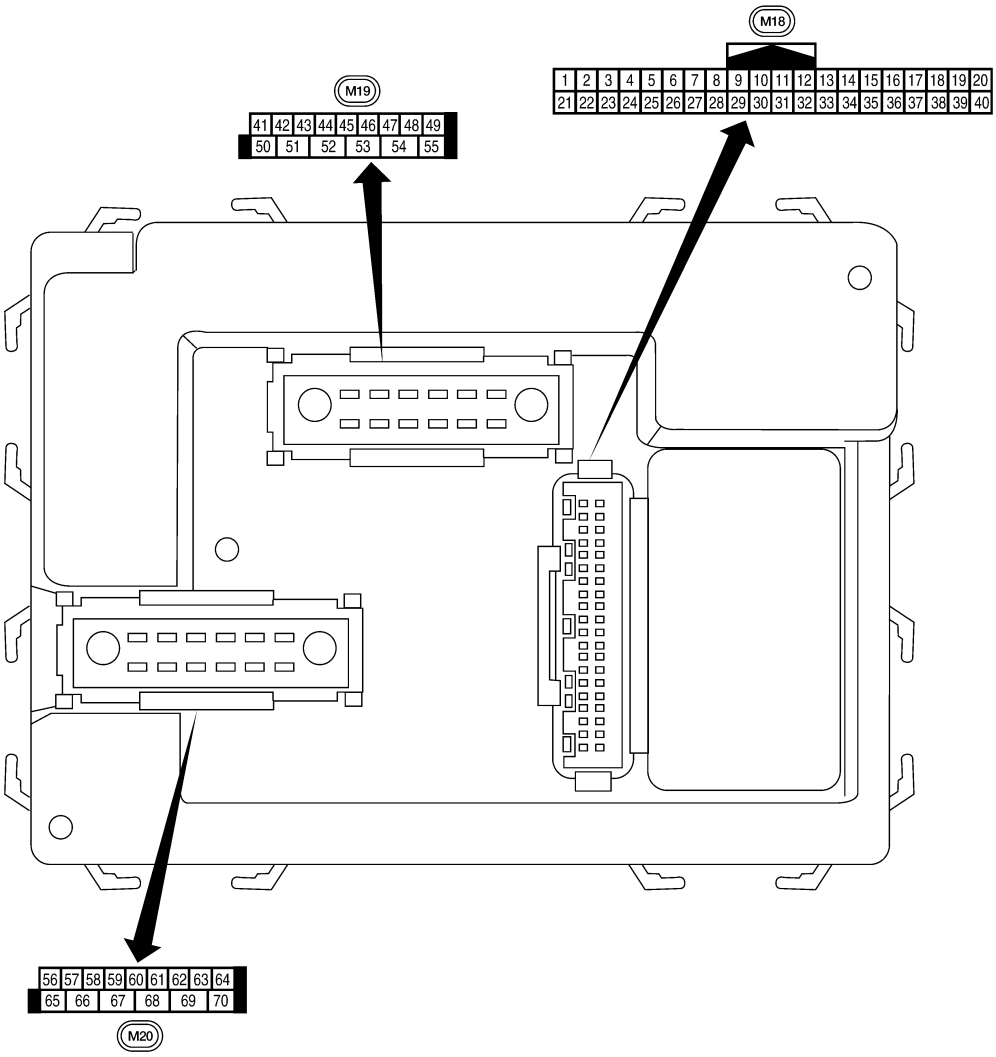

LIIA2443E

Physical Values

INFOID:0000000010217370

Terminal	Wire color	Item	Signal input/ output	Measuring condition		Reference value or waveform (Approx.)
				Ignition switch	Operation or condition	
1	BR	Ignition keyhole illumination	Output	OFF	Door is locked (SW OFF)	Battery voltage
					Door is unlocked (SW ON)	0V
2	P	Combination switch input 5	Input	ON	Lighting, turn, wiper OFF Wiper dial position 4	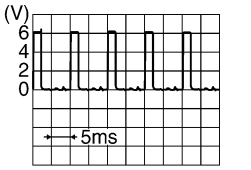
3	SB	Combination switch input 4	Input	ON	Lighting, turn, wiper OFF Wiper dial position 4	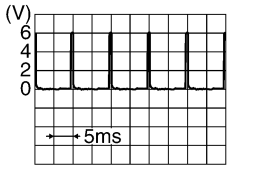
4	V	Combination switch input 3	Input	ON	Lighting, turn, wiper OFF Wiper dial position 4	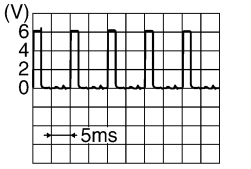
5	L	Combination switch input 2	Input	ON	Lighting, turn, wiper OFF Wiper dial position 4	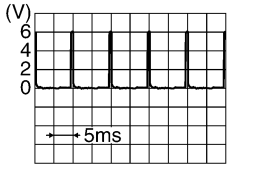
6	R	Combination switch input 1				
7	GR	Front door lock assembly LH (key cylinder switch) unlock	Input	OFF	ON (open, 2nd turn)	Momentary 1.5V
					OFF (closed)	0V
8	SB	Front door lock assembly LH (key cylinder switch) lock	Input		On (open)	Momentary 1.5V
					OFF (closed)	0V
9	LG	Brake sw	Input	OFF	OFF (brake pedal is not depressed)	0V
					ON (brake pedal is depressed)	Battery voltage
11	G/B	Ignition switch (ACC or ON)	Input	ACC or ON	Ignition switch ACC or ON	Battery voltage
12	LG	Front door switch RH (All)	Input	OFF	ON (open)	0V
		Rear door switch upper RH (King Cab)			OFF (closed)	Battery voltage
		Rear door switch lower RH (King Cab)				

Terminal	Wire color	Item	Signal input/ output	Measuring condition		Reference value or waveform (Approx.)
				Ignition switch	Operation or condition	
13	L	Rear door switch RH (Crew Cab)	Input	OFF	ON (open)	0V
					OFF (closed)	Battery voltage
15	W	Tire pressure warning check connector	Input	OFF	—	5V
18	BR	Remote keyless entry receiver and optical sensor (Ground)	Output	OFF	—	0V
19	V	Remote keyless entry receiver (power supply)	Output	OFF	Ignition switch OFF	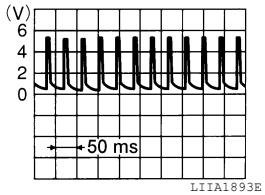
20	G	Remote keyless entry receiver signal (Signal)	Input	OFF	Stand-by (keyfob buttons released)	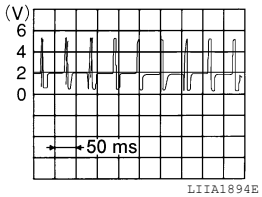
					When remote keyless entry receiver receives signal from keyfob (keyfob buttons pressed)	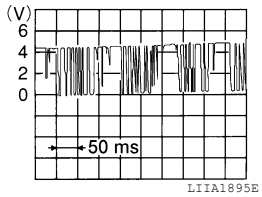
21	GR	NATS antenna amp.	Input	OFF → ON	Ignition switch (OFF → ON)	Just after turning ignition switch ON: Pointer of tester should move.
23	G	Security indicator lamp	Output	OFF	Goes OFF → illuminates (Every 2.4 seconds)	Battery voltage → 0V
25	BR	NATS antenna amp.	Input	OFF → ON	Ignition switch (OFF → ON)	Just after turning ignition switch ON: Pointer of tester should move.
27	W	Compressor ON signal	Input	ON	A/C switch OFF	5V
					A/C switch ON	0V
28	R	Front blower monitor	Input	ON	Front blower motor OFF	Battery voltage
					Front blower motor ON	0V
29	G	Hazard switch	Input	OFF	ON	0V
					OFF	5V
31	GR	Cargo lamp switch	Input	OFF	ON	0V
					OFF	Battery voltage

Terminal	Wire color	Item	Signal input/ output	Measuring condition		Reference value or waveform (Approx.)
				Ignition switch	Operation or condition	
32	BG	Combination switch output 5	Output	ON	Lighting, turn, wiper OFF Wiper dial position 4	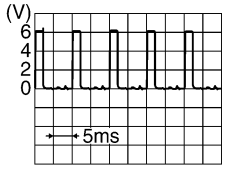
33	GR	Combination switch output 4	Output	ON	Lighting, turn, wiper OFF Wiper dial position 4	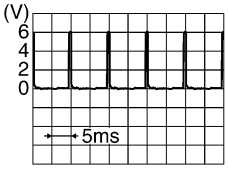
34	G	Combination switch output 3	Output	ON	Lighting, turn, wiper OFF Wiper dial position 4	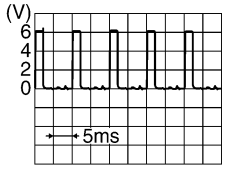
35	BR	Combination switch output 2	Output	ON	Lighting, turn, wiper OFF Wiper dial position 4	
36	LG	Combination switch output 1				
37	B	Key switch	Input	OFF	Key inserted	Battery voltage
					Key removed	0V
38	W/R	Ignition switch (ON)	Input	ON	—	Battery voltage
39	L	CAN-H	—	—	—	—
40	P	CAN-L	—	—	—	—
41	Y	Rear window defogger switch	Input	ON	Rear window defogger switch ON	0V
					Rear window defogger switch OFF	5V
45	V	Lock switch	Input	OFF	ON (lock)	0V
					OFF	Battery voltage
46	LG	Unlock switch	Input	OFF	ON (unlock)	0V
					OFF	Battery voltage
47	GR	Front door switch LH (All)	Input	OFF	ON (open)	0V
		Rear door switch upper LH (King Cab)			OFF (closed)	Battery voltage
		Rear door switch lower LH (King Cab)				

Terminal	Wire color	Item	Signal input/ output	Measuring condition		Reference value or waveform (Approx.)
				Ignition switch	Operation or condition	
48	P	Rear door switch LH (Crew Cab)	Input	OFF	ON (open)	0V
					OFF (closed)	Battery voltage
50	P	Cargo lamp	Output	OFF	Any door open (ON)	0V
					All doors closed (OFF)	Battery voltage
51	BG	Trailer turn signal (right)	Output	ON	Turn right ON	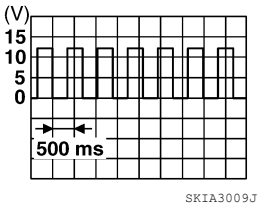
52	LG	Trailer turn signal (left)	Output	ON	Turn left ON	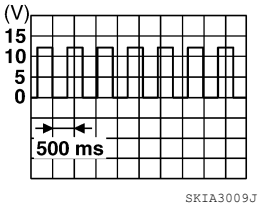
56	R/Y	Battery saver output	Output	OFF	10 minutes after ignition switch is turned OFF	0V
				ON	—	Battery voltage
57	R/Y	Battery power supply	Input	—	—	Battery voltage
58	W	Optical sensor	Input	ON	When optical sensor is illuminated	3.1V or more
					When optical sensor is not illuminated	0.6V or less
59	GR	Front door lock assembly LH (unlock)	Output	OFF	OFF (neutral)	0V
					ON (unlock)	Battery voltage
60	LG	Turn signal (left)	Output	ON	Turn left ON	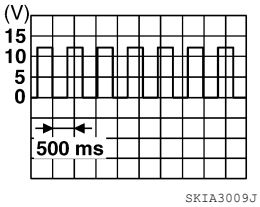
61	G	Turn signal (right)	Output	ON	Turn right ON	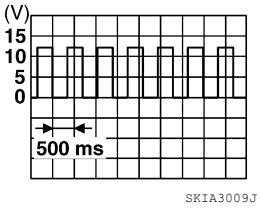
63	BR	Interior room/map lamp	Output	OFF	Any door switch: ON (open)	0V
					Any door switch: OFF (closed)	Battery voltage
65	V	All door lock actuators (lock)	Output	OFF	OFF (neutral)	0V
					ON (lock)	Battery voltage

Terminal	Wire color	Item	Signal input/ output	Measuring condition		Reference value or waveform (Approx.)
				Ignition switch	Operation or condition	
66	L	Front door lock actuator RH, rear door lock actuators LH/RH (unlock)	Output	OFF	OFF (neutral)	0V
					ON (unlock)	Battery voltage
67	B	Ground	Input	ON	—	0V
68[1]	O	Power window power supply (RAP)	Output	—	Ignition switch ON	Battery voltage
					Within 45 seconds after ignition switch OFF	Battery voltage
					More than 45 seconds after ignition switch OFF	0V
					When front door LH or RH is open or power window timer operates	0V
68[2]	SB	Power window power supply (RAP)	Output	—	Ignition switch ON	Battery voltage
					Within 45 seconds after ignition switch OFF	Battery voltage
					More than 45 seconds after ignition switch OFF	0V
					When front door LH or RH is open or power window timer operates	0V
69	P	Power window power supply (BAT)	Output	OFF	—	Battery voltage
70	W	Battery power supply	Input	OFF	—	Battery voltage

1: King cab

2: Crew cab

Fail Safe

INFOID:0000000010217371

Fail-safe index

BCM performs fail-safe control when any DTC listed below is detected.

Display contents of CONSULT	Fail-safe	Cancellation
U1000: CAN COMM CIRCUIT	Inhibit engine cranking	When the BCM re-establishes communication with the other modules.

DTC Inspection Priority Chart

INFOID:0000000010217373

If some DTCs are displayed at the same time, perform inspections one by one based on the following priority chart.

Priority	DTC
1	• U1000: CAN COMM CIRCUIT
2	• B2190: NATS ANTENNA AMP • B2191: DIFFERENCE OF KEY • B2192: ID DISCORD BCM-ECM • B2193: CHAIN OF BCM-ECM

Priority	DTC
3	• C1729: VHCL SPEED SIG ERR • C1735: IGNITION SIGNAL
4	• C1704: LOW PRESSURE FL • C1705: LOW PRESSURE FR • C1706: LOW PRESSURE RR • C1707: LOW PRESSURE RL • C1708: [NO DATA] FL • C1709: [NO DATA] FR • C1710: [NO DATA] RR • C1711: [NO DATA] RL • C1712: [CHECKSUM ERR] FL • C1713: [CHECKSUM ERR] FR • C1714: [CHECKSUM ERR] RR • C1715: [CHECKSUM ERR] RL • C1716: [PRESSDATA ERR] FL • C1717: [PRESSDATA ERR] FR • C1718: [PRESSDATA ERR] RR • C1719: [PRESSDATA ERR] RL • C1720: [CODE ERR] FL • C1721: [CODE ERR] FR • C1722: [CODE ERR] RR • C1723: [CODE ERR] RL • C1724: [BATT VOLT LOW] FL • C1725: [BATT VOLT LOW] FR • C1726: [BATT VOLT LOW] RR • C1727: [BATT VOLT LOW] RL

DTC Index

INFOID:0000000010217374

NOTE:

Details of time display

- CRNT: Displays when there is a malfunction now or after returning to the normal condition until turning ignition switch OFF → ON again.
- 1 - 39: Displayed if any previous malfunction is present when current condition is normal. It increases like 1 → 2 → 3...38 → 39 after returning to the normal condition whenever ignition switch OFF → ON. The counter remains at 39 even if the number of cycles exceeds it. It is counted from 1 again when turning ignition switch OFF → ON after returning to the normal condition if the malfunction is detected again.

CONSULT display	Fail-safe	Low tire pressure warning lamp ON	Reference page
No DTC is detected. further testing may be required.	—	—	—
U1000: CAN COMM CIRCUIT	—	—	BCS-26
B2190: NATS ANTTENA AMP	—	—	SEC-18
B2191: DIFFERENCE OF KEY	—	—	SEC-21
B2192: ID DISCORD BCM-ECM	—	—	SEC-22
B2193: CHAIN OF BCM-ECM	—	—	SEC-24
C1708: [NO DATA] FL	—	X	WT-15
C1709: [NO DATA] FR	—	X	WT-15
C1710: [NO DATA] RR	—	X	WT-15
C1711: [NO DATA] RL	—	X	WT-15
C1712: [CHECKSUM ERR] FL	—	X	WT-17
C1713: [CHECKSUM ERR] FR	—	X	WT-17
C1714: [CHECKSUM ERR] RR	—	X	WT-17
C1715: [CHECKSUM ERR] RL	—	X	WT-17

CONSULT display	Fail-safe	Low tire pressure warning lamp ON	Reference page
C1716: [PRESSDATA ERR] FL	—	X	WT-19
C1717: [PRESSDATA ERR] FR	—	X	WT-19
C1718: [PRESSDATA ERR] RR	—	X	WT-19
C1719: [PRESSDATA ERR] RL	—	X	WT-19
C1720: [CODE ERR] FL	—	X	WT-17
C1721: [CODE ERR] FR	—	X	WT-17
C1722: [CODE ERR] RR	—	X	WT-17
C1723: [CODE ERR] RL	—	X	WT-17
C1724: [BATT VOLT LOW] FL	—	X	WT-17
C1725: [BATT VOLT LOW] FR	—	X	WT-17
C1726: [BATT VOLT LOW] RR	—	X	WT-17
C1727: [BATT VOLT LOW] RL	—	X	WT-17
C1729: VHCL SPEED SIG ERR	—	X	WT-21
C1735: IGNITION SIGNAL	—	X	WT-22

SUNROOF MOTOR ASSEMBLY

Reference Value

INFOID:0000000009482360

TERMINAL LAYOUT

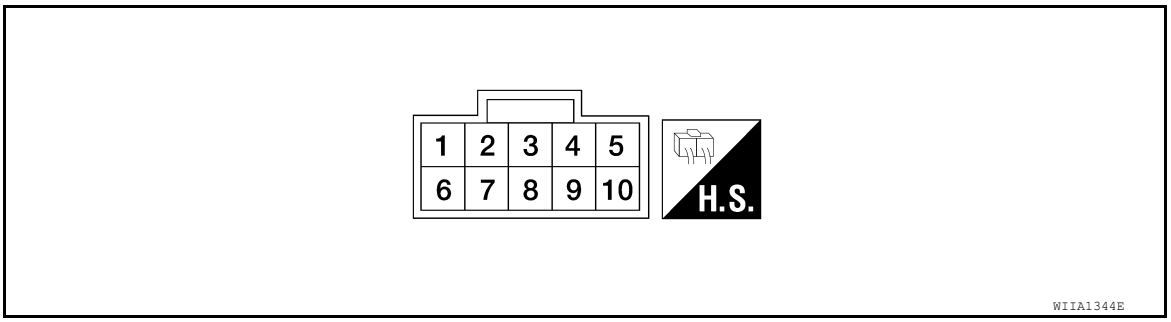

PHYSICAL VALUES

Terminal No. (Wire color)		Description		Condition	Voltage (V) (Approx.)
+	-	Signal name	Input/ Output		
1 (SB)	Ground	Sunroof switch (UP/ CLOSE) signal	Input	Ignition switch ON and sunroof switch in UP/CLOSE position	0V
				Ignition switch ON and sunroof switch in OFF position	Battery voltage
5 (R)	Ground	Sunroof switch (DOWN/ OPEN) signal	Input	Ignition switch ON and sunroof switch in DOWN/OPEN position	0V
				Ignition switch ON and sunroof switch in OFF position	Battery voltage
7 (P)	Ground	BAT power supply	Input	—	Battery voltage
8 (W)	Ground	Vehicle speed signal	Input	Speedometer operated [when vehicle speed is approx. 40 km/h (25 MPH)]	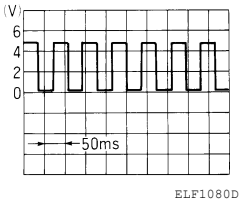
9 (SB)	Ground	RAP signal	Input	Ignition switch ON	Battery voltage
				Within 45 seconds after ignition switch turned OFF	Battery voltage
				When front door LH or RH is opened while retained power is operating	0V
10 (B)	Ground	Ground	Input	—	0V

WIRING DIAGRAM

SUNROOF

Wiring Diagram

INFOID:0000000009482361

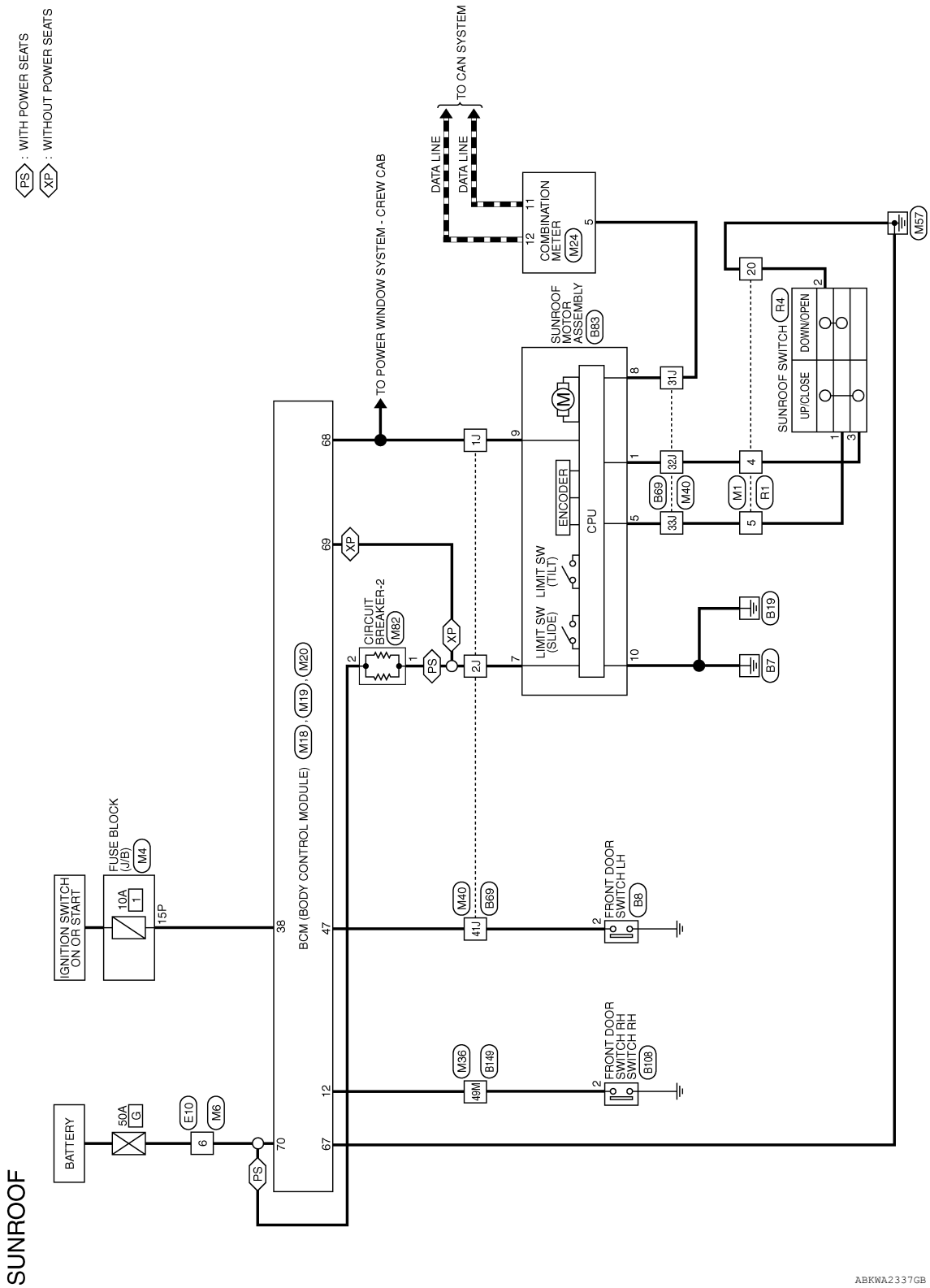

ABKWA2337GB

SUNROOF CONNECTORS

Connector No.	M1
Connector Name	WIRE TO WIRE
Connector Color	WHITE

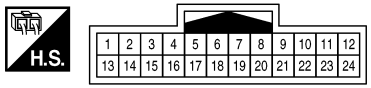

Terminal No.	Color of Wire	Signal Name
4	SB	–
5	R	–
20	B	–

Connector No.	M4
Connector Name	FUSE BLOCK (J/B)
Connector Color	WHITE

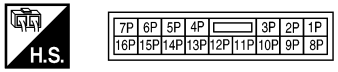

Terminal No.	Color of Wire	Signal Name
15P	W/R	–

Connector No.	M6
Connector Name	WIRE TO WIRE
Connector Color	WHITE

Terminal No.	Color of Wire	Signal Name
6	W	–

Connector No.	M18
Connector Name	BCM (BODY CONTROL MODULE)
Connector Color	WHITE

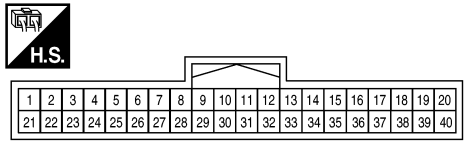

Terminal No.	Color of Wire	Signal Name
12	LG	DOOR SW (AS)
38	W/R	IGN SW

Connector No.	M19
Connector Name	BCM (BODY CONTROL MODULE)
Connector Color	WHITE

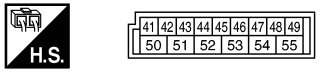

Terminal No.	Color of Wire	Signal Name
47	GR	DOOR SW (DR)

Connector No.	M20
Connector Name	BCM (BODY CONTROL MODULE)
Connector Color	BLACK

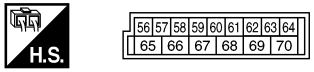

Terminal No.	Color of Wire	Signal Name
67	B	GND (POWER)
68	SB	POWER WINDOW POWER SUPPLY (LINKED TO RAP) (FOR CREW CAB)
69	P	POWER WINDOW POWER SUPPLY (BAT)
70	W	BAT (F/L)

ABKIA5213GB

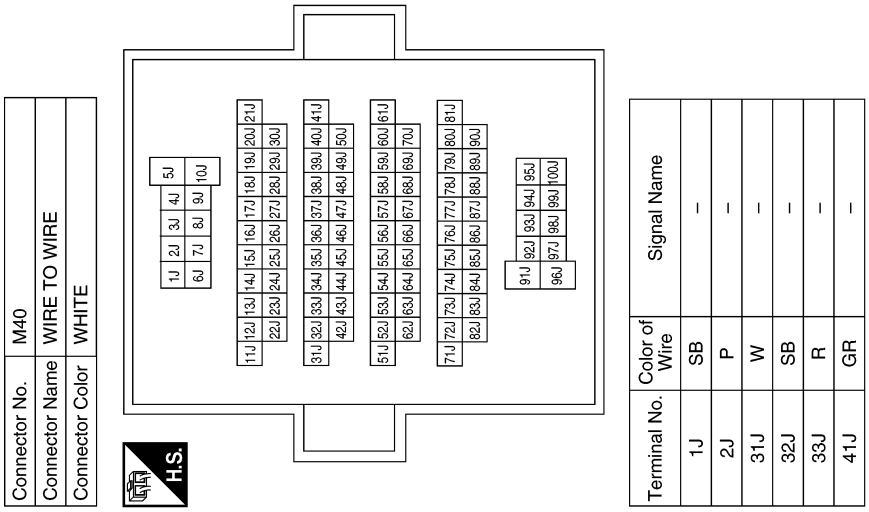

Terminal No.	Color of Wire	Signal Name
1J	SB	–
2J	P	–
31J	W	–
32J	SB	–
33J	R	–
41J	GR	–

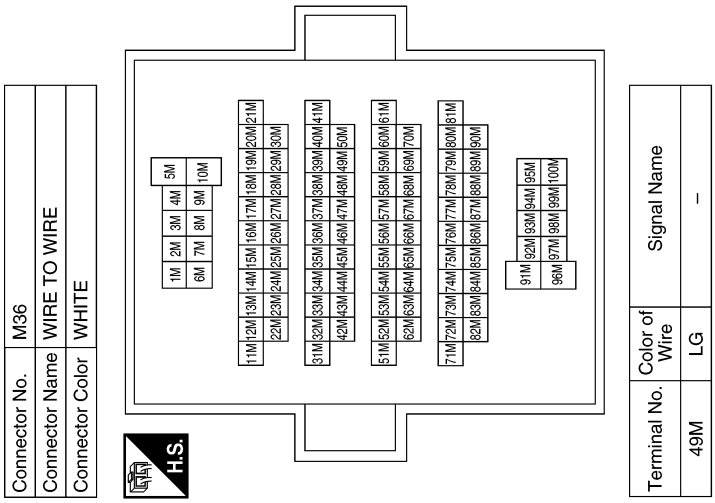

Terminal No.	Color of Wire	Signal Name
49M	LG	–

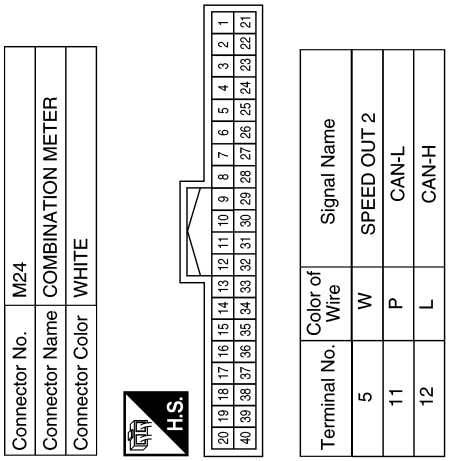

Terminal No.	Color of Wire	Signal Name
5	W	SPEED OUT 2
11	P	CAN-L
12	L	CAN-H

ABKIA5214GB

Connector No.	M82
Connector Name	CIRCUIT BREAKER-2
Connector Color	WHITE

Terminal No.	Color of Wire	Signal Name
1	G	–
2	P	–

Connector No.	E10
Connector Name	WIRE TO WIRE
Connector Color	WHITE

Terminal No.	Color of Wire	Signal Name
6	W	–

Connector No.	B8
Connector Name	FRONT DOOR SWITCH LH (CREW CAB)
Connector Color	WHITE

Terminal No.	Color of Wire	Signal Name
2	GR	–

Connector No.	B69
Connector Name	WIRE TO WIRE
Connector Color	WHITE

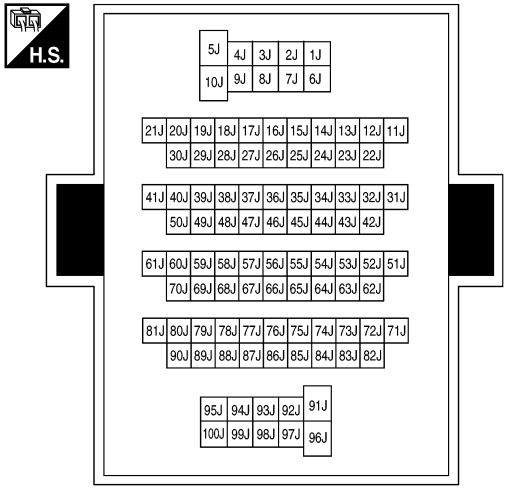

ABKIA5215GB

Terminal No.	Color of Wire	Signal Name
1J	SB	–
2J	P	–
31J	W	–
32J	SB	–
33J	R	–
41J	GR	–

Connector No.	B83
Connector Name	SUNROOF MOTOR ASSEMBLY
Connector Color	GRAY

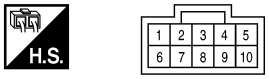

Terminal No.	Color of Wire	Signal Name
1	SB	–
5	R	–
7	P	–
8	W	–
9	SB	–
10	B	–

Connector No.	B108
Connector Name	FRONT DOOR SWITCH RH (CREW CAB)
Connector Color	WHITE

H.S.

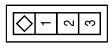

Terminal No.	Color of Wire	Signal Name
2	LG	–

Connector No.	B149
Connector Name	WIRE TO WIRE
Connector Color	WHITE

H.S.

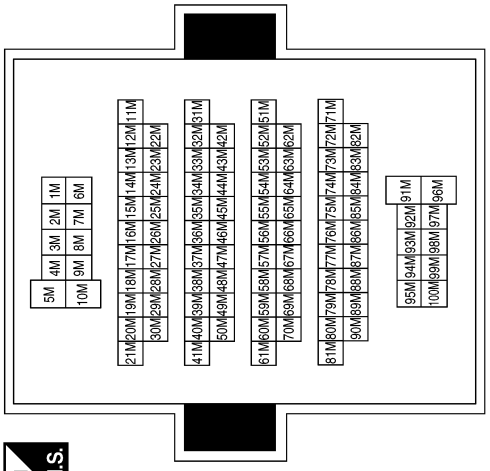

Terminal No.	Color of Wire	Signal Name
49M	LG	–

Connector No.	R1
Connector Name	WIRE TO WIRE
Connector Color	WHITE

H.S.

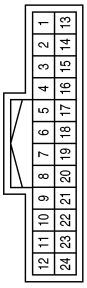

Terminal No.	Color of Wire	Signal Name
4	SB	–
5	R	–
20	B	–

Connector No.	R4
Connector Name	SUNROOF SWITCH
Connector Color	WHITE

H.S.

Terminal No.	Color of Wire	Signal Name
1	R	–
2	B	–
3	SB	–

ABKIA5216GB

SYMPTOM DIAGNOSIS

SUNROOF DOES NOT OPERATE PROPERLY

Diagnosis Procedure

INFOID:0000000009482362

1. CHECK BCM POWER SUPPLY AND GROUND CIRCUITS

Check BCM power supply and ground circuits. Refer to BCS-27, "Diagnosis Procedure".

Is the inspection result normal?

YES >> GO TO 2.
NO >> Repair or replace malfunctioning parts.

2. CHECK SUNROOF MOTOR ASSEMBLY POWER SUPPLY AND GROUND CIRCUIT

Check sunroof motor assembly power supply and ground circuit. Refer to RF-10, "SUNROOF MOTOR ASSEMBLY : Diagnosis Procedure".

Is the inspection result normal?

YES >> GO TO 3.
NO >> Repair or replace malfunctioning parts.

3. CHECK SUNROOF SWITCH CIRCUIT

Check sunroof switch circuit. Refer to RF-13, "Description".

Is the inspection result normal?

YES >> GO TO 4.
NO >> Repair or replace malfunctioning parts.

4. CHECK VEHICLE SPEED SIGNAL CIRCUIT

Check vehicle speed signal circuit. Refer to RF-15, "Component Function Check".

Is the inspection result normal?

YES >> Check intermittent incident. Refer to GI-42, "Intermittent Incident".
NO >> Repair or replace malfunctioning parts.

AUTO OPERATION DOES NOT OPERATE

Diagnosis Procedure

INFOID:0000000009482363

1. PERFORM INITIALIZATION PROCEDURE

Perform initialization procedure. Refer to RF-5, "ADDITIONAL SERVICE WHEN REPLACING CONTROL UNIT : Special Repair Requirement".

Is the inspection result normal?

YES >> Inspection End.
NO >> Perform basic inspection. Refer to RF-3, "Work Flow".

DOES NOT STOP FULLY-OPEN OR FULLY-CLOSED POSITION

Diagnosis Procedure

INFOID:0000000009482364

1. PERFORM INITIALIZATION PROCEDURE

Perform initialization procedure. Refer to RF-5, "ADDITIONAL SERVICE WHEN REPLACING CONTROL UNIT : Special Repair Requirement".

Is the inspection result normal?

YES >> Inspection End.
NO >> Perform basic inspection. Refer to RF-3, "Work Flow".

RETAINED POWER OPERATION DOES NOT OPERATE PROPERLY

Diagnosis Procedure

INFOID:0000000009482365

1. CHECK FRONT DOOR SWITCH

Check front door switch. Refer to RF-16, "Component Function Check".

Is the inspection result normal?

YES >> Check intermittent incident. Refer to GI-42, "Intermittent Incident".
NO >> Repair or replace malfunctioning parts.

SUNROOF DOES NOT OPERATE ANTI-PINCH FUNCTION

Diagnosis Procedure

INFOID:0000000009482366

1. PERFORM INITIALIZATION PROCEDURE

Perform initialization procedure.Refer to RF-5, "ADDITIONAL SERVICE WHEN REPLACING CONTROL UNIT : Special Repair Requirement".

Is the inspection result normal?

YES >> Inspection End.
NO >> Perform basic inspection. Refer to RF-3, "Work Flow".

SQUEAK AND RATTLE TROUBLE DIAGNOSES

Work Flow

INFOID:0000000010154595

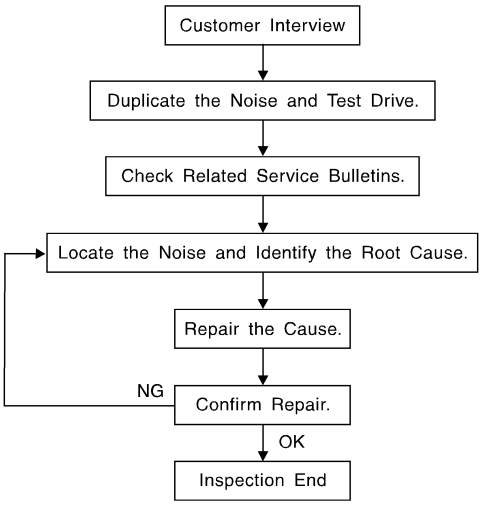

SBT842

CUSTOMER INTERVIEW

Interview the customer if possible, to determine the conditions that exist when the noise occurs. Use the Diagnostic Worksheet during the interview to document the facts and conditions when the noise occurs and any customer's comments; refer to RF-44, "Diagnostic Worksheet". This information is necessary to duplicate the conditions that exist when the noise occurs.

- The customer may not be able to provide a detailed description or the location of the noise. Attempt to obtain all the facts and conditions that exist when the noise occurs (or does not occur).
- If there is more than one noise in the vehicle, be sure to diagnose and repair the noise that the customer is concerned about. This can be accomplished by test driving the vehicle with the customer.
- After identifying the type of noise, isolate the noise in terms of its characteristics. The noise characteristics are provided so the customer, service adviser and technician are all speaking the same language when defining the noise.
- Squeak —(Like tennis shoes on a clean floor)
  Squeak characteristics include the light contact/fast movement/brought on by road conditions/hard surfaces = higher pitch noise/softer surfaces = lower pitch noises/edge to surface = chirping.
- Creak—(Like walking on an old wooden floor)
  Creak characteristics include firm contact/slow movement/twisting with a rotational movement/pitch dependent on materials/often brought on by activity.
- Rattle—(Like shaking a baby rattle)
  Rattle characteristics include the fast repeated contact/vibration or similar movement/loose parts/missing clip or fastener/incorrect clearance.
- Knock —(Like a knock on a door)
  Knock characteristics include hollow sounding/sometimes repeating/often brought on by driver action.
- Tick—(Like a clock second hand)
  Tick characteristics include gentle contacting of light materials/loose components/can be caused by driver action or road conditions.
- Thump—(Heavy, muffled knock noise)
  Thump characteristics include softer knock/dead sound often brought on by activity.
- Buzz—(Like a bumble bee)
  Buzz characteristics include high frequency rattle/firm contact.
- Often the degree of acceptable noise level will vary depending upon the person. A noise that you may judge as acceptable may be very irritating to the customer.
- Weather conditions, especially humidity and temperature, may have a great effect on noise level.

DUPLICATE THE NOISE AND TEST DRIVE

If possible, drive the vehicle with the customer until the noise is duplicated. Note any additional information on the Diagnostic Worksheet regarding the conditions or location of the noise. This information can be used to duplicate the same conditions when you confirm the repair.

If the noise can be duplicated easily during the test drive, to help identify the source of the noise, try to duplicate the noise with the vehicle stopped by doing one or all of the following:
1) Close a door.
2) Tap or push/pull around the area where the noise appears to be coming from.
3) Rev the engine.
4) Use a floor jack to recreate vehicle “twist”.
5) At idle, apply engine load (electrical load, half-clutch on M/T model, drive position on CVT and A/T models).
6) Raise the vehicle on a hoist and hit a tire with a rubber hammer.

- Drive the vehicle and attempt to duplicate the conditions the customer states exist when the noise occurs.
- If it is difficult to duplicate the noise, drive the vehicle slowly on an undulating or rough road to stress the vehicle body.

CHECK RELATED SERVICE BULLETINS

After verifying the customer concern or symptom, check ASIST for Technical Service Bulletins (TSBs) related to that concern or symptom.
If a TSB relates to the symptom, follow the procedure to repair the noise.

LOCATE THE NOISE AND IDENTIFY THE ROOT CAUSE

1. Narrow down the noise to a general area. To help pinpoint the source of the noise, use a listening tool (Chassis Ear: J-39570, Engine Ear: J-39565 and mechanic's stethoscope).
2. Narrow down the noise to a more specific area and identify the cause of the noise by:
   - removing the components in the area that you suspect the noise is coming from.
     Do not use too much force when removing clips and fasteners, otherwise clips and fasteners can be broken or lost during the repair, resulting in the creation of new noise.
   - tapping or pushing/pulling the component that you suspect is causing the noise.
     Do not tap or push/pull the component with excessive force, otherwise the noise will be eliminated only temporarily.
   - feeling for a vibration with your hand by touching the component(s) that you suspect is (are) causing the noise.
   - placing a piece of paper between components that you suspect are causing the noise.
   - looking for loose components and contact marks.
     Refer to RF-41, "Generic Squeak and Rattle Troubleshooting".

REPAIR THE CAUSE

- If the cause is a loose component, tighten the component securely.
- If the cause is insufficient clearance between components:
- separate components by repositioning or loosening and retightening the component, if possible.
- insulate components with a suitable insulator such as urethane pads, foam blocks, felt cloth tape or urethane tape. A NISSAN Squeak and Rattle Kit (J-50397) is available through your authorized NISSAN Parts Department.

CAUTION:
Do not use excessive force as many components are constructed of plastic and may be damaged.
NOTE:

- Always check with the Parts Department for the latest parts information.
- The materials contained in the NISSAN Squeak and Rattle Kit (J-50397) are listed on the inside cover of the kit; and can each be ordered separately as needed.
- The following materials not found in the kit can also be used to repair squeaks and rattles.
- SILICONE GREASE: Use instead of UHMW tape that will be visible or does not fit. The silicone grease will only last a few months.
- SILICONE SPRAY: Use when grease cannot be applied.
- DUCT TAPE: Use to eliminate movement.

CONFIRM THE REPAIR

Confirm that the cause of a noise is repaired by test driving the vehicle. Operate the vehicle under the same conditions as when the noise originally occurred. Refer to the notes on the Diagnostic Worksheet.

Generic Squeak and Rattle Troubleshooting

INFOID:0000000010154596

Refer to Table of Contents for specific component removal and installation information.

INSTRUMENT PANEL

Most incidents are caused by contact and movement between:

1. Cluster lid A and the instrument panel
2. Acrylic lens and combination meter housing
3. Instrument panel to front pillar finisher
4. Instrument panel to windshield
5. Instrument panel pins
6. Wiring harnesses behind the combination meter
7. A/C defroster duct and duct joint

These incidents can usually be located by tapping or moving the components to duplicate the noise or by pressing on the components while driving to stop the noise. Most of these incidents can be repaired by applying felt cloth tape or silicone spray (in hard to reach areas). Urethane pads can be used to insulate wiring harness.

CAUTION:

Do not use silicone spray to isolate a squeak or rattle. If you saturate the area with silicone, you will not be able to recheck the repair.

CENTER CONSOLE

Components to pay attention to include:

1. Shift selector assembly cover to finisher
2. A/C control unit and cluster lid C
3. Wiring harnesses behind audio and A/C control unit

The instrument panel repair and isolation procedures also apply to the center console.

DOORS

Pay attention to the:

1. Finisher and inner panel making a slapping noise
2. Inside handle escutcheon to door finisher
3. Wiring harnesses tapping
4. Door striker out of alignment causing a popping noise on starts and stops

Tapping or moving the components or pressing on them while driving to duplicate the conditions can isolate many of these incidents. You can usually insulate the areas with felt cloth tape or insulator foam blocks from the NISSAN Squeak and Rattle Kit (J-50397) to repair the noise.

TRUNK

Trunk noises are often caused by a loose jack or loose items put into the trunk by the owner.
In addition look for:

1. Trunk lid bumpers out of adjustment
2. Trunk lid striker out of adjustment
3. The trunk lid torsion bars knocking together
4. A loose license plate or bracket

Most of these incidents can be repaired by adjusting, securing or insulating the item(s) or component(s) causing the noise.

SUNROOF/HEADLINING

Noises in the sunroof/headlining area can often be traced to one of the following:

1. Sunroof lid, rail, linkage or seals making a rattle or light knocking noise
2. Sun visor shaft shaking in the holder
3. Front or rear windshield touching headlining and squeaking

Again, pressing on the components to stop the noise while duplicating the conditions can isolate most of these incidents. Repairs usually consist of insulating with felt cloth tape.

OVERHEAD CONSOLE (FRONT AND REAR)

Overhead console noises are often caused by the console panel clips not being engaged correctly. Most of these incidents are repaired by pushing up on the console at the clip locations until the clips engage.
In addition look for:

1. Loose harness or harness connectors.
2. Front console map/reading lamp lens loose.

3. Loose screws at console attachment points.

SEATS

When isolating seat noise it's important to note the position the seat is in and the load placed on the seat when the noise is present. These conditions should be duplicated when verifying and isolating the cause of the noise.

Cause of seat noise include:

1. Headrest rods and holder
2. A squeak between the seat pad cushion and frame
3. The rear seatback lock and bracket

These noises can be isolated by moving or pressing on the suspected components while duplicating the conditions under which the noise occurs. Most of these incidents can be repaired by repositioning the component or applying urethane tape to the contact area.

UNDERHOOD

Some interior noise may be caused by components under the hood or on the engine wall. The noise is then transmitted into the passenger compartment.

Causes of transmitted underhood noise include:

1. Any component installed to the engine wall
2. Components that pass through the engine wall
3. Engine wall mounts and connectors
4. Loose radiator installation pins
5. Hood bumpers out of adjustment
6. Hood striker out of adjustment

These noises can be difficult to isolate since they cannot be reached from the interior of the vehicle. The best method is to secure, move or insulate one component at a time and test drive the vehicle. Also, engine rpm or load can be changed to isolate the noise. Repairs can usually be made by moving, adjusting, securing, or insulating the component causing the noise.

Diagnostic Worksheet

INFOID:0000000010154597

Dear Customer:
We are concerned about your satisfaction with your vehicle. Repairing a squeak or rattle sometimes can be very difficult. To help us fix your vehicle right the first time, please take a moment to note the area of the vehicle where the squeak or rattle occurs and under what conditions. You may be asked to take a test drive with a service advisor or technician to ensure we confirm the noise you are hearing.

SQUEAK & RATTLE DIAGNOSTIC WORKSHEET

I. WHERE DOES THE NOISE COME FROM? (circle the area of the vehicle)
The illustrations are for reference only, and may not reflect the actual configuration of your vehicle.

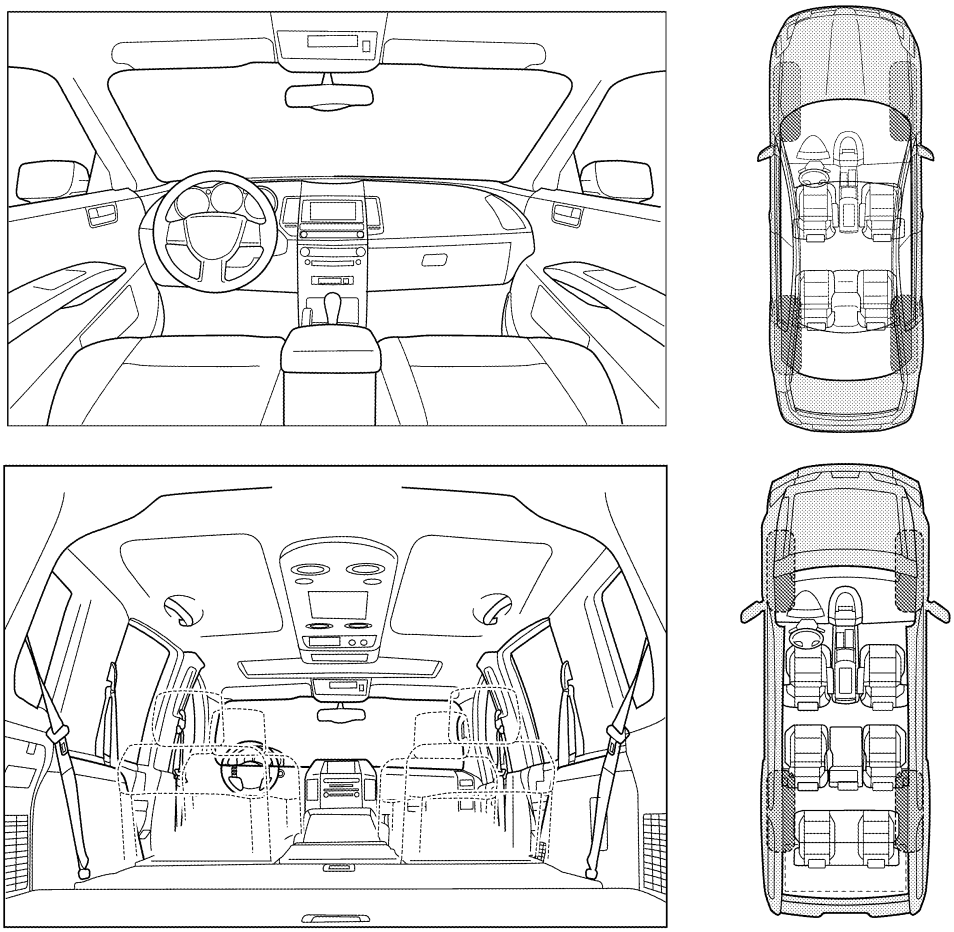

Continue to page 2 of the worksheet and briefly describe the location of the noise or rattle. In addition, please indicate the conditions which are present when the noise occurs.

-1-

LAIA0072E

SQUEAK & RATTLE DIAGNOSTIC WORKSHEET - page 2

Briefly describe the location where the noise occurs:

_____

_____

II. WHEN DOES IT OCCUR? (please check the boxes that apply)

- ☐ Anytime
- ☐ 1st time in the morning
- ☐ Only when it is cold outside
- ☐ Only when it is hot outside
- ☐ After sitting out in the rain
- ☐ When it is raining or wet
- ☐ Dry or dusty conditions
- ☐ Other:

III. WHEN DRIVING:

- ☐ Through driveways
- ☐ Over rough roads
- ☐ Over speed bumps
- ☐ Only about ____ mph
- ☐ On acceleration
- ☐ Coming to a stop
- ☐ On turns: left, right or either (circle)
- ☐ With passengers or cargo
- ☐ Other: _____
- ☐ After driving _____ miles or _____ minutes

IV. WHAT TYPE OF NOISE

- ☐ Squeak (like tennis shoes on a clean floor)
- ☐ Creak (like walking on an old wooden floor)
- ☐ Rattle (like shaking a baby rattle)
- ☐ Knock (like a knock at the door)
- ☐ Tick (like a clock second hand)
- ☐ Thump (heavy muffled knock noise)
- ☐ Buzz (like a bumble bee)

TO BE COMPLETED BY DEALERSHIP PERSONNEL

Test Drive Notes:

_____

_____

_____

	YES	NO	Initials of person performing
Vehicle test driven with customer	☐	☐	_____
- Noise verified on test drive	☐	☐	_____
- Noise source located and repaired	☐	☐	_____
- Follow up test drive performed to confirm repair	☐	☐	_____

VIN: _____ Customer Name _____

W.O.# _____ Date: _____

This form must be attached to Work Order

LAIA0071E

PRECAUTION

PRECAUTIONS

Precaution for Supplemental Restraint System (SRS) "AIR BAG" and "SEAT BELT PRE-TENSIONER"

INFOID:0000000010154604

The Supplemental Restraint System such as “AIR BAG” and “SEAT BELT PRE-TENSIONER”, used along with a front seat belt, helps to reduce the risk or severity of injury to the driver and front passenger for certain types of collision. This system includes seat belt switch inputs and dual stage front air bag modules. The SRS system uses the seat belt switches to determine the front air bag deployment, and may only deploy one front air bag, depending on the severity of a collision and whether the front occupants are belted or unbelted.
Information necessary to service the system safely is included in the SR and SB section of this Service Manual.

WARNING:

- **To avoid rendering the SRS inoperative, which could increase the risk of personal injury or death in the event of a collision which would result in air bag inflation, all maintenance must be performed by an authorized NISSAN/INFINITI dealer.**
- **Improper maintenance, including incorrect removal and installation of the SRS, can lead to personal injury caused by unintentional activation of the system. For removal of Spiral Cable and Air Bag Module, see the SR section.**
- **Do not use electrical test equipment on any circuit related to the SRS unless instructed to in this Service Manual. SRS wiring harnesses can be identified by yellow and/or orange harnesses or harness connectors.**

PRECAUTIONS WHEN USING POWER TOOLS (AIR OR ELECTRIC) AND HAMMERS

WARNING:

- **When working near the Airbag Diagnosis Sensor Unit or other Airbag System sensors with the Ignition ON or engine running, DO NOT use air or electric power tools or strike near the sensor(s) with a hammer. Heavy vibration could activate the sensor(s) and deploy the air bag(s), possibly causing serious injury.**
- **When using air or electric power tools or hammers, always switch the Ignition OFF, disconnect the battery and wait at least three minutes before performing any service.**

Precaution for Work

INFOID:0000000009482371

- When removing or disassembling each component, be careful not to damage or deform it. If a component may be subject to interference, be sure to protect it with a shop cloth.
- When removing (disengaging) components with a screwdriver or similar tool, be sure to wrap the component with a shop cloth or vinyl tape to protect it.
- Protect the removed parts with a shop cloth and prevent them from being dropped.
- Replace a deformed or damaged clip.
- If a part is specified as a non-reusable part, always replace it with a new one.
- Be sure to tighten bolts and nuts securely to the specified torque.
- After installation is complete, be sure to check that each part works properly.
- Follow the steps below to clean components:
- Water soluble dirt:
- Dip a soft cloth into lukewarm water, wring the water out of the cloth and wipe the dirty area.
- Then rub with a soft, dry cloth.
- Oily dirt:
- Dip a soft cloth into lukewarm water with mild detergent (concentration: within 2 to 3%) and wipe the dirty area.
- Then dip a cloth into fresh water, wring the water out of the cloth and wipe the detergent off.
- Then rub with a soft, dry cloth.
- Do not use organic solvent such as thinner, benzene, alcohol or gasoline.
- For genuine leather seats, use a genuine leather seat cleaner.

PREPARATION

PREPARATION

Special Service Tool

INFOID:0000000010134818

The actual shape of the tools may differ from those illustrated here.

Tool number (TechMate No.) Tool name		Description
— (J-39570) Chassis Ear	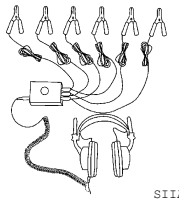 SIIA0993E	Locating the noise
— (J-50397) NISSAN Squeak and Rattle Kit	 ALJIA1232ZZ	Repairing the cause of noise
— (J-46534) Trim Tool Set	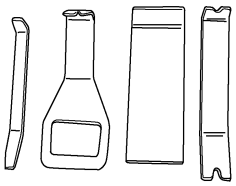 AWJIA0483ZZ	Removing trim components

Commercial Service Tools

INFOID:0000000010134819

Tool number (TechMate No.) Tool name		Description
— (J-39565) Engine Ear	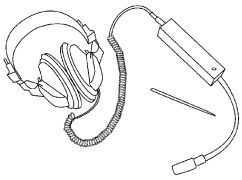 SIIA0995E	Locating the noise

REMOVAL AND INSTALLATION

SUNROOF SYSTEM

Adjustment

INFOID:0000000009482374

INSPECTION

Inspect then measure the gap and height difference between the glass lid assembly and roof panel; compare to specifications. Determine which procedure to follow based on results of measurements.

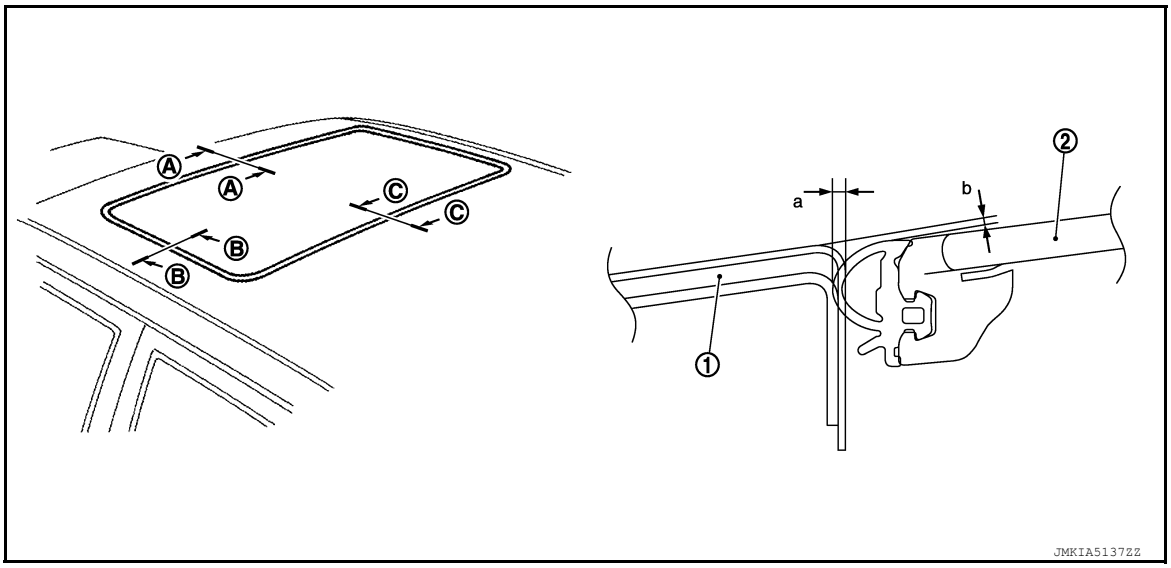

1. Roof panel
2. Glass lid assembly

Units: mm (in)

Portion	a (Gap)	b (Surface height difference)
A – A	1.4 ± 0.9 (0.055 ± 0.035)	–0.8 ± 1.5 (–0.031 ± 0.059)
B – B	1.0 ± 0.9 (0.039 ± 0.035)	–0.8 ± 1.5 (–0.031 ± 0.059)
C – C	1.4 ± 0.9 (0.055 ± 0.035)	–0.8 ± 1.5 (–0.031 ± 0.059)

GAP ADJUSTMENT

If a gap or minor height difference between glass lid assembly and roof panel is found, adjust in the following manner:

1. Open sunshade assembly and tilt glass lid assembly up.
2. Loosen glass lid assembly screws (two each on left and right sides), then tilt glass lid assembly down.
3. Manually adjust glass lid assembly from outside of vehicle so it is within specification "A-A" as shown.
4. After adjustment, tilt glass lid assembly up and tighten screws.
5. Tilt glass lid assembly up and down several times to check that it moves and seals properly.

HEIGHT DIFFERENCE ADJUSTMENT

If an excessive height difference between glass lid assembly and roof panel is found, adjust in the following manner:

1. Remove headlining. Refer to INT-25, "Removal and Installation".
2. Loosen sunroof unit nuts and sunroof bracket bolts.
3. Add shims until gap is within specification "A-A" as shown.
   NOTE:
   Temporarily snug nuts and bolts to prevent movement between each adjustment.
4. Tilt glass lid assembly up and down several times to check that it moves and seals properly.
5. Tighten sunroof unit nuts and sunroof bracket bolts.
   NOTE:

First tighten left front then right rear sunroof unit nuts to prevent uneven torque while tightening remaining sunroof bracket bolts.

6. Install headlining. Refer to INT-25, "Removal and Installation".

Removal and Installation

INFOID:0000000009482375

SEC. 736

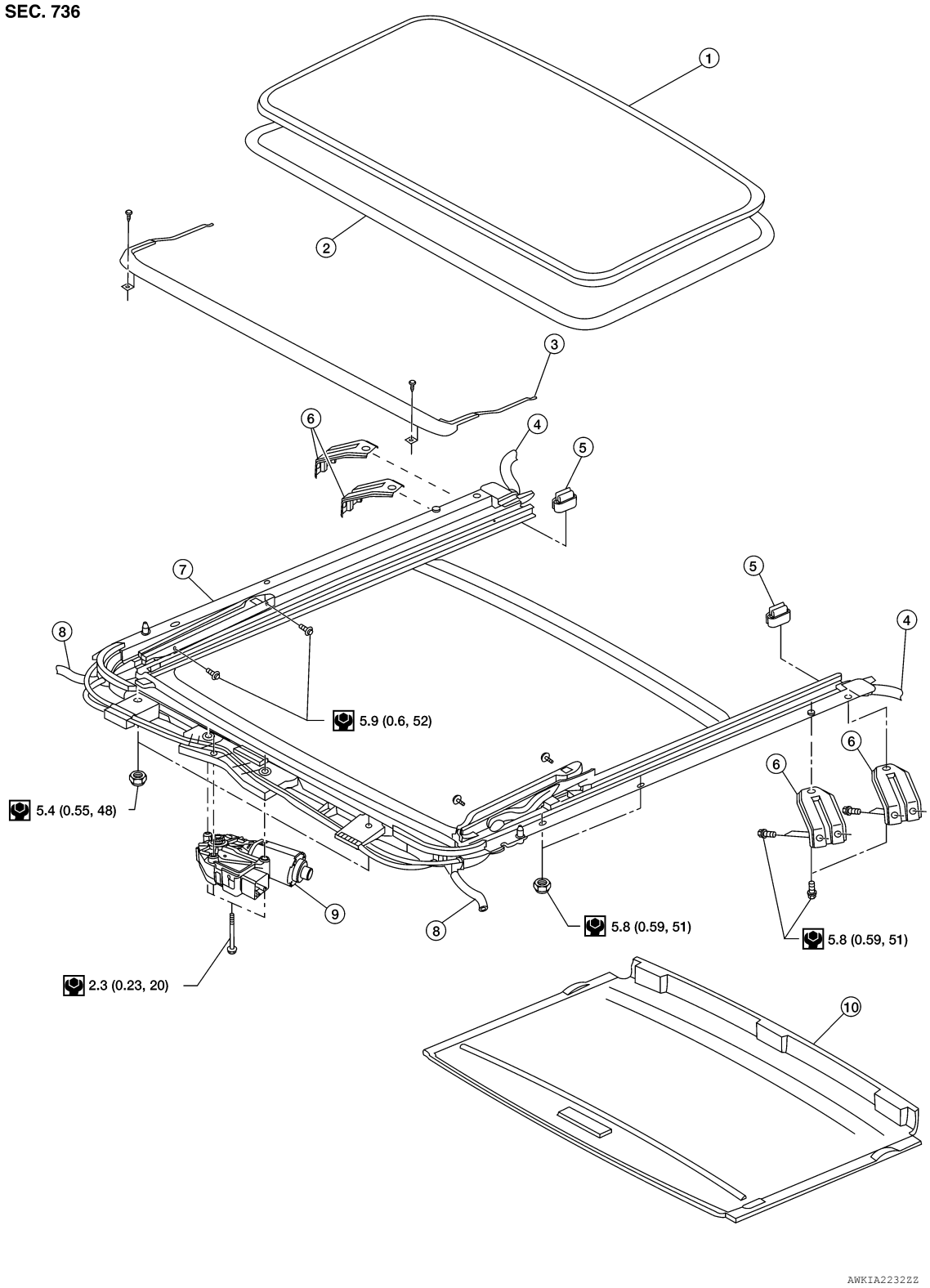

1. Glass lid assembly
2. Sunroof lid seal
3. Wind deflector
4. Rear drain hoses
5. Shade stoppers
6. Sunroof bracket
7. Sunroof frame assembly
8. Front drain hoses
9. Sunroof motor assembly
10. Sunshade assembly

CAUTION:
- **Always work with a helper.**
- **Handle glass lid assembly with care so not to cause damage.**
- **Before removal, fully close the glass lid assembly. Then, after removal, do not move the motor assembly.**
- **After installing the sunroof unit and glass lid assembly, check gap adjustment to ensure there is no malfunction.**

NOTE:
- After any adjustment, check sunroof operation and glass lid assembly alignment.
- For easier installation, mark each point before removal.

SUNROOF UNIT

Removal

CAUTION:
- **Always work with a helper.**
- **When taking sunroof unit out, use shop cloths to protect the seats and trim from damage.**
- **After installing the sunroof unit and glass lid, be sure to check gap adjustment to ensure there is no malfunction.**

1. Remove headlining. Refer to INT-25, "Removal and Installation".
2. Remove the glass lid. Refer to GLASS LID REMOVAL AND INSTALLATION procedure in this section.
3. Disconnect sunroof motor assembly, and remove the overhead console bracket (if equipped).
4. Disconnect the drain hoses.
5. Remove front sunroof unit nuts.
6. Remove the rear sunroof bracket bolts.
7. Remove the side bolts and the sunroof unit.
8. Remove the sunshade from the rear end of the sunroof unit. Refer to SUNSHADE REMOVAL AND INSTALLATION procedure in this section

Installation

1. Install the sunshade to the rear end of the sunroof unit. Refer to SUNSHADE REMOVAL AND INSTALLATION procedure in this section
2. Position the sunroof unit and install the side bolts.
3. Install the rear sunroof bracket bolts.
4. Install front sunroof unit nuts.
5. Connect the drain hoses.
6. Install the overhead console bracket (if equipped), then connect the sunroof motor assembly.
7. Install the glass lid. Refer to GLASS LID REMOVAL AND INSTALLATION procedure in this section.
8. Install headlining. Refer to INT-25, "Removal and Installation".

GLASS LID ASSEMBLY

Removal

1. Open sunshade.
2. Ensure glass lid is closed.
3. Remove the screws securing glass lid assembly to the sunroof unit.
4. Remove the glass lid.

Installation

1. Position glass lid assembly to sunroof unit.

2. Install the glass lid screws. (First tighten left front bolt, then tighten right rear bolt on glass lid to prevent lid from moving while tightening other bolts.)
3. Adjust the glass lid if necessary. Refer to RF-48, "Adjustment".

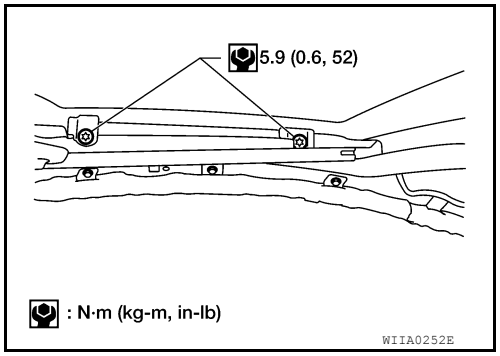

SUNROOF LID SEAL

Removal

1. Remove glass lid assembly. Refer to GLASS LID ASSEMBLY REMOVAL AND INSTALLATION procedure in this section.
2. Inspect rubber edge of glass lid.
   NOTE:
   If rubber edge is deformed or damaged, entire glass lid must be replaced.
3. Remove sunroof lid seal from the rubber edge of glass lid by pulling it outward.

Installation

1. Inspect and clean the ditch groove of the rubber edge removing any dirt or debris.
2. Stretch sunroof lid seal around glass lid and push the tongue edge into the ditch groove.
   NOTE:
   If needed, very light taps with a rubber hammer can be used to press the seal into place.
3. Install glass lid into sunroof unit. Refer to GLASS LID REMOVAL AND INSTALLATION procedure in this section.

WIND DEFLECTOR

Removal

1. Open the sunroof.
2. Remove screws from the left, center, and right side wind deflector holders.
3. Remove the wind deflector from the sunroof unit.

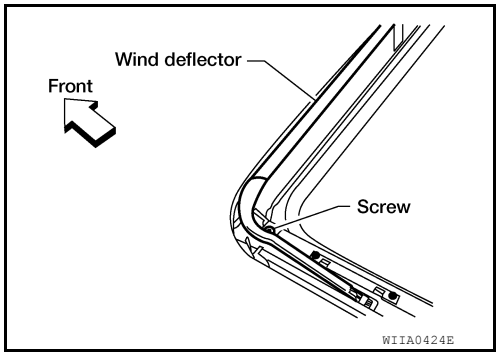

Installation

Installation is in the reverse order of removal.

SUNSHADE ASSEMBLY

Removal

1. Remove the sunroof unit. Refer to SUNROOF UNIT REMOVAL AND INSTALLATION procedure in this section.

2. Remove the sunshade stoppers (two points) from the rear end of the sunroof unit.
3. Remove the sunshade from the rear end of the sunroof unit.

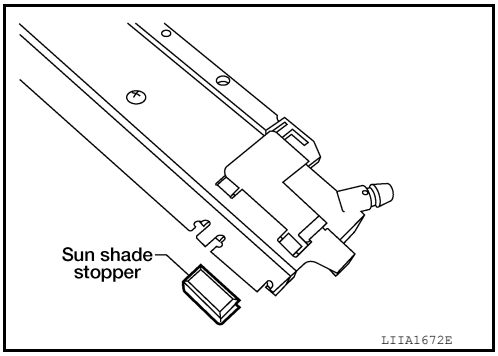

Installation
Installation is in the reverse order of removal.

SUNROOF MOTOR ASSEMBLY

Removal
CAUTION:
- **When removing the sunroof motor, be sure that the sunroof is in the fully closed position.**
- **Do not run the removed motor as a single unit.**

1. Position the sunroof unit in the fully closed position.
2. Remove the roof console assembly. Refer to INT-25, "Removal and Installation".
3. Disconnect the harness connector from the sunroof motor assembly.
4. Remove the mounting screws and the sunroof motor assembly.

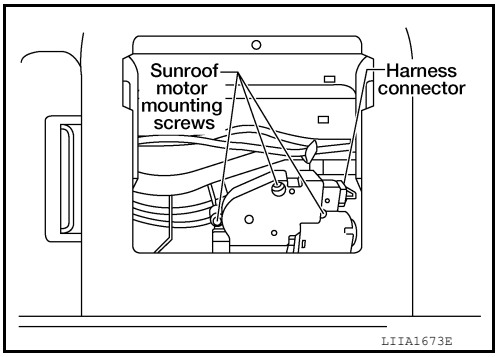

Installation
CAUTION:
Before installing the sunroof motor assembly, be sure to place the link and wire assembly in the symmetrical and fully closed position.

1. Move the sunroof motor assembly laterally little by little so that the gear is completely engaged into the wire on the sunroof unit and the mounting surface becomes parallel. Then secure the motor with bolts.
2. Connect the harness connector to the sunroof motor assembly.

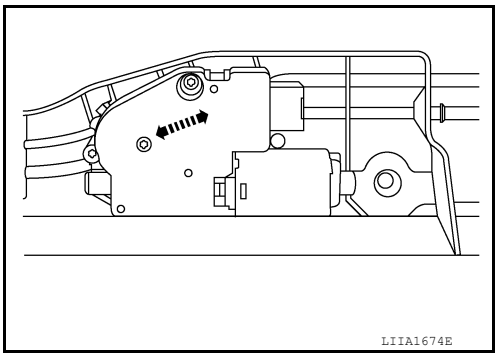

3. Install the roof console assembly. Refer to INT-25, "Removal and Installation".
4. Reset the sunroof motor memory. Refer to RF-5, "ADDITIONAL SERVICE WHEN REPLACING CONTROL UNIT : Special Repair Requirement".

DRAIN HOSES

Removal

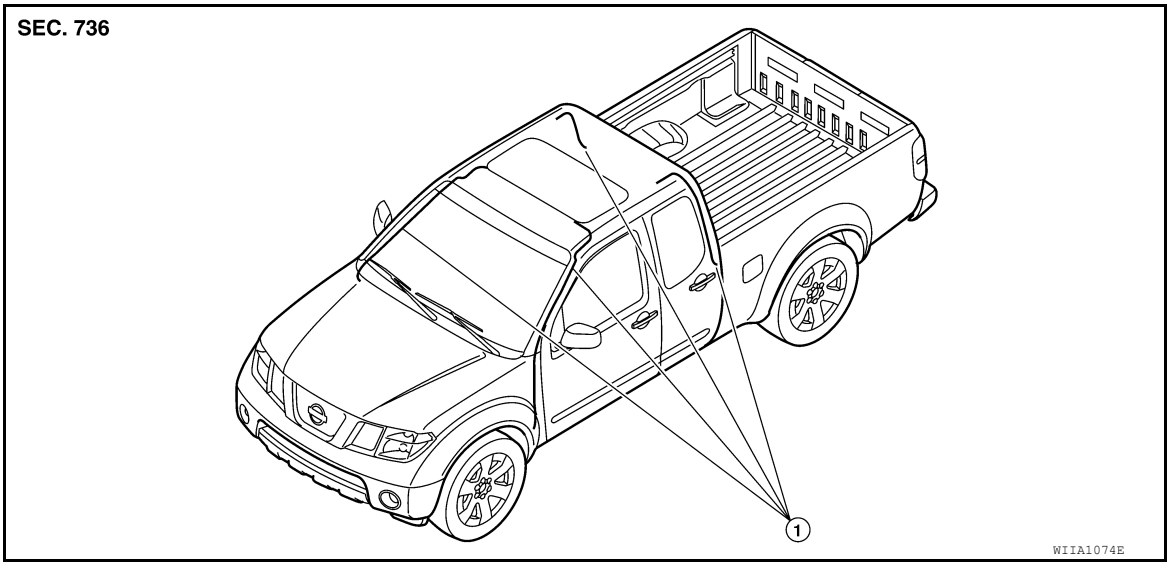

1. Drain hose

1. Remove the headlining. Refer to INT-25, "Removal and Installation".

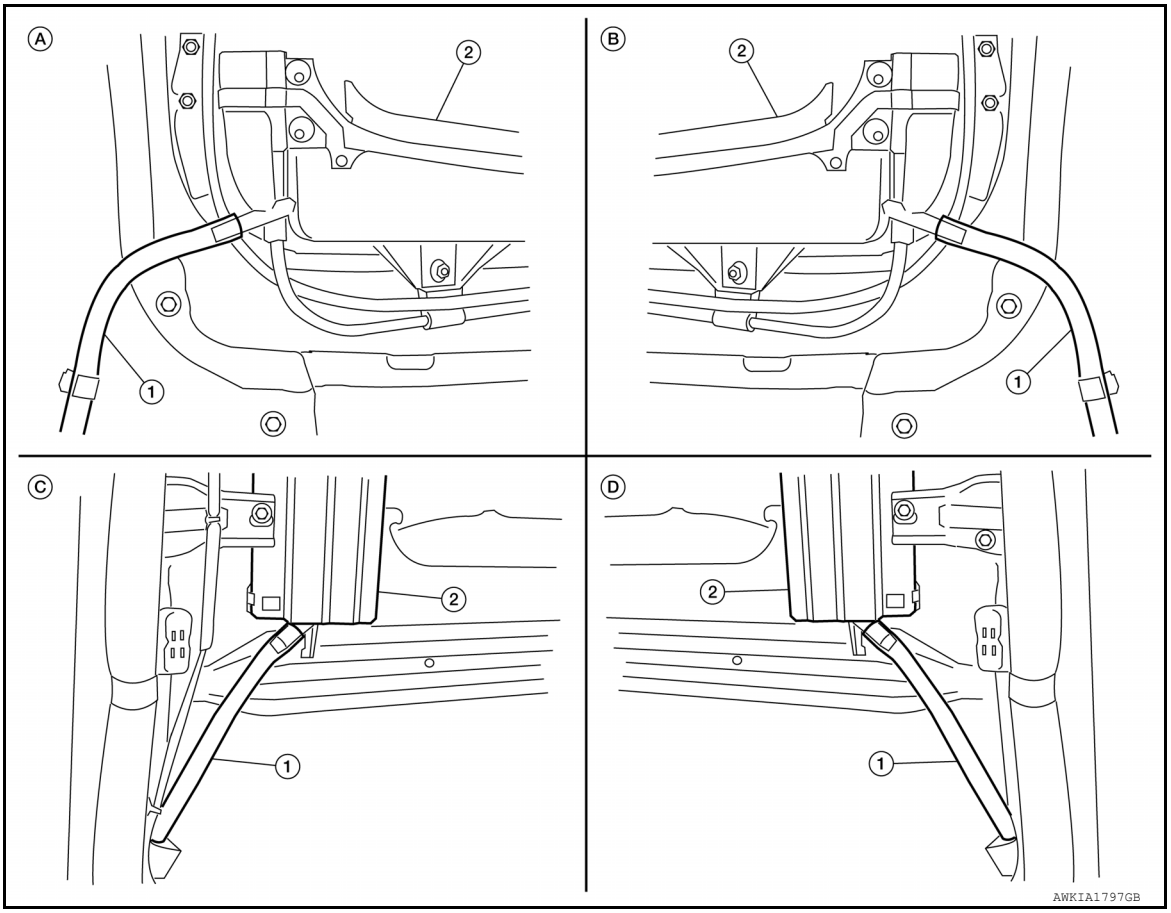

1.	Drain hose	2.	Sunroof unit	A.	Front (LH)
B.	Front (RH)	C.	Rear (LH)	D.	Rear (RH)

2. Visually check the drain hoses for proper connections, damage or deterioration.
3. Remove each drain hose and check visually for damage, cracks or deterioration.
4. Pour water through the drain hose to check for damage.

- If any damage is found, replace the drain hose.

Installation
Installation is in the reverse order of removal.

WEATHERSTRIP

Visually check weatherstrip for any damage, deterioration, or flattening.

- In the case of wind or water leakage around glass lid area, close glass lid and pour water around it to find the damaged or gaped portion.
- If any damage is found, inspect and repair the body sealing surface, replace sunroof lid seal, or replace glass lid assembly. Refer to GLASS LID in this section.

CAUTION:
Do not remove weatherstrip from glass lid.

LINK AND WIRE ASSEMBLY

NOTE:
Before replacing any suspect part, be sure it is the source of the noise.

1. Visually check to determine if a sufficient amount of petroleum jelly has been applied to the wire or rail groove. If not, add petroleum jelly as required.
2. Check wire for any damage or deterioration. If any damage is found, remove rear guide, then replace wire.