Table of Contents

E60 Voltage Supply and Bus Systems

Subject **Page**

Voltage Supply and Bus Systems 4
Voltage Supply 4
System Components 5
Ground Points 5
Battery 6
Battery Service Information 6
Battery Cable 6

Intelligent Battery Sensor 6
Mechanical Section 7
IBS Measuring Ranges 8
Electronic Evaluation Module 8
IBS Hardware 9
IBS Software 9
IBS Charge Management 10
Closed-Circuit Monitoring 10
IBS Wake-up 11
Servicing the IBS 11
IBS Diagnosis 11
Voltage Measurement 12
Current Measurement 12
Terminal 15 Wake-up Signal Faults 12
SoC/SoH 12
State of Charge 12
State of Health 12

30g and MPM System Schematic 14

Terminal 30g Relay 15
30g Switch On Conditions 16
30g Switch Off Conditions 16

cardiagn.com

Subject **Page**

Micro-Power Module 16
Normal Mode 18
Sleep Mode 19
Service Information for MPM 19

Alternator 21

Digital Motor Electronics 21
Variable Battery Charging Voltage 22
Idle Speed Boost 22
Reducing Peak Loads 22
Electric Load Cutout 22
Data Transfer to the IBS 23
Closed-Circuit Current Diagnosis 23
Terminal 30g Relay 23

Bus Systems 25
K-CAN 25
K-CAN Changes 25
MOST 25
Most Changes 25
byteflight 25
byteflight Changes 25
byteflight Comparison 26
PT-CAN 26
Bus system parameters 26

Subbus Systems 27
LIN-Bus 27
LIN-Bus Main Controller 27
F-CAN 28
BSD (Bit-Serial Data Interface) 28
Sub-bus System Parameters 29
MOST Connector Junction 29

cardiagn.com

Model: E60

Production: Start of Production MY 2004

Voltage Supply and Bus Systems

Objectives:

After completion of this module you will be able to:

- Understand IBS operation.
- Explain Power Management.
- Recognize the different bus systems.
- Diagnose Voltage Supply Faults.

cardiagn.com

Voltage Supply and Bus Systems

Voltage Supply

The voltage supply system on the E60 is similar to that of the E65. The E60, however, is ***Not*** fitted with a power module, therefore there is no main power switch. Supply voltage is monitored during both driving and parked conditions to reduce the possibility of unwanted closed current draws and insure that adequate voltage is available as needed.

The "State of Charge" (SoC) and the "State of Health" (SoH) of the battery are determined continuously with the E60 power management system.

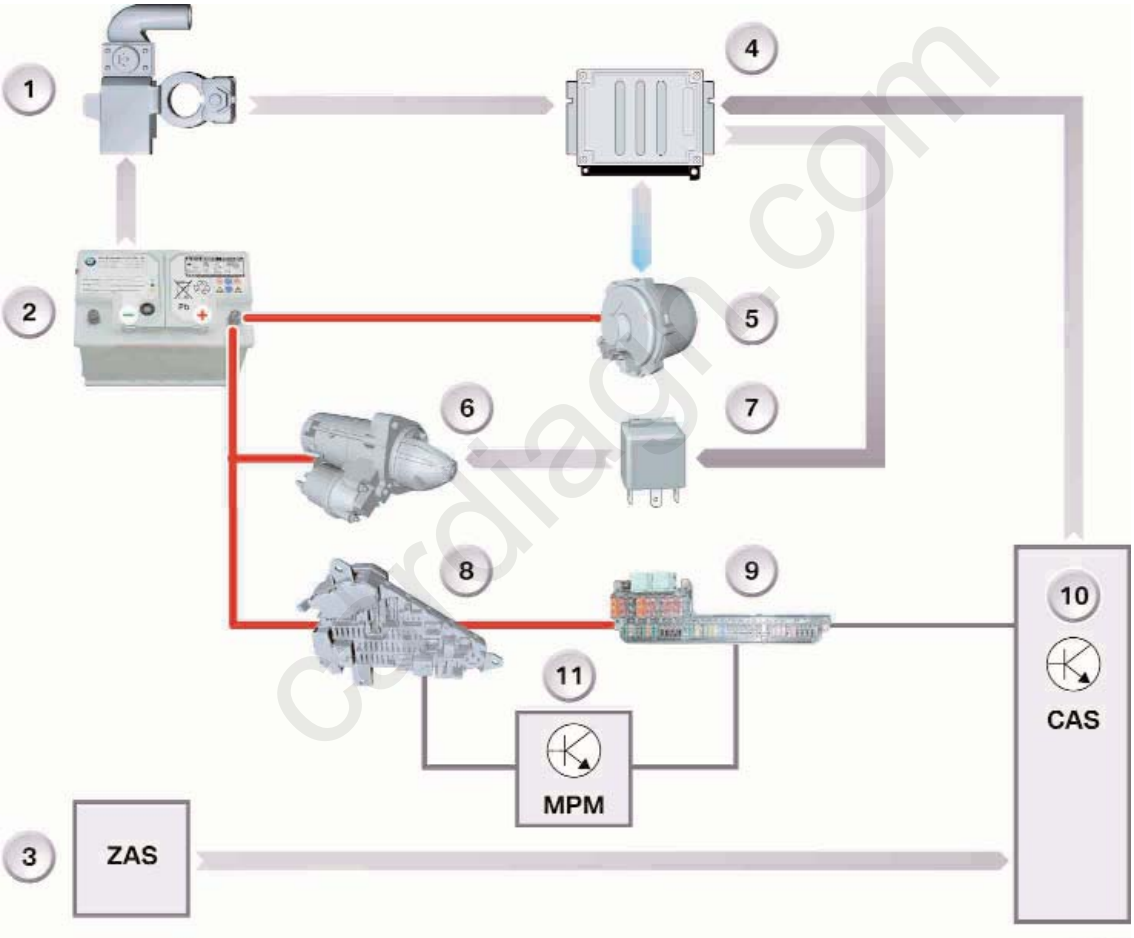

Typical Voltage Supply for 6 Cylinder Vehicles

1. Intelligent Battery Sensor (IBS)
2. Battery
3. Ignition/Starter Switch (ZAS)
4. DME
5. Alternator
6. Starter
7. Starter Relay
8. Rear Power Distribution Box w/ Terminal 30g Relay
9. Front Power Distribution Box
10. Car-access System (CAS)
11. Micro-Power Module (MPM)

System Components

The power supply system consists of the following components:

- Vehicle Ground Points
- Battery
- Battery Cable
- Intelligent Battery Sensor with ground Lead (IBS)
- Terminal 30g Relay
- Micro-Power Module (MPM)
- DME
- Car Access System (CAS)

Ground Points

The ground point (GRAV) improves the electro-magnetic compatibility (EMC) of the vehicle. Ageing connections between the front end and the remaining car body do not affect the EMC. The contact resistances between the front end and the remaining car body are bridged by means of the ground lead.

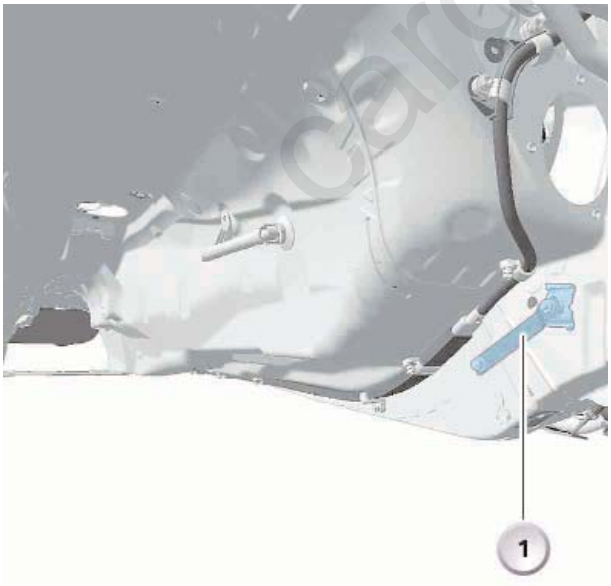

cardiagn.com

Battery

The battery size in the E60 depends on the engine and equipment configuration.

Battery Service Information

The battery size is coded in the DME. Replacement batteries must be the same capacity rating as the original Battery.

Particular attention must be paid to the cables and the IBS when replacing a battery. Irreparable damage may occur if the cables and IBS are subjected to high mechanical stress and strain. Refer to service information for the IBS.

As on the E65, the power management system is to be initialized by means of the diagnosis job "Control_battery_replacement_register." Follow the repair instructions.

Battery Cable

The battery cable is installed on the underside of the vehicle. The battery cable is monitored by the ASE system as in the E85. Sensor leads are routed from the battery cable to the left and right B Pillar satellites.
Battery cable size is dependent on engine. Most US vehicles use 120mm^2 aluminum Ribbon cable.

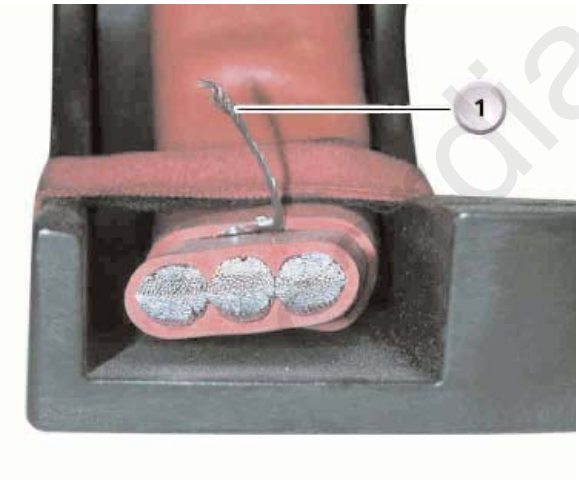

Cross Section Battery Cable w/ Sensor lead

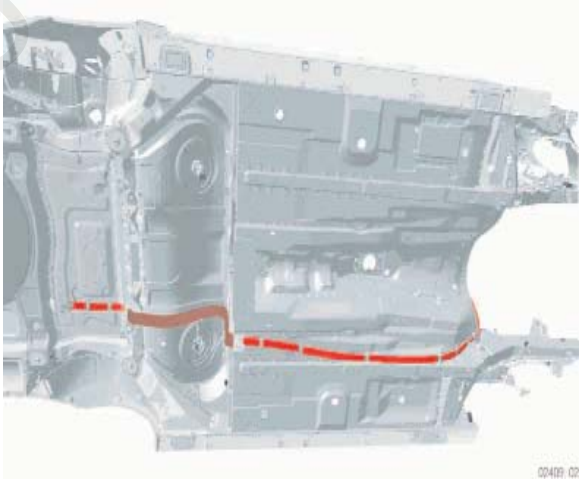

Under car Routing of Ribbon Battery Cable

Intelligent Battery Sensor

The IBS (1) is a mechatronic intelligent battery sensor with its own microcontroller. It constantly measures the following:

- Battery terminal voltage
- Battery charge/discharge current
- Battery acid temperature

Installed directly at the negative battery terminal, care should be used when removing and installing the negative battery cable.

The IBS consists of 3 functional elements:
- Mechanical section,
- Hardware
- Software

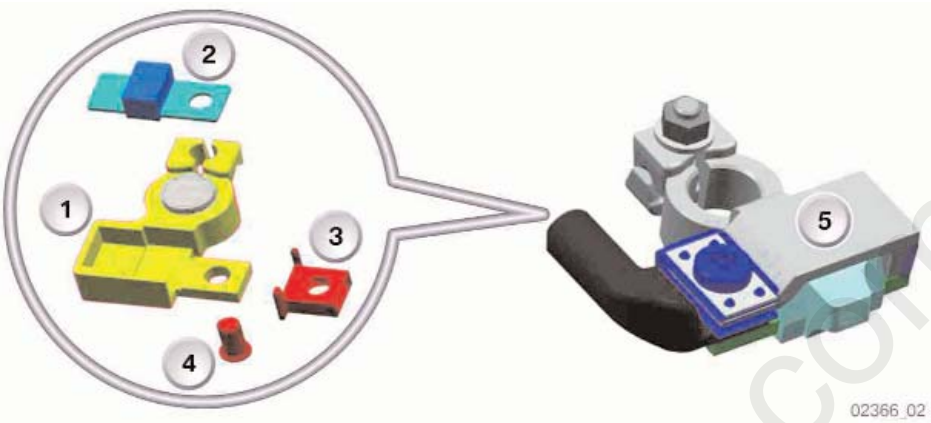

Exploded View of IBS

1. Pole Terminal
2. Shunt
3. Spacer
4. Screw
5. IBS

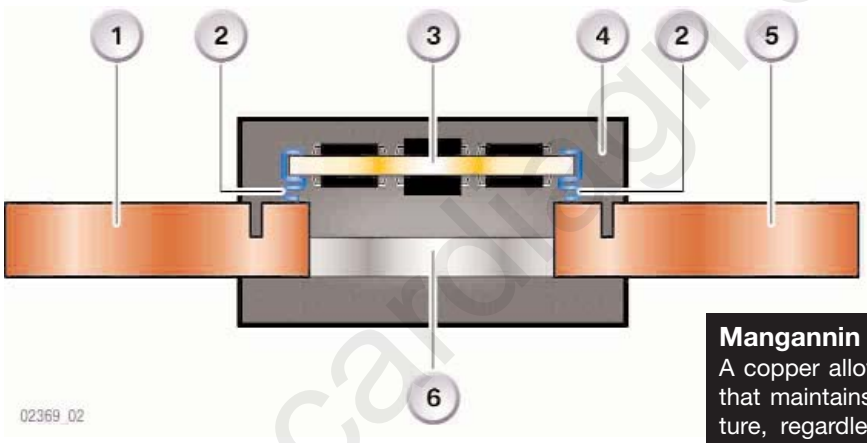

IBS Hardware

1. Copper
2. Gull Wings
3. PC Board w/evaluator
4. Injection Molding
5. Copper
6. Mangannin

Mangannin
A copper alloy resistor of low resistance value, that maintains an extremely constant temperature, regardless of current flow. Used as the shunt resistor to measure current flow by the evaluation electronics of the IBS.

cardiagn.com

Mechanical Section

The mechanical part of the IBS consists of the battery terminal for the negative pole with ground cable. Tasks of the mechanical section of the IBS:

- Providing electrical contact of the car body with the negative pole of the battery
- Acceptance of the sensor element for current measurement
- Acceptance of the hardware
- Providing sufficient thermal contact between the temperature sensor of the hardware and the negative pole of the battery
- Providing protection for the sensitive electronic components
- The battery terminal is the ground connection for IBS

IBS Measuring Ranges

- Voltage 6 V to 16.5 V
- Current -200 A to +200 A
- Closed circuit current 0 A to 10 A
- Starting current 0 A to 1000 A
- Temperature -40°C to 105°C

Electronic Evaluation Module

The electronic evaluation module of the IBS continuously registers the measured data. The IBS uses these data to calculate the following battery indicators.

- Voltage
- Current
- Temperature

The IBS sends the calculated battery indicators to the DME via the BSD. The IBS calculates changes in battery SoC/SoH based on information received from the DME on the SoC of the battery during the period of time between engine "OFF" and deactivation of the DME relay. After the DME relay has been switched off, the IBS continues to constantly observe the SoC of the battery.

cardiagn.com

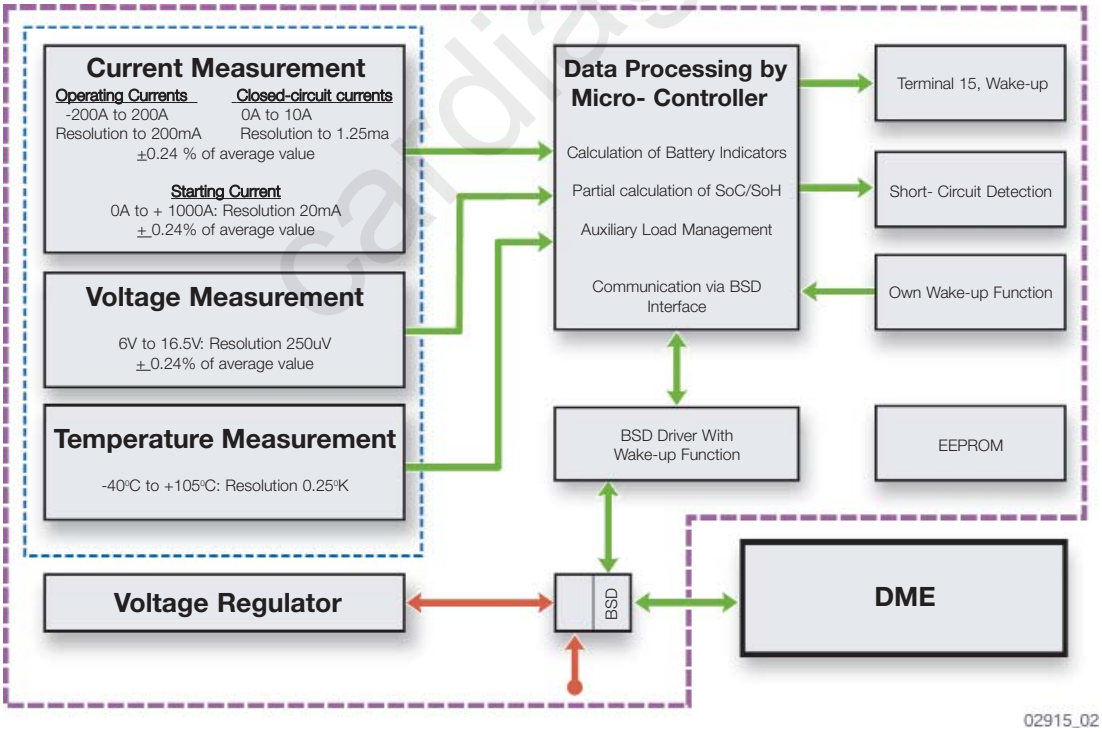

IBS Hardware

IBS Hardware consists of the following:

- Shunt for current measurement
- Temperature Sensor
- Multi-layer pc-board as the electronic circuit including the electronic components.

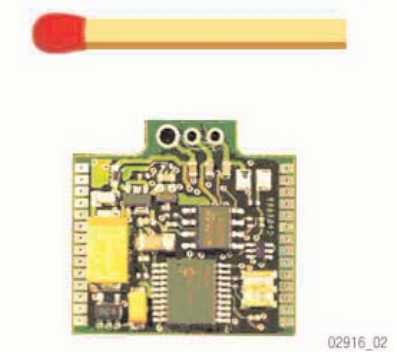

PC-board of IBS

IBS Software

The software in the PC-board of the IBS calculates State of Charge and State of Health of the battery and sends the information to the DME. Communication with the DME, which takes place via the BSD, allows the DME to obtain data constantly from the IBS during vehicle operation.

The following functions are integrated in the IBS:

- Continuous measurement of current, voltage and temperature of the battery under all vehicle operating conditions
- Calculation of battery indicators as basis for SoC and SoH
- Monitoring of battery charge/discharge current
- Monitoring of SoC and notification to DME of critical SoC
- Partial calculation of SoH Based on starter draw
- Closed-circuit current monitoring in vehicle
- Data transfer to DME
- Self-diagnosis
- Self wake-up capability during sleep mode

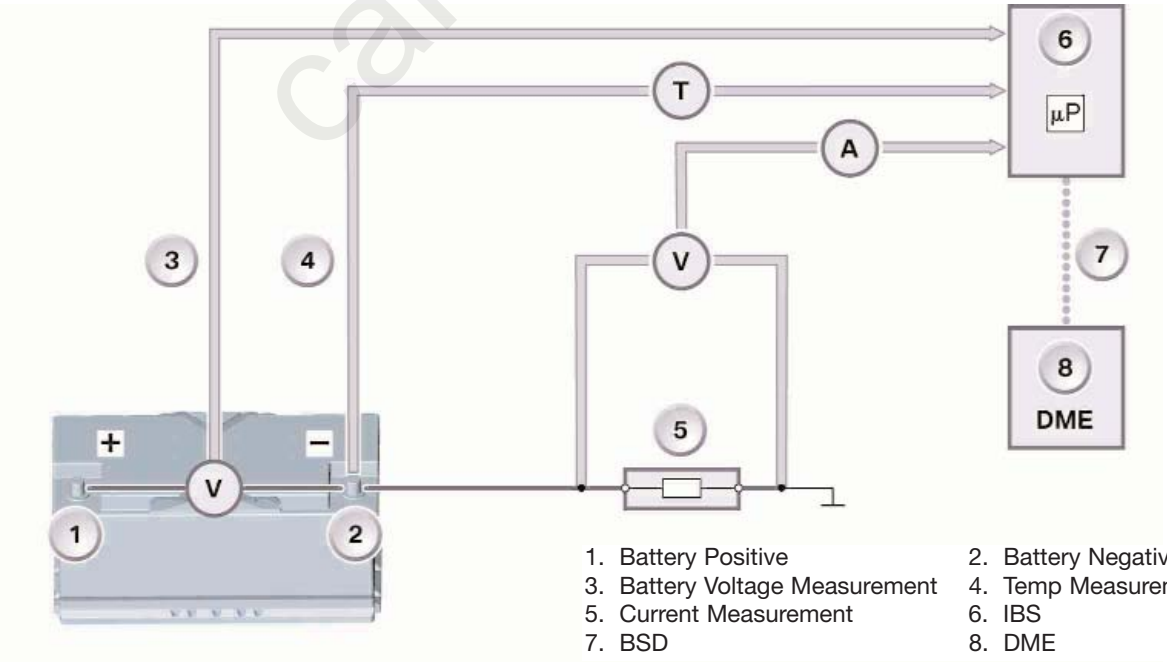

cardiagn.com

IBS Charge Management

The IBS continuously manages the charge status of the battery when the key is off. The current SoC is stored in the IBS every 2 hours.
When the IBS receives the terminal 15 “wake up signal” the DME is updated with the current values of the battery indicators.

Closed-Circuit Monitoring

When the vehicle is off the IBS is programmed to wake up every 40 s so that it can update the measured values (Voltage, current, temperature). The measuring time of the IBS is approx. 50 ms.
The DME reads the history of the measurements on start-up. An entry is made in the fault code memory of the DME if a closed-circuit current draw was present.

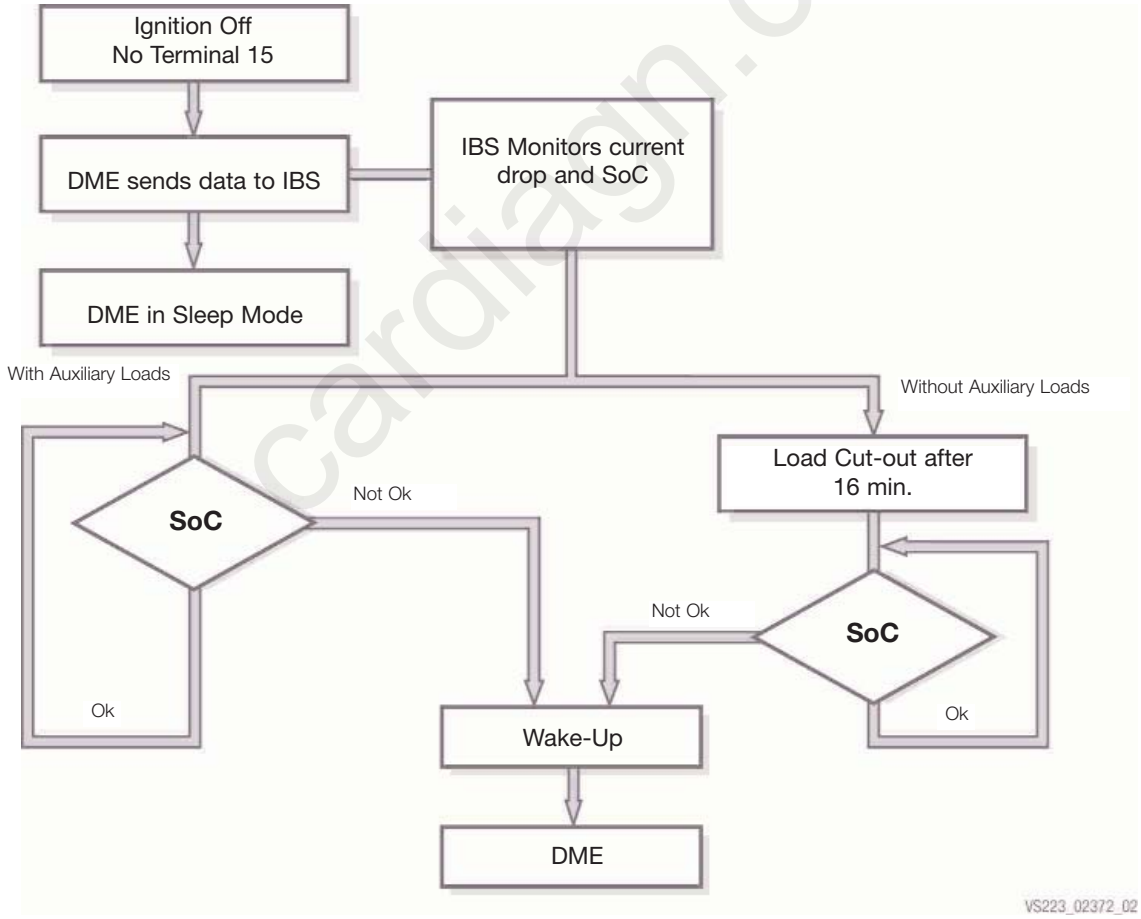

cardiagn.com

IBS Wake-up

When the key is switched off, before the DME enters sleep mode, the DME informs the IBS of the current SoC of the battery. The IBS monitors the SoC and when it drops below the programmed threshold, a wake-up signal is sent to the DME via the BSD. The DME wakes up, obtains information on the current SoC of the battery from the IBS and requests the auxiliary electrical loads to switch off.
After one wake-up sequence the IBS is prohibited from waking the vehicle again during this key off cycle. The vehicle subsequently reassumes sleep mode.

Servicing the IBS

The IBS is very sensitive to mechanical stress and strain. It is serviced as a complete unit with the ground cable. The ground cable also serves as a heat dissipater for the IBS.

Particular attention should be paid to the following points in service:

- Do not make any additional connections at the negative terminal of the battery
- Do not modify the ground cable
- Do not make any connections between the IBS and the sensor screw
- Do not use force when disconnecting the ground terminal from the battery
- Do not pull at the ground cable
- Do not use the IBS as a pivot point to lever off the ground terminal
- Do not use the connections of the IBS as a lever
- Use only a torque wrench as described in the repair manual
- Do not release or tighten the sensor screw

A fault code is stored in the DME when the IBS is defective. The DME adopts a substitute value and assumes IBS emergency mode. IBS emergency mode boosts the idle speed in order to sufficiently charge the battery.

Note:
The software in the DME and that of the IBS must match. To ensure this requirement it may be necessary to replace the IBS in connection with a software update.

IBS Diagnosis

The IBS features a fault code memory that is read out by the DME. Self diagnosis checks the voltage, current, temperature measurement, terminal 15 wake up as well as system errors in the IBS.
Direct diagnosis of the IBS is not possible, it must be diagnosed through the DME.

cardiagn.com

Voltage Measurement

If the IBS is shorted to ground, a DME fault code will display “Voltage Fault DME ON”. The IBS will be unable to wake up the DME.

If the IBS is shorted to B+, a DME fault code will display “Voltage fault, DME not ON” and no charging current. The vehicle will NOT enter sleep mode.

Current Measurement

Current measurement is a very dynamic process, indicated by the measuring range of mA to kA.
The fault code “Current Fault” is entered in fault memory when an implausible value is determined during the plausibility check of the various measuring ranges of the IBS.

Terminal 15 Wake-up Signal Faults

The IBS recognizes wake-up line faults. The IBS can detect a wake-up line error under the following conditions:

- DME “ON”
- Terminal 15 “ON” (voltage high at IBS)
- Terminal 15 running via BSD

If Terminal 15 at the IBS and Terminal 15 via the BSD are not equal, a fault is indicated in the BSD line or an IBS Fault.

The IBS fault may be caused by:

- Terminal 15 Driver in the IBS has a short to ground
- Terminal 15 Driver in the IBS has a short to B+ or is defective.

SoC/SoH

State of Charge

SoC is a calculated condition showing the current charge in the battery. The SoC calculations are performed by the DME. SoC is used during key off periods to insure the battery maintains a sufficient charge to start the engine at least one more time.

State of Health

SoH tracks the history of the battery in the vehicle. Charge/discharge cycles and times are monitored. SoH helps the DME determine the proper charging rates and anticipated battery life.
The IBS detects vehicle start based on current draw in excess of 200A. The engine running signal is made available by the DME via the BSD. Internal resistance of the battery is calculated from the current and voltage dip. These indicators are forwarded to the DME. From this data, the DME the state of health (SoH) of the battery.

cardiagn.com

Workshop Exercise - IBS

Vehicle has been brought into shop for dead battery. A closed current draw exceeding limits was found and repaired. However a fault is stored in the DME regarding the IBS.
The fault is

1. *Interrogate the DME for Faults. What are the faults found?* _____

   _____

2. *How does the IBS communicate with the DME?* _____

3. *Perform a pin out of the IBS terminals with the key off and with the key on.*

	Pin 1	Pin 3
Key ON		
Key OFF		

4. *Perform the test plan B1362 as outlined in the DISplus.* _____

5. *Scope the signal on the line coming from IBS and the line coming from DME.*

   _____

   Why do you get these voltage readings? _____

6. *Monitor voltage (or scope pattern of BSD). Observe BSD entering sleep mode. How long did it take for the BSD line to go to sleep?* _____
   What is the BSD voltage during sleep mode? _____

7. *Lower the terminal 30 input to the IBS through the stimulation mode of the DISplus. What happens to the BSD?* _____

8. *Why is it important that replacement batteries be the same type and capacity as the factory installed battery?* _____

9. *What measurements are performed directly by the IBS?* _____

10. *Which control unit calculates the SoC/SoH of the battery while the engine is running?*

    _____

11. *How often is the battery conditioned monitored while the vehicle is "OFF"?* _____

12. *How does the IBS signal the DME of significant changes in SoC during "OFF" time?* _____

cardiagn.com

30g and MPM System Schematic

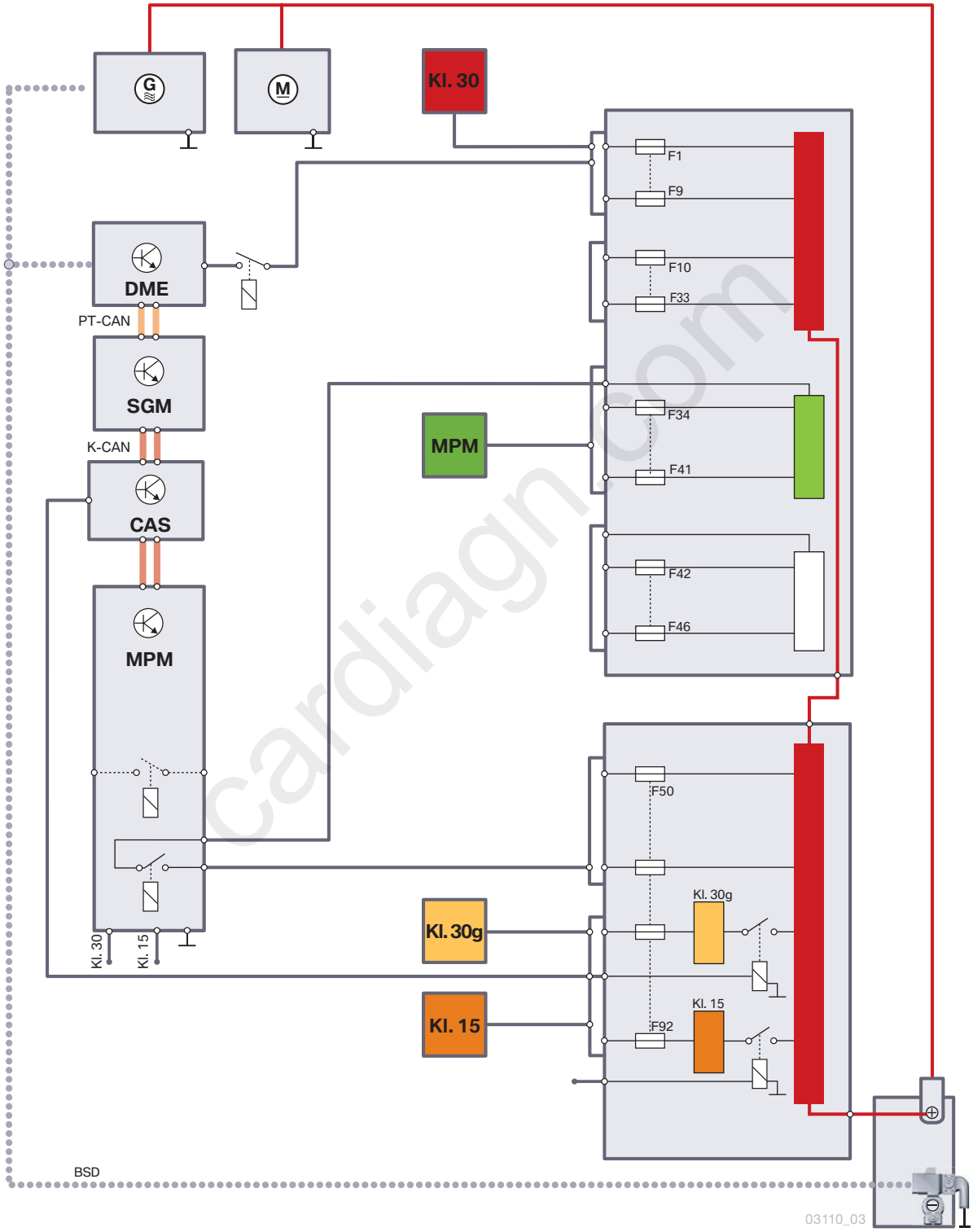

cardiagn.com

Terminal 30g Relay

The Terminal 30g Relay prevents increased closed-circuit current consumption by switching off electric loads.

The switch-off procedure disconnects various electric loads in a defined manner from the vehicle electrical system. This happens approx. 60 min after terminal R "OFF." The deactivated electric loads are activated again together with terminal 30g "ON."

The terminal 30g relay is actuated by the car access system.

Power to the following control units is managed by the terminal 30g relay:

- Center console switch center
- Rain and low beam sensor
- Controller
- Central information display
- Slide/tilt sunroof
- Satellite radio
- TOP HiFi amplifier
- Telephone
- Head-up display
- Active cruise control
- Electronic transmission control/SMG
- Dynamic stability control
- Adaptive cornering light

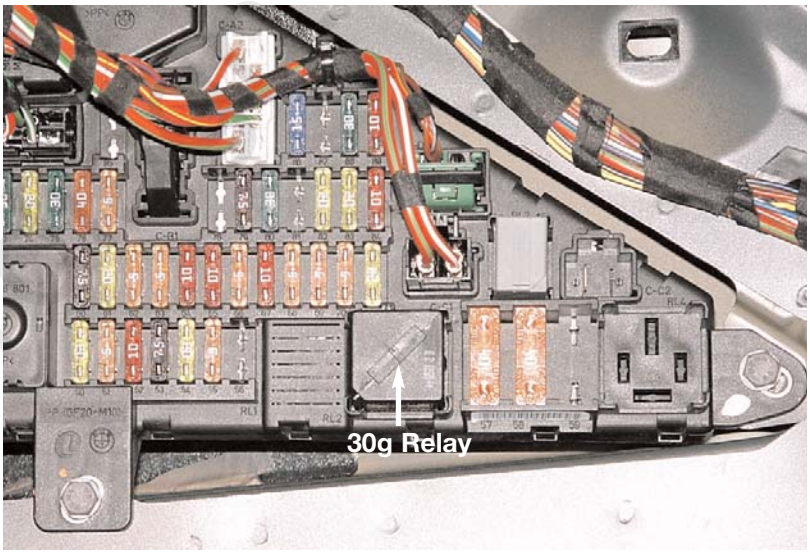

Terminal 30g Relay Location

30g Switch On Conditions

The switch-on conditions for terminal 30g relay are as follows:

- Unlock vehicle or
- Terminal R or
- Status change of door contacts or of trunk contact or
- Telephone wake-up line for telematic services or
- Service applications

30g Switch Off Conditions

The switch-off conditions for terminal 30g relay are as follows:

- 60 min after terminal R "OFF" or
- Service applications
- Power Management Switch off

Notes:

cardiagn.com

Workshop Exercise - Terminal 30g Relay

Vehicle is brought into the shop with a “No Start” condition.

1. *Verify the complaint.*

2. *Perform short test on vehicle.*

3. *What control modules where not interrogated during the short test?*

   _____

   _____

4. *What are the possible causes of this “No Start” condition?*

   _____

   _____

5. *Check the status of the Key Recognition, EWS Line release.*

   _____

6. *Activate starter position while observing status in the CAS. What is the status of the 50E and 50 L?*

   _____

   _____

7. *Print FB for the 30g Relay. Observe the modules which are supplied power via the relay.* _____

8. *Is there a module on the list which could cause the no start condition?*

   _____

9. *Repair fault, perform quick delete and now observe status of 50E and 50L.*

   _____

10. *How long after terminal R “OFF” is the terminal 30g relay switched off?*

    _____

11. *Terminal 30g relay is actuated by the* _____.

cardiagn.com

Micro-Power Module

In the same way as with terminal 30g, the micro-power module (MPM) facilitates defined deactivation of electric loads.
The MPM is installed in the spare wheel recess and operates in 3 modes, normal mode, sleep mode and service mode

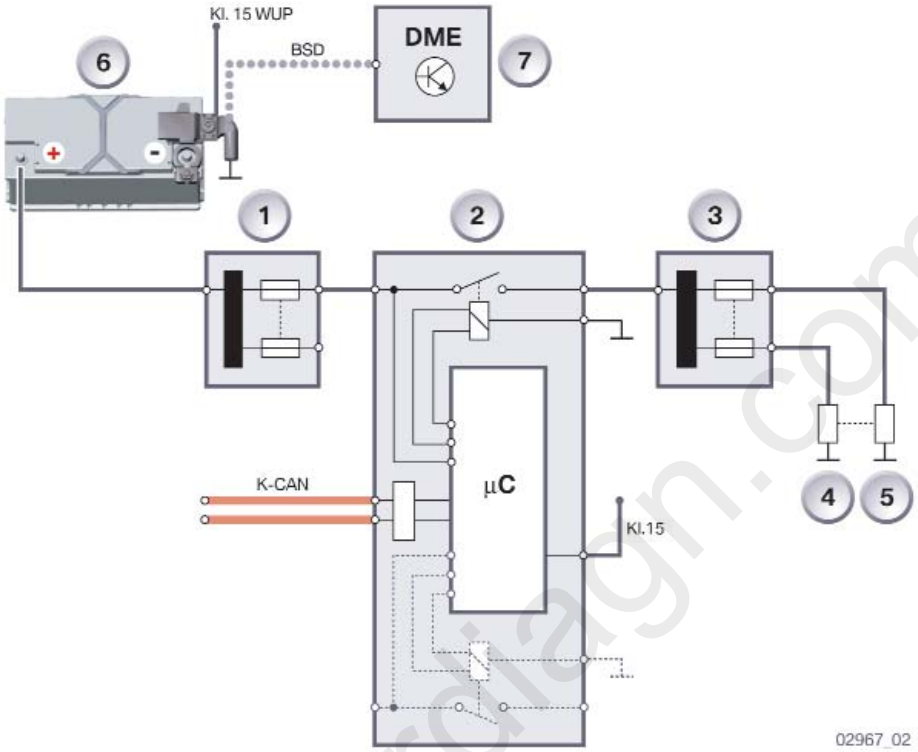

Block Diagram of MPM

1. Rear Power Distribution Box
2. MPM
3. Front Power Distribution Box
4. Electrical Load
5. Electrical Load
6. Battery
7. DME

K-CAN	Body CAN
Kl.15	Terminal 15
Kl.15 WUP	Terminal 15, Wake Up

Normal Mode

All functions of the MPM are available in normal mode.
The MPM switches on/off the voltage supply to the electric loads involved in communication. Loads are switched on and off only when a fault occurs during the vehicle rest period.
The MPM switches the voltage supply on and off in the following control units:

- Multi-audio system controller M-ASK
- Car communication computer CCC
- CD disc changer CDC
- DVD changer DVD

The supply voltage is switched on and off by means of a bistable (switchover type) relay.
The relay is set to "ON" when it leaves the factory. This type of relay has two positions, On and OFF. When ON voltage is passed from Fuse 57 through the MPM to the above consumers. When OFF, the connection to F57 is broken. This type of relay does not need power (coil energized) to maintain either switch position. Power is only needed to cause the relay to switch from ON to OFF or OFF to ON.

cardiagn.com

Switch on/off conditions for micro-power module

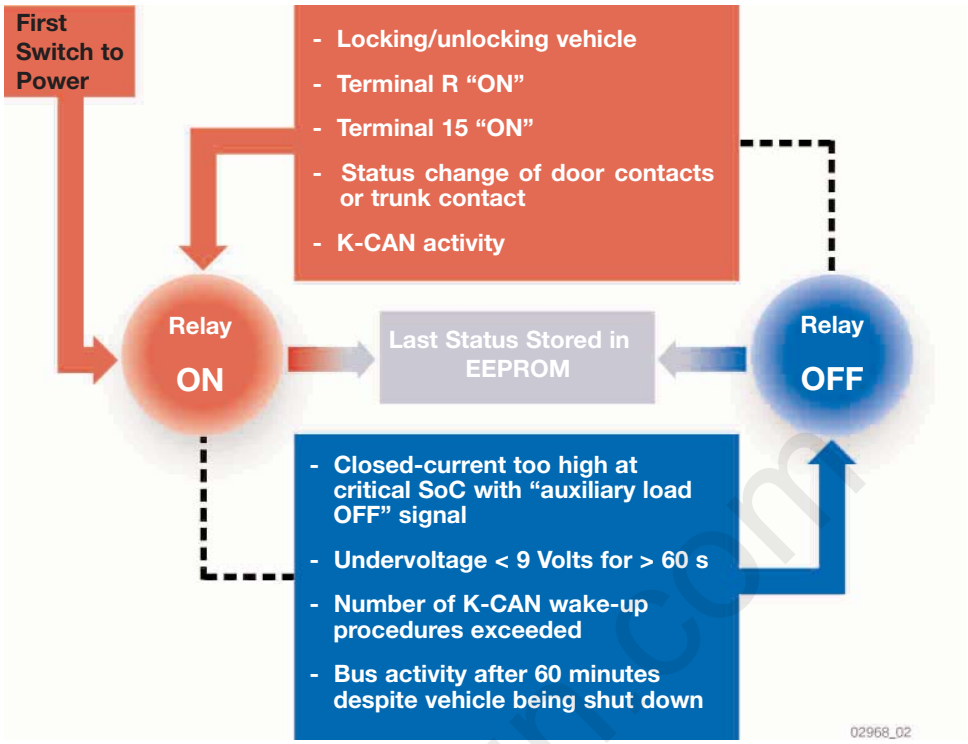

The MPM communicates with the vehicle through the K-CAN and is supplied power by both a KL 30 and a KL 15. If terminal 30 voltage is lost, operation continues with the voltage supplied by terminal 15, and a fault is registered.

Sleep Mode

The MPM assumes sleep mode approx.1 s after the K-CAN has gone into sleep mode. The current switching status of the relay is stored before the MPM assumes sleep mode.

The MPM is woken by the terminal 15 signal via the K-CAN or by activation of terminal 15. On waking, the switching status of the relay last stored is reestablished.

Service Information for MPM

A fault code is stored in the fault code memory when the MPM disconnects the electric loads from the vehicle electrical system. The following fault codes can be read out in diagnosis:

- Terminal 15 fault
- Deactivation with information on the switch-off condition

The information on the switch-off condition is stored in the info memory:

- Undervoltage
- Contact fault of relay contacts

Workshop Exercise - Micro Power Module

Vehicle is brought into shop with the radio not working.

1. *Verify the complaint.*

2. *Perform short test. Are there any faults stored which could be associated with this problem?* _____

   _____

3. *Which control modules did not respond during the short test?*

   _____

4. *Which bus or busses do these modules use for communication?* _____

5. *What are the pin numbers of the connectors at the TCU that supply power to the TCU?*

   _____

   Where does the power come from? _____

6. *What are the pin numbers of the M-ASK that provide K-Can communication?* _____

7. *If the M-ASK is not recognized during the short test would the OPPS tester be useful?*

   _____

8. *What fuse supplies power to the M-ASK ?* _____

9. *Is the fuse OK?* _____

10. *What is the voltage source of the fuse?* _____
    Print the ETM.

11. *Pin out all terminals of the MPM.*

12. *What should the scope pattern be on terminals 3 and 11?* _____

13. *Is communication possible with the MPM?* _____

14. *What information is available through Diagnosis Requests?* _____

15. *Is operation of the MPM possible through component activation?* _____

cardiagn.com

Alternator

Bosch and Valeo alternators are installed in the E60. The alternators are fitted depending on the type of engine and equipment configuration. They differ with regard to their rating of 140 A and 170 A and are aircooled.

Digital Motor Electronics

The power management software is contained in the DME. When the vehicle is at rest, the IBS is partially responsible for power management.
The tasks of the power management system include:

- Adaptation of the alternator charging voltage
- Idle speed boost for increasing the power output of the alternator
- Reduction of peak loads in the event of a shortfall in coverage provided by the vehicle electrical system
- Deactivation by means of bus messages of electric loads such telephone, on reaching the start capability limit of the vehicle
- Closed-circuit current diagnosis

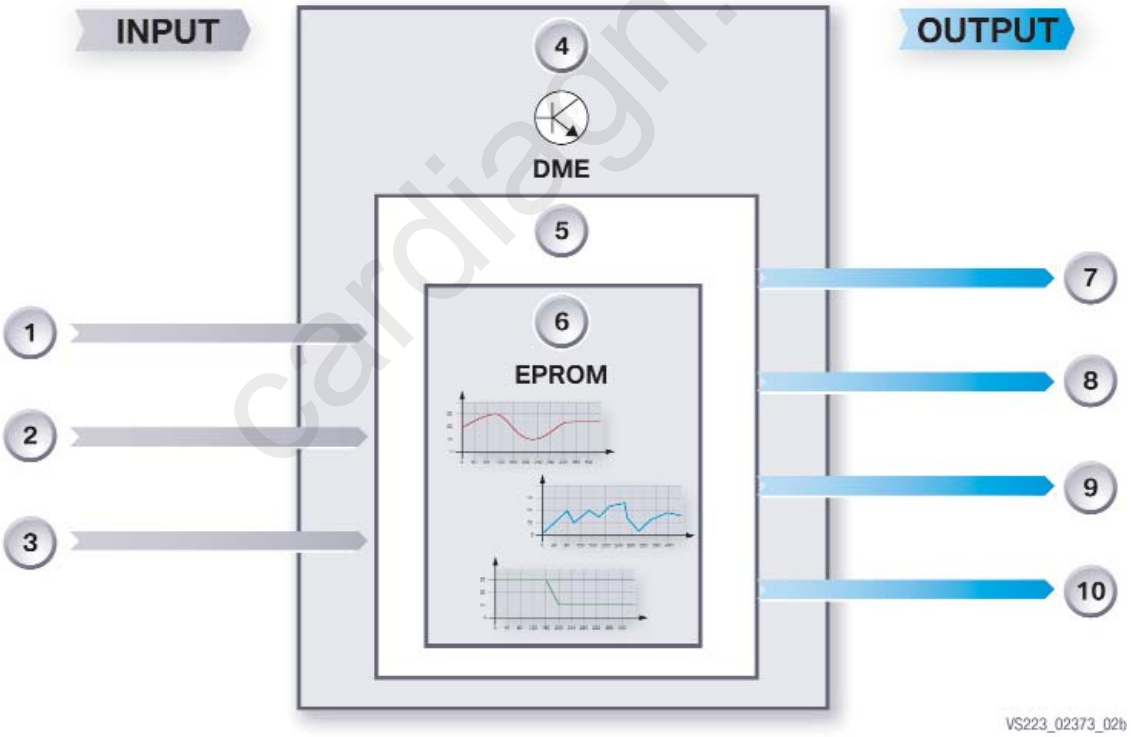

1. Battery Voltage
2. Current Input
3. Temperature Input
4. DME
5. Power Management
6. EPROM with maps for Voltage,Current and Temp
7. Idle Speed control
8. Specified Alternator Charging Voltage
9. Deactivation of Electrical Loads
10. Peak Load Reduction

cardiagn.com

Variable Battery Charging Voltage

The variable battery charging voltage on system ensures improved charging management of the battery in unfavorable driving situations. The power management controls the temperature-dependent voltage for the charging voltage of the alternator via the BSD line.

Idle Speed Boost

The idle speed can be increased in situations where the battery does not cover power requirements. When the specified voltage alone is no longer sufficient, the DME boosts the idle speed corresponding to the engine status.

Reducing Peak Loads

The peak load of the vehicle electrical system is reduced when there is still a shortfall in battery coverage despite boosting idle speed.
Peak load reduction is realized by:

- Reducing power output, e.g. by correspondingly controlling the clock cycles of the rear window defogger
- If reducing the power output is not sufficient, individual electric loads can be switched off in extreme situations

Electric Load Cutout

The electric loads in the E60 are divided into the following categories:

- Comfort loads, e.g. window defogger, seat heating, steering wheel heating

Electric loads switch off automatically after engine "OFF." These electric loads can be activated again after the vehicle has been restarted.

- Legally required auxiliary electric loads, e.g. side lights, hazard warning lights

Legally required auxiliary loads must be operational for a certain period of time after engine "OFF." These legally required electric loads are not switched off even on reaching the start capability limit of the battery.

- Auxiliary electric loads, e.g. independent ventilation,communication components such as central information display, telephone, telematic services

Auxiliary loads can be switched on after engine "OFF." The comfort electric loads switch off automatically on reaching the start capability limit of the battery. Switch-off is requested by the DME in the form of a CAN message.

- System-related afterrunning loads, e.g. electric radiator fan

System-related afterrunning loads can maintain operation for a defined period of time.

cardiagn.com

Data Transfer to the IBS

The following data are transferred via the BSD to the IBS before the DME assumes sleep mode:

- State of charge of the battery SoC
- State of health of the battery SoH
- Outside temperature
- Available discharge level
- Terminal 15 wake-up enable
- Terminal 15 wake-up disable
- DME close

Closed-Circuit Current Diagnosis

A fault code is stored in the DME when the battery current exceeds a defined value during the vehicle rest phase. The vehicle should be analyzed accordingly.

Terminal 30g Relay

The terminal 30g relay is actuated by the CAS at an excessively high closed-circuit current or on reaching the start capability limit of the battery.

Notes

cardiagn.com

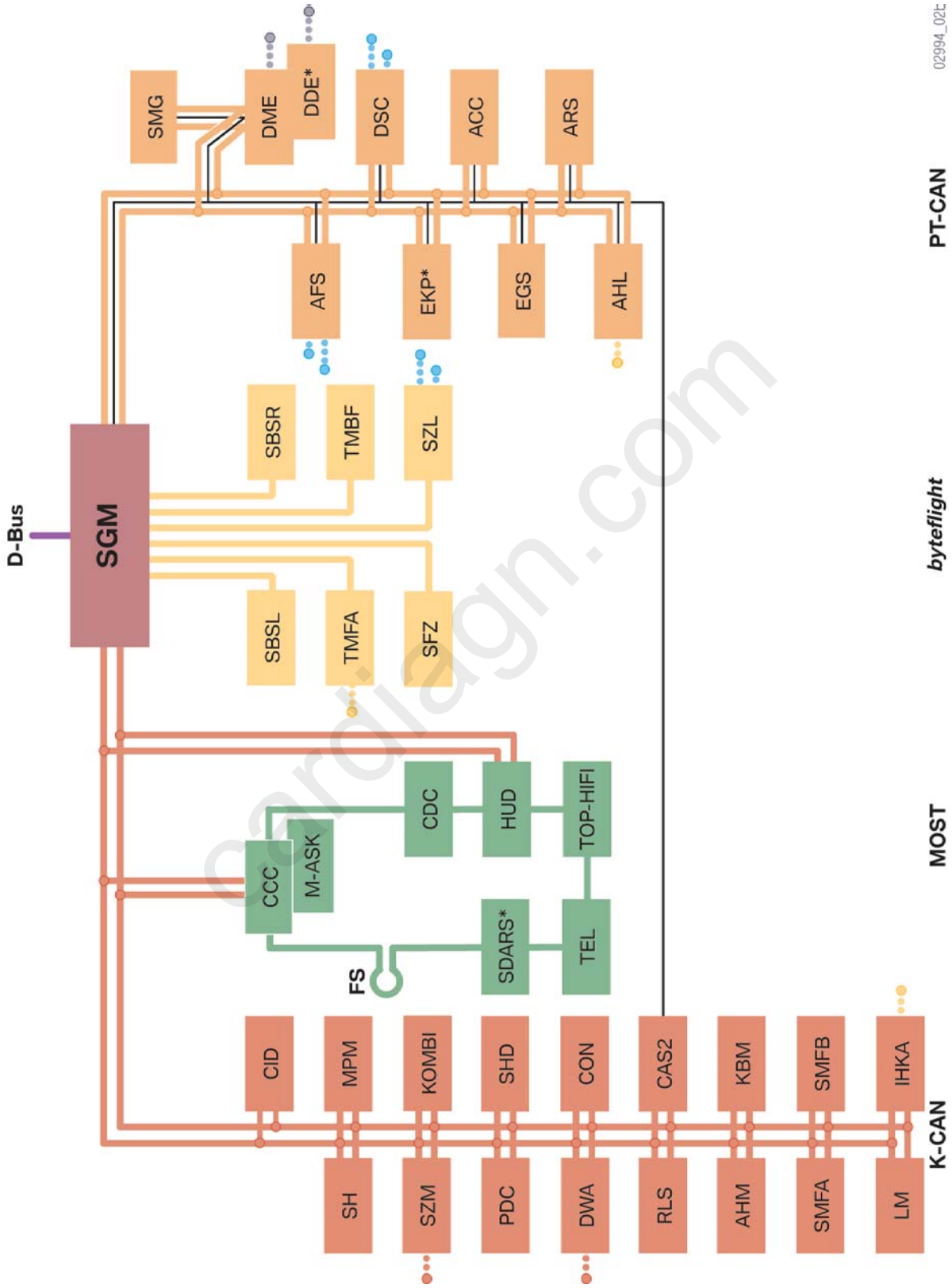

cardiagn.com

Bus Systems

K-CAN

K-CAN Changes

In the E60, the bus systems K-CAN-S and K-CAN-P of the E65 were combined to form the K-CAN.

The car access system CAS is no longer used as a repeater between K-CAN-S and K-CAN-P. CAS is now only a K-CAN user. The internal designation is CAS 2.

The instrument cluster and the central information display are now connected to K-CAN. They no longer serve as a gateway between K-CAN-S and MOST.

The door modules are no longer connected to K-CAN-P but rather to byteflight.

The controller CON is connected directly to K-CAN and no longer via the centre console switch centre SZM.

MOST

Most Changes

MOST has less users than on the E65. Components such as the instrument cluster and central information display CID are connected to other bus systems. The MOST additionally features the satellite radio (SDARS).

A large MOST system extending up to the luggage compartment is installed if the E60 is equipped with a telephone, or Top HiFi system.

cardiagn.com

byteflight

byteflight Changes

The SIM and ZGM functions have been combined in the SGM. The door modules adopt the functions of the front door satellites.

byteflight Comparison

byteflight E65	byteflight E60
Central Gateway Module ZGM	Safety and Gateway Module SGM
Safety and Information Module	Combined in SGM
Steering column switch cluster SZL	SZL
Center Satellite SFZ	SFZ
A-Pillar Satellite Left SASL	Not used
A-Pillar Satellite Right SASL	Not used
Front Door Satellite Left STVL	Driver's Door Module TMFA
Front Door Satellite Right STVR	Passenger's Door Module TMBF
B-Pillar Satellite left SBSL	SBSL
B-Pillar Satellite Right SBSR	SBSR
Driver's Seat Satellite SSFA	Not used
Passenger's Seat Satellite SSBF	Not used
Rear Seat Satellite SSH	Not used

PT-CAN

No changes

Bus system parameters

Bus System	Data Rate		Bus Structure
	kBd	MBd	
K-CAN	100		Linear/Two Wire
PT_CAN	500		Linear/Two Wire
byteflight		10	Star/Fiber Optic
MOST		22.5	Ring/Fiber Optic
D-Bus	10.5/115		Linear/Single Wire

cardiagn.com

Subbus Systems

LIN-Bus

The LIN-bus was developed to provide a standard network for the automobile industry. The LIN-bus is a standardized serial single-wire bus system. The LINbus facilitates fast and simple data transmission. The use of LIN-bus technology reduces the number of lines in the vehicle.

LIN-bus systems in E60

Main Controller	Server Unit
IHKA	Flap Motors and Blower Motor
Door Module	Driver's Switch Block SBFA
AHL	Stepper Motor Controller SMC

A typical LIN-bus system includes the following components:
- 1 Main Controller
- Several Server Units
- Single-wire line

The LIN-bus uses a bi-directional single-wire bus line as the transmission medium. The bus contains only one Main Controller while many server units are possible. The transfer rate on the LIN-bus can be up to 19.2 kBaud.

The following transfer rates are possible:

9.6 kBaud for IHKA 19.2 kBaud for other systems

LIN-Bus Main Controller
The LIN-bus Main Controller transfers the control unit requests to the server units of the system. The LIN-bus Main Controller controls the message traffic on the bus line.

LIN-bus server units of the air conditioning systems include:
- Actuator motors for the air distribution flaps
- Blower controller

The LIN-bus server units wait for commands from the LIN-bus Main Controller and communicate with it only on request.

cardiagn.com

F-CAN

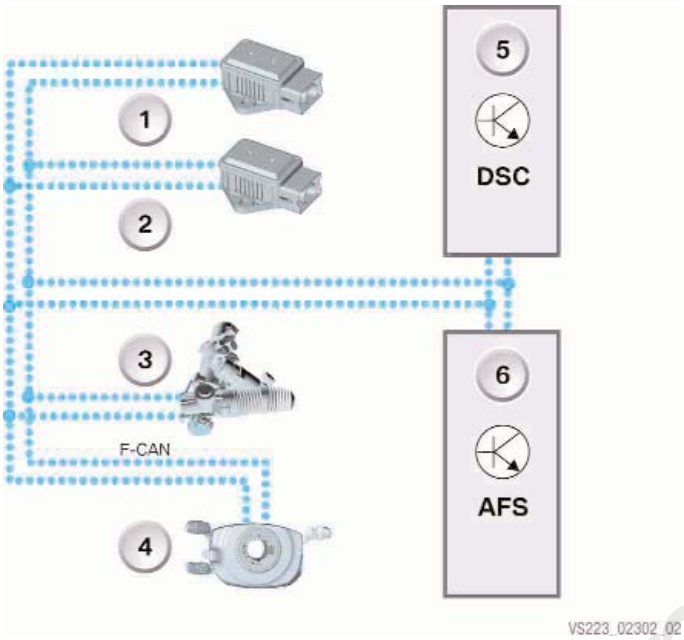

1. DSC Sensor 1
2. DSC Sensor 2
3. Active Steering Actuator
4. SZL
5. DSC
6. AFS

The F-CAN enables fast data transfer between the components, e.g.active steering.

BSD (Bit-Serial Data Interface)

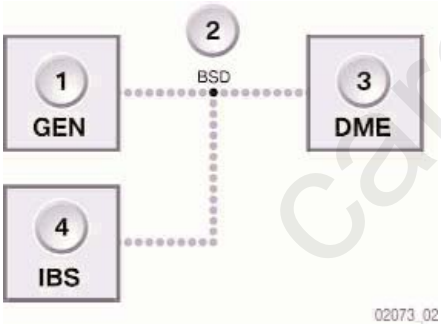

1. Alternator GEN
2. Bit-serial data interface BSD
3. DME
4. IBS

cardiagn.com

Sub-bus System Parameters

Sub-bus	Data Rate kBd	Bus Structure	Components
BSD	9.6	Linear/Single Wire	DME, IBS, Alternator
DWA-bus	9.6	Linear/Single Wire	UIS, DWA Siren w/Tilt Sensor
K-bus seat	9.6	Linear/Single Wire	Seat adjustment switch unit, Center Console switch unit
LIN bus A/C	9.6	Linear/Single Wire	IHKA,All A/C stepper motors blower motor, PTC
Lin-bus RDC	9.6	Linear/Single Wire	RDC, Wheel arch antennas
Lin-bus AHL	19.2	Linear/Single Wire	AHL Control Unit, Stepper Motor Controller
Lin-bus TMFA	19.2	Linear/Single Wire	Door Module, Driver's Switch Block
F-CAN	100	Linear/Two Wire	AFS, ARS, Yaw rate sensors SZL,DSC, LWS

MOST Connector Junction

The MOST connector junction facilitates quick connection of new control units.

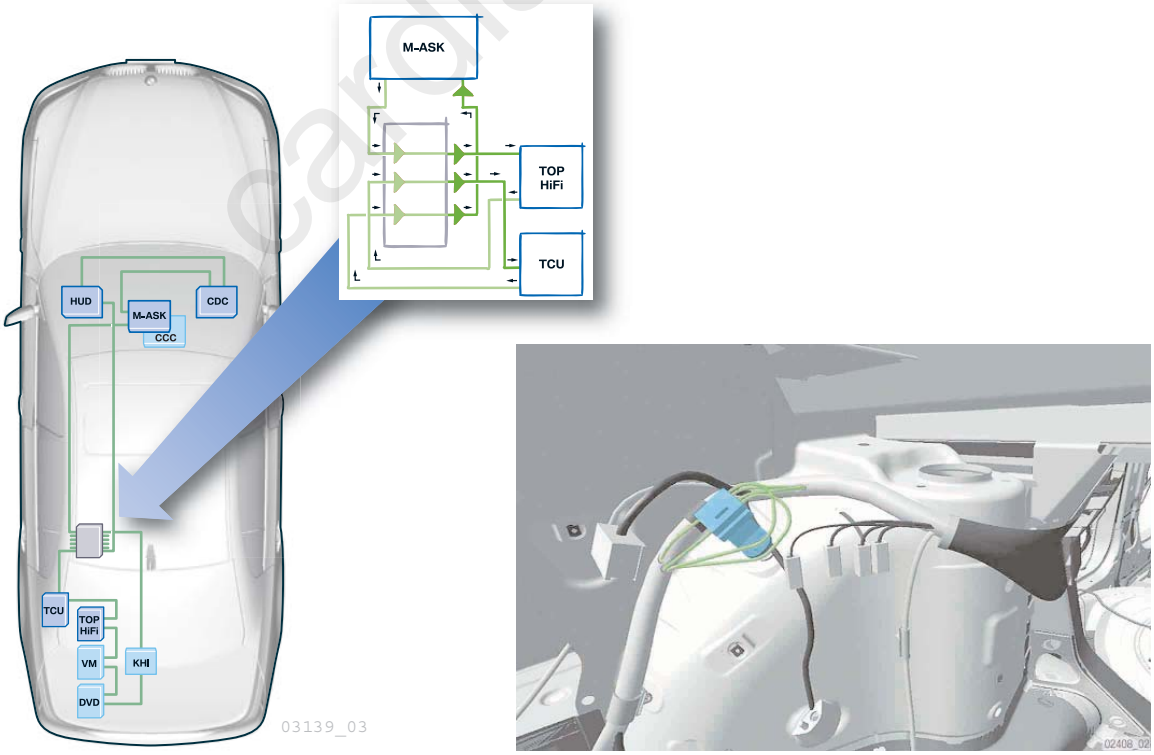

cardiagn.com

Workshop Exercise - Power Management/Bus System

1. *What are the power management tasks performed by the DME?*

2. *Under what conditions (concerning the electrical system) does the DME boost the idle?*

3. *How does the DME determine SoC?*

4. *What is the difference is between SoC/SoH?*

5. *How does the IBS detect starter operation?*

6. *Explain IBS wake-up disable.*

7. *List the components of a typical LIN-bus system.*

8. *Name the Bus or sub-bus systems that are two wire busses.*

9. *What is the purpose of the MOST connector junction?*

10. *What are some of the symptoms of a failed MOST Bus?*

11. *What modules are connected to the MOST Bus?*

cardiagn.com

12. *Which control module is the gateway from the K-Can to the MOST?* _____

13. *How does a short test help in MOST Bus diagnosis?* _____

_____

14. *What test plans are available for MOST Bus diagnosis in the DISplus or GT1?*

_____

15. *Where is the OPPS connection point located?* _____
What is special about this access point? _____

16. *How is the MOST Bus affected by a blown fuse to the:*

TCU _____
CD Changer _____
M-ASK _____

17. *What is the order of light travel in the MOST Bus?* _____

18. *Does the MOST Bus respond differently (if faulted) in the E-60 depending on vehicle equipment?*

_____
_____
_____
_____
_____

cardiagn.com