GMC Jimmy 2002 fuse box diagram

Instrument Panel Fuse Block

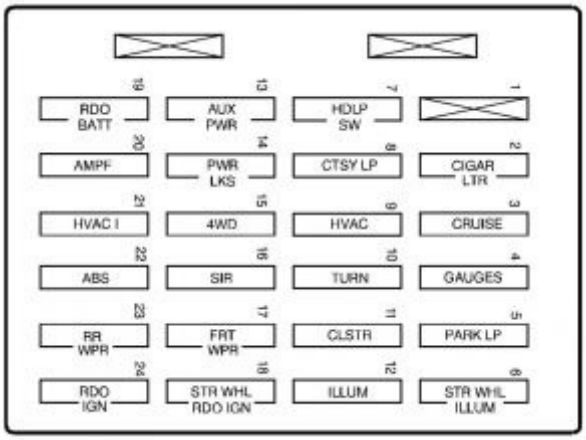

GMC Jimmy – fuse box – instrument panel

The instrument panel fuse block is at the driver's end of the instrument panel.

Fuse/Circuit Breaker	Usage
A	Not Used
B	Not Used
1	Not Used
2	Cigarette Lighter, Data Link Connector
3	Cruise Control Module and Switch, Body Control Module, Heated Seats
4	Gages, Body Control Module, Instrument Panel Cluster
5	Parking Lamps, Power Window Switch, Body Control Module, Ashtray Lamp
6	Steering Wheel Radio Controls
7	Headlamps Switch, Body control Module, Headlamp Relay
8	Courtesy Lamps, Battery Run-Down Protection
9	HVAC Control Head (Manual)
10	Turn Signal
11	Cluster, Engine Control Module
12	Interior lights
13	Auxiliary Power
14	Power Locks Motor
15	4WD Switch, Engine Controls (VCM, PCM, Transmission)
16	Supplemental Inflatable Restraint
17	Front Wiper
18	Steering Wheel Radio Controls
19	Radio, Battery

20	Amplifier
21	HVAC (Manual), HVAC I (Automatic), HVAC Sensors (Automatic)
22	Anti-Lock Brakes
23	Rear Wiper
24	Radio, Ignition

Engine Compartment Fuse Block

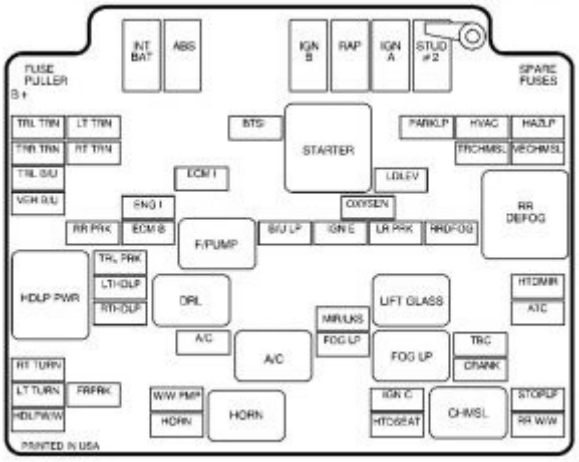

GMC Jimmy – fuse box – engine compartment

The fuse block is under the hood at the driver's side of the engine compartment.

Name	Usage
TRL TRN	Trailer Left Turn
TRR TRN	Trailer Right Turn
TRL B/U	Trailer Back Up Lamps
VEH B/U	Vehicle Back Up Lamps
RT TURN	Right Turn Signal Front
LT TURN	Left Turn Signal Front
HDLP W/W	Not Used
LT TRN	Left Turn Signal Rear
RT TRN	Right Turn Signal Rear
RR PRK	Right Rear Parking Lamps
TRL PRK	Trailer Park Lamps
LTHDLP	Left Headlamp
RTHDLP	Right Headlamp
FRPRK	Front Parking Lamps
INT BAT	I/P Fuse Block Feed
ENG I	Engine Sensors/Solenoids, MAF, CAM, PURGE, VENT
ECM B	Engine Control Module, Fuel Pump Module, Oil Pressure
ABS	Anti-Lock Brake System

ECM I	Engine Control Module Injectors
A/C	Air Conditioning
W/W PMP	Not Used
HORN	Horn
BTSI	Brake-Transmission Shift Interlock
B/U LP	Back Up Lamps
IGN B	Column Feed, IGN 2, 3, 4
RAP	Retained Accessory Power
LD LEV	Not Used
OXYSEN	Oxygen Sensor
IGN E	Engine
MIR/LKS	Mirrors, Door Locks
FOG LP	Fog Lamps
IGN A	Starting and Charging IGN 1
STUD #2	Accessory Feeds, Electric Brake
PARKLP	Parking Lamps
LR PRK	Left Rear Parking Lamps
IGN C	Starter Solenoid, Fuel Pump, PRNDL
HTDSEAT	Heated Seat
HVAC	HVAC System
TRCHMSL	Trailer Center High Mount Stop Light
RRDFOG	Rear Defogger
TBC	Truck Body Computer
CRANK	Clutch Switch, NSBU Switch
HAZLP	Hazard Lamps
VECHMSL	Vehicle Center High-Mounted Stop Lamp
HTDMIR	Heated Mirror
ATC	Transfer Case (Four-Wheel Drive)
STOPLP	Stop Lamps
RR W/W	Rear Window Wiper