CHASSIS SECTION

FRONT SUSPENSION	FS
REAR SUSPENSION	RS
WHEEL AND TIRE SYSTEM	WT
TIRE PRESSURE MONITORING SYSTEM (DIAGNOSTICS)	TPM(diag)
DIFFERENTIALS	DI
TRANSFER CASE	TC
DRIVE SHAFT SYSTEM	DS
VEHICLE DYNAMICS CONTROL (VDC)	VDC
VEHICLE DYNAMICS CONTROL (VDC) (DIAGNOSTICS)	VDC(diag)
BRAKE	BR
PARKING BRAKE	PB
PARKING BRAKE (DIAGNOSTICS)	PB(diag)
POWER ASSISTED SYSTEM (POWER STEERING)	PS

This service manual has been prepared to provide SUBARU service personnel with the necessary information and data for the correct maintenance and repair of SUBARU vehicles.
This manual includes the procedures for maintenance, disassembling, reassembling, inspection and adjustment of components and diagnostics for guidance of experienced mechanics.
Please peruse and utilize this manual fully to ensure complete repair work for satisfying our customers by keeping their vehicle in optimum condition. When replacement of parts during repair work is needed, be sure to use SUBARU genuine parts.

All information, illustration and specifications contained in this manual are based on the latest product information available at the time of publication approval.

FUJI HEAVY INDUSTRIES LTD.

G2480BE6

GETtheMANUALS.org

FRONT SUSPENSION

FS

Page

1. General Description 2
2. Wheel Alignment 9
3. Cradle 20
4. Front Stabilizer 29
5. Front Ball Joint 32
6. Front Arm 35
7. Front Strut 41
8. General Diagnostic Table 46

GETtheMANUALS.org

1. General Description

A: SPECIFICATION

Tire size			P205/60R16 P215/50R17	P225/50R17 225/45R18	P225/60R17 P215/70R16
Front	Wheel arch height (Tolerance: $^{+12\ mm}_{-24\ mm}$ ($^{+0.47\ in}_{-0.94\ in}$)) mm (in)		403 (15.9)	395 (15.6)	469 (18.5)
	Camber (Tolerance: ±0°45′ Differences between RH and LH: 45′ or less)		–0°30′	–0°15′	0°00′
	Caster (Referential Value)		5°55′	6°00′	5°05′
	Steering angle (Tolerance: ±1.5°)	Inner wheel	37.6°	37.4°	38.4°
		Outer wheel	33.3°	33.0°	34.1°
	Toe-in mm (in)		1±3 (0.04±0.12) Toe angle (sum of both wheels): 0°05′±0°15′		
	Kingpin angle (Referential Value)		14°00′	14°15′	12°20′
Rear	Wheel arch height (Tolerance: $^{+12\ mm}_{-24\ mm}$ ($^{+0.47\ in}_{-0.94\ in}$)) mm (in)		392 (15.4)	387 (15.2)	474 (18.7)
	Camber (Tolerance: ±0°45′ Differences between RH and LH: 45′ or less)		–1°00′	–1°10′	0°00′
	Toe-in mm (in)		*2		*1
	Thrust angle (Tolerance: ±0°30′)		0°		

*1: OUTBACK model
2±3 mm (0.08 — 0.12 in) Toe angle (sum of both wheels): 0°10′±0°15′

*2: Except for OUTBACK model
0±3 mm (0±0.12 in) Toe angle (sum of both wheels): 0°±0°15′

NOTE:
- Front and rear toe-in and front camber can be adjusted. Adjust if the toe-in or camber tolerance exceeds specifications.
- Other items indicated in the specifications is not equipped with adjustment mechanisms. If other items exceed specifications, check the suspension parts and connections for deformation. If defective, replace with new parts.

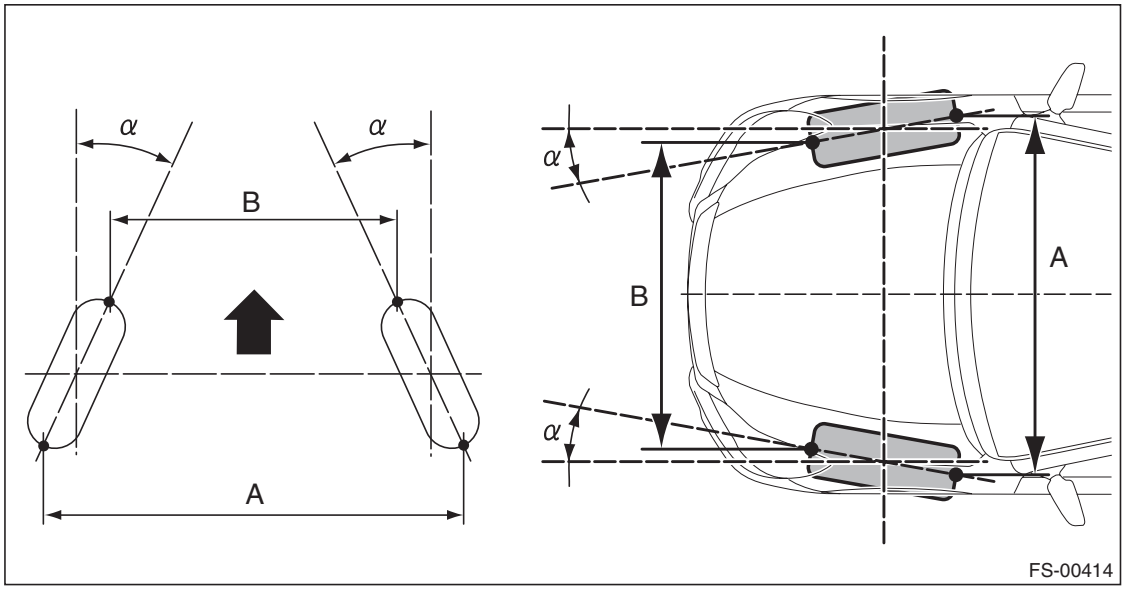

A – B = Positive: Toe-in, Negative: Toe-out

α = Individual toe angles

GETtheMANUALS.org

B: COMPONENT

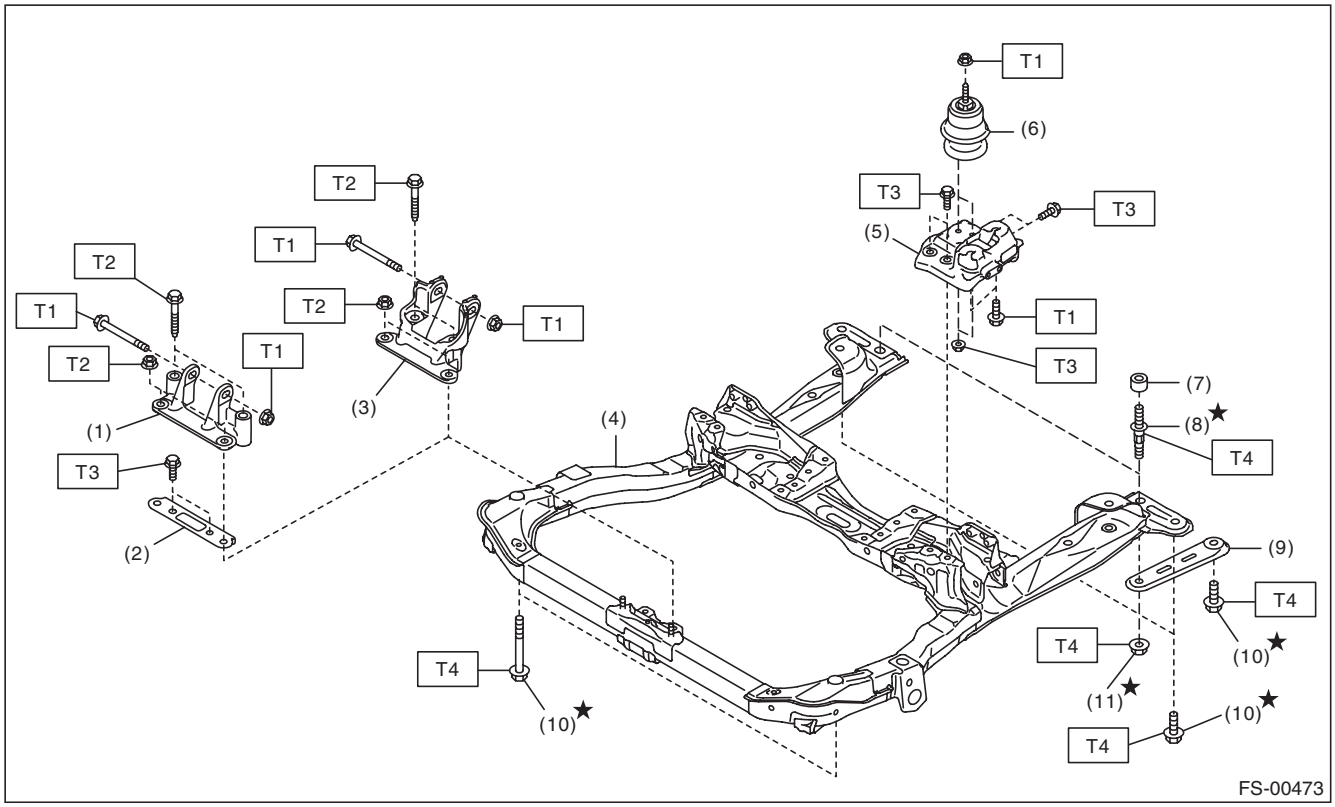

(1)	Front mounting bracket (H6 model)	(7)	Stopper (OUTBACK model only)	***Tightening torque:N·m (kgf-m, ft-lb)***
(2)	Bracket	(8)	Stud bolt	***T1: 45 (4.59, 33.2)***
(3)	Front mounting bracket (H4 model)	(9)	Stiffener	***T2: 60 (6.12, 44.3)***
(4)	Cradle	(10)	Bolt	***T3: 65 (6.63, 47.9)***
(5)	Main mounting bracket	(11)	Self-locking nut	***T4: 75 (7.65, 55.3)***
(6)	Main cushion rubber			

GETtheMANUALS.org

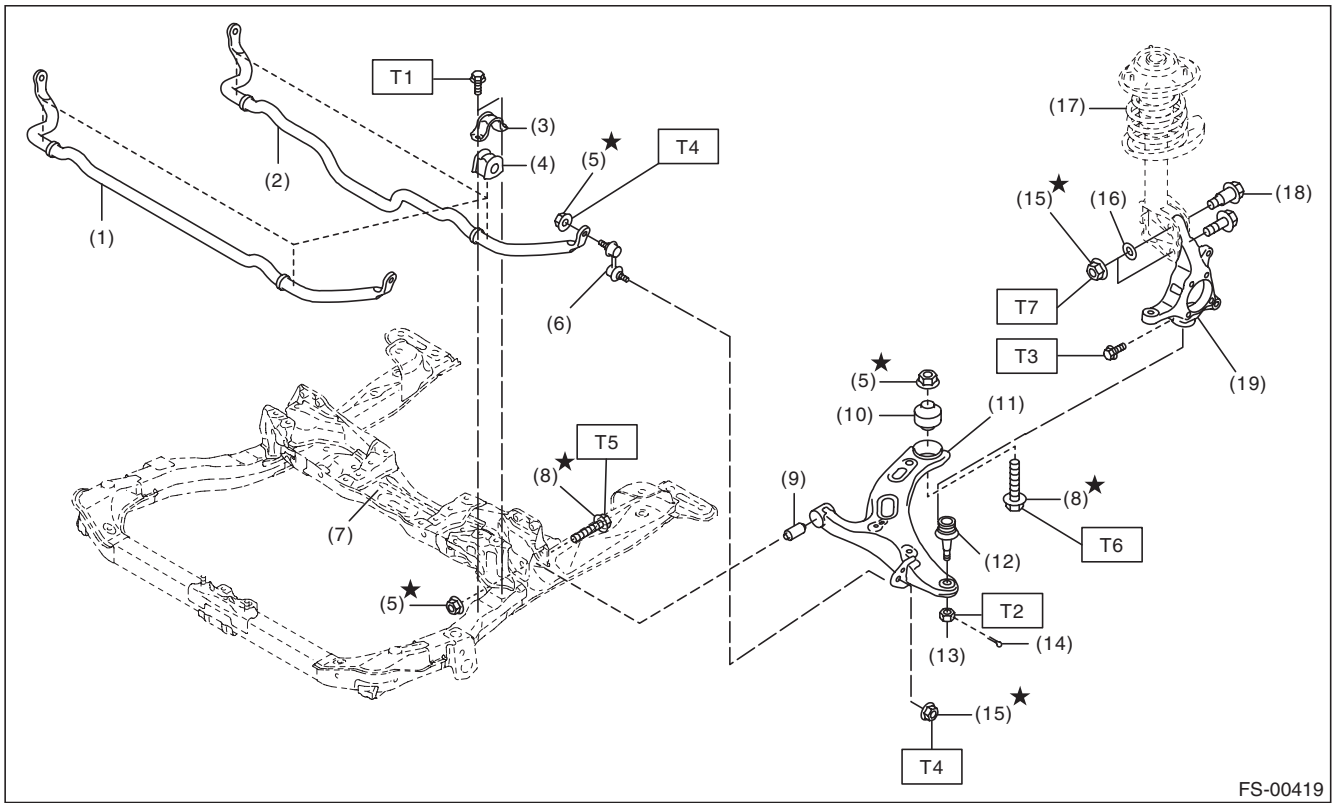

(1)	Stabilizer (H6 model)	(11)	Front arm
(2)	Stabilizer (H4 model)	(12)	Ball joint
(3)	Stabilizer bracket	(13)	Castle nut
(4)	Stabilizer bushing	(14)	Cotter pin
(5)	Self-locking nut	(15)	Flange nut
(6)	Stabilizer link	(16)	Adjusting washer
(7)	Cradle	(17)	Front strut ASSY
(8)	Bolt	(18)	Adjusting bolt
(9)	Front bushing	(19)	Front axle housing
(10)	Rear bushing		

Tightening torque:N·m (kgf-m, ft-lb)	
T1:	***25 (2.55, 18.4)***
T2:	***39 (3.98, 28.8)***
T3:	***50 (5.10, 36.9)***
T4:	***60 (6.12, 44.3)***
T5:	***95 (9.69, 70.1)***
T6:	***140 (14.28, 103.3)***
T7:	***155 (15.81, 114.3)***

GETtheMANUALS.org

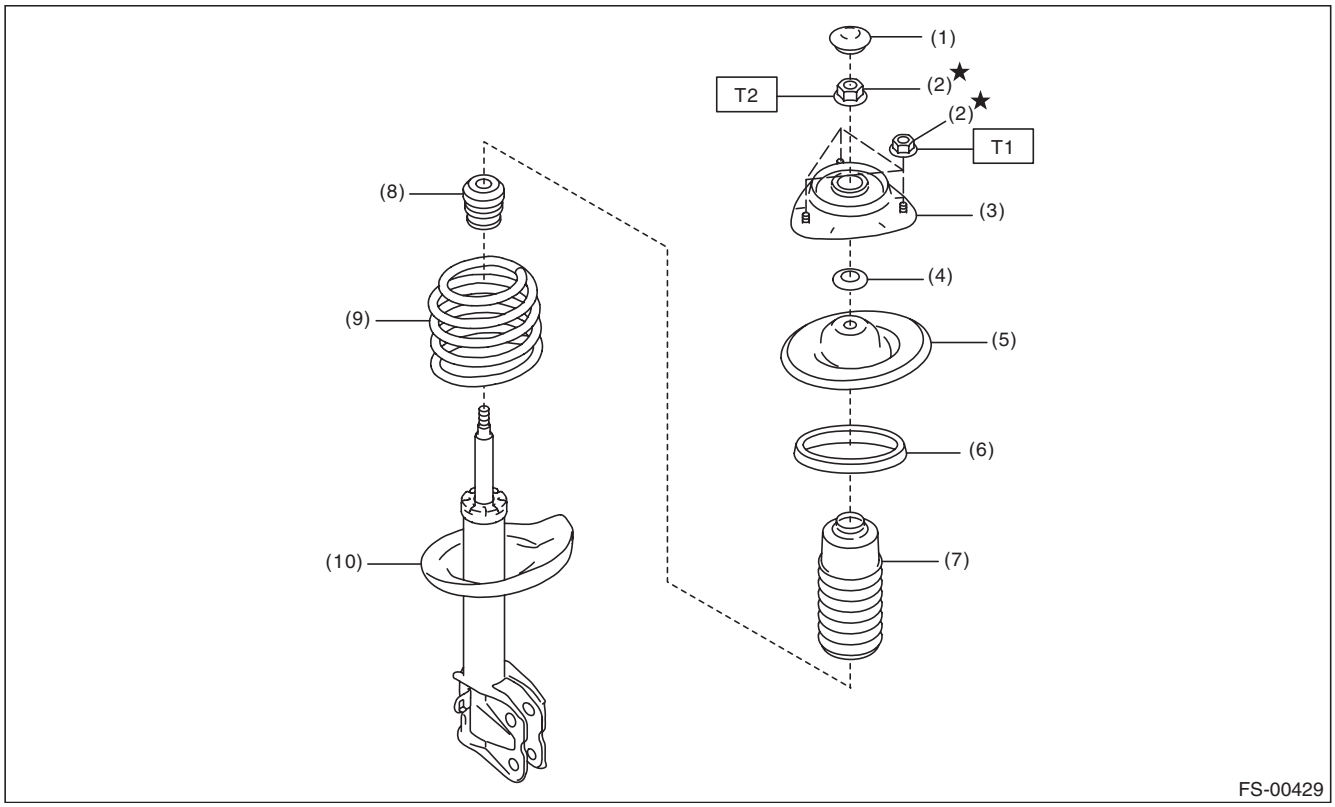

(1)	Dust seal	(6)	Rubber seat (OUTBACK model only)	***Tightening torque:N·m (kgf-m, ft-lb)***
(2)	Self-locking nut	(7)	Dust cover	***T1: 20 (2.04, 14.8)***
(3)	Strut mount	(8)	Helper (except for Bilstein strut)	***T2: 55 (5.61, 40.6)***
(4)	Spacer	(9)	Coil spring	
(5)	Upper spring seat	(10)	Strut	

C: CAUTION

- Wear appropriate work clothing, including a helmet, protective goggles and protective shoes when performing any work.
- Before removal, installation or disassembly, be sure to clarify the failure. Avoid unnecessary removal, installation, disassembly and replacement.
- Use SUBARU genuine grease etc. or equivalent. Do not mix grease etc. of different grades or manufacturers.
- Before securing a part on a vise, place cushioning material such as wood blocks, aluminum plate, or cloth between the part and the vise.
- Be sure to tighten fasteners including bolts and nuts to the specified torque.
- Place shop jacks or rigid racks at the specified points.

GETtheMANUALS.org

D: PREPARATION TOOL

1. SPECIAL TOOL

ILLUSTRATION	TOOL NUMBER	DESCRIPTION	REMARKS
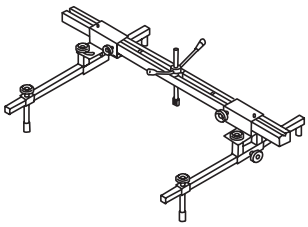 ST99099AJ000	99099AJ000	ENGINE HANGER	• Used for hanging power unit. • Used together with CHAIN BALANCER (99099AJ010).
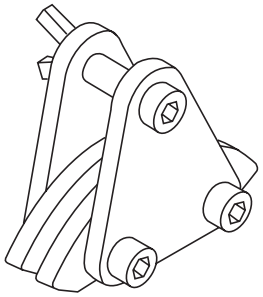 ST99099AJ010	99099AJ010	CHAIN BALANCER	• Used for hanging power unit. • Used together with ENGINE HANGER (99099AJ000).
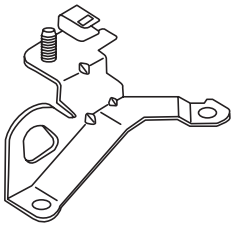 ST10004AA180	10004AA180 (SUBARU genuine part)	HANGER CP ENGINE RR	• Used for hanging power unit. • For H4 non-turbo model. • SUBARU genuine part
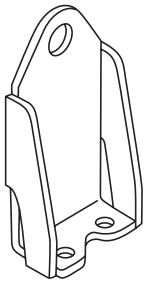 ST18360AA020	18360AA020	HANGER	• Used for hanging power unit. • For H6 model.

GETtheMANUALS.org

ILLUSTRATION	TOOL NUMBER	DESCRIPTION	REMARKS
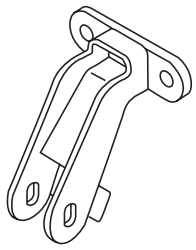 ST41099AJ000	41099AJ000	SPECIAL TOOL H4	Used for removing and installing front stabilizer. (for turbo model)
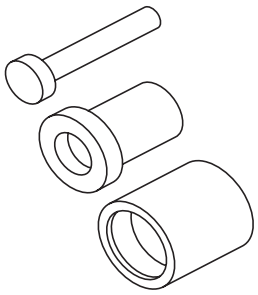 ST-927680000	927680000	INSTALLER & REMOVER SET	Used for replacing front arm front bushing.
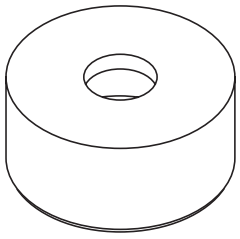 ST20299AG000	20299AG000	REMOVER	• Used for replacing front arm rear bushing. • Used together with BASE (20299AG010).
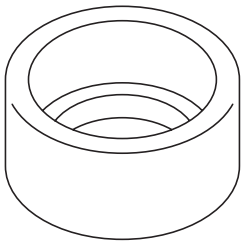 ST20299AG010	20299AG010	BASE	• Used for replacing front arm rear bushing. • Used together with REMOVER (20299AG000).
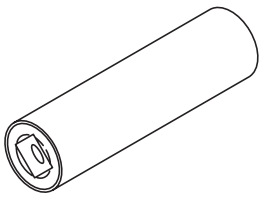 ST20299AG020	20299AG020	STUD BOLT SOCKET	Used for removing and installing the stud bolt for front arm installing portion.

GETtheMANUALS.org

ILLUSTRATION	TOOL NUMBER	DESCRIPTION	REMARKS
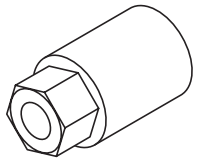 ST20399AG000	20399AG000	STRUT MOUNT SOCKET	Used for disassembling and assembling strut mount.

2. GENERAL TOOL

TOOL NAME	REMARKS
Alignment gauge	Used for measuring wheel alignment.
Alignment gauge adapter	Used for measuring wheel alignment.
Turning radius gauge	Used for measuring wheel alignment.
Toe-in gauge	Used for toe-in measurement.
Chain sling	• Used for hanging power unit. • Diameter: 6 mm (0.24 in) or 6.3 mm (0.25 in) • Length: 0.8 — 1 m (2.6 — 3.3 ft) • Chain inner width: 8.5 mm (0.33 in) or more • Chain external width: 23.5 mm (0.93 in) or less • Load capacity: 1.2 t (2646 lb) or more
Shackle	• Two units used for hanging power unit. • Attached to both end of chain sling and connected to engine hook. • Load capacity: 250 kg (551 lb) or more
Sling belt	• Used to remove and install the cradle. • Width: 35 — 40 mm (1.38 — 1.57 in) • Length: 2 m (6.6 ft) • Load capacity: 1 t (2205 lb) or more
Shackle	• Used to remove and install the cradle. • Load capacity: 500 kg (1103 lb) or more
Tie-rod end puller	Used for disconnecting tie-rod end.
Dial gauge	Used for damper strut measurement.
Coil spring compressor	Used for strut assembly/disassembly.

GETtheMANUALS.org

2. Wheel Alignment

A: INSPECTION

Check the following items before performing the wheel alignment measurement.
- Tire inflation pressure
- Uneven wear of RH and LH tires, or difference of sizes
- Tire runout
- Excessive play and wear of ball joint
- Excessive play and wear of tie-rod end
- Excessive play of wheel bearing
- Right and left wheel base imbalance
- Deformation and excessive play of steering link
- Deformation and excessive play of suspension parts

Check, adjust and measure the wheel alignment in accordance with the following procedures.

1	Wheel arch height (front and rear wheels)	Inspection: <Ref. to FS-12, REAR WHEEL TOE-IN, INSPECTION, Wheel Alignment.>
↓		
2	Camber (front and rear wheels)	Inspection: <Ref. to FS-11, CAMBER, INSPECTION, Wheel Alignment.> Adjustment: <Ref. to FS-14, FRONT CAMBER, ADJUSTMENT, Wheel Alignment.>
↓		
3	Caster (front wheel)	Inspection: <Ref. to FS-11, CASTER, INSPECTION, Wheel Alignment.>
↓		
4	Steering angle	Inspection: <Ref. to FS-12, FRONT WHEEL TOE-IN, INSPECTION, Wheel Alignment.> Adjustment: <Ref. to FS-15, STEERING ANGLE, ADJUSTMENT, Wheel Alignment.>
↓		
5	Front wheel toe-in	Inspection: <Ref. to FS-12, STEERING ANGLE, INSPECTION, Wheel Alignment.> Adjustment: <Ref. to FS-16, FRONT WHEEL TOE-IN, ADJUSTMENT, Wheel Alignment.>
↓		
6	Rear wheel toe-in	Inspection: <Ref. to FS-10, WHEEL ARCH HEIGHT, INSPECTION, Wheel Alignment.> Adjustment: <Ref. to FS-17, REAR WHEEL TOE-IN, ADJUSTMENT, Wheel Alignment.>
↓		
7	Thrust angle	Inspection: <Ref. to FS-13, THRUST ANGLE, INSPECTION, Wheel Alignment.> Adjustment: <Ref. to FS-18, THRUST ANGLE, ADJUSTMENT, Wheel Alignment.>

GETtheMANUALS.org

1. WHEEL ARCH HEIGHT

1) Park the vehicle on a level surface.
2) Empty the vehicle so that it is at “curb weight”. (Empty the luggage compartment, load the spare tire, jack and service tools, and fill up the fuel tank.)
3) Set the steering wheel in a straight-ahead position, and stabilize the suspension by moving the vehicle in a straight line for 5 m (16 ft) or more.
4) Suspend a thread from the wheel arch (point “A” in the figure below) and affix at a position directly above the center of wheel.
5) Measure the distance between the point “A” and the center of wheel.

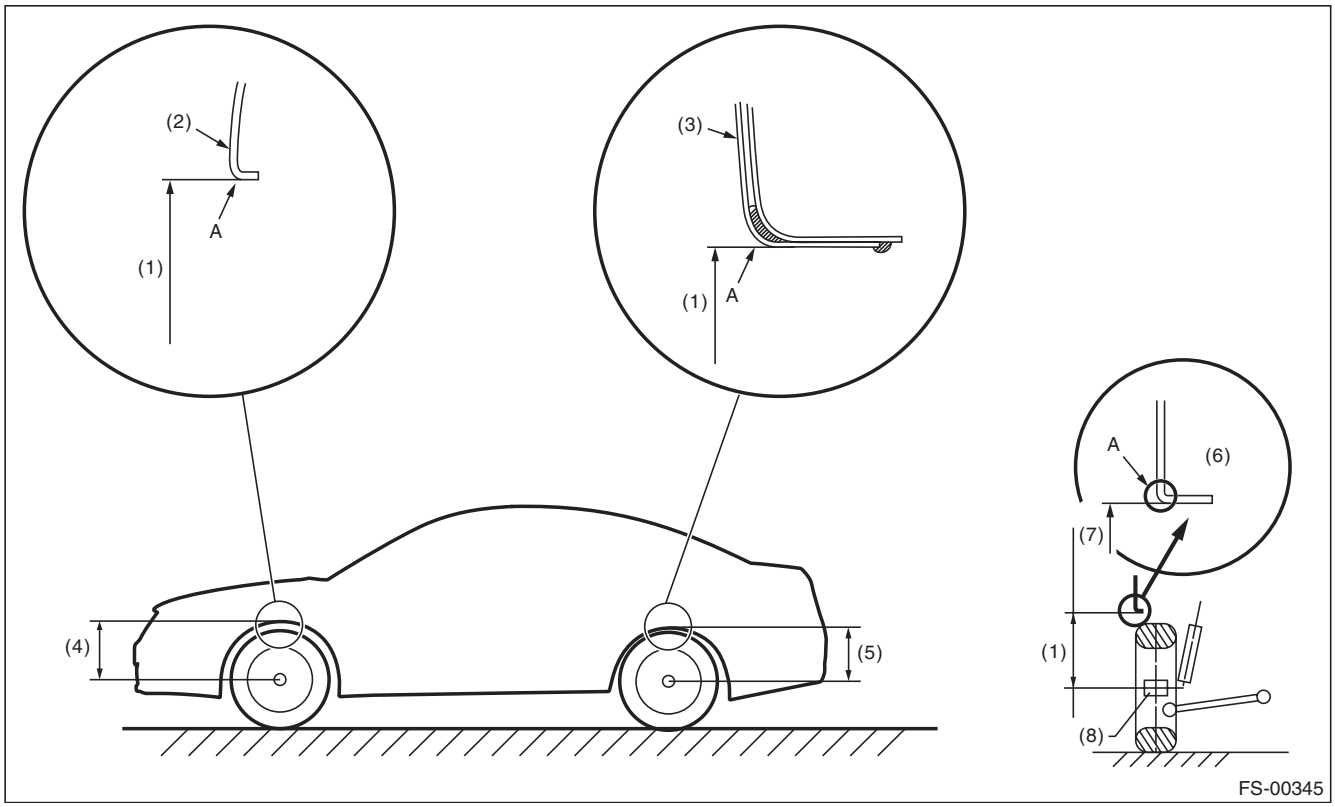

(1)	Wheel arch height	(4)	Front wheel arch height	(7)	Point of measurement
(2)	Front fender	(5)	Rear wheel arch height	(8)	End of spindle
(3)	Rear quarter	(6)	Flange bend line		

Wheel arch height specification mm (in) (Tolerance: $^{+12\ mm}_{-24\ mm}$ ($^{+0.47\ in}_{-0.94\ in}$))			
Tire size	P205/60R16 P215/50R17	P225/50R17 225/45R18	P225/60R17 P215/70R16
Front	403 (15.9)	395 (15.6)	469 (18.5)
Rear	392 (15.4)	387 (15.2)	474 (18.7)

GETtheMANUALS.org

2. CAMBER

1) Place the front wheel on the turning radius gauge.

NOTE:
Make sure the ground contact surfaces of the front and rear wheels are at the same height.

2) Set the adapter into the center of wheel, and then set the wheel alignment gauge.

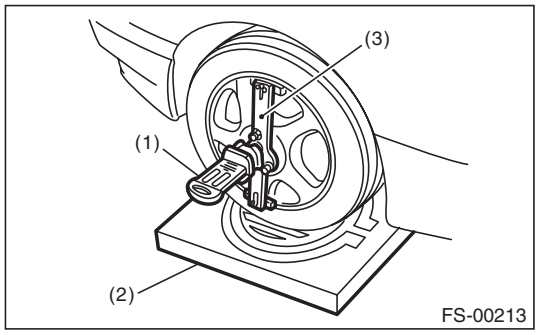

(1) Alignment gauge
(2) Turning radius gauge
(3) Adapter

3) Measure the camber angle in accordance with the operation manual for wheel alignment gauge.

Model	Camber (Difference between RH and LH 45′ or less)
P205/60R16 P215/50R17	–0°30′±0°45′
P225/50R17 225/45R18	–0°15′±0°45′
P225/60R17 P215/70R16	0°00′±0°45′

3. CASTER

1) Place the front wheel on the turning radius gauge. Make sure the ground contact surfaces of the front and rear wheels are at the same height.

2) Set the adapter into the center of wheel, and then set the wheel alignment gauge.

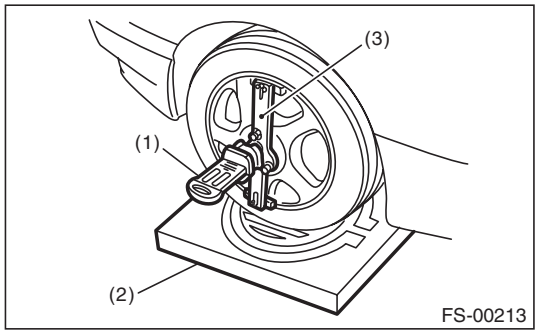

(1) Alignment gauge
(2) Turning radius gauge
(3) Adapter

GETtheMANUALS.org

3) Measure the caster angle in accordance with the operation manual for wheel alignment gauge.

Model	Caster
P205/60R16 P215/50R17	5°55′
P225/50R17 225/45R18	6°00′
P225/60R17 P215/70R16	5°05′

4. STEERING ANGLE

1) Place the vehicle on turning radius gauge.
2) While depressing the brake pedal, turn the steering wheel fully to the left and right.
3) With the steering wheel held at each fully turned position, measure both the inner and outer wheel steering angles.

Model	Inner wheel	Outer wheel
P205/60R16 P215/50R17	37.6°±1.5°	33.3°±1.5°
P225/50R17 225/45R18	37.4°±1.5°	33.0°±1.5°
P225/60R17 P215/70R16	38.4°±1.5°	34.1°±1.5°

5. FRONT WHEEL TOE-IN

Toe-in: Inspection value
1±3 mm (0.04±0.12 in)

1) Set the toe-in gauge in the position at wheel axis center height behind the right and left front tires.
2) Place a mark at the center of both left and right tires, and measure distance “A” between the marks.
3) Move the vehicle forward to rotate the tires 180°.

NOTE:
Be sure to rotate the tires in the forward direction.

4) Measure the distance “B” between the left and right marks. Find toe-in using the following calculation:

A – B = Toe-in

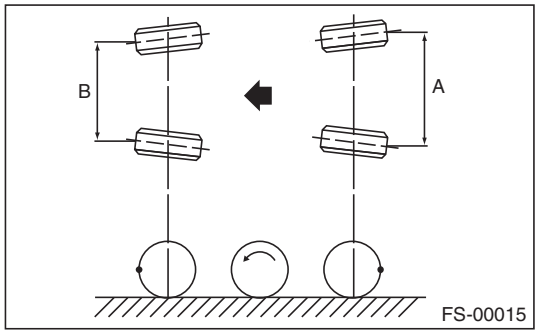

6. REAR WHEEL TOE-IN

Refer to the FRONT WHEEL TOE-IN for rear toe-in inspection procedures. <Ref. to FS-12, STEERING ANGLE, INSPECTION, Wheel Alignment.>

Toe-in: Inspection value
Other than OUTBACK model: 0±3 mm (0±0.12 in)
OUTBACK model: 2±3 mm (0.08±0.12 in)

GETtheMANUALS.org

7. THRUST ANGLE

1) Park the vehicle on a level surface.
2) Move the vehicle 3 to 4 meters (10 to 13 feet) straight forward.
3) Draw the center of loci for both the front and rear axles.
4) Measure distance “L” between the center lines of the axle loci.

Thrust angle: Inspection value
0°±30′
Less than 30′ when “L” is 23 mm (0.9 in) or less

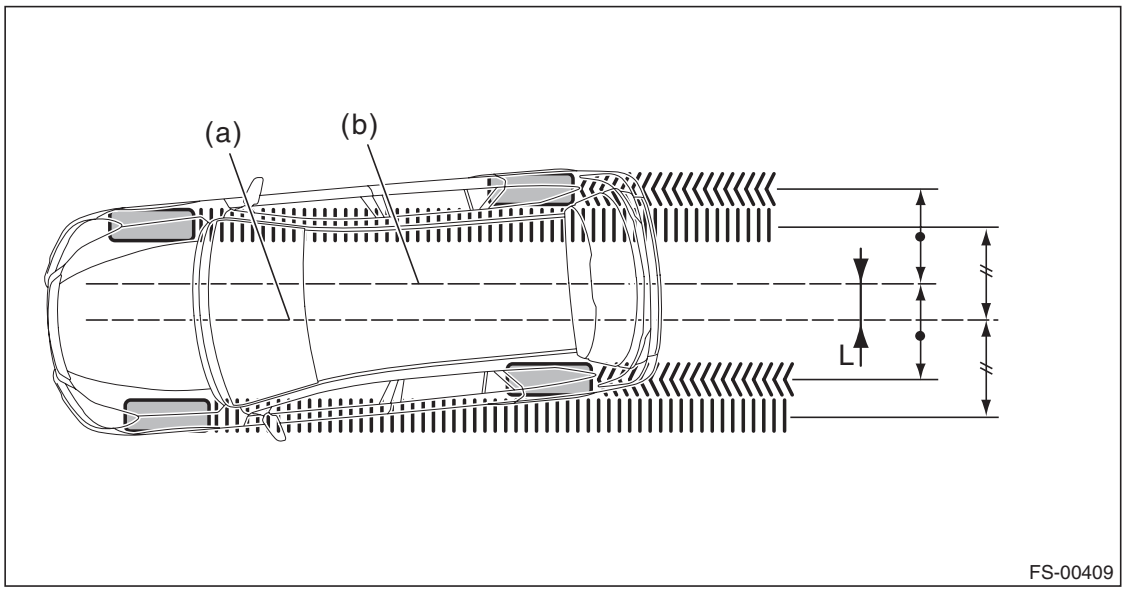

(a) Center line of loci (front axle)
(b) Center line of loci (rear axle)

GETtheMANUALS.org

B: ADJUSTMENT

1. FRONT CAMBER

1) Adjust the camber angle to the following value.

Model	Camber (Difference between RH and LH 45′ or less)
P205/60R16 P215/50R17	–0°30′±0°45′
P225/50R17 225/45R18	–0°15′±0°45′
P225/60R17 P215/70R16	0°00′±0°45′

2) Loosen the two flange nuts located at the front lower section of the strut.

NOTE:
When the adjusting bolt needs to be loosened or tightened, hold its head with a wrench and turn the flange nut.

3) Turn the camber adjusting bolt so that the camber is set at specification.

NOTE:
Moving the adjusting bolt by one scale changes the camber by approximately 0°15′.

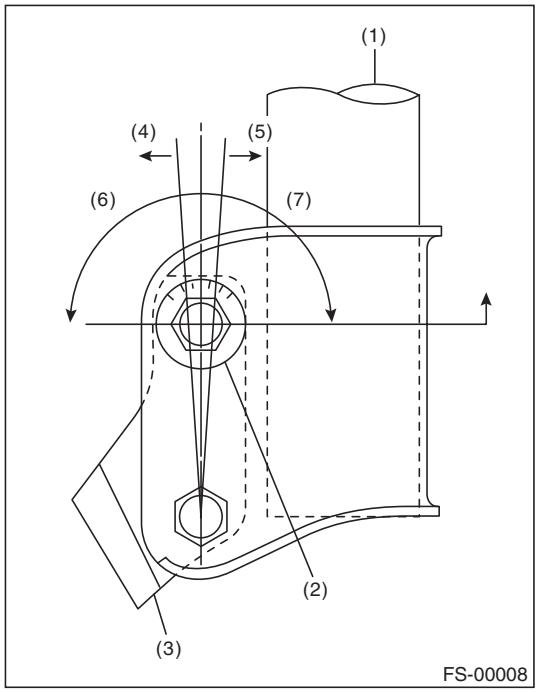

(1) Strut
(2) Adjusting bolt
(3) Front axle housing
(4) Outer
(5) Inner
(6) Camber is increased.
(7) Camber is decreased.

GETtheMANUALS.org

To increase camber.	
Rotate the left side counterclockwise.	Rotate the right side clockwise.
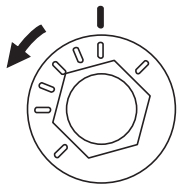 FS-00352	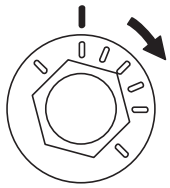 FS-00353

To decrease camber.	
Rotate the left side clockwise.	Rotate the right side counterclockwise.
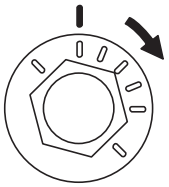 FS-00353	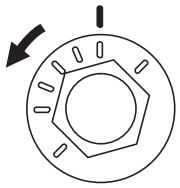 FS-00352

4) Tighten two new flange nuts.

Tightening torque:
155 N·m (15.81 kgf-m, 114.3 ft-lb)

2. STEERING ANGLE

1) Adjust the steering angle of both inner and outer wheels.
   (1) Loosen the steering tie-rod lock nut (a), and rotate the tie-rod.

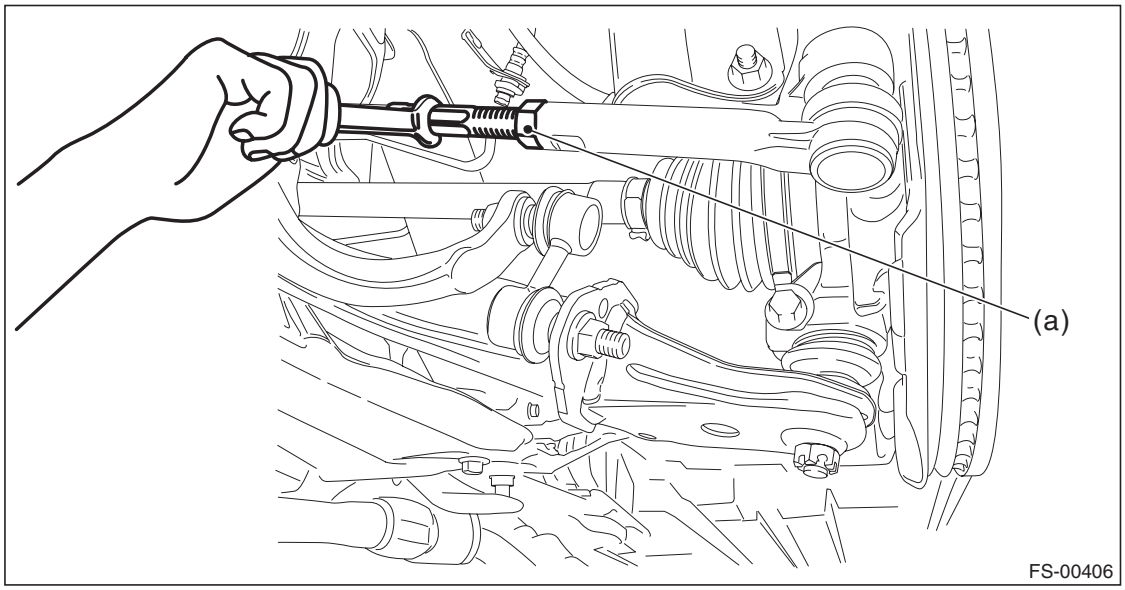

   (2) Turn the tie-rod to adjust the steering angle of both inner and outer wheels.

GETtheMANUALS.org

(3) Tighten the steering tie-rod lock nut (a).

Tightening torque:
85 N·m (8.67 kgf-m, 62.7 ft-lb)

NOTE:
Check and correct the tie-rod boot if twisted.
2) Check the toe-in. <Ref. to FS-12, STEERING ANGLE, INSPECTION, Wheel Alignment.>

3. FRONT WHEEL TOE-IN

When adjusting the toe-in, adjust it to the following value. <Ref. to FS-15, STEERING ANGLE, ADJUSTMENT, Wheel Alignment.>

Toe-in: Adjustment value
1±2 mm (0.04±0.08 in)

1) Check that the left and right wheel steering angles are within specification.
2) Loosen the left and right side steering tie-rod lock nuts (a).
3) Turn the left and right tie-rods by equal amounts until the toe-in is at the specification.

NOTE:
Both the left and right tie-rods are right-hand threaded. To increase toe-in, turn both tie-rods clockwise by equal amount (viewing from the inside of vehicle).
4) Tighten the tie-rod lock nut.

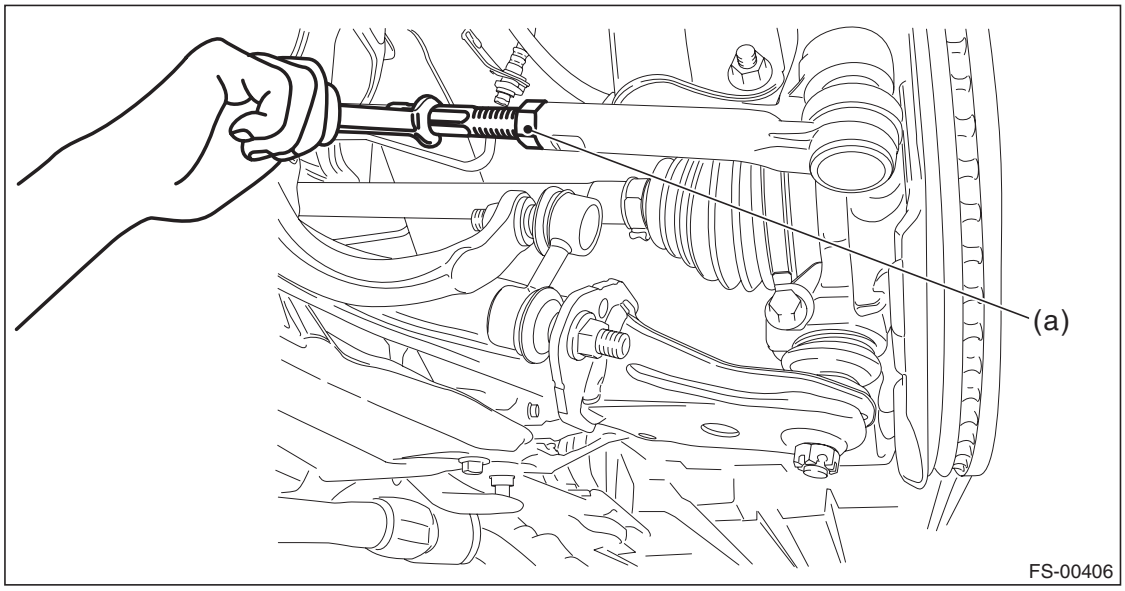

Tightening torque:
85 N·m (8.67 kgf-m, 62.7 ft-lb)

5) Check and correct the tie-rod boot if twisted.

GETtheMANUALS.org

4. REAR WHEEL TOE-IN

When adjusting, adjust it to the following value.

Toe-in: Adjustment value
Other than OUTBACK model: 0±2 mm (0±0.08 in)
OUTBACK model: 2±2 mm (0.08±0.08 in)

1) Loosen the self-locking nut for the front lateral link.

NOTE:
When loosening or tightening the adjusting bolt, hold the bolt head and turn the self-locking nut.

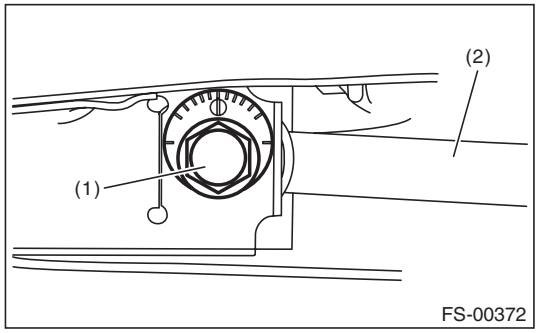

(1) Adjusting bolt
(2) Lateral link

2) Turn the adjusting bolt until toe-in is within the specification.

NOTE:
When the left and right wheels are adjusted for toe-in at the same time, the movement of one scale graduation changes toe-in by approx. 1.3 mm (0.05 in).

To increase toe-in.	
Rotate the left side clockwise.	Rotate the right side counterclockwise.
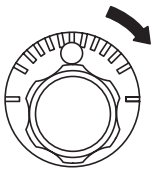 FS-00018	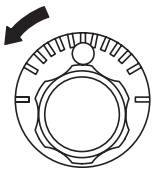 FS-00019

To decrease toe-in.	
Rotate the left side counterclockwise.	Rotate the right side clockwise.
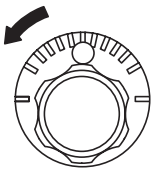 FS-00019	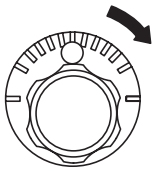 FS-00018

GETtheMANUALS.org

3) Attach and tighten a new self-locking nut.

Tightening torque:
120 N·m (12.24 kgf-m, 88.5 ft-lb)

5. THRUST ANGLE

When adjusting, adjust it to the following value.

Thrust angle: Adjustment value
0°±20′
Less than 20′ when "L" is 15 mm (0.6 in) or less

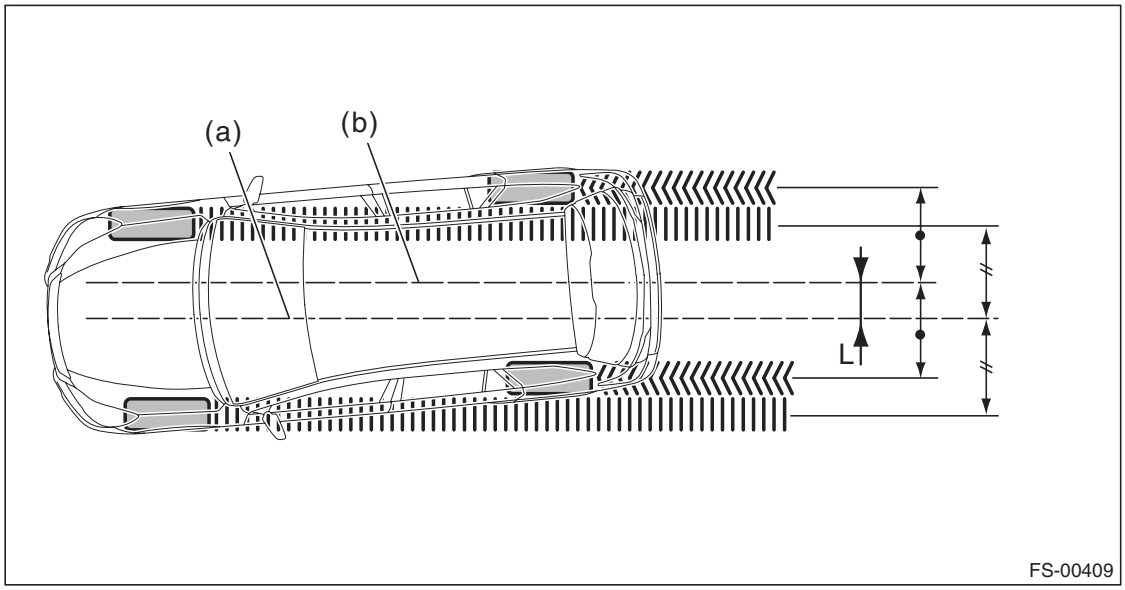

(a) Center line of loci (front axle) (b) Center line of loci (rear axle)

1) Make thrust angle adjustments by turning the toe-in adjusting bolts of the rear suspension equally in the same direction.
2) When one rear wheel is adjusted in a toe-in direction, adjust the other rear wheel equally in toe-out direction, in order to make the thrust angle adjustment.

GETtheMANUALS.org

3) When the left and right adjusting bolts are turned by one graduation, the thrust angle will change approx. 15′. (“L” is approx. 11 mm (0.43 in)).

NOTE:
Thrust angle is a mean value of left and right wheel toe angles in relation to the vehicle body center line. Vehicle is driven straight in the thrust angle direction while slanting in the oblique direction depending on the degree of the mean thrust angle.

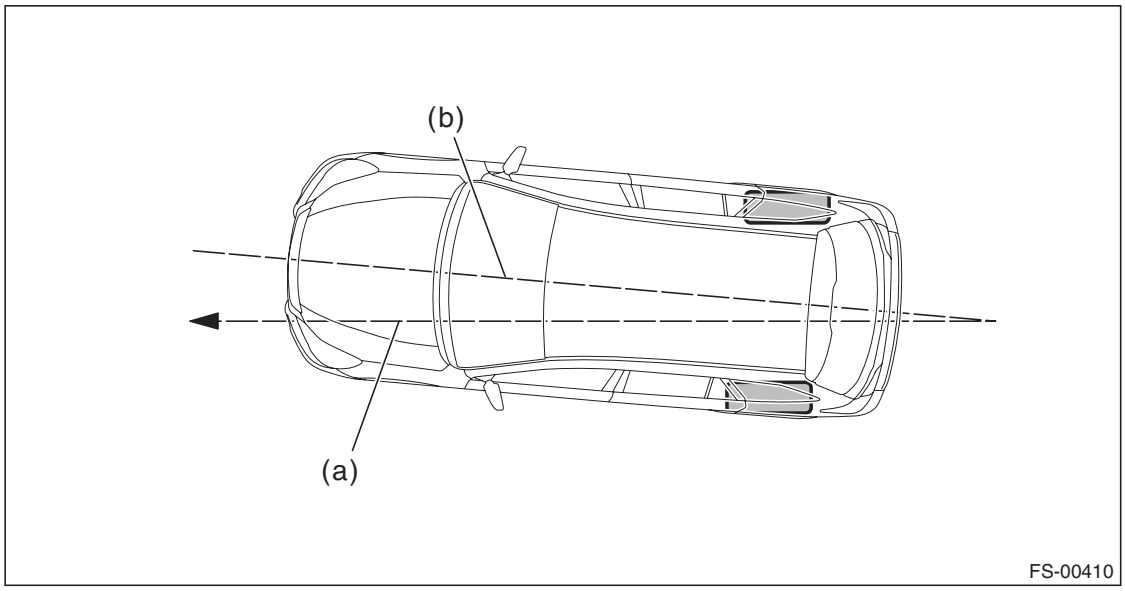

(a) Thrust angle
(b) Body center line

Thrust angle

$\gamma = (\alpha - \beta)/2$

α: Rear RH wheel toe-in angle
β: Rear LH wheel toe-in angle
Substitute only the positive toe-in values from each wheel into α and β in the calculation.

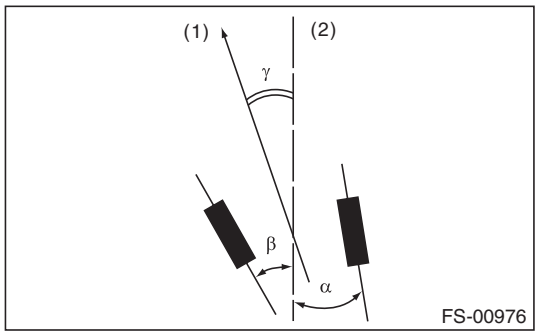

(1) Front
(2) Body center line

GETtheMANUALS.org

3. Cradle

A: REMOVAL

1) Set the vehicle on a lift.
2) Adjust the tilt position of the steering column to the lowest position and lock the tilt lever.

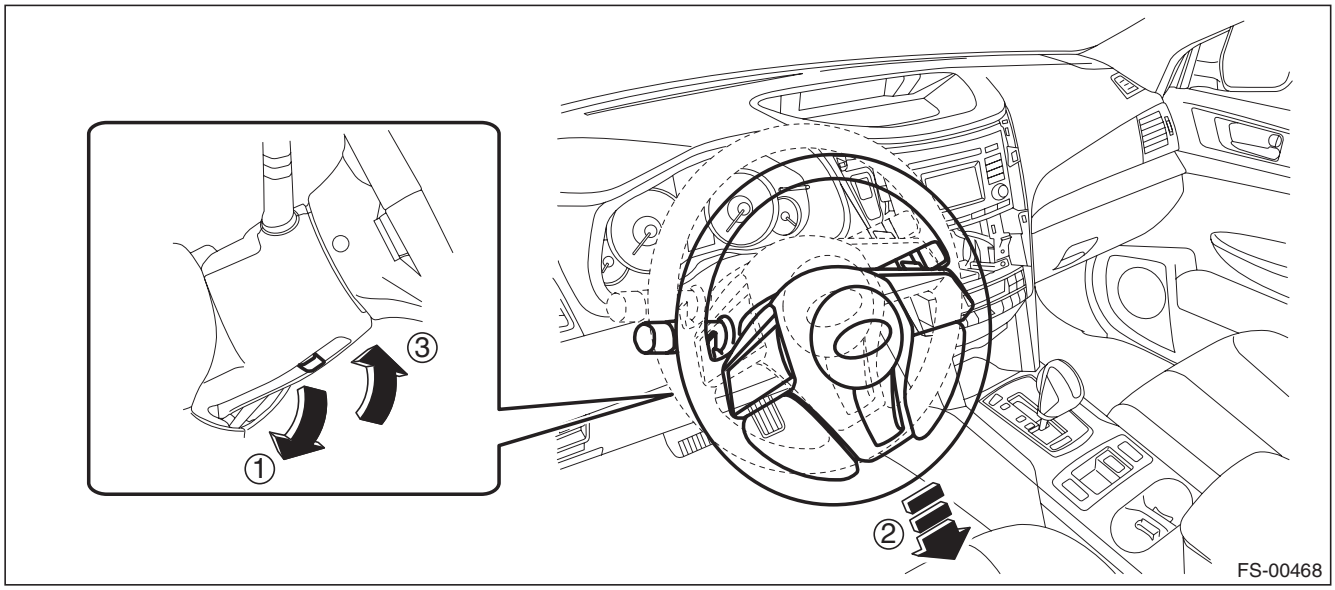

3) Prevent the steering wheel from turning using the seat belt.

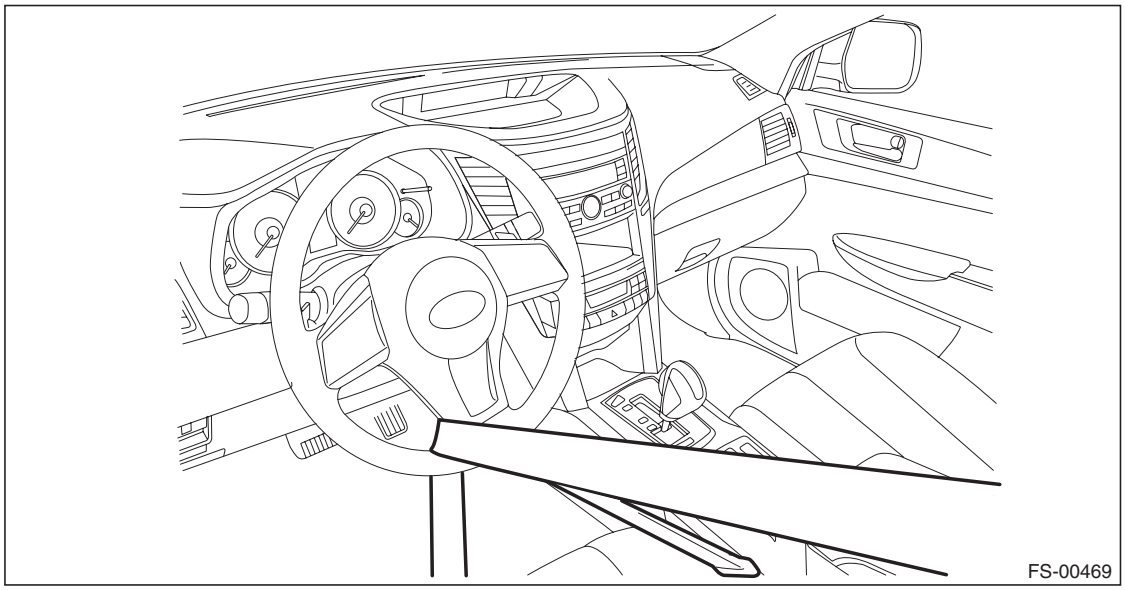

4) Remove the front wheels.
5) Disconnect the ground cable from battery.
6) Remove the air intake duct. <Ref. to IN(H4SO)-9, REMOVAL, Air Intake Duct.>
7) Remove the air intake boot assembly. (non-turbo model)
- H4 model: <Ref. to IN(H4SO)-8, REMOVAL, Air Intake Boot.>
- H6 model: <Ref. to IN(H6DO)-7, REMOVAL, Air Intake Boot.>

8) Remove the intercooler and the intercooler stay. (turbo model) <Ref. to IN(H4DOTC)-17, REMOVAL, Intercooler.>

GETtheMANUALS.org

9) Remove the clips and remove the grille bracket.

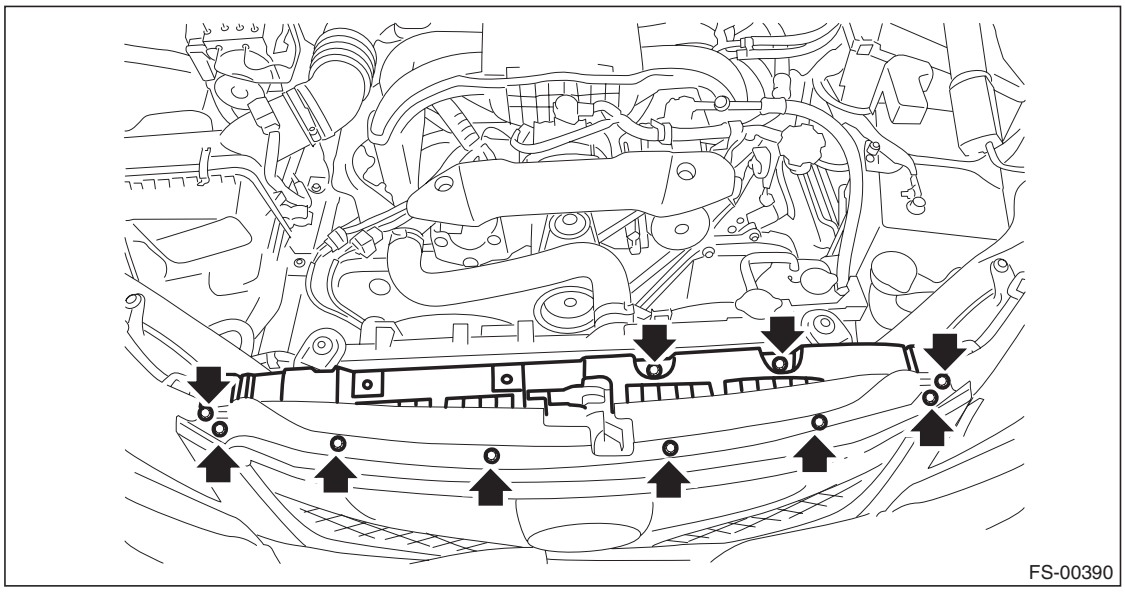

10) Remove the power steering hose bracket and power steering hose.

CAUTION:
Plug the removed hose and pipe to prevent foreign matter from entering.

(1) Remove the hose clamp, and disconnect the power steering hose (a).
(2) Remove the bolt, and remove the power steering hose bracket (b).
(3) Remove the bolt, and disconnect the hose (c) from the power steering pump.

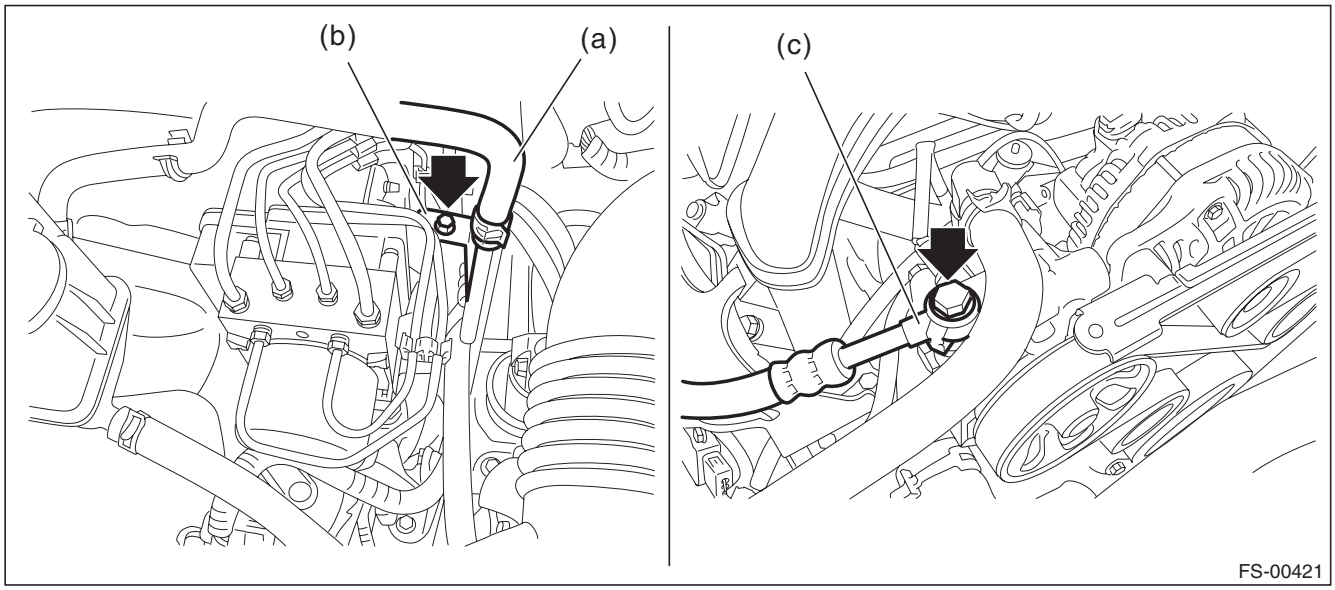

11) Remove the throttle body from the intake manifold.

NOTE:
Do not disconnect the inlet and outlet hoses of engine coolant.

GETtheMANUALS.org

12) Replace the engine hanger installed on the engine with the SUBARU genuine engine hanger (H4 non-turbo model) or ST (H6 model).

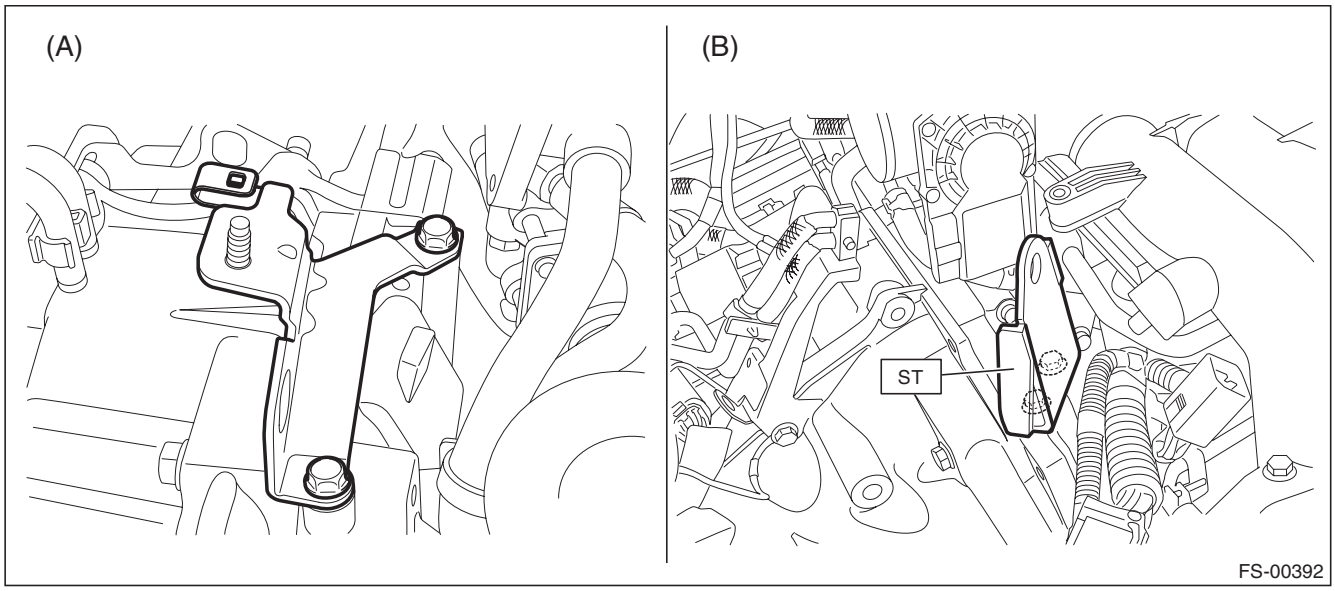

(A) H4 non-turbo model (SUBARU genuine part): HANGER CP ENGINE RR (10004AA180)
(B) H6 model (ST): HANGER (18360AA020)

Tightening torque:
16 N·m (1.63 kgf-m, 11.8 ft-lb)

13) Suspend the engine using ST, chain sling, and shackle.
(1) Set the ST on the vehicle.

CAUTION:
Set the arms of ST (ENGINE HANGER) at the locations shown in the figure.

PREPARATION TOOL:
ST1: ENGINE HANGER (99099AJ000)
ST2: CHAIN BALANCER (99099AJ010)

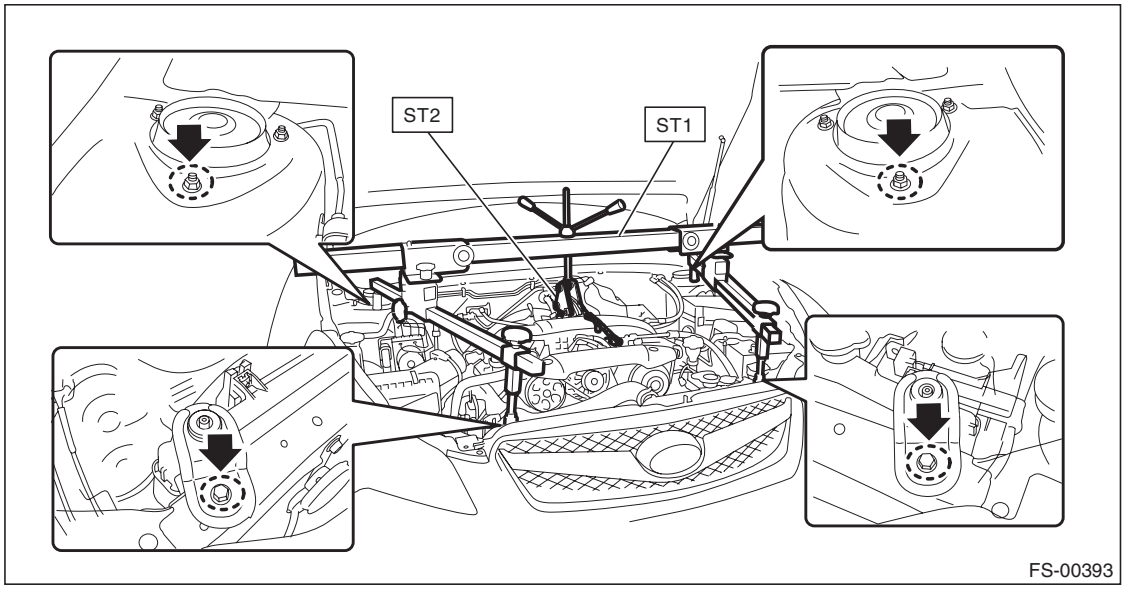

(2) Attach the shackle to the both ends of chain sling.

GETtheMANUALS.org

(3) Pass the chain sling through the CHAIN BALANCER and secure the both ends to the hooks on the engine.

CAUTION:

- **Set the chain sling so that it does not contact the engine parts.**

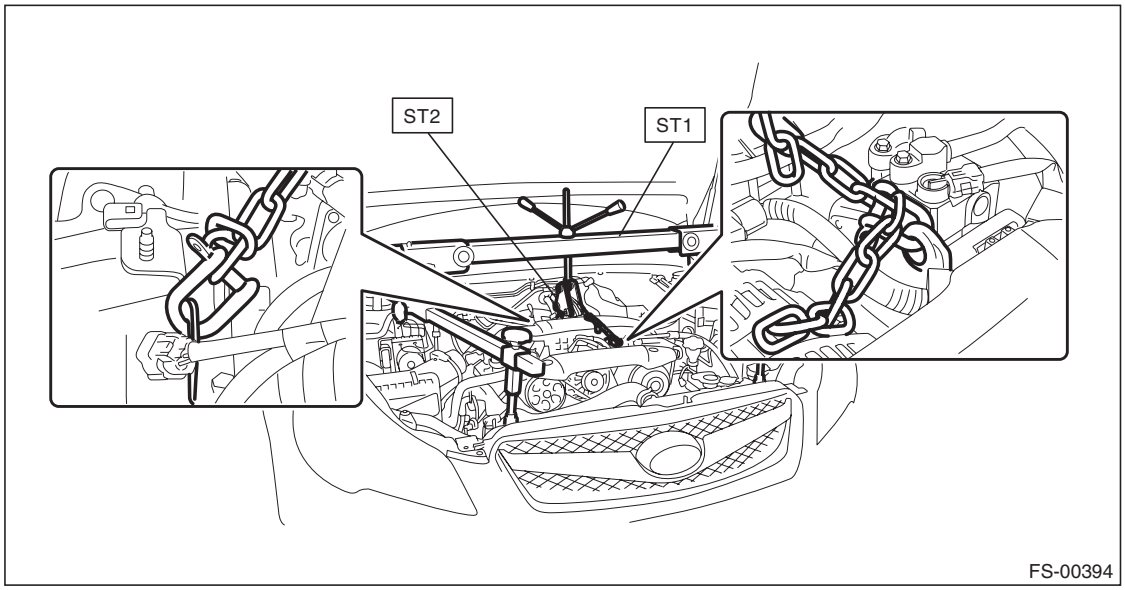

- **Be sure to use chain slings that satisfy the following requirements:**
  - **Length: 0.8 — 1 m (2.6 — 3.3 ft)**
  - **Load capacity: 1.2 t (2646 lb) or more**
  - **Wire diameter: 6 mm (0.24 in) or 6.3 mm (0.25 in)**
  - **Internal width: 8.5 mm (0.33 in) or more**
  - **External width: 23.5 mm (0.93 in) or less**

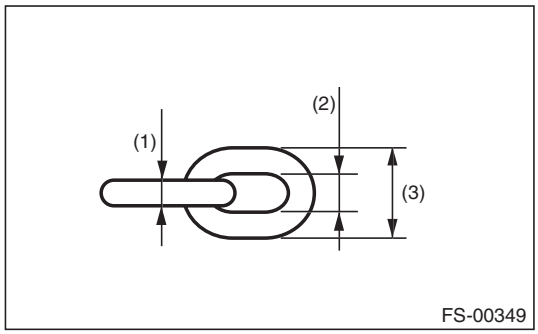

(1) Wire diameter: 6 mm (0.24 in) or 6.3 mm (0.25 in)
(2) Internal width: 8.5 mm (0.33 in) or more
(3) External width: 23.5 mm (0.93 in) or less

- **Use a shackle with the load capacity of 250 kg (551 lb) or more.**

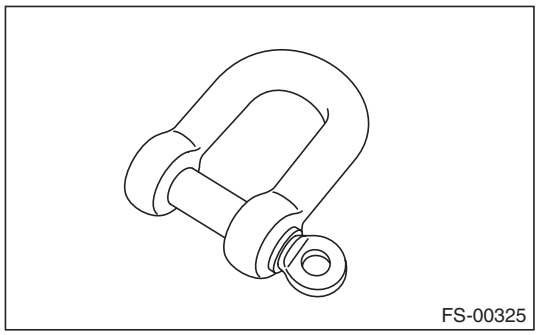

GETtheMANUALS.org

14) Remove the nuts connecting the main mount and the transmission mounting bracket.

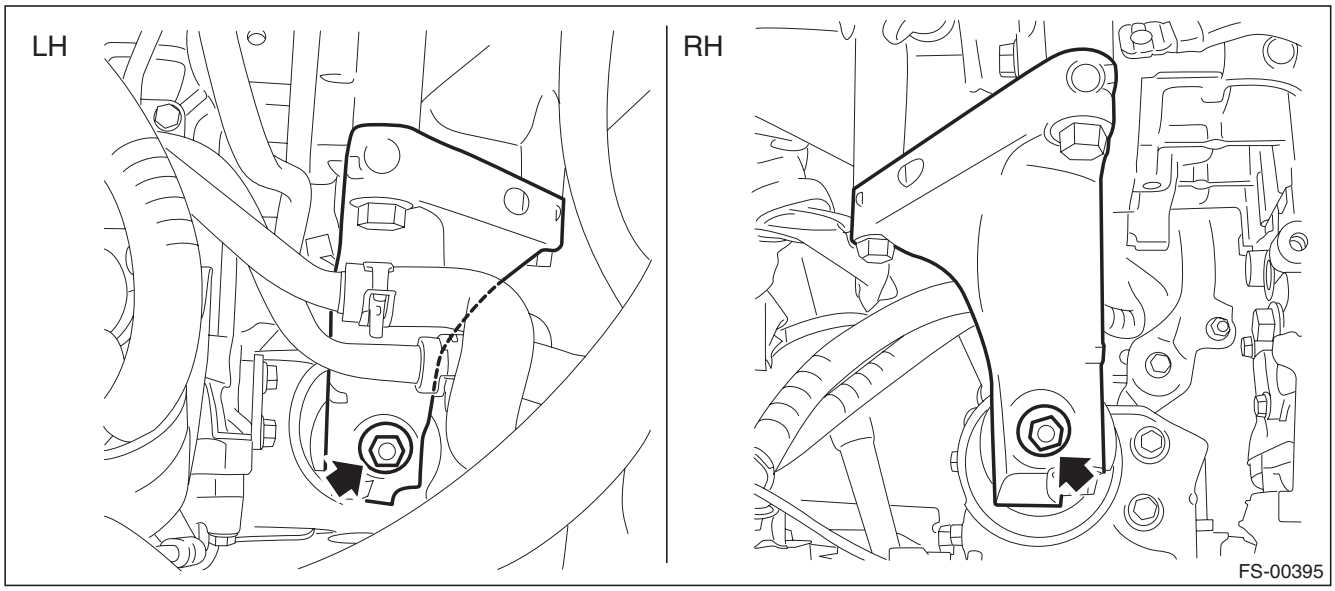

15) Remove the universal joint. <Ref. to PS-21, REMOVAL, Universal Joint.>

CAUTION:
To prevent damage to the universal joint and error of handling force, make sure to remove the universal joint.

16) Remove the front exhaust pipe.
- H4 turbo model: <Ref. to EX(H4DOTC)-5, REMOVAL, Front Exhaust Pipe.>
- H4 non-turbo model: <Ref. to EX(H4SO)-5, REMOVAL, Front Exhaust Pipe.>
- H6 model: <Ref. to EX(H6DO)-5, REMOVAL, Front Exhaust Pipe.>

17) Remove the bolt, and disconnect the left and right front arms.

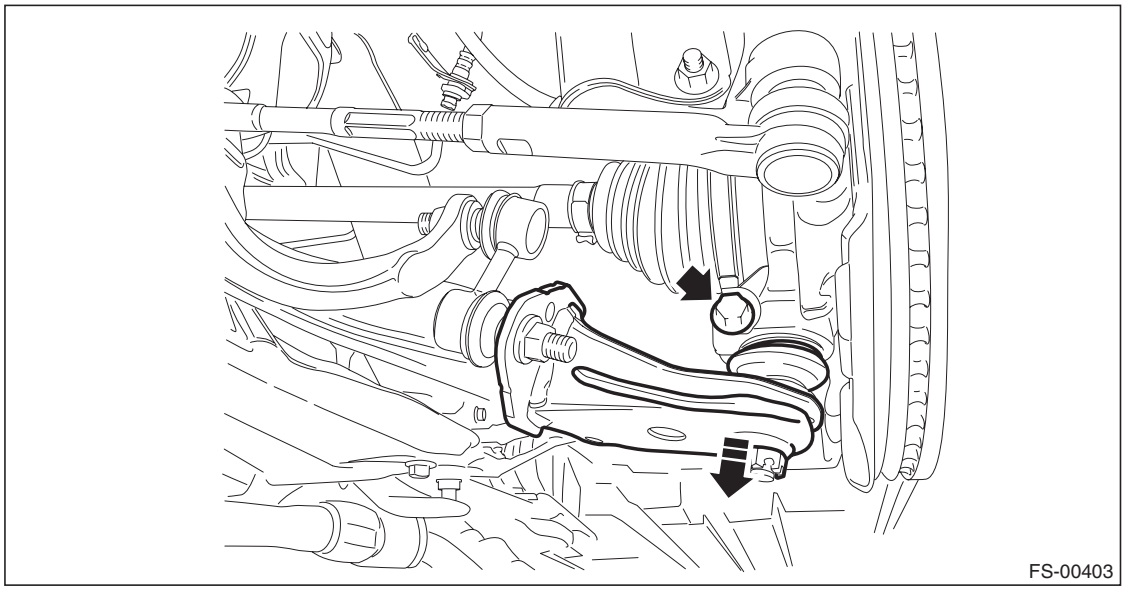

GETtheMANUALS.org

18) Disconnect the left and right tie-rod ends.
   (1) Pull out the cotter pin.
   (2) Remove the castle nut.
   (3) Extract the tie-rod end from the front axle housing.

PREPARATION TOOL:
Tie-rod end puller

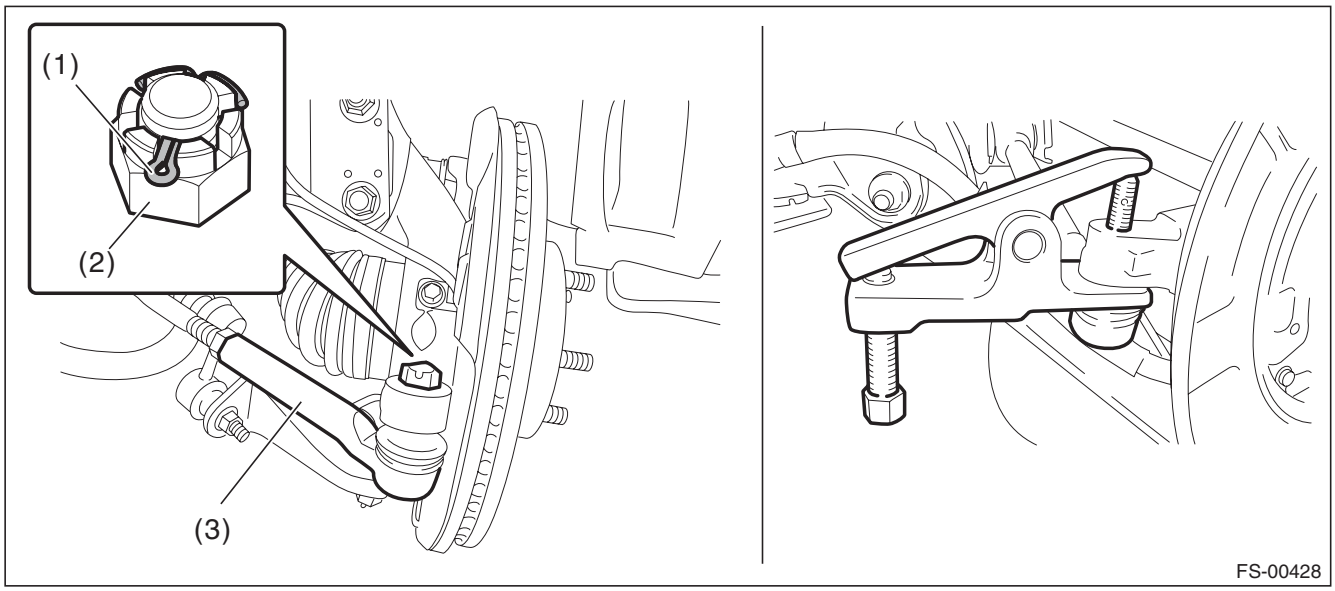

19) Attach the sling belt so that it wraps around the both frames using the shackle.

CAUTION:
- **Be sure to attach the sling belt to ensure safety in operation.**
- **Use a sling belt with the length of 2 m (6.6 ft), the width of 35 — 40 mm (1.38 — 1.57 in) and the load capacity of 1 t (2205 lb) or more.**

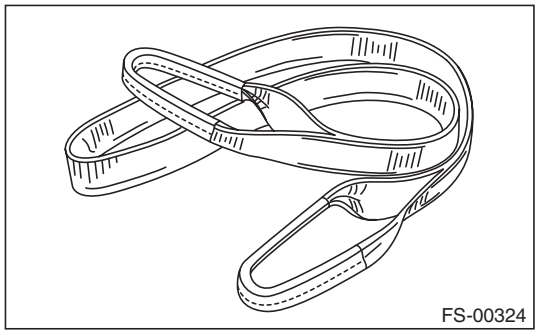

GETtheMANUALS.org

- **Use a shackle with the load capacity of 0.5 t (1103 lb) or more.**

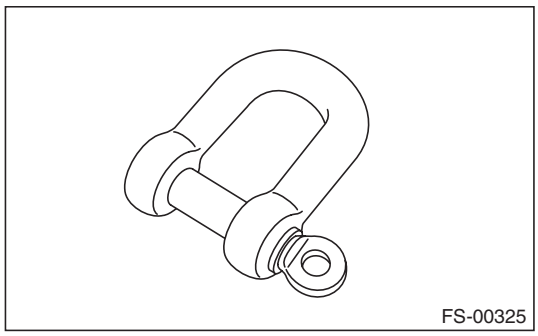

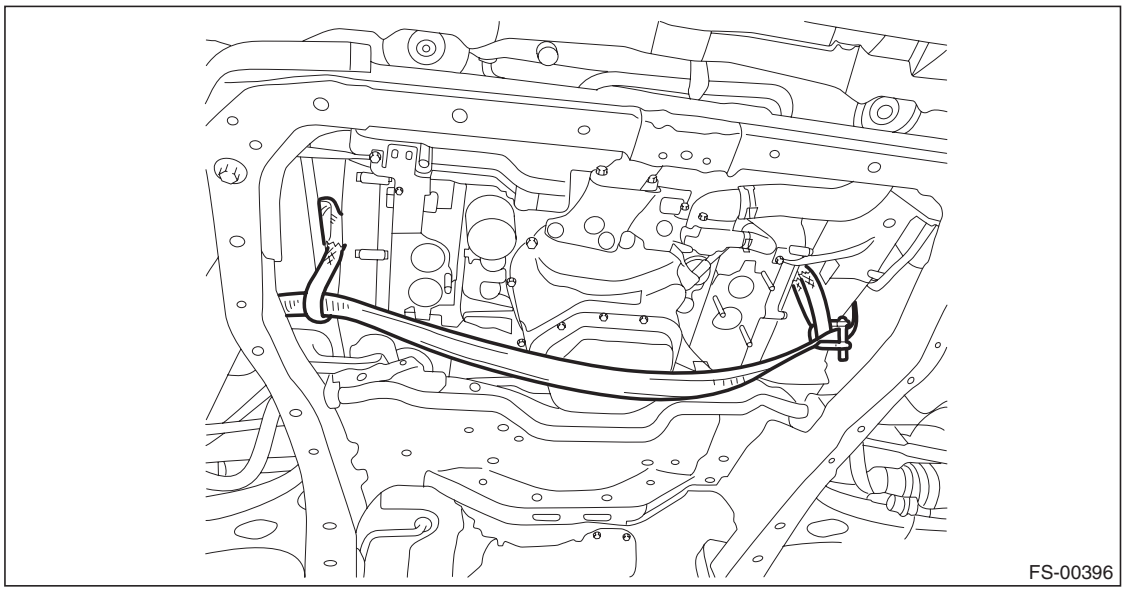

20) Remove the cradle from the vehicle.

CAUTION:
The cradle is heavy. Remove it carefully by paying attention to the balance.

(1) Support the cradle with the transmission jack.

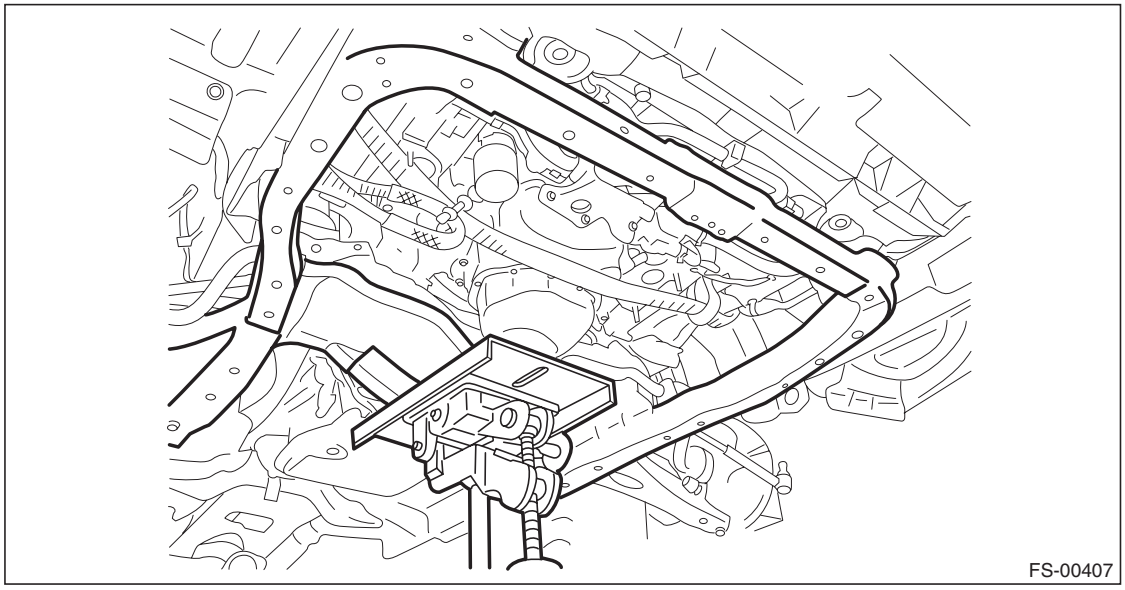

GETtheMANUALS.org

(2) Remove the bolt from the front cushion rubber, and remove the bolt securing the front of the cradle.

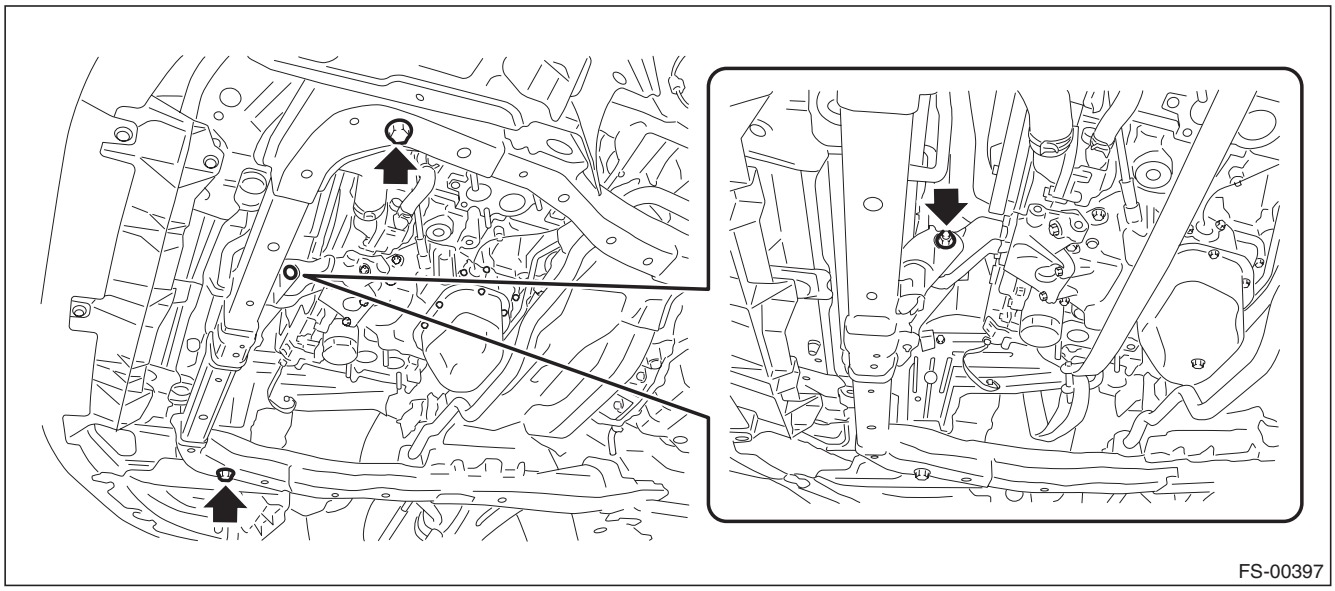

(3) Remove the left and right bolts and nuts.

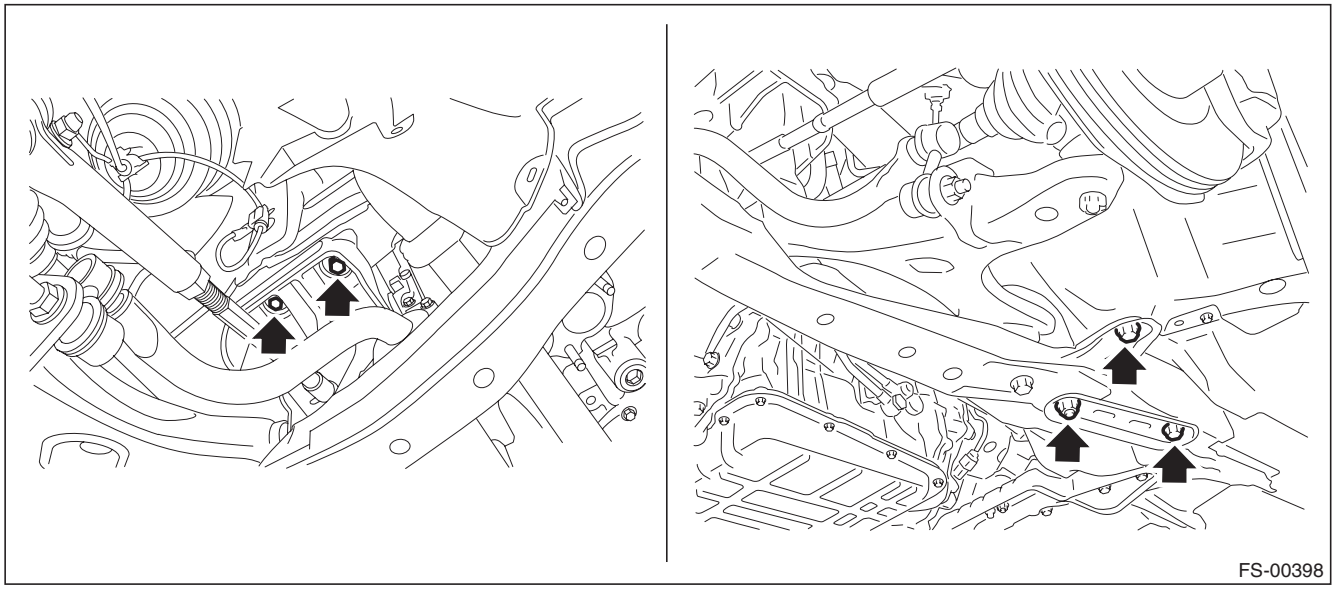

(4) Remove the cradle from the vehicle.

GETtheMANUALS.org

21) To remove the stud bolt, use the ST.

CAUTION:
Do not remove the stud bolt unless necessary. Always replace the parts with new parts when removed.

PREPARATION TOOL:
ST: STUD BOLT SOCKET (20299AG020)

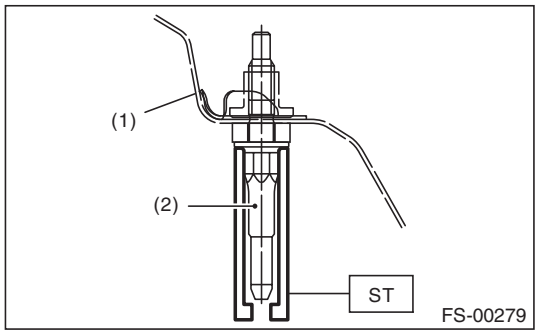

(1) Vehicle body
(2) Stud bolt

B: INSTALLATION

1) Install each part in the reverse order of removal.

CAUTION:
- **Use a new bolt and self-locking nut. For parts which are not reusable, refer to "COMPONENT". <Ref. to FS-3, COMPONENT, General Description.>**
- **Perform installation of the universal joint when the tilt position of the steering column is at the lowest position.**
- **Tighten the bolts of the universal joint in the order of gearbox side and column shaft side.**
- **Be sure to follow the tightening order and tightening torque of universal joint to avoid the steering effort from becoming heavy.**

NOTE:
Replace the gasket of the throttle body with a new gasket.

Tightening torque:
Front suspension-related parts: <Ref. to FS-3, COMPONENT, General Description.>
Steering gearbox-related parts: <Ref. to PS-6, STEERING GEARBOX, COMPONENT, General Description.>

2) Inspect the wheel alignment and adjust if necessary.
- Inspection: <Ref. to FS-9, INSPECTION, Wheel Alignment.>
- Adjustment: <Ref. to FS-14, ADJUSTMENT, Wheel Alignment.>

GETtheMANUALS.org

4. Front Stabilizer

A: REMOVAL

1) Lift up the vehicle, and then remove the left and right front wheels.
2) Remove the front under cover. <Ref. to EI-35, REMOVAL, Front Under Cover.>
3) Remove the center exhaust pipe. (turbo model) <Ref. to EX(H4DOTC)-12, REMOVAL, Center Exhaust Pipe.>
4) Remove the front stabilizer.
   (1) Remove the left and right stabilizer links.

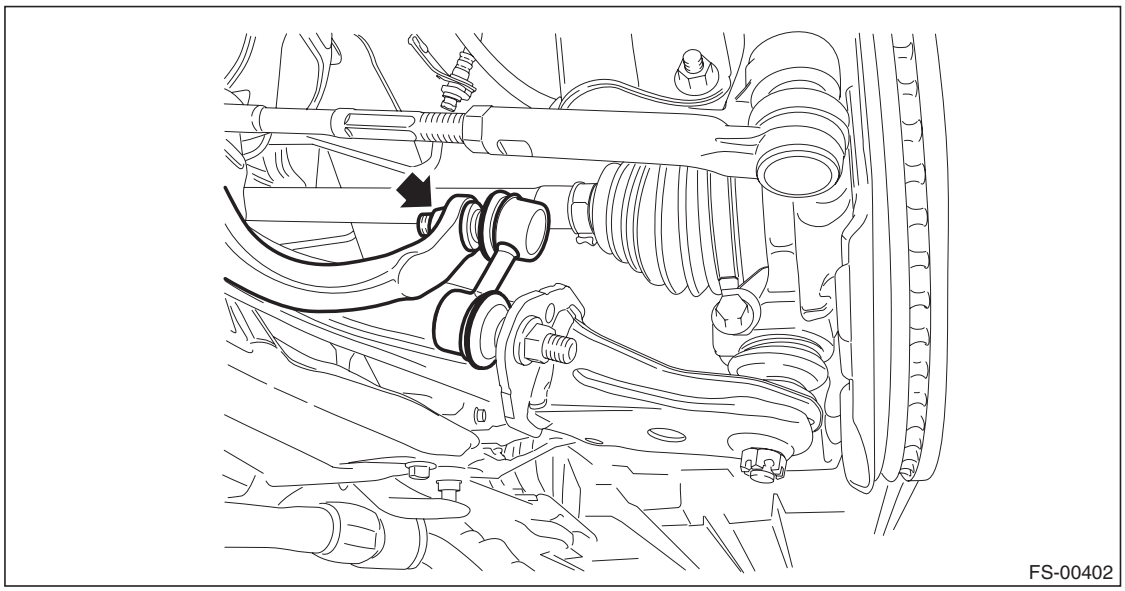

   (2) Remove the left and right stabilizer brackets.

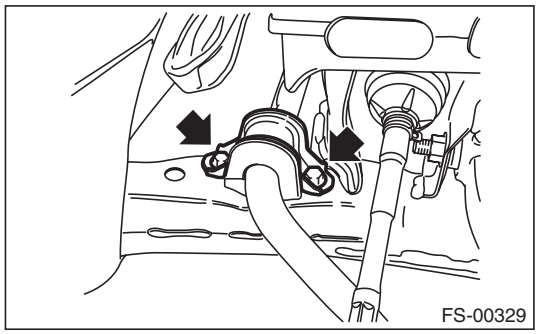

GETtheMANUALS.org

(3) Disconnect the left and right tie-rod ends.
a) Pull out the cotter pin.
b) Remove the castle nut.
c) Extract the tie-rod end from the front axle housing.

PREPARATION TOOL:
Tie-rod end puller

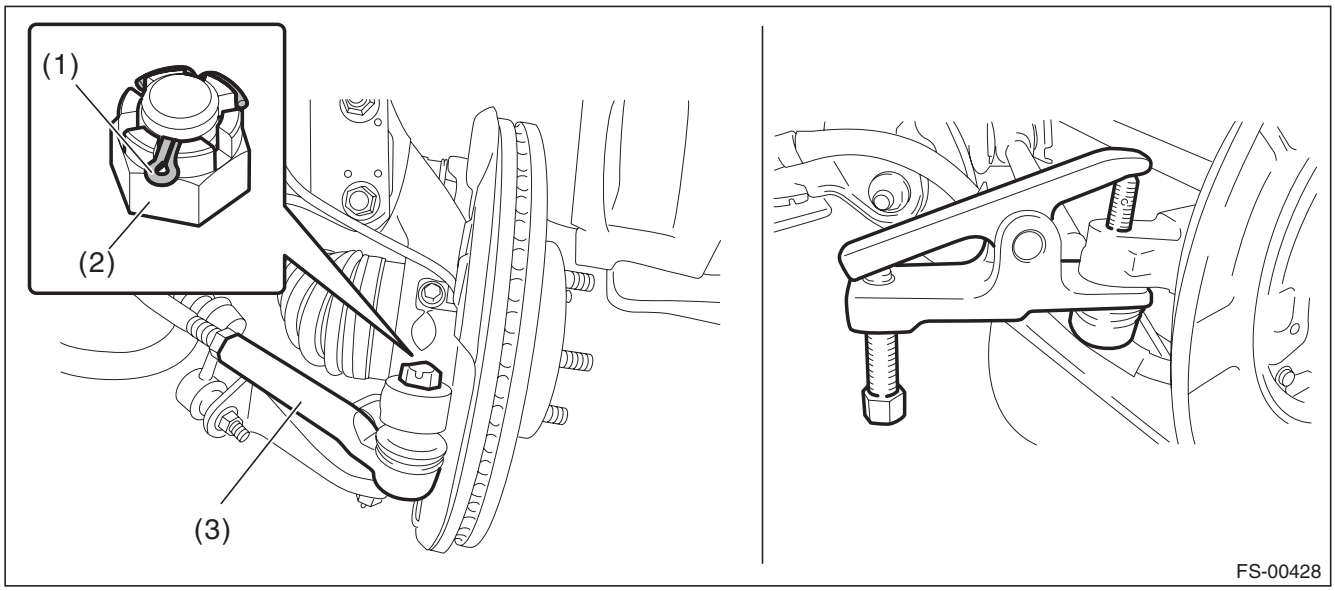

(1) Cotter pin (2) Castle nut (3) Tie-rod end

(4) Suspend the engine and replace the front cushion mount with ST. (turbo model) <Ref. to 5AT-37, REMOVAL, Automatic Transmission Assembly.>

PREPARATION TOOL:
ST: SPECIAL TOOL - H4 (41099AJ000)

NOTE:
For turbo model, it is required to secure space for operation to hang the engine and remove the stabilizer.

(5) Turn the front stabilizer by approximately 180° toward the front of the vehicle and pull out the front stabilizer from the right side of the vehicle.

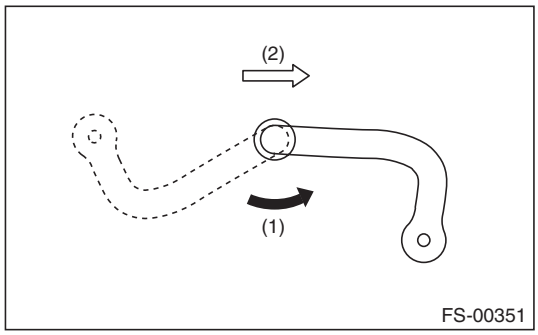

(1) Turn toward the front of the vehicle.
(2) Front side of vehicle

GETtheMANUALS.org

B: INSTALLATION

1) Before installation, inspect the following items and replace any faulty part with a new one.
- Check the bushing for abnormal cracks, fatigue or damage.
- Check the stabilizer link for damage.

2) Install each part in the reverse order of removal.

CAUTION:
The stabilizer bracket has a set orientation. Install it with the arrow mark facing the front side (1) of the vehicle.

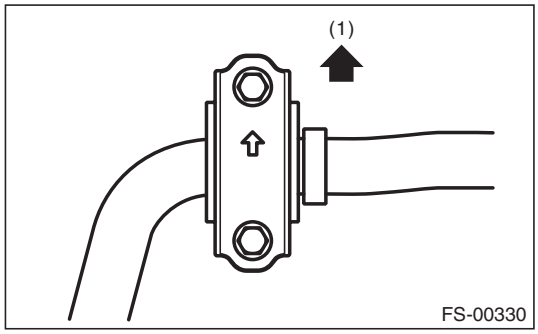

Tightening torque:
Stabilizer bracket: 25 N·m (2.55 kgf-m, 18.4 ft-lb)
Stabilizer link: 60 N·m (6.12 kgf-m, 44.3 ft-lb)

GETtheMANUALS.org

5. Front Ball Joint

A: REMOVAL

1) Lift up the vehicle, and then remove the front wheels.
2) Remove the left and right stabilizer brackets.

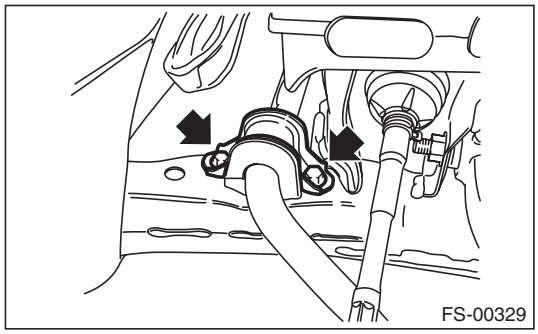

3) Remove the ball joint.
   (1) Extract the cotter pin (a) from the ball stud.
   (2) Remove the castle nut (b).
   (3) Extract the ball stud from the front arm.
   (4) Remove the bolt securing the ball joint to the front axle housing.

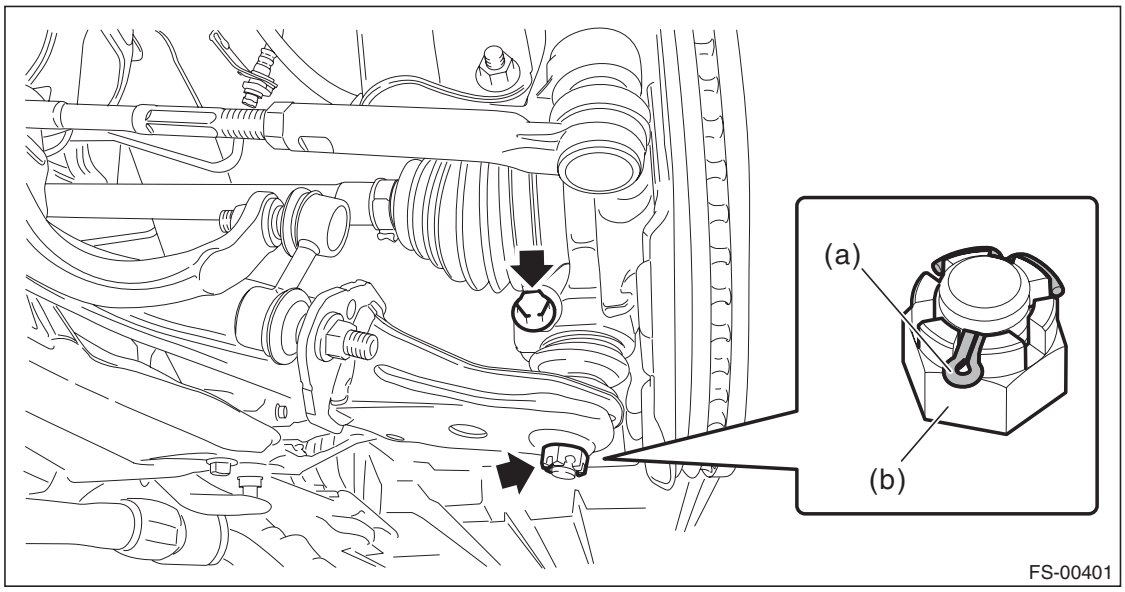

   (5) Extract the ball joint from the front axle housing.

GETtheMANUALS.org

B: INSTALLATION

1) Install the ball joint to the front axle housing.

CAUTION:
- **Do not apply grease to the tapered portion of ball stud.**
- **Before tightening, make sure the lower side of front axle housing and stepped section of ball joint are in contact.**

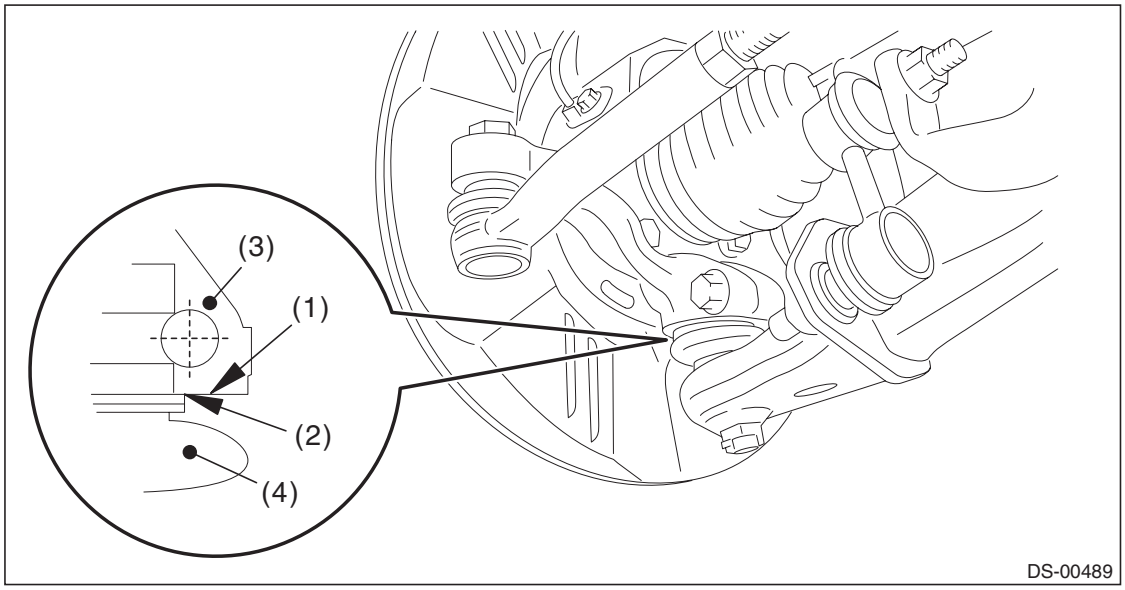

(1) Lower side of front axle housing
(2) Raised section of ball joint
(3) Front axle housing
(4) Ball joint

Tightening torque:
50 N·m (5.1 kgf-m, 36.9 ft-lb)

2) Install the ball joint into front arm.
   (1) Connect the ball joint to the front arm.

Tightening torque:
39 N·m (3.98 kgf-m, 28.8 ft-lb)

   (2) Retighten the castle nut further up to 60° until the hole in the ball stud is aligned with a slot in castle nut.
   (3) Insert a new cotter pin and bend it around the castle nut.

GETtheMANUALS.org

3) Install the stabilizer bracket.

NOTE:
The stabilizer bracket has a set orientation. Install it with the arrow mark facing the upper side of the vehicle.

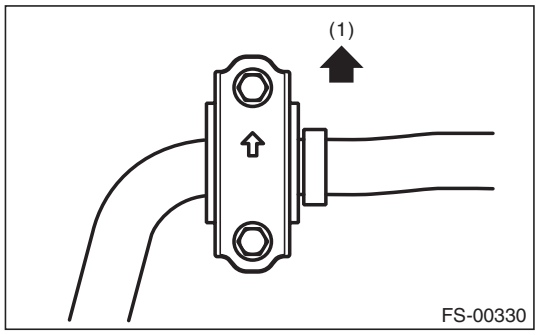

(1) Front side of vehicle

Tightening torque:
25 N·m (2.55 kgf-m, 18.4 ft-lb)

4) Install the front wheels.

C: INSPECTION

1) Measure the play of the ball joint using the following procedures. Replace with a new part if the play exceeds specification.

(1) With 686 N (70 kgf, 154 lbf) loaded in direction shown in the figure, measure the length ℓ_1.

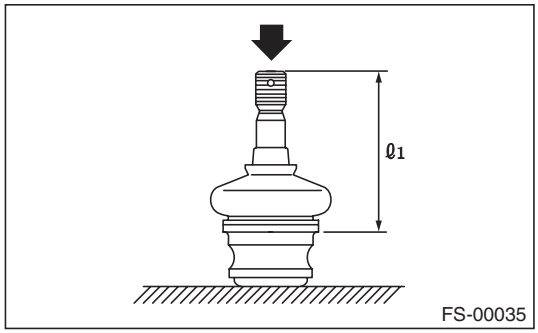

(2) With 686 N (70 kgf, 154 lbf) loaded in direction shown in the figure, measure the length ℓ_2.

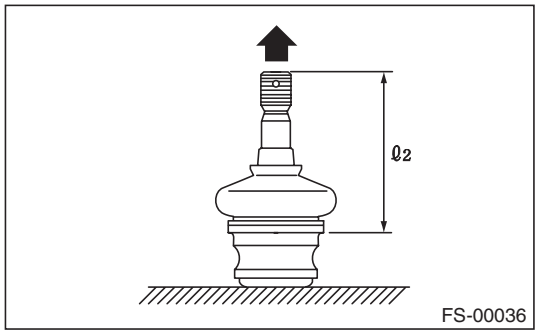

(3) Determine free play using the following formula.

$S = \ell_2 - \ell_1$

(4) Replace with a new part if the play exceeds specification.

Front ball joint
Replacement standard S: Less than 0.3 mm (0.012 in)

2) If the play is within specification, visually check the dust cover.
3) If the dust cover is damaged, replace with a new ball joint.

GETtheMANUALS.org

6. Front Arm

A: REMOVAL

1) Lift up the vehicle, and then remove the front wheels.
2) Remove the front arm.
   (1) Remove the nut and disconnect the front stabilizer link.
   (2) Remove the bolt, and then remove the ball joint for the front arm.

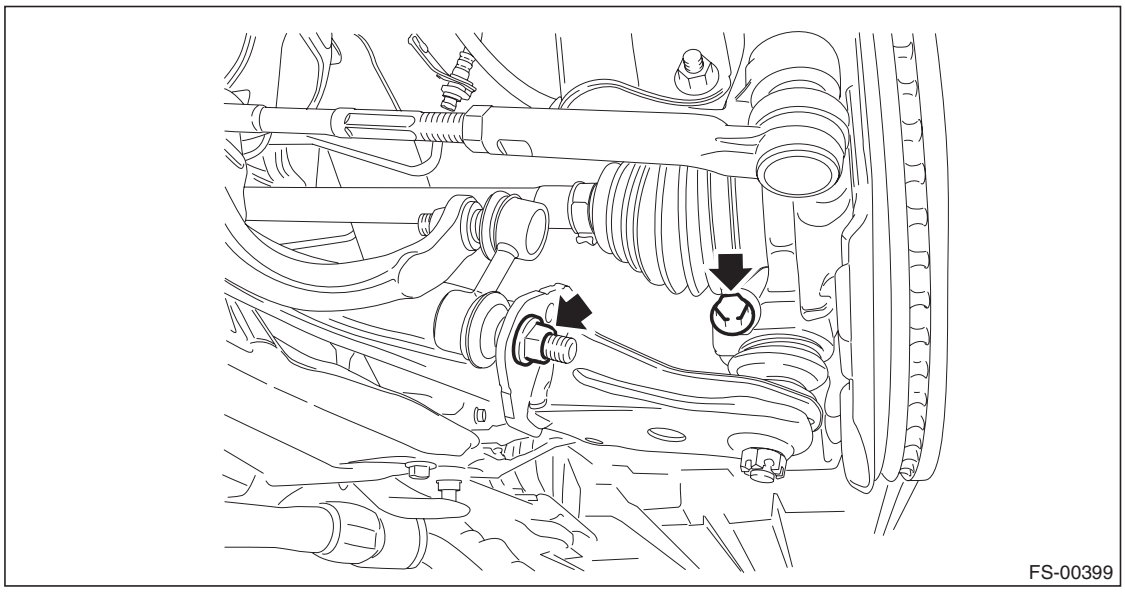

   (3) Remove the bolts, then remove the front arm.

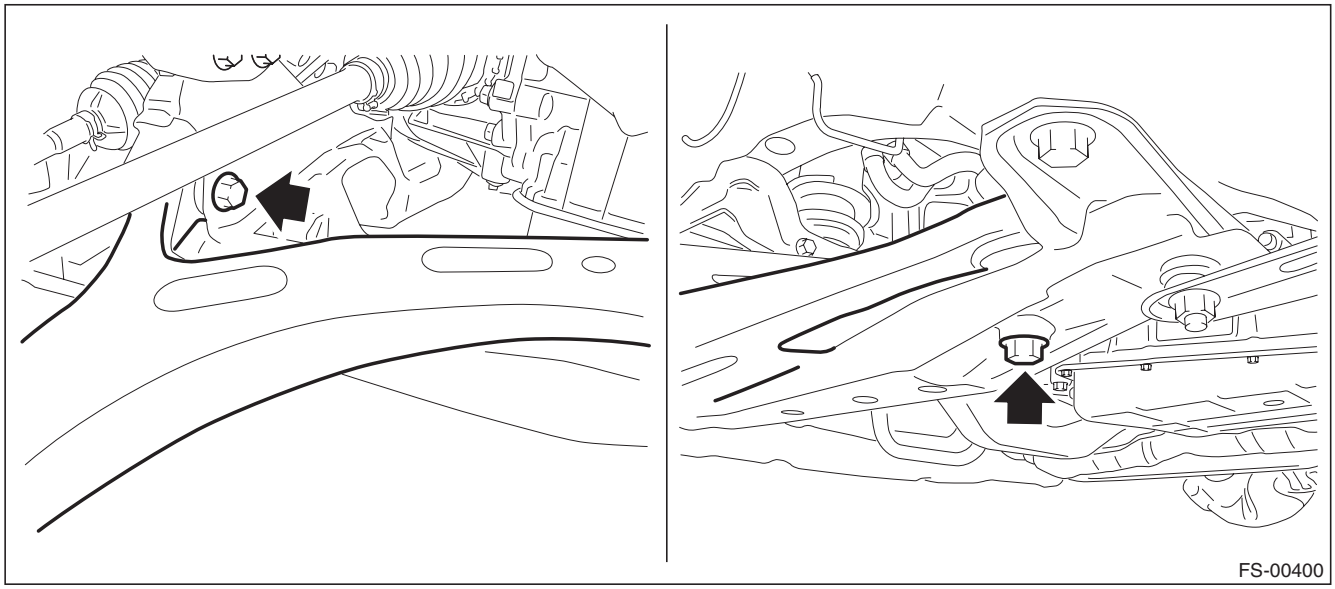

GETtheMANUALS.org

B: INSTALLATION

1) Before installation, inspect the following items and replace any faulty part with a new one.
- Check the front arm for damage or cracks, and replace if defective.
- Visually check the bushing for abnormal cracks, fatigue or damage.
- Visually check the dust cover on the ball joint for damage.

2) Using new self-locking nuts, temporary tighten the front arm.
3) Install the ball joint to the front axle housing.

CAUTION:
Before tightening, make sure the lower side of front axle housing and stepped section of ball joint are in contact.

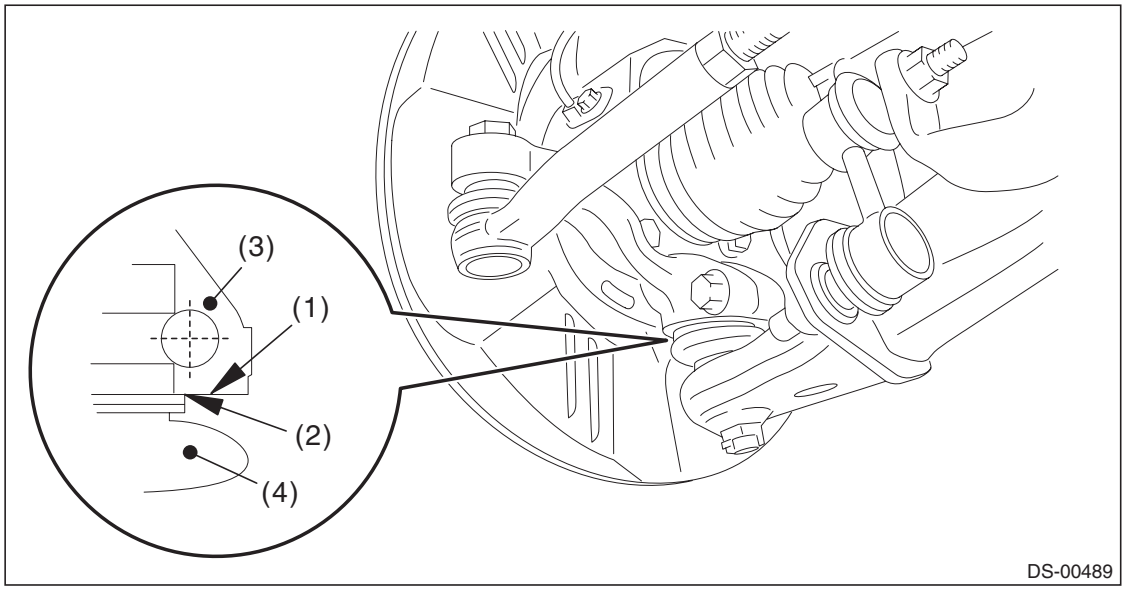

(1) Lower side of front axle housing
(2) Raised section of ball joint
(3) Front axle housing
(4) Ball joint

Tightening torque:
50 N·m (5.1 kgf-m, 36.9 ft-lb)

4) Install the stabilizer link.

Tightening torque:
60 N·m (6.1 kgf-m, 44.3 ft-lb)

5) Install the front wheels.
6) Unload the vehicle from lift, and tighten the bolt which secures the front arm to cradle with wheels in full contact with the ground and the vehicle at curb weight.

Tightening torque:
Front bushing side: 95 N·m (9.7 kgf-m, 70.1 ft-lb)
Rear bushing side: 140 N·m (14.3 kgf-m, 103.3 ft-lb)

7) Inspect the wheel alignment and adjust if necessary.
- Inspection: <Ref. to FS-9, INSPECTION, Wheel Alignment.>
- Adjustment: <Ref. to FS-14, ADJUSTMENT, Wheel Alignment.>

GETtheMANUALS.org

C: DISASSEMBLY

1. FRONT BUSHING

1) Put an alignment mark on the front arm based on the gap of bushing intermediate plate for front bushing.

CAUTION:
Always put an alignment mark for aligning the position on bushing installation.

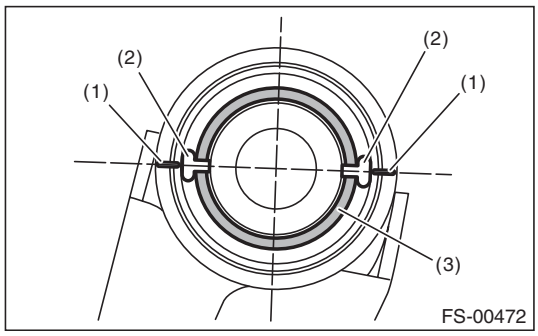

(1) Put an alignment mark.
(2) Gap of bushing intermediate plate
(3) Bushing intermediate plate

2) Using the ST and a press, remove the front bushing.

PREPARATION TOOL:
ST: INSTALLER & REMOVER SET (927680000)

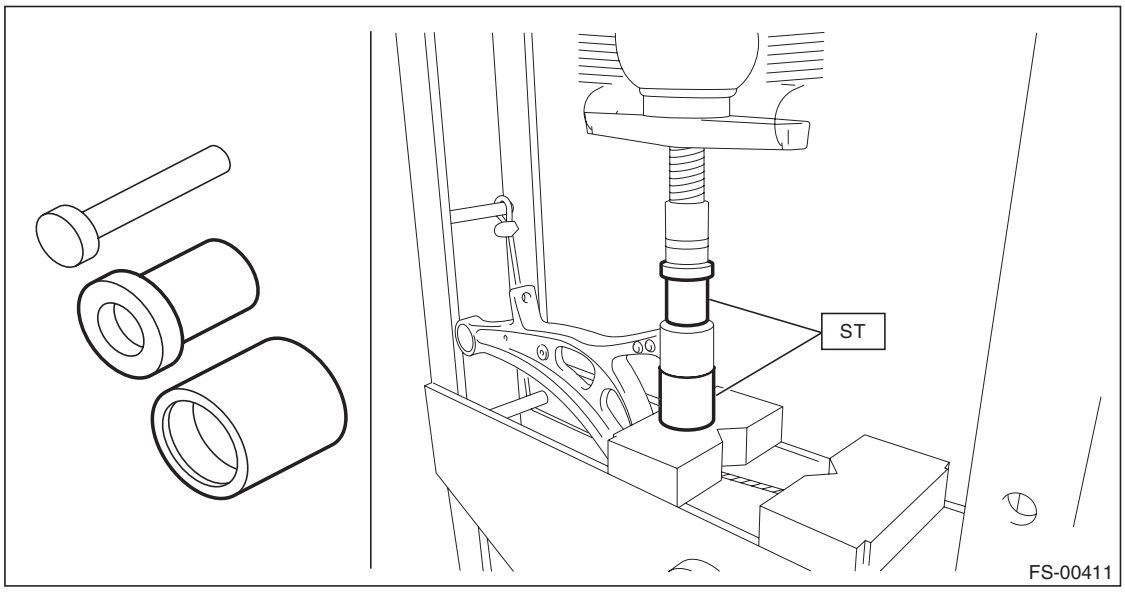

GETtheMANUALS.org

2. REAR BUSHING

1) Put an alignment mark on the front arm based on the center of rear bushing recess portion.

CAUTION:
Always put an alignment mark for aligning the position on bushing installation.

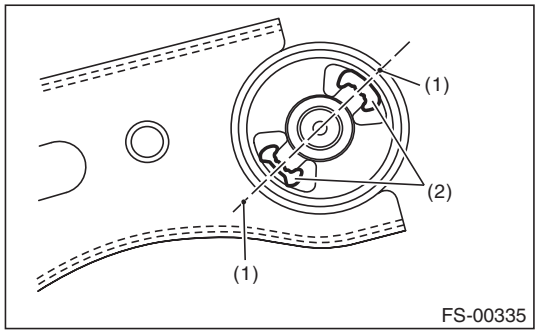

(1) Put an alignment mark.
(2) Recess section

2) Using the ST and a press, remove the rear bushing.

PREPARATION TOOL:
ST1: REMOVER (20299AG000)
ST2: BASE (20299AG010)

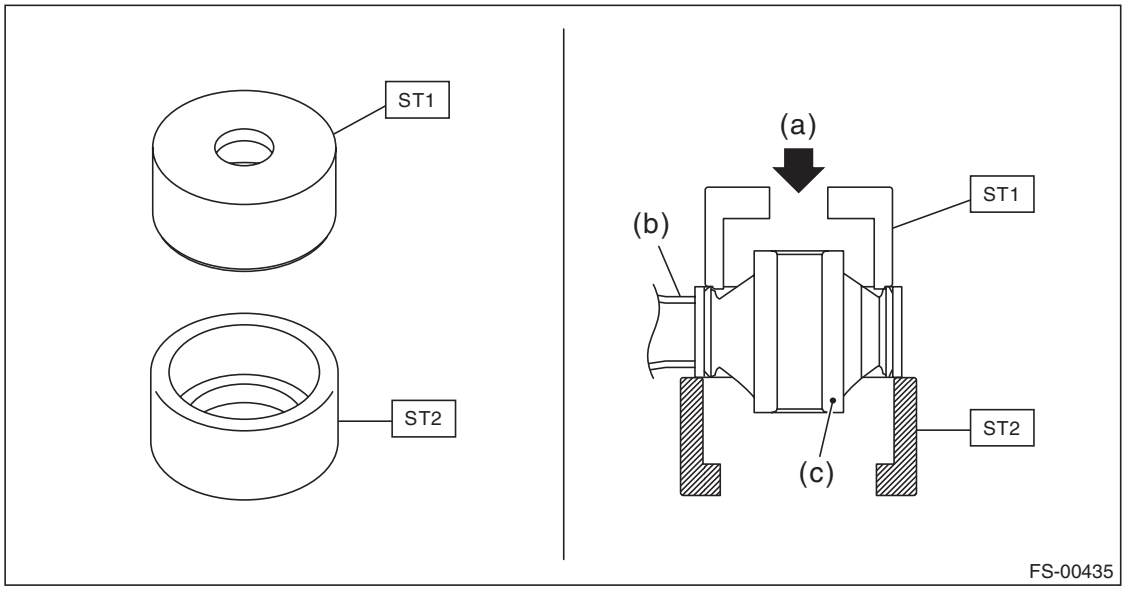

(a) Press (b) Front arm (c) Rear bushing

GETtheMANUALS.org

D: ASSEMBLY

1. FRONT BUSHING

1) Before assembly, inspect the following items and replace any faulty part with a new one.
- Check the front arm for damage or cracks, and replace if defective.
- Visually check the bushing for abnormal cracks, fatigue or damage.
- Visually check the dust cover on the ball joint for damage.

2) Align the gap of bushing intermediate plate for front bushing with the alignment mark of the front arm.
3) Using the ST and a press, install the front bushing.

PREPARATION TOOL:
ST: INSTALLER & REMOVER SET (927680000)

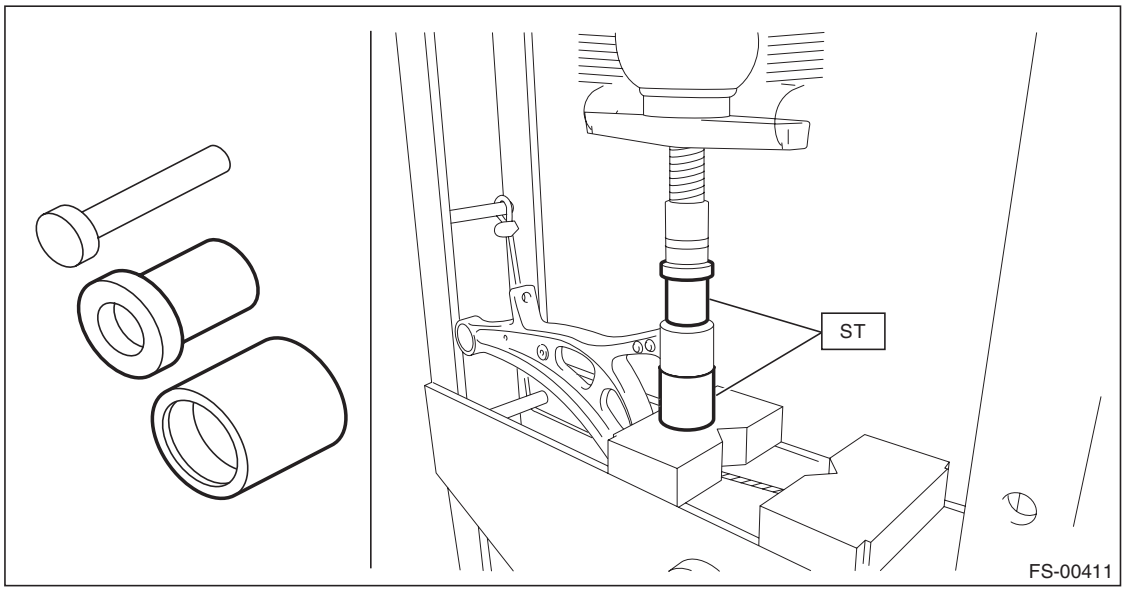

2. REAR BUSHING

1) Before installation, inspect the following items and replace any faulty part with a new one.
- Check the front arm for damage or cracks, and replace if defective.
- Visually check the bushing for abnormal cracks, fatigue or damage.
- Visually check the dust cover on the ball joint for damage.

2) Align the center of recess portion with the alignment mark on the front arm, with the protrusion (A) of recess portion facing the front side of vehicle.

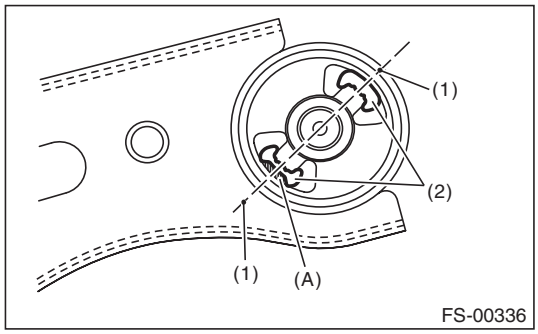

(1) Alignment mark
(2) Recess section

GETtheMANUALS.org

3) Using the ST and a press, install the rear bushing.

CAUTION:
Align the upper face of front arm and the end of bushing during installation.

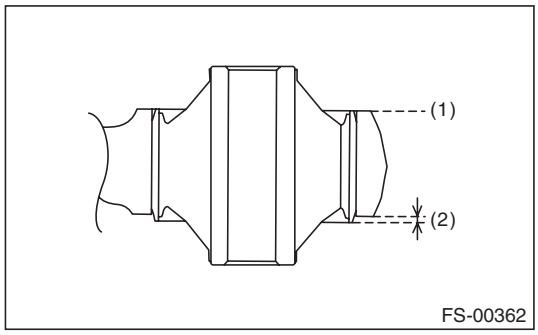

(1) Aligned
(2) Not aligned

PREPARATION TOOL:
ST1: REMOVER (20299AG000)
ST2: BASE (20299AG010)

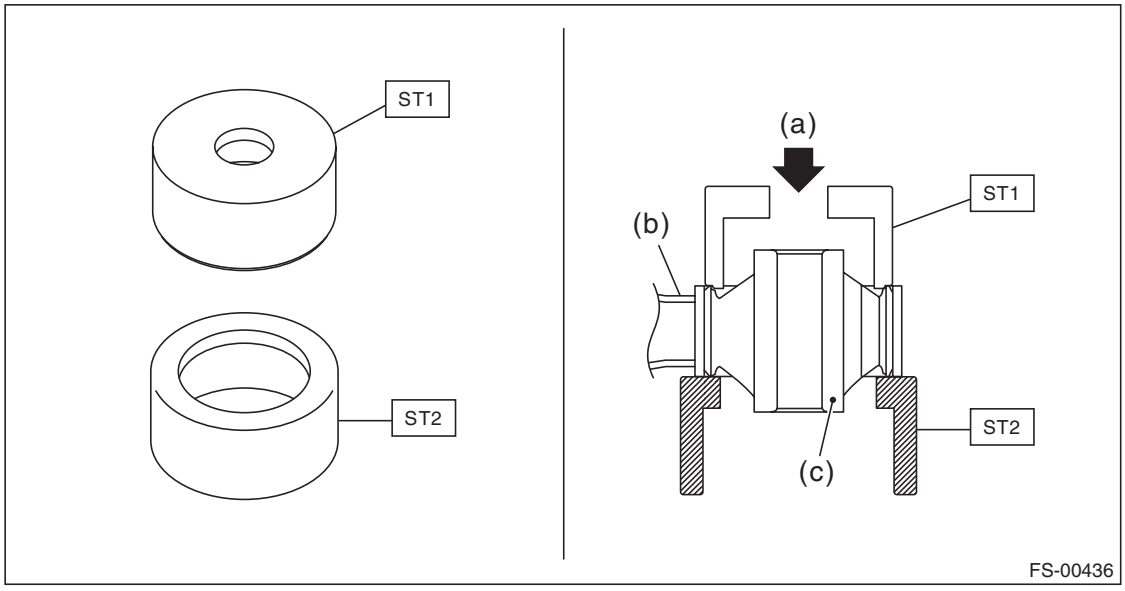

(a) Press (b) Front arm (c) Rear bushing

GETtheMANUALS.org

7. Front Strut

A: REMOVAL

1) Lift up the vehicle, and then remove the front wheels.
2) Remove the front strut.
   (1) Place an alignment mark on the camber adjusting bolt and strut.
   (2) Remove the brake hose bracket.

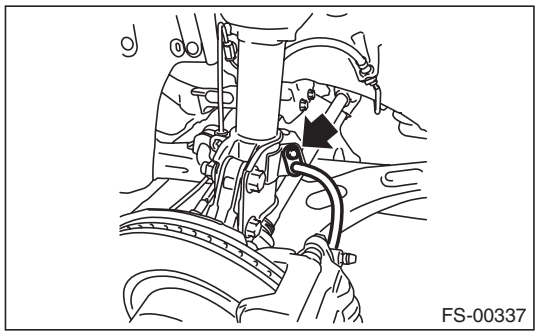

   (3) Remove the ABS wheel speed sensor harness.

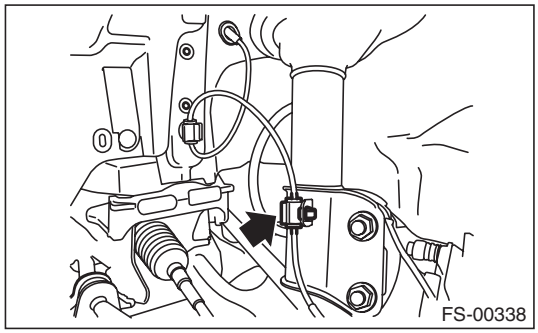

   (4) Remove the two bolts securing the front axle housing to the strut.

NOTE:
While holding the head of the adjusting bolt, loosen the flange nut.

   (5) Remove the three nuts securing strut mount to body.

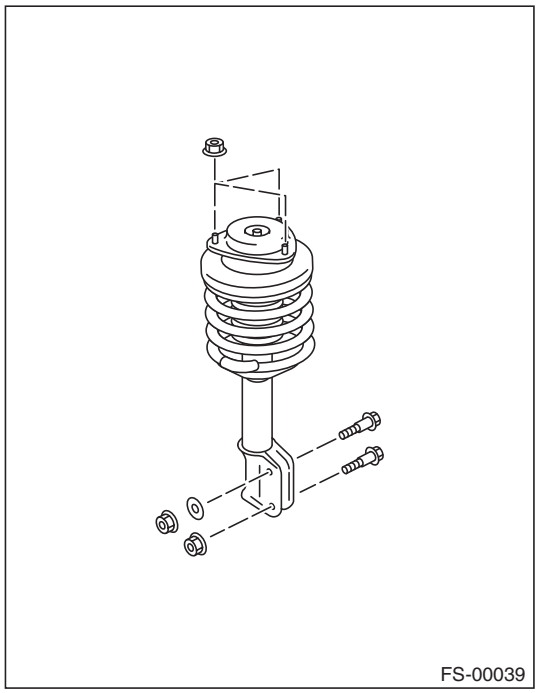

GETtheMANUALS.org

B: INSTALLATION

1) Install the strut mount at the upper side of strut to body, and tighten it with new self-locking nuts.

Tightening torque:
20 N·m (2.04 kgf-m, 14.8 ft-lb)

2) Align alignment marks on the camber adjusting bolt and strut.
Using new self-locking nuts, install the strut to the front axle housing.

NOTE:
While holding the head of adjusting bolt, tighten the self-locking nut.

Tightening torque:
155 N·m (15.81 kgf-m, 114.3 ft-lb)

3) Secure the ABS wheel speed sensor harness to the strut.
4) Install the brake hose bracket.

Tightening torque:
33 N·m (3.36 kgf-m, 24.3 ft-lb)

5) Install the front wheels.
6) Inspect the wheel alignment and adjust if necessary.
- Inspection: <Ref. to FS-9, INSPECTION, Wheel Alignment.>
- Adjustment: <Ref. to FS-14, ADJUSTMENT, Wheel Alignment.>

C: DISASSEMBLY

1) Using a coil spring compressor, compress the coil spring.
2) Using the ST, remove the self-locking nut.

PREPARATION TOOL:
ST: STRUT MOUNT SOCKET (20399AG000)

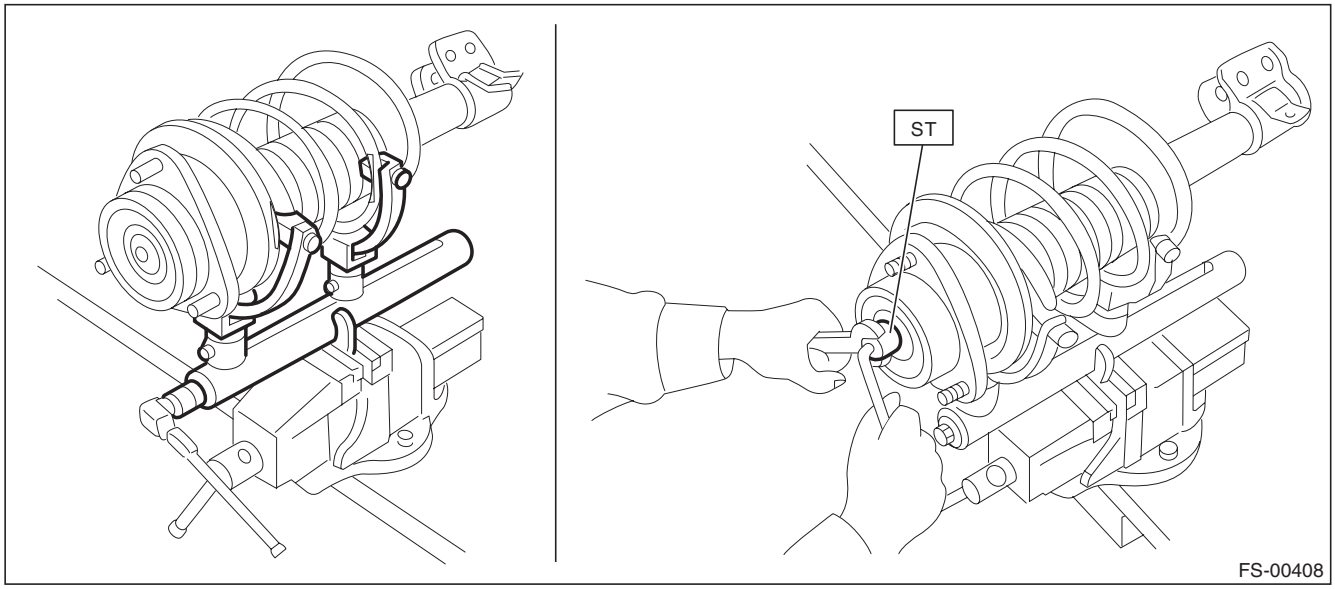

3) Remove the strut mount, spacer and upper spring seat from the strut.
4) Gradually decrease the compression force of compressor, and remove the coil spring.
5) Remove the dust cover and helper.

GETtheMANUALS.org

D: ASSEMBLY

1) Before assembly, check each part. <Ref. to FS-45, INSPECTION, Front Strut.>
2) Using a coil spring compressor, compress the coil spring.

NOTE:
Make sure that the vertical install direction of the coil spring is as shown in the figure.

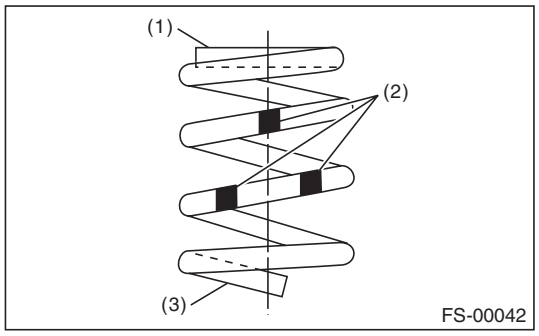

(1) Diameter is small (upper part)
(2) Identification paint
(3) Diameter is large (bottom part)

3) Set the coil spring correctly so that its end face seats well in the spring seat as shown in the figure.

CAUTION:
Install the coil spring so that the end of spring is between the marks on the spring seat.

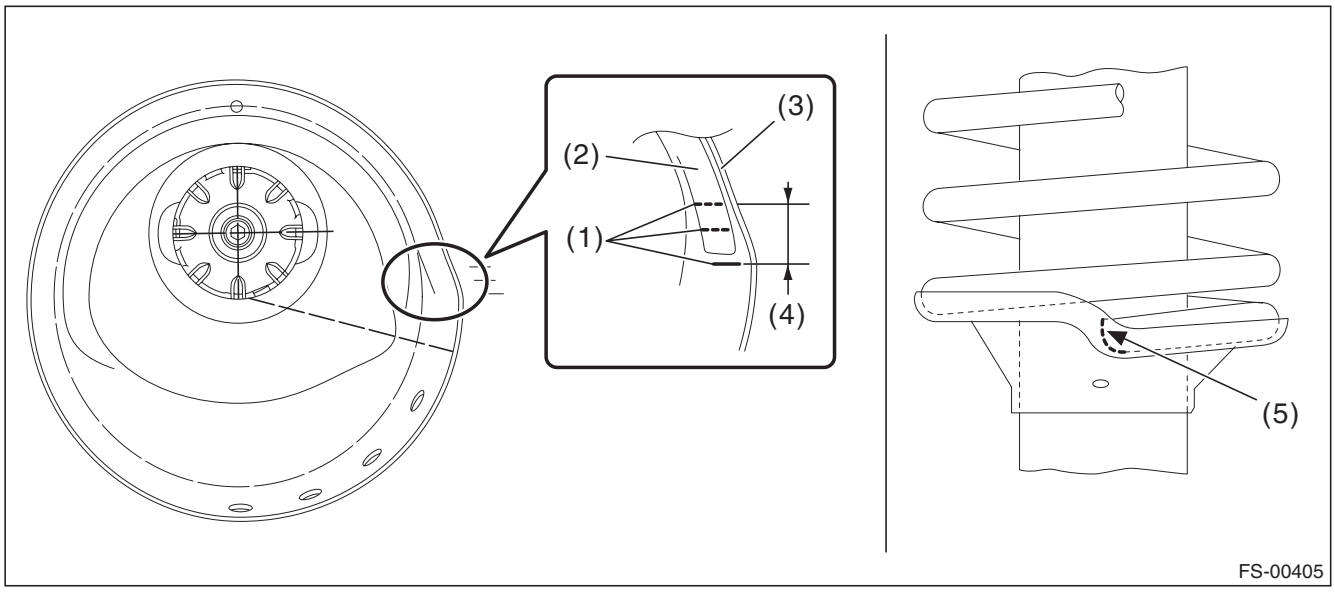

(1) Mark
(2) Spring
(3) Spring seat
(4) Install the spring within this area
(5) Coil spring end face

4) Install the dust cover and helper to the piston rod.

GETtheMANUALS.org

5) Pull the piston rod fully upward, and install the spring seat.

NOTE:
Position the upper spring seat as shown in the figure.

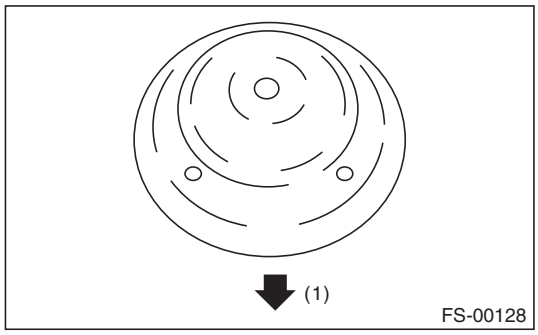

(1) Outside of body

6) Install the spacer and strut mount to the piston rod, and temporarily tighten a new self-locking nut.
7) Using a hexagon wrench to prevent strut rod from turning, tighten the new self-locking nut with ST.

PREPARATION TOOL:
ST: STRUT MOUNT SOCKET (20399AG000)

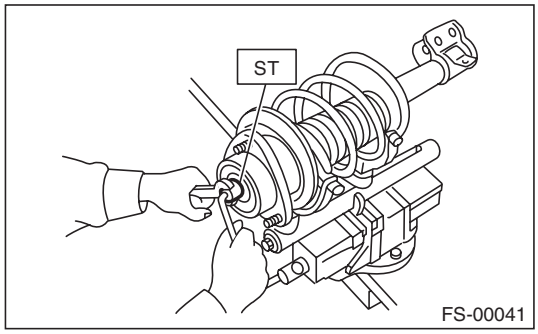

Tightening torque:
55 N·m (5.61 kgf-m, 40.6 ft-lb)

8) Loosen the coil spring compressor carefully.

GETtheMANUALS.org

E: INSPECTION

Check the removed part for wear, damage and cracks, and then repair or replace it if defective.

1. STRUT

1) Check for oil leaks.
2) Move the piston rod up and down to check that it operates smoothly without any hitch.
3) Check the piston rod for play as follows:
1. Fix the outer shell in place and fully extend the rod.
2. Set the dial gauge on the end of the rod L [10 mm (0.39 in)].
3. While applying a force of W [20 N (2 kgf, 4 lbf)] to the threaded part, read the dial gauge indication P_1.
4. Apply a force of 20 N (2 kgf, 4 lbf) from the opposite direction of “W”, and then read the dial gauge indication P_2.

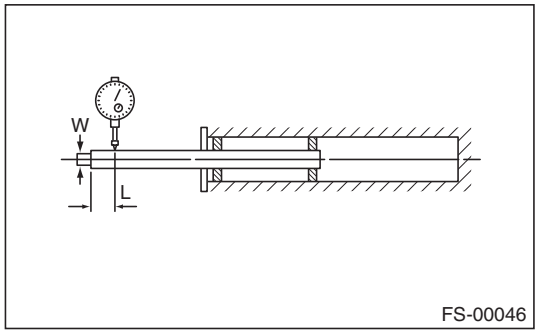

Play limit (P_1 + P_2): 0.8 mm (0.031 in)

4) Replace the strut if faulty is found in the inspection or limit value is exceeded.

2. STRUT MOUNT

Check the rubber part for deformation, cracks or deterioration, and then replace it with a new part if defective.

3. DUST COVER

If cracks or damage are found, replace it with a new part.

4. COIL SPRING

If a permanent strain is found, replace it with a new part.

5. HELPER

If major cracks or damage are found, replace it with a new part.

F: DISPOSAL

CAUTION:

- **Before handling struts, be sure to wear goggles to protect eyes from gas, oil and cutting powder.**
- **Do not disassemble the strut damper or throw into flames.**
- **When discarding gas filled struts, drill holes in them to purge the gas.**

1) Place the strut on a level surface with the piston rod fully expanded.
2) Using a 2 — 3 mm (0.08 — 0.12 in) dia. drill, make holes in areas shown in the figure.

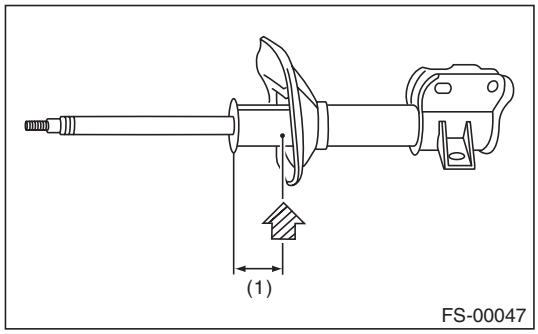

(1) 40 mm (1.57 in)

GETtheMANUALS.org

8. General Diagnostic Table

A: INSPECTION

1. IMPROPER VEHICLE POSTURE OR IMPROPER WHEEL ARCH HEIGHT

Possible cause	Corrective action
(1) Permanent distortion or damage of the coil spring	Replace.
(2) Rough operation of strut or shock absorber	Replace.
(3) Improper installation of strut or shock absorber	Replace with appropriate parts.
(4) Installation of the wrong coil spring	Replace with appropriate parts.

2. POOR RIDE COMFORT

1) Large rebound shock.
2) Rocking of the vehicle continues too long after running over bump and hump.
3) Excessive shock in bumping.

Possible cause	Corrective action
(1) Damaged coil spring	Replace.
(2) Overinflation of tires	Adjust.
(3) Improper wheel arch height	Replace the coil springs with new parts.
(4) Fault in operation of strut or shock absorber	Replace.
(5) Damage or deformation of strut mount or shock absorber mount	Replace.
(6) Unsuitable length (maximum or minimum) of strut or shock absorber	Replace with appropriate parts.
(7) Abnormal deformation or loss of bushing	Replace.
(8) Deformation or damage of helper in strut assembly or shock absorber	Replace.
(9) Oil leakage from the strut or shock absorber	Replace.

3. NOISE

Possible cause	Corrective action
(1) Wear or damage of strut or shock absorber component parts	Replace.
(2) Loosening of the suspension link installing bolt	Tighten to the specified torque.
(3) Deformation or loss of bushing	Replace.
(4) Unsuitable length (maximum or minimum) of strut or shock absorber	Replace with appropriate parts.
(5) Damaged coil spring	Replace.
(6) Wear or damage of the ball joint	Replace.
(7) Deformation of the stabilizer clamp	Replace.

GETtheMANUALS.org

REAR SUSPENSION

RS

Page

1. General Description 2
2. Wheel Alignment 9
3. Rear Stabilizer 10
4. Rear Trailing Link 11
5. Rear Sub Frame 16
6. Upper Arm 19
7. Rear Shock Absorber 20
8. Front Lateral Link 22
9. Rear Lateral Link 25
10. General Diagnostic Table 27

GETtheMANUALS.org

1. General Description

A: SPECIFICATION

Refer to “SPECIFICATIONS” in “FRONT SUSPENSION” section for rear suspension specifications. <Ref. to FS-2, SPECIFICATION, General Description.>

NOTE:
- Front toe-in, rear toe-in and front camber can be adjusted. Adjust if the value of toe-in or camber exceeds the tolerance range of the specification chart.
- Other items except for front toe-in, rear toe-in and front camber that are described in the specification chart cannot be adjusted. If other items exceed the tolerance range of the specification chart, check the suspension parts and connections for deformation. If defective, replace with new parts.

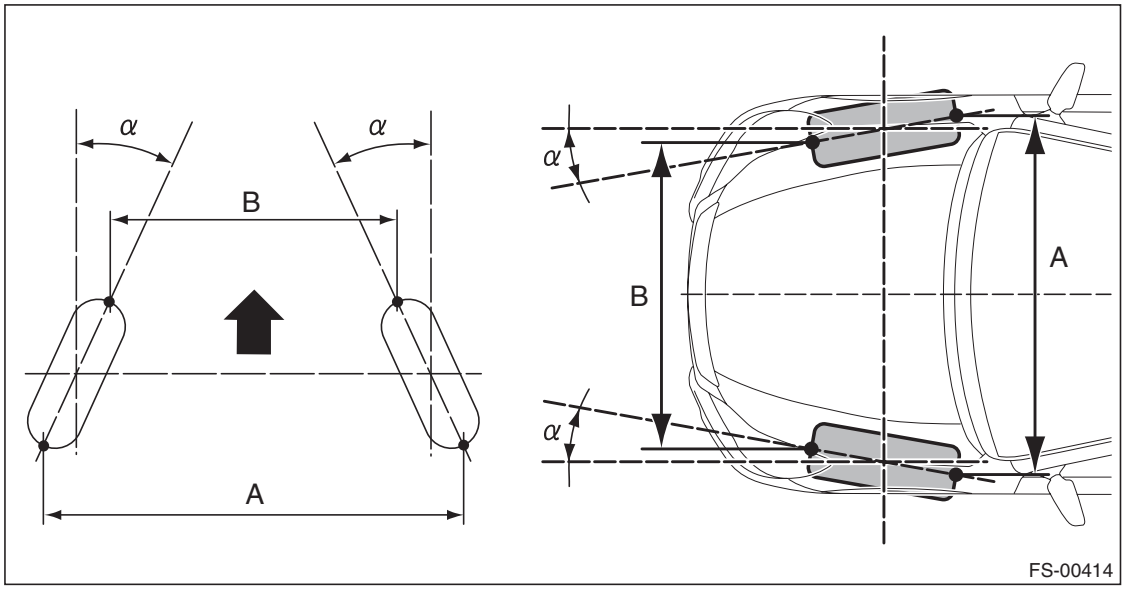

A – B = Positive: Toe-in, Negative: Toe-out

α = Individual toe angles

GETtheMANUALS.org

B: COMPONENT

1. REAR SUSPENSION

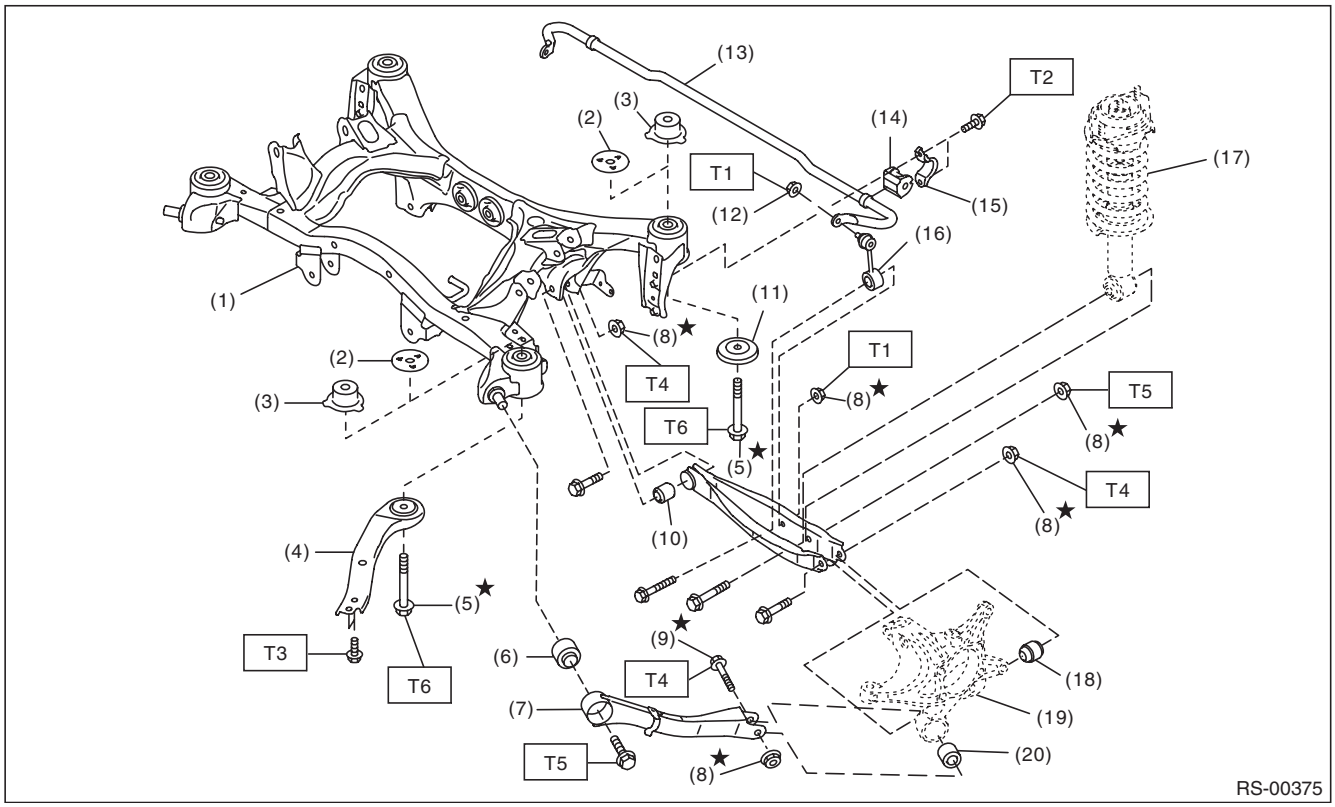

(1)	Rear sub frame ASSY	(11)	Rear sub frame stopper lower	***Tightening torque:N·m (kgf-m, ft-lb)***
(2)	Rear sub frame stopper upper (except for OUTBACK model)	(12)	Flange nut	***T1: 33 (3.36, 24.3)***
(3)	Rear sub frame stopper upper (OUTBACK model)	(13)	Rear stabilizer	***T2: 38 (3.87, 28.0)***
(4)	Front sub frame support plate	(14)	Stabilizer bushing	***T3: 70 (7.14, 51.6)***
(5)	Flange bolt A	(15)	Stabilizer clamp	***T4: 80 (8.16, 59)***
(6)	Trailing link bushing	(16)	Stabilizer link	***T5: 120 (12.24, 88.5)***
(7)	Trailing link	(17)	Rear shock absorber ASSY	***T6: 145 (14.79, 106.9)***
(8)	Self-locking nut	(18)	Rear axle housing bushing	
(9)	Flange bolt B	(19)	Rear axle housing	
(10)	Rear lateral link bushing	(20)	Trailing link rear bushing	

GETtheMANUALS.org

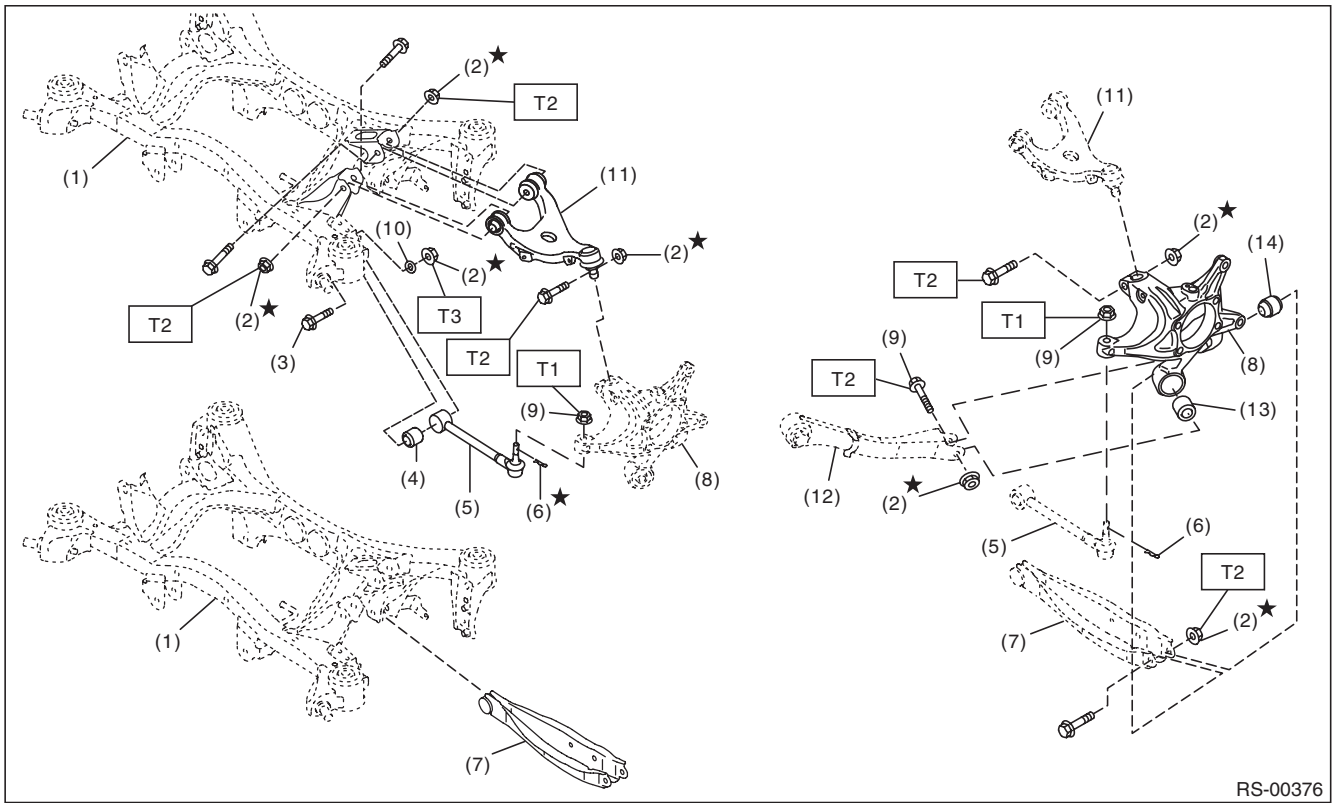

(1)	Rear sub frame ASSY	(8)	Rear axle housing
(2)	Self-locking nut	(9)	Flange nut
(3)	Adjusting bolt	(10)	Adjusting washer
(4)	Front lateral link bushing	(11)	Upper arm
(5)	Front lateral link	(12)	Trailing link
(6)	Snap pin	(13)	Trailing link bushing
(7)	Rear lateral link	(14)	Rear axle housing bushing

Tightening torque:N·m (kgf-m, ft-lb)

T1: 60 (6.12, 44.3)

T2: 80 (8.16, 59)

T3: 120 (12.24, 88.5)

GETtheMANUALS.org

2. REAR STRUT

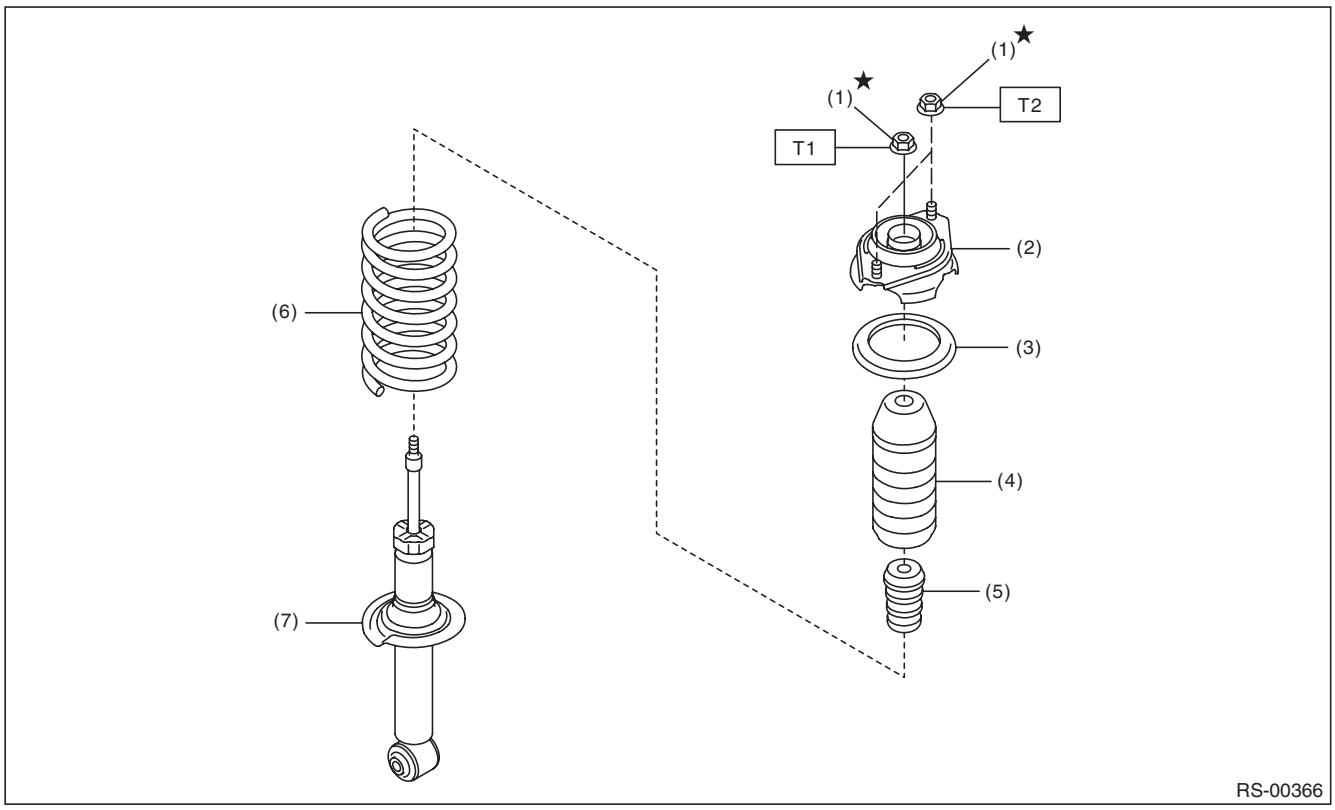

(1) Self-locking nut
(2) Upper rubber sheet
(3) Mount
(4) Dust cover
(5) Helper
(6) Coil spring
(7) Shock absorber

Tightening torque:N·m (kgf-m, ft-lb)
T1: 25 (2.55, 18.4)
T2: 30 (3.06, 22.1)

C: CAUTION

Please clearly understand and adhere to the following general precautions. They must be strictly followed to avoid minor or serious injury to the person doing the work or people in the area.

1. EACH PROCEDURE

- Wear appropriate work clothing, including a helmet, protective goggles and protective shoes when performing any work.
- Before disposing of shock absorbers, be sure to bleed the gas out completely. Also, do not expose to flames or fire.
- Before removal, installation or disassembly, be sure to clarify the failure. Avoid unnecessary removal, installation, disassembly and replacement.
- Use SUBARU genuine grease etc. or equivalent. Do not mix grease etc. of different grades or manufacturers.
- Before securing a part on a vise, place cushioning material such as wood blocks, aluminum plate, or cloth between the part and the vise.
- Be sure to tighten fasteners including bolts and nuts to the specified torque.
- Place shop jacks or rigid racks at the specified points.

2. OIL

When handling oil, adhere to the following to prevent unexpected accident.

- Prepare container and waste cloths when performing work which oil could possibly spill. If oil spills, wipe it off immediately to prevent from penetrating into floor or flowing outside, for environmental protection.
- Follow all government regulations concerning disposal of refuse when disposing.

GETtheMANUALS.org

D: PREPARATION TOOL

1. SPECIAL TOOL

ILLUSTRATION	TOOL NUMBER	DESCRIPTION	REMARKS
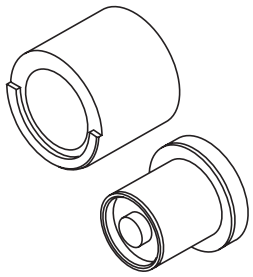 ST20099AE000	20099AE000	INSTALLER & REMOVER	Used for replacing the front lateral link bushing.
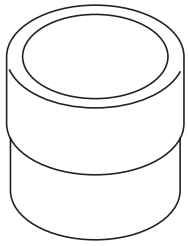 ST-499755602	499755602	PRESS	Used for replacing the rear trailing link bushing.
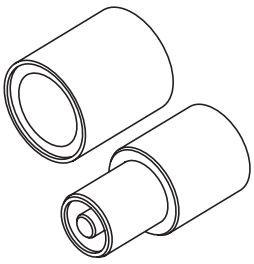 ST20099AE010	20099AE010	INSTALLER & REMOVER	Used for replacing the rear lateral link bushing.
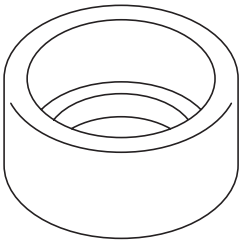 ST20299AG010	20299AG010	BASE	Used for replacing the rear trailing link bushing.

GETtheMANUALS.org

ILLUSTRATION	TOOL NUMBER	DESCRIPTION	REMARKS
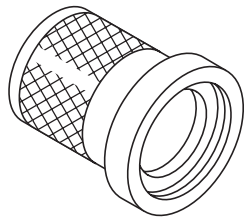 ST-899874100	899874100	INSTALLER	Used for replacing the rear trailing link bushing.
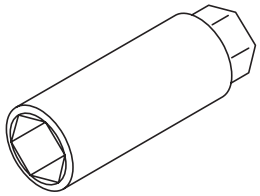 ST20399FG000	20399FG000	STRUT MOUNT SOCKET	• Used for removing and installing shock mount. • Used for checking torque of shock mount center nut.
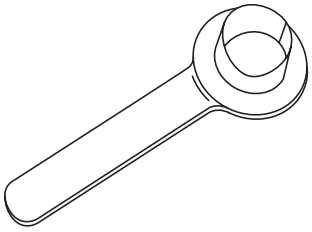 ST28099PA090	28099PA090	OIL SEAL PROTECTOR	• Used for installing the rear drive shaft to the rear differential. • For oil seal protection
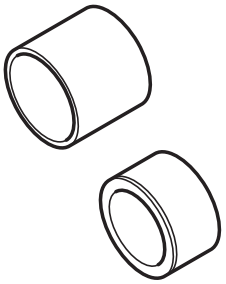 ST20099PA010	20099PA010	INSTALLER & REMOVER	• Used for replacing the bushing of the rear housing. • Used together with BUSHING REMOVER (20099FG000).
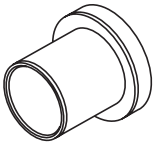 ST20099FG000	20099FG000	BUSHING REMOVER	• Used for replacing the bushing of the rear housing. • Used together with base part of INSTALLER & REMOVER (20099PA010).

GETtheMANUALS.org

2. GENERAL TOOL

TOOL NAME	REMARKS
Alignment tester	Used for measuring wheel alignment.
Toe-in gauge	Used for toe-in measurement.
Jack	Used for removing and installing suspension.
Bearing puller	Used for removing bushings.
Tie-rod end puller	Used for disconnecting the lateral link assembly - front.
Coil spring compressor	Used for disassembling and assembling shock absorber.

GETtheMANUALS.org

2. Wheel Alignment

A: INSPECTION

NOTE:
Measure and adjust the front and rear wheel alignment at a time. Refer to “Wheel Alignment” in FS section for measurement and adjustment of wheel alignment.

- Inspection: <Ref. to FS-9, INSPECTION, Wheel Alignment.>
- Adjustment: <Ref. to FS-14, ADJUSTMENT, Wheel Alignment.>

GETtheMANUALS.org

3. Rear Stabilizer

A: REMOVAL

1) Lift up the vehicle, and then remove the rear wheels.
2) Remove the rear stabilizer.
   (1) Remove left and right stabilizer links.
   (2) Detach the stabilizer clamp and remove the rear stabilizer.

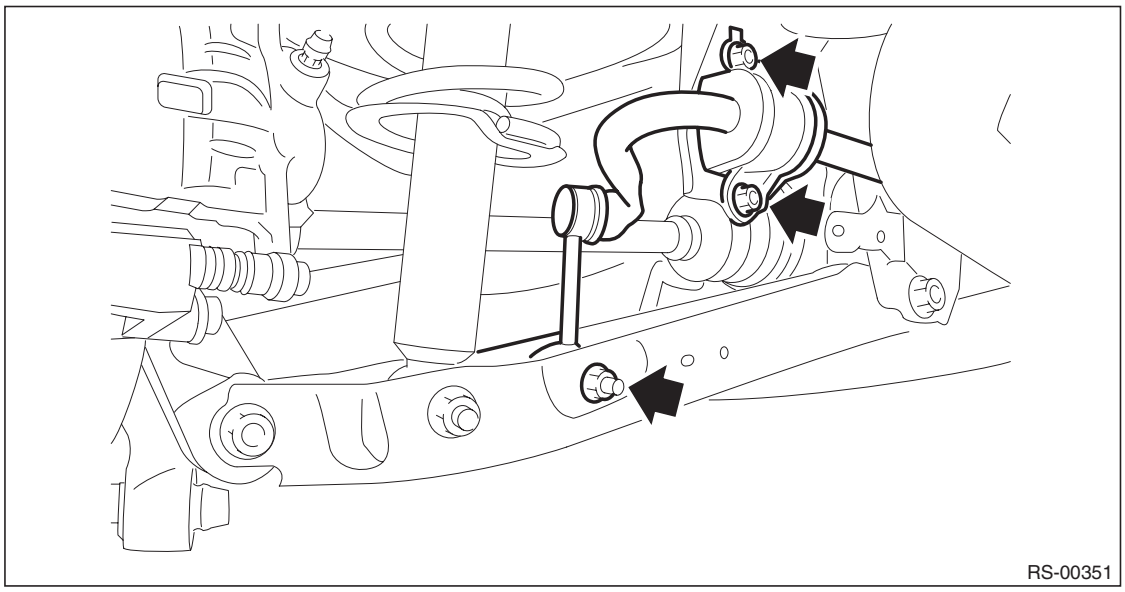

B: INSTALLATION

CAUTION:
- **Be sure to use a new flange nut and self-locking nut.**
- **Always tighten the bushing in the state where the vehicle is at curb weight and the wheels are in full contact with the ground.**
- **Perform installation with Anti-Walk Ring (c) and stabilizer bushing (b) fitted 6 mm (6.24 in) apart.**

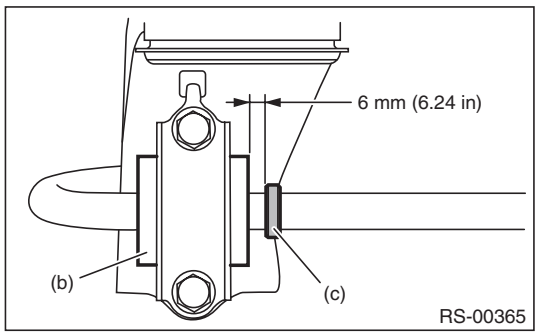

1) Before installation, inspect the following items and replace any faulty part with a new one.
- Check the bushing for abnormal cracks, fatigue or damage.
- Check the stabilizer link for damage.

2) Install each part in the reverse order of removal.

Tightening torque:
Stabilizer link: 33 N·m (3.36 kgf-m, 24.3 ft-lb)
Stabilizer clamp: 38 N·m (3.87 kgf-m, 28.0 ft-lb)

GETtheMANUALS.org

4. Rear Trailing Link

A: REMOVAL

1) Lift up the vehicle, and then remove the rear wheels.
2) Remove the trailing link.
   (1) Remove the bracket, and remove the parking brake cable from the guide (a).
   (2) Remove the bolts and nuts, and then remove the trailing link.

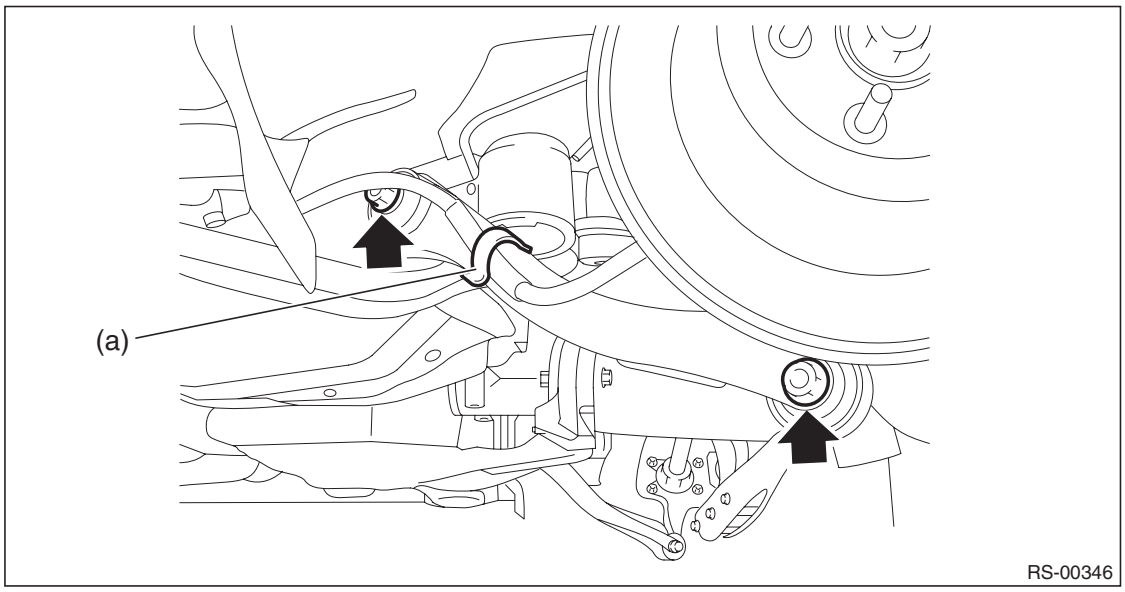

B: INSTALLATION

CAUTION:
- **Be sure to use a new self-locking nut.**
- **Always tighten the bushing in the state where the vehicle is at curb weight and the wheels are in full contact with the ground.**

Install each part in the reverse order of removal.

Tightening torque:
Trailing link — rear sub frame: 120 N·m (12.24 kgf-m, 88.5 ft-lb)
Trailing link — rear axle housing: 80 N·m (8.16 kgf-m, 59 ft-lb)

GETtheMANUALS.org

C: DISASSEMBLY

1. TRAILING LINK BUSHING

Using the ST, push out the bushing.

PREPARATION TOOL:
ST-A: INSTALLER (899874100)
ST-B: PRESS (499755602)

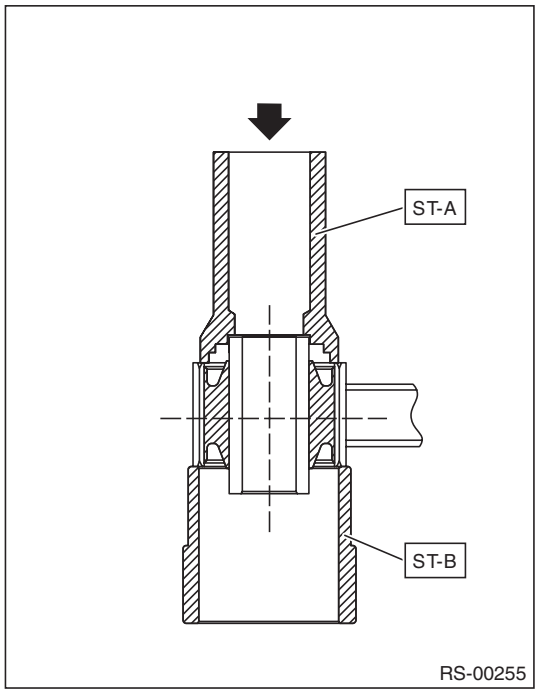

GETtheMANUALS.org

2. REAR AXLE HOUSING BUSHING

1) Remove the rear axle housing. <Ref. to DS-30, REMOVAL, Rear Axle.>
2) Using the ST and a hydraulic press, push out the bushing.

PREPARATION TOOL:
ST1: BUSHING REMOVER (20099FG000)
ST2: INSTALLER & REMOVER (BASE) (20099PA010)

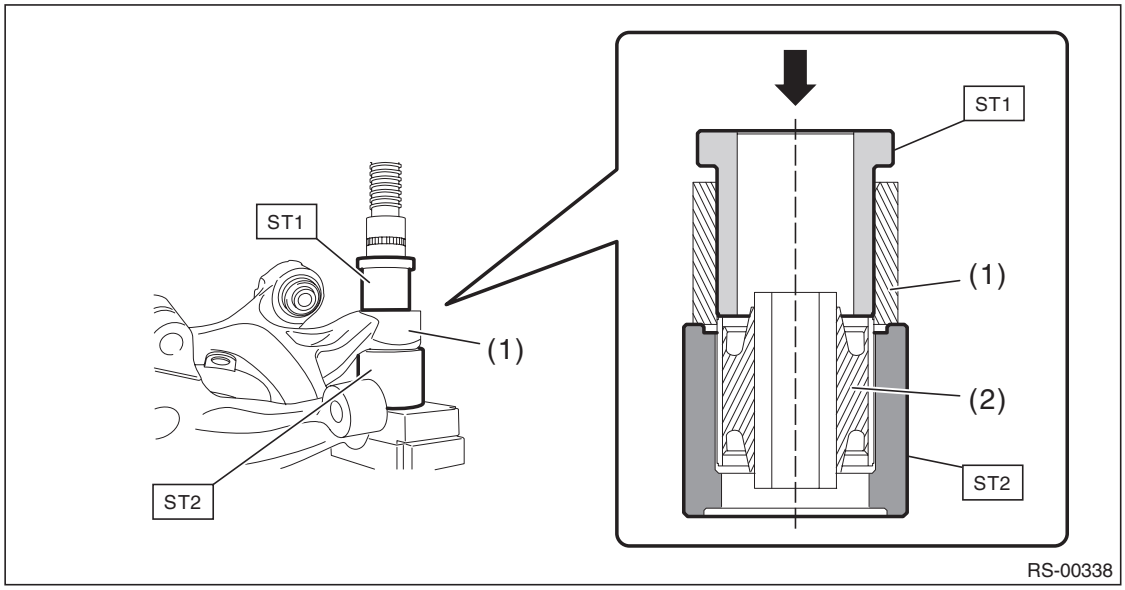

(1) Rear axle housing (2) Bushing

GETtheMANUALS.org

D: ASSEMBLY

1. TRAILING LINK BUSHING

1) Before assembly, inspect the following items and replace any faulty part with a new one.
- Perform visual check for damage or bend on the trailing link.
- Visually check the bushing for abnormal cracks, fatigue or damage.

2) Using the ST-A and ST-B, press-fit the bushing.

CAUTION:
Make sure to press the bushing straight in.

PREPARATION TOOL:
ST-A: INSTALLER (899874100)
ST-B: PRESS (499755602)

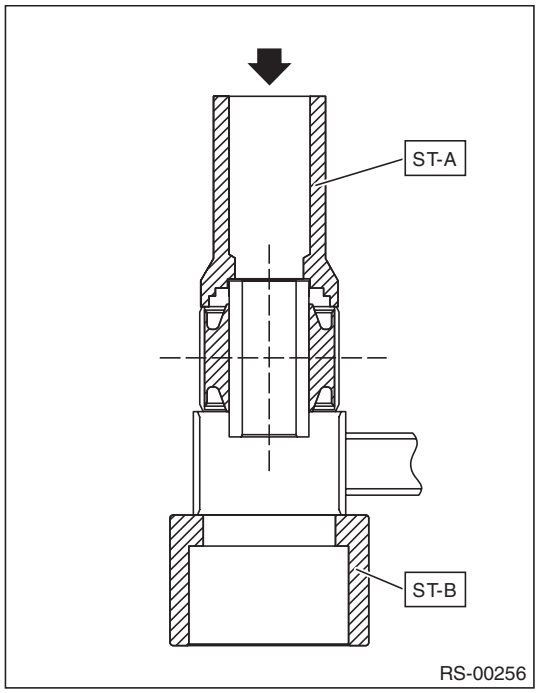

GETtheMANUALS.org

2. REAR AXLE HOUSING BUSHING

1) Before assembly, inspect the following items and replace any faulty part with a new one.
- Perform visual check for damage or bend on the trailing link.
- Visually check the bushing for abnormal cracks, fatigue or damage.

2) Press-fit the bushing using ST and the hydraulic press.

CAUTION:
Make sure to press the bushing straight in.

PREPARATION TOOL:
ST1: BUSHING REMOVER (20099FG000)
ST2: INSTALLER & REMOVER (BASE) (20099PA010)

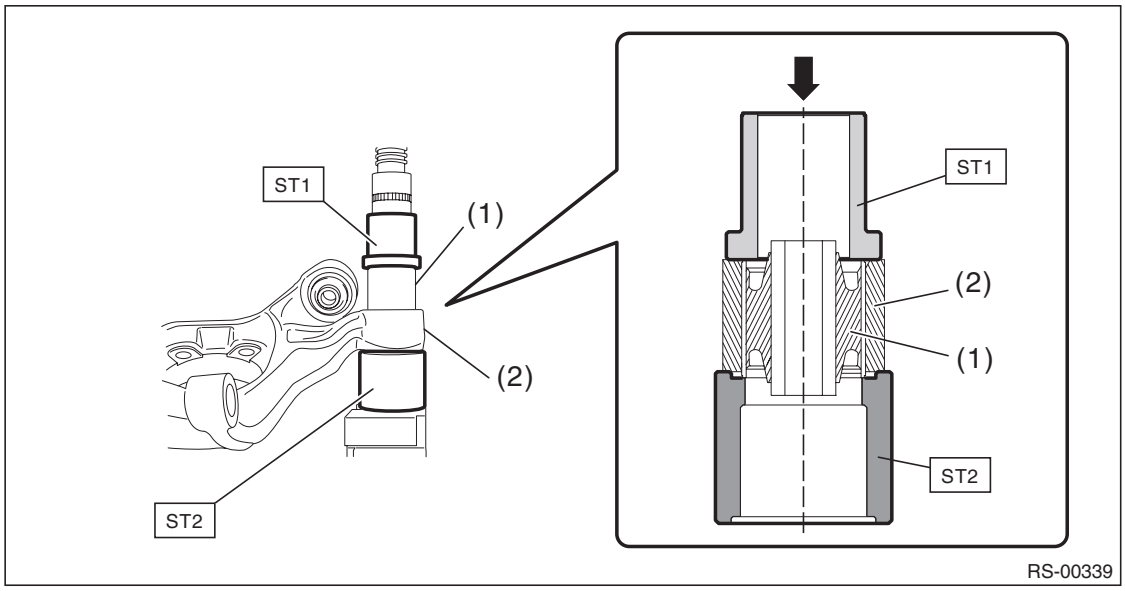

(1) Bushing (2) Rear axle housing

GETtheMANUALS.org

5. Rear Sub Frame

A: REMOVAL

1) Disconnect the ground cable from battery.
2) Lift up the vehicle, and then remove the rear wheels.
3) Remove the propeller shaft. <Ref. to DS-10, REMOVAL, Propeller Shaft.>
4) Remove the rear disc brake caliper from the rear axle housing.
   (1) Remove the bolt from the brake hose bracket.
   (2) Remove the mounting bolts, and then remove the rear disc brake caliper.

   (3) Prepare wiring harnesses etc. to be discarded, and suspend the rear disc brake caliper from the shock absorber with the harnesses.

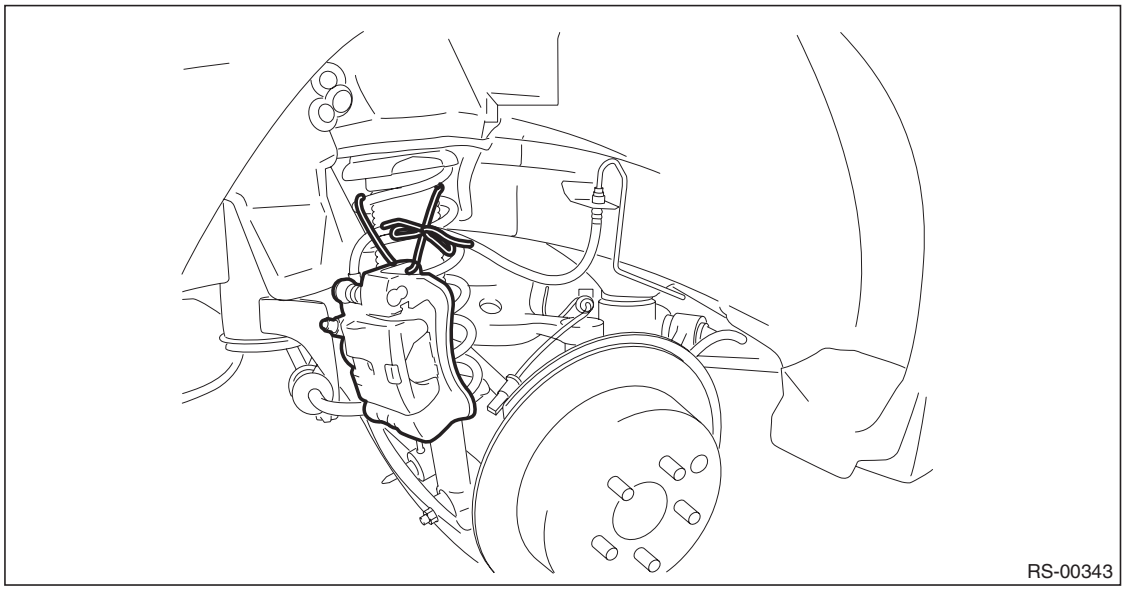

5) Remove the rear parking brake cable from the parking brake assembly. <Ref. to PB-10, REMOVAL, Parking Brake Assembly (Rear Disc Brake).>

GETtheMANUALS.org

6) Remove the rear ABS wheel speed sensor from the rear axle housing.

CAUTION:
- **Be careful not to damage the sensor.**
- **Do not apply excessive force to the sensor harness.**
- **Leave the sensor harness clamp (white arrow) on the vehicle side.**

(1) Remove the bolts, and remove the rear ABS wheel speed sensor.
(2) Remove the rear ABS wheel speed sensor bracket from the upper arm.

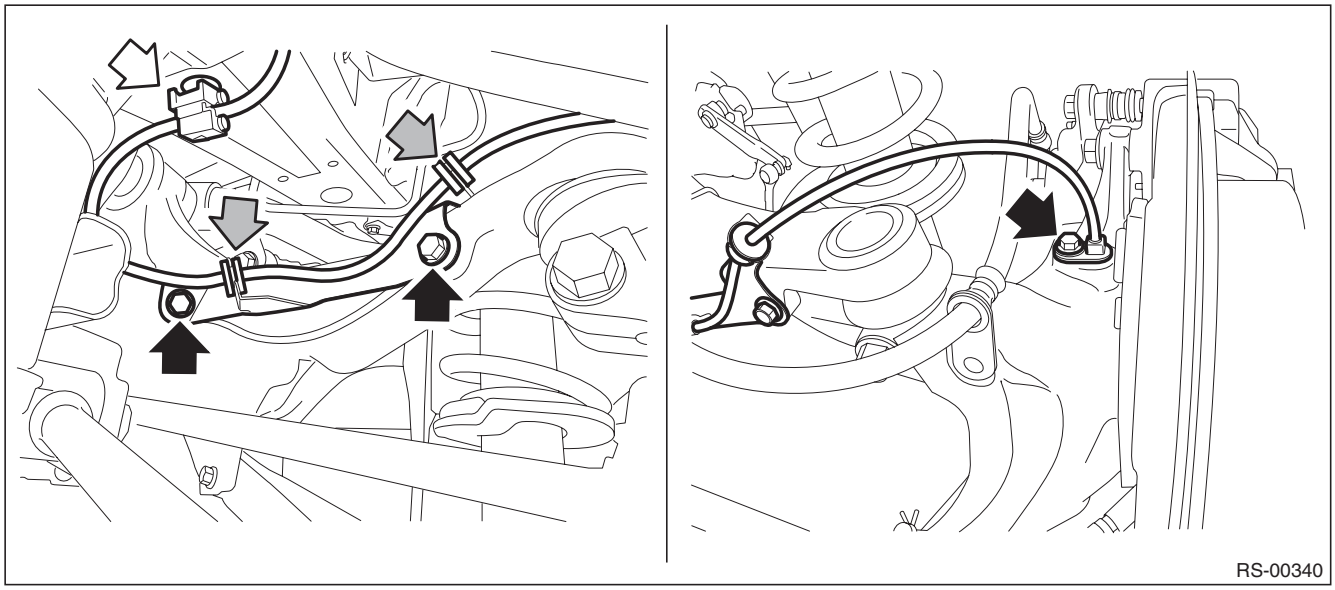

7) Remove the rear sub frame assembly.
(1) Remove the shock absorber lower bolt.

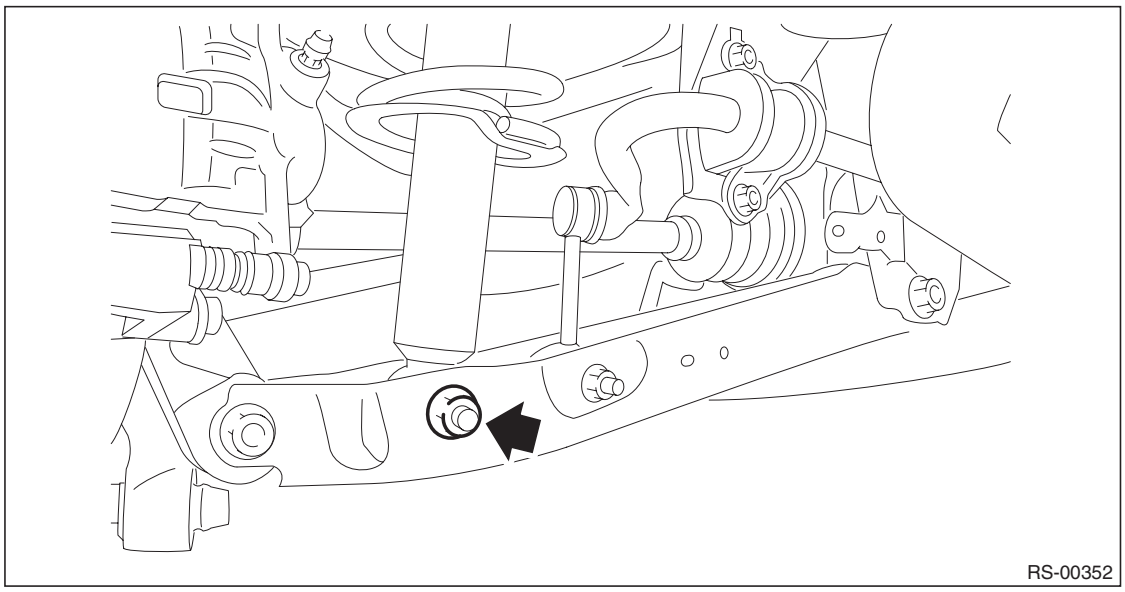

(2) Support the sub frame assembly using a transmission jack.

GETtheMANUALS.org

(3) Remove the bolts, then remove the rear sub frame assembly.

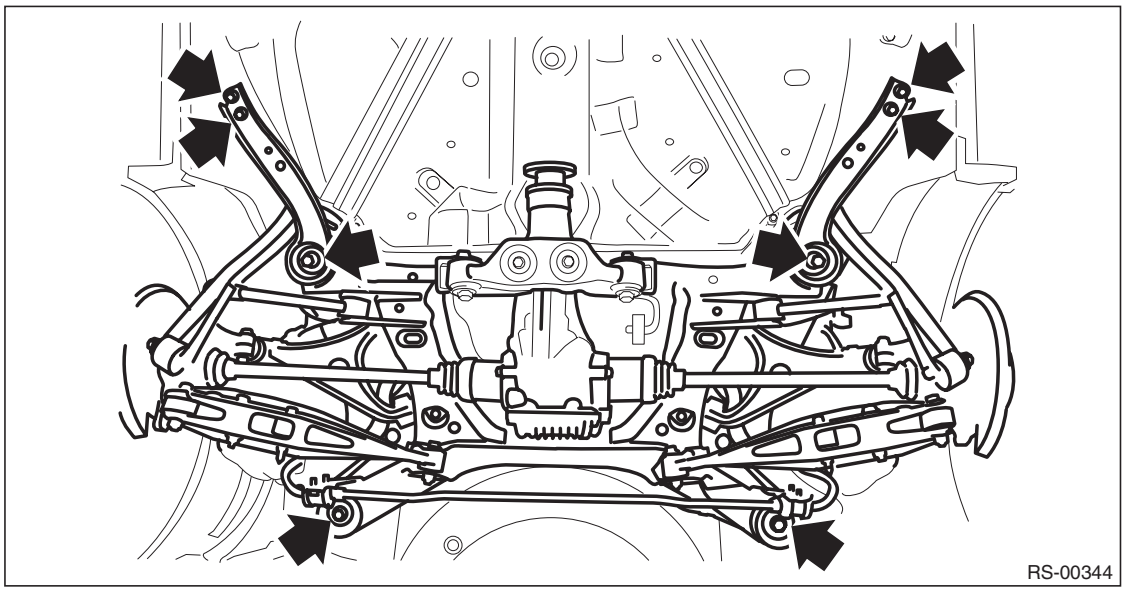

8) As necessary, remove each part from the rear sub frame assembly.

B: INSTALLATION

CAUTION:
- **Be sure to use a new self-locking nut.**
- **Always tighten the bushing in the state where the vehicle is at curb weight and the wheels are in full contact with the ground.**

1) Check the removed parts for wear, damage and crack, and repair or replace them if faulty.
2) Install each part in the reverse order of removal.

Tightening torque:
Refer to "COMPONENT" of "General Description" for the tightening torque. <Ref. to RS-3, COMPONENT, General Description.>

3) Bleed air from brake system.
4) Inspect the wheel alignment and adjust if necessary. <Ref. to FS-9, INSPECTION, Wheel Alignment.>

C: INSPECTION

Check the removed parts for wear, damage and crack, and repair or replace them if faulty.

GETtheMANUALS.org

6. Upper Arm

A: REMOVAL

1) Remove the rear sub frame assembly. <Ref. to RS-16, REMOVAL, Rear Sub Frame.>
2) Remove the bolts, then remove the upper arm from the rear sub frame assembly.

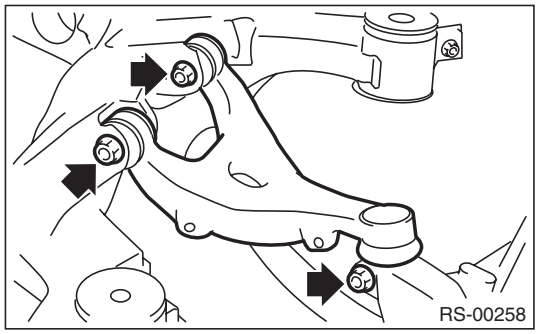

B: INSTALLATION

CAUTION:
- **Use a new self-locking nut.**
- **Always tighten the bushing when the arm is positioned in the state where the vehicle is at curb weight and the wheels are in full contact with the ground.**

1) Before installation, inspect the following items and replace any faulty part with a new one.
- Visually check the upper arm for damage and deformation.
- Visually check the bushing for abnormal cracks, fatigue or damage.
- Visually check the dust cover on the ball joint for abnormal cracks, fatigue or damage.

2) Install each part in the reverse order of removal.
3) Inspect the wheel alignment and adjust if necessary. <Ref. to FS-9, INSPECTION, Wheel Alignment.>

Tightening torque:
Upper arm — rear sub frame: 80 N·m (8.16 kgf-m, 59.0 ft-lb)
Upper arm — rear housing: 80 N·m (8.16 kgf-m, 59.0 ft-lb)
Rear ABS vehicle speed sensor bracket: 7.5 N·m (0.76 kgf-m, 5.5 ft-lb)

GETtheMANUALS.org

7. Rear Shock Absorber

A: REMOVAL

1) Remove the trunk trim panel assembly-side (sedan model) or rear floor mat (OUTBACK model).
- Sedan model: <Ref. to EI-127, TRUNK ROOM TRIM, REMOVAL, Trunk Room Trim.>
- OUTBACK model

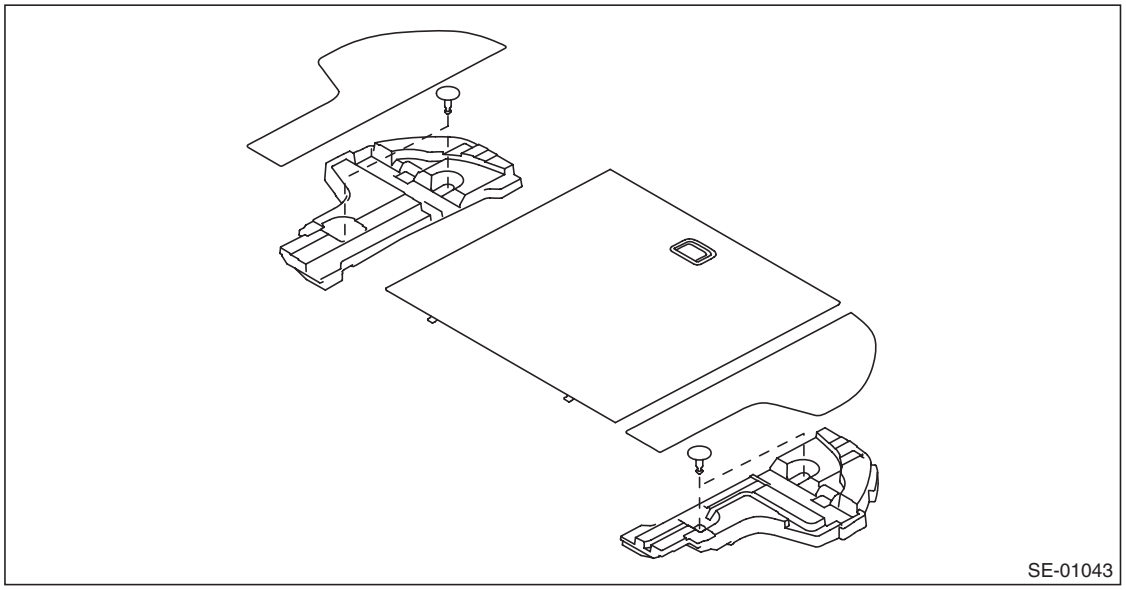

2) Lift up the vehicle, and then remove the rear wheels.
3) Remove the bolts and nuts and lower the rear lateral link.
   (1) Remove the nut and disconnect the rear stabilizer link.
   (2) Remove the shock absorber lower bolt.
   (3) Disconnect the rear lateral link.

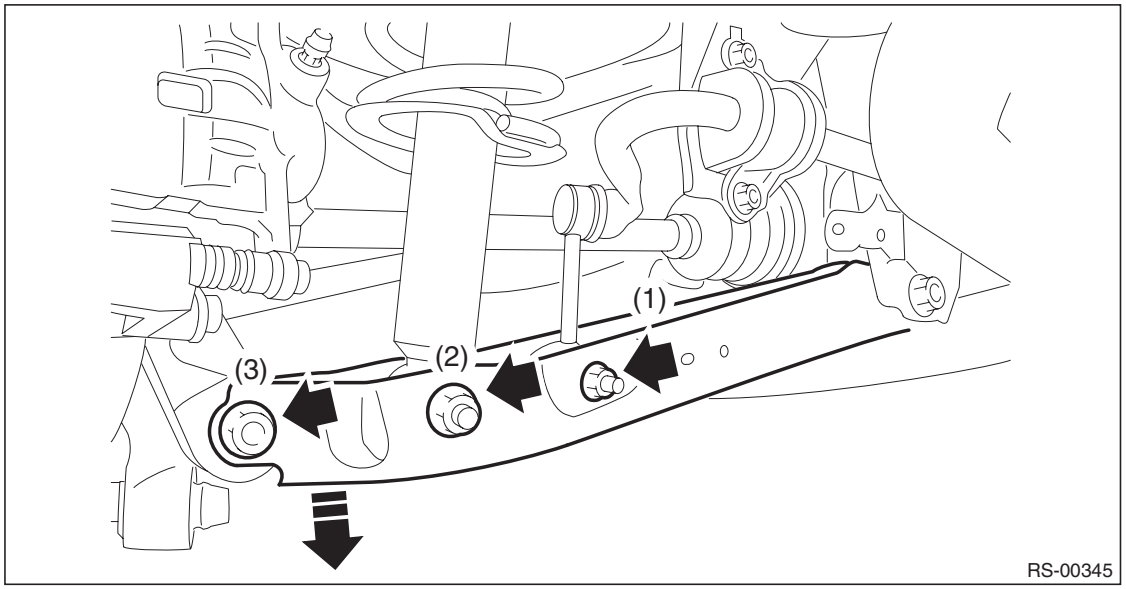

GETtheMANUALS.org

4) Remove the shock absorber mount nut.

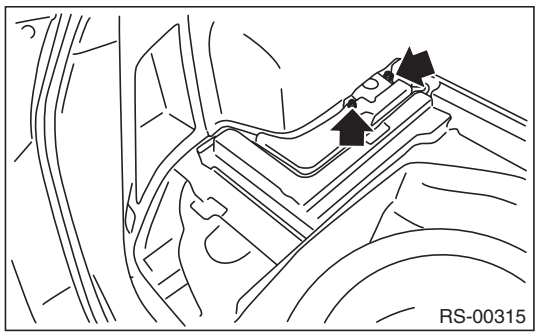

5) Remove the shock absorber.

B: INSTALLATION

CAUTION:
- **Be sure to use a new self-locking nut.**
- **Always tighten the bushing in the state where the vehicle is at curb weight and the wheels are in full contact with the ground.**

1) Install each part in the reverse order of removal.

Tightening torque:
Refer to "COMPONENT" of "General Description" for the tightening torque. <Ref. to RS-3, COMPONENT, General Description.>

2) Check the wheel alignment and adjust it if necessary. <Ref. to FS-9, INSPECTION, Wheel Alignment.>

C: DISASSEMBLY

Refer to "Front Strut" for disassembly procedure. <Ref. to FS-42, DISASSEMBLY, Front Strut.>

D: ASSEMBLY

Refer to "Front Strut" for assembly procedures. <Ref. to FS-43, ASSEMBLY, Front Strut.>

E: INSPECTION

Refer to "Front Strut" for inspection procedures. <Ref. to FS-45, INSPECTION, Front Strut.>

F: DISPOSAL

CAUTION:
- **Before handling the shock absorber, be sure to wear goggles to protect eyes from gas, oil and cutting powder.**
- **Do not disassemble the shock absorber or place it into a fire.**
- **Drill a hole into shock absorbers in case of discarding shock absorbers filled with gas.**

1) Place the shock absorber on a level surface with the piston rod fully expanded.
2) Make a hole into the specified position 30 mm (1.18 in) deep using a drill with 2 — 3 mm (0.08 — 0.12 in) diameter.

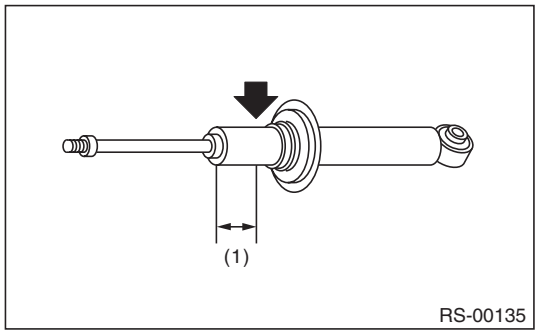

(1) 40 mm (1.57 in)

GETtheMANUALS.org

8. Front Lateral Link

A: REMOVAL

1) Lift up the vehicle, and then remove the rear wheels.
2) Remove the trailing link.
   (1) Remove the bracket, and remove the parking brake cable from the guide (a).
   (2) Remove the bolts and nuts, and then remove the trailing link.

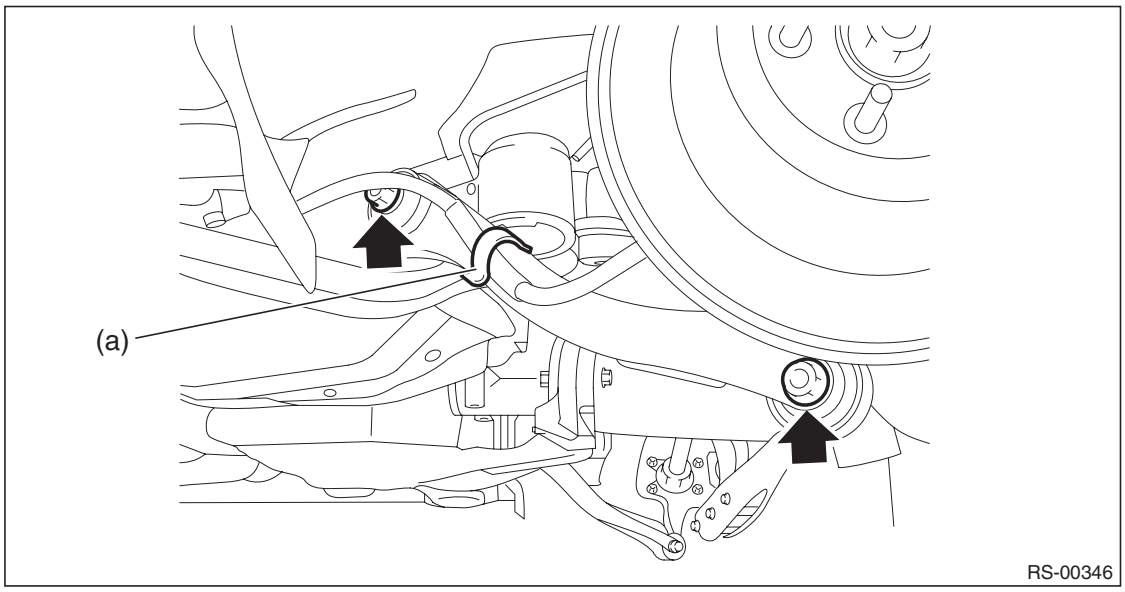

3) Remove the front lateral link.
   (1) Remove the snap pin (a) and nut (b).
   (2) Using a puller, remove the ball joint.

PREPARATION TOOL:
Tie-rod end puller

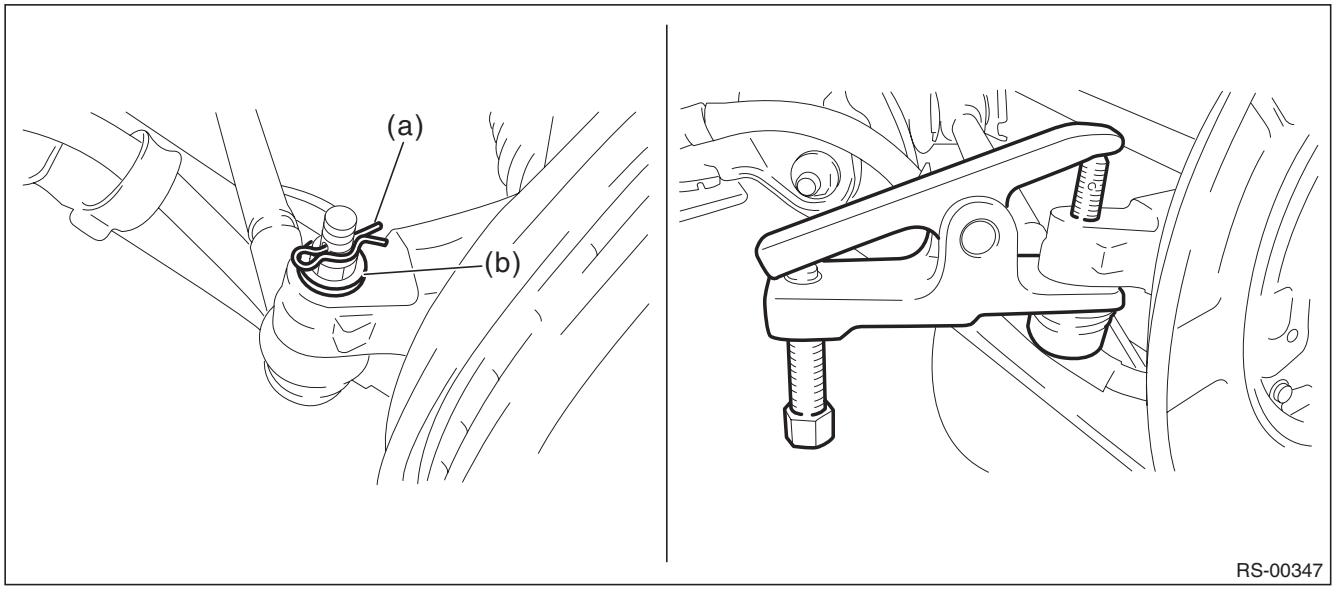

   (3) Scribe an alignment mark on the front lateral link adjusting bolt and rear sub frame.

GETtheMANUALS.org

(4) Remove the adjusting bolt, and remove the front lateral link.

CAUTION:
When removing the adjusting bolt, make sure to fix the bolt head in place when loosening the nut.

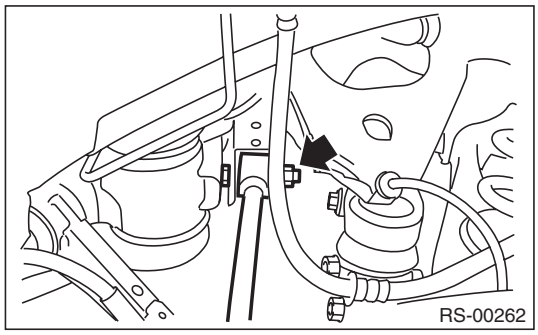

B: INSTALLATION

CAUTION:
- **Be sure to use a new self-locking nut.**
- **Always tighten the bushing in the state where the vehicle is at curb weight and the wheels are in full contact with the ground.**

1) Before installation, inspect the following items and replace any faulty part with a new one.
- Visually check the front lateral link for damage and deformation.
- Visually check the bushing for abnormal cracks, fatigue or damage.
- Visually check the dust cover on the ball joint for abnormal cracks, fatigue or damage.

2) Install each part in the reverse order of removal.

Tightening torque:
Front lateral link — sub frame: 120 N·m (12.24 kgf-m, 88.5 ft-lb)
Front lateral link — rear axle housing: 60 N·m (6.12 kgf-m, 44.3 ft-lb)

3) Inspect the wheel alignment and adjust if necessary. <Ref. to FS-9, INSPECTION, Wheel Alignment.>

C: DISASSEMBLY

Using the ST, push out the bushing.

PREPARATION TOOL:
ST-A & ST-B: INSTALLER & REMOVER (20299AE000)

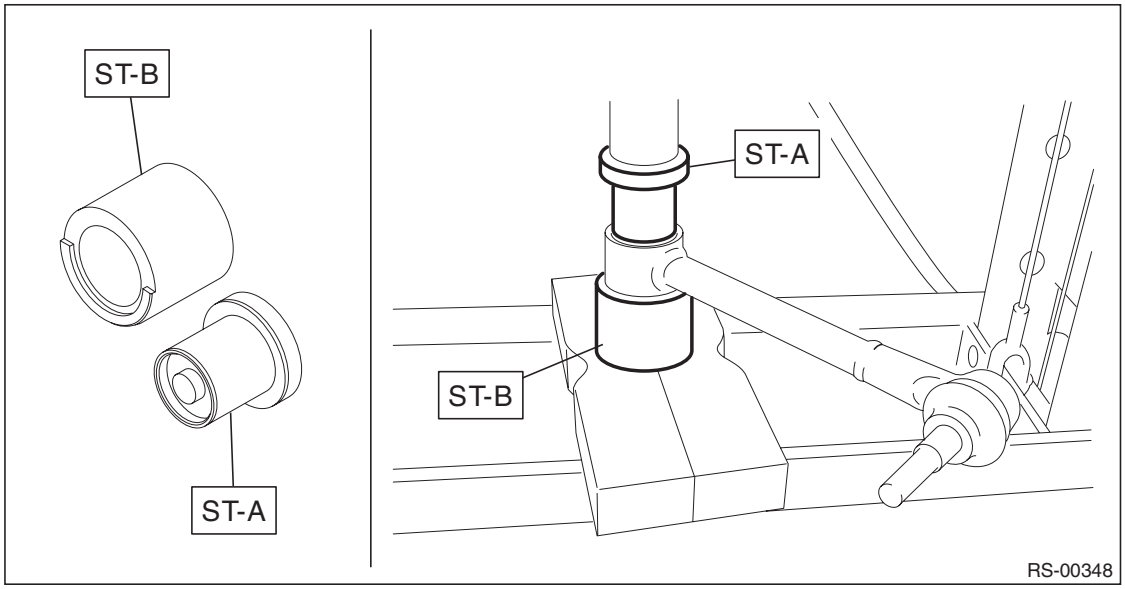

GETtheMANUALS.org

D: ASSEMBLY

1) Before assembly, inspect the following items and replace any faulty part with a new one.
- Visually check the front lateral link for damage and deformation.
- Visually check the bushing for abnormal cracks, fatigue or damage.
- Visually check the dust cover on the ball joint for damage.

2) Using the ST, press the bushing into place.

CAUTION:
Make sure to press the bushing straight in.

PREPARATION TOOL:
ST-A & ST-B: INSTALLER & REMOVER (20299AE000)

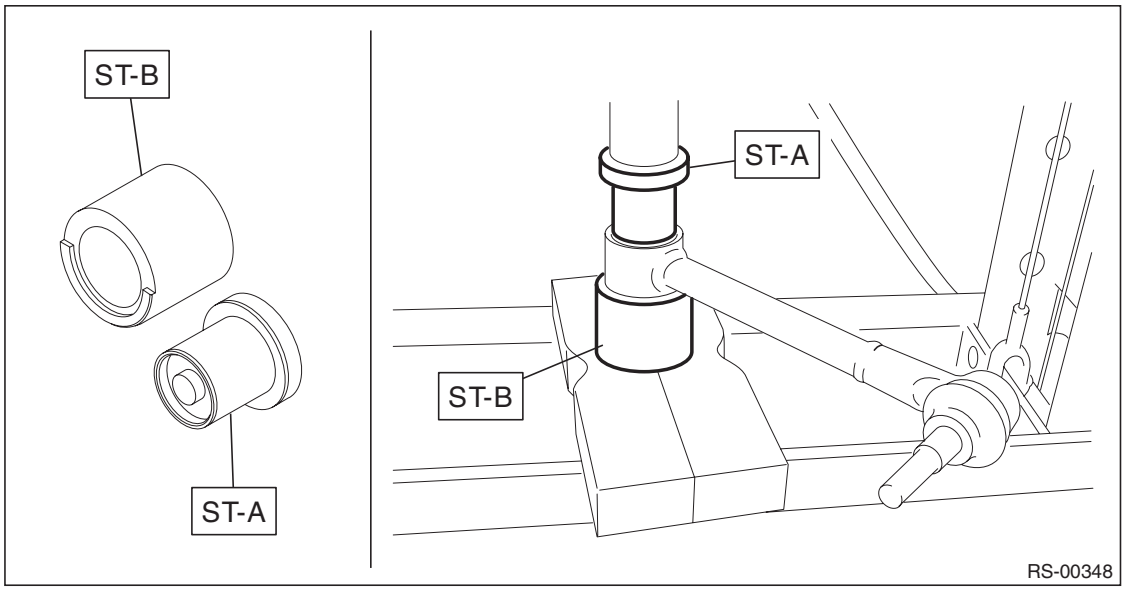

GETtheMANUALS.org

9. Rear Lateral Link

A: REMOVAL

1) Lift up the vehicle, and then remove the rear wheels.
2) Remove the bolts and nuts and lower the rear lateral link.
   (1) Remove the nut and disconnect the rear stabilizer link.
   (2) Remove the shock absorber lower bolt.
   (3) Disconnect the rear lateral link.

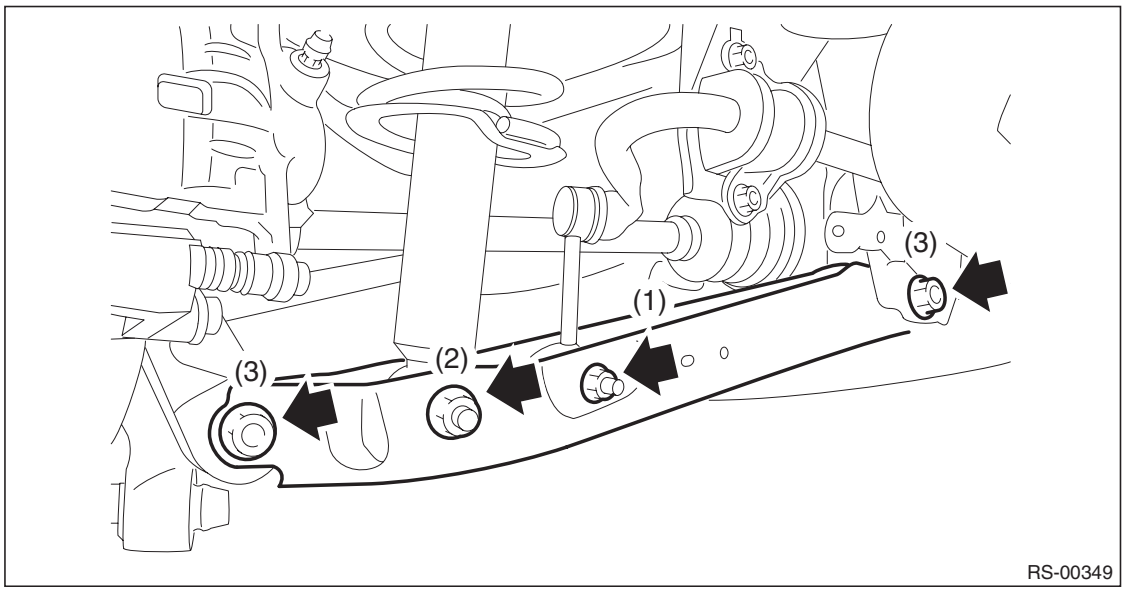

B: INSTALLATION

CAUTION:
- **Be sure to use a new self-locking nut.**
- **Always tighten the bushing in the state where the vehicle is at curb weight and the wheels are in full contact with the ground.**

1) Before installation, inspect the following items and replace any faulty part with a new one.
- Visually check the rear lateral link for damage and deformation.
- Visually check the bushing for abnormal cracks, fatigue or damage.

2) Install each part in the reverse order of removal.

Tightening torque:
Rear lateral link: 80 N·m (8.16 kgf-m, 59.0 ft-lb)
Shock absorber: 80 N·m (8.16 kgf-m, 59.0 ft-lb)
Stabilizer link: 33 N·m (3.36 kgf-m, 24.3 ft-lb)

3) Inspect the wheel alignment and adjust if necessary. <Ref. to FS-9, INSPECTION, Wheel Alignment.>

GETtheMANUALS.org

C: DISASSEMBLY

Using the ST, push out the bushing.

PREPARATION TOOL:
ST-A & ST-B: INSTALLER & REMOVER (20299AE010)

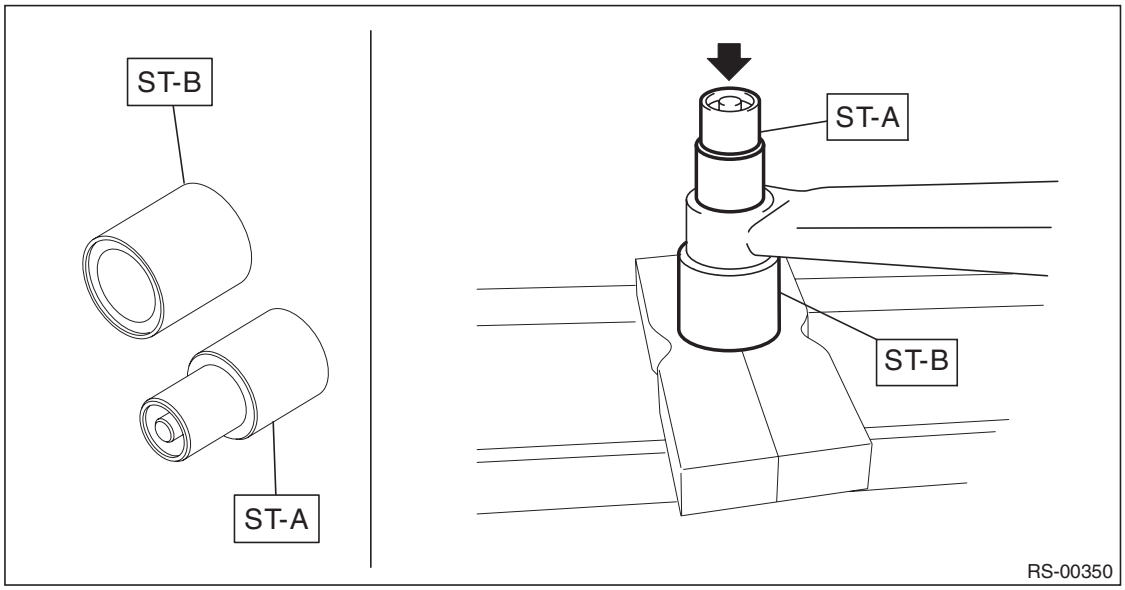

D: ASSEMBLY

1) Before assembly, inspect the following items and replace any faulty part with a new one.
- Visually check the rear lateral link for damage and deformation.
- Visually check the bushing for abnormal cracks, fatigue or damage.

2) Using the ST, press the bushing into place.

PREPARATION TOOL:
ST-A & ST-B: INSTALLER & REMOVER (20299AE010)

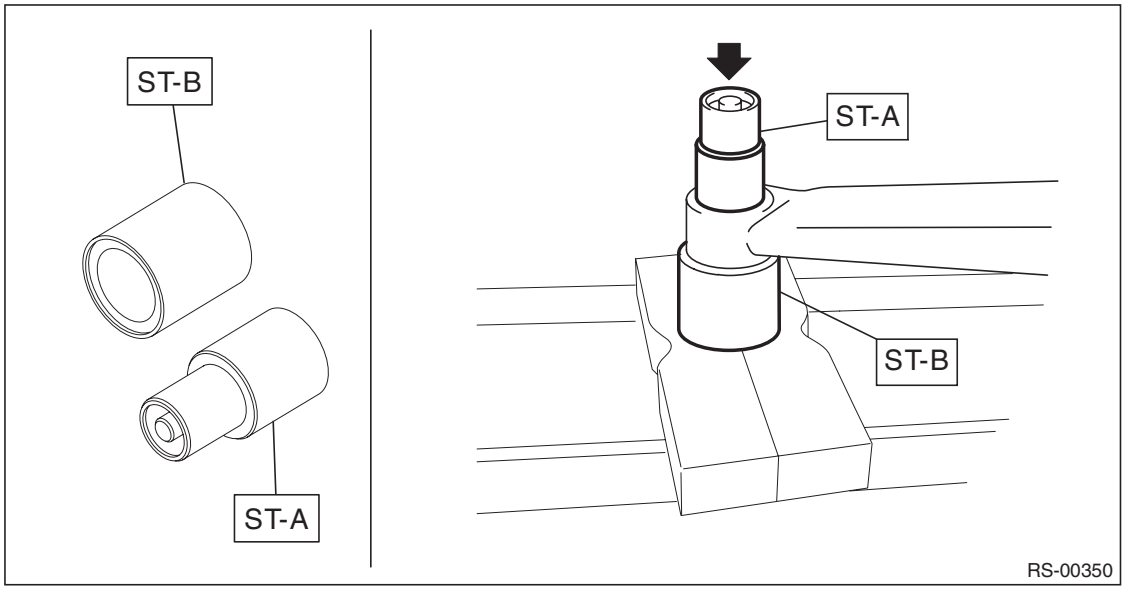

GETtheMANUALS.org

10. General Diagnostic Table

A: INSPECTION

1. IMPROPER VEHICLE POSTURE OR IMPROPER WHEEL ARCH HEIGHT

Possible cause	Corrective action
(1) Permanent distortion or damaged coil spring	Replace.
(2) Rough operation of shock absorber	Replace.
(3) Installation of the wrong shock absorber	Replace with proper parts.
(4) Installation of the wrong coil spring	Replace with proper parts.

2. POOR RIDE COMFORT

1) Large rebound shock
2) Rocking of the vehicle continues too long after running over bump and hump.
3) Excessive shock in bumping

Possible cause	Corrective action
(1) Damaged coil spring	Replace.
(2) Overinflation of tires	Adjust.
(3) Improper wheel arch height	Replace the coil springs with new parts.
(4) Defective operation of shock absorber	Replace.
(5) Damage or deformation of shock absorber mount	Replace.
(6) Unsuitable length (maximum or minimum) of shock absorber	Replace with appropriate parts.
(7) Deformation or loss of bushing	Replace.
(8) Deformation or damage of helper in shock absorber	Replace.
(9) Oil leakage from the shock absorber	Replace.

3. NOISE

Possible cause	Corrective action
(1) Wear or damage of shock absorber component parts	Replace.
(2) Loosening of the suspension link or arm installing bolt	Tighten to the specified torque.
(3) Deformation or loss of bushing	Replace.
(4) Unsuitable length (maximum or minimum) of shock absorber	Replace with appropriate parts.
(5) Damaged coil spring	Replace.
(6) Wear or damage of the ball joint	Replace.
(7) Deformation of the stabilizer clamp	Replace.

GETtheMANUALS.org

GETtheMANUALS.org

WHEEL AND TIRE SYSTEM

WT

Page

1. General Description 2
2. Tire and Wheel 4
3. “T-type” Tire 7
4. Tire Pressure Monitoring System 8
5. General Diagnostic Table 12

GETtheMANUALS.org

1. General Description

A: SPECIFICATION

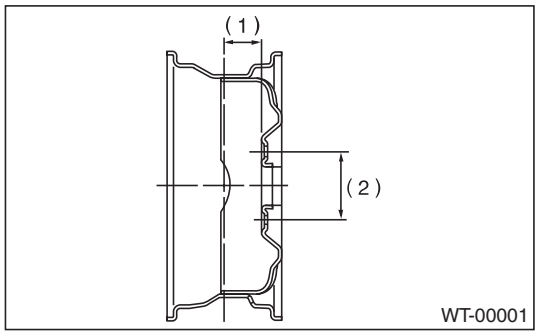

(1) Offset
(2) P.C.D.

Tire size	Wheel size	Offset mm (in)	P.C.D. mm (in)	Tire inflation pressure kPa (kgf/cm^2, psi)	
				Front wheel	Rear wheel
P205/60R16 91V	16 × 6$^1/_2$JJ 16 × 6$^1/_2$J	48 (1.89)	100 (3.94)	230 (2.3, 33)	220 (2.2, 32)
P215/50R17 90V	17 × 7$^1/_2$J				
P225/50R17 93V	17 × 7$^1/_2$J				
P215/70R16 99S	16 × 6$^1/_2$JJ			220 (2.2, 32)	210 (2.1, 31)
P225/60R17 98T	17 × 7J				
225/45R18 91W	18 × 7$^1/_2$J	55 (2.17)		230 (2.3, 33)	220 (2.2, 32)
T135/80R16 101M	16 × 4T	20 (0.79)		–	420 (4.2, 60)
T135/70R17 102M	17 × 4T				
T145/80R17 97M					

NOTE:
Size and inflation pressure of the standard equipment tire and spare tire for emergency are described on the “Tire inflation pressure” label attached to the body side of the driver’s door.

1. SERVICE DATA

Part	Axial runout	Radial runout
Steel wheel	1.5 mm (0.059 in)	
Aluminum wheel	1.0 mm (0.039 in)	

Wheel balancing	Standard	Service limit
Dynamic unbalance	5 g (0.18 oz) or less	

GETtheMANUALS.org

B: COMPONENT

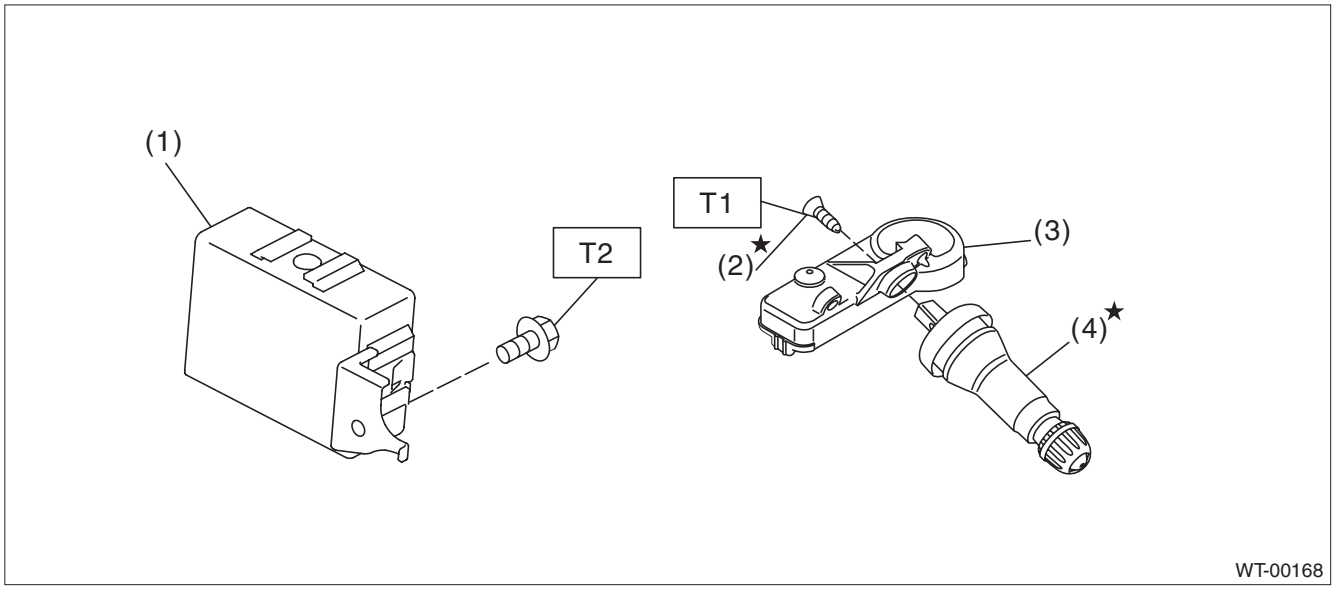

(1)	TPMS & keyless entry control module	(3)	Transmitter (snap in type)	***Tightening torque:N·m (kgf-m, ft-lb)***
(2)	Screw	(4)	Valve	***T1: 1.4 (0.14, 1.0)***
				T2: 7.5 (0.76, 5.5)

C: PREPARATION TOOL

1. GENERAL TOOL

TOOL NAME	REMARKS
Air pressure gauge	Used for measuring tire air pressure.
Dial gauge	Used for measuring wheel runout.
Wheel balancer	Used for adjusting wheel balance.

GETtheMANUALS.org

2. Tire and Wheel

A: REMOVAL

1) Remove the hubcap.
2) Lift up the vehicle.
3) Remove the wheel nut.
4) Remove the wheels.

CAUTION:
When removing the wheels, be careful not to damage the hub bolts.

B: INSTALLATION

1) Install the wheels to vehicle.
2) Tighten the wheel nuts to the specified torque.

Tightening torque:
120 N·m (12.24 kgf-m, 88.5 ft-lb)

C: INSPECTION

1. TIRE

CAUTION:
When replacing a tire, make sure to use only tires of the same size, construction and load range as originally installed.

1) Tire size and tire inflation pressure check <Ref. to WT-2, SPECIFICATION, General Description.>
2) Cracks, damage and wear check
3) Tire runout check
   (1) Lift up the vehicle.
   (2) Slowly rotate the wheel to check rim “runout” using a dial gauge.

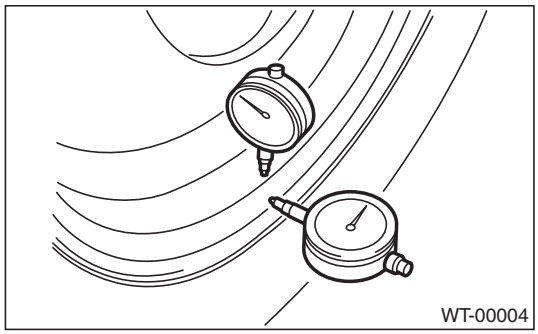

- Aluminum wheel

Axial runout limit	Radial runout limit
1.0 mm (0.039 in)	

- Steel wheel

Axial runout limit	Radial runout limit
1.5 mm (0.059 in)	

   (3) If the rim runout exceeds service limit, replace the wheel.

GETtheMANUALS.org

2. TIRE ROTATION

NOTE:
Rotate tires periodically (12,500 km/7,500 miles) in order to prolong life and to prevent uneven wear.
Rotate tires as shown in the figure depending on whether or not the direction of the tire rotation is specified.

- When the direction of tire rotation is not specified

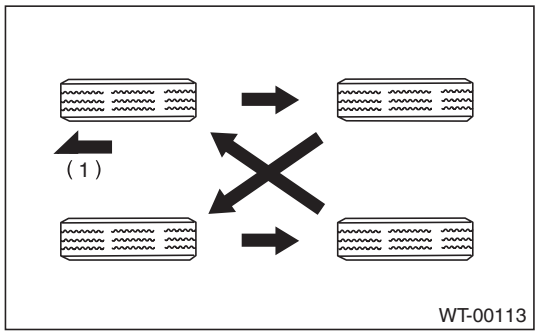

(1) Front side of vehicle

- When the direction of tire rotation is specified

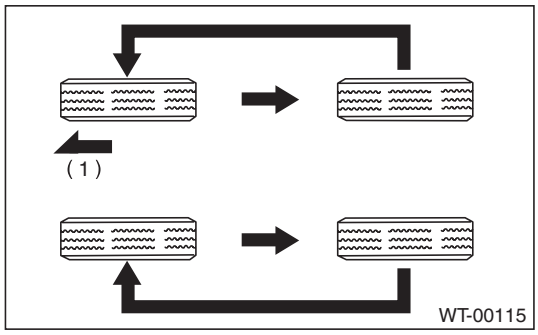

(1) Front side of vehicle

GETtheMANUALS.org

3. WHEEL BALANCING

1) Using the wheel balancer, measure wheel balance.
2) Adjust the wheel balancing.

NOTE:
- Unbalance after adjusting the wheel balancing should be 5 g (0.18 oz) or less.
- When using the adhesive type weight, degrease the surface where the adhesive type weight will be applied securely.
- After applying the adhesive type weight, apply a force to the weight and attain full adhesion.
- Using the knock-on type weight, check the size of the knock-on part.

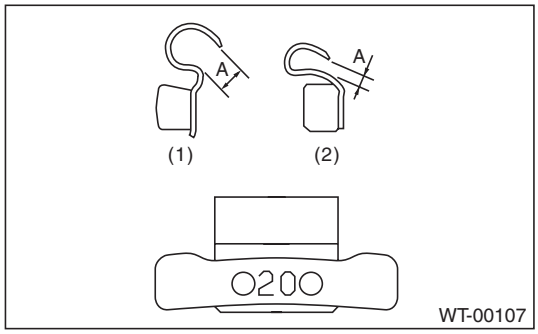

(1) Knock-on type weight for aluminum wheel
(2) Knock-on type weight for steel wheel

Service limit A:
Knock-on type weight for steel wheel: 2.0 mm (0.079 in)
Knock-on type weight for aluminum wheel: 5.0 mm (0.197 in)

GETtheMANUALS.org

3. “T-type” Tire

A: NOTE

“T-type” tire for temporary use is prepared as a spare tire.

CAUTION:
- **The “T-type” tire is only for temporary use. Replace with a conventional tire as soon as possible.**
- **Do not use tire chains for “T-type” tires. Doing so can damage the vehicle and the tires because the tires are too small in size to attach chains to.**
- **Do not drive at a speed greater than 80 km/h (50 MPH).**
- **Drive at as low a speed as possible and avoid bumps on the road.**

B: REPLACEMENT

Refer to “Tire & Wheel” for removal and installation of the “T-type” tire. <Ref. to WT-4, Tire and Wheel.>

C: INSPECTION

Refer to “Tire & Wheel” for inspection of the “T-type” tire. <Ref. to WT-4, TIRE, INSPECTION, Tire and Wheel.>

GETtheMANUALS.org

4. Tire Pressure Monitoring System

A: REMOVAL

1. TRANSMITTER (TIRE INFLATION PRESSURE SENSOR)

1) Remove the wheels from the vehicle. <Ref. to WT-4, REMOVAL, Tire and Wheel.>
2) Remove the tires from wheels.

CAUTION:
Use a tire changer when removing the tire from the wheel.
3) Loosen the screw to remove the transmitter from the valve stem.

CAUTION:
Do not reuse the valve and screw.
Replace the valve and screw with a new part even when reusing transmitter.

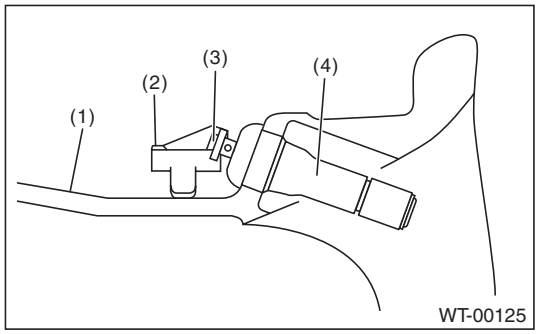

(1) Wheel
(2) Transmitter
(3) Screw
(4) Valve

4) Remove the valve from the wheel.

GETtheMANUALS.org

2. TPMS & KEYLESS CONTROL MODULE

NOTE:
TPMS control module is integrated with the keyless entry control module.

Sedan model

1) Disconnect the ground cable from battery.
2) Remove the rear shelf trim. <Ref. to EI-120, REMOVAL, Rear Shelf Trim.>
3) Remove the TPMS & keyless control module.
   (1) Disconnect the connector.
   (2) Remove the bolt and then remove the TPMS & keyless control module.

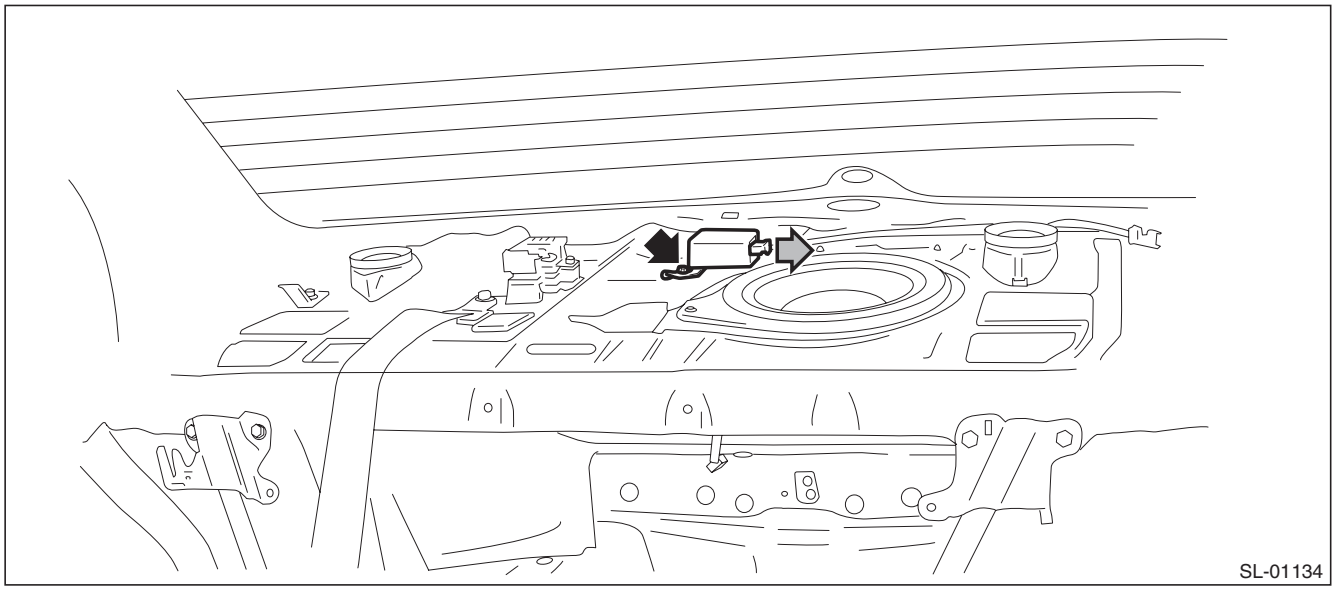

OUTBACK model

1) Disconnect the ground cable from battery.
2) Remove the rear quarter trim LH. <Ref. to EI-110, REMOVAL, Rear Quarter Trim.>
3) Remove the TPMS & keyless control module.
   (1) Disconnect the connector.
   (2) Remove the bolt and then remove the TPMS & keyless control module.

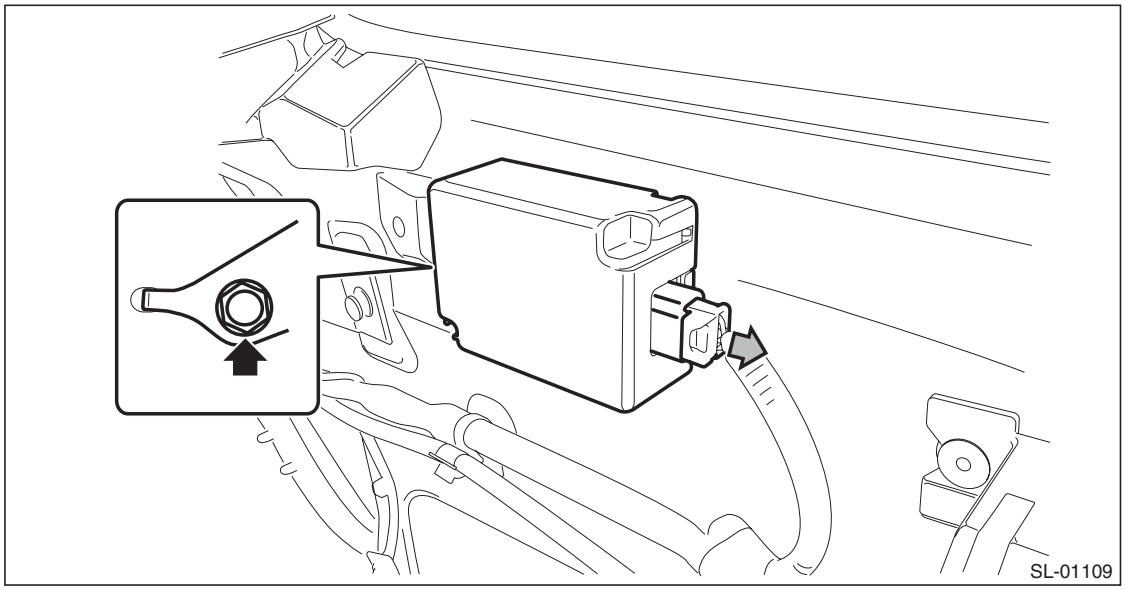

GETtheMANUALS.org

B: INSTALLATION

1. TRANSMITTER (TIRE INFLATION PRESSURE SENSOR)

CAUTION:
Use the new transmitter assembly or replace the new valve and screw, when installing.

1) Replace the valve and screw with a new part when reusing transmitter.

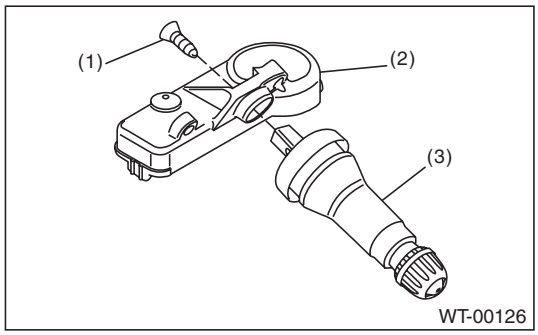

(1) Screw
(2) Transmitter
(3) Valve

Tightening torque:
1.4 N·m (0.14 kgf-m, 1.0 ft-lb)

2) Install the transmitter to the wheel by aligning it with valve hole.

NOTE:
When using the jig that pulls the valve cap by hooking its neck part, use another short-type cap.

3) Install the tires to wheels.

CAUTION:
- **Use a tire changer when installing tire to wheel.**
- **To prevent damaging the transmitter, set the tire changer boom in the position as shown in the figure.**

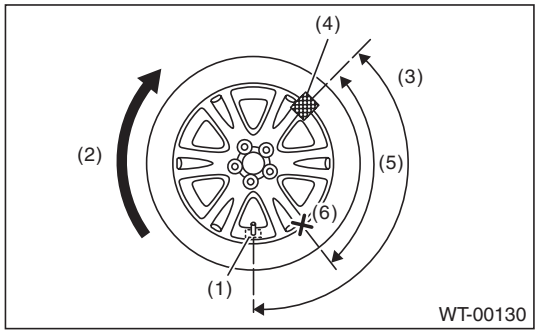

(1) Transmitter
(2) Direction of turn table rotation
(3) 135°
(4) Tire changer boom
(5) 90°
(6) Starting point for fitting the bead to the rim

4) Install the wheels to vehicle. <Ref. to WT-4, INSTALLATION, Tire and Wheel.>
5) Register the transmitter ID to the TPMS & keyless control module. <Ref. to TPM(diag)-12, Register Transmitter (ID).>

GETtheMANUALS.org

2. TPMS & KEYLESS CONTROL MODULE

Install each part in the reverse order of removal.

Tightening torque:
7.5 N·m (0.76 kgf-m, 5.5 ft-lb)

C: ADJUSTMENT

Re-register the transmitter ID when transmitter has been replaced. <Ref. to TPM(diag)-12, Register Transmitter (ID).>

GETtheMANUALS.org

5. General Diagnostic Table

A: INSPECTION

Symptoms	Possible cause	Corrective action
Wheel is out of balance.	Improperly inflated tire.	Adjust the tire pressure.
	Uneven wear	Check the tire referring to Abnormal tire wear in this table, carry out the procedure and replace the tire.
	Front wheel alignment	Check or adjust the front wheel alignment. • Inspection: <Ref. to FS-9, INSPECTION, Wheel Alignment.> • Adjustment: <Ref. to FS-14, ADJUSTMENT, Wheel Alignment.>
	Rear wheel alignment	Check or adjust the rear wheel alignment. • Inspection: <Ref. to FS-9, INSPECTION, Wheel Alignment.> • Adjustment: <Ref. to FS-14, ADJUSTMENT, Wheel Alignment.>
	Front strut	Check the front strut. <Ref. to FS-45, INSPECTION, Front Strut.>
	Rear shock absorber	Check the rear shock absorber. <Ref. to RS-21, INSPECTION, Rear Shock Absorber.>
	Front axle	Check the front axle. <Ref. to DS-29, INSPECTION, Front Hub Unit Bearing.>
	Front hub unit bearing	Check the front hub unit bearing. <Ref. to DS-29, INSPECTION, Front Hub Unit Bearing.>
	Rear hub unit bearing	Check the rear hub unit bearing. <Ref. to DS-47, INSPECTION, Rear Hub Unit Bearing.>
Vehicle is abnormally out of balance.	Improperly inflated tire.	Adjust the tire pressure.
	Uneven wear	Check the tire referring to Abnormal tire wear in this table, carry out the procedure and replace the tire.
	Front stabilizer	Inspect the front stabilizer.
	Front wheel alignment	Check or adjust the front wheel alignment. • Inspection: <Ref. to FS-9, INSPECTION, Wheel Alignment.> • Adjustment: <Ref. to FS-14, ADJUSTMENT, Wheel Alignment.>
	Rear wheel alignment	Check or adjust the rear wheel alignment. • Inspection: <Ref. to FS-9, INSPECTION, Wheel Alignment.> • Adjustment: <Ref. to FS-14, ADJUSTMENT, Wheel Alignment.>
Abnormal wheel vibration	Improperly inflated tire.	Adjust the tire pressure.
	Uneven wear	Check the tire referring to Abnormal tire wear in this table, carry out the procedure and replace the tire.
	Improper wheel balancing	Check the wheel balance. <Ref. to WT-6, WHEEL BALANCING, INSPECTION, Tire and Wheel.>
	Front axle	Check the front axle. <Ref. to DS-29, INSPECTION, Front Hub Unit Bearing.>
	Front hub unit bearing	Check the front hub unit bearing. <Ref. to DS-29, INSPECTION, Front Hub Unit Bearing.>
	Rear hub unit bearing	Check the rear hub unit bearing. <Ref. to DS-47, INSPECTION, Rear Hub Unit Bearing.>

GETtheMANUALS.org

General Diagnostic Table

Symptoms	Possible cause	Corrective action
Abnormal tire wear	Improperly inflated tire.	Adjust the tire pressure.
	Improper wheel balancing	Check the wheel balance. <Ref. to WT-6, WHEEL BALANCING, INSPECTION, Tire and Wheel.>
	Front wheel alignment	Check or adjust the front wheel alignment. • Inspection: <Ref. to FS-9, INSPECTION, Wheel Alignment.> • Adjustment: <Ref. to FS-14, ADJUSTMENT, Wheel Alignment.>
	Rear wheel alignment	Check or adjust the rear wheel alignment. • Inspection: <Ref. to FS-9, INSPECTION, Wheel Alignment.> • Adjustment: <Ref. to FS-14, ADJUSTMENT, Wheel Alignment.>

GETtheMANUALS.org

GETtheMANUALS.org

TIRE PRESSURE MONITORING SYSTEM (DIAGNOSTICS)

TPM(diag)

Page

1. Basic Diagnostic Procedure 2
2. General Description 3
3. Electrical Component Location 5
4. Control Module I/O Signal 6
5. Subaru Select Monitor 7
6. Read Diagnostic Trouble Code (DTC) 9
7. Clear Memory Mode 10
8. Read Current Data 11
9. Register Transmitter (ID) 12
10. Display Transmitter (ID) 13
11. Inspection Mode 14
12. Tire Pressure Warning Light / Trouble Indicator Light Illumination Pattern 15
13. List of Diagnostic Trouble Code (DTC) 20
14. Diagnostic Procedure with Diagnostic Trouble Code (DTC) 22
15. General Diagnostic Table 32

GETtheMANUALS.org

1. Basic Diagnostic Procedure

A: PROCEDURE

CAUTION:
Before removal or installation, be sure to remove any foreign matter (dust, moisture, oil, etc.) from the TPMS & keyless entry control module connector.

NOTE:
To check harness for open or short circuits, shake the suspected trouble spot or connector.

	Step	Check	Yes	No
1	**CHECK PRE-INSPECTION.** 1) Check with the user regarding when the warning light lit or started blinking. 2) Before performing diagnostics, check all components which may adversely affect the tire pressure monitor system. <Ref. to TPM(diag)-3, INSPECTION, General Description.>	Is the component that might affect the tire pressure monitor system normal?	Go to step **2**.	Repair or replace each component.
2	**CHECK DIAGNOSTIC TROUBLE CODE (DTC).** 1) Turn the ignition switch to OFF. 2) Connect the Subaru Select Monitor to data link connector. 3) Turn the ignition switch to ON and run the Subaru Select Monitor. NOTE: If the communication function of the Subaru Select Monitor cannot be executed normally, check the communication circuit. <Ref. to TPM(diag)-7, COMMUNICATION FOR INITIALIZING IMPOSSIBLE, INSPECTION, Subaru Select Monitor.> 4) Read the DTC. <Ref. to TPM(diag)-9, OPERATION, Read Diagnostic Trouble Code (DTC).>	Is DTC displayed?	Go to step **4**.	Go to step **3**.
3	**PERFORM GENERAL DIAGNOSTICS.** 1) Perform the inspection by referring to “General Diagnostic Table”. <Ref. to TPM(diag)-32, General Diagnostic Table.> 2) Perform the Clear Memory Mode. <Ref. to TPM(diag)-10, OPERATION, Clear Memory Mode.> 3) Perform the Inspection Mode. <Ref. to TPM(diag)-14, Inspection Mode.> 4) Read the DTC. <Ref. to TPM(diag)-9, OPERATION, Read Diagnostic Trouble Code (DTC).> Check the DTC is not displayed.	Does the tire pressure warning light illuminates for about 2 seconds and then foes off after turning on the ignition switch, and then go out?	Finish the diagnosis.	Check the tire inflation pressure warning light. <Ref. to TPM(diag)-15, Tire Pressure Warning Light / Trouble Indicator Light Illumination Pattern.>
4	**PERFORM DIAGNOSIS.** 1) Refer to “List of Diagnostic Trouble Code (DTC)”. 2) Correct the cause of trouble. 3) Perform the Clear Memory Mode. <Ref. to TPM(diag)-10, OPERATION, Clear Memory Mode.> 4) Perform the drive test. Drive the vehicle at 40 km/h (25 MPH) or faster for at least 10 minutes. 5) Read the DTC. <Ref. to TPM(diag)-9, OPERATION, Read Diagnostic Trouble Code (DTC).>	Is DTC displayed?	Repeat steps 1 to 4 until DTC is not shown.	Finish the diagnosis.

GETtheMANUALS.org

2. General Description

A: CAUTION

1. SUPPLEMENTAL RESTRAINT SYSTEM "AIRBAG"

Airbag system wiring harness is routed near the TPM control module.

CAUTION:

- **Do not use electrical test equipment on any of the airbag system wiring harness circuits.**
- **Be careful not to damage the wiring harness of the airbag system when servicing the TPMS & keyless entry control module.**

2. TPMS & KEYLESS ENTRY CONTROL MODULE

- If a transmitter is replaced, the ID of the new transmitter must be registered. <Ref. to TPM(diag)-12, OPERATION, Register Transmitter (ID).>
- When adjusting tire inflation pressure indoors in winter, there is a big temperature difference between the indoor facilities and outside. Once the car is outside where the temperature is lower, the air pressure in the tires will drop, causing the tire inflation pressure warning light to illuminate, even if the pressure in the tires was adjusted to standard values indoors. To avoid this, it is necessary to adjust the tire inflation pressure to the high side in consideration of the difference in temperature between inside and outside according to the following table.

a. Sedan model

Temperature °C (°F)	Indoor temperature	15.5 (60)		
	Outdoor temperature	–1 (30)	–12 (10)	–23 (–10)
Tire inflation pressure kPa (psi)	Front	250 (36)	265 (38)	280 (40)
	Rear	240 (35)	255 (37)	270 (39)

b. OUTBACK model

Temperature °C (°F)	Indoor temperature	15.5 (60)		
	Outdoor temperature	–1 (30)	–12 (10)	–23 (–10)
Tire inflation pressure kPa (psi)	Front	240 (35)	255 (37)	270 (39)
	Rear	230 (33)	245 (35)	255 (37)

B: INSPECTION

Before performing diagnosis, check the following item which might affect the quality of the tire pressure monitoring system.

1. TIRE

- Inspect that the tire pressure is within the specification while the tire is cool. (Refer to Tire Caution Label.)
- Check the tires for damage or the insertion of foreign matters.

2. BATTERY

Check that amount of battery fluid, gravity and voltage are within the specifications.

Standard voltage: 12 V or more

Specific gravity: 1.260 or more

GETtheMANUALS.org

C: PREPARATION TOOL

1. SPECIAL TOOL

ILLUSTRATION	TOOL NUMBER	DESCRIPTION	REMARKS
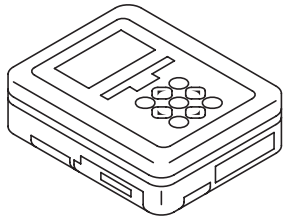 ST1B022XU0	1B022XU0	SUBARU SELECT MONITOR III KIT	Used for troubleshooting the electrical system.

2. GENERAL TOOL

TOOL NAME	REMARKS
Circuit tester	Used for measuring resistance, voltage and current.
Transmitter registration tool	Used to register the transmitter ID. Manufacturer: Kent-Moore Item number: J45295

GETtheMANUALS.org

3. Electrical Component Location

A: LOCATION

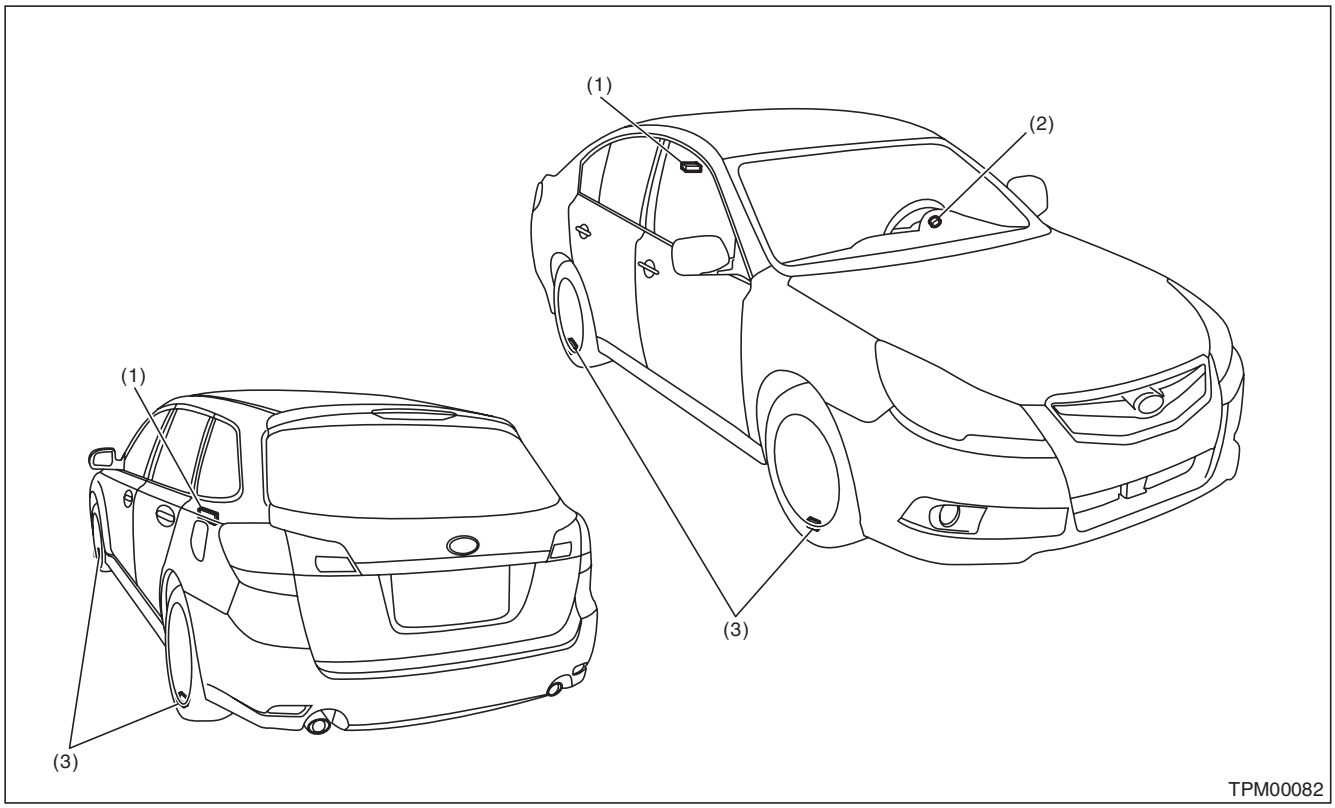

(1) TPMS & keyless entry control module
(2) Tire pressure warning light
(3) Snap-in type transmitter

- Sedan model

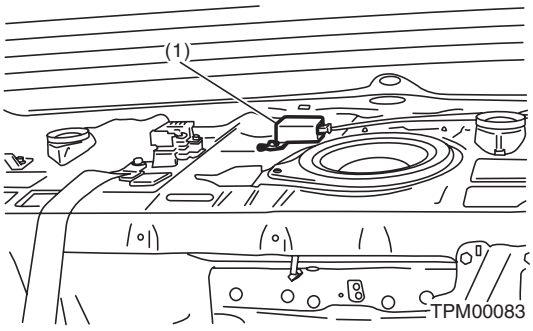

- OUTBACK model

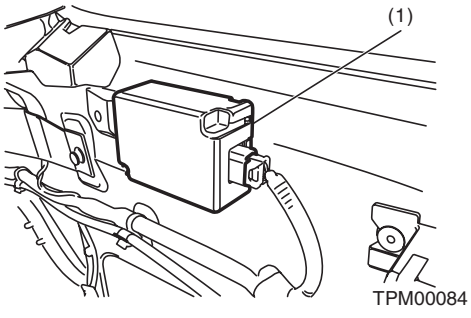

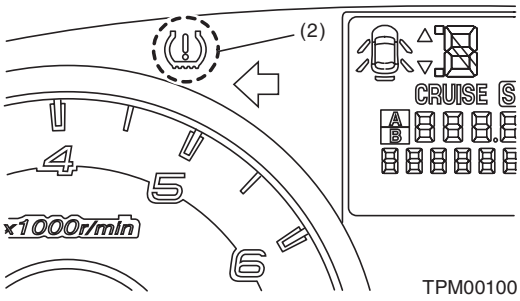

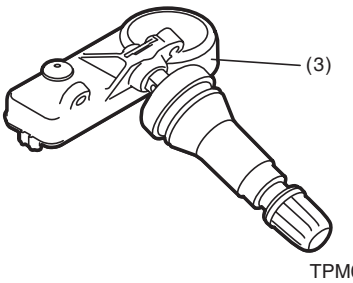

GETtheMANUALS.org

4. Control Module I/O Signal

A: ELECTRICAL SPECIFICATION

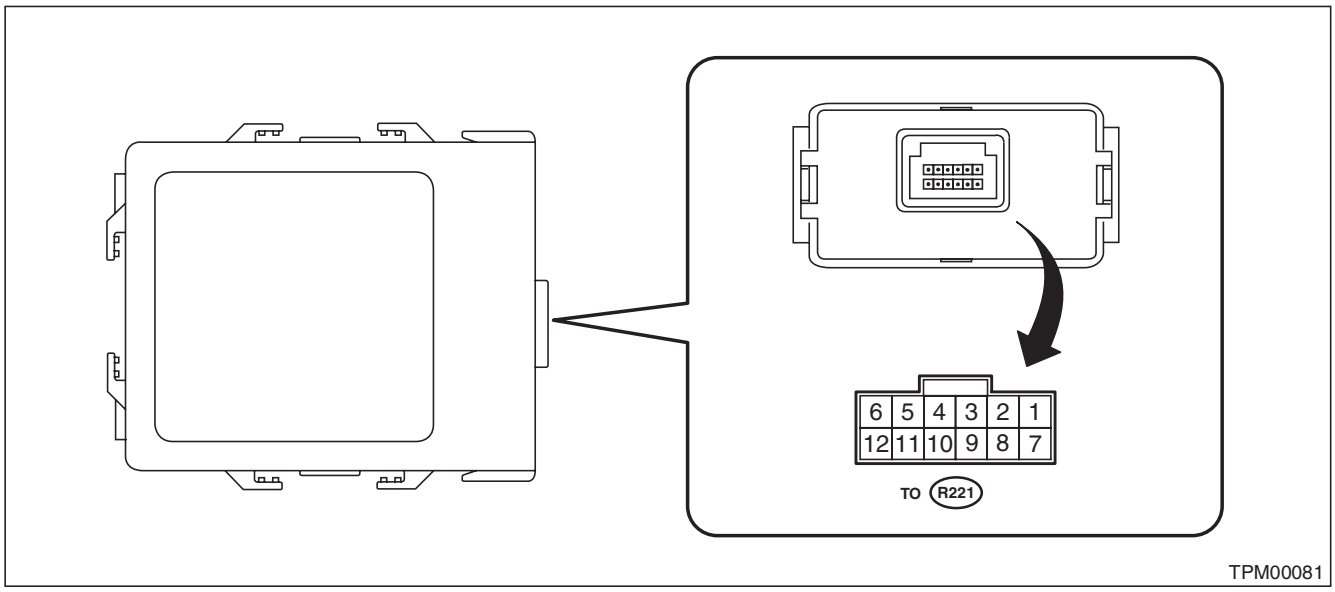

Terminal No.	Content	Measured value and measuring conditions	Remarks
1	—	—	—
2	Tire pressure warning light output	Illuminate when malfunction occurs, or tire pressure decreases	System failure: blinks 25 times → illuminates Tire pressure decreases: turns on
3	Speed sensor signal	While driving (Pulse signal)	Change according to vehicle speed
4	Ignition power supply	IG switch ON (Battery voltage)	—
5	Ground	0 V (Always)	—
6	Battery power supply	Battery voltage (Always)	—
7	—	—	—
8	—	—	—
9	—	—	—
10	—	—	—
11	Body integrated unit	—	—
12	Select monitor communication	Serial communication	—

B: WIRING DIAGRAM

<Ref. to WI-248, WIRING DIAGRAM, Tire Pressure Monitoring System.>

GETtheMANUALS.org

5. Subaru Select Monitor

A: OPERATION

For the operation procedure, refer to the “PC application help for Subaru Select Monitor”.

NOTE:
If TPMS & keyless entry control module and Subaru Select Monitor cannot communicate, check the communication circuit. <Ref. to TPM(diag)-7, INSPECTION, Subaru Select Monitor.>

B: INSPECTION

1. COMMUNICATION FOR INITIALIZING IMPOSSIBLE

DETECTING CONDITION:
Defective harness connector
TROUBLE SYMPTOM:
Communication is impossible between the TPMS & keyless entry control module and the Subaru Select Monitor.
WIRING DIAGRAM:

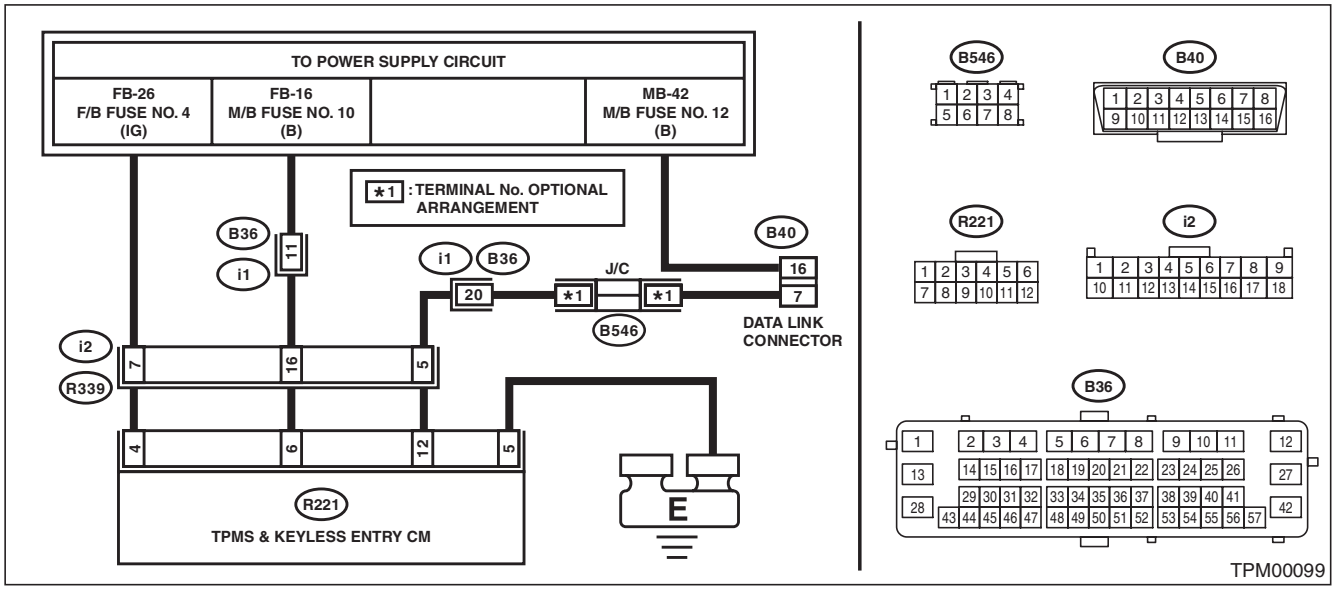

Step		Check	Yes	No
1	**CHECK IGNITION SWITCH.**	Is the ignition switch ON?	Go to step **2**.	Turn the ignition switch to ON, and select TPM mode using Subaru Select Monitor.
2	**CHECK BATTERY.**	Is the voltage 11 V or more?	Go to step **3**.	Charge or replace the battery.
3	**CHECK BATTERY TERMINAL.**	Is there poor contact at battery terminal?	Repair or tighten the battery terminal.	Go to step **4**.
4	**CHECK SUBARU SELECT MONITOR COMMUNICATION.** 1) Turn the ignition switch to ON. 2) Using the Subaru Select Monitor, check whether communication to other systems can be executed normally.	Is the system name displayed on Subaru Select Monitor?	Go to step **8**.	Go to step **5**.

GETtheMANUALS.org

Step		Check	Yes	No
5	**CHECK SUBARU SELECT MONITOR COMMUNICATION.** 1) Turn the ignition switch to OFF. 2) Disconnect the TPMS & keyless entry control module connector. 3) Turn the ignition switch to ON. 4) Check whether communication to other systems can be executed normally.	Is the system name displayed on Subaru Select Monitor?	Replace the TPMS & keyless entry control module.	Go to step **6**.
6	**CHECK HARNESS CONNECTOR BETWEEN EACH CONTROL MODULE AND DATA LINK CONNECTOR.** 1) Turn the ignition switch to OFF. 2) Disconnect the TPMS & keyless entry control module. 3) Measure the resistance between data link connector and chassis ground. ***Connector & terminal*** ***(B40) No. 7 — Chassis ground:***	Is the resistance 1 MΩ or more?	Go to step **7**.	Repair the harness and connector between each control module and data link connector.
7	**CHECK OUTPUT SIGNAL TO TPMS & KEYLESS ENTRY CONTROL MODULE.** 1) Turn the ignition switch to ON. 2) Measure the voltage between TPMS & keyless entry control module and chassis ground. ***Connector & terminal*** ***(B40) No. 7 (+) — Chassis ground (–):***	Is the voltage less than 1 V?	Go to step **8**.	Repair the harness and connector between each control module and data link connector.
8	**CHECK HARNESS CONNECTOR BETWEEN TPMS & KEYLESS ENTRY CONTROL MODULE AND DATA LINK CONNECTOR.** 1) Turn the ignition switch to OFF. 2) Measure the resistance between the TPMS & keyless entry control module connector and the data link connector. ***Connector & terminal*** ***(R221) No. 12 — (B40) No. 7:***	Is the resistance less than 0.5 Ω?	Go to step **9**.	Repair the harness and connector between TPMS & keyless entry control module and data link connector.
9	**CHECK TPMS & KEYLESS ENTRY CONTROL MODULE CONNECTOR.**	Is the connector inserted into the TPMS & keyless entry control module until it locks?	Go to step **10**.	Insert the connector into the TPMS & keyless entry control module.
10	**CHECK POWER SUPPLY CIRCUIT.** 1) Turn the ignition switch to ON. 2) Measure the ignition power supply voltage between TPMS & keyless entry control module connector and chassis ground. ***Connector & terminal*** ***(R221) No. 4 (+) — Chassis ground (–):***	Is the voltage 10 — 15 V?	Go to step **11**.	Repair open circuit of the harness between TPMS & keyless entry control module and battery.
11	**CHECK HARNESS CONNECTOR BETWEEN TPMS & KEYLESS ENTRY CONTROL MODULE AND CHASSIS GROUND.** 1) Turn the ignition switch to OFF. 2) Disconnect the connector from the TPMS & keyless entry control module. 3) Measure the resistance of harness between TPMS & keyless entry control module and chassis ground. ***Connector & terminal*** ***(R221) No. 5 — Chassis ground:***	Is the resistance less than 0.5 Ω?	Go to step **12**.	Repair open circuit of the harness of the TPMS & keyless entry control module.
12	**CHECK POOR CONTACT OF CONNECTOR.**	Is there poor contact of TPMS & keyless entry control module power supply, ground circuit and data link connector?	Repair the connector.	Replace the TPMS & keyless entry control module.

GETtheMANUALS.org

6. Read Diagnostic Trouble Code (DTC)

A: OPERATION

For operation procedures, refer to the “PC application help for Subaru Select Monitor”.

NOTE:
- For details concerning DTCs, refer to List of Diagnostic Trouble Code (DTC). <Ref. to TPM(diag)-20, List of Diagnostic Trouble Code (DTC).>
- All DTCs detected will be displayed.
- If a particular DTC is not properly stored in memory (due to a voltage drop of the TPMS & keyless entry control module power supply, etc.) when a problem occurs, a DTC suffixed with a question mark will appears on the Subaru Select Monitor display. This shows it may be an unreliable reading.
- When DTC is not displayed, check the indicator circuit and communication circuit. <Ref. to TPM(diag)-15, Tire Pressure Warning Light / Trouble Indicator Light Illumination Pattern.>

GETtheMANUALS.org

7. Clear Memory Mode

A: OPERATION

For the operation procedure, refer to the “PC application help for Subaru Select Monitor”.

GETthemMANUALS.org

8. Read Current Data

A: OPERATION

For the operation procedure, refer to the “PC application help for Subaru Select Monitor”.

B: LIST

Display	Contents to be displayed	Unit of measure
Tire 1 FN code	LEARN, LOW BAT, OFF, WAKE, RE ME, NORMAL	LEARN: Transmitted transmitter ID using the transmitter registration tool LOW BAT: Transmitter battery voltage running low OFF: Transmitter function stops (no data transmission) RE ME: Tire air changes ±8.4 kPa WAKE: When data transmission is started from a stopped state. NORMAL: Conditions other than above
Tire 2 FN code		
Tire 3 FN code		
Tire 4 FN code		
Tire 1 air pressure	Value converted to tire pressure from data delivered from transmitter is displayed. (The figure may differ from the actual measured values.)	kPa, psig, mmHg, inHg
Tire 2 air pressure		kPa, psig, mmHg, inHg
Tire 3 air pressure		kPa, psig, mmHg, inHg
Tire 4 air pressure		kPa, psig, mmHg, inHg
Vehicle Speed	Vehicle speed signal which is input in control module	km/h, MPH
Pressure warning	Threshold where tire pressure warning light illuminates	kPa, psig, mmHg, inHg
Return pressure	Threshold where tire pressure warning light goes out	kPa, psig, mmHg, inHg

GETtheMANUALS.org

9. Register Transmitter (ID)

A: OPERATION

Perform the registration procedure of the transmitter in the following cases:
- Transmitter replaced.
- TPMS & keyless entry control module replaced.

NOTE:
- If registration of the transmitter ID is not possible after two attempts, replace the TPMS & keyless entry control module.
- During the registration, turn the ignition switch to OFF and end the Subaru Select Monitor. Or if the registration is not performed for 5 minutes or more, the registration mode is cancelled.
- When rotating tires, there is no affect on the performance or functions of the tire pressure monitoring control module even if the transmitter (ID) is not registered, however, the tire position displayed on the Subaru Select Monitor will be incorrect.

1) Adjust all tire pressures to the specifications.
2) Connect Subaru Select Monitor and select the {Each System Check} on the «Main Menu».
3) On «System Selection Menu» display, select {Tire pressure monitor}.
4) After the {Tire pressure monitor} is displayed, select [OK].
5) On «Tire pressure monitor diagnosis» display, select {Transmitter ID regist confirm}.
6) {ID registration mode When execute Registered ID is deleted. Continue?} is displayed, select [OK].
7) Contact the transmitter registration tool to the side wall area near the air valve on the front left tire, and press the switch. The transmitter ID is sent to the TPMS & keyless entry control module. (At that time, the tire pressure warning light blinks to confirm that the registration has started.)

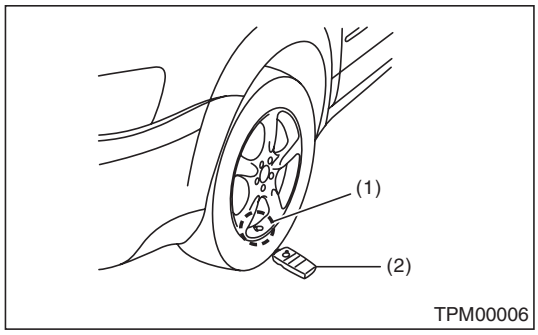

(1) Air valve (transmitter)
(2) Transmitter registration tool

NOTE:
- The registration order of transmitter ID is not specified.
- The transmitter registration tool is used by touching the side wall area near the transmitter.
- When registration of each tire is completed, {ID registration completed} is displayed on the Select Monitor screen.
- If registration procedure stop in the halfway (turning ignition switch to OFF, wrong registration order, etc), proceed from step 5).

8) When ID registration is completed, the tire pressure warning light remains lit for approximately 2 seconds, to end the registration. Switch to the screen displaying the transmitter ID on the Subaru Select Monitor display. <Ref. to TPM(diag)-13, Display Transmitter (ID).>
9) Check the transmitter ID that was registered, then perform a driving test. <Ref. to TPM(diag)-14, Inspection Mode.>

GETthemMANUALS.org

10. Display Transmitter (ID)

A: OPERATION

For the operation procedure, refer to the “PC application help for Subaru Select Monitor”.

GETthemMANUALS.org

11.Inspection Mode

A: PROCEDURE

Reproduce the malfunction occurrence condition as much as possible. Drive the vehicle at 40 km/h (25 MPH) or faster for at least ten minutes.

GETthemANSWERS.org

12. Tire Pressure Warning Light / Trouble Indicator Light Illumination Pattern

A: INSPECTION

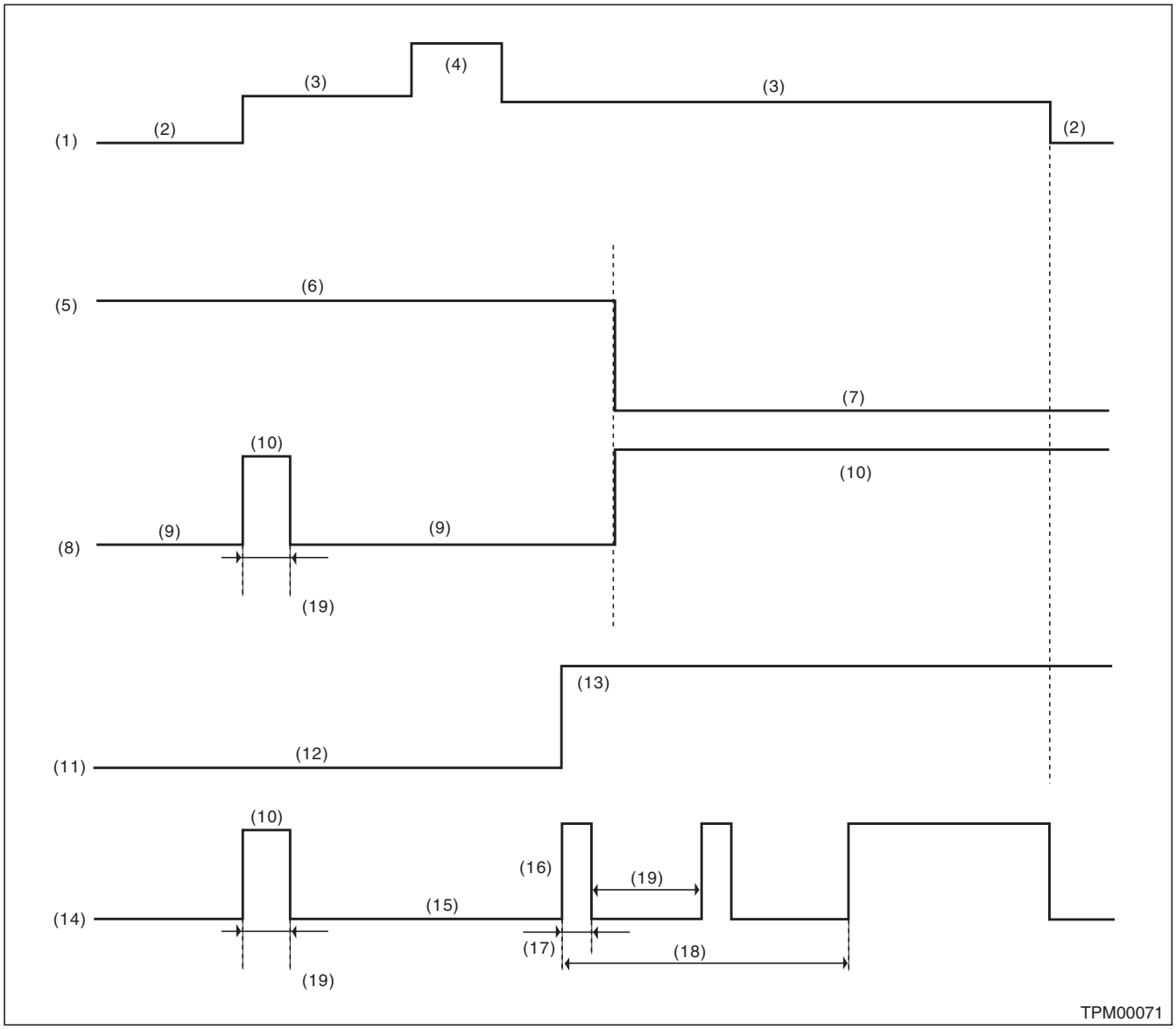

(1)	Ignition switch	(8)	Tire inflation pressure warning light (pressure condition)	(15)	Light OFF
(2)	OFF	(9)	Light OFF	(16)	Blink
(3)	ON	(10)	Light ON	(17)	1 second
(4)	Start	(11)	System status	(18)	Blinks 25 times
(5)	Tire inflation pressure condition	(12)	Normal	(19)	2 seconds
(6)	Meet the specification	(13)	Malfunction		
(7)	Less than standard value (For the pressure warning level, refer to "CURRENT DATA".) <Ref. to TPM(diag)-11, LIST, Read Current Data.>	(14)	Tire inflation pressure warning light (system condition)		

GETtheMANUALS.org

Tire Pressure Warning Light / Trouble Indicator Light Illumination Pattern

1) When the tire pressure warning light does not illuminate in accordance with this illumination pattern, there must be an electrical malfunction.
2) If the tire pressure warning light does not go off, check the TPMS & keyless entry control module/warning light circuit and the combination meter circuit. <Ref. to TPM(diag)-17, TIRE PRESSURE WARNING LIGHT DOES NOT COME OFF, Tire Pressure Warning Light / Trouble Indicator Light Illumination Pattern.>

NOTE:
If the problem is fixed while driving at approximately 40 km/h (25 MPH) after the tire pressure warning light blinks/lights, the warning light goes out and the tire pressure monitor system operates normally. (If there is a decrease in tire pressure, or a malfunction of the system, the malfunction history is displayed.)

GETthemMANUALS.org

B: TIRE PRESSURE WARNING LIGHT DOES NOT COME ON

DETECTING CONDITION:
Defective combination meter
TROUBLE SYMPTOM:
When the ignition switch is turned to ON, the tire pressure warning light does not turn on (for approx. 2 seconds).

Step		Check	Yes	No
1	**CHECK DIAGNOSTIC TROUBLE CODE (DTC).** Connect the Subaru Select Monitor, and read the Diagnostic Trouble Code. <Ref. to TPM(diag)-9, OPERATION, Read Diagnostic Trouble Code (DTC).>	Is diagnostics code (DTC) displayed?	Perform the diagnosis according to the DTC. <Ref. to TPM(diag)-20, List of Diagnostic Trouble Code (DTC).>	Replace the combination meter. <Ref. to IDI-21, REMOVAL, Combination Meter.>

C: TIRE PRESSURE WARNING LIGHT DOES NOT COME OFF

DETECTING CONDITION:
- Defective combination meter
- Tires pressure drop
- Transmitter ID not registered

TROUBLE SYMPTOM:
Tire pressure warning light remains illuminating after engine starts.

Step		Check	Yes	No
1	**CHECK DTC.** Connect the Subaru Select Monitor, and read the Diagnostic Trouble Code. <Ref. to TPM(diag)-9, OPERATION, Read Diagnostic Trouble Code (DTC).>	Is a DTC displayed?	Perform the diagnosis according to the DTC. <Ref. to TPM(diag)-20, List of Diagnostic Trouble Code (DTC).>	Go to step **2**.
2	**CHECK TRANSMITTER (ID).** Display the transmitter ID of the tire pressure monitor system.	Is the transmitter ID registered?	Go to step **3**.	Register the transmitter ID. <Ref. to TPM(diag)-12, OPERATION, Register Transmitter (ID).>
3	**CHECK TRANSMITTER DATA OUTPUT.** 1) Select data display of the tire pressure monitoring. 2) Start the engine and check the tire pressure warning light output.	Is the warning light output ON?	Replace the TPMS & keyless entry control module.	Replace the combination meter. <Ref. to IDI-21, REMOVAL, Combination Meter.>

GETtheMANUALS.org

D: TIRE PRESSURE WARNING LIGHT IS 25 TIMES BLINKING AND TURN ON

DETECTING CONDITION:

- Defective TPMS & keyless entry control module
- Defective harness
- Transmitter is faulty.

TROUBLE SYMPTOM:

Every time the engine starts, tire pressure warning light blinks 25 times and then illuminates.

WIRING DIAGRAM:

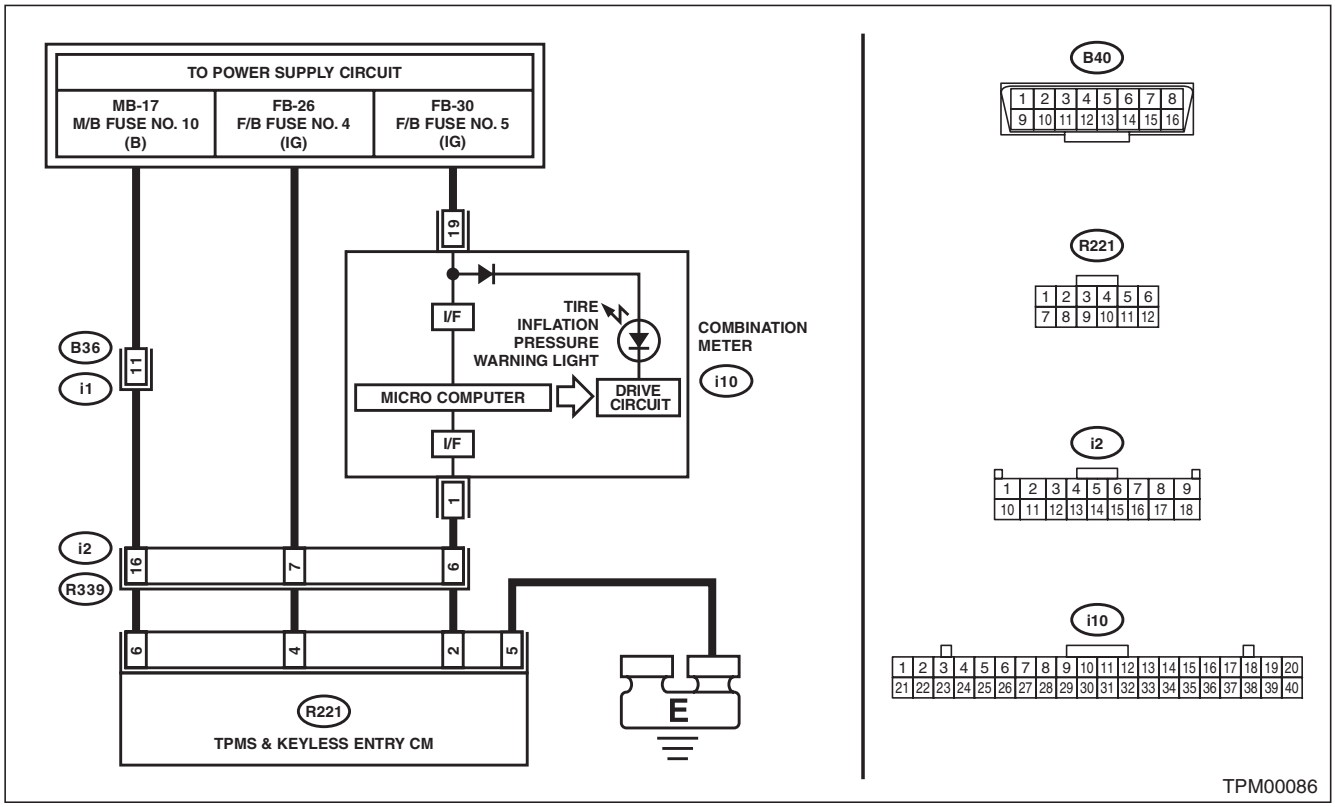

Step		Check	Yes	No
1	**CHECK DTC.** Connect the Subaru Select Monitor, and read the Diagnostic Trouble Code. <Ref. to TPM(diag)-9, OPERATION, Read Diagnostic Trouble Code (DTC).>	Is diagnostics code (DTC) displayed?	Perform the diagnosis according to the DTC. <Ref. to TPM(diag)-20, List of Diagnostic Trouble Code (DTC).>	Go to step **2**.
2	**CHECK HARNESS.** 1) Connect the Subaru Select Monitor to the terminal No. 2 of the TPMS & keyless entry control module connector (R221). ***Connector & terminal*** ***(R221) No. 2 (+) — Chassis ground (–):*** 2) Turn the ignition switch to ON, and select "Oscilloscope" from the Main Menu of Subaru Select Monitor. 3) Check the voltage displayed.	Is the voltage 10 V or more?	Go to step **3**.	Go to step **4**.

GETtheMANUALS.org

Step	Check	Yes	No
3 **CHECK HARNESS.** 1) Check the output waveform displayed in the oscilloscope of Subaru Select Monitor. 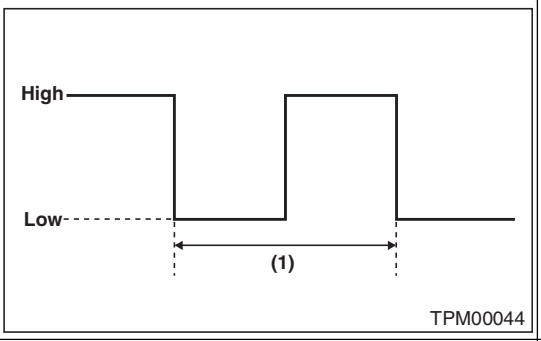 	Is the pattern the same output waveform as shown in the figure? (1) 400±9 ms Duty 50% High: Battery voltage Low:1.5 V or less	Check the combination meter.	Replace the TPMS & keyless entry control module.
4 **CHECK HARNESS.** 1) Disconnect the TPMS & keyless entry control module connector. 2) Connect the Subaru Select Monitor to the terminal No. 2 of the TPMS & keyless entry control module connector (R221). ***Connector & terminal*** ***(R221) No. 2 (+) — Chassis ground (–):*** 3) Turn the ignition switch to ON, and select “Oscilloscope” from the Main Menu of Subaru Select Monitor. 4) Check the voltage displayed.	Is the voltage 10 V or more?	Replace the TPMS & keyless entry control module.	The harness between the combination meter connector and the TPMS & keyless entry control module connector is shorted or open. Repair or replace the harness.

GETtheMANUALS.org

13. List of Diagnostic Trouble Code (DTC)

A: LIST

DTC	Item	Contents of diagnosis	Remarks
11	Tire 1 Air Pressure Decrease	Tire pressure of tire 1 is reduced.	<Ref. to TPM(diag)-22, DTC 11 TIRE 1 AIR PRESSURE DECREASE, Diagnostic Procedure with Diagnostic Trouble Code (DTC).>
12	Tire 2 Air Pressure Decrease	Tire pressure of tire 2 is reduced.	<Ref. to TPM(diag)-22, DTC 12 TIRE 2 AIR PRESSURE DECREASE, Diagnostic Procedure with Diagnostic Trouble Code (DTC).>
13	Tire 3 Air Pressure Decrease	Tire pressure of tire 3 is reduced.	<Ref. to TPM(diag)-22, DTC 13 TIRE 3 AIR PRESSURE DECREASE, Diagnostic Procedure with Diagnostic Trouble Code (DTC).>
14	Tire 4 Air Pressure Decrease	Tire pressure of tire 4 is reduced.	<Ref. to TPM(diag)-23, DTC 14 TIRE 4 AIR PRESSURE DECREASE, Diagnostic Procedure with Diagnostic Trouble Code (DTC).>
21	Transmitter 1 No Data	Data cannot be received from transmitter 1.	<Ref. to TPM(diag)-23, DTC 21 TRANSMITTER 1 NO DATA, Diagnostic Procedure with Diagnostic Trouble Code (DTC).>
22	Transmitter 2 No Data	Data cannot be received from transmitter 2.	<Ref. to TPM(diag)-23, DTC 22 TRANSMITTER 2 NO DATA, Diagnostic Procedure with Diagnostic Trouble Code (DTC).>
23	Transmitter 3 No Data	Data cannot be received from transmitter 3.	<Ref. to TPM(diag)-23, DTC 23 TRANSMITTER 3 NO DATA, Diagnostic Procedure with Diagnostic Trouble Code (DTC).>
24	Transmitter 4 No Data	Data cannot be received from transmitter 4.	<Ref. to TPM(diag)-24, DTC 24 TRANSMITTER 4 NO DATA, Diagnostic Procedure with Diagnostic Trouble Code (DTC).>
31	Transmitter 1 Pressure Data Abnormal	Transmitter 1 data contents are abnormal.	<Ref. to TPM(diag)-25, DTC 31 TRANSMITTER 1 PRESSURE DATA ABNORMAL, Diagnostic Procedure with Diagnostic Trouble Code (DTC).>
32	Transmitter 2 Pressure Data Abnormal	Transmitter 2 data contents are abnormal.	<Ref. to TPM(diag)-25, DTC 32 TRANSMITTER 2 PRESSURE DATA ABNORMAL, Diagnostic Procedure with Diagnostic Trouble Code (DTC).>
33	Transmitter 3 Pressure Data Abnormal	Transmitter 3 data contents are abnormal.	<Ref. to TPM(diag)-25, DTC 33 TRANSMITTER 3 PRESSURE DATA ABNORMAL, Diagnostic Procedure with Diagnostic Trouble Code (DTC).>

GETtheMANUALS.org

DTC	Item	Contents of diagnosis	Remarks
34	Transmitter 4 Pressure Data Abnormal	Transmitter 4 data contents are abnormal.	<Ref. to TPM(diag)-26, DTC 34 TRANSMITTER 4 PRESSURE DATA ABNORMAL, Diagnostic Procedure with Diagnostic Trouble Code (DTC).>
41	Transmitter 1 Function Code Abnormal	Function code has error.	<Ref. to TPM(diag)-27, DTC 41 TRANSMITTER 1 FUNCTION CODE ABNORMAL, Diagnostic Procedure with Diagnostic Trouble Code (DTC).>
42	Transmitter 2 Function Code Abnormal	Function code has error.	<Ref. to TPM(diag)-27, DTC 42 TRANSMITTER 2 FUNCTION CODE ABNORMAL, Diagnostic Procedure with Diagnostic Trouble Code (DTC).>
43	Transmitter 3 Function Code Abnormal	Function code has error.	<Ref. to TPM(diag)-27, DTC 43 TRANSMITTER 3 FUNCTION CODE ABNORMAL, Diagnostic Procedure with Diagnostic Trouble Code (DTC).>
44	Transmitter 4 Function Code Abnormal	Function code has error.	<Ref. to TPM(diag)-28, DTC 44 TRANSMITTER 4 FUNCTION CODE ABNORMAL, Diagnostic Procedure with Diagnostic Trouble Code (DTC).>
51	Transmitter 1 Battery Voltage Decrease	Transmitter battery voltage is low.	<Ref. to TPM(diag)-29, DTC 51 TRANSMITTER 1 BATTERY VOLTAGE DECREASE, Diagnostic Procedure with Diagnostic Trouble Code (DTC).>
52	Transmitter 2 Battery Voltage Decrease	Transmitter battery voltage is low.	<Ref. to TPM(diag)-29, DTC 52 TRANSMITTER 2 BATTERY VOLTAGE DECREASE, Diagnostic Procedure with Diagnostic Trouble Code (DTC).>
53	Transmitter 3 Battery Voltage Decrease	Transmitter battery voltage is low.	<Ref. to TPM(diag)-29, DTC 53 TRANSMITTER 3 BATTERY VOLTAGE DECREASE, Diagnostic Procedure with Diagnostic Trouble Code (DTC).>
54	Transmitter 4 Battery Voltage Decrease	Transmitter battery voltage is low.	<Ref. to TPM(diag)-30, DTC 54 TRANSMITTER 4 BATTERY VOLTAGE DECREASE, Diagnostic Procedure with Diagnostic Trouble Code (DTC).>
61	Vehicle Speed is Abnormal	Vehicle speed signal is not input to the control module when the vehicle speed is 6 km/h (3.7 MPH) or more.	<Ref. to TPM(diag)-31, DTC 61 VEHICLE SPEED IS ABNORMAL, Diagnostic Procedure with Diagnostic Trouble Code (DTC).>

GETtheMANUALS.org

14. Diagnostic Procedure with Diagnostic Trouble Code (DTC)

A: DTC 11 TIRE 1 AIR PRESSURE DECREASE

NOTE:
Refer to DTC 14 for diagnostic procedure. <Ref. to TPM(diag)-23, DTC 14 TIRE 4 AIR PRESSURE DECREASE, Diagnostic Procedure with Diagnostic Trouble Code (DTC).>

B: DTC 12 TIRE 2 AIR PRESSURE DECREASE

NOTE:
Refer to DTC 14 for diagnostic procedure. <Ref. to TPM(diag)-23, DTC 14 TIRE 4 AIR PRESSURE DECREASE, Diagnostic Procedure with Diagnostic Trouble Code (DTC).>

C: DTC 13 TIRE 3 AIR PRESSURE DECREASE

NOTE:
Refer to DTC 14 for diagnostic procedure. <Ref. to TPM(diag)-23, DTC 14 TIRE 4 AIR PRESSURE DECREASE, Diagnostic Procedure with Diagnostic Trouble Code (DTC).>

GETtheMANUALS.org

D: DTC 14 TIRE 4 AIR PRESSURE DECREASE

DTC DETECTING CONDITION:
Inflation pressure of tires dropped below the specified value.

NOTE:
For the specifications, refer to “CURRENT DATA”. <Ref. to TPM(diag)-11, LIST, Read Current Data.>
TROUBLE SYMPTOM:
Tire inflation pressure warning light illuminates.

Step		Check	Yes	No
1	**CHECK TIRES.** Lift up the vehicle and check for damage in the tires.	Are there cracks or damage?	Replace the tire.	Go to step **2**.
2	**CHECK TIRES.** Check the tire inflation pressure.	Is the tire inflation pressure within the specified value?	Go to step **3**.	Adjust the tire inflation pressure.
3	**CHECK TRANSMITTER.** Drive the vehicle at 40 km/h (25 MPH) or faster and compare the data from the transmitters on the four wheels.	Is there a transmitter with different data?	Replace the transmitter (tire inflation pressure sensor).	Go to step **4**.
4	**PERFORM DRIVING TEST.** 1) Perform the Clear Memory Mode. <Ref. to TPM(diag)-10, OPERATION, Clear Memory Mode.> 2) Perform the driving test. <Ref. to TPM(diag)-14, PROCEDURE, Inspection Mode.> 3) Read diagnostic trouble code (DTC). <Ref. to TPM(diag)-9, OPERATION, Read Diagnostic Trouble Code (DTC).>	Is DTC displayed?	Inspect using “Diagnostic Procedure with Diagnostic Trouble Code (DTC)”. <Ref. to TPM(diag)-22, Diagnostic Procedure with Diagnostic Trouble Code (DTC).>	Finish the diagnosis.

CAUTION:
When driving vehicle to perform driving test, there should be always 2 persons (driver and checker) to check.

E: DTC 21 TRANSMITTER 1 NO DATA

NOTE:
Refer to DTC 24 for diagnostic procedure. <Ref. to TPM(diag)-24, DTC 24 TRANSMITTER 4 NO DATA, Diagnostic Procedure with Diagnostic Trouble Code (DTC).>

F: DTC 22 TRANSMITTER 2 NO DATA

NOTE:
Refer to DTC 24 for diagnostic procedure. <Ref. to TPM(diag)-24, DTC 24 TRANSMITTER 4 NO DATA, Diagnostic Procedure with Diagnostic Trouble Code (DTC).>

G: DTC 23 TRANSMITTER 3 NO DATA

NOTE:
Refer to DTC 24 for diagnostic procedure. <Ref. to TPM(diag)-24, DTC 24 TRANSMITTER 4 NO DATA, Diagnostic Procedure with Diagnostic Trouble Code (DTC).>

GETtheMANUALS.org

H: DTC 24 TRANSMITTER 4 NO DATA

DTC DETECTING CONDITION:
Data from transmitters cannot be received for 8 minutes
TROUBLE SYMPTOM:
Tire inflation pressure warning light blinks 25 times and then illuminates.

Step		Check	Yes	No
1	**START FL TRANSMITTER.** 1) Connect the Subaru Select Monitor and then turn the ignition switch to ON. 2) Select “Transmitter ID display”. <Ref. to TPM(diag)-13, OPERATION, Display Transmitter (ID).> 3) Use the transmitter registration tool and transmit the ID from the FL transmitter to check “Latest reception ID”.	Is “Latest reception ID” updated?	Go to step **2**.	Replace front left transmitter.
2	**CHECK FL TRANSMITTER ID.** Check the ID displayed in the updated ID display and the tire 1 registered ID.	Are the two IDs same?	Go to step **3**.	Record the received ID update as the FL transmitter. Go to step **3**.
3	**START FR TRANSMITTER.** Use the transmitter registration tool and transmit the ID from the FR transmitter to check “Latest reception ID”.	Is “Latest reception ID” updated?	Go to step **4**.	Replace front right transmitter.
4	**CHECK FR TRANSMITTER ID.** Check the ID displayed in the updated ID display and the tire 2 registered ID.	Are the two IDs same?	Go to step **5**.	Record the received ID update as the FR transmitter. Go to step **5**.
5	**START RR TRANSMITTER.** Use the transmitter registration tool and transmit the ID from the RR transmitter to check “Latest reception ID”.	Is “Latest reception ID” updated?	Go to step **6**.	Replace RR transmitter.
6	**CHECK RR TRANSMITTER ID.** Check the ID displayed in the updated ID display and the tire 3 registered ID.	Are the two IDs same?	Go to step **7**.	Record the received ID update as the RR transmitter. Go to step **7**.
7	**START RL TRANSMITTER.** Use the transmitter registration tool and transmit the ID from the RL transmitter to check “Latest reception ID”.	Is “Latest reception ID” updated?	Go to step **8**.	Replace RL transmitter.
8	**CHECK RL TRANSMITTER ID.** Check the ID displayed in the updated ID display and the tire 4 registered ID.	Are the two IDs same?	Go to step **9**.	Record the received ID update as the RL transmitter. Go to step **9**.
9	**CHECK MALFUNCTION TRANSMITTER.**	Is ID recorded by this procedure?	Go to step **10**.	Go to step **1**.
10	**CHECK MALFUNCTION TRANSMITTER.** Check the registered ID of the transmitter indicated by diagnostic trouble code (DTC).	Is the checked ID included in the record?	Replace the transmitter of the recorded position.	Replace the transmitter showing the latest ID that is not included in the registered IDs.

CAUTION:
When driving vehicle to perform driving test, there should be always 2 persons (driver and checker) to check.

GETtheMANUALS.org

I: DTC 31 TRANSMITTER 1 PRESSURE DATA ABNORMAL

NOTE:
Refer to DTC 34 for diagnostic procedure. <Ref. to TPM(diag)-26, DTC 34 TRANSMITTER 4 PRESSURE DATA ABNORMAL, Diagnostic Procedure with Diagnostic Trouble Code (DTC).>

J: DTC 32 TRANSMITTER 2 PRESSURE DATA ABNORMAL

NOTE:
Refer to DTC 34 for diagnostic procedure. <Ref. to TPM(diag)-26, DTC 34 TRANSMITTER 4 PRESSURE DATA ABNORMAL, Diagnostic Procedure with Diagnostic Trouble Code (DTC).>

K: DTC 33 TRANSMITTER 3 PRESSURE DATA ABNORMAL

NOTE:
Refer to DTC 34 for diagnostic procedure. <Ref. to TPM(diag)-26, DTC 34 TRANSMITTER 4 PRESSURE DATA ABNORMAL, Diagnostic Procedure with Diagnostic Trouble Code (DTC).>

GETthemMANUALS.org

L: DTC 34 TRANSMITTER 4 PRESSURE DATA ABNORMAL

DTC DETECTING CONDITION:
- When comparing the data from each transmitter with the previous data, the change is large.
- The pressure exceeds what the transmitter can measure. (Excessive pressure)

TROUBLE SYMPTOM:
Tire inflation pressure warning light blinks 25 times and then illuminates.

Step		Check	Yes	No
1	**START FL TRANSMITTER.** 1) Connect the Subaru Select Monitor and then turn the ignition switch to ON. 2) Select “Transmitter ID display”. <Ref. to TPM(diag)-13, OPERATION, Display Transmitter (ID).> 3) Use the transmitter registration tool and transmit the ID from the FL transmitter to check “Latest reception ID”.	Is “Latest reception ID” updated?	Go to step **2**.	Replace front left transmitter.
2	**CHECK FL TRANSMITTER ID.** Check the ID displayed in the updated ID display and the tire 1 registered ID.	Are the two IDs same?	Go to step **3**.	Record the received ID update as the FL transmitter. Go to step **3**.
3	**START FR TRANSMITTER.** Use the transmitter registration tool and transmit the ID from the FR transmitter to check “Latest reception ID”.	Is “Latest reception ID” updated?	Go to step **4**.	Replace front right transmitter.
4	**CHECK FR TRANSMITTER ID.** Check the ID displayed in the updated ID display and the tire 2 registered ID.	Are the two IDs same?	Go to step **5**.	Record the received ID update as the FR transmitter. Go to step **5**.
5	**START RR TRANSMITTER.** Use the transmitter registration tool and transmit the ID from the RR transmitter to check “Latest reception ID”.	Is “Latest reception ID” updated?	Go to step **6**.	Replace RR transmitter.
6	**CHECK RR TRANSMITTER ID.** Check the ID displayed in the updated ID display and the tire 3 registered ID.	Are the two IDs same?	Go to step **7**.	Record the received ID update as the RR transmitter. Go to step **7**.
7	**START RL TRANSMITTER.** Use the transmitter registration tool and transmit the ID from the RL transmitter to check “Latest reception ID”.	Is “Latest reception ID” updated?	Go to step **8**.	Replace RL transmitter.
8	**CHECK RL TRANSMITTER ID.** Check the ID displayed in the updated ID display and the tire 4 registered ID.	Are the two IDs same?	Go to step **9**.	Record the received ID update as the RL transmitter. Go to step **9**.
9	**CHECK MALFUNCTION TRANSMITTER.**	Is ID recorded by this procedure?	Go to step **10**.	Go to step **1**.
10	**CHECK MALFUNCTION TRANSMITTER.** Check the registered ID of the transmitter indicated by diagnostic trouble code (DTC).	Is the checked ID included in the record?	Replace the transmitter of the recorded position.	Replace the transmitter showing the latest ID that is not included in the registered IDs.

GETtheMANUALS.org

M: DTC 41 TRANSMITTER 1 FUNCTION CODE ABNORMAL

NOTE:
Refer to DTC 44 for diagnostic procedure. <Ref. to TPM(diag)-28, DTC 44 TRANSMITTER 4 FUNCTION CODE ABNORMAL, Diagnostic Procedure with Diagnostic Trouble Code (DTC).>

N: DTC 42 TRANSMITTER 2 FUNCTION CODE ABNORMAL

NOTE:
Refer to DTC 44 for diagnostic procedure. <Ref. to TPM(diag)-28, DTC 44 TRANSMITTER 4 FUNCTION CODE ABNORMAL, Diagnostic Procedure with Diagnostic Trouble Code (DTC).>

O: DTC 43 TRANSMITTER 3 FUNCTION CODE ABNORMAL

NOTE:
Refer to DTC 44 for diagnostic procedure. <Ref. to TPM(diag)-28, DTC 44 TRANSMITTER 4 FUNCTION CODE ABNORMAL, Diagnostic Procedure with Diagnostic Trouble Code (DTC).>

GETtheMANUALS.org

P: DTC 44 TRANSMITTER 4 FUNCTION CODE ABNORMAL

DTC DETECTING CONDITION:
Unexpected function codes received from each transmitter.
TROUBLE SYMPTOM:
Tire inflation pressure warning light blinks 25 times and then illuminates.

Step		Check	Yes	No
1	**START FL TRANSMITTER.** 1) Connect the Subaru Select Monitor and then turn the ignition switch to ON. 2) Select “Transmitter ID display”. <Ref. to TPM(diag)-13, OPERATION, Display Transmitter (ID).> 3) Use the transmitter registration tool and transmit the ID from the FL transmitter to check “Latest reception ID”.	Is “Latest reception ID” updated?	Go to step **2**.	Replace front left transmitter.
2	**CHECK FL TRANSMITTER ID.** Check the ID displayed in the updated ID display and the tire 1 registered ID.	Are the two IDs same?	Go to step **3**.	Record the received ID update as the FL transmitter. Go to step **3**.
3	**START FR TRANSMITTER.** Use the transmitter registration tool and transmit the ID from the FR transmitter to check “Latest reception ID”.	Is “Latest reception ID” updated?	Go to step **4**.	Replace front right transmitter.
4	**CHECK FR TRANSMITTER ID.** Check the ID displayed in the updated ID display and the tire 2 registered ID.	Are the two IDs same?	Go to step **5**.	Record the received ID update as the FR transmitter. Go to step **5**.
5	**START RR TRANSMITTER.** Use the transmitter registration tool and transmit the ID from the RR transmitter to check “Latest reception ID”.	Is “Latest reception ID” updated?	Go to step **6**.	Replace RR transmitter.
6	**CHECK RR TRANSMITTER ID.** Check the ID displayed in the updated ID display and the tire 3 registered ID.	Are the two IDs same?	Go to step **7**.	Record the received ID update as the RR transmitter. Go to step **7**.
7	**START RL TRANSMITTER.** Use the transmitter registration tool and transmit the ID from the RL transmitter to check “Latest reception ID”.	Is “Latest reception ID” updated?	Go to step **8**.	Replace RL transmitter.
8	**CHECK RL TRANSMITTER ID.** Check the ID displayed in the updated ID display and the tire 4 registered ID.	Are the two IDs same?	Go to step **9**.	Record the received ID update as the RL transmitter. Go to step **9**.
9	**CHECK MALFUNCTION TRANSMITTER.**	Is ID recorded by this procedure?	Go to step **10**.	Replace the transmitter indicated by diagnostics trouble code (DTC).
10	**CHECK MALFUNCTION TRANSMITTER.** Check the registered ID of the transmitter indicated by diagnostic trouble code (DTC).	Is the checked ID included in the record?	Replace the transmitter of the recorded position.	Replace the transmitter indicated by diagnostics trouble code (DTC).

GETtheMANUALS.org

Q: DTC 51 TRANSMITTER 1 BATTERY VOLTAGE DECREASE

NOTE:
Refer to DTC 54 for diagnostic procedure. <Ref. to TPM(diag)-30, DTC 54 TRANSMITTER 4 BATTERY VOLTAGE DECREASE, Diagnostic Procedure with Diagnostic Trouble Code (DTC).>

R: DTC 52 TRANSMITTER 2 BATTERY VOLTAGE DECREASE

NOTE:
Refer to DTC 54 for diagnostic procedure. <Ref. to TPM(diag)-30, DTC 54 TRANSMITTER 4 BATTERY VOLTAGE DECREASE, Diagnostic Procedure with Diagnostic Trouble Code (DTC).>

S: DTC 53 TRANSMITTER 3 BATTERY VOLTAGE DECREASE

NOTE:
Refer to DTC 54 for diagnostic procedure. <Ref. to TPM(diag)-30, DTC 54 TRANSMITTER 4 BATTERY VOLTAGE DECREASE, Diagnostic Procedure with Diagnostic Trouble Code (DTC).>

GETtheMANUALS.org

T: DTC 54 TRANSMITTER 4 BATTERY VOLTAGE DECREASE

DTC DETECTING CONDITION:
Low battery signals received 20 times from each transmitter.
TROUBLE SYMPTOM:
Tire pressure warning light blinks 25 times and then illuminates.

Step		Check	Yes	No
1	**CHECK TRANSMITTER.** 1) Replace all transmitters and register their IDs. <Ref. to TPM(diag)-12, OPERATION, Register Transmitter (ID).> 2) Perform the Clear Memory Mode, and perform driving test.	Is the fault eliminated?	Internal battery of the transmitter had worn out.	Replace the TPMS & keyless entry control module.

GETtheMANUALS.org

U: DTC 61 VEHICLE SPEED IS ABNORMAL

DTC DETECTING CONDITION:
Vehicle speed function codes were received from the transmitter, but the vehicle speed signal was not input to the module.

TROUBLE SYMPTOM:
Tire pressure warning light blinks 25 times and then illuminates.

WIRING DIAGRAM:

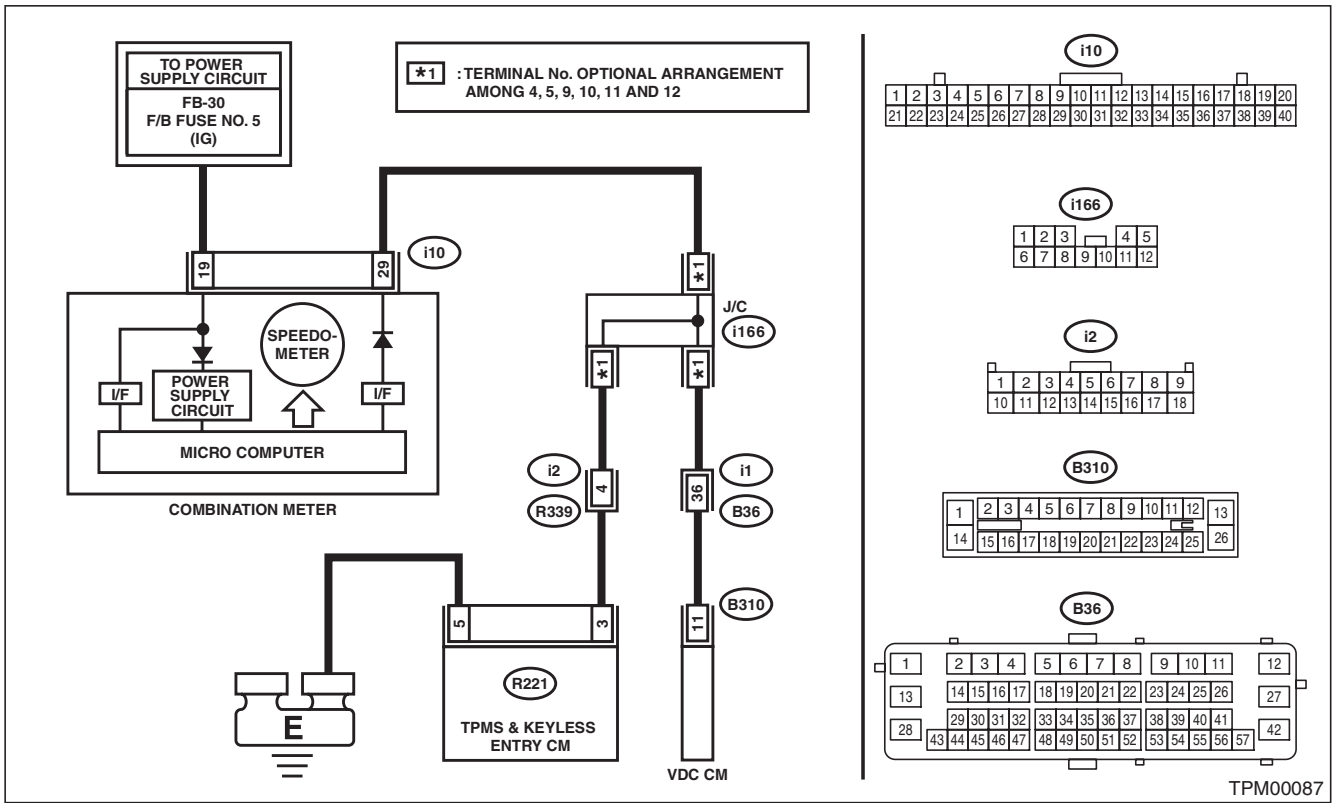

Step		Check	Yes	No
1	**CHECK TPMS & KEYLESS ENTRY CONTROL MODULE.** 1) Connect an oscilloscope to the terminal No. 3 of the TPMS & keyless entry control module connector (R221). 2) Lift up the vehicle and then drive the vehicle at 40 km/h (25 MPH) and check the vehicle speed signal at that time.	Is the vehicle speed being input?	Replace the TPMS & keyless entry control module.	Go to step **2**.
2	**CHECK HARNESS.** 1) Disconnect the combination meter connector (i10). 2) Connect the tester to the TPMS & keyless entry control module connector (R221) and combination meter connector (i10), and measure the resistance. ***Connector & terminal*** ***(R221) No. 3 — (i10) No. 29:***	Is the resistance less than 0.5 Ω?	Check the combination meter. <Ref. to IDI-21, REMOVAL, Combination Meter.>	Repair or replace the open circuit of the harness.

GETtheMANUALS.org

15. General Diagnostic Table

A: INSPECTION

Symptoms		Faulty parts
Tire pressure warning light illuminates.	Tire pressure is reduced.	• Improper tire pressure adjustment. • Punctured tire
Tire pressure warning light blinks 25 times and then illuminates.	Tire pressure monitoring system has malfunction.	• Air pressure sensor malfunction • Air pressure sensor is out of battery. • Defective TPMS & keyless entry control module • Defective vehicle harness • Defective combination meter
Tire pressure is dropping but the warning light does not illuminate.	Tire pressure warning light does not illuminate.	• Air pressure sensor is faulty. • Defective TPMS & keyless entry control module • Defective combination meter

GETtheMANUALS.org

DIFFERENTIALS

DI

		Page
1.	General Description	2
2.	Differential Gear Oil	23
3.	Front Differential Assembly	25
4.	Rear Differential (T-type)	26
5.	Rear Differential (VA-type)	46
6.	Rear Differential Front Oil Seal	76
7.	Rear Differential Side Oil Seal	78
8.	Rear Differential Front Member	79
9.	Rear Differential Mount Bushing	80
10.	Rear Differential Inspection Mode	84
11.	General Diagnostic Table	85

GETtheMANUALS.org

1. General Description

A: SPECIFICATION

1. REAR DIFFERENTIAL

When replacing a rear differential assembly, select the correct one according to the following table.

NOTE:
- Using a different rear differential assembly will cause the drive train and tires to drag or emit abnormal noise.
- For option code, refer to “ID” section. <Ref. to ID-2, IDENTIFICATION, Identification.>

Model	Sedan				OUTBACK		
	2.5 L SOHC		2.5 L DOHC turbo	3.6 L	2.5 L SOHC		3.6 L
	CVT	6MT	6MT	5AT	CVT	6MT	5AT
Rear differential type	VA1-type	T-type	T-type	VA2-TYPE	T-type	T-type	VA2-TYPE
Identification	XD	T2	B1	XC	B2	TP	XC
LSD type	—						
Type of gear	Hypoid gear						
Gear ratio (Number of gear teeth)	3.700 (37/10)	4.111 (37/9)	4.111 (37/9)	3.083 (37/12)	3.900 (39/10)	4.444 (40/9)	3.083 (37/12)
Oil capacity	0.8 ℓ (0.8 US qt, 0.7 Imp qt)						
Rear differential gear oil	GL–5 (75W–90)						

GETtheMANUALS.org

2. IDENTIFICATION

Identification positions are shown in the following figures. For details concerning identification, refer to the “ID” section.

- T-type

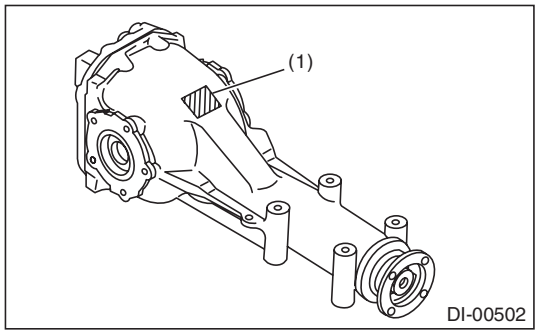

(1) Identification

- VA1-type

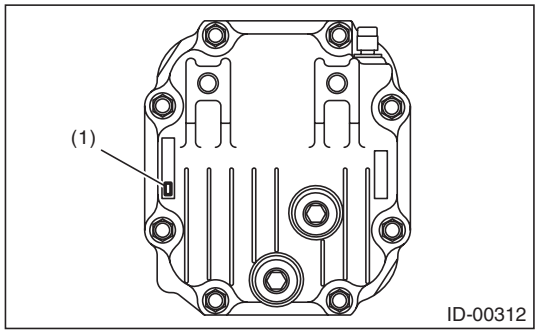

(1) Identification

- VA2-type

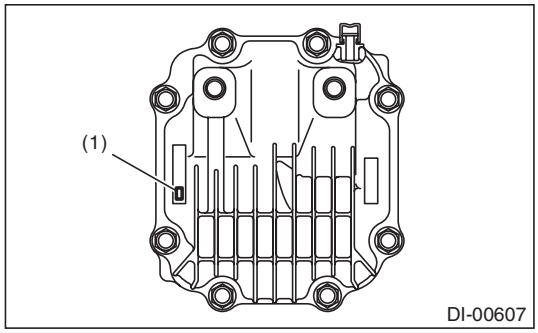

(1) Identification

3. REAR DIFFERENTIAL GEAR OIL

Recommended gear oil:
GL–5 (75W–90)

CAUTION:
Each oil manufacturer has its base oil and additives. Thus, do not mix two or more brands.

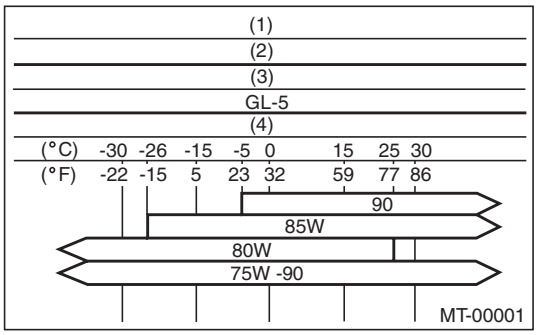

(1) Item
(2) Rear differential gear oil
(3) API classification
(4) SAE viscosity No. and applicable temperature

GETtheMANUALS.org

4. SERVICE DATA

Drive pinion bearing preload (For new bearing)	Measured with spring measurement (Measured at companion flange bolt hole) N (kgf, lbf)	T-type	18.1 — 38.8 (1.8 — 4.0, 4.1 — 8.7)
		VA1, VA2-type	12.7 — 32.2 (1.3 — 3.3, 2.9 — 7.2)
	Measured with torque wrench N·m (kgf-m, ft-lb)	T-type	0.69 — 1.47 (0.07 — 0.15, 0.51 — 1.08)
		VA1, VA2-type	0.48 — 1.22 (0.05 — 0.12, 0.35 — 0.90)
Side gear backlash mm (in)		T-type	0.10 — 0.20 (0.004 — 0.008)
		VA1-type	0.05 — 0.15 (0.002 — 0.006)
		VA2-type	0.13 — 0.18 (0.005 — 0.007)
Hypoid driven gear backlash mm (in)		T-type	0.10 — 0.20 (0.004 — 0.008)
		VA1, VA2-type	0.10 — 0.15 (0.004 — 0.006)
Hypoid driven gear runout on its back surface mm (in)		T-type	0.05 (0.002)
Total preload (Measured from the companion flange bolt hole) N (kgf, lbf)		T-type	20.7 — 54.4 (2.1 — 5.5, 4.7 — 12.2)
Companion flange mating surface runout mm (in)			0.08 (0.003)
Companion flange runout on its inner side mm (in)			0.08 (0.003)

GETtheMANUALS.org

B: COMPONENT

1. REAR DIFFERENTIAL (T-TYPE)

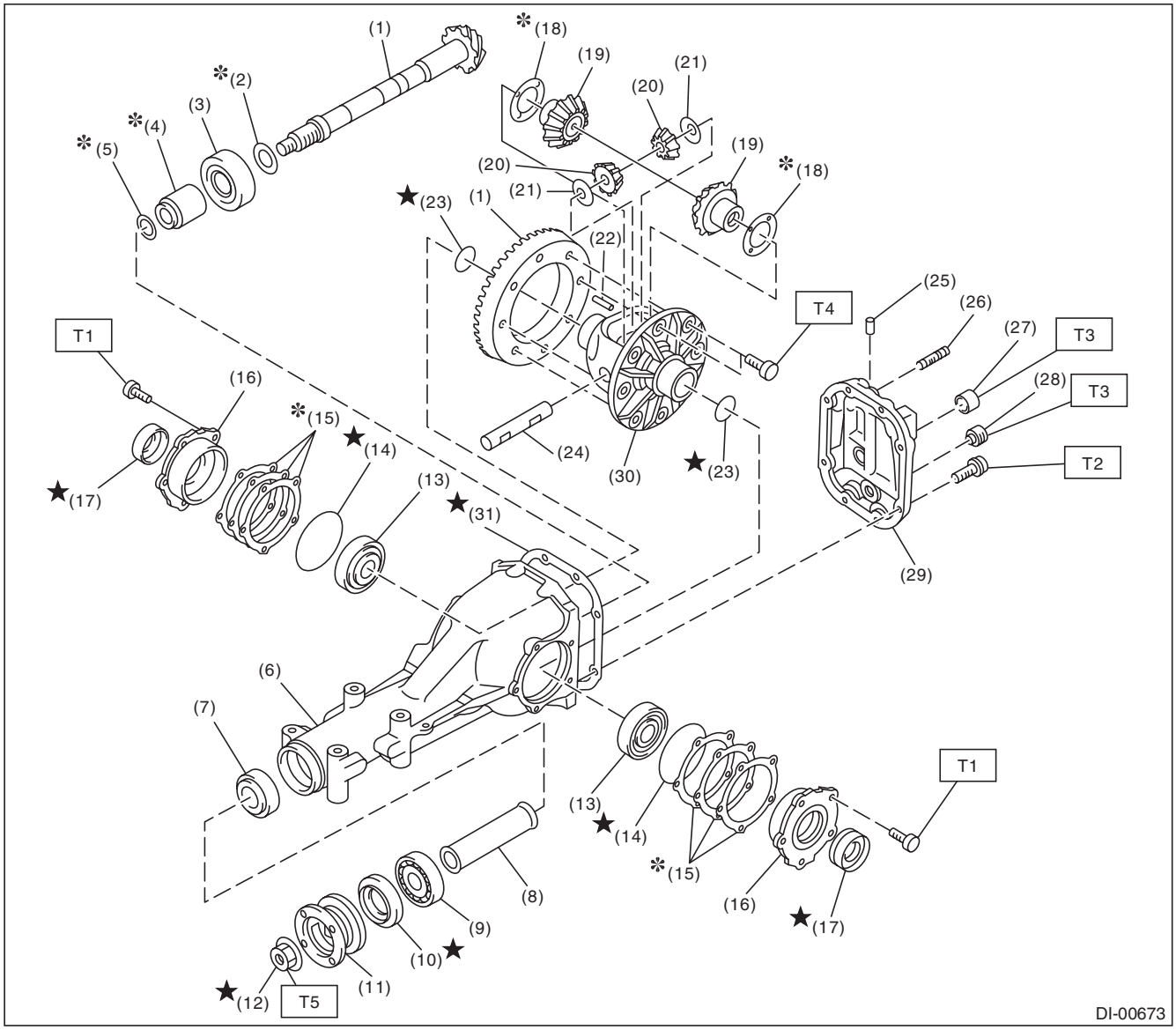

(1)	Hypoid driven gear and drive pinion set	(14)	O-ring	(27)	Filler plug
(2)	Pinion height adjusting washer	(15)	Side retainer shim	(28)	Drain plug
(3)	Rear bearing	(16)	Side retainer	(29)	Rear cover
(4)	Preload adjusting spacer	(17)	Side oil seal	(30)	Differential case
(5)	Preload adjusting washer	(18)	Side gear thrust washer	(31)	Gasket
(6)	Differential carrier	(19)	Side gear		
(7)	Front bearing	(20)	Pinion mate gear		
(8)	Spacer	(21)	Pinion mate gear washer		
(9)	Pilot bearing	(22)	Pinion shaft lock pin		
(10)	Front oil seal	(23)	Snap ring		
(11)	Companion flange	(24)	Pinion mate shaft		
(12)	Self-locking nut	(25)	Air breather cap		
(13)	Side bearing	(26)	Stud bolt		

Tightening torque:N·m (kgf-m, ft-lb)

T1: 10.5 (1.1, 7.7)
T2: 29.5 (3.0, 21.8)
T3: 49 (5.0, 36.1)
T4: 103 (10.5, 76.0)
T5: 181.5 (18.5, 133.9)

GETtheMANUALS.org

2. REAR DIFFERENTIAL (VA1-TYPE)

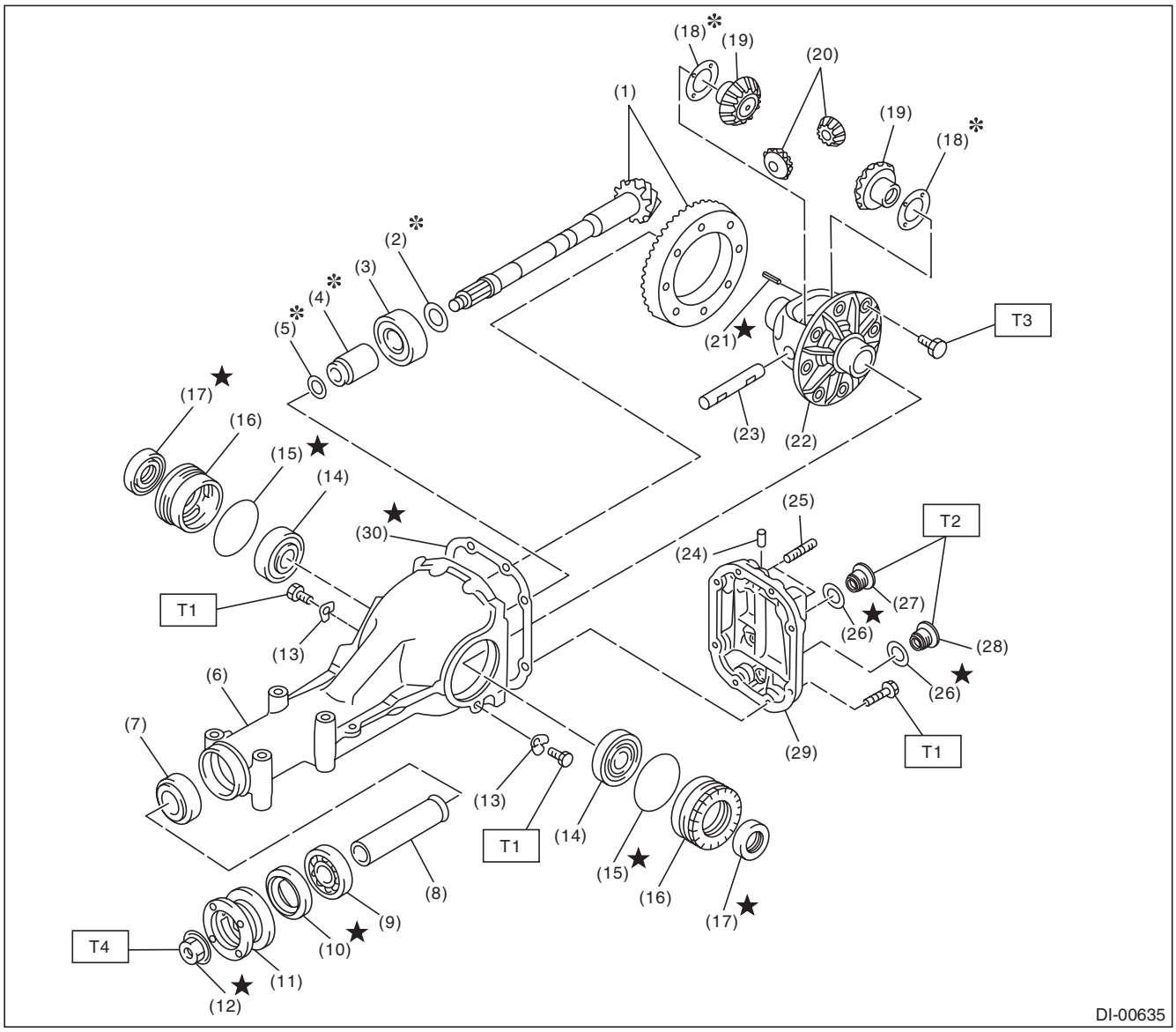

(1)	Hypoid driven gear and drive pinion set	(13)	Lock plate	(25)	Stud bolt
(2)	Pinion height adjusting washer	(14)	Side bearing	(26)	Gasket
(3)	Rear bearing	(15)	O-ring	(27)	Filler plug
(4)	Preload adjusting spacer	(16)	Side retainer	(28)	Drain plug
(5)	Preload adjusting washer	(17)	Side oil seal	(29)	Rear cover
(6)	Differential carrier	(18)	Side gear thrust washer	(30)	Gasket
(7)	Front bearing	(19)	Side gear		
(8)	Spacer	(20)	Pinion mate gear		
(9)	Pilot bearing	(21)	Spring pin		
(10)	Front oil seal	(22)	Differential case		
(11)	Companion flange	(23)	Pinion mate shaft		
(12)	Self-locking nut	(24)	Air breather cap		

Tightening torque:N·m (kgf-m, ft-lb)

T1: 25 (2.5, 18.4)

T2: 50 (5.1, 36.9)

T3: <Ref. to DI-52, ASSEMBLY, Rear Differential (VA-type).>

T4: 191 (19.5, 140.9)

GETtheMANUALS.org

3. REAR DIFFERENTIAL (VA2-TYPE)

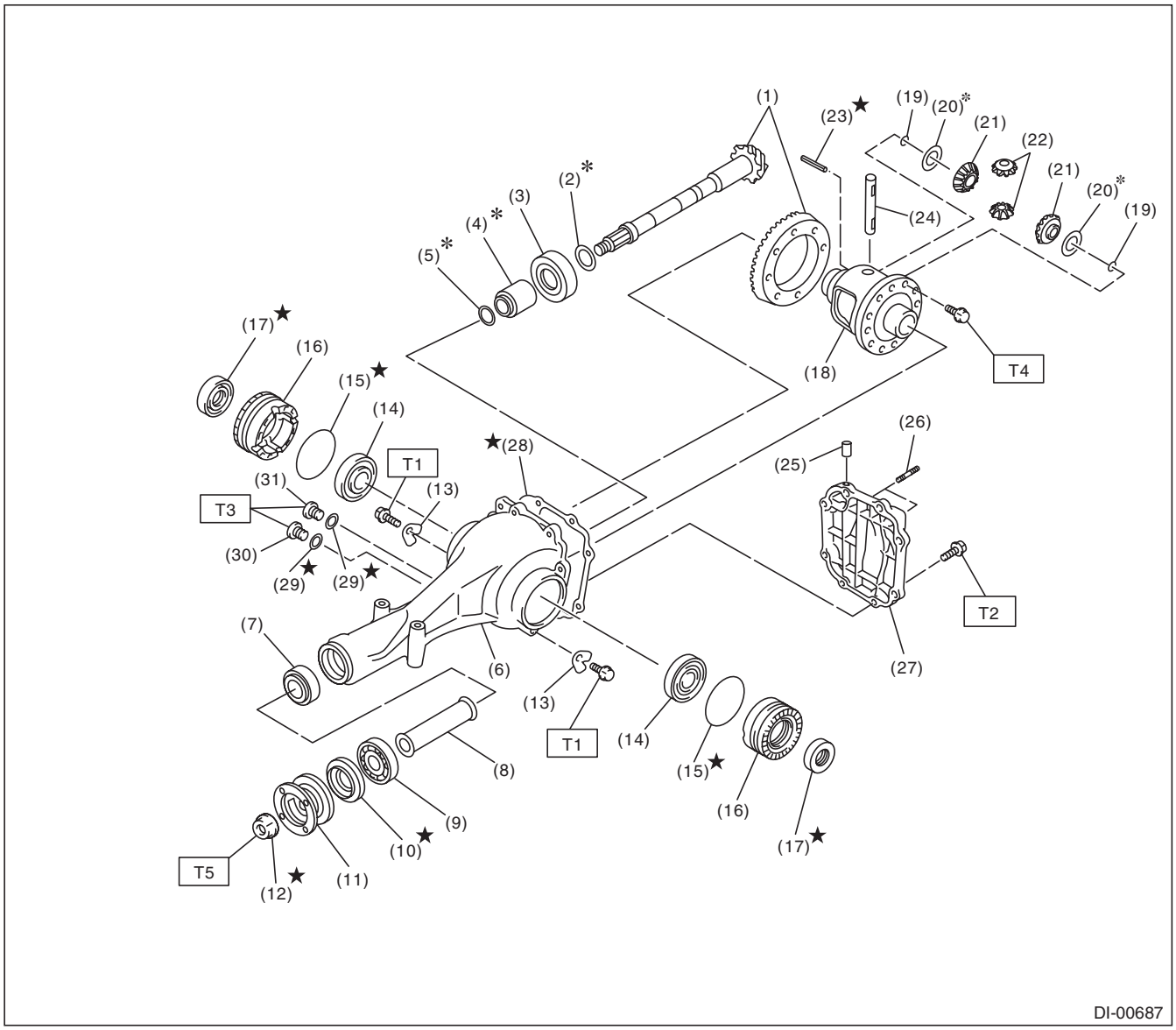

(1)	Hypoid driven gear and drive pinion set	(14)	Side bearing	(27)	Rear cover
(2)	Pinion height adjusting washer	(15)	O-ring	(28)	Gasket
(3)	Rear bearing	(16)	Side retainer	(29)	Gasket
(4)	Preload adjusting spacer	(17)	Side oil seal	(30)	Filler plug
(5)	Preload adjusting washer	(18)	Differential case	(31)	Drain plug
(6)	Differential carrier	(19)	Circlip		
(7)	Front bearing	(20)	Side gear thrust washer		
(8)	Spacer	(21)	Side gear		
(9)	Pilot bearing	(22)	Pinion mate gear		
(10)	Front oil seal	(23)	Spring pin		
(11)	Companion flange	(24)	Pinion mate shaft		
(12)	Self-locking nut	(25)	Air breather cap		
(13)	Lock plate	(26)	Stud bolt		

Tightening torque:N·m (kgf-m, ft-lb)

T1: 25 (2.5, 18.4)

T2: 34 (3.5, 25.1)

T3: 50 (5.1, 36.9)

T4: <Ref. to DI-52, ASSEMBLY, Rear Differential (VA-type).>

T5: 191 (19.5, 140.9)

GETtheMANUALS.org

4. REAR DIFFERENTIAL MOUNTING SYSTEM

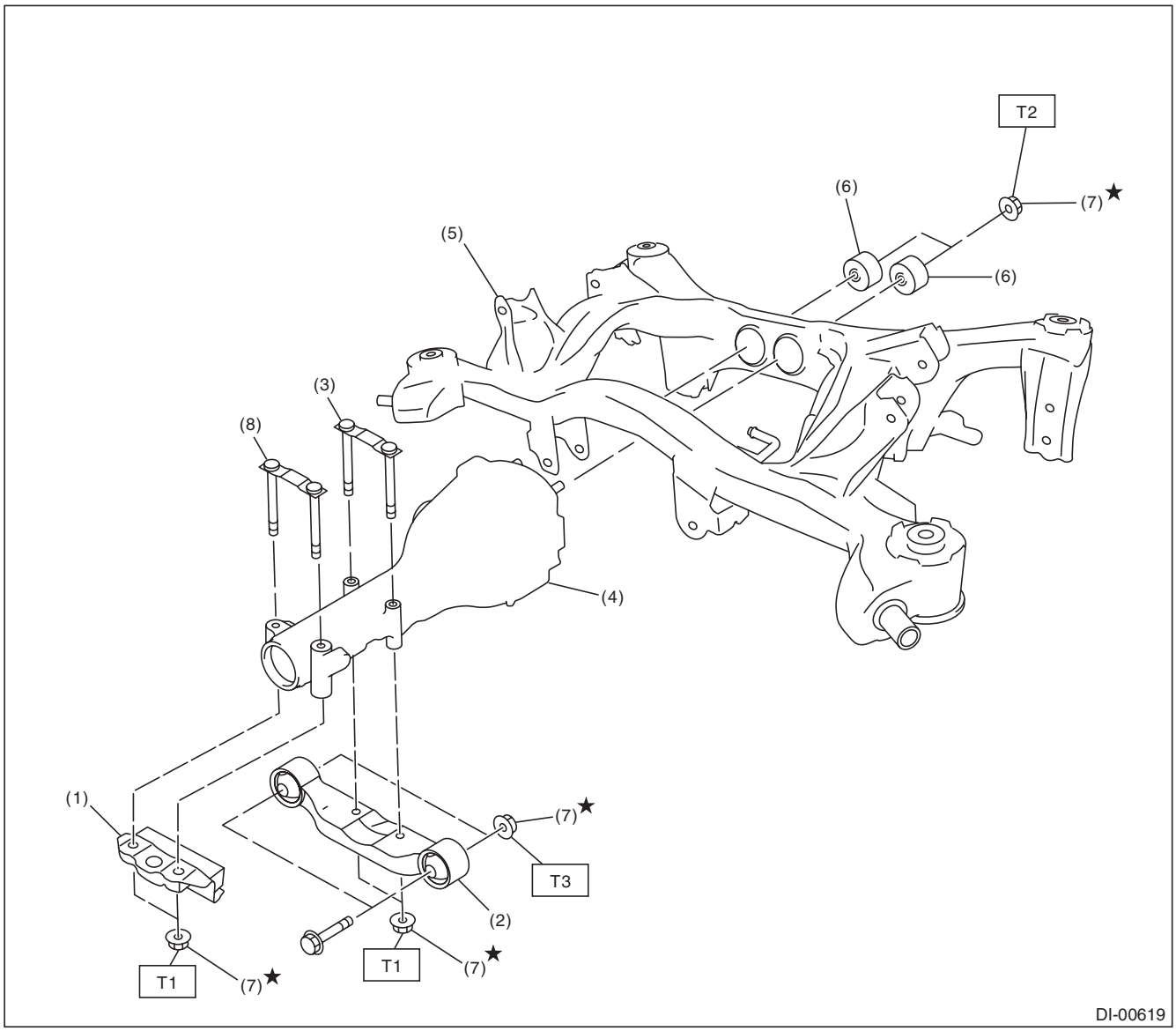

(1)	Mass damper (CVT model)	(5)	Sub frame
(2)	Rear differential front member	(6)	Rear differential mount bushing
(3)	Rear differential member plate	(7)	Self-locking nut
(4)	Rear differential ASSY	(8)	Rear differential member plate (CVT model)

Tightening torque:N·m (kgf-m, ft-lb)

T1: 50 (5.1, 36.9)
T2: 70 (7.1, 51.6)
T3: 110 (11.2, 81.1)

GETtheMANUALS.org

C: CAUTION

- Wear appropriate work clothing, including a cap, protective goggles and protective shoes when performing any work.
- Remove contamination including dirt and corrosion before removal, installation or disassembly.
- Keep the disassembled parts in order and protect them from dust and dirt.
- Before removal, installation or disassembly, be sure to clarify the failure. Avoid unnecessary removal, installation, disassembly and replacement.
- Vehicle components are extremely hot after driving. Be wary of receiving burns from heated parts.
- Use SUBARU genuine gear oil, grease or equivalent. Do not mix gear oil, grease, etc. of different grades or manufacturers.
- Be sure to tighten fasteners including bolts and nuts to the specified torque.
- Place shop jacks or rigid racks at the specified points.
- Apply gear oil onto sliding or revolving surfaces before installation.
- Before installing the O-ring or snap ring, apply a sufficient amount of gear oil to avoid damage and deformation.
- Before securing a part on a vise, place cushioning material such as wood blocks, aluminum plate, or cloth between the part and the vise.
- Avoid damaging the mating surface of the case.

GETtheMANUALS.org

D: PREPARATION TOOL

1. SPECIAL TOOL

ILLUSTRATION	TOOL NUMBER	DESCRIPTION	REMARKS
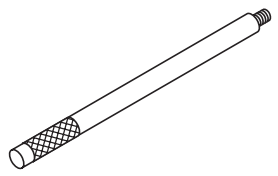 ST-398477701	398477701	HANDLE	• Used for installing the rear bearing race. • Used for installing the front bearing race. (T-type and VA1-type)
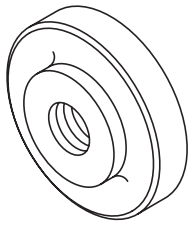 ST-398477702	398477702	DRIFT	• Used for installing the front bearing race. (T-type) • Used for installing the rear bearing race. (VA1-type) • Used for installing side bearing race. (VA1-type)
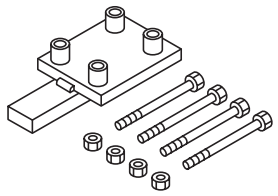 ST-398217700	398217700	ATTACHMENT SET	Stand for rear differential carrier disassembly and assembly.
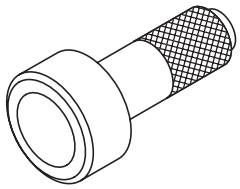 ST-498447120	498447120	INSTALLER	Used for installing the front oil seal.

GETtheMANUALS.org

ILLUSTRATION	TOOL NUMBER	DESCRIPTION	REMARKS
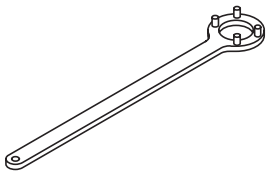 ST-498427200	498427200	FLANGE WRENCH	Used for stopping rotation of companion flange when removing and tightening self-lock nut.
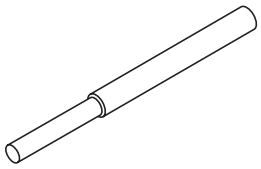 ST-398467700	398467700	DRIFT	Used for removing drive pinion shaft, pilot bearing and front bearing cone. (T-type and VA1-type)
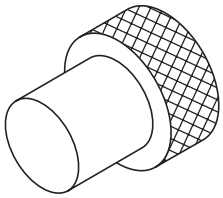 ST-399780104	399780104	WEIGHT	• Used for installing the front bearing cone and the companion flange. • Used for installing the pilot bearing. (T-type and VA1-type)
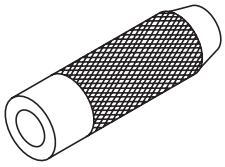 ST-899580100	899580100	INSTALLER	Used for installing the front bearing cone and the pilot bearing. (T-type and VA1-type)
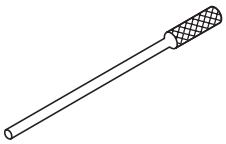 ST-899904100	899904100	STRAIGHT PIN REMOVER	• Used for removing and installing the pinion mate shaft lock pin. (T-type) • Used for removing and installing the pinion mate shaft spring pin. (VA-type)

GETtheMANUALS.org

ILLUSTRATION	TOOL NUMBER	DESCRIPTION	REMARKS
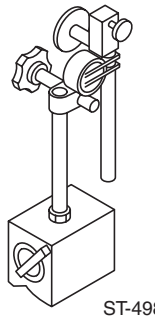 ST-498247001	498247001	MAGNET BASE	• Used for measuring backlash between side gear and pinion, and hypoid gear. • Used together with DIAL GAUGE (498247100).
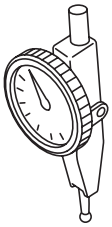 ST-498247100	498247100	DIAL GAUGE	• Used for measuring backlash between side gear and pinion, and hypoid gear. • Used together with MAGNET BASE (498247001).
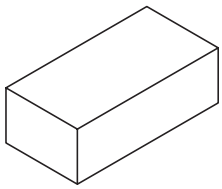 ST-398507704	398507704	BLOCK	Used for adjusting pinion height and preload. (T-type and VA1-type)
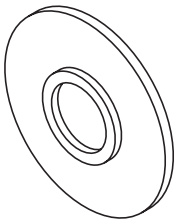 ST-398177700	398177700	INSTALLER	Used for installing the rear bearing cone. (T-type and VA2-type)
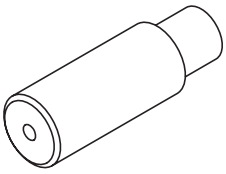 ST-398457700	398457700	ATTACHMENT	Used for removing the side retainer. (T-type)

GETtheMANUALS.org

ILLUSTRATION	TOOL NUMBER	DESCRIPTION	REMARKS
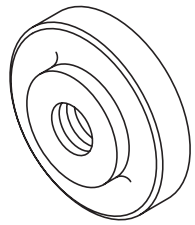 ST-398477703	398477703	DRIFT 2	Used for installing the rear bearing race. (T-type and VA2-type)
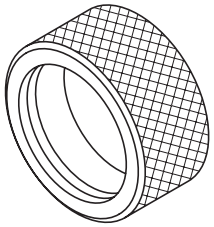 ST-398437700	398437700	DRIFT	Used for installing the side oil seal. (T-type and VA2-type)
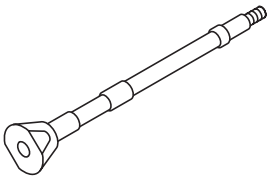 ST-398507702	398507702	DUMMY SHAFT	Used for adjusting pinion height and preload. (T-type)
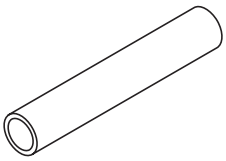 ST-398507703	398507703	DUMMY COLLAR	Used for adjusting pinion height and preload. (T-type)
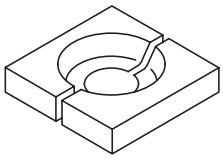 ST-398517700	398517700	REPLACER	Used for removing rear bearing cone. (T-type and VA2-type)

GETtheMANUALS.org

ILLUSTRATION	TOOL NUMBER	DESCRIPTION	REMARKS
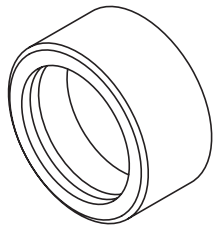 ST-398487700	398487700	DRIFT	Used for installing side bearing cone. (T-type and VA2-type)
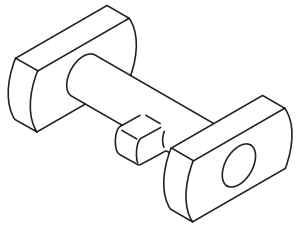 ST-398507701	398507701	DIFFERENTIAL CARRIER GAUGE	Used for adjusting pinion height. (T-type)
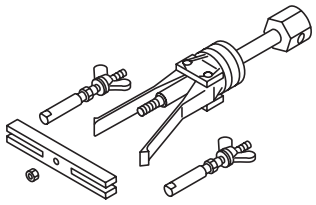 ST-398527700	398527700	PULLER ASSY	• Used for removing front oil seal. • Used for removing the side bearing race. (T-type)
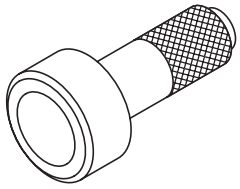 ST-398417700	398417700	DRIFT	Used for installing side bearing race. (T-type and VA2-type)
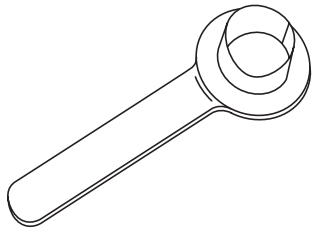 ST28099PA090	28099PA090	OIL SEAL PROTECTOR	Used for installing the rear drive shaft to the rear differential. (For oil seal protection)

GETtheMANUALS.org

ILLUSTRATION	TOOL NUMBER	DESCRIPTION	REMARKS
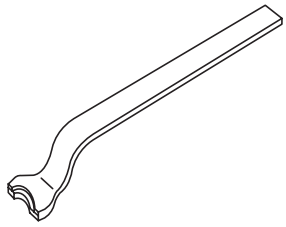 ST28099PA100	28099PA100	DRIVE SHAFT REMOVER	Used for removing the rear drive shaft from rear differential. (T-type)
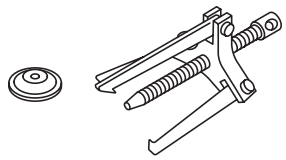 ST-399703600	399703600	PULLER ASSY	Used for removing companion flange.
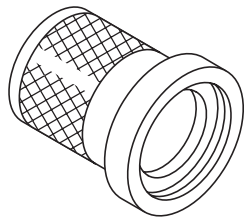 ST-899874100	899874100	INSTALLER	Used for installing the companion flange.
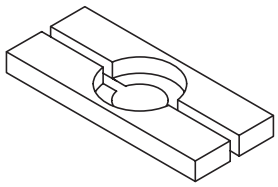 ST-498077000	498077000	REMOVER	Used for removing the side bearing cone. (VA2-type)
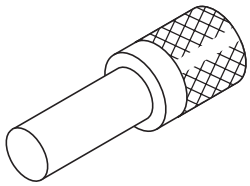 ST-899864100	899864100	REMOVER	Used for removing the side bearing cone. (VA2-type)

GETtheMANUALS.org

ILLUSTRATION	TOOL NUMBER	DESCRIPTION	REMARKS
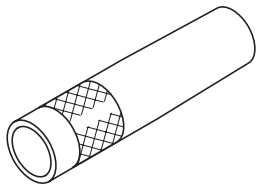 ST-499277200	499277200	INSTALLER	Used for installing the front bearing race and front oil seal. (VA2-type)
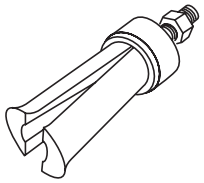 ST18758AA000	18758AA000	PULLER	Used for removing the side bearing race. (VA2-type)
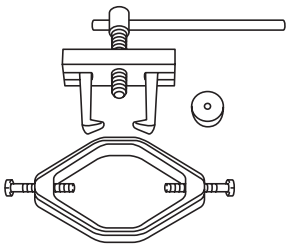 ST18759AA000	18759AA000	PULLER ASSY	Used for removing the side bearing cone. (T-type)
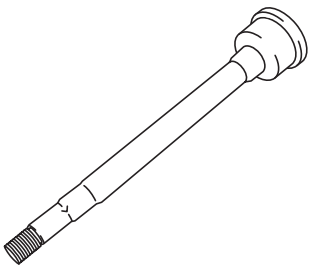 ST18678AA000	18678AA000	DUMMY SHAFT	Used for adjusting pinion height and preload. (VA2-type)
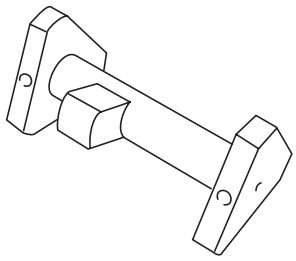 ST18831AA010	18831AA010	DIFFERENTIAL CARRIER GAUGE	Used for adjusting pinion height. (VA2-type)

GETtheMANUALS.org

ILLUSTRATION	TOOL NUMBER	DESCRIPTION	REMARKS
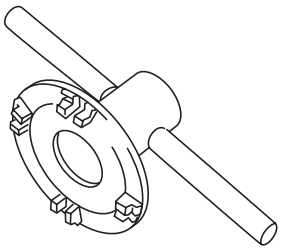 ST18630AA010	18630AA010	WRENCH COMPL RETAINER	• Used for removing and installing the side retainer. (VA1-type and VA2-type) • WRENCH ASSY (499787000) can also be used.
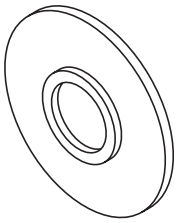 ST-498175500	498175500	INSTALLER	Used for installing the rear bearing cone. (VA1-type)
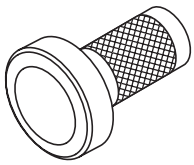 ST498447100	498447100	INSTALLER	Used for installing the side oil seal. (VA1-type and VA2-type)
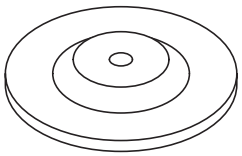 ST-399520105	399520105	SEAT	• Used for removing the side bearing cone. (VA1-type and VA2-type) • Used together with PULLER SET (899524100). (VA1-type) • Used together with REMOVER (899864100). (VA2-type)
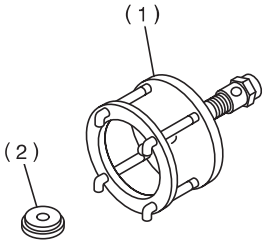 ST-899524100	899524100	PULLER SET	• Used for removing the side bearing cone. (VA1-type) • Used together with SEAT (399520105). (1) Puller (2) Cap

GETtheMANUALS.org

ILLUSTRATION	TOOL NUMBER	DESCRIPTION	REMARKS
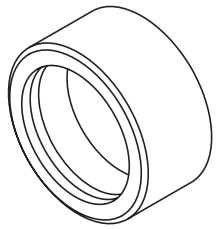 ST-498485400	498485400	DRIFT	Used for installing side bearing cone. (VA1-type)
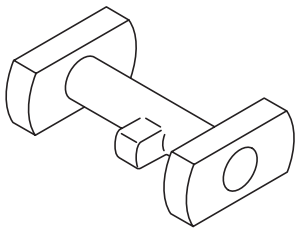 ST-498505501	498505501	DIFFERENTIAL CARRIER GAUGE	Used for adjusting pinion height. (VA1-type)
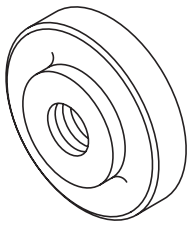 ST-498447110	498447110	DRIFT	Used for installing the front bearing race. (VA1-type)
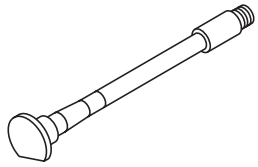 ST-498447150	498447150	DUMMY SHAFT	Used for adjusting pinion height and preload. (VA1-type)
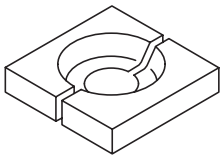 ST-498515500	498515500	REPLACER	Used for removing rear bearing cone. (VA1-type)

GETtheMANUALS.org

ILLUSTRATION	TOOL NUMBER	DESCRIPTION	REMARKS
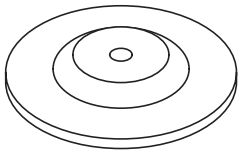 ST-499705404	499705404	SEAT	• Used for removing the side bearing race. (VA1-type) • Used together with PULLER ASSY (499705401).
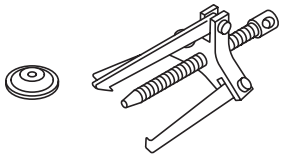 ST-499705401	499705401	PULLER ASSY	• Used for removing the side bearing race. (VA1-type) • Used together with SEAT (499705404).
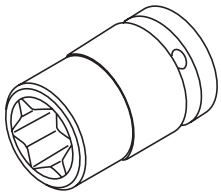 ST18270KA020	18270KA020	SOCKET (E20)	Used for removing and installing the hypoid driven gear. (VA1-type and VA2-type)
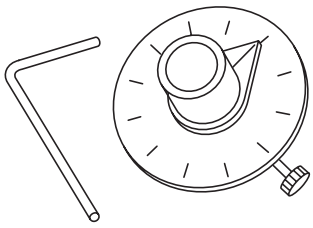 ST18854AA000	18854AA000	ANGLE GAUGE	Used for installing the hypoid driven gear. (VA1-type and VA2-type)

GETtheMANUALS.org

ILLUSTRATION	TOOL NUMBER	DESCRIPTION	REMARKS
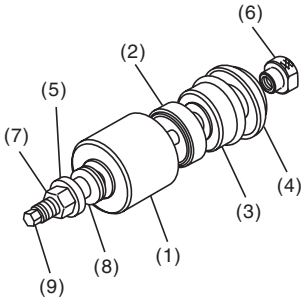 ST41399FG001	41399FG001	SPECIAL TOOL ASSY	• Used for removing and installing the rear differential mount bushing. • Use (1), (3), (5), (6), (7), (8) and (9) for removal. • Use (2), (4), (5), (6), (7), (8) and (9) for installation. (1) SPECIAL TOOL A (41399FG010) (2) SPECIAL TOOL B (41399FG020) (3) SPECIAL TOOL C (41399FG031) (4) SPECIAL TOOL D (41399FG041) (5) SPECIAL TOOL SLEEVE (41399FG050) (6) SPECIAL TOOL RING (41399FG061) (7) SPECIAL TOOL NUT (41399FG070) (8) SPECIAL TOOL BEARING (41399FG080) (9) SPECIAL TOOL SHAFT (41399FG091)
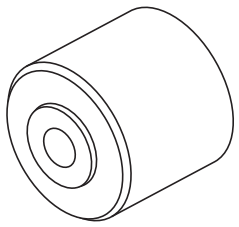 ST41399FG010	41399FG010	SPECIAL TOOL A	• Used for removing the rear differential mount bushing. • For combination of tools for removal, refer to “SPECIAL TOOL ASSY (41399FG001)”.
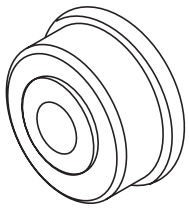 ST41399FG020	41399FG020	SPECIAL TOOL B	• Used for installing the rear differential mount bushing. • For combination of tools for installation, refer to “SPECIAL TOOL ASSY (41399FG001)”.
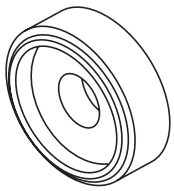 ST41399FG031	41399FG031	SPECIAL TOOL C	• Used for removing the rear differential mount bushing. • For combination of tools for removal, refer to “SPECIAL TOOL ASSY (41399FG001)”.

GETtheMANUALS.org

ILLUSTRATION	TOOL NUMBER	DESCRIPTION	REMARKS
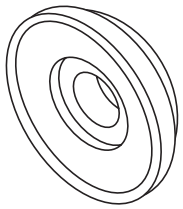 ST41399FG041	41399FG041	SPECIAL TOOL D	• Used for installing the rear differential mount bushing. • For combination of tools for installation, refer to “SPECIAL TOOL ASSY (41399FG001)”.
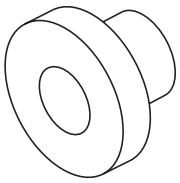 ST41399FG050	41399FG050	SPECIAL TOOL SLEEVE	• Used for removing and installing the rear differential mount bushing. • For combination of tools for removal and installation, refer to “SPECIAL TOOL ASSY (41399FG001)”.
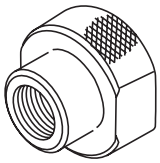 ST41399FG061	41399FG061	SPECIAL TOOL RING	• Used for removing and installing the rear differential mount bushing. • For combination of tools for removal and installation, refer to “SPECIAL TOOL ASSY (41399FG001)”.
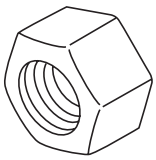 ST41399FG070	41399FG070	SPECIAL TOOL NUT	• Used for removing and installing the rear differential mount bushing. • For combination of tools for removal and installation, refer to “SPECIAL TOOL ASSY (41399FG001)”.
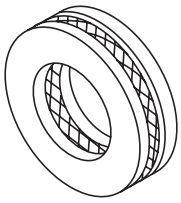 ST41399FG080	41399FG080	SPECIAL TOOL BEARING	• Used for removing and installing the rear differential mount bushing. • For combination of tools for removal and installation, refer to “SPECIAL TOOL ASSY (41399FG001)”.

GETtheMANUALS.org

ILLUSTRATION	TOOL NUMBER	DESCRIPTION	REMARKS
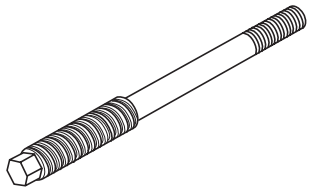 ST41399FG091	41399FG091	SPECIAL TOOL SHAFT	• Used for removing and installing the rear differential mount bushing. • For combination of tools for removal and installation, refer to “SPECIAL TOOL ASSY (41399FG001)”.
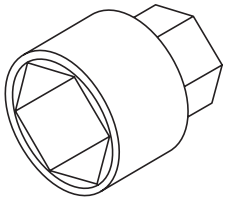 ST41399YC000	41399YC000	SOCKET WRENCH (17)	Used for tightening the self-locking nut. (Except for OUTBACK)
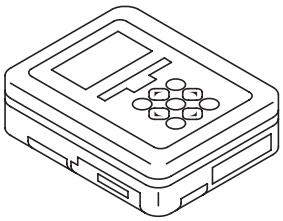 ST1B022XU0	1B022XU0	SUBARU SELECT MONITOR III KIT	Used for troubleshooting the electrical system.

2. GENERAL TOOL

TOOL NAME	REMARKS
Transmission jack	Used for removing and installing the rear differential.
Puller	Used for removing the side bearing retainer.
Thickness gauge	Used for measuring clearance.
Hexagon wrench	Used for installing and removing the oil filler plug and oil drain plug.
Tire lever	Used for removing the rear drive shaft. (VA-type)

GETtheMANUALS.org

2. Differential Gear Oil

A: INSPECTION

1) Remove the filler plug, and then check the gear oil. Replace the gear oil if it is contaminated, deteriorated or cloudy. <Ref. to DI-23, REPLACEMENT, Differential Gear Oil.>
2) Check that the gear oil level is within –5 mm (–0.2 in) from the bottom of the filler plug hole. If the level is low, make sure that there is no oil leakage and refill up to the bottom of filler plug hole.

NOTE:
On VA1-types at factory settings, the oil level may be within –14 mm (–0.6 in) from the bottom of the filler plug. This is at normal level, requiring no oil refill.

- T-type

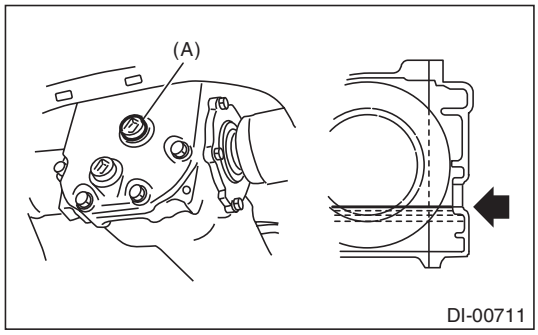

(A) Filler plug

- VA1-type

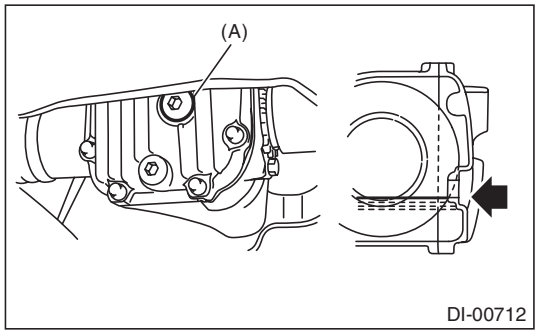

(A) Filler plug

- VA2-type

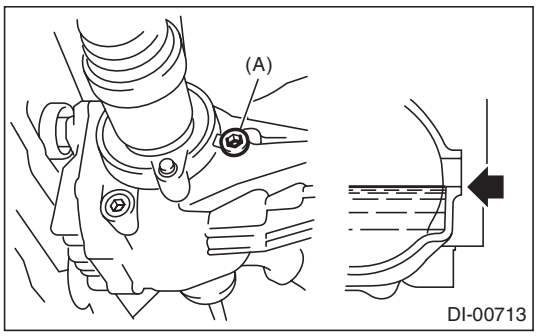

(A) Filler plug

B: REPLACEMENT

CAUTION:
- **Gear oil is extremely hot just after driving. Be wary of receiving burns.**
- **Be careful not to spill the differential gear oil on exhaust pipe. If gear oil is spilled, wipe it off completely.**

1) Lift up the vehicle.
2) Remove the drain plug and filler plug, and drain the gear oil.

- T-type

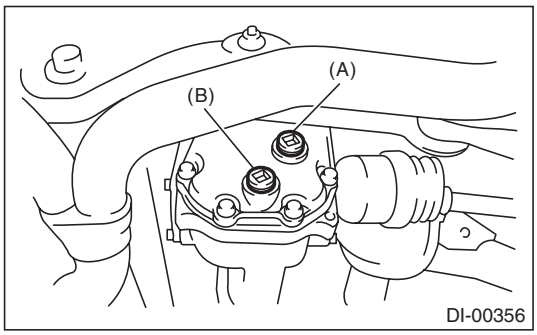

(A) Filler plug
(B) Drain plug

- VA1-type

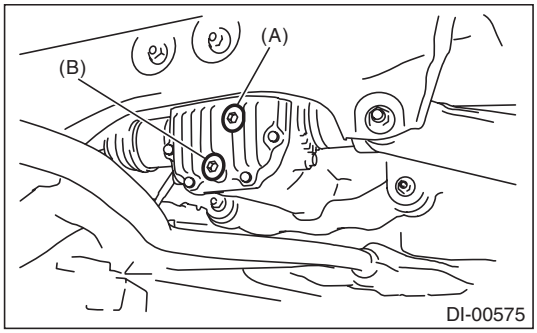

(A) Filler plug
(B) Drain plug

GETtheMANUALS.org

- VA2-type

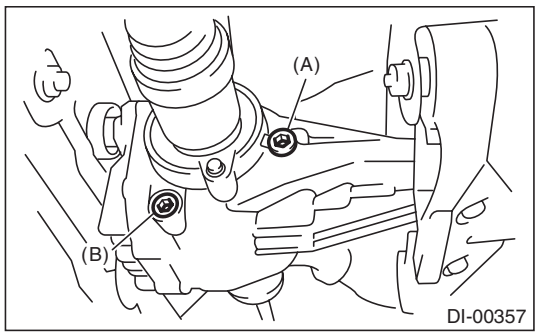

(A) Filler plug
(B) Drain plug

3) Tighten the drain plug.

NOTE:
- For the T-type, apply liquid gasket to the drain plug.

Liquid gasket:
THREE BOND 1105 (Part No. 004403010) or equivalent
- For VA type, use a new gasket.

Tightening torque:
T-type
49 N·m (5.0 kgf-m, 36.1 ft-lb)
VA-type:
50 N·m (5.1 kgf-m, 36.9 ft-lb)

4) Fill the differential carrier with gear oil to the bottom of filler plug.

NOTE:
Carefully refill gear oil while watching the level. Excessive or insufficient oil must be avoided.

Recommended gear oil:
<Ref. to DI-2, SPECIFICATION, General Description.>

Oil capacity:
0.8 ℓ (0.8 US qt, 0.7 Imp qt)

- T-type

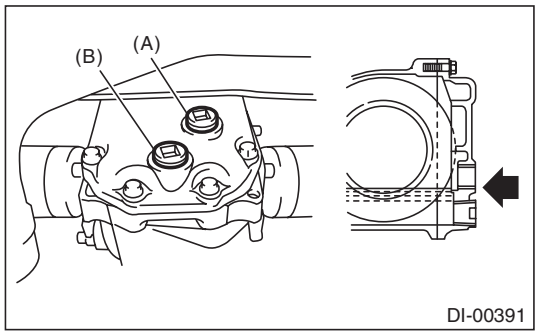

(A) Filler plug
(B) Drain plug

- VA1-type

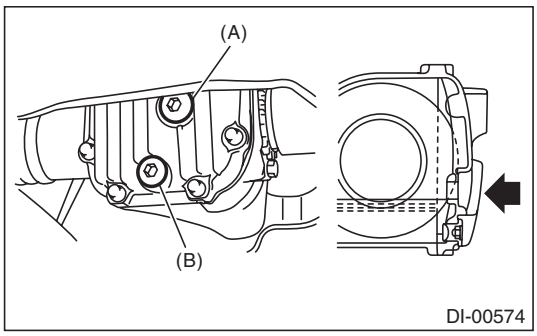

(A) Filler plug
(B) Drain plug

- VA2-type

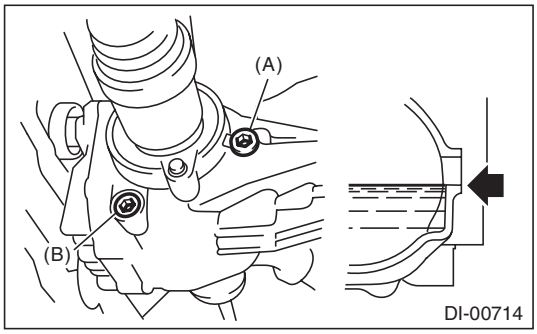

(A) Filler plug
(B) Drain plug

5) Install the filler plug.

NOTE:
- For the T-type, apply liquid gasket to the filler plug.

Liquid gasket:
THREE BOND 1105 (Part No. 004403010) or equivalent
- For VA type, use a new gasket.

Tightening torque:
T-type:
49 N·m (5.0 kgf-m, 36.1 ft-lb)
VA-type:
50 N·m (5.1 kgf-m, 36.9 ft-lb)

GETtheMANUALS.org

3. Front Differential Assembly

A: NOTE

1. CVT MODEL

For front differential for the CVT model, refer to the “CVT” section. <Ref. to CVT-263, Front Differential Assembly.>

2. AT MODEL

For front differential of 5AT model, refer to “5AT” section. <Ref. to 5AT-89, Front Differential Assembly.>

3. MT MODEL

For front differential for the 6MT model, refer to the “6MT” section. <Ref. to 6MT-77, Front Differential Assembly.>

GETtheMANUALS.org

4. Rear Differential (T-type)

A: REMOVAL

1) Shift the select lever or gear shift lever to neutral.
2) Release the parking brake.
3) Disconnect the ground cable from battery.
4) Loosen the wheel nuts.
5) Lift up the vehicle.
6) Remove the rear wheels.
7) Drain differential gear oil. <Ref. to DI-23, REPLACEMENT, Differential Gear Oil.>
8) Remove the rear exhaust pipe.
- 2.5 L SOHC model

<Ref. to EX(H4SO)-9, REMOVAL, Rear Exhaust Pipe.>
- 2.5 L DOHC turbo model

<Ref. to EX(H4DOTC)-15, REMOVAL, Rear Exhaust Pipe.>
- 3.6 L model

<Ref. to EX(H6DO)-8, REMOVAL, Rear Exhaust Pipe.>
9) Remove the heat shield cover.

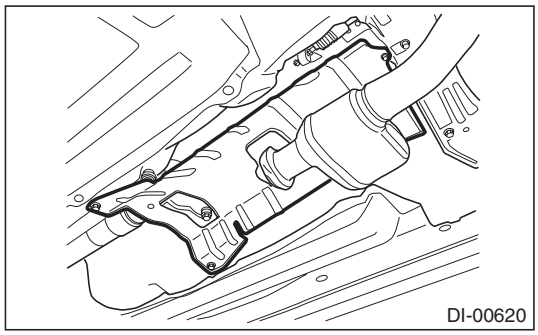

10) Remove the propeller shaft. <Ref. to DS-10, REMOVAL, Propeller Shaft.>
11) Loosen the self-lock nuts which hold the rear differential to rear crossmember.

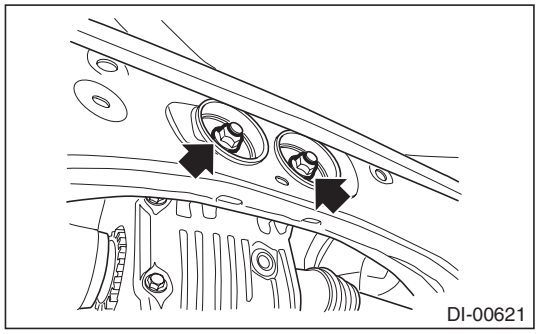

12) Remove the DOJ of rear drive shaft from rear differential using ST or tire lever.

NOTE:
- For the T-type, use the ST.
- For the VA-type, use the tire lever.
- When removing the DOJ from the rear differential, fit the tire lever or ST to the bolts as shown in the figure so as not to damage the side retainer.

T-type

ST 28099PA100 DRIVE SHAFT REMOVER

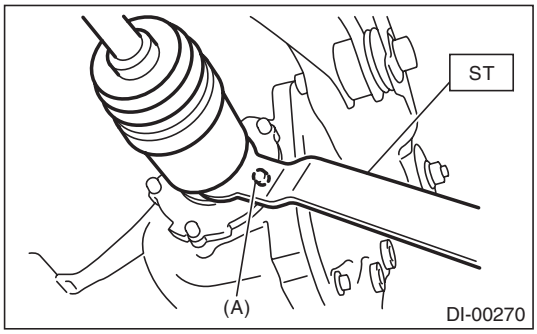

(A) Bolt

VA-type

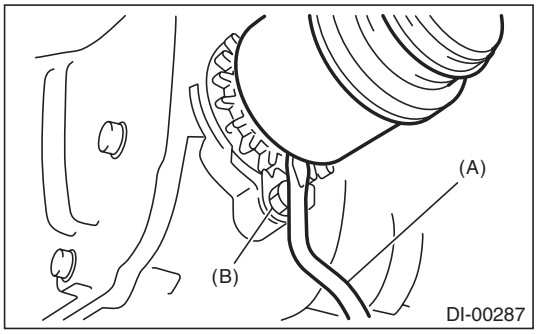

(A) Tire lever
(B) Bolt

13) Set the rear differential to transmission jack.

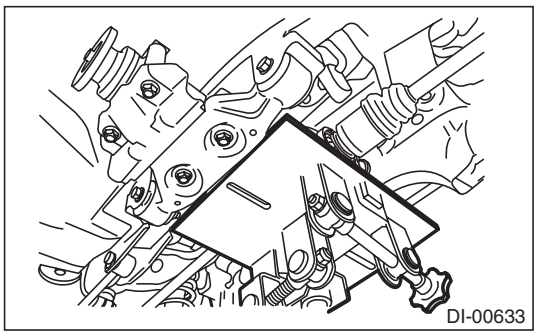

GETtheMANUALS.org

14) Remove the mass damper. (CVT model)

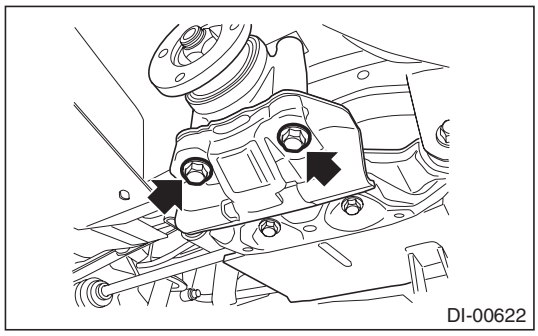

15) Remove the rear differential front member.

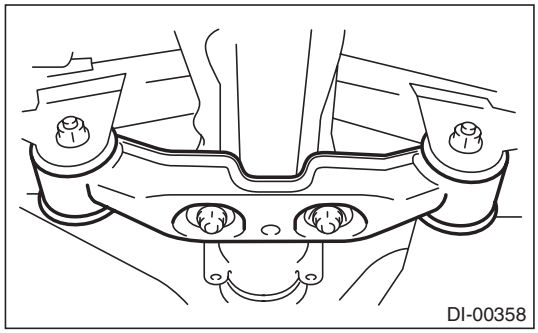

16) Remove the self-locking nuts which hold the rear differential to the crossmember.

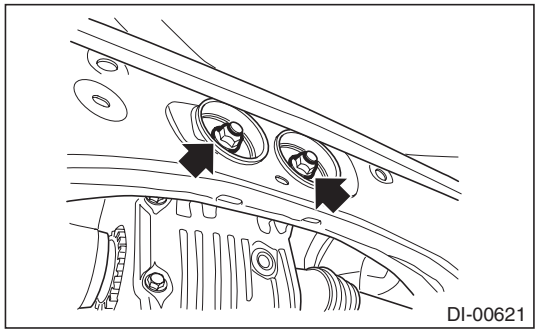

17) Pull out the rear differential stud bolt from rear crossmember bushing.

NOTE:
When removing the stud bolt from the rear crossmember bushing, carefully adjust the angle and location of transmission jack and jack stand, if necessary.

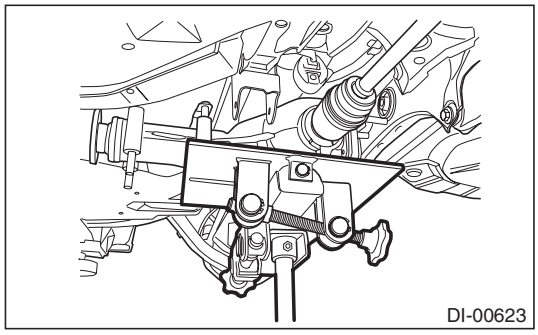

18) Lower the transmission jack.

19) Pull out the rear drive shaft from the rear differential.

NOTE:
- If it is difficult to pull out the rear drive shaft from rear differential, use the ST for T-type and the tire lever for VA-type.

ST 28099PA100 DRIVE SHAFT REMOVER

- If a circlip is attached to the removed rear drive shaft for VA2-type, remove the differential case assembly and replace it with a new part.

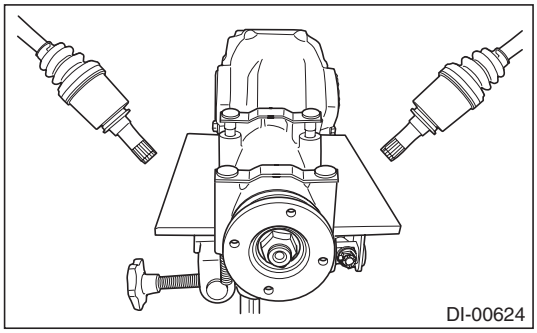

20) Lower the transmission jack.

21) Secure the rear drive shaft to rear lateral link using wire.

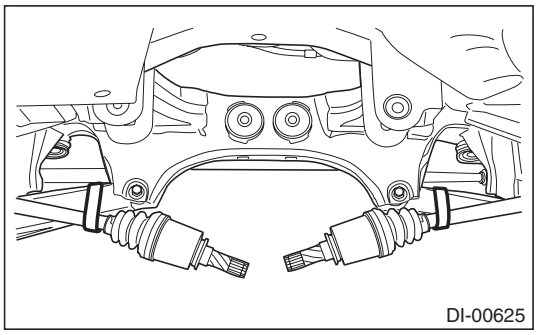

22) Remove the rear differential member plate from rear differential.

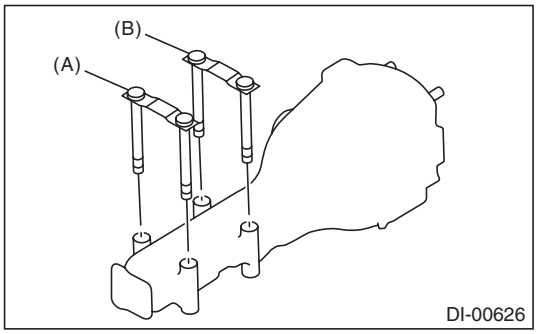

(A) Rear differential member plate (CVT model)
(B) Rear differential member plate

GETtheMANUALS.org

B: INSTALLATION

1) Attach the rear differential member plate to the rear differential.

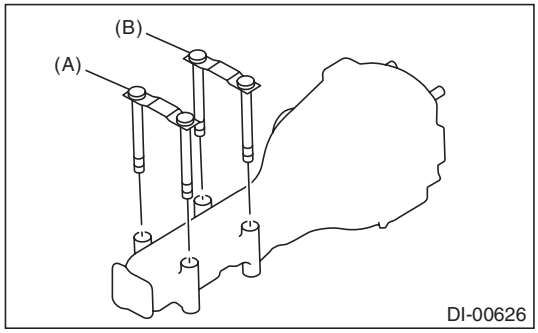

(A) Rear differential member plate (CVT model)
(B) Rear differential member plate

2) Set the rear differential to transmission jack.
3) Set the ST to the rear differential.
ST 28099PA090 OIL SEAL PROTECTOR

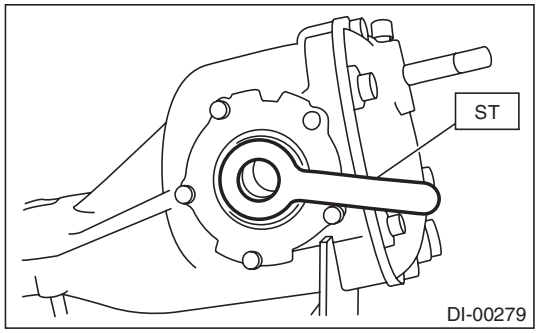

4) Insert the rear drive shaft until the spline portion of the rear drive shaft exceeds the side oil seal.

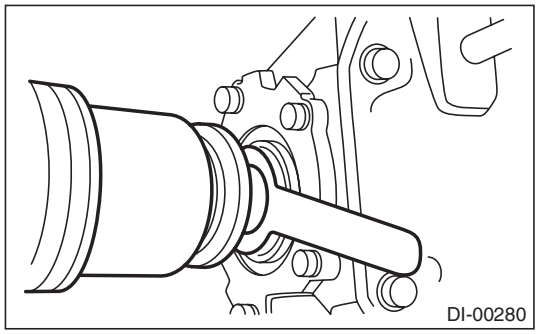

5) Remove ST from rear differential.

6) Push the rear differential from side to side to insert the DOJ into rear differential completely.

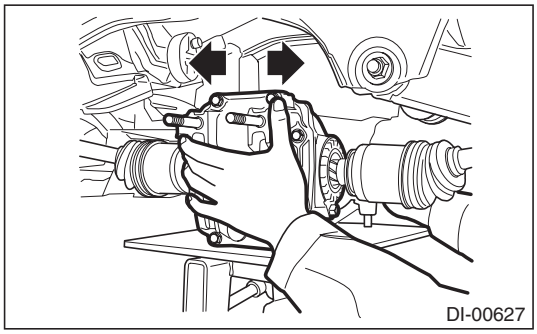

7) Adjust the transmission jack, if necessary, and insert the rear differential stud bolt into rear crossmember bushing properly.

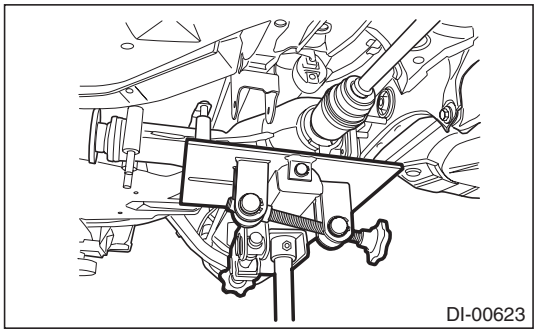

8) After inserting the rear differential stud bolt into the rear crossmember bushing, lift up the transmission jack and align the rear differential to its attachment position.

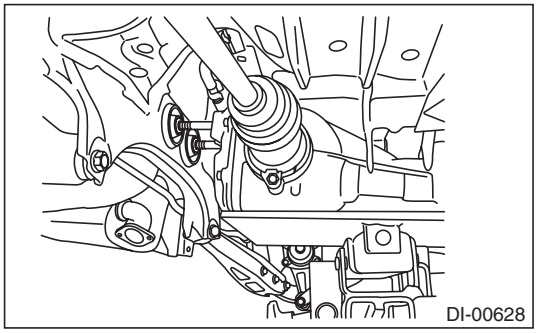

9) Tighten a new self-locking nut temporarily to rear crossmember.

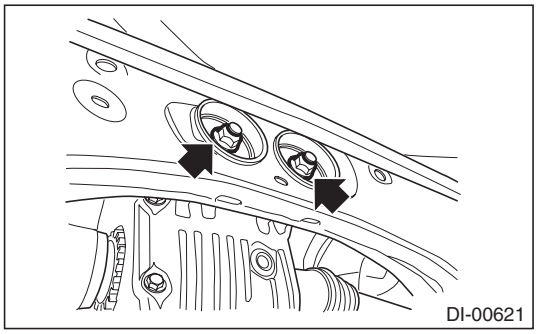

GETtheMANUALS.org

10) Install the rear differential front member with a new self-locking nut.

Tightening torque:
T1: 50 N·m (5.1 kgf-m, 36.9 ft-lb)
T2: 110 N·m (11.2 kgf-m, 81.1 ft-lb)

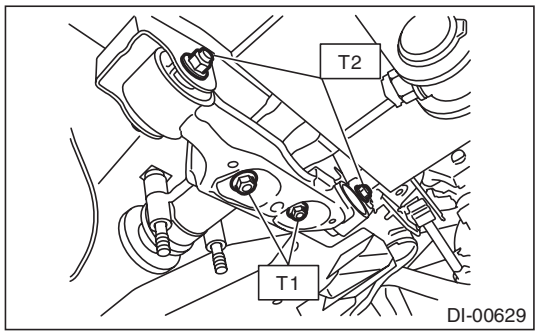

11) Install the mass damper with a new self-locking nut. (CVT model)

Tightening torque:
50 N·m (5.1 kgf-m, 36.9 ft-lb)

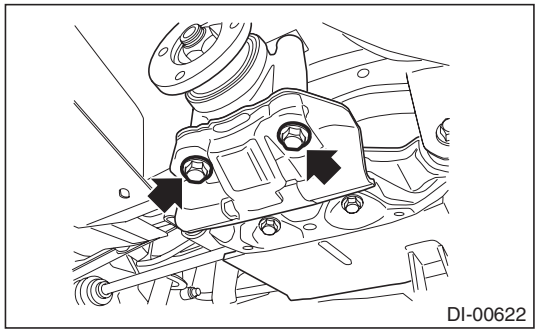

12) Remove the transmission jack.
13) Tighten the self-locking nut.

NOTE:
For models other than OUTBACK model, tighten the self-locking nut using the ST.
ST 41399YC000 SOCKET WRENCH (17)

Tightening torque:
70 N·m (7.1 kgf-m, 51.6 ft-lb)

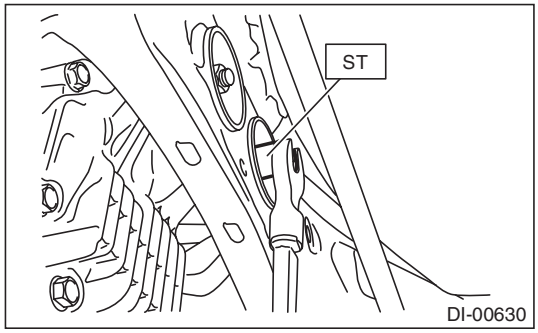

14) Install the propeller shaft. <Ref. to DS-11, INSTALLATION, Propeller Shaft.>

15) Install the heat shield cover.

Tightening torque:
18 N·m (1.8 kgf-m, 13.3 ft-lb)

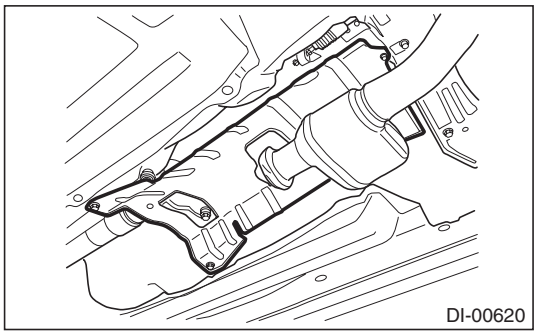

16) Install the rear exhaust pipe.
- 2.5 L SOHC model

<Ref. to EX(H4SO)-9, INSTALLATION, Rear Exhaust Pipe.>
- 2.5 L DOHC turbo model

<Ref. to EX(H4DOTC)-15, INSTALLATION, Rear Exhaust Pipe.>
- 3.6 L model

<Ref. to EX(H6DO)-8, INSTALLATION, Rear Exhaust Pipe.>

17) Fill differential gear oil. <Ref. to DI-23, REPLACEMENT, Differential Gear Oil.>
18) Installing procedure hereafter is in the reverse order of removal.
19) Perform “Rear differential inspection mode ” using the Subaru Select Monitor. (CVT model) <Ref. to DI-84, Rear Differential Inspection Mode.>

CAUTION:
Be sure to perform rear differential inspection mode when the following work has been performed.
- **Replacement of rear differential**
- **Replacement of rear differential hypoid gear set**
- **Replacement of transmission assembly**
- **Replacement of front differential hypoid gear set**

GETtheMANUALS.org

C: DISASSEMBLY

To detect the real cause of trouble, inspect the following items before disassembling.

- Tooth contact and backlash between hypoid driven gear and drive pinion
- Hypoid driven gear runout on its back surface
- Total preload of drive pinion

1) Set the ST on vise and install the differential assembly to ST.

ST 398217700 ATTACHMENT SET

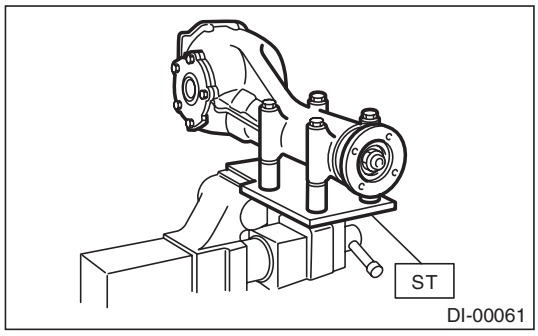

2) Remove the drain plug and filler plug.
3) Remove the air breather cap.

NOTE:
- Do not attempt to remove the air breather cap unless necessary.
- Whenever the air breather cap is removed, replace it with a new part.

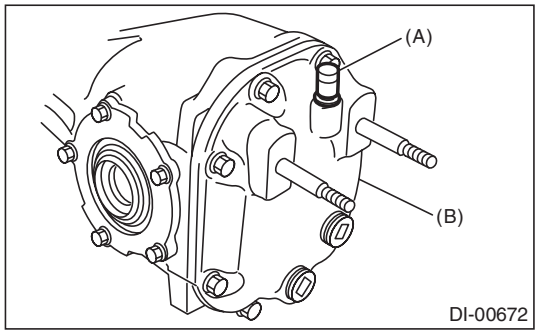

(A) Air breather cap
(B) Rear cover

4) Remove the bolts, and then remove the rear cover.

5) Remove the side retainer attachment bolts, set the ST to differential case, and extract the side retainers RH and LH with a puller.

NOTE:
- Side retainer shim of each side should be kept together with its mating retainer.
- Keep the side retainers separate by attaching tags or in similar ways to make it possible to identify RH and LH sides during reassembly.

ST 398457700 ATTACHMENT

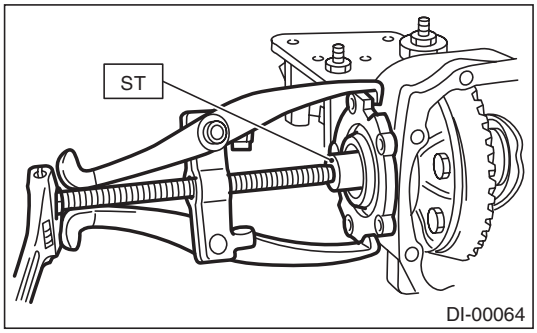

6) Remove the oil seal from the side retainer.
7) Pull out the differential case assembly from the differential carrier.

NOTE:
Be careful not to hit the teeth of hypoid driven gear against the differential carrier.

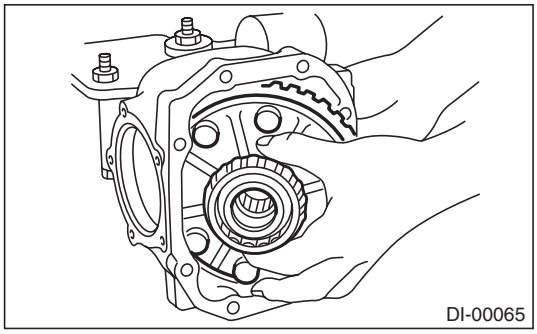

8) When replacing the side bearing, remove the bearing race from the side retainer using ST.

ST 398527700 PULLER ASSY

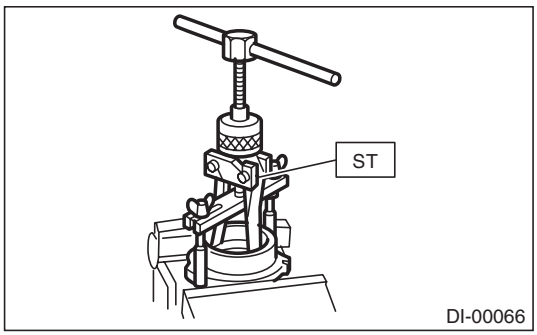

GETtheMANUALS.org

9) Using the ST, remove the bearing cone.

NOTE:
- Do not attempt to disassemble the parts unless necessary.
- Set the ST so that its claws catch the edge of the bearing cone.
- Never mix up the RH and LH bearing races and cones.

ST 18759AA000 PULLER ASSY

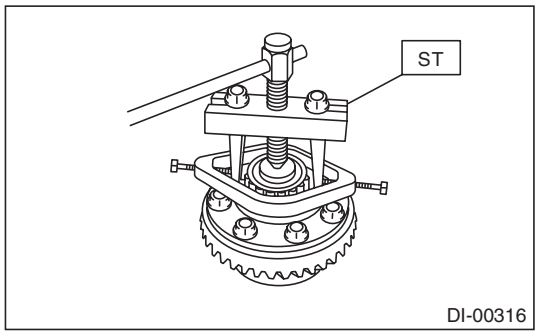

10) Remove the hypoid driven gear by loosening hypoid driven gear bolts.

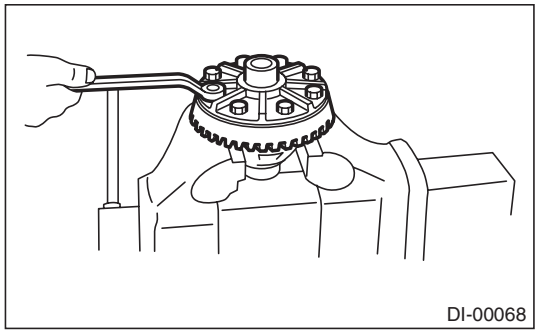

11) Remove the pinion shaft lock pin from hypoid driven gear side using ST.

ST 899904100 STRAIGHT PIN REMOVER

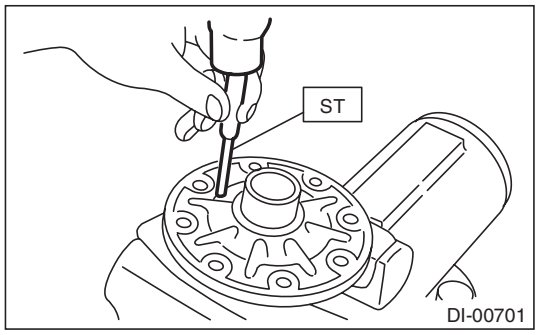

12) Draw out the pinion mate shaft, and remove pinion mate gears, pinion mate gear washers, side gears, and thrust washers.

NOTE:
The gears and washers should be marked with RH or LH, front or rear, or kept separately.

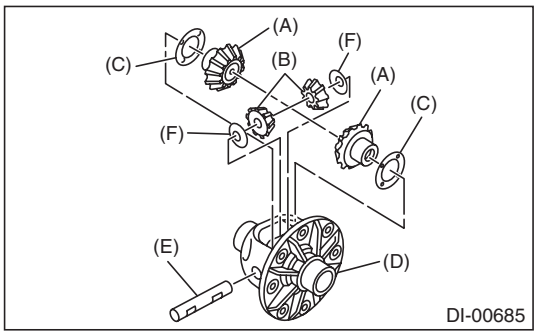

(A) Side gear
(B) Pinion mate gear
(C) Side gear thrust washer
(D) Differential case
(E) Pinion mate shaft
(F) Pinion mate gear washer

13) Remove the self-locking nut while securing the companion flange with ST.

ST 498427200 FLANGE WRENCH

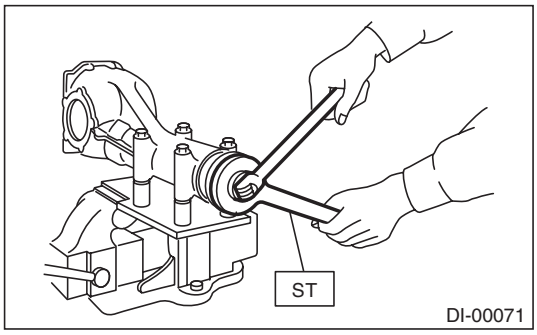

14) Extract the companion flange with a puller.

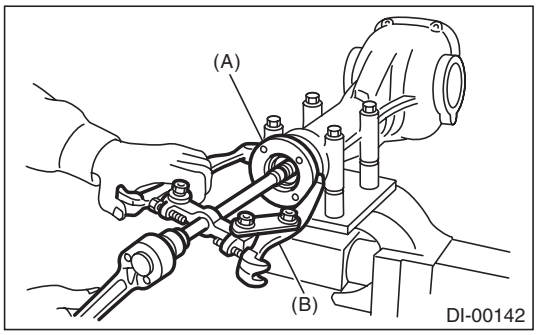

(A) Companion flange
(B) Puller

GETtheMANUALS.org

15) Press the end of drive pinion shaft using ST and remove the rear bearing cone, preload adjusting spacer and washer.

NOTE:
Hold the drive pinion so as not to drop it.
ST 398467700 DRIFT

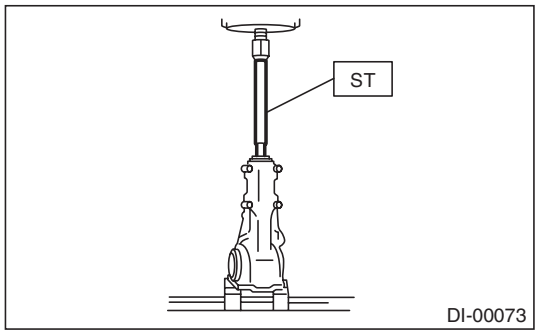

16) Remove the rear bearing cone from drive pinion by supporting the cone with ST.

NOTE:
Place the replacer so that its center-recessed side faces the bearing cone.
ST 398517700 REPLACER

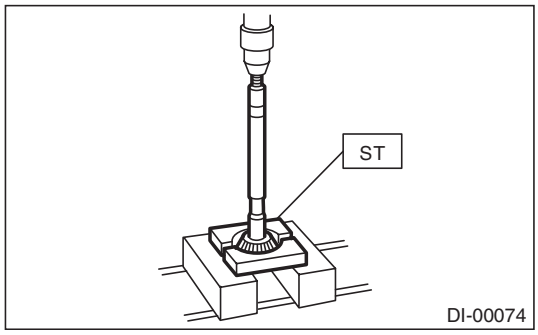

17) Remove the front oil seal from differential carrier using ST.
ST 398527700 PULLER ASSY

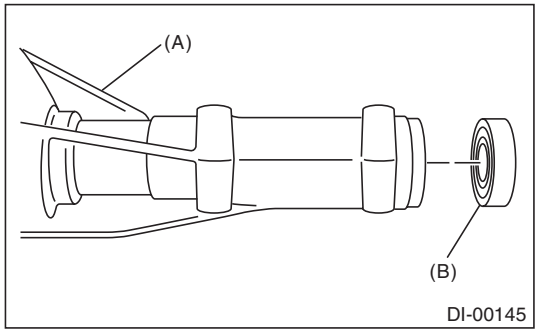

(A) Differential carrier
(B) Front oil seal

18) Remove the pilot bearing together with the front bearing cone and spacer using the ST.
ST 398467700 DRIFT

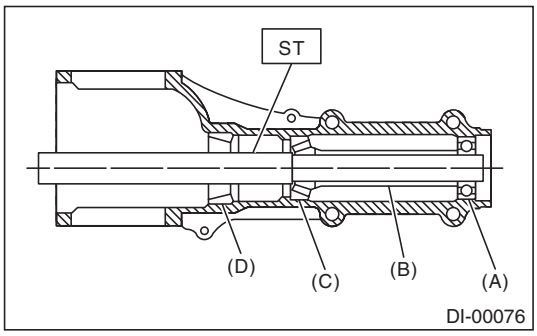

(A) Pilot bearing
(B) Spacer
(C) Front bearing
(D) Rear bearing race

19) When replacing the bearings, use a brass bar to tap out the front bearing race and rear bearing race in this order to remove them.

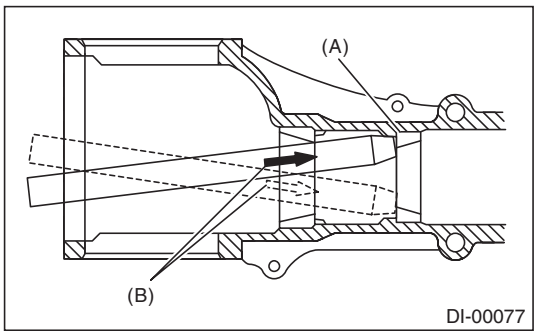

(A) 2 cutout portions along diagonal lines
(B) Tap alternately with brass bar.

D: ASSEMBLY

NOTE:
- Assemble in the reverse order of disassembly.
- Check and adjust each part during assembly.
- Keep the shims and washers in order, so that they are not improperly installed.
- Thoroughly clean the surfaces on which the shims, washers and bearings are to be installed.
- Apply gear oil when installing the bearings and thrust washers.
- Be careful not to mix up the RH and LH bearing races.
- Use a new O-ring and gasket.
- Replace the oil seal with a new part at every disassembly.
- Be careful not to mix up the oil seal RH and LH.

GETtheMANUALS.org

• Apply differential gear oil to the lips when installing the oil seal.

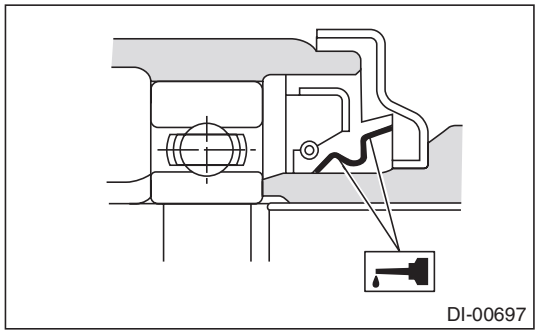

1) Adjusting preload for front and rear bearings

NOTE:
Adjust the bearing preload between front and rear bearings with preload adjusting spacer and washer. Pinion height adjusting washer is not affected by this adjustment. The adjustment must not be carried out with oil seal inserted.

(1) Install the rear bearing race into the differential carrier using ST1 and ST2.

ST1 398477701 HANDLE
ST2 398477703 DRIFT 2

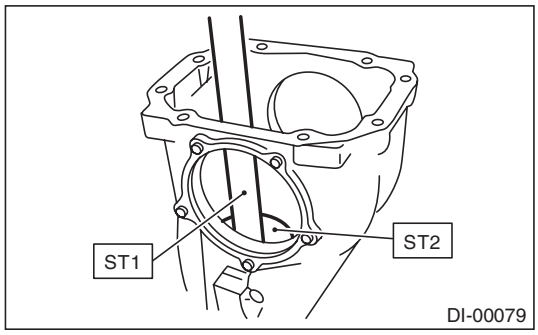

(2) Install the front bearing race to the differential carrier using ST1 and ST2.

ST1 398477701 HANDLE
ST2 398477702 DRIFT

(3) Insert ST1 into the differential carrier with the pinion height adjusting washer and rear bearing cone fitted onto it.

NOTE:
• If tooth contact (drive pinion, hypoid driven gear) is normal in the inspection before disassembling, verify that the washer is not deformed, and then reuse the used washer.
• Use new rear bearing cone.

(4) Install the preload adjusting spacer and washer, front bearing cone, ST2, companion flange and self-locking nut.

ST1 398507702 DUMMY SHAFT
ST2 398507703 DUMMY COLLAR

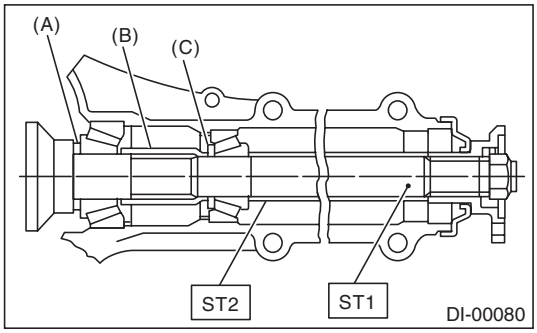

(A) Pinion height adjusting washer
(B) Preload adjusting spacer
(C) Preload adjusting washer

(5) Turn the ST1 by hand to smooth the bearing, and tighten the self-locking nut while measuring the initial load or initial torque with a spring scale or torque wrench. Select the preload adjusting washer and spacer so that the specified preload is obtained when nut is tightened to the specified torque.

NOTE:
• Use a new self-locking nut.
• Measure the preload in direction of tangent to the flange.
• Be careful not to give excessive preload.
• When tightening the self-locking nut, lock ST1 with ST2 as shown in the figure.

ST1 398507702 DUMMY SHAFT
ST2 398507704 BLOCK

Tightening torque:
181.5 N·m (18.5 kgf-m, 133.9 ft-lb)

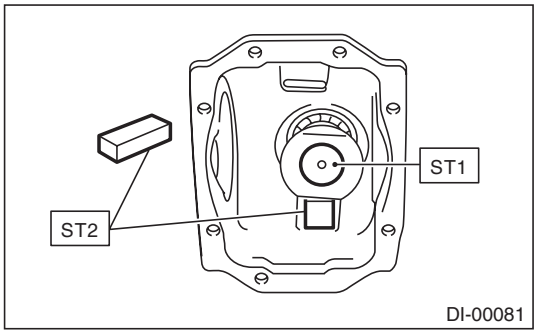

GETtheMANUALS.org

Initial load:
18.1 — 38.8 N (1.8 — 4.0 kgf, 4.1 — 8.7 lbf)

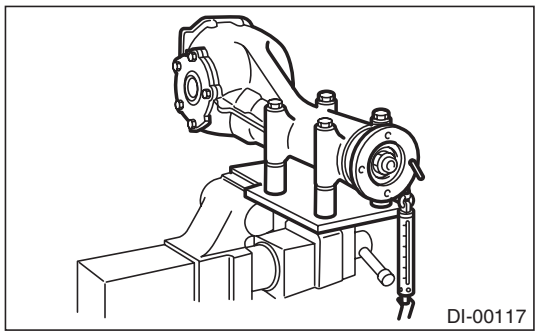

Initial torque:
0.69 — 1.47 N·m (0.07 — 0.15 kgf-m, 0.51 — 1.08 ft-lb)

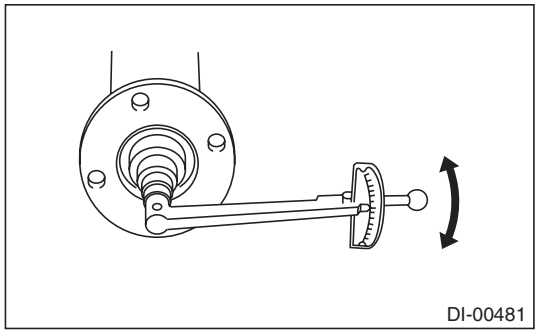

Preload adjusting washer	
Part No.	Thickness mm (in)
383705200	2.59 (0.1020)
383715200	2.57 (0.1012)
383725200	2.55 (0.1004)
383735200	2.53 (0.0996)
383745200	2.51 (0.0988)
383755200	2.49 (0.0980)
383765200	2.47 (0.0972)
383775200	2.45 (0.0965)
383785200	2.43 (0.0957)
383795200	2.41 (0.0949)
383805200	2.39 (0.0941)
383815200	2.37 (0.0933)
383825200	2.35 (0.0925)
383835200	2.33 (0.0917)
383845200	2.31 (0.0909)

Preload adjusting spacer	
Part No.	Length mm (in)
383695201	56.2 (2.213)
383695202	56.4 (2.220)
383695203	56.6 (2.228)
383695204	56.8 (2.236)
383695205	57.0 (2.244)
383695206	57.2 (2.252)

2) Adjusting drive pinion height:
Adjust the drive pinion height with pinion height adjusting washer installed between the rear bearing cone and the back of pinion gear.
(1) Attach the ST2.

NOTE:
At this time, install a provisionally selected or previously used pinion height adjusting washer. Measure and record the thickness.

ST1	398507702	DUMMY SHAFT
ST2	398507701	DIFFERENTIAL CARRIER GAUGE
ST3	398507703	DUMMY COLLAR

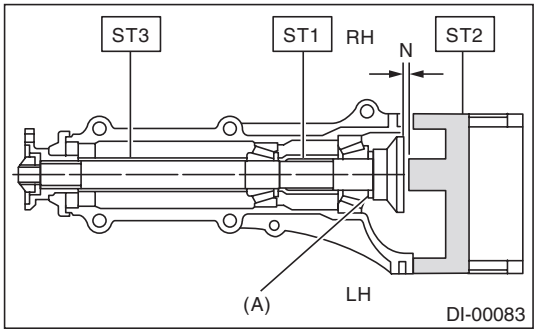

(A) Pinion height adjusting washer

(2) Measure the clearance “N” between the end of ST2 and the end surface of ST1 by using a thickness gauge.

NOTE:
Make sure there is no clearance between the differential carrier and ST2.

ST1	398507702	DUMMY SHAFT
ST2	398507701	DIFFERENTIAL CARRIER GAUGE

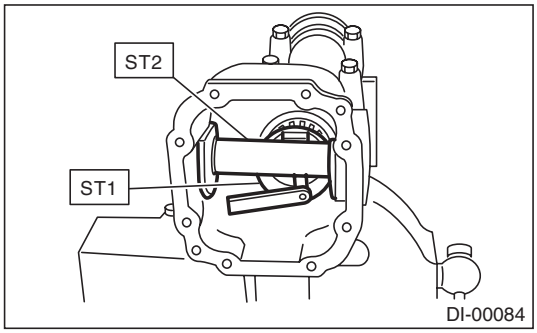

GETtheMANUALS.org

(3) Obtain the thickness of pinion height adjusting washer to be inserted from the following formula, and replace the temporarily installed washer with this one.
T = To + N – (H × 0.01) – 0.20 mm (0.0079 in)

T	Thickness of pinion height adjusting washer mm (in)	
To	Thickness of washer temporarily inserted mm (in)	
N	Clearance of thickness gauge mm (in)	
H	Figure marked on drive pinion head	
Memo:		

(Example of calculation)
To = 3.39 mm (0.1335 in)
N = 0.24 mm (0.0094 in)
H = + 1
T = 3.39 mm (0.1335 in) + 0.24 mm (0.0094 in) – 0.01 mm (0.0004 in) – 0.20 mm (0.0079 in) = 3.42 mm (0.1346 in)
Result: Thickness = 3.42 mm (0.1346 in)
Therefore use washer 383605200.

Pinion height adjusting washer	
Part No.	Thickness mm (in)
383495200	3.09 (0.1217)
383505200	3.12 (0.1228)
383515200	3.15 (0.1240)
383525200	3.18 (0.1252)
383535200	3.21 (0.1264)
383545200	3.24 (0.1276)
383555200	3.27 (0.1287)
383565200	3.30 (0.1299)
383575200	3.33 (0.1311)
383585200	3.36 (0.1323)
383595200	3.39 (0.1335)
383605200	3.42 (0.1346)
383615200	3.45 (0.1358)
383625200	3.48 (0.1370)
383635200	3.51 (0.1382)
383645200	3.54 (0.1394)
383655200	3.57 (0.1406)
383665200	3.60 (0.1417)
383675200	3.63 (0.1429)
383685200	3.66 (0.1441)

3) Install the selected pinion height adjusting washer on drive pinion, and press the rear bearing cone into position with ST.
ST 398177700 INSTALLER

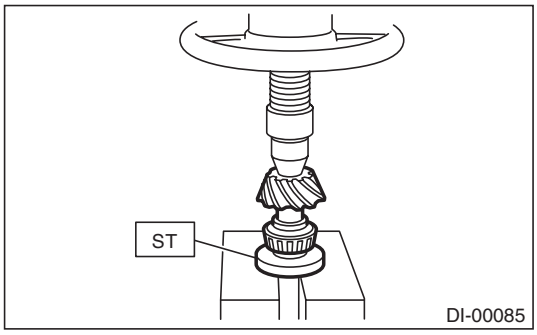

4) Insert the drive pinion into the differential carrier, and install the preselected preload adjusting spacer and washer.

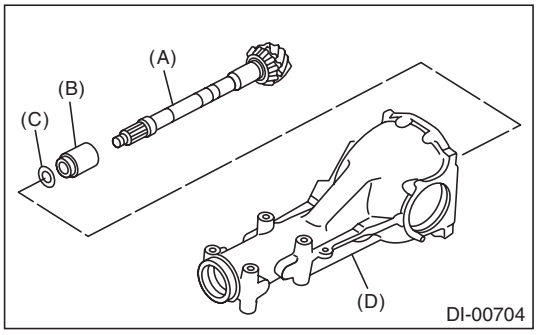

(A) Drive pinion
(B) Preload adjusting spacer
(C) Preload adjusting washer
(D) Differential carrier

5) Press-fit the front bearing cone with ST1, ST2 and ST3.
ST1 398507703 DUMMY COLLAR
ST2 399780104 WEIGHT
ST3 899580100 INSTALLER

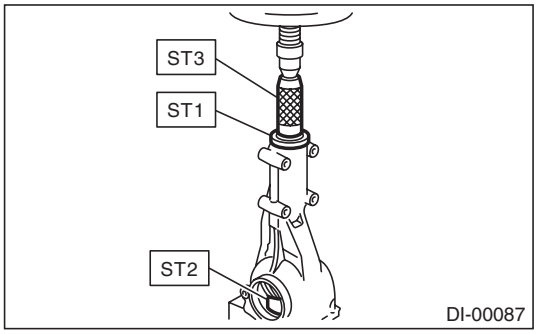

GETtheMANUALS.org

6) Insert the spacer, then press-fit the pilot bearing with ST1 and ST2.
ST1 399780104 WEIGHT
ST2 899580100 INSTALLER

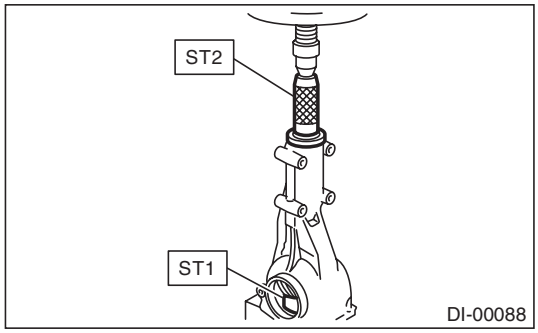

7) Using the ST, install the oil seal.

NOTE:
- Use a new oil seal.
- Press-fit until the oil seal end comes 1 mm (0.04 in) inward from end of carrier.
- Apply differential gear oil to the oil seal lips.

ST 498447120 INSTALLER

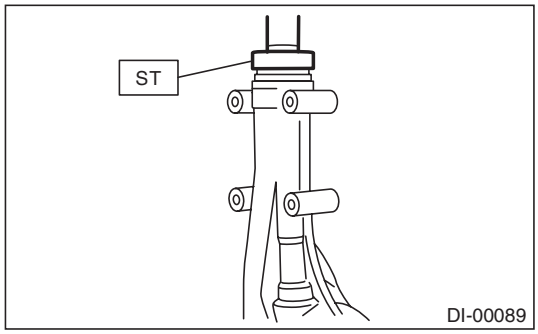

8) Press-fit the companion flange with ST1 and ST2.

NOTE:
Be careful not to damage the bearing.
ST1 899874100 INSTALLER
ST2 399780104 WEIGHT

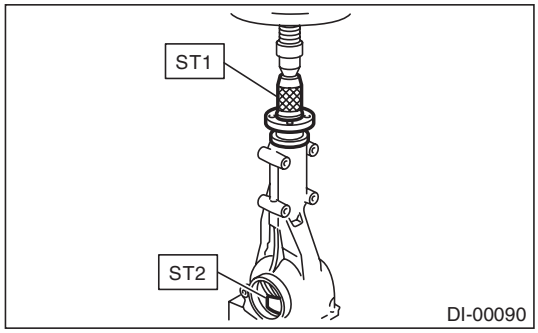

9) Apply seal material on the drive pinion shaft thread and new self-locking nut seat.

Seal material:
THREE BOND 1324 (Part No. 004403042) or equivalent

10) Attach the new self-locking nut and use the ST to fix the companion flange in place, then tighten the self-locking nut.

Tightening torque:
181.5 N·m (18.5 kgf-m, 133.9 ft-lb)
ST 498427200 FLANGE WRENCH

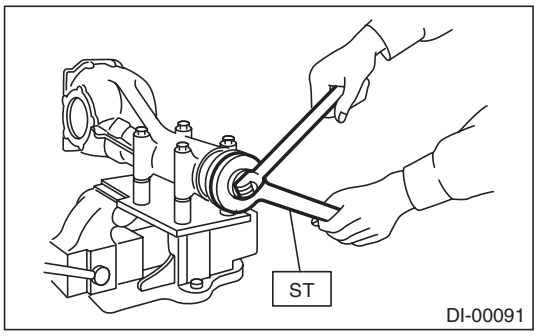

11) Check the initial torque or initial load.

Initial load:
18.1 — 38.8 N (1.8 — 4.0 kgf, 4.1 — 8.7 lbf)

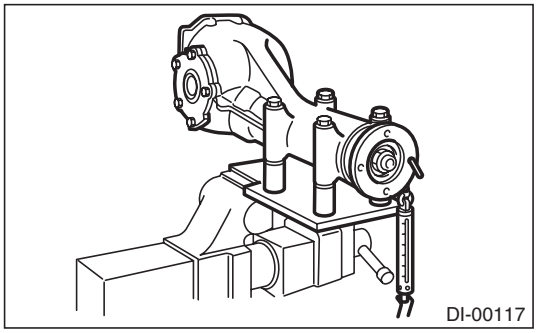

Initial torque:
0.69 — 1.47 N·m (0.07 — 0.15 kgf-m, 0.51 — 1.08 ft-lb)

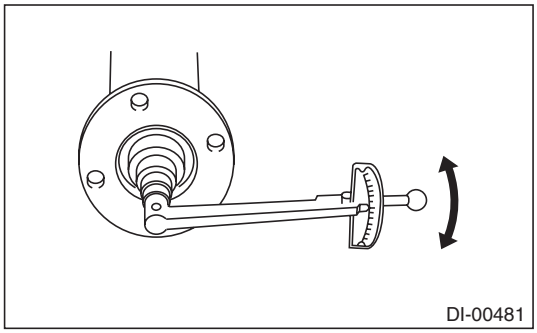

12) Assembling differential case
Install the side gears and pinion mate gears, with their side gear thrust washers, pinion mate gear washer, and pinion mate shaft, into the differential case.

GETtheMANUALS.org

NOTE:
• Apply gear oil on both sides of the washer and on the pinion mate shaft before installing.
• Insert the pinion mate shaft into the differential case by aligning the pin holes.

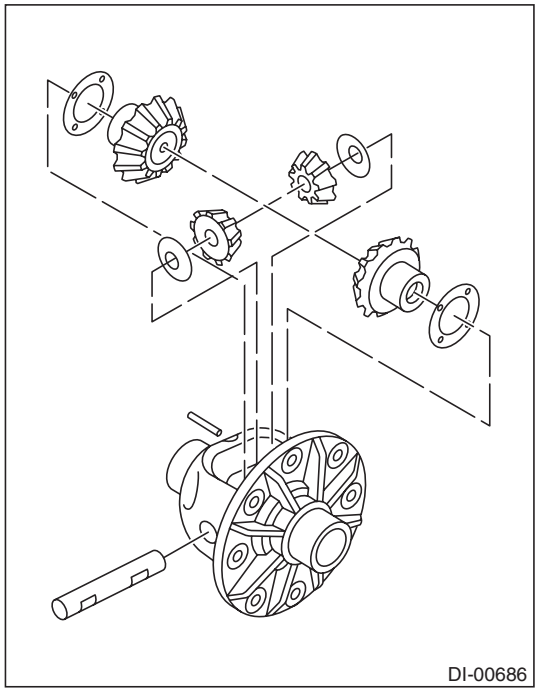

(1) Measure the side gear backlash.

Side gear backlash:
0.10 — 0.20 mm (0.004 — 0.008 in)

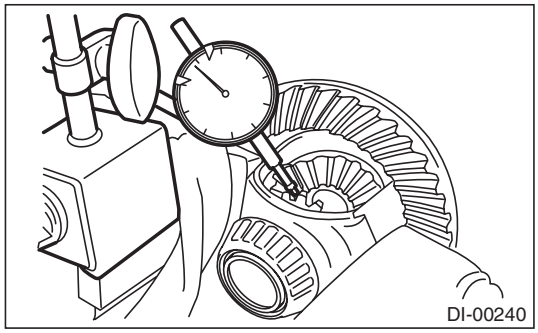

(2) Adjust the backlash as specified by selecting side gear thrust washer.

Side gear thrust washer	
Part No.	Thickness mm (in)
383445201	0.75 — 0.80 (0.0295 — 0.0315)
383445202	0.80 — 0.85 (0.0315 — 0.0335)
383445203	0.85 — 0.90 (0.0335 — 0.0354)

(3) Check the condition of rotation after applying oil to the gear tooth surfaces and thrust washer surfaces.
(4) Drive the pinion shaft lock pin into the differential case.

13) Install the driven gear to the differential case.

NOTE:
• Before installing bolts, apply seal material to bolt threads.

Seal material:
THREE BOND 1324 (Part No. 004403042) or equivalent
• Make sure there is no clearance between the differential case and driven gear.
• Tighten opposing bolts in order.

Tightening torque:
103 N·m (10.5 kgf-m, 76.0 ft-lb)

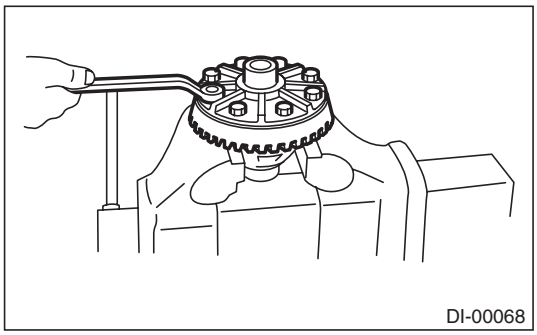

14) Using the ST, press-fit the side bearing to the differential case.
ST 398487700 DRIFT

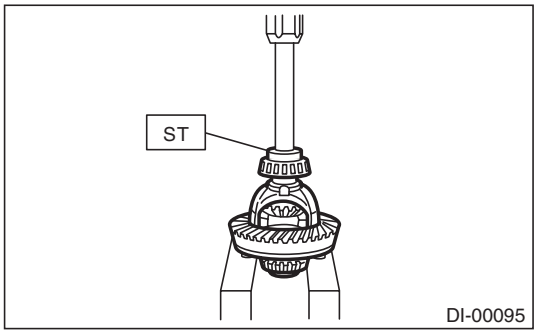

15) Using the ST, press-fit the side bearing outer race to the side retainer.

CAUTION:
Make sure that the bearing outer races and cones are properly assembled.
ST 398417700 DRIFT

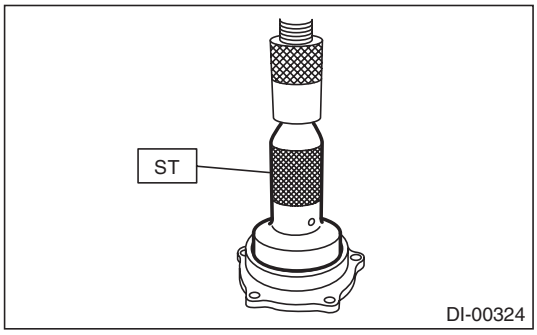

GETtheMANUALS.org

16) Side retainer shim adjustment
(1) The hypoid driven gear backlash and side bearing preload can be adjusted by the side retainer shim thickness.
(2) Install the differential case assembly into differential carrier in the reverse order of disassembly.

NOTE:
Be careful not to hit the teeth of hypoid driven gear against the differential carrier.

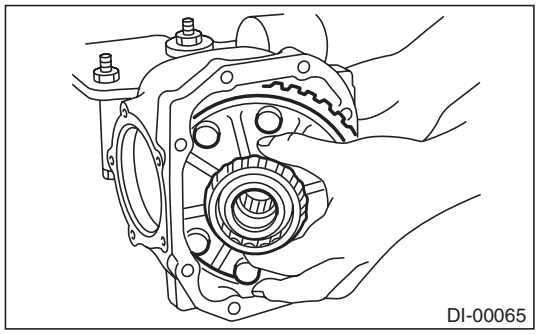

(3) Install the side retainer shim.

NOTE:
• Be careful not to mix up the side retainer shim RH and LH.
• Replace broken or corroded side retainer shims with a new part of the same thickness.

Side retainer shim	
Part No.	Thickness mm (in)
383475201	0.20 (0.0079)
383475202	0.25 (0.0098)
383475203	0.30 (0.0118)
383475204	0.40 (0.0157)
383475205	0.50 (0.0197)

(4) Align the arrow mark on the differential carrier with the arrow mark on the side retainer when installing the side retainer.

NOTE:
Be careful that the side bearing outer race is not damaged by the bearing roller.

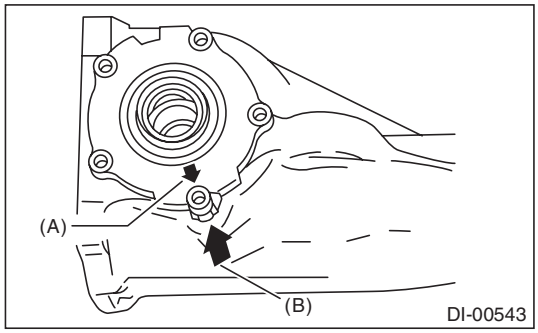

(A) Arrow mark (on the side retainer)
(B) Arrow mark (on the differential carrier)

(5) Tighten the side retainer bolts.

Tightening torque:
10.5 N·m (1.1 kgf-m, 7.7 ft-lb)

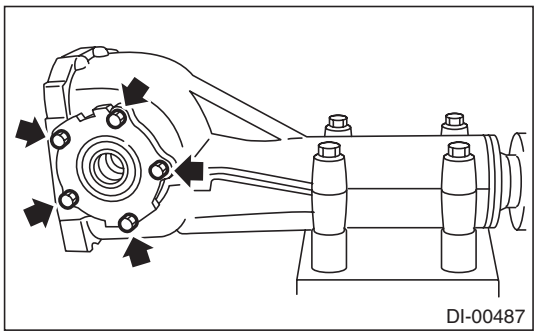

(6) Measure the hypoid driven gear to drive pinion backlash. Set the magnet base on differential carrier. Align the contact point of dial gauge with tooth face of hypoid driven gear, and move hypoid driven gear while holding drive pinion still. Read the value indicated on dial gauge. If the backlash is outside the standard range, adjust the side retainer shim by the following method.
•When backlash is less than 0.1 mm (0.004 in):
Reduce the thickness of shim on the back side of the hypoid driven gear and increase the thickness of shims on the teeth side of the hypoid driven gear.
•When backlash exceeds 0.2 mm (0.008 in):
Increase the thickness of shim on the back side of the hypoid driven gear and reduce the thickness of shims on the teeth side of the hypoid driven gear.

Backlash:
0.10 — 0.20 mm (0.004 — 0.008 in)

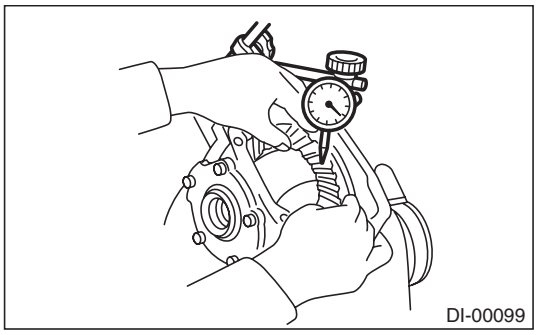

(7) Measure the total preload of the drive pinion. If the total preload is outside the specification range, adjust the thickness of side retainer shims, increasing/reducing both shims by an even amount at a time.

Total preload:
20.7 — 54.4 N (2.1 — 5.5 kgf, 4.7 — 12.2 lbf)

GETtheMANUALS.org

17) Recheck the hypoid driven gear to drive pinion backlash.

Backlash:
0.10 — 0.20 mm (0.004 — 0.008 in)

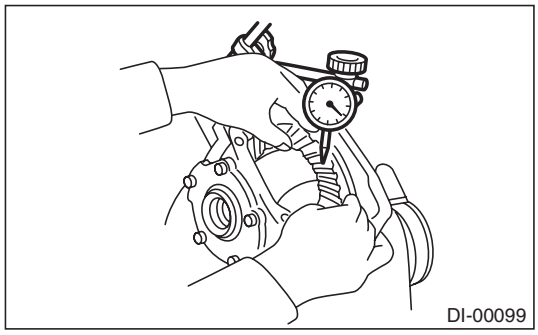

18) Check pinion and hypoid driven gears rotate smoothly and make sure of the hypoid driven gear runout on its back surface. If the hypoid driven gear runout on its back surface exceeds the specification, check for any foreign objects between the hypoid driven gear and differential case, and for any deformation of the differential case or hypoid driven gear.

Hypoid driven gear back surface runout:
0.05 mm (0.002 in)

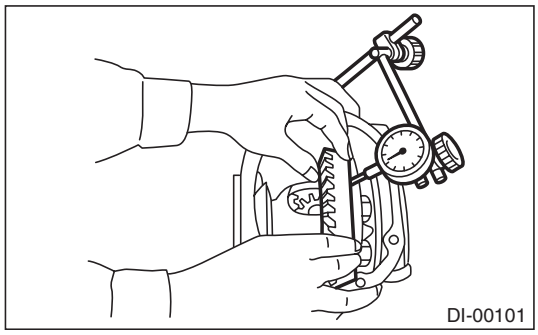

19) Check and adjustment of the tooth contact of hypoid driven gear and drive pinion

(1) Apply lead-free red dye evenly on the both sides of three to four teeth of the hypoid driven gear. Check the contact pattern after rotating the hypoid driven gear several revolutions back and forth until a definite contact pattern appears on the hypoid driven gear.

(2) When the contact pattern is not correct, re-adjust.

NOTE:
Be sure to wipe off the lead-free red dye completely after the adjustment is completed.

- Correct tooth contact
  Check item: Tooth contact pattern is slightly shifted toward toe side under no-load rotation. (When driving, it moves towards the heel side.)

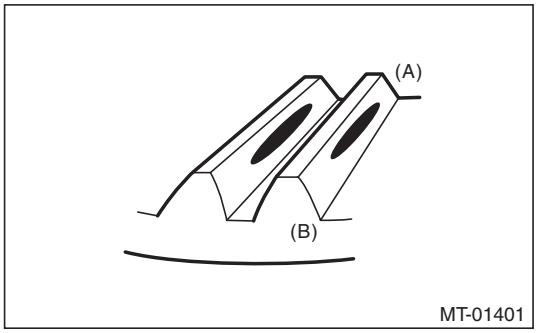

(A) Toe side
(B) Heel side

GETtheMANUALS.org

- Face contact

Check item: Backlash is too large.

Contact pattern

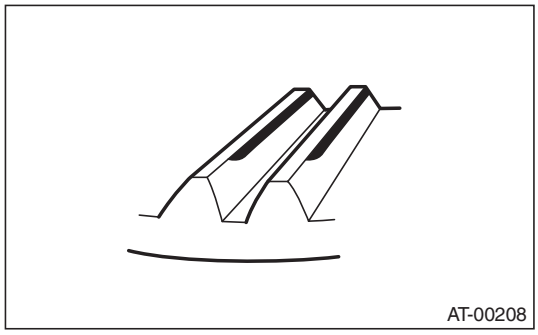

Corrective action: Increase thickness of pinion height adjusting washer according to the procedure for bringing drive pinion close to hypoid driven gear side.

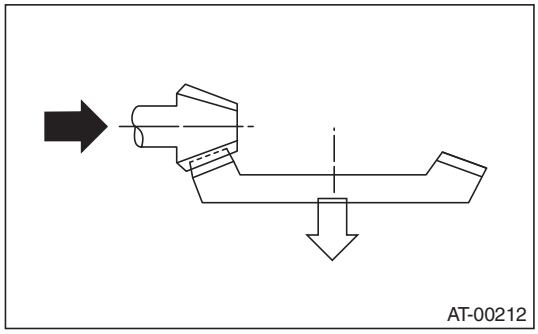

- Flank contact

Check item: Backlash is too small.

Contact pattern

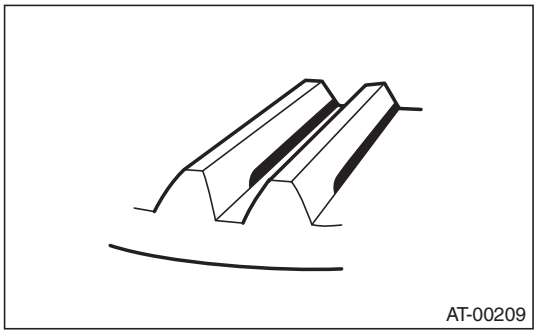

Corrective action: Reduce the thickness of pinion height adjusting washer according to the procedure for bringing drive pinion away from hypoid driven gear.

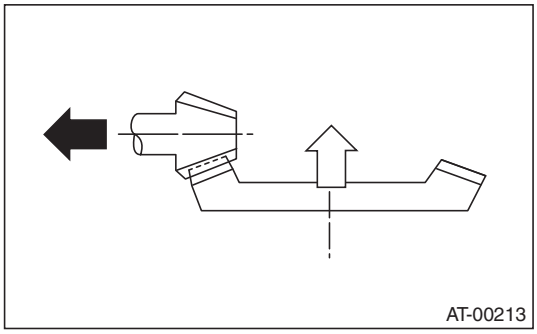

GETtheMANUALS.org

- Toe contact (inside contact)

Check item: Teeth contact area is too small.
Contact pattern

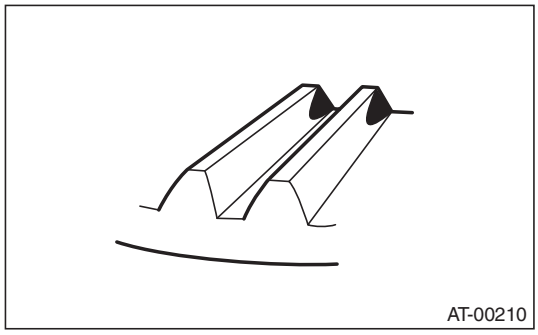

Corrective action: Reduce the thickness of pinion height adjusting washer according to the procedure for bringing drive pinion away from hypoid driven gear.

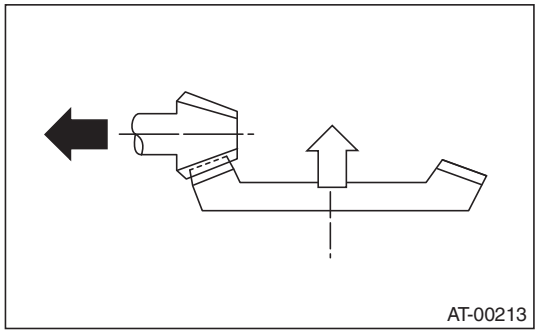

- Heel contact (outside end contact)

Check item: Teeth contact area is too small.
Contact pattern

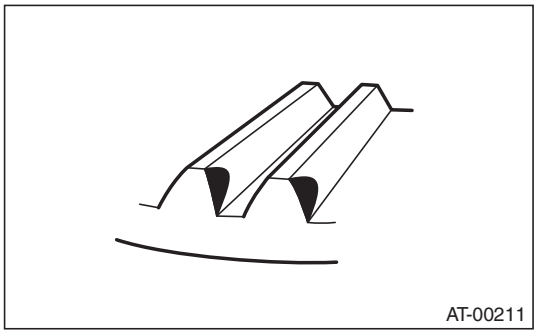

Corrective action: Increase thickness of pinion height adjusting washer according to the procedure for bringing drive pinion close to hypoid driven gear side.

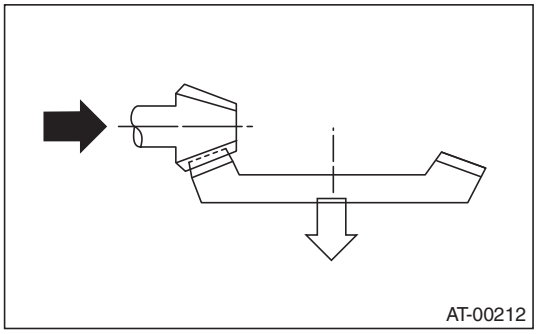

GETtheMANUALS.org

20) If proper tooth contact is not obtained, readjust the drive pinion height by changing the RH and LH side retainer shims and the hypoid gear backlash.

(1) Drive pinion height

ST1 398507702 DUMMY SHAFT
ST2 398507701 DIFFERENTIAL CARRIER GAUGE

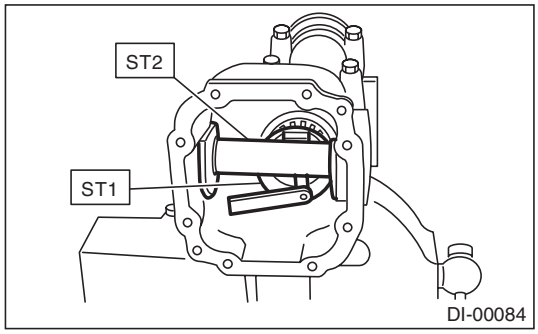

T = To + N – (H × 0.01) – 0.20 mm (0.0079 in)

T	Thickness of pinion height adjusting washer mm (in)	
To	Thickness of washer temporarily inserted mm (in)	
N	Clearance of thickness gauge mm (in)	
H	Figure marked on drive pinion head	
Memo:		

(2) Hypoid gear backlash

Backlash:
0.10 — 0.20 mm (0.004 — 0.008 in)

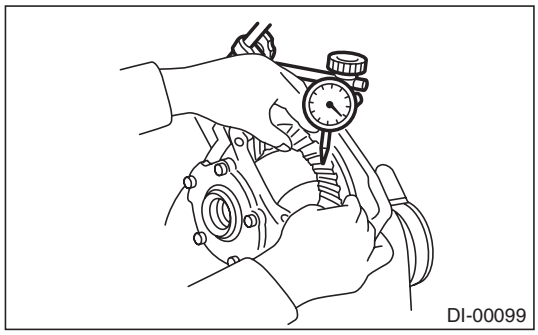

21) Remove the RH and LH side retainers.
22) Install the O-ring to left and right side retainers.

NOTE:
Use new O-rings.

23) Install the oil seal to the side retainer of both sides. <Ref. to DI-78, REPLACEMENT, Rear Differential Side Oil Seal.>

24) Align the arrow mark on the differential carrier with the arrow mark on the side retainer when installing the side retainer.

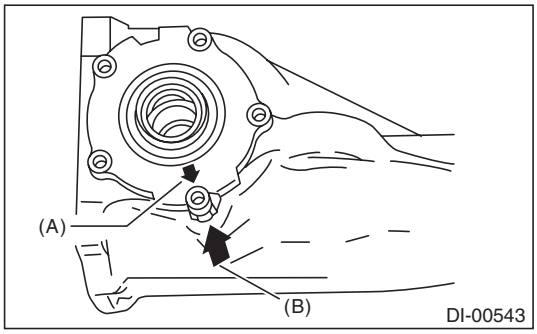

(A) Arrow mark (on the side retainer)
(B) Arrow mark (on the differential carrier)

25) Apply liquid gasket to the bolts indicated by arrows, and tighten the bolts.

Liquid gasket:
THREE BOND 1110B (Part No. K0879Y0020) or equivalent

Tightening torque:
10.5 N·m (1.1 kgf-m, 7.7 ft-lb)

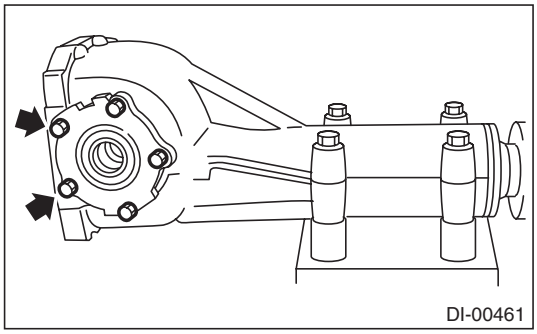

26) Install the gasket and rear cover, and tighten the bolts to specified torque.

NOTE:
Use a new gasket.

Tightening torque:
29.5 N·m (3.0 kgf-m, 21.8 ft-lb)

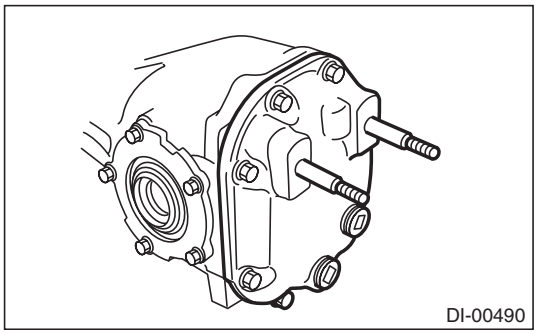

GETtheMANUALS.org

27) Install the air breather cap.

NOTE:
When installing the air breather cap, do not tap section (A). Be sure to tap section (B) to install.

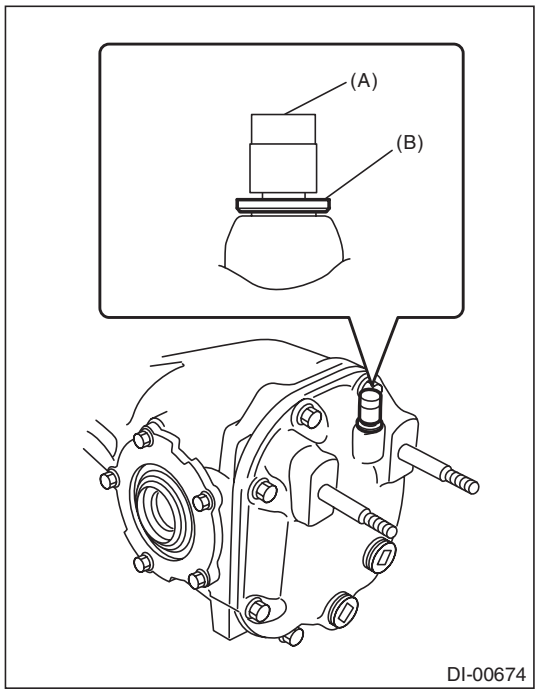

28) Install the drain plug.

NOTE:
Apply liquid gasket to the drain plug.

Liquid gasket:
THREE BOND 1105 (Part No. 004403010) or equivalent

Tightening torque:
49 N·m (5.0 kgf-m, 36.1 ft-lb)

29) Install the filler plug.

NOTE:
After installing the rear differential assembly to the vehicle, fill the gear oil, then apply liquid gasket, and tighten to the specified torque. <Ref. to DI-23, REPLACEMENT, Differential Gear Oil.>

E: INSPECTION

Wash all the disassembled parts clean, and examine them for wear, damage and other defects. Repair or replace the defective parts as necessary.

1) Hypoid driven gear and drive pinion
- If there is evidently an abnormal tooth contact, find out the cause and adjust until the teeth contact correctly. Replace the gear if there is an excessive worn or an incapable adjustment.
- If crack, cutout or seizure is found, replace the parts as a set. Slight damage of some teeth can be corrected by oil stone or the like.

2) Side gear and pinion mate gear
- Replace if cracks, scoring or other defects are evident on the tooth surface.
- Replace if thrust washer contact surface is worn or scored. Slight damages of the surface can be corrected by oil stones or equivalent.

3) Bearing
Replace if seizure, peeling, wear, rust, dragging during rotation, noise or other defect is evident.

4) Thrust washer of the side gear and pinion mate gear
Replace if seized, flawed, abnormally worn or having other defects.

5) Oil seal
Replace if deformed or damaged, and at every disassembling.

6) Differential carrier
Replace if the bearing bores are worn or damaged.

7) Differential case
Replace if sliding surfaces are abnormally worn, burned, or cracked.

8) Companion flange
Replace if the oil seal lip contact surface shows cracking.

GETtheMANUALS.org

1. SIDE GEAR BACKLASH

Using a dial gauge, check the backlash of side gear.

Side gear backlash:
0.10 — 0.20 mm (0.004 — 0.008 in)

If the side gear backlash is not within the specification, select the side gear thrust washer and adjust the side gear backlash as specified.

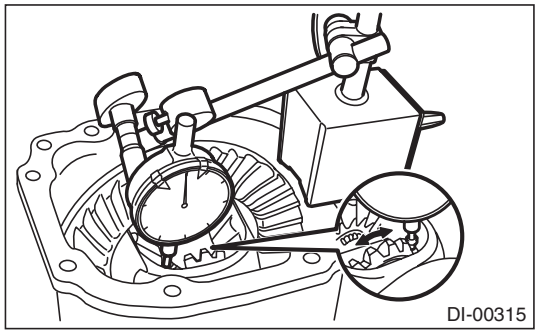

2. HYPOID DRIVEN GEAR BACKLASH

Using a dial gauge, check the backlash of hypoid driven gear.

Hypoid driven gear backlash:
0.10 — 0.20 mm (0.004 — 0.008 in)

If the hypoid driven gear backlash is outside the specification range, adjust the side bearing preload and repair if necessary.

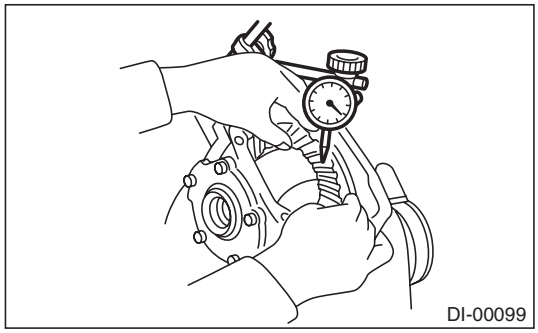

3. HYPOID DRIVEN GEAR RUNOUT ON ITS BACK SURFACE

Using a dial gauge, check the hypoid driven gear back surface runout.

Hypoid driven gear back surface runout:
0.05 mm (0.002 in)

If the hypoid driven gear runout on its back surface exceeds the limit, replace the hypoid driven gear.

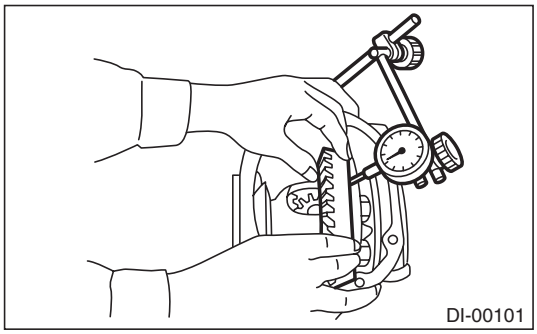

4. TOOTH CONTACT BETWEEN HYPOID DRIVEN GEAR AND DRIVE PINION

Inspect the tooth contact between the hypoid driven gear and drive pinion. <Ref. to DI-32, ASSEMBLY, Rear Differential (T-type).>

5. TOTAL PRELOAD

Using a spring scale, check the total preload.

Total preload:
20.7 — 54.4 N (2.1 — 5.5 kgf, 4.7 — 12.2 lb)

If the total preload is not within the specification, adjust the side retainer shim.

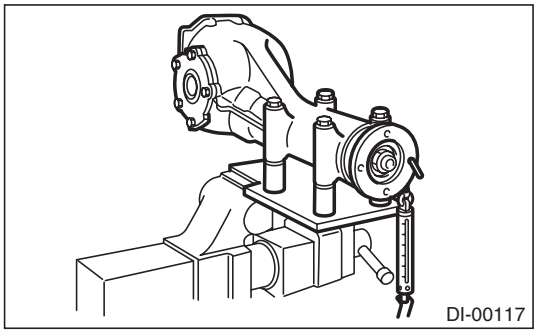

GETtheMANUALS.org

6. COMPANION FLANGE

1) If rust or dirt is attached to the companion flange, remove them.
2) Set a dial gauge at a companion flange surface (mating surface of propeller shaft and companion flange), and then measure the companion flange runout.

Limit of runout:
0.08 mm (0.003 in)

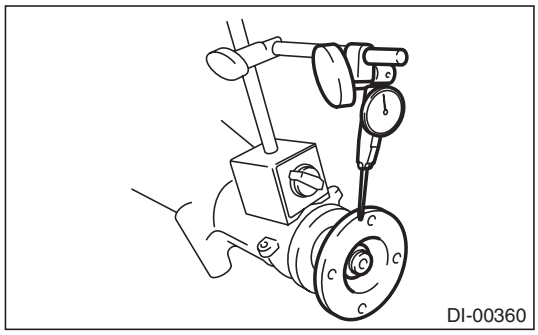

3) Set the gauge inside of the companion flange, and measure the runout.

Limit of runout:
0.08 mm (0.003 in)

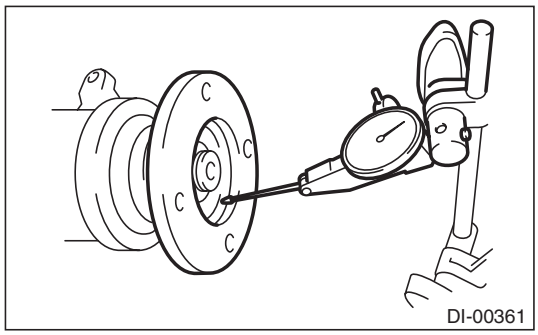

4) If either runout exceeds the limit, move the phase of companion flange and drive pinion 90° each, and find the point where the runout is within the limit.
5) If the runout exceeds the limit even after changing the phase, replace the companion flange and recheck the runout.
6) If the runout exceeds the limit after replacing the companion flange, the drive pinion may be assembled incorrectly or bearing is faulty.

F: ADJUSTMENT

1. SIDE GEAR BACKLASH

Adjust the side gear backlash. <Ref. to DI-32, ASSEMBLY, Rear Differential (T-type).>

2. HYPOID DRIVEN GEAR BACKLASH

Adjust hypoid driven gear backlash. <Ref. to DI-32, ASSEMBLY, Rear Differential (T-type).>

3. TOOTH CONTACT BETWEEN HYPOID DRIVEN GEAR AND DRIVE PINION

Adjust the tooth contact between hypoid driven gear and drive pinion gear. <Ref. to DI-32, ASSEMBLY, Rear Differential (T-type).>

4. TOTAL PRELOAD

Adjust the side retainer shim. <Ref. to DI-32, ASSEMBLY, Rear Differential (T-type).>

GETtheMANUALS.org

5. Rear Differential (VA-type)

A: REMOVAL

The removal procedure for VA-type is included in “REMOVAL” for T-type. <Ref. to DI-26, REMOVAL, Rear Differential (T-type).>

B: INSTALLATION

The installation procedure for VA-type is included in “INSTALLATION” for T-type. <Ref. to DI-28, INSTALLATION, Rear Differential (T-type).>

C: DISASSEMBLY

1. VA1-TYPE

To detect the real cause of trouble, inspect the following items before disassembling.

• Tooth contact and backlash between hypoid driven gear and drive pinion

1) Set the ST on vise and install the differential assembly to ST.

ST 398217700 ATTACHMENT SET

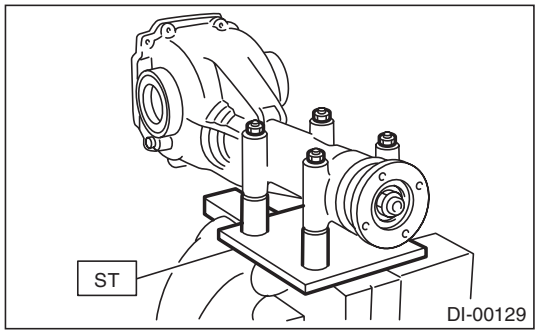

2) Remove the drain plug and filler plug.

3) Remove the rear cover by removing retaining bolts.

NOTE:
Remove it by tapping with a plastic hammer.

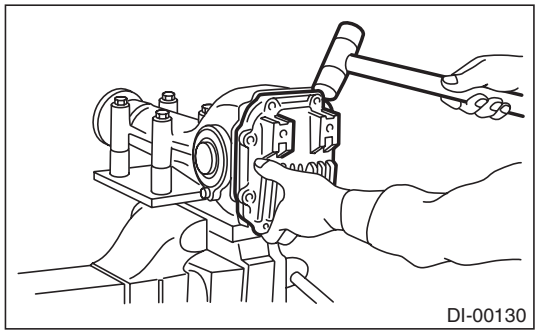

4) Remove the air breather cap.

NOTE:

• Do not attempt to remove the air breather cap unless necessary.

• Whenever the air breather cap is removed, replace it with a new part.

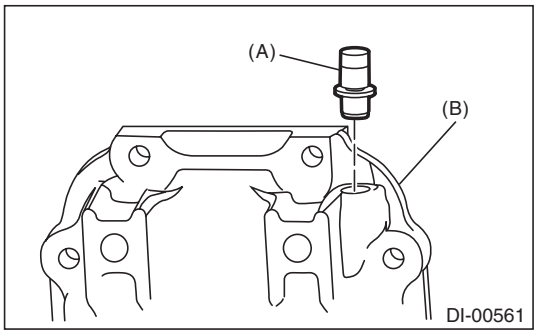

(A) Air breather cap
(B) Rear cover

5) Remove the lock plate RH and LH.

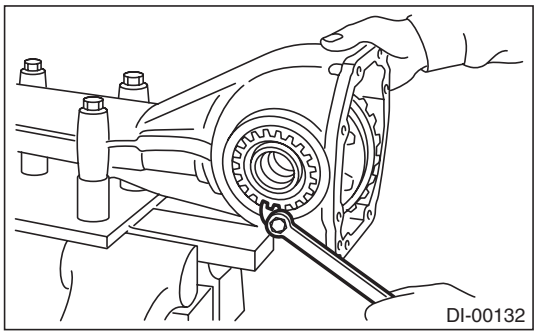

6) Remove the side retainer RH and LH with ST.

NOTE:
When keeping the retainers aside, use labels etc. to avoid confusing the left and right.

ST 18630AA010 WRENCH COMPL RETAINER

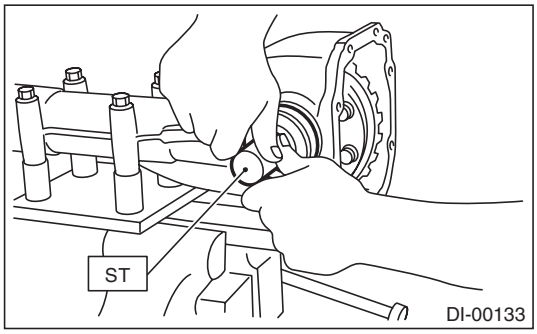

GETtheMANUALS.org

7) Pull out the differential case assembly from differential carrier.

NOTE:
Be careful not to hit the teeth of hypoid driven gear against the differential carrier.

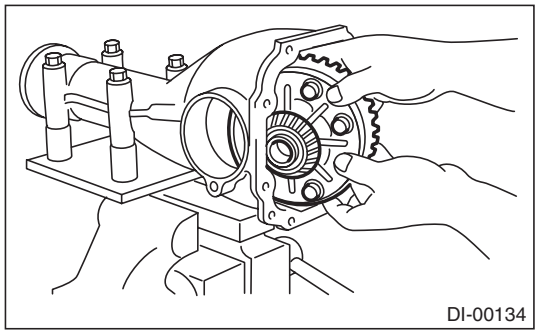

8) Remove the bearing race from side retainer RH and LH with ST1 and ST2.
ST1 499705401 PULLER ASSY
ST2 499705404 SEAT

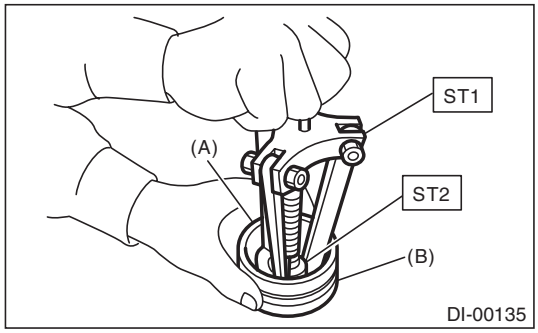

(A) Bearing race
(B) Side retainer

9) Remove the oil seal from the RH and LH side retainers using a screwdriver.

NOTE:
Perform this operation only when changing oil seal.

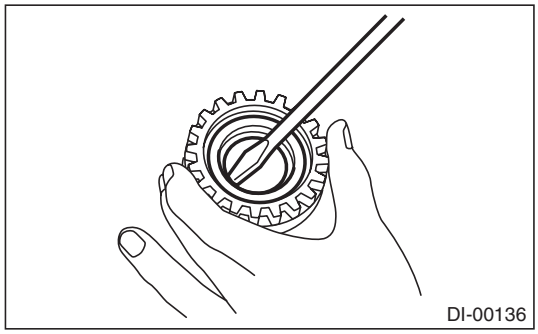

10) Extract the bearing cone with ST1 and ST2.

NOTE:
- Do not attempt to disassemble the parts unless necessary.
- Set the puller so that its claws catch the edge of the bearing cone.
- Store so that the right and left side bearing races and cones are not mixed together.

ST1 899524100 PULLER SET
ST2 399520105 SEAT

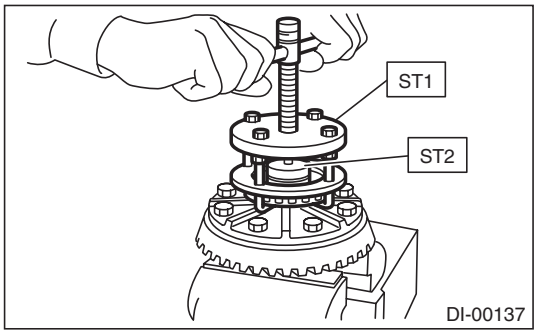

11) Using the ST, loosen the hypoid driven gear bolt and remove the hypoid driven gear.
ST 18270KA020 SOCKET (E20)

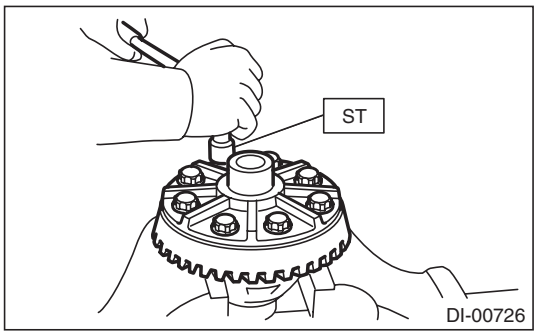

12) Remove the spring pin from hypoid driven gear side using ST.
ST 899904100 STRAIGHT PIN REMOVER

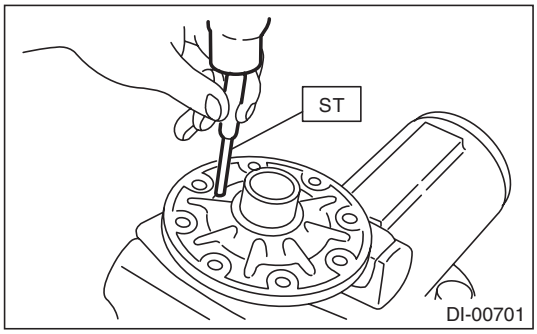

GETtheMANUALS.org

13) Draw out the pinion mate shaft and remove pinion mate gears, side gears and thrust washers.

NOTE:
The gears and washers should be marked with RH or LH, front or rear, or kept separately.

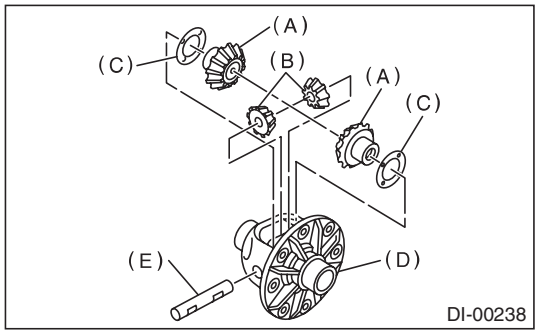

(A) Side gear
(B) Pinion mate gear
(C) Thrust washer
(D) Differential case
(E) Pinion mate shaft

14) Remove the self-locking nut while securing the companion flange with ST.
ST 498427200 FLANGE WRENCH

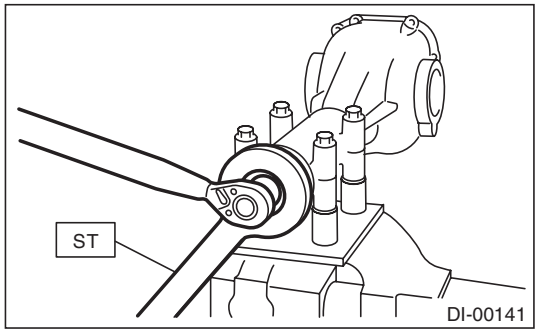

15) Extract the companion flange with a puller.

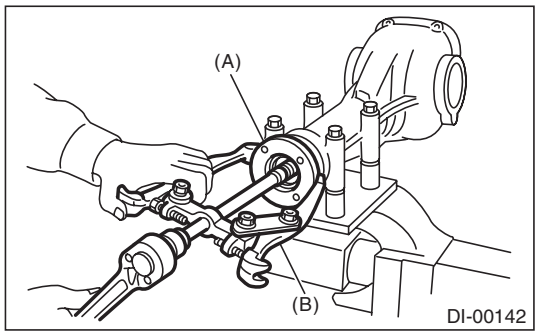

(A) Companion flange
(B) Puller

16) Press the end of drive pinion shaft and extract it together with rear bearing cone, pinion height adjusting washer and washer by using the ST.

NOTE:
Hold the drive pinion so as not to drop it.
ST 398467700 DRIFT

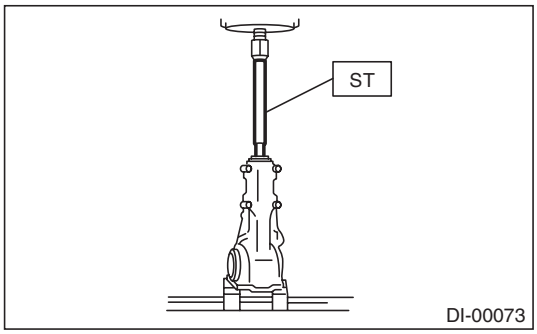

17) Remove the rear bearing cone from drive pinion by supporting the cone with ST.

NOTE:
Place the replacer so that its center-recessed side faces the bearing cone.
ST 498515500 REPLACER

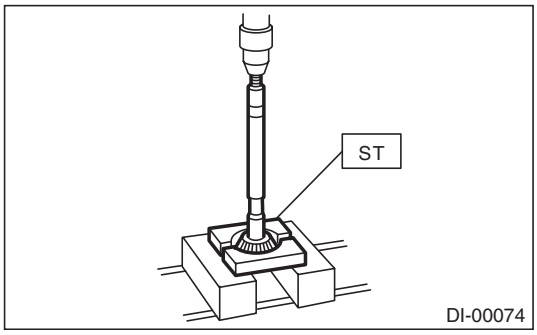

18) Remove the front oil seal from differential carrier using ST.
ST 398527700 PULLER ASSY

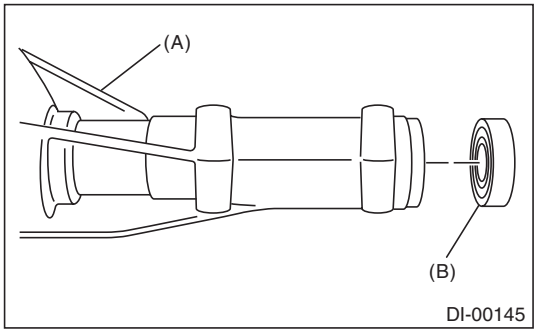

(A) Differential carrier
(B) Front oil seal

GETtheMANUALS.org

19) Remove the pilot bearing together with the front bearing cone and spacer using the ST.
ST 398467700 DRIFT

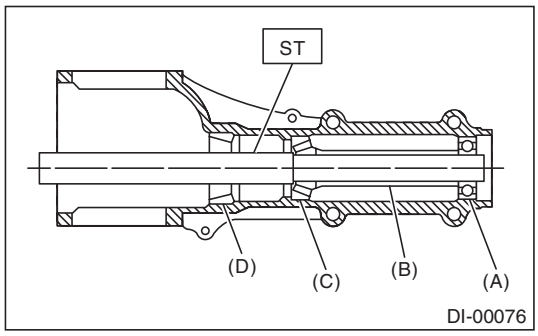

(A) Pilot bearing
(B) Spacer
(C) Front bearing
(D) Rear bearing cup

20) When replacing the bearings, hit out the front bearing cup and rear bearing cup in this order using a brass bar.

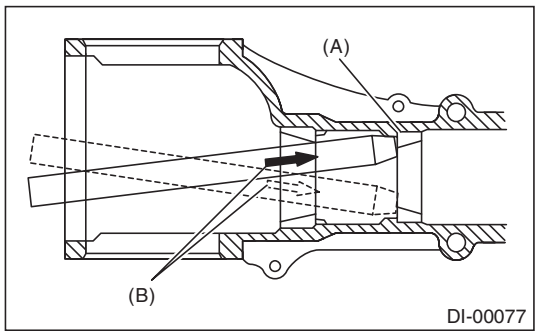

(A) 2 cutout portions along diagonal lines
(B) Tap alternately with brass bar.

2. VA2-TYPE

To detect the real cause of trouble, inspect the following items before disassembling.
• Tooth contact and backlash between hypoid driven gear and drive pinion
1) Set the ST on vise and install the differential assembly to ST.
ST 398217700 ATTACHMENT SET

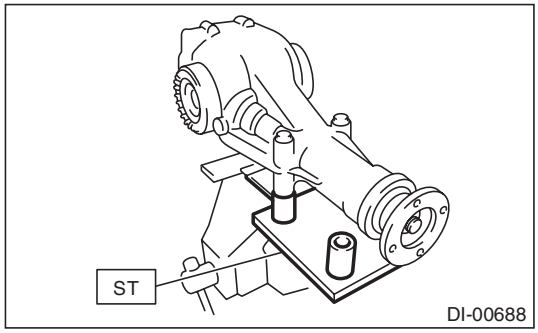

2) Remove the drain plug and filler plug.
3) Remove the rear cover by removing retaining bolts.

NOTE:
Remove it by tapping with a plastic hammer.

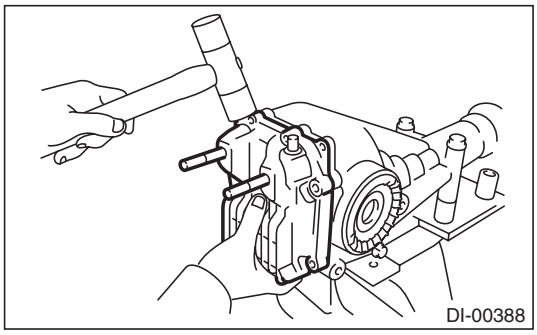

4) Remove the air breather cap.

NOTE:
• Do not attempt to remove the air breather cap unless necessary.
• Whenever the air breather cap is removed, replace it with a new part.

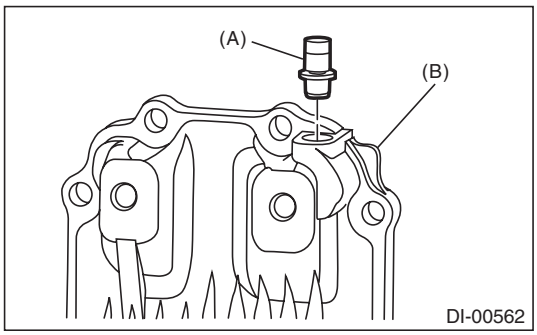

(A) Air breather cap
(B) Rear cover

5) Remove the lock plate RH and LH.

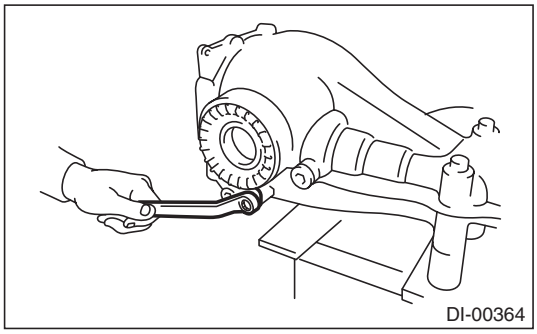

GETtheMANUALS.org

6) Remove the side retainer RH and LH with ST.

NOTE:
When keeping the retainers aside, use labels etc. to avoid confusing the left and right.

ST 18630AA010 WRENCH COMPL RETAINER

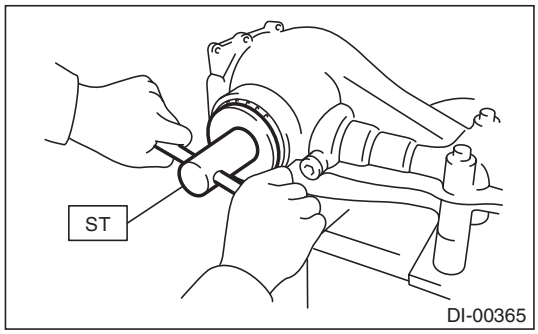

7) Pull out the differential case assembly from differential carrier.

NOTE:
Be careful not to hit the teeth of hypoid driven gear against the differential carrier.

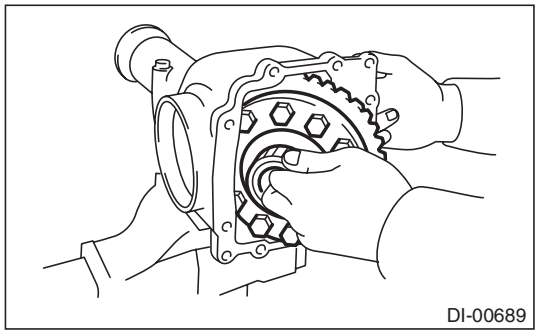

8) Remove the bearing race from side retainer RH and LH with ST and the press.

NOTE:
- Be sure to turn the bolt of the ST by hand.
- Set the puller so that its claws catch the groove of side retainer.

ST 18758AA000 PULLER

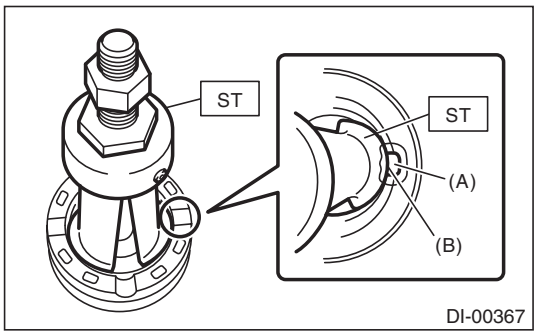

(A) Groove
(B) Claw

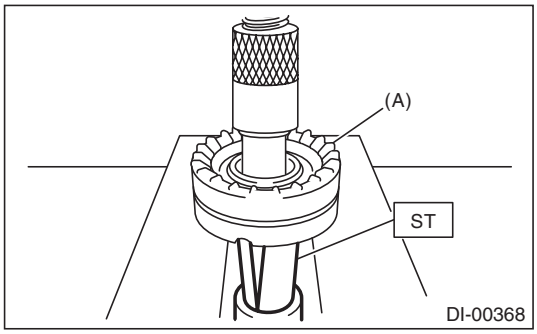

(A) Side retainer

9) Remove the oil seal from the RH and LH side retainers using a screwdriver.

NOTE:
Perform this operation only when changing oil seal.

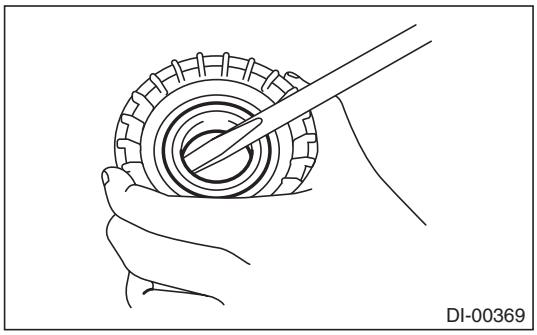

GETtheMANUALS.org

10) Extract the bearing cone with ST1, ST2 and ST3.

NOTE:
- Do not attempt to disassemble the parts unless necessary.
- Never mix up the RH and LH bearing races and cones.

ST1 498077000 REMOVER
ST2 399520105 SEAT
ST3 899864100 REMOVER

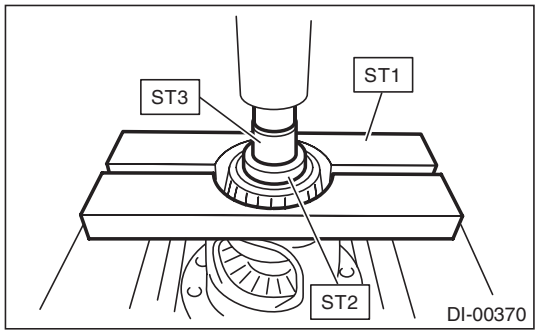

11) Using the ST, loosen the hypoid driven gear bolt and remove the hypoid driven gear.
ST 18270KA020 SOCKET (E20)

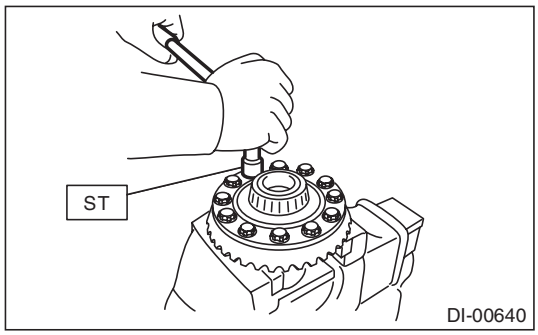

12) Remove the spring pin from hypoid driven gear side using ST.
ST 899904100 STRAIGHT PIN REMOVER

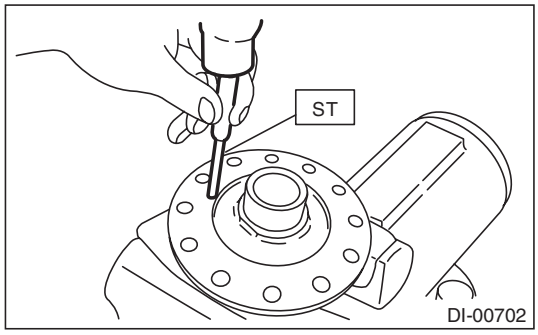

13) Draw out the pinion mate shaft and remove pinion mate gears, side gears and thrust washers.

NOTE:
The gears and washers should be marked with RH or LH, front or rear, or kept separately.

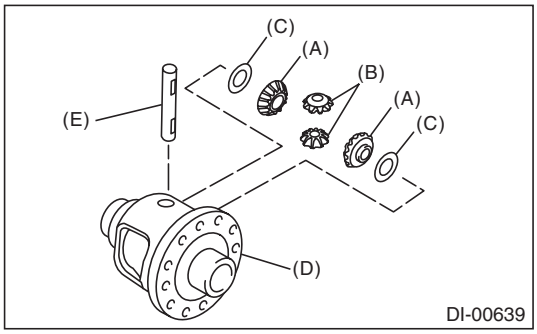

(A) Side gear
(B) Pinion mate gear
(C) Thrust washer
(D) Differential case
(E) Pinion mate shaft

14) Remove the circlip from the side gear.

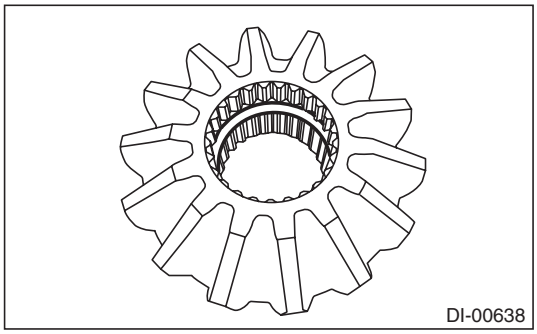

15) Remove the self-locking nut while securing the companion flange with ST.
ST 498427200 FLANGE WRENCH

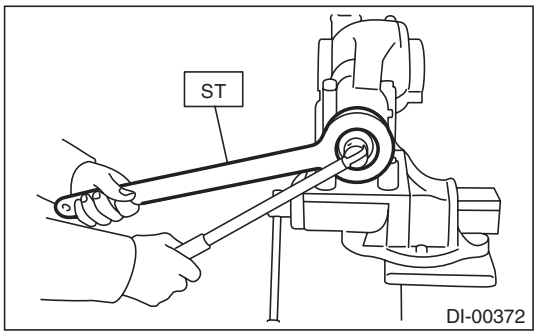

GETtheMANUALS.org

16) Extract the companion flange using a puller.

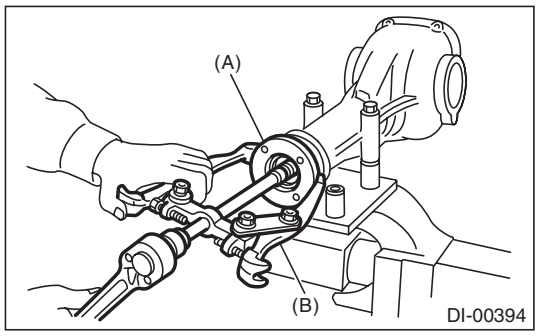

(A) Companion flange
(B) Puller

17) Remove the drive pinion shaft.
18) Remove the rear bearing cone from drive pinion by supporting the cone with ST.

NOTE:
Place the replacer so that its center-recessed side faces the bearing cone.
ST 398517700 REPLACER

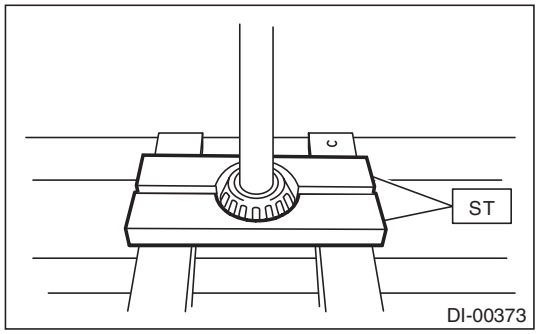

19) Remove the front oil seal from differential carrier using screwdriver.
20) Remove the pilot bearing, front bearing cone and spacer.

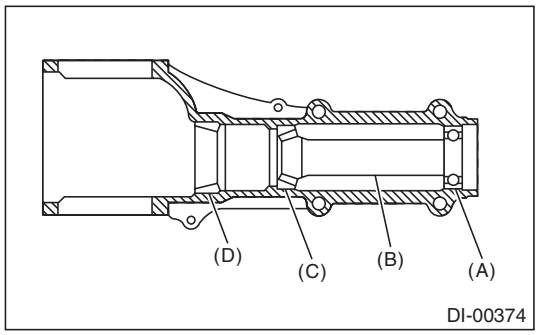

(A) Pilot bearing
(B) Spacer
(C) Front bearing
(D) Rear bearing race

21) When replacing the bearings, tap out the front bearing race and rear bearing race in this order using a brass bar to remove them.

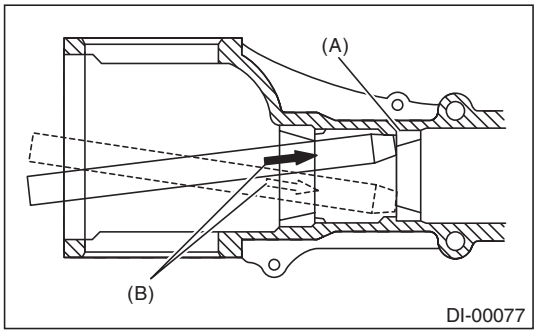

(A) 2 cutout portions along diagonal lines
(B) Tap alternately with brass bar.

D: ASSEMBLY

1. VA1-TYPE

NOTE:
- Assemble in the reverse order of disassembly.
- Check and adjust each part during assembly.
- Use new gaskets and O-rings.
- Keep the shims and washers in order, so that they are not improperly installed.
- Thoroughly clean the surfaces on which the shims, washers and bearings are to be installed.
- Apply gear oil when installing the bearings and thrust washers.
- Be careful not to mix up the RH and LH bearing races.
- Replace the oil seal and O-ring with a new part at every disassembly.
- Be careful not to mix up the side oil seal RH and LH.
- Apply differential gear oil to the lips when installing the oil seal.

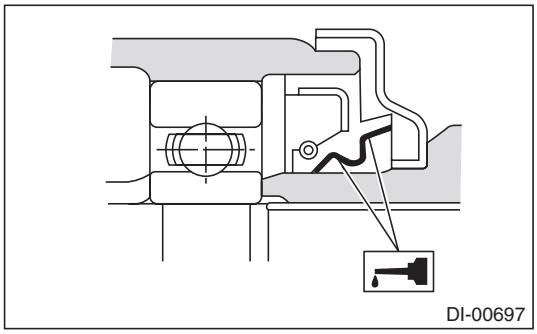

1) Adjusting preload for front and rear bearings

NOTE:
Adjust the bearing preload between front and rear bearings with preload adjusting spacer and washer. Pinion height adjusting washer is not affected by this adjustment. The adjustment must be carried out with oil seal removed.

GETtheMANUALS.org

(1) Install the rear bearing race into the differential carrier using ST1 and ST2.

ST1 398477701 HANDLE
ST2 398477702 DRIFT

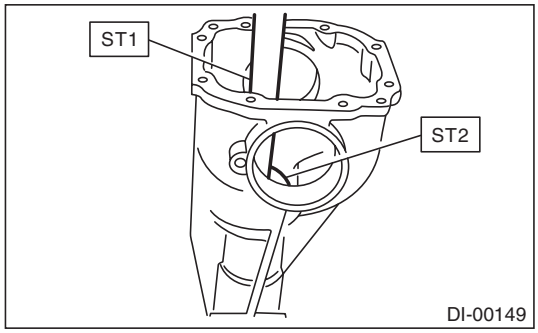

(2) Install the front bearing race to the differential carrier using ST1 and ST2.

ST1 398477701 HANDLE
ST2 498447110 DRIFT

(3) Insert the front bearing cone.

NOTE:
Use new front bearing cone.

(4) Measure and record the thickness of pinion height adjusting washer.

NOTE:
If tooth contact (drive pinion and hypoid driven gear) is normal in the inspection before disassembling, verify that the washer is not deformed, and then reuse the used washer.

(5) Insert the ST (DUMMY SHAFT) into case with the pinion height adjusting washer and rear bearing cone fitted onto it.

NOTE:
Use new rear bearing cone.

(6) Install the preload adjusting spacer, washer, front bearing cone, spacer, pilot bearing, companion flange, and self-locking nut.

ST 498447150 DUMMY SHAFT
Part No. 32285AA000 Spacer

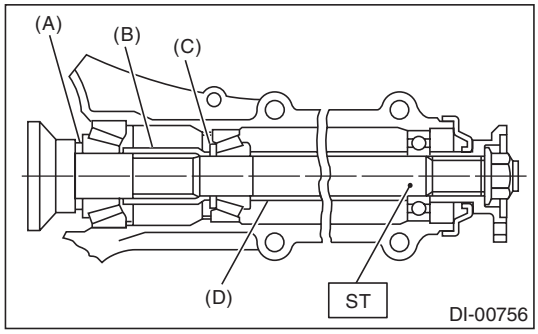

(A) Pinion height adjusting washer
(B) Preload adjusting spacer
(C) Preload adjusting washer
(D) Spacer (SUBARU genuine parts)

(7) Turn the ST by hand to slowly seat the bearing, and tighten the self-locking nut while measuring the initial load or initial torque with a spring scale or torque wrench. Select the preload adjusting washer and spacer so that the specified preload is obtained when nut is tightened to the specified torque.

NOTE:
- Use a new self-locking nut.
- Measure the preload in direction of tangent to the flange.
- Be careful not to give excessive preload.
- When tightening the self-locking nut, lock ST1 with ST2 as shown in the figure.

ST1 498447150 DUMMY SHAFT
ST2 398507704 BLOCK

Tightening torque:
191 N·m (19.5 kgf-m, 140.9 ft-lb)

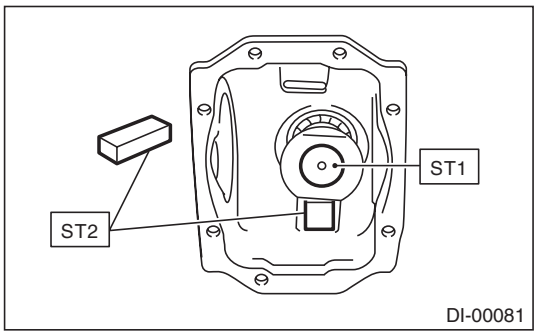

Initial load:
12.7 — 32.2 N (1.3 — 3.3 kgf, 2.9 — 7.2 lbf)

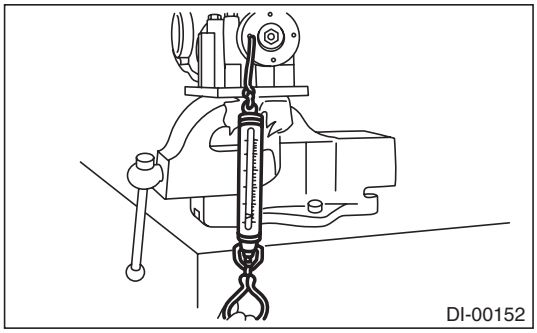

GETtheMANUALS.org

Initial torque:
0.48 — 1.22 N·m (0.05 — 0.12 kgf-m, 0.35 — 0.90 ft-lb)

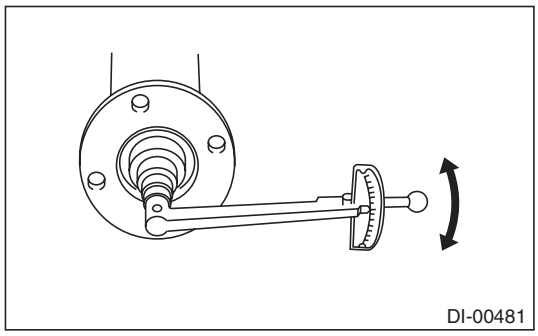

Preload adjusting washer	
Part No.	Thickness mm (in)
38336AA000	1.500 (0.0591)
38336AA120	1.513 (0.0596)
38336AA010	1.525 (0.0600)
38336AA130	1.538 (0.0606)
38336AA020	1.550 (0.0610)
38336AA140	1.563 (0.0615)
38336AA030	1.575 (0.0620)
38336AA150	1.588 (0.0625)
38336AA040	1.600 (0.0630)
38336AA160	1.613 (0.0635)
38336AA050	1.625 (0.0640)
38336AA170	1.638 (0.0645)
38336AA060	1.650 (0.0650)
38336AA180	1.663 (0.0655)
38336AA070	1.675 (0.0659)
38336AA190	1.688 (0.0665)
38336AA080	1.700 (0.0669)
38336AA200	1.713 (0.0674)
38336AA090	1.725 (0.0679)
38336AA210	1.738 (0.0684)
38336AA100	1.750 (0.0689)
38336AA220	1.763 (0.0694)
38336AA110	1.775 (0.0699)

Preload adjusting spacer	
Part No.	Length mm (in)
32288AA040	52.3 (2.059)
32288AA050	52.5 (2.067)
31454AA100	52.6 (2.071)
32288AA060	52.7 (2.075)
31454AA110	52.8 (2.079)
32288AA070	52.9 (2.083)
31454AA120	53.0 (2.087)
32288AA080	53.1 (2.091)
32288AA090	53.3 (2.098)

2) Adjusting drive pinion height:
Adjust the drive pinion height with pinion height adjusting washer installed between the rear bearing cone and the back of pinion gear.

(1) Attach the ST2.

NOTE:
At this time, install a provisionally selected or previously used pinion height adjusting washer.

ST1 498447150 DUMMY SHAFT
ST2 498505501 DIFFERENTIAL CARRIER GAUGE
Part No. 32285AA000 Spacer

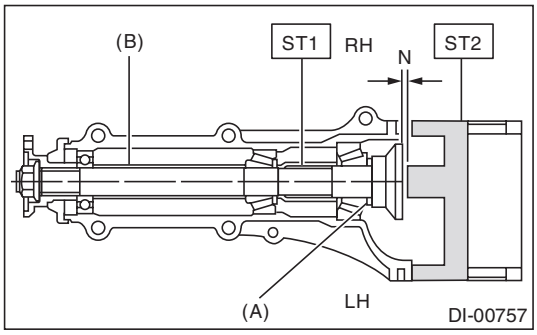

(A) Pinion height adjusting washer
(B) Spacer (SUBARU genuine parts)

(2) Measure the clearance “N” between the end of ST2 and the end surface of ST1 by using a thickness gauge.

NOTE:
Make sure there is no clearance between the differential carrier and ST2.

ST1 498447150 DUMMY SHAFT
ST2 498505501 DIFFERENTIAL CARRIER GAUGE

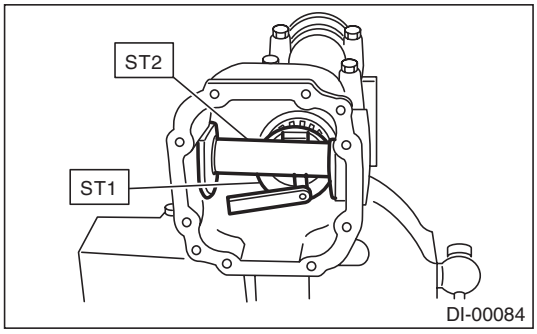

GETtheMANUALS.org

(3) Obtain the thickness of pinion height adjusting washer to be inserted from the following formula, and replace the temporarily installed washer with this one.

NOTE:
Adjust it using the 1 — 3 washers.
T = To + N – 0.05 mm (0.0020 in)

T	Thickness of pinion height adjusting washer mm (in)	
To	Thickness of washer temporarily inserted mm (in)	
N	Clearance of thickness gauge mm (in)	
Memo:		

(Example of calculation)
To = 0.15 mm (0.0059 in)
N = 0.1 mm (0.0039 in)
T = 0.15 + 0.1 – 0.05 = 0.2 mm (0.0079 in)
Result: Thickness = 0.2 mm (0.0079 in)
Therefore use part number 32295AA220.

Pinion height adjusting washer	
Part No.	Thickness mm (in)
32295AA200	0.150 (0.0059)
32295AA210	0.175 (0.0069)
32295AA220	0.200 (0.0079)
32295AA230	0.225 (0.0089)
32295AA240	0.250 (0.0098)
32295AA250	0.275 (0.0108)

3) Install the selected pinion height adjusting washer on drive pinion, and press the rear bearing cone into position with ST.
ST 498175500 INSTALLER

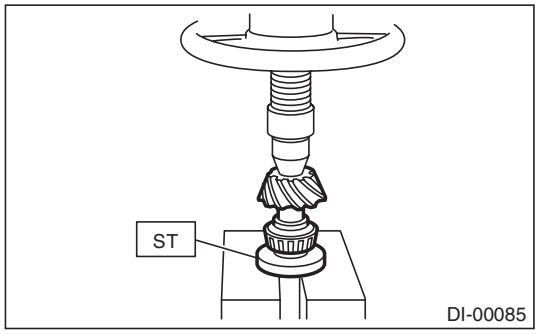

4) Insert the drive pinion into the differential carrier, and install the preselected preload adjusting spacer and washer.

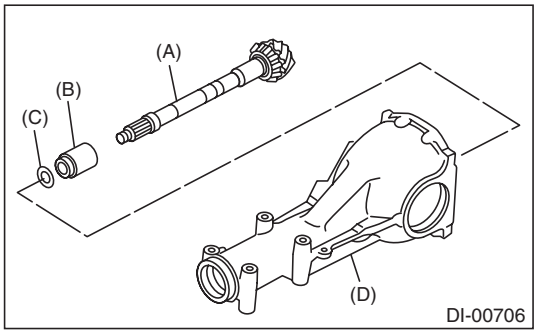

(A) Drive pinion
(B) Preload adjusting spacer
(C) Preload adjusting washer
(D) Differential carrier

5) Press-fit the front bearing cone into the carrier with ST1, ST2 and the spacer.
ST1 399780104 WEIGHT
ST2 899580100 INSTALLER
Part No. 32285AA000 Spacer

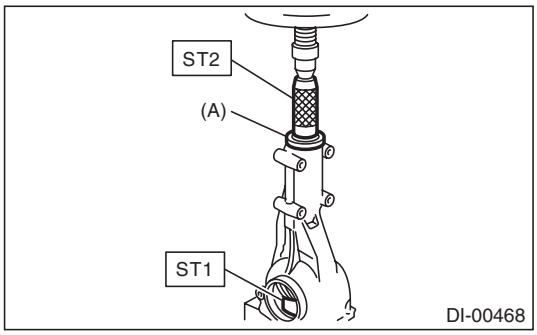

(A) Spacer (SUBARU genuine parts)

6) Insert the spacer, then press-fit the pilot bearing with ST1 and ST2.
ST1 399780104 WEIGHT
ST2 899580100 INSTALLER

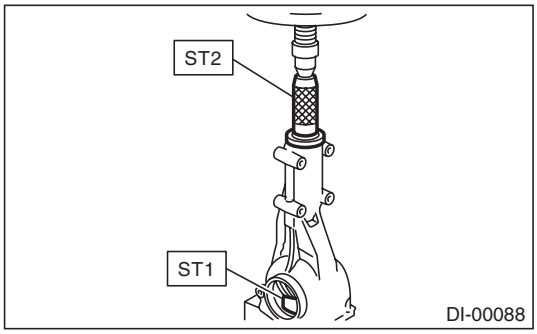

GETtheMANUALS.org

7) Using the ST, install the oil seal.

NOTE:
- Use a new oil seal.
- Press-fit until the oil seal end comes 1 mm (0.04 in) inward from end of carrier.
- Apply differential gear oil to the oil seal lips.

ST 498447120 INSTALLER

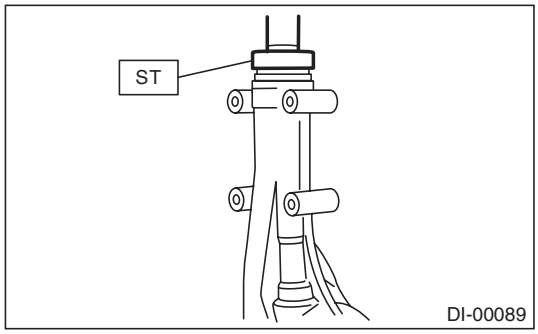

8) Press-fit the companion flange with ST1 and ST2.

NOTE:
Be careful not to damage the pilot bearing.

ST1 899874100 INSTALLER
ST2 399780104 WEIGHT

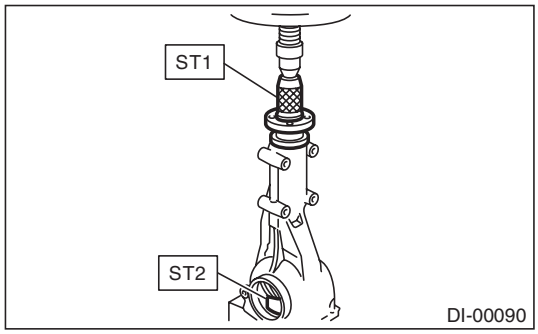

9) Attach the self-locking nut and use the ST to fix the companion flange in place, then tighten the self-locking nut.

NOTE:
- Use a new self-locking nut.
- Before installing the self-locking nut, apply the seal material to the threads of the drive pinion shaft and to the seating surface of the self-locking nut.

Seal material:
THREE BOND 1324 (Part No. 004403042) or equivalent

Tightening torque:
191 N·m (19.5 kgf-m, 140.9 ft-lb)

ST 498427200 FLANGE WRENCH

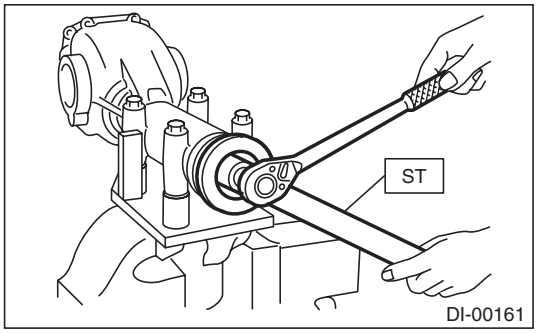

10) Check the initial torque or initial load.

Initial load:
12.7 — 32.2 N (1.3 — 3.3 kgf, 2.9 — 7.2 lbf)

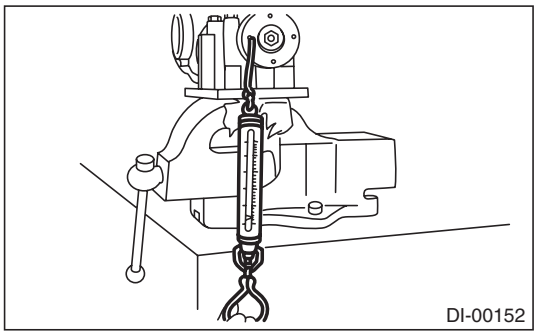

Initial torque:
0.48 — 1.22 N·m (0.05 — 0.12 kgf-m, 0.35 — 0.90 ft-lb)

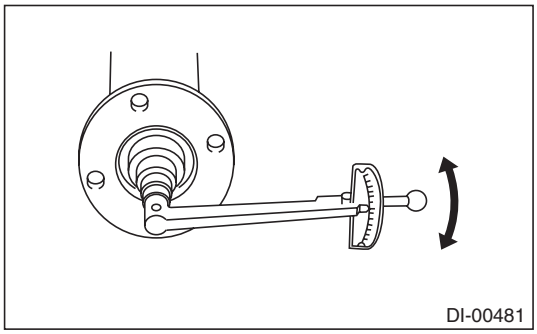

GETtheMANUALS.org

11) Assembling differential case
(1) Install the side gears and pinion mate gears, with their thrust washers and pinion mate shaft, into the differential case.

NOTE:
• Apply gear oil on both sides of the washer and on the side gear shaft before installing.
• Insert the pinion mate shaft into the differential case by aligning the pin holes.
• The thrust washer inner surface has a chamfered side. Install the washer with the chamfered side facing toward the side gear.

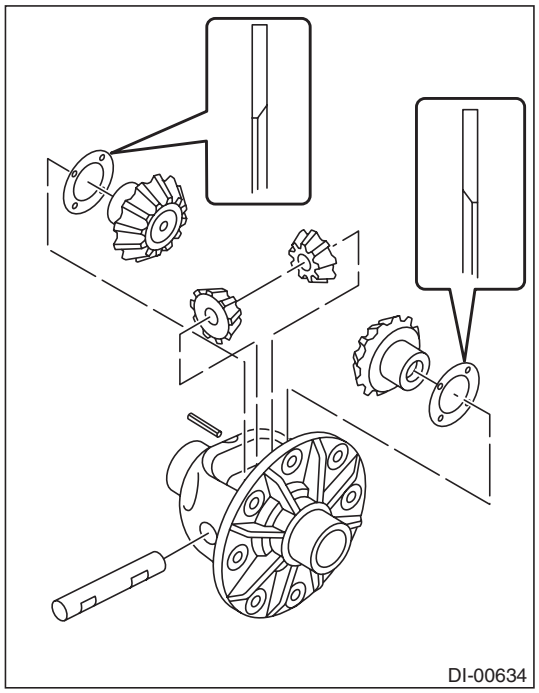

(2) Measure the side gear backlash.

Side gear backlash:
0.05 — 0.15 mm (0.002 — 0.006 in)

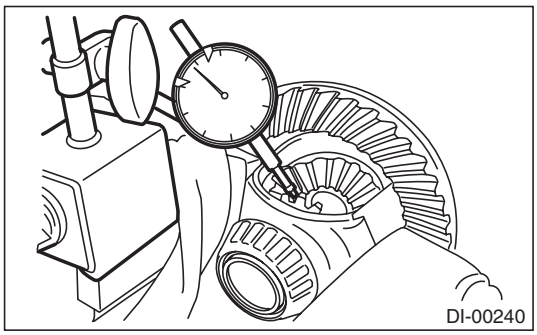

(3) Adjust the side gear backlash by selecting side gear thrust washer.

Side gear thrust washer	
Part No.	Thickness mm (in)
803135011	0.925 — 0.950 (0.0364 — 0.0374)
803135012	0.950 — 0.975 (0.0374 — 0.0384)
803135013	0.975 — 1.000 (0.0384 — 0.0394)
803135014	1.000 — 1.025 (0.0394 — 0.0404)
803135015	1.025 — 1.050 (0.0404 — 0.0413)

(4) Check the condition of rotation after applying oil to the gear tooth surfaces and thrust washer surfaces.
(5) Drive the spring pin into the differential case.

NOTE:
Use new spring pin.

GETtheMANUALS.org

12) Install the hypoid driven gear to differential case.

NOTE:
- Before installing bolts, apply seal material to bolt threads.

Seal material:
THREE BOND 1324 (Part No. 004403042) or equivalent

- Tighten opposing bolts in order.
  (1) Tighten the hypoid driven gear mounting bolts to the specified torque using the ST.

ST 18270KA020 SOCKET (E20)

Tightening torque:
20 N·m (2.0 kgf-m, 14.8 ft-lb)

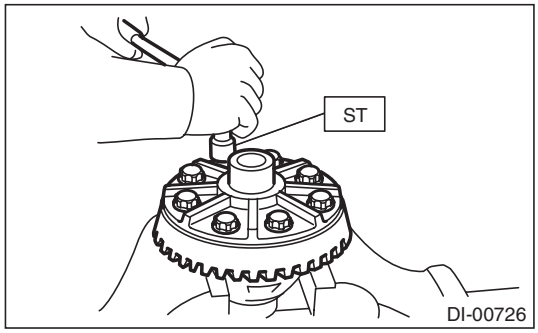

(2) While checking the tightening angle with the ST, further tighten the hypoid driven gear mounting bolts.

Tightening angle:
35°±2°

ST 18554AA000 ANGLE GAUGE

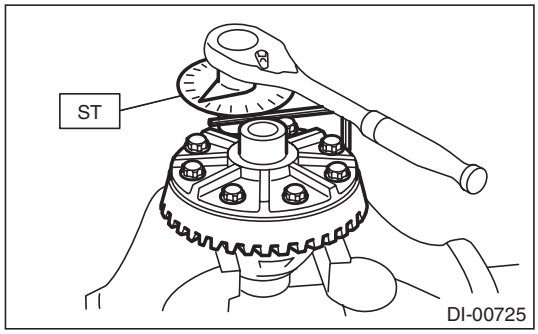

13) Using the ST, press-fit the side bearing to the differential case.

ST 498485400 DRIFT

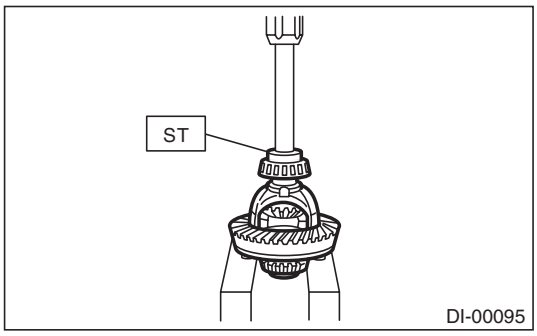

14) Assemble the side retainer.
  (1) Install the oil seal into side retainer RH and LH.

CAUTION:
Pay attention to the left and right of the oil seal.

NOTE:
Use a new oil seal.

ST 498447100 INSTALLER

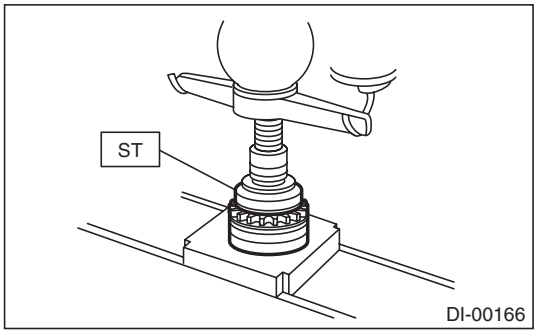

(2) Install the bearing race into side retainer RH and LH.

CAUTION:
Make sure that the bearing outer races and cones are properly assembled.

ST 398477702 DRIFT

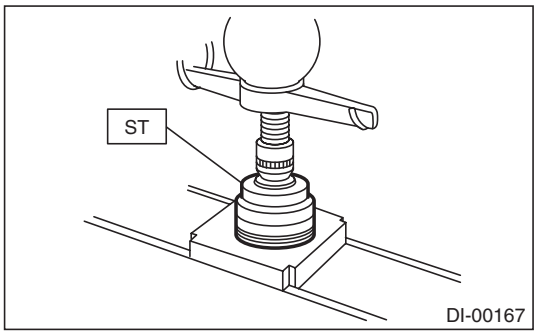

GETtheMANUALS.org

(3) Install the differential case assembly into differential carrier in the reverse order of disassembly.

NOTE:
Be careful not to hit the teeth of hypoid driven gear against the differential carrier.

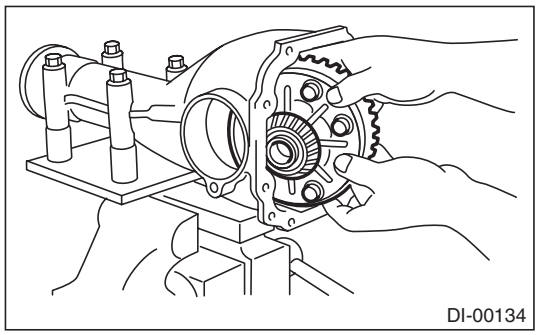

(4) Temporally tighten the side retainers RH and LH in differential carrier to install.

15) Perform the backlash adjustment between the hypoid driven gear and drive pinion, and preload adjustment of differential side bearing.

(1) Turn the drive pinion with ST for better fitting of differential side bearing.

ST 498427200 FLANGE WRENCH

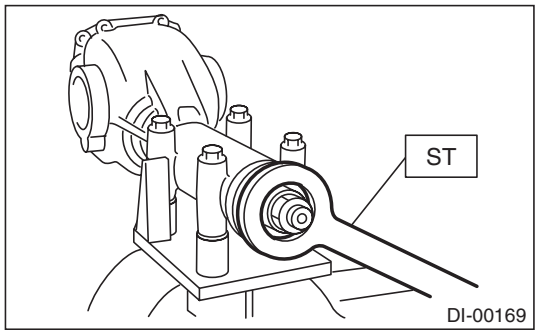

(2) Using the ST, tighten side retainer RH, and then tighten side retainer LH until there is no backlash.

ST 18630AA010 WRENCH COMPL RETAINER

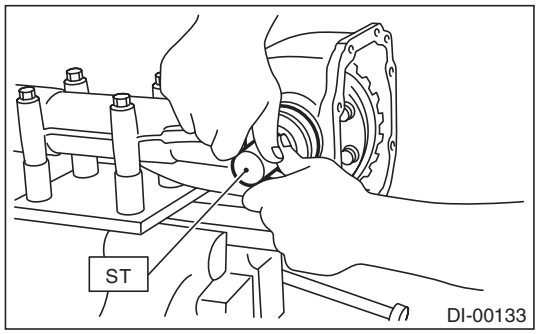

(3) Loosen the side retainer LH by approx. 1 and 1/2 teeth, and tighten the side retainer RH by approx. 2 teeth [amount that the side retainer LH is turned back (1 and 1/2) + approx. 0.5 teeth]. Difference between [amount that the side retainer LH is turned back (approx. 1 and 1/2 teeth)] and [amount that the side retainer RH is tightened (approx. 2 teeth)] gives preload.

(4) Temporarily tighten the lock plate.

NOTE:
Turn over the lock plate to shift the holder by 1/2 tooth.

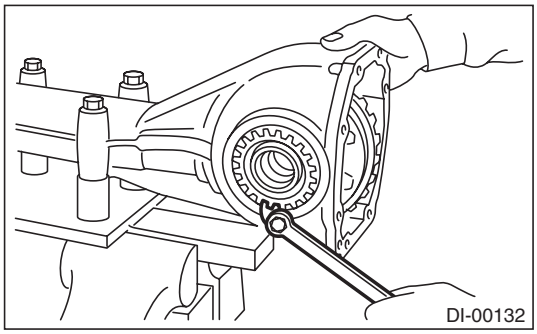

(5) Measure the hypoid driven gear-to-drive pinion backlash. Set the magnet base on differential carrier. Align the contact point of dial gauge with tooth face of hypoid driven gear, and move hypoid driven gear while holding drive pinion still. Read the value indicated on dial gauge.

NOTE:
If measured value of backlash is not within the specified range, repeat the procedures for pinion driven gear set backlash adjustment and the differential side bearing preload adjustment.

Backlash:
0.10 — 0.15 mm (0.004 — 0.006 in)

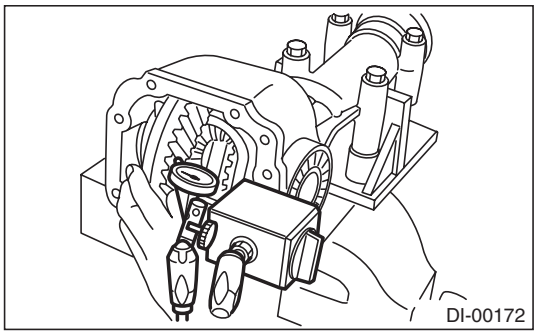

GETtheMANUALS.org

16) Put alignment marks on both the differential carrier and side retainer. Remove the side retainers one side at a time. After installing an O-ring and applying oil to the threaded portion, restore them to the original position.

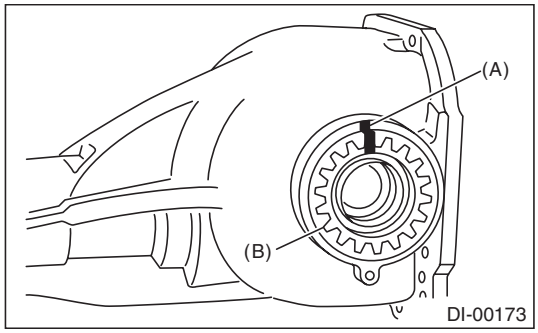

(A) Alignment mark
(B) Side retainer

17) Install the lock plate, and tighten the bolts to the specified torque.

Tightening torque:
25 N·m (2.5 kgf-m, 18.4 ft-lb)

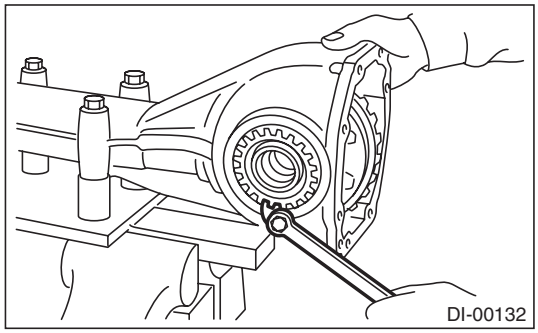

18) Recheck the backlash between hypoid driven gear and drive pinion.

Backlash:
0.10 — 0.15 mm (0.004 — 0.006 in)

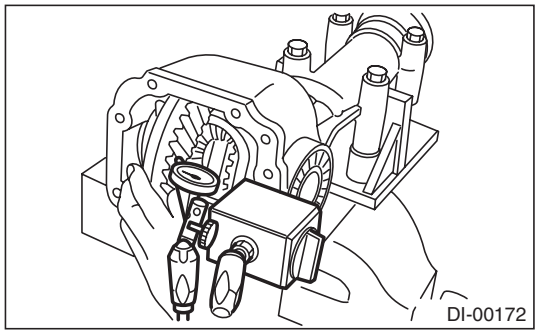

19) Checking and adjusting the tooth contact of hypoid driven gear

(1) Apply lead-free red dye evenly on the both sides of three to four teeth of the hypoid driven gear. Check the contact pattern after rotating the hypoid driven gear several revolutions back and forth until a definite contact pattern appears on the hypoid driven gear.

(2) When the contact pattern is not correct, readjust.

NOTE:
Be sure to wipe off the lead-free red dye completely after the adjustment is completed.

- Correct tooth contact
  Check item: Tooth contact pattern is slightly shifted toward toe side under no-load rotation. (When driving, it moves towards the heel side.)

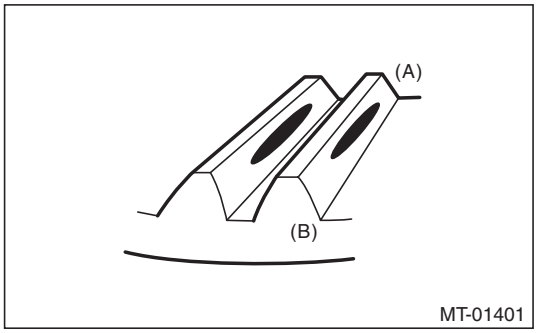

(A) Toe side
(B) Heel side

GETtheMANUALS.org

- Face contact

Check item: Backlash is too large.

Contact pattern

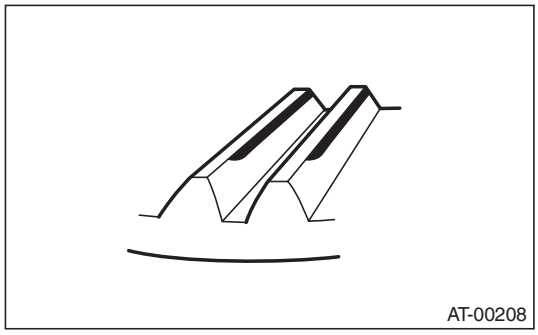

Corrective action: Increase thickness of pinion height adjusting washer according to the procedure for bringing drive pinion close to hypoid driven gear side.

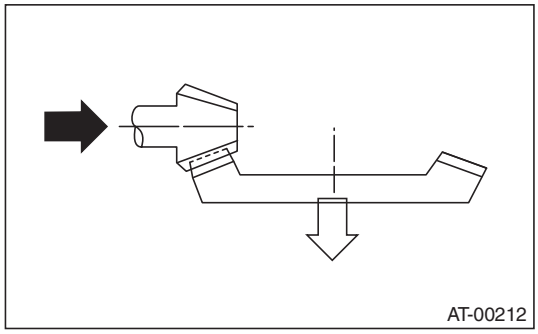

- Flank contact

Check item: Backlash is too small.

Contact pattern

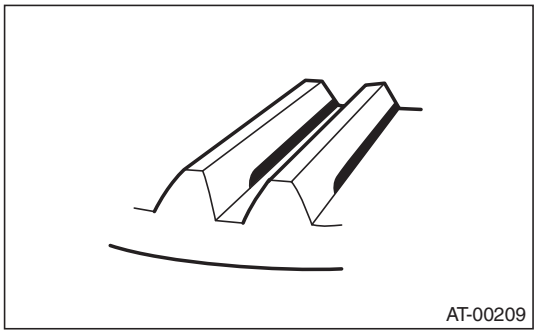

Corrective action: Reduce the thickness of pinion height adjusting washer according to the procedure for bringing drive pinion away from hypoid driven gear.

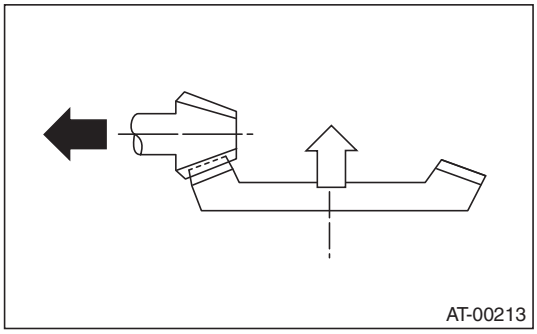

GETtheMANUALS.org

- Toe contact (inside contact)

Check item: Teeth contact area is too small.
Contact pattern

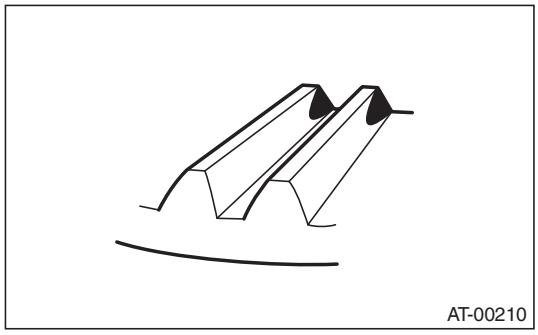

Corrective action: Reduce the thickness of pinion height adjusting washer according to the procedure for bringing drive pinion away from hypoid driven gear side.

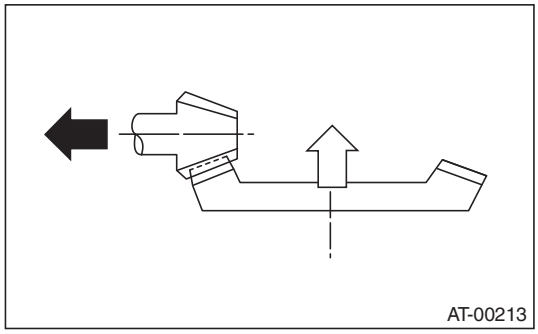

- Heel contact (outside end contact)

Check item: Teeth contact area is too small.
Contact pattern

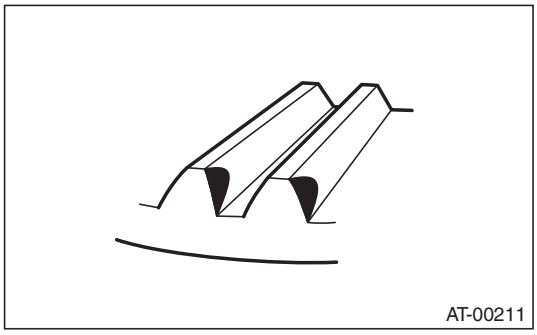

Corrective action: Increase thickness of pinion height adjusting washer according to the procedure for bringing drive pinion close to hypoid driven gear side.

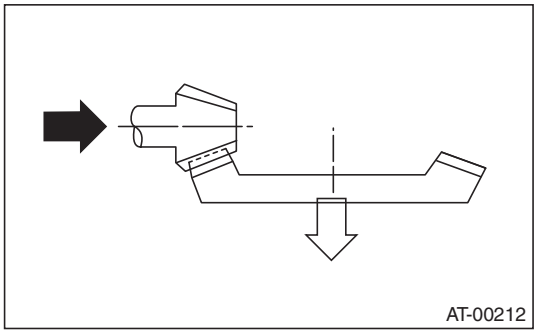

20) If correct tooth contact is not obtained, readjust the drive pinion height and the differential side bearing preload (already mentioned) and the hypoid gear backlash.
21) Install the gasket and rear cover to the differential carrier, and tighten the bolts to specified torque.

NOTE:
Use a new gasket.

Tightening torque:
25 N·m (2.5 kgf-m, 18.4 ft-lb)

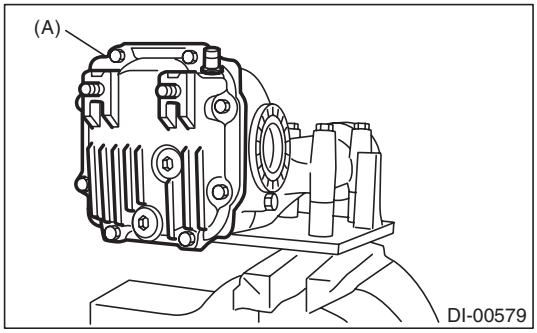

(A) Rear cover

GETtheMANUALS.org

22) Install the air breather cap.

NOTE:
When installing the air breather cap, do not tap section (A). Be sure to tap section (B) to install.

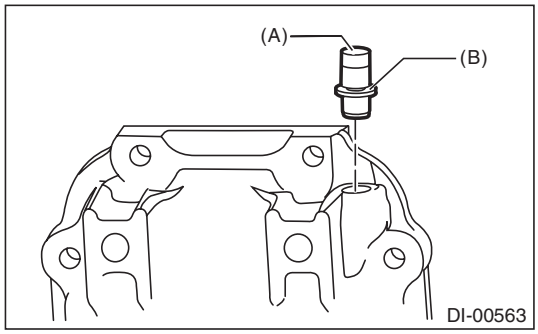

23) Install the drain plug.

NOTE:
Use a new gasket.

Tightening torque:
50 N·m (5.1 kg-m, 36.9 ft-lb)

24) Install the filler plug.

NOTE:
After installing the rear differential assembly to the vehicle, fill the gear oil, then use a new gasket, and tighten to the specified torque. <Ref. to DI-23, REPLACEMENT, Differential Gear Oil.>

2. VA2-TYPE

NOTE:
- Assemble in the reverse order of disassembly.
- Check and adjust each part during assembly.
- Use new gaskets and O-rings.
- Keep the shims and washers in order, so that they are not improperly installed.
- Thoroughly clean the surfaces on which the shims, washers and bearings are to be installed.
- Apply gear oil when installing the bearings and thrust washers.
- Attach tags not to mix up the RH and LH bearing races.
- Replace the oil seal and O-ring with a new part at every disassembly.
- Apply differential gear oil to the lips when installing the oil seal.

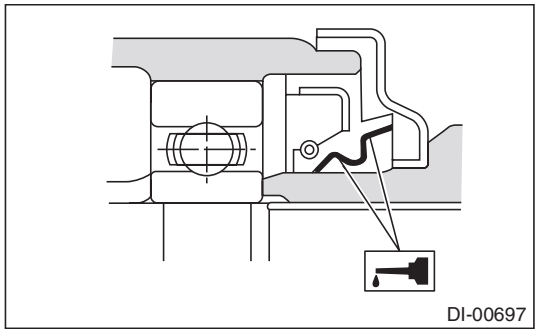

1) Adjusting preload for front and rear bearings

NOTE:
Adjust the bearing preload between front and rear bearings with preload adjusting spacer and washer. Pinion height adjusting washer is not affected by this adjustment. The adjustment must not be carried out with oil seal inserted.

(1) Install the rear bearing race into the differential carrier using ST1 and ST2.

ST1 398477701 HANDLE
ST2 398477703 DRIFT 2

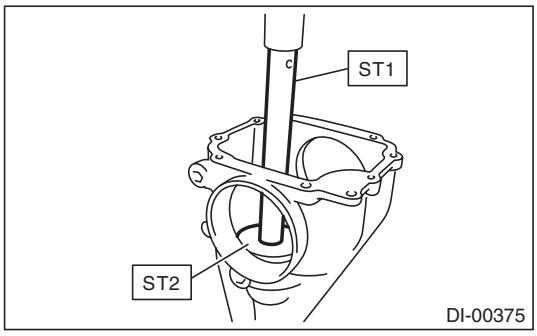

(2) Using the ST, press-fit the front bearing race to the differential carrier.

ST 499277200 INSTALLER

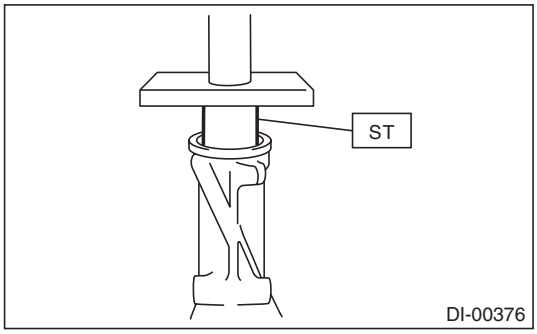

(3) Insert the front bearing cone.

NOTE:
Use new front bearing cone.

(4) Measure and record the thickness of the pinion height adjusting washer.

NOTE:
If tooth contact (drive pinion and hypoid driven gear) is normal in the inspection before disassembling, verify that the washer is not deformed, and then reuse the used washer.

(5) Insert the ST1 into carrier with the pinion height adjusting washer and rear bearing cone fitted onto it.

NOTE:
Use new rear bearing cone.

GETtheMANUALS.org

(6) Install the preload adjusting spacer, washer, front bearing cone, spacer, pilot bearing, companion flange, and self-locking nut.

ST1 18678AA000 DUMMY SHAFT

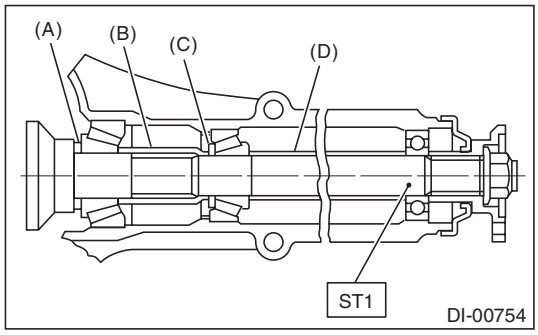

(A) Pinion height adjusting washer
(B) Preload adjusting spacer
(C) Preload adjusting washer
(D) Spacer

(7) Turn the ST1 by hand to smooth the bearing, and tighten the self-locking nut while measuring the initial load or initial torque with a spring scale or torque wrench. Select the preload adjusting washer and spacer so that the specified preload is obtained when nut is tightened to the specified torque.

NOTE:
- Use a new self-locking nut.
- Measure the preload in direction of tangent to the flange.
- Be careful not to give excessive preload.
- When tightening the self-locking nut, lock companion flange with ST2 as shown in the figure.

ST1 18678AA000 DUMMY SHAFT
ST2 498427200 FLANGE WRENCH

Tightening torque:
191 N·m (19.5 kgf-m, 140.9 ft-lb)

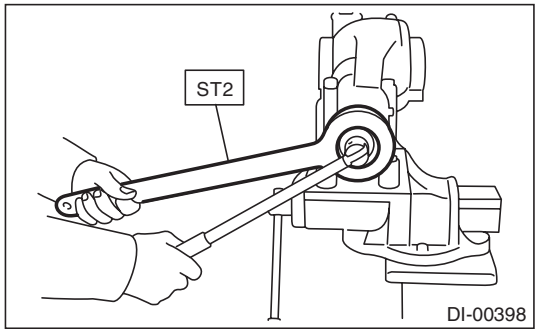

Initial load:
12.7 — 32.2 N (1.3 — 3.3 kgf, 2.9 — 7.2 lbf)

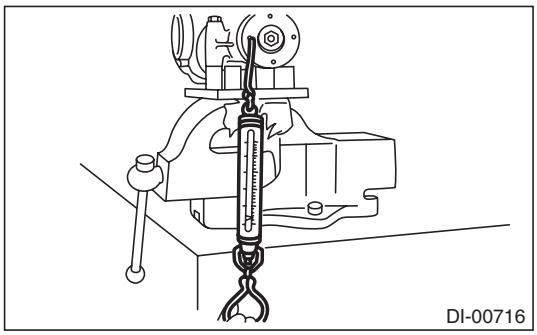

Initial torque:
0.48 — 1.22 N·m (0.05 — 0.12 kgf-m, 0.35 — 0.90 ft-lb)

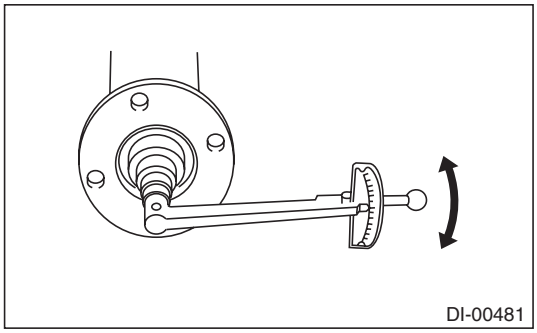

GETtheMANUALS.org

Preload adjusting washer	
Part No.	Thickness mm (in)
38336AA430	1.500 (0.0591)
38336AA440	1.513 (0.0596)
38336AA450	1.525 (0.0600)
38336AA460	1.538 (0.0606)
38336AA470	1.550 (0.0610)
38336AA480	1.563 (0.0615)
38336AA490	1.575 (0.0620)
38336AA500	1.588 (0.0625)
38336AA510	1.600 (0.0630)
38336AA520	1.613 (0.0635)
38336AA530	1.625 (0.0640)
38336AA540	1.638 (0.0645)
38336AA550	1.650 (0.0650)
38336AA560	1.663 (0.0655)
38336AA570	1.675 (0.0659)
38336AA580	1.688 (0.0665)
38336AA590	1.700 (0.0669)
38336AA600	1.713 (0.0674)
38336AA610	1.725 (0.0679)
38336AA620	1.738 (0.0684)
38336AA630	1.750 (0.0689)
38336AA640	1.763 (0.0694)
38336AA650	1.775 (0.0699)

Preload adjusting spacer	
Part No.	Length mm (in)
31454AA250	51.05 (2.010)
31454AA260	51.25 (2.018)
31454AA270	51.35 (2.022)
31454AA280	51.45 (2.026)
31454AA290	51.55 (2.030)
31454AA300	51.65 (2.033)
31454AA310	51.75 (2.037)
31454AA320	51.85 (2.041)
31454AA330	52.05 (2.049)

2) Adjusting drive pinion height:
Adjust the drive pinion height with pinion height adjusting washer installed between the rear bearing cone and the back of pinion gear.

(1) Attach the ST2.

NOTE:
At this time, install a provisionally selected or previously used pinion height adjusting washer.

ST1 18678AA000 DUMMY SHAFT
ST2 18831AA010 DIFFERENTIAL CARRIER GAUGE

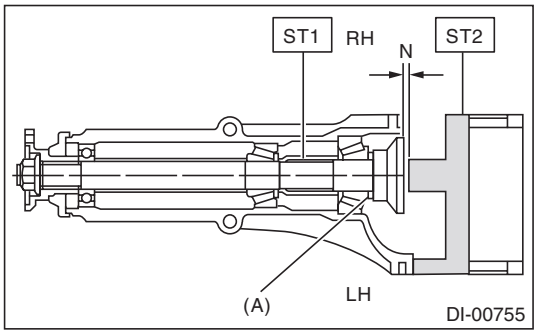

(A) Pinion height adjusting washer

(2) Install the side retainer LH to the left side of the differential carrier in reverse direction.

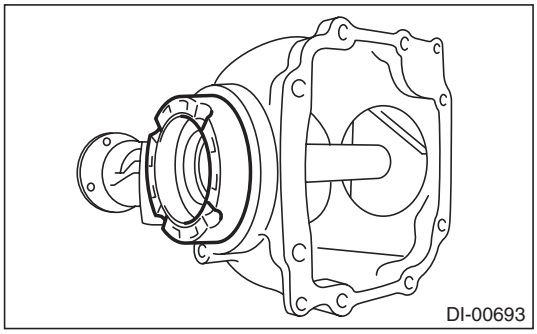

GETtheMANUALS.org

(3) Measure the clearance “N” between the end of ST2 and the end surface of ST1 by using a thickness gauge.

NOTE:
Make sure there is no clearance between the differential carrier and ST2.

ST1 18678AA000 DUMMY SHAFT
ST2 18831AA010 DIFFERENTIAL CARRIER GAUGE

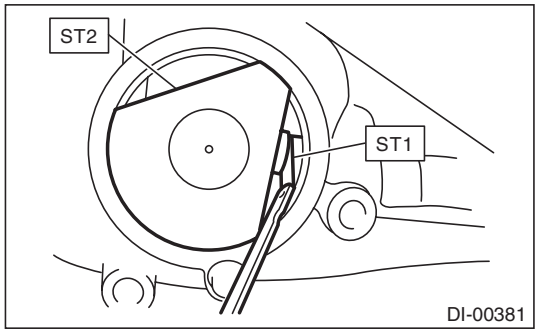

(4) Obtain the thickness of pinion height adjusting washer to be inserted from the following formula, and replace the temporarily installed washer with this one.

NOTE:
Adjust it using the 1 — 3 washers.
T = To + N – 0.05 mm (0.0020 in)

T	Thickness of pinion height adjusting washer mm (in)	
To	Thickness of washer temporarily inserted mm (in)	
N	Clearance of thickness gauge mm (in)	
Memo:		

(Example of calculation)
To = 0.15 mm (0.0059 in)
N = 0.1 mm (0.0039 in)
T = 0.15 mm (0.0059 in) + 0.1 mm (0.0039 in) – 0.05 mm (0.0020 in) = 0.2 mm (0.0079 in)
Result: Thickness = 0.2 mm (0.0079 in)
Therefore use part number 32295AA370.

Pinion height adjusting washer	
Part No.	Thickness mm (in)
32295AA350	0.150 (0.0059)
32295AA360	0.175 (0.0069)
32295AA370	0.200 (0.0079)
32295AA380	0.225 (0.0089)
32295AA390	0.250 (0.0098)
32295AA400	0.275 (0.0108)

3) Install the selected pinion height adjusting washer on drive pinion, and press the rear bearing cone into position with ST.

ST 398177700 INSTALLER

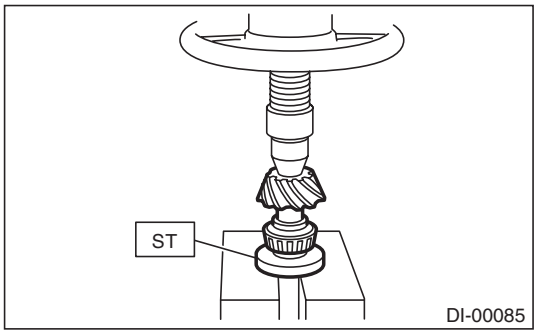

4) Insert the drive pinion into the differential carrier, and install the preselected preload adjusting spacer and washer.

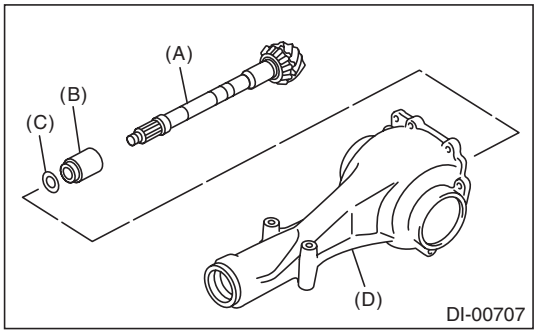

(A) Drive pinion
(B) Preload adjusting spacer
(C) Preload adjusting washer
(D) Differential carrier

5) Set ST and differential carrier to the press and install the front bearing cone.

ST 399780104 WEIGHT

NOTE:
Set the carrier to the press until the companion flange is installed.

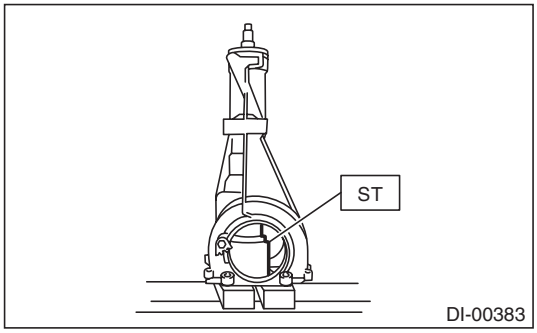

GETtheMANUALS.org

6) Insert the spacer, then install the pilot bearing.

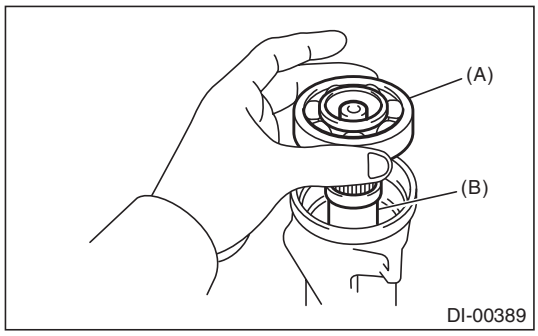

(A) Pilot bearing
(B) Spacer

7) Using the ST, install the oil seal.

NOTE:
- Use a new oil seal.
- Press-fit until the oil seal end comes 1 mm (0.04 in) inward from end of carrier.
- Apply differential gear oil to the oil seal lips.

ST 499277200 INSTALLER

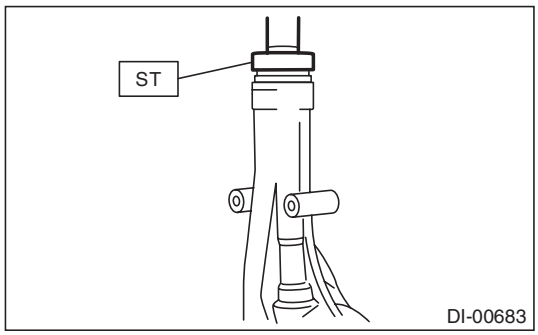

8) Press-fit the companion flange with ST.

NOTE:
Be careful not to damage the bearing.

ST 899874100 INSTALLER

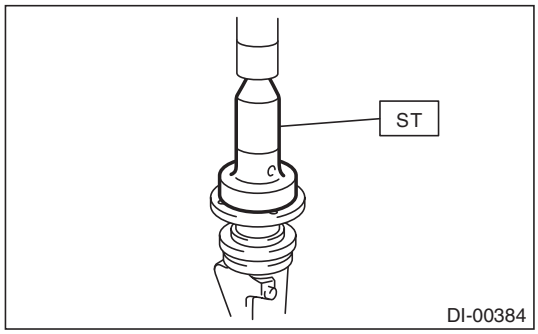

9) Apply seal material on the drive pinion shaft thread and new self-locking nut seat.

Seal material:
THREE BOND 1324 (Part No. 004403042) or equivalent

10) Install the self-locking nut while holding the companion flange with ST.

Tightening torque:
191 N·m (19.5 kgf-m, 140.9 ft-lb)

ST 498427200 FLANGE WRENCH

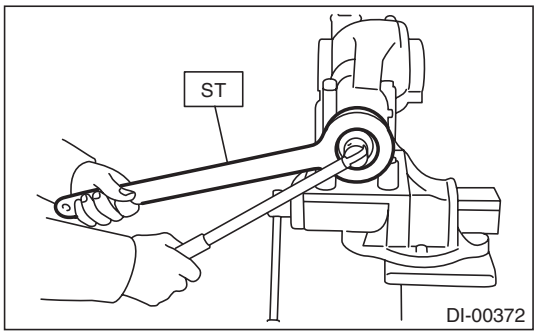

11) Check the initial torque or initial load.

Initial load:
12.7 — 32.2 N (1.3 — 3.3 kgf, 2.9 — 7.2 lbf)

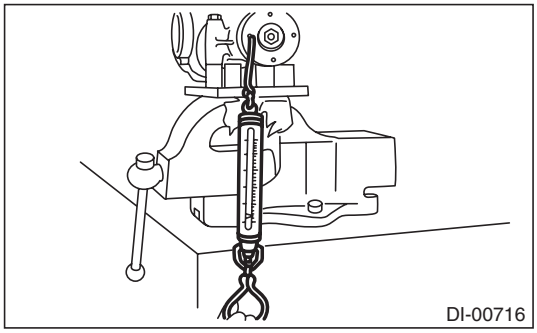

Initial torque:
0.48 — 1.22 N·m (0.05 — 0.12 kgf-m, 0.35 — 0.90 ft-lb)

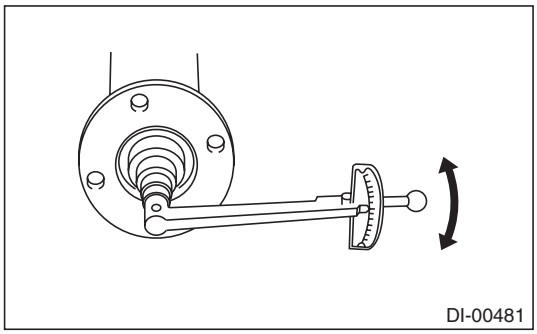

GETtheMANUALS.org

12) Assembling differential case
(1) Attach the circlip to the side gear.

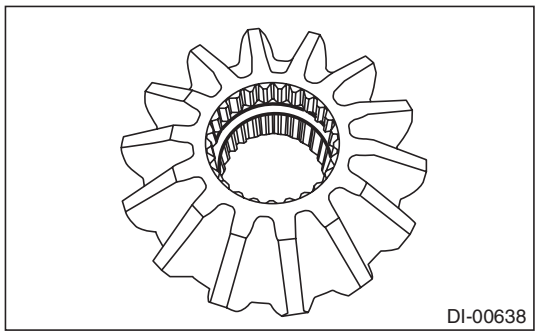

(2) Install the side gears and pinion mate gears, with their thrust washers and pinion mate shaft, into the differential case.

NOTE:
• Apply gear oil on both sides of the washer and on the side gear shaft before installing.
• Insert the pinion mate shaft into the differential case by aligning the pin holes.

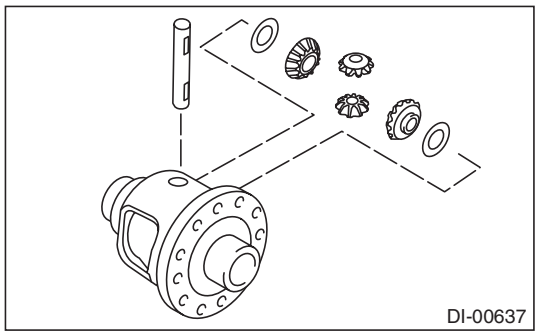

(3) Measure the side gear backlash.

Side gear backlash:
0.13 — 0.18 mm (0.005 — 0.007 in)

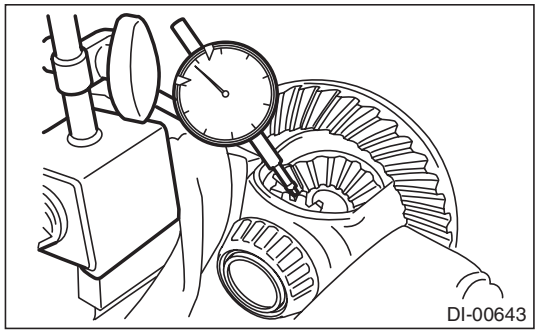

(4) Adjust the side gear backlash as specified by selecting side gear thrust washer.

Side gear thrust washer	
Part No.	Thickness mm (in)
803038021	0.950 (0.0374)
803038022	1.000 (0.0394)
803038023	1.050 (0.0413)

(5) Check the condition of rotation after applying oil to the gear tooth surfaces and thrust washer surfaces.
(6) Attach the spring pin to the differential case.

NOTE:
Use new spring pin.

13) Install the hypoid driven gear to differential case.

NOTE:
• Set a cushioning such as wooden block, aluminum plate or shop cloth between vise and differential case if the side gear comes into contact with vise.
• Before installing bolts, apply seal material to bolt threads.

Seal material:
THREE BOND 1324 (Part No. 004403042) or equivalent

• Tighten opposing bolts in order.
(1) Tighten the hypoid driven gear mounting bolts to the specified torque using the ST.

ST 18270KA020 SOCKET (E20)

Tightening torque:
20 N·m (2.0 kgf-m, 14.8 ft-lb)

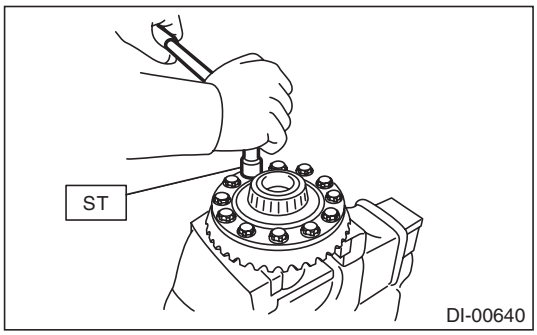

(2) While checking the tightening angle with the ST, further tighten the hypoid driven gear mounting bolts.

Tightening angle:
33°±2°

ST 18554AA000 ANGLE GAUGE

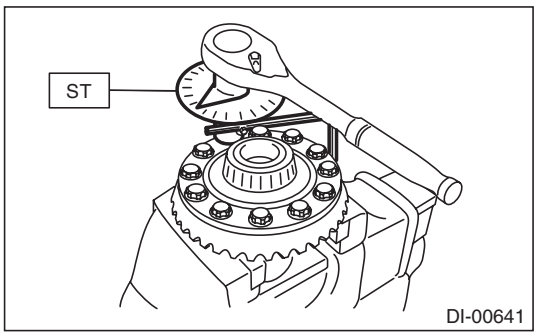

GETtheMANUALS.org

14) Using the ST, press-fit the side bearing to the differential case.
ST 398487700 DRIFT

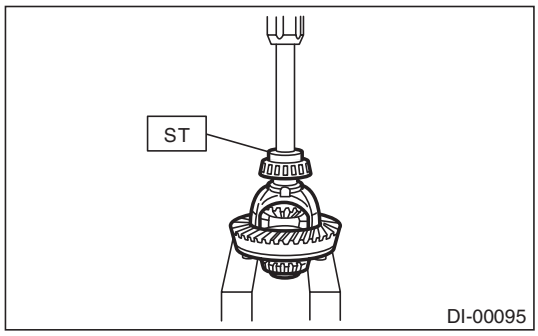

15) Assemble the side retainer.
(1) Install the oil seal into side retainer RH and LH.

NOTE:
Use a new oil seal.
ST 498447100 INSTALLER

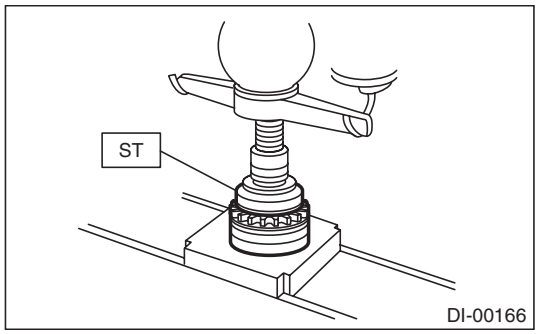

(2) Install the bearing race into side retainer RH and LH.

CAUTION:
Make sure that the bearing outer races and cones are properly assembled.
ST 398417700 DRIFT

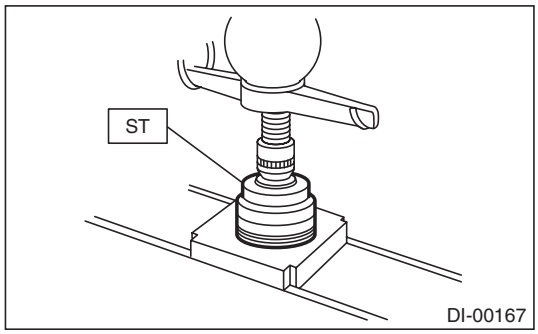

(3) Install the differential case assembly into differential carrier in the reverse order of disassembly.

NOTE:
Be careful not to hit the teeth of hypoid driven gear against the differential carrier.

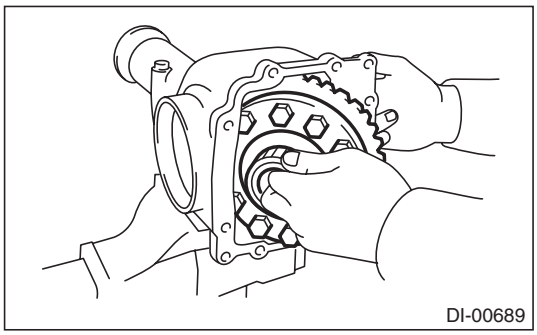

(4) Temporally tighten the side retainers RH and LH in differential carrier to install.

16) Perform the backlash adjustment between the hypoid driven gear and drive pinion, and side bearing preload adjustment.
(1) Turn the drive pinion with ST for better fitting of differential side bearing.
ST 498427200 FLANGE WRENCH

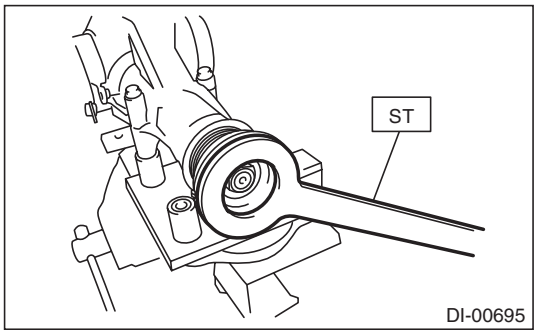

(2) Using the ST, tighten side retainer RH, and then tighten side retainer LH until there is no backlash.
ST 18630AA010 WRENCH COMPL RETAINER

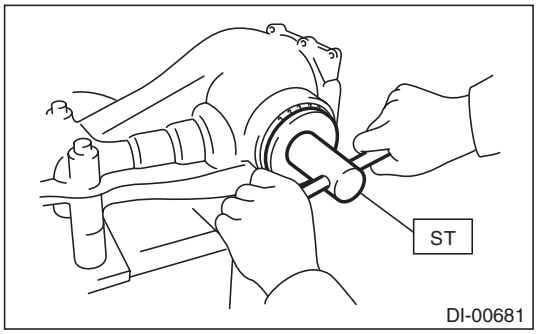

GETtheMANUALS.org

(3) Back off the side retainer LH by approx. 1.5 teeth, and tighten the side retainer RH by approx. 2 teeth [amount that the side retainer LH is turned back (1.5) + 1/2 teeth].

NOTE:
Difference between [amount that the side retainer LH is turned back (approx. 1 and 1/2 teeth)] and [amount that the side retainer RH is tightened (approx. 2 teeth)] gives preload.

(4) Temporarily attach the lock plate.

NOTE:
Turn over the lock plate to shift the holder by 1/2 teeth.

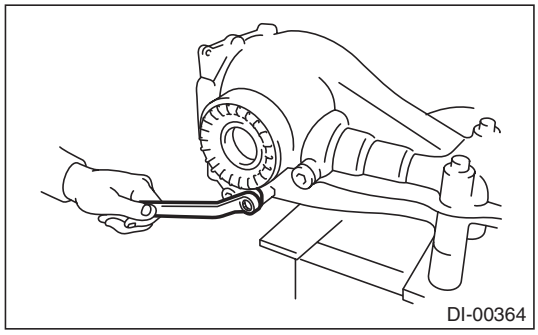

(5) Measure the hypoid driven gear-to-drive pinion backlash. Set the magnet base on differential carrier. Align the contact point of dial gauge with tooth face of hypoid driven gear, and move hypoid driven gear while holding drive pinion still. Read the value indicated on dial gauge.

NOTE:
If measured value of backlash is not within the specified range, repeat the procedures for the backlash adjustment between hypoid driven gear and drive pinion, and the differential side bearing preload adjustment.

Backlash:
0.10 — 0.15 mm (0.004 — 0.006 in)

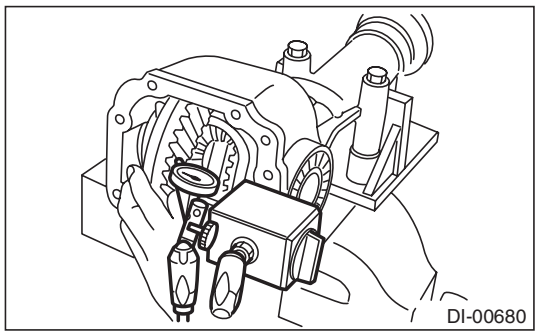

17) Put alignment marks on both the differential carrier and side retainer. Remove the side retainers one side at a time. After installing an O-ring and applying differential gear oil to the threaded portion, restore them to the original position.

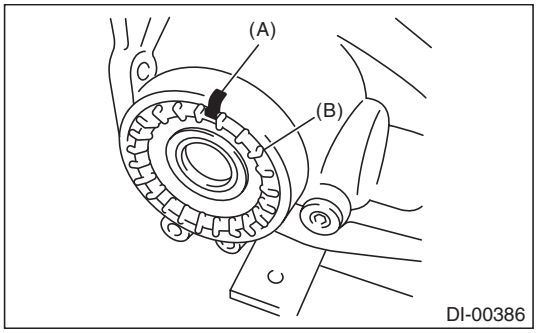

(A) Alignment mark
(B) Side retainer

18) Tighten the bolt of lock plate to specified torque.

Tightening torque:
25 N·m (2.5 kgf-m, 18.4 ft-lb)

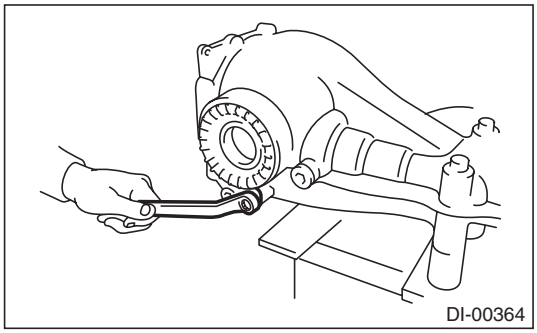

19) Recheck the hypoid driven gear to pinion backlash.

Backlash:
0.10 — 0.15 mm (0.004 — 0.006 in)

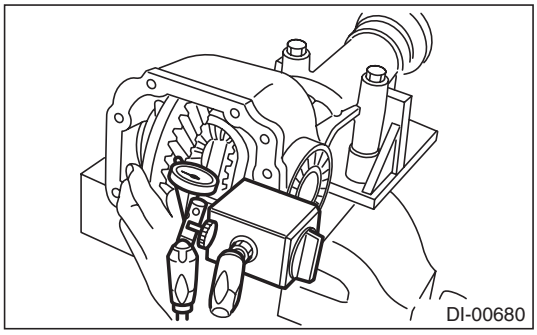

GETtheMANUALS.org

20) Checking and adjusting the tooth contact of hypoid driven gear

(1) Apply lead-free red dye evenly on the both sides of three to four teeth of the hypoid driven gear. Check the contact pattern after rotating the hypoid driven gear several revolutions back and forth until a definite contact pattern appears on the hypoid driven gear.

(2) When the contact pattern is not correct, readjust.

NOTE:
Be sure to wipe off the lead-free red dye completely after the adjustment is completed.

- Correct tooth contact

Check item: Tooth contact pattern is slightly shifted toward toe side under no-load rotation. (When driving, it moves towards the heel side.)

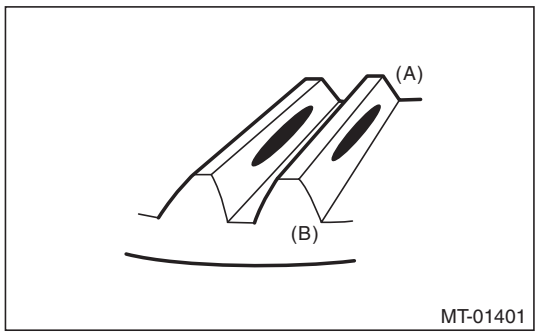

(A) Toe side
(B) Heel side

- Face contact

Check item: Backlash is too large.
Contact pattern

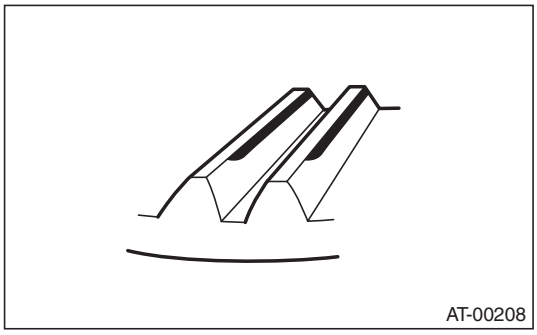

Corrective action: Increase thickness of pinion height adjusting washer according to the procedure for bringing drive pinion close to hypoid driven gear side.

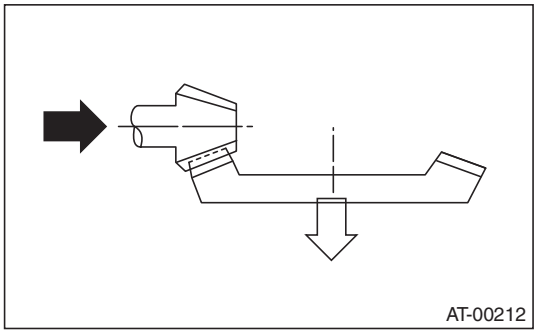

GETtheMANUALS.org

- Flank contact

Check item: Backlash is too small.

Contact pattern

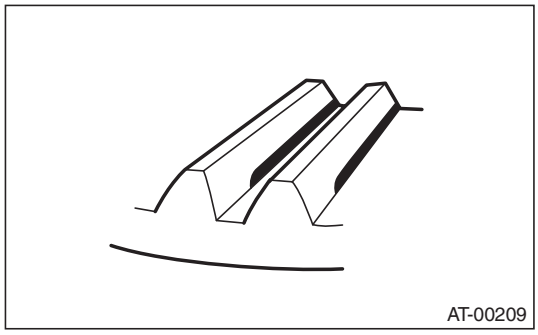

Corrective action: Reduce the thickness of pinion height adjusting washer according to the procedure for bringing drive pinion away from hypoid driven gear.

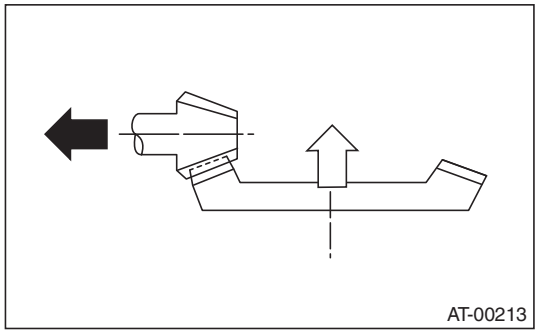

- Toe contact (inside contact)

Check item: Teeth contact area is too small.

Contact pattern

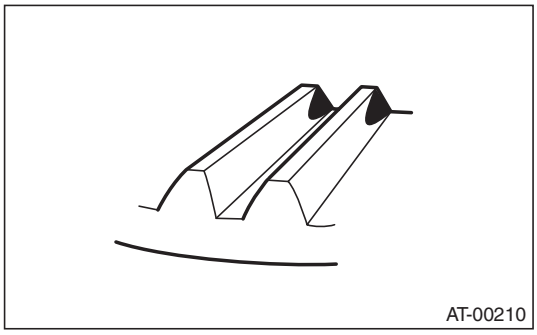

Corrective action: Reduce the thickness of pinion height adjusting washer according to the procedure for bringing drive pinion away from hypoid driven gear.

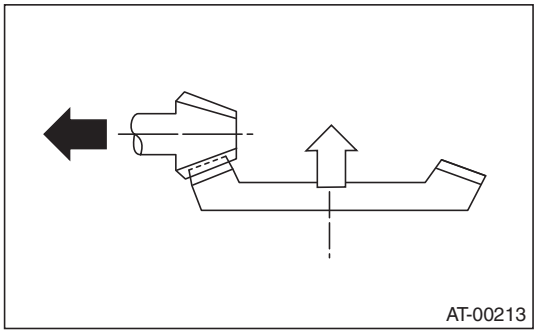

GETtheMANUALS.org

- Heel contact (outside end contact)

Check item: Teeth contact area is too small.
Contact pattern

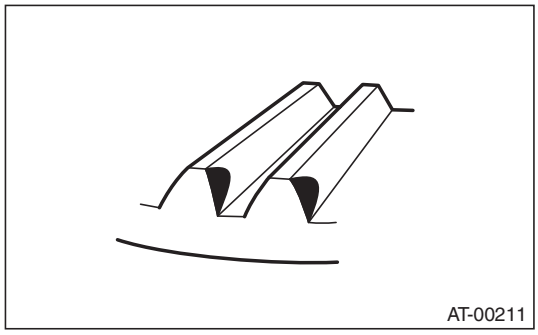

Corrective action: Increase thickness of pinion height adjusting washer according to the procedure for bringing drive pinion close to hypoid driven gear side.

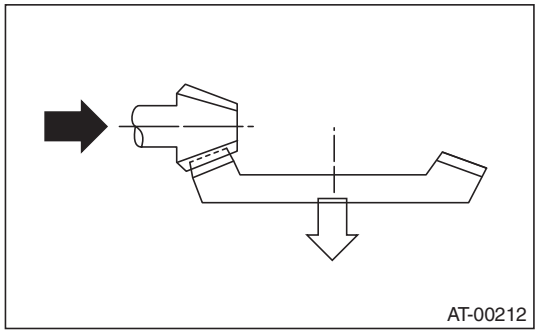

21) If correct tooth contact is not obtained, readjust the drive pinion height and the differential side bearing preload (already mentioned) and the hypoid gear backlash.
22) Install the gasket and rear cover to the differential carrier, and tighten the bolts to specified torque.

NOTE:
Use a new gasket.

Tightening torque:
34 N·m (3.5 kgf-m, 25.1 ft-lb)

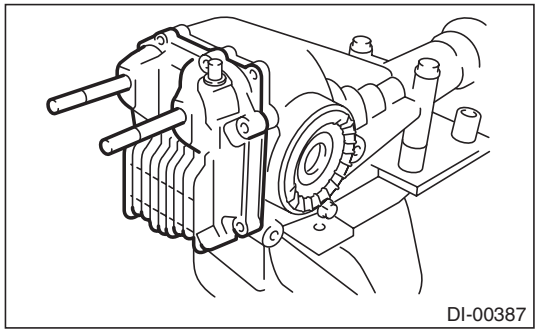

23) Install the air breather cap.

NOTE:
When installing the air breather cap, do not tap section (A). Be sure to tap section (B) to install.

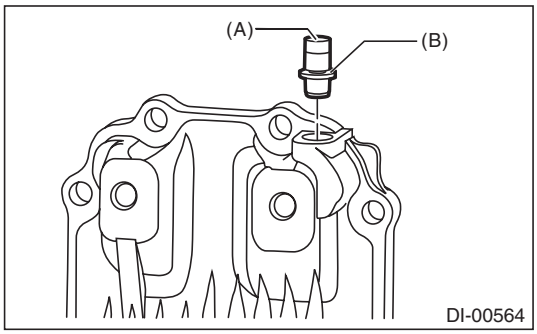

24) Install the drain plug.

NOTE:
Use a new gasket.

Tightening torque:
50 N·m (5.1 kgf-m, 36.9 ft-lb)

25) Install the filler plug.

NOTE:
After installing the rear differential assembly to the vehicle, fill the gear oil, then use a new gasket, and tighten to the specified torque. <Ref. to DI-23, REPLACEMENT, Differential Gear Oil.>

E: INSPECTION

Wash all the disassembled parts clean, and examine them for wear, damage or other defects. Repair or replace the defective parts as necessary.
1) Hypoid driven gear and drive pinion
- If there is evidently an abnormal tooth contact, find out the cause and adjust until the teeth contact correctly. Replace the gear if there is an excessive worn or an incapable adjustment.
- If crack, cutout or seizure is found, replace the parts as a set. Slight damage of some teeth can be corrected by oil stone or the like.

2) Side gear and pinion mate gear
- Replace if cracks, scoring or other defects are evident on the tooth surface.
- Replace if thrust washer contact surface is worn or seized. Slight damages of the surface can be corrected by oil stones or equivalent.

3) Bearing
Replace if seizure, peeling, wear, rust, dragging during rotation, noise or other defect is evident.
4) Thrust washer of the side gear and pinion mate gear:
Replace if seized, flawed, abnormally worn or having other defects.
5) Oil seal
Replace if deformed or damaged, and at every disassembling.

GETtheMANUALS.org

6) Differential carrier
Replace if the bearing bores are worn or damaged.
7) Differential case
Replace if its sliding surfaces are abnormally worn, burned, or cracked.
8) Companion flange
Replace if the oil seal lip contact surface shows cracking.

1. SIDE GEAR BACKLASH

Using a dial gauge, check the backlash of side gear.

Side gear backlash:
VA1-type:
0.05 — 0.15 mm (0.002 — 0.006 in)
VA2-type:
0.13 — 0.18 mm (0.005 — 0.007 in)

If the side gear backlash is outside the specification range, select the side gear thrust washer and adjust the side gear backlash as specified.

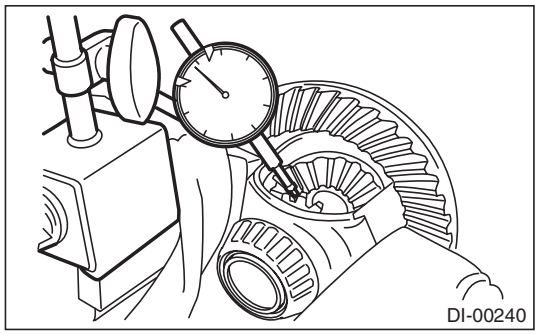

2. HYPOID DRIVEN GEAR BACKLASH

Using a dial gauge, check the backlash of hypoid driven gear.

Hypoid driven gear backlash:
0.10 — 0.15 mm (0.004 — 0.006 in)

If the hypoid driven gear backlash is outside the specification range, adjust the side bearing preload and repair if necessary.

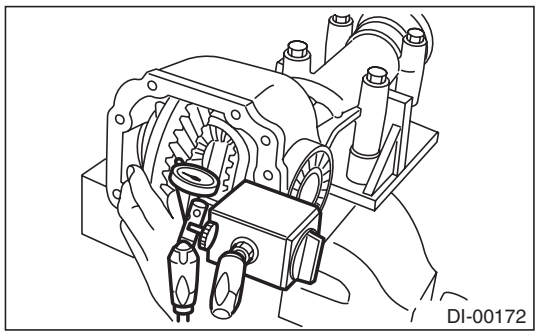

3. COMPANION FLANGE

1) If rust or dirt is attached to the companion flange, remove them.
2) Set a dial gauge at a companion flange surface (mating surface of propeller shaft and companion flange), and then measure the companion flange runout.

Limit of runout:
0.08 mm (0.003 in)

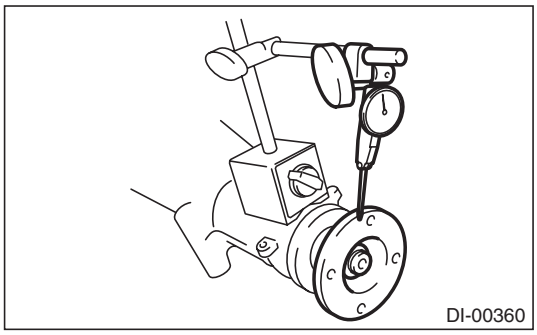

3) Set the gauge inside of the companion flange, and measure the runout.

Limit of runout:
0.08 mm (0.003 in)

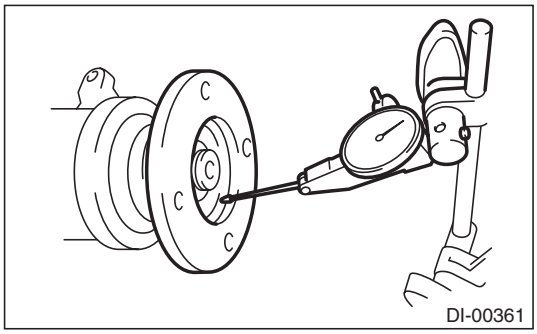

4) If either runout exceeds the limit, move the phase of companion flange and drive pinion 90° each, and find the point where the runout is within the limit.
5) If the runout exceeds the limit even after changing the phase, replace the companion flange and recheck the runout.
6) If the runout exceeds the limit after replacing the companion flange, the drive pinion may be assembled incorrectly or bearing is faulty.

4. TOOTH CONTACT BETWEEN HYPOID DRIVEN GEAR AND DRIVE PINION

Inspect the tooth contact between the hypoid driven gear and drive pinion. <Ref. to DI-52, ASSEMBLY, Rear Differential (VA-type).>

GETtheMANUALS.org

F: ADJUSTMENT

1. SIDE GEAR BACKLASH

Adjust the side gear backlash. <Ref. to DI-52, ASSEMBLY, Rear Differential (VA-type).>

2. HYPOID DRIVEN GEAR BACKLASH

Adjust hypoid driven gear backlash. <Ref. to DI-52, ASSEMBLY, Rear Differential (VA-type).>

3. TOOTH CONTACT BETWEEN HYPOID DRIVEN GEAR AND DRIVE PINION

Adjust the tooth contact between hypoid driven gear and drive pinion gear. <Ref. to DI-52, ASSEMBLY, Rear Differential (VA-type).>

GETtheMANUALS.org

6. Rear Differential Front Oil Seal

A: INSPECTION

Make sure that there is no leakage from front oil seal portion. If there is any leakage, replace the oil seal and inspect the propeller shaft.

B: REPLACEMENT

1) Shift the select lever or gear shift lever to neutral.
2) Release the parking brake.
3) Disconnect the ground cable from battery.
4) Lift up the vehicle.
5) Drain differential gear oil. <Ref. to DI-23, REPLACEMENT, Differential Gear Oil.>
6) Remove the rear exhaust pipe.
- 2.5 L SOHC model

<Ref. to EX(H4SO)-9, REMOVAL, Rear Exhaust Pipe.>
- 2.5 L DOHC turbo model

<Ref. to EX(H4DOTC)-15, REMOVAL, Rear Exhaust Pipe.>
- 3.6 L model

<Ref. to EX(H6DO)-8, REMOVAL, Rear Exhaust Pipe.>

7) Remove the heat shield cover.

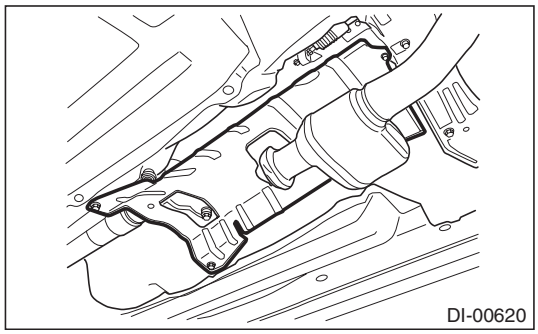

8) Remove the propeller shaft. <Ref. to DS-10, REMOVAL, Propeller Shaft.>
9) Check the initial torque and write it down.
10) Remove the self-locking nut while holding the companion flange with ST.
ST 498427200 FLANGE WRENCH

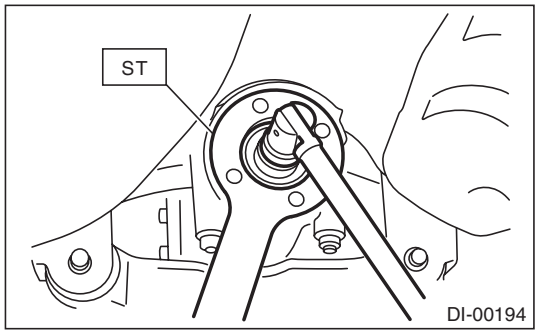

11) Extract the companion flange using the ST.
ST 399703600 PULLER ASSY

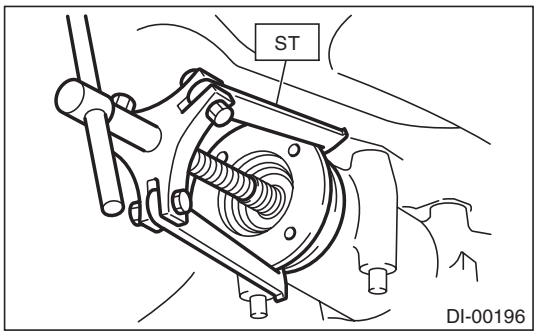

12) Remove the oil seal using ST or screwdriver.
ST 398527700 PULLER ASSY

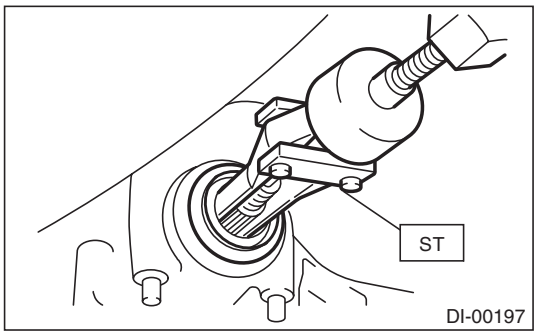

13) Using the ST, install the oil seal.

NOTE:
- Use a new oil seal.
- Apply differential gear oil to the oil seal lips.

ST 498447120 INSTALLER

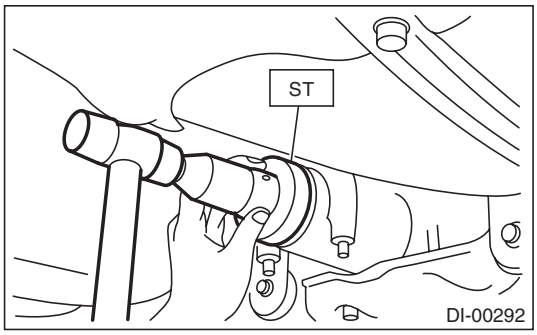

14) Install the companion flange.

NOTE:
Use a plastic hammer to install companion flange.

GETtheMANUALS.org

15) Tighten the self-locking nut to the specified torque so that the initial torque of companion flange becomes the same as that of before oil seal replacement.

NOTE:
- Use a new self-locking nut.
- Before installing the self-locking nut, apply the seal material to the threads of the drive pinion shaft and to the seating surface of the self-locking nut.

Seal material:
THREE BOND 1324 (Part No. 004403042) or equivalent

Tightening torque:
T-type
167 — 196 N·m (17.0 — 20.0 kgf-m, 123.2 — 144.6 ft-lb)
VA-type
162 — 220 N·m (16.5 — 22.5 kgf-m, 119.5 — 162.3 ft-lb)

ST 498427200 FLANGE WRENCH

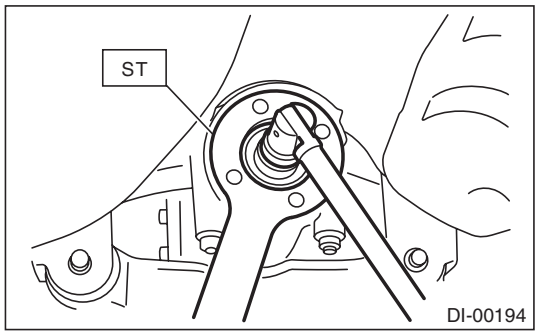

16) Hereafter, perform assembly in the reverse order of disassembly.
17) Fill differential gear oil. <Ref. to DI-23, REPLACEMENT, Differential Gear Oil.>

GETtheMANUALS.org

7. Rear Differential Side Oil Seal

A: INSPECTION

Make sure that there is no leakage from side oil seal. If there is any leakage, replace the oil seal.

B: REPLACEMENT

1) Remove the rear differential. <Ref. to DI-26, REMOVAL, Rear Differential (T-type).> <Ref. to DI-46, REMOVAL, Rear Differential (VA-type).>
2) Remove the rear differential side oil seal using a ST or screwdriver wrapped with vinyl tape to prevent the side retainer from scratching.
ST 398527700 PULLER ASSY
3) Using the ST, install the oil seal to the side retainer.

NOTE:
- Use a new oil seal.
- Apply differential gear oil to the oil seal lips.
- T-type and VA2-type

ST 398437700 DRIFT

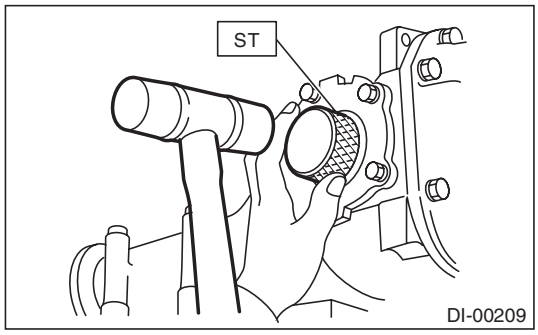

- VA1-type

ST 498447100 INSTALLER

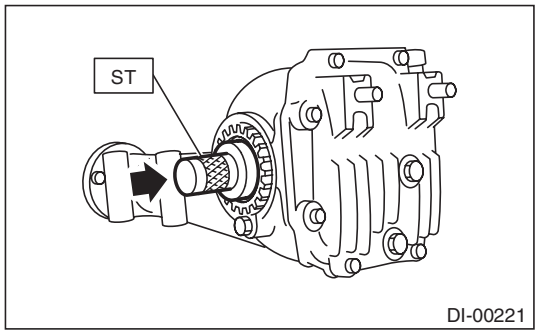

4) Install the rear differential. <Ref. to DI-28, INSTALLATION, Rear Differential (T-type).> <Ref. to DI-46, INSTALLATION, Rear Differential (VA-type).>

GETtheMANUALS.org

8. Rear Differential Front Member

A: REMOVAL

1) Disconnect the ground cable from battery.
2) Lift up the vehicle.
3) Support the rear differential using transmission jack, and then remove the rear differential front member.

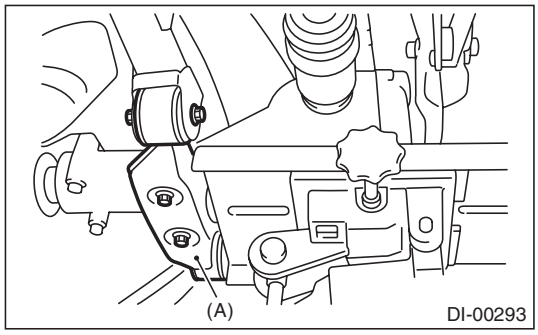

(A) Rear differential front member

B: INSTALLATION

Install the rear differential front member with a new self-locking nut.

Tightening torque:
T1: 50 N·m (5.1 kgf-m, 36.9 ft-lb)
T2: 110 N·m (11.2 kgf-m, 81.1 ft-lb)

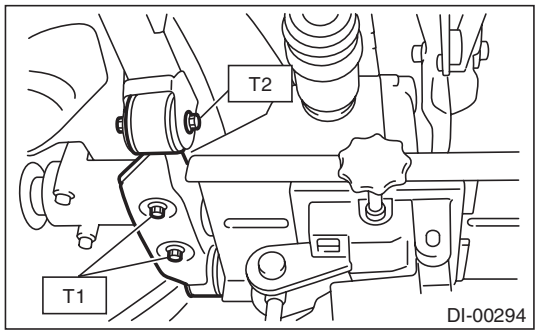

C: INSPECTION

1) Check the rear differential front member for damage, bend and corrosion.
If damage, bend or corrosion is excessive, replace the rear differential front member.
2) Check the bushings of rear differential member for cracking, hardening and damage. If cracking, hardening or damage is excessive, replace rear differential front member.

GETtheMANUALS.org

9. Rear Differential Mount Bushing

A: INSPECTION

Check the rear differential mount bushing for cracks, hardening or damage. If cracking, hardening or damage is excessive, replace rear differential mount bushing.

B: REPLACEMENT

CAUTION:
- **If there was so much rust in the rear differential mount bushing, remove the rust before starting work.**
- **Apply the molybdenum grease on the square thread of the ST (shaft and nut) before use.**

1) Remove the rear differential. <Ref. to DI-26, REMOVAL, Rear Differential (T-type).> <Ref. to DI-46, REMOVAL, Rear Differential (VA-type).>

2) Fit the ST to the periphery of the sub frame cylinder, and make sure that the ST does not contact with welded spots or spatters.

ST 41399FG010 SPECIAL TOOL A

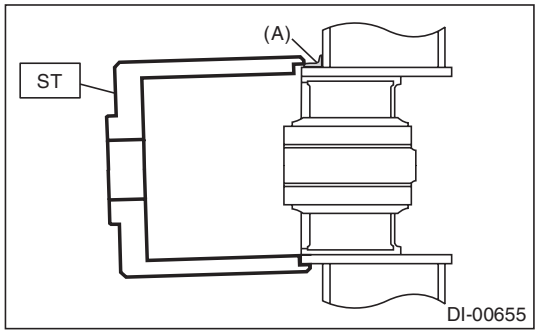

(A) Welded spot

3) If the ST contacts with welded spots or spatters, remove the excessive welds or spatters with sander or the equivalent so that the ST contacts the cylinder peripheral part.

CAUTION:
Performing the operation with the ST contacting with welded spots or spatters may break the ST. Be sure to remove excessive welds or spatters before the operation.

4) Set ST1, ST2, ST3, ST4 and ST5 as shown in the figure.

ST1 41399FG091 SPECIAL TOOL SHAFT
ST2 41399FG070 SPECIAL TOOL NUT
ST3 41399FG050 SPECIAL TOOL SLEEVE
ST4 41399FG080 SPECIAL TOOL BEARING
ST5 41399FG010 SPECIAL TOOL A

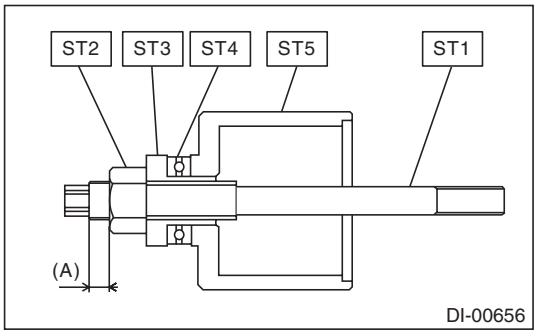

(A) 5 mm (0.2 in) or less

5) Fit and hold the ST1 and ST2 to the rear differential mount bushing from the rear side of vehicle.

ST1 41399FG031 SPECIAL TOOL C
ST2 41399FG061 SPECIAL TOOL RING

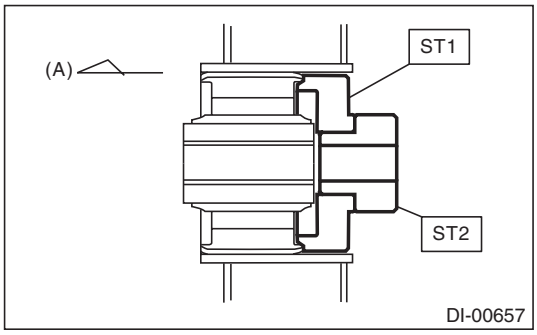

(A) Front side of vehicle

GETtheMANUALS.org

6) Insert the ST set in the step 4) through the rear differential mount bushing hole from the front side of vehicle, and screw in the ST1 by hand till the front end of ST1 comes out slightly from the rear end of ST2.

ST1 41399FG091 SPECIAL TOOL SHAFT
ST2 41399FG061 SPECIAL TOOL RING

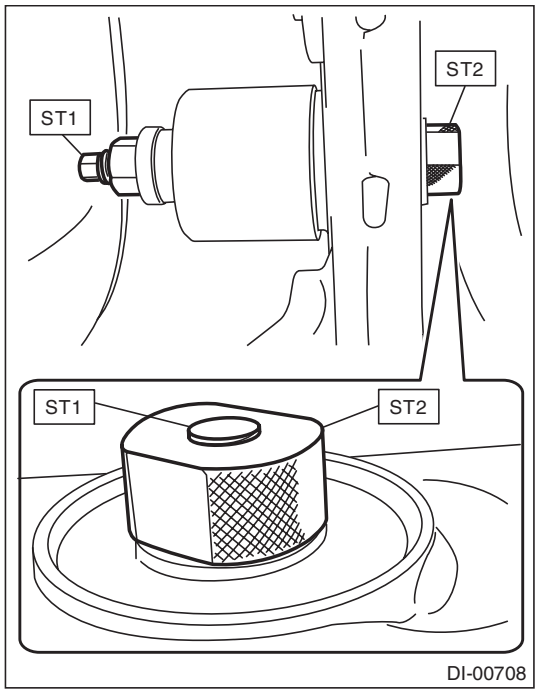

7) Hold the ST1 to prevent it from rotating, and screw in the ST3 by hand till there is no loose fit on the ST2.

CAUTION:
When setting the ST to the vehicle, always make sure that the ST2 fits the periphery of the sub frame cylinder and is not tilted.

ST1 41399FG091 SPECIAL TOOL SHAFT
ST2 41399FG010 SPECIAL TOOL A
ST3 41399FG070 SPECIAL TOOL NUT

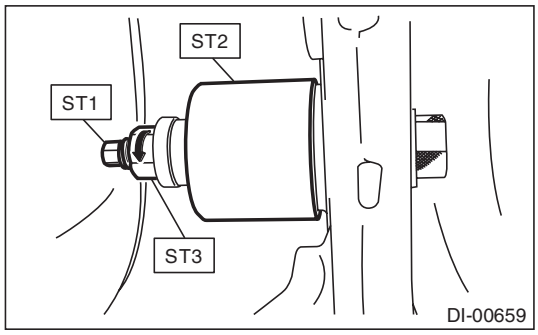

8) Hold the ST1 with a tool to prevent it from rotating, and screw in the ST2 to remove the rear differential mount bushing.

CAUTION:
- **Rotation of ST1 will damage the screw at the rear end of rear differential mount bushing. Never rotate the ST1.**
- **If the ST starts to tilt while removing the rear differential mount bushing, stop the work and set the ST again.**

ST1 41399FG091 SPECIAL TOOL SHAFT
ST2 41399FG070 SPECIAL TOOL NUT

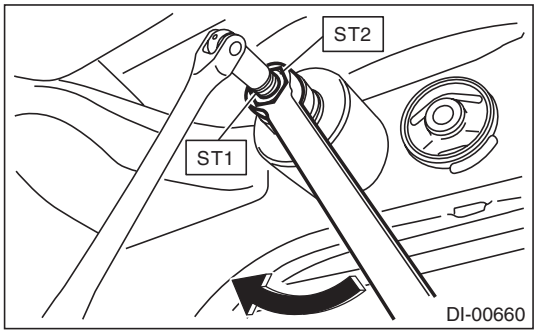

9) Set ST1, ST2, ST3, ST4, ST5 and rear differential mount bushing as shown in the figure.

NOTE:
- Set the ST2 nut near to the end of ST1 screw.
- Hold the rear differential mount bushing with the marked side facing toward the rear of the vehicle, and set the rear differential mount bushing to the ST so that the arrow mark faces upward.

GETtheMANUALS.org

• Mark the bottom end of rear differential mount bushing to identify the installing direction.

ST1	41399FG091	SPECIAL TOOL SHAFT
ST2	41399FG070	SPECIAL TOOL NUT
ST3	41399FG050	SPECIAL TOOL SLEEVE
ST4	41399FG080	SPECIAL TOOL BEARING
ST5	41399FG020	SPECIAL TOOL B

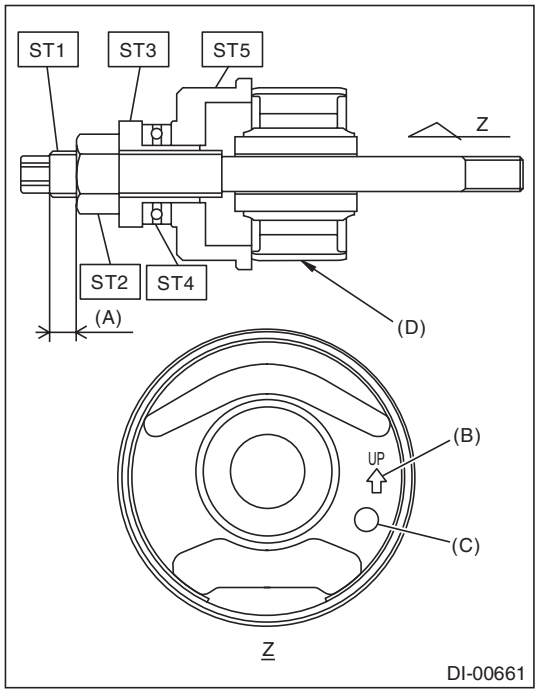

(A) 8 mm (0.31 in) or more
(B) Arrow mark
(C) Mark
(D) Marked position

10) Attach ST1 to the ST2, and fit and hold the STs as a unit to the sub frame from the rear side of vehicle.

ST1	41399FG061	SPECIAL TOOL RING
ST2	41399FG041	SPECIAL TOOL D

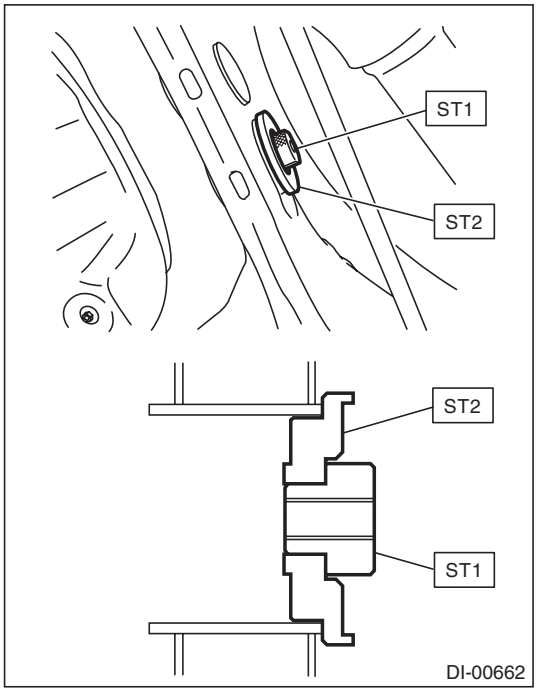

GETtheMANUALS.org

11) Insert the ST and rear differential mount bushing set in the step 9) through the sub frame from the front side of vehicle, and screw in the ST1 by hand till the front end of ST1 comes out slightly from the rear end of ST2.

CAUTION:
Set the rear differential mount bushing with its mark facing the bottom end direction.

ST1 41399FG091 SPECIAL TOOL SHAFT
ST2 41399FG061 SPECIAL TOOL RING

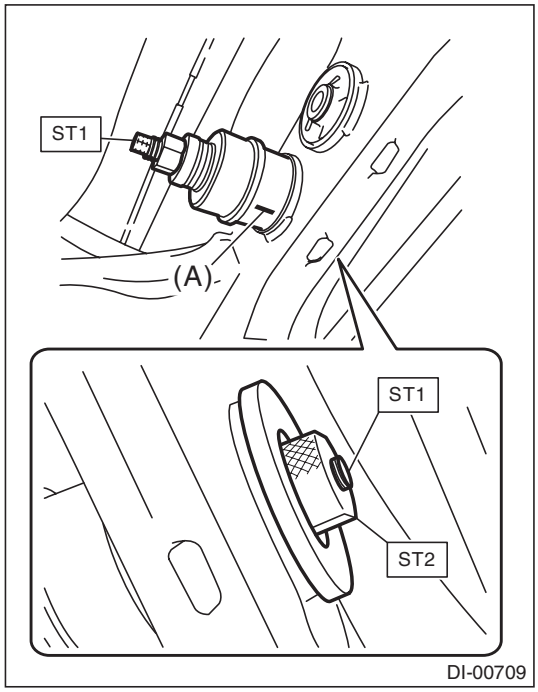

(A) Mark

12) Hold the ST1 to prevent it from rotating, and screw in the ST2 by hand till there is no loose fit on the ST and the rear differential mount bushing.

CAUTION:
Make sure that the ST and rear differential mount bushing are not tilted.

ST1 41399FG091 SPECIAL TOOL SHAFT
ST2 41399FG070 SPECIAL TOOL NUT

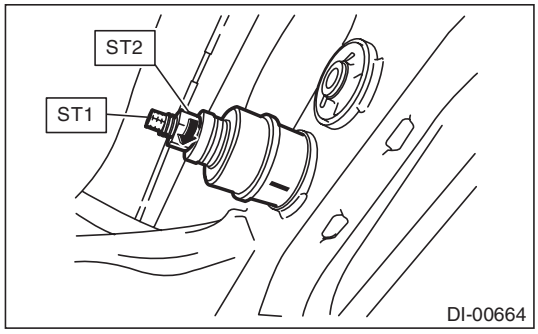

13) Screw in the ST2 while holding the ST1 with a tool to prevent it from rotating, and press-fit the rear differential mount bushing to the front end of sub frame cylinder.

ST1 41399FG091 SPECIAL TOOL SHAFT
ST2 41399FG070 SPECIAL TOOL NUT

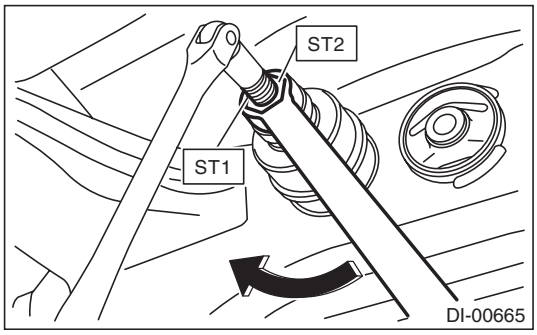

14) Make sure that the rear differential mount bushing is inserted to the front end of sub frame cylinder.

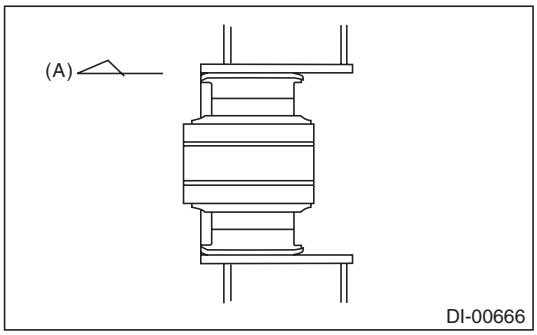

(A) Front side of vehicle

15) Install the rear differential. <Ref. to DI-28, INSTALLATION, Rear Differential (T-type).> <Ref. to DI-46, INSTALLATION, Rear Differential (VA-type).>

GETtheMANUALS.org

10. Rear Differential Inspection Mode

A: GENERAL DESCRIPTION

CAUTION:
Be sure to perform Rear Differential Inspection Mode.
- Follow the messages displayed on the Subaru Select Monitor when working.
- “Rear Differential Inspection Mode” using the Subaru Select Monitor is available only for the CVT model.
- Perform Rear Differential Inspection Mode when the following work has been performed.

Transmission assembly replacement/Replacement of rear differential/Replacement of front differential hypoid gear set/Replacement of rear differential hypoid gear set

B: PROCEDURE

CAUTION:
Do not turn the power of the Subaru Select Monitor OFF during work, and do not disconnect the data link connector.
1) Shift the select lever to “P” range.
2) Apply the electronic parking brake.
3) Lift up the vehicle.

WARNING:
Lift up the vehicle until the tire bottom is 30 cm or more above the ground.
4) Connect the Subaru Select Monitor to data link connector.
5) Turn the ignition switch to ON. (In the case of a push button start, press the push button ignition switch twice without stepping on the brake.)
6) Select {AT related learning & inspecting mode} in the «Transmission Diagnosis» display screen of the Subaru Select Monitor.
7) Select {Rear differential inspection mode} in the «AT related learning & inspecting mode» display screen of the Subaru Select Monitor.
8) Follow the messages displayed on the Subaru Select Monitor screen when working.
9) The results of the rear differential inspection mode are displayed on the Subaru Select Monitor screen.
- When ended normally: “The rear differential has been replaced normally.”
- When ended abnormally: “A rear differential abnormality has been detected. Reinspect the items at the time of rear differential installation.”
- When interrupted: “Inspection is stopped. Restart this inspection mode from the beginning.”

10) After the message “Inspection has been completed. Set the ignition switch to OFF.” appears, the rear differential inspection mode completes.

NOTE:
- For detailed operation procedures, refer to “PC application help for Subaru Select Monitor”.
- If the rear differential inspection mode does not end normally, repeat the mode until it ends normally.
- When the inspection mode does not end normally, the AWD warning light will start blinking at 2 Hz.
- When the inspection mode ends abnormally, the front differential and rear differential may be different from the specifications for the vehicle.
- When the inspection mode is interrupted, the following reasons are possible.

Message	Main reasons for abnormal termination
• “Inspection is stopped.” • “Inspection is stopped. Restart this inspection mode from the beginning.”	• TCM has detected a failure. • VDC has a failure. • Brake is applied after start during automatic running. • Too delayed operation to the instructions displayed on the Subaru Select Monitor.
“TCM incompatible. Rear differential inspection mode is stopped.”	The model does not support the rear differential inspection mode.
The TCM has detected a fault. Inspect following the manual.	TCM has detected a failure.

11) Perform “Function Check Sequence” for VDC. <Ref. to VDC(diag)-18, FUNCTION CHECK, OPERATION, Subaru Select Monitor.> <Ref. to VDC-16, ADJUSTMENT, VDC Control Module and Hydraulic Control Unit (VDCCM&H/U).>

GETtheMANUALS.org

11. General Diagnostic Table

A: INSPECTION

Symptom or trouble	Possible cause	Remedy
1. Oil leakage	(1) Worn, scratched, or incorrectly seated front or side oil seal. Scored, battered or excessively worn sliding surface of companion flange.	Repair or replace.
	(2) Clogged or damaged air breather cap.	Clean, repair or replace.
	(3) Loose bolts on the side retainer, or incorrectly fitted O-ring.	Tighten the bolts to specified torque. Replace the O-ring.
	(4) Loose rear cover attachment bolts or damaged gasket.	Replace the gasket, and tighten the bolts to specified torque.
	(5) Loose filler plug or drain plug.	• Apply liquid gasket, and tighten to the specified torque. (T-type) • Replace the gasket, and tighten to the specified torque. (VA-type)
	(6) Wear, damage or incorrect fitting of drive shaft, side retainer or oil seal.	Repair or replace.
2. Seizure NOTE: Seized or damaged parts should be replaced, and also other parts should be thoroughly checked for any defect and should be repaired or replaced as required.	(1) Insufficient backlash for hypoid gear.	Readjust or replace.
	(2) Excessive preload for side, rear or front bearing.	Readjust or replace.
	(3) Insufficient or improper oil used.	Add recommended oil to the specified level.
3. Damage NOTE: Damaged parts should be replaced, and also other parts should be thoroughly checked for any defect and should be repaired or replaced as required.	(1) Improper backlash for hypoid gear.	Replace.
	(2) Insufficient or excessive preload for side, rear or front bearing.	Readjust or replace.
	(3) Excessive backlash for differential gear.	Replace gear or thrust washer.
	(4) Loose bolts and nuts such as hypoid driven gear bolt.	Retighten.
	(5) Damage due to overloading.	Replace.
4. Noises when starting or shifting gears NOTE: Noises may be caused by differential assembly, universal joint, wheel bearing, etc. Find out what is actually making noise before disassembling.	(1) Improper tooth contact of hypoid driven gear and drive pinion	Readjust. (drive pinion adjustment and backlash adjustment)
	(2) Excessive backlash for hypoid driven gear	Replace the gear or the pinion height adjusting washer.
	(3) Excessive backlash for side gear.	Replace gear or thrust washer.
	(4) Insufficient preload for front or rear bearing.	Readjust.
	(5) Loose drive pinion nut.	Tighten to the specified torque.
	(6) Loose bolts and nuts such as side retainer attachment bolt.	Tighten to the specified torque.
5. Noises when cornering	(1) Damaged differential gear.	Replace.
	(2) Excessive wear or damage of thrust washer.	Replace.
	(3) Broken pinion mate shaft.	Replace.
	(4) Seized or damaged side bearing.	Replace.

GETtheMANUALS.org

Symptom or trouble	Possible cause	Remedy
6. Gear Noise NOTE: Since noises from engine, muffler, transmission, propeller shaft, wheel bearings, tires, and body are sometimes mistaken for noises from differential assembly, be careful in checking them. Inspection methods to locate noises include coasting, accelerating, cruising, and lifting-up all four wheels. Perform these inspections according to the condition of trouble. When listening to noises, shift the gear into four-wheel drive and fourth speed position, trying to pick up only differential noise.	(1) Improper tooth contact of hypoid driven gear and drive pinion	Readjust or replace the hypoid gear set.
	(2) Improper backlash of the hypoid driven gear	Readjust.
	(3) Scored or chipped teeth of hypoid gear.	Replace hypoid gear set.
	(4) Scuffed hypoid gear	Replace hypoid gear set.
	(5) Improper preload for front or rear bearings.	Readjust.
	(6) Stuck, scored or chipped teeth of front or rear bearing	Replace.
	(7) Stuck, scored or chipped teeth of side bearing	Replace.
	(8) Vibrating differential gear.	Replace.

GETtheMANUALS.org

TRANSFER CASE

TC

Page

1. General Description 2
2. Transfer Case and Extension Case Assembly 3
3. Transfer Clutch 4
4. Extension Case 5
5. Oil Seal 6
6. Transfer Drive Gear 7
7. Transfer Driven Gear 8
8. Center Differential Carrier 9
9. Reduction Driven Gear 10
10. Center Differential 11
11. Transfer Clutch Pressure Test 12

GETtheMANUALS.org

1. General Description

A: NOTE

For general description, refer to “5AT”, “CVT” or “6MT” section.
5AT model:
<Ref. to 5AT-2, General Description.>
CVT model:
<Ref. to CVT-3, General Description.>
6MT model:
<Ref. to 6MT-2, General Description.>

GETtheMANUALS.org

2. Transfer Case and Extension Case Assembly

A: NOTE

For removal, installation and inspection, refer to “6MT” section. <Ref. to 6MT-40, Transfer Case and Extension Case Assembly.>

GETtheMANUALS.org

3. Transfer Clutch

A: NOTE

For removal, installation and inspection, refer to “5AT” or “CVT” section.
5AT model:
<Ref. to 5AT-67, Transfer Clutch.>
CVT model:
<Ref. to CVT-146, Transfer Clutch.>

GETtheMANUALS.org

4. Extension Case

A: NOTE

For removal, installation and inspection, refer to “5AT” or “CVT” section.
5AT model:
<Ref. to 5AT-65, Extension Case.>
CVT model:
<Ref. to CVT-138, Extension Case.>

GETtheMANUALS.org

5. Oil Seal

A: NOTE

For replacement and inspection, refer to “5AT”, “CVT” or “6MT” section.
5AT model:
<Ref. to 5AT-48, Extension Case Oil Seal.>
CVT model:
<Ref. to CVT-89, Extension Case Oil Seal.>
6MT model:
<Ref. to 6MT-35, Oil Seal.>

GETtheMANUALS.org

6. Transfer Drive Gear

A: NOTE

For removal, installation and inspection, refer to “6MT” section. <Ref. to 6MT-45, Transfer Drive Gear.>

GETtheMANUALS.org

7. Transfer Driven Gear

A: NOTE

For removal, installation and inspection, refer to “6MT” section. <Ref. to 6MT-47, Transfer Driven Gear.>

GETtheMANUALS.org

8. Center Differential Carrier

A: NOTE

For removal, installation and inspection, refer to “5AT” section. <Ref. to 5AT-74, Center Differential Carrier.>

GETtheMANUALS.org

9. Reduction Driven Gear

A: NOTE

For removal, installation and inspection, refer to “5AT” or “CVT” section.
5AT model:
<Ref. to 5AT-71, Reduction Driven Gear.>
CVT model:
<Ref. to CVT-158, Transfer Reduction Driven Gear.>

GETtheMANUALS.org

10. Center Differential

A: NOTE

For removal, installation and inspection, refer to “6MT” section. <Ref. to 6MT-49, Center Differential.>

GETtheMANUALS.org

11. Transfer Clutch Pressure Test

A: NOTE

For inspection, refer to “5AT” or “CVT” section.
5AT model:
<Ref. to 5AT-36, Transfer Clutch Pressure Test.>
CVT model:
<Ref. to CVT-53, Transfer Clutch Pressure Test.>

GETtheMANUALS.org

DRIVE SHAFT SYSTEM

DS

		Page
1.	General Description	2
2.	Propeller Shaft	10
3.	Front Axle	15
4.	Front Hub Unit Bearing	23
5.	Rear Axle	30
6.	Rear Hub Unit Bearing	39
7.	Front Drive Shaft	48
8.	Rear Drive Shaft	57
9.	General Diagnostic Table	66

GETtheMANUALS.org

1. General Description

A: SPECIFICATION

1. PROPELLER SHAFT

Car line		All models
Propeller shaft type		EDJ
Front propeller shaft Joint-to-joint length: L_1 mm (in)	CVT	578 (22.76)
	6MT	735.5 (28.96)
	5AT	562 (22.13)
Rear propeller shaft Joint-to-Joint length: L_2 mm (in)		828 (32.6)
Outer diameter of tube: mm (in)	D_1	63.5 (2.500)
	D_2	57.5 (2.264)

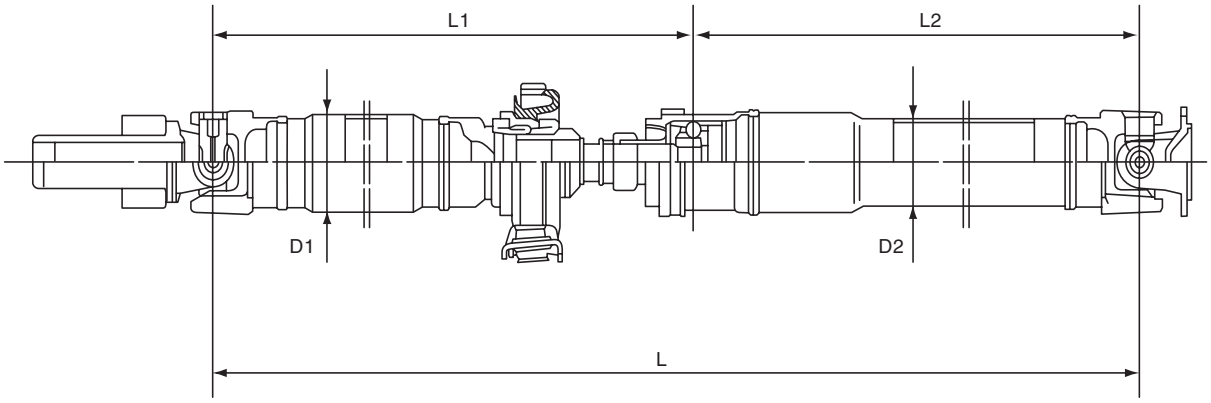

DS-00430

GETtheMANUALS.org

2. FRONT DRIVE SHAFT ASSEMBLY

Model	Type of drive shaft	Axle diameterϕ mm (in)	Axle length mm (in)
All models	AC + AAR	22.67 (0.89)	352.4 (13.87)

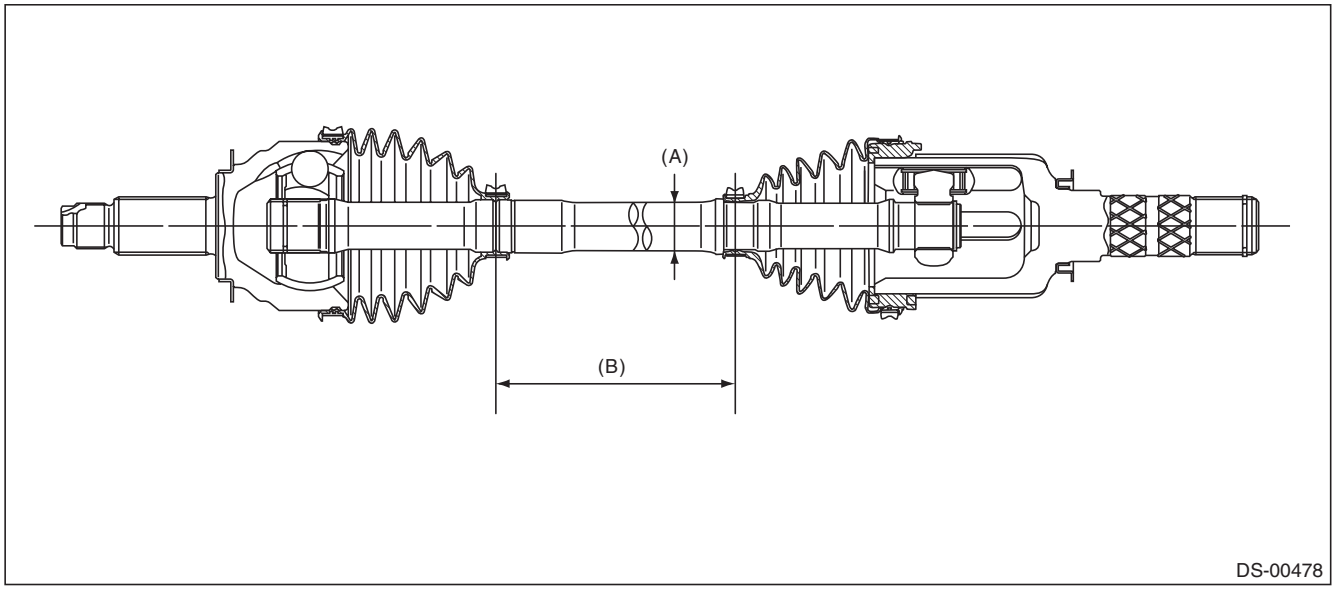

(A) Axle diameter (B) Axle length

3. REAR DRIVE SHAFT ASSEMBLY

Model	Type of drive shaft	Axle diameterϕ mm (in)	Axle length mm (in)
Sedan CVT	BJ + DOJ	22 (0.87)	400.6 (15.77)
Other than above	EBJ + DOJ	22 (0.87)	394.3 (15.52)

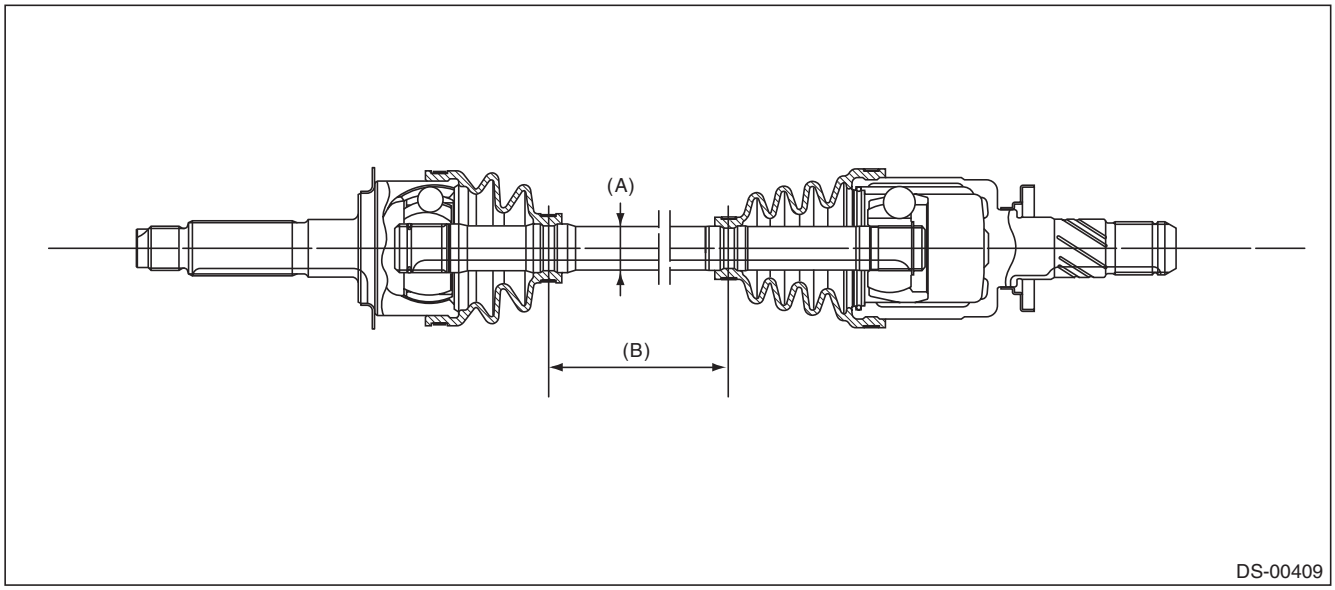

(A) Axle diameter (B) Axle length

GETtheMANUALS.org

B: COMPONENT

1. PROPELLER SHAFT

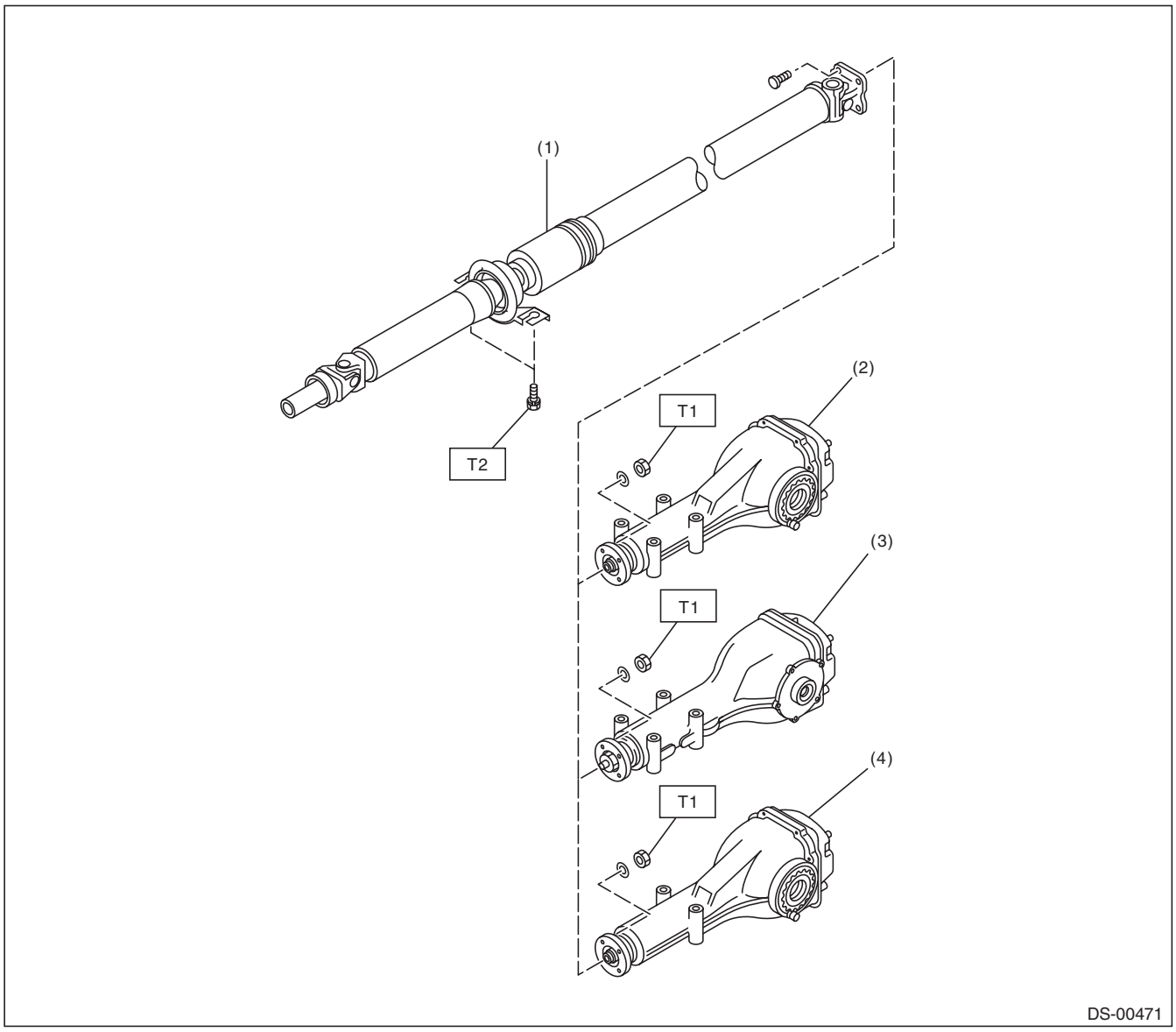

(1)	Propeller shaft	(3)	Rear differential (T-type)	***Tightening torque:N·m (kgf-m, ft-lb)***
(2)	Rear differential (VA1-type)	(4)	Rear differential (VA2-type)	***T1: 31 (3.16, 22.9)***
				T2: 52 (5.3, 38.4)

GETtheMANUALS.org

2. FRONT AXLE

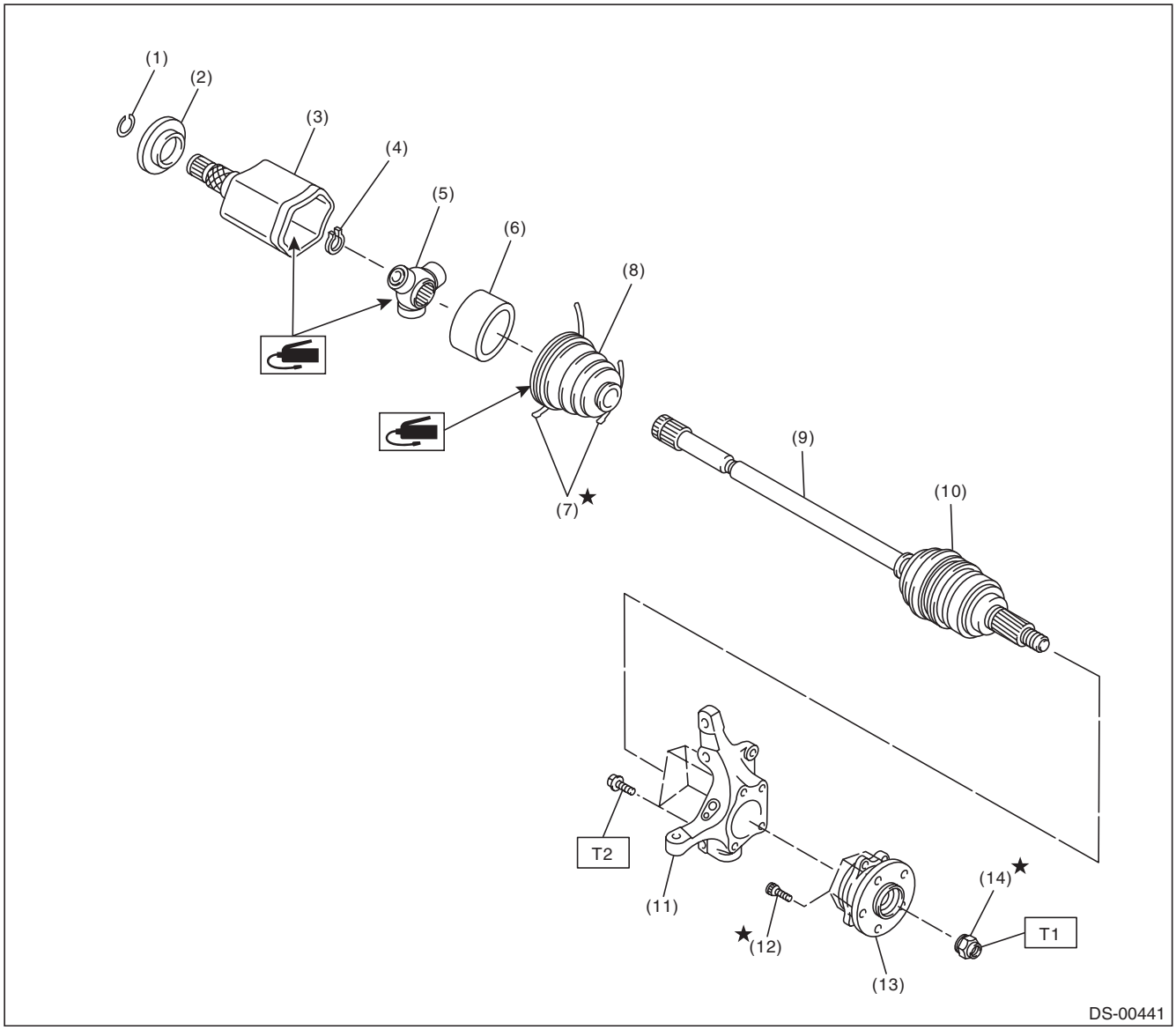

(1)	Circlip	(7)	Boot band	(13)	Front hub unit bearing
(2)	Baffle plate	(8)	Boot (AAR)	(14)	Axle nut
(3)	Outer race (AAR)	(9)	AC shaft ASSY		
(4)	Snap ring	(10)	Boot (AC)		
(5)	Trunnion	(11)	Front axle housing		
(6)	Grommet	(12)	Hub bolt		

Tightening torque:N·m (kgf-m, ft-lb)
T1: 220 (22.43, 162.3)
T2: 65 (6.63, 47.9)

GETtheMANUALS.org

3. REAR AXLE

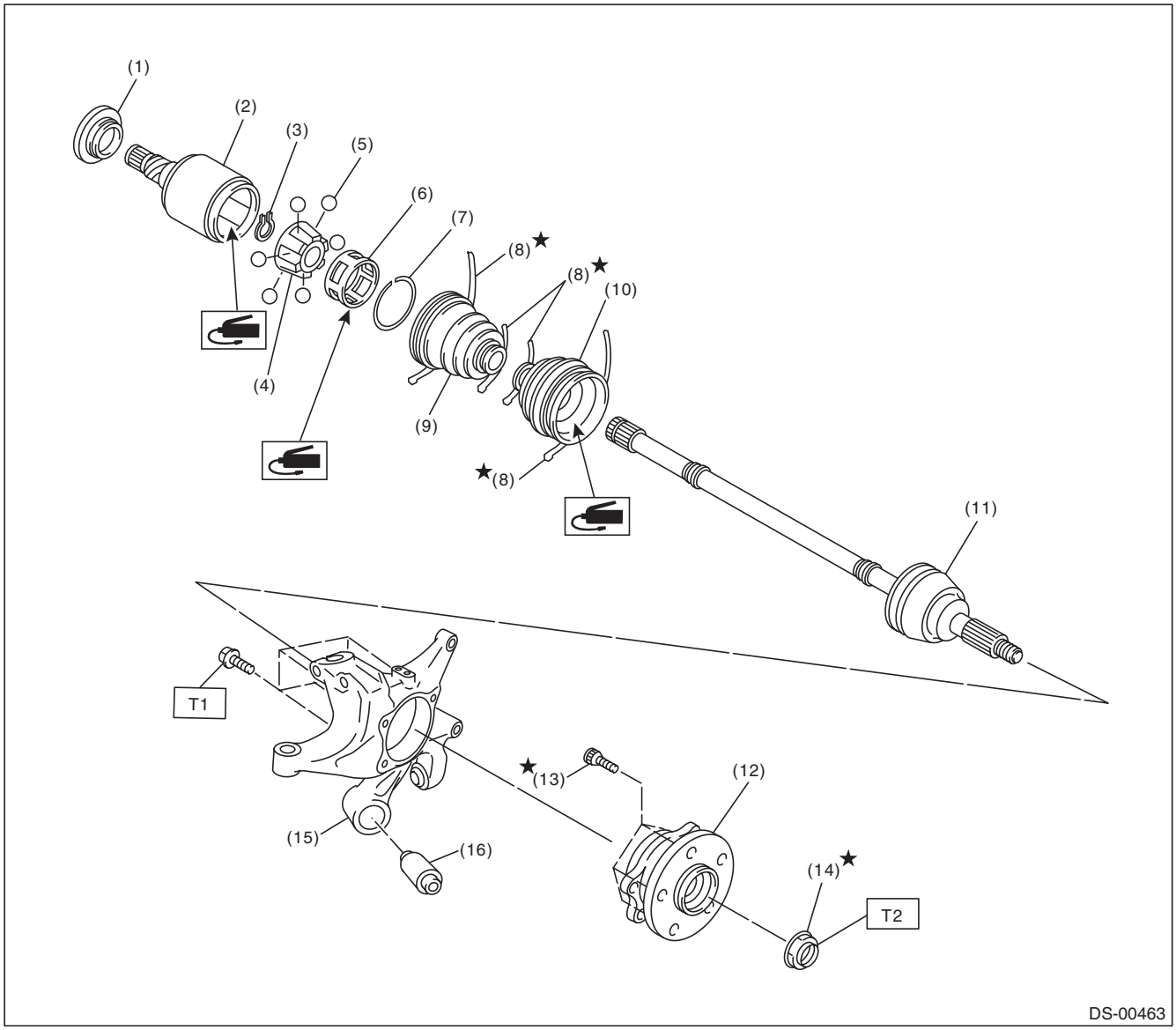

(1)	Baffle plate	(8)	Boot band	(14)	Axle nut
(2)	Outer race (DOJ)	(9)	Boot (DOJ)	(15)	Rear axle housing
(3)	Snap ring	(10)	Boot (BJ)	(16)	Rear bushing
(4)	Inner race	(11)	BJ shaft ASSY (sedan CVT model)		
(5)	Ball		EBJ shaft ASSY (except for sedan CVT model)		
(6)	Cage	(12)	Rear hub unit bearing		
(7)	Snap ring	(13)	Hub bolt		

Tightening torque:N·m (kgf-m, ft-lb)	
T1:	***65 (6.63, 47.9)***
T2:	***240 (24.47, 177.0)***

GETtheMANUALS.org

C: CAUTION

- Wear appropriate work clothing, including a helmet, protective goggles and protective shoes when performing any work.
- Remove contamination including dirt and corrosion before removal, installation or disassembly.
- Keep the disassembled parts in order and protect them from dust and dirt.
- Before removal, installation or disassembly, be sure to clarify the failure. Avoid unnecessary removal, installation, disassembly and replacement.
- Vehicle components are extremely hot after driving. Be wary of receiving burns from heated parts.
- Use SUBARU genuine grease etc. or equivalent. Do not mix grease etc. of different grades or manufacturers.
- Be sure to tighten fasteners including bolts and nuts to the specified torque.
- Place shop jacks or rigid racks at the specified points.
- Apply grease onto sliding or revolving surfaces before installation.
- Before installing snap rings, apply sufficient amount of grease to avoid damage and deformation.
- Before securing a part on a vise, place cushioning materials such as wood blocks, aluminum plates, or waste cloth between the part and the vise.

D: PREPARATION TOOL

1. SPECIAL TOOL

ILLUSTRATION	Part No.	DESCRIPTION	REMARKS
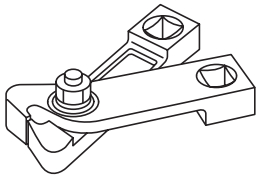 ST28099AC000	28099AC000	BOOT BAND PLIER	Used for tightening the boot band. (Front boot band)
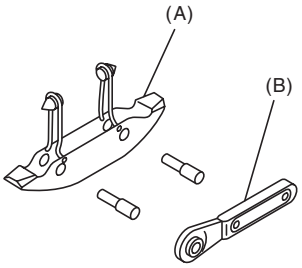 ST-925091000	925091000	BAND TIGHTENING TOOL	Used for tightening the boot band. (A) Jig for the band (B) Ratchet wrench
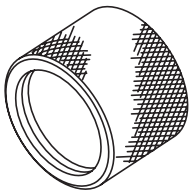 ST18675AA000	18675AA000	DIFFERENTIAL SIDE OIL SEAL INSTALLER	Used for installing the differential side retainer oil seal.

GETtheMANUALS.org

ILLUSTRATION	Part No.	DESCRIPTION	REMARKS
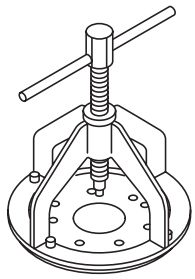 ST-926470000	926470000	AXLE SHAFT PULLER	• Used for removing the axle shaft. • Used together with AXLE SHAFT PULLER PLATE (28099PA110).
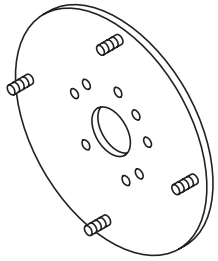 ST28099PA110	28099PA110	AXLE SHAFT PULLER PLATE	Exchange with the plate of the AXLE SHAFT PULLER (926470000) to use.
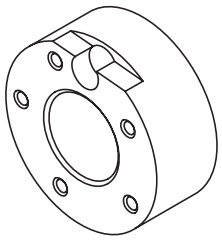 ST-927080000	927080000	HUB STAND	Used for assembling hub bolt in hub.
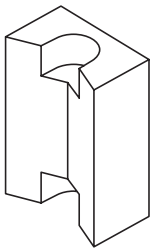 ST28399AG000	28399AG000	HUB STAND	Used for extracting hub bolt.
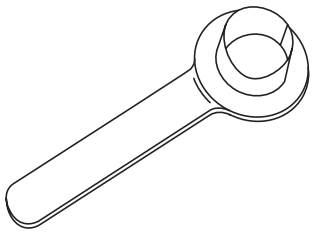 ST28099PA090	28099PA090	OIL SEAL PROTEC-TOR	• Used for installing the rear drive shaft to the rear differential. • For protecting the oil seal.

GETtheMANUALS.org

ILLUSTRATION	Part No.	DESCRIPTION	REMARKS
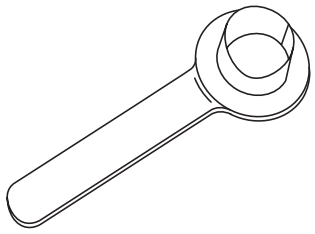 ST28399SA010	28399SA010	OIL SEAL PROTECTOR	• Used for installing front drive shaft into front differential. • For protecting the oil seal.

2. GENERAL TOOL

TOOL NAME	REMARKS
Tie-rod end puller	Used for disconnecting tie-rod end.
Puller	Used for removing the ball joint from knuckle arm.
Dial gauge	Used for inspecting the propeller shaft run-out.
Extension cap	Used for preventing leakage of gear oil or ATF.
Crowbar	Used for extracting drive shaft.

GETtheMANUALS.org

2. Propeller Shaft

A: REMOVAL

CAUTION:
- **Do not disassemble the center EDJ of the propeller shaft.**
- **Before removing propeller shaft, wrap the metal parts attached to the rubber boot of center EDJ with a cloth or rubber material, as shown in the figure. The rubber boot may be damaged due to interference with adjacent metal parts while bending the EDJ during removal.**

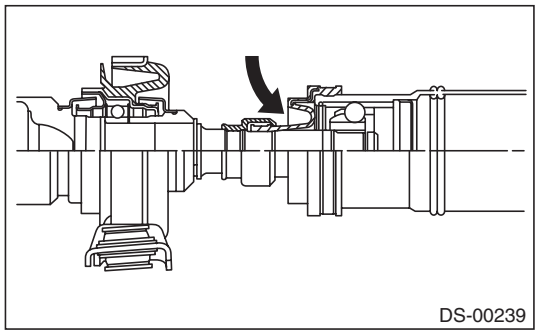

1) Shift the select lever or gear shift lever to neutral.
2) Release the parking brake.
3) Lift up the vehicle.
4) Remove the center exhaust pipe, rear exhaust pipe, and muffler.
- **Center exhaust pipe & rear exhaust pipe**
  - H4 turbo model: <Ref. to EX(H4DOTC)-15, REMOVAL, Rear Exhaust Pipe.>
  - H4 non-turbo model: <Ref. to EX(H4SO)-9, REMOVAL, Rear Exhaust Pipe.>
  - H6 model: <Ref. to EX(H6DO)-8, REMOVAL, Rear Exhaust Pipe.>
- **Muffler**
  - H4 turbo model: <Ref. to EX(H4DOTC)-17, REMOVAL, Muffler.>
  - H4 non-turbo model: <Ref. to EX(H4SO)-11, REMOVAL, Muffler.>
  - H6 model: <Ref. to EX(H6DO)-10, REMOVAL, Muffler.>

5) Remove the bolts to remove the front heat shield cover.

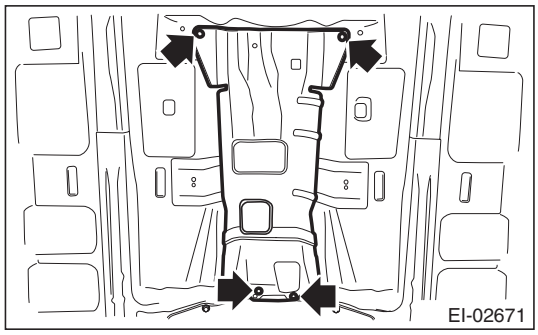

GETtheMANUALS.org

6) Remove the propeller shaft assembly.

CAUTION:
Do not disassemble the propeller shaft.

(1) Place alignment marks (A) on the flange yoke and rear differential.
(2) Remove four bolts holding the propeller shaft to the rear differential.

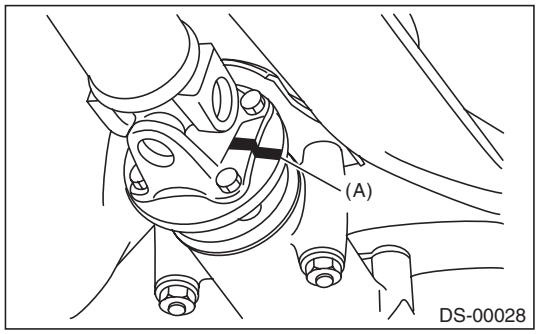

(3) Remove the center bearing.

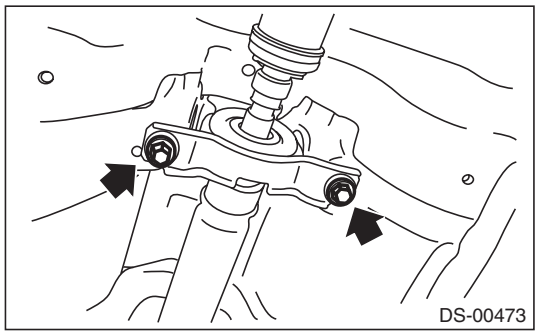

(4) Remove the propeller shaft from transmission.

NOTE:
- Use a container to catch ATF or oil flowing from propeller shaft.
- To prevent ATF from leaking, install extension cap etc. to the transmission.

B: INSTALLATION

1) Before installation, check the following items, and replace the propeller shaft assembly as necessary.
- Dents or cracks on the tube surface
- Splines for deformation or abnormal wear
- Unsmooth joint operation or abnormal noise
- Center bearing for free play, noise or non-smooth operation.
- Oil seals for abnormal wear or damage
- Damaged center bearing

2) Insert the sleeve yoke into the transmission and attach center bearing to body.

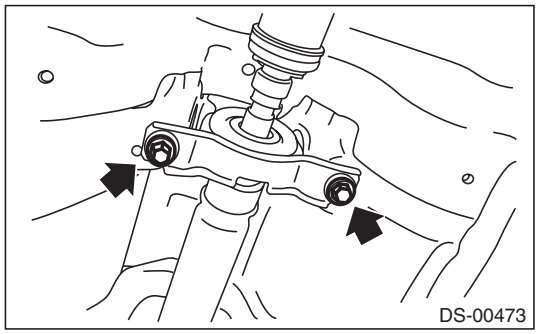

Tightening torque:
52 N·m (5.3 kgf-m, 38.4 ft-lb)

GETtheMANUALS.org

3) Align the alignment marks (A), and connect the flange yoke and rear differential.

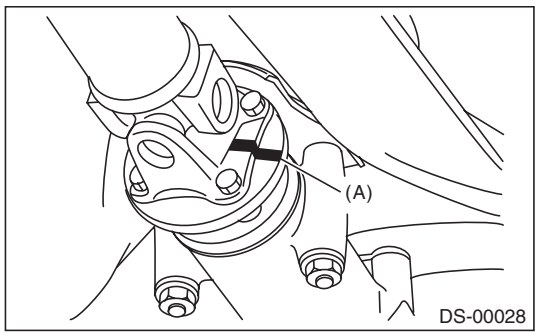

Tightening torque:
31 N·m (3.16 kgf-m, 22.9 ft-lb)

4) Check the propeller shaft with the propeller shaft installed to the vehicle. <Ref. to DS-12, INSPECTION, Propeller Shaft.>
5) Install the heat shield cover.

Tightening torque:
18 N·m (1.84 kgf-m, 13.3 ft-lb)

6) Install the center exhaust pipe and rear exhaust pipe.
7) Lower the vehicle.

C: INSPECTION

Check the propeller shaft with the propeller shaft installed to the vehicle.
1) Remove the front exhaust pipe.
- H4 turbo model: <Ref. to EX(H4DOTC)-5, REMOVAL, Front Exhaust Pipe.>
- H4 non-turbo model: <Ref. to EX(H4SO)-5, REMOVAL, Front Exhaust Pipe.>
- H6 model: <Ref. to EX(H6DO)-5, REMOVAL, Front Exhaust Pipe.>

2) Remove the center exhaust pipe, rear exhaust pipe, and muffler.
- **Center exhaust pipe & rear exhaust pipe**
  - H4 turbo model: <Ref. to EX(H4DOTC)-15, REMOVAL, Rear Exhaust Pipe.>
  - H4 non-turbo model: <Ref. to EX(H4SO)-9, REMOVAL, Rear Exhaust Pipe.>
  - H6 model: <Ref. to EX(H6DO)-8, REMOVAL, Rear Exhaust Pipe.>
- **Muffler**
  - H4 turbo model: <Ref. to EX(H4DOTC)-17, REMOVAL, Muffler.>
  - H4 non-turbo model: <Ref. to EX(H4SO)-11, REMOVAL, Muffler.>
  - H6 model: <Ref. to EX(H6DO)-10, REMOVAL, Muffler.>

3) Remove the bolts to remove the front heat shield cover.

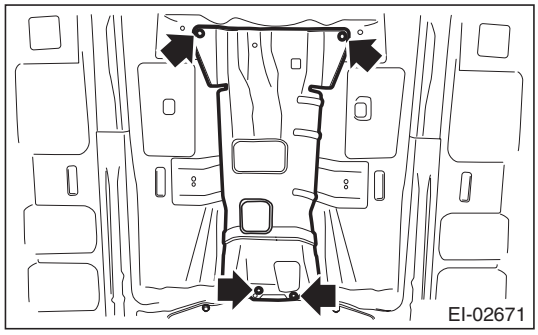

GETtheMANUALS.org

4) Check the propeller shaft mounting bolt for looseness.
   (1) Yoke flange mounting bolts which connect to the rear differential
   (2) Center bearing bracket mounting bolts

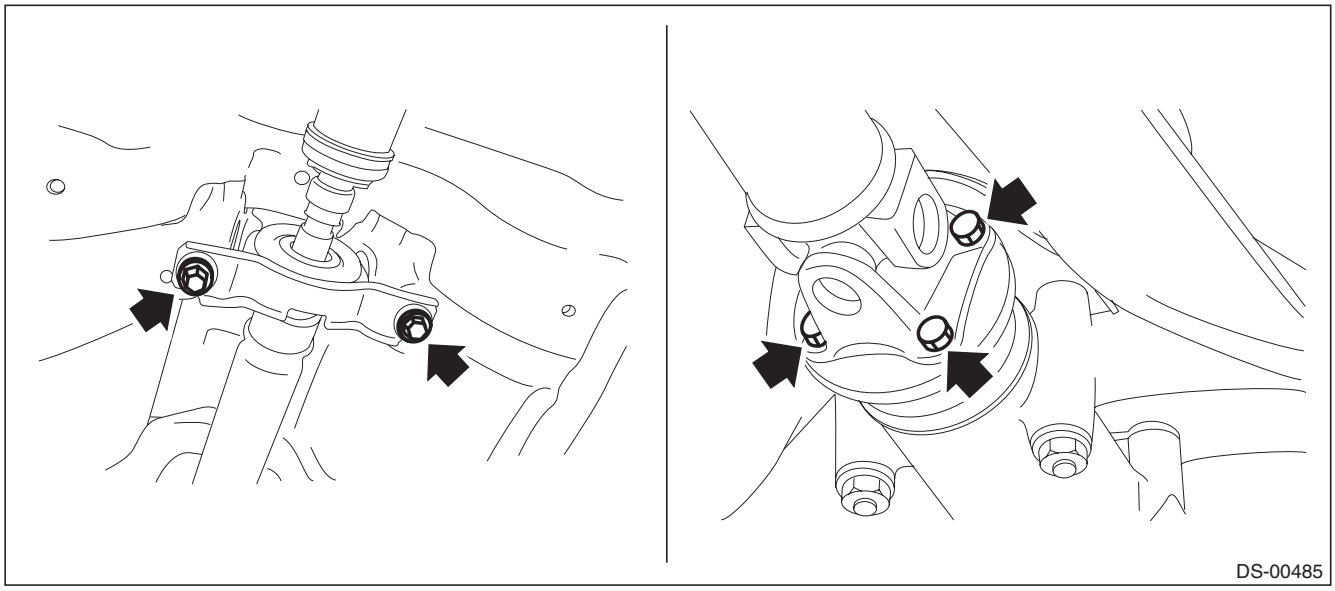

5) Check the spline and bearing for the propeller shaft.
   (1) Turn the propeller shaft by hand to check if abnormal free play exists at splines.
   (2) Also move yokes to check if abnormal free play exists at spiders and bearings.

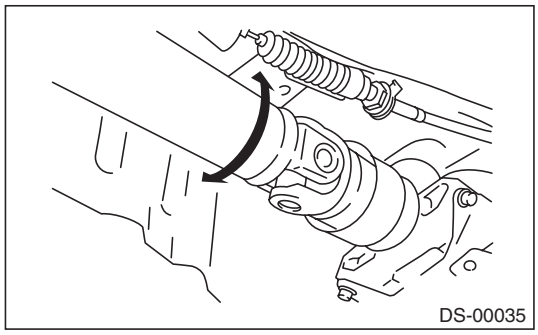

GETtheMANUALS.org

6) Measure the deflection of the propeller shaft.
   (1) Set the dial gauge (B) with its indicator stem at the center of the propeller shaft (A).
   (2) Turn the propeller shaft (A) slowly by hands to check for runout of the propeller shaft.

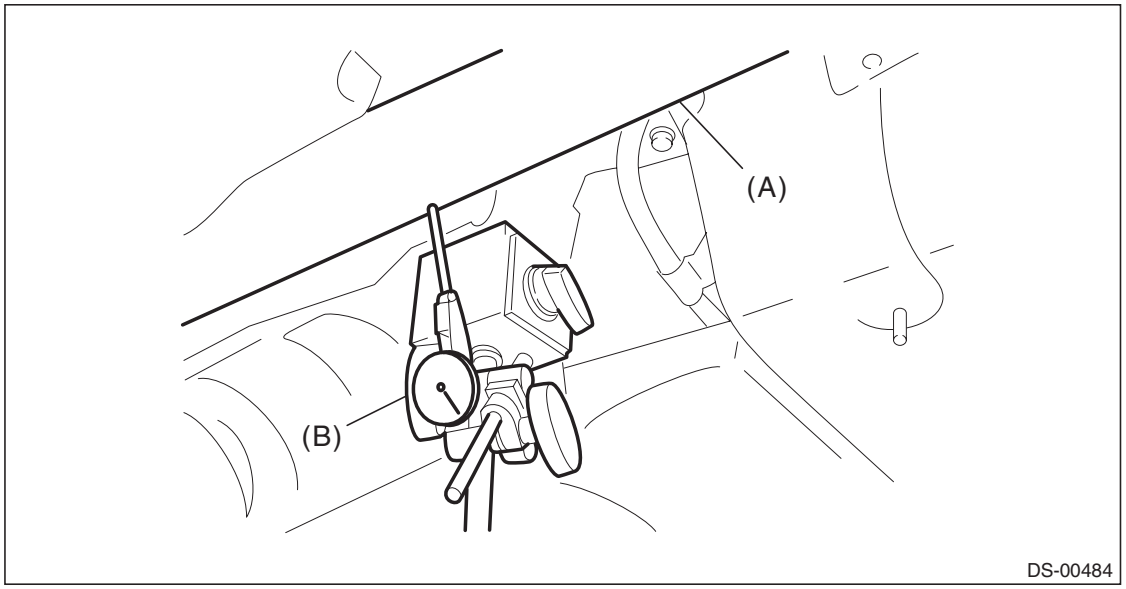

Runout:
Limit: 0.6 mm (0.024 in)

7) Check the center bearing for free play.
Move the propeller shaft near the center bearing up, down, left, right by hand, to check for any abnormal free play of the bearings.

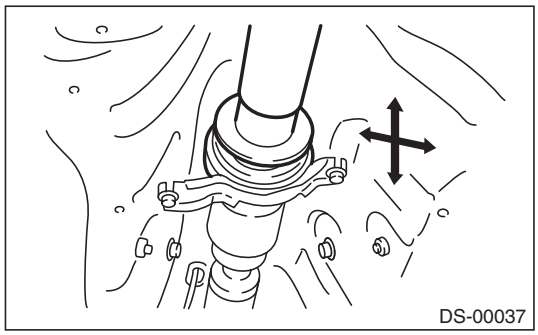

8) Replace the propeller shaft assembly if faulty is found in the inspection.

GETtheMANUALS.org

3. Front Axle

A: REMOVAL

1) Lift up the vehicle, and then remove the front wheels.
2) Remove the axle nut.

CAUTION:
Do not loosen the axle nut while the front axle is loaded. Doing so may damage the hub bearing.

(1) Lift the crimped section of axle nut.
(2) Remove the axle nut using a socket wrench while depressing the brake pedal.

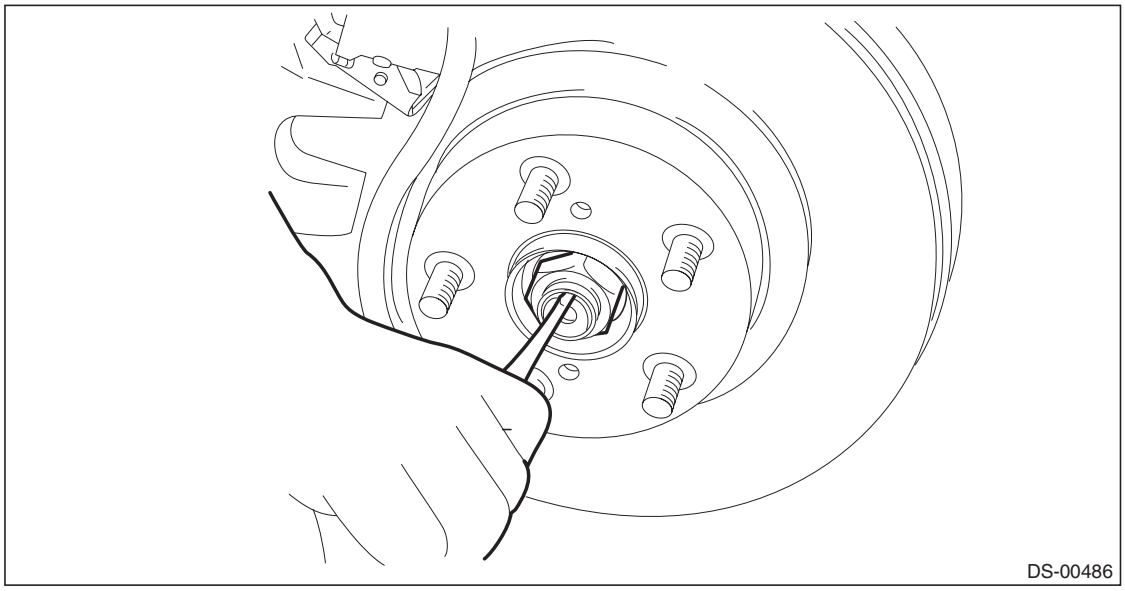

3) Remove the front disc brake caliper from the front axle housing.

(1) Remove the mounting bolts, and then remove the front disc brake caliper.
(2) Prepare wiring harnesses etc. to be discarded, and suspend the front disc brake caliper from the shock absorber with the harnesses.

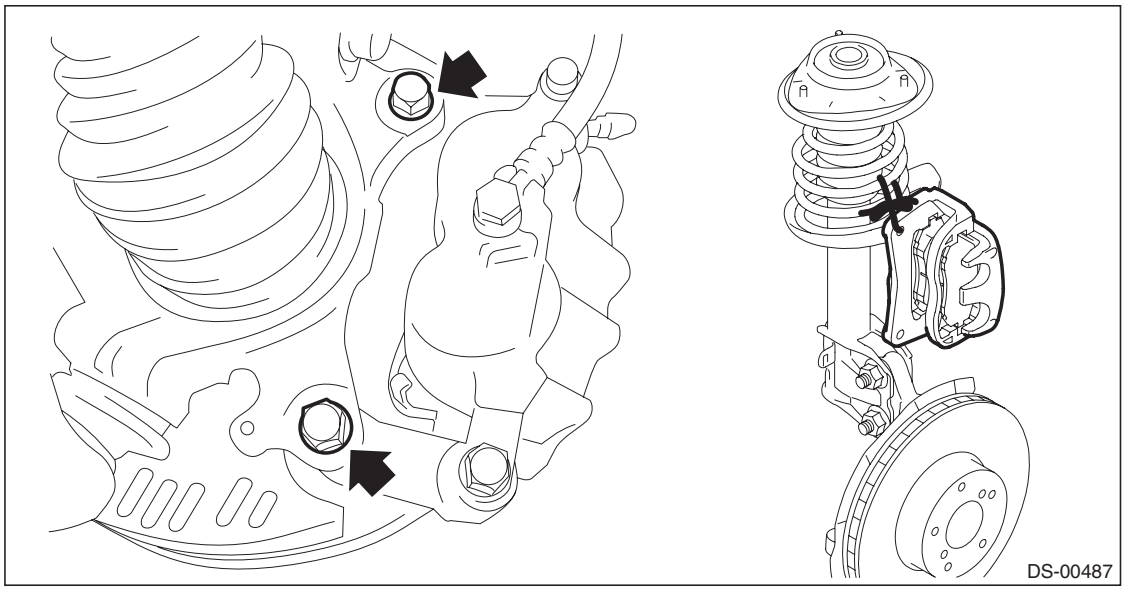

GETtheMANUALS.org

4) Remove the disc rotor.

NOTE:
When the disc rotor is difficult to be removed from the front hub unit bearing, screw in 8 mm (0.31 in) bolt to the threaded part of the disc rotor (A), and remove the disc rotor.

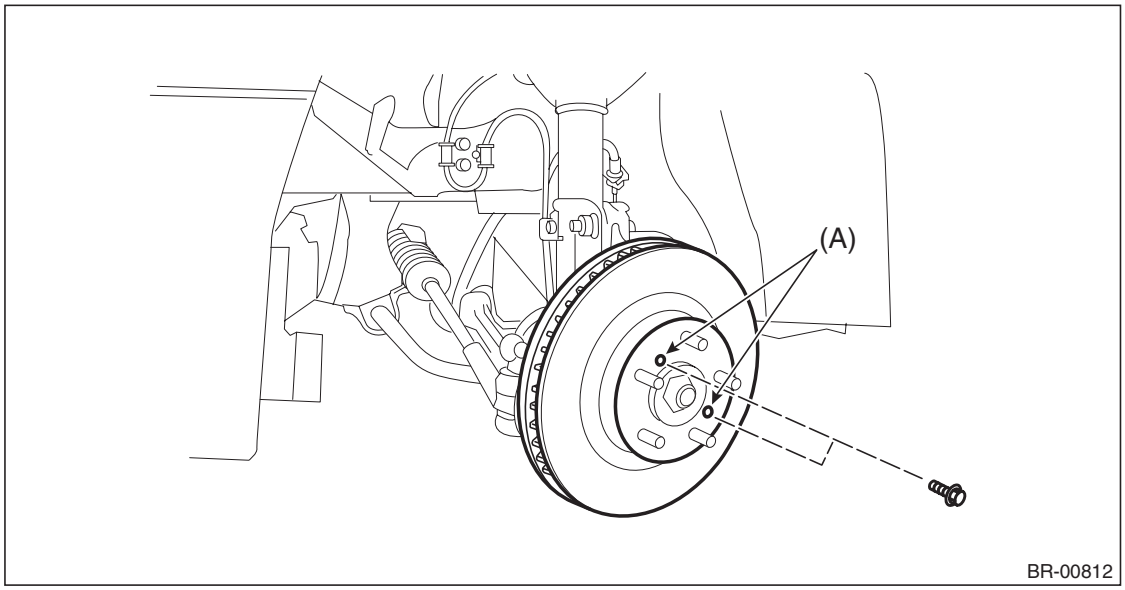

5) Disconnect the tie-rod end.
   (1) Pull out the cotter pin.
   (2) Remove the castle nut.
   (3) Extract the tie-rod end from the front axle housing.

PREPARATION TOOL:
Tie-rod end puller

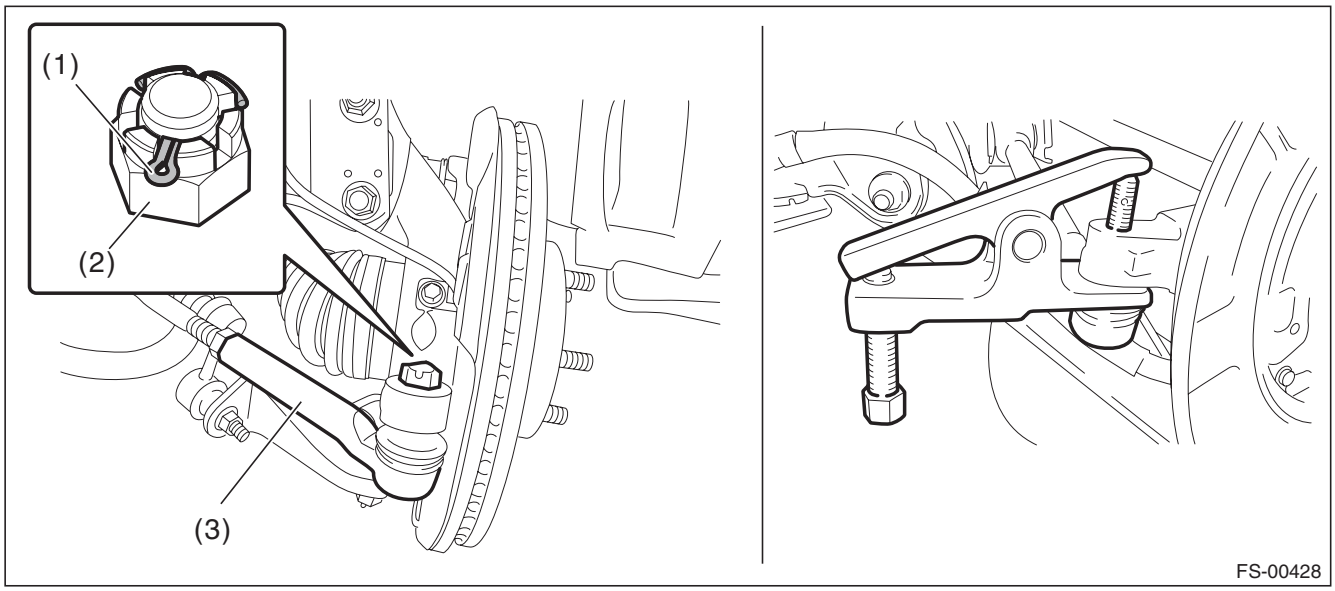

GETtheMANUALS.org

6) Remove the bolts, and remove the front ABS wheel speed sensor.

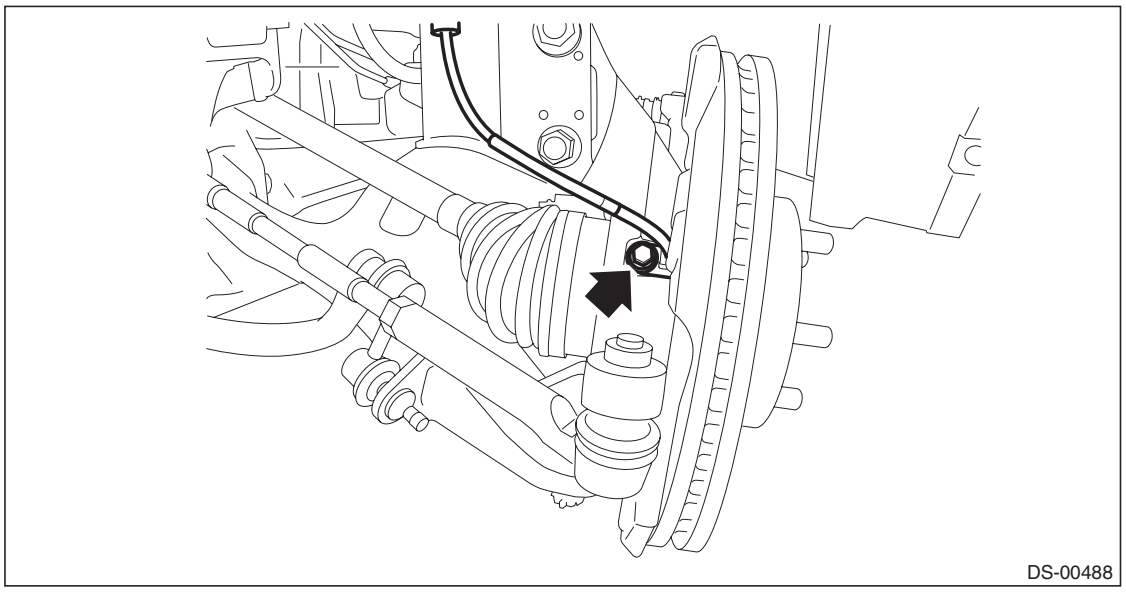

7) Remove the stabilizer link and ball joint.

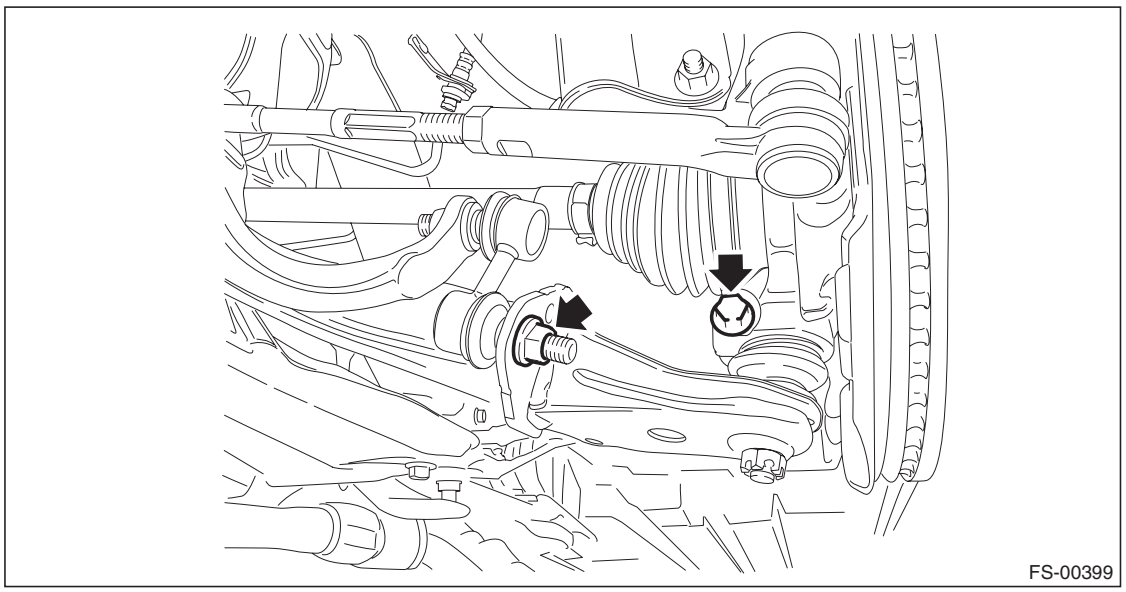

8) Using a bar, remove the front drive shaft from transmission.

CAUTION:
Be careful not to allow the bar to damage holder area.

GETtheMANUALS.org

9) Remove the front drive shaft assembly from the hub. If it is hard to remove, use the ST.

PREPARATION TOOL:
ST1: AXLE SHAFT PULLER (926470000)
ST2: AXLE SHAFT PULLER PLATE (28099PA110)

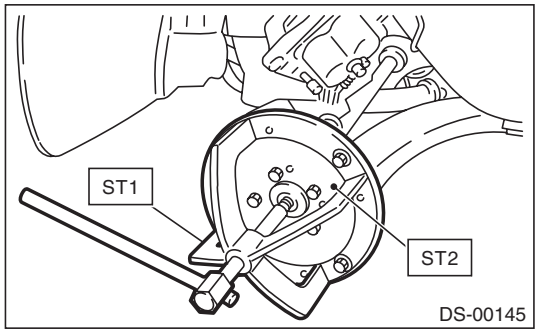

10) Place an alignment marks on the camber adjusting bolt and front axle housing.
11) Remove two bolts to remove the front axle housing from the strut.

B: INSTALLATION

1) Install the front drive shaft. <Ref. to DS-49, INSTALLATION, Front Drive Shaft.>
2) Install the ball joint to the front axle housing.

CAUTION:
Before tightening, make sure the lower side of front axle housing and stepped section of ball joint are in contact.

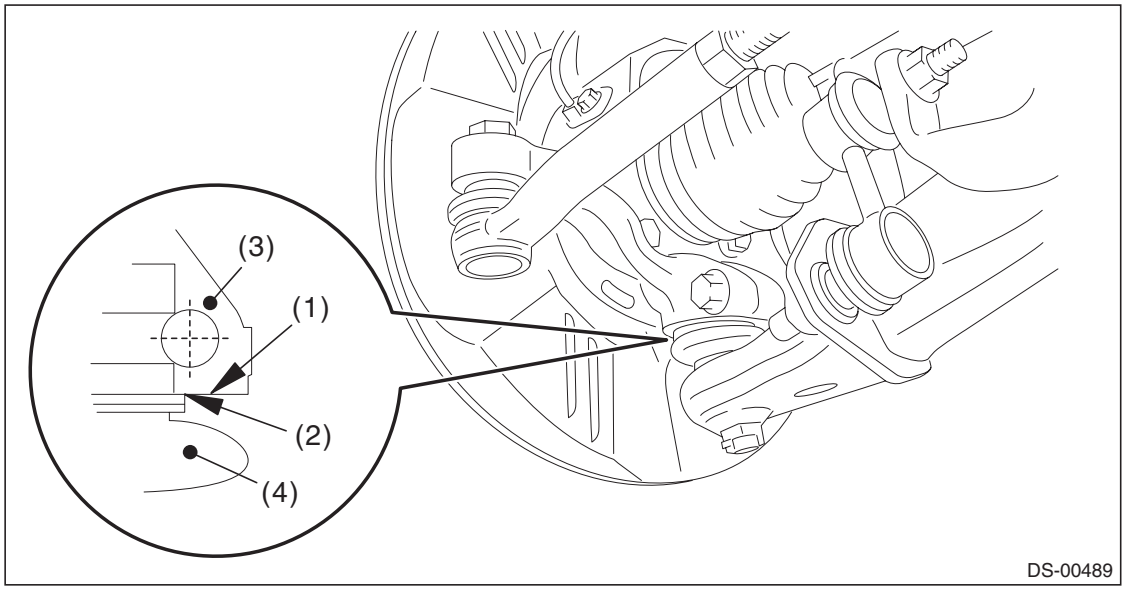

(1) Lower side of front axle housing
(2) Raised section of ball joint
(3) Front axle housing
(4) Ball joint

Tightening torque:
50 N·m (5.1 kgf-m, 36.9 ft-lb)

3) Install the front ABS wheel speed sensor.

Tightening torque:
7.5 N·m (0.76 kgf-m, 5.5 ft-lb)

4) Install the disc rotor.

GETtheMANUALS.org

5) Install the disc brake.

Tightening torque:
120 N·m (12.24 kgf-m, 88.5 ft-lb)

6) Install the stabilizer link.

Tightening torque:
60 N·m (6.12 kgf-m, 44.3 ft-lb)

7) Connect the tie-rod ends.
(1) Connect the tie-rod ends from the front axle housing.
(2) Tighten the castle nuts to the specified torque.

CAUTION:
When connecting the tie-rod, do not hit the cap at bottom of tie-rod end with a hammer.

Tightening torque:
27 N·m (2.75 kgf-m, 19.9 ft-lb)

(3) Tighten the castle nut within the range of 60° so that the cotter pin hole and cutout portion of the castle nut are aligned.
(4) Insert the cotter pin, and bend the tip of the pin to fix it.

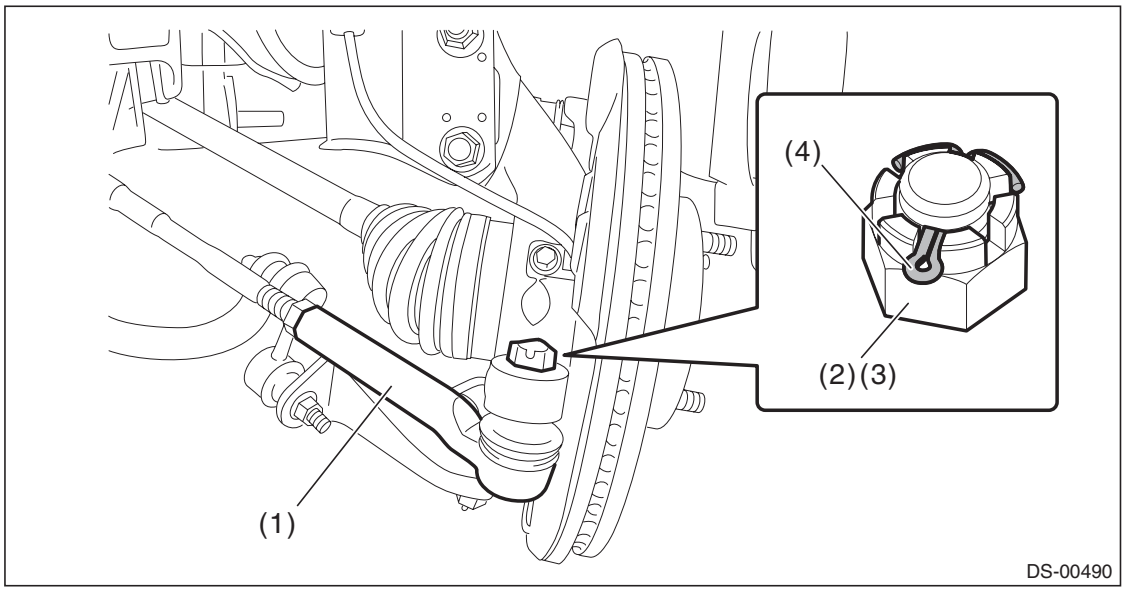

8) While depressing the brake pedal, tighten a new axle nut to the specified torque and lock it securely.

CAUTION:
Do not load the front axle before tightening the axle nut. Doing so may damage the hub bearing.

Tightening torque:
220 N·m (22.43 kgf-m, 162.3 ft-lb)

GETtheMANUALS.org

9) Inspect the lean of axis direction using a dial gauge. Replace the bearing if the load range exceeds the limitation.

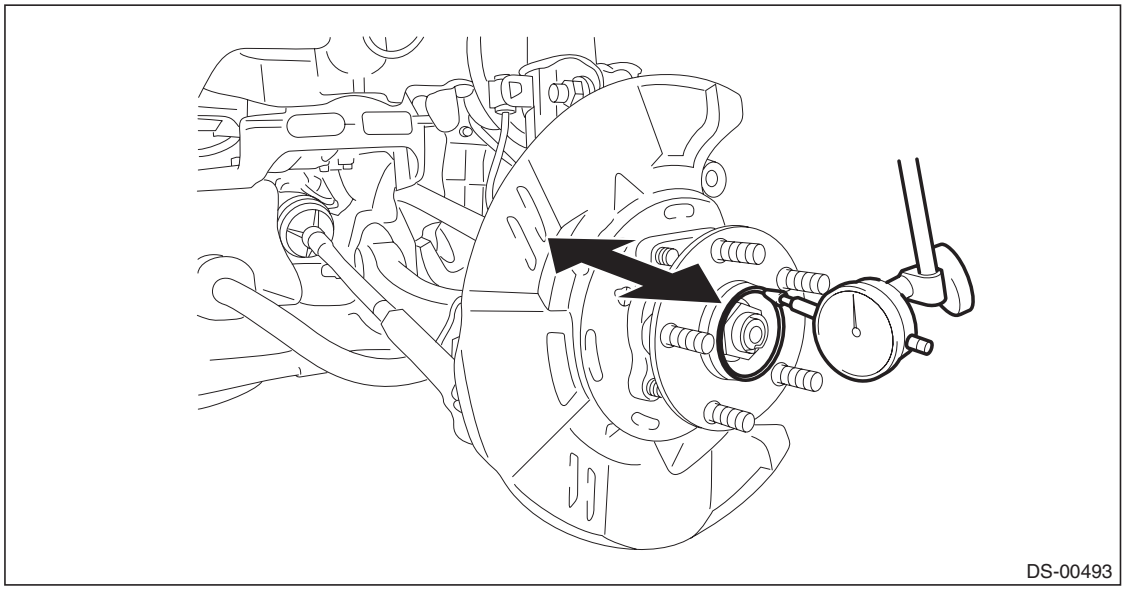

Service limit:
Maximum: 0.05 mm (0.0020 in)

10) After tightening the axle nut, lock it securely.

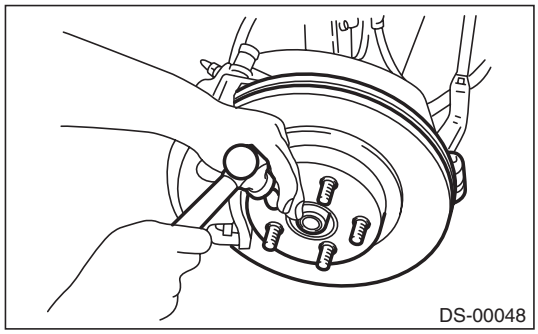

11) Install the wheel.

Tightening torque:
120 N·m (12.24 kgf-m, 88.5 ft-lb)

12) Moving the front tire up and down by hand, check there is no play in bearing, and check the wheel rotates smoothly.

CAUTION:
If there is any fault in the bearing, replace hub unit bearing.

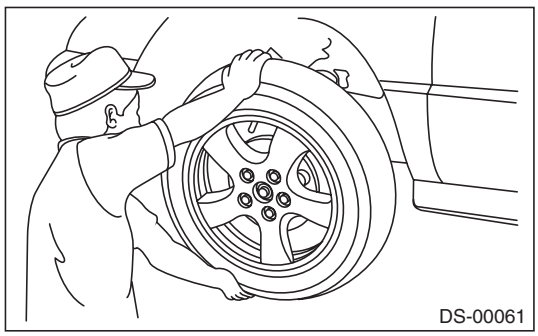

GETtheMANUALS.org

13) Inspect the wheel alignment and adjust if necessary.
- Inspection: <Ref. to FS-9, INSPECTION, Wheel Alignment.>
- Adjustment: <Ref. to FS-14, ADJUSTMENT, Wheel Alignment.>

C: DISASSEMBLY

1) Remove bolt from the front axle housing, and remove the front hub unit bearing and disc brake cover.

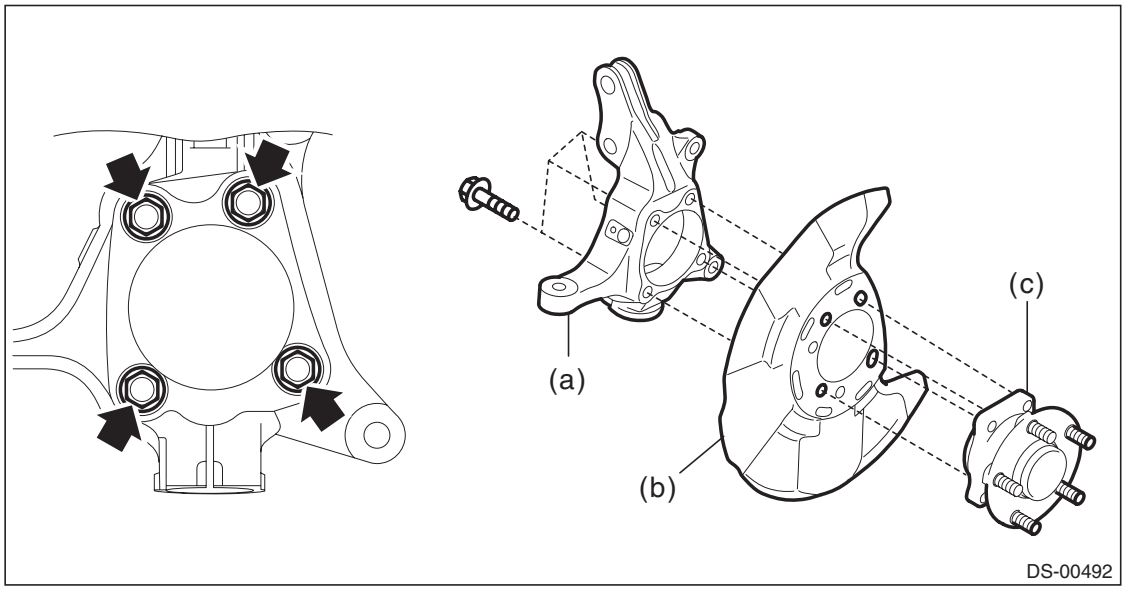

(a) Front axle housing (b) Disc brake cover (c) Front hub unit bearing

CAUTION:
- **Do not get closer the tool which charged magnetism to magnetic encoder.**
- **Be careful not to damage the magnetic encoder.**

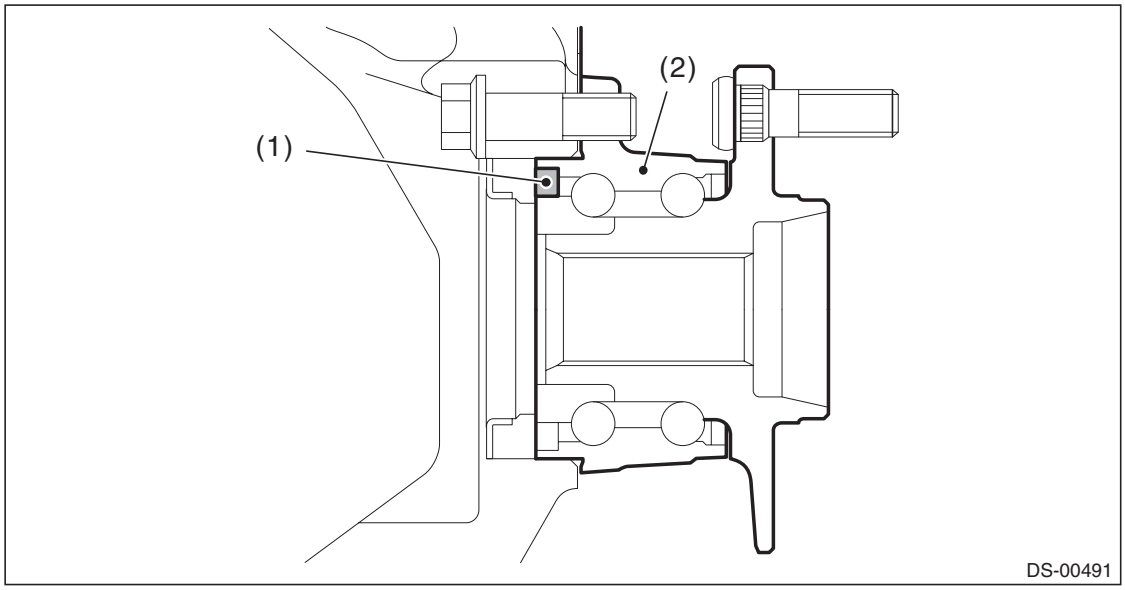

(1) Magnetic encoder (2) Front hub unit bearing

2) Disassemble the front hub unit bearing. <Ref. to DS-28, DISASSEMBLY, Front Hub Unit Bearing.>

GETtheMANUALS.org

D: ASSEMBLY

1) Assemble the front hub unit bearing. <Ref. to DS-28, ASSEMBLY, Front Hub Unit Bearing.>
2) Install the front axle housing (a) and front hub unit bearing (c) to the disc brake cover (b) as shown in the figure, and tighten the bolt.

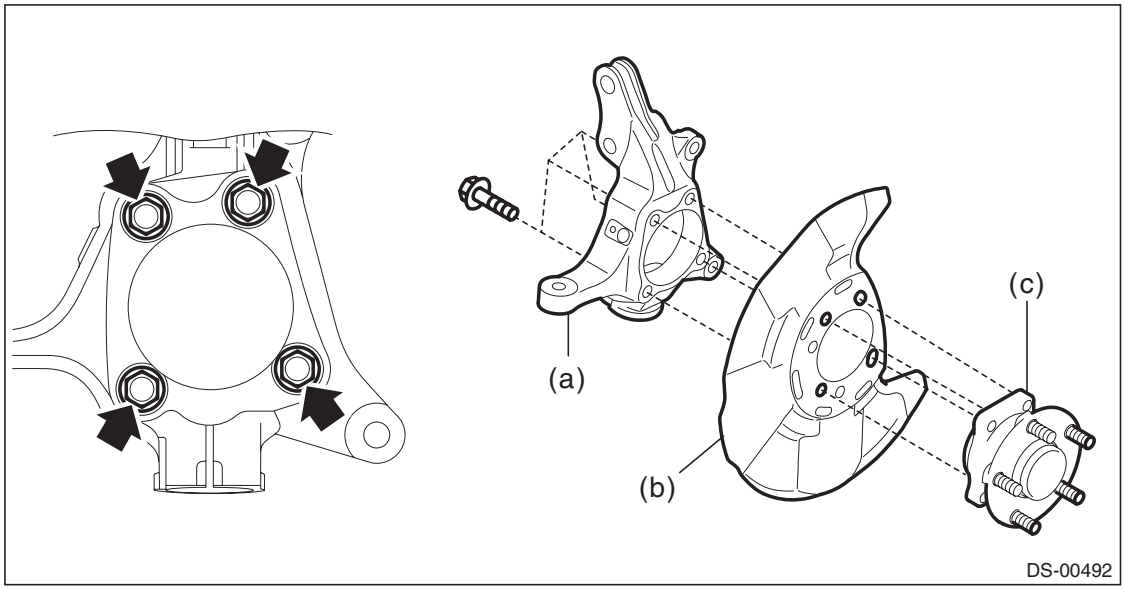

Tightening torque:
65 N·m (6.63 kgf-m, 47.9 ft-lb)

CAUTION:
- **Do not get closer the tool which charged magnetism to magnetic encoder.**
- **Be careful not to damage the magnetic encoder.**

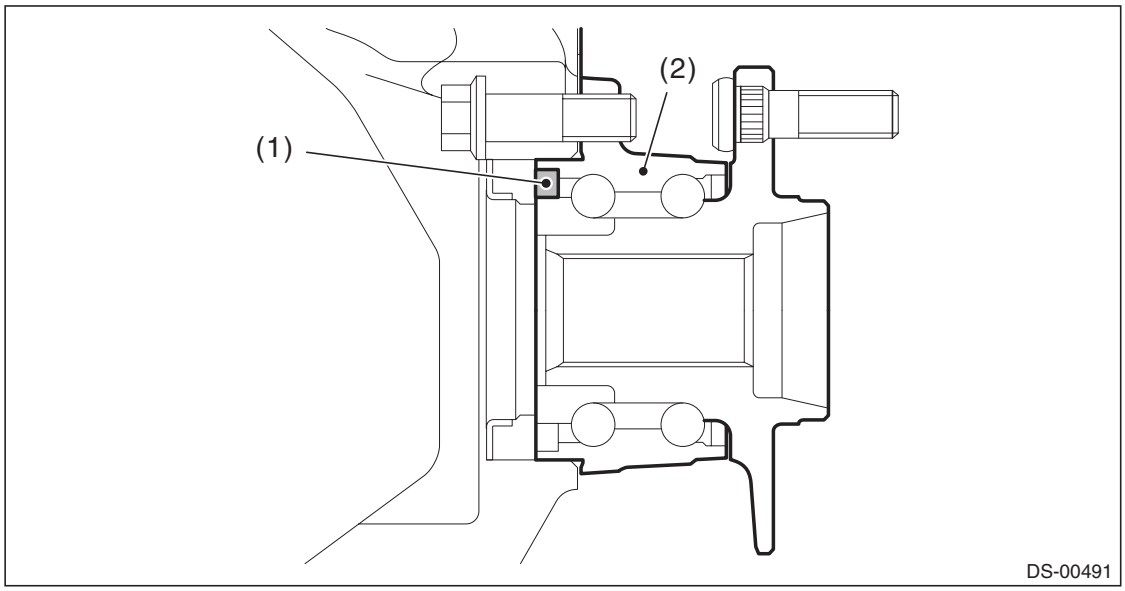

(1) Magnetic encoder (2) Front hub unit bearing

GETtheMANUALS.org

4. Front Hub Unit Bearing

A: REMOVAL

1) Lift up the vehicle, and then remove the front wheels.
2) Remove the axle nut.

CAUTION:
Do not loosen the axle nut while the front axle is loaded. Doing so may damage the hub bearing.

(1) Lift the crimped section of axle nut.
(2) Remove the axle nut using a socket wrench while depressing the brake pedal.

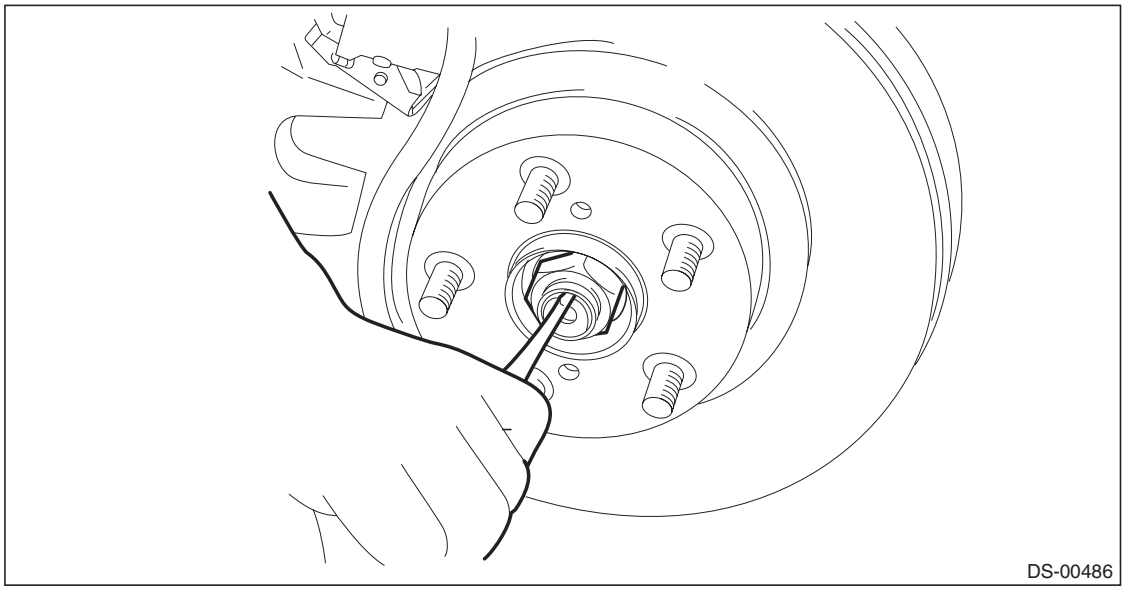

3) Remove the front ABS wheel speed sensor.

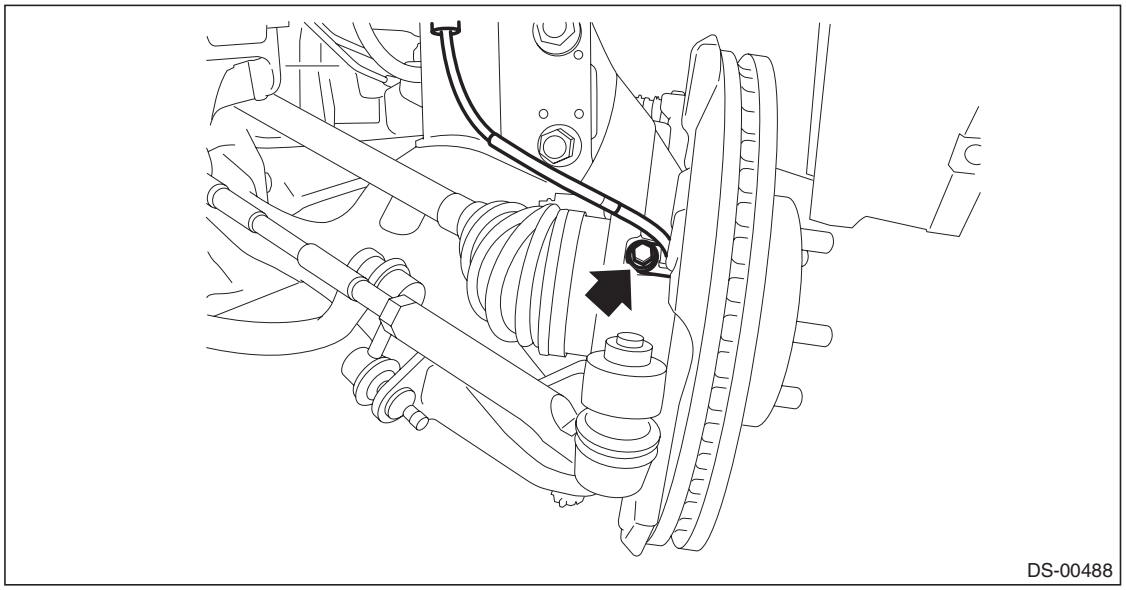

GETtheMANUALS.org

4) Remove the front disc brake caliper from the front axle housing.
   (1) Remove the mounting bolts, and then remove the front disc brake caliper.
   (2) Prepare wiring harnesses etc. to be discarded, and suspend the front disc brake caliper from the shock absorber with the harnesses.

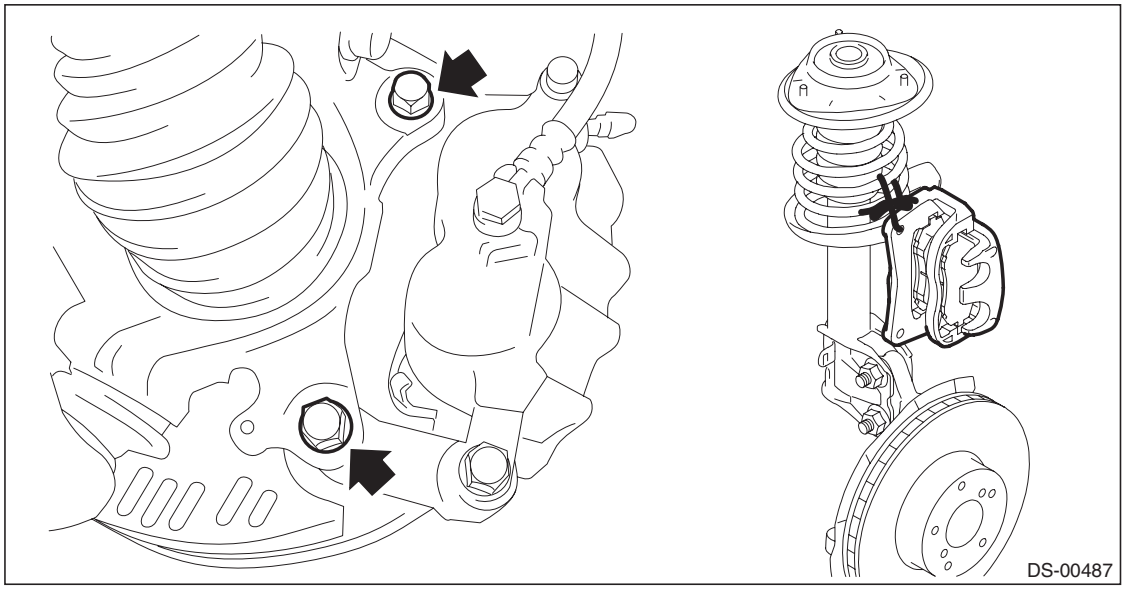

5) Remove the disc rotor.

NOTE:
When the disc rotor is difficult to be removed from the front hub unit bearing, screw in 8 mm (0.31 in) bolt to the threaded part of the disc rotor (A), and remove the disc rotor.

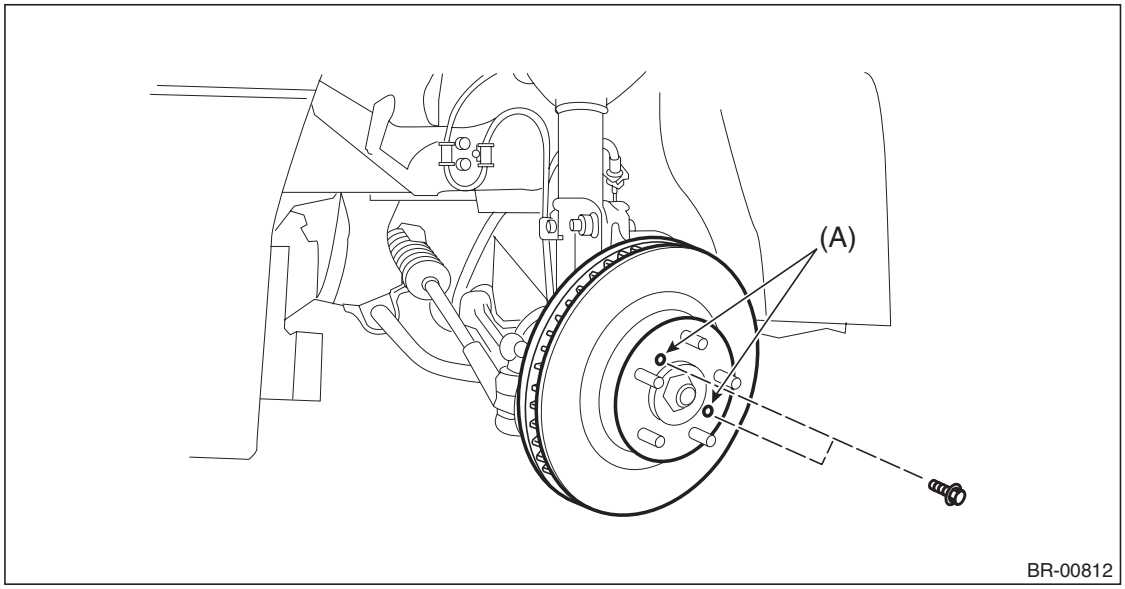

GETtheMANUALS.org

6) Remove the bolt from the front axle housing.

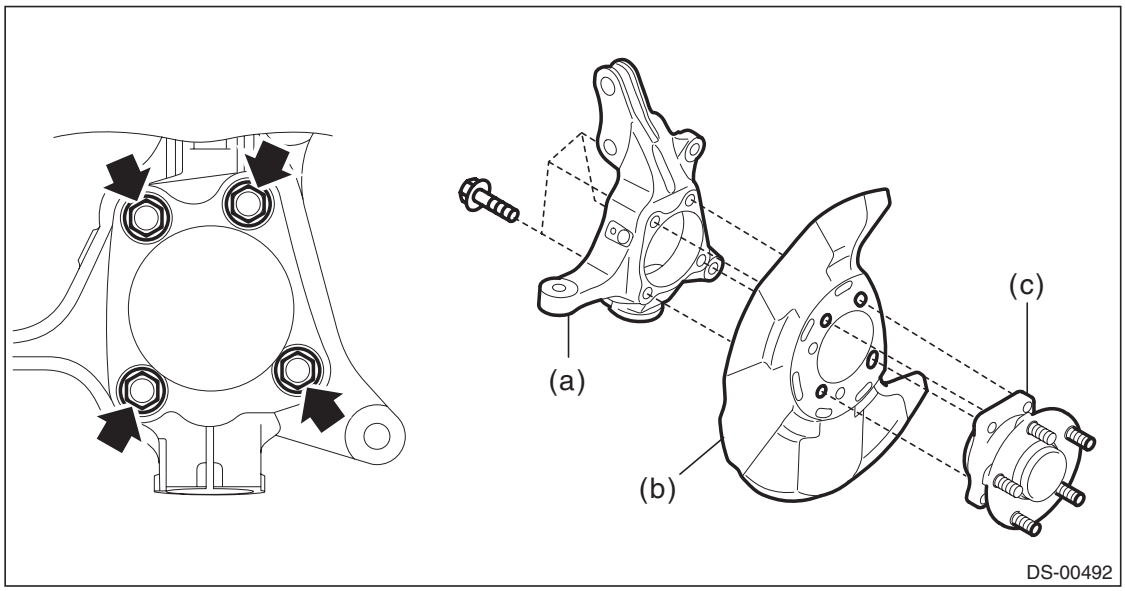

(a) Front axle housing (b) Disc brake cover (c) Front hub unit bearing

CAUTION:
- **Do not get closer the tool which charged magnetism to magnetic encoder.**
- **Be careful not to damage the magnetic encoder.**

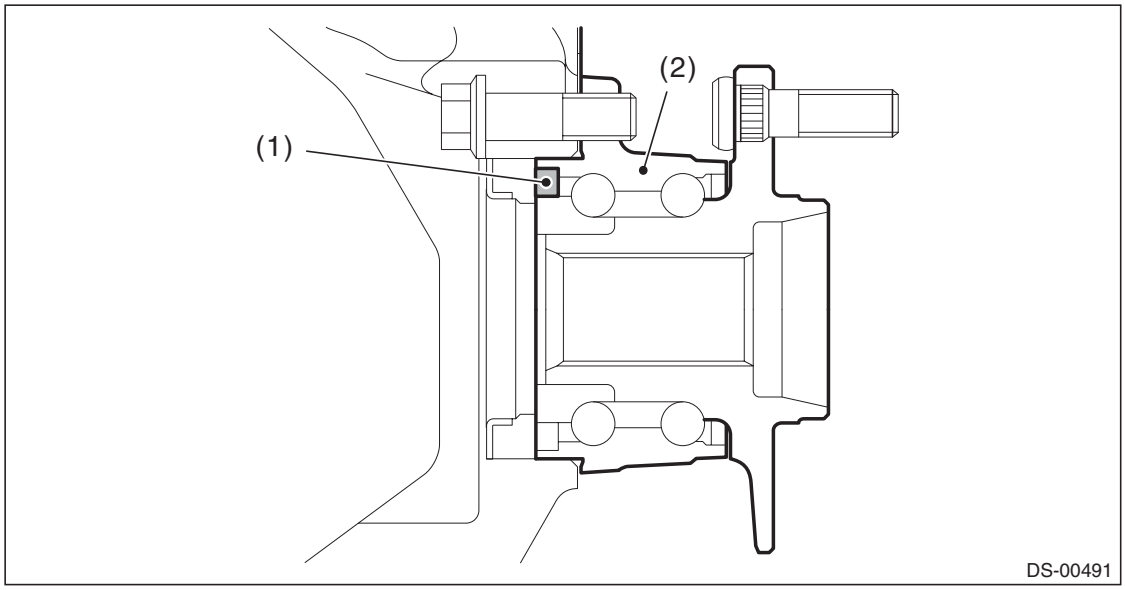

(1) Magnetic encoder (2) Front hub unit bearing

GETtheMANUALS.org

7) Remove the front hub unit bearing. If it is hard to remove, use the ST.

PREPARATION TOOL:
ST1: AXLE SHAFT PULLER (926470000)
ST2: AXLE SHAFT PULLER PLATE (28099PA110)

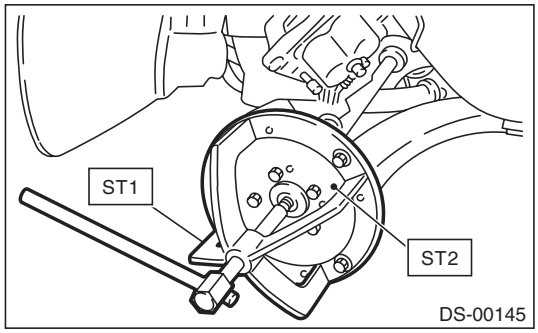

B: INSTALLATION

1) Install the front axle housing (a) and front hub unit bearing (c) to the disc brake cover (b) as shown in the figure, and tighten the bolt.

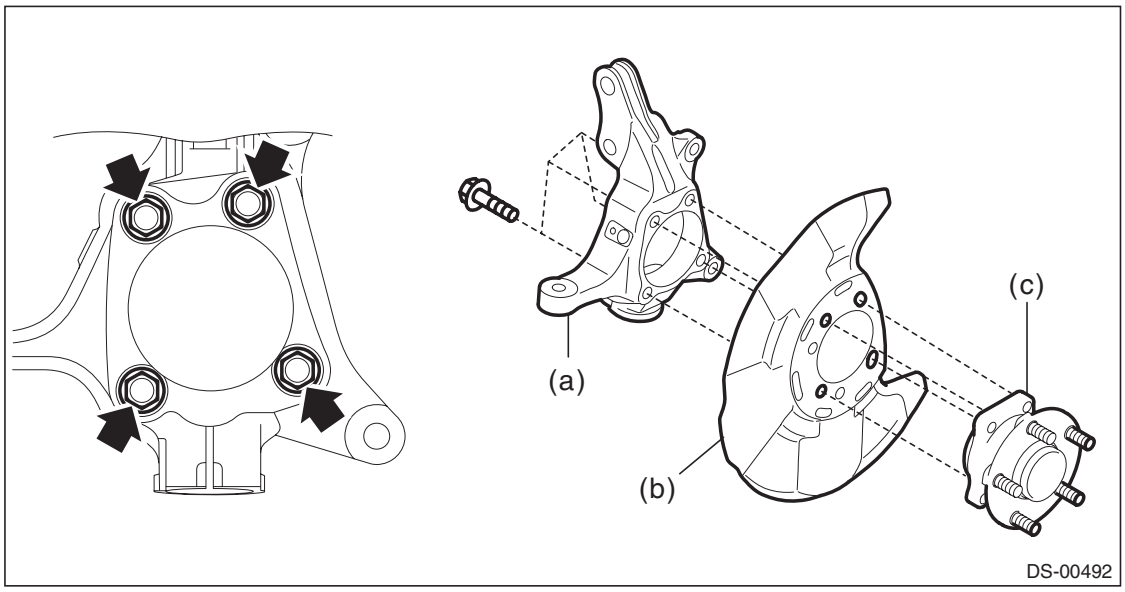

Tightening torque:
65 N·m (6.63 kgf-m, 47.9 ft-lb)

2) Install the front drive shaft. <Ref. to DS-49, INSTALLATION, Front Drive Shaft.>
3) Tighten the axle nut temporarily.
4) Install the disc rotor to hub unit bearing.
5) Install the disc brake caliper to the front axle housing.

Tightening torque:
120 N·m (12.24 kgf-m, 88.5 ft-lb)

6) Install the front ABS wheel speed sensor.

Tightening torque:
7.5 N·m (0.76 kgf-m, 5.5 ft-lb)

7) While pressing the brake pedal, tighten the new axle nuts to the specified torque.

CAUTION:
Do not load the front axle before tightening the axle nut. Doing so may damage the hub bearing.

Tightening torque:
220 N·m (22.43 kgf-m, 162.3 ft-lb)

GETtheMANUALS.org

8) Inspect the lean of axis direction using a dial gauge. Replace the bearing if the load range exceeds the limitation.

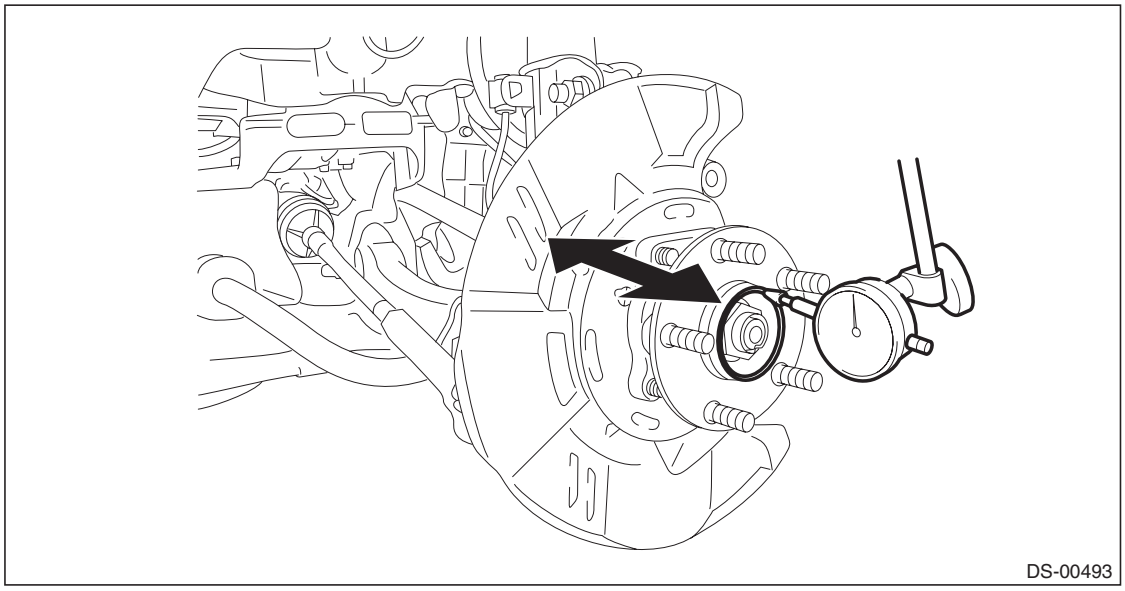

Service limit:
Maximum: 0.05 mm (0.0020 in)

9) After tightening the axle nut, lock it securely.

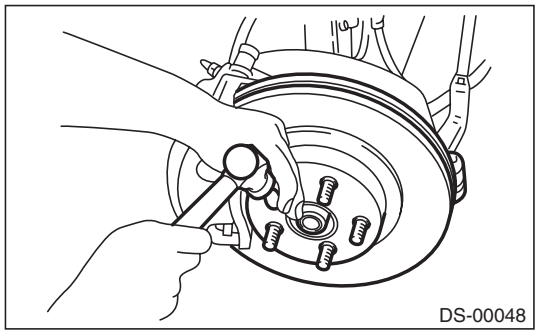

10) Install the wheel.

Tightening torque:
120 N·m (12.24 kgf-m, 88.5 ft-lb)

11) Moving the front tire up and down by hand, check there is no play in bearing, and check the wheel rotates smoothly.

CAUTION:
If there is any fault in the bearing, replace hub unit bearing.

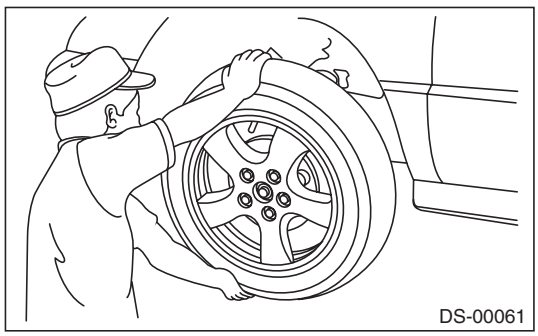

GETtheMANUALS.org

C: DISASSEMBLY

Using the ST or a hydraulic press, push out the hub bolt (b) from the front hub unit bearing (a).

CAUTION:
- **Be careful not to hammer the hub bolts. This may deform the hub.**
- **Do not reuse the hub bolt.**

PREPARATION TOOL:
ST: HUB STAND (28399AG000)

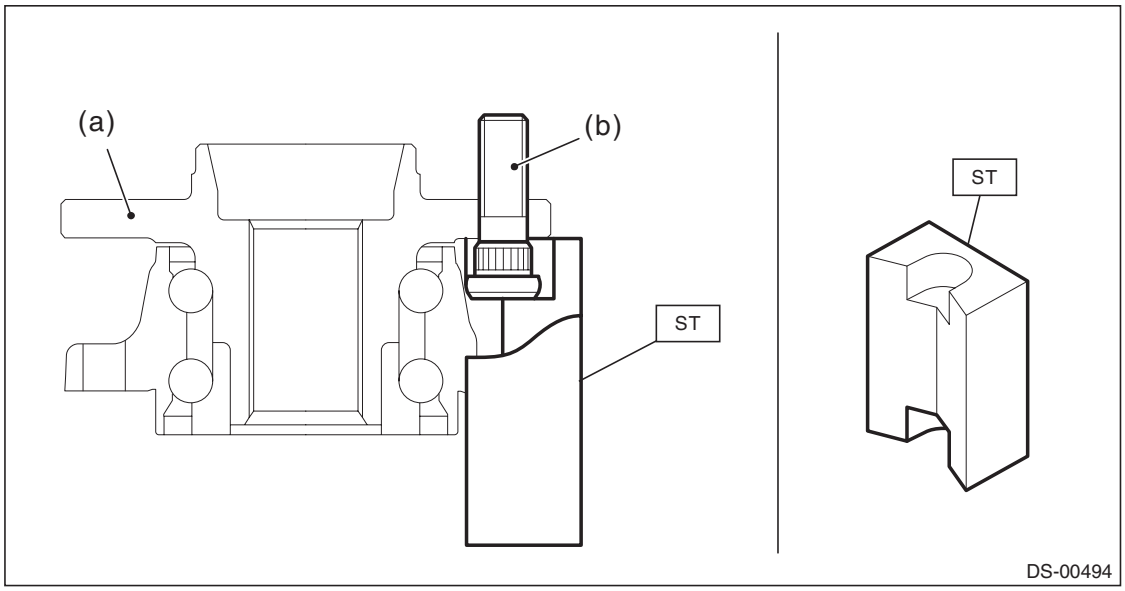

NOTE:
Since the hub unit bearing can not be disassembled, only hub bolts can be removed.

D: ASSEMBLY

1) Install the hub unit bearing to the ST securely.

PREPARATION TOOL:
ST: HUB STAND (927080000)

2) Using a press, press the new hub bolts (b) until their seating surfaces contact the hub unit bearing (a).

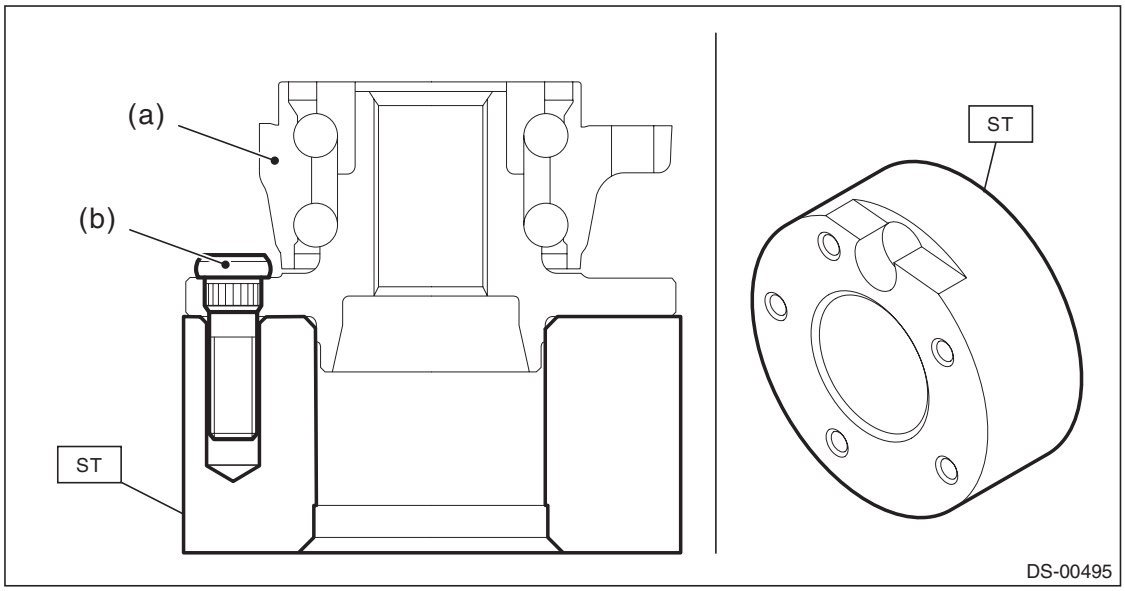

GETtheMANUALS.org

NOTE:
Use the 12 mm (0.47 in) dia. holes in the HUB STAND to prevent bolts from tilting.

E: INSPECTION

1) Moving the front tire up and down by hand, check there is no play in bearing, and check the wheel rotates smoothly.

CAUTION:
If there is any fault in the bearing, replace hub unit bearing.

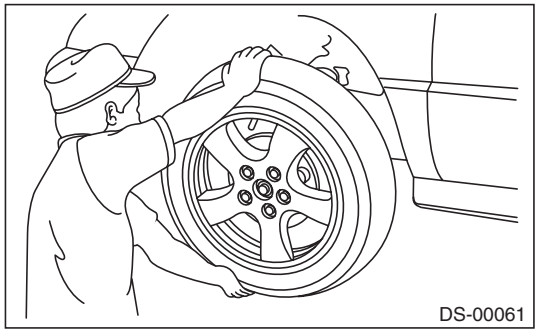

2) Inspect the lean of axis direction using a dial gauge. Replace the bearing if the load range exceeds the limitation.

Service limit:
Maximum: 0.05 mm (0.0020 in)

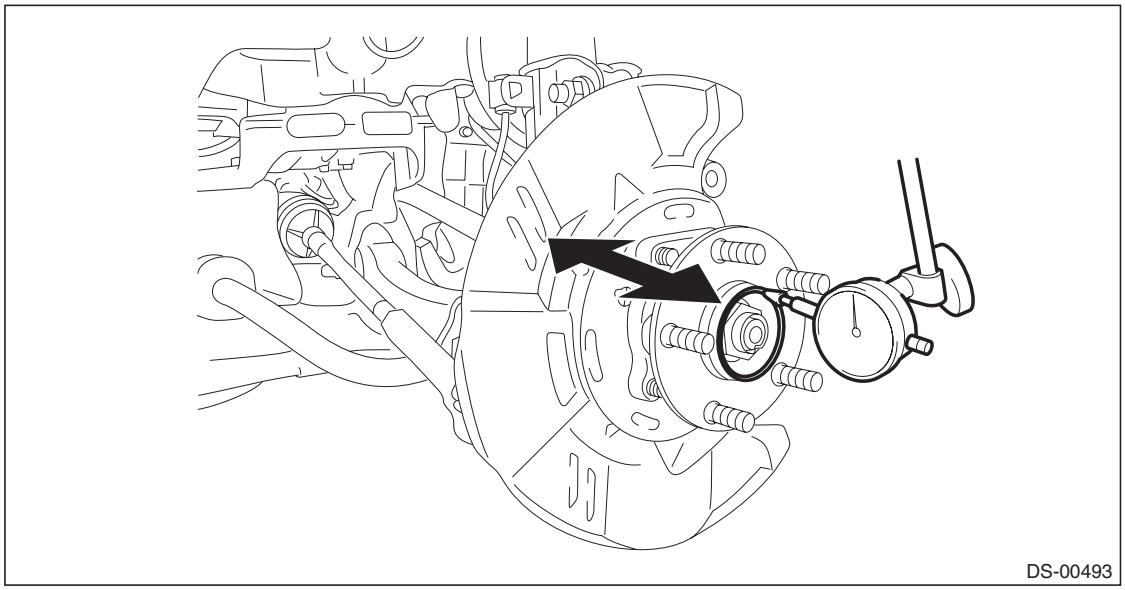

GETtheMANUALS.org

5. Rear Axle

A: REMOVAL

1) Lift up the vehicle, and then remove the rear wheels.
2) Remove the axle nut.

CAUTION:
Do not loosen the axle nut while the rear axle is loaded. Doing so may damage the hub bearing.

(1) Lift the crimped section of axle nut.
(2) Remove the axle nut using a socket wrench while depressing the brake pedal.

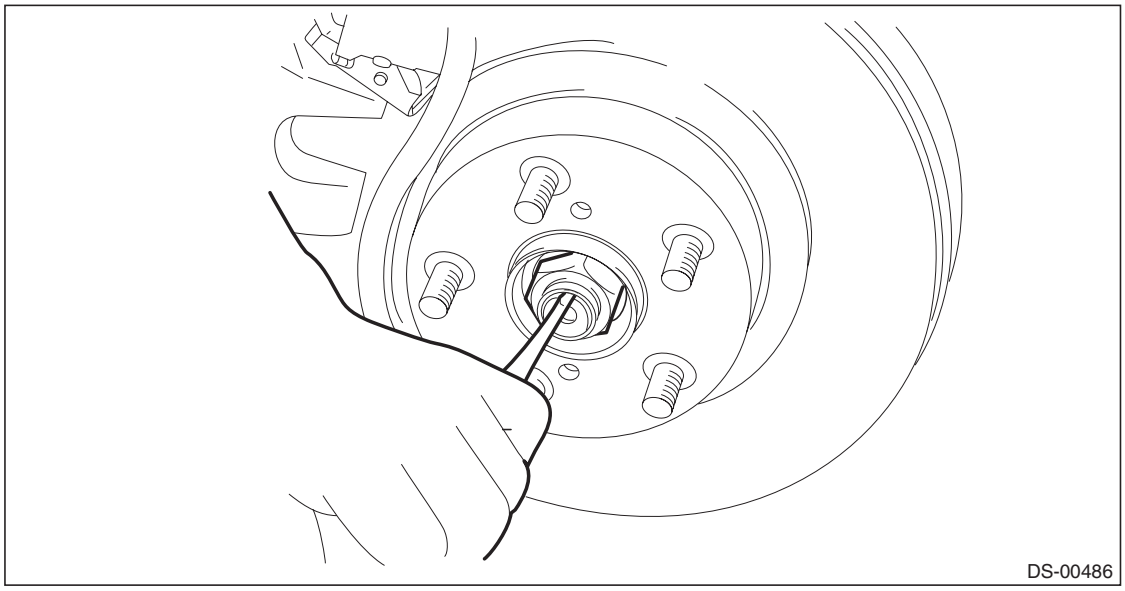

3) Remove the rear disc brake caliper from the rear axle housing.

(1) Remove the bolts, and remove the brake hose bracket and ABS wheel speed sensor.
(2) Remove the mounting bolts, and then remove the rear disc brake caliper.

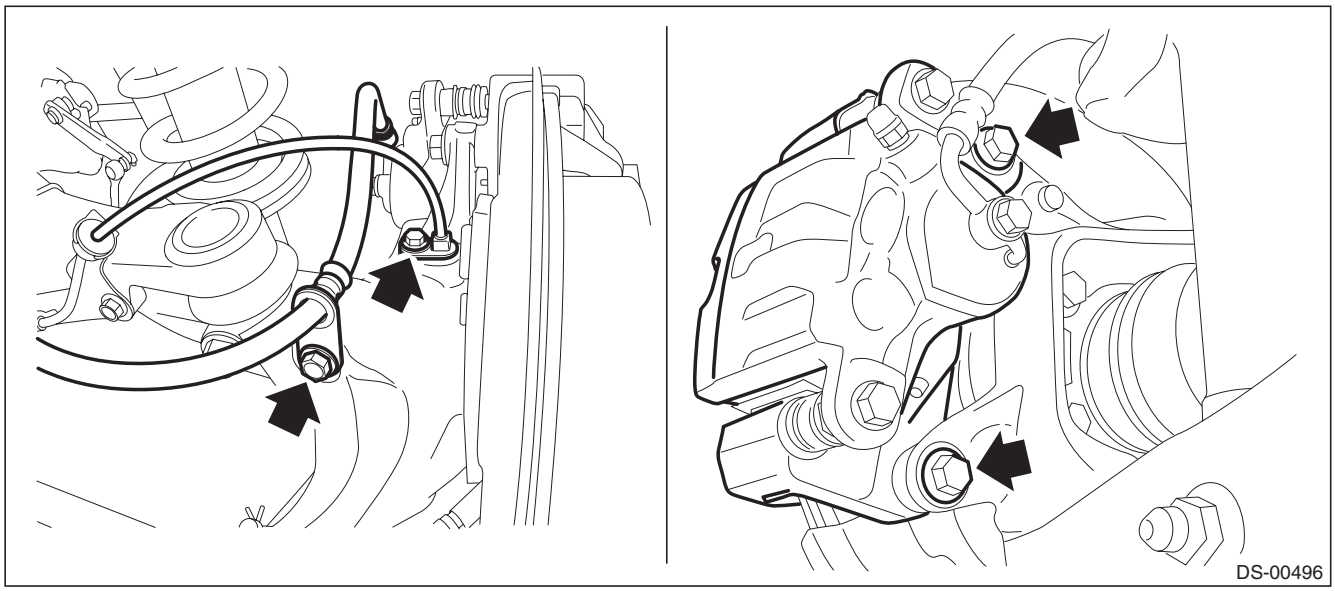

GETtheMANUALS.org

(3) Prepare wiring harnesses etc. to be discarded, and suspend the rear disc brake caliper from the shock absorber with the harnesses.

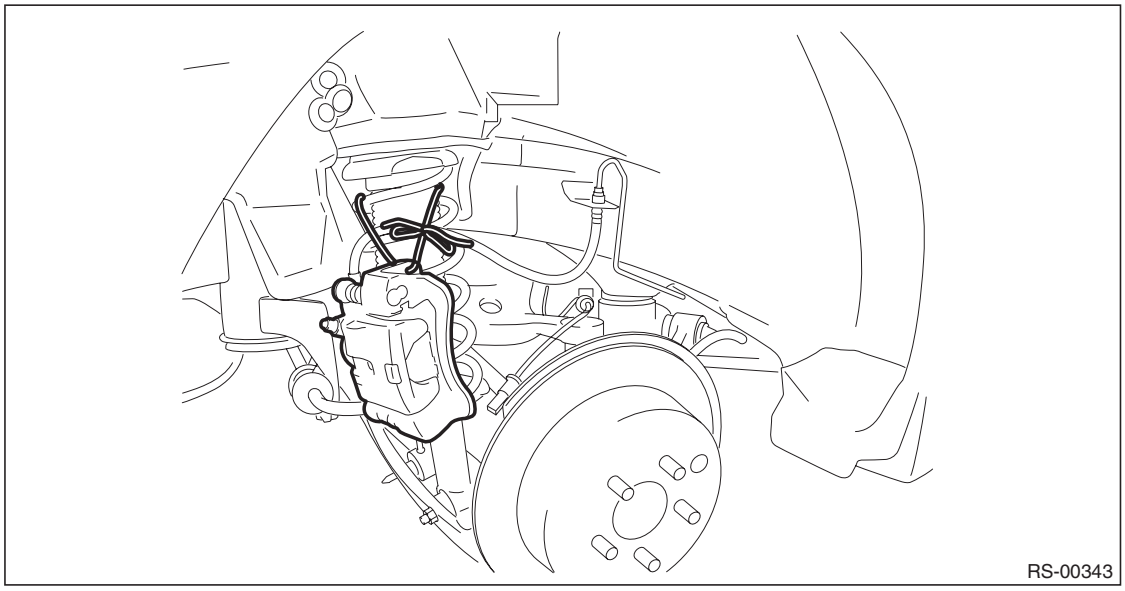

4) Remove the rear disc rotor.

NOTE:
If it is difficult to remove the disc rotor, perform the following two methods in order.
1. Insert the flat tip screwdriver (b) into the brake adjustment hole (A), and rotate the adjusting screw (a) until the brake shoe moves far enough to remove the disc rotor (c).

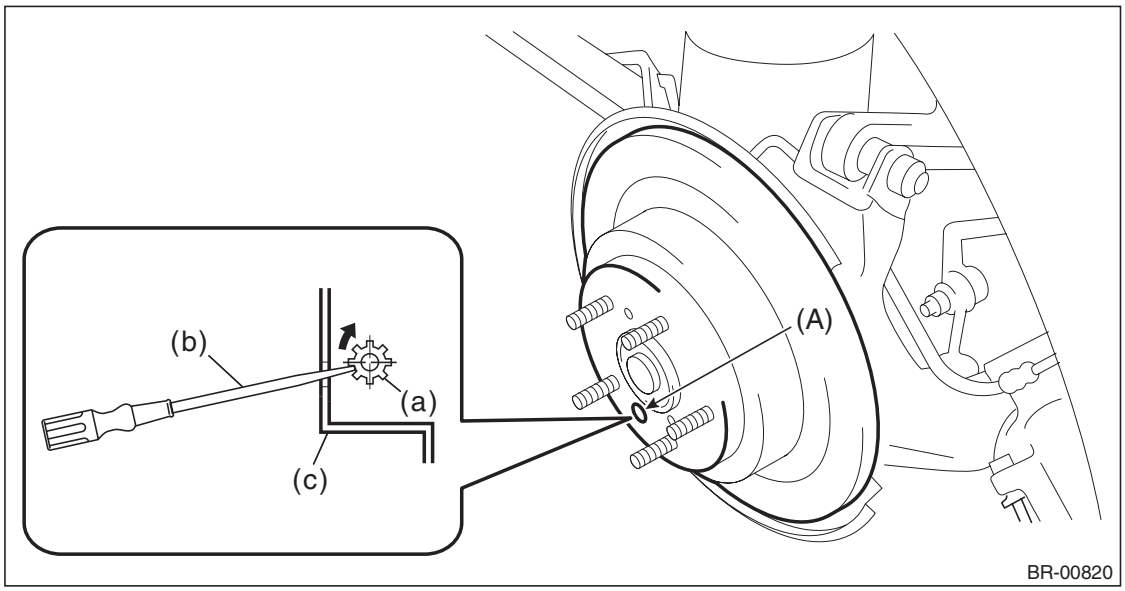

GETtheMANUALS.org

2. When the disc rotor is difficult to be removed from the rear hub unit bearing, screw in 8 mm (0.31 in) bolt to the threaded part of the disc rotor (A), and remove the disc rotor.

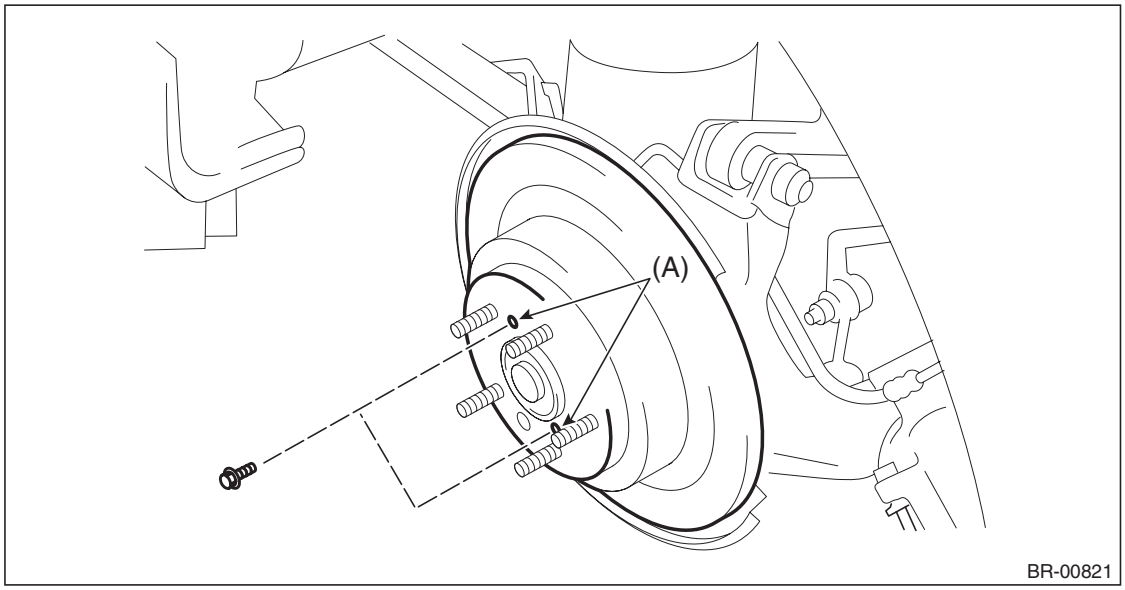

5) Remove the rear hub unit bearing.

CAUTION:
- **Be careful not to damage the magnetic encoder.**
- **Do not get closer the tool which charged magnetism to magnetic encoder.**

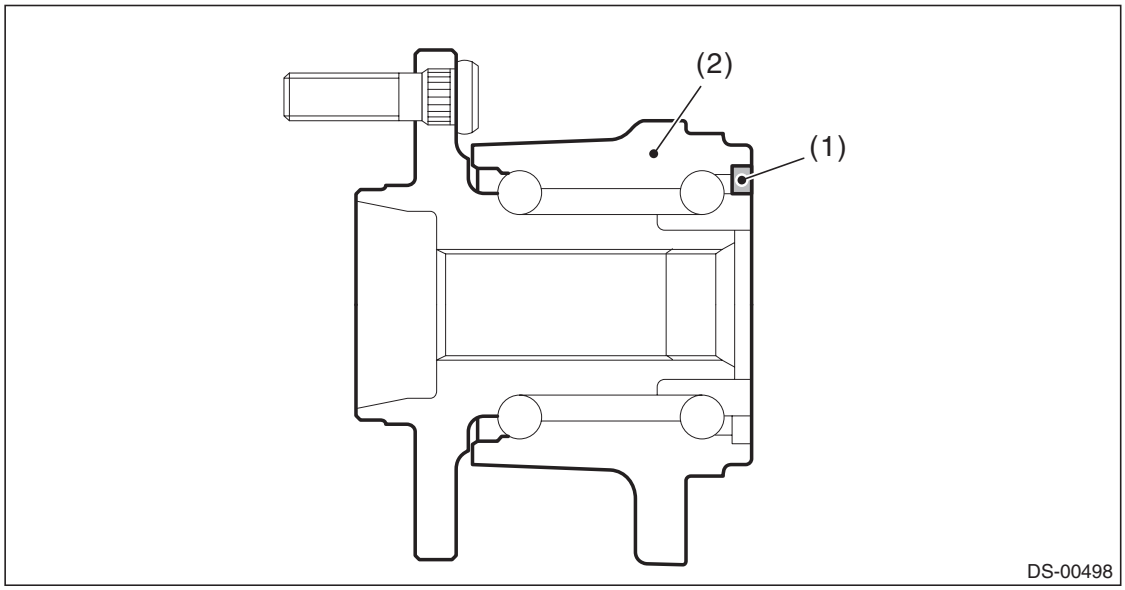

(1) Magnetic encoder (2) Rear hub unit bearing

GETtheMANUALS.org

(1) Remove the bolt from the rear axle housing.

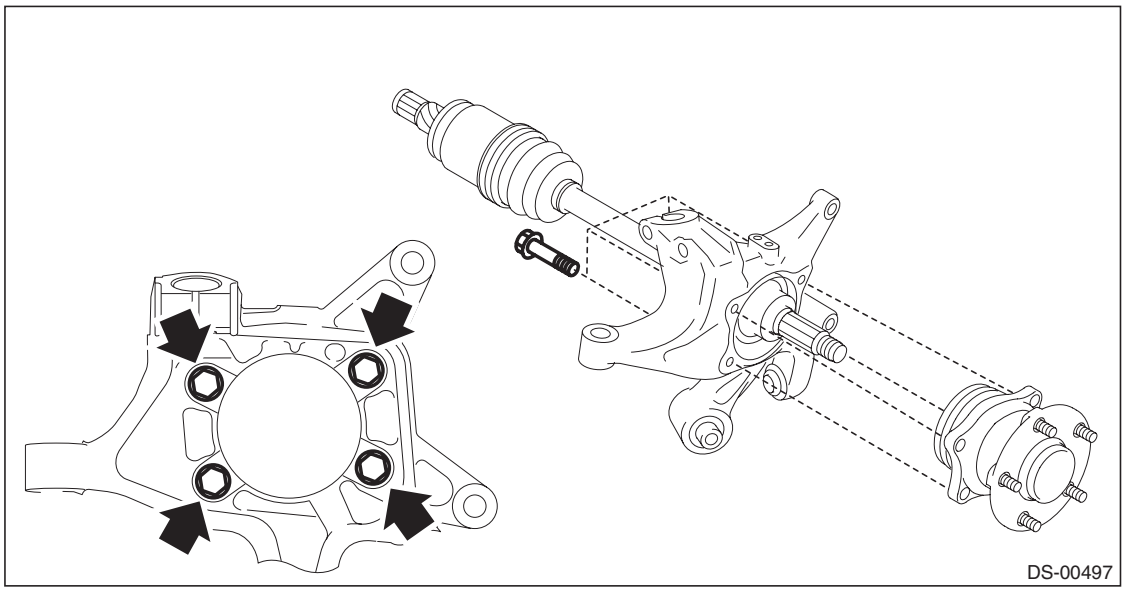

(2) Remove the rear hub unit bearing.

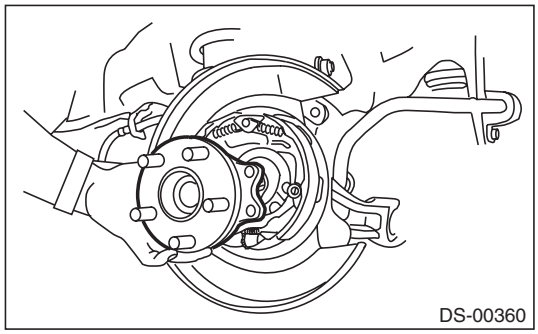

NOTE:
If it is hard to remove, use the ST.

PREPARATION TOOL:
ST1: AXLE SHAFT PULLER (926470000)
ST2: AXLE SHAFT PULLER PLATE (28099PA110)

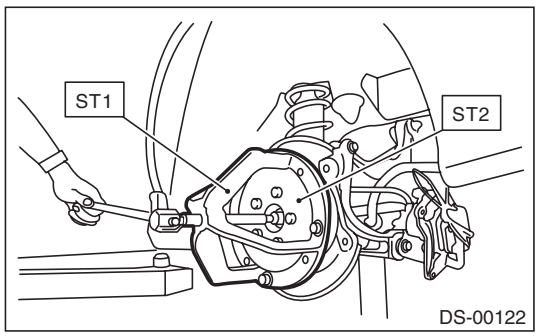

GETtheMANUALS.org

6) Remove the front lateral link.
   (1) Remove the snap pin (a) and nut (b).
   (2) Using a puller, remove the ball joint.

PREPARATION TOOL:
Tie-rod end puller

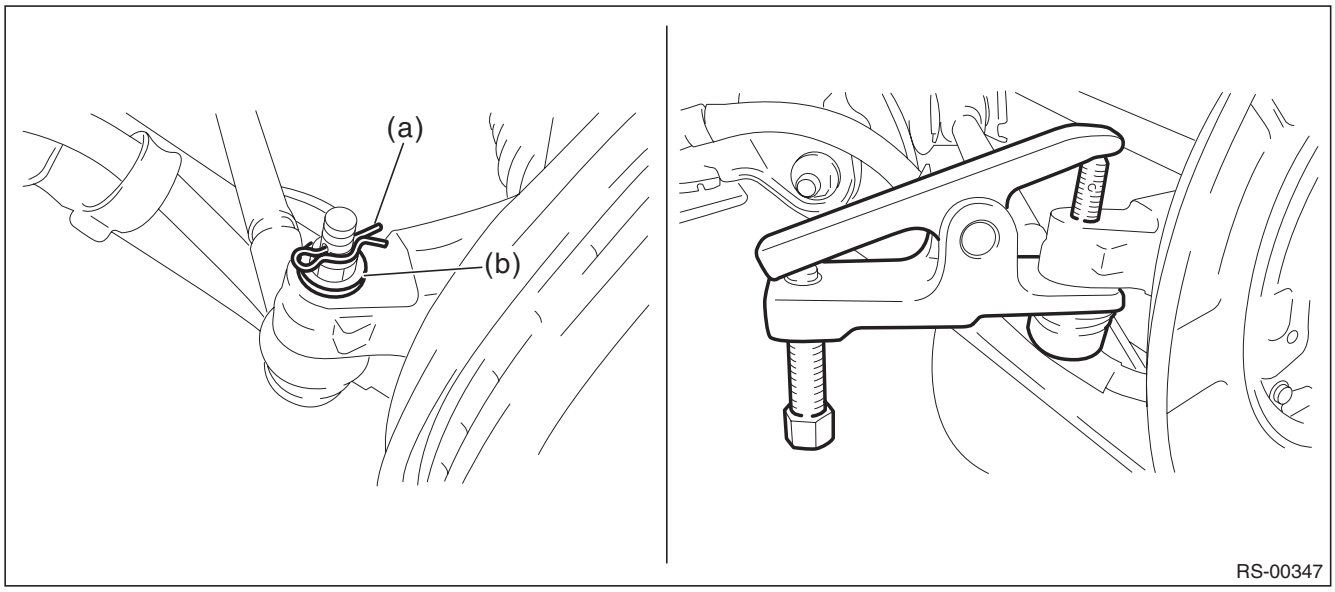

7) Remove the rear axle housing.
   (1) Remove the bolts for the upper arm, trailing link, and rear lateral link, and then separate the rear axle housing.

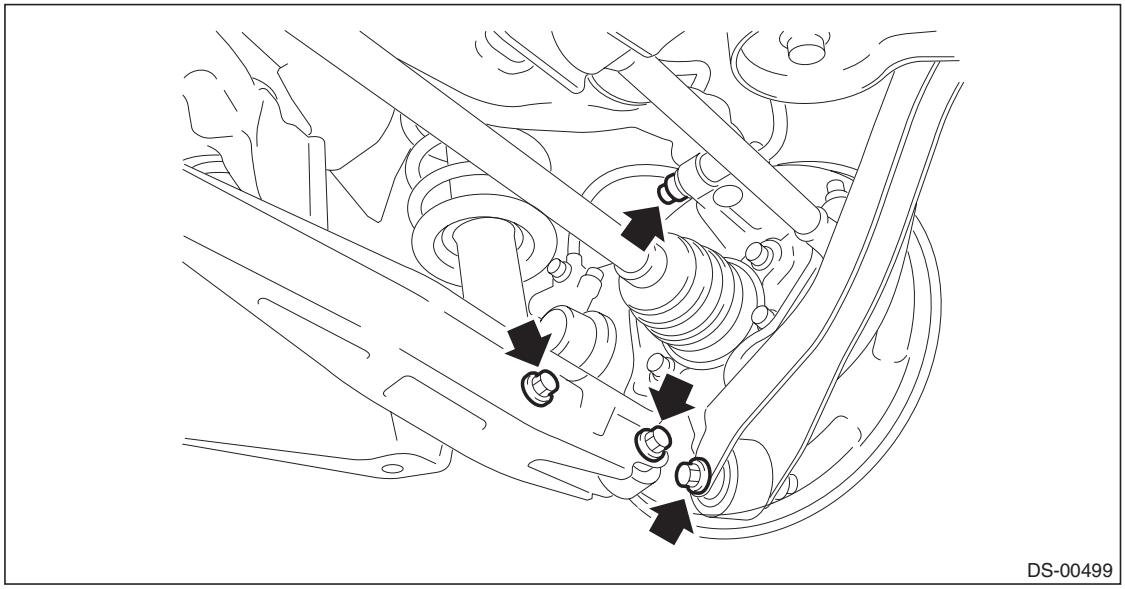

   (2) Remove the rear axle housing.

GETtheMANUALS.org

B: INSTALLATION

1) Temporarily tighten the rear axle housing to the upper arm.
2) Aligning with the mounting hole of the rear brake back plate, temporarily tighten the rear hub unit bearing to the rear axle housing.

CAUTION:
- **Be careful not to damage the magnetic encoder.**
- **Do not get closer the tool which charged magnetism to magnetic encoder.**

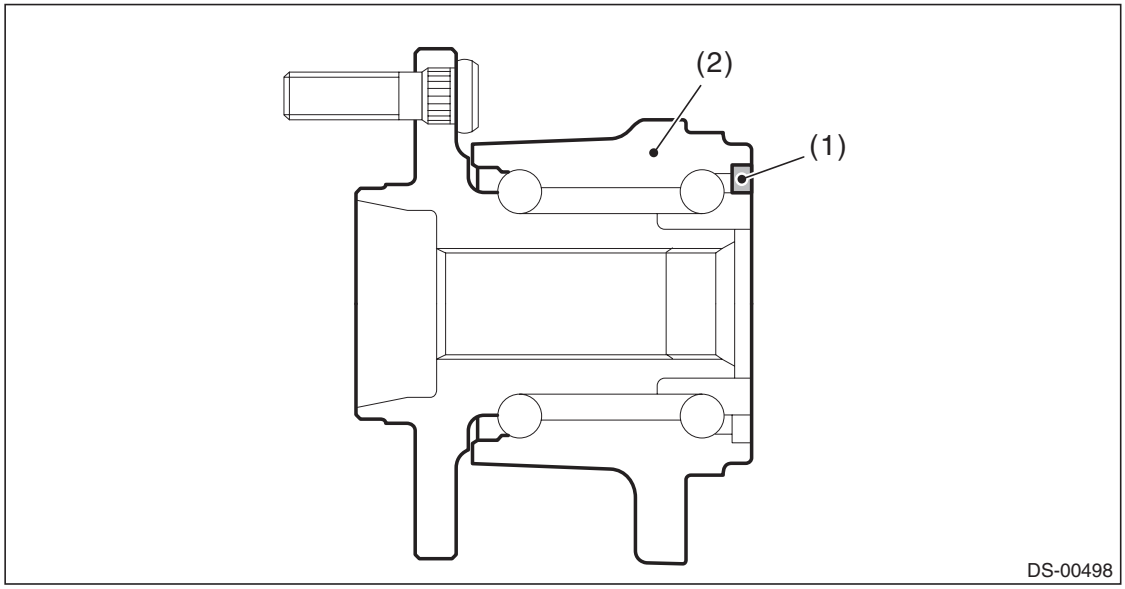

(1) Magnetic encoder (2) Rear hub unit bearing

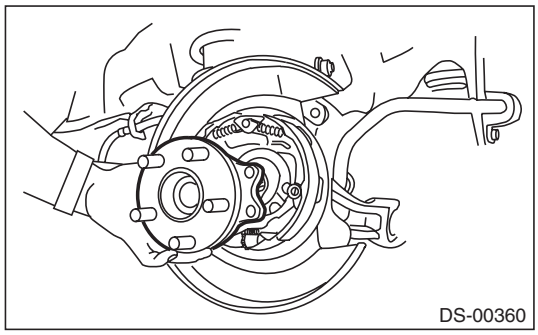

3) Attach the rear drive shaft to the rear hub unit bearing.
4) Tighten the new axle nut temporarily.

CAUTION:
Use new axle nuts.
5) Attach the links to the rear axle housing and tighten them to the specified torque.

Tightening torque:
Upper arm: 80 N·m (8.2 kgf-m, 59 ft-lb)
Front lateral link: 60 N·m (6.1 kgf-m, 44.3 ft-lb)
Rear lateral link: 80 N·m (8.2 kgf-m, 59 ft-lb)
Trailing link: 80 N·m (8.2 kgf-m, 59 ft-lb)

GETtheMANUALS.org

6) Tighten the rear hub unit bearing.

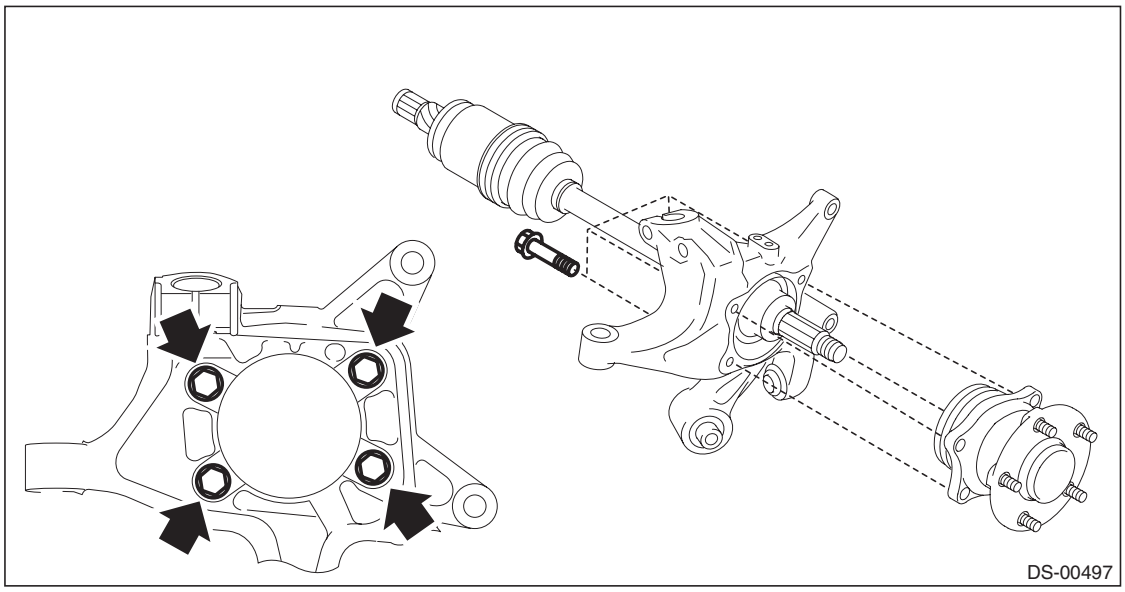

Tightening torque:
65 N·m (6.63 kgf-m, 47.9 ft-lb)

7) Install the rear disc rotor.
8) Install the rear disc brake.

Tightening torque:
66 N·m (6.73 kgf-m, 48.7 ft-lb)

9) Install the brake hose bracket and rear ABS wheel speed sensor.

Tightening torque:
Brake hose bracket: 33 N·m (3.36 kgf-m, 24.3 ft-lb)
Rear ABS wheel speed sensor: 7.5 N·m (0.76 kgf-m, 5.5 ft-lb)

10) While pressing the brake pedal, tighten the new axle nuts to the specified torque.

CAUTION:
Do not load the rear axle before tightening the axle nut. Doing so may damage the hub bearing.

Tightening torque:
240 N·m (24.47 kgf-m, 177 ft-lb)

GETtheMANUALS.org

11) Inspect the lean of axis direction using a dial gauge. Replace the bearing if the load range exceeds the limitation.

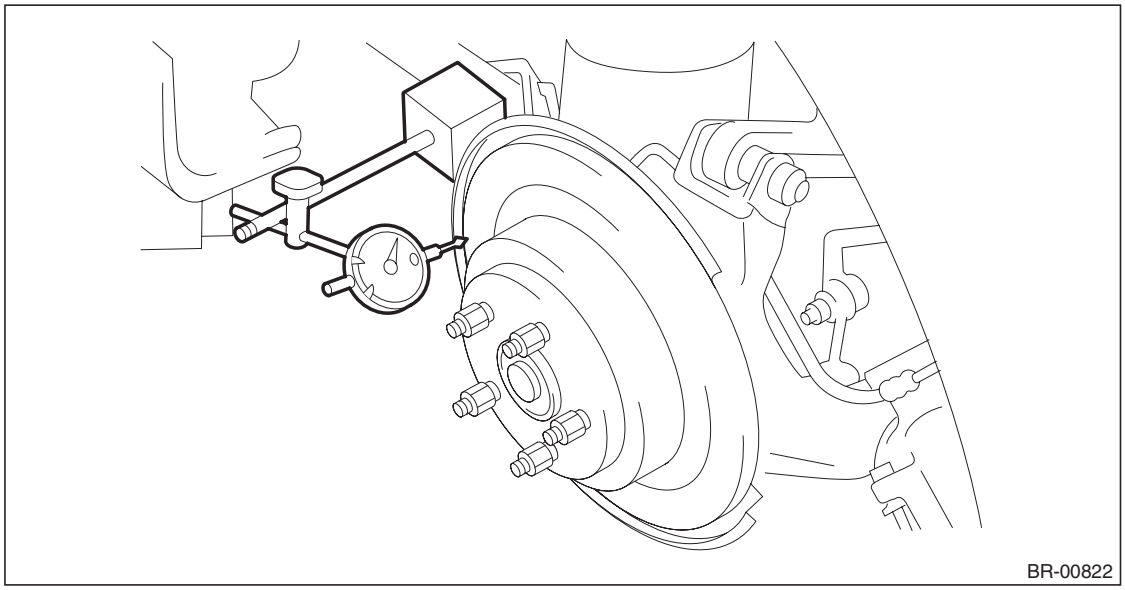

Service limit:
Maximum: 0.05 mm (0.0020 in)

12) After tightening the axle nut, lock it securely.

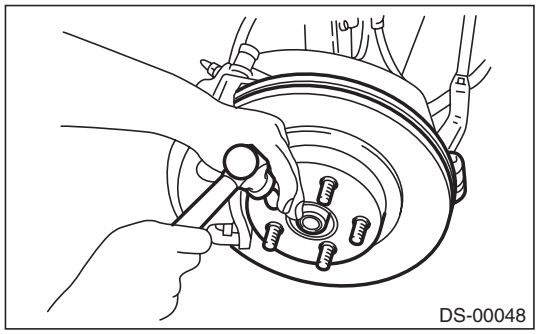

13) Install the rear wheels.

Tightening torque:
120 N·m (12.24 kgf-m, 88.5 ft-lb)

14) Moving the rear tire up and down by hand, check there is no backlash in bearing, and check the wheel rotates smoothly.

CAUTION:
If there is any fault in the bearing, replace hub unit bearing.

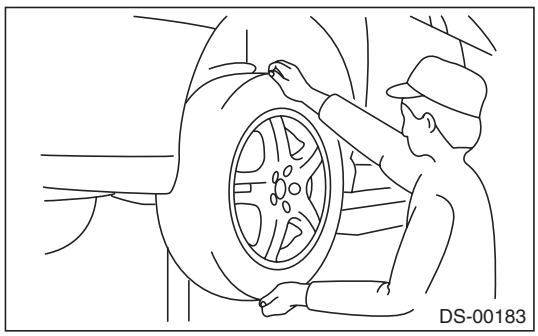

GETtheMANUALS.org

15) Inspect the wheel alignment and adjust if necessary.
- Inspection: <Ref. to FS-9, INSPECTION, Wheel Alignment.>
- Adjustment: <Ref. to FS-14, ADJUSTMENT, Wheel Alignment.>

C: DISASSEMBLY

For the removal procedure of bushing, refer to “Rear Trailing Link” in “REAR SUSPENSION”. <Ref. to RS-13, REAR AXLE HOUSING BUSHING, DISASSEMBLY, Rear Trailing Link.>

D: ASSEMBLY

For the installation procedure of bushing, refer to “Rear Trailing Link” in “REAR SUSPENSION”. <Ref. to RS-15, REAR AXLE HOUSING BUSHING, ASSEMBLY, Rear Trailing Link.>

GETtheMANUALS.org

6. Rear Hub Unit Bearing

A: REMOVAL

1) Lift up the vehicle, and then remove the rear wheels.
2) Remove the axle nut.

CAUTION:
Do not loosen the axle nut while the rear axle is loaded. Doing so may damage the hub bearing.

(1) Lift the crimped section of axle nut.
(2) Remove the axle nut using a socket wrench while depressing the brake pedal.

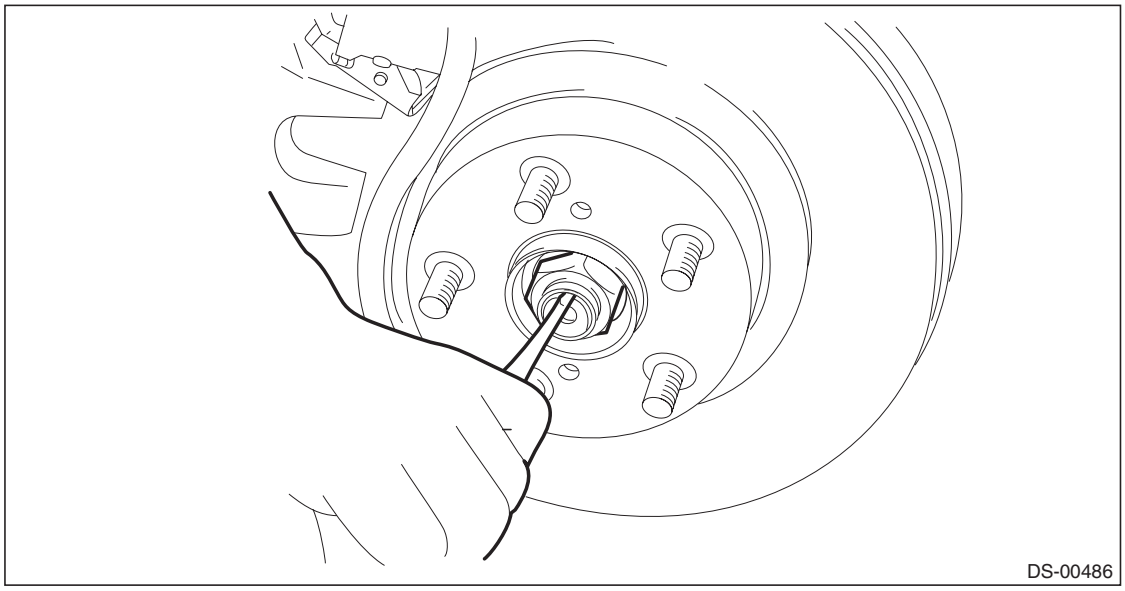

3) Remove the rear disc brake caliper from the rear axle housing.

(1) Remove the bolt from the brake hose bracket.
(2) Remove the mounting bolts, and then remove the rear disc brake caliper.

GETtheMANUALS.org

(3) Prepare wiring harnesses etc. to be discarded, and suspend the rear disc brake caliper from the shock absorber with the harnesses.

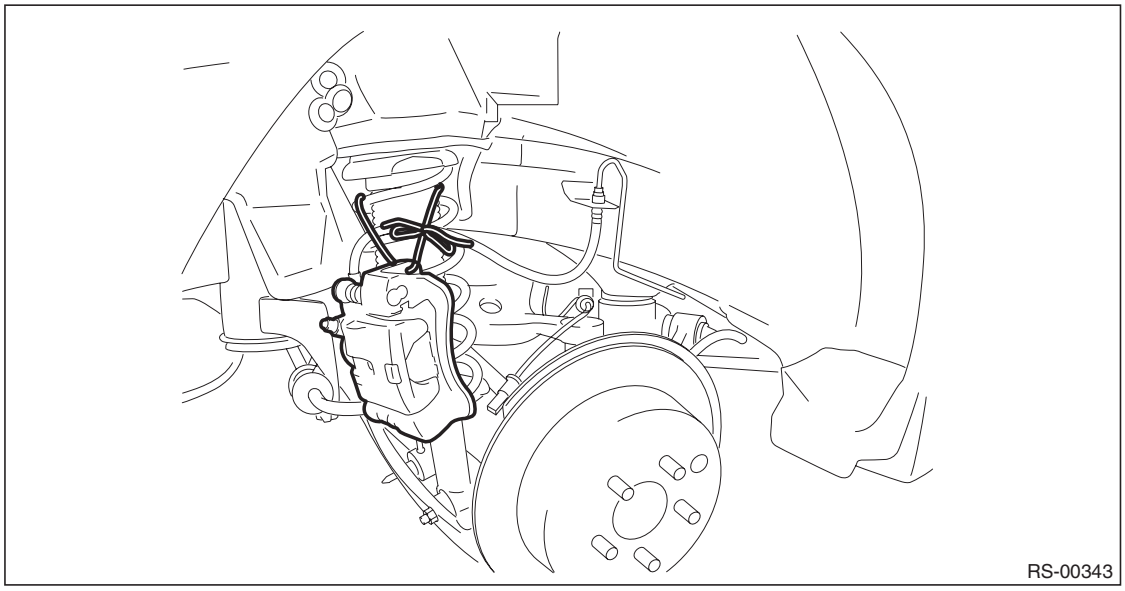

4) Remove the rear disc rotor.

NOTE:
If it is difficult to remove the disc rotor, perform the following two methods in order.
1. Insert the flat tip screwdriver (b) into the brake adjustment hole (A), and rotate the adjusting screw (a) until the brake shoe moves far enough to remove the disc rotor (c).

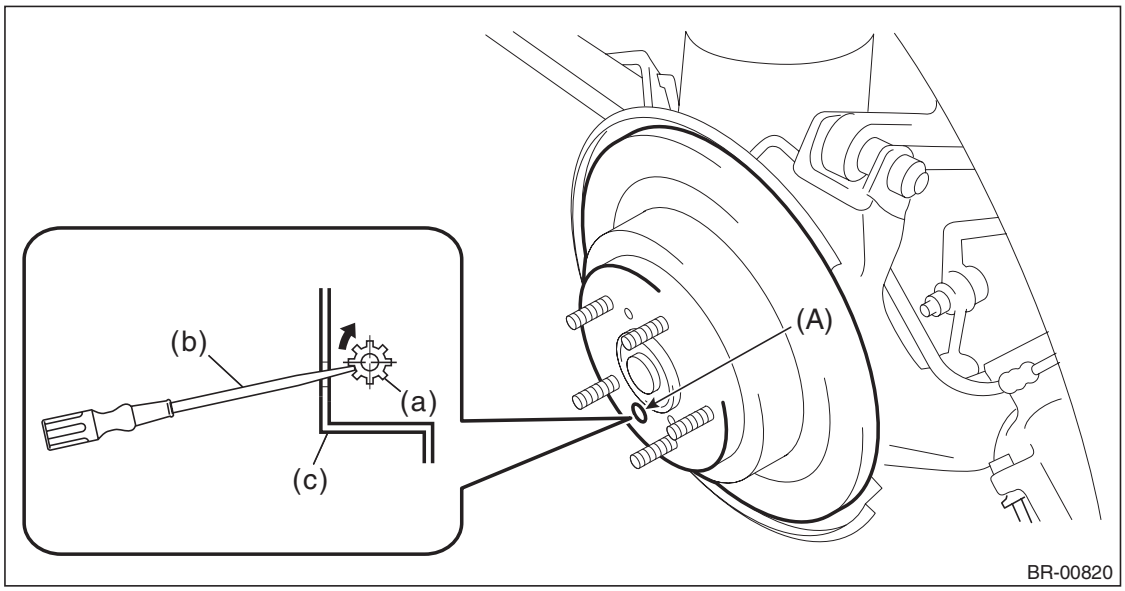

GETtheMANUALS.org

2. When the disc rotor is difficult to be removed from the rear hub unit bearing, screw in 8 mm (0.31 in) bolt to the threaded part of the disc rotor (A), and remove the disc rotor.

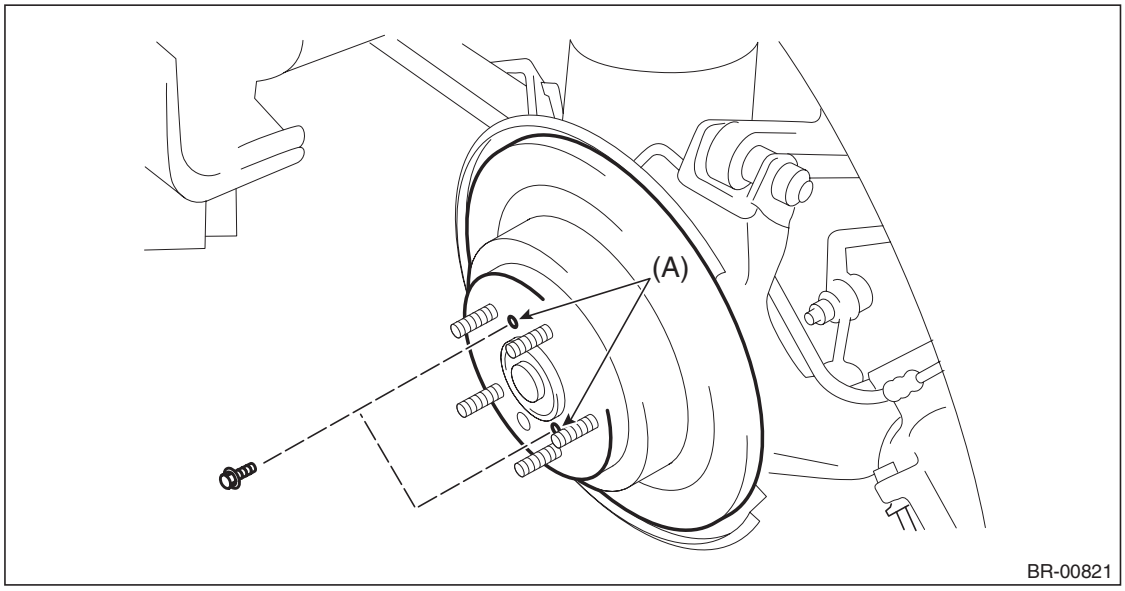

5) Remove the rear hub unit bearing.

CAUTION:
- **Be careful not to damage the magnetic encoder.**
- **Do not get closer the tool which charged magnetism to magnetic encoder.**

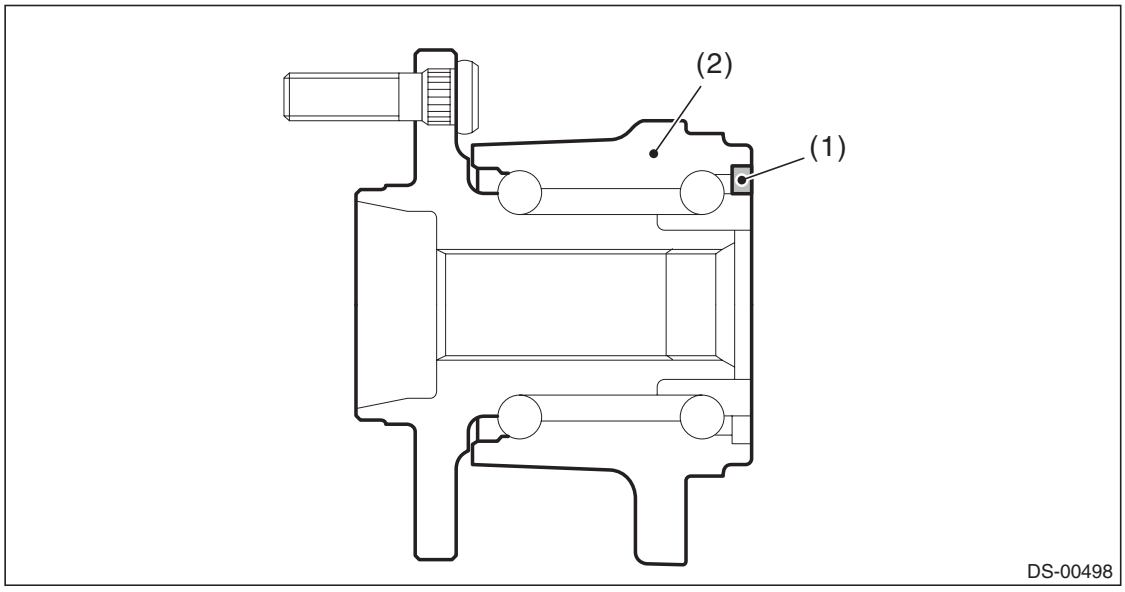

(1) Magnetic encoder (2) Rear hub unit bearing

GETtheMANUALS.org

(1) Remove the bolt from the rear axle housing.

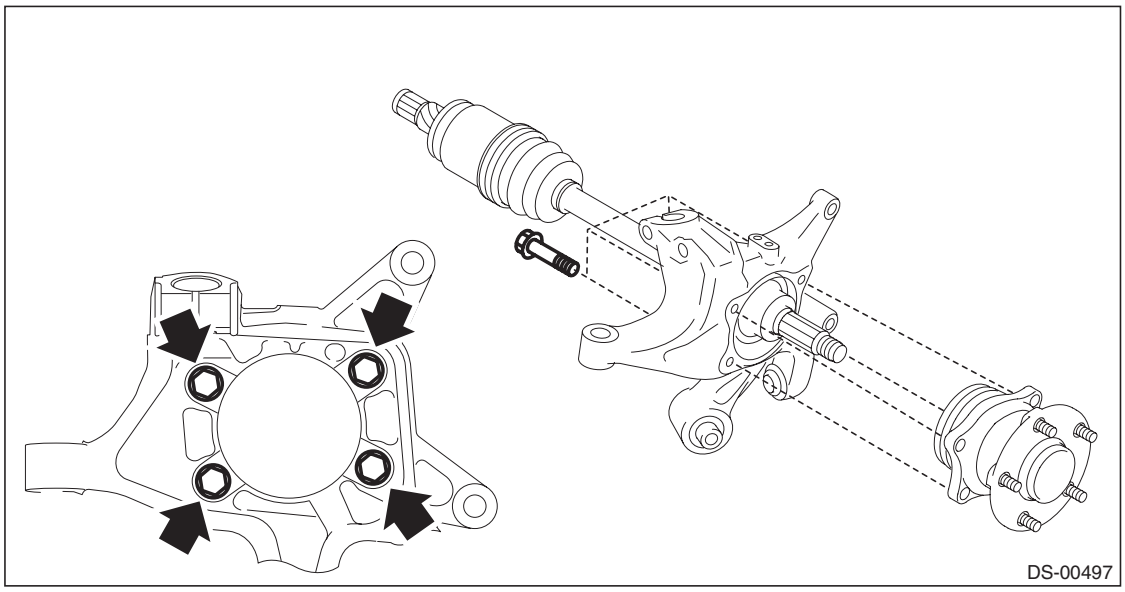

(2) Remove the rear hub unit bearing.

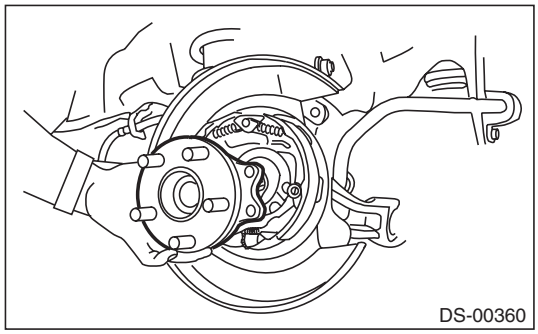

NOTE:
If it is hard to remove, use the ST.

PREPARATION TOOL:
ST1: AXLE SHAFT PULLER (926470000)
ST2: AXLE SHAFT PULLER PLATE (28099PA110)

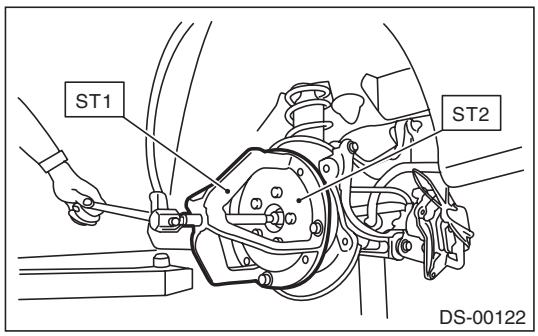

GETtheMANUALS.org

B: INSTALLATION

1) Aligning with the mounting hole of the rear brake back plate, temporarily tighten the rear hub unit bearing to the rear axle housing.

CAUTION:
- **Be careful not to damage the magnetic encoder.**
- **Do not get closer the tool which charged magnetism to magnetic encoder.**

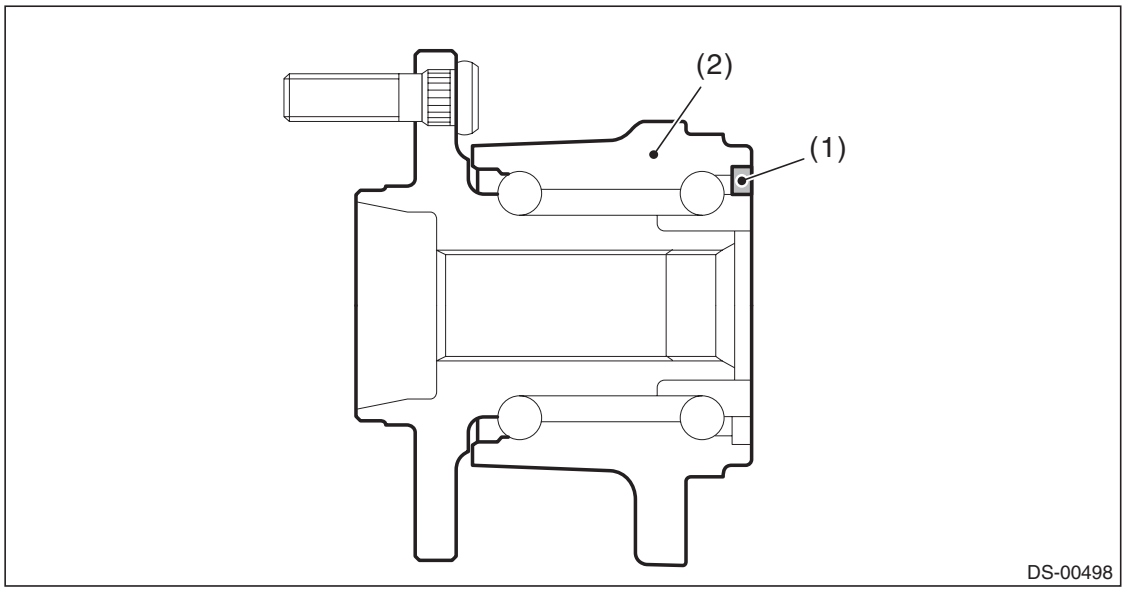

(1) Magnetic encoder (2) Rear hub unit bearing

2) Tighten the rear hub unit bearing.

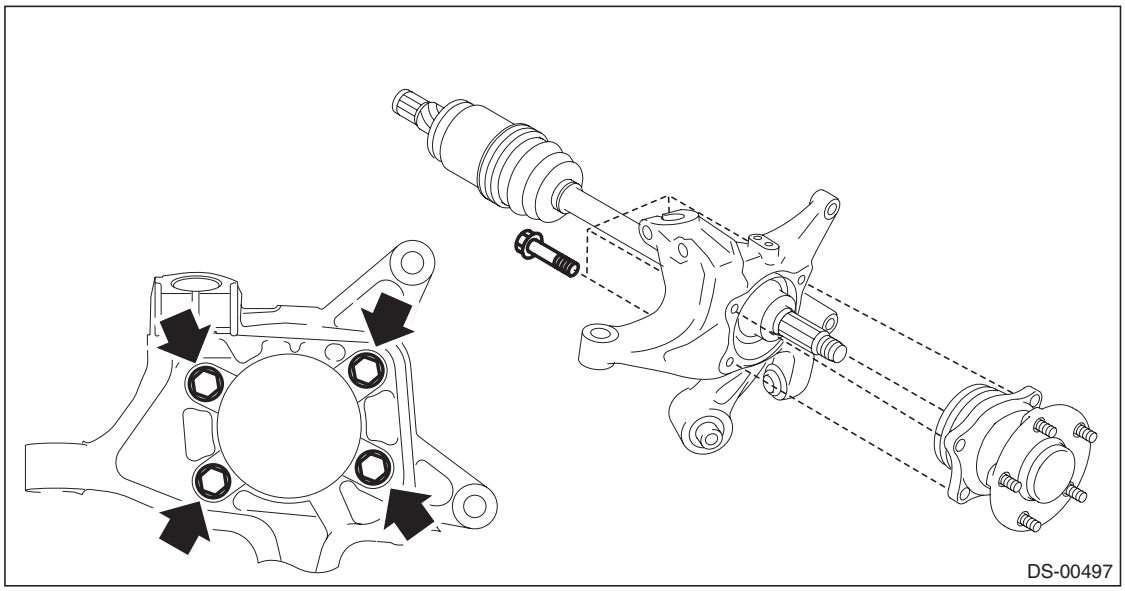

Tightening torque:
65 N·m (6.63 kgf-m, 47.9 ft-lb)

3) Tighten the new axle nut temporarily.

CAUTION:
Use new axle nuts.

4) Install the rear disc rotor.

GETtheMANUALS.org

5) Install the disc brake.

Tightening torque:
66 N·m (6.73 kgf-m, 48.7 ft-lb)

6) While pressing the brake pedal, tighten the new axle nuts to the specified torque.

CAUTION:
Do not load the rear axle before tightening the axle nut. Doing so may damage the hub bearing.

Tightening torque:
240 N·m (24.47 kgf-m, 177 ft-lb)

7) Inspect the lean of axis direction using a dial gauge. Replace the bearing if the load range exceeds the limitation.

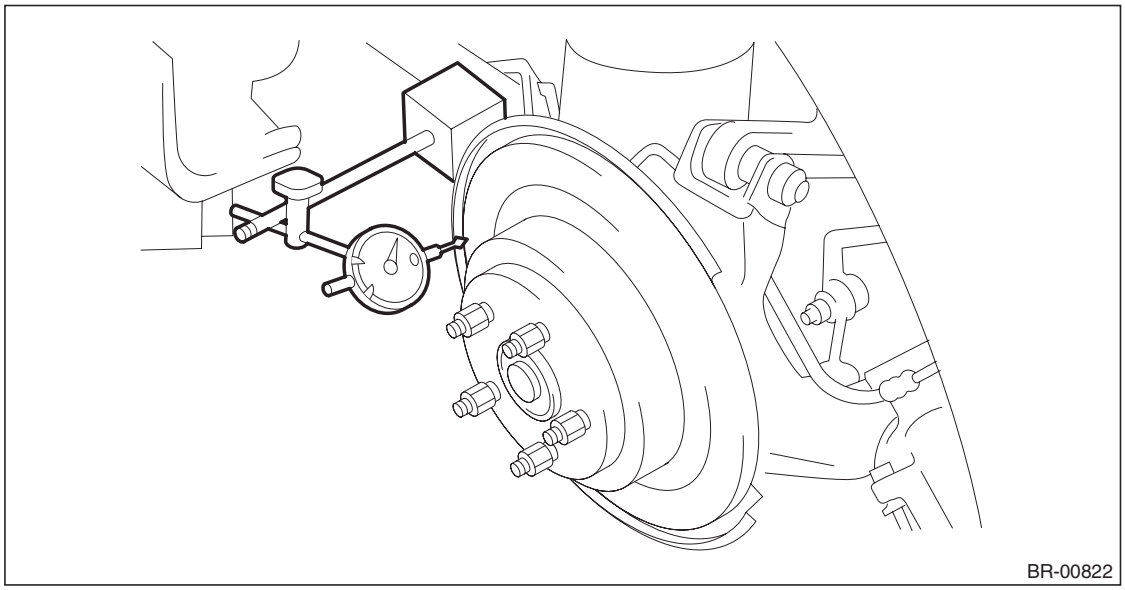

Service limit:
Maximum: 0.05 mm (0.0020 in)

8) After tightening the axle nut, lock it securely.

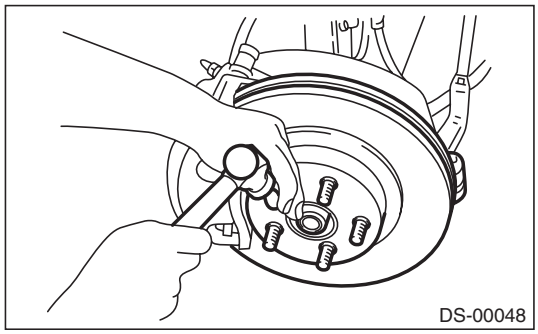

9) Install the rear wheels.

Tightening torque:
120 N·m (12.24 kgf-m, 88.5 ft-lb)

GETtheMANUALS.org

10) Moving the rear tire up and down by hand, check there is no backlash in bearing, and check the wheel rotates smoothly.

CAUTION:
If there is any fault in the bearing, replace hub unit bearing.

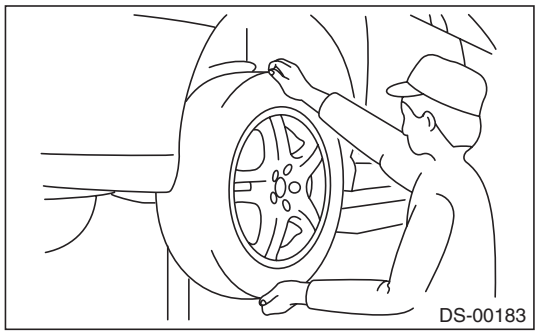

C: DISASSEMBLY

Using the ST or a hydraulic press, push out the hub bolt (b) from the rear hub unit bearing (a).

CAUTION:
- **Be careful not to hammer the hub bolts. This may deform the hub.**
- **Do not reuse the hub bolt.**

PREPARATION TOOL:
ST: HUB STAND (28399AG000)

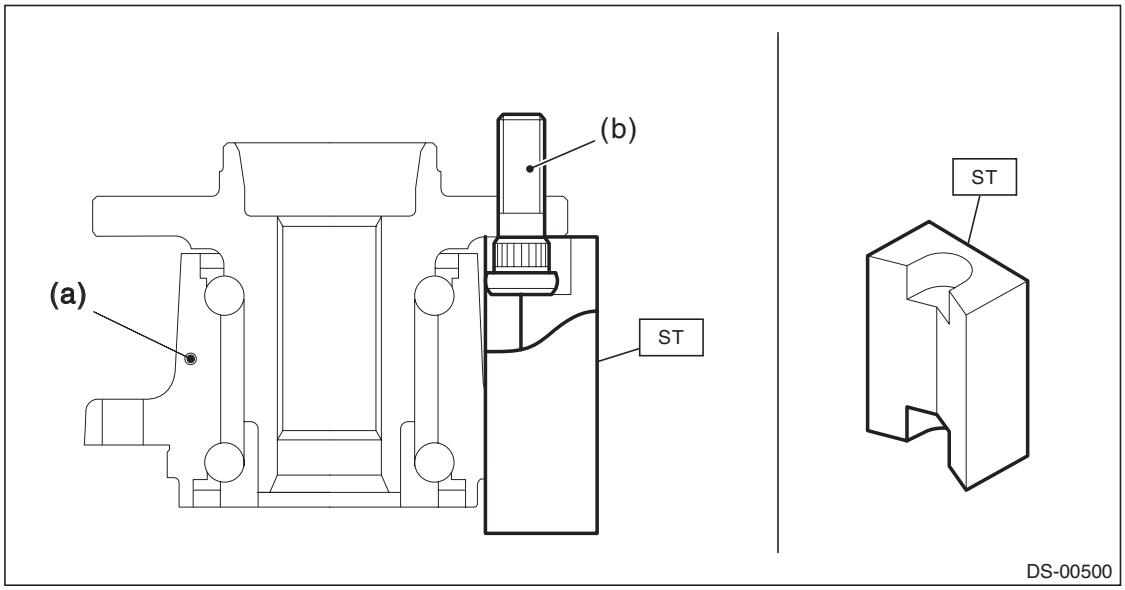

NOTE:
Since the hub unit bearing can not be disassembled, only hub bolts can be removed.

GETtheMANUALS.org

D: ASSEMBLY

1) Install the hub unit bearing to the ST securely.

PREPARATION TOOL:
ST: HUB STAND (927080000)

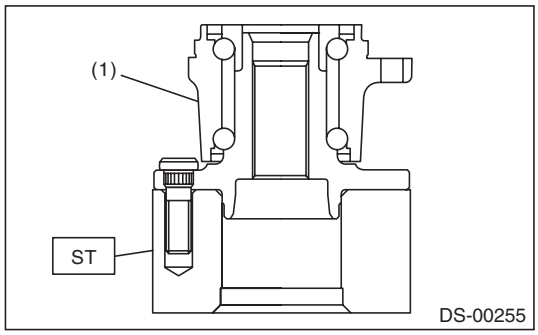

(1) Rear hub unit bearing

2) Using a press, press the new hub bolts (b) until their seating surfaces contact the hub unit bearing (a).

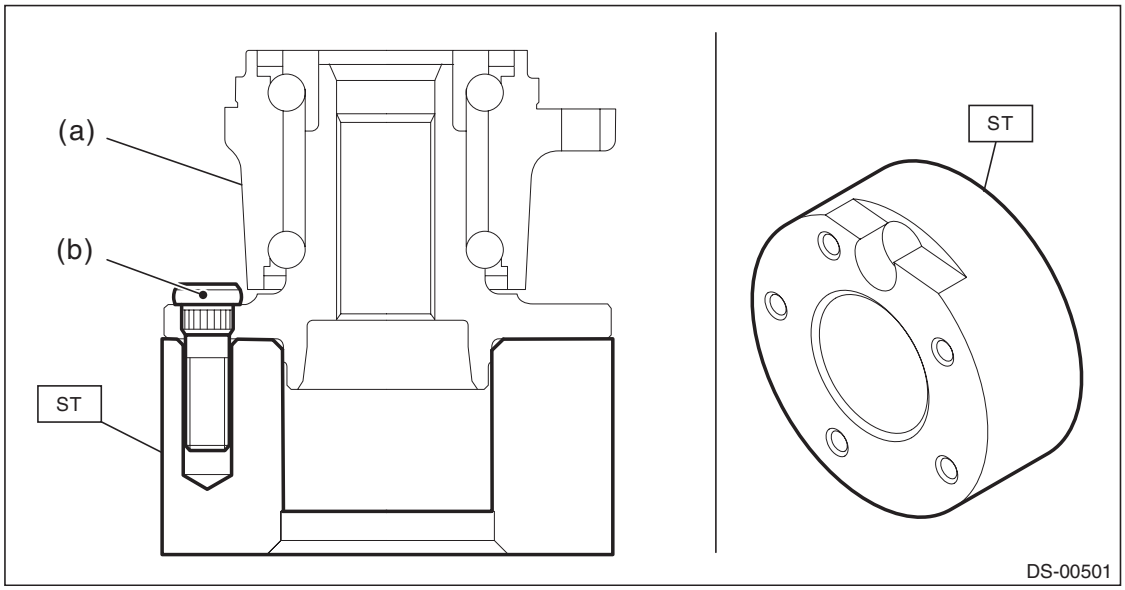

NOTE:
Use the 12 mm (0.47 in) dia. holes in the HUB STAND to prevent bolts from tilting.

GETtheMANUALS.org

E: INSPECTION

1) Moving the rear tire up and down by hand, check there is no backlash in bearing, and check the wheel rotates smoothly.

CAUTION:
If there is any fault in the bearing, replace hub unit bearing.

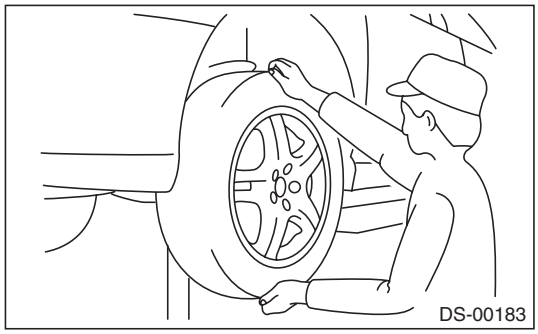

2) Inspect the lean of axis direction using a dial gauge. Replace the bearing if the load range exceeds the limitation.

Service limit:
Maximum: 0.05 mm (0.0020 in)

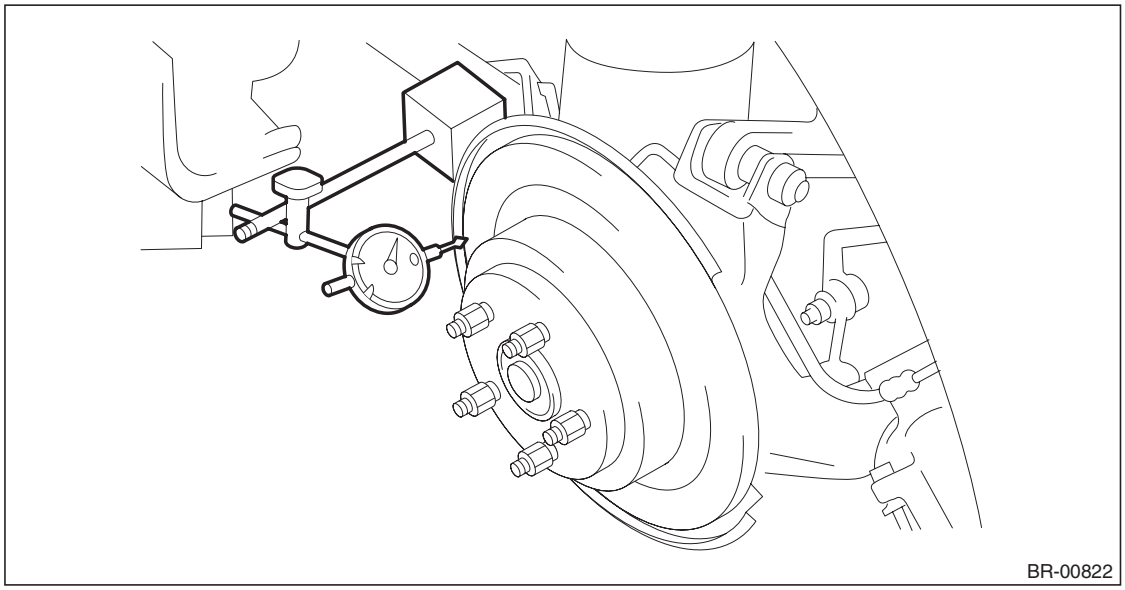

GETtheMANUALS.org

7. Front Drive Shaft

A: REMOVAL

1) Lift up the vehicle, and then remove the front wheels.
2) Remove the axle nut.

CAUTION:
Do not loosen the axle nut while the front axle is loaded. Doing so may damage the hub bearing.

(1) Lift the crimped section of axle nut.
(2) Remove the axle nut using a socket wrench while depressing the brake pedal.

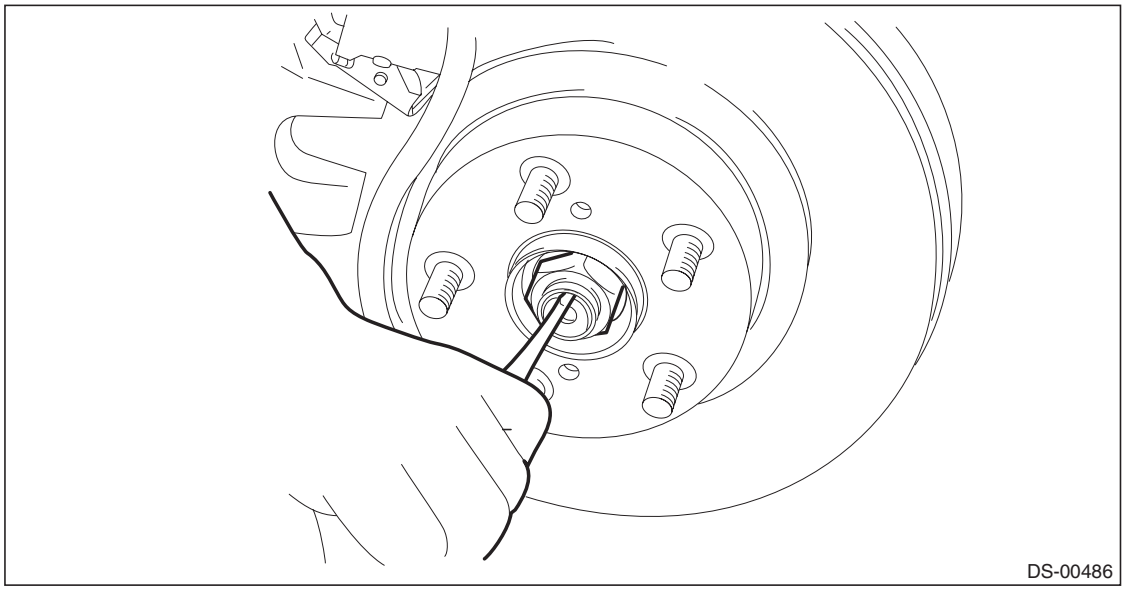

3) Drain the transmission gear oil. (MT model)
4) Drain differential gear oil. (AT and CVT models)
5) Remove the front arm.

(1) Remove the nut and disconnect the front stabilizer link.
(2) Remove the bolt, and disconnect the front arm ball joint from the front axle housing.

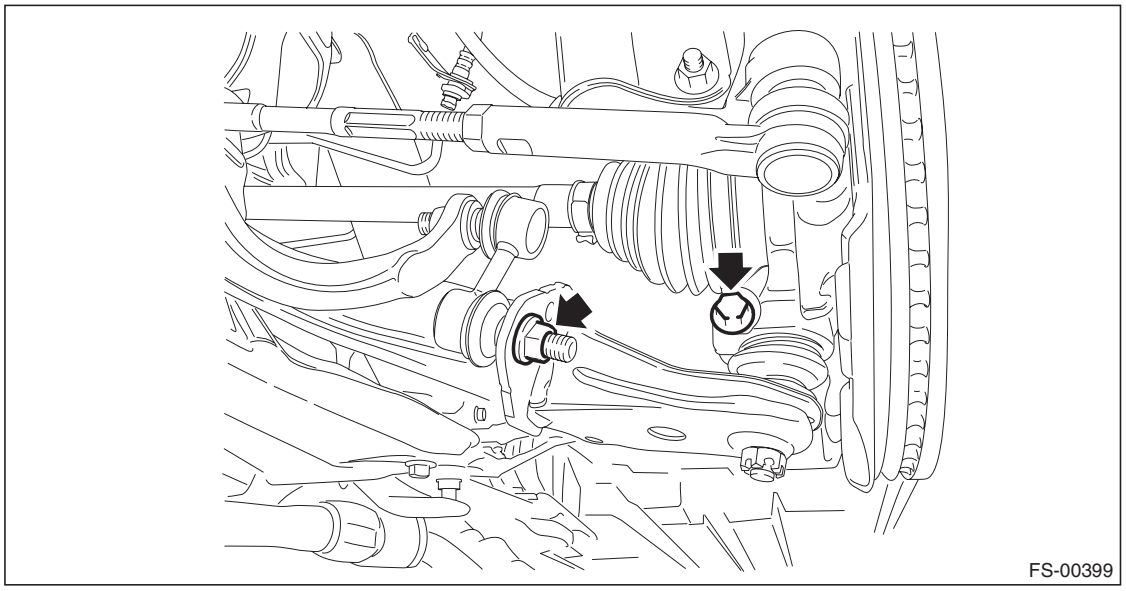

GETtheMANUALS.org

6) Remove the front drive shaft assembly. If it is hard to remove, use the ST.

PREPARATION TOOL:
ST1: AXLE SHAFT PULLER (926470000)
ST2: AXLE SHAFT PULLER PLATE (28099PA110)

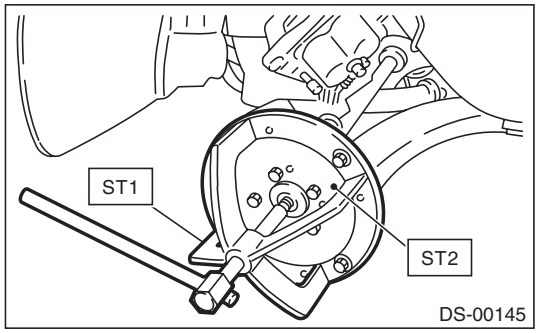

7) Using a bar, remove the front drive shaft from transmission.

CAUTION:
Be careful not to allow the bar to damage holder area.

B: INSTALLATION

1) Before installation, check the drive shaft. <Ref. to DS-56, INSPECTION, Front Drive Shaft.>
2) Replace the differential side retainer oil seal with a new part.
- 6MT model: <Ref. to 6MT-36, REPLACEMENT, Differential Side Retainer Oil Seal.>
- 5AT model: <Ref. to 5AT-49, REPLACEMENT, Differential Side Retainer Oil Seal.>
- CVT model: <Ref. to CVT-91, REPLACEMENT, Differential Side Retainer Oil Seal.>

NOTE:
After pulling out the drive shaft, be sure to replace with a new oil seal.
3) Insert the drive shaft into the hub spline, and pull in the drive shaft into specified position.

CAUTION:
Do not hammer drive shaft when installing it.
4) Tighten the axle nut temporarily.
5) Using the ST, install the front drive shaft to transmission.

PREPARATION TOOL:
ST: OIL SEAL PROTECTOR (28399SA010)

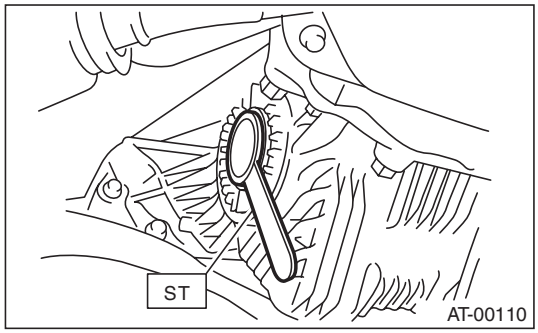

GETtheMANUALS.org

6) Install the front arm ball joint to the front axle housing.

CAUTION:
Before tightening, make sure the lower side of front axle housing and stepped section of ball joint are in contact.

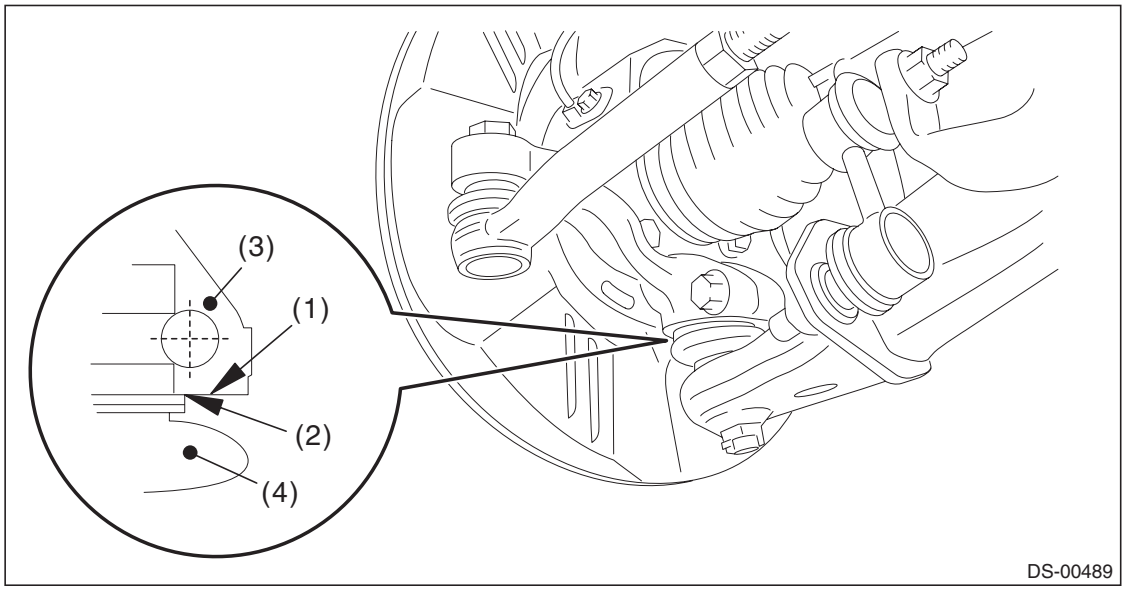

(1) Lower side of front axle housing
(2) Raised section of ball joint
(3) Front axle housing
(4) Ball joint

Tightening torque:
50 N·m (5.1 kgf-m, 36.9 ft-lb)

7) Install the stabilizer link.

CAUTION:
Use a new flange nut.

Tightening torque:
60 N·m (6.12 kgf-m, 44.3 ft-lb)

8) While pressing the brake pedal, tighten the new axle nuts to the specified torque.

CAUTION:
Do not load the front axle before tightening the axle nut. Doing so may damage the hub bearing.

Tightening torque:
220 N·m (22.43 kgf-m, 162.3 ft-lb)

9) After tightening axle nut, lock it securely.
10) Fill transmission gear oil. (MT model)
11) Fill differential gear oil. (AT and CVT models)
12) Install the front wheels.

Tightening torque:
120 N·m (12.24 kgf-m, 88.5 ft-lb)

13) Inspect the wheel alignment and adjust if necessary.
- Inspection: <Ref. to FS-9, INSPECTION, Wheel Alignment.>
- Adjustment: <Ref. to FS-14, ADJUSTMENT, Wheel Alignment.>

GETtheMANUALS.org

C: DISASSEMBLY

1) Remove the AAR outer race from shaft assembly.

CAUTION:
Be careful not to damage the boot.

(1) Place alignment marks on the shaft and outer race.

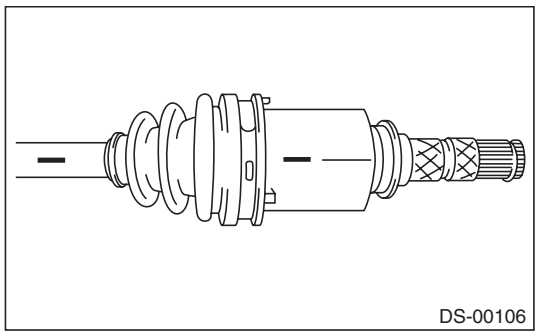

(2) Remove the AAR boot band and boot.

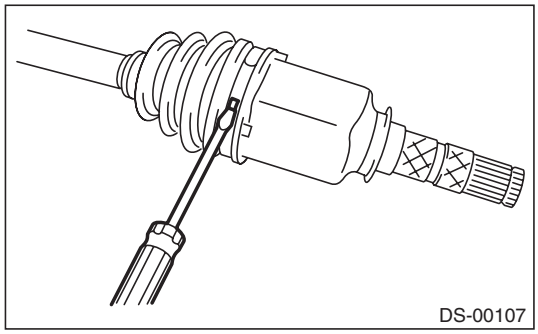

(3) Place the drive shaft between wooden blocks and fix it on a vise.

CAUTION:
Do not set the only drive shaft on a vise.

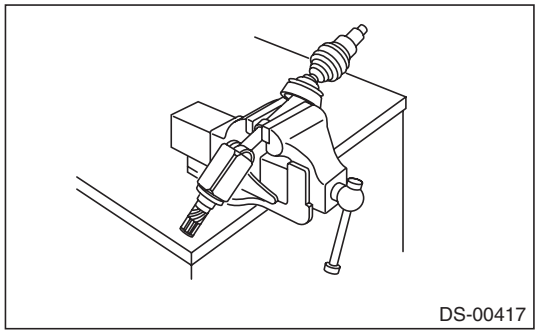

GETtheMANUALS.org

(4) Tap the staking are of the outer race alternately with a plastic or wooden bar, and remove one roller at a time.

CAUTION:
- **Tap the staking area (A) of the outer race.**
- **Do not use a metal bar as the outer race may deform.**
- **Be careful not to damage the roller parts.**

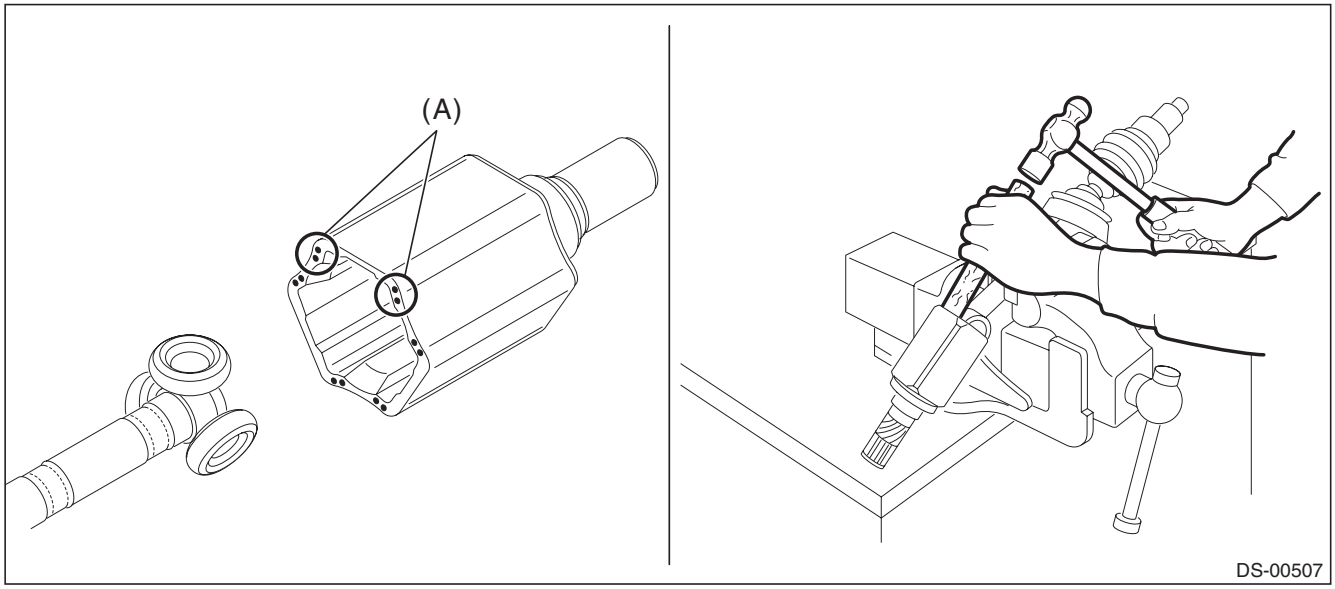

(5) Remove the outer race from shaft assembly.

CAUTION:
Make sure to have your associate held the outer race when removing the third roller to prevent the outer race from falling.

(6) Wipe off grease.

CAUTION:
The grease is a special type of grease. Do not mix with other grease.

2) Remove the roller kit from trunnion.

CAUTION:
Be careful with the roller kit position.

(1) Place alignment marks on the roller kit and trunnion.

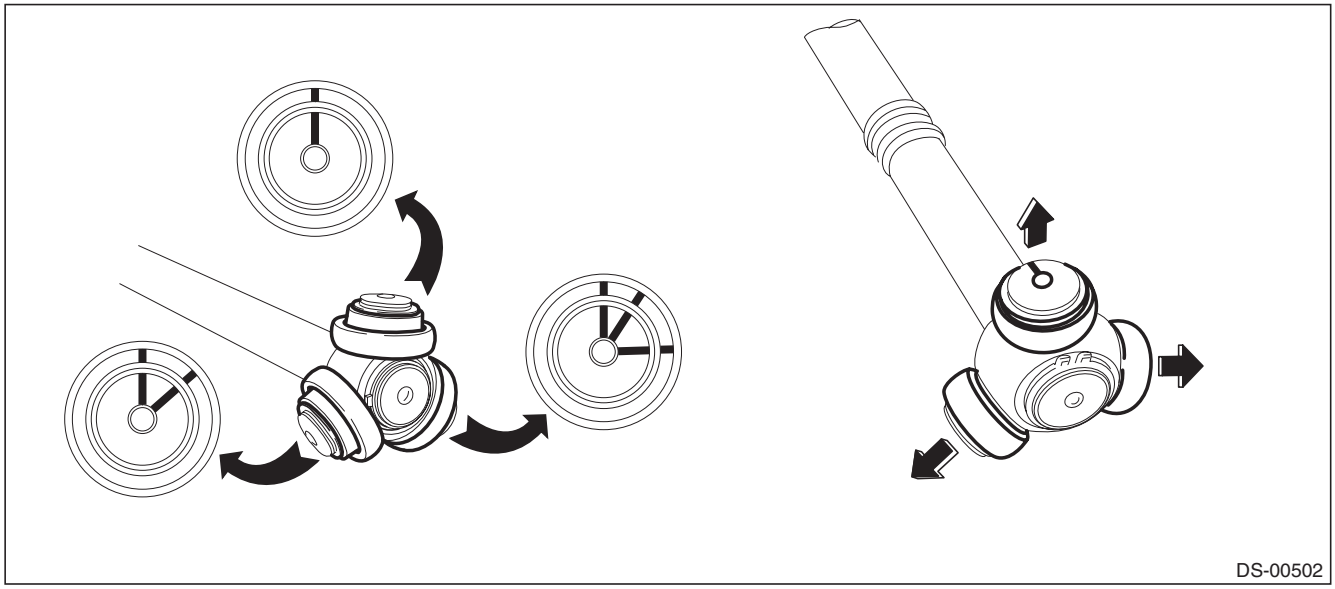

GETtheMANUALS.org

(2) Remove the roller kit from trunnion.

3) Remove the trunnion from the shaft.

(1) Place alignment marks on the trunnion and shaft.

(2) Remove the snap ring and trunnion.

CAUTION:
Be sure to wrap shaft splines with vinyl tape to protect the boot from scratches.

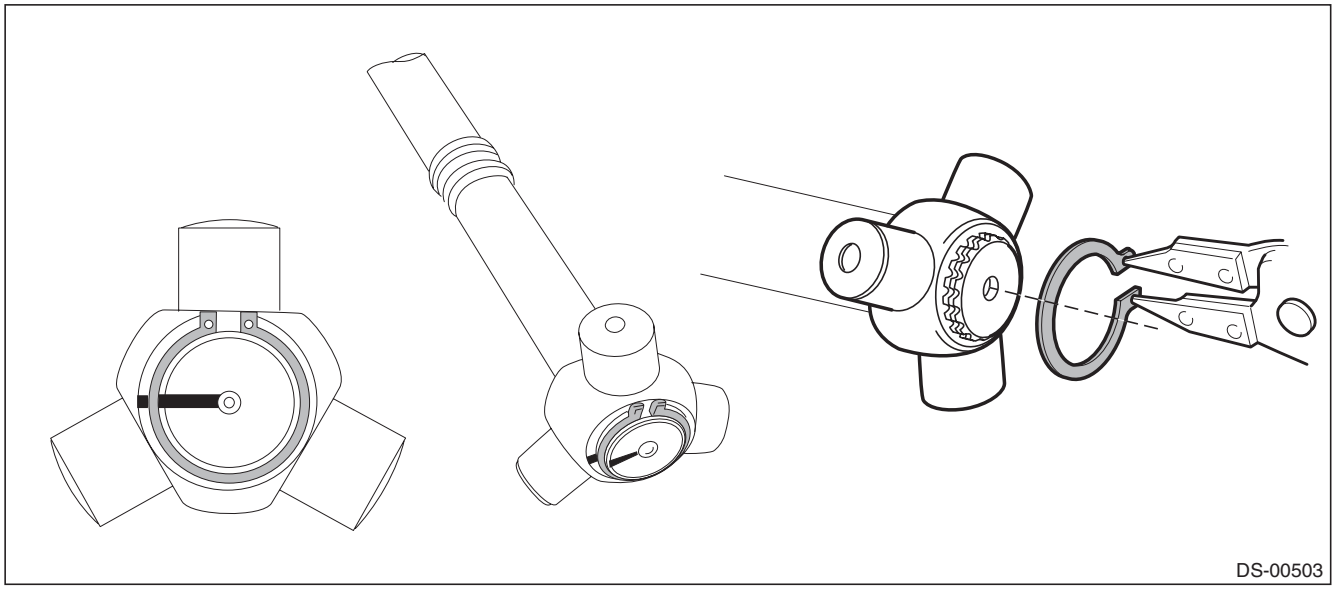

4) Remove the AAR boot.

NOTE:
The AC is a non-disassembly part, so the drive shaft disassembly stops here.

GETtheMANUALS.org

D: ASSEMBLY

NOTE:
Use specified grease.

AAR side:
ONE LUBER C

1) Pass the AAR boot through the shaft.
2) Install the trunnion to the shaft.
   (1) Match the alignment marks, and attach the trunnion onto the shaft.
   (2) Attach the snap ring to the shaft.

CAUTION:
Confirm that the snap ring is completely fitted in the shaft groove.

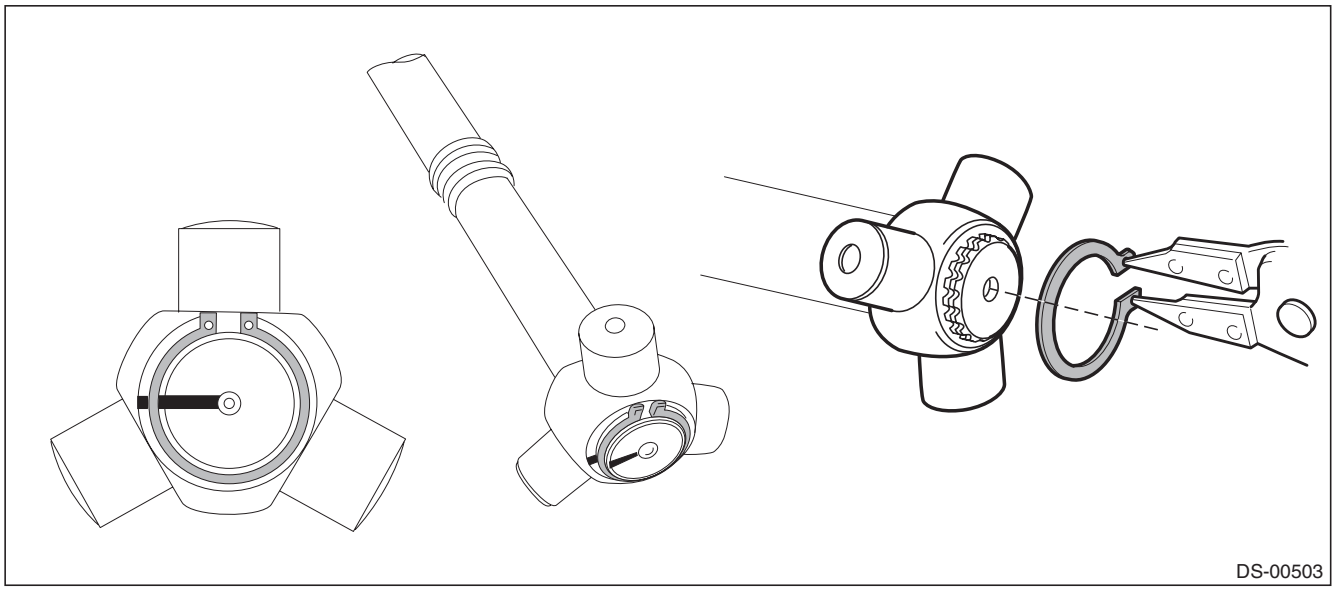

3) Fill 50 to 60 g (1.76 to 2.12 oz) of specified grease into the interior of AAR outer race.
4) Install the trunnion to the roller kit.
   (1) Apply a thin coat of specified grease to the roller kit and trunnion.
   (2) Place the drive shaft between wooden blocks and fix it on a vise.

CAUTION:
Do not set the drive shaft directly on a vise.

5) Align the alignment marks on the shaft and outer race.
6) Tap the insertion upper part of the outer race alternately using a plastic or wood bar shown in the figure, and then insert the roller one by one.

CAUTION:
- **Do not use a metal bar as the outer race may deform.**
- **Do not tap on the end of outer race (shaft part).**
- **Be careful not to deform the baffle plate.**

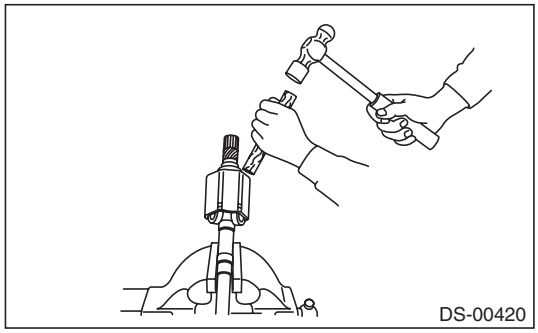

GETtheMANUALS.org

7) Apply an even coat of the specified grease 30 to 40 g (1.06 to 1.41 oz) to the entire inner surface of boot.
8) Install the AAR boot and grommet taking care not to twist it.

CAUTION:
- **Replace the boot and grommet as a set.**
- **Do not let grease get on groove of the outer race side.**

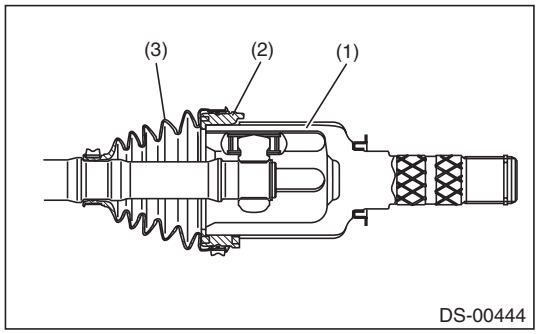

(1) Outer race
(2) Grommet
(3) Boot

9) Insert a flat tip screwdriver, etc. between outer race and grommet to make pressure inside of boot as high as barometric pressure.
10) Tighten the boot band.
(1) Install the new large boot band and small boot band at the required positions.
(2) Connect the torque wrench and socket flex handle to the ST.

PREPARATION TOOL:
ST: BOOT BAND PLIER (28099AC000)
Torque wrench
Socket flex handle
(3) Use a prepared tool, tighten the boot band.

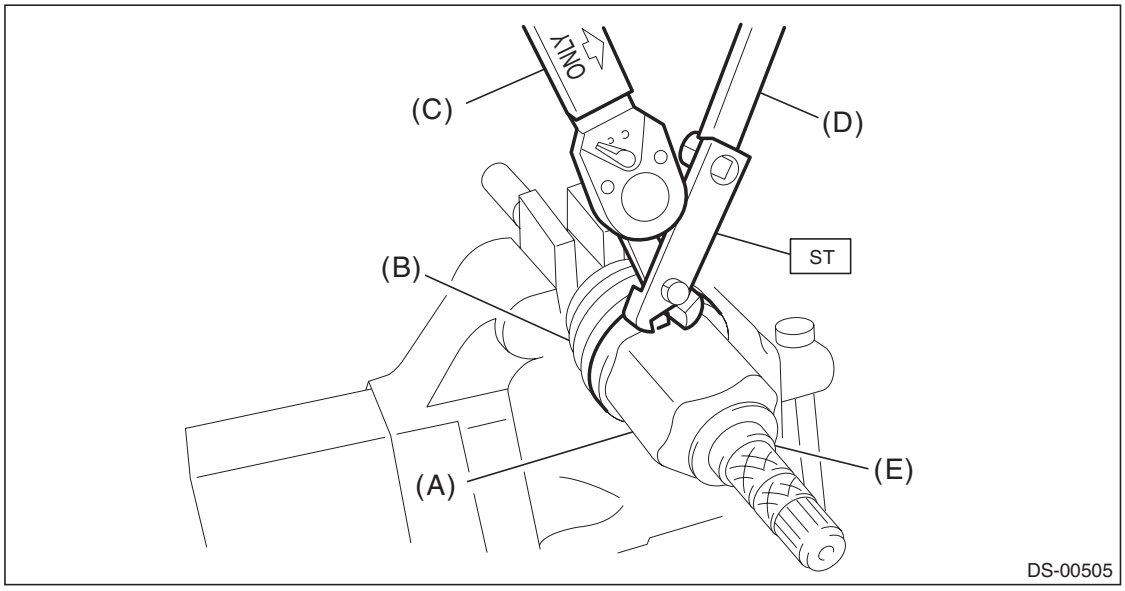

(A) Large boot band
(B) Boot
(C) Torque wrench
(D) Socket flex handle
(E) Outer race

GETtheMANUALS.org

Clearance at the crimped section of the boot band:
Large boot band
1 mm (0.04 in) or less
Small boot band
1 mm (0.04 in) or less

Tightening torque:
Large boot band: 178 N·m (18.15 kgf-m, 131.3 ft-lb)
Small boot band: 145 N·m (14.79 kgf-m, 106.9 ft-lb)

11) Extend and retract the AAR repeatedly to provide an equal coating of grease.

E: INSPECTION

Check the removed parts for damage, wear, corrosion etc. If faulty, repair or replace.

- **AAR and AC:**

Check for seizure, corrosion, damage, wear and excessive play.

- **Shaft:**

Check for excessive bending, twisting, damage and wear.

- **Boot:**

Check for wear, warping, breakage and scratches.

- **Grease:**

Check for discoloration and fluidity.

GETtheMANUALS.org

8. Rear Drive Shaft

A: REMOVAL

1) Lift up the vehicle, and then remove the rear wheels.
2) Remove the axle nut.

CAUTION:
Do not loosen the axle nut while the rear axle is loaded. Doing so may damage the hub bearing.

(1) Lift the crimped section of axle nut.
(2) Remove the axle nut using a socket wrench while depressing the brake pedal.

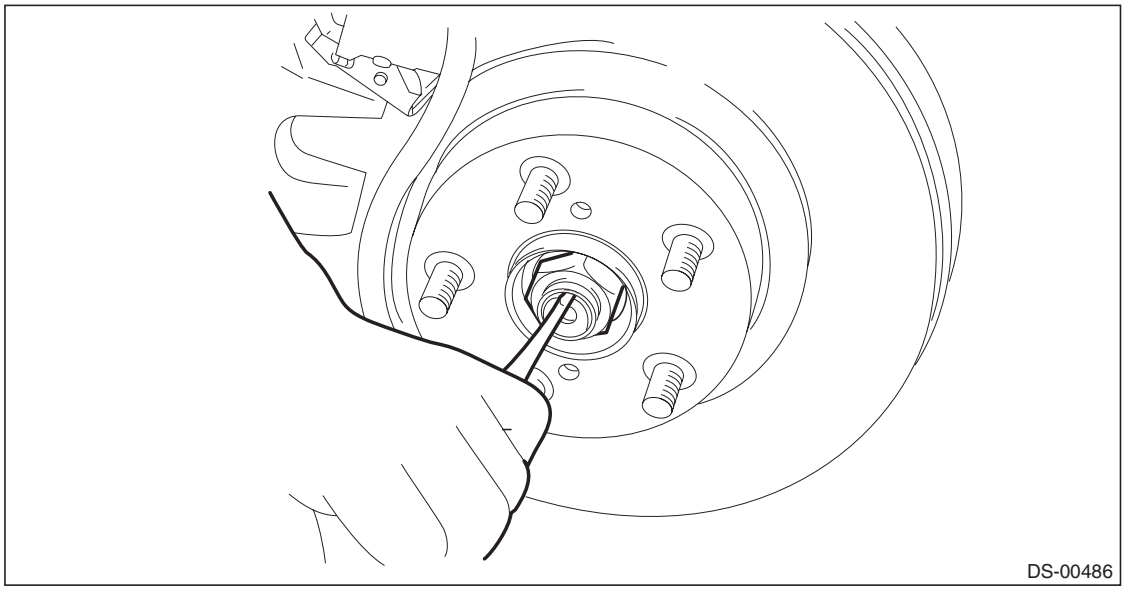

3) Drain differential gear oil.
4) Remove the trailing link.

(1) Remove the bracket, and remove the parking brake cable from the guide (a).
(2) Remove the bolts and nuts, and then remove the trailing link.

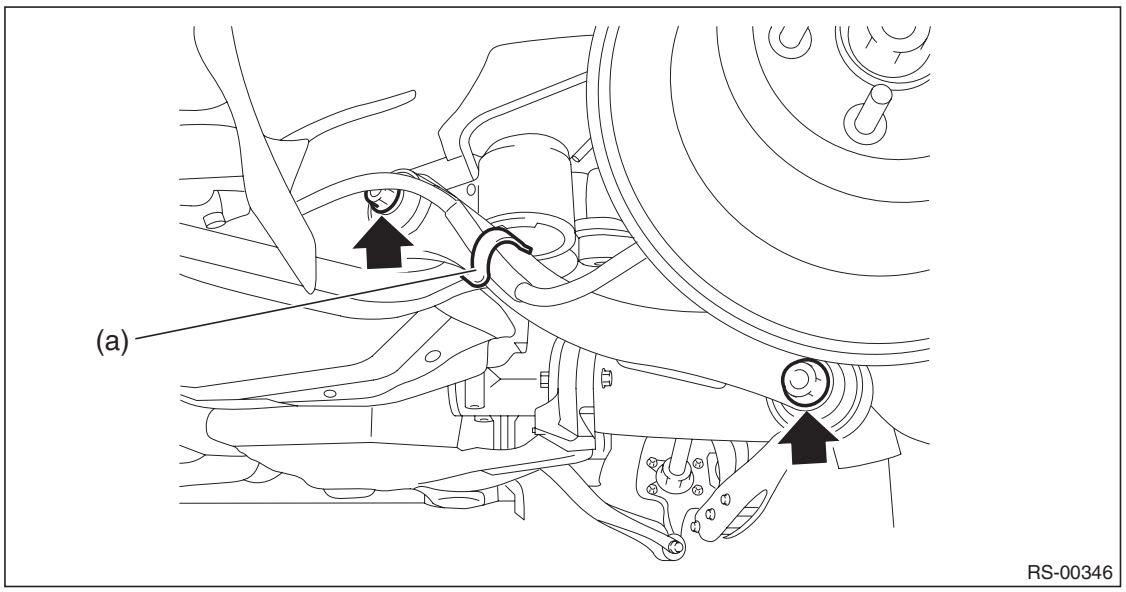

GETtheMANUALS.org

5) Remove the bolts and nuts and lower the rear lateral link.
   (1) Remove the nut and disconnect the rear stabilizer link.
   (2) Remove the shock absorber lower bolt.
   (3) Disconnect the rear lateral link.

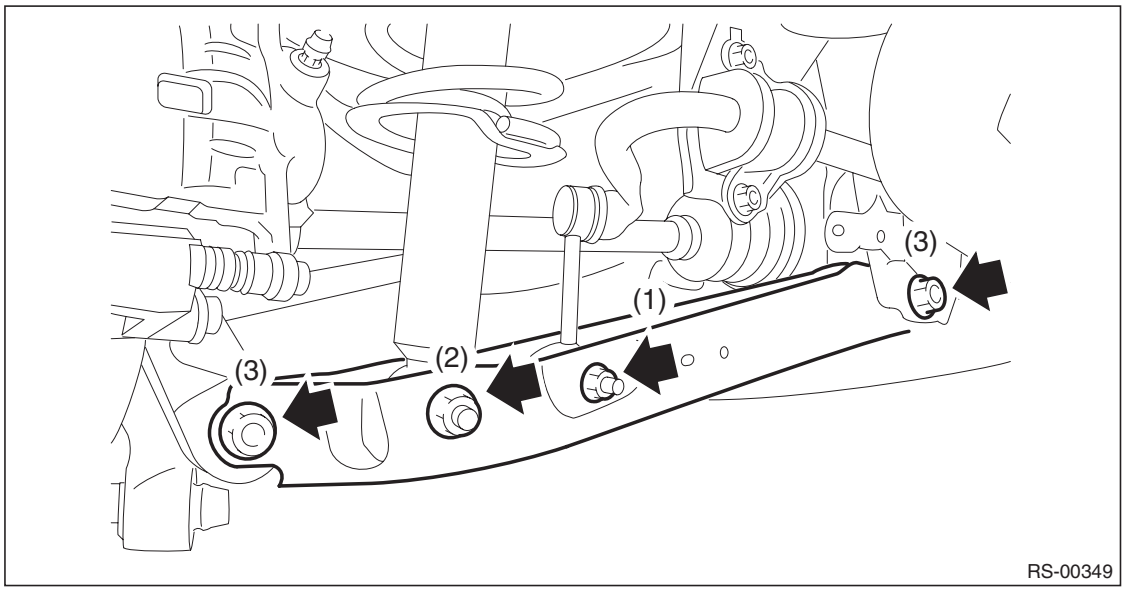

6) Remove the rear drive shaft from the rear differential.

- T-type
  1. Fit the ST to the bolt (a) as shown in the figure.

CAUTION:
Fit the ST to the bolts as shown in the figure to prevent damage of the side bearing retainer.

PREPARATION TOOL:
ST: DRIVE SHAFT REMOVER (28099PA100)

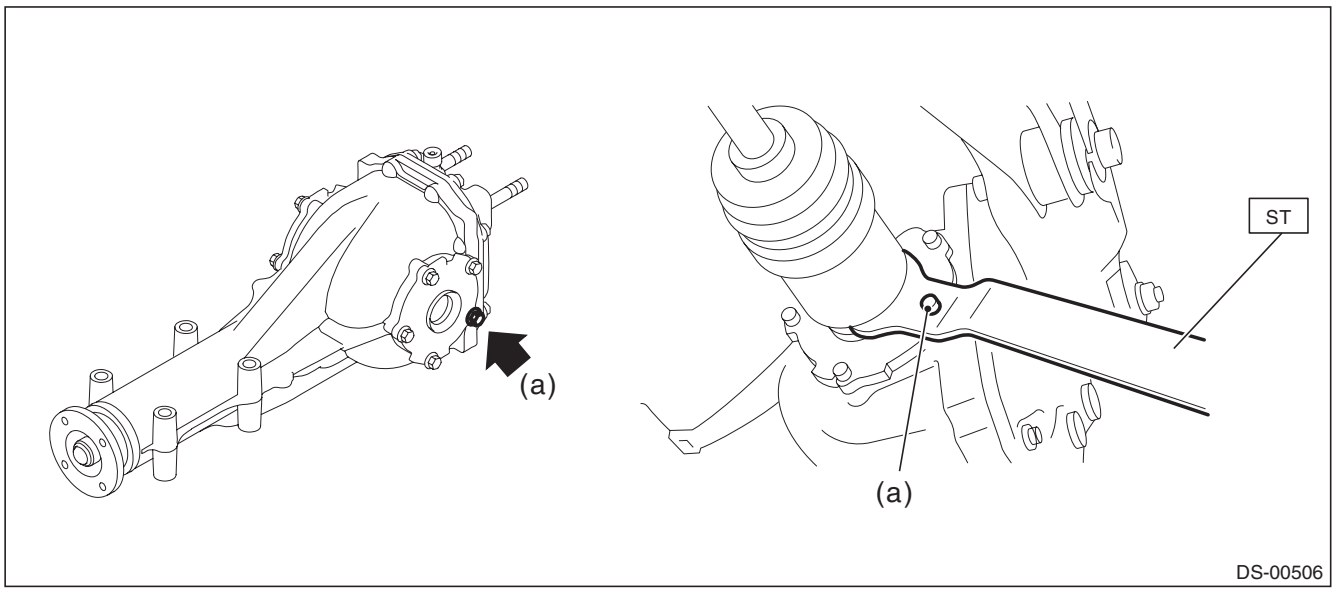

2. Extract the rear drive shaft from the rear differential.

GETtheMANUALS.org

- VA-type
  1. Fit the tire lever (b) to the bolt (a) as shown in the figure.

CAUTION:
To prevent damage to the side bearing retainer, use by placing the tire lever against the bolt as shown in the figure.

Preparation tool: Tire lever

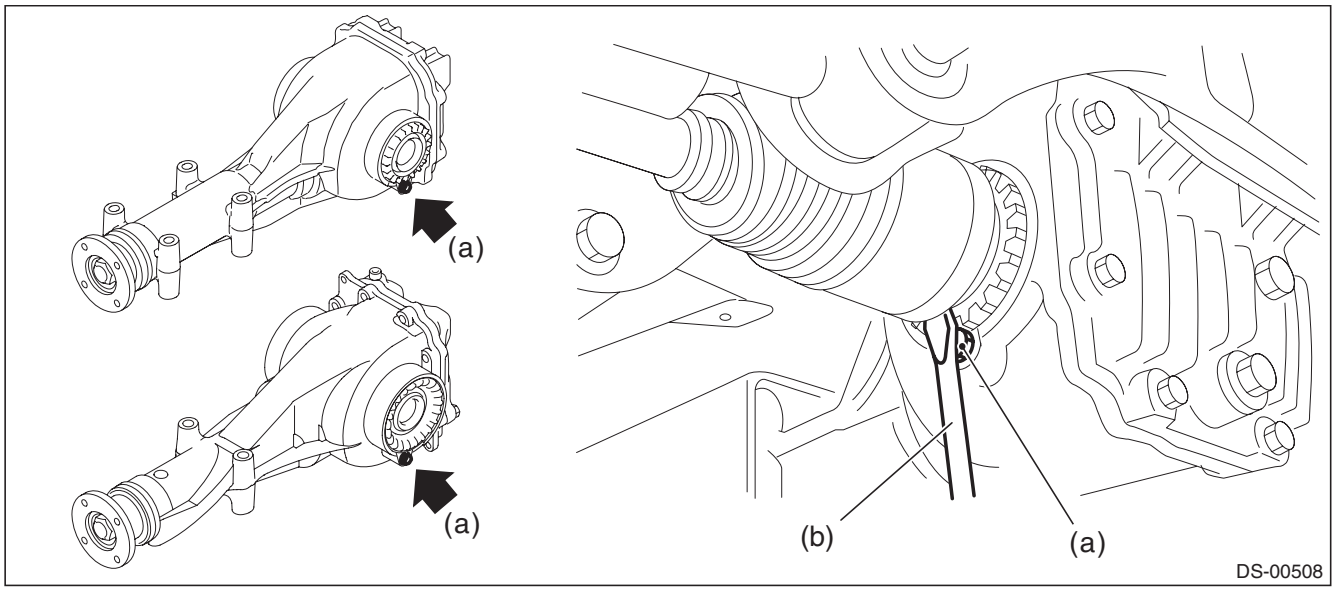

  2. Extract the rear drive shaft from the rear differential.

7) Remove the rear drive shaft from the rear axle.

NOTE:
If it is hard to remove, use the ST.

PREPARATION TOOL:
ST1: AXLE SHAFT PULLER (926470000)
ST2: AXLE SHAFT PULLER PLATE (28099PA110)

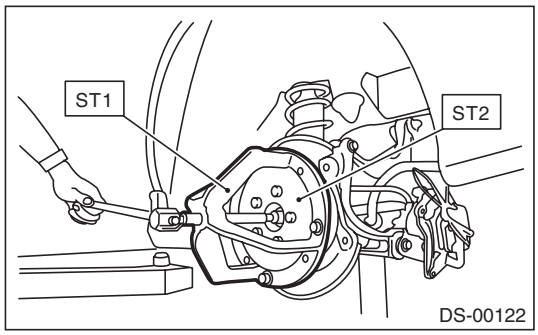

GETtheMANUALS.org

B: INSTALLATION

1) Replace the rear differential side oil seal. <Ref. to DI-78, REPLACEMENT, Rear Differential Side Oil Seal.>

NOTE:
After pulling out the drive shaft, be sure to replace with a new oil seal.
2) Insert the drive shaft into the rear hub spline, and pull the drive shaft into specified position.

CAUTION:
- **Be careful not to damage the magnetic encoder.**
- **Do not get closer the tool which charged magnetism to magnetic encoder.**
- **Do not hammer drive shaft when installing it.**

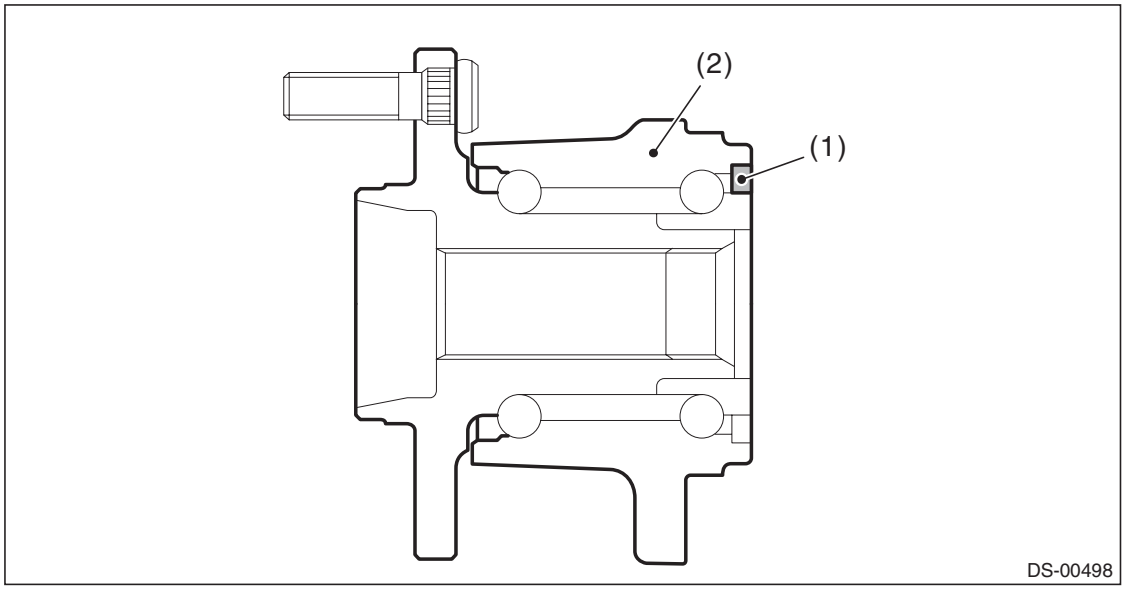

(1) Magnetic encoder (2) Rear hub unit bearing

3) Tighten the axle nut temporarily.
4) Using the ST, install the rear drive shaft to the rear differential.

PREPARATION TOOL:
ST: OIL SEAL PROTECTOR (28099PA090)

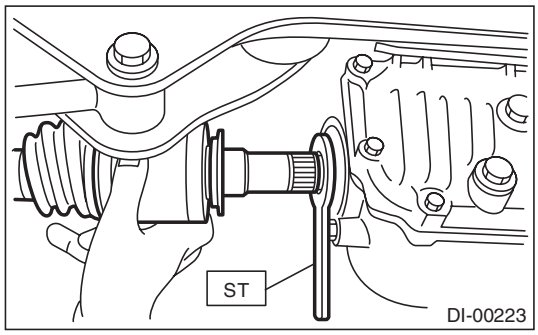

5) Attach the links to the rear housing and tighten them to the specified torque.

Tightening torque:
Stabilizer link: 33 N·m (3.4 kgf-m, 24.3 ft-lb)
Shock absorber: 120 N·m (12.2 kgf-m, 88.5 ft-lb)
Rear lateral link: 80 N·m (8.2 kgf-m, 59 ft-lb)
Trailing link — rear sub frame: 120 N·m (12.2 kgf-m, 88.5 ft-lb)
Trailing link — rear housing: 80 N·m (8.2 kgf-m, 59 ft-lb)

GETtheMANUALS.org

6) While pressing the brake pedal, tighten the new axle nuts to the specified torque.

CAUTION:
Do not load the rear axle before tightening the axle nut. Doing so may damage the hub bearing.

Tightening torque:
240 N·m (24.47 kgf-m, 177 ft-lb)

7) Lock the axle nut securely.

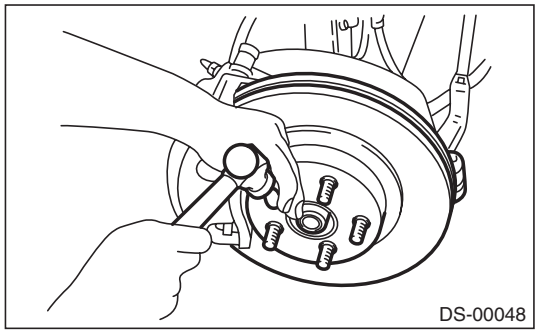

8) Fill differential gear oil.
9) Install the rear wheels.

Tightening torque:
120 N·m (12.24 kgf-m, 88.5 ft-lb)

10) Inspect the wheel alignment and adjust if necessary.
- Inspection: <Ref. to FS-9, INSPECTION, Wheel Alignment.>
- Adjustment: <Ref. to FS-14, ADJUSTMENT, Wheel Alignment.>

C: DISASSEMBLY

1) Take out the DOJ outer race from the shaft assembly.

CAUTION:
Be careful not to damage the boot.

(1) Using a flat tip screwdriver or plier, loosen the boot band on the large end of DOJ boot.

CAUTION:
Be careful not to damage the boot.

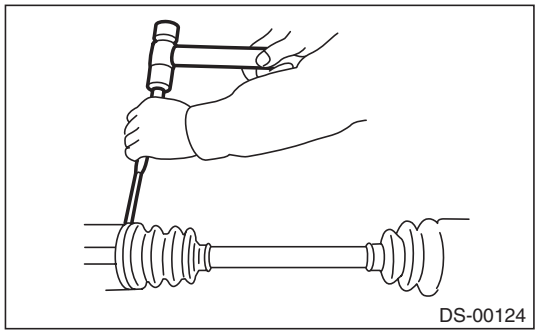

(2) Remove the boot band on the small end of DOJ boot in the same manner.
(3) Remove the large end of DOJ boot from DOJ outer race.

GETtheMANUALS.org

(4) Remove the round snap ring at the neck of DOJ outer race with a flat tip screwdriver.

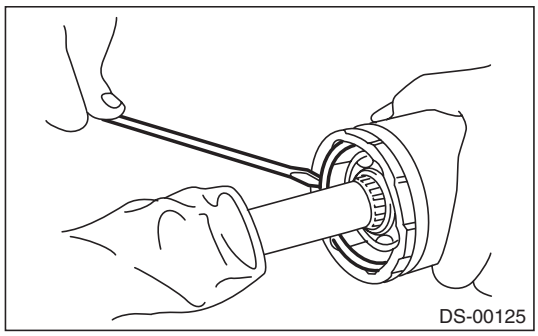

(5) Take out the DOJ outer race from the shaft assembly.
(6) Wipe off the grease and take out the ball bearings.

CAUTION:
The grease is a special grease (grease for constant velocity joints). Do not mix with other greases.

NOTE:
Disassemble exercising care not to lose balls.

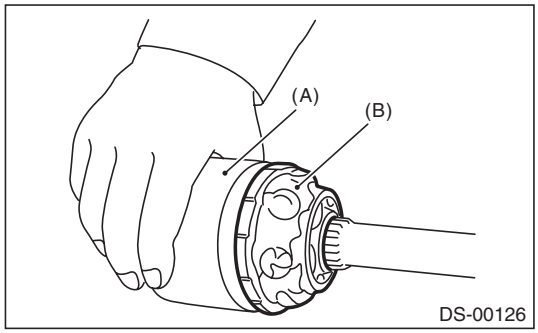

(A) Outer race
(B) Grease

2) Remove the cage from the inner race.
(1) Turn the cage by a half pitch to the track groove of inner race and shift the cage.
(2) Using pliers, remove the snap ring fixing the inner race to the shaft.

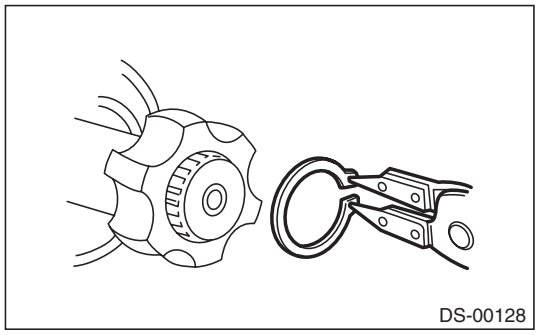

(3) Take out the DOJ inner race.
(4) Take off the DOJ cage from shaft and remove the DOJ boot.

CAUTION:
Wrap shaft splines with vinyl tape to protect the boot from scratches.

3) Remove the BJ boot or EBJ boot in the same procedure as the DOJ boot.

NOTE:
Further disassembly of the drive shaft is impossible because the BJ and EBJ cannot be disassembled.

GETtheMANUALS.org

D: ASSEMBLY

CAUTION:
Wrap shaft splines with vinyl tape to protect the boot from scratches.

NOTE:
Use specified grease.

BJ, EBJ side:
NKG106

DOJ side:
NKG205

1) Install the DOJ inner race to the shaft.
   (1) Install the BJ or EBJ boot in specified position, and fill it with 50 to 60 g (1.76 to 2.12 oz.) of specified grease.
   (2) Place the DOJ boot at the center of shaft.
   (3) Insert the DOJ cage onto shaft.

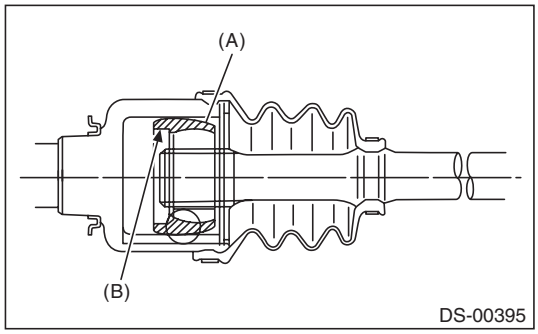

(A) Cage
(B) Cutout portion

NOTE:
Insert the cage with the cutout portion facing the shaft end, since the cage has an orientation.

   (4) Install the DOJ inner race on shaft and fix the snap ring in place with pliers.

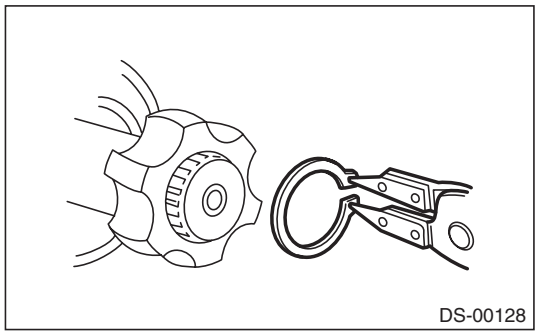

NOTE:
Confirm that the snap ring is completely fitted in the shaft groove.

GETtheMANUALS.org

2) Install the cage to the inner race.
   (1) Install the cage (B) with the protruding section aligned with the track on the inner race (A), and turn by a half pitch.

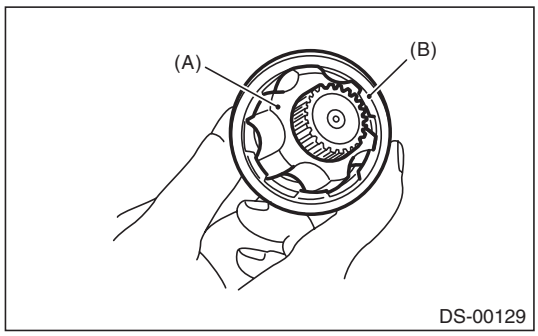

   (2) Fill 80 to 90 g (2.82 to 3.17 oz) of specified grease into the inner side of the DOJ outer race.
   (3) Apply a thin coat of specified grease to the cage pocket and ball.
   (4) Insert the ball bearings into the cage pocket.
3) Connect the shaft assembly to the outer race.
   (1) Align the outer race track and ball positions, and place the shaft, inner race, cage and ball bearings in the original positions, and then fix outer race in place.

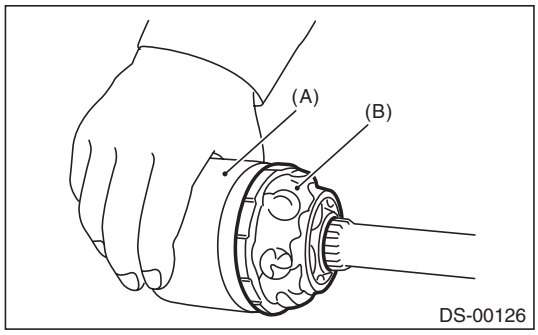

   (A) Outer race
   (B) Grease

   (2) Install the snap ring in the groove on the DOJ outer race.

CAUTION:
Be careful of the following items during installation:
- **Make sure that the balls, cage and inner race are completely fitted in the outer race of DOJ.**
- **Use care not to place the matched position of snap ring in the ball groove of outer race.**
- **Pull the shaft lightly and assure that the circlip is completely fitted in the groove.**

   (3) Apply an even coat of the specified grease [20 to 30 g (0.71 to 1.06 oz)] to the entire inner surface of boot. Also apply grease to the shaft.
   (4) Install the DOJ boot taking care not to twist it.

NOTE:
- The inside of the large end of DOJ boot and the boot groove shall be cleaned so as to be free from grease and other substances.
- When installing the DOJ boot, position the outer race of DOJ at center of the stroke.

   (5) Put a new band through the clip and wind twice in the band groove of the boot.
   (6) Pinch the end of band with pliers. Hold the clip and tighten securely.

NOTE:
When tightening boot, use care so that the air within the boot is appropriate.

GETtheMANUALS.org

(7) Tighten the band using the ST.

PREPARATION TOOL:
ST: BAND TIGHTENING TOOL (925091000)

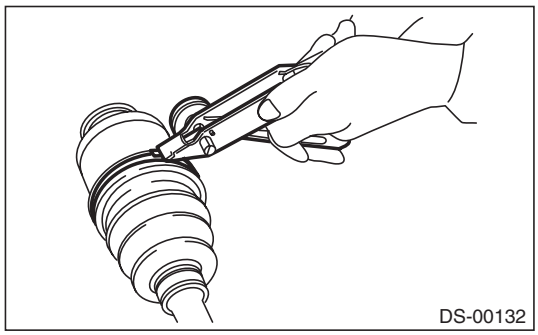

NOTE:
Tighten the band until it cannot be moved by hand.

(8) Tap the clip with the punch provided at the end of the ST.

PREPARATION TOOL:
ST: BAND TIGHTENING TOOL (925091000)

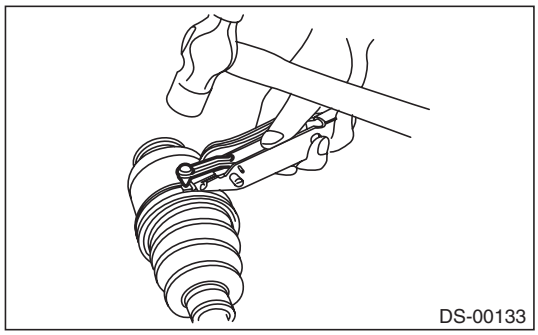

NOTE:
Tap to an extent that the boot underneath is not damaged.

(9) Cut off the band with an allowance of about 10 mm (0.39 in) left from the clip and bend this allowance over the clip.

CAUTION:
Make sure that the end of the band is in close contact with clip.

4) Install the BJ boot or EBJ boot in the same procedure as a DOJ boot.
5) Extend and retract the DOJ repeatedly to provide an equal coating of grease.

E: INSPECTION

Check the removed parts for damage, wear, corrosion etc. Repair or replace if defective.

- **DOJ (Double Offset Joint):**

Check for seizure, corrosion, damage, wear and excessive play.

- **EBJ (high-efficiency compact ball fixed joint):**

Check for seizure, corrosion, damage, wear and excessive play.

- **Shaft:**

Check for excessive bending, twisting, damage and wear.

- **BJ (Bell Joint):**

Check for seizure, corrosion, damage and excessive play.

- **Boot:**

Check for wear, warping, breakage and scratches.

- **Grease:**

Check for discoloration and fluidity.

GETtheMANUALS.org

9. General Diagnostic Table

A: INSPECTION

NOTE:
Vibration while cruising may be caused by an unbalanced tire, improper tire inflation pressure, improper wheel alignment, etc.

Symptoms	Possible cause	Corrective action
Noise or vibration from propeller shaft	• Center bearing • Runout of propeller shaft • Loose or gap at connections	Inspect the propeller shaft. <Ref. to DS-12, INSPECTION, Propeller Shaft.>
Abnormal wheel vibration	Wheel is out of balance.	Check the wheel balance. <Ref. to WT-6, WHEEL BALANCING, INSPECTION, Tire and Wheel.>
	Front wheel alignment	Check the front wheel alignment. <Ref. to FS-9, INSPECTION, Wheel Alignment.>
	Rear wheel alignment	Check the rear wheel alignment. <Ref. to RS-9, INSPECTION, Wheel Alignment.>
	Front strut	Check the front strut. <Ref. to FS-45, INSPECTION, Front Strut.>
	Rear shock absorber	Check the rear shock absorber. <Ref. to RS-21, INSPECTION, Rear Shock Absorber.>
	Front drive shaft	Check the front drive shaft. <Ref. to DS-56, INSPECTION, Front Drive Shaft.>
	Rear drive shaft	Check the rear drive shaft. <Ref. to DS-65, INSPECTION, Rear Drive Shaft.>
	Front hub unit bearing	Check the front hub unit bearing. <Ref. to DS-29, INSPECTION, Front Hub Unit Bearing.>
	Rear hub unit bearing	Check the rear hub unit bearing. <Ref. to DS-47, INSPECTION, Rear Hub Unit Bearing.>
Noise from the underbody	Wheel is out of balance.	Check the wheel balance. <Ref. to WT-6, WHEEL BALANCING, INSPECTION, Tire and Wheel.>
	Front wheel alignment	Check the front wheel alignment. <Ref. to FS-9, INSPECTION, Wheel Alignment.>
	Rear wheel alignment	Check the rear wheel alignment. <Ref. to RS-9, INSPECTION, Wheel Alignment.>
	Front strut	Check the front strut. <Ref. to FS-45, INSPECTION, Front Strut.>
	Rear shock absorber	Check the rear shock absorber. <Ref. to RS-21, INSPECTION, Rear Shock Absorber.>

GETtheMANUALS.org

VEHICLE DYNAMICS CONTROL (VDC)

VDC

		Page
1.	General Description	2
2.	Relay and Fuse	7
3.	Vehicle Dynamics Control System	8
4.	VDC Control Module and Hydraulic Control Unit (VDCCM&H/U)	9
5.	ABS Sequence Control	17
6.	VDC Sequence Control	20
7.	Yaw Rate and G Sensor	23
8.	Steering Angle Sensor	24
9.	Front ABS Wheel Speed Sensor	29
10.	Rear ABS Wheel Speed Sensor	32
11.	Front Magnetic Encoder	34
12.	Rear Magnetic Encoder	35
13.	VDC OFF Switch	36

GETtheMANUALS.org

1. General Description

A: SPECIFICATION

Item				Specification or identification
ABS wheel speed sensor	ABS wheel speed sensor gap (for reference)	Front		0.77 — 1.43 mm (0.030 — 0.056 in)
		Rear		0.64 — 1.56 mm (0.025 — 0.061 in)
	Identifications of harness (marks, color)	Front	Except for OBK model	S1 (Pink)
			OBK model	S2 (Blue)
		Rear	RH (Except for OBK model)	S3 (Yellow)
			LH (Except for OBK model)	S4 (White)
			RH (OBK model)	S5 (Red)
			LH (OBK model)	S6 (Light green)
VDCCM&H/U Identification				V4

GETtheMANUALS.org

B: COMPONENT

1. ABS WHEEL SPEED SENSOR

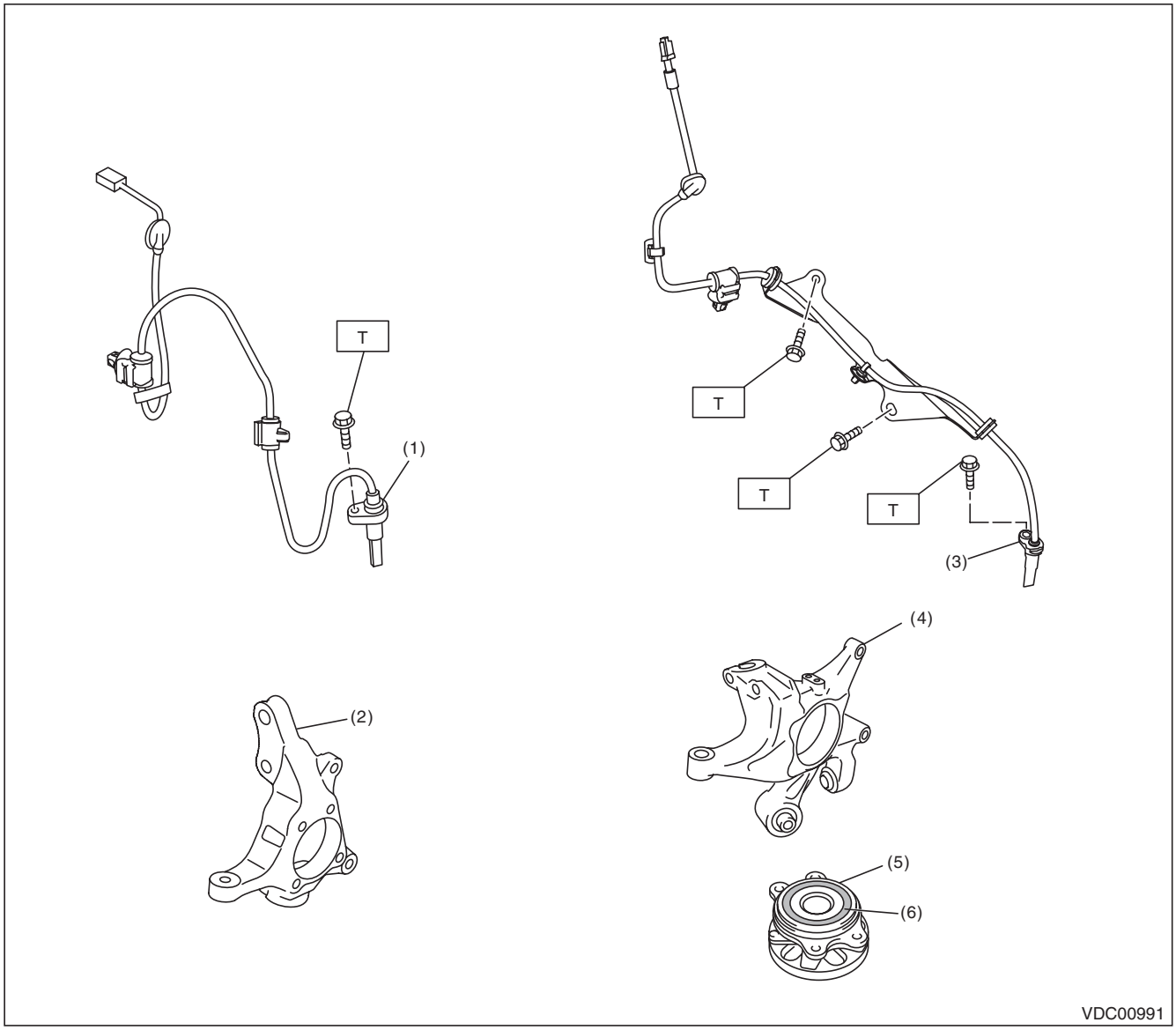

(1) Front ABS wheel speed sensor
(2) Front axle housing
(3) Rear ABS wheel speed sensor
(4) Rear axle housing
(5) Hub unit bearing
(6) Magnetic encoder

Tightening torque:N·m (kgf-m, ft-lb)
T: 7.5 (0.76, 5.5)

GETtheMANUALS.org

2. STEERING ANGLE SENSOR

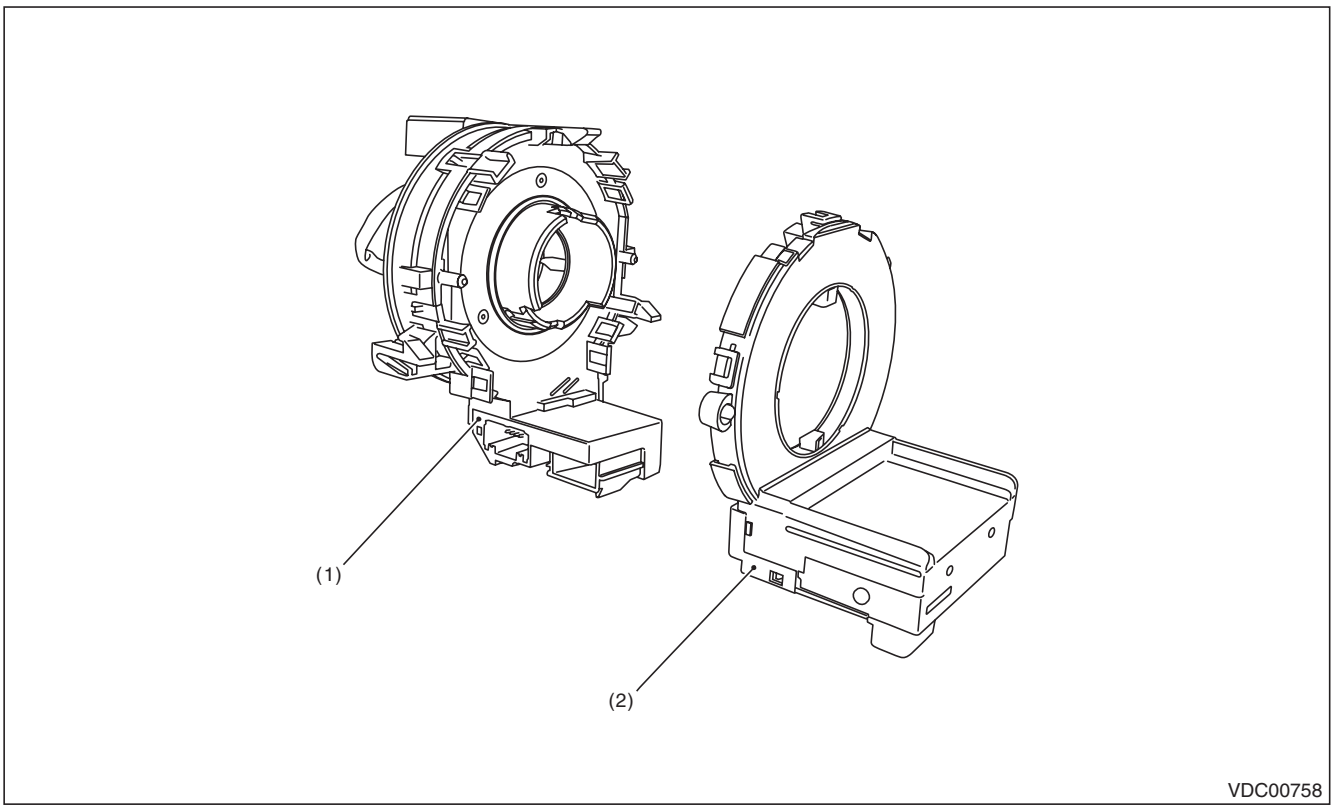

(1) Steering roll connector (2) Steering angle sensor

GETtheMANUALS.org

3. VDC CONTROL MODULE & HYDRAULIC CONTROL UNIT (VDCCM&H/U)

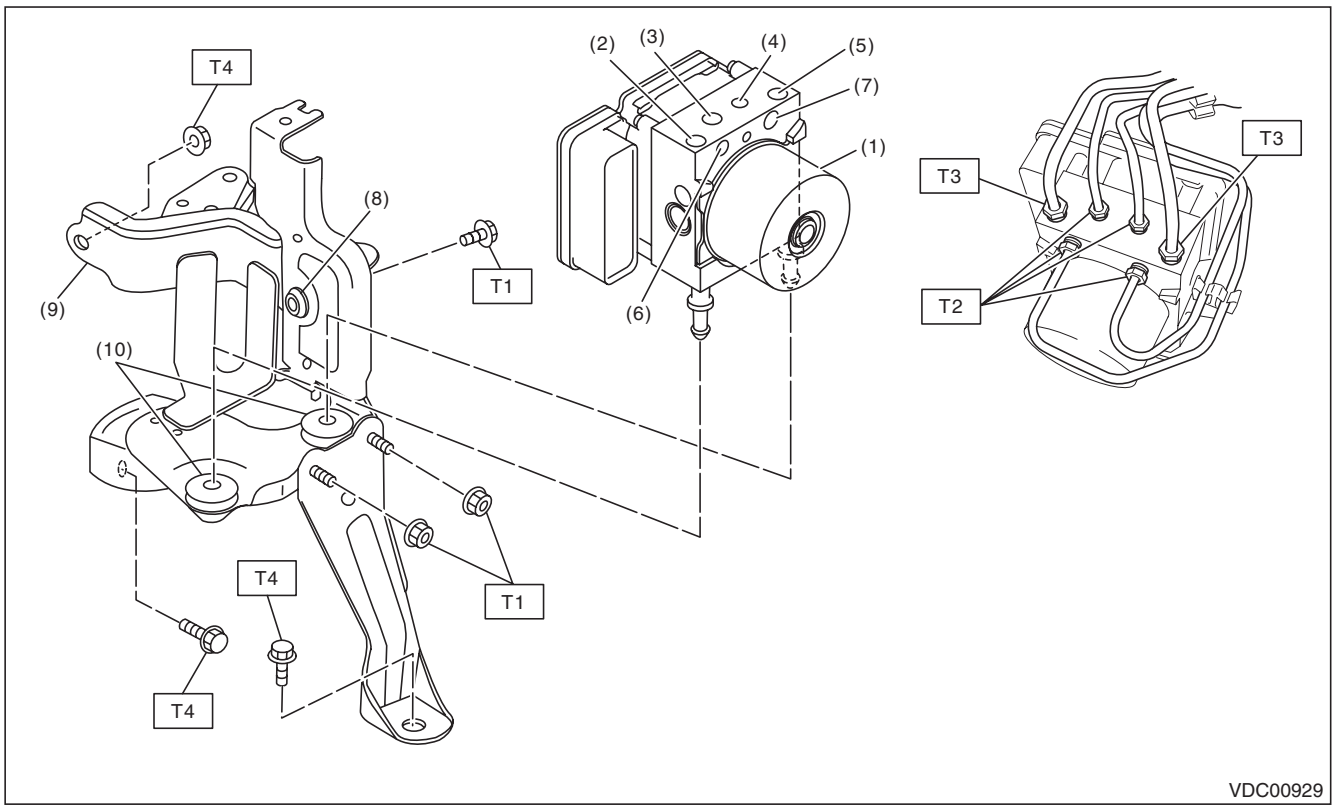

(1)	VDC control module and hydraulic control unit (VDCCM&H/U)	(6)	Rear RH outlet	***Tightening torque:N·m (kgf-m, ft-lb)***
(2)	Secondary inlet	(7)	Rear LH outlet	***T1: 7.5 (0.76, 5.5)***
(3)	Front LH outlet	(8)	Damper & spacer	***T2: 15 (1.53, 11.1)***
(4)	Front RH outlet	(9)	Bracket	***T3: 19 (1.94, 14.0)***
(5)	Primary inlet	(10)	Damper	***T4: 33 (3.36, 24.3)***

C: CAUTION

- Wear appropriate work clothing, including a helmet, protective goggles and protective shoes when performing any work.
- Remove contamination including dirt and corrosion before removal, installation or disassembly.
- Keep the disassembled parts in order and protect them from dust and dirt.
- Before disconnecting connectors of sensors or units, be sure to disconnect the ground cable from battery.
- Before removal, installation or disassembly, be sure to clarify the failure. Avoid unnecessary removal, installation, disassembly and replacement.
- Vehicle components are extremely hot after driving. Be wary of receiving burns from heated parts.
- Be sure to tighten fasteners including bolts and nuts to the specified torque.
- Place shop jacks or rigid racks at the specified points.

GETtheMANUALS.org

D: PREPARATION TOOL

1. SPECIAL TOOL

ILLUSTRATION	TOOL NUMBER	DESCRIPTION	REMARKS
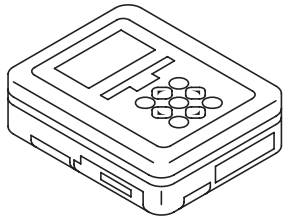 ST1B022XU0	1B022XU0	SUBARU SELECT MONITOR III KIT	Used for setting of each function and trouble-shooting for electrical system.

2. GENERAL TOOL

TOOL NAME	REMARKS
Circuit tester	Used for measuring resistance and voltage.
Pressure gauge	Used for measuring oil pressure.
Oscilloscope	Used for measuring the sensor.

GETtheMANUALS.org

2. Relay and Fuse

A: LOCATION

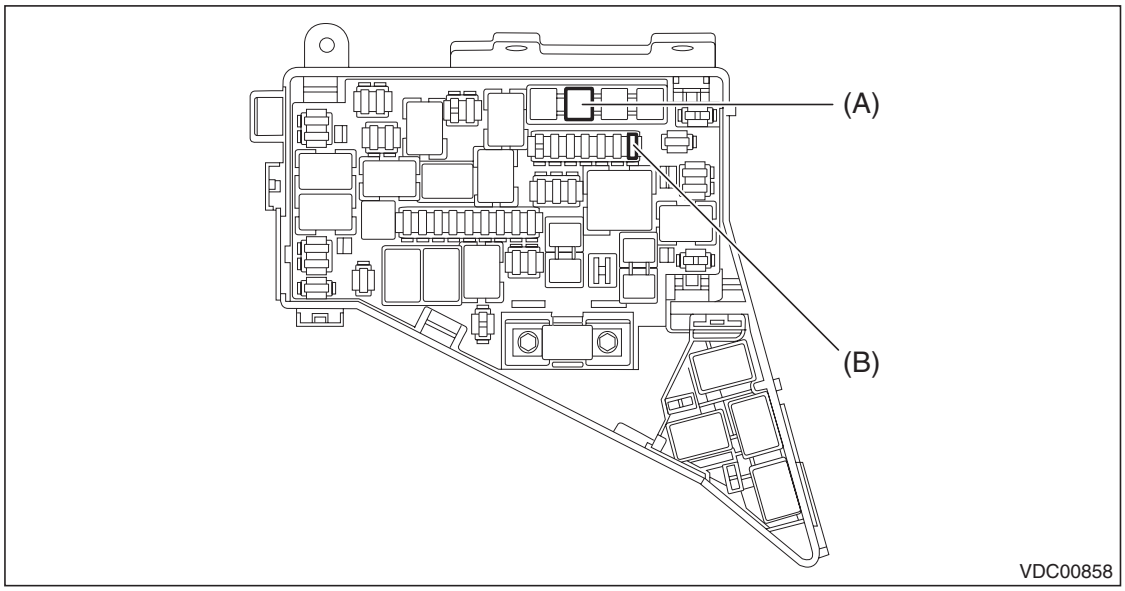

Main fuse box	Fuse 40 A (VDC CM&H/U)	(A)
	Fuse 30 A (VDC CM&H/U)	(B)

NOTE:
For other related fuses, refer to the wiring diagram. <Ref. to WI-15, Power Supply Circuit.>

B: INSPECTION

1. CHECK FUSE.

1) Remove the fuse and inspect visually.
2) If the fuse is blown out, replace the fuse.

GETtheMANUALS.org

3. Vehicle Dynamics Control System

A: WIRING DIAGRAM

Refer to “Vehicle Dynamics Control System” in the wiring diagram. <Ref. to WI-251, WIRING DIAGRAM, Vehicle Dynamics Control System.>

B: ELECTRICAL SPECIFICATION

Refer to the Control Module I/O Signal of the “Vehicle Dynamics Control System (VDC) (DIAGNOSTICS)”. <Ref. to VDC(diag)-12, ELECTRICAL SPECIFICATION, Control Module I/O Signal.>

C: INSPECTION

Refer to the “Vehicle Dynamics Control System (VDC) (DIAGNOSTICS)”. <Ref. to VDC(diag)-90, INSPECTION, General Diagnostic Table.>

D: NOTE

For operation procedures of each component of the vehicle dynamics control system, refer to the respective section.

- VDC control module & hydraulic control unit (VDCCM&H/U): <Ref. to VDC-9, VDC Control Module and Hydraulic Control Unit (VDCCM&H/U).>
- Yaw rate & G sensor: <Ref. to VDC-23, Yaw Rate and G Sensor.>
- Steering angle sensor: <Ref. to VDC-24, Steering Angle Sensor.>
- Front ABS wheel speed sensor: <Ref. to VDC-29, Front ABS Wheel Speed Sensor.>
- Rear ABS wheel speed sensor: <Ref. to VDC-32, Rear ABS Wheel Speed Sensor.>
- Front magnetic encoder: <Ref. to VDC-34, Front Magnetic Encoder.>
- Rear magnetic encoder: <Ref. to VDC-35, Rear Magnetic Encoder.>
- VDC OFF switch: <Ref. to VDC-36, VDC OFF Switch.>

GETtheMANUALS.org

4. VDC Control Module and Hydraulic Control Unit (VDCCM&H/U)

A: REMOVAL

1) Disconnect the ground cable from battery.
2) Remove the air intake boot.
- H4 model: <Ref. to IN(H4DOTC)-10, REMOVAL, Air Intake Boot.>
- H6 model: <Ref. to IN(H6DO)-7, REMOVAL, Air Intake Boot.>

3) Remove the VDC control module & hydraulic control unit (VDCCM&H/U).
   (1) Remove any dirt from around the VDCCM&H/U.
   (2) Push the lock button (a), pull down the lock lever (b) and disconnect the VDCCM&H/U connector.

CAUTION:
Do not pull on the harness when disconnecting the connector.

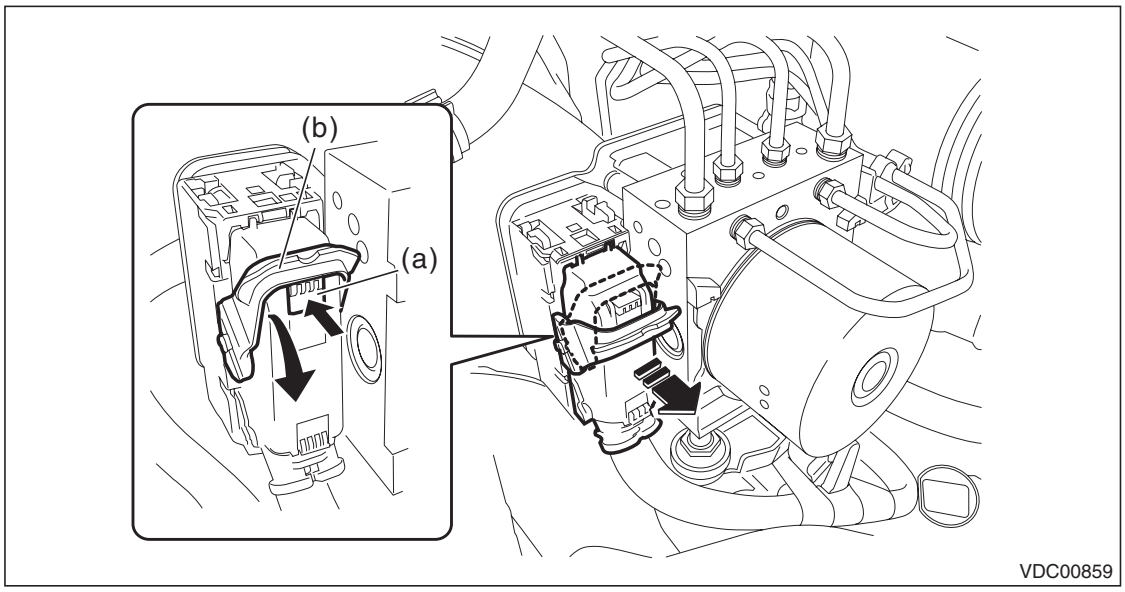

GETtheMANUALS.org

(3) Using a flare nut wrench, disconnect each brake pipe from VDCCM&H/U.

CAUTION:
- **Wrap the brake pipe with a vinyl bag so as not to spill the brake fluid on the painted surface of the vehicle body.**
- **If brake fluid is spilled on the painted surface of the vehicle body, wash it off immediately with water and wipe clean.**

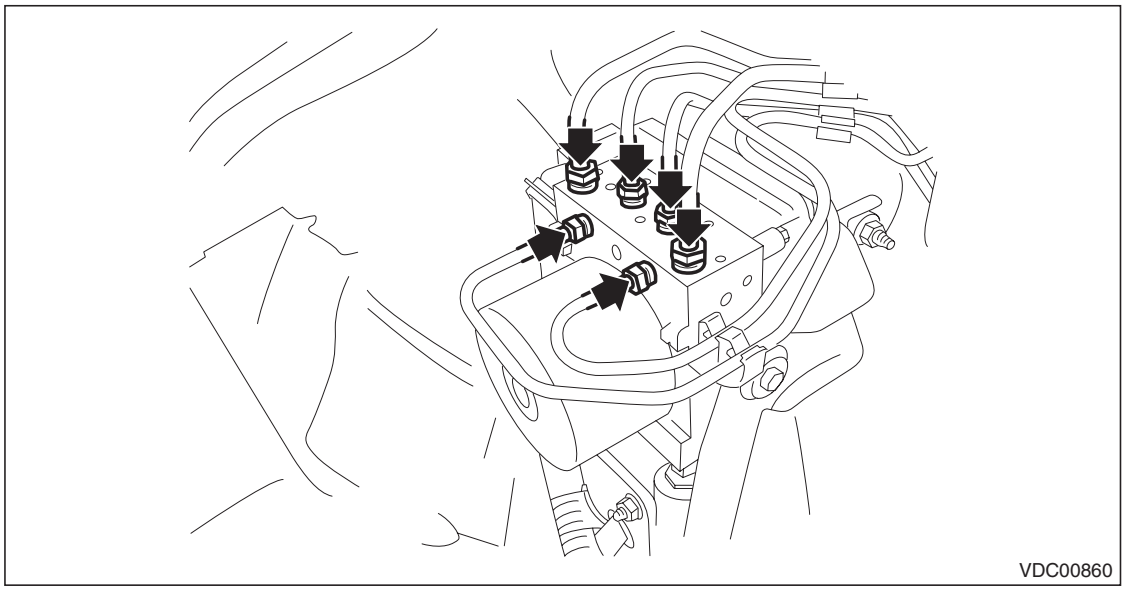

(4) Remove the bolt, and then remove the VDCCM&H/U from the bracket damper.

CAUTION:
- **Do not drop or bump the VDCCM&H/U.**
- **Do not turn the VDCCM&H/U upside down or place it sideways for storage.**
- **Be careful not to let foreign matter enter the VDCCM&H/U.**
- **Be careful that no water enters the connectors.**

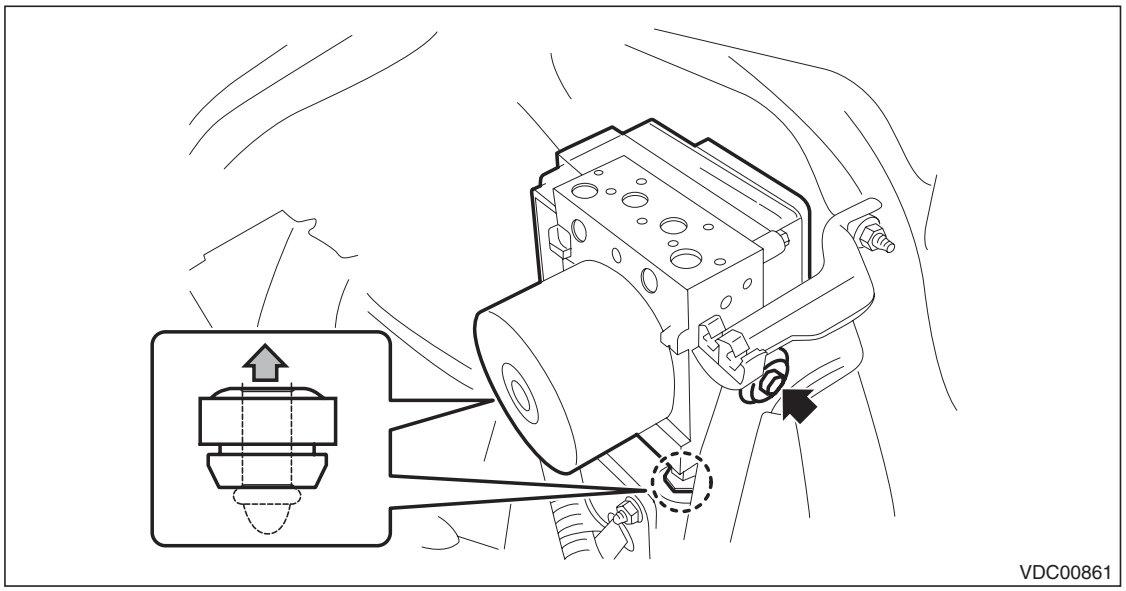

GETtheMANUALS.org

B: INSTALLATION

CAUTION:
- **When installing the VDCCM&H/U to the bracket, make sure that there is no oil adhered to the threads of VDCCM&H/U. If the oil is adhered, degrease it carefully before tightening.**
- **Connect the VDCCM&H/U connector securely.**

1) Install each part in the reverse order of removal.

Tightening torque:
Refer to "COMPONENT" of "General Description". <Ref. to VDC-5, VDC CONTROL MODULE & HYDRAULIC CONTROL UNIT (VDCCM&H/U), COMPONENT, General Description.>

2) Bleed air from the brake system. <Ref. to BR-54, Air Bleeding.>
3) Perform parameter confirmation, selection, and registration.

NOTE:
- When the VDCCM&H/U is replaced with a new part, be sure to perform the selection · registration operation.
- For the selection and registration of parameter, the Subaru Select Monitor is required.
- When the registration has not been performed, the DTC code "Parameter selection error" is detected together with the ABS/EBD/VDC warning light illumination.

(1) Check that the applied model and grade of the relevant vehicle are included. <Ref. to VDC(diag)-19, PARAMETER CHECK, OPERATION, Subaru Select Monitor.>
(2) If the applied model and grade of the target vehicle are not included on the {Confirm on parameter} display screen, perform parameter selection and registration. <Ref. to VDC(diag)-19, PARAMETER SELECTION, OPERATION, Subaru Select Monitor.>

4) Perform mode setting for each sensor.
- Set up mode for Neutral of Steering Angle Sensor & Lateral G Sensor 0 point: <Ref. to VDC-16, SET UP MODE FOR NEUTRAL OF STEERING ANGLE SENSOR & LATERAL G SENSOR 0 POINT, ADJUSTMENT, VDC Control Module and Hydraulic Control Unit (VDCCM&H/U).>
- Longitudinal G sensor & lateral G sensor 0 point setting mode: <Ref. to VDC-16, LONGITUDINAL G SENSOR & LATERAL G SENSOR 0 POINT SETTING MODE, ADJUSTMENT, VDC Control Module and Hydraulic Control Unit (VDCCM&H/U).>

C: INSPECTION

1) Check the identification label (a) of the VDC control unit & hydraulic control unit (VDCCM&H/U).

NOTE:
For the identification label, refer to "SPECIFICATION" in "General Description". <Ref. to VDC-2, SPECIFICATION, General Description.>

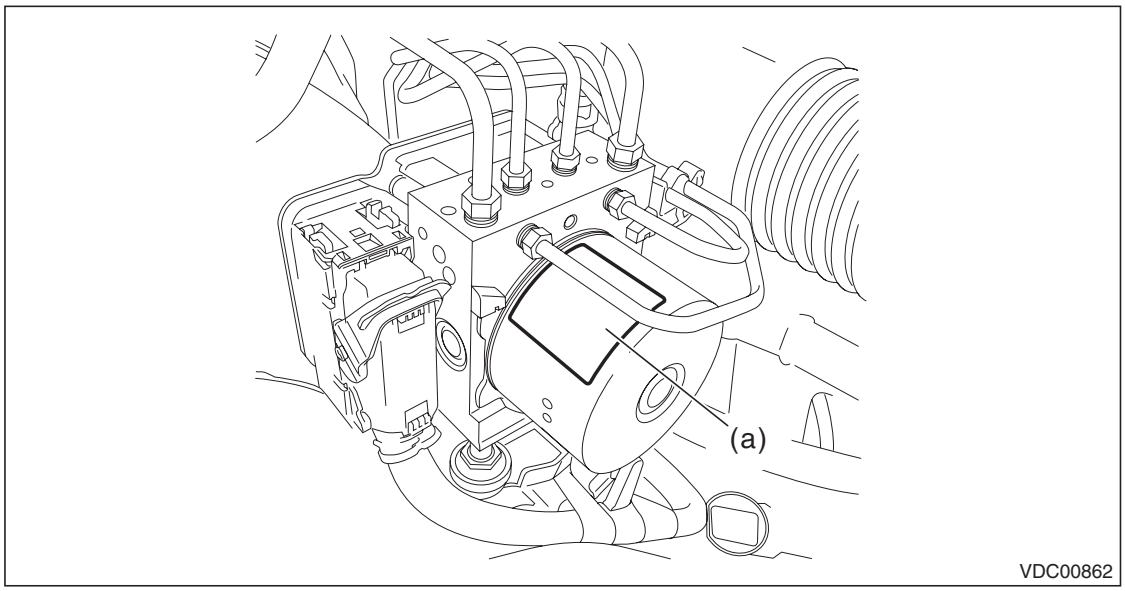

2) Check the condition of connection and settlement of connector, and correct or replace if defective.

GETtheMANUALS.org

1. CHECKING THE HYDRAULIC UNIT ABS OPERATION BY PRESSURE GAUGE

1) Lift up the vehicle, and then remove the wheel.
2) Remove the air bleeder screws from FL and FR caliper bodies.
3) Connect two pressure gauges to FL and FR caliper bodies.

CAUTION:
- **Use a pressure gauge used exclusively for brake fluid measurement.**
- **Do not use the pressure gauge used for the measurement of transmission oil. Doing so will cause the piston seal to expand and deform.**

NOTE:
Wrap sealing tape around the pressure gauge.

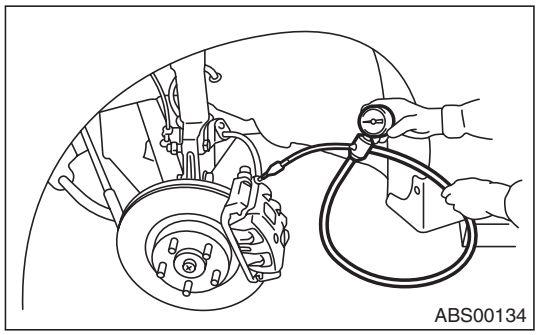

4) Bleed air from the pressure gauges and the FL and FR caliper bodies.
5) Perform ABS sequence control. <Ref. to VDC-17, ABS Sequence Control.>
6) When the hydraulic unit begins to work, first the FL side performs decompression, hold and compression, and then the FR side performs decompression, hold and compression.
7) Read values indicated on the pressure gauge and check if the fluctuation of the values between decompression and compression meets the standard values. Depress the brake pedal and check that the kick-back is normal, and tightness is normal.

Inspection conditions	Front wheel	Rear wheel
Initial value	3,500 kPa (36 kgf/cm^2, 511 psi)	3,500 kPa (36 kgf/cm^2, 511 psi)
When depressurized	500 kPa (5 kgf/cm^2, 73 psi) or less	500 kPa (5 kgf/cm^2, 73 psi) or less
When pressurized	3,500 kPa (36 kgf/cm^2, 511 psi) or more	3,500 kPa (36 kgf/cm^2, 511 psi) or more

8) Disconnect the pressure gauges from FL and FR caliper bodies.
9) Install the air bleeder screws of FL and FR caliper bodies.
10) Remove the air bleeder screws from RL and RR caliper bodies.
11) Connect two pressure gauges to RL and RR caliper bodies.
12) Bleed air from RL and RR caliper bodies, and pressure gauge.
13) Perform ABS sequence control. <Ref. to VDC-17, ABS Sequence Control.>
14) When the hydraulic unit begins to work, first the RR side performs decompression, hold and compression, and then the RL side performs decompression, hold and compression.
15) Read values indicated on the pressure gauge and check if the fluctuation of the values between decompression and compression meets specification. Depress the brake pedal and check that the kick-back is normal, and tightness is normal.
16) Disconnect the pressure gauge from the RL and RR caliper bodies.
17) Install the air bleeder screws of RL and RR caliper bodies.
18) Bleed air from the brake system. <Ref. to BR-54, Air Bleeding.>

2. CHECKING THE HYDRAULIC UNIT ABS OPERATION WITH THE BRAKE TESTER

1) Set wheels other than the one to measure on free rollers.

GETtheMANUALS.org

2) Prepare for the ABS sequence control operation. <Ref. to VDC-17, ABS Sequence Control.>
3) Set the front wheels or rear wheels on the brake tester (a) and set the gear to neutral.

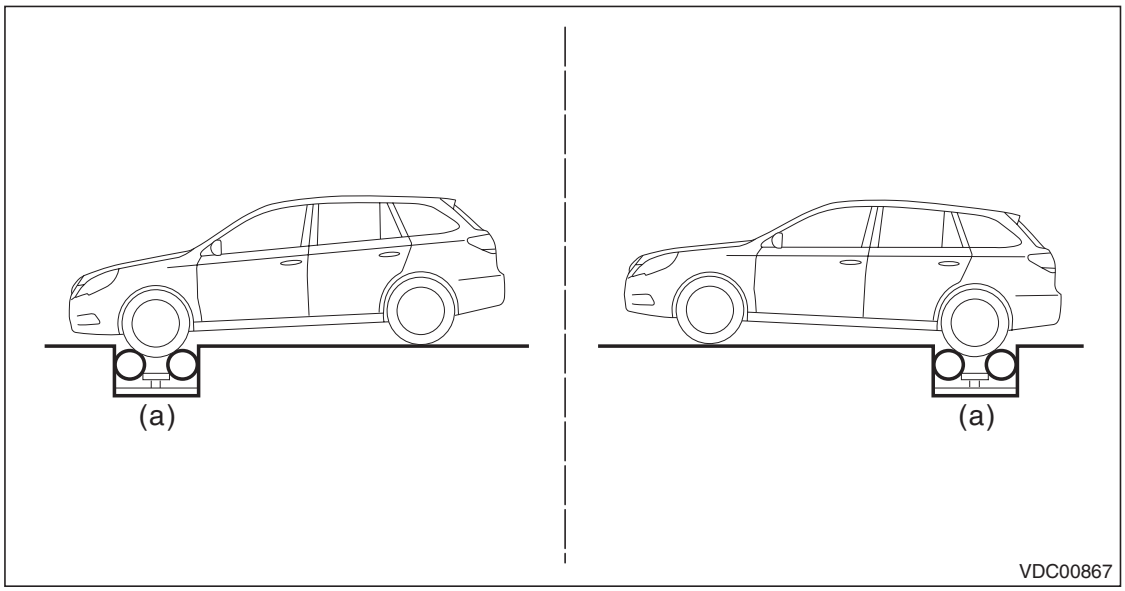

4) Operate the brake tester.
5) Perform ABS sequence control. <Ref. to VDC-17, ABS Sequence Control.>
6) When the hydraulic unit begins to work, check the following work sequence.
   (1) The FL wheel performs decompression, hold and compression in sequence, and subsequently the FR wheel repeats the cycle.
   (2) The RR wheel performs decompression, hold and compression in sequence, and subsequently the RL wheel repeats the cycle.
7) Read values indicated on the brake tester and check if the fluctuation of the values between decompression and compression meets specification.

Inspection conditions	Front wheel	Rear wheel
Initial value	1,000 N (102 kgf, 225 lb)	1,000 N (102 kgf, 225 lb)
When depressurized	500 N (51 kgf, 112 lb) or less	500 N (51 kgf, 112 lb) or less
When pressurized	1,000 N (102 kgf, 225 lb) or more	1,000 N (102 kgf, 225 lb) or more

8) After the inspection, depress the brake pedal and check that it is not abnormally hard, and tightness is normal.

GETtheMANUALS.org

3. CHECKING THE HYDRAULIC UNIT VDC OPERATION USING A PRESSURE GAUGE

1) Lift up the vehicle, and then remove the wheel.
2) Remove the air bleeder screws from FL and FR caliper bodies.
3) Connect two pressure gauges to FL and FR caliper bodies.

CAUTION:
- **Use a pressure gauge used exclusively for brake fluid measurement.**
- **Do not use a pressure gauge used for the measuring transmission oil pressure, as the piston seal may expand and deform.**

NOTE:
Wrap sealing tape around the pressure gauge.

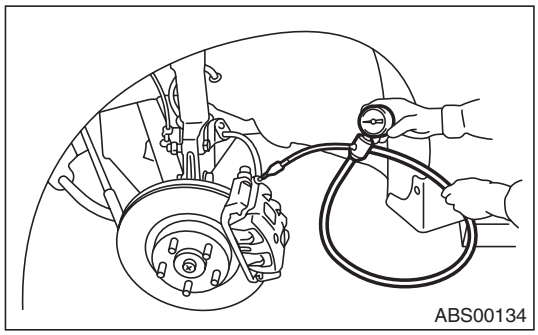

4) Bleed air from the pressure gauge.
5) Perform VDC sequence control. <Ref. to VDC-20, VDC Sequence Control.>
6) When the hydraulic unit begins to work, first the FL side performs compression, hold, and decompression, and then the FR side performs compression, hold, and decompression.
7) Read values indicated on the pressure gauge and check if the fluctuation of the values between decompression and compression meets specification. Depress the brake pedal and check that it is not abnormally hard, and tightness is normal.

Inspection conditions	Front wheel	Rear wheel
When pressurized	3,000 kPa (31 kgf/cm^2, 441 psi) or more	3,000 kPa (31 kgf/cm^2, 441 psi) or more
When depressurized	500 kPa (5 kgf/cm^2, 73 psi) or less	500 kPa (5 kgf/cm^2, 73 psi) or less

8) Disconnect the pressure gauges from FL and FR caliper bodies.
9) Install the air bleeder screws of FL and FR caliper bodies.
10) Remove the air bleeder screws from RL and RR caliper bodies.
11) Connect two pressure gauges to RL and RR caliper bodies.
12) Bleed air from RL and RR caliper bodies, and pressure gauge.
13) Perform VDC sequence control. <Ref. to VDC-20, VDC Sequence Control.>
14) When the hydraulic unit begins to work, first the RR side performs compression, hold, and decompression, and then the RL side performs compression, hold, and decompression.
15) Read the values indicated on the pressure gauges and check if it is within specification. Depress the brake pedal and check that it is not abnormally hard, and tightness is normal.
16) Disconnect the pressure gauge from the RL and RR caliper bodies.
17) Install the air bleeder screws of RL and RR caliper bodies.
18) Bleed air from the brake system. <Ref. to BR-54, Air Bleeding.>

GETtheMANUALS.org

4. CHECK HYDRAULIC UNIT VDC OPERATION WITH BRAKE TESTER

1) Set wheels other than the one to measure on free rollers.
2) Prepare to operate the VDC sequence control. <Ref. to VDC-20, VDC Sequence Control.>
3) Set the front wheels or rear wheels on the brake tester (a) and set the gear to neutral.

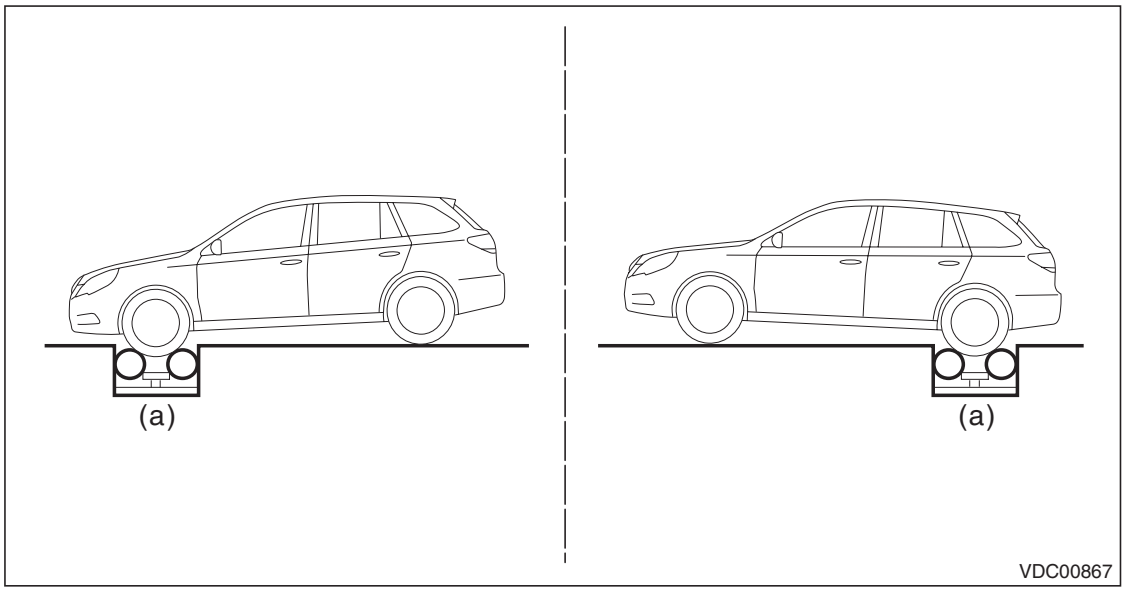

4) Operate the brake tester.
5) Perform VDC sequence control. <Ref. to VDC-20, VDC Sequence Control.>
6) When the hydraulic unit begins to work, check the following work sequence.
   (1) The FL wheel performs compression, hold and decompression in sequence, and subsequently the FR wheel repeats the cycle.
   (2) The RR wheel performs compression, hold and decompression in sequence, and subsequently the RL wheel repeats the cycle.
7) Read values indicated on the brake tester and check if the fluctuation of the values between decompression and compression meets specification.

Inspection conditions	Front wheel	Rear wheel
When pressurized	2,000 N (204 kgf, 450 lbf) or more	2,000 N (204 kgf, 450 lbf) or more
When depressurized	500 N (51 kgf, 112 lbf) or less	500 N (51 kgf, 112 lbf) or less

8) After the inspection, depress the brake pedal and check that it is not abnormally hard, and tightness is normal.

GETtheMANUALS.org

D: ADJUSTMENT

1. SET UP MODE FOR NEUTRAL OF STEERING ANGLE SENSOR & LATERAL G SENSOR 0 POINT

After installing, replacing, or adjusting the following part, perform the Set up mode for Neutral of Steering Angle Sensor & Lateral G Sensor 0 point.

- Steering angle sensor
- Steering wheel
- Suspension parts
- Wheel alignment
- VDCCM&H/U
- VDCCM&H/U bracket

1) Set the steering wheel to the neutral position.
2) Connect the Subaru Select Monitor to data link connector.
   (1) Run the “PC application for Subaru Select Monitor”.
   (2) On «Main Menu» display, select {Each System Check}.
   (3) Select {Brake Control System}. When {VDC} is displayed, select the [OK] button.
   (4) From {Current Data Display & Save}, select {Steer Angle Sensor Op}.
3) Check that the steering angle sensor output value is between –10 and 10 deg.
4) From {Function Check Sequence}, select {Set up mode for Neutral of Steering Angle Sensor & Lateral G Sensor 0 point}, and perform the setting according to the procedure displayed on the Subaru Select Monitor Screen.
5) Drive the vehicle for 10 minutes, and check that there is no system malfunction or the warning light illumination while driving.
6) Make sure that the DTC is not stored.

2. LONGITUDINAL G SENSOR & LATERAL G SENSOR 0 POINT SETTING MODE

After installing or replacing the following part, perform the longitudinal G sensor & lateral G sensor 0 point setting mode.

- Suspension parts
- VDCCM&H/U
- VDCCM&H/U bracket

1) Park the vehicle on a level surface with all wheels aligned straight.
2) Connect the Subaru Select Monitor to data link connector.
   (1) Run the “PC application for Subaru Select Monitor”.
   (2) On «Main Menu» display, select {Each System Check}.
   (3) Select {Brake Control System}. When {VDC} is displayed, select the [OK] button.
   (4) From {Current Data Display & Save}, select {Longitudinal G Sensor Output} and {Lateral G Sensor Output}.
3) Check that output values for the longitudinal G sensor and lateral G sensor are –2 — 2 m/s^2.
4) From {Function Check Sequence}, select {Longitudinal G Sensor & Lateral G Sensor 0 Point Setting Mode}, and perform the setting according to the procedure displayed on the Subaru Select Monitor Screen.
5) Drive the vehicle for 10 minutes, and check that there is no system malfunction or the warning light illumination while driving.
6) Make sure that the DTC is not stored.

GETtheMANUALS.org

5. ABS Sequence Control

A: OPERATION

1) While the ABS sequence control is being performed, the operation of the hydraulic unit can be checked using the brake tester or pressure gauge after the hydraulic unit solenoid valve operation.
2) ABS sequence control can be started by the Subaru Select Monitor.

1. ABS SEQUENCE CONTROL WITH SUBARU SELECT MONITOR

NOTE:
In the event of any trouble, the ABS sequence control will not operate.

1) Connect the Subaru Select Monitor to data link connector.
   (1) Run the “PC application for Subaru Select Monitor”.
   (2) On «Main Menu» display, select {Each System Check}.
   (3) Select {Brake Control System}. When {ABS} is displayed, select the [OK] button.
   (4) Select the {ABS Function Check Mode} from {ABS Sequence Control Mode}.
2) Follow the procedures displayed in the Subaru Select Monitor to execute the following.
   (1) When using a brake tester, press the brake pedal pad with a force of 1,000 N (102 kgf, 225 lbf).
   (2) When using a pressure gauge, press the brake pedal so that the pressure gauge indicates 3,500 kPa (36 kgf/cm^2, 511 psi).
3) The brake system being operated is displayed on the Subaru Select Monitor.

GETtheMANUALS.org

2. CONDITIONS FOR ABS SEQUENCE CONTROL

NOTE:
The control operation starts at point A.

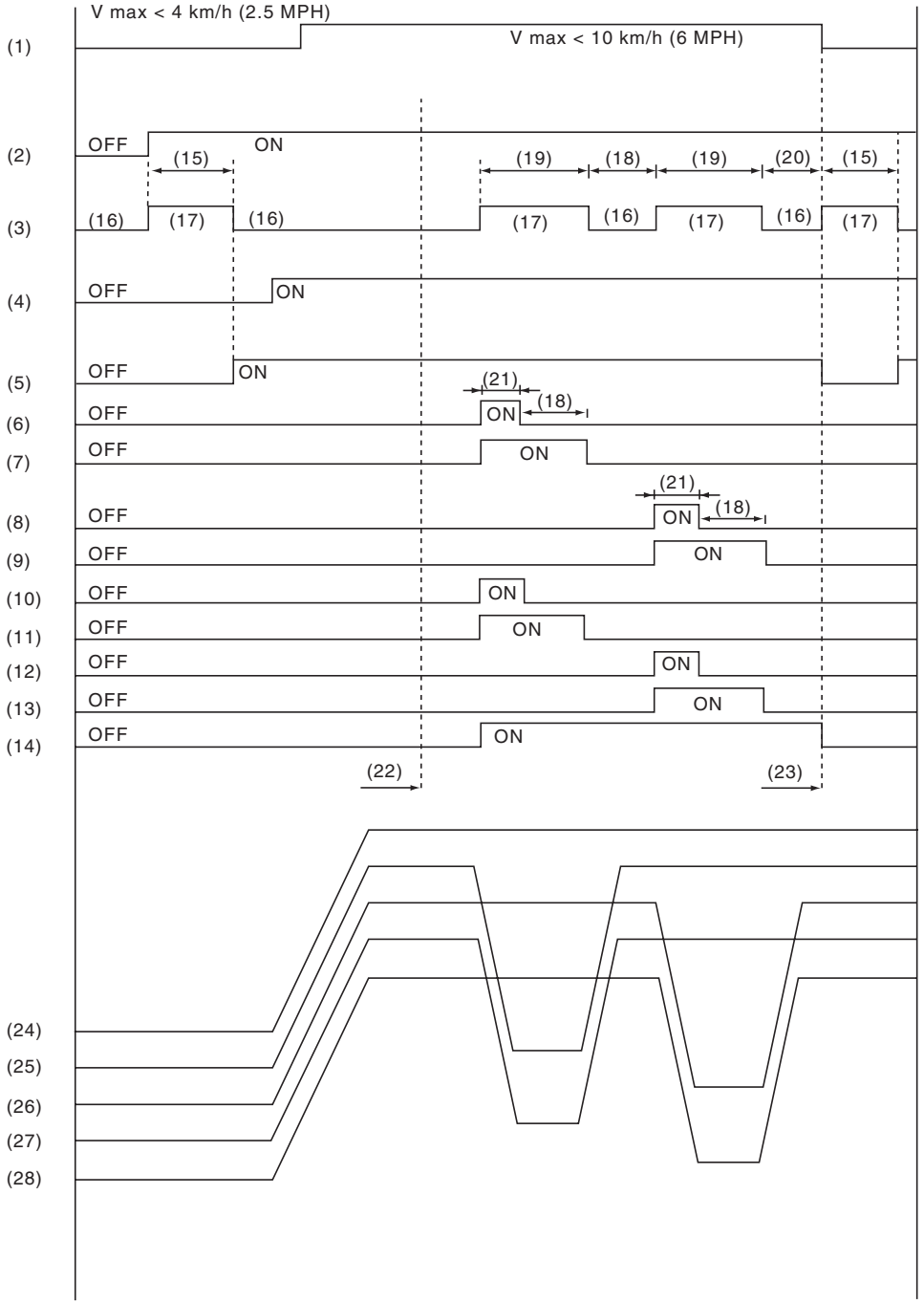

VDC00799

GETtheMANUALS.org

(1) All wheel speed
(2) Ignition key
(3) ABS warning light
(4) Stop light switch
(5) Valve relay
(6) FL decompression valve
(7) FL compression valve
(8) FR decompression valve
(9) FR compression valve
(10) RR decompression valve
(11) RR compression valve
(12) RL decompression valve
(13) RL compression valve
(14) Pump motor
(15) 2 seconds
(16) Light OFF
(17) Light ON
(18) 1.0 second
(19) 1.4 seconds
(20) 0.6 seconds
(21) 0.4 seconds
(22) Point A
(23) Reset
(24) Master cylinder pressure
(25) FL wheel cylinder pressure
(26) FR wheel cylinder pressure
(27) RR wheel cylinder pressure
(28) RL wheel cylinder pressure

B: SPECIFICATION

1. CONDITIONS FOR COMPLETION OF ABS SEQUENCE CONTROL

When the following conditions develop, the ABS sequence control stops and ABS operation is returned to the normal control mode.

- When the speed of at least one wheel reaches 10 km/h (6 MPH).
- When the brake pedal is released during ABS sequence control and the stop light switch is becomes OFF.
- After completion of ABS sequence control.
- When a malfunction is detected.

GETtheMANUALS.org

6. VDC Sequence Control

A: OPERATION

1) While the VDC sequence control is performed, the operation of the hydraulic unit can be checked using the brake tester or pressure gauge after the hydraulic unit solenoid valve is operated.
2) VDC sequence control can be started by Subaru Select Monitor.

1. VDC SEQUENCE CONTROL WITH SUBARU SELECT MONITOR

NOTE:
In the event of any trouble, sequence control will not operate.
1) Connect the Subaru Select Monitor to data link connector.
   (1) Run the “PC application for Subaru Select Monitor”.
   (2) On «Main Menu» display, select {Each System Check}.
   (3) Select {Brake Control System}. When {VDC} is displayed, select the [OK] button.
   (4) Select the {VDC Function Check Mode} from {Function Check Sequence}.
2) Operate according to the procedures displayed in the Subaru Select Monitor.
3) The brake system being operated is displayed on the Subaru Select Monitor.

GETtheMANUALS.org

2. CONDITIONS FOR VDC SEQUENCE CONTROL

NOTE:
The control operation starts at point A.

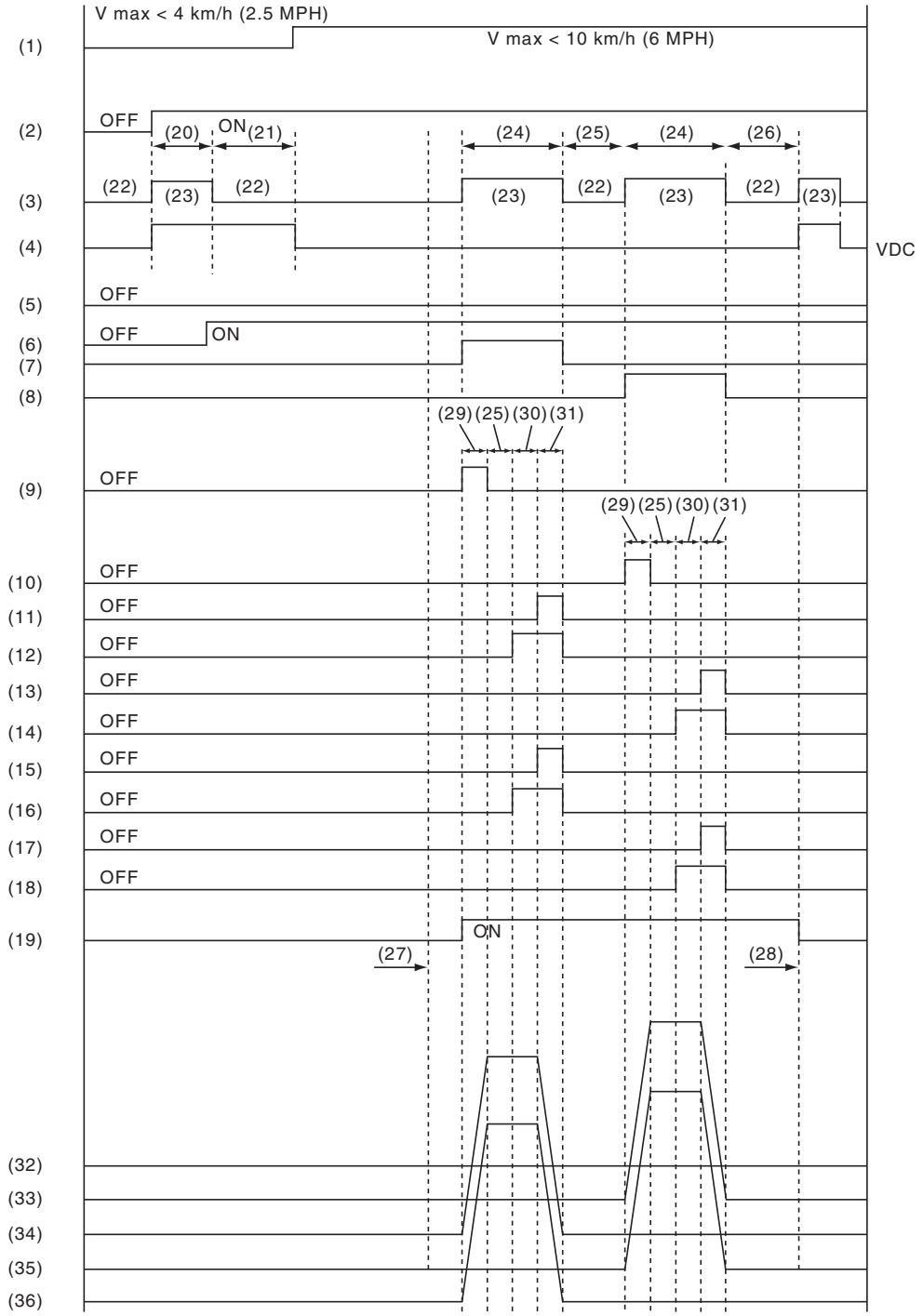

VDC00800

GETtheMANUALS.org

(1) All wheel speed
(2) Ignition key
(3) ABS warning light
(4) VDC warning light
(5) Stop light switch
(6) Valve relay
(7) VDC switching valve 1 FL
(8) VDC switching valve 1 FR
(9) VDC switching valve 2 FL
(10) VDC switching valve 2 FR
(11) FL decompression valve
(12) FL compression valve
(13) FR decompression valve
(14) FR compression valve
(15) RR decompression valve
(16) RR compression valve
(17) RL decompression valve
(18) RL compression valve
(19) Pump motor
(20) 2 seconds
(21) Approx. 1 second
(22) Light OFF
(23) Light ON
(24) 3.4 seconds
(25) 1 second
(26) 1.6 seconds
(27) Point A
(28) Reset
(29) 0.8 seconds
(30) 1.2 seconds
(31) 0.4 seconds
(32) Master cylinder pressure
(33) FR wheel cylinder pressure
(34) FL wheel cylinder pressure
(35) RL wheel cylinder pressure
(36) RR wheel cylinder pressure

B: SPECIFICATION

1. CONDITIONS FOR COMPLETION OF VDC SEQUENCE CONTROL

When the following conditions develop, the VDC sequence control stops and VDC operation is returned to the normal control mode.

- When the speed of at least one wheel reaches 10 km/h (6 MPH).
- After completion of VDC sequence control.
- When a malfunction is detected.

GETtheMANUALS.org

7. Yaw Rate and G Sensor

A: NOTE

Yaw rate & longitudinal G and lateral G sensor are integrated with the VDC control module & hydraulic control module (VDCCM&H/U).

B: INSPECTION

1. YAW RATE & LONGITUDINAL G AND LATERAL G SENSOR SIGNAL

Step		Check	Yes	No
1	**CHECK YAW RATE & G SENSOR.** 1) Select “Current Data Display & Save” on the Subaru Select Monitor. 2) Read the output of yaw rate & G sensor.	When the vehicle is placed horizontally, are the displayed values –1.5 — 1.5 m/s^2 for longitudinal G and lateral G sensor, and –4 — 4 deg/s for yaw rate sensor?	Go to step **2**.	Replace the VDC control module & hydraulic control unit (VDCCM&H/U).
2	**DRIVING INSPECTION.** Drive for approximately 10 minutes, and check that there is no system malfunction or the warning light illumination while driving.	Is there any abnormal movement or the warning light illumination while driving?	Perform the diagnosis according to DTCs for the VDC system. <Ref. to VDC(diag)-35, List of Diagnostic Trouble Code (DTC).>	G sensor is normal.

GETtheMANUALS.org

8. Steering Angle Sensor

A: REPLACEMENT

1) Position the front wheels straight ahead. (After moving a vehicle 5 m (16 ft) or more with front wheels positioned straight ahead, make sure that the vehicle moves straight ahead.)
2) Turn the ignition switch to OFF.
3) Disconnect the ground cable from battery and wait for at least 60 seconds before starting work.

CAUTION:
Always refer to "CAUTION" of "General Description" in the Airbag System before performing service on the airbag modules. <Ref. to AB-9, CAUTION, General Description.>

4) Remove the driver's airbag module assembly.
   (1) Push in the snap pin using a hexagon wrench or equivalent wrapped with a protective tape to disengage the locks (3 locations).

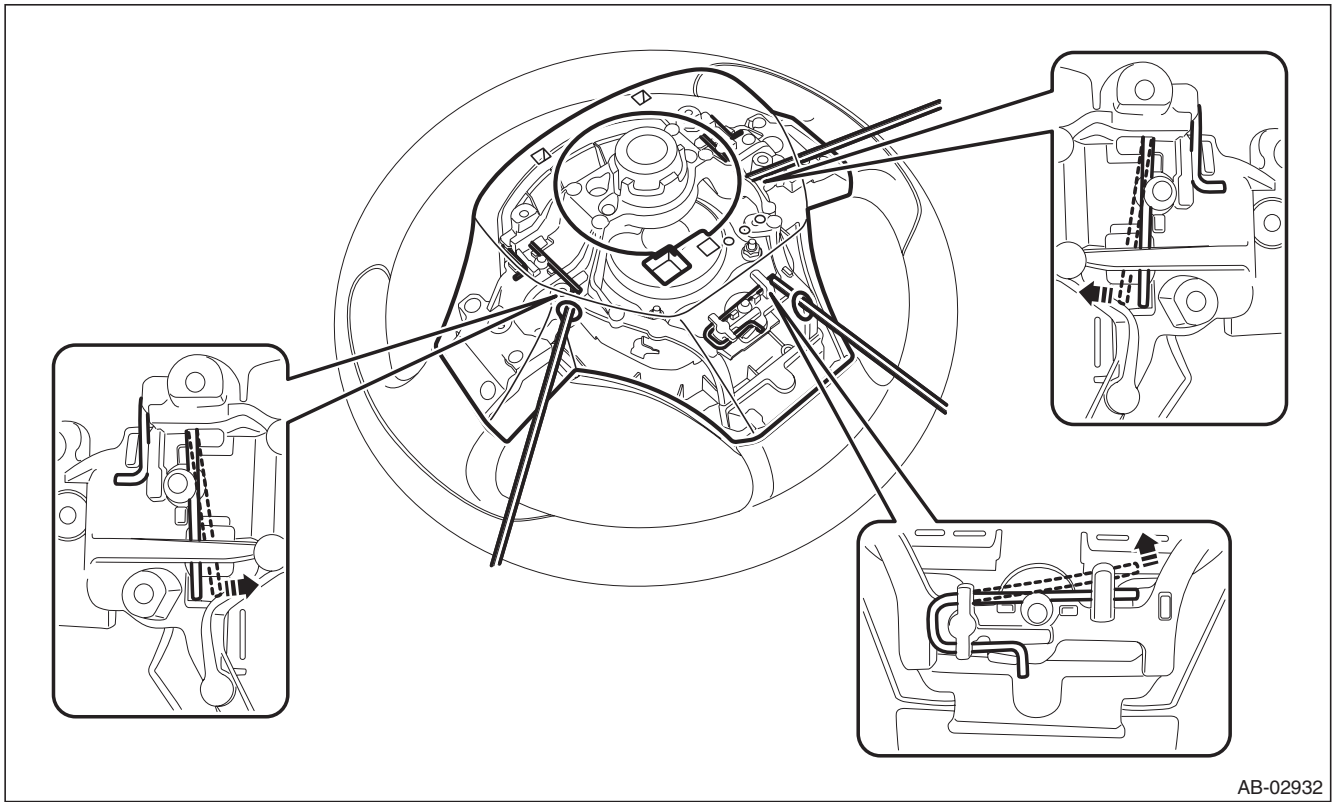

GETtheMANUALS.org

(2) Disconnect the horn harness and airbag connector and remove the airbag module assembly. <Ref. to AB-21, DRIVER'S AIRBAG MODULE, CURTAIN AIRBAG MODULE & PRETENSIONER, PROCEDURE, Airbag Connector.>

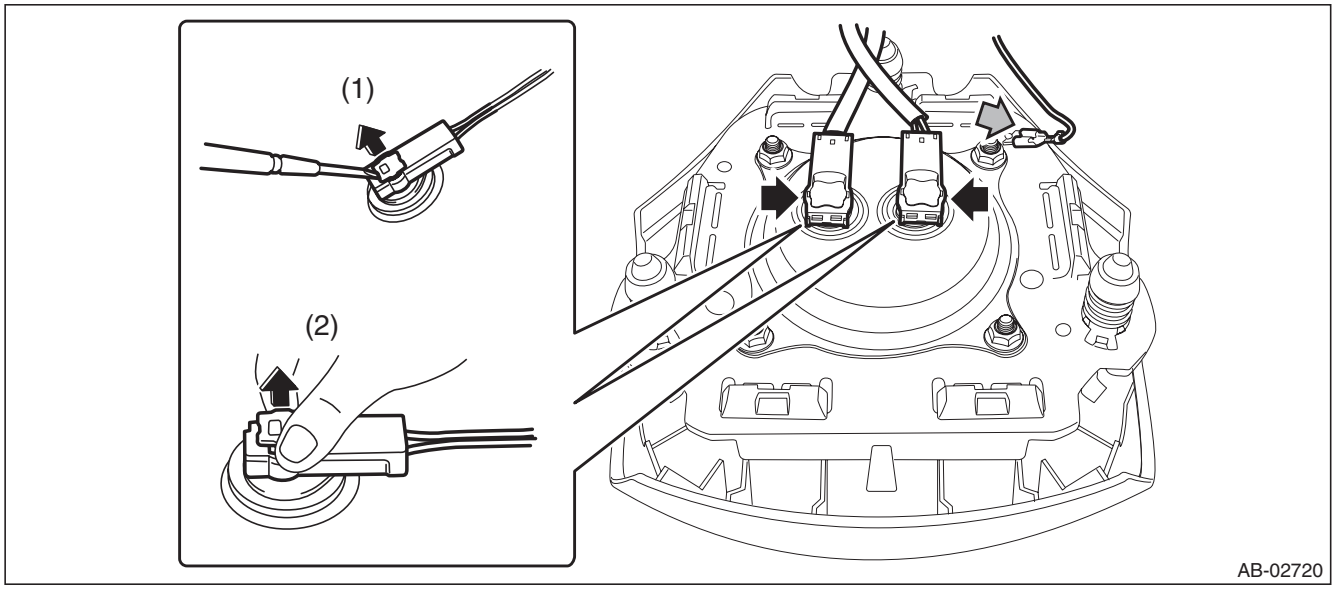

5) Remove the steering wheel.

CAUTION:

- **Always use the steering wheel puller for removal to avoid deforming the steering wheel.**
- **If the steering wheel has been removed, make sure that the roll connector is not turned from the original position.**

Preparation tool: Steering wheel puller

(1) Disconnect the connector and remove the nut.
(2) Put alignment marks and remove the steering wheel.

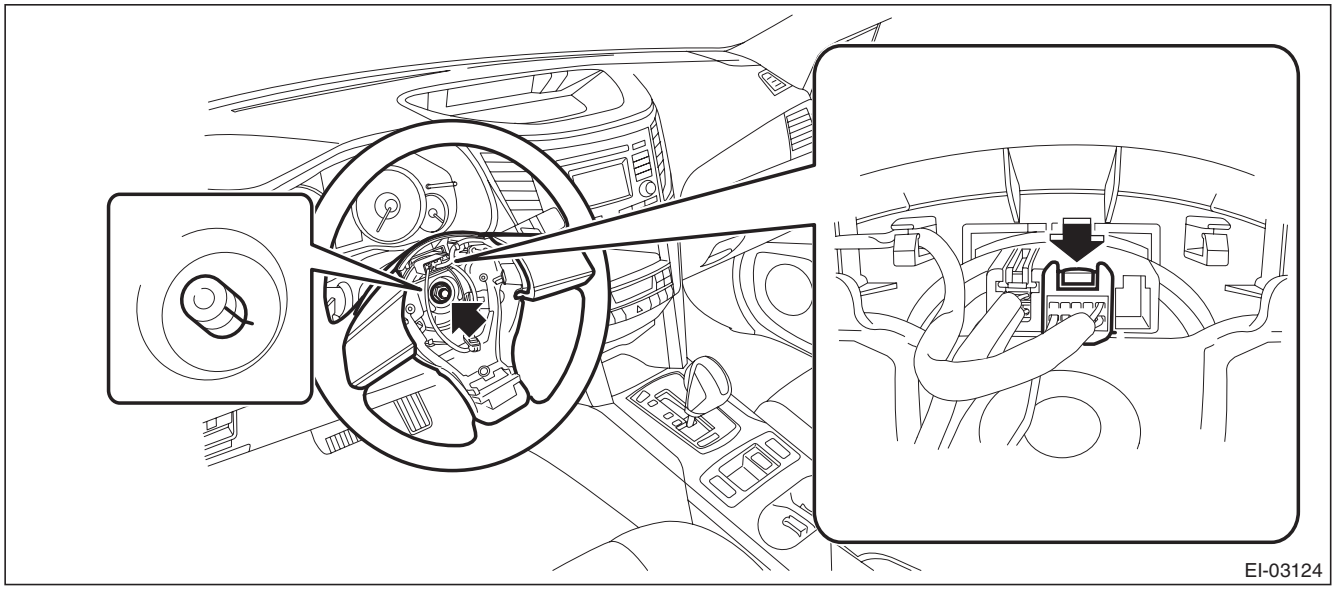

GETtheMANUALS.org

6) Remove the steering column cover.
   (1) Lower the lever of the steering column.
   (2) Release the claws and remove the screws, then detach the steering column lower cover.

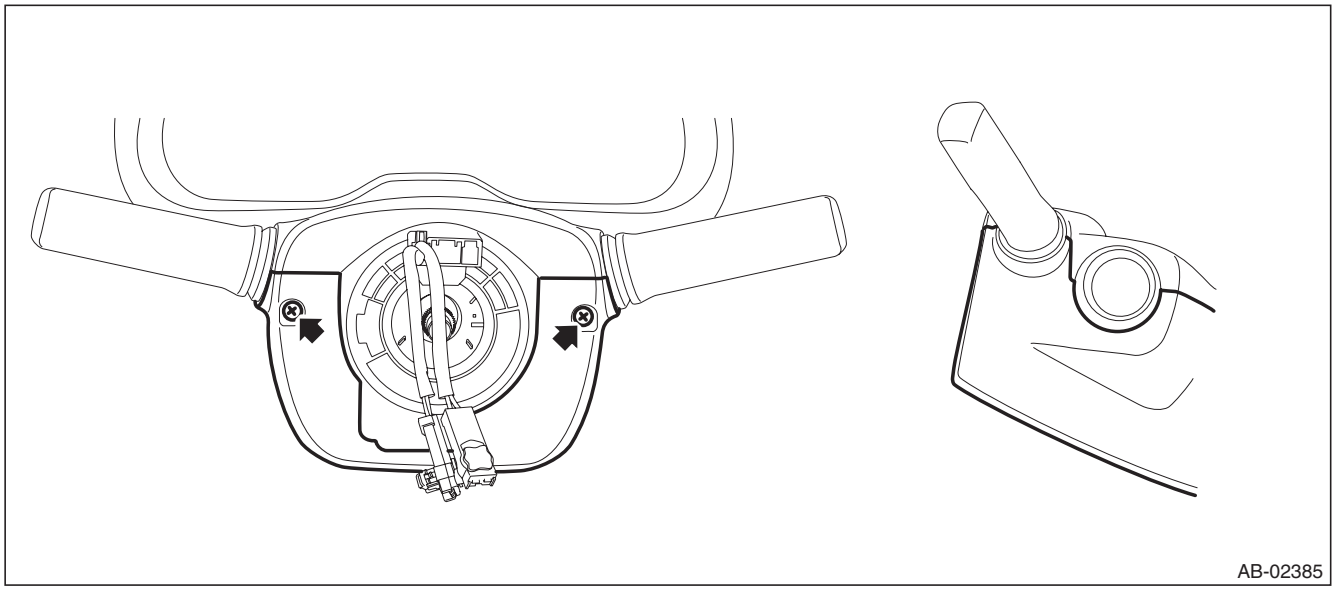

   (3) Separate the steering column upper cover and steering upper cover, and remove the steering column upper cover.

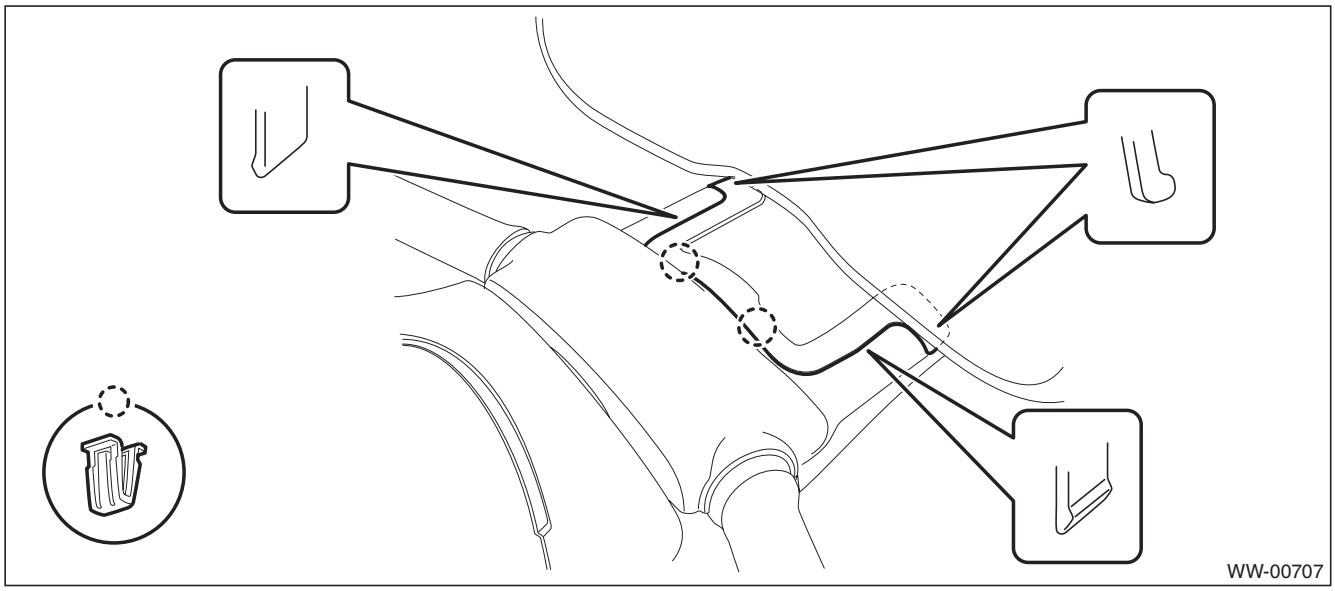

GETtheMANUALS.org

7) Remove the roll connector.

CAUTION:
Make sure that the roll connector is not turned from the original position.

(1) Disconnect the connector under the roll connector.
(2) Release the claws and remove the roll connector.

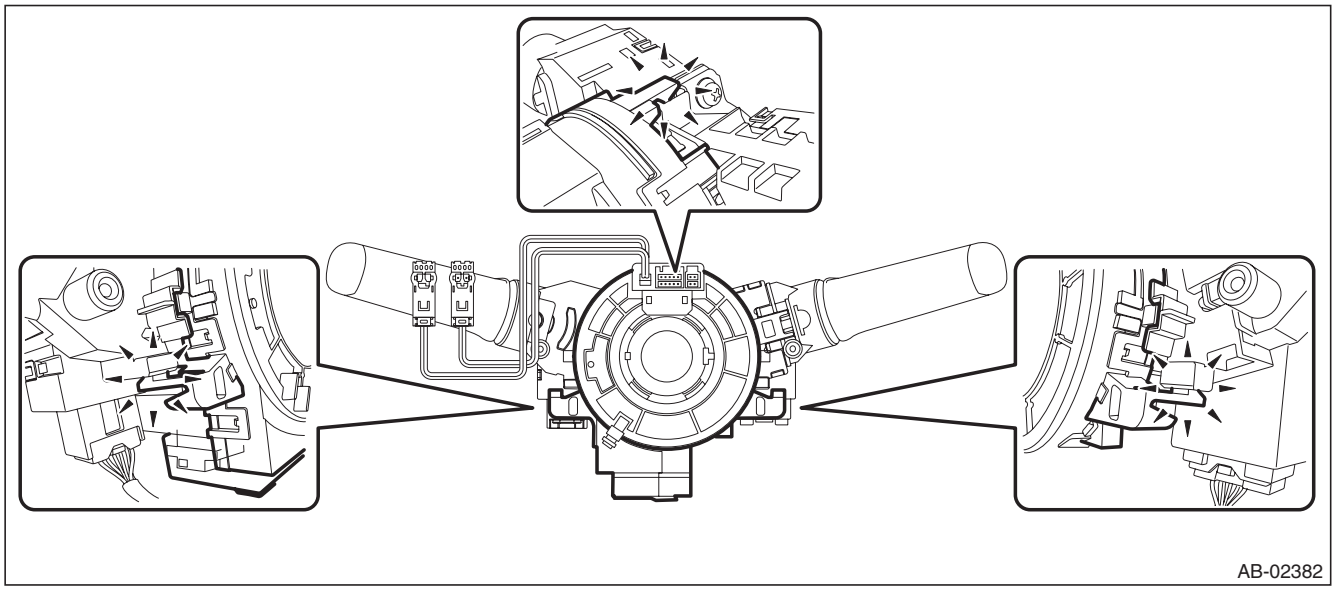

8) Remove the steering angle sensor.

(1) Release the claws and remove the steering angle sensor (b) from the roll connector (a).

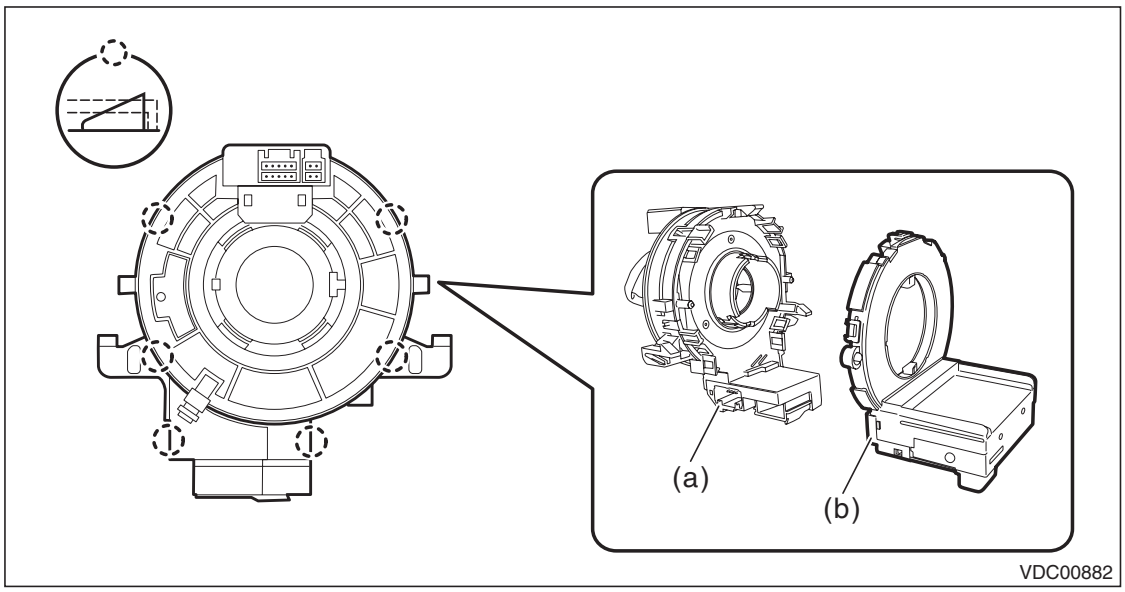

GETtheMANUALS.org

9) Install the steering angle sensor.
(1) Apply grease to the protrusion (a) of the new steering angle sensor.

CAUTION:
Do not rotate the steering angle sensor protrusion.

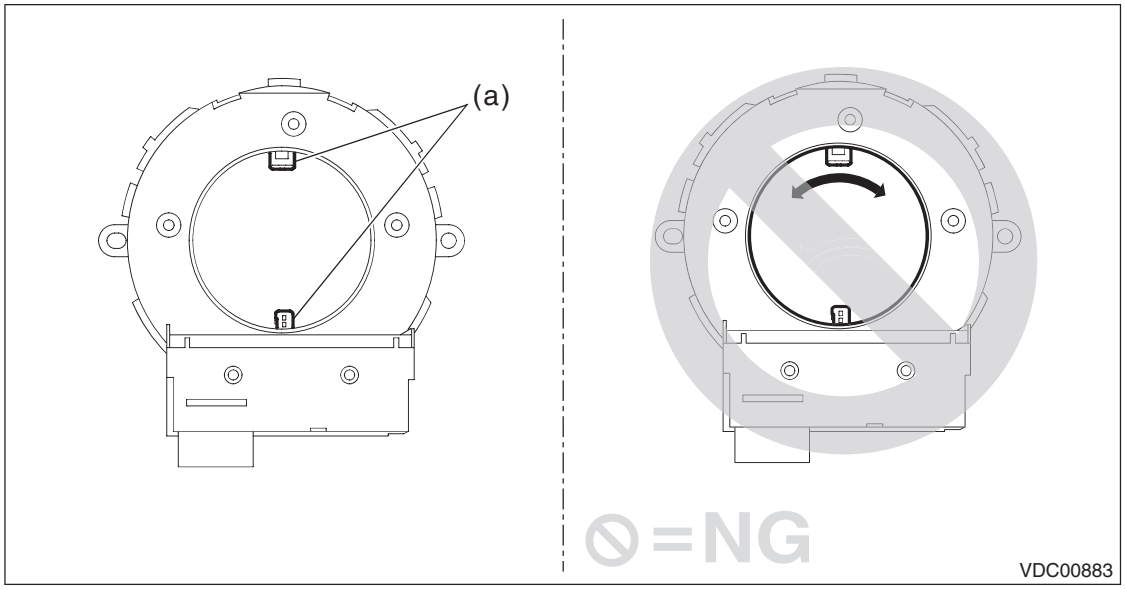

(2) Align the center of roll connector. <Ref. to AB-99, INSTALLATION, Roll Connector.>
(3) Align the position of the protrusion and install roll connector to steering angle sensor.
10) Install each part in the reverse order of removal.

Tightening torque:
Steering wheel: 39 N·m (3.98 kgf-m, 28.8 ft-lb)

Clearance:
Column cover to steering wheel: 2 — 4 mm (0.08 — 0.16 in)
11) After installation, perform the neutral position setting of the steering angle sensor. <Ref. to VDC-16, SET UP MODE FOR NEUTRAL OF STEERING ANGLE SENSOR & LATERAL G SENSOR 0 POINT, ADJUSTMENT, VDC Control Module and Hydraulic Control Unit (VDCCM&H/U).>

GETtheMANUALS.org

9. Front ABS Wheel Speed Sensor

A: REMOVAL

1) Disconnect the ground cable from battery.
2) Lift up the vehicle, and then remove the front wheels.
3) Remove the front ABS wheel speed sensor.

CAUTION:
- **Be careful not to damage the sensor.**
- **Do not apply excessive force to the sensor harness.**

(1) Disconnect the front ABS wheel speed sensor connector in the engine compartment.

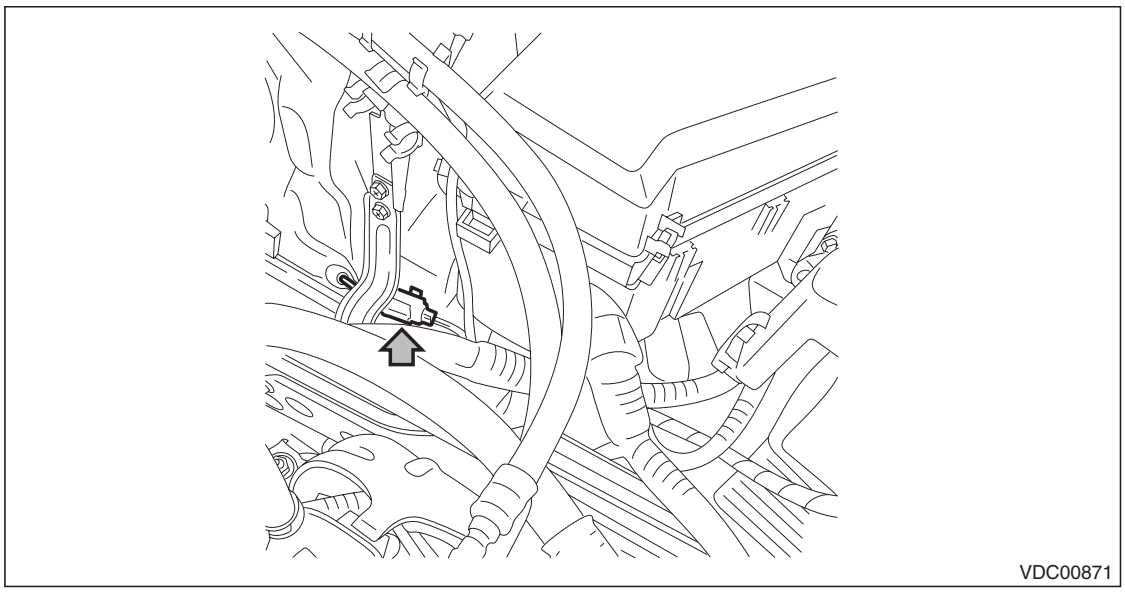

(2) Remove each harness clip and grommet.
(3) Remove the bolts, and remove the front ABS wheel speed sensor from the front axle housing.

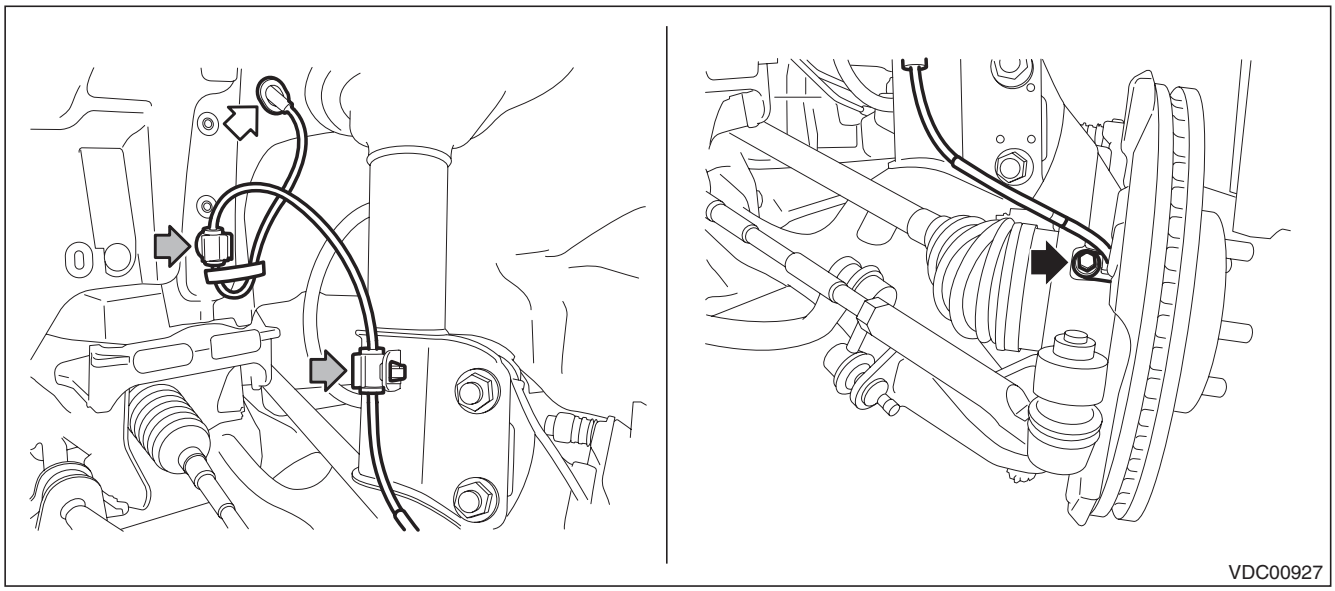

GETtheMANUALS.org

B: INSTALLATION

CAUTION:
Be careful not to damage the sensor.
Install each part in the reverse order of removal.

NOTE:
- Check the identification (mark) on the harness to make sure there is no warpage. <Ref. to VDC-2, SPECIFICATION, General Description.>
- Check if the harness is not pulled and does not come in contact with the suspension or body while operating the steering.

Tightening torque:
Front ABS wheel speed sensor: 7.5 N·m (0.76 kgf-m, 5.5 ft-lb)

C: INSPECTION

1. CHECK WITH SUBARU SELECT MONITOR

1) Connect the Subaru Select Monitor to data link connector.
   (1) Run the “PC application for Subaru Select Monitor”.
   (2) On «Main Menu» display, select {Each System Check}.
   (3) Select {Brake Control System}. When {VDC} is displayed, select the [OK] button.
   (4) From {Current Data Display & Save}, select {FR Wheel Speed} and {FL Wheel Speed}.
2) Check if the speed indicated on the display changes in the same manner as the speedometer reading during acceleration/deceleration when the steering wheel is in the straight-ahead position.
3) If the speed indicated on the display does not change in the inspection, check the ABS wheel speed sensor. <Ref. to VDC-30, CHECK ABS WHEEL SPEED SENSOR UNIT., INSPECTION, Front ABS Wheel Speed Sensor.>

2. CHECK ABS WHEEL SPEED SENSOR UNIT

1) Visually check the tip of the ABS wheel speed sensor for foreign particles or damage. If necessary, clean the tip or replace the ABS wheel speed sensor.
2) Disconnect the ABS wheel speed sensor connector.
3) Check the ABS wheel speed sensor cable for discontinuity. If defective, replace the ABS wheel speed sensor.

GETtheMANUALS.org

4) Connect a 12 V power supply to No. 1 terminal of ABS wheel speed sensor connector, then attach resistance to the No. 2 terminal. Rotate the wheel at about 2.75 km/h (2 MPH), and measure the voltage using an oscilloscope.

Standard value of output voltage:
0.7 — 1.4 V

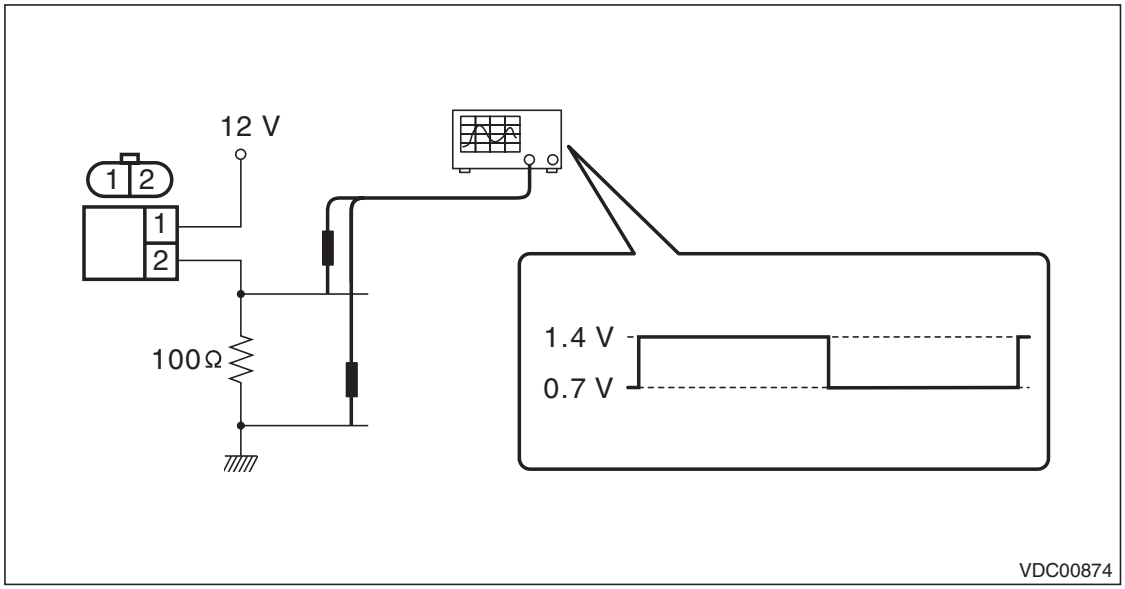

5) Replace the ABS wheel speed sensor if the inspection result is not within the standard value.

GETtheMANUALS.org

10. Rear ABS Wheel Speed Sensor

A: REMOVAL

1) Disconnect the ground cable from battery.
2) Lift up the vehicle, and then remove the rear wheels.
3) Remove the rear ABS wheel speed sensor.

CAUTION:
- **Be careful not to damage the sensor.**
- **Do not apply excessive force to the sensor harness.**
- **Leave the sensor harness clamp (white arrow) on the vehicle side.**

(1) Remove the clips and turn over the mud guard.
(2) Disconnect the connector from the rear ABS wheel speed sensor, and remove the grommet.

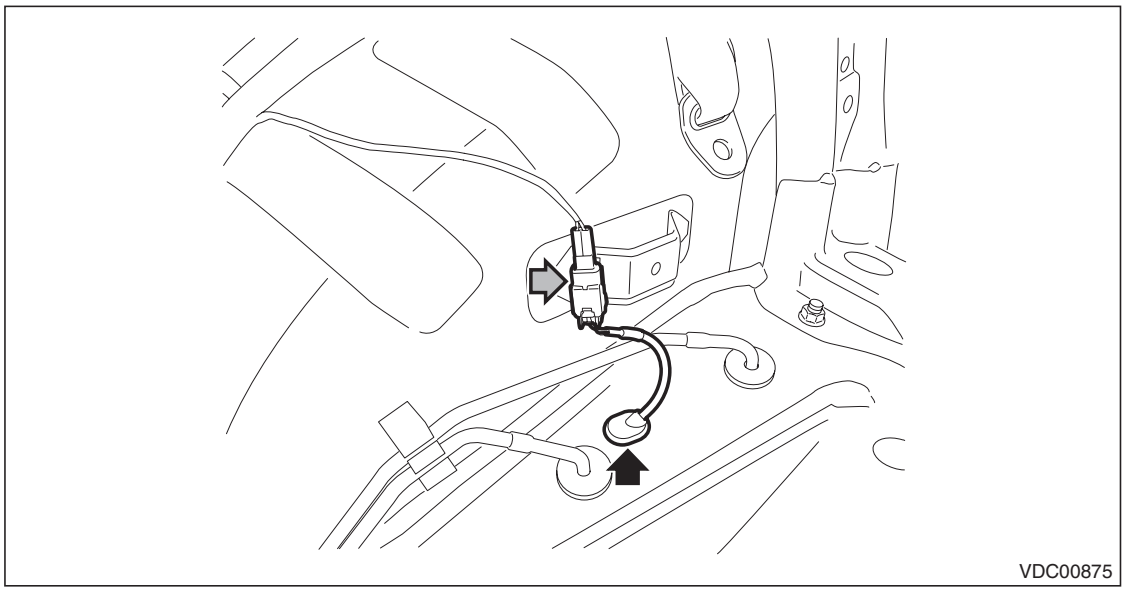

(3) Remove the harness clamp and bolts, and remove the rear ABS wheel speed sensor from the rear axle housing.

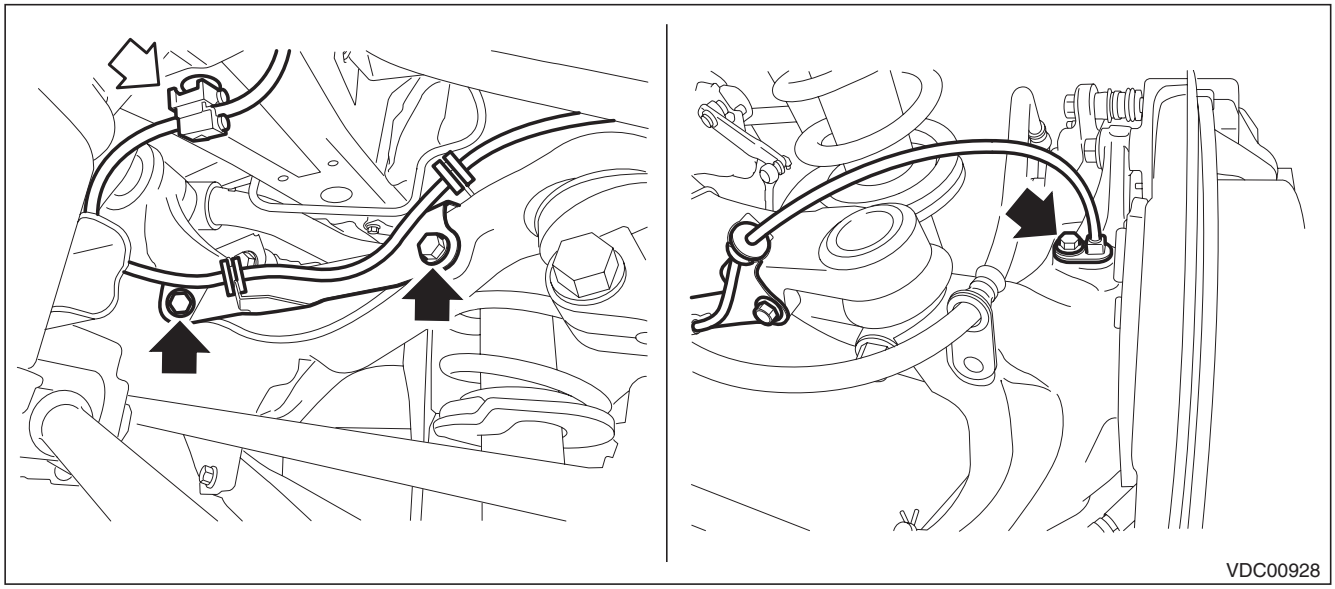

GETtheMANUALS.org

B: INSTALLATION

CAUTION:
Be careful not to damage the sensor.
Install each part in the reverse order of removal.

NOTE:
Check the identification (mark) on the harness to make sure there is no warpage. <Ref. to VDC-2, SPECIFICATION, General Description.>

Tightening torque:
Rear ABS wheel speed sensor: 7.5 N·m (0.76 kgf-m, 5.5 ft-lb)
Rear ABS wheel speed sensor bracket: 7.5 N·m (0.76 kgf-m, 5.5 ft-lb)

C: INSPECTION

1. ABS WHEEL SPEED SENSOR

For inspection of rear ABS wheel speed sensor, refer to inspection of front ABS wheel speed sensor. <Ref. to VDC-30, CHECK ABS WHEEL SPEED SENSOR UNIT., INSPECTION, Front ABS Wheel Speed Sensor.>

GETtheMANUALS.org

11.Front Magnetic Encoder

A: REMOVAL

Refer to “Front Hub Bearing” for removal, because the front magnetic encoder is integrated with front hub bearing. <Ref. to DS-23, REMOVAL, Front Hub Unit Bearing.>

B: INSTALLATION

Refer to “Front Hub Bearing” for installation, because the front magnetic encoder is integrated with front hub bearing. <Ref. to DS-26, INSTALLATION, Front Hub Unit Bearing.>

C: INSPECTION

Visually check the magnetic encoder for any damage. If necessary, replace with a new hub unit bearing.

NOTE:
Because the magnetic encoder is integrated with hub unit bearing assembly, replace the hub unit bearing with a new part if there is any defect found on the magnetic encoder.

GETtheMANUALS.org

12. Rear Magnetic Encoder

A: REMOVAL

Refer to “Rear Hub Unit Bearing” for removal, because the rear magnetic encoder is integrated with rear hub unit bearing. <Ref. to DS-39, REMOVAL, Rear Hub Unit Bearing.>

B: INSTALLATION

Refer to “Rear Hub Unit Bearing” for installation, because the rear magnetic encoder is integrated with rear hub unit bearing. <Ref. to DS-43, INSTALLATION, Rear Hub Unit Bearing.>

C: INSPECTION

Visually check the magnetic encoder parts for any damage. If necessary, replace with a new hub unit bearing.

NOTE:
Because the magnetic encoder is integrated with hub unit bearing assembly, replace the hub unit bearing with a new part if there is any defect found on the magnetic encoder.

GETtheMANUALS.org

13. VDC OFF Switch

A: REMOVAL

NOTE:
The trunk opener switch is integrated with the VDC OFF switch. (Sedan model)
1) Remove the instrument panel lower cover. <Ref. to EI-64, REMOVAL, Instrument Panel Lower Cover.>
2) Release the claws and remove the VDC OFF switch.

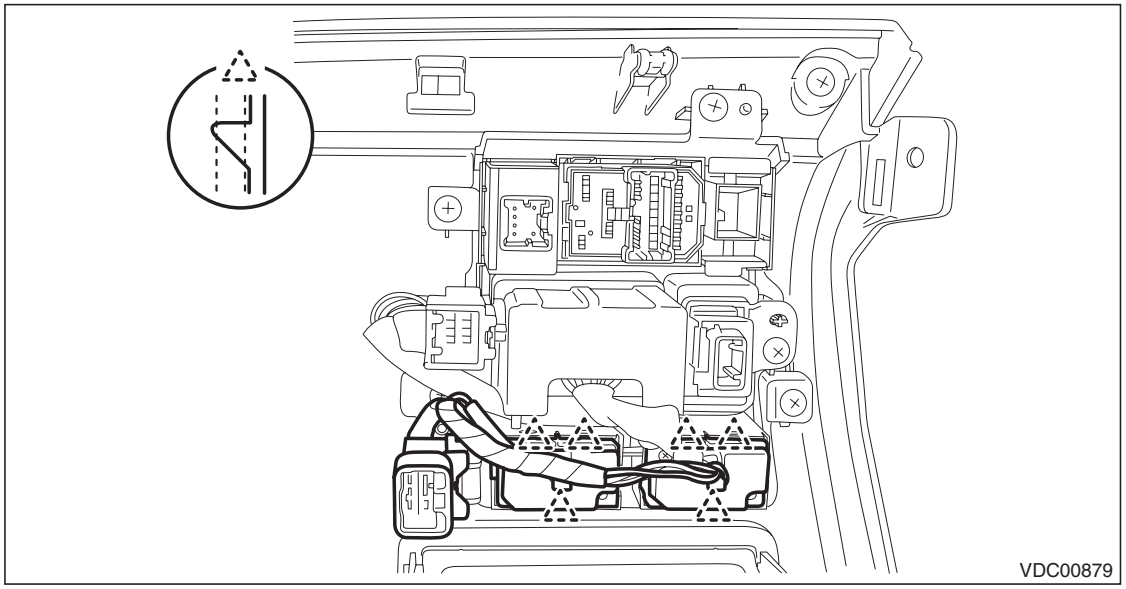

B: INSTALLATION

Install each part in the reverse order of removal.

GETtheMANUALS.org

C: INSPECTION

1) Disconnect the VDC OFF switch connector.
2) Check the resistance between the VDC OFF switch terminals.

Preparation tool: Circuit tester

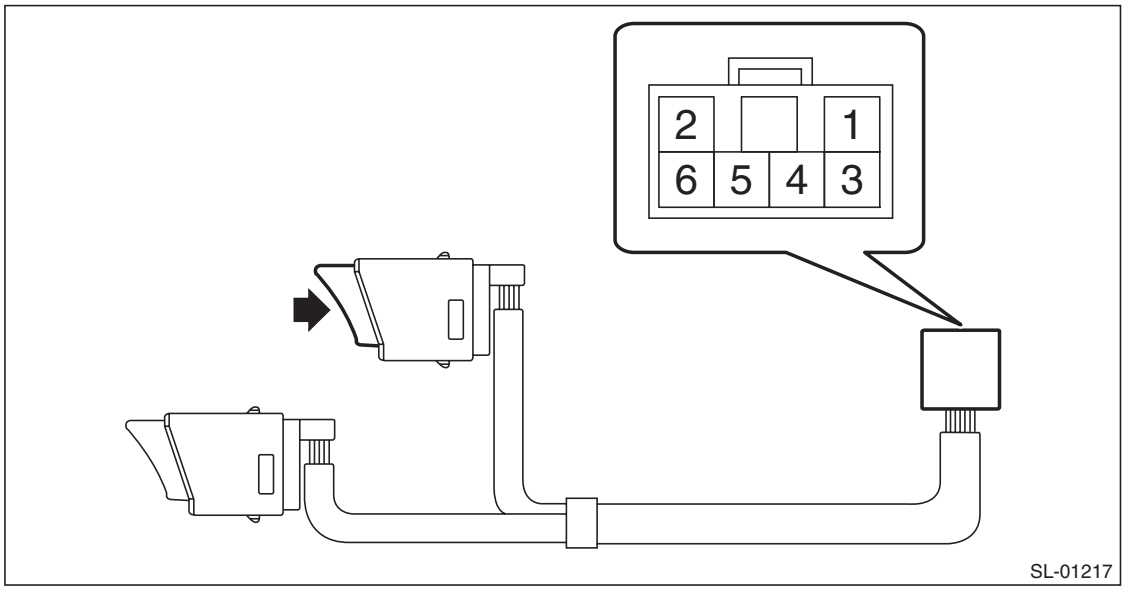

Terminal No.	Inspection conditions	Standard
1 — 3	Switch OFF	1 MΩ or more
	Switch ON	Less than 1 Ω

3) Replace the VDC OFF switch if the inspection result is not within the standard value.

GETtheMANUALS.org

GETtheMANUALS.org

VEHICLE DYNAMICS CONTROL (VDC) (DIAGNOSTICS)

VDC(diag)

Page

1. Basic Diagnostic Procedure 2
2. Check List for Interview 4
3. General Description 8
4. Electrical Component Location 10
5. Control Module I/O Signal 12
6. Subaru Select Monitor 16
7. Read Diagnostic Trouble Code (DTC) 23
8. Inspection Mode 24
9. Clear Memory Mode 25
10. Warning Light Illumination Pattern 26
11. List of Diagnostic Trouble Code (DTC) 35
12. Diagnostic Procedure with Diagnostic Trouble Code (DTC) 39
13. General Diagnostic Table 90

GETtheMANUALS.org

1. Basic Diagnostic Procedure

A: PROCEDURE

CAUTION:
Remove foreign matter (dust, water, oil etc.) from the VDCCM&H/U connector during removal and installation.

NOTE:
- To check the harness for open or short circuits, shake problem spot or connector.
- Refer to “Check List for Interview”. <Ref. to VDC(diag)-4, Check List for Interview.>

Step		Check	Yes	No
1	**CHECK PRE-INSPECTION.** 1) Ask the customer when and how the trouble occurred using the interview check list. <Ref. to VDC(diag)-4, Check List for Interview.> 2) Before performing diagnostics, check the component which might affect VDC problems. <Ref. to VDC(diag)-8, INSPECTION, General Description.>	Is the component that might influence the VDC problem normal?	Go to step **2**.	Repair or replace each component.
2	**CHECK INDICATION OF DTC.** 1) Turn the ignition switch to OFF. 2) Connect the Subaru Select Monitor to data link connector. 3) Turn the ignition switch to ON and run the Subaru Select Monitor. 4) Read the DTC using the Subaru Select Monitor. <Ref. to VDC(diag)-23, OPERATION, Read Diagnostic Trouble Code (DTC).> NOTE: If the communication function of the Subaru Select Monitor cannot be executed properly, check the communication circuit. <Ref. to VDC(diag)-20, COMMUNICATION FOR INITIALIZING IMPOSSIBLE, INSPECTION, Subaru Select Monitor.>	Is DTC displayed on Subaru Select Monitor?	Record the DTC. Go to step **4**.	Go to step **3**.
3	**PERFORM GENERAL DIAGNOSTICS.** 1) Perform the inspection by referring to “General Diagnostic Table”. <Ref. to VDC(diag)-90, INSPECTION, General Diagnostic Table.> 2) Perform the Clear Memory Mode. <Ref. to VDC(diag)-25, OPERATION, Clear Memory Mode.> 3) Perform the Inspection Mode. <Ref. to VDC(diag)-24, PROCEDURE, Inspection Mode.> 4) Read the DTC. <Ref. to VDC(diag)-23, OPERATION, Read Diagnostic Trouble Code (DTC).> 5) Check the DTC is not displayed.	Do the VDC warning light & VDC indicator light, VDC OFF indicator light and ABS warning light go off after starting the engine?	Finish the diagnosis.	Check the combination meter circuit. <Ref. to VDC(diag)-29, ABS WARNING LIGHT DOES NOT GO OFF, Warning Light Illumination Pattern.> <Ref. to VDC(diag)-30, VDC WARNING LIGHT AND VDC INDICATOR LIGHT DO NOT GO OFF, Warning Light Illumination Pattern.> <Ref. to VDC(diag)-31, VDC OFF INDICATOR LIGHT DOES NOT GO OFF, Warning Light Illumination Pattern.>

GETtheMANUALS.org

Step		Check	Yes	No
4	**CHECK INFORMATION STORED IN FREEZE FRAME DATA.** Using the Subaru Select Monitor, check the freeze frame data of VDC control module.	Are freeze frame data recorded?	Record the freeze frame data. Go to step **5**.	Go to step **5**.
5	**PERFORM DIAGNOSIS.** 1) Refer to “List of Diagnostic Trouble Code (DTC)”. NOTE: For the DTC list, refer to “List of Diagnostic Trouble Code (DTC)”. <Ref. to VDC(diag)-35, LIST, List of Diagnostic Trouble Code (DTC).> 2) Correct the cause of trouble. 3) Perform the Clear Memory Mode. <Ref. to VDC(diag)-25, OPERATION, Clear Memory Mode.> 4) Perform the Inspection Mode. <Ref. to VDC(diag)-24, PROCEDURE, Inspection Mode.> 5) Read the DTC. <Ref. to VDC(diag)-23, OPERATION, Read Diagnostic Trouble Code (DTC).>	Is DTC displayed?	Repeat step 5 until DTC is not shown.	Finish the diagnosis.

GETtheMANUALS.org

2. Check List for Interview

A: CHECK

Check the following item about the vehicle's state.

1. STATE OF ABS WARNING LIGHT

ABS warning light comes on.	❑ Always ❑ Sometimes ❑ Only once ❑ Does not illuminate • When/How long does it illuminate?		
Ignition key position	❑ LOCK ❑ ACC ❑ ON (Before starting engine) ❑ START ❑ ON (After starting engine, engine is running) ❑ ON (After starting engine, engine is at a standstill)		
Timing	❑ Immediately after turning the ignition switch to ON ❑ Immediately after turning the ignition switch to START		
	❑ When accelerating	—	km/h
		—	MPH
	❑ While driving at a constant speed	km/h	MPH
	❑ While decelerating	—	km/h
		—	MPH
	❑ When turning to the right	Steering angle:	deg
		Steering time:	Sec.
	❑ When turning to the left	Steering angle:	deg
		Steering time:	Sec.
	❑ When operating other electrical parts		
	• Part name: • Operating condition:		

GETtheMANUALS.org

2. STATE OF VDC WARNING LIGHT & VDC INDICATOR LIGHT

VDC warning light & VDC indicator light illuminates.	❑ Always ❑ Sometimes ❑ Only once ❑ Does not illuminate • When/How long does it illuminate?		
Ignition key position	❑ LOCK ❑ ACC ❑ ON (Before starting engine) ❑ START ❑ ON (After starting engine, engine is running) ❑ ON (After starting engine, engine is at a standstill)		
Timing	❑ Immediately after turning the ignition switch to ON ❑ Immediately after turning the ignition switch to START		
	❑ When accelerating	—	km/h
		—	MPH
	❑ While driving at a constant speed	km/h	MPH
	❑ While decelerating	—	km/h
		—	MPH
	❑ When turning to the right	Steering angle:	deg
		Steering time:	Sec.
	❑ When turning to the left	Steering angle:	deg
		Steering time:	Sec.
	❑ When operating other electrical parts		
	• Part name: • Operating condition:		

3. STATE OF VDC OFF INDICATOR LIGHT

VDC OFF indicator light comes on.	❑ Always ❑ Sometimes ❑ Only once ❑ Does not illuminate • When/How long does it illuminate?		
Ignition key position	❑ LOCK ❑ ACC ❑ ON (Before starting engine) ❑ START ❑ ON (After starting engine, engine is running) ❑ ON (After starting engine, engine is at a standstill)		
Timing	❑ Immediately after turning the ignition switch to ON ❑ Immediately after turning the ignition switch to START		
	❑ When accelerating	—	km/h
		—	MPH
	❑ While driving at a constant speed	km/h	MPH
	❑ While decelerating	—	km/h
		—	MPH
	❑ When turning to the right	Steering angle:	deg
		Steering time:	Sec.
	❑ When turning to the left	Steering angle:	deg
		Steering time:	Sec.
	❑ When operating other electrical parts		
	• Part name: • Operating condition:		

GETtheMANUALS.org

4. CONDITIONS UNDER WHICH TROUBLE OCCURS

Environment	a) Weather	❑ Fine ❑ Cloudy ❑ Rainy ❑ Snowy ❑ Others:
	b) Ambient temperature	°C (°F)
	c) Road	❑ Inner city ❑ Suburbs ❑ Highway ❑ Local street ❑ Uphill ❑ Downhill ❑ Paved road ❑ Gravel road ❑ Muddy road ❑ Sandy place ❑ Straight road ❑ Sharp curve ❑ Gentle curve ❑ S-curve ❑ Road with a slope on both sides ❑ Others:
	d) Road surface	❑ Dry ❑ Wet ❑ Covered with fresh snow ❑ Covered with hardened snow ❑ Frozen slope ❑ Others:

GETtheMANUALS.org

Check List for Interview

Condition	a) Brakes	Deceleration:	G
		❑ continuous / ❑ intermittent	
	b) Accelerator	Acceleration:	G
		❑ continuous / ❑ intermittent	
	c) Vehicle speed	km/h	MPH
		❑ Advancing ❑ When accelerating ❑ While decelerating ❑ At low speed ❑ When turning ❑ Others:	
	d) Tire inflation pressure	Front RH tire:	kPa
		Front LH tire:	kPa
		Rear RH tire:	kPa
		Rear LH tire:	kPa
	e) Degree of wear	Front RH tire:	mm (in)
		Front LH tire:	mm (in)
		Rear RH tire:	mm (in)
		Rear LH tire:	mm (in)
	f) Steering wheel	❑ Sharp turning ❑ Gentle turning ❑ Straight forward motion ❑ Gentle return ❑ Sharp return	
	g) Tire/Wheel size	❑ Specified size ❑ Except specification ( )	
	h) Tire variation	❑ Summer tire ❑ Studless tire (Brand:)	
	i) Tire chain is attached: ❑ Yes / ❑ No		
	j) Using T-type tires: ❑ Yes / ❑ No		
	k) Condition of suspension alignment:		
	l) Load condition:		
	m) Repaired parts are used: ❑ Yes / ❑ No		
	• Content:		
	n) Others:		

GETthemANUALS.org

3. General Description

A: CAUTION

1. SUPPLEMENTAL RESTRAINT SYSTEM "AIRBAG"

Airbag system wiring harness is routed near the ABS wheel speed sensor and VDCCM&H/U.

CAUTION:
- **Do not use electrical test devices on airbag system wiring harnesses or connector circuits.**
- **Be careful not to damage the airbag system wiring harness when servicing the ABS wheel speed sensor and VDCCM&H/U.**

B: INSPECTION

Before performing diagnosis, check the following items which might affect VDC problems.

1. BATTERY

Measure the battery voltage and check electrolyte.

Standard voltage:
12 V or more

Specific gravity:
1.260 or more

2. GROUND

Check the tightening torque of ground (GV) bolt for VDC.

Tightening torque:
13 N·m (1.3 kgf-m, 9.6 ft-lb)

3. BRAKE FLUID

1) Check the brake fluid level.
2) Check the brake fluid for leaks.

4. HYDRAULIC UNIT

Check the hydraulic unit.
- With brake tester <Ref. to VDC-12, CHECKING THE HYDRAULIC UNIT ABS OPERATION WITH THE BRAKE TESTER, INSPECTION, VDC Control Module and Hydraulic Control Unit (VDC-CM&H/U).>
- Without brake tester <Ref. to VDC-12, CHECKING THE HYDRAULIC UNIT ABS OPERATION BY PRESSURE GAUGE, INSPECTION, VDC Control Module and Hydraulic Control Unit (VDC-CM&H/U).>

5. BRAKE DRAG

Check for brake drag.

6. BRAKE PAD AND ROTOR

Check the brake pad and rotor.
- Front <Ref. to BR-17, INSPECTION, Front Brake Pad.> <Ref. to BR-19, INSPECTION, Front Disc Rotor.>
- Rear <Ref. to BR-31, INSPECTION, Rear Brake Pad.> <Ref. to BR-34, INSPECTION, Rear Disc Rotor.>

7. TIRE

Check the tire specifications, tire wear and air pressure. <Ref. to WT-2, SPECIFICATION, General Description.>

GETtheMANUALS.org

C: PREPARATION TOOL

1. SPECIAL TOOL

ILLUSTRATION	TOOL NUMBER	DESCRIPTION	REMARKS
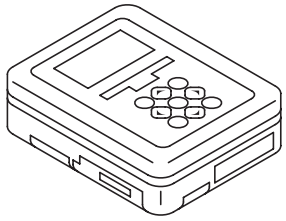 ST1B022XU0	1B022XU0	SUBARU SELECT MONITOR III KIT	Used for troubleshooting the electrical system.

2. GENERAL TOOL

TOOL NAME	REMARKS
Circuit tester	Used for measuring resistance, voltage and current.
Oscilloscope	Used for measuring the sensor.

GETtheMANUALS.org

4. Electrical Component Location

A: LOCATION

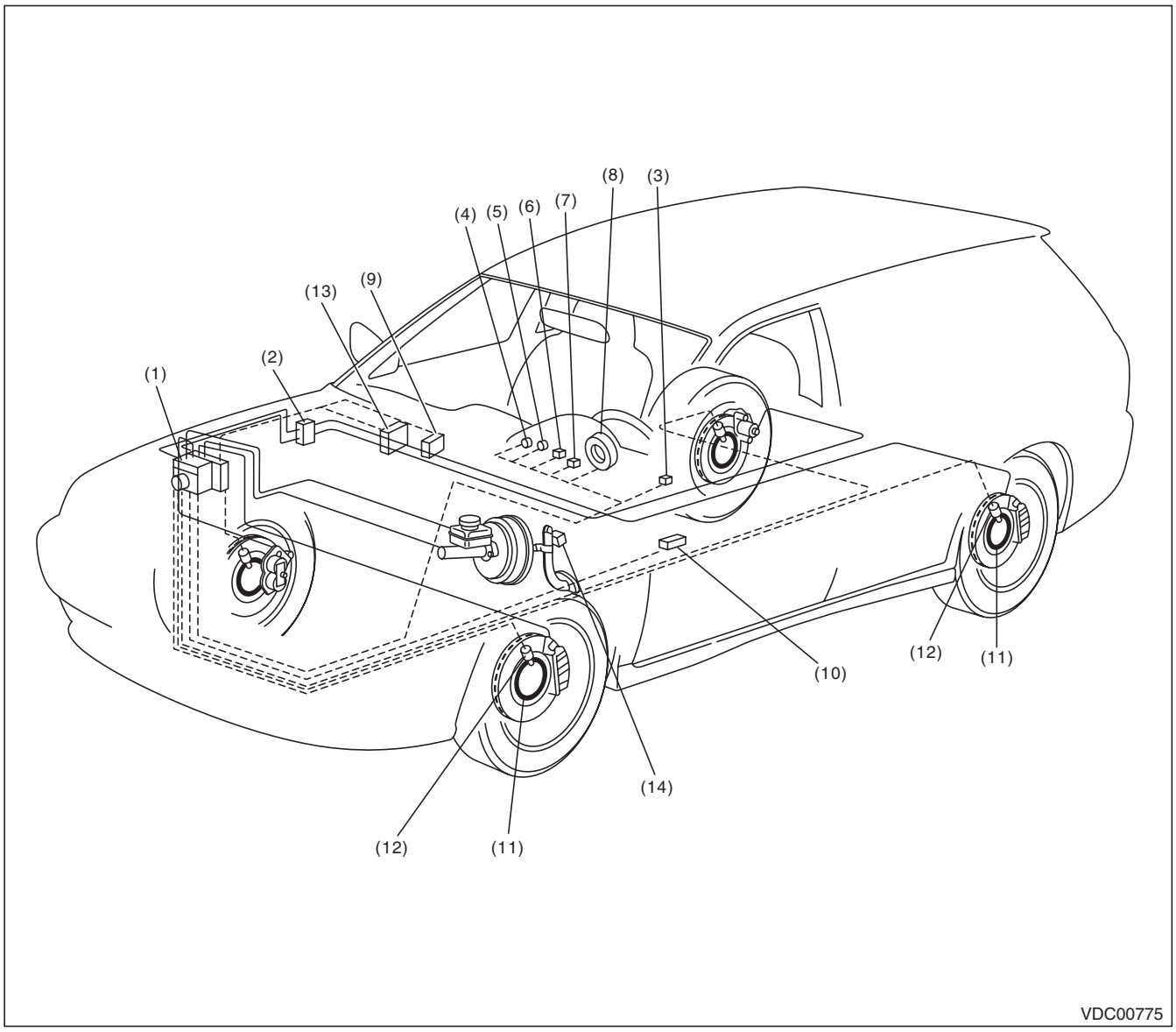

(1)	VDC control module & hydraulic control unit (VDCCM&H/U)	(6)	VDC warning light & VDC indicator light	(11)	Magnetic encoder
(2)	Connector	(7)	VDC OFF indicator light	(12)	ABS wheel speed sensor
(3)	VDC OFF switch	(8)	Steering angle sensor	(13)	Engine control module (ECM)
(4)	ABS warning light	(9)	Transmission control module (TCM)	(14)	Stop light & brake switch
(5)	Brake warning light (EBD warning light)	(10)	Data link connector		

GETtheMANUALS.org

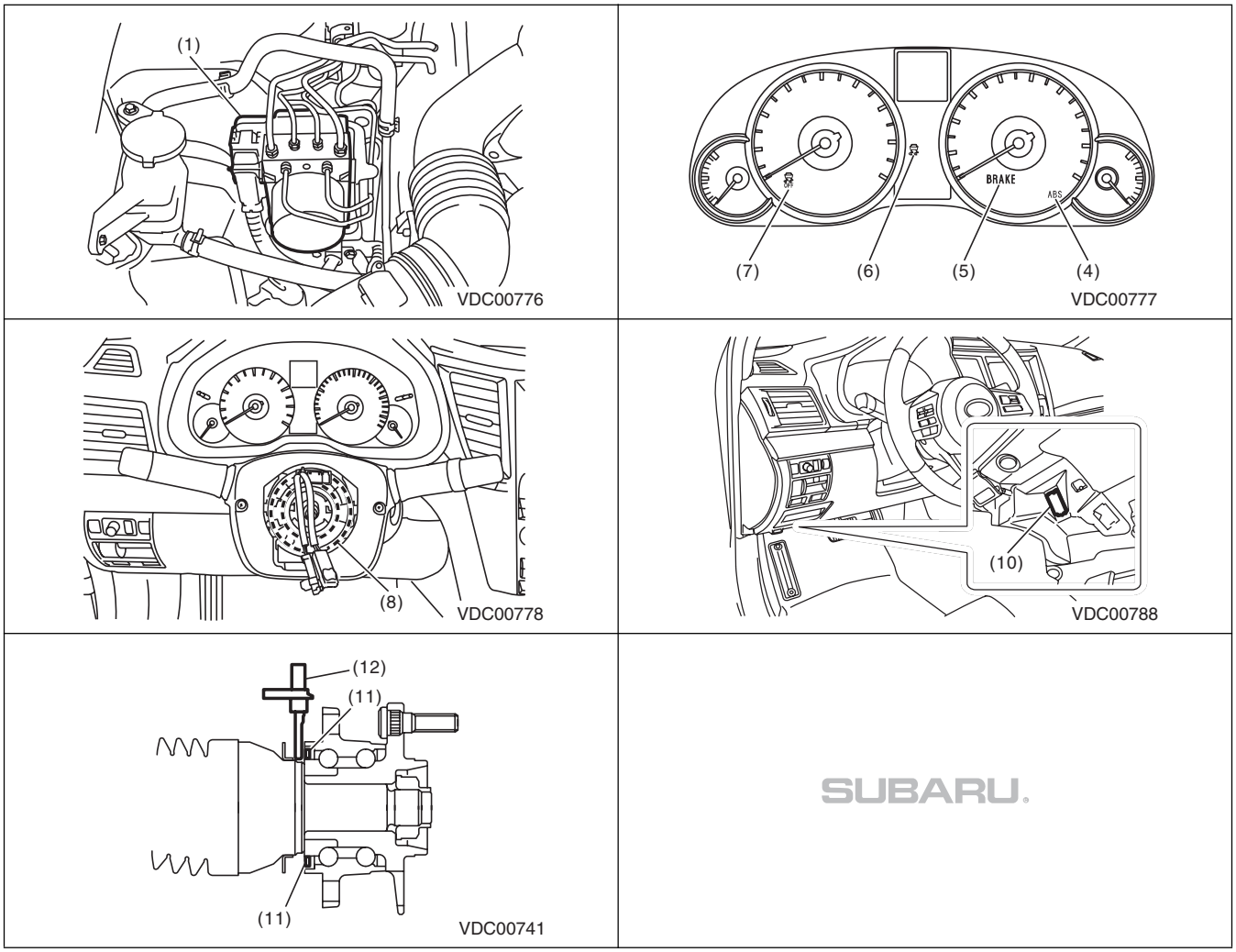

GETtheMANUALS.org

5. Control Module I/O Signal

A: ELECTRICAL SPECIFICATION

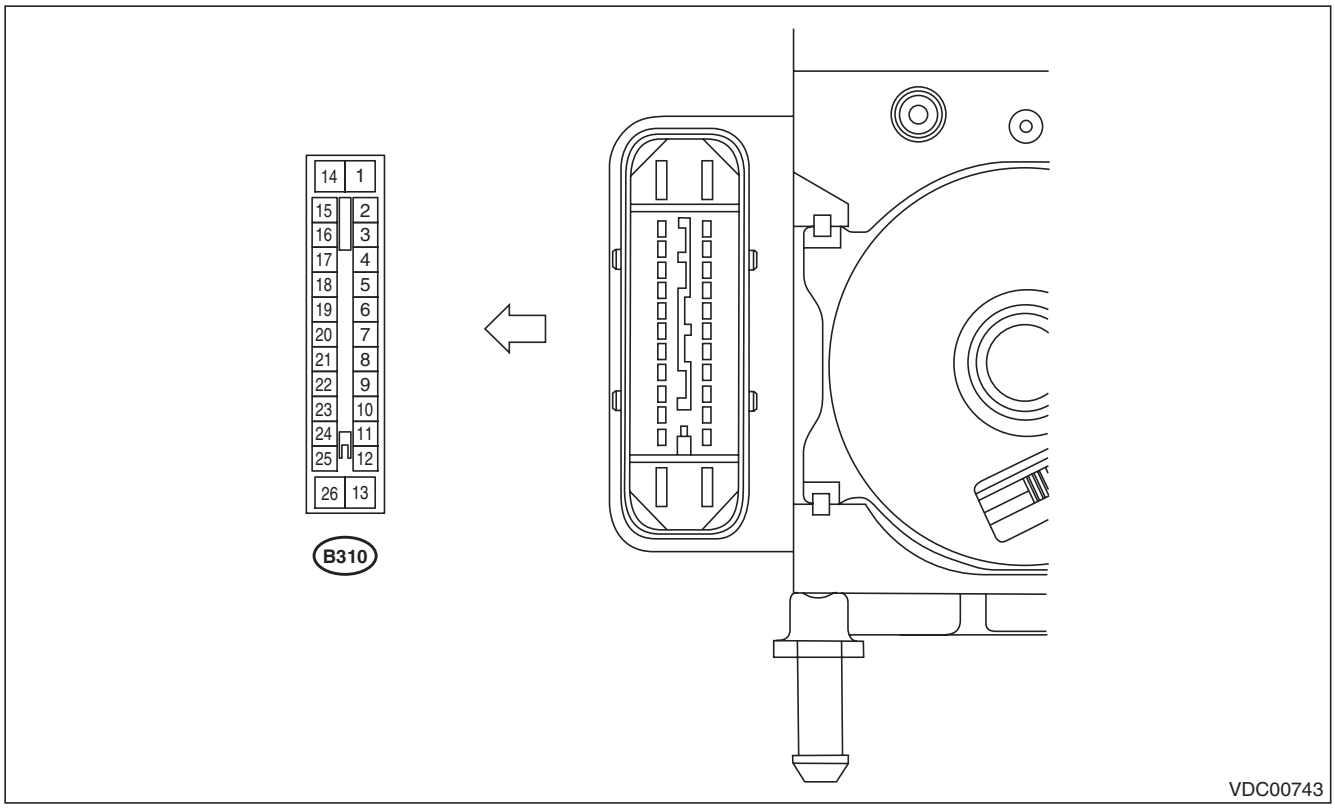

NOTE:
- Terminal numbers in VDCCM&H/U connector are shown in the figure.
- When the connector is removed from VDCCM&H/U, the brake warning light (EBD warning light), ABS warning light, and VDC warning light & VDC indicator light illuminate.

GETtheMANUALS.org

Control Module I/O Signal

Content			Terminal No. (+) — (–)	Input/Output signal Measured value and measuring conditions
Power supply			7 — 13	10 — 15 V when the ignition switch is ON.
ABS wheel speed sensor	Front LH wheel	Power supply	22 — 13	0 — 18 V
		Signal	21	7 — 14 mA: Rectangle waveform
	Front RH wheel	Power supply	18 — 13	0 — 18 V
		Signal	19	7 — 14 mA: Rectangle waveform
	Rear LH wheel	Power supply	16 — 13	0 — 18 V
		Signal	15	7 — 14 mA: Rectangle waveform
	Rear RH wheel	Power supply	24 — 13	0 — 18 V
		Signal	25	7 — 14 mA: Rectangle waveform
CAN communication line (L)			8	0.5 — 2.25 V pulse signal
CAN communication line (H)			10	2.75 — 4.5 V pulse signal
Valve relay power supply			14 — 13	10 — 15 V when the ignition switch is ON.
Motor relay power supply			1 — 13	10 — 15 V when the ignition switch is ON.
Stop light switch			3 — 13	1.5 V or less when the stop light is OFF; otherwise, 10 — 15 V when the stop light is ON.
Subaru Select Monitor			5 — 13	0 ←→ 12 V pulse (in communication)
Vehicle speed output signal			11	0 ←→ 12 V pulse
VDC OFF switch			9 — 13	0.5 Ω or less when the OFF switch is ON; 1 MΩ or more when the switch is OFF.
Clutch stroke sensor power supply			2 — 13	4.8 — 5.2 V
Clutch stroke sensor ground			23	—
Ground			13	—

GETtheMANUALS.org

B: WIRING DIAGRAM

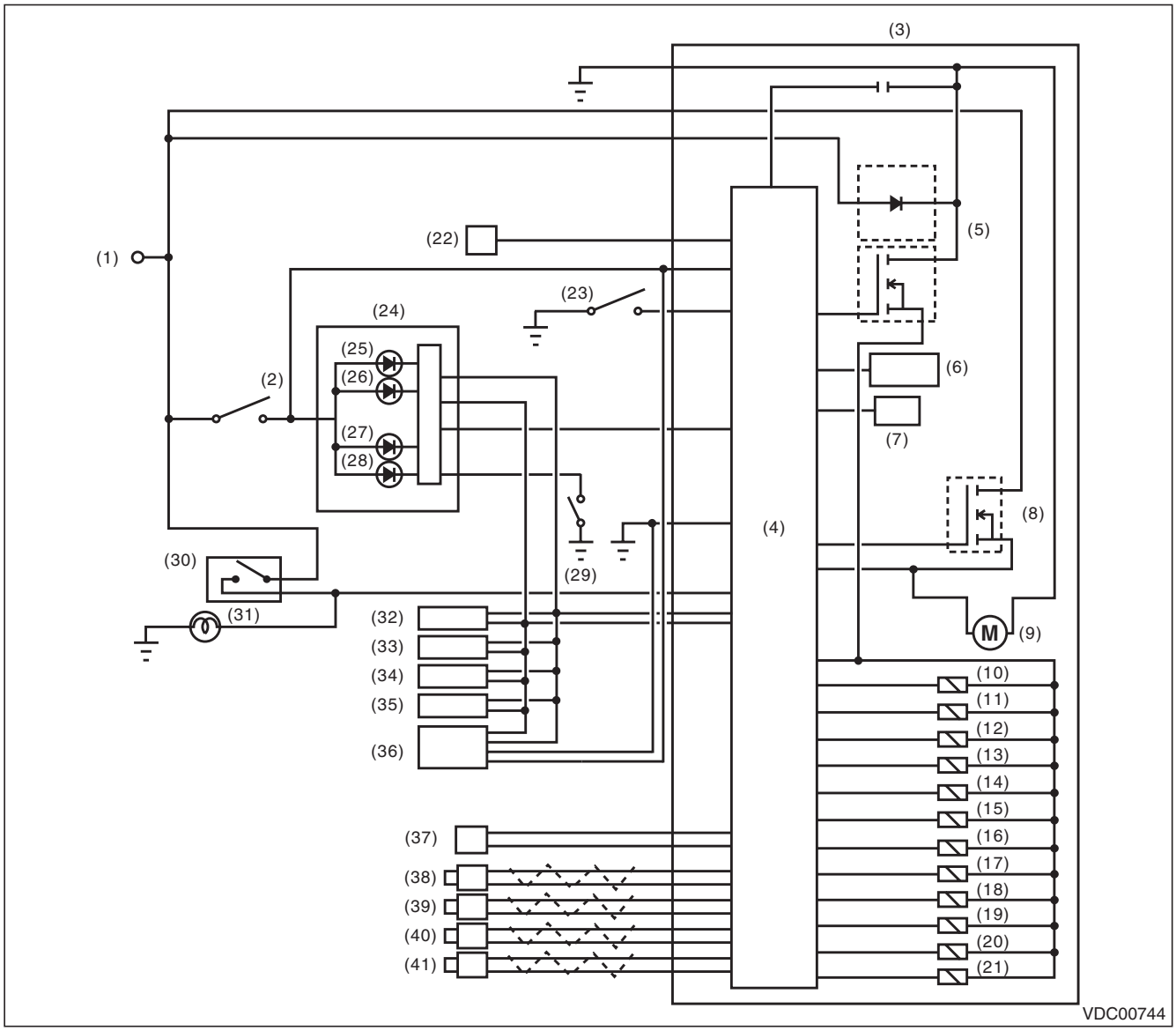

GETtheMANUALS.org

Control Module I/O Signal

(1) Battery
(2) Ignition switch
(3) VDC control module & hydraulic control unit (VDCCM&H/U)
(4) VDC control module
(5) Valve relay
(6) Pressure sensor
(7) Yaw rate & G sensor
(8) Motor relay
(9) Motor
(10) Front inlet solenoid valve LH
(11) Front outlet solenoid valve LH
(12) Front inlet solenoid valve RH
(13) Front outlet solenoid valve RH
(14) Rear inlet solenoid valve LH
(15) Rear outlet solenoid valve LH
(16) Rear inlet solenoid valve RH
(17) Rear outlet solenoid valve RH
(18) Primary cut solenoid valve
(19) Primary suction solenoid valve
(20) Secondary cut solenoid valve
(21) Secondary suction solenoid valve
(22) Data link connector
(23) VDC OFF switch
(24) Combination meter
(25) VDC OFF indicator light
(26) VDC warning light & VDC indicator light
(27) ABS warning light
(28) Brake warning light (EBD warning light)
(29) Brake fluid level switch
(30) Stop light switch
(31) Stop light
(32) Body integrated unit
(33) Engine control module (ECM)
(34) Transmission control module (TCM)
(35) Parking brake control module
(36) Steering angle sensor
(37) Clutch stroke sensor (MT model only)
(38) Front ABS wheel speed sensor LH
(39) Front ABS wheel speed sensor RH
(40) Rear ABS wheel speed sensor LH
(41) Rear ABS wheel speed sensor RH

GETtheMANUALS.org

6. Subaru Select Monitor

A: OPERATION

1. HOW TO USE SUBARU SELECT MONITOR

NOTE:
- For detailed operation procedures, refer to “PC application help for Subaru Select Monitor”.
- If VDC and Subaru Select Monitor cannot communicate, check the communication circuit. <Ref. to VDC(diag)-20, COMMUNICATION FOR INITIALIZING IMPOSSIBLE, INSPECTION, Subaru Select Monitor.>

GETtheMANUALS.org

2. READ CURRENT DATA

NOTE:
- For detailed operation procedures, refer to “PC application help for Subaru Select Monitor”.
- A list of the support data is shown in the following table.

Display	Contents to be displayed	Unit of measure
FR Wheel Speed	Wheel speed detected by front ABS wheel speed sensor RH is displayed.	km/h or MPH
FL Wheel Speed	Wheel speed detected by front ABS wheel speed sensor LH is displayed.	km/h or MPH
RR Wheel Speed	Wheel speed detected by rear ABS wheel speed sensor RH is displayed.	km/h or MPH
RL Wheel Speed	Wheel speed detected by rear ABS wheel speed sensor LH is displayed.	km/h or MPH
Steering Angle Sensor Op	Steering angle detected by steering angle sensor is displayed.	deg
Yaw Rate Sensor Output	Vehicle angular speed detected by yaw rate sensor is displayed.	deg/s
Longitudinal G sensor output	Vehicle longitudinal acceleration detected by longitudinal G sensor is displayed.	m/s^2
Lateral G sensor Output	Vehicle lateral acceleration detected by lateral G sensor is displayed.	m/s^2
IG power supply voltage	Voltage supplied to VDCCM&H/U is displayed.	V
M. Relay monitor Voltage	Voltage applied to the motor relay is displayed.	V
Motor Relay Signal	Motor relay operation signal is displayed.	ON or OFF
Valve Relay Signal	Valve relay operation signal is displayed.	ON or OFF
EBD Warning Light	ON operation of the EBD warning light is displayed.	ON or OFF
ABS Warning Light	ON operation of the ABS warning light is displayed.	ON or OFF
VDC Warning Light	ON operation of the VDC warning light is displayed.	ON or OFF
EBD Control Flag	EBD operation condition is displayed.	ON or OFF
ABS Control Flag	ABS operation condition is displayed.	ON or OFF
TCS Control Flag	TCS operation condition is displayed.	ON or OFF
VDC Control Flag	VDC operation condition is displayed.	ON or OFF
E/G Control Stop Flag	Engine control command signal is displayed.	1 or 0
OFF Lamp	ON/OFF condition of VDC OFF indicator light is displayed.	ON or OFF
OFF SW Signal	Operation condition of VDC OFF switch is displayed.	ON or OFF
Brake Switch	Brake ON/OFF is displayed.	ON or OFF
Master Cylinder Pressure Sensor	Master cylinder brake fluid pressure detected by pressure sensor is displayed.	bar
FL Wheel Cylinder Pressure Sensor	0 bar is always displayed.	bar
FR Wheel Cylinder Pressure Sensor	0 bar is always displayed.	bar

GETtheMANUALS.org

3. FUNCTION CHECK

Display	Contents of display	Index No.
ABS Sequence Control Mode	Operate the valve and pump motor continuously to perform the ABS sequence control.	<Ref. to VDC-17, ABS Sequence Control.>
VDC Check Mode	Operate the valve and pump motor continuously to perform the VDC sequence control.	<Ref. to VDC-20, VDC Sequence Control.>
Set up mode for Neutral of Steering Angle Sensor & Lateral G Sensor 0 point	Set the steering angle sensor neutral position and the lateral G sensor “0” point.	<Ref. to VDC-16, SET UP MODE FOR NEUTRAL OF STEERING ANGLE SENSOR & LATERAL G SENSOR 0 POINT, ADJUSTMENT, VDC Control Module and Hydraulic Control Unit (VDCCM&H/U).>
Longitudinal G sensor & lateral G sensor 0 point setting mode	Set “0” point of the longitudinal G sensor and the lateral G sensor.	<Ref. to VDC-16, LONGITUDINAL G SENSOR & LATERAL G SENSOR 0 POINT SETTING MODE, ADJUSTMENT, VDC Control Module and Hydraulic Control Unit (VDCCM&H/U).>

4. FREEZE FRAME DATA

NOTE:
- Data stored at the time of trouble occurrence is shown on display.
- Each time a trouble occurs, the latest information is stored in the freeze frame data in memory.
- If a freeze frame data is not properly stored in memory (due to a drop in VDCCM power supply, etc.), a DTC suffixed with a question mark “?” appears on the Subaru Select Monitor display. This shows it may be an unreliable reading.

Display	Contents to be displayed
FR Wheel Speed	Wheel speed detected by front ABS wheel speed sensor RH is displayed in km/h or MPH.
FL Wheel Speed	Wheel speed detected by front ABS wheel speed sensor LH is displayed in km/h or MPH.
RR Wheel Speed	Wheel speed detected by rear ABS wheel speed sensor RH is displayed in km/h or MPH.
RL Wheel Speed	Wheel speed detected by rear ABS wheel speed sensor LH is displayed in km/h or MPH.
Vehicle Speed	Vehicle speed calculated by VDC control module is displayed.
Steering Angle Sensor Op	Steering angle detected by steering angle sensor is displayed.
Yaw Rate Sensor Output	Vehicle angular speed detected by yaw rate sensor is displayed.
Longitudinal G sensor output	Vehicle longitudinal acceleration detected by longitudinal G sensor is displayed.
Lateral G sensor Output	Vehicle lateral acceleration detected by lateral G sensor is displayed.
IG power supply voltage	Voltage supplied to VDC control module is displayed.
Accel. Opening Angle	Acceleration opening is displayed.
Engine Speed	Engine speed on malfunction occurrence is displayed.
Steering angle flag	Whether the absolute angle of the steering angle sensor was determined is displayed.

Display	Contents to be displayed
EBD Control Flag	EBD control condition is displayed.
ABS Control Flag	ABS control condition is displayed.
TCS Control Flag	TCS control condition is displayed.
VDC Control Flag	VDC control condition is displayed.
E/G Control Stop Flag	Engine control command signal is displayed.
OFF Switch Detection	ON/OFF condition of the VDC operated by the driver is displayed.
Brake Switch	Brake ON/OFF is displayed.
Master Cylinder Pressure Sensor	Master cylinder brake fluid pressure detected by pressure sensor is displayed.
FL Wheel Cylinder Pressure Sensor	0 bar is always displayed.
FR Wheel Cylinder Pressure Sensor	0 bar is always displayed.

GETtheMANUALS.org

5. PARAMETER SELECTION

CAUTION:
- **Subaru Select Monitor is required for parameter selection.**
- **This function can be used for the replacement part of VDCCM&H/U.**

NOTE:
- When the VDCCM&H/U is replaced with a replacement part, be sure to perform the parameter selection/registration to the VDCCM&H/U using this function.
- To confirm the applied model, refer to the “model number plate” attached on the vehicle. <Ref. to ID-2, IDENTIFICATION, Identification.>
- When the applied model is entered wrong, re-entry is possible.
- When the registration has not been performed, the DTC code “Parameter selection error” is detected together with the ABS/EBD/VDC warning light illumination.

1) Connect the Subaru Select Monitor.
2) On «Main Menu» display, select {Each System Check}.
3) On «System Selection Menu» display, select {Brake Control System}.
4) When {VDC} is displayed, select the [OK] button.
5) On «Brake Control Diagnosis» display, select {Select Parameter}.
6) Check the applied model and option code indicated in the “Model number plate”. <Ref. to ID-2, IDENTIFICATION, Identification.>
7) Enter the applied model of 7-digit alphanumeric characters and press the [Enter] key.
8) When the option code input screen appears after entering the applied model, enter the option code consisting of 4-digit alphanumeric characters, and press the [Enter] key When the option code is 3 digits, add “0” in front and enter the code as 4 digits.
9) When the confirmation screen indicating the vehicle information appears, check that the correct applied model and grade are displayed and click the [OK] button.

NOTE:
When the displayed applied model and grade are different from those of the vehicle, perform registration operations again after clicking the [OK] button.

10) Execute the Clear Memory Mode after parameter selection and registration operations because the DTC for “Parameter selection error” is memorized. <Ref. to VDC(diag)-25, Clear Memory Mode.>

6. PARAMETER CHECK

NOTE:
The parameter data registered in the VDCCM is shown on the display.

1) Connect the Subaru Select Monitor.
2) On the «Main Menu» display, select the {Each System Check}.
3) On the «System Selection Menu» display, select the {Brake Control System}.
4) Click the [OK] button after the {VDC} is displayed.
5) On the «Brake Control Diagnosis» display, select the {Confirm on parameter}.
6) On the {Confirm on parameter} display screen, check that the applied model and grade of the target vehicle are included, and click the [OK] button.
7) If the applied model and grade of the target vehicle are not included on the {Confirm on parameter} display screen, perform parameter selection and registration. <Ref. to VDC(diag)-19, PARAMETER SELECTION, OPERATION, Subaru Select Monitor.>

GETtheMANUALS.org

B: INSPECTION

1. COMMUNICATION FOR INITIALIZING IMPOSSIBLE

DETECTING CONDITION:
Defective harness connector
TROUBLE SYMPTOM:
Communication is impossible between VDC and Subaru Select Monitor.
WIRING DIAGRAM:

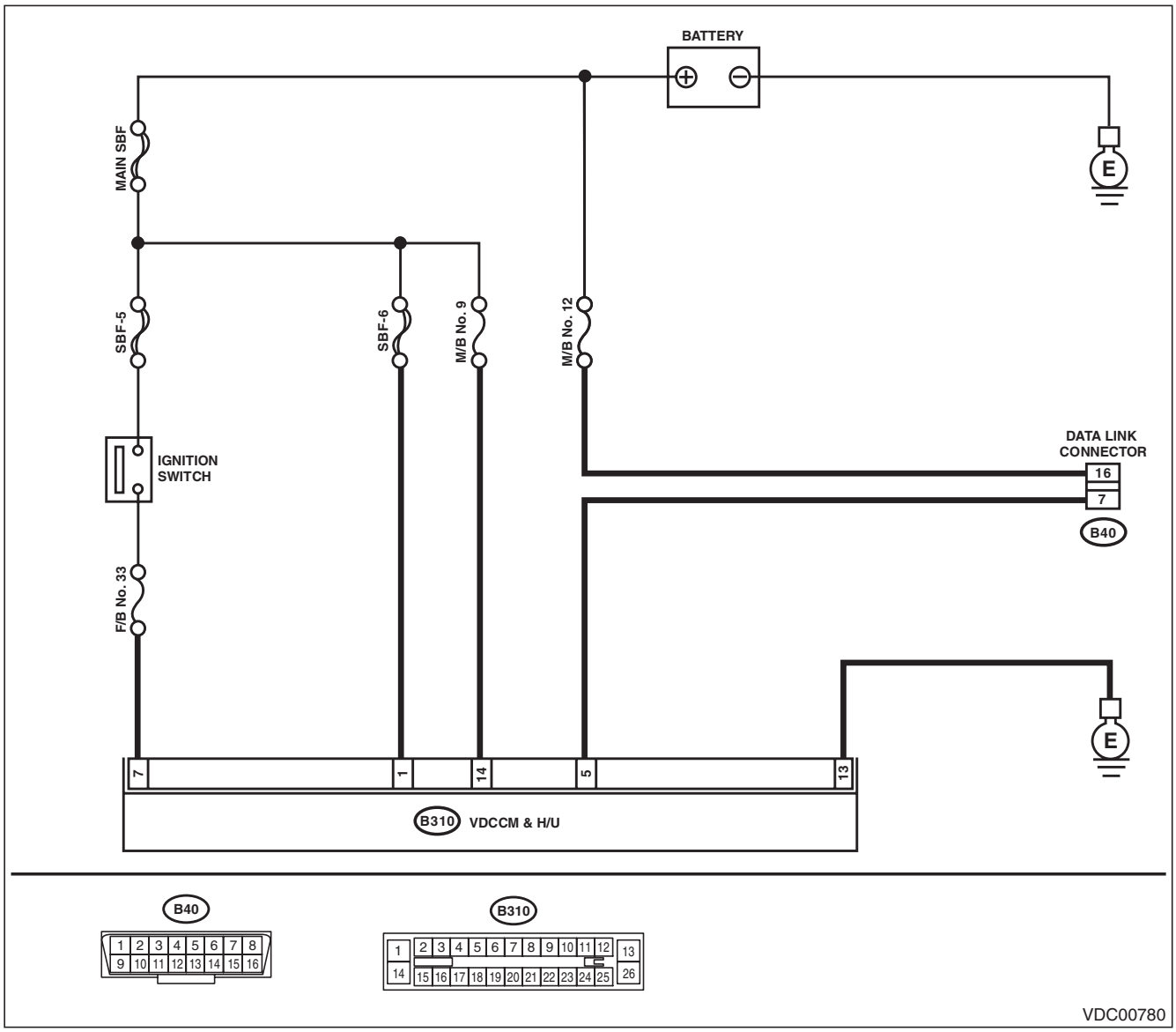

Step		Check	Yes	No
1	**CHECK IGNITION SWITCH.**	Is the ignition switch ON?	Go to step **2**.	Turn the ignition switch to ON, and select VDC mode using Subaru Select Monitor.
2	**CHECK BATTERY.** 1) Turn the ignition switch to OFF. 2) Measure the battery voltage.	Is the voltage 11 V or more?	Go to step **3**.	Charge or replace the battery.

GETtheMANUALS.org

Step		Check	Yes	No
3	**CHECK BATTERY TERMINAL.**	Is there poor contact at battery terminal?	Repair or tighten the battery terminal.	Go to step **4**.
4	**CHECK SUBARU SELECT MONITOR COMMUNICATION.** 1) Turn the ignition switch to ON. 2) Using the Subaru Select Monitor, check whether communication to other systems can be executed normally.	Is the system name displayed on Subaru Select Monitor?	Go to step **8**.	Go to step **5**.
5	**CHECK SUBARU SELECT MONITOR COMMUNICATION.** 1) Turn the ignition switch to OFF. 2) Disconnect the VDCCM&H/U connector. 3) Turn the ignition switch to ON. 4) Check whether communication to other systems can be executed normally.	Is the system name displayed on Subaru Select Monitor?	Replace the VDCCM&H/U. <Ref. to VDC-9, VDC Control Module and Hydraulic Control Unit (VDCCM&H/U).>	Go to step **6**.
6	**CHECK HARNESS CONNECTOR BETWEEN EACH CONTROL MODULE AND DATA LINK CONNECTOR.** 1) Turn the ignition switch to OFF. 2) Disconnect the connectors from the ECM, TCM, airbag CM, TPMS & keyless entry CM, and impact sensor. **CAUTION:** **When disconnecting the connector from airbag CM, always follow the precautions on AB section. <Ref. to AB-9, CAUTION, General Description.>** 3) Measure the resistance between data link connector and chassis ground. ***Connector & terminal*** ***(B40) No. 7 — Chassis ground:***	Is the resistance 1 MΩ or more?	Go to step **7**.	Repair the harness and connector between each control module and data link connector.
7	**CHECK HARNESS CONNECTOR BETWEEN VDCCM&H/U AND DATA LINK CONNECTOR.** 1) Turn the ignition switch to ON. 2) Measure the voltage between data link connector and chassis ground. ***Connector & terminal*** ***(B40) No. 7 (+) — Chassis ground (–):***	Is the voltage less than 1 V?	Go to step **8**.	Repair the harness and connector between each control module and data link connector.
8	**CHECK HARNESS CONNECTOR BETWEEN VDCCM&H/U AND DATA LINK CONNECTOR.** Measure the resistance between VDCCM&H/U connector and data link connector. ***Connector & terminal*** ***(B310) No. 5 — (B40) No. 7:***	Is the resistance less than 1 Ω?	Go to step **9**.	Repair harness and connector between VDCCM&H/U and data link connector.
9	**CHECK INSTALLATION OF VDCCM&H/U CONNECTOR.** Turn the ignition switch to OFF.	Is the VDCCM&H/U connector inserted into VDCCM&H/U until the clamp locks onto it?	Go to step **10**.	Insert VDCCM&H/U connector into VDCCM&H/U.
10	**CHECK POWER SUPPLY CIRCUIT.** 1) Turn the ignition switch to ON. (engine OFF) 2) Measure the ignition power supply voltage between VDCCM&H/U connector and chassis ground. ***Connector & terminal*** ***(B310) No. 7 (+) — Chassis ground (–):*** ***(B310) No. 14 (+) — Chassis ground (–):*** ***(B310) No. 1 (+) — Chassis ground (–):***	Is the voltage 10 — 15 V?	Go to step **11**.	Repair open circuit in harness between VDCCM&H/U and battery.

GETtheMANUALS.org

Step		Check	Yes	No
11	**CHECK HARNESS CONNECTOR BETWEEN VDCCM&H/U AND CHASSIS GROUND.** 1) Turn the ignition switch to OFF. 2) Disconnect the connector from the VDCCM&H/U. 3) Measure the resistance of harness between VDCCM&H/U connector and chassis ground. ***Connector & terminal*** ***(B310) No. 13 — Chassis ground:***	Is the resistance less than 10 Ω?	Go to step **12**.	Repair the open circuit of VDCCM&H/U ground harness and poor contact of connector.
12	**CHECK POOR CONTACT OF CONNECTOR.**	Is there poor contact of control module power supply, ground circuit and data link connector?	Repair the connector.	Replace the VDCCM&H/U. <Ref. to VDC-9, VDC Control Module and Hydraulic Control Unit (VDCCM&H/U).>

GETtheMANUALS.org

7. Read Diagnostic Trouble Code (DTC)

A: OPERATION

NOTE:
- For detailed operation procedures, refer to “PC application help for Subaru Select Monitor”.
- For details concerning DTCs, refer to “List of Diagnostic Trouble Code (DTC)”. <Ref. to VDC(diag)-35, List of Diagnostic Trouble Code (DTC).>
- Up to 3 DTCs are displayed in the order of detection.
- If a particular DTC is not stored in memory properly at the occurrence of problem (due to a drop in VDCCM&H/U power supply etc.), the DTC suffixed with a question mark “?” is displayed on Subaru Select Monitor display screen. This shows it may be an unreliable reading.

Display	Contents to be displayed
(Current)	The current DTC is displayed on Subaru Select Monitor display screen.
(Old)	The latest DTC from the history of previous problems is displayed on Subaru Select Monitor display screen.
(Older)	The second latest DTC from the history of previous problems is displayed on the Subaru Select Monitor display screen.
(Before 3)	The third latest DTC from the history of previous problems is displayed on Subaru Select Monitor display screen.

GETtheMANUALS.org

8. Inspection Mode

A: PROCEDURE

Reproduce the malfunction occurrence condition as much as possible.
Drive the vehicle at least ten minutes.

NOTE:
Make sure the vehicle is not dragged to one side under usual driving condition.

GETtheMANUALS.org

9. Clear Memory Mode

A: OPERATION

NOTE:
For detailed operation procedures, refer to “PC application help for Subaru Select Monitor”.

GETtheMANUALS.org

10. Warning Light Illumination Pattern

A: INSPECTION

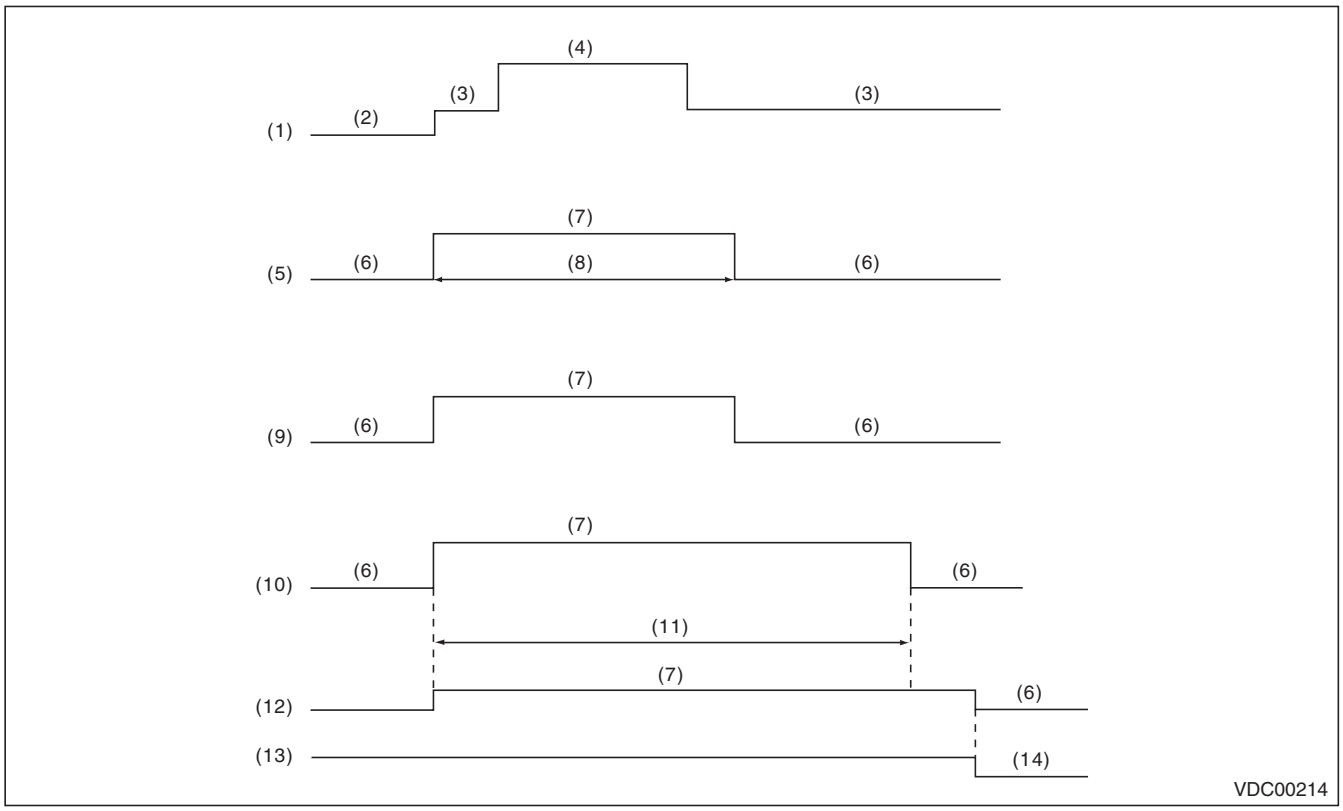

(1)	Ignition switch	(6)	Light OFF	(11)	Several seconds (depending on engine coolant temperature)
(2)	OFF	(7)	Light ON	(12)	Brake warning light (EBD warning light)
(3)	ON	(8)	2 sec.	(13)	Parking brake
(4)	Engine start	(9)	VDC OFF indicator light	(14)	Released
(5)	ABS warning light	(10)	VDC warning light & VDC indicator light		

GETtheMANUALS.org

1) When warning lights or indicator lights do not illuminate in accordance with this illumination pattern, there must be an electrical malfunction.
2) When warning lights or indicator lights remain constantly OFF, check the combination meter circuit or CAN communication circuit. <Ref. to VDC(diag)-28, ABS WARNING LIGHT, VDC OFF INDICATOR LIGHT, VDC WARNING LIGHT AND VDC INDICATOR LIGHT DO NOT COME ON, Warning Light Illumination Pattern.>
3) When the ABS warning light, VDC OFF indicator light, and VDC warning light & VDC indicator light do not go off, check the combination meter circuit or CAN communication circuit. <Ref. to VDC(diag)-29, ABS WARNING LIGHT DOES NOT GO OFF, Warning Light Illumination Pattern.> <Ref. to VDC(diag)-31, VDC OFF INDICATOR LIGHT DOES NOT GO OFF, Warning Light Illumination Pattern.> <Ref. to VDC(diag)-30, VDC WARNING LIGHT AND VDC INDICATOR LIGHT DO NOT GO OFF, Warning Light Illumination Pattern.>
4) When the brake warning light blinks and the hill hold indicator light illumination is faulty, check the parking brake system. <Ref. to PB(diag)-2, Basic Diagnostic Procedure.>

NOTE:
- Even though the ABS warning light, and the VDC warning light & VDC indicator light do not go off in 2 seconds after illuminating, the ABS and VDC functions are normal if the warning lights go off while the vehicle is driven at approximately 12 km/h (7 MPH). However, while these lights are on, the functions with their warning lights illuminated do not operate.
- It may take several minutes before the VDC warning light & VDC indicator light goes off, if the vehicle is parked under low temperature for a specified time. This is not defective because it is resulted from low engine coolant temperature. If DTC is recorded at this time, perform the Clear Memory Mode. <Ref. to VDC(diag)-25, Clear Memory Mode.>
- With the vehicle jack-up/lift-up or set on free rollers, when the wheels lock or spin after starting the engine, ABS warning light, and VDC warning light & VDC indicator light may illuminate because VDC-CM&H/U detects the abnormal conditions from ABS wheel speed sensors. In this case, this is not a malfunction. Perform the Clear Memory Mode. <Ref. to VDC(diag)-25, Clear Memory Mode.>

GETtheMANUALS.org

B: ABS WARNING LIGHT, VDC OFF INDICATOR LIGHT, VDC WARNING LIGHT AND VDC INDICATOR LIGHT DO NOT COME ON

DETECTING CONDITION:
- Defective combination meter
- Defective CAN communication

TROUBLE SYMPTOM:
When the ignition switch is turned to ON (engine OFF), ABS warning light, VDC OFF indicator light, and VDC warning light & VDC indicator light do not illuminate.

NOTE:
When pressing the VDC OFF switch for 10 seconds or more, the VDC OFF indicator light goes off and cannot operate any more. When turning the ignition switch from OFF to ON, the OFF operation enabled status is restored.

Step		Check	Yes	No
1	**CHECK OTHER INDICATOR LIGHT.** Turn the ignition switch to ON.	Does other indicator light illuminate soon after “ON”?	Go to step **2**.	Perform the self-diagnosis of combination meter. <Ref. to IDI-6, SELF-DIAGNOSIS DISPLAY MODE, OPERATION, Combination Meter System.>
2	**CHECK LAN SYSTEM.** Perform the diagnosis for LAN system. <Ref. to LAN(diag)-2, Basic Diagnostic Procedure.>	Is there any fault in LAN system?	Perform the diagnosis according to DTC for LAN system. <Ref. to LAN(diag)-32, List of Diagnostic Trouble Code (DTC).>	Go to step **3**.
3	**CHECK VDCCM.** When the engine does not start, display the current data of VDCCM using Subaru Select Monitor.	Is the «EBD Warning Light» output ON?	Go to step **4**.	Replace the VDCCM&H/U. <Ref. to VDC-9, VDC Control Module and Hydraulic Control Unit (VDCCM&H/U).>
4	**CHECK VDCCM.** When the engine does not start, display the current data of VDCCM using Subaru Select Monitor.	Is the «ABS Warning Light» output ON?	Go to step **5**.	Replace the VDCCM&H/U. <Ref. to VDC-9, VDC Control Module and Hydraulic Control Unit (VDCCM&H/U).>
5	**CHECK VDCCM.** When the engine does not start, display the current data of VDCCM using Subaru Select Monitor.	Is the «VDC Warning Light» output ON?	Go to step **6**.	Replace the VDCCM&H/U. <Ref. to VDC-9, VDC Control Module and Hydraulic Control Unit (VDCCM&H/U).>
6	**CHECK COMBINATION METER.** Check the combination meter. <Ref. to IDI-6, SELF-DIAGNOSIS DISPLAY MODE, OPERATION, Combination Meter System.>	Is combination meter OK?	Replace the VDCCM&H/U. <Ref. to VDC-9, VDC Control Module and Hydraulic Control Unit (VDCCM&H/U).>	Replace the combination meter. <Ref. to IDI-21, REMOVAL, Combination Meter.>

GETtheMANUALS.org

C: ABS WARNING LIGHT DOES NOT GO OFF

DETECTING CONDITION:

- Defective combination meter
- Defective CAN communication

TROUBLE SYMPTOM:

When starting the engine, the ABS warning light is kept ON.

Step		Check	Yes	No
1	**READ DTC.** Read the DTC. <Ref. to VDC(diag)-23, Read Diagnostic Trouble Code (DTC).>	Is DTC displayed?	Perform the diagnosis according to DTC. <Ref. to VDC(diag)-35, List of Diagnostic Trouble Code (DTC).>	Go to step **2**.
2	**CHECK LAN SYSTEM.** Perform the diagnosis for LAN system. <Ref. to LAN(diag)-2, Basic Diagnostic Procedure.>	Is there any fault in LAN system?	Perform the diagnosis according to DTC for LAN system. <Ref. to LAN(diag)-32, List of Diagnostic Trouble Code (DTC).>	Go to step **3**.
3	**CHECK COMBINATION METER.** Check the combination meter. <Ref. to IDI-6, SELF-DIAGNOSIS DISPLAY MODE, OPERATION, Combination Meter System.>	Is combination meter OK?	Replace the VDCCM&H/U. <Ref. to VDC-9, VDC Control Module and Hydraulic Control Unit (VDCCM&H/U).>	Replace the combination meter. <Ref. to IDI-21, REMOVAL, Combination Meter.>

GETtheMANUALS.org

D: VDC WARNING LIGHT AND VDC INDICATOR LIGHT DO NOT GO OFF

DETECTING CONDITION:

- Defective combination meter
- Defective engine
- Defective CAN communication

TROUBLE SYMPTOM:

When starting the engine, the VDC warning light & VDC indicator light remains lit.

	Step	Check	Yes	No
1	**READ DTC.** Read the DTC. <Ref. to VDC(diag)-23, Read Diagnostic Trouble Code (DTC).>	Is DTC displayed?	Perform the diagnosis according to DTC. <Ref. to VDC(diag)-35, List of Diagnostic Trouble Code (DTC).>	Go to step **2**.
2	**CHECK ENGINE.**	Does the malfunction indicator light illuminate?	Repair the engine. <Ref. to EN(H4SO)(diag)-39, Read Diagnostic Trouble Code (DTC).> <Ref. to EN(H4DOTC)(diag)-40, Read Diagnostic Trouble Code (DTC).> <Ref. to EN(H6DO)(diag)-43, Read Diagnostic Trouble Code (DTC).>	Go to step **3**.
3	**CHECK ENGINE COOLANT TEMPERATURE.** Warm up the engine, and check if the VDC warning light & VDC indicator light illumination condition changes.	When the engine coolant temperature is too low, the VDC warning light & VDC indicator light illuminates. Do the lights go off when the engine is warmed up?	Normal If DTC is recorded, clear the memory. <Ref. to VDC(diag)-25, Clear Memory Mode.>	Go to step **4**.
4	**CHECK LAN SYSTEM.** Perform the diagnosis for LAN system. <Ref. to LAN(diag)-2, Basic Diagnostic Procedure.>	Is there any fault in LAN system?	Perform the diagnosis according to DTC for LAN system. <Ref. to LAN(diag)-32, List of Diagnostic Trouble Code (DTC).>	Go to step **5**.
5	**CHECK COMBINATION METER.** Check the combination meter. <Ref. to IDI-6, SELF-DIAGNOSIS DISPLAY MODE, OPERATION, Combination Meter System.>	Is combination meter OK?	Replace the VDCCM&H/U. <Ref. to VDC-9, VDC Control Module and Hydraulic Control Unit (VDCCM&H/U).>	Replace the combination meter. <Ref. to IDI-21, REMOVAL, Combination Meter.>

GETtheMANUALS.org

E: VDC OFF INDICATOR LIGHT DOES NOT GO OFF

DETECTING CONDITION:

- Defective combination meter
- Defective CAN communication
- VDC OFF switch is shorted.

TROUBLE SYMPTOM:

When starting the engine, VDC OFF indicator light is kept ON.

NOTE:
When pressing the VDC OFF switch for 10 seconds or more, the VDC OFF indicator light goes off and cannot operate any more. When turning the ignition switch from OFF to ON, the OFF operation enabled status is restored.

Step		Check	Yes	No
1	**READ DTC.** Read the DTC. <Ref. to VDC(diag)-23, Read Diagnostic Trouble Code (DTC).>	Is DTC displayed?	Perform the diagnosis according to DTC. <Ref. to VDC(diag)-35, List of Diagnostic Trouble Code (DTC).>	Go to step **2**.
2	**CHECK VDC OFF SWITCH.** Remove and check VDC OFF switch. <Ref. to VDC-36, VDC OFF Switch.>	Is the VDC OFF switch normal?	Go to step **3**.	Replace the VDC OFF switch.
3	**CHECK LAN SYSTEM.** Perform the diagnosis for LAN system. <Ref. to LAN(diag)-2, Basic Diagnostic Procedure.>	Is there any fault in LAN system?	Perform the diagnosis according to DTC for LAN system. <Ref. to LAN(diag)-32, List of Diagnostic Trouble Code (DTC).>	Go to step **4**.
4	**CHECK COMBINATION METER.** Check the combination meter. <Ref. to IDI-6, SELF-DIAGNOSIS DISPLAY MODE, OPERATION, Combination Meter System.>	Is combination meter OK?	Replace the VDCCM&H/U. <Ref. to VDC-9, VDC Control Module and Hydraulic Control Unit (VDCCM&H/U).>	Replace the combination meter. <Ref. to IDI-21, REMOVAL, Combination Meter.>

GETtheMANUALS.org

F: BRAKE WARNING LIGHT DOES NOT GO OFF

DETECTING CONDITION:

- Brake warning light circuit is shorted.
- Defective sensor/connector

TROUBLE SYMPTOM:

After starting the engine, the brake warning light remains lit though the parking lever is released.

NOTE:

When brake warning light blinks, check the parking brake system. <Ref. to PB(diag)-2, Basic Diagnostic Procedure.>

GETtheMANUALS.org

WIRING DIAGRAM:

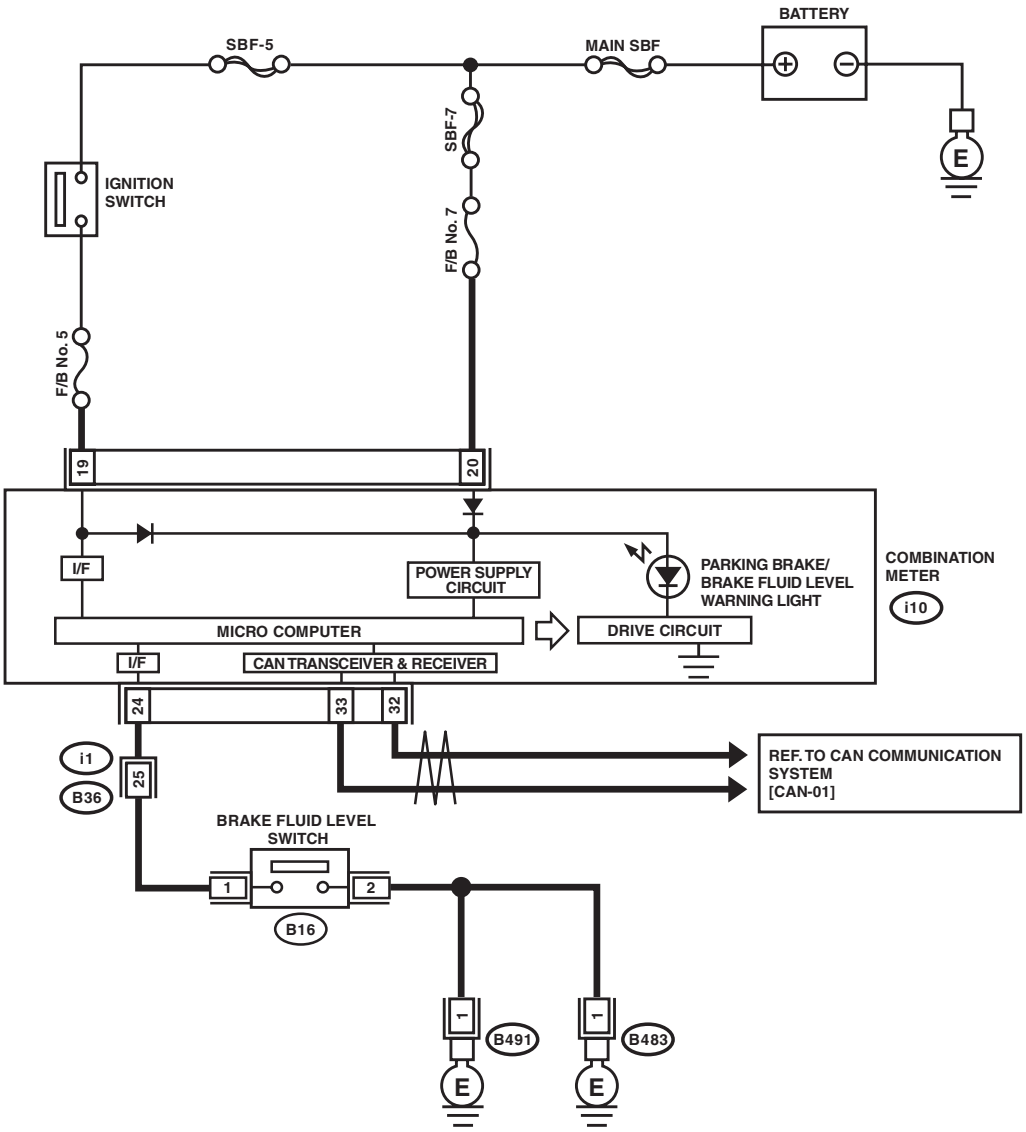

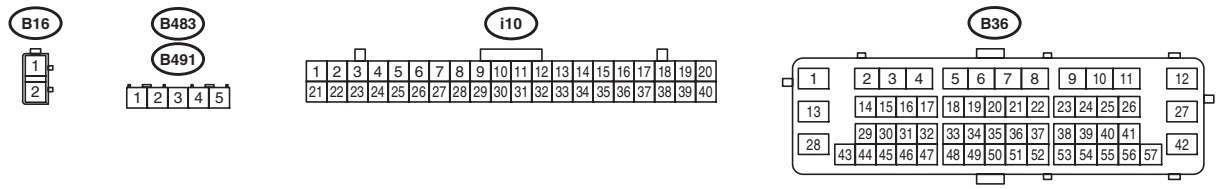

VDC00921

Step		Check	Yes	No
1	**CHECK INSTALLATION OF VDCCM&H/U CONNECTOR.** 1) Turn the ignition switch to OFF. 2) Check that the VDCCM&H/U connector is inserted until it is locked by clamp.	Is the connector firmly inserted?	Go to step **2**.	Insert the VDCCM&H/U connector until it is locked by clamp.

GETtheMANUALS.org

	Step	Check	Yes	No
2	**READ DTC.** Read the DTC. <Ref. to VDC(diag)-23, Read Diagnostic Trouble Code (DTC).>	Is DTC displayed?	Perform the diagnosis according to DTC. <Ref. to VDC(diag)-35, List of Diagnostic Trouble Code (DTC).>	Go to step **3**.
3	**CHECK BRAKE FLUID AMOUNT.** Check the amount of brake fluid in the reservoir tank of master cylinder.	Does the level of the brake fluid amount fall between the lines of "MAX" and "MIN"?	Go to step **4**.	Replenish brake fluid to the specified value.
4	**CHECK BRAKE FLUID LEVEL SWITCH.** 1) Turn the ignition switch to OFF. 2) Disconnect the level switch connector (B16) from master cylinder. 3) Measure the resistance of master cylinder terminals. ***Terminals*** ***No. 1 — No. 2:***	Is the resistance 1 MΩ or more?	Go to step **5**.	Replace the master cylinder. <Ref. to BR-41, Master Cylinder.>
5	**CHECK GROUND SHORT OF HARNESS.** 1) Disconnect the connector from the combination meter. 2) Measure the resistance between combination meter connector and chassis ground. ***Connector & terminal*** ***(i10) No. 24 — Chassis ground:***	Is the resistance 1 MΩ or more?	Go to step **6**.	Repair the harness connector between combination meter and brake fluid level switch.
6	**CHECK LAN SYSTEM.** Perform the diagnosis for LAN system. <Ref. to LAN(diag)-2, Basic Diagnostic Procedure.>	Is there any fault in LAN system?	Perform the diagnosis according to DTC for LAN system. <Ref. to LAN(diag)-32, List of Diagnostic Trouble Code (DTC).>	Go to step **7**.
7	**CHECK COMBINATION METER.** Check the combination meter. <Ref. to IDI-6, SELF-DIAGNOSIS DISPLAY MODE, OPERATION, Combination Meter System.>	Is combination meter OK?	Perform the diagnosis for the parking brake system. <Ref. to PB(diag)-23, Read Diagnostic Trouble Code (DTC).>	Replace the combination meter. <Ref. to IDI-21, REMOVAL, Combination Meter.>

GETtheMANUALS.org

11.List of Diagnostic Trouble Code (DTC)

A: LIST

DTC	Detailed code	Item	Content of diagnosis	Reference
C0021	5045	Front Right ABS Sensor Circuit Open or Short	Open/high input of front ABS wheel speed sensor RH	<Ref. to VDC(diag)-39, DTC C0021 FRONT RIGHT ABS SENSOR CIRCUIT OPEN OR SHORT, Diagnostic Procedure with Diagnostic Trouble Code (DTC).>
C0022	5049 5053 5057 5061 5065	Front Right ABS Sensor Signal	Front ABS wheel speed sensor RH signal malfunction	<Ref. to VDC(diag)-42, DTC C0022 FRONT RIGHT ABS SENSOR SIGNAL, Diagnostic Procedure with Diagnostic Trouble Code (DTC).>
C0023	5044	Front Left ABS Sensor Circuit Open or Short	Open/high input of front ABS wheel speed sensor LH	<Ref. to VDC(diag)-39, DTC C0023 FRONT LEFT ABS SENSOR CIRCUIT OPEN OR SHORT, Diagnostic Procedure with Diagnostic Trouble Code (DTC).>
C0024	5048 5052 5056 5060 5064	Front Left ABS Sensor Signal	Front ABS wheel speed sensor LH signal malfunction	<Ref. to VDC(diag)-42, DTC C0024 FRONT LEFT ABS SENSOR SIGNAL, Diagnostic Procedure with Diagnostic Trouble Code (DTC).>
C0025	5047	Rear Right ABS Sensor Circuit Open or Short	Open/high input of rear ABS wheel speed sensor RH	<Ref. to VDC(diag)-39, DTC C0025 REAR RIGHT ABS SENSOR CIRCUIT OPEN OR SHORT, Diagnostic Procedure with Diagnostic Trouble Code (DTC).>
C0026	5051 5055 5059 5063 5067	Rear Right ABS Sensor Signal	Rear ABS wheel speed sensor RH signal malfunction	<Ref. to VDC(diag)-42, DTC C0026 REAR RIGHT ABS SENSOR SIGNAL, Diagnostic Procedure with Diagnostic Trouble Code (DTC).>
C0027	5046	Rear Left ABS Sensor Circuit Open or Short	Open/high input of rear ABS wheel speed sensor LH	<Ref. to VDC(diag)-40, DTC C0027 REAR LEFT ABS SENSOR CIRCUIT OPEN OR SHORT, Diagnostic Procedure with Diagnostic Trouble Code (DTC).>
C0028	5050 5054 5058 5062 5066	Rear Left ABS Sensor Signal	Rear ABS wheel speed sensor LH signal malfunction	<Ref. to VDC(diag)-43, DTC C0028 REAR LEFT ABS SENSOR SIGNAL, Diagnostic Procedure with Diagnostic Trouble Code (DTC).>
C0031	5019	FR Hold Valve Malfunction	Front inlet solenoid valve RH malfunction in VDCCM&H/U	<Ref. to VDC(diag)-45, DTC C0031 FR HOLD VALVE MALFUNCTION, Diagnostic Procedure with Diagnostic Trouble Code (DTC).>
C0032	5023	FR Pressure Reducing Valve Malfunction	Front outlet solenoid valve RH malfunction in VDCCM&H/U	<Ref. to VDC(diag)-45, DTC C0032 FR PRESSURE REDUCING VALVE MALFUNCTION, Diagnostic Procedure with Diagnostic Trouble Code (DTC).>
C0033	5018	FL Hold Valve Malfunction	Front inlet solenoid valve LH malfunction in VDCCM&H/U	<Ref. to VDC(diag)-45, DTC C0033 FL HOLD VALVE MALFUNCTION, Diagnostic Procedure with Diagnostic Trouble Code (DTC).>
C0034	5022	FL Pressure Reducing Valve Malfunction	Front outlet solenoid valve LH malfunction in VDCCM&H/U	<Ref. to VDC(diag)-45, DTC C0034 FL PRESSURE REDUCING VALVE MALFUNCTION, Diagnostic Procedure with Diagnostic Trouble Code (DTC).>
C0035	5021	RR Hold Valve Malfunction	Rear inlet solenoid valve RH malfunction in VDCCM&H/U	<Ref. to VDC(diag)-45, DTC C0035 RR HOLD VALVE MALFUNCTION, Diagnostic Procedure with Diagnostic Trouble Code (DTC).>

GETtheMANUALS.org

DTC	Detailed code	Item	Content of diagnosis	Reference
C0036	5025	RR Pressure Reducing Valve Malfunction	Rear outlet solenoid valve RH malfunction in VDCCM&H/U	<Ref. to VDC(diag)-46, DTC C0036 RR PRESSURE REDUCING VALVE MALFUNCTION, Diagnostic Procedure with Diagnostic Trouble Code (DTC).>
C0037	5020	RL Hold Valve Malfunction	Rear inlet solenoid valve LH malfunction in VDCCM&H/U	<Ref. to VDC(diag)-46, DTC C0037 RL HOLD VALVE MALFUNCTION, Diagnostic Procedure with Diagnostic Trouble Code (DTC).>
C0038	5024	RL Pressure Reducing Valve Malfunction	Rear outlet solenoid valve LH malfunction in VDCCM&H/U	<Ref. to VDC(diag)-46, DTC C0038 RL PRESSURE REDUCING VALVE MALFUNCTION, Diagnostic Procedure with Diagnostic Trouble Code (DTC).>
C0041	5002 5003 5004 5005 5006 5007 5008 5009 5010 5011 5012 5013 5014 5015 5037 5038 5040 5041 5068 5069 5134	ECM	VDC control module malfunction	<Ref. to VDC(diag)-49, DTC C0041 ECM, Diagnostic Procedure with Diagnostic Trouble Code (DTC).>
	5148 5149	Parameter Selection Error	VDC control module parameter selection failure	<Ref. to VDC(diag)-51, DTC C0041 PARAMETER SELECTION ERROR, Diagnostic Procedure with Diagnostic Trouble Code (DTC).>
C0042	5000 5001	Power Supply Voltage Failure	Power voltage malfunction	<Ref. to VDC(diag)-52, DTC C0042 POWER SUPPLY VOLTAGE FAILURE, Diagnostic Procedure with Diagnostic Trouble Code (DTC).>
C0044	5137 5140 5142	TCM Communication Circuit	CAN communication failure of transmission control module	<Ref. to VDC(diag)-54, DTC C0044 TCM COMMUNICATION CIRCUIT, Diagnostic Procedure with Diagnostic Trouble Code (DTC).>
C0045	5144	TCM Malfunction	Malfunction of transmission control module	<Ref. to VDC(diag)-55, DTC C0045 TCM MALFUNCTION, Diagnostic Procedure with Diagnostic Trouble Code (DTC).>
	5146	Incorrect VDC Control Module Specifications	Different VDC control module specification	<Ref. to VDC(diag)-56, DTC C0045 INCORRECT VDC CONTROL MODULE SPECIFICATIONS, Diagnostic Procedure with Diagnostic Trouble Code (DTC).>
C0046	5155	Body Integrated Module Communication Circuit	Body integrated module communication circuit	<Ref. to VDC(diag)-58, DTC C0046 BODY INTEGRATED MODULE COMMUNICATION CIRCUIT, Diagnostic Procedure with Diagnostic Trouble Code (DTC).>
C0047	5135	CAN Communication	Improper CAN communication	<Ref. to VDC(diag)-59, DTC C0047 CAN COMMUNICATION, Diagnostic Procedure with Diagnostic Trouble Code (DTC).>

GETtheMANUALS.org

DTC	Detailed code	Item	Content of diagnosis	Reference
C0048	5156	Parking Brake System Communication Circuit	Parking brake system communication circuit	<Ref. to VDC(diag)-61, DTC C0048 PARKING BRAKE SYSTEM COMMUNICATION CIRCUIT, Diagnostic Procedure with Diagnostic Trouble Code (DTC).>
C0051	5016 5017 5034 5036	Valve Relay	Valve Relay	<Ref. to VDC(diag)-62, DTC C0051 VALVE RELAY, Diagnostic Procedure with Diagnostic Trouble Code (DTC).>
C0052	5039 5042 5043 5154	Motor Malfunction	Motor	<Ref. to VDC(diag)-64, DTC C0052 MOTOR MALFUNCTION, Diagnostic Procedure with Diagnostic Trouble Code (DTC).>
C0054	5133	BLS Off Malfunction	BLS OFF Malfunction	<Ref. to VDC(diag)-67, DTC C0054 BLS OFF MALFUNCTION, Diagnostic Procedure with Diagnostic Trouble Code (DTC).>
	5153	BLS On Malfunction	BLS ON malfunction	<Ref. to VDC(diag)-69, DTC C0054 BLS ON MALFUNCTION, Diagnostic Procedure with Diagnostic Trouble Code (DTC).>
C0056	5102 5108	G Sensor Abnormal	G sensor failure	<Ref. to VDC(diag)-70, DTC C0056 G SENSOR ABNORMAL, Diagnostic Procedure with Diagnostic Trouble Code (DTC).>
	5103 5104 5105 5106 5107 5109	G Sensor Signal	G sensor signal	<Ref. to VDC(diag)-71, DTC C0056 G SENSOR SIGNAL, Diagnostic Procedure with Diagnostic Trouble Code (DTC).>
C0057	5136 5139 5141	ECM Communication Circuit	CAN communication failure of engine control module	<Ref. to VDC(diag)-73, DTC C0057 ECM COMMUNICATION CIRCUIT, Diagnostic Procedure with Diagnostic Trouble Code (DTC).>
	5143	ECM Control System	Coordinate control prohibition of engine control module	<Ref. to VDC(diag)-74, DTC C0057 ECM CONTROL SYSTEM, Diagnostic Procedure with Diagnostic Trouble Code (DTC).>
	5145	VDC Interrupted Due to EGI Reason	VDC interrupted due to EGI reason	<Ref. to VDC(diag)-75, DTC C0057 VDC INTERRUPTED DUE TO EGI REASON, Diagnostic Procedure with Diagnostic Trouble Code (DTC).>
C0061	5027	Normal Opening Valve 1 Malfunction	Secondary cut valve malfunction in VDCCM&H/U	<Ref. to VDC(diag)-46, DTC C0061 NORMAL OPENING VALVE 1 MALFUNCTION, Diagnostic Procedure with Diagnostic Trouble Code (DTC).>
C0062	5026	Normal Opening Valve 2 Malfunction	Primary cut valve malfunction in VDCCM&H/U	<Ref. to VDC(diag)-46, DTC C0062 NORMAL OPENING VALVE 2 MALFUNCTION, Diagnostic Procedure with Diagnostic Trouble Code (DTC).>
C0063	5029	Normal Closing Valve 1 Malfunction	Secondary suction valve malfunction in VDCCM&H/U	<Ref. to VDC(diag)-46, DTC C0063 NORMAL CLOSING VALVE 1 MALFUNCTION, Diagnostic Procedure with Diagnostic Trouble Code (DTC).>
C0064	5028	Normal Closing Valve 2 Malfunction	Primary suction valve malfunction in VDCCM&H/U	<Ref. to VDC(diag)-47, DTC C0064 NORMAL CLOSING VALVE 2 MALFUNCTION, Diagnostic Procedure with Diagnostic Trouble Code (DTC).>

GETtheMANUALS.org

DTC	Detailed code	Item	Content of diagnosis	Reference
C0071	5121 5122 5123 5138	No Signal From Steering Angle Sensor	Steering angle sensor communication	<Ref. to VDC(diag)-76, DTC C0071 NO SIGNAL FROM STEERING ANGLE SENSOR, Diagnostic Procedure with Diagnostic Trouble Code (DTC).>
	5124 5125 5126 5127 5128 5129 5132	Steer Angle Sensor Op	Steering angle sensor output	<Ref. to VDC(diag)-78, DTC C0071 STEER ANGLE SENSOR OP, Diagnostic Procedure with Diagnostic Trouble Code (DTC).>
C0072	5116 5117 5118 5119 5120 5131	Abnormal Yaw Rate Sensor Output	Yaw rate sensor output	<Ref. to VDC(diag)-81, DTC C0072 ABNORMAL YAW RATE SENSOR OUTPUT, Diagnostic Procedure with Diagnostic Trouble Code (DTC).>
C0073	5110 5114	Lateral G Sensor Power/Output	Lateral G sensor power supply/output	<Ref. to VDC(diag)-83, DTC C0073 LATERAL G SENSOR POWER/OUTPUT, Diagnostic Procedure with Diagnostic Trouble Code (DTC).>
	5111 5112 5113 5115 5130	Abnormal Lateral G Sensor Output	Lateral G sensor output	<Ref. to VDC(diag)-84, DTC C0073 ABNORMAL LATERAL G SENSOR OUTPUT, Diagnostic Procedure with Diagnostic Trouble Code (DTC).>
C0074	5070 5071 5072 5073 5074 5075 5076 5077 5078 5079	Master Cylinder Pressure Sensor Output	Master cylinder pressure sensor output	<Ref. to VDC(diag)-87, DTC C0074 MASTER CYLINDER PRESSURE SENSOR OUTPUT, Diagnostic Procedure with Diagnostic Trouble Code (DTC).>
C0075	5080 5081 5082 5083 5084 5086 5087 5088 5089 5090 5091 5092 5093 5094 5095 5097 5098 5099 5100 5101	Wheel Cylinder Pressure Sensor Output	Wheel cylinder pressure sensor output	<Ref. to VDC(diag)-87, DTC C0075 WHEEL CYLINDER PRESSURE SENSOR OUTPUT, Diagnostic Procedure with Diagnostic Trouble Code (DTC).>
C0081	5147	System Failure	System malfunction	<Ref. to VDC(diag)-88, DTC C0081 SYSTEM FAILURE, Diagnostic Procedure with Diagnostic Trouble Code (DTC).>

GETtheMANUALS.org

12. Diagnostic Procedure with Diagnostic Trouble Code (DTC)

A: DTC C0021 FRONT RIGHT ABS SENSOR CIRCUIT OPEN OR SHORT

NOTE:
For the diagnostic procedure, refer to “DTC C0027 REAR LEFT ABS SENSOR CIRCUIT OPEN OR SHORT”. <Ref. to VDC(diag)-40, DTC C0027 REAR LEFT ABS SENSOR CIRCUIT OPEN OR SHORT, Diagnostic Procedure with Diagnostic Trouble Code (DTC).>

B: DTC C0023 FRONT LEFT ABS SENSOR CIRCUIT OPEN OR SHORT

NOTE:
For the diagnostic procedure, refer to “DTC C0027 REAR LEFT ABS SENSOR CIRCUIT OPEN OR SHORT”. <Ref. to VDC(diag)-40, DTC C0027 REAR LEFT ABS SENSOR CIRCUIT OPEN OR SHORT, Diagnostic Procedure with Diagnostic Trouble Code (DTC).>

C: DTC C0025 REAR RIGHT ABS SENSOR CIRCUIT OPEN OR SHORT

NOTE:
For the diagnostic procedure, refer to “DTC C0027 REAR LEFT ABS SENSOR CIRCUIT OPEN OR SHORT”. <Ref. to VDC(diag)-40, DTC C0027 REAR LEFT ABS SENSOR CIRCUIT OPEN OR SHORT, Diagnostic Procedure with Diagnostic Trouble Code (DTC).>

GETtheMANUALS.org

D: DTC C0027 REAR LEFT ABS SENSOR CIRCUIT OPEN OR SHORT

DTC DETECTING CONDITION:

- Defective ABS wheel speed sensor (broken wire, input voltage too high)
- Defective harness connector

TROUBLE SYMPTOM:

- ABS does not operate.
- VDC does not operate.
- Hill start assist does not operate.

WIRING DIAGRAM:

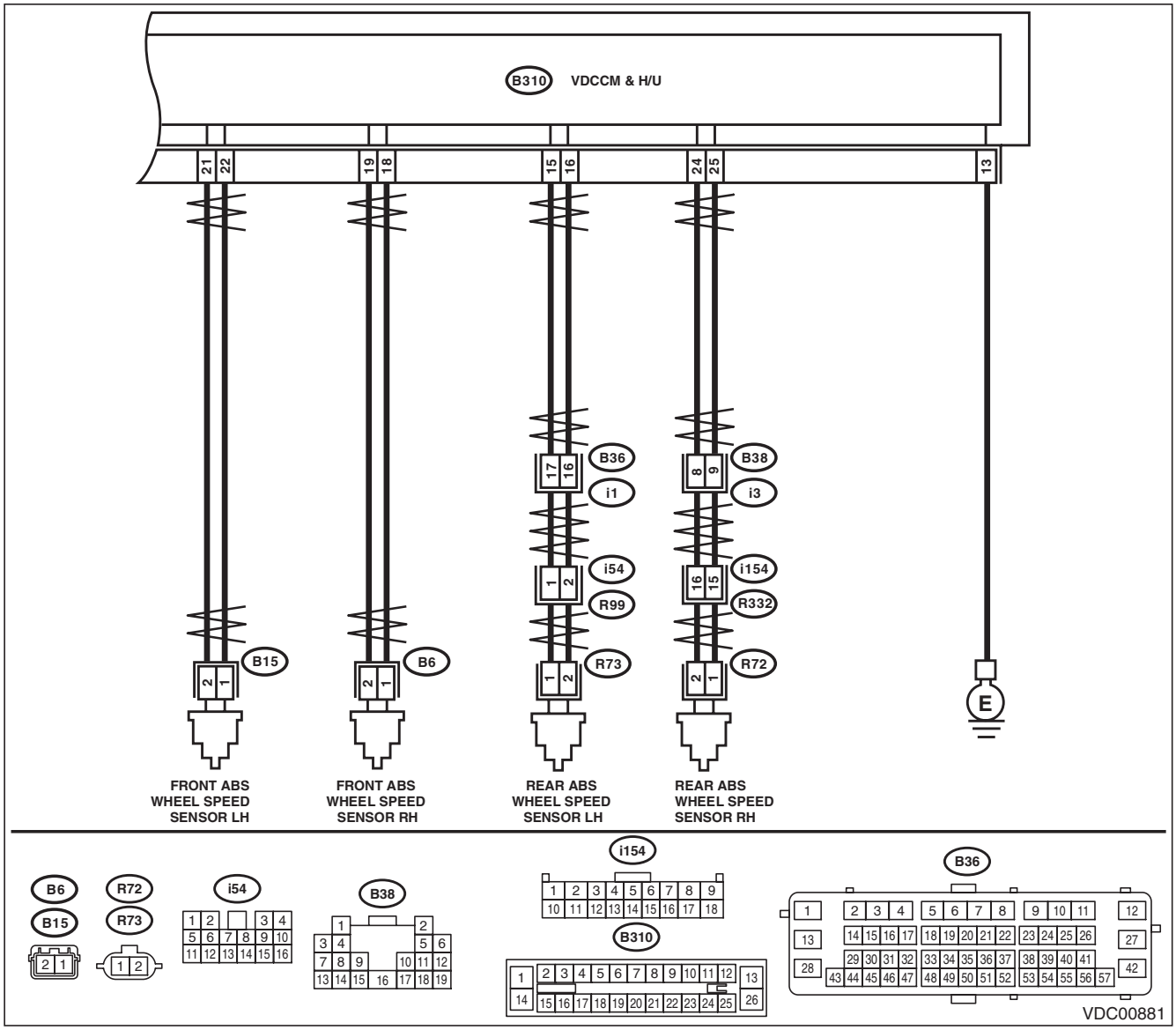

Step		Check	Yes	No
1	**CHECK POOR CONTACT OF CONNECTOR.** Check if there is poor contact between VDCCM&H/U and ABS wheel speed sensor.	Is there poor contact?	Repair the connector.	Go to step **2**.

GETtheMANUALS.org

	Step	Check	Yes	No
2	**CHECK HARNESS CONNECTOR BETWEEN VDCCM&H/U AND ABS WHEEL SPEED SENSOR.** 1) Disconnect the connector (B310) from the VDCCM&H/U. 2) Disconnect the connector from ABS wheel speed sensor. 3) Measure the resistance between VDCCM&H/U connector and ABS wheel speed sensor connector. ***Connector & terminal*** ***DTC C0021*** ***(B310) No. 18 — (B6) No. 1:*** ***(B310) No. 19 — (B6) No. 2:*** ***DTC C0023*** ***(B310) No. 22 — (B15) No. 1:*** ***(B310) No. 21 — (B15) No. 2:*** ***DTC C0025*** ***(B310) No. 25 — (R72) No. 1:*** ***(B310) No. 24 — (R72) No. 2:*** ***DTC C0027*** ***(B310) No. 15 — (R73) No. 1:*** ***(B310) No. 16 — (R73) No. 2:***	Is the resistance less than 1 Ω?	Go to step **3**.	Repair the harness connector between VDCCM&H/U and ABS wheel speed sensor.
3	**CHECK GROUND SHORT OF HARNESS.** Measure the resistance between VDCCM&H/U connector and chassis ground. ***Connector & terminal*** ***DTC C0021*** ***(B310) No. 19 — Chassis ground:*** ***DTC C0023*** ***(B310) No. 21 — Chassis ground:*** ***DTC C0025*** ***(B310) No. 25 — Chassis ground:*** ***DTC C0027*** ***(B310) No. 15 — Chassis ground:***	Is the resistance 1 MΩ or more?	Go to step **4**.	Repair the harness connector between VDCCM&H/U and ABS wheel speed sensor.
4	**CHECK ABS WHEEL SPEED SENSOR POWER SUPPLY CIRCUIT.** 1) Connect the VDCCM&H/U connector. 2) Turn the ignition switch to ON. 3) Measure the voltage between ABS wheel speed sensor connector and chassis ground. ***Connector & terminal*** ***DTC C0021*** ***(B6) No. 1 (+) — Chassis ground (–):*** ***DTC C0023*** ***(B15) No. 1 (+) — Chassis ground (–):*** ***DTC C0025*** ***(R72) No. 2 (+) — Chassis ground (–):*** ***DTC C0027*** ***(R73) No. 2 (+) — Chassis ground (–):***	Is the voltage 5 — 16 V?	Go to step **6**.	Go to step **5**.

GETtheMANUALS.org

Step		Check	Yes	No
5	**CHECK VDCCM&H/U POWER SUPPLY CIRCUIT.** 1) Turn the ignition switch to OFF. 2) Disconnect the VDCCM&H/U connector. 3) Turn the ignition switch to ON. 4) Measure the voltage between VDCCM&H/U connector terminals. ***Connector & terminal*** ***(B310) No. 7 (+) — (B310) No. 13 (–):*** ***(B310) No. 14 (+) — (B310) No. 13 (–):*** ***(B310) No. 1 (+) — (B310) No. 13 (–):***	Is the voltage 10 — 15 V?	Go to step **6**.	Check the generator, battery and VDCCM&H/U power supply circuit.
6	**CHECK ABS WHEEL SPEED SENSOR SIGNAL.** 1) Install the ABS wheel speed sensor. 2) Prepare an oscilloscope. 3) Check the ABS wheel speed sensor. <Ref. to VDC-30, CHECK ABS WHEEL SPEED SENSOR UNIT., INSPECTION, Front ABS Wheel Speed Sensor.>	Does the oscilloscope indicate the waveform pattern as shown in the figure?	Go to step **7**.	Replace the ABS wheel speed sensor. <Ref. to VDC-29, Front ABS Wheel Speed Sensor.>
7	**CHECK VDCCM&H/U.** 1) Connect all connectors. 2) Clear the memory. <Ref. to VDC(diag)-25, Clear Memory Mode.> 3) Perform the Inspection Mode. <Ref. to VDC(diag)-24, Inspection Mode.> 4) Read the DTC.	Is the same DTC displayed?	Replace the VDCCM&H/U. <Ref. to VDC-9, VDC Control Module and Hydraulic Control Unit (VDCCM&H/U).>	Go to step **8**.
8	**CHECK OTHER DTC DETECTION.**	Is any other DTC displayed?	Perform the diagnosis according to DTC. <Ref. to VDC(diag)-35, List of Diagnostic Trouble Code (DTC).>	It results from a temporary noise interference.

E: DTC C0022 FRONT RIGHT ABS SENSOR SIGNAL

NOTE:
For the diagnostic procedure, refer to “DTC C0028 REAR LEFT ABS SENSOR SIGNAL”. <Ref. to VDC(diag)-43, DTC C0028 REAR LEFT ABS SENSOR SIGNAL, Diagnostic Procedure with Diagnostic Trouble Code (DTC).>

F: DTC C0024 FRONT LEFT ABS SENSOR SIGNAL

NOTE:
For the diagnostic procedure, refer to “DTC C0028 REAR LEFT ABS SENSOR SIGNAL”. <Ref. to VDC(diag)-43, DTC C0028 REAR LEFT ABS SENSOR SIGNAL, Diagnostic Procedure with Diagnostic Trouble Code (DTC).>

G: DTC C0026 REAR RIGHT ABS SENSOR SIGNAL

NOTE:
For the diagnostic procedure, refer to “DTC C0028 REAR LEFT ABS SENSOR SIGNAL”. <Ref. to VDC(diag)-43, DTC C0028 REAR LEFT ABS SENSOR SIGNAL, Diagnostic Procedure with Diagnostic Trouble Code (DTC).>

GETtheMANUALS.org

H: DTC C0028 REAR LEFT ABS SENSOR SIGNAL

DTC DETECTING CONDITION:

- Defective ABS wheel speed sensor signal (noise, irregular signal, etc.)
- Defective harness connector

TROUBLE SYMPTOM:

- ABS does not operate.
- VDC does not operate.
- Hill start assist does not operate.

WIRING DIAGRAM:

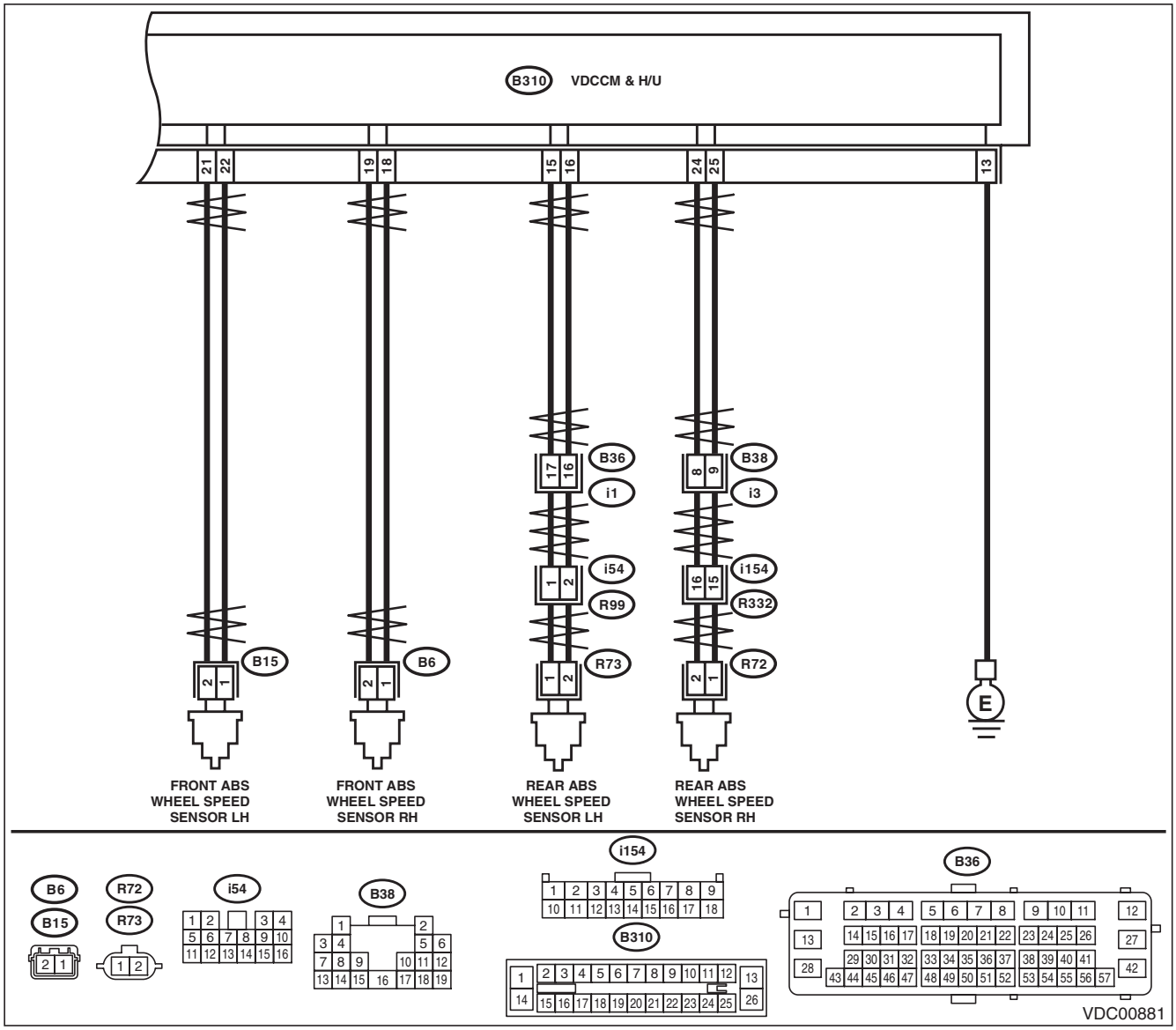

Step		Check	Yes	No
1	**CHECK OUTPUT OF ABS WHEEL SPEED SENSOR USING SUBARU SELECT MONITOR.** 1) Select “Current Data Display & Save” on the Subaru Select Monitor. 2) Read the defective ABS wheel speed sensor output.	Does the speed indicated on the display change in response to the speedometer reading during acceleration/deceleration when the steering wheel is in the straight-ahead position?	Go to step **2**.	Go to step **7**.

GETtheMANUALS.org

	Step	Check	Yes	No
2	**CHECK POOR CONTACT OF CONNECTOR.** Turn the ignition switch to OFF.	Is there poor contact of connectors between VDCCM&H/U and ABS wheel speed sensor?	Repair the connector.	Go to step **3**.
3	**CHECK CAUSE OF SIGNAL NOISE.** Make sure the radio wave devices and electronic components are installed correctly.	Are the radio wave devices and electronic components installed correctly?	Go to step **4**.	Install the radio wave devices and electronic components properly.
4	**CHECK CAUSE OF SIGNAL NOISE.** Check if the noise sources (such as an antenna) are installed near the sensor harness.	Are noise sources installed?	Install the noise sources apart from sensor harness.	Go to step **5**.
5	**CHECK VDCCM&H/U.** 1) Connect all connectors. 2) Clear the memory. <Ref. to VDC(diag)-25, Clear Memory Mode.> 3) Perform the Inspection Mode. <Ref. to VDC(diag)-24, Inspection Mode.> 4) Read the DTC.	Is the same DTC displayed?	Replace the VDCCM&H/U. <Ref. to VDC-9, VDC Control Module and Hydraulic Control Unit (VDCCM&H/U).>	Go to step **6**.
6	**CHECK OTHER DTC DETECTION.**	Is any other DTC displayed?	Perform the diagnosis according to DTC. <Ref. to VDC(diag)-35, List of Diagnostic Trouble Code (DTC).>	It results from a temporary noise interference.
7	**CHECK INSTALLATION OF ABS WHEEL SPEED SENSOR.**	Is the ABS wheel speed sensor installation bolt tightened to 7.5 N·m (0.76 kgf-m, 5.5 ft-lb)?	Go to step **8**.	Tighten the ABS wheel speed sensor installation bolts.
8	**CHECK ABS WHEEL SPEED SENSOR SIGNAL.** 1) Install the ABS wheel speed sensor. 2) Prepare an oscilloscope. 3) Check the ABS wheel speed sensor. <Ref. to VDC-30, CHECK ABS WHEEL SPEED SENSOR UNIT., INSPECTION, Front ABS Wheel Speed Sensor.>	Does the oscilloscope indicate the waveform pattern like shown in the figure when the tire is slowly turned? Does the oscilloscope indication repeat the waveform pattern like shown in the figure when the tire is slowly turned in equal speed for one rotation or more?	Go to step **10**.	Go to step **9**.
9	**CHECK ABS WHEEL SPEED SENSOR OR MAGNETIC ENCODER.**	Are there foreign matter, breakage or damage at the tip of ABS wheel speed sensor or magnetic encoder?	Remove dirt thoroughly. Also replace the ABS wheel speed sensor or magnetic encoder as a unit with hub unit bearing if it is broken or damaged.	Go to step **10**.
10	**CHECK CAUSE OF SIGNAL NOISE.** Make sure the radio wave devices and electronic components are installed correctly.	Are the radio wave devices and electronic components installed correctly?	Go to step **11**.	Install the radio wave devices and electronic components properly.
11	**CHECK CAUSE OF SIGNAL NOISE.** Check if the noise sources (such as an antenna) are installed near the sensor harness.	Are noise sources installed?	Install the noise sources apart from sensor harness.	Go to step **12**.
12	**CHECK VDCCM&H/U.** 1) Connect all connectors. 2) Clear the memory. <Ref. to VDC(diag)-25, Clear Memory Mode.> 3) Perform the Inspection Mode. <Ref. to VDC(diag)-24, Inspection Mode.> 4) Read the DTC.	Is the same DTC displayed?	Replace the VDCCM&H/U. <Ref. to VDC-9, VDC Control Module and Hydraulic Control Unit (VDCCM&H/U).>	Go to step **13**.

GETtheMANUALS.org

Step	Check	Yes	No
13 CHECK OTHER DTC DETECTION.	Is any other DTC displayed?	Perform the diagnosis according to DTC. <Ref. to VDC(diag)-35, List of Diagnostic Trouble Code (DTC).>	It results from a temporary noise interference. NOTE: Though the ABS warning light, and the VDC warning light & VDC indicator light remain lit at this point, this is normal. Drive the vehicle at 12 km/h (7 MPH) or more in order to turn off the ABS warning light, and the VDC warning light & VDC indicator light. Be sure to drive the vehicle and check that the warning light goes off.

I: DTC C0031 FR HOLD VALVE MALFUNCTION

NOTE:
For the diagnostic procedure, refer to “DTC C0064 NORMAL CLOSING VALVE 2 MALFUNCTION”. <Ref. to VDC(diag)-47, DTC C0064 NORMAL CLOSING VALVE 2 MALFUNCTION, Diagnostic Procedure with Diagnostic Trouble Code (DTC).>

J: DTC C0032 FR PRESSURE REDUCING VALVE MALFUNCTION

NOTE:
For the diagnostic procedure, refer to “DTC C0064 NORMAL CLOSING VALVE 2 MALFUNCTION”. <Ref. to VDC(diag)-47, DTC C0064 NORMAL CLOSING VALVE 2 MALFUNCTION, Diagnostic Procedure with Diagnostic Trouble Code (DTC).>

K: DTC C0033 FL HOLD VALVE MALFUNCTION

NOTE:
For the diagnostic procedure, refer to “DTC C0064 NORMAL CLOSING VALVE 2 MALFUNCTION”. <Ref. to VDC(diag)-47, DTC C0064 NORMAL CLOSING VALVE 2 MALFUNCTION, Diagnostic Procedure with Diagnostic Trouble Code (DTC).>

L: DTC C0034 FL PRESSURE REDUCING VALVE MALFUNCTION

NOTE:
For the diagnostic procedure, refer to “DTC C0064 NORMAL CLOSING VALVE 2 MALFUNCTION”. <Ref. to VDC(diag)-47, DTC C0064 NORMAL CLOSING VALVE 2 MALFUNCTION, Diagnostic Procedure with Diagnostic Trouble Code (DTC).>

M: DTC C0035 RR HOLD VALVE MALFUNCTION

NOTE:
For the diagnostic procedure, refer to “DTC C0064 NORMAL CLOSING VALVE 2 MALFUNCTION”. <Ref. to VDC(diag)-47, DTC C0064 NORMAL CLOSING VALVE 2 MALFUNCTION, Diagnostic Procedure with Diagnostic Trouble Code (DTC).>

GETtheMANUALS.org

N: DTC C0036 RR PRESSURE REDUCING VALVE MALFUNCTION

NOTE:
For the diagnostic procedure, refer to “DTC C0064 NORMAL CLOSING VALVE 2 MALFUNCTION”. <Ref. to VDC(diag)-47, DTC C0064 NORMAL CLOSING VALVE 2 MALFUNCTION, Diagnostic Procedure with Diagnostic Trouble Code (DTC).>

O: DTC C0037 RL HOLD VALVE MALFUNCTION

NOTE:
For the diagnostic procedure, refer to “DTC C0064 NORMAL CLOSING VALVE 2 MALFUNCTION”. <Ref. to VDC(diag)-47, DTC C0064 NORMAL CLOSING VALVE 2 MALFUNCTION, Diagnostic Procedure with Diagnostic Trouble Code (DTC).>

P: DTC C0038 RL PRESSURE REDUCING VALVE MALFUNCTION

NOTE:
For the diagnostic procedure, refer to “DTC C0064 NORMAL CLOSING VALVE 2 MALFUNCTION”. <Ref. to VDC(diag)-47, DTC C0064 NORMAL CLOSING VALVE 2 MALFUNCTION, Diagnostic Procedure with Diagnostic Trouble Code (DTC).>

Q: DTC C0061 NORMAL OPENING VALVE 1 MALFUNCTION

NOTE:
For the diagnostic procedure, refer to “DTC C0064 NORMAL CLOSING VALVE 2 MALFUNCTION”. <Ref. to VDC(diag)-47, DTC C0064 NORMAL CLOSING VALVE 2 MALFUNCTION, Diagnostic Procedure with Diagnostic Trouble Code (DTC).>

R: DTC C0062 NORMAL OPENING VALVE 2 MALFUNCTION

NOTE:
For the diagnostic procedure, refer to “DTC C0064 NORMAL CLOSING VALVE 2 MALFUNCTION”. <Ref. to VDC(diag)-47, DTC C0064 NORMAL CLOSING VALVE 2 MALFUNCTION, Diagnostic Procedure with Diagnostic Trouble Code (DTC).>

S: DTC C0063 NORMAL CLOSING VALVE 1 MALFUNCTION

NOTE:
For the diagnostic procedure, refer to “DTC C0064 NORMAL CLOSING VALVE 2 MALFUNCTION”. <Ref. to VDC(diag)-47, DTC C0064 NORMAL CLOSING VALVE 2 MALFUNCTION, Diagnostic Procedure with Diagnostic Trouble Code (DTC).>

GETtheMANUALS.org

T: DTC C0064 NORMAL CLOSING VALVE 2 MALFUNCTION

DTC DETECTING CONDITION:

- Defective harness connector
- Defective VDCH/U solenoid valve

TROUBLE SYMPTOM:

- ABS does not operate.
- EBD does not operate.
- VDC does not operate.
- Hill start assist does not operate.

WIRING DIAGRAM:

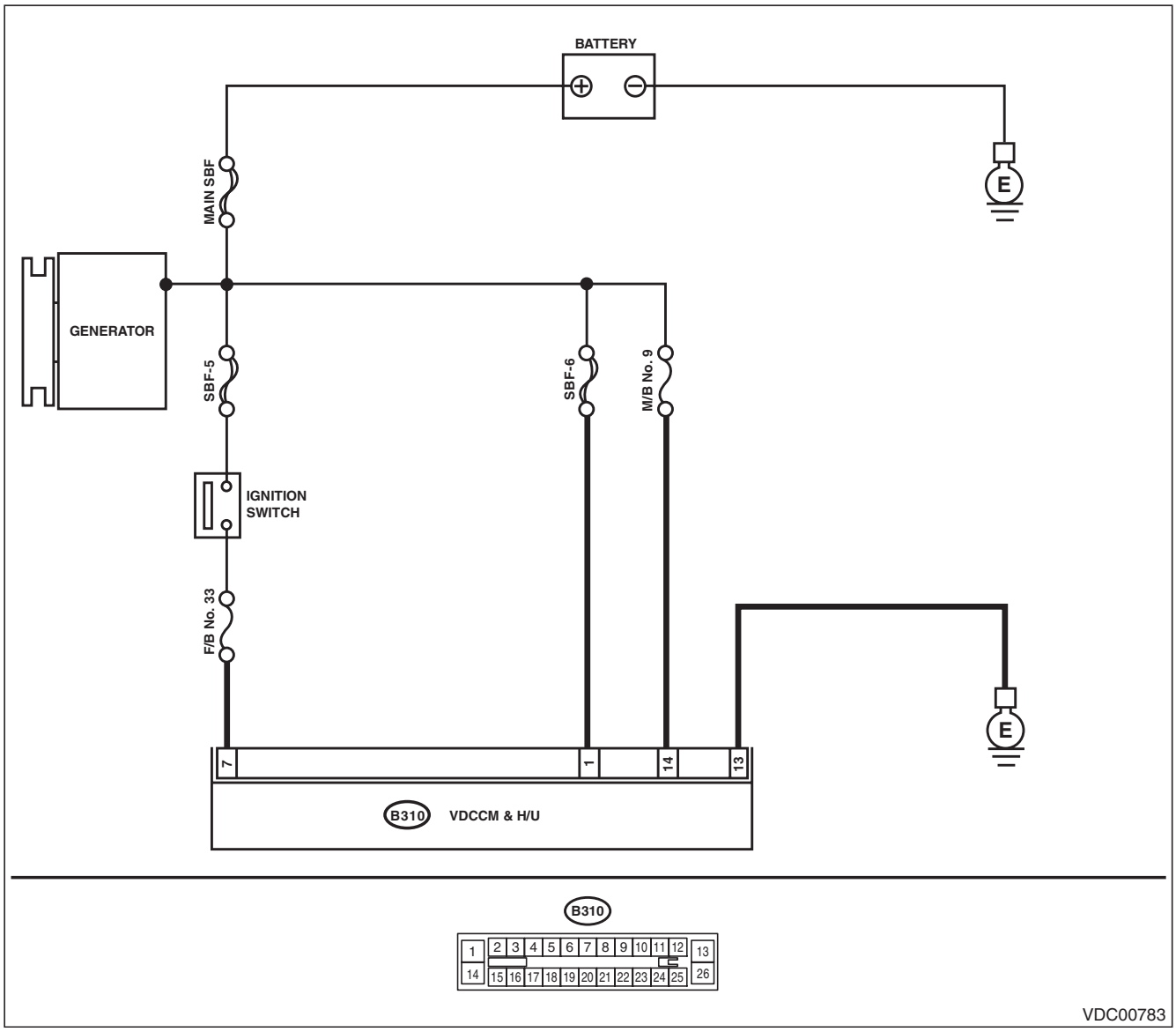

GETtheMANUALS.org

	Step	Check	Yes	No
1	**CHECK VDCCM&H/U INPUT VOLTAGE.** 1) Turn the ignition switch to OFF. 2) Disconnect the connector from the VDCCM&H/U. 3) Run the engine at idle. 4) Measure the voltage between VDCCM&H/U connector and chassis ground. ***Connector & terminal*** ***(B310) No. 7 (+) — Chassis ground (–):*** ***(B310) No. 14 (+) — Chassis ground (–):*** ***(B310) No. 1 (+) — Chassis ground (–):***	Is the voltage 10 — 15 V?	Go to step **2**.	Repair the power supply circuit.
2	**CHECK VDCCM&H/U GROUND CIRCUIT.** 1) Turn the ignition switch to OFF. 2) Measure the resistance between VDCCM&H/U connector and chassis ground. ***Connector & terminal*** ***(B310) No. 13 — Chassis ground:***	Is the resistance less than 10 Ω?	Go to step **3**.	Repair the VDCCM&H/U ground harness.
3	**CHECK POOR CONTACT OF CONNECTORS.**	Is there poor contact of connector between generator, battery and VDCCM&H/U?	Repair the connector.	Go to step **4**.
4	**CHECK VDCCM&H/U.** 1) Connect all connectors. 2) Clear the memory. <Ref. to VDC(diag)-25, Clear Memory Mode.> 3) Perform the Inspection Mode. <Ref. to VDC(diag)-24, Inspection Mode.> 4) Read the DTC.	Is the same DTC displayed?	Replace the VDCCM&H/U. <Ref. to VDC-9, VDC Control Module and Hydraulic Control Unit (VDCCM&H/U).>	Go to step **5**.
5	**CHECK OTHER DTC DETECTION.**	Is any other DTC displayed?	Perform the diagnosis according to DTC. <Ref. to VDC(diag)-35, List of Diagnostic Trouble Code (DTC).>	Temporary poor contact occurs.

GETtheMANUALS.org

U: DTC C0041 ECM

DTC DETECTING CONDITION:
Defective VDCCM&H/U

TROUBLE SYMPTOM:
- ABS does not operate.
- EBD does not operate.
- VDC does not operate.
- Hill start assist does not operate.

WIRING DIAGRAM:

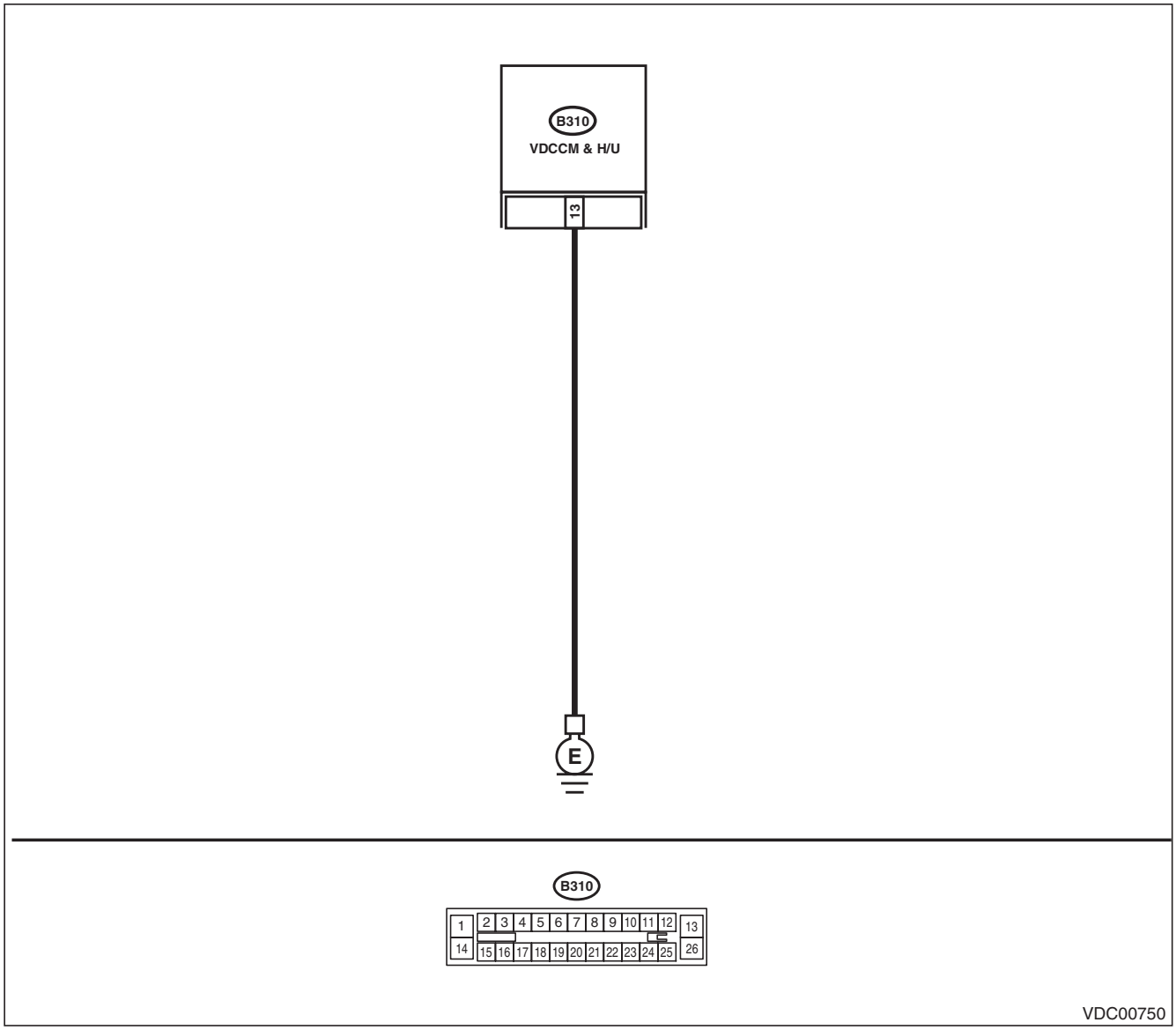

Step	Check	Yes	No
1 **CHECK VDCCM&H/U GROUND CIRCUIT.** 1) Turn the ignition switch to OFF. 2) Disconnect the connector from the VDCCM&H/U. 3) Measure the resistance between VDCCM&H/U and chassis ground. ***Connector & terminal*** ***(B310) No. 13 — Chassis ground:***	Is the resistance less than 10 Ω?	Go to step **2**.	Repair the VDCCM&H/U ground harness.

GETtheMANUALS.org

Step		Check	Yes	No
2	**CHECK POOR CONTACT OF CONNECTORS.**	Is there poor contact of the connector between the battery, ignition switch and VDCCM&H/U?	Repair the connector.	Go to step **3**.
3	**CHECK CAUSE OF SIGNAL NOISE.**	Are the radio wave devices and electronic components installed correctly?	Go to step **4**.	Install the radio wave devices and electronic components properly.
4	**CHECK CAUSE OF SIGNAL NOISE.**	Is there a noise source (such as an antenna) installed near the sensor harness and VDCCM?	Install the noise source apart from the sensor harness and VDCCM.	Go to step **5**.
5	**CHECK VDCCM&H/U.** 1) Connect all connectors. 2) Clear the memory. <Ref. to VDC(diag)-25, Clear Memory Mode.> 3) Perform the Inspection Mode. <Ref. to VDC(diag)-24, Inspection Mode.> 4) Read the DTC.	Is the same DTC displayed?	Replace the VDCCM&H/U. <Ref. to VDC-9, VDC Control Module and Hydraulic Control Unit (VDCCM&H/U).>	Go to step **6**.
6	**CHECK OTHER DTC DETECTION.**	Is any other DTC displayed?	Perform the diagnosis according to DTC. <Ref. to VDC(diag)-35, List of Diagnostic Trouble Code (DTC).>	Temporary poor contact occurs.

GETtheMANUALS.org

V: DTC C0041 PARAMETER SELECTION ERROR

DTC DETECTING CONDITION:
VDCCM parameter selection error
TROUBLE SYMPTOM:
- ABS does not operate.
- EBD does not operate.
- VDC does not operate.
- Hill start assist does not operate.

NOTE:
When the VDCCM&H/U is replaced, this DTC may be stored.

Step		Check	Yes	No
1	**CHECK VDCCM&H/U IDENTIFICATION SYMBOL.** Check the identification symbol attached on the H/U. Identification symbol: V4	Is the identification symbol correct?	Go to step **2**.	Replace the VDCCM&H/U. <Ref. to VDC-9, VDC Control Module and Hydraulic Control Unit (VDCCM&H/U).>
2	**CHECK PARAMETER SELECTED IN VDCCM.** <Ref. to VDC(diag)-19, PARAMETER CHECK, OPERATION, Subaru Select Monitor.>	Does the parameter registered in the VDCCM match the relevant vehicle?	Replace the VDCCM&H/U. <Ref. to VDC-9, VDC Control Module and Hydraulic Control Unit (VDCCM&H/U).>	Select and register the correct parameter. <Ref. to VDC(diag)-19, PARAMETER SELECTION, OPERATION, Subaru Select Monitor.>

GETtheMANUALS.org

W: DTC C0042 POWER SUPPLY VOLTAGE FAILURE

DTC DETECTING CONDITION:

Improper VDCCM&H/U power supply voltage

TROUBLE SYMPTOM:

- ABS does not operate.
- EBD may not operate.
- VDC does not operate.
- Hill start assist does not operate.

NOTE:

Warning lights go off if voltage returns.

WIRING DIAGRAM:

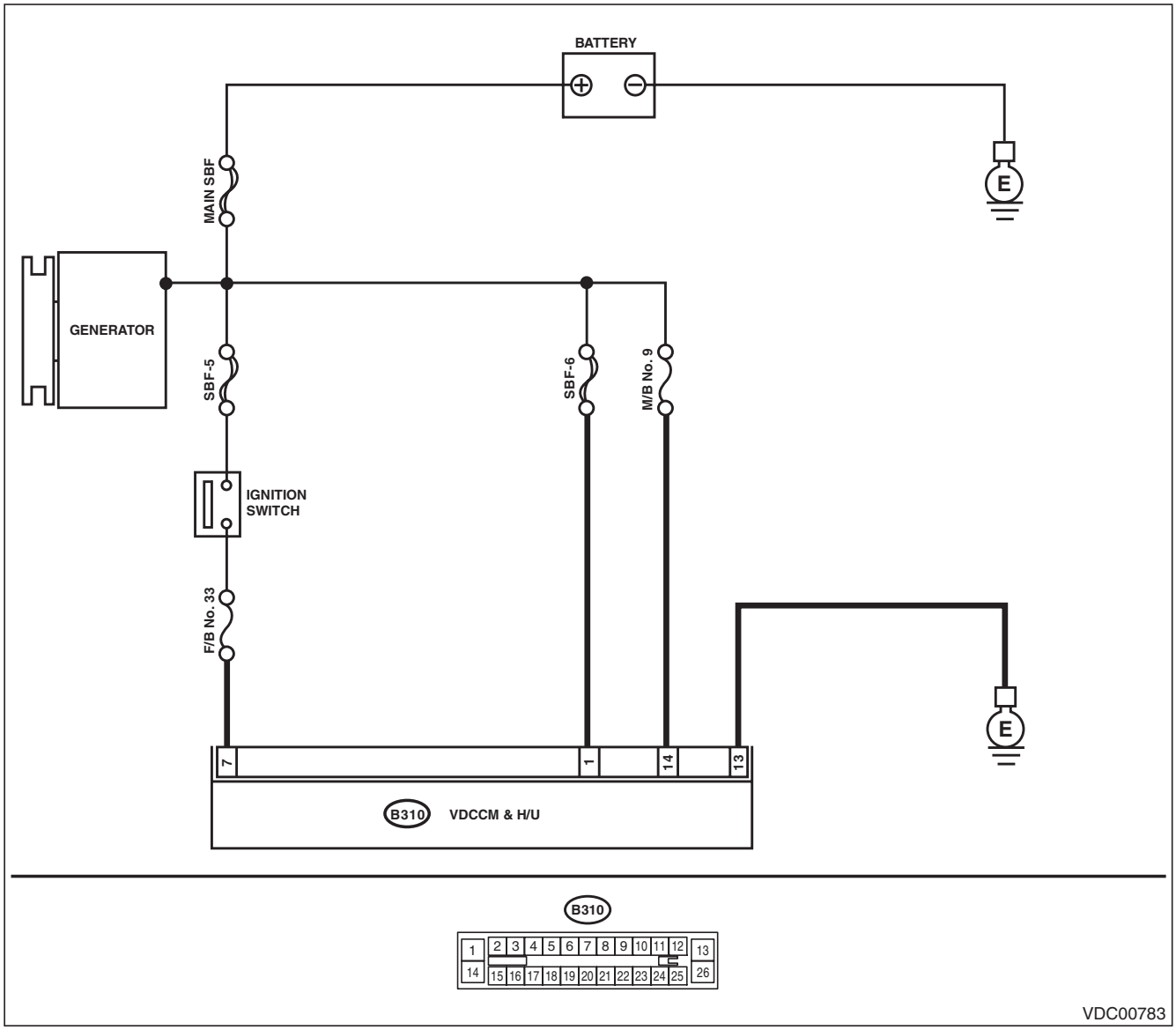

GETtheMANUALS.org

	Step	Check	Yes	No
1	**CHECK GENERATOR.** 1) Start the engine. 2) Run the engine at idle after warming up. 3) Measure the voltage between generator terminal B and chassis ground. ***Terminals*** ***Generator terminal B (+) — Chassis ground (–):***	Is the voltage 10 — 15 V?	Go to step **2**.	Repair the generator. <Ref. to SC(H4SO)-18, Generator.>
2	**CHECK BATTERY TERMINAL.** Turn the ignition switch to OFF.	Are the positive and negative battery terminals clamped tightly?	Go to step **3**.	Tighten the terminal.
3	**CHECK VDCCM&H/U INPUT VOLTAGE.** 1) Disconnect the connector from the VDCCM&H/U. 2) Run the engine at idle. 3) Operate devices such as headlights, air conditioner, defogger, etc. which produce an electrical load. 4) Measure the voltage between VDCCM&H/U connector and chassis ground. ***Connector & terminal*** ***(B310) No. 7 (+) — Chassis ground (–):*** ***(B310) No. 14 (+) — Chassis ground (–):*** ***(B310) No. 1 (+) — Chassis ground (–):***	Is the voltage 10 — 15 V?	Go to step **4**.	Repair the power supply circuit.
4	**CHECK VDCCM&H/U GROUND CIRCUIT.** 1) Turn the ignition switch to OFF. 2) Measure the resistance between VDCCM&H/U connector and chassis ground. ***Connector & terminal*** ***(B310) No. 13 — Chassis ground:***	Is the resistance less than 10 Ω?	Go to step **5**.	Repair the VDCCM&H/U ground harness.
5	**CHECK POOR CONTACT OF CONNECTORS.**	Is there poor contact of connector between generator, battery and VDCCM&H/U?	Repair the connector.	Go to step **6**.
6	**CHECK VDCCM&H/U.** 1) Connect all connectors. 2) Clear the memory. <Ref. to VDC(diag)-25, Clear Memory Mode.> 3) Perform the Inspection Mode. <Ref. to VDC(diag)-24, Inspection Mode.> 4) Read the DTC.	Is the same DTC displayed?	Replace the VDCCM&H/U. <Ref. to VDC-9, VDC Control Module and Hydraulic Control Unit (VDCCM&H/U).>	Go to step **7**.
7	**CHECK OTHER DTC DETECTION.**	Is any other DTC displayed?	Perform the diagnosis according to DTC. <Ref. to VDC(diag)-35, List of Diagnostic Trouble Code (DTC).>	Temporary poor contact occurs.

GETtheMANUALS.org

X: DTC C0044 TCM COMMUNICATION CIRCUIT

DTC DETECTING CONDITION:

No CAN signal from TCM.

TROUBLE SYMPTOM:

- ABS does not operate.
- VDC does not operate.
- Hill start assist does not operate.

	Step	Check	Yes	No
1	**CHECK LAN SYSTEM.** Perform the diagnosis for LAN system. <Ref. to LAN(diag)-2, Basic Diagnostic Procedure.>	Is there any fault in LAN system?	Perform the diagnosis according to DTC for LAN system. <Ref. to LAN(diag)-32, List of Diagnostic Trouble Code (DTC).>	Go to step **2**.
2	**CHECK POOR CONTACT OF CONNECTORS.**	Is there poor contact of TCM connector?	Repair the connector.	Go to step **3**.
3	**CHECK TCM.** Refer to the basic diagnostic procedure for each transmission (diagnostics).	Is the TCM normal?	Go to step **4**.	Replace the TCM. <Ref. to 5AT-57, Transmission Control Module (TCM).> <Ref. to CVT-124, Transmission Control Module (TCM).>
4	**CHECK VDCCM&H/U.** 1) Connect all connectors. 2) Clear the memory. <Ref. to VDC(diag)-25, Clear Memory Mode.> 3) Perform the Inspection Mode. <Ref. to VDC(diag)-24, Inspection Mode.> 4) Read the DTC.	Is the same DTC displayed?	Replace the VDCCM&H/U. <Ref. to VDC-9, VDC Control Module and Hydraulic Control Unit (VDCCM&H/U).>	Go to step **5**.
5	**CHECK OTHER DTC DETECTION.**	Is any other DTC displayed?	Perform the diagnosis according to DTC. <Ref. to VDC(diag)-35, List of Diagnostic Trouble Code (DTC).>	It results from a temporary noise interference.

GETtheMANUALS.org

Y: DTC C0045 TCM MALFUNCTION

DTC DETECTING CONDITION:

Defective TCM

TROUBLE SYMPTOM:

- ABS does not operate.
- VDC does not operate.
- Hill start assist does not operate.

	Step	Check	Yes	No
1	**CHECK AT SYSTEM OR CVT SYSTEM.** 1) Start the engine. 2) Check the DTC in AT system or CVT system.	Is DTC of AT system or CVT system displayed?	Repair the AT system or CVT system. <Ref. to 5AT(diag)-33, List of Diagnostic Trouble Code (DTC).> <Ref. to CVT(diag)-32, List of Diagnostic Trouble Code (DTC).>	Go to step **2**.
2	**CHECK VDCCM&H/U.** 1) Connect all connectors. 2) Clear the memory. <Ref. to VDC(diag)-25, Clear Memory Mode.> 3) Perform the Inspection Mode. <Ref. to VDC(diag)-24, Inspection Mode.> 4) Read the DTC.	Is the same DTC displayed?	Replace the VDCCM&H/U. <Ref. to VDC-9, VDC Control Module and Hydraulic Control Unit (VDCCM&H/U).>	Go to step **3**.
3	**CHECK OTHER DTC DETECTION.**	Is any other DTC displayed?	Perform the diagnosis according to DTC. <Ref. to VDC(diag)-35, List of Diagnostic Trouble Code (DTC).>	It results from a temporary noise interference.

GETtheMANUALS.org

Z: DTC C0045 INCORRECT VDC CONTROL MODULE SPECIFICATIONS

DTC DETECTING CONDITION:
Different control module specification
TROUBLE SYMPTOM:
- ABS does not operate.
- VDC does not operate.
- Hill start assist does not operate.

NOTE:
When parameter selection for VDCCM is improper, this DTC may be memorized.

Step		Check	Yes	No
1	**CHECK VDCCM&H/U IDENTIFICATION SYMBOL.** Check the identification symbol attached on the H/U. Identification symbol: V4	Is the identification symbol correct?	Go to step **2**.	Replace the VDCCM&H/U. <Ref. to VDC-9, VDC Control Module and Hydraulic Control Unit (VDCCM&H/U).>
2	**CHECK PARAMETER SELECTED IN VDCCM.** <Ref. to VDC(diag)-19, PARAMETER CHECK, OPERATION, Subaru Select Monitor.>	Does the parameter registered in the VDCCM match the relevant vehicle?	Go to step **3**.	Select and register the correct parameter. <Ref. to VDC(diag)-19, PARAMETER SELECTION, OPERATION, Subaru Select Monitor.>
3	**CHECK TCM SPECIFICATION.** Check the TCM specification.	Is the specification of TCM same as vehicle specification?	Go to step **4**.	Replace the TCM. <Ref. to 5AT-57, Transmission Control Module (TCM).> <Ref. to CVT-124, Transmission Control Module (TCM).>
4	**CHECK AT SYSTEM OR CVT SYSTEM.** 1) Start the engine. 2) Check the DTC in AT system or CVT system.	Is DTC of AT system or CVT system displayed?	Repair the AT system or CVT system. <Ref. to 5AT(diag)-33, List of Diagnostic Trouble Code (DTC).> <Ref. to CVT(diag)-32, List of Diagnostic Trouble Code (DTC).>	Go to step **5**.
5	**CHECK ECM SPECIFICATION.** Check the ECM specification.	Is the specification of ECM same as vehicle specification?	Go to step **6**.	Replace the ECM. <Ref. to FU(H4SO)-46, Engine Control Module (ECM).> <Ref. to FU(H4DOTC)-58, Engine Control Module (ECM).> <Ref. to FU(H6DO)-54, Engine Control Module (ECM).>

GETtheMANUALS.org

Step		Check	Yes	No
6	**CHECK VDCCM&H/U.** 1) Connect all connectors. 2) Clear the memory. <Ref. to VDC(diag)-25, Clear Memory Mode.> 3) Perform the Inspection Mode. <Ref. to VDC(diag)-24, Inspection Mode.> 4) Read the DTC.	Is the same DTC displayed?	Replace the VDCCM&H/U. <Ref. to VDC-9, VDC Control Module and Hydraulic Control Unit (VDCCM&H/U).>	Go to step **7**.
7	**CHECK OTHER DTC DETECTION.**	Is any other DTC displayed?	Perform the diagnosis according to DTC. <Ref. to VDC(diag)-35, List of Diagnostic Trouble Code (DTC).>	It results from a temporary noise interference.

GETtheMANUALS.org

AA:DTC C0046 BODY INTEGRATED MODULE COMMUNICATION CIRCUIT

DTC DETECTING CONDITION:

No CAN signal received from body integrated unit.

TROUBLE SYMPTOM:

- VDC may not operate.
- Hill start assist does not operate. (MT model only)

Step		Check	Yes	No
1	**CHECK LAN SYSTEM.** Perform the diagnosis for LAN system. <Ref. to LAN(diag)-2, Basic Diagnostic Procedure.>	Is there any fault in LAN system?	Perform the diagnosis according to DTC for LAN system. <Ref. to LAN(diag)-32, List of Diagnostic Trouble Code (DTC).>	Go to step **2**.
2	**CHECK POOR CONTACT OF CONNECTORS.**	Is there poor contact of body integrated unit connector?	Repair the connector.	Go to step **3**.
3	**CHECK BODY INTEGRATED UNIT.** Perform the diagnosis for body integrated unit. <Ref. to BC(diag)-2, Basic Diagnostic Procedure.>	Is the body integrated unit normal?	Go to step **4**.	Perform the diagnosis according to DTC for the body integrated unit. <Ref. to BC(diag)-21, List of Diagnostic Trouble Code (DTC).>
4	**CHECK VDCCM&H/U.** 1) Connect all connectors. 2) Clear the memory. <Ref. to VDC(diag)-25, Clear Memory Mode.> 3) Perform the Inspection Mode. <Ref. to VDC(diag)-24, Inspection Mode.> 4) Read the DTC.	Is the same DTC displayed?	Replace the VDCCM&H/U. <Ref. to VDC-9, VDC Control Module and Hydraulic Control Unit (VDCCM&H/U).>	Go to step **5**.
5	**CHECK OTHER DTC DETECTION.**	Is any other DTC displayed?	Perform the diagnosis according to DTC. <Ref. to VDC(diag)-35, List of Diagnostic Trouble Code (DTC).>	It results from a temporary noise interference.

GETtheMANUALS.org

AB:DTC C0047 CAN COMMUNICATION

DTC DETECTING CONDITION:

CAN communication line circuit is open or shorted.

TROUBLE SYMPTOM:

- VDC does not operate.
- Hill start assist does not operate.

WIRING DIAGRAM:

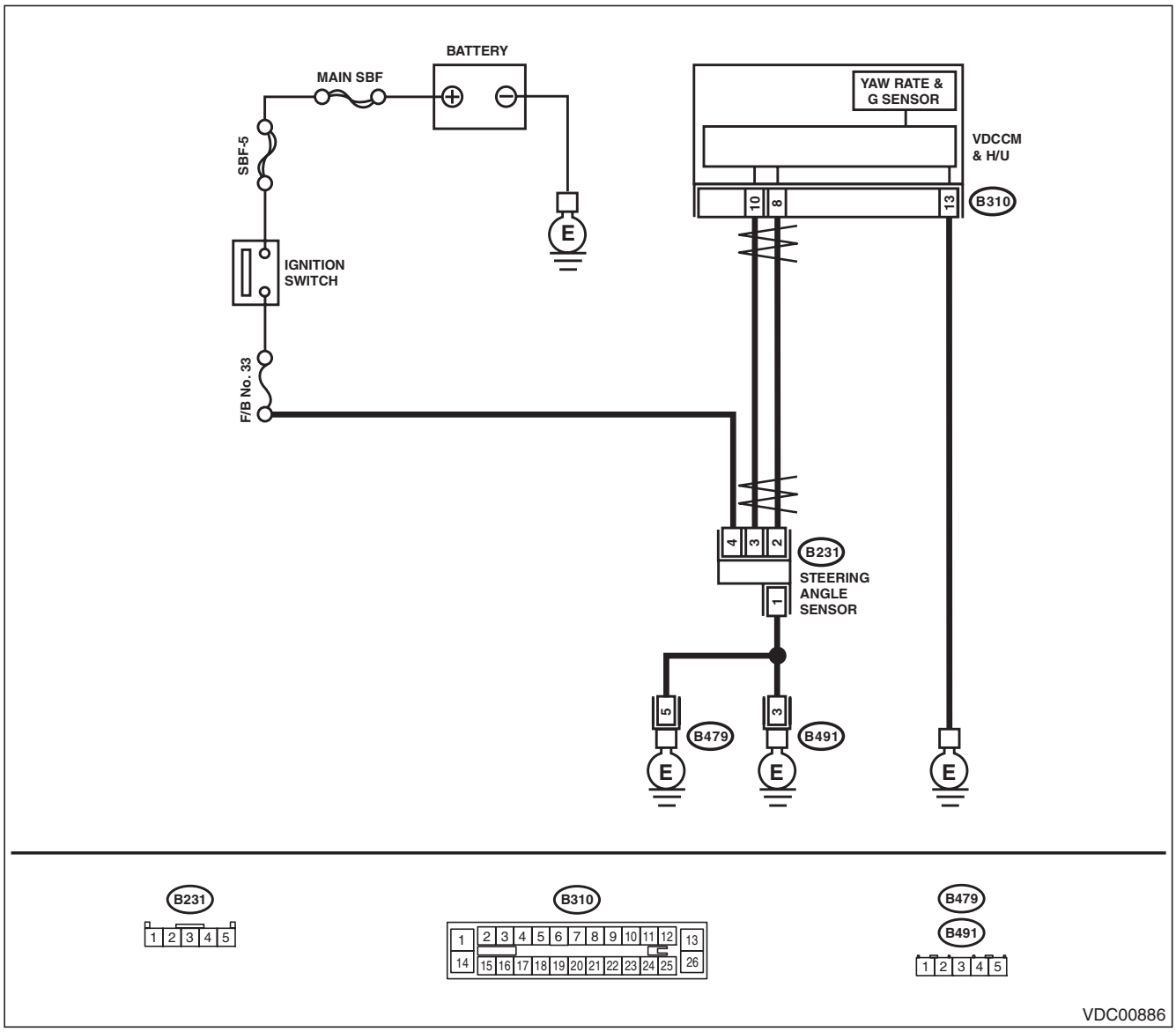

Step		Check	Yes	No
1	**CHECK LAN SYSTEM.** Perform the diagnosis for LAN system. <Ref. to LAN(diag)-2, Basic Diagnostic Procedure.>	Is there any fault in LAN system?	Perform the diagnosis according to DTC for LAN system. <Ref. to LAN(diag)-32, List of Diagnostic Trouble Code (DTC).>	Go to step **2**.
2	**CHECK POOR CONTACT OF CONNECTORS.**	Is there poor contact of VDCCM&H/U connector?	Repair the connector.	Go to step **3**.

GETtheMANUALS.org

Step		Check	Yes	No
3	**CHECK OUTPUT OF STEERING ANGLE SENSOR WITH SUBARU SELECT MONITOR.** 1) Select “Current Data Display & Save” on the Subaru Select Monitor. 2) Check the «Steer Angle Sensor Op».	Does the output signal change?	Go to step **4**.	Check output of the steering angle sensor. <Ref. to VDC(diag)-78, DTC C0071 STEER ANGLE SENSOR OP, Diagnostic Procedure with Diagnostic Trouble Code (DTC).>
4	**CHECK VDCCM&H/U.** 1) Connect all connectors. 2) Clear the memory. <Ref. to VDC(diag)-25, Clear Memory Mode.> 3) Perform the Inspection Mode. <Ref. to VDC(diag)-24, Inspection Mode.> 4) Read the DTC.	Is the same DTC displayed?	Replace the VDCCM&H/U. <Ref. to VDC-9, VDC Control Module and Hydraulic Control Unit (VDCCM&H/U).>	Temporary poor contact occurs.

GETtheMANUALS.org

AC:DTC C0048 PARKING BRAKE SYSTEM COMMUNICATION CIRCUIT

DTC DETECTING CONDITION:

No CAN signal from parking brake control module.

TROUBLE SYMPTOM:

- VDC may not operate.
- Hill start assist does not operate.

Step		Check	Yes	No
1	**CHECK LAN SYSTEM.** Perform the diagnosis for LAN system. <Ref. to LAN(diag)-2, Basic Diagnostic Procedure.>	Is there any fault in LAN system?	Perform the diagnosis according to DTC for LAN system. <Ref. to LAN(diag)-32, List of Diagnostic Trouble Code (DTC).>	Go to step **2**.
2	**CHECK POOR CONTACT OF CONNECTORS.**	Is there poor contact of the parking brake control module connector?	Repair the connector.	Go to step **3**.
3	**CHECK PARKING BRAKE SYSTEM.** Perform the diagnosis for the parking brake system. <Ref. to PB(diag)-2, Basic Diagnostic Procedure.>	Is the parking brake system normal?	Go to step **4**.	Perform the diagnosis according to DTC for the parking brake system. <Ref. to PB(diag)-35, List of Diagnostic Trouble Code (DTC).>
4	**CHECK VDCCM&H/U.** 1) Connect all connectors. 2) Clear the memory. <Ref. to VDC(diag)-25, Clear Memory Mode.> 3) Perform the Inspection Mode. <Ref. to VDC(diag)-24, Inspection Mode.> 4) Read the DTC.	Is the same DTC displayed?	Replace the VDCCM&H/U. <Ref. to VDC-9, VDC Control Module and Hydraulic Control Unit (VDCCM&H/U).>	Go to step **5**.
5	**CHECK OTHER DTC DETECTION.**	Is any other DTC displayed?	Perform the diagnosis according to DTC. <Ref. to VDC(diag)-35, List of Diagnostic Trouble Code (DTC).>	It results from a temporary noise interference.

GETtheMANUALS.org

AD:DTC C0051 VALVE RELAY

DTC DETECTING CONDITION:

Defective valve relay

TROUBLE SYMPTOM:

- ABS does not operate.
- EBD does not operate.
- VDC does not operate.
- Hill start assist does not operate.

WIRING DIAGRAM:

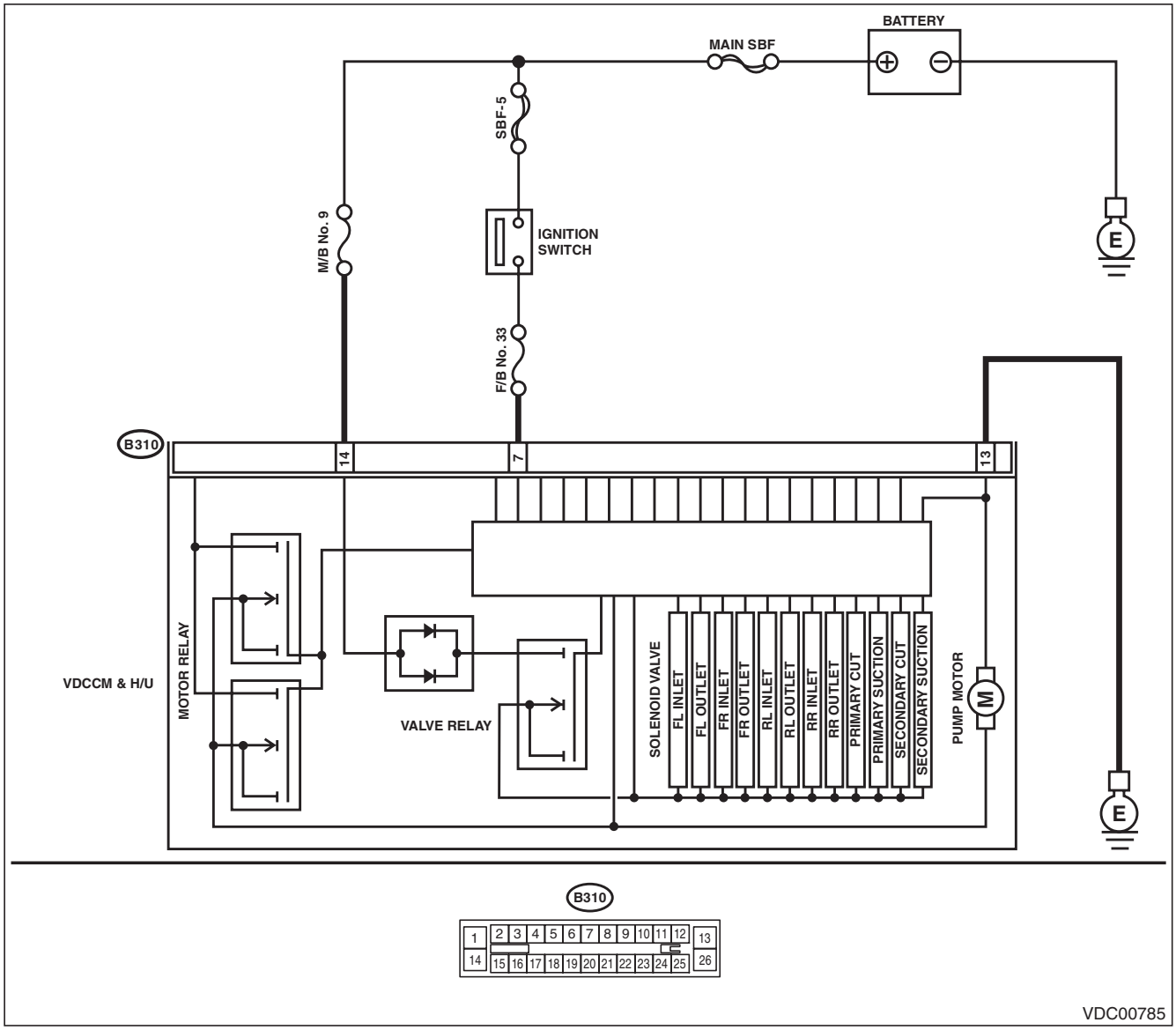

GETtheMANUALS.org

	Step	Check	Yes	No
1	**CHECK VDCCM&H/U INPUT VOLTAGE.** 1) Turn the ignition switch to OFF. 2) Disconnect the connector from the VDCCM&H/U. 3) Run the engine at idle. 4) Measure the voltage between VDCCM&H/U connector and chassis ground. ***Connector & terminal*** ***(B310) No. 7 (+) — Chassis ground (–):*** ***(B310) No. 14 (+) — Chassis ground (–):***	Is the voltage 10 — 15 V?	Go to step **2**.	Repair the power supply circuit.
2	**CHECK VDCCM&H/U INPUT VOLTAGE.** Calculate the voltage difference measured in step 1. A: (B310) No. 7 (+) — Chassis ground (–): B: (B310) No. 14 (+) — Chassis ground (–):	Is the voltage difference between A and B 2 V or more?	Repair the power supply circuit.	Go to step **3**.
3	**CHECK INSTALLATION OF VDCCM&H/U GROUND.**	Is the VDCCM&H/U ground terminal installation bolt tightened to 13 N·m (1.3 kgf-m, 9.6 ft-lb)?	Go to step **4**.	Tighten the VDCCM&H/U ground terminal installation bolt.
4	**CHECK VDCCM&H/U GROUND CIRCUIT.** 1) Turn the ignition switch to OFF. 2) Measure the resistance between VDCCM&H/U connector and chassis ground. ***Connector & terminal*** ***(B310) No. 13 — Chassis ground:***	Is the resistance less than 10 Ω?	Go to step **5**.	Repair the VDCCM&H/U ground harness.
5	**CHECK VDCCM&H/U VALVE RELAY.** Measure the resistance between VDCCM&H/U connector terminals. ***Connector & terminal*** ***(B310) No. 14 — (B310) No. 13:***	Is the resistance 1 MΩ or more?	Go to step **6**.	Replace the VDCCM&H/U. <Ref. to VDC-9, VDC Control Module and Hydraulic Control Unit (VDCCM&H/U).>
6	**CHECK POOR CONTACT OF CONNECTORS.**	Is there poor contact of connector between generator, battery and VDCCM&H/U?	Repair the connector.	Go to step **7**.
7	**CHECK VDCCM&H/U.** 1) Connect all connectors. 2) Clear the memory. <Ref. to VDC(diag)-25, Clear Memory Mode.> 3) Perform the Inspection Mode. <Ref. to VDC(diag)-24, Inspection Mode.> 4) Read the DTC.	Is the same DTC displayed?	Replace the VDCCM&H/U. <Ref. to VDC-9, VDC Control Module and Hydraulic Control Unit (VDCCM&H/U).>	Go to step **8**.
8	**CHECK OTHER DTC DETECTION.**	Is any other DTC displayed?	Perform the diagnosis according to DTC. <Ref. to VDC(diag)-35, List of Diagnostic Trouble Code (DTC).>	Temporary poor contact occurs.

GETtheMANUALS.org

AE:DTC C0052 MOTOR MALFUNCTION

DTC DETECTING CONDITION:

- Defective motor and motor relay
- Defective harness connector

TROUBLE SYMPTOM:

- ABS does not operate.
- VDC does not operate.
- EBD may not operate.
- Hill start assist does not operate.

WIRING DIAGRAM:

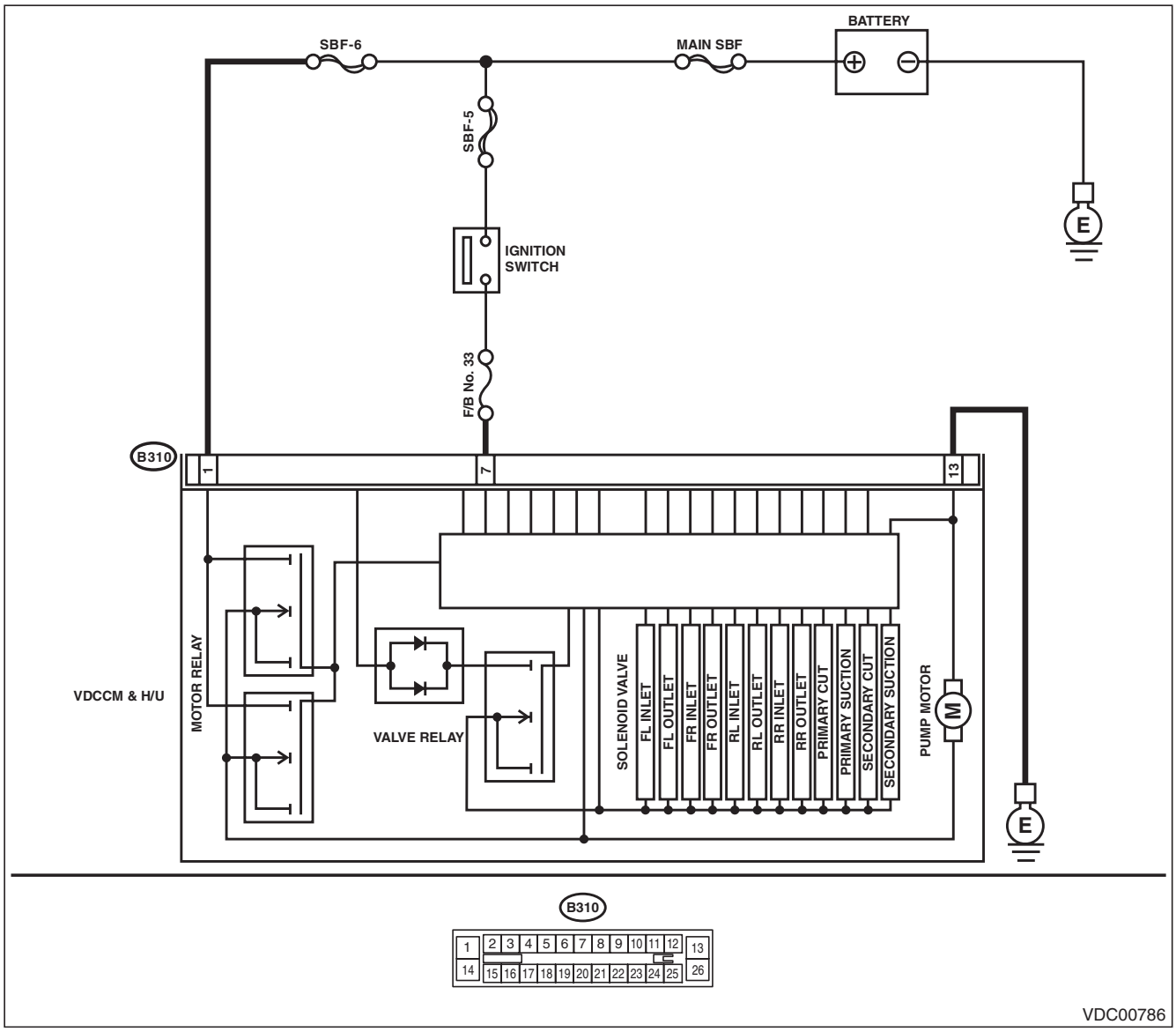

GETtheMANUALS.org

	Step	Check	Yes	No
1	**CHECK VDCCM&H/U INPUT VOLTAGE.** 1) Turn the ignition switch to OFF. 2) Disconnect the connector from the VDCCM&H/U. 3) Turn the ignition switch to ON. 4) Measure the voltage between VDCCM&H/U connector and chassis ground. ***Connector & terminal*** ***(B310) No. 1 (+) — Chassis ground (–):*** ***(B310) No. 7 (+) — Chassis ground (–):***	Is the voltage 10 — 15 V?	Go to step **2**.	Repair the VDCCM&H/U power supply circuit.
2	**CHECK VDCCM&H/U INPUT VOLTAGE.** Calculate the voltage difference measured in step 1. A: (B310) No. 1 (+) — Chassis ground (–): B: (B310) No. 7 (+) — Chassis ground (–):	Is the voltage difference between A and B 2 V or more?	Repair the power supply circuit.	Go to step **3**.
3	**CHECK INSTALLATION OF VDCCM&H/U GROUND.**	Is the VDCCM&H/U ground terminal installation bolt tightened to 13 N·m (1.3 kgf-m, 9.6 ft-lb)?	Go to step **4**.	Tighten the VDCCM&H/U ground terminal installation bolt.
4	**CHECK VDCCM&H/U GROUND CIRCUIT.** 1) Turn the ignition switch to OFF. 2) Measure the resistance between VDCCM&H/U connector and chassis ground. ***Connector & terminal*** ***(B310) No. 13 — Chassis ground:***	Is the resistance less than 10 Ω?	Go to step **5**.	Repair the VDCCM&H/U ground harness.
5	**CHECK VDCCM&H/U MOTOR RELAY.** Measure the resistance between VDCCM&H/U connector terminals. ***Connector & terminal*** ***(B310) No. 1 — (B310) No. 13:***	Is the resistance 1 MΩ or more?	Go to step **6**.	Replace the VDCCM&H/U. <Ref. to VDC-9, VDC Control Module and Hydraulic Control Unit (VDCCM&H/U).>
6	**CHECK POOR CONTACT OF CONNECTORS.** Turn the ignition switch to OFF.	Is there poor contact of connector between generator, battery and VDCCM&H/U?	Repair the connector.	Go to step **7**.
7	**CHECK VDCCM&H/U.** 1) Connect all connectors. 2) Clear the memory. <Ref. to VDC(diag)-25, Clear Memory Mode.> 3) Perform the Inspection Mode. <Ref. to VDC(diag)-24, Inspection Mode.> 4) Read the DTC.	Is the same DTC displayed?	Replace the VDCCM&H/U. <Ref. to VDC-9, VDC Control Module and Hydraulic Control Unit (VDCCM&H/U).>	Go to step **8**.

GETtheMANUALS.org

Step	Check	Yes	No
8 CHECK OTHER DTC DETECTION.	Is any other DTC displayed?	Perform the diagnosis according to DTC. <Ref. to VDC(diag)-35, List of Diagnostic Trouble Code (DTC).>	Temporary poor contact occurs. NOTE: Though the ABS warning light, and the VDC warning light & VDC indicator light remain lit at this point, this is normal. Drive the vehicle at 12 km/h (7 MPH) or more in order to turn off the ABS warning light, and the VDC warning light & VDC indicator light. Be sure to drive the vehicle and check that the warning light goes off.

GETtheMANUALS.org

AF:DTC C0054 BLS OFF MALFUNCTION

DTC DETECTING CONDITION:

Defective stop light switch

TROUBLE SYMPTOM:

- VDC does not operate.
- Hill start assist does not operate.

WIRING DIAGRAM:

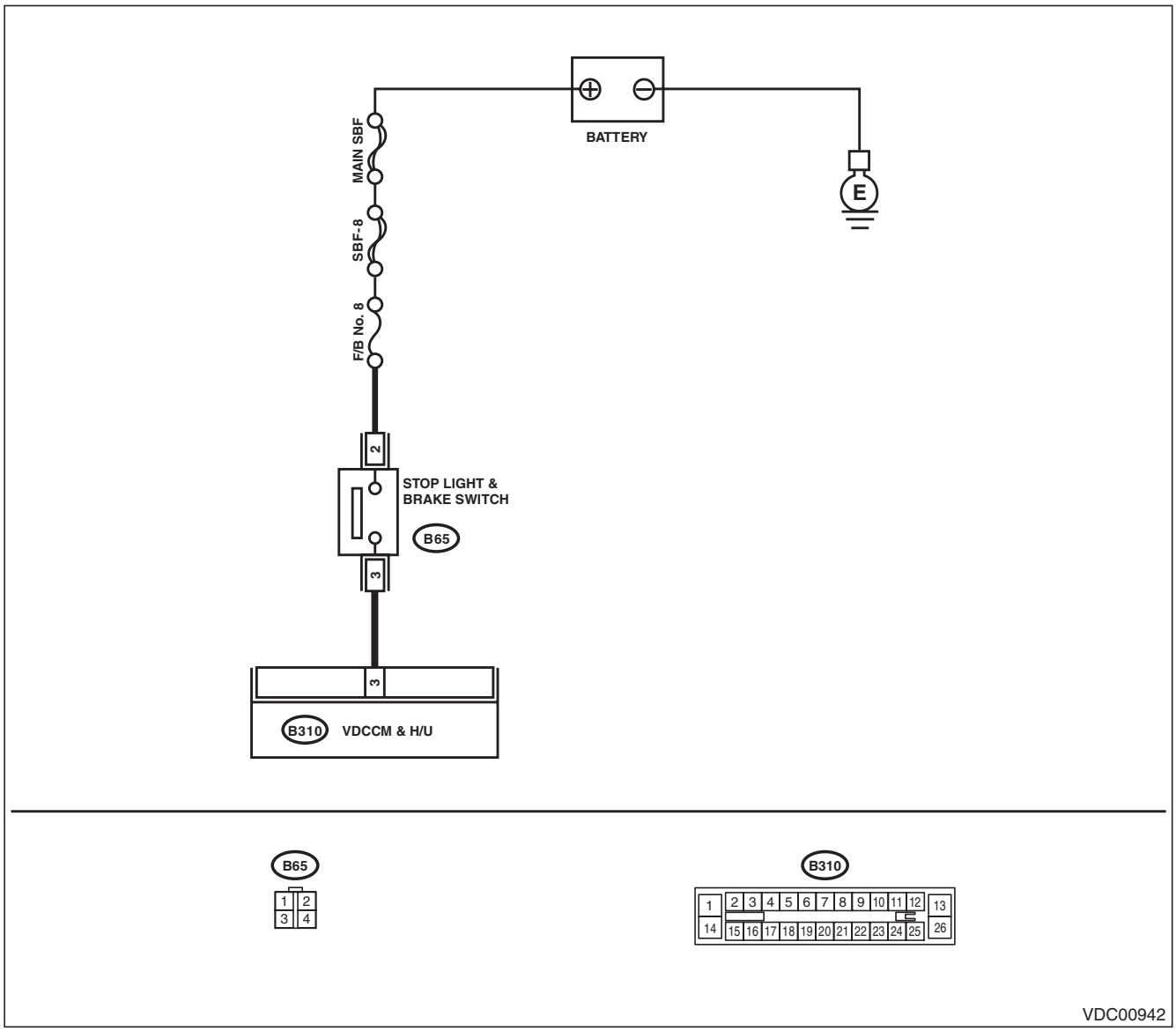

Step		Check	Yes	No
1	**CHECK STOP LIGHT SWITCH.** 1) Turn the ignition switch to OFF. 2) Disconnect the stop light switch connector. 3) Measure the resistance of stop light switch terminals. ***Connector & terminal (B65) No. 2 — No. 3:***	Is the resistance 1 Ω or less when the switch is ON (when pedal is depressed)?	Go to step **2**.	Replace the stop light switch. <Ref. to BR-64, Stop Light Switch.>

GETtheMANUALS.org

Step		Check	Yes	No
2	**CHECK STOP LIGHT POWER SUPPLY.** Measure the voltage between stop light switch terminal and chassis ground. ***Connector & terminal*** ***(B65) No. 2 (+) — Chassis ground (–):***	Is the voltage 10 — 15 V?	Go to step **3**.	Repair the stop light power supply circuit.
3	**CHECK STOP LIGHT SWITCH HARNESS.** 1) Disconnect the connector from the VDCCM&H/U. 2) Measure the resistance between VDCCM&H/U and stop light switch. ***Connector & terminal*** ***(B65) No. 3 — (B310) No. 3:***	Is the resistance less than 1 Ω?	Go to step **4**.	Repair the stop light switch circuit.
4	**CHECK POOR CONTACT OF CONNECTORS.**	Is there poor contact of connector between stop light switch and VDCCM&H/U?	Repair the connector.	Go to step **5**.
5	**CHECK VDCCM&H/U.** 1) Connect all connectors. 2) Clear the memory. <Ref. to VDC(diag)-25, Clear Memory Mode.> 3) Perform the Inspection Mode. <Ref. to VDC(diag)-24, Inspection Mode.> 4) Read the DTC.	Is the same DTC displayed?	Replace the VDCCM&H/U. <Ref. to VDC-9, VDC Control Module and Hydraulic Control Unit (VDCCM&H/U).>	Go to step **6**.
6	**CHECK OTHER DTC DETECTION.**	Is any other DTC displayed?	Perform the diagnosis according to DTC. <Ref. to VDC(diag)-35, List of Diagnostic Trouble Code (DTC).>	Temporary poor contact occurs.

GETtheMANUALS.org

AG:DTC C0054 BLS ON MALFUNCTION

DTC DETECTING CONDITION:

Defective stop light switch

TROUBLE SYMPTOM:

- VDC does not operate.
- Hill start assist does not operate.

WIRING DIAGRAM:

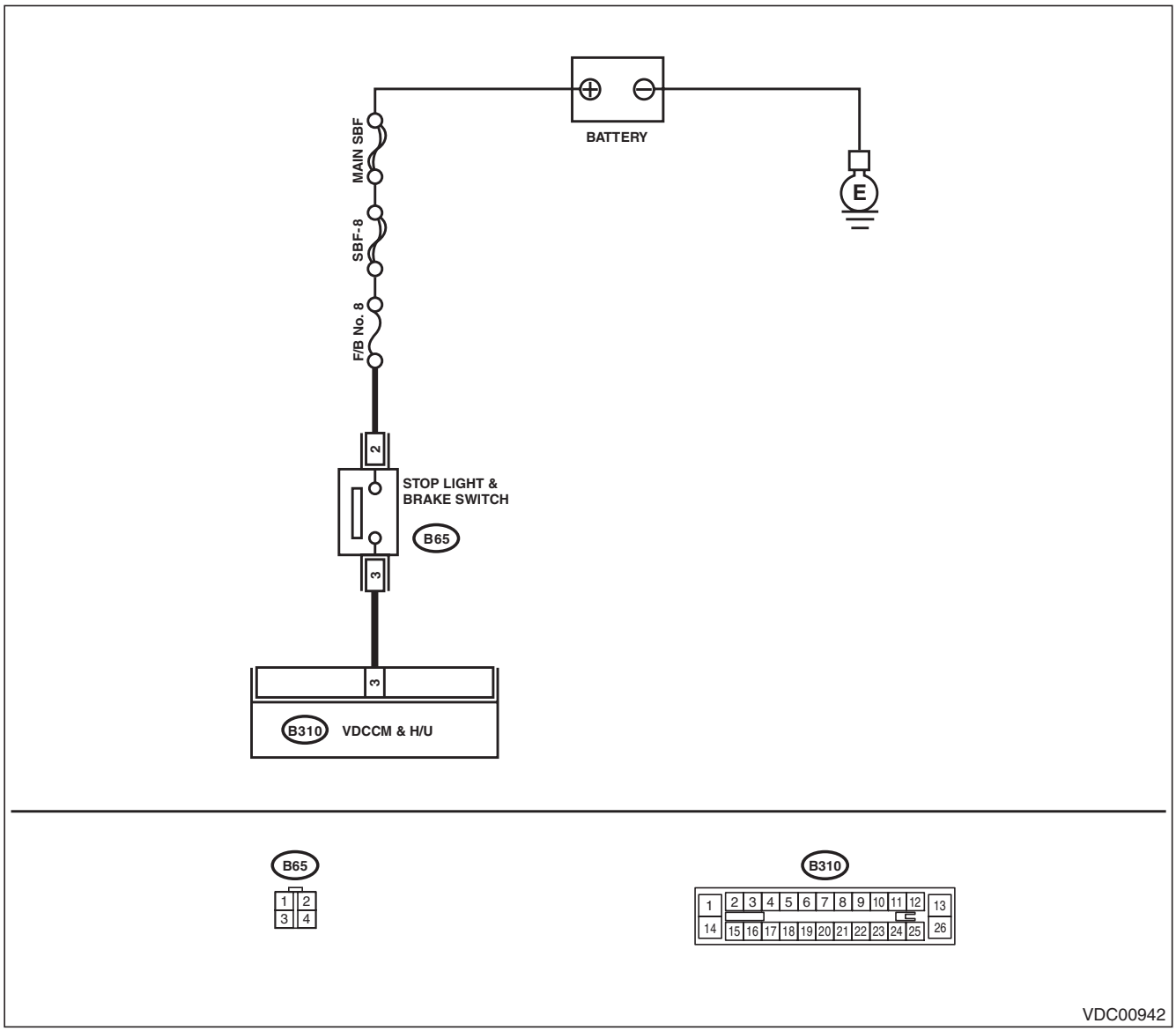

Step		Check	Yes	No
1	**CHECK STOP LIGHT SWITCH.** 1) Turn the ignition switch to OFF. 2) Disconnect the stop light switch connector. 3) Measure the resistance of stop light switch terminals. ***Connector & terminal (B65) No. 2 — No. 3:***	Is the resistance 1 MΩ or more when switch is OFF (when pedal is not depressed)?	Go to step **2**.	Replace the stop light switch. <Ref. to BR-64, Stop Light Switch.>

GETtheMANUALS.org

Step		Check	Yes	No
2	**CHECK STOP LIGHT SWITCH HARNESS.** 1) Disconnect the connector from the VDCCM&H/U. 2) Measure the resistance between VDCCM&H/U connector and chassis ground. ***Connector & terminal*** ***(B310) No. 3 — Chassis ground:***	Is the resistance less than 1 MΩ?	Go to step **3**.	Repair the stop light switch circuit.
3	**INTERVIEW CUSTOMERS.** Make sure that the operation was performed in which accelerator pedal and brake pedal were depressed simultaneously (with depressing brake pedal with left foot).	Were the acceleration pedal and brake pedal depressed simultaneously?	System is normal. (DTC may be recorded while brake is applied during driving.)	Go to step **4**.
4	**CHECK VDCCM&H/U.** 1) Connect all connectors. 2) Clear the memory. <Ref. to VDC(diag)-25, Clear Memory Mode.> 3) Perform the Inspection Mode. <Ref. to VDC(diag)-24, Inspection Mode.> 4) Read the DTC.	Is the same DTC displayed?	Replace the VDCCM&H/U. <Ref. to VDC-9, VDC Control Module and Hydraulic Control Unit (VDCCM&H/U).>	Go to step **5**.
5	**CHECK OTHER DTC DETECTION.**	Is any other DTC displayed?	Perform the diagnosis according to DTC. <Ref. to VDC(diag)-35, List of Diagnostic Trouble Code (DTC).>	Temporary poor contact occurs.

AH:DTC C0056 G SENSOR ABNORMAL

DTC DETECTING CONDITION:
Longitudinal G sensor signal failure
TROUBLE SYMPTOM:
- ABS does not operate.
- VDC does not operate.
- Hill start assist does not operate.

NOTE:
For the diagnostic procedure, refer to “DTC C0056 G SENSOR SIGNAL”. <Ref. to VDC(diag)-71, DTC C0056 G SENSOR SIGNAL, Diagnostic Procedure with Diagnostic Trouble Code (DTC).>

GETtheMANUALS.org

AI: DTC C0056 G SENSOR SIGNAL

DTC DETECTING CONDITION:
Longitudinal G sensor signal failure
TROUBLE SYMPTOM:
- ABS does not operate.
- VDC does not operate.
- Hill start assist does not operate.

Step		Check	Yes	No
1	**CHECK INSTALLATION OF VDCCM&H/U.**	Is VDCCM&H/U installed properly without being tilted? Is the bracket deformation-free? Are the VDCCM&H/U installation bolts installed without missing or getting loose?	Go to step **2**.	Repair the fault location. Go to step **2**. • Install VDCCM&H/U properly. • Replace the bracket if faulty. • Tighten the VDCCM&H/U installation bolt. <Ref. to VDC-5, VDC CONTROL MODULE & HYDRAULIC CONTROL UNIT (VDCCM&H/U), COMPONENT, General Description.>
2	**CHECK OUTPUT OF LONGITUDINAL G SENSOR USING SUBARU SELECT MONITOR.** 1) Park the vehicle on a level surface. 2) Connect Subaru Select Monitor, and select {Current Data Display & Save}. 3) Read the «Fr Rr G sensor Output» displayed on display.	Is the indicated reading of the longitudinal G sensor on the monitor display –2 — 2 m/s^2?	Go to step **3**.	Recheck from step 1, and if the problem is not solved, go to next. Go to step **6**.
3	**SET 0 POINT FOR LONGITUDINAL G SENSOR USING SUBARU SELECT MONITOR.** 1) Select “Function Check Sequence” on Subaru Select Monitor. 2) Perform the “Longitudinal G sensor & lateral G sensor 0 point setting mode”. <Ref. to VDC-16, LONGITUDINAL G SENSOR & LATERAL G SENSOR 0 POINT SETTING MODE, ADJUSTMENT, VDC Control Module and Hydraulic Control Unit (VDCCM&H/U).>	Is the 0 point setting successful?	Go to step **4**.	Recheck from step 1, and when the 0 point setting is not possible, replace the VDCCM&H/U. <Ref. to VDC-9, VDC Control Module and Hydraulic Control Unit (VDCCM&H/U).>
4	**DRIVING INSPECTION.** Drive approximately 10 minutes, and check if the warning lights illuminate or improperly operate during driving. In a safe place, drive the vehicle while alternating acceleration and deceleration as much as possible.	Did the ABS warning light or VDC warning light remain off? Does ABS or VDC operate without malfunction?	Go to step **5**.	Recheck from step 1, and when the warning lights illuminate or improperly operate, replace the VDCCM&H/U. <Ref. to VDC-9, VDC Control Module and Hydraulic Control Unit (VDCCM&H/U).>

GETthemANUALS.org

Step		Check	Yes	No
5	**CHECK OUTPUT OF LONGITUDINAL G SENSOR USING SUBARU SELECT MONITOR.** 1) Park the vehicle on a level surface. 2) Connect Subaru Select Monitor, and select {Current Data Display & Save}. 3) Read the «Fr Rr G sensor Output» displayed on display.	Is the indicated reading of the longitudinal G sensor on the monitor display –1.5 — 1.5 m/s^2?	End. It results from a temporary noise interference.	Recheck from step 1, and if the problem is not solved, replace the VDCCM&H/U. <Ref. to VDC-9, VDC Control Module and Hydraulic Control Unit (VDCCM&H/U).>
6	**CHECK OUTPUT OF LONGITUDINAL G SENSOR USING SUBARU SELECT MONITOR.** 1) Remove the VDCCM&H/U installation bolt and bracket. 2) Keep VDCCM&H/U in a horizontal position. 3) Connect Subaru Select Monitor, and select {Current Data Display & Save}. 4) Read the «Fr Rr G sensor Output» displayed on display.	When the VDCCM&H/U is in a horizontal position, is the indicated reading of the longitudinal G sensor on the monitor display –1.5 — 1.5 m/s^2?	Check the bracket and brake pipe, and install VDCCM&H/U in a horizontal position to the vehicle.	Replace the VDCCM&H/U. <Ref. to VDC-9, VDC Control Module and Hydraulic Control Unit (VDCCM&H/U).>

GETtheMANUALS.org

AJ:DTC C0057 ECM COMMUNICATION CIRCUIT

DTC DETECTING CONDITION:

No CAN signal from ECM.

TROUBLE SYMPTOM:

- VDC does not operate.
- Hill start assist does not operate.

Step		Check	Yes	No
1	**CHECK LAN SYSTEM.** Perform the diagnosis for LAN system. <Ref. to LAN(diag)-2, Basic Diagnostic Procedure.>	Is there any fault in LAN system?	Perform the diagnosis according to DTC for LAN system. <Ref. to LAN(diag)-32, List of Diagnostic Trouble Code (DTC).>	Go to step **2**.
2	**CHECK POOR CONTACT OF CONNECTORS.**	Is there poor contact of ECM connector?	Repair the connector.	Go to step **3**.
3	**CHECK ECM.** Refer to the basic diagnostic procedure for each engine (diagnostics).	Is ECM normal?	Go to step **4**.	Replace the ECM. <Ref. to FU(H4SO)-46, Engine Control Module (ECM).> <Ref. to FU(H4DOTC)-58, Engine Control Module (ECM).> <Ref. to FU(H6DO)-54, Engine Control Module (ECM).>
4	**CHECK VDCCM&H/U.** 1) Connect all connectors. 2) Clear the memory. <Ref. to VDC(diag)-25, Clear Memory Mode.> 3) Perform the Inspection Mode. <Ref. to VDC(diag)-24, Inspection Mode.> 4) Read the DTC.	Is the same DTC displayed?	Replace the VDCCM&H/U. <Ref. to VDC-9, VDC Control Module and Hydraulic Control Unit (VDCCM&H/U).>	Go to step **5**.
5	**CHECK OTHER DTC DETECTION.**	Is any other DTC displayed?	Perform the diagnosis according to DTC. <Ref. to VDC(diag)-35, List of Diagnostic Trouble Code (DTC).>	It results from a temporary noise interference.

GETtheMANUALS.org

AK:DTC C0057 ECM CONTROL SYSTEM

DTC DETECTING CONDITION:

ECM malfunctioning

TROUBLE SYMPTOM:

- VDC does not operate.
- Hill start assist does not operate.

	Step	Check	Yes	No
1	**CHECK COOPERATION CONTROL FEASIBILITY OF ECM USING SUBARU SELECT MONITOR.** 1) Start the engine, and run the engine at idle approximately 5 minutes. 2) Connect Subaru Select Monitor, and select “Current Data Display & Save”. 3) Check the «E/G Control Stop Flag» displayed on screen.	Is the «E/G Control Stop Flag» “1”?	Go to step **4**.	Go to step **2**.
2	**CHECK WARNING LIGHT.** Check whether the VDC warning light illuminates after driving for 1 minute or more at a speed of 10 km/h or more.	Does the VDC warning light illuminate?	Go to step **3**.	VDC is normal. Perform the Clear Memory Mode. NOTE: DTC may be recorded if cranking is performed during driving.
3	**CHECK POOR CONTACT OF CONNECTORS.**	Is there poor contact of ECM connector?	Repair the connector.	Go to step **4**.
4	**CHECK ECM.** Refer to the basic diagnostic procedure for each engine (diagnostics).	Is ECM normal?	Go to step **5**.	Replace the ECM. <Ref. to FU(H4SO)-46, Engine Control Module (ECM).> <Ref. to FU(H4DOTC)-58, Engine Control Module (ECM).> <Ref. to FU(H6DO)-54, Engine Control Module (ECM).>
5	**CHECK VDCCM&H/U.** 1) Connect all connectors. 2) Clear the memory. <Ref. to VDC(diag)-25, Clear Memory Mode.> 3) Perform the Inspection Mode. <Ref. to VDC(diag)-24, Inspection Mode.> 4) Read the DTC.	Is the same DTC displayed?	Replace the VDCCM&H/U. <Ref. to VDC-9, VDC Control Module and Hydraulic Control Unit (VDCCM&H/U).>	Go to step **6**.
6	**CHECK OTHER DTC DETECTION.**	Is any other DTC displayed?	Perform the diagnosis according to DTC. <Ref. to VDC(diag)-35, List of Diagnostic Trouble Code (DTC).>	It results from a temporary noise interference.

GETtheMANUALS.org

AL:DTC C0057 VDC INTERRUPTED DUE TO EGI REASON

DTC DETECTING CONDITION:
ECM prohibits the cooperation control.
TROUBLE SYMPTOM:
- VDC does not operate.
- Hill start assist does not operate.

NOTE:
- For the diagnostic procedure, refer to “DTC C0057 ECM CONTROL SYSTEM”. <Ref. to VDC(diag)-74, DTC C0057 ECM CONTROL SYSTEM, Diagnostic Procedure with Diagnostic Trouble Code (DTC).>
- Warning lights go off if the cooperation control of ECM returns.

GETtheMANUALS.org

AM:DTC C0071 NO SIGNAL FROM STEERING ANGLE SENSOR

DTC DETECTING CONDITION:

Communication from steering angle sensor is faulty.

TROUBLE SYMPTOM:

- VDC does not operate.
- Hill start assist does not operate.

WIRING DIAGRAM:

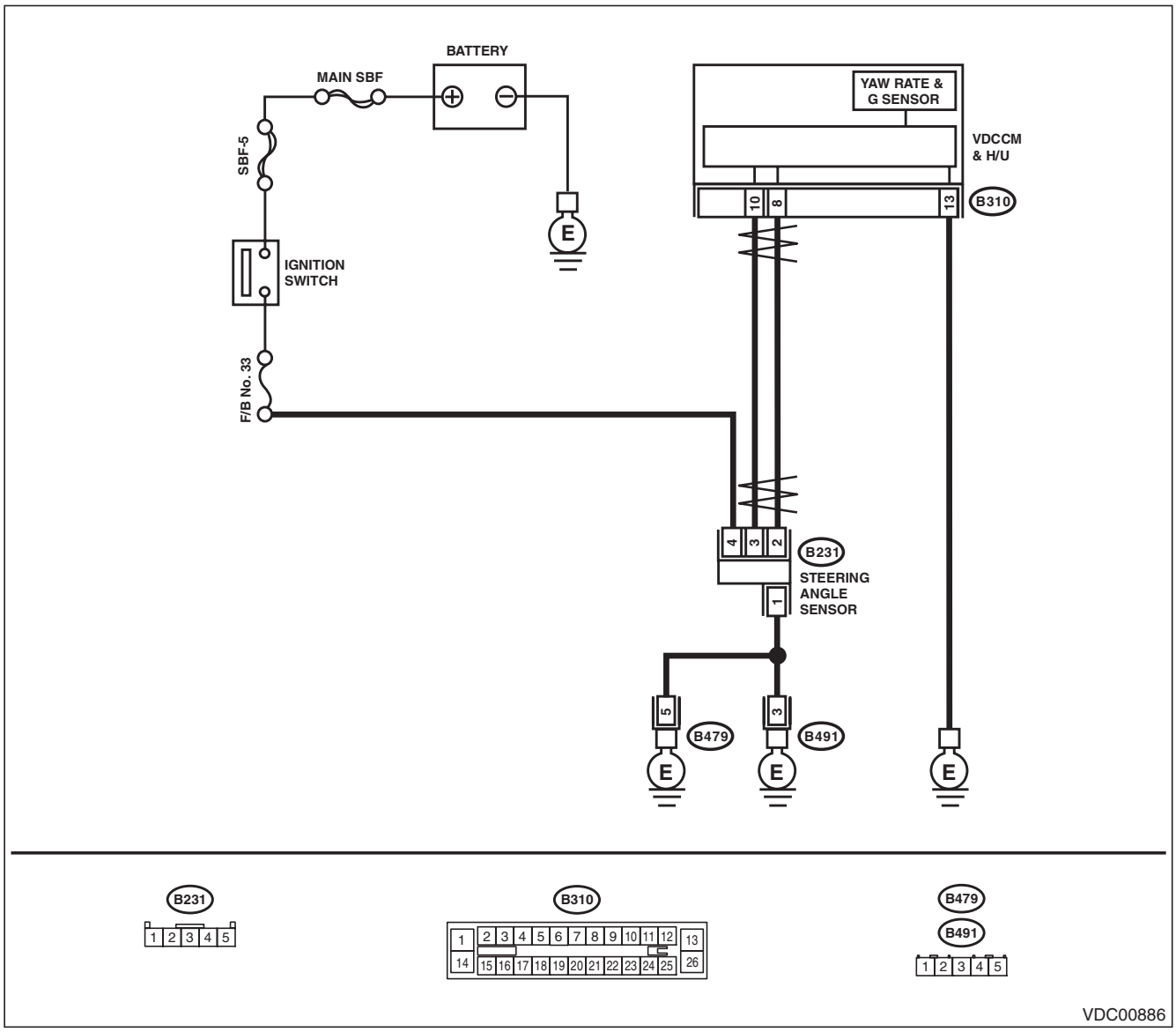

Step		Check	Yes	No
1	**CHECK POWER SUPPLY FOR STEERING ANGLE SENSOR.** 1) Turn the ignition switch to OFF. 2) Disconnect the connector from steering angle sensor. 3) Turn the ignition switch to ON. 4) Measure the voltage between steering angle sensor and chassis ground. ***Connector & terminal*** ***(B231) No. 4 (+) — Chassis ground (–):***	Is the voltage 10 — 15 V?	Go to step **2**.	Repair the steering angle sensor power supply circuit.

GETtheMANUALS.org

	Step	Check	Yes	No
2	**CHECK GROUND CIRCUIT OF STEERING ANGLE SENSOR.** Measure the resistance between steering angle sensor and chassis ground. ***Connector & terminal*** ***(B231) No. 1 — Chassis ground:***	Is the resistance less than 10 Ω?	Go to step **3**.	Repair ground circuit in the steering angle sensor.
3	**CHECK STEERING ANGLE SENSOR.** 1) Turn the ignition switch to OFF. 2) Connect all connectors. 3) Clear the memory. <Ref. to VDC(diag)-25, Clear Memory Mode.> 4) Perform the Inspection Mode. <Ref. to VDC(diag)-24, Inspection Mode.> 5) Read the DTC.	Is the same DTC displayed?	Go to step **4**.	Go to step **5**.
4	**CHECK VDCCM&H/U.** 1) Turn the ignition switch to OFF. 2) Replace the steering angle sensor. <Ref. to VDC-24, Steering Angle Sensor.> 3) Clear the memory. <Ref. to VDC(diag)-25, Clear Memory Mode.> 4) Perform the Inspection Mode. <Ref. to VDC(diag)-24, Inspection Mode.> 5) Read the DTC.	Is the same DTC displayed?	Replace the VDCCM&H/U. <Ref. to VDC-9, VDC Control Module and Hydraulic Control Unit (VDCCM&H/U).>	Go to step **6**.
5	**CHECK OTHER DTC DETECTION.**	Is any other DTC displayed?	Perform the diagnosis according to DTC. <Ref. to VDC(diag)-35, List of Diagnostic Trouble Code (DTC).>	Temporary poor contact occurs. Though VDC warning light may remain lit, this is normal. Warning light goes off when the vehicle is driven at 12 km/h (7 MPH) or more.
6	**CHECK OTHER DTC DETECTION.**	Is any other DTC displayed?	Perform the diagnosis according to DTC. <Ref. to VDC(diag)-35, List of Diagnostic Trouble Code (DTC).>	Original steering angle sensor malfunction

GETtheMANUALS.org

AN:DTC C0071 STEER ANGLE SENSOR OP

DTC DETECTING CONDITION:

Steering angle sensor output is faulty.

TROUBLE SYMPTOM:

- VDC does not operate.
- Hill start assist does not operate.

WIRING DIAGRAM:

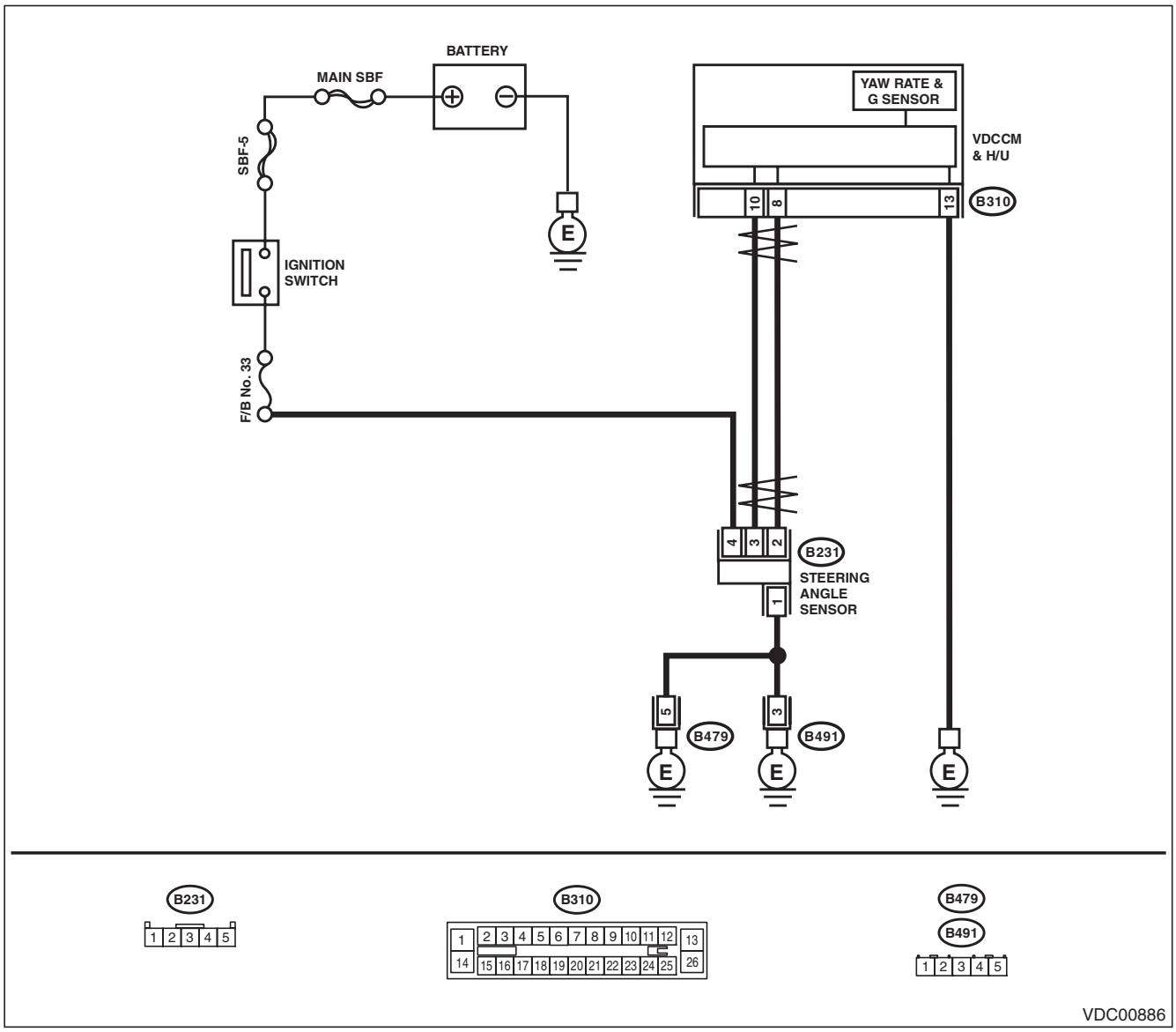

Step		Check	Yes	No
1	**CHECK POWER SUPPLY FOR STEERING ANGLE SENSOR.** 1) Turn the ignition switch to OFF. 2) Disconnect the connector from steering angle sensor. 3) Turn the ignition switch to ON. 4) Measure the voltage between steering angle sensor and chassis ground. ***Connector & terminal*** ***(B231) No. 4 (+) — Chassis ground (–):***	Is the voltage 10 — 15 V?	Go to step **2**.	Repair the steering angle sensor power supply circuit.

GETtheMANUALS.org

	Step	Check	Yes	No
2	**CHECK GROUND CIRCUIT OF STEERING ANGLE SENSOR.** Measure the resistance between steering angle sensor and chassis ground. ***Connector & terminal*** ***(B231) No. 1 — Chassis ground:***	Is the resistance less than 10 Ω?	Go to step **3**.	Repair ground circuit in the steering angle sensor.
3	**CHECK STEERING ANGLE SENSOR HARNESS.** 1) Disconnect the connector from the VDCCM&H/U. 2) Measure the resistance between VDCCM&H/U and steering angel sensor. ***Connector & terminal*** ***(B231) No. 2 — (B310) No. 8:*** ***(B231) No. 3 — (B310) No. 10:***	Is the resistance less than 1 Ω?	Go to step **4**.	Repair the harness between the steering angle sensor and VDCCM&H/U.
4	**CHECK GROUND SHORT CIRCUIT OF STEERING ANGLE SENSOR HARNESS.** Measure the resistance between steering angle sensor and chassis ground. ***Connector & terminal*** ***(B231) No. 2 — Chassis ground:*** ***(B231) No. 3 — Chassis ground:***	Is the resistance 1 MΩ or more?	Go to step **5**.	Repair the harness between the steering angle sensor and VDCCM&H/U.
5	**CHECK STEERING WHEEL.** 1) Drive the vehicle on a flat road. 2) Park the vehicle straight. 3) Check the steering wheel for deviation from center.	Is the deviation from the center of steering wheel less than 5°?	Go to step **6**.	Perform the centering adjustment of steering wheel, and perform Set up mode for Neutral of Steering Angle Sensor & Lateral G Sensor 0 point. <Ref. to VDC-16, SET UP MODE FOR NEUTRAL OF STEERING ANGLE SENSOR & LATERAL G SENSOR 0 POINT, ADJUSTMENT, VDC Control Module and Hydraulic Control Unit (VDCCM&H/U).>
6	**CHECK OUTPUT OF STEERING ANGLE SENSOR USING SUBARU SELECT MONITOR.** 1) Adjust steering wheel to the center position. 2) Connect Subaru Select Monitor, and select {Current Data Display & Save}. 3) Read the «Steer Angle Sensor Op» displayed on display.	Is the indicated reading of the «Steer Angle Sensor Op» on the monitor display –10° — 10°?	Perform Set up mode for Neutral of Steering Angle Sensor & Lateral G Sensor 0 point. Go to step **7**. <Ref. to VDC-16, SET UP MODE FOR NEUTRAL OF STEERING ANGLE SENSOR & LATERAL G SENSOR 0 POINT, ADJUSTMENT, VDC Control Module and Hydraulic Control Unit (VDCCM&H/U).>	Check the installation of the steering wheel and steering angle sensor.

GETtheMANUALS.org

Step		Check	Yes	No
7	**CHECK STEERING ANGLE SENSOR USING SUBARU SELECT MONITOR.** 1) Turn the ignition switch to OFF. 2) Connect all connectors. 3) Clear the memory. <Ref. to VDC(diag)-25, Clear Memory Mode.> 4) Perform the Inspection Mode. <Ref. to VDC(diag)-24, Inspection Mode.> 5) Read the DTC.	Is the same DTC displayed?	Go to step **8**.	Go to step **9**.
8	**CHECK VDCCM&H/U.** 1) Turn the ignition switch to OFF. 2) Replace the steering angle sensor. <Ref. to VDC-24, Steering Angle Sensor.> 3) Clear the memory. <Ref. to VDC(diag)-25, Clear Memory Mode.> 4) Perform the Inspection Mode. <Ref. to VDC(diag)-24, Inspection Mode.> 5) Read the DTC.	Is the same DTC displayed?	Replace the VDCCM&H/U. <Ref. to VDC-9, VDC Control Module and Hydraulic Control Unit (VDCCM&H/U).>	Go to step **10**.
9	**CHECK OTHER DTC DETECTION.**	Is any other DTC displayed?	Perform the diagnosis according to DTC. <Ref. to VDC(diag)-35, List of Diagnostic Trouble Code (DTC).>	Temporary poor contact occurs. Though VDC warning light may remain lit, this is normal. Warning light goes off when the vehicle is driven at 12 km/h (7 MPH) or more.
10	**CHECK OTHER DTC DETECTION.**	Is any other DTC displayed?	Perform the diagnosis according to DTC. <Ref. to VDC(diag)-35, List of Diagnostic Trouble Code (DTC).>	Original steering angle sensor malfunction

GETtheMANUALS.org

AO:DTC C0072 ABNORMAL YAW RATE SENSOR OUTPUT

DTC DETECTING CONDITION:

Defective yaw rate sensor

TROUBLE SYMPTOM:

- VDC does not operate.
- Hill start assist does not operate.

WIRING DIAGRAM:

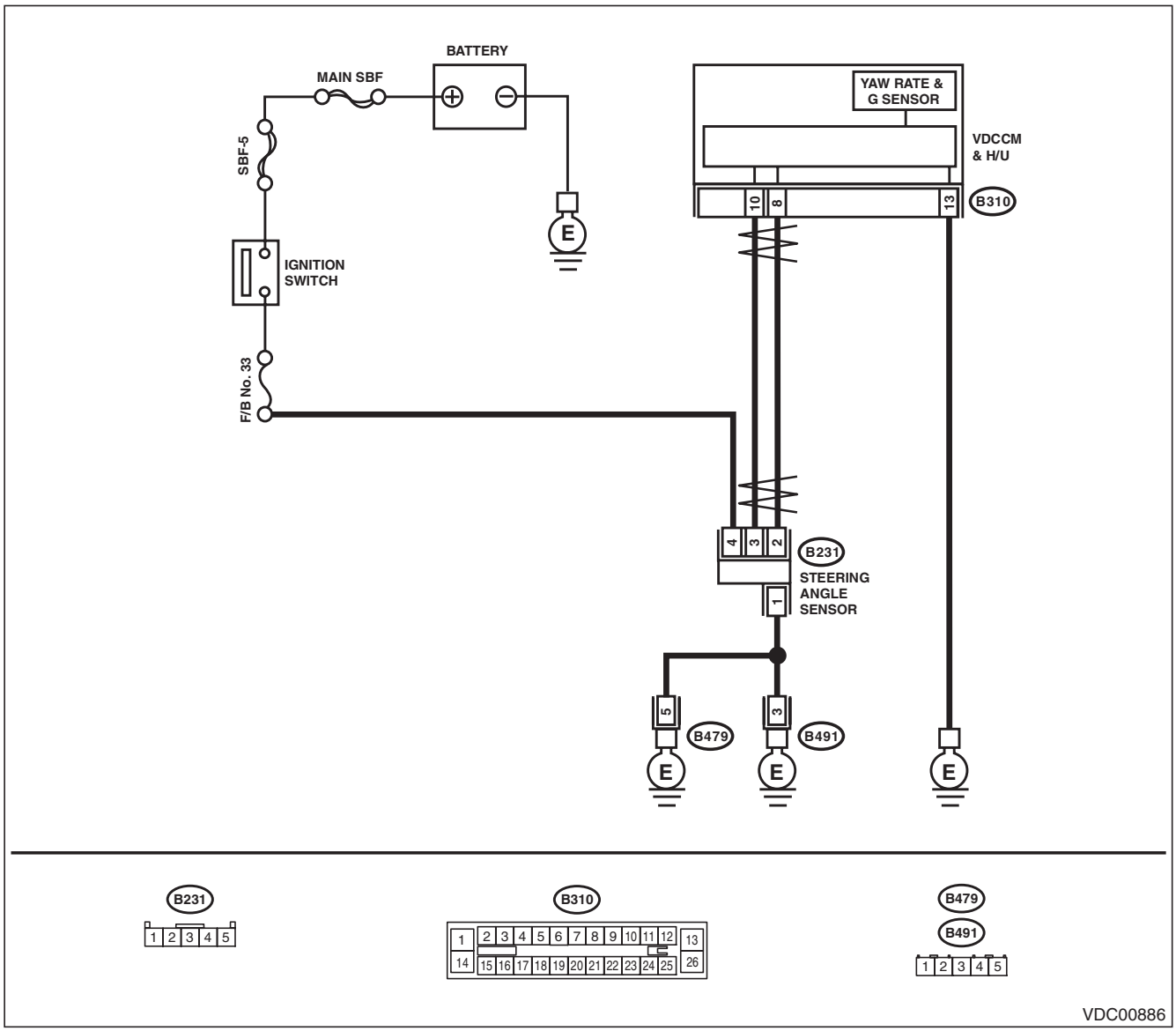

Step		Check	Yes	No
1	**INTERVIEW CUSTOMERS.** Check if the vehicle ran the road with banks or sandy surface (which does not mean a dirt road).	Did the vehicle run the road with banks or sandy surface (which does not mean a dirt road)?	VDCCM&H/U may record DTC when the vehicle ran the road with banks or sandy surface (which does not mean a dirt road).	Go to step **2**.

GETtheMANUALS.org

Step		Check	Yes	No
2	**CHECK INSTALLATION OF VDCCM&H/U.**	Is VDCCM&H/U installed properly without being tilted? Is the bracket deformation-free? Are the VDCCM&H/U installation bolts installed without missing or getting loose?	Go to step **3**.	Repair the fault location. Go to step **3**. • Install VDCCM&H/U properly. • Replace the bracket if faulty. • Tighten the VDCCM&H/U installation bolt. <Ref. to VDC-5, VDC CONTROL MODULE & HYDRAULIC CONTROL UNIT (VDCCM&H/U), COMPONENT, General Description.>
3	**CHECK OUTPUT OF YAW RATE & G SENSOR WITH SUBARU SELECT MONITOR.** 1) Drive the vehicle on a flat road. 2) Park the vehicle straight. 3) Select “Current Data Display & Save” on the Subaru Select Monitor. 4) Read the «Yaw Rate Sensor Output» displayed on display.	Is the reading indicated on monitor display –4 — 4 deg/s?	Go to step **4**.	Replace the VDCCM&H/U. <Ref. to VDC-9, VDC Control Module and Hydraulic Control Unit (VDCCM&H/U).>
4	**CHECK OUTPUT OF STEERING ANGLE SENSOR WITH SUBARU SELECT MONITOR.** 1) Drive the vehicle on a flat road. 2) Park the vehicle straight. 3) Select “Current Data Display & Save” on the Subaru Select Monitor. 4) Read the «Steer Angle Sensor Op» displayed on display.	Is the reading indicated on monitor display –5 — 5°?	Go to step **5**.	Perform the centering adjustment of steering wheel.
5	**CHECK VDCCM&H/U.** 1) Turn the ignition switch to OFF. 2) Clear the memory. <Ref. to VDC(diag)-25, Clear Memory Mode.> 3) Perform the Inspection Mode. <Ref. to VDC(diag)-24, Inspection Mode.> 4) Read the DTC.	Is the same DTC displayed?	Replace the VDCCM&H/U. <Ref. to VDC-9, VDC Control Module and Hydraulic Control Unit (VDCCM&H/U).>	Go to step **6**.
6	**CHECK OTHER DTC DETECTION.**	Is any other DTC displayed?	Perform the diagnosis according to DTC. <Ref. to VDC(diag)-35, List of Diagnostic Trouble Code (DTC).>	It results from a temporary noise interference. Though VDC warning light may remain lit, this is normal. Warning light goes off when the vehicle is driven at 12 km/h (7 MPH) or more.

GETthemMANUALS.org

AP:DTC C0073 LATERAL G SENSOR POWER/OUTPUT

NOTE:
For the diagnostic procedure, refer to “DTC C0073 ABNORMAL LATERAL G SENSOR OUTPUT”. <Ref. to VDC(diag)-84, DTC C0073 ABNORMAL LATERAL G SENSOR OUTPUT, Diagnostic Procedure with Diagnostic Trouble Code (DTC).>

GETtheMANUALS.org

AQ:DTC C0073 ABNORMAL LATERAL G SENSOR OUTPUT

DTC DETECTING CONDITION:

Defective lateral G sensor

TROUBLE SYMPTOM:

- VDC does not operate.
- Hill start assist does not operate.

WIRING DIAGRAM:

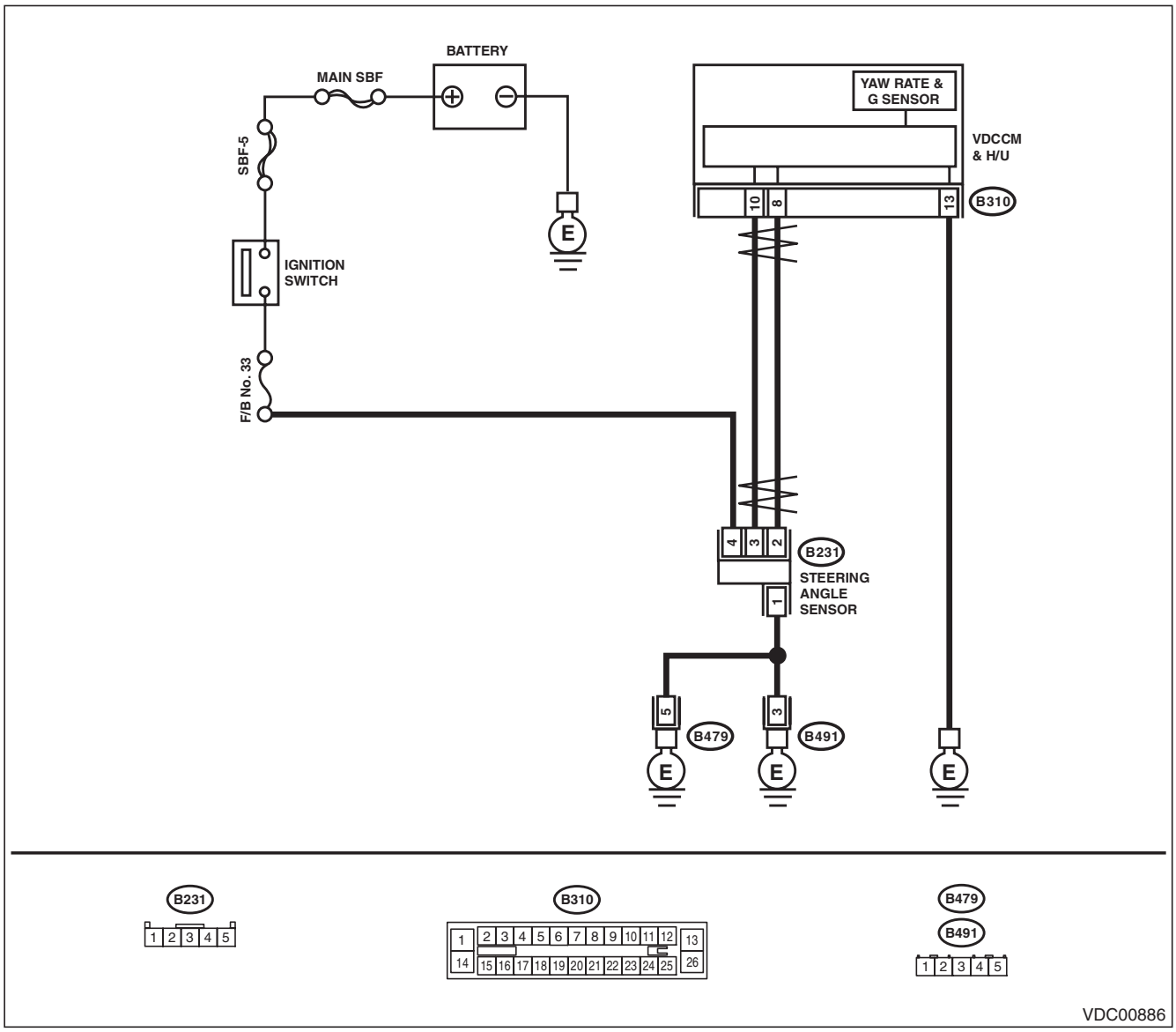

GETtheMANUALS.org

Step		Check	Yes	No
1	**CHECK INSTALLATION OF VDCCM&H/U.**	Is VDCCM&H/U installed properly without being tilted? Is the bracket deformation-free? Are the VDCCM&H/U installation bolts installed without missing or getting loose?	Go to step **2**.	Repair the fault location. Go to step **2**. • Install VDCCM&H/U properly. • Replace the bracket if faulty. • Tighten the VDCCM&H/U installation bolt. <Ref. to VDC-5, VDC CONTROL MODULE & HYDRAULIC CONTROL UNIT (VDCCM&H/U), COMPONENT, General Description.>
2	**CHECK OUTPUT OF STEERING ANGLE SENSOR USING SUBARU SELECT MONITOR.** 1) Park the vehicle straight on a level surface. 2) Connect Subaru Select Monitor, and select {Current Data Display & Save}. 3) Read the «Steer Angle Sensor Op» displayed on display.	Is the indicated reading of the steering angle sensor on the monitor display –10° — 10°?	Go to step **3**.	Check the installation of steering angle sensor.
3	**CHECK OUTPUT OF LATERAL G SENSOR WITH SUBARU SELECT MONITOR.** 1) Park the vehicle straight on a level surface. 2) Connect Subaru Select Monitor, and select {Current Data Display & Save}. 3) Read the «Lateral G sensor Output» displayed on display.	Is the indicated reading of the lateral G sensor on the monitor display –2 — 2 m/s^2?	Go to step **4**.	Recheck from step 1, and if the problem is not solved, go to next. Go to step **7**.
4	**SET 0 POINT FOR LATERAL G SENSOR USING SUBARU SELECT MONITOR.** 1) Select “Function Check Sequence” on Subaru Select Monitor. 2) Perform Set up mode for Neutral of Steering Angle Sensor & Lateral G Sensor 0 point. <Ref. to VDC-16, SET UP MODE FOR NEUTRAL OF STEERING ANGLE SENSOR & LATERAL G SENSOR 0 POINT, ADJUSTMENT, VDC Control Module and Hydraulic Control Unit (VDCCM&H/U).>	Is the 0 point setting successful?	Go to step **5**.	Recheck from step 1, and when the 0 point setting is not possible, replace the VDCCM&H/U. <Ref. to VDC-9, VDC Control Module and Hydraulic Control Unit (VDCCM&H/U).>
5	**DRIVING INSPECTION.** Drive approximately 10 minutes, and check if the warning lights illuminate or improperly operate during driving. In a safe place, drive the vehicle while alternating acceleration and deceleration as much as possible.	Did the ABS warning light or VDC warning light remain off? Does ABS or VDC operate without malfunction?	Go to step **6**.	Recheck from step 1, and when the warning lights illuminate or improperly operate, replace the VDCCM&H/U. <Ref. to VDC-9, VDC Control Module and Hydraulic Control Unit (VDCCM&H/U).>

GETtheMANUALS.org

Step		Check	Yes	No
6	**CHECK OUTPUT OF LATERAL G SENSOR WITH SUBARU SELECT MONITOR.** 1) Park the vehicle on a level surface. 2) Connect Subaru Select Monitor, and select {Current Data Display & Save}. 3) Read the «Lateral G sensor Output» displayed on display.	Is the indicated reading of the lateral G sensor on the monitor display –1.5 — 1.5 m/s^2?	End. It results from a temporary noise interference. Though VDC warning light may remain lit, this is normal. Warning light goes off when the vehicle is driven at 12 km/h (7 MPH) or more.	Recheck from step 1, and if the problem is not solved, replace the VDCCM&H/U. <Ref. to VDC-9, VDC Control Module and Hydraulic Control Unit (VDCCM&H/U).>
7	**CHECK OUTPUT OF LATERAL G SENSOR WITH SUBARU SELECT MONITOR.** 1) Remove the VDCCM&H/U installation bolt and bracket. 2) Keep VDCCM&H/U in a horizontal position. 3) Connect Subaru Select Monitor, and select {Current Data Display & Save}. 4) Read the «Lateral G sensor Output» displayed on display.	When the VDCCM&H/U is in a horizontal position, is the indicated reading of the lateral G sensor on the monitor display –1.5 — 1.5 m/s^2?	Check the bracket and brake pipe, and install VDCCM&H/U in a horizontal position to the vehicle.	Replace the VDCCM&H/U. <Ref. to VDC-9, VDC Control Module and Hydraulic Control Unit (VDCCM&H/U).>

GETtheMANUALS.org

AR:DTC C0074 MASTER CYLINDER PRESSURE SENSOR OUTPUT

DTC DETECTING CONDITION:
Defective pressure sensor
TROUBLE SYMPTOM:
- ABS does not operate.
- VDC does not operate.
- Hill start assist does not operate.

	Step	Check	Yes	No
1	**CHECK STOP LIGHT SWITCH CIRCUIT.** Check stop light switch open circuit.	Is the stop light switch circuit OK?	Go to step **2**.	Repair the stop light switch circuit. NOTE: If there is malfunction in the stop light circuit, DTC may be recorded in the memory.
2	**CHECK OUTPUT OF PRESSURE SENSOR WITH SUBARU SELECT MONITOR.** 1) Select {Current Data Display & Save} in Subaru Select Monitor. 2) Read the master cylinder output displayed on display.	With the brake pedal released, is the displayed value 0 — 11 bar?	Go to step **3**.	Replace the VDCCM&H/U. <Ref. to VDC-9, VDC Control Module and Hydraulic Control Unit (VDCCM&H/U).>
3	**CHECK OUTPUT OF PRESSURE SENSOR WITH SUBARU SELECT MONITOR.** 1) Select {Current Data Display & Save} in Subaru Select Monitor. 2) Read the master cylinder output displayed on display.	When the brake pedal is operated, does the master cylinder output value displayed on the display change in accordance with the brake pedal?	Go to step **4**.	Replace the VDCCM&H/U. <Ref. to VDC-9, VDC Control Module and Hydraulic Control Unit (VDCCM&H/U).>
4	**CHECK PRESSURE SENSOR.** 1) Clear the memory. <Ref. to VDC(diag)-25, Clear Memory Mode.> 2) Perform the Inspection Mode. <Ref. to VDC(diag)-24, Inspection Mode.> 3) Read the DTC.	Is the same DTC displayed?	Replace the VDCCM&H/U. <Ref. to VDC-9, VDC Control Module and Hydraulic Control Unit (VDCCM&H/U).>	Go to step **5**.
5	**CHECK OTHER DTC DETECTION.**	Is any other DTC displayed?	Perform the diagnosis according to DTC. <Ref. to VDC(diag)-35, List of Diagnostic Trouble Code (DTC).>	It results from a temporary noise interference.

AS:DTC C0075 WHEEL CYLINDER PRESSURE SENSOR OUTPUT

DTC DETECTING CONDITION:
Different VDCCM&H/U specification

NOTE:
When this DTC is displayed, replace the VDCCM&H/U. <Ref. to VDC-9, VDC Control Module and Hydraulic Control Unit (VDCCM&H/U).>

GETtheMANUALS.org

AT:DTC C0081 SYSTEM FAILURE

DTC DETECTING CONDITION:
VDC long time sequential control
TROUBLE SYMPTOM:
- VDC does not operate.
- Hill start assist does not operate.

Step		Check	Yes	No
1	**CHECK INSTALLATION OF VDCCM&H/U.**	Is VDCCM&H/U installed properly without being tilted? Is the bracket deformation-free? Are the VDCCM&H/U installation bolts installed without missing or getting loose?	Go to step **2**.	Repair the fault location. Go to step **2**. • Install VDCCM&H/U properly. • Replace the bracket if faulty. • Tighten the VDCCM&H/U installation bolt. <Ref. to VDC-5, VDC CONTROL MODULE & HYDRAULIC CONTROL UNIT (VDCCM&H/U), COMPONENT, General Description.>
2	**CHECK STEERING WHEEL.** 1) Drive the vehicle on a flat road. 2) Park the vehicle straight. 3) Check the steering wheel for deviation from center.	Is the deviation from the center of steering wheel less than 5°?	Go to step **3**.	Perform the centering adjustment of steering wheel, and perform Set up mode for Neutral of Steering Angle Sensor & Lateral G Sensor 0 point. Go to step **3**. <Ref. to VDC-16, SET UP MODE FOR NEUTRAL OF STEERING ANGLE SENSOR & LATERAL G SENSOR 0 POINT, ADJUSTMENT, VDC Control Module and Hydraulic Control Unit (VDCCM&H/U).>
3	**CHECK OUTPUT OF STEERING ANGLE SENSOR USING SUBARU SELECT MONITOR.** 1) Adjust steering wheel to the center position. 2) Connect Subaru Select Monitor, and select {Current Data Display & Save}. 3) Read the «Steer Angle Sensor Op» displayed on display.	Is the indicated reading of the «Steer Angle Sensor Op» on the monitor display –10° — 10°?	Go to step **4**.	Check the installation of the steering wheel and steering angle sensor, and replace the parts if necessary.

GETtheMANUALS.org

	Step	Check	Yes	No
4	**CHECK OUTPUT OF SENSORS USING SUBARU SELECT MONITOR.** 1) Drive the vehicle on a flat road. 2) Park the vehicle straight. 3) Connect Subaru Select Monitor, and select {Current Data Display & Save}. 4) Read output of sensors displayed on display.	Are the indicated reading of sensor outputs following values? Lateral G sensor Output: –2 — 2 m/s^2 Longitudinal G sensor output: –2 — 2 m/s^2 Yaw Rate Sensor Output: –4 — 4 deg/s	Go to step **5**.	Recheck from step 1, and if the problem is not solved, go to next. Go to step **8**.
5	**SET 0 POINT FOR LONGITUDINAL G SENSOR USING SUBARU SELECT MONITOR.** 1) Select “Function Check Sequence” on Subaru Select Monitor. 2) Perform Set up mode for Neutral of Steering Angle Sensor & Lateral G Sensor 0 point. <Ref. to VDC-16, SET UP MODE FOR NEUTRAL OF STEERING ANGLE SENSOR & LATERAL G SENSOR 0 POINT, ADJUSTMENT, VDC Control Module and Hydraulic Control Unit (VDCCM&H/U).>	Is the 0 point setting successful?	Go to step **6**.	Recheck from step 1, and when the 0 point setting is not possible, replace the VDCCM&H/U and steering angle sensor. <Ref. to VDC-9, VDC Control Module and Hydraulic Control Unit (VDCCM&H/U).> <Ref. to VDC-24, Steering Angle Sensor.>
6	**DRIVING INSPECTION.** Drive approximately 10 minutes, and check if the warning lights illuminate or improperly operate during driving.	Did the ABS warning light or VDC warning light remain off? Does ABS or VDC operate without malfunction?	Go to step **7**.	Recheck from step 1, and when the warning lights illuminate or improperly operate, replace the VDCCM&H/U. <Ref. to VDC-9, VDC Control Module and Hydraulic Control Unit (VDCCM&H/U).>
7	**CHECK OUTPUT OF SENSORS USING SUBARU SELECT MONITOR.** 1) Park the vehicle on a level surface. 2) Connect Subaru Select Monitor, and select {Current Data Display & Save}. 3) Read output of sensors displayed on display.	Are the indicated reading of sensor outputs following values? Lateral G sensor Output: –1.5 — 1.5 m/s^2 Longitudinal G sensor output: –1.5 — 1.5 m/s^2 Yaw Rate Sensor Output: –4 — 4 deg/s	It results from a temporary noise interference.	Replace the VDCCM&H/U. <Ref. to VDC-9, VDC Control Module and Hydraulic Control Unit (VDCCM&H/U).>
8	**CHECK OUTPUT OF SENSORS USING SUBARU SELECT MONITOR.** 1) Remove the VDCCM&H/U installation bolt and bracket. 2) Keep VDCCM&H/U in a horizontal position. 3) Connect Subaru Select Monitor, and select {Current Data Display & Save}. 4) Read output of sensors displayed on display.	When VDCCM&H/U is in a horizontal position, are the indicated reading of sensor outputs following values? Lateral G sensor Output: –1.5 — 1.5 m/s^2 Longitudinal G sensor output: –1.5 — 1.5 m/s^2 Yaw Rate Sensor Output: –4 — 4 deg/s	Check the bracket and brake pipe, and install VDCCM&H/U in a horizontal position to the vehicle.	Replace the VDCCM&H/U. <Ref. to VDC-9, VDC Control Module and Hydraulic Control Unit (VDCCM&H/U).>

GETtheMANUALS.org

13. General Diagnostic Table

A: INSPECTION

Symptoms		Main probable cause	Other probable cause
Poor brake performance	Long braking/ stopping distance	• VDCCM&H/U • Brake pad • Aeration to brake line • Tire specifications, tire wear and air pressures • Incorrect wiring or piping connections	• Defective ABS wheel speed sensor or sensor gap • Defective steering angle sensor or improper neutral position • Defective yaw rate & G sensor or improper installation of VDCCM&H/U. • Master cylinder • Brake caliper • Disc rotor • Brake pipe • Brake booster
	Wheel lock	• VDCCM&H/U • Defective ABS wheel speed sensor or sensor gap • Incorrect wiring or piping connections	• Defective steering angle sensor or improper neutral position • Defective yaw rate & G sensor or improper installation of VDCCM&H/U. • Brake caliper • Brake pipe
	Brake drag	• VDCCM&H/U • Defective ABS wheel speed sensor or sensor gap • Master cylinder • Brake caliper • Parking brake • Axle and wheels • Brake pedal play	• Defective steering angle sensor or improper neutral position • Defective yaw rate & G sensor or improper installation of VDCCM&H/U. • Brake pad • Brake pipe
	Long brake pedal stroke	• Aeration to brake line • Brake pedal play	• VDCCM&H/U • Master cylinder • Brake caliper • Brake pad • Brake pipe • Brake booster
	Vehicle vertical pitching	• VDCCM&H/U • Road surface (uneven) • Suspension play or fatigue (reduced damping) • Incorrect wiring or piping connections	• Defective ABS wheel speed sensor or sensor gap • Defective steering angle sensor or improper neutral position • Defective yaw rate & G sensor or improper installation of VDCCM&H/U.
Poor brake performance	Unstable or uneven braking	• VDCCM&H/U • Defective ABS wheel speed sensor or sensor gap • Brake caliper • Brake pad • Road surface (uneven) • Tire specifications, tire wear and air pressures • Incorrect wiring or piping connections	• Defective ABS wheel speed sensor or sensor gap • Defective steering angle sensor or improper neutral position • Defective yaw rate & G sensor or improper installation of VDCCM&H/U. • Master cylinder • Disc rotor • Brake pipe • Axle and wheels • Road with crowns or banks • Suspension play or fatigue (reduced damping)

GETtheMANUALS.org

General Diagnostic Table

Symptoms		Main probable cause	Other probable cause
Vibration or noise • When braking suddenly • When accelerating suddenly • While driving on a slippery road	Excessive brake pedal vibration	• Road surface (uneven) • Incorrect wiring or piping connections	• VDCCM&H/U • Brake booster • Suspension play or fatigue (reduced damping)
	Noise from VDCH/U	• VDCCM&H/U (mount bushing) • Defective ABS wheel speed sensor or sensor gap • Brake pipe	• VDCCM&H/U • Defective steering angle sensor or improper neutral position • Defective yaw rate & G sensor or improper installation of VDCCM&H/U.
	Noise from the front side of vehicle	• VDCCM&H/U (mount bushing) • Defective ABS wheel speed sensor or sensor gap • Master cylinder • Brake caliper • Brake pad • Disc rotor • Brake pipe • Brake booster • Suspension play or fatigue (reduced damping)	• Axle and wheels • Tire specifications, tire wear and air pressures
	Noise from the rear side of vehicle	• Defective ABS wheel speed sensor or sensor gap • Brake caliper • Brake pad • Disc rotor • Parking brake • Brake pipe • Suspension play or fatigue (reduced damping)	• Axle and wheels • Tire specifications, tire wear and air pressures
Engine does not accelerate or goes into a stall when accelerating suddenly or driving on a slippery surface.		• VDCCM&H/U • Defective ABS wheel speed sensor or sensor gap • Master cylinder • Brake caliper • Parking brake • Incorrect wiring or piping	• Defective steering angle sensor or improper neutral position • Defective yaw rate & G sensor or improper installation of VDCCM&H/U. • Brake pad • Brake pipe

GETtheMANUALS.org

General Diagnostic Table

Symptoms		Main probable cause	Other probable cause
Poor change-direction-operation stability of TCS	Deviation to right or left direction	• VDCCM&H/U • Defective ABS wheel speed sensor or sensor gap • Defective steering angle sensor or improper neutral position • Defective yaw rate & G sensor or improper installation of VDCCM&H/U. • Brake caliper • Brake pad • Wheel alignment • Road surface (uneven) • Road with crowns or banks • Tire specifications, tire wear and air pressures • Incorrect wiring or piping connections	• Disc rotor • Brake pipe • Axle and wheels • Suspension play or fatigue (reduced damping)
	Vehicle spin	• VDCCM&H/U • Defective ABS wheel speed sensor or sensor gap • Defective steering angle sensor or improper neutral position • Defective yaw rate & G sensor or improper installation of VDCCM&H/U. • Brake pad • Tire specifications, tire wear and air pressures • Incorrect wiring or piping connections	• Brake caliper • Brake pipe
Steering wheel drag while driving		• VDCCM&H/U • Defective ABS wheel speed sensor or sensor gap • Defective steering angle sensor or improper neutral position • Defective yaw rate & G sensor or improper installation of VDCCM&H/U. • Incorrect wiring or piping connections • Power steering system	• Brake caliper • Brake pad • Disc rotor • Wheel alignment • Road surface (uneven) • Road with crowns or banks • Suspension play or fatigue (reduced damping) • Tire specifications, tire wear and air pressures
VDC operates while driving normally.		• VDCCM&H/U • Defective ABS wheel speed sensor or sensor gap • Defective steering angle sensor or improper neutral position • Defective yaw rate & G sensor or improper installation of VDCCM&H/U. • Wheel alignment • Road surface (uneven) • Road with crowns or banks • Suspension play or fatigue (reduced damping) • Tire specifications, tire wear and air pressures • Incorrect wiring or piping connections • Power steering system	

GETtheMANUALS.org

Symptoms	Main probable cause	Other probable cause
VDC OFF indicator light does not illuminate when the VDC OFF switch is depressed. NOTE: When pressing VDC OFF switch for 10 seconds or more, VDC OFF indicator light goes off and cannot operate any more. When turning the ignition switch from OFF to ON, the previous status is restored.	• Harness • Combination meter • VDC OFF switch	

GETtheMANUALS.org

GETtheMANUALS.org

BRAKE

BR

		Page
1.	General Description	2
2.	Front Brake Pad	14
3.	Front Disc Rotor	18
4.	Front Disc Brake Assembly	21
5.	Rear Brake Pad	29
6.	Rear Disc Rotor	32
7.	Rear Disc Brake Assembly	36
8.	Master Cylinder	41
9.	Brake Booster	43
10.	Brake Fluid	53
11.	Air Bleeding	54
12.	Brake Hose	56
13.	Brake Pipe	59
14.	Brake Pedal	60
15.	Stop Light Switch	64
16.	General Diagnostic Table	69

GETtheMANUALS.org

1. General Description

A: SPECIFICATION

Front disc brake	Size		16-inch type	17-inch type
	Type		Disc (Floating type, ventilated)	
	Effective disc diameter	mm (in)	244 (4.61)	261 (10.28)
	Disc thickness × Diameter	mm (in)	24 × 294 (0.94 × 11.57)	30 × 316 (1.18 × 12.44)
	Effective cylinder diameter	mm (in)	42.8 (1.685) × 2	
	Pad dimensions (Length × Width × Thickness)	mm (in)	117.8 × 50.5 × 11.0 (4.638 × 1.988 × 0.433)	130.0 × 53.5 × 11.0 (5.118 × 2.106 × 0.433)
	Clearance adjustment		Automatic adjustment	
Rear disc brake	Size		16-inch type	
	Type		Disc (Floating type, solid)	Disc (Floating type, ventilated)
	Effective disc diameter	mm (in)	250 (9.84)	255 (10.0)
	Disc thickness × Diameter	mm (in)	10 × 286 (0.39 × 11.26)	18 × 290 (0.71 × 11.42)
	Effective cylinder diameter	mm (in)	38.1 (1.500)	40.4 (1.591)
	Pad dimensions (Length × Width × Thickness)	mm (in)	92.0 × 33.0 × 9.0 (3.622 × 1.299 × 0.354)	95.5 × 34.8 × 11.0 (3.759 × 1.370 × 0.433)
	Clearance adjustment		Automatic adjustment	
Master cylinder	Type		Tandem	
	Effective diameter	mm (in)	23.8 (15/16)	
	Reservoir type		Sealed type	
	Brake fluid reservoir capacity	cm^3 (cu in)	205 (12.51)	
Brake booster	Type		Vacuum suspended	
	Effective diameter	mm (in)	208 + 229 (8.19 + 9.02)	
Brake line			Dual circuit system	
Brake fluid			FMVSS No. 116, DOT3, or DOT4 **CAUTION:** **• Avoid mixing brake fluid of different brands to prevent fluid performance from degrading.** **• When filling with brake fluid, be careful not to allow any dust to enter the reservoir.** **• Use new SUBARU genuine brake fluid when replacing or refilling the fluid.**	

GETtheMANUALS.org

NOTE:
Refer to “PB” section for parking brake specifications. <Ref. to PB-2, SPECIFICATION, General Description.>

Item			Standard	Limit
Front brake	Pad thickness mm (in)	16-inch type	11 (0.43)	1.5 (0.059)
		17-inch type	11 (0.43)	1.5 (0.059)
	Disc thickness mm (in)	16-inch type	24 (0.94)	22 (0.87)
		17-inch type	30 (1.18)	28 (1.10)
	Disc runout mm (in)		—	0.05 (0.0020)
Rear brake (disc type)	Pad thickness mm (in)	Solid disc	9.0 (0.354)	1.5 (0.059)
		Ventilated disc	11 (0.43)	1.5 (0.059)
	Disc thickness mm (in)	Solid disc	10 (0.39)	8.5 (0.335)
		Ventilated disc	18 (0.71)	16 (0.63)
	Disc runout mm (in)		—	0.05 (0.0020)
Parking brake	Inside diameter mm (in)		190 (7.48)	191 (7.52)
	Lining thickness mm (in)		2.8 (0.11)	1.5 (0.059)

		Brake pedal force N (kgf, lbf)	Fluid pressure kPa (kgf/cm^2, psi)
Brake booster	Brake fluid pressure with engine stopped	147 (15, 33)	553 (5, 77)
		294 (30, 66)	1,551 (16, 225)
	Brake fluid pressure with engine running and vacuum pressure at 66.7 kPa (500 mmHg, 19.69 inHg)	147 (15, 33)	6,177 (63, 896)
		294 (30, 66)	11,273 (115, 1,635)

Brake pedal	Free play mm (in)	2 — 5 (0.079 — 0.197) [When pulling the brake pedal upward with a force of less than 10 N (1 kgf, 2 lbf)]

GETtheMANUALS.org

B: COMPONENT

1. FRONT DISC BRAKE

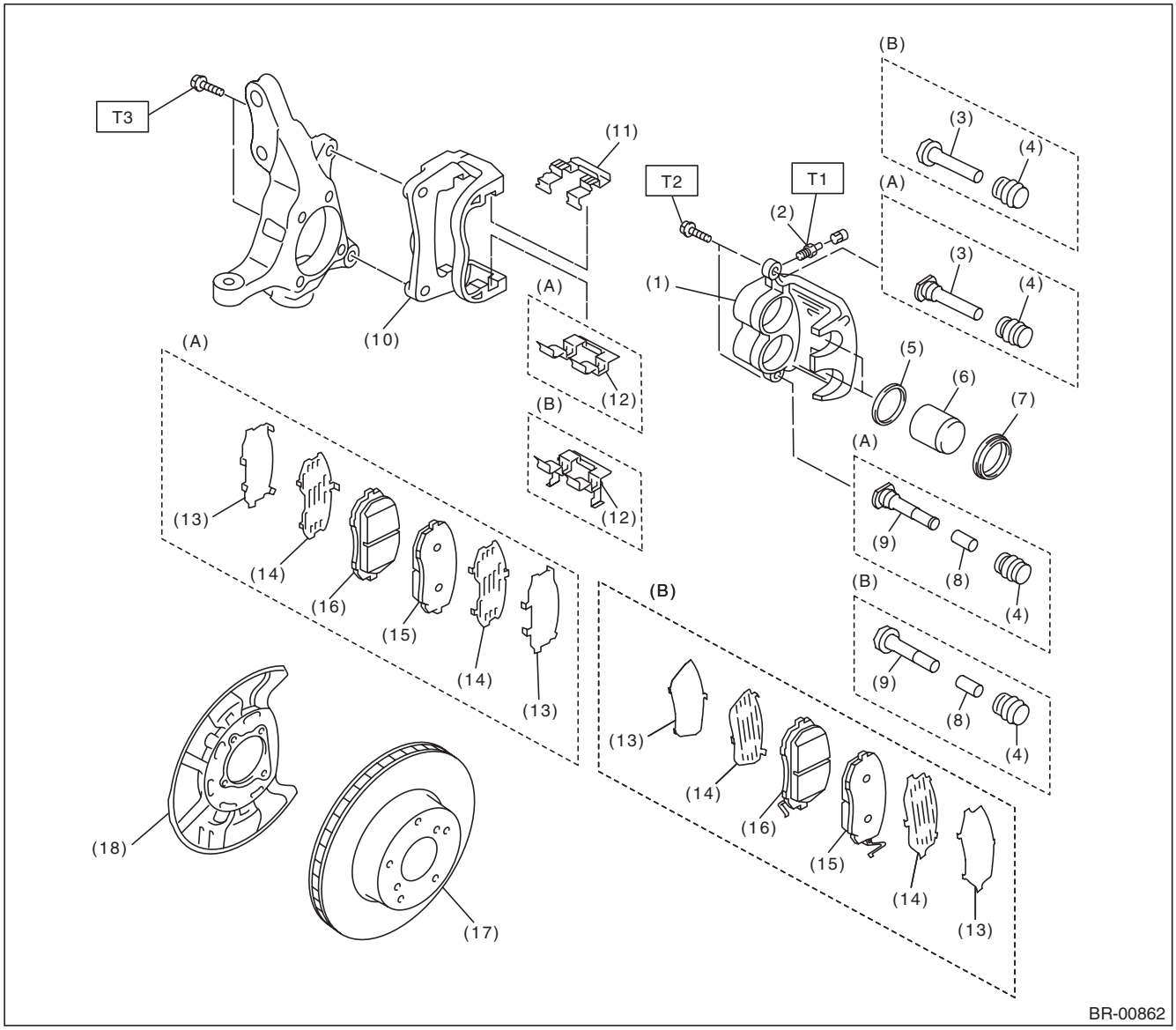

(A)	16-inch type	(B)	17-inch type		
(1)	Caliper body	(9)	Lock pin (silver)	(17)	Disc rotor
(2)	Air bleeder screw	(10)	Support	(18)	Disc cover
(3)	Guide pin (black)	(11)	Pad clip upper		
(4)	Pin boot	(12)	Pad clip lower		
(5)	Piston seal	(13)	Outer shim		
(6)	Piston	(14)	Inner shim		
(7)	Piston boot	(15)	Pad (outside)		
(8)	Bushing	(16)	Pad (inside)		

Tightening torque:N·m (kgf-m, ft-lb)

T1: 8 (0.82, 5.9)
T2: 27 (2.75, 19.9)
T3: 120 (12.24, 88.5)

GETtheMANUALS.org

2. REAR DISC BRAKE

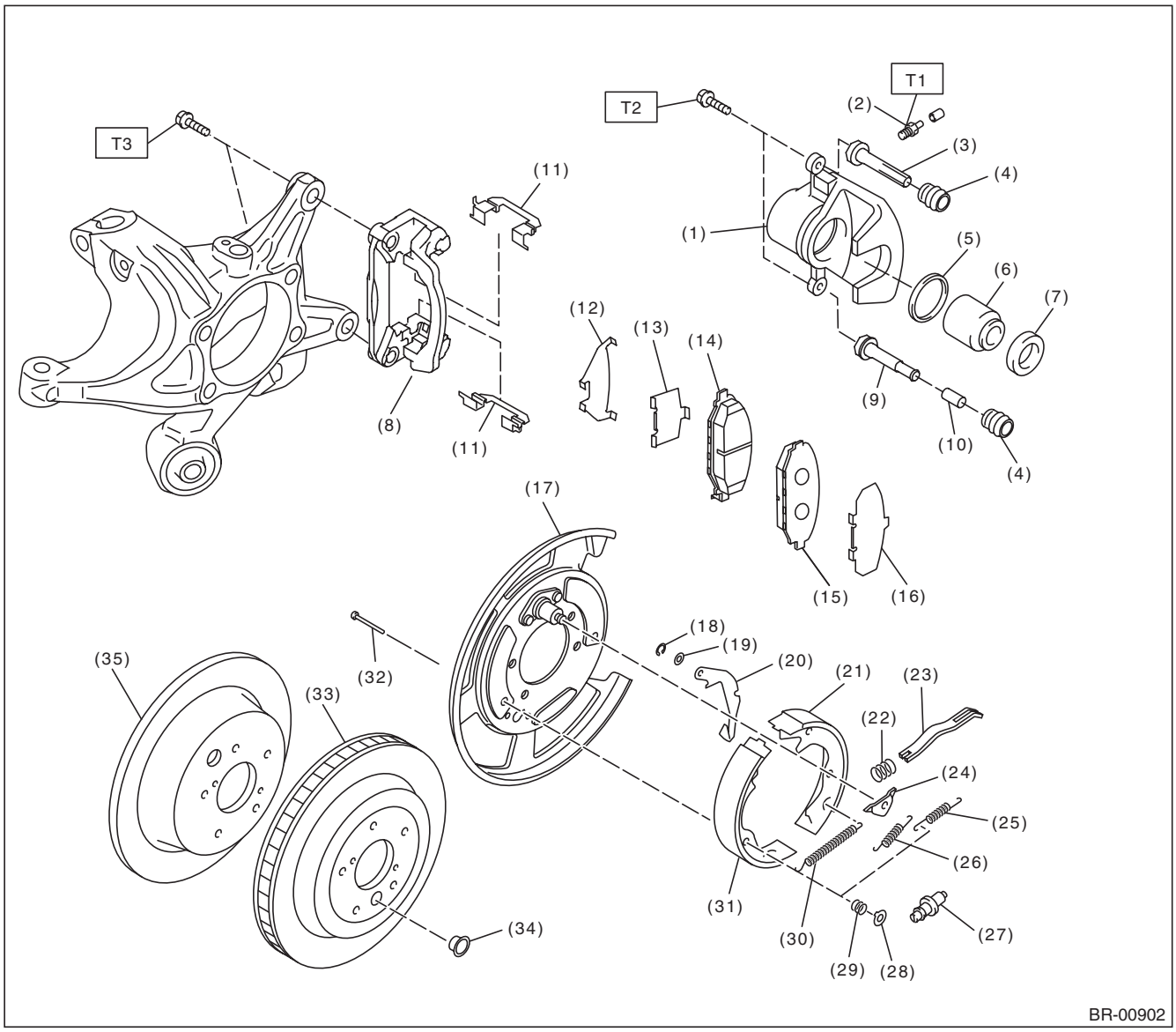

(1)	Caliper body	(15)	Outer pad	(29)	Shoe hold-down spring
(2)	Air bleeder screw	(16)	Shim	(30)	Adjusting spring
(3)	Guide pin (black)	(17)	Back plate	(31)	Parking brake shoe (primary)
(4)	Pin boot	(18)	Retainer	(32)	Shoe hold-down pin
(5)	Piston seal	(19)	Wave washer	(33)	Disc rotor (ventilated type)
(6)	Piston	(20)	Lever	(34)	Adjusting hole cover
(7)	Piston boot	(21)	Parking brake shoe (secondary)	(35)	Disc rotor (solid type)
(8)	Support	(22)	Strut spring		
(9)	Lock pin (silver)	(23)	Strut		
(10)	Bushing	(24)	Shoe guide plate		
(11)	Pad clip	(25)	Secondary shoe return spring		
(12)	Outer shim	(26)	Primary shoe return spring		
(13)	Inner shim	(27)	Adjusting screw		
(14)	Inner pad	(28)	Shoe hold-down cup		

Tightening torque:N·m (kgf-m, ft-lb)

T1: 8 (0.82, 5.9)

T2: 27 (2.75, 19.9)

T3: 66 (6.73, 48.7)

GETtheMANUALS.org

3. MASTER CYLINDER

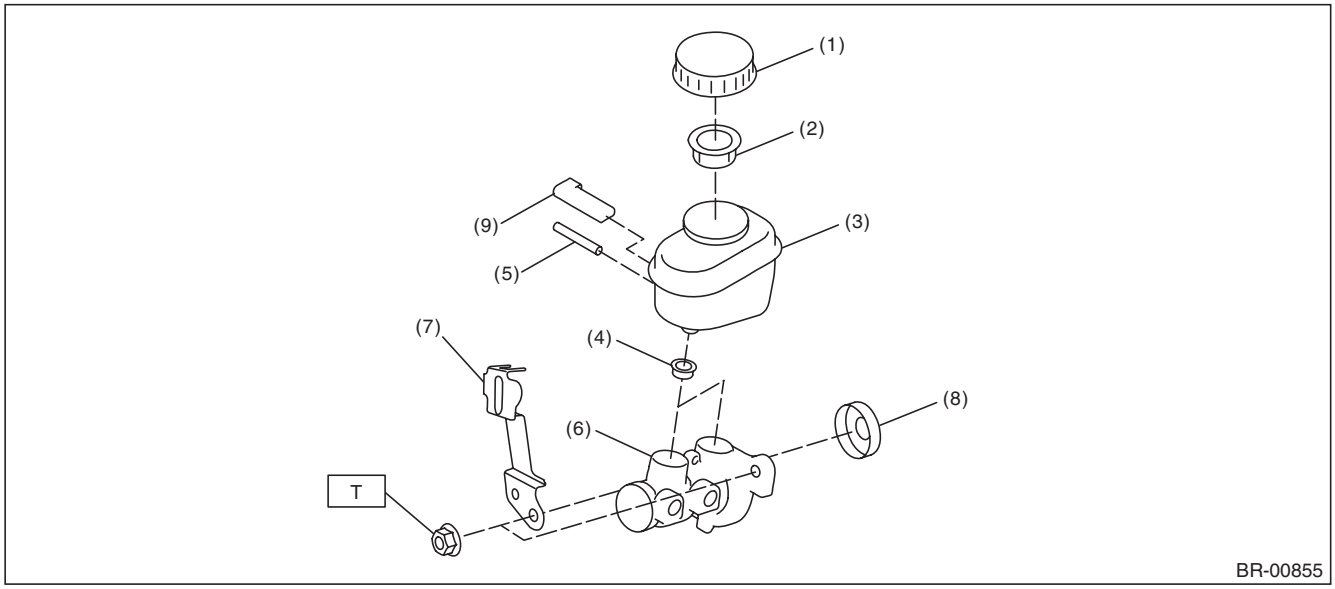

(1) Cap
(2) Filter
(3) Reservoir tank
(4) Seal
(5) Pin
(6) Cylinder body ASSY
(7) Bracket
(8) Seal sub ASSY
(9) Level sensor

Tightening torque:N·m (kgf-m, ft-lb)
T: 13 (1.33, 9.6)

GETtheMANUALS.org

4. FRONT BRAKE PIPES AND HOSES

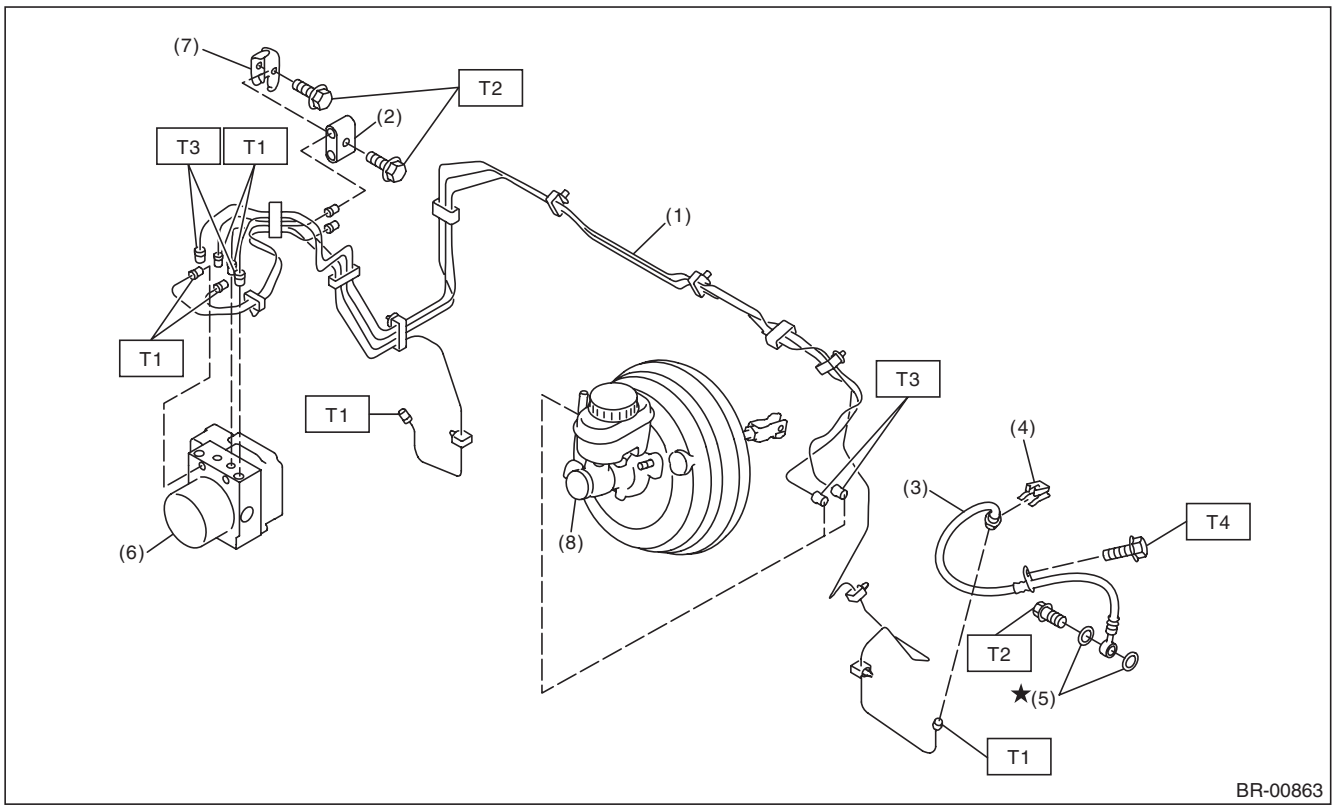

(1)	Front brake pipe ASSY	(6)	VDC control module and hydraulic control unit (VDCCM&H/U)	***Tightening torque:N·m (kgf-m, ft-lb)***
(2)	Two-way connector	(7)	Bracket	***T1: 15 (1.53, 11.1)***
(3)	Front brake hose RH/LH	(8)	Master cylinder	***T2: 18 (1.84, 13.3)***
(4)	Clamp			***T3: 19 (1.94, 14.0)***
(5)	Gasket			***T4: 33 (3.36, 24.3)***

GETtheMANUALS.org

5. CENTER AND REAR BRAKE PIPES AND HOSES

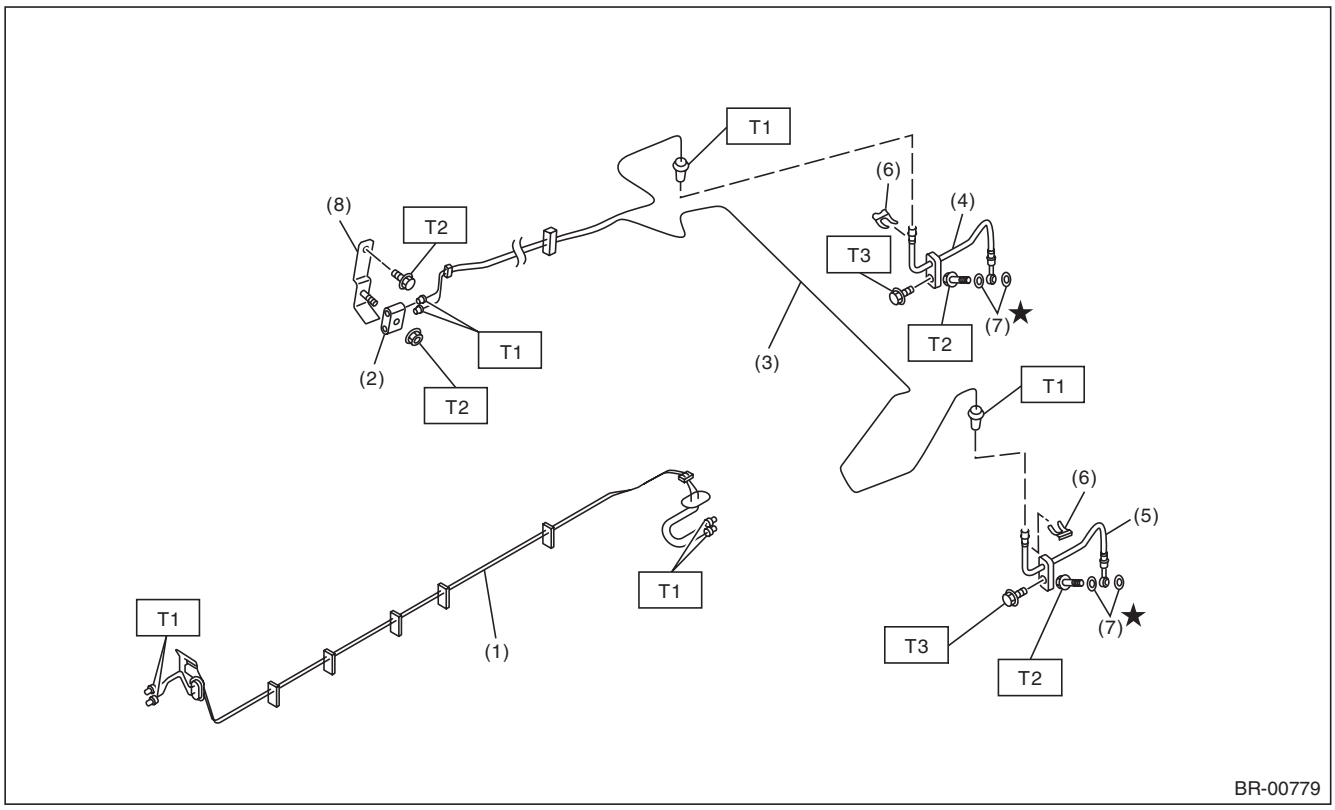

(1)	Center brake pipe ASSY	(5)	Rear brake hose LH	***Tightening torque:N·m (kgf-m, ft-lb)***
(2)	Connector	(6)	Clamp	***T1: 15 (1.53, 11.1)***
(3)	Rear brake pipe ASSY	(7)	Gasket	***T2: 18 (1.84, 13.3)***
(4)	Rear brake hose RH	(8)	Bracket	***T3: 33 (3.36, 24.3)***

GETtheMANUALS.org

6. BRAKE BOOSTER

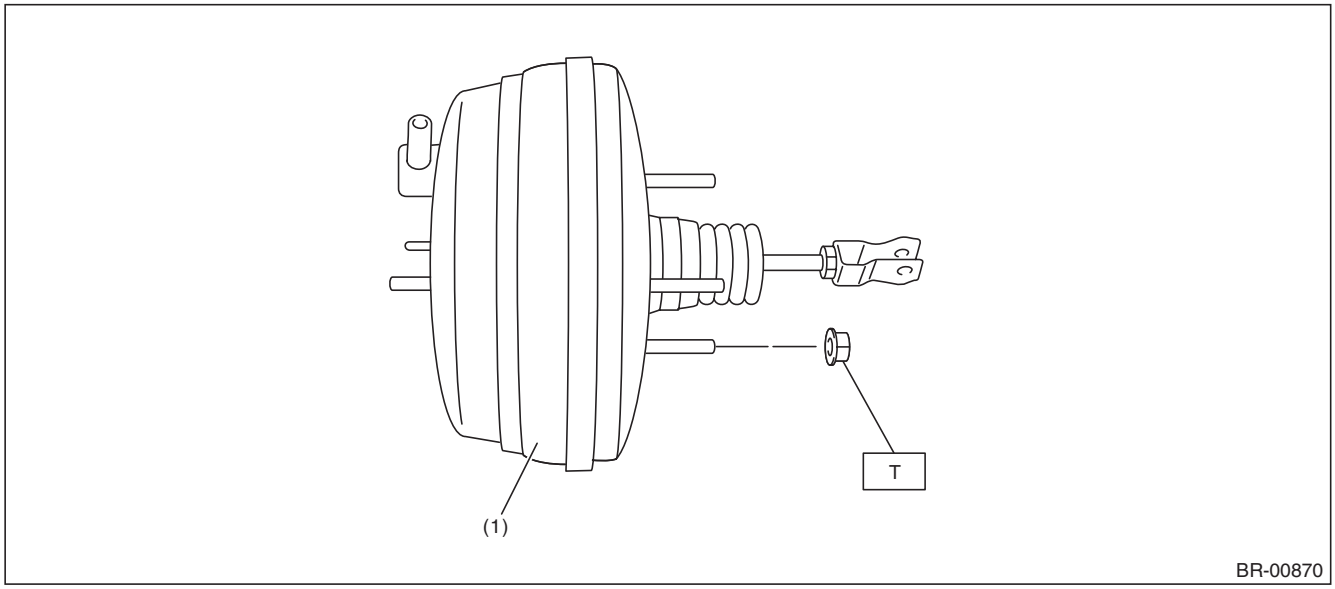

(1) Brake booster

Tightening torque:N·m (kgf-m, ft-lb)
T: 18 (1.84, 13.3)

GETtheMANUALS.org

7. BRAKE PEDAL

- AT model

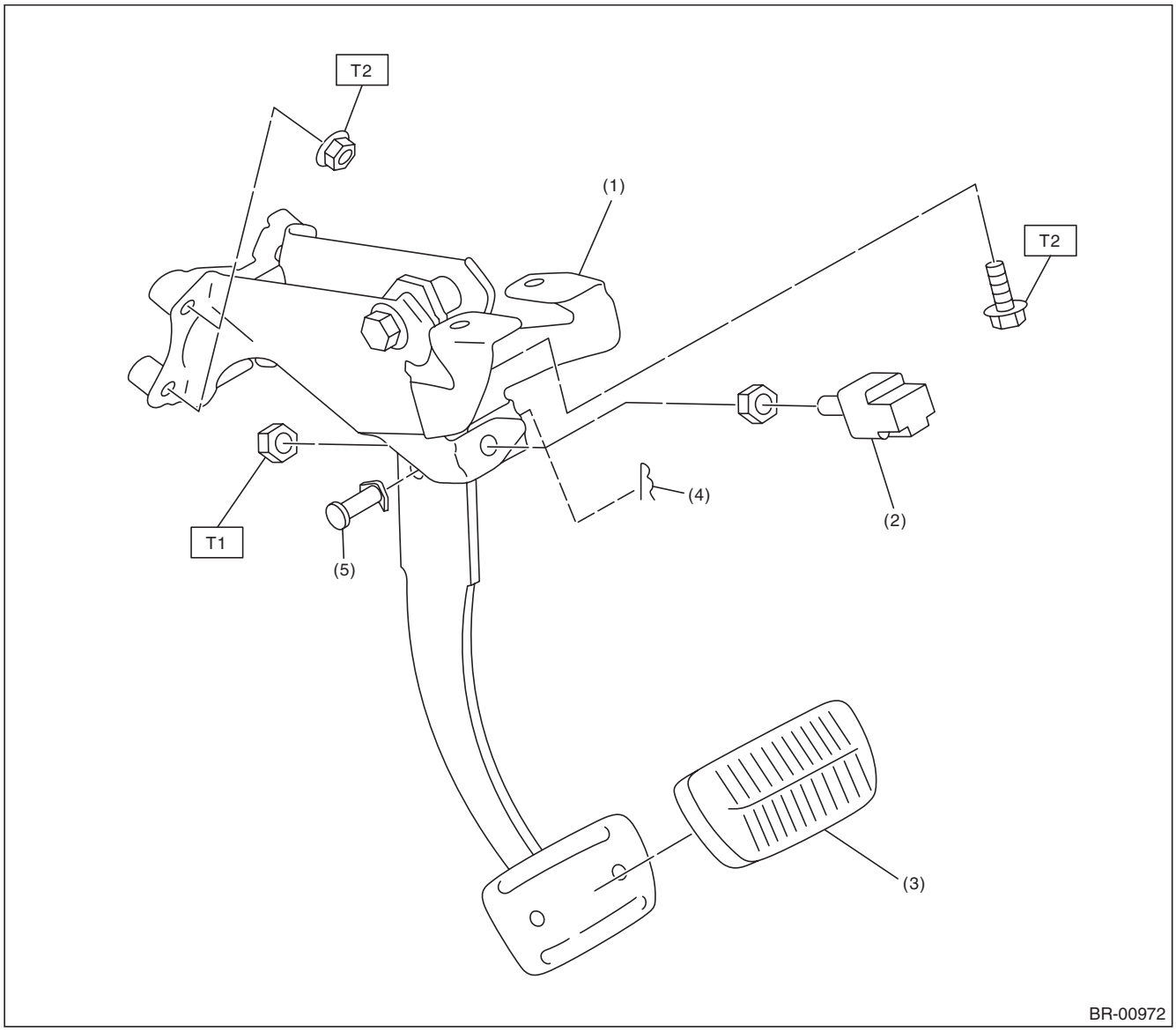

(1)	Brake pedal ASSY	(4)	Snap pin
(2)	Stop light switch	(5)	Clevis pin
(3)	Brake pedal pad		

Tightening torque:N·m (kgf-m, ft-lb)
T1: 8 (0.82, 5.9)
T2: 18 (1.84, 13.3)

GETtheMANUALS.org

- MT model

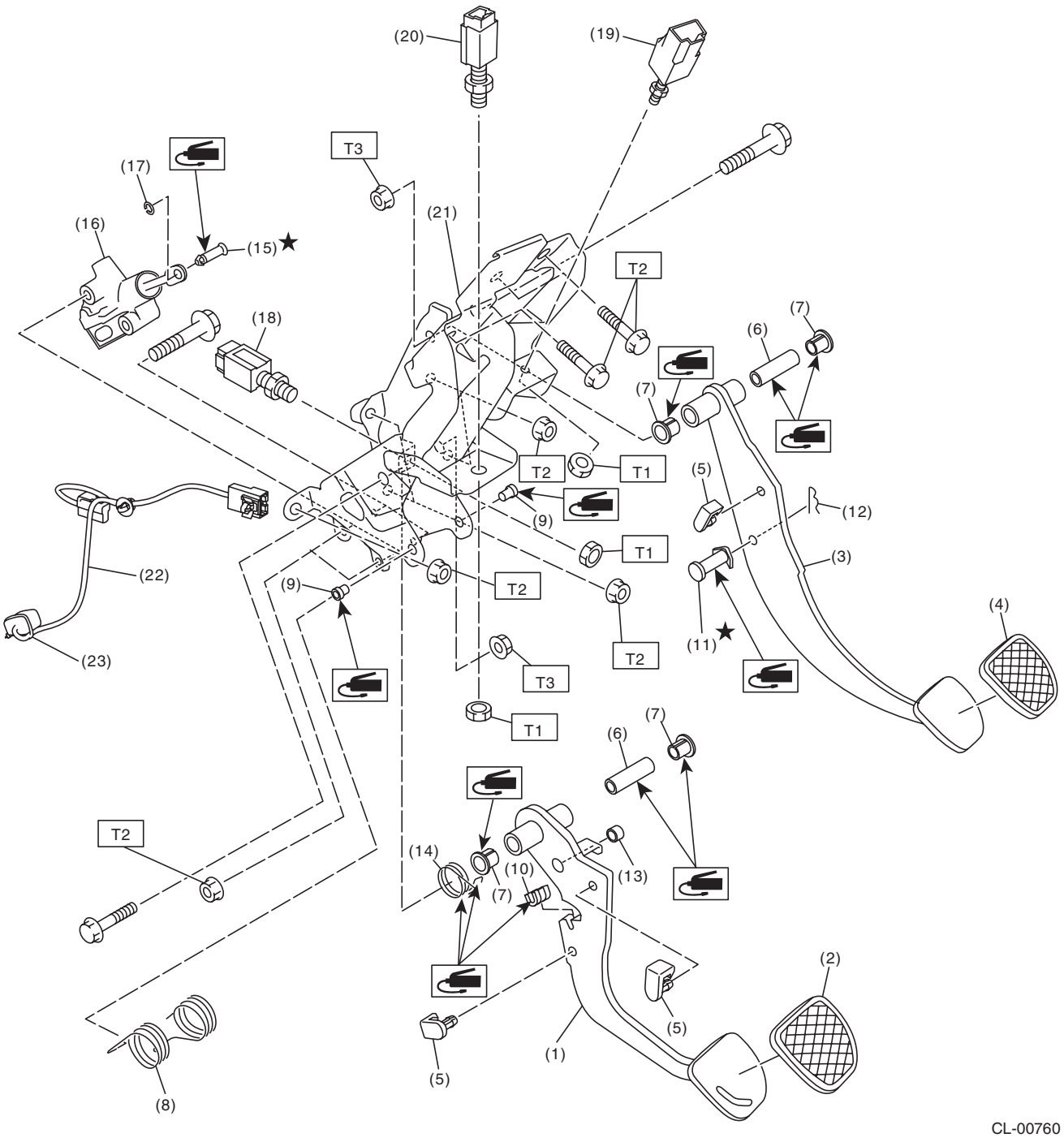

GETtheMANUALS.org

(1) Clutch pedal
(2) Clutch pedal pad
(3) Brake pedal
(4) Brake pedal pad
(5) Stopper
(6) Spacer
(7) Bushing
(8) Torsion spring
(9) Assist bushing
(10) Torsion spring bushing
(11) Clevis pin
(12) Snap pin
(13) Bushing A
(14) Assist spring
(15) Clevis pin
(16) Master cylinder ASSY
(17) Clip
(18) Clutch switch (clutch start)
(19) Stop & brake switch
(20) Clutch switch (cruise control)
(21) Pedal bracket
(22) Sensor harness
(23) Band

Tightening torque:N·m (kgf-m, ft-lb)	
T1:	***8 (0.82, 5.9)***
T2:	***18 (1.84, 13.3)***
T3:	***30 (3.06, 22.1)***

GETtheMANUALS.org

C: CAUTION

- Wear appropriate work clothing, including a helmet, protective goggles and protective shoes when performing any work.
- Before removal, installation or disassembly, be sure to clarify the failure. Avoid unnecessary removal, installation, disassembly and replacement.
- Use SUBARU genuine grease etc. or equivalent. Do not mix grease etc. of different grades or manufacturers.
- Before securing a part on a vise, place cushioning material such as wood blocks, aluminum plate, or cloth between the part and the vise.
- Be sure to tighten fasteners including bolts and nuts to the specified torque.
- Place shop jacks or rigid racks at the specified points.

D: PREPARATION TOOL

1. GENERAL TOOL

TOOL NAME	REMARKS
Circuit tester	Used for measuring resistance and voltage.
Pressure gauge	Used for measuring the operation and airtightness of the brake booster.
Vacuum gauge	Used for measuring the operation and airtightness of the brake booster.
Dial gauge	Used for measuring brake disc rotor run-out.

GETtheMANUALS.org

2. Front Brake Pad

A: REMOVAL

1) Lift up the vehicle, and then remove the front wheels.
2) Remove the front brake pad.
   (1) Remove the caliper bolt.
   (2) Raise the caliper body and support it.

NOTE:
Do not disconnect the brake hose from the caliper body.

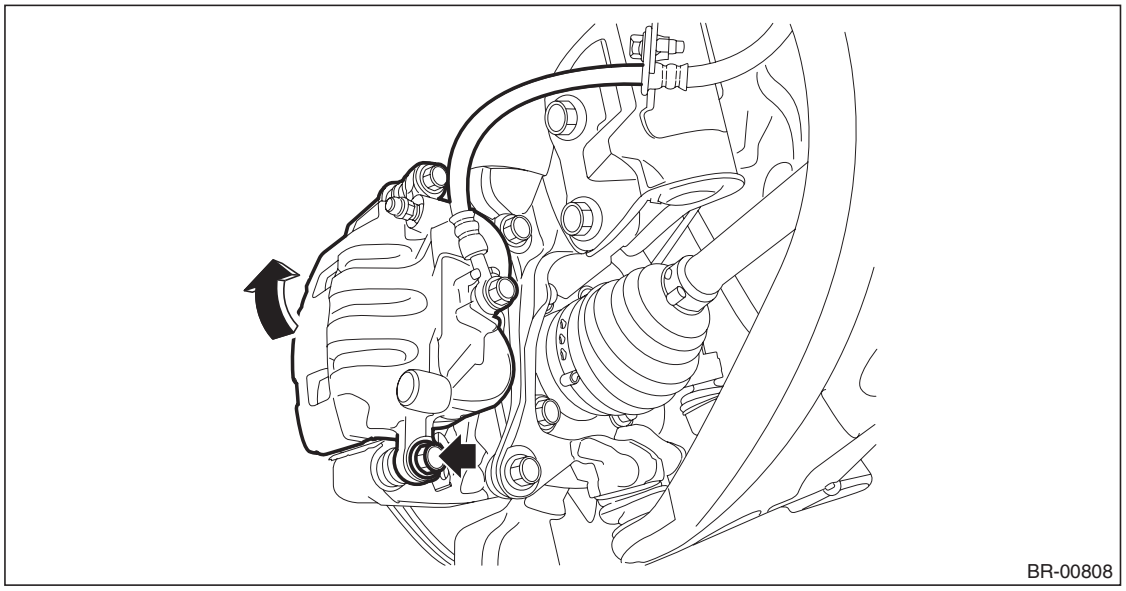

(3) Remove the brake pad from support.

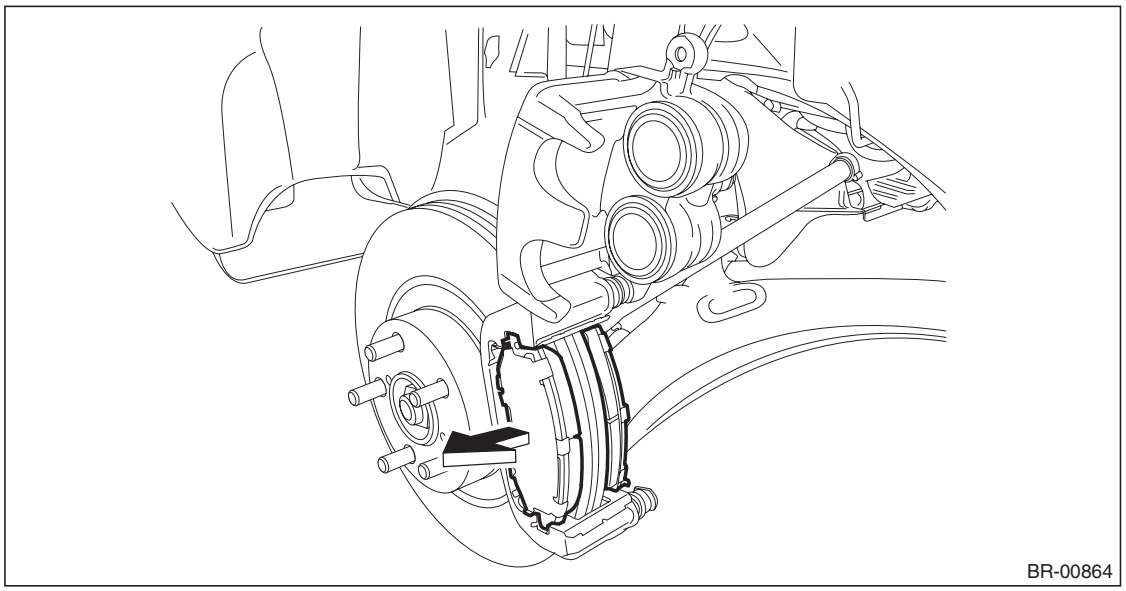

GETtheMANUALS.org

B: INSTALLATION

1. 16-INCH TYPE

NOTE:
Before installation, remove mud and foreign matter from the caliper body and support.
1) Before installation, check the brake pad. <Ref. to BR-17, INSPECTION, Front Brake Pad.>
2) Apply a thin coat of Molykote M7439 (Part No. 003602001) or grease contained in the pad kit to the pad clip.

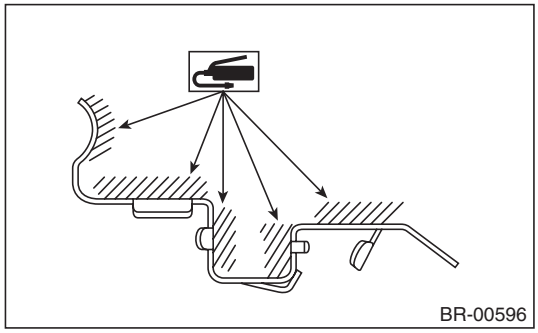

3) Apply a thin coat of Molykote AS880N (Part No. K0777YA010) or grease contained in the pad kit to both surfaces of the pad and inner shim.

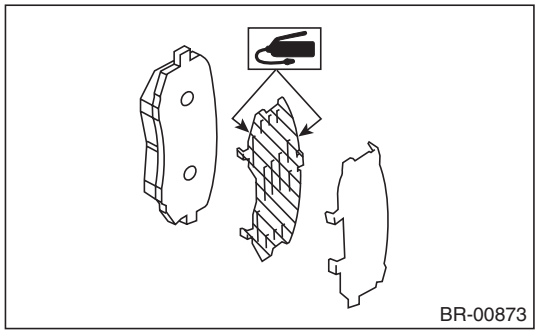

4) Install the brake pad to the support.
5) Install the caliper body to the support.

Tightening torque:
Caliper bolt: 27 N·m (2.75 kgf-m, 19.9 ft-lb)
6) Install the front wheels.

2. 17-INCH TYPE

NOTE:
Before installation, remove mud and foreign matter from the caliper body and support.
1) Before installation, check the brake pad. <Ref. to BR-17, INSPECTION, Front Brake Pad.>
2) Apply a thin coat of Molykote M7439 (Part No. 003602001) or grease contained in the pad kit to the pad clip.

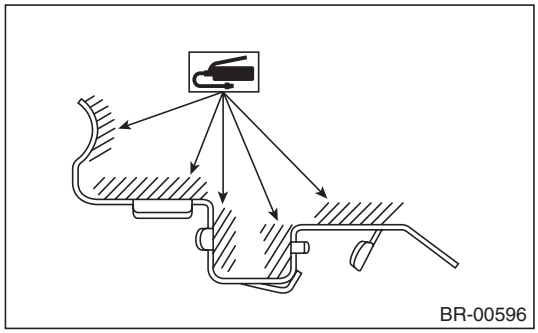

GETtheMANUALS.org

3) Apply a thin coat of Molykote AS880N (Part No. K0777YA010) or grease contained in the pad kit to both surfaces of the pad and inner shim.

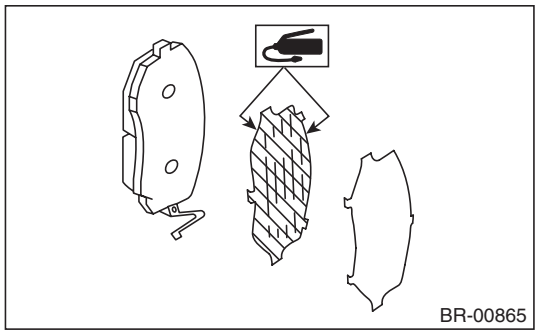

4) Install the brake pad to the support.

CAUTION:
- **Be sure to install so that the pad return spring faces the input side of the direction of brake rotor rotation, as shown in the figure.**
- **Correctly install the pad return spring to the supporting surface of the pad clip as shown in the figure.**
- **If the pad return spring is deformed or damaged, replace the brake pad.**

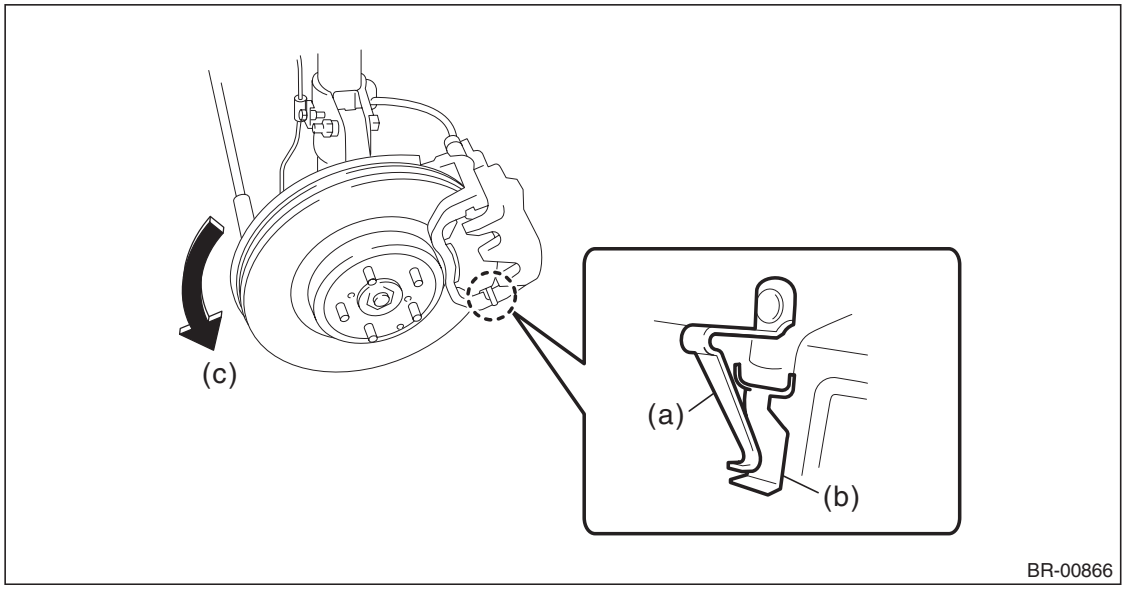

(a) Pad return spring (b) Supporting surface of pad clip (c) Direction of brake rotor rotation

GETtheMANUALS.org

NOTE:
Install the brake pad indicator in proper direction.

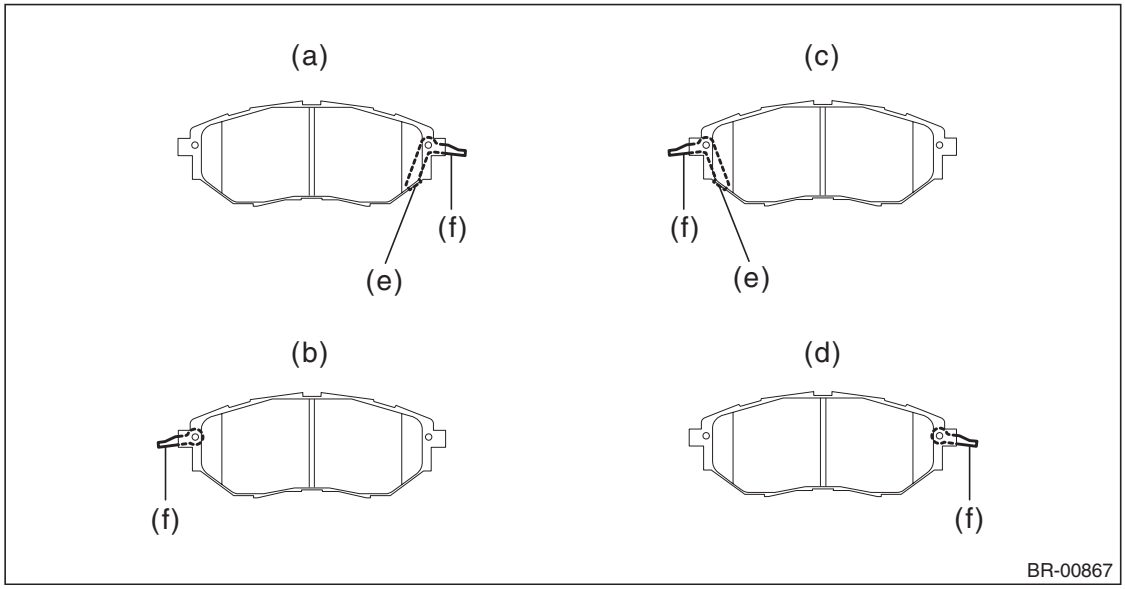

(a) LH — IN
(b) LH — OUT
(c) RH — IN
(d) RH — OUT
(e) Pad indicator
(f) Pad return spring

5) Install the caliper body to the support.

Tightening torque:
Caliper bolt: 27 N·m (2.75 kgf-m, 19.9 ft-lb)

6) Install the front wheels.

C: INSPECTION

1) Check the pad thickness (A).

NOTE:
- Always replace the pads of both wheels and both sides as a set.
- Replace pad clips if they are twisted or worn.
- Replace the pad if there is oil or grease on it.

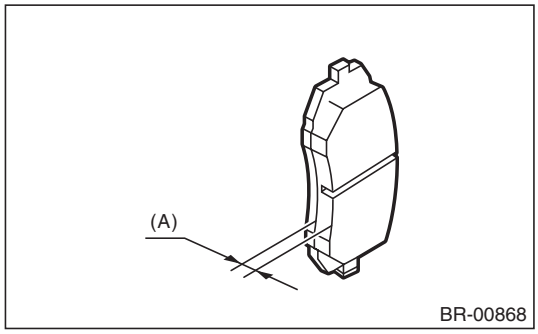

	Standard	Wear limit
Pad thickness (A)	11 mm (0.43 in)	1.5 mm (0.059 in)

2) If the wear limit is exceeded in the inspection, replace the brake pad.

GETtheMANUALS.org

3. Front Disc Rotor

A: REMOVAL

1) Lift up the vehicle, and then remove the front wheels.
2) Remove the caliper body assembly from the front axle housing.
   (1) Remove the bolt from the brake hose bracket.
   (2) Remove the mounting bolt, and remove the caliper body assembly.

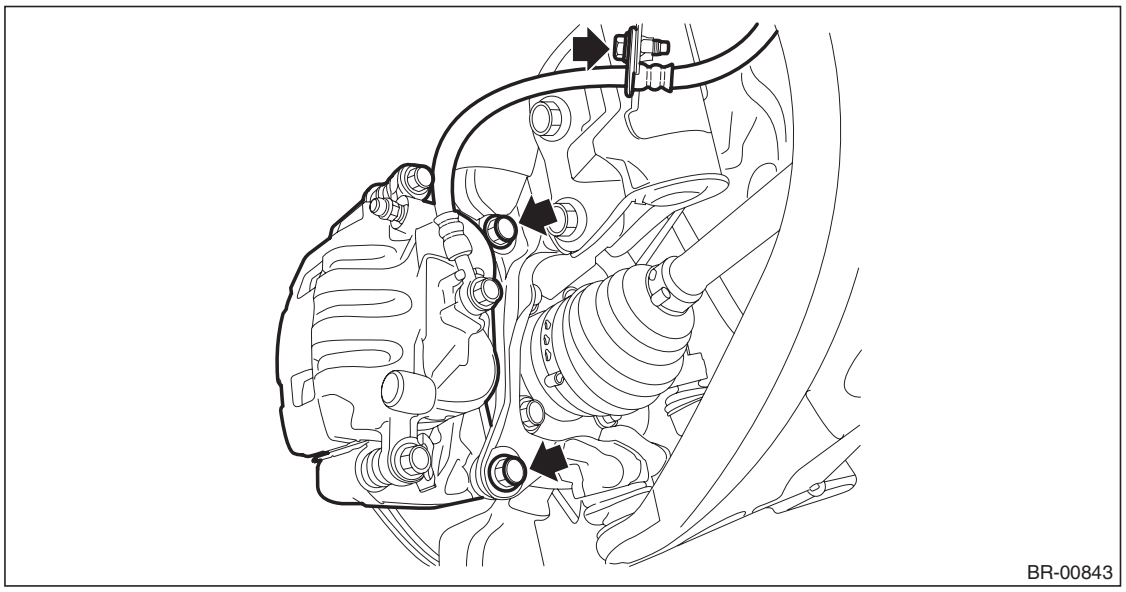

   (3) Prepare wiring harnesses etc. to be discarded, and suspend the caliper body assembly from the shock absorber with the harnesses.

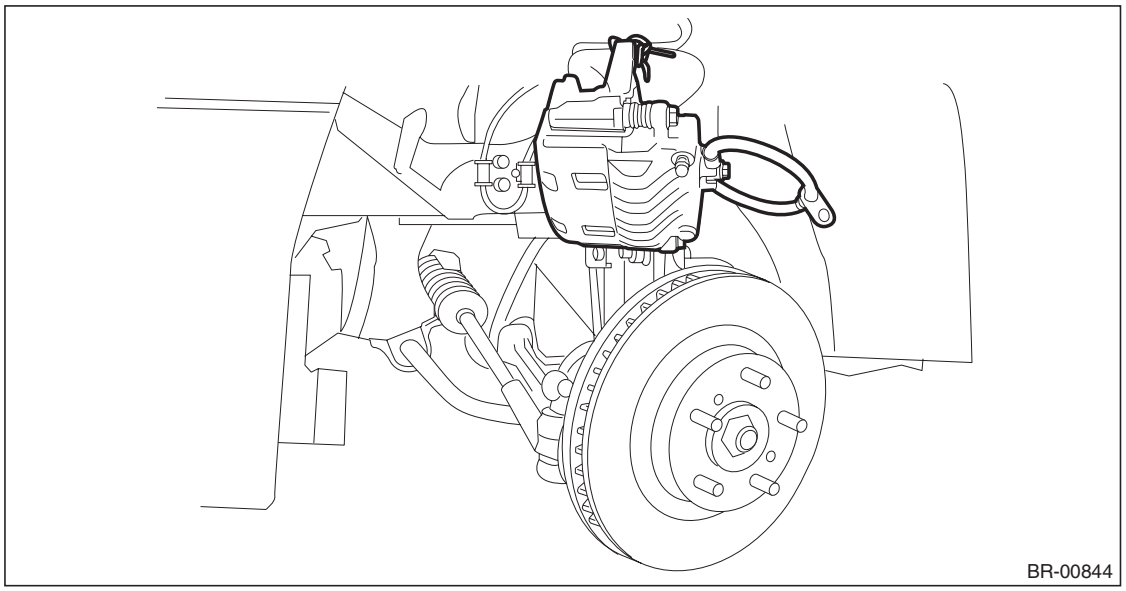

GETtheMANUALS.org

3) Remove the front disc rotor.

NOTE:
When the disc rotor is difficult to be removed from the front hub unit bearing, screw in 8 mm (0.31 in) bolt to the threaded part of the disc rotor (A), and remove the disc rotor.

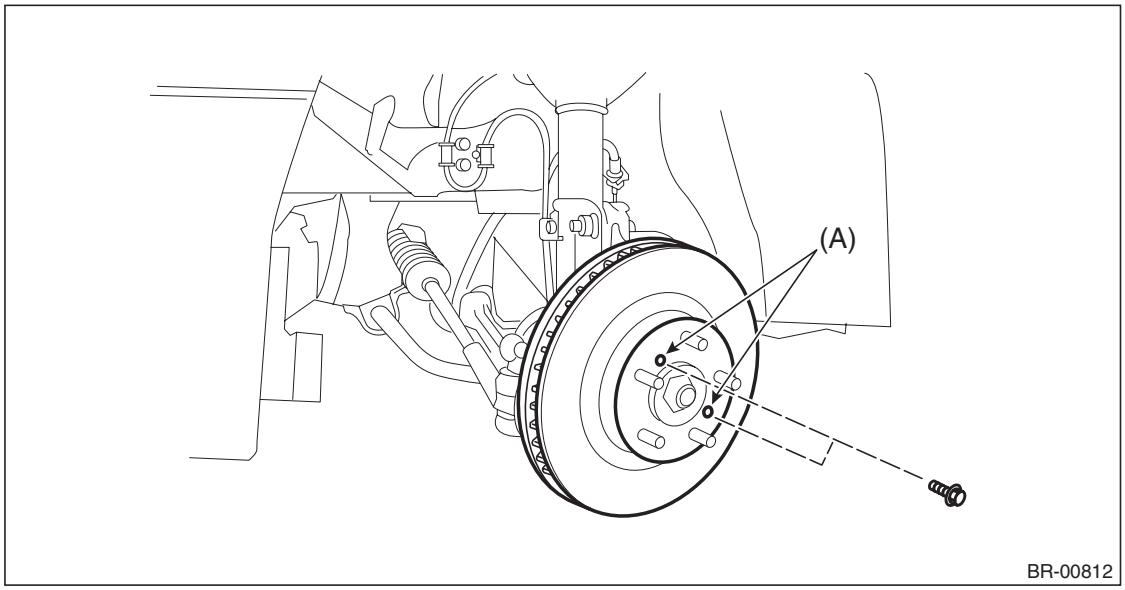

B: INSTALLATION

NOTE:
Before installation, remove mud and foreign matter from the caliper body assembly.
1) Before installation, check the front disc rotor. <Ref. to BR-19, INSPECTION, Front Disc Rotor.>
2) Install each part in the reverse order of removal.

Tightening torque:
Brake hose bracket: 33 N·m (3.36 kgf-m, 24.3 ft-lb)
Mounting bolt: 120 N·m (12.24 kgf-m, 88.5 ft-lb)

C: INSPECTION

1. DISC ROTOR RUNOUT CHECK

1) Check the front hub unit bearing for free play and runout before the inspection of disc rotor runout limit. <Ref. to DS-29, INSPECTION, Front Hub Unit Bearing.>
2) Tighten the wheel nuts to secure disc rotor.

GETtheMANUALS.org

3) Set a dial gauge 10 mm (0.39 in) inward from the disc rotor outer circumference, and check the disc rotor runout while rotating the disc rotor.

Disc rotor runout limit: 0.05 mm (0.0020 in)

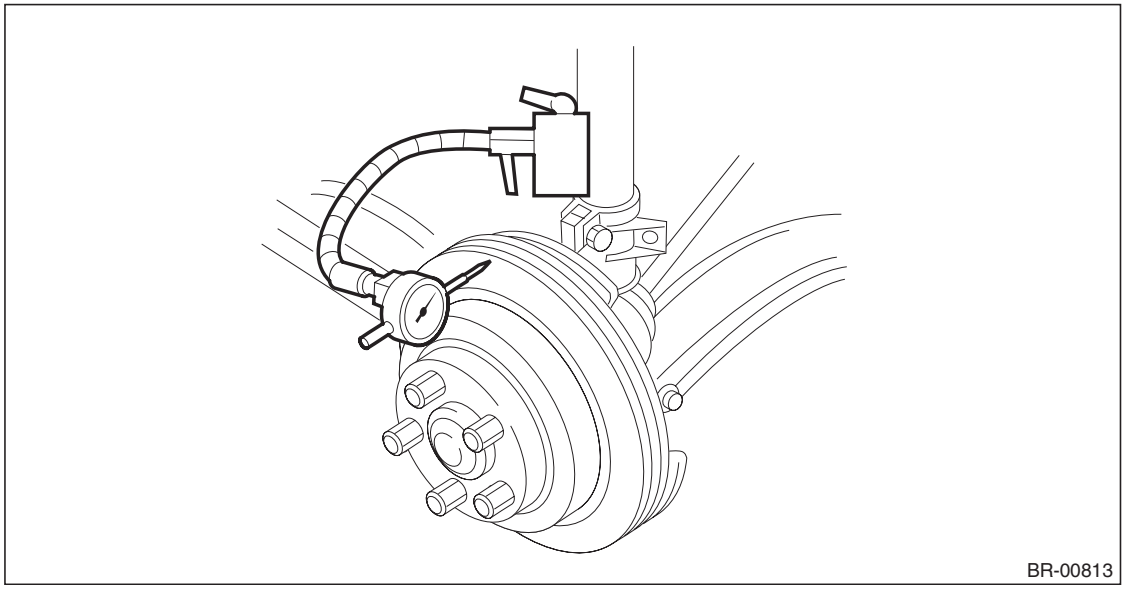

4) If the runout limit is exceeded in the inspection, replace the disc rotor.

2. DISC ROTOR THICKNESS CHECK

1) Set a micrometer 10 mm (0.39 in) inward from the disc rotor outer perimeter, and then measure the disc rotor thickness (A).

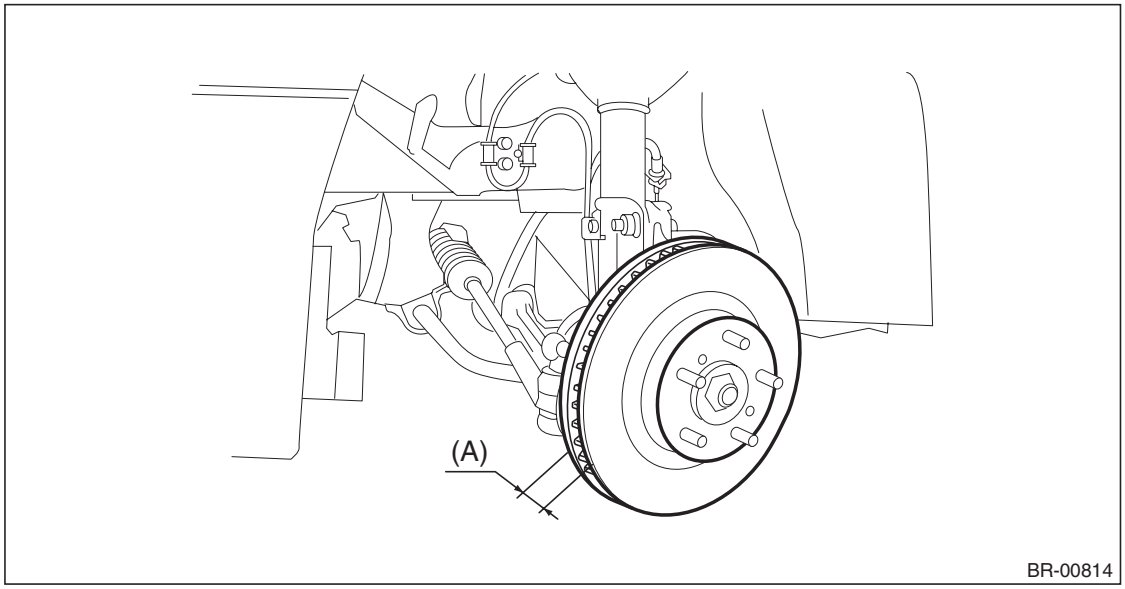

	Size	Standard	Wear limit	Disc rotor outer diameter
Disc rotor thickness (A)	16-inch	24 mm (0.94 in)	22 mm (0.87 in)	294 mm (11.57 in)
	17-inch	30 mm (1.18 in)	28 mm (1.10 in)	316 mm (12.44 in)

2) If the wear limit is exceeded in the inspection, replace the disc rotor.

GETtheMANUALS.org

4. Front Disc Brake Assembly

A: REMOVAL

CAUTION:
Do not allow brake fluid to come in contact with the painted surface of the vehicle body. If it does, wash off with water and wipe away completely.

1) Lift up the vehicle, and then remove the front wheels.
2) Remove the caliper body.
   (1) Remove the union bolt and caliper bolt, and remove the caliper body from the support.

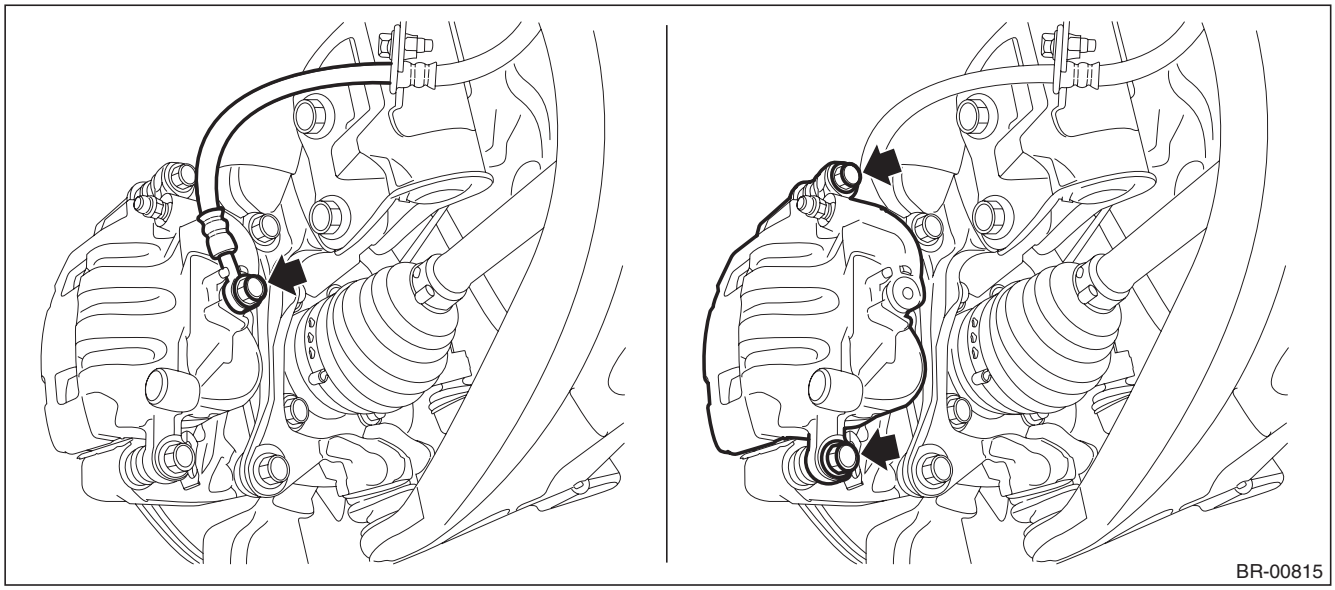

3) Remove the support.

NOTE:
Remove the support only when replacing the disc rotor or support. It is not necessary to remove it when servicing the caliper body.

   (1) Remove the brake pad from support.

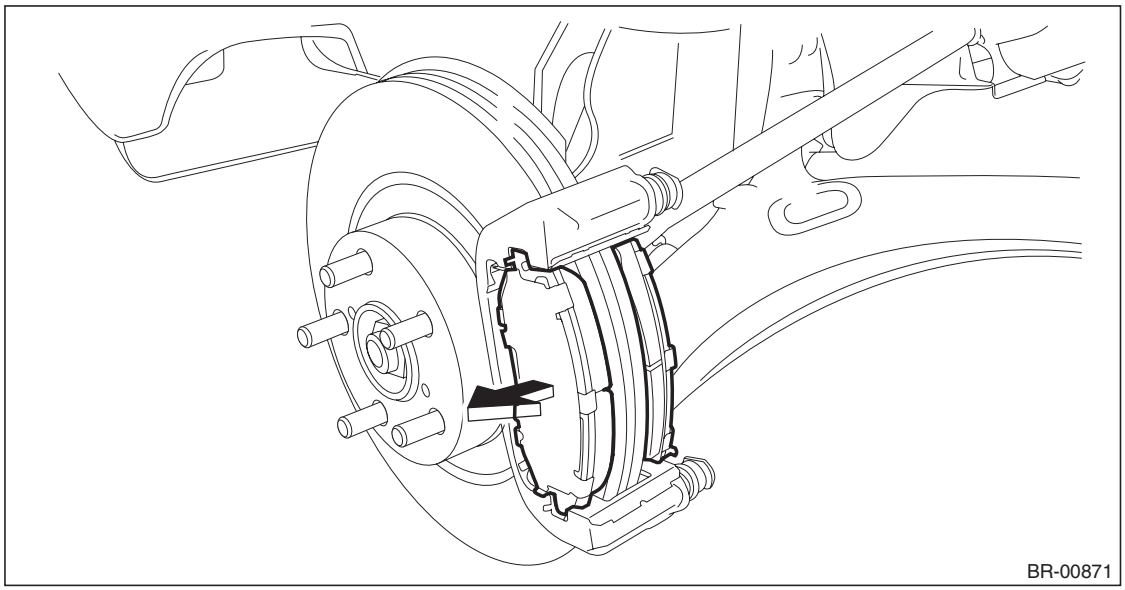

GETtheMANUALS.org

(2) Remove the mounting bolts, and then remove the support from the front axle housing.

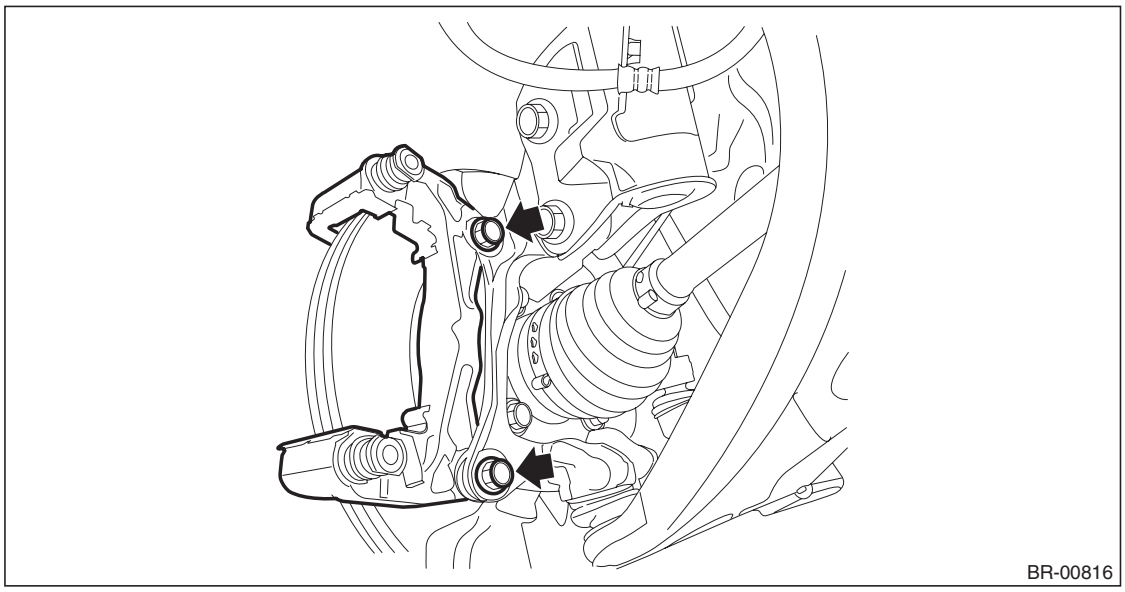

B: INSTALLATION

1. 16-INCH TYPE

NOTE:
Before installation, remove mud and foreign matter from the caliper body and support.
1) Before installation, check each part. <Ref. to BR-28, INSPECTION, Front Disc Brake Assembly.>
2) Apply a thin coat of Molykote M7439 (Part No. 003602001) to the support.

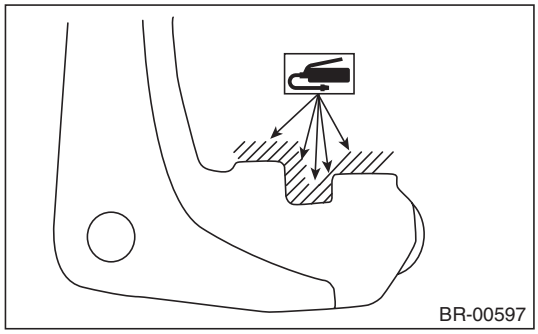

3) Install the support to the front axle housing.

Tightening torque:
Mounting bolt: 120 N·m (12.24 kgf-m, 88.5 ft-lb)

4) Apply a thin coat of Molykote M7439 (Part No. 003602001) or grease contained in the pad kit to the pad clip.

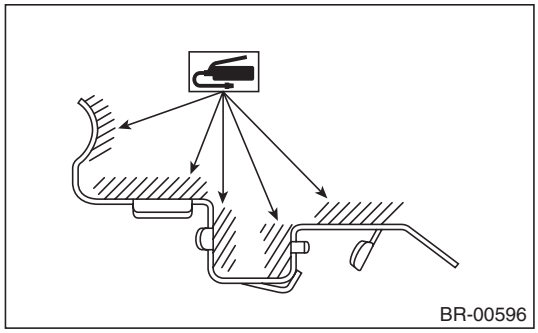

GETtheMANUALS.org

5) Apply a thin coat of Molykote AS880N (Part No. K0777YA010) or grease contained in the pad kit to both surfaces of the pad and inner shim.

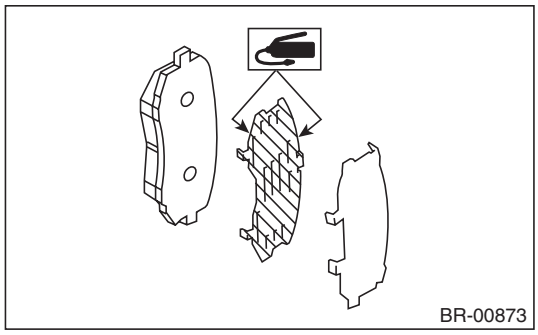

6) Install the brake pad to the support.
7) Install the caliper body to the support.

Tightening torque:
Caliper bolt: 27 N·m (2.75 kgf-m, 19.9 ft-lb)

8) Connect the brake hose using a new brake hose gasket.

Tightening torque:
Union bolt: 18 N·m (1.84 kgf-m, 13.3 ft-lb)

9) Bleed air from the brake system. <Ref. to BR-54, BRAKE LINE, PROCEDURE, Air Bleeding.>
10) Install the front wheels.

2. 17-INCH TYPE

NOTE:
Before installation, remove mud and foreign matter from the caliper body and support.
1) Before installation, check each part. <Ref. to BR-28, INSPECTION, Front Disc Brake Assembly.>
2) Apply a thin coat of Molykote M7439 (Part No. 003602001) to the support.

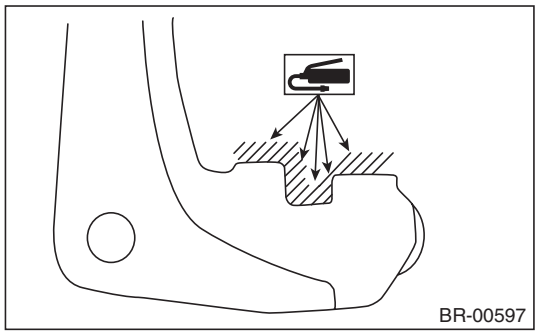

3) Install the support to the front axle housing.

Tightening torque:
Mounting bolt: 120 N·m (12.24 kgf-m, 88.5 ft-lb)

4) Apply a thin coat of Molykote M7439 (Part No. 003602001) or grease contained in the pad kit to the pad clip.

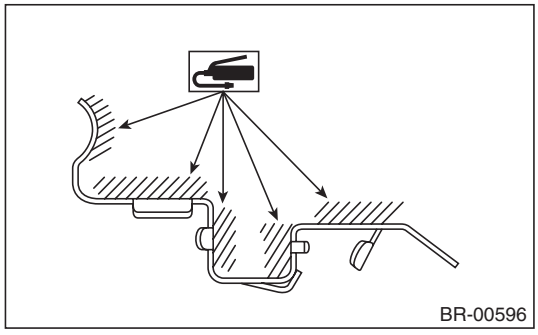

GETtheMANUALS.org

5) Apply a thin coat of Molykote AS880N (Part No. K0777YA010) or grease contained in the pad kit to both surfaces of the pad and inner shim.

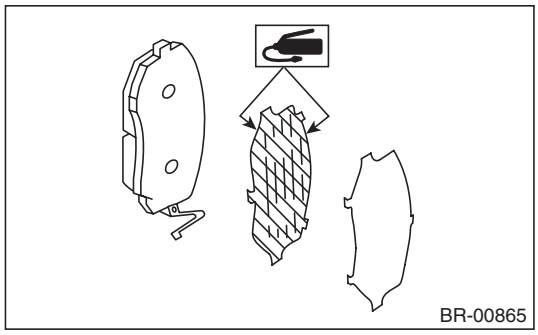

6) Install the brake pad to the support.

CAUTION:
- **Be sure to install so that the pad return spring faces the input side of the direction of brake rotor rotation, as shown in the figure.**
- **Correctly install the pad return spring to the supporting surface of the pad clip as shown in the figure.**
- **If the pad return spring is deformed or damaged, replace the brake pad.**

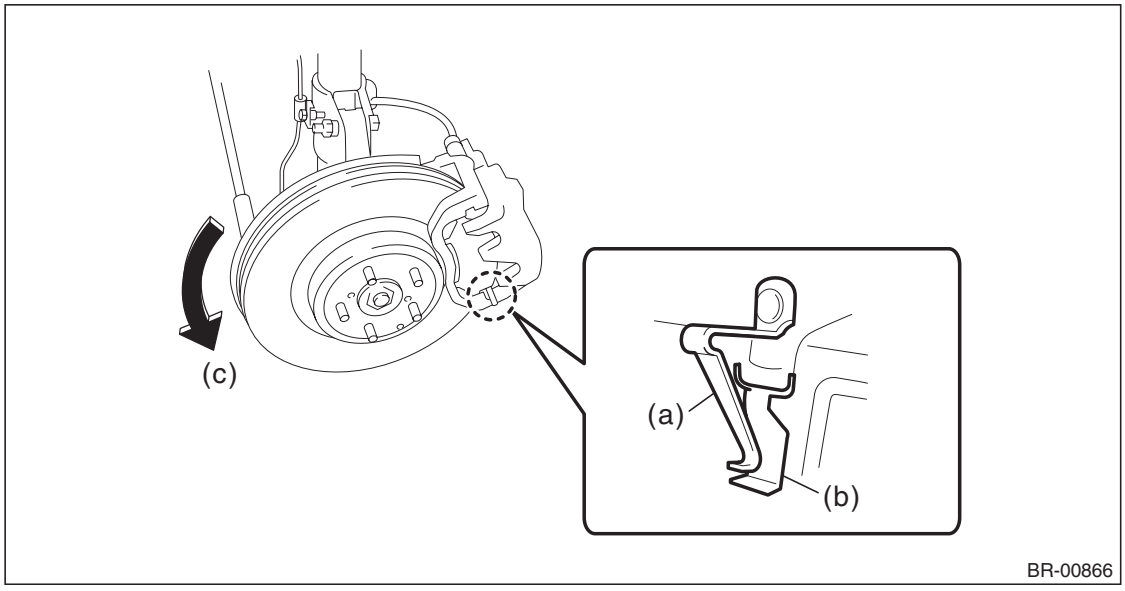

(a) Pad return spring (b) Supporting surface of pad clip (c) Direction of brake rotor rotation

GETtheMANUALS.org

NOTE:
Install the brake pad indicator in proper direction.

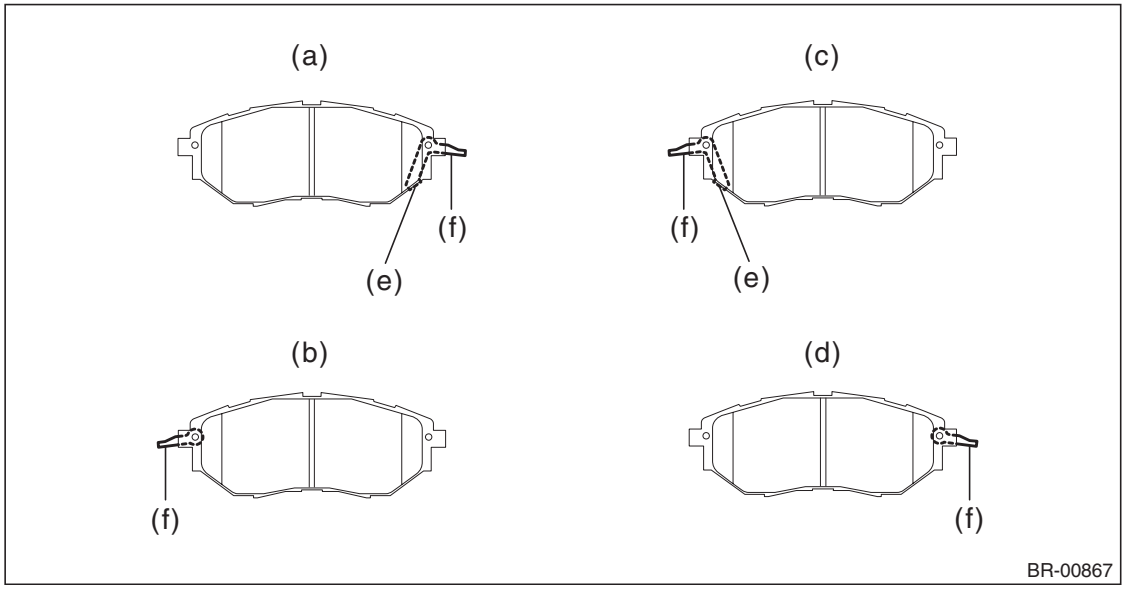

(a) LH — IN
(b) LH — OUT
(c) RH — IN
(d) RH — OUT
(e) Pad indicator
(f) Pad return spring

7) Install the caliper body to the support.

Tightening torque:
Caliper bolt: 27 N·m (2.75 kgf-m, 19.9 ft-lb)

8) Connect the brake hose using a new brake hose gasket.

Tightening torque:
Union bolt: 18 N·m (1.84 kgf-m, 13.3 ft-lb)

9) Bleed air from the brake system. <Ref. to BR-54, BRAKE LINE, PROCEDURE, Air Bleeding.>
10) Install the front wheels.

C: DISASSEMBLY

CAUTION:
Be careful not to allow foreign matter to enter the brake hose connector.

1) Remove mud and foreign matter from the caliper body.
2) Remove the piston.
   (1) Place a wooden block in the caliper body as shown in the figure to prevent the piston from jumping out and being damaged.
   (2) Using an air gun, gradually apply compressed air via the brake hose installation hole to push the piston out.

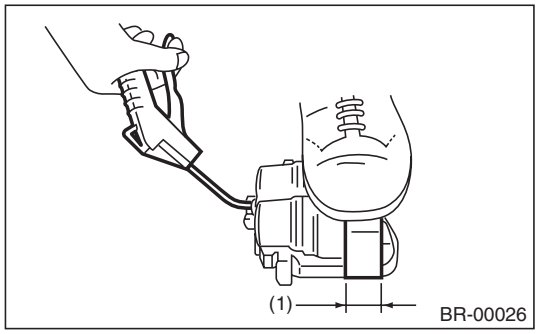

(1) Place a wooden block of 30 mm (1.18 in) width.

GETtheMANUALS.org

3) Remove the piston boot from caliper body cylinder.

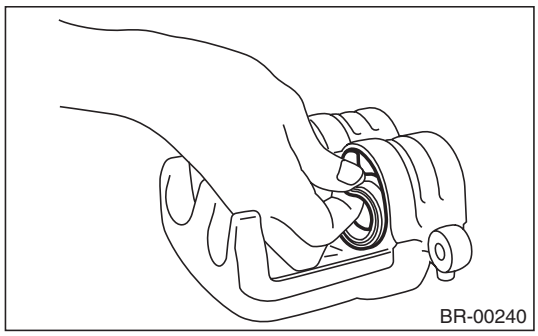

4) Remove the piston seal from caliper body cylinder.

CAUTION:
Do not damage the cylinder and piston seal groove.

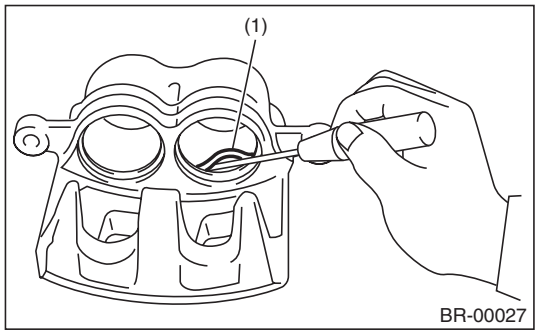

(1) Piston seal

5) Remove the guide pin, lock pin, bushing pin, and pin boot from the support.

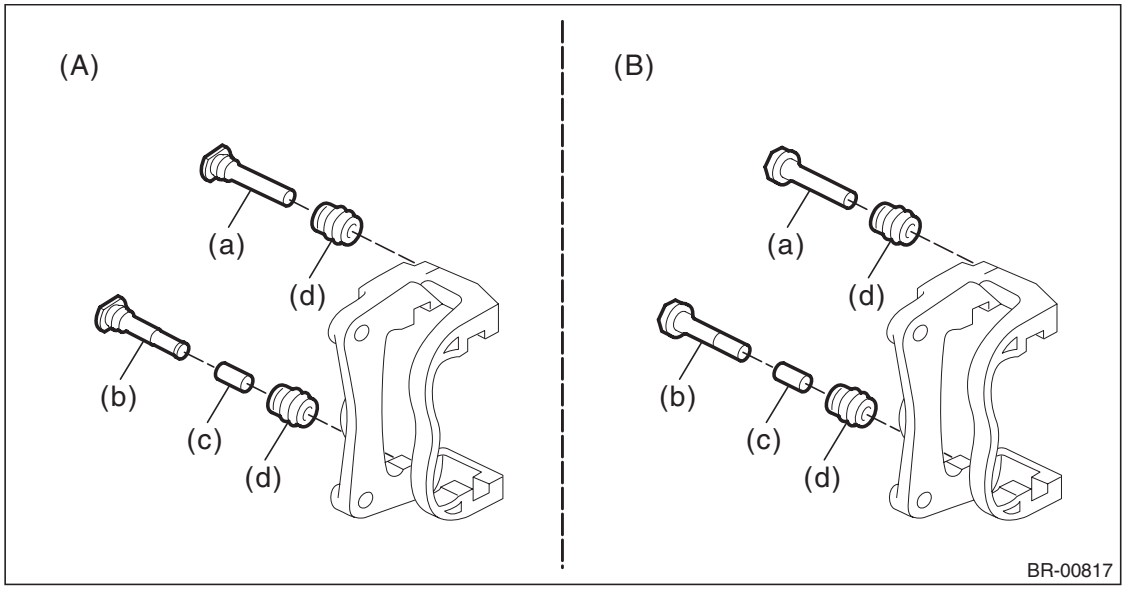

(A) 16-inch
(B) 17-inch

(a) Guide pin (black)
(b) Lock pin (silver)
(c) Bushing
(d) Pin boot

GETtheMANUALS.org

D: ASSEMBLY

1) Before assembly, check each part. <Ref. to BR-28, INSPECTION, Front Disc Brake Assembly.>
2) Clean the inside of the caliper body cylinder using brake fluid.
3) Apply a coat of brake fluid to piston seal and install the piston seal to the caliper body cylinder groove.
4) Apply a coat of brake fluid to the inner surface of caliper body cylinder and the entire outer surface of the piston.
5) Apply grease contained in the piston seal kit to the piston boot, and install it to the groove at the end of the cylinder.
6) Insert the piston into caliper body cylinder.

CAUTION:
Do not force the piston into caliper body cylinder.

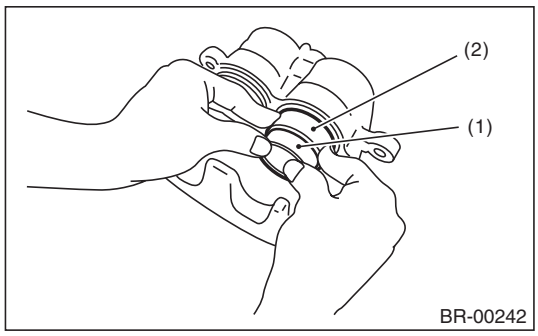

(1) Piston
(2) Piston boot

7) Position the piston boot in the grooves on caliper body cylinder and piston.

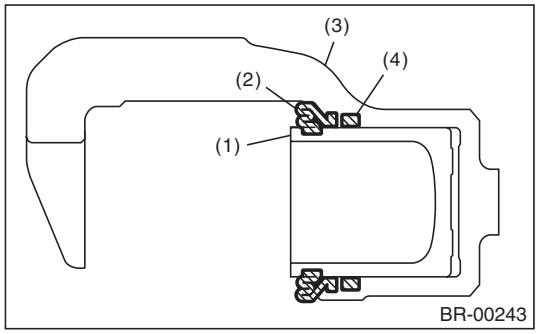

(1) Piston
(2) Piston boot
(3) Caliper body
(4) Piston seal

8) Apply grease contained in the piston seal kit to the lock pin, guide pin outer surface, support cylinder inner surface, and pin boot grooves.

GETtheMANUALS.org

9) Install the pin boot to the lock pin and guide pin, and insert it into the support cylinder.

CAUTION:
Insert the lock pin and guide pin into specified position, and make sure that they slide and seat properly.

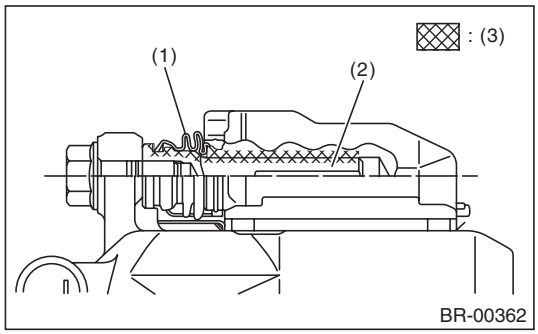

(1) Pin boot
(2) Lock pin or guide pin
(3) Grease applied area

E: INSPECTION

1) Check the caliper body cylinder and piston for uneven wear, damage or rust.
2) Check the rubber parts for damage or deterioration.
3) If faulty is found in the inspection, replace the relevant part.

GETtheMANUALS.org

5. Rear Brake Pad

A: REMOVAL

1) Lift up the vehicle, and then remove the rear wheels.
2) Remove the rear brake pad.
   (1) Remove the bolts and remove the brake hose bracket.
   (2) Remove the caliper bolt, and raise and hold the caliper body.

NOTE:
Do not disconnect the brake hose from the caliper body.

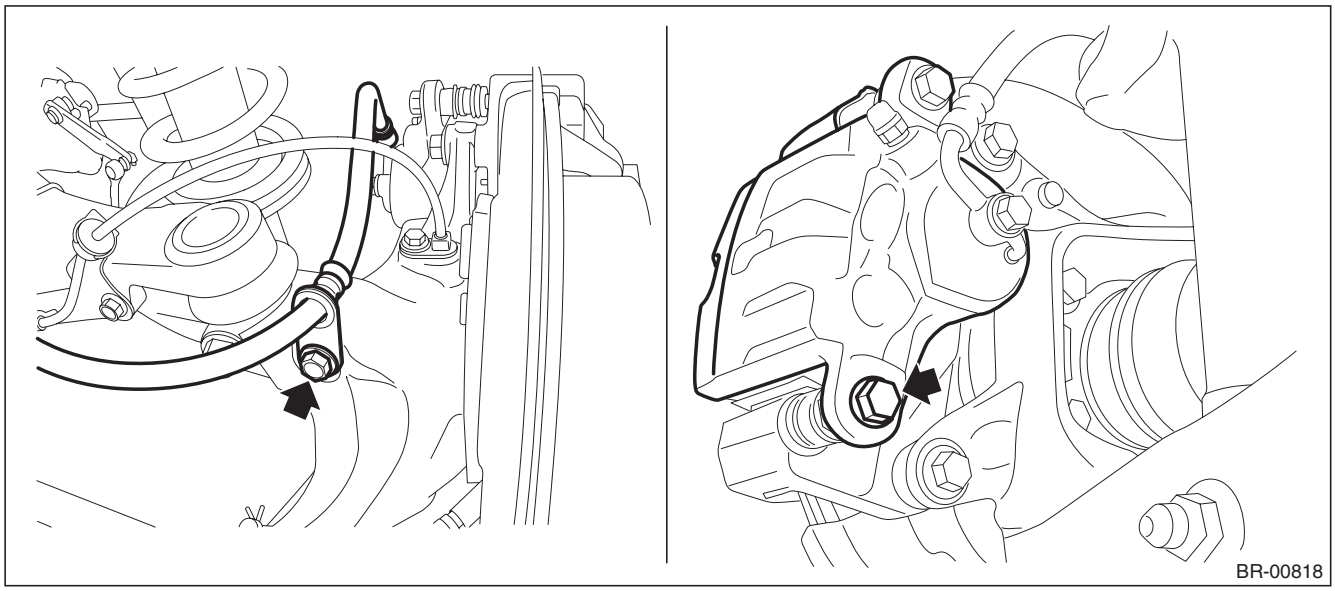

(3) Remove the brake pad from support.

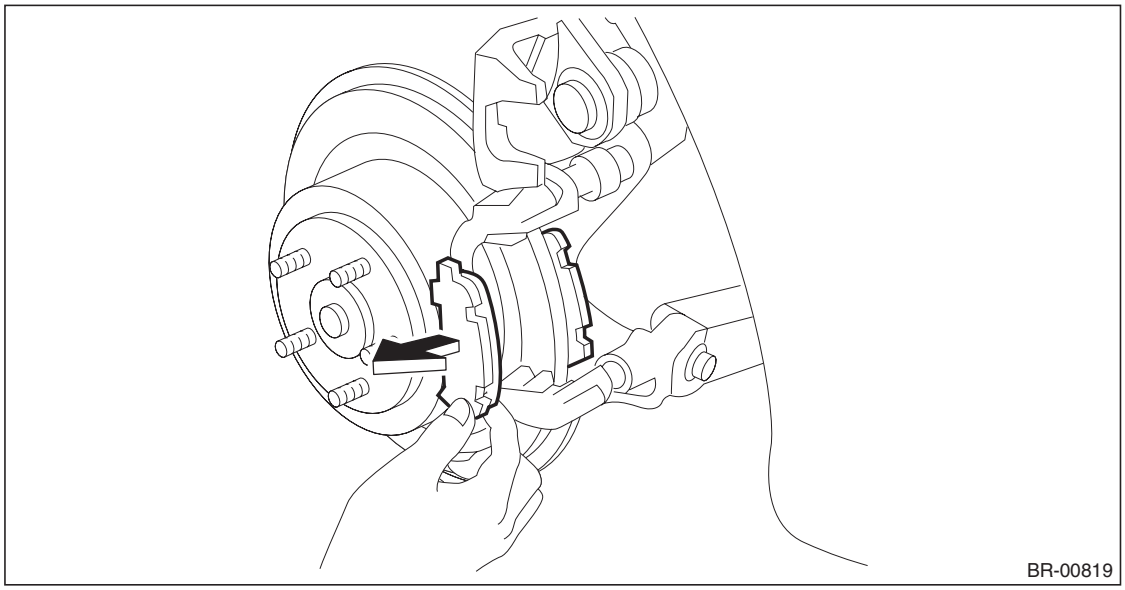

GETtheMANUALS.org

B: INSTALLATION

NOTE:
Before installation, remove mud and foreign matter from the caliper body and support.
1) Before installation, check the brake pad. <Ref. to BR-31, INSPECTION, Rear Brake Pad.>
2) Apply a thin coat of Molykote M7439 (Part No. 003602001) or grease contained in the pad kit to the pad clip.

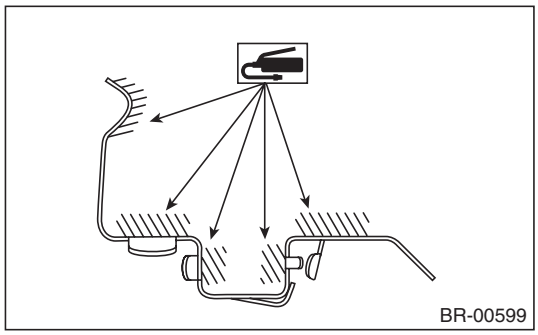

3) Apply a thin coat of Molykote AS880N (Part No. K0777YA010) or grease contained in the pad kit between the outer pad and shim.

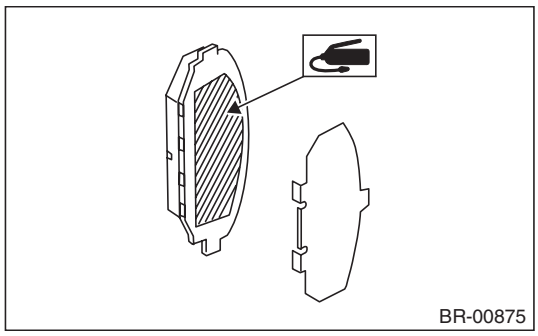

4) Apply a thin coat of Molykote AS880N (Part No. K0777YA010) or grease contained in the pad kit to both surfaces of the inner pad inner shim.

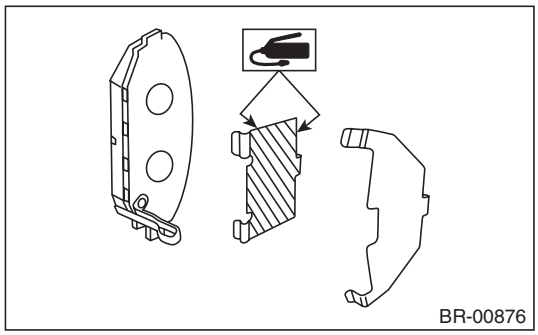

5) Install the brake pad to the support.
6) Install the caliper body to the support.

Tightening torque:
Caliper bolt: 27 N·m (2.75 kgf-m, 19.9 ft-lb)

7) Install the brake hose bracket.

Tightening torque:
Brake hose bracket: 33 N·m (3.36 kgf-m, 24.3 ft-lb)

8) Install the rear wheels.

GETtheMANUALS.org

C: INSPECTION

1) Check the pad thickness (A).

NOTE:
- Always replace the pads of both wheels and both sides as a set.
- Replace pad clips if they are twisted or worn.
- Replace the pad if there is oil or grease on it.
- A wear indicator is installed on the inner disc brake pad. If the pad is worn to the limit, the end of wear indicator contacts disc rotor, and a squeaking sound is heard as the wheel rotates. If the sound is heard, replace the pad.

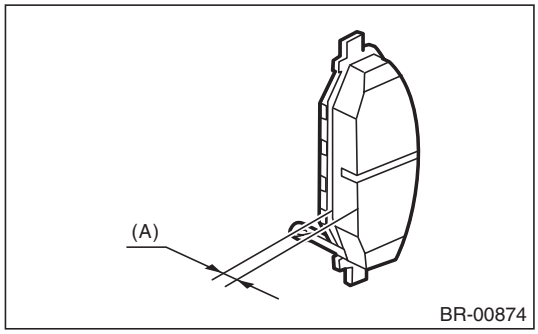

	Disc rotor type	Standard	Wear limit
Pad thickness (A)	Solid	9 mm (0.35 in)	1.5 mm (0.059 in)
	Ventilated	11 mm (0.43 in)	1.5 mm (0.059 in)

2) If the wear limit is exceeded in the inspection, replace the brake pad.

GETtheMANUALS.org

6. Rear Disc Rotor

A: REMOVAL

1) Lift up the vehicle, and then remove the rear wheels.
2) Release the parking brake.
3) Remove the caliper body assembly from the rear axle housing.
   (1) Remove the bolt from the brake hose bracket.
   (2) Remove the mounting bolt, and remove the caliper body assembly.

   (3) Prepare wiring harnesses etc. to be discarded, and suspend the caliper body assembly from the shock absorber with the harnesses.

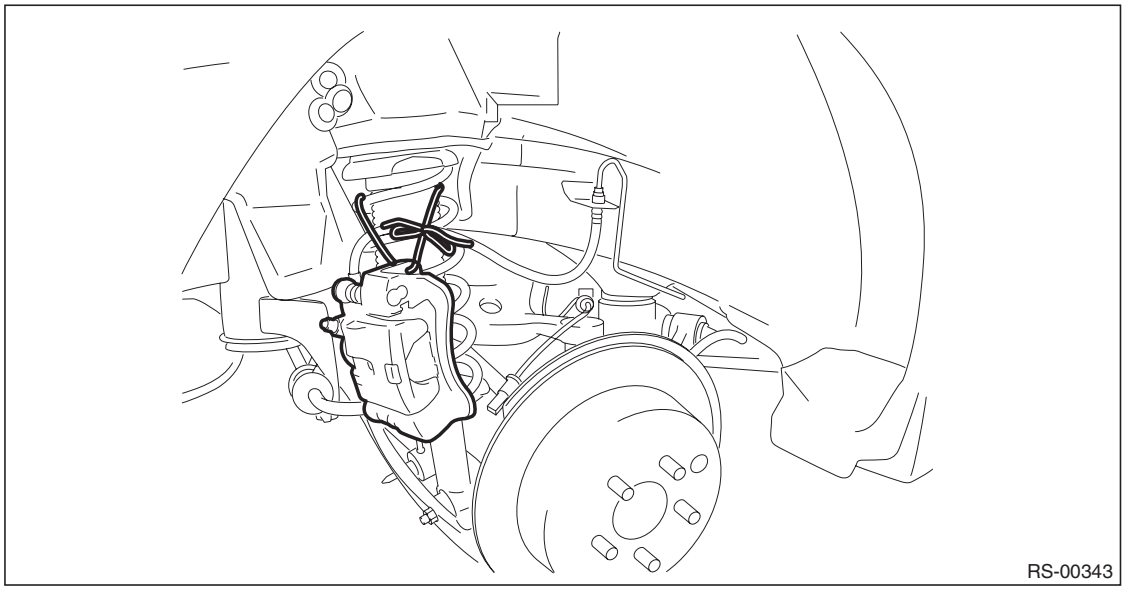

4) Remove the rear disc rotor.

NOTE:
If it is difficult to remove the disc rotor, perform the following two methods in order.

GETtheMANUALS.org

1. Insert the flat tip screwdriver into the brake adjustment hole (A), and rotate the adjusting screw until the brake shoe moves far enough to remove the disc rotor.

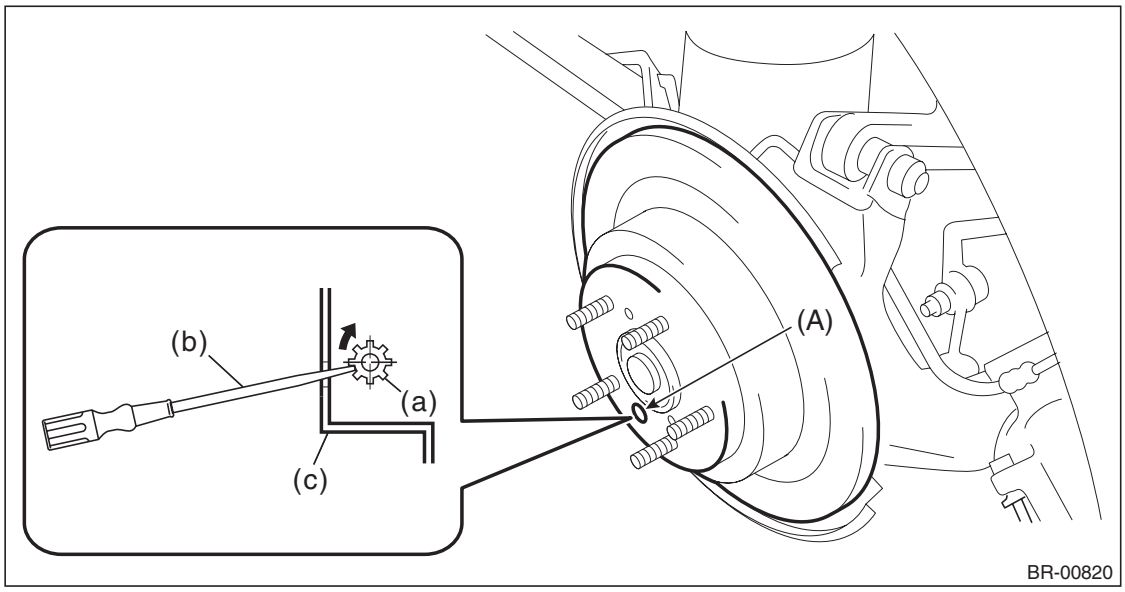

(a) Adjusting screw (b) Flat tip screwdriver (c) Disc rotor

2. When the disc rotor is difficult to be removed from the rear hub unit bearing, screw in 8 mm (0.31 in) bolt to the threaded part of the disc rotor (A), and remove the disc rotor.

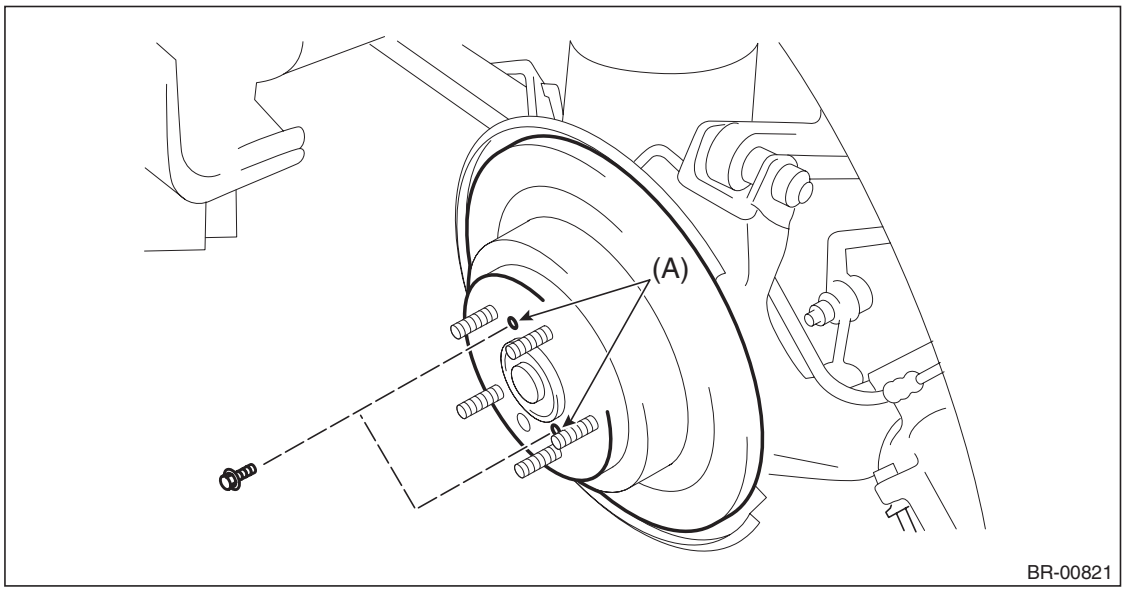

B: INSTALLATION

NOTE:
Before installation, remove mud and foreign matter from the caliper body assembly.
1) Before installation, check the rear disc rotor. <Ref. to BR-34, INSPECTION, Rear Disc Rotor.>
2) Install each part in the reverse order of removal.
3) Adjust the parking brake. <Ref. to PB-15, ADJUSTMENT, Parking Brake Assembly (Rear Disc Brake).>

Tightening torque:
Brake hose bracket: 33 N·m (3.36 kgf-m, 24.3 ft-lb)
Mounting bolt: 66 N·m (6.73 kgf-m, 48.7 ft-lb)

GETtheMANUALS.org

C: INSPECTION

1. DISC ROTOR RUNOUT CHECK

1) Check the rear hub unit bearing for free play and runout before the inspection of disc rotor runout limit. <Ref. to DS-47, INSPECTION, Rear Hub Unit Bearing.>
2) Secure the disc rotor by tightening the five wheel nuts.
3) Set a dial gauge 10 mm (0.39 in) inward from the disc rotor outer circumference, and check the disc rotor runout while rotating the disc rotor.

Disc rotor runout limit:
0.05 mm (0.0020 in)

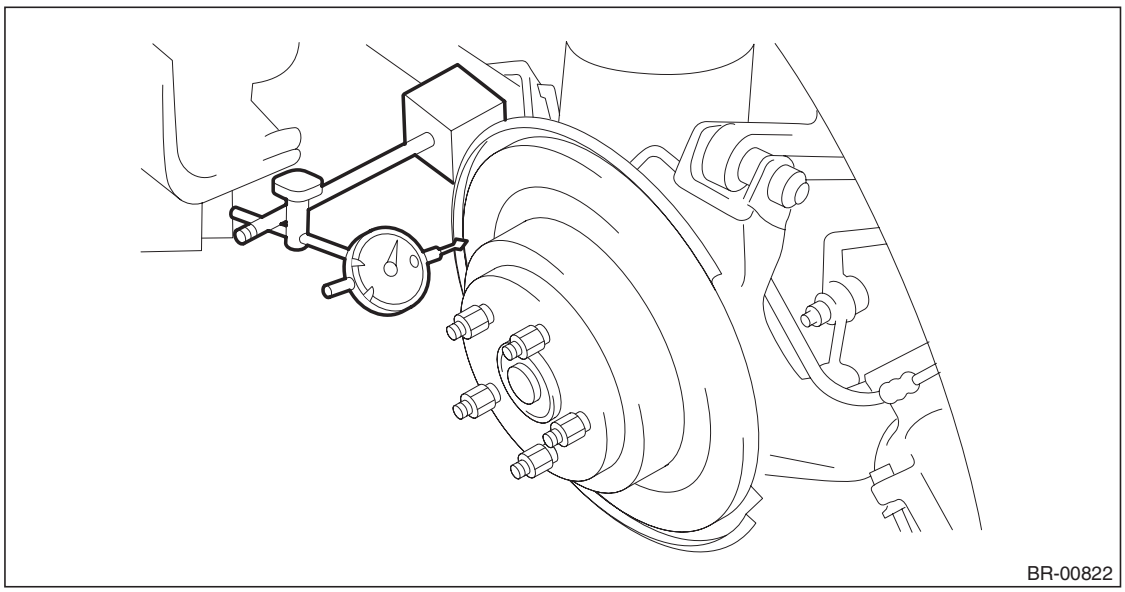

4) If the runout limit is exceeded in the inspection, replace the disc rotor.

GETtheMANUALS.org

2. DISC ROTOR THICKNESS CHECK

1) Set a micrometer 10 mm (0.39 in) inward from the disc rotor outer perimeter, and then measure the disc rotor thickness (A).

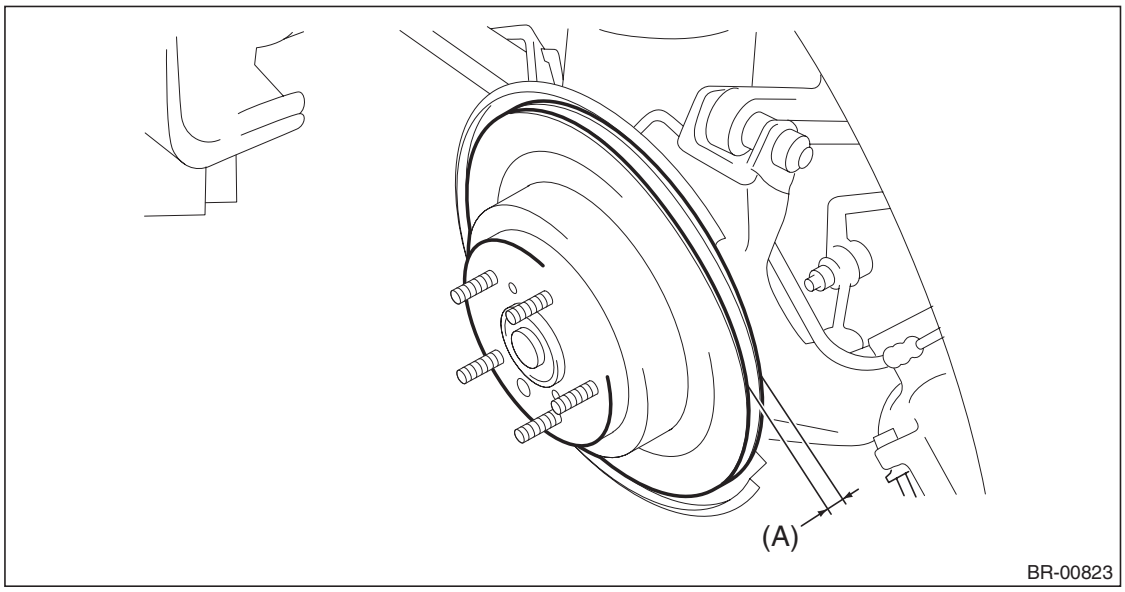

	Disc rotor type	Standard	Wear limit	Disc rotor outer diameter
Disc rotor thickness (A)	Solid disc	10 mm (0.39 in)	8.5 mm (0.33 in)	286 mm (11.26 in)
	Ventilated disc	18 mm (0.71 in)	16 mm (0.63 in)	290 mm (11.42 in)

2) If the wear limit is exceeded in the inspection, replace the disc rotor.

GETtheMANUALS.org

7. Rear Disc Brake Assembly

A: REMOVAL

CAUTION:
Do not allow brake fluid to come in contact with the painted surface of the vehicle body. If it does, wash off with water and wipe away completely.

1) Lift up the vehicle, and then remove the rear wheels.
2) Remove the caliper body from support.
   (1) Remove the brake hose bracket and union bolt.

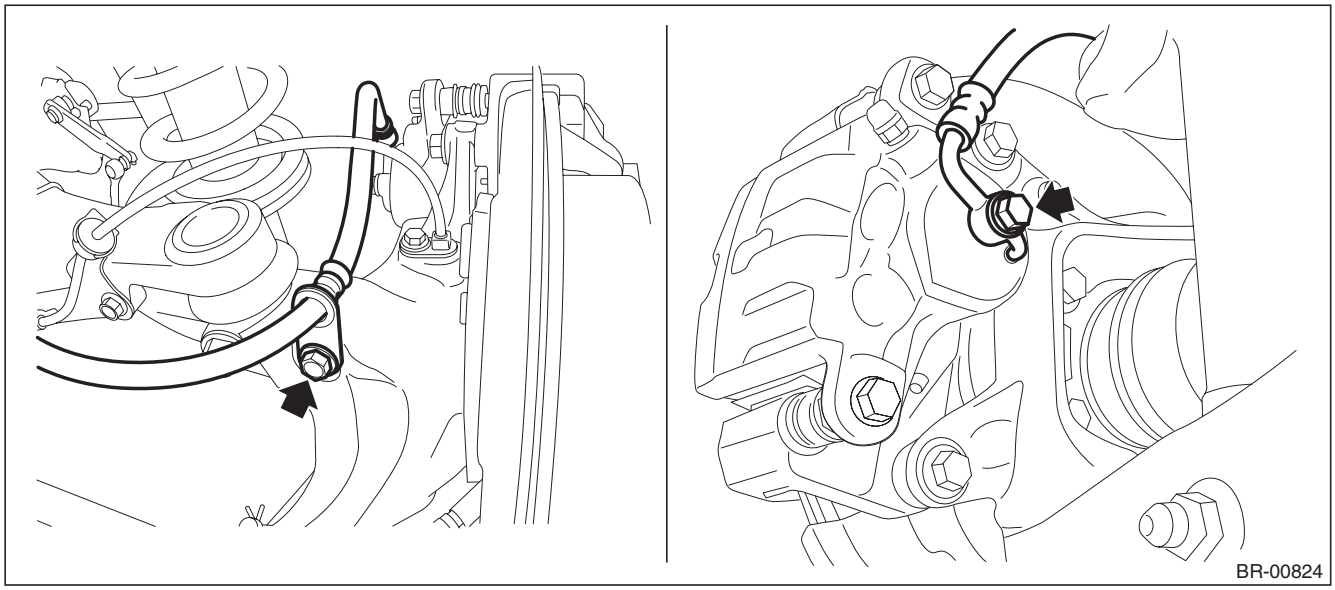

   (2) Remove the caliper bolt, and remove the caliper body.

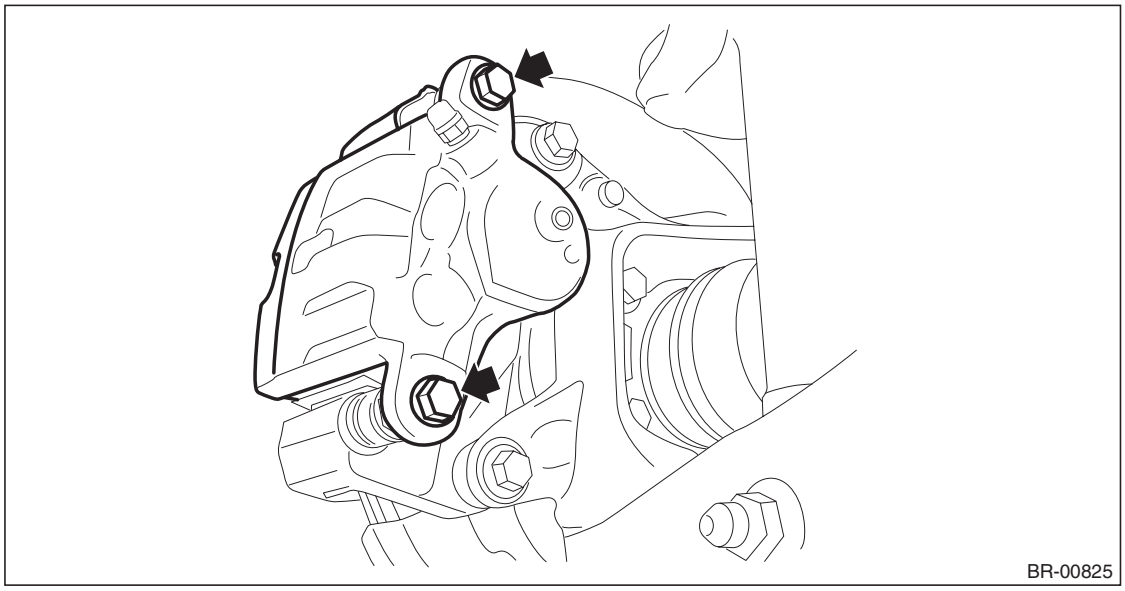

3) Remove the support.

NOTE:
Remove the support only when replacing the disc rotor or support. It is not necessary to remove it when servicing the caliper body.
   (1) Remove the brake pad from support.
   (2) Remove the mounting bolts, and then remove the support from the rear axle housing.

GETtheMANUALS.org

B: INSTALLATION

NOTE:
Before installation, remove mud and foreign matter from the caliper body and support.
1) Before installation, check each part. <Ref. to BR-40, INSPECTION, Rear Disc Brake Assembly.>
2) Apply a thin coat of Molykote M7439 (Part No. 003602001) or the grease included with pad kit to the support.

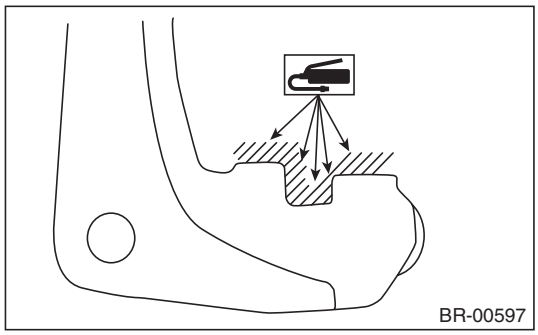

3) Install the support to the rear axle housing.

Tightening torque:
Mounting bolt: 66 N·m (6.73 kgf-m, 48.7 ft-lb)

4) Apply a thin coat of Molykote M7439 (Part No. 003602001) or grease contained in the pad kit to the pad clip.

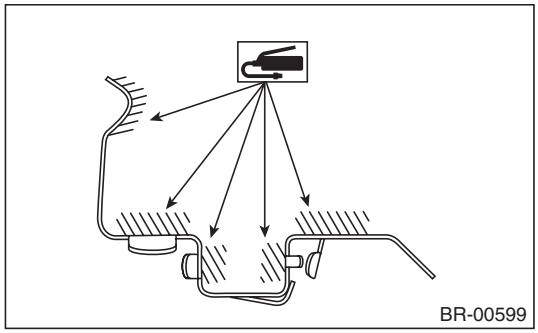

5) Apply a thin coat of Molykote AS880N (Part No. K0777YA010) or grease contained in the pad kit between the outer pad and shim.

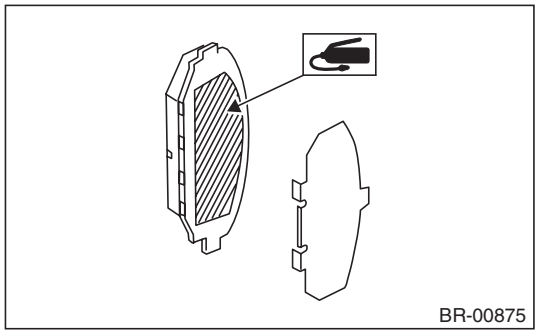

GETtheMANUALS.org

6) Apply a thin coat of Molykote AS880N (Part No. K0777YA010) or grease contained in the pad kit to both surfaces of the inner pad inner shim.

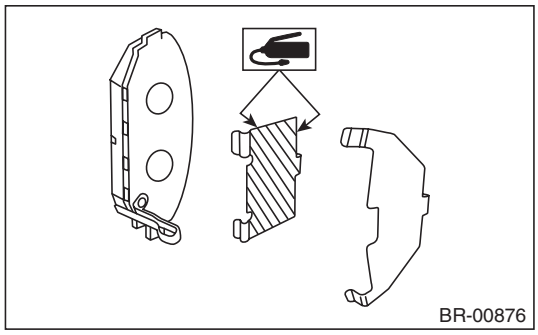

7) Install the brake pad to the support.
8) Install the caliper body to the support.

Tightening torque:
Caliper bolt: 27 N·m (2.75 kgf-m, 19.9 ft-lb)

9) Install the brake hose bracket.

Tightening torque:
Brake hose bracket: 33 N·m (3.4 kgf-m, 14.3 ft-lb)

10) Connect the brake hose using a new brake hose gasket.

Tightening torque:
Union bolt: 18 N·m (1.84 kgf-m, 13.3 ft-lb)

11) Bleed air from the brake system. <Ref. to BR-54, BRAKE LINE, PROCEDURE, Air Bleeding.>
12) Install the rear wheels.

C: DISASSEMBLY

CAUTION:
Be careful not to allow foreign matter to enter the brake hose connector.

1) Remove mud and foreign matter from the caliper body.
2) Remove the piston boot from caliper body cylinder.

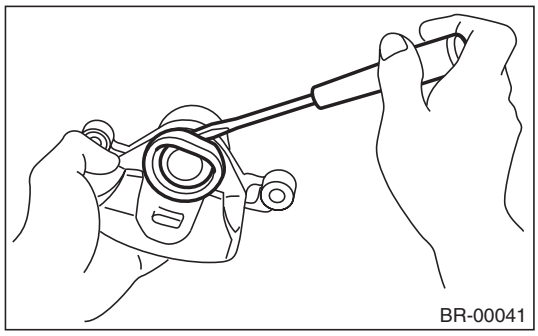

GETtheMANUALS.org

3) Remove the piston.
(1) Place a wooden block in the caliper body as shown in the figure to prevent the piston from jumping out and being damaged.
(2) Using an air gun, gradually apply compressed air via the brake hose installation hole to push the piston out.

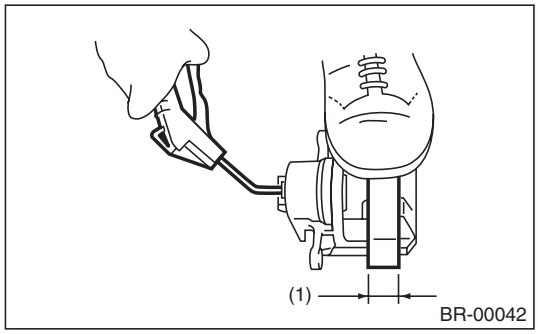

(1) Place a wooden block of 30 mm (1.18 in) width.

4) Remove the piston seal from caliper body cylinder.

CAUTION:
Do not damage the cylinder and piston seal groove.

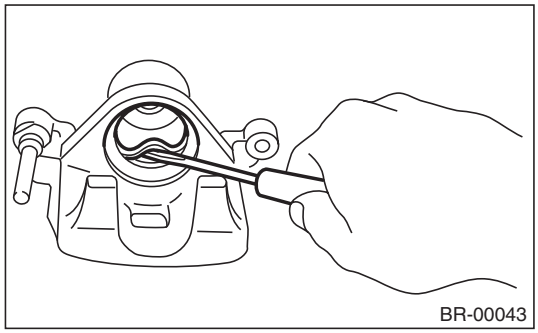

5) Remove the guide pin, lock pin, bushing pin, and pin boot from the support.

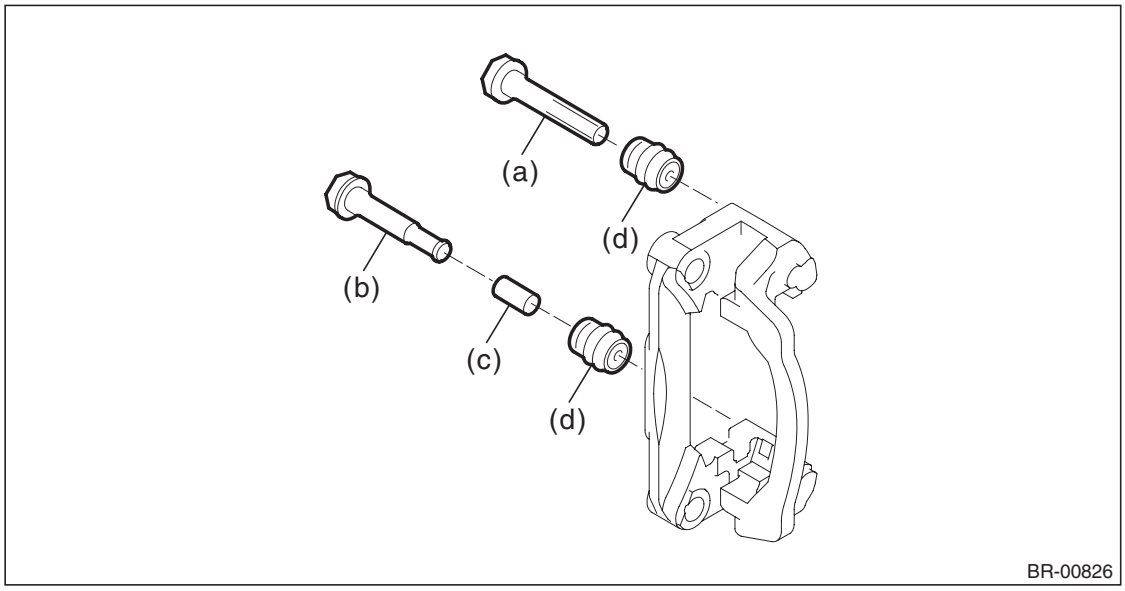

(a) Guide pin (black)
(b) Lock pin (silver)
(c) Bushing
(d) Pin boot

GETtheMANUALS.org

D: ASSEMBLY

1) Before installation, check each part. <Ref. to BR-40, INSPECTION, Rear Disc Brake Assembly.>
2) Clean the inside of the caliper body cylinder using brake fluid.
3) Apply a coat of brake fluid to piston seal and install the piston seal to the caliper body cylinder groove.
4) Apply a coat of brake fluid to the inner surface of caliper body cylinder and the entire outer surface of the piston.
5) Apply grease contained in the piston seal kit to the piston boot, and install it to the groove at the end of the cylinder.
6) Insert the piston into caliper body cylinder.

CAUTION:
Do not force the piston into caliper body cylinder.

7) Position the piston boot in the grooves on caliper body cylinder and piston.

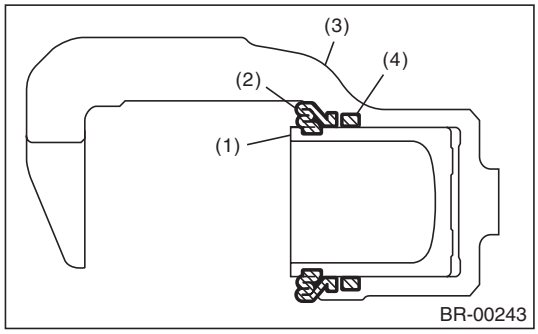

(1) Piston
(2) Piston boot
(3) Caliper body
(4) Piston seal

8) Apply grease contained in the piston seal kit to the lock pin, guide pin outer surface, support cylinder inner surface, and pin boot grooves.
9) Install the pin boot to the lock pin and guide pin, and insert it into the support cylinder.

CAUTION:
Insert the lock pin and guide pin into specified position, and make sure that they slide and seat properly.

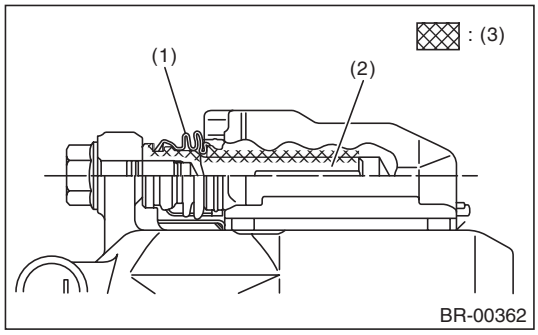

(1) Pin boot
(2) Lock pin or guide pin
(3) Grease applied area

E: INSPECTION

1) Check the caliper body cylinder and piston for uneven wear, damage or rust.
2) Check the rubber parts for damage or deterioration.
3) If faulty is found in the inspection, replace the relevant part.

GETtheMANUALS.org

8. Master Cylinder

A: REMOVAL

CAUTION:
Do not allow brake fluid to come in contact with the painted surface of the vehicle body. If it does, wash off with water and wipe away completely.
1) Disconnect the ground cable from battery.
2) Drain brake fluid from the reservoir tank completely.
3) Remove the master cylinder assembly.

CAUTION:
In order to prevent the contact of the bracket and check valve, be sure to loosen the master cylinder mounting nut while holding the bracket with hand. Otherwise it may deform the bracket.

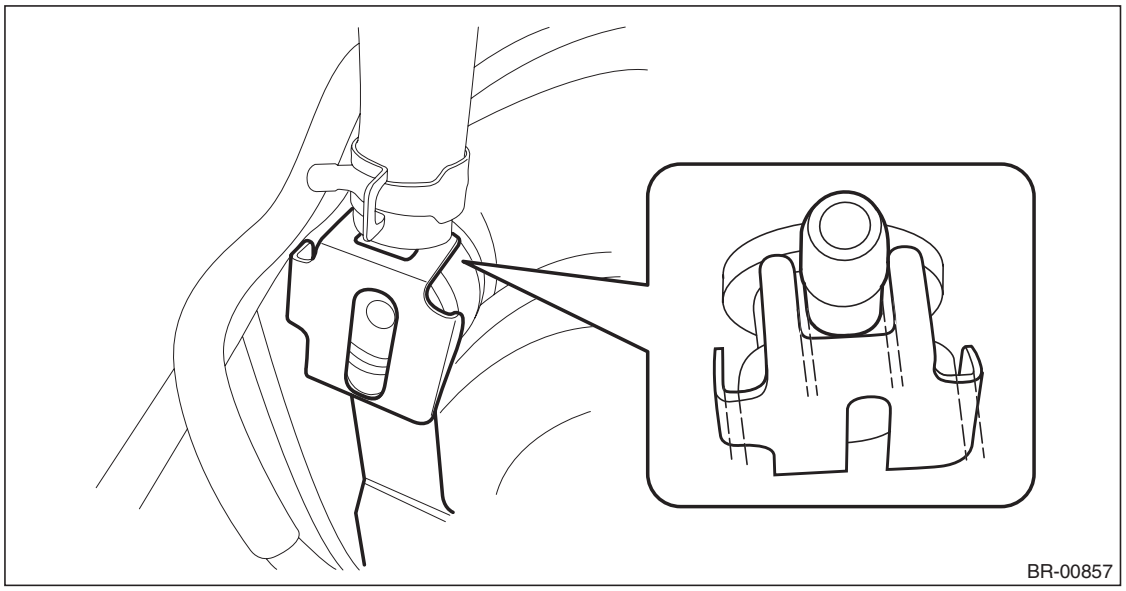

(1) Disconnect the fluid level gauge connector (a).
(2) Disconnect the brake pipe (b).
(3) Remove the nut (c), and slowly remove the master cylinder from the brake booster.

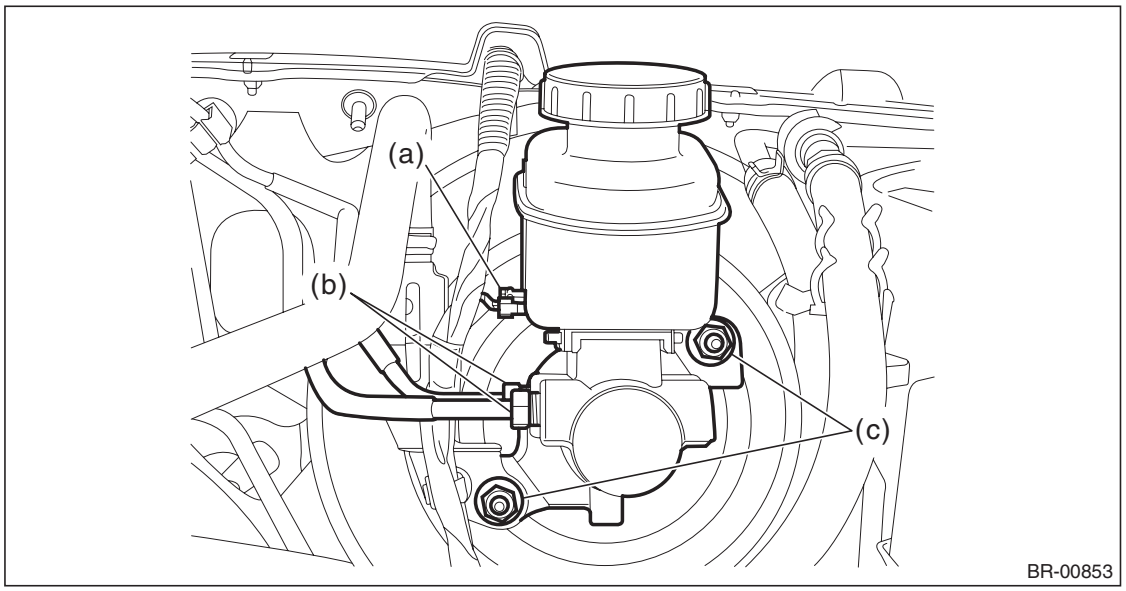

GETtheMANUALS.org

B: INSTALLATION

1) Replace the seal sub assembly for the master cylinder with a new part.

CAUTION:
Be careful not to install the seal sub assembly in the wrong location.

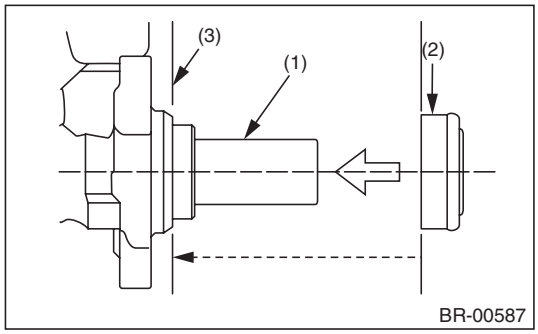

(1) Primary piston
(2) Seal sub ASSY
(3) Install the seal sub assembly to this surface.

2) Install each part in the reverse order of removal.

CAUTION:
- **Install the bracket at the position with sufficient clearance that it does not contact with the check valve.**
- **Be sure to loosen the master cylinder mounting nut while holding the bracket with hand. Otherwise the bracket may deform.**

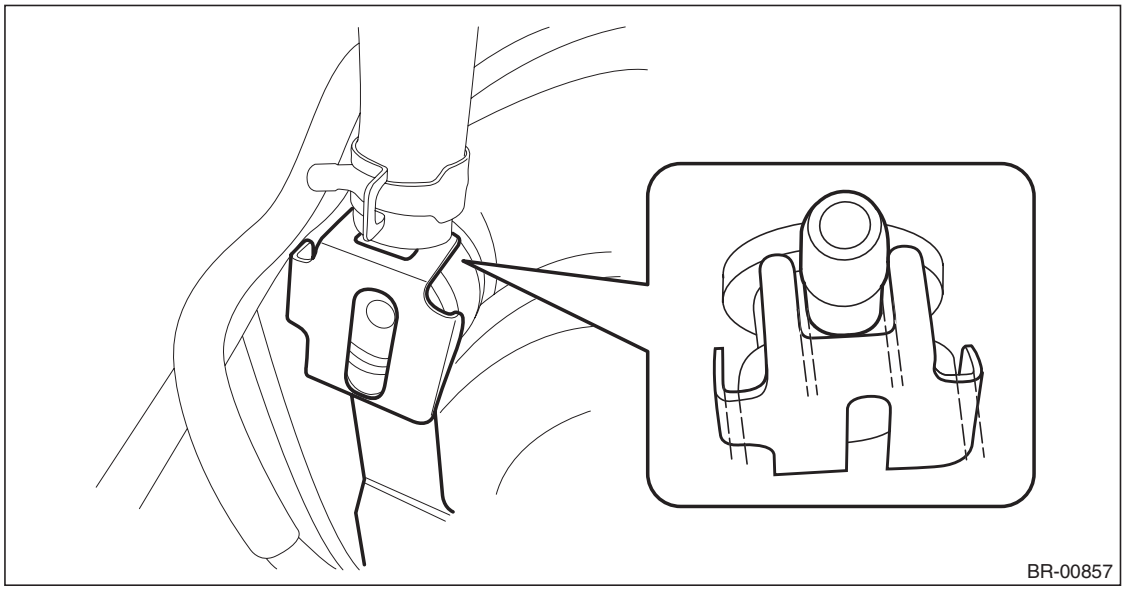

Tightening torque:
Master cylinder: 13 N·m (1.33 kgf-m, 9.6 ft-lb)
Brake pipe flare nut: 19 N·m (1.94 kgf-m, 14.0 ft-lb)

3) Bleed air from the brake system. <Ref. to BR-54, PROCEDURE, Air Bleeding.>

C: REPLACEMENT

CAUTION:
Since the master cylinder assembly cannot be disassembled, disassembly and cleaning are prohibited. When replacing, replace the master cylinder assembly.

GETtheMANUALS.org

9. Brake Booster

A: REMOVAL

CAUTION:
Do not allow brake fluid to come in contact with the painted surface of the vehicle body. If it does, wash off with water and wipe away completely.
1) Disconnect the ground cable from battery.
2) Drain brake fluid from the reservoir tank completely.
3) Remove the master cylinder assembly.

CAUTION:
In order to prevent the contact of the bracket and check valve, be sure to loosen the master cylinder mounting nut while holding the bracket with hand. Otherwise it may deform the bracket.

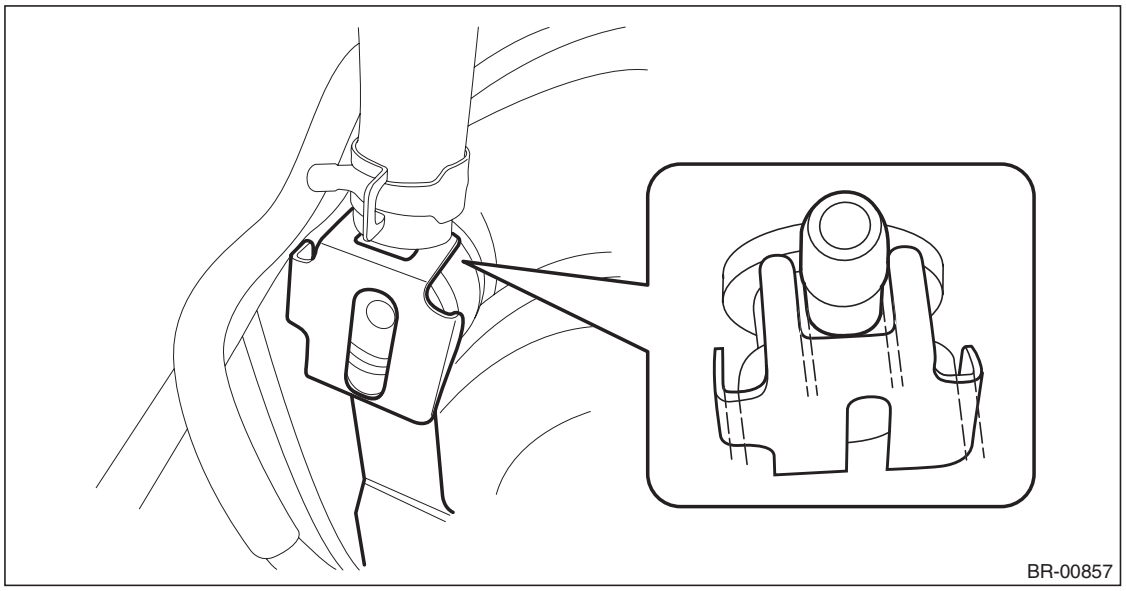

(1) Disconnect the fluid level gauge connector (a).
(2) Disconnect the brake pipe (b).
(3) Remove the nut (c), and slowly remove the master cylinder from the brake booster.

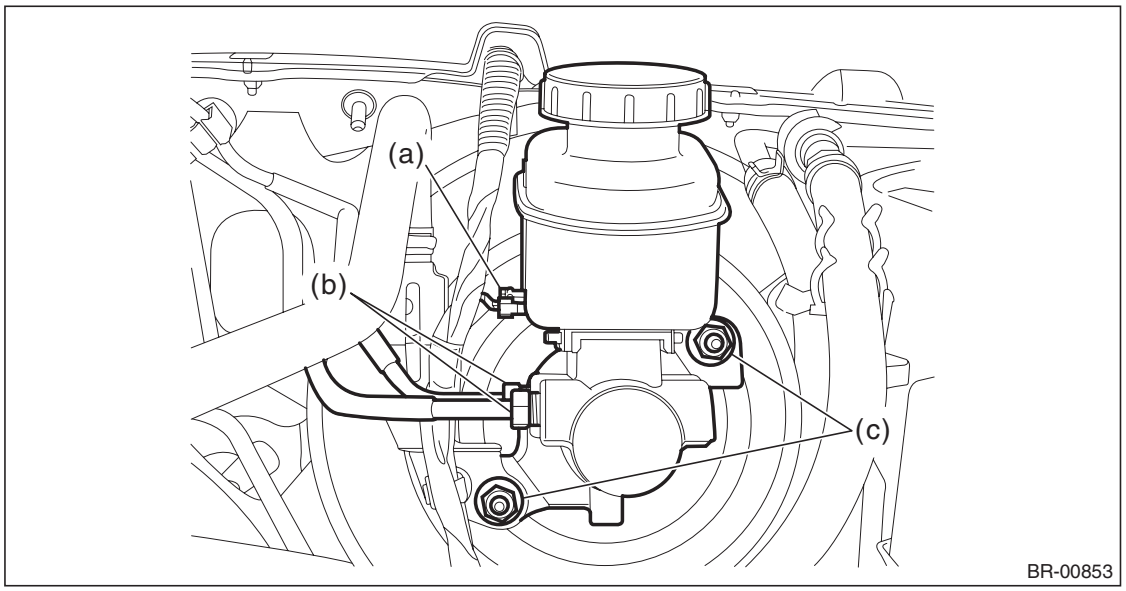

GETtheMANUALS.org

4) Remove the brake booster.

CAUTION:
- **Do not disassemble the brake booster.**
- **If external force (1) is applied from above when brake booster is placed in this position, the resin portion as indicated by "P" may become damaged.**

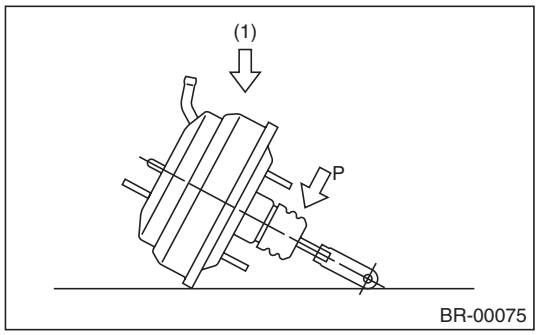

(1) Remove the clamp and remove the vacuum hose.

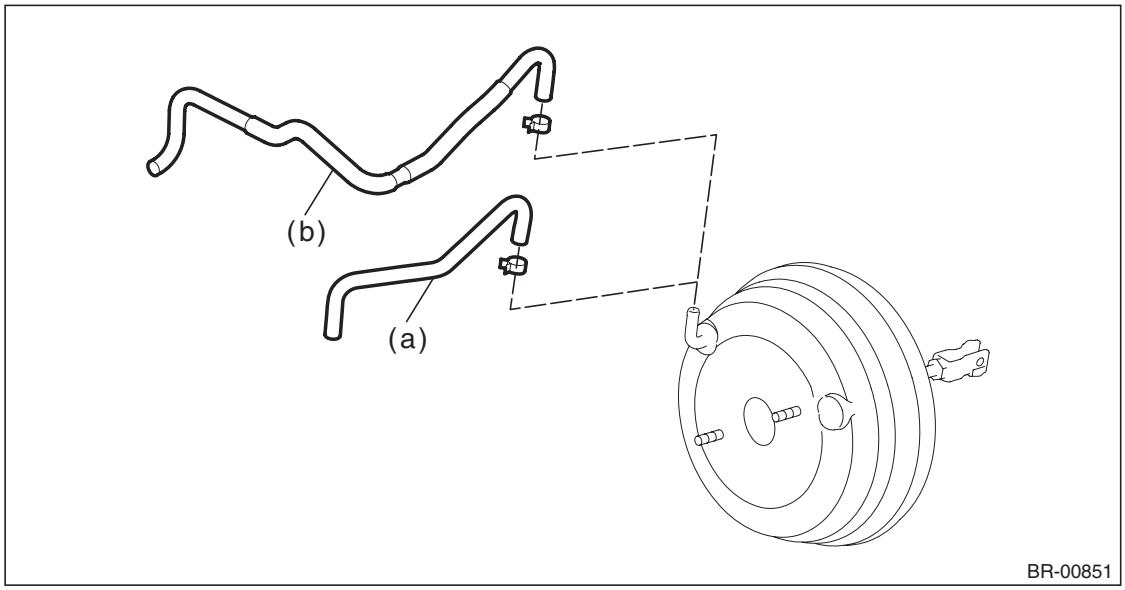

(a) Non-turbo model (b) Turbo model

GETtheMANUALS.org

(2) Remove the clips, and remove the instrument panel side cover LH.

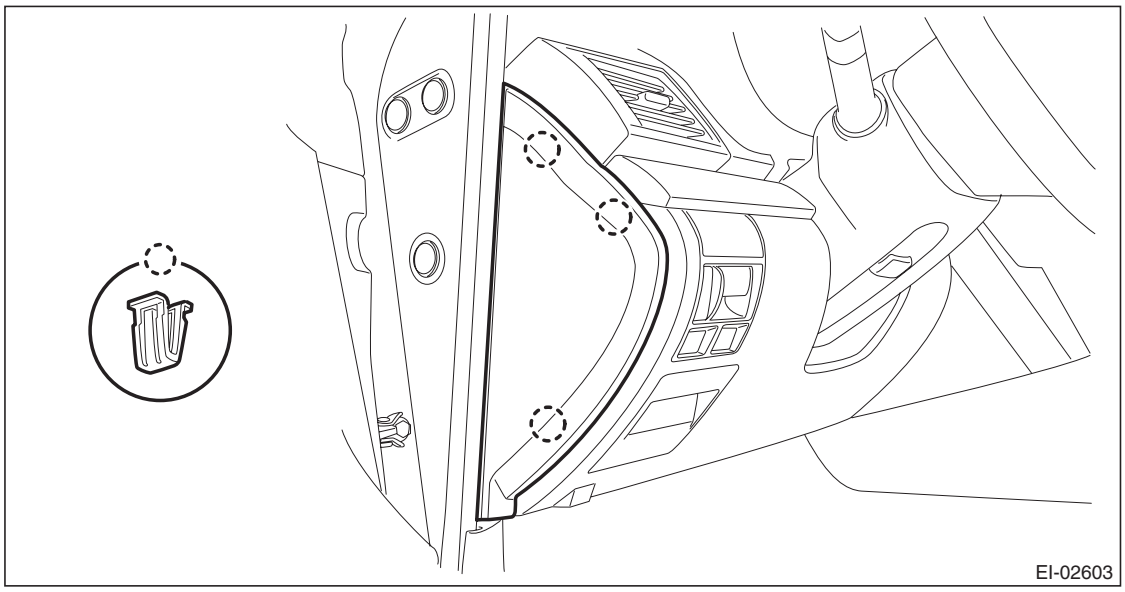

(3) Remove the clips and data link connector, and remove the instrument panel lower cover under.

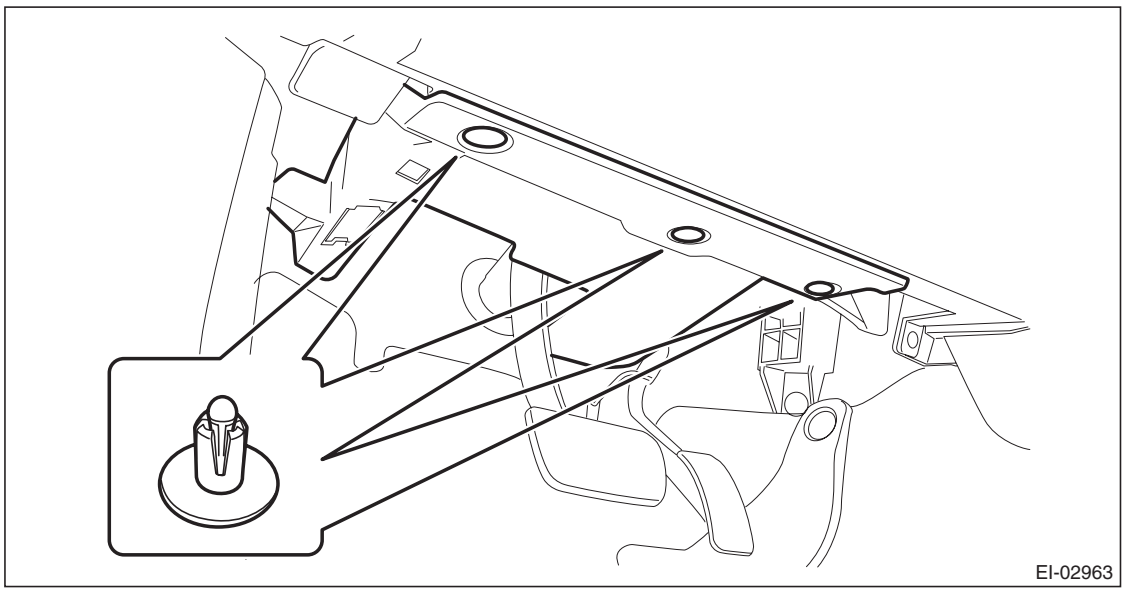

GETtheMANUALS.org

(4) Remove the screws and clips and release the claws, and remove the instrument panel lower cover while disconnecting the harness connectors.

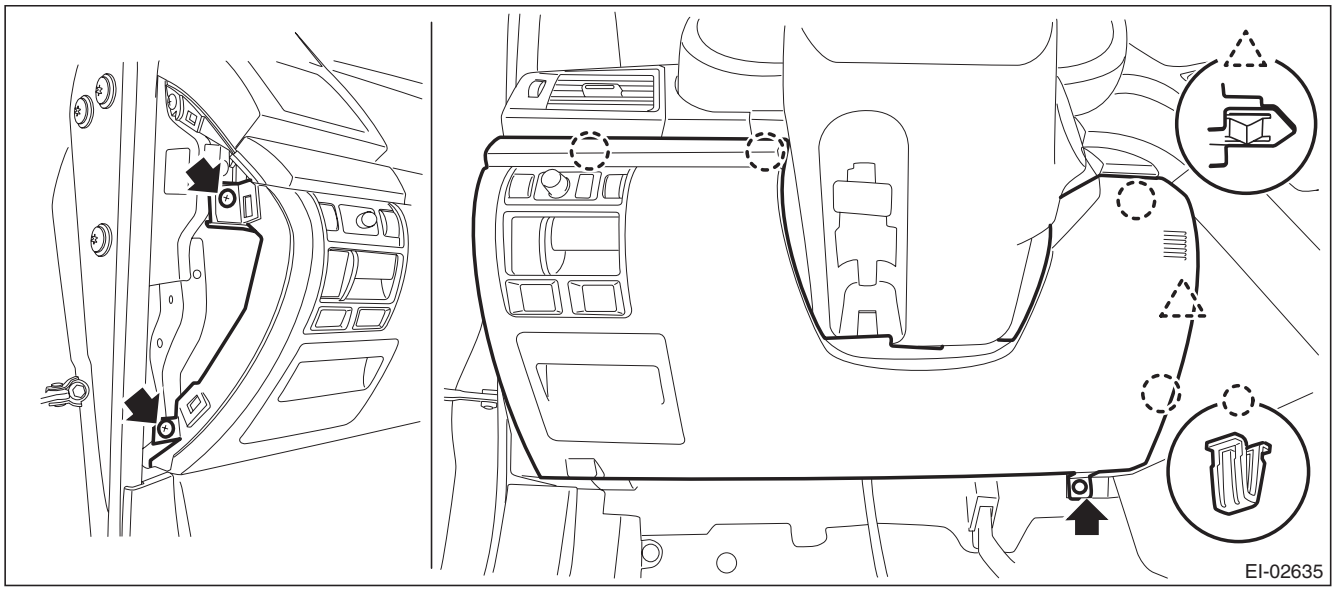

(5) Remove the bolts, and remove the knee guard panel.

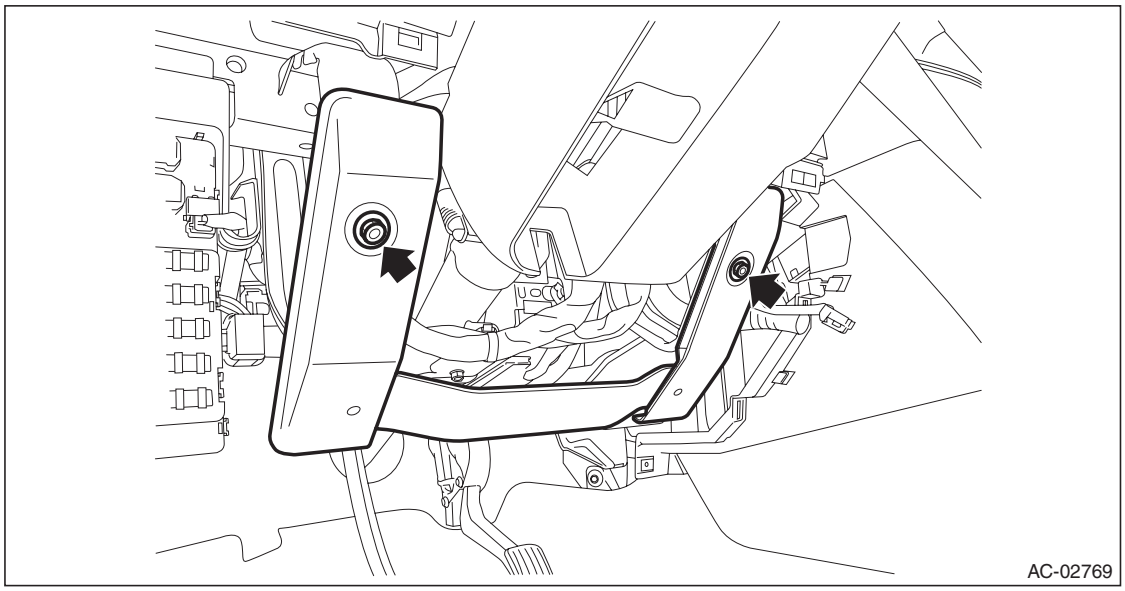

GETtheMANUALS.org

(6) Remove the snap pin (a) and clevis pin (b), and remove the operating rod from the brake pedal.

NOTE:
- Use special care when handling the operating rod. If excessive force is applied to the operating rod, the angle may change by ±3°, and it may result in damage to power piston cylinder.
- Do not change the push rod length.

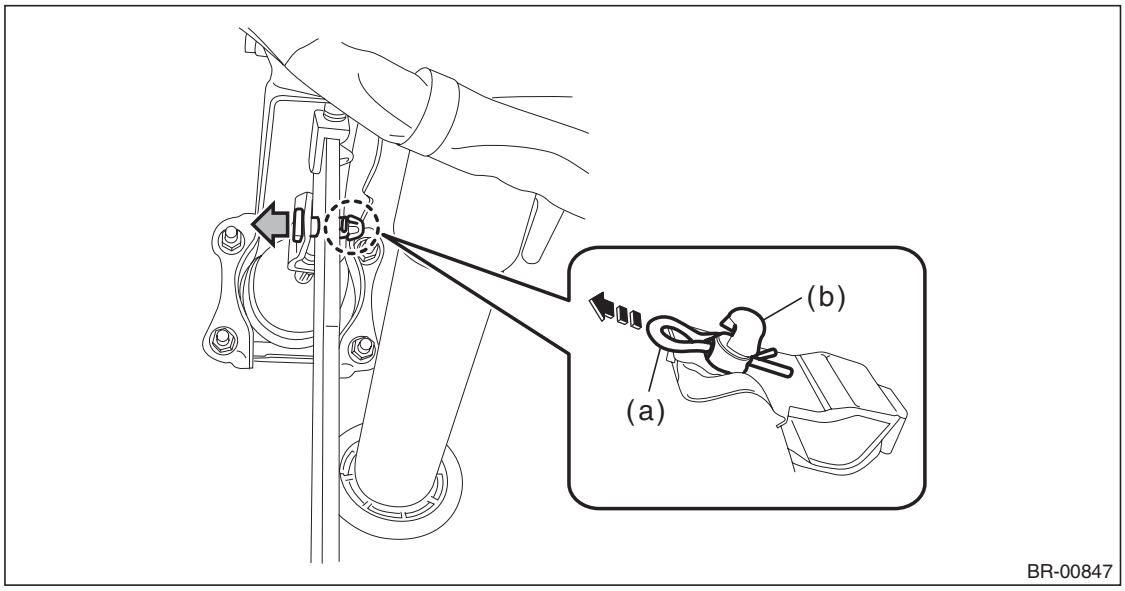

(7) Remove the nut and remove the brake booster.

NOTE:
- Make sure that the booster shell and vacuum pipe are not subject to strong impacts.
- Be careful not to drop the brake booster. If the brake booster is dropped accidentally, replace it.
- Be careful when placing the brake booster on floor.

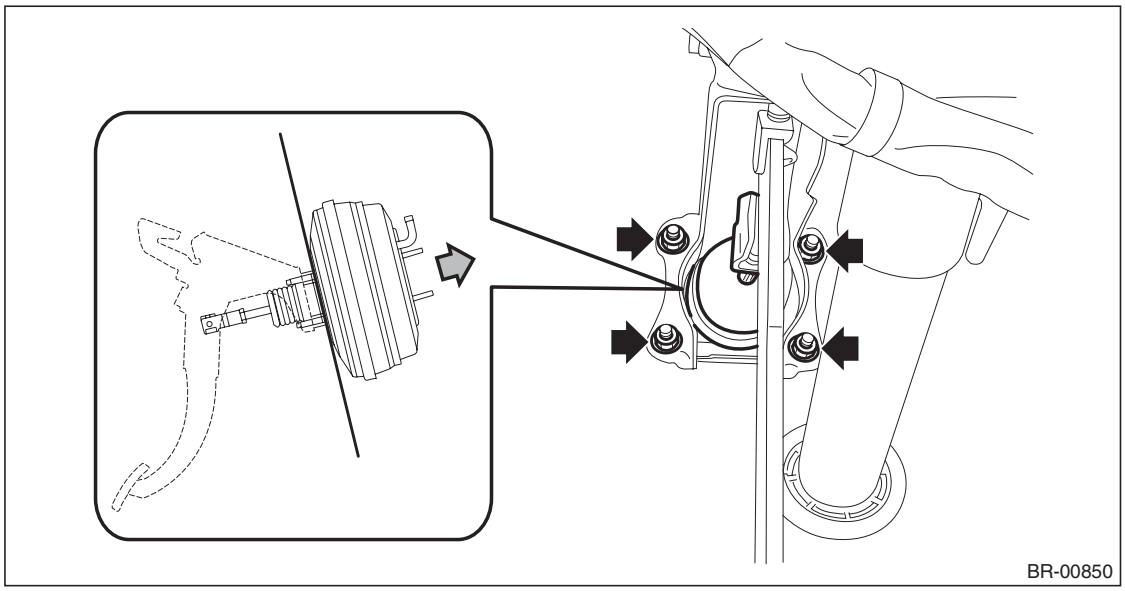

GETtheMANUALS.org

B: INSTALLATION

1) Check and adjust the operating rod of the brake booster.
   (1) Measure the length between the brake booster mounting surface and clevis pin hole.
   (2) If it is not within specification, loosen the lock nut, rotate the brake booster operating rod to adjust the rod length.

Specification L:
136.5 mm (5.37 in)

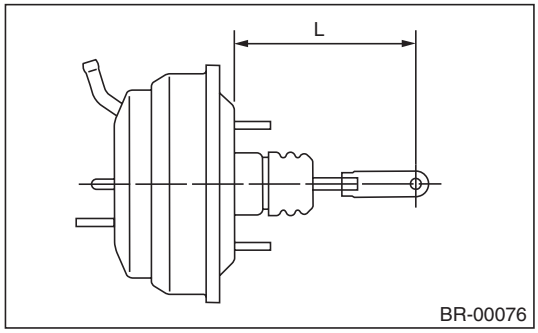

2) Install each part in the reverse order of removal.

CAUTION:
- **Apply grease to the snap pin to prevent the operating rod from wear.**
- **Replace the clevis pin with new parts, and apply thin coat of NIGTIGHT LYW No. 2 grease to the clevis pin.**
- **When installing the master cylinder assembly, replace the seal sub assembly with a new part, and install it to the brake booster.**

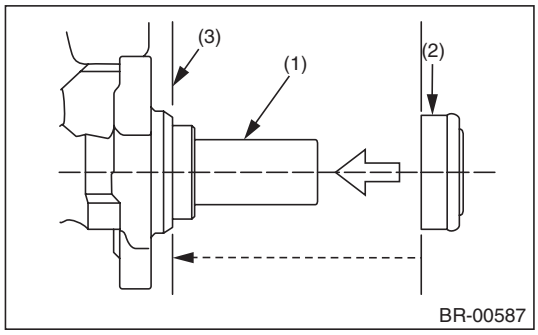

(1) Primary piston
(2) Seal sub ASSY
(3) Install the seal sub assembly to this surface.

- **Install the bracket at the position with sufficient clearance that it does not contact with the check valve.**

GETtheMANUALS.org

- **Be sure to loosen the master cylinder mounting nut while holding the bracket with hand. Otherwise the bracket may deform.**

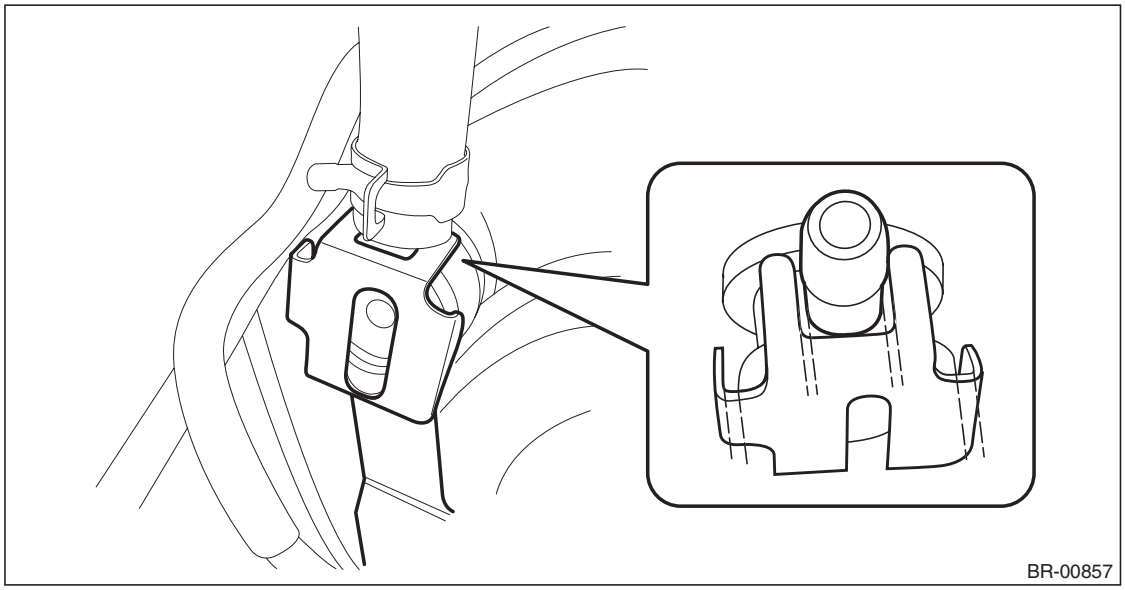

Tightening torque:
Brake booster: 18 N·m (1.84 kgf-m, 13.3 ft-lb)
Master cylinder: 13 N·m (1.33 kgf-m, 9.6 ft-lb)
Brake pipe flare nut: 19 N·m (1.94 kgf-m, 14.0 ft-lb)
Operating lock nut: 22 N·m (2.24 kgf-m, 16.2 ft-lb)

3) Bleed air from the brake system. <Ref. to BR-54, PROCEDURE, Air Bleeding.>
4) Perform a road test to make sure the brakes do not drag.

C: INSPECTION

1. OPERATION CHECK (WITHOUT GAUGES)

CAUTION:
When checking operation, be sure to apply the parking brake securely.

- **Check without gauges**

This method can not determine exactly what part is defective. But it is possible to identify the outline of the defect by performing the check according to the following procedures.

GETtheMANUALS.org

- **Air tightness check**

Start the engine, and idle it for 1 to 2 minutes, then turn it OFF. Depress the brake pedal several times applying the normal pedal force. The pedal stroke should be the longest at the 1st depression, and it should become shorter at each successive depression. If no change occurs in the pedal height when pressed, the brake booster is faulty.

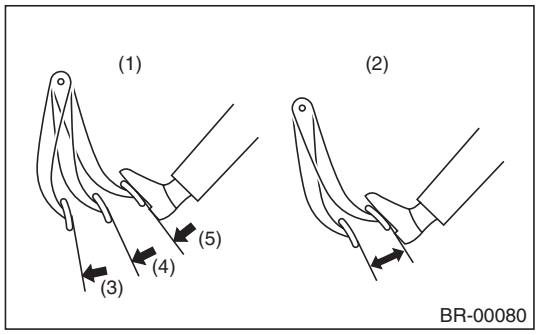

(1) Normal
(2) Not OK
(3) 1st
(4) 2nd
(5) 3rd

NOTE:
- In case of defective operation, inspect the condition of the check valve and vacuum hose as well.
- Replace them if faulty, and perform the test again.
- If no improvement is observed, check precisely with gauges.

- **Check operation**

1) While the engine is OFF, depress the brake pedal several times applying the same pedal force, to check for a change in pedal height.

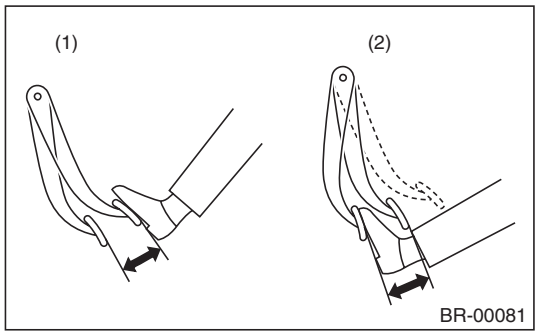

(1) When engine is stopped
(2) When engine is started

2) With the brake pedal depressed, start the engine.
3) As the engine starts, the brake pedal should move slowly toward the floor. If the pedal height does not change, the brake booster is faulty.

NOTE:
If faulty, check precisely with gauges.

GETtheMANUALS.org

- **Loaded air tightness check**

Depress the brake pedal while the engine is running, and turn the engine to OFF while the pedal is depressed. Keep the pedal depressed for 30 seconds. If the pedal height does not change, the function of brake booster is normal. If the pedal height increases, it is faulty.

NOTE:
If faulty, check precisely with gauges.

2. OPERATION CHECK (WITH GAUGES)

CAUTION:
When checking operation, be sure to apply the parking brake securely.

- **Check with gauge**

Connect the gauge as shown in the figure. After bleeding air from the pressure gauge, perform each check.

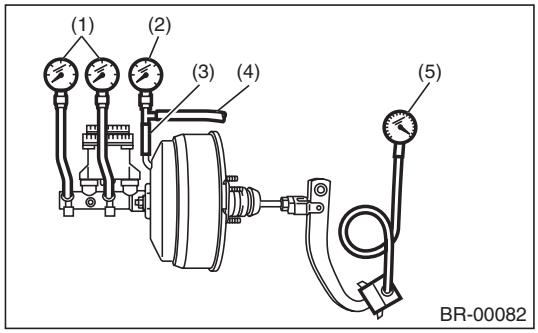

(1) Pressure gauge
(2) Vacuum gauge
(3) Adapter hose
(4) Vacuum hose
(5) Pedal force gauge

- **Air tightness check**

1) Start the engine and keep it running until vacuum pressure indicates point A of the vacuum gauge = 66.7 kPa (500 mmHg, 19.69 inHg). Do not depress the brake pedal at this time.

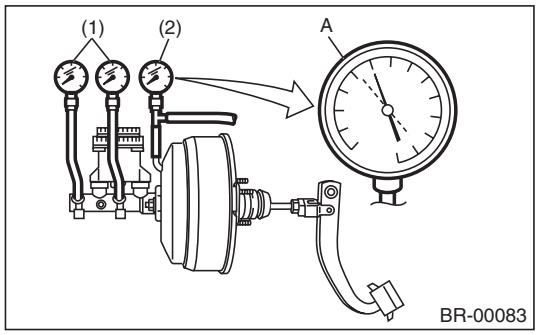

(1) Pressure gauge
(2) Vacuum gauge

2) Stop the engine and check the gauge. If the vacuum pressure drop within 15 seconds after stopping the engine is 3.3 kPa (25 mmHg, 0.98 inHg) or less, the function of brake booster is normal.
If faulty, the cause may be one of the following.

- Check valve malfunction
- Leak from vacuum hose
- Leak from shell joint section or stud bolt welded section
- Damaged diaphragm

GETtheMANUALS.org

- Leak from valve body seal and bearing section
- Leak from plate and seal assembly section
- Leak from poppet valve assembly section

• Loaded air tightness check

1) Start the engine and depress the brake pedal with a pedal force of 196 N (20 kgf, 44 lbf). Keep the engine running and keep the pedal pressed until a vacuum of point B = 66.7 kPa (500 mmHg, 19.69 inHg) is indicated on the vacuum gauge.

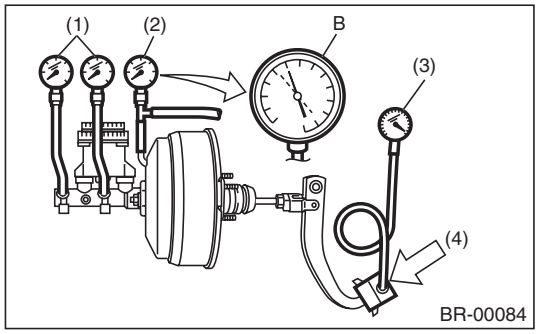

(1) Pressure gauge
(2) Vacuum gauge
(3) Pedal force gauge
(4) Depressed

2) Stop the engine and check the vacuum gauge.
If the vacuum pressure drop within 15 seconds after stopping the engine is 3.3 kPa (25 mmHg, 0.98 inHg) or less, the function of brake booster is normal.
If defective, refer to “AIR TIGHTNESS CHECK”.
<Ref. to BR-49, INSPECTION, Brake Booster.>
3) If the brake booster is faulty, replace it with a new part.

• Lack of boost action check

Turn the engine OFF, and set the value of the vacuum gauge to “0”. Then, check the fluid pressure when the brake pedal is depressed. The pressure must be greater than the specification listed.

Brake pedal operation force	N (kgf, lbf)	147 (15, 33)	294 (30, 66)
Fluid pressure	kPa (kgf/cm^2, psi)	533 (5, 77)	1,551 (16, 225)

• Boosting action check

Set the vacuum gauge reading to 66.7 kPa (500 mmHg, 19.69 inHg) with the engine running. Then, check the fluid pressure when the brake pedal is depressed. The pressure must be greater than the specification listed.

Brake pedal operation force	N (kgf, lbf)	147 (15, 33)	294 (30, 66)
Fluid pressure	kPa (kgf/cm^2, psi)	6,177 (63, 896)	11,273 (115, 1,635)

GETtheMANUALS.org

10. Brake Fluid

A: INSPECTION

1) Check that the amount of brake fluid is between the lines of “MIN” and “MAX”. If out of the specified range, refill or drain the fluid. If the fluid level is close to “MIN”, check the brake pad for wear and refill the fluid.
2) Check the fluid for discoloration. If the fluid is extremely discolored, replace with the new fluid.

B: REPLACEMENT

CAUTION:
- **Do not let brake fluid come into contact with the painted surface of the vehicle body. Wash away with water immediately and wipe off if it is spilled by accident.**
- **Avoid mixing brake fluid of different brands to prevent fluid performance from degrading.**
- **Be careful not to allow dirt or dust to enter the reservoir tank.**

NOTE:
- During the operation, keep the reservoir tank filled with brake fluid to prevent entry of air.
- Operate the brake pedal slowly.
- For convenience and safety, perform the work with 2 people.
- The required amount of brake fluid is approximately 500 mℓ (16.9 US fl oz, 17.6 Imp fl oz) for the entire brake system.

1) Lift up the vehicle and set rigid racks at the specified locations, or keep the vehicle lifted.
2) Remove both the front and rear wheels.
3) Drain brake fluid from the reservoir tank.
4) Refill the reservoir tank with recommended brake fluid.

Recommended brake fluid:
FMVSS No. 116, DOT3, or DOT4

Perform the same procedure as for bleeding the brake line, until new brake fluid comes out from vinyl tube.
<Ref. to BR-54, PROCEDURE, Air Bleeding.>

GETtheMANUALS.org

11. Air Bleeding

A: PROCEDURE

CAUTION:
- **Do not let brake fluid come into contact with the painted surface of the vehicle body. Wash away with water immediately and wipe off if it is spilled by accident.**
- **Avoid mixing brake fluid of different brands to prevent fluid performance from degrading.**
- **Be careful not to allow dirt or dust to enter the reservoir tank.**

1. MASTER CYLINDER

NOTE:
- When the master cylinder is replaced or the reservoir tank is empty, bleed the master cylinder.
- If bleeding of the master cylinder is not necessary, omit the following procedures, and perform bleeding of the brake line. <Ref. to BR-54, BRAKE LINE, PROCEDURE, Air Bleeding.>

1) Fill the reservoir tank of the master cylinder with brake fluid.

NOTE:
While bleeding air, keep the reservoir tank filled with brake fluid to prevent entry of air.

2) Disconnect the brake line at primary and secondary sides.
3) Wrap the master cylinder with a plastic bag.
4) Depress the brake pedal slowly and hold it.

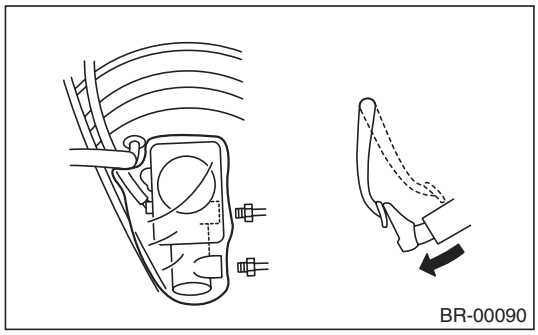

5) Plug the outlet plug with your finger, and then release the brake pedal.

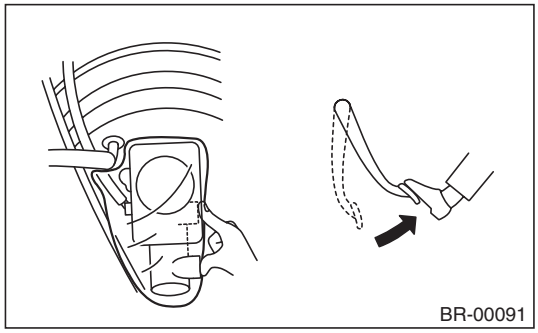

6) Repeat the step 4) and 5) several times.
7) Remove the plastic bag.
8) Install the brake pipe to the master cylinder.

Tightening torque:
Brake pipe flare nut: 19 N·m (1.94 kgf-m, 14.0 ft-lb)

9) Bleed air from the brake line. <Ref. to BR-54, BRAKE LINE, PROCEDURE, Air Bleeding.>

2. BRAKE LINE

1) When the master cylinder is replaced or the reservoir tank is empty, bleed the master cylinder before bleeding the brake line. <Ref. to BR-54, MASTER CYLINDER, PROCEDURE, Air Bleeding.>

GETtheMANUALS.org

2) Fill the reservoir tank of the master cylinder with brake fluid.

NOTE:
While bleeding air, keep the reservoir tank filled with brake fluid to prevent entry of air.
3) Attach one end of the vinyl tube to the air bleeder and the other end to the brake fluid container.

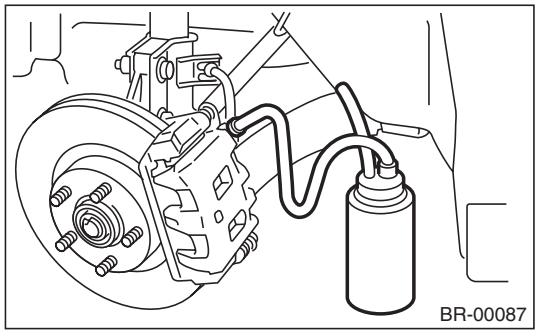

4) Depress the brake pedal several times, and hold it.
5) Loosen the air bleeder screw to drain brake fluid. Tighten the air bleeder quickly, and release the brake pedal.
6) Repeat the steps 4) to 5) until there are no more air bubbles in the vinyl tube.
7) Repeat the steps from 2) to 6) above to bleed air from each wheel.

NOTE:
Perform air bleed starting in the order from the farthest wheel cylinder from the master cylinder.
8) Securely tighten the air bleeder screws.

Tightening torque:
Air bleeder screw: 8 N·m (0.82 kgf-m, 5.9 ft-lb)
9) Check that there are no brake fluid leaks in the entire brake system.
10) Check the pedal stroke.
Run the engine at idle after warming up the engine, and depress the brake pedal with a force of 500 N (51 kgf, 112 lbf). Measure the distance between the brake pedal and steering wheel. Release the pedal, and measure the distance between pedal and steering wheel again.

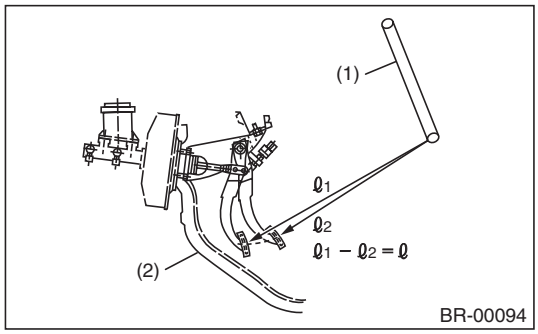

(1) Steering wheel
(2) Toe board

Specification of pedal stroke:
When depressing the pedal with a force of 500 N (51 kgf, 112 lbf).
110 mm (4.33 in) or less
11) If the distance is more than specification, there is a possibility of air being caught in the brake line. Bleed the brake line of all air until the pedal stroke meets the specification.
12) Operate the hydraulic control unit in the sequence control mode. <Ref. to VDC-17, ABS Sequence Control.>
13) Check the pedal stroke again.
14) If the distance is more than specification, there is a possibility of air being caught in the hydraulic unit. Repeat above steps 2) to 9) until the pedal stroke meets the specification.
15) Fill the reservoir tank with brake fluid up to the “MAX” level.
16) Perform a road test and ensure that the brakes operate normally.

GETtheMANUALS.org

12. Brake Hose

A: REMOVAL

1. FRONT BRAKE HOSE

1) Separate the brake pipe (b) from brake hose (a) using a flare nut wrench.
2) Remove the clamp, strut mounting bolt and union bolt, and remove the front brake hose.

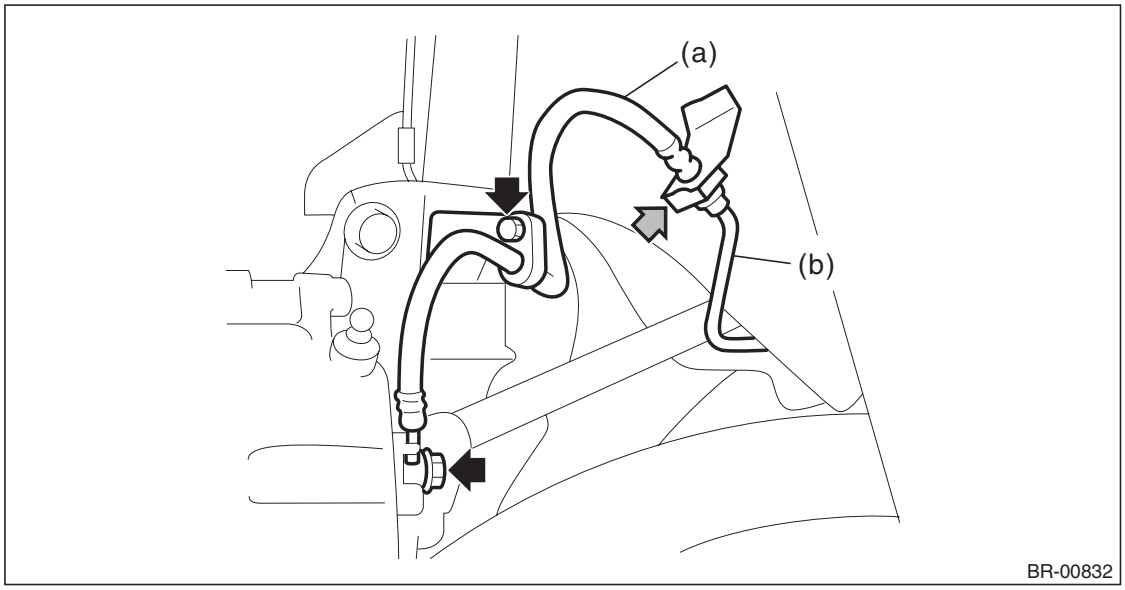

2. REAR BRAKE HOSE

1) Remove the brake hose bracket bolt and union bolt.

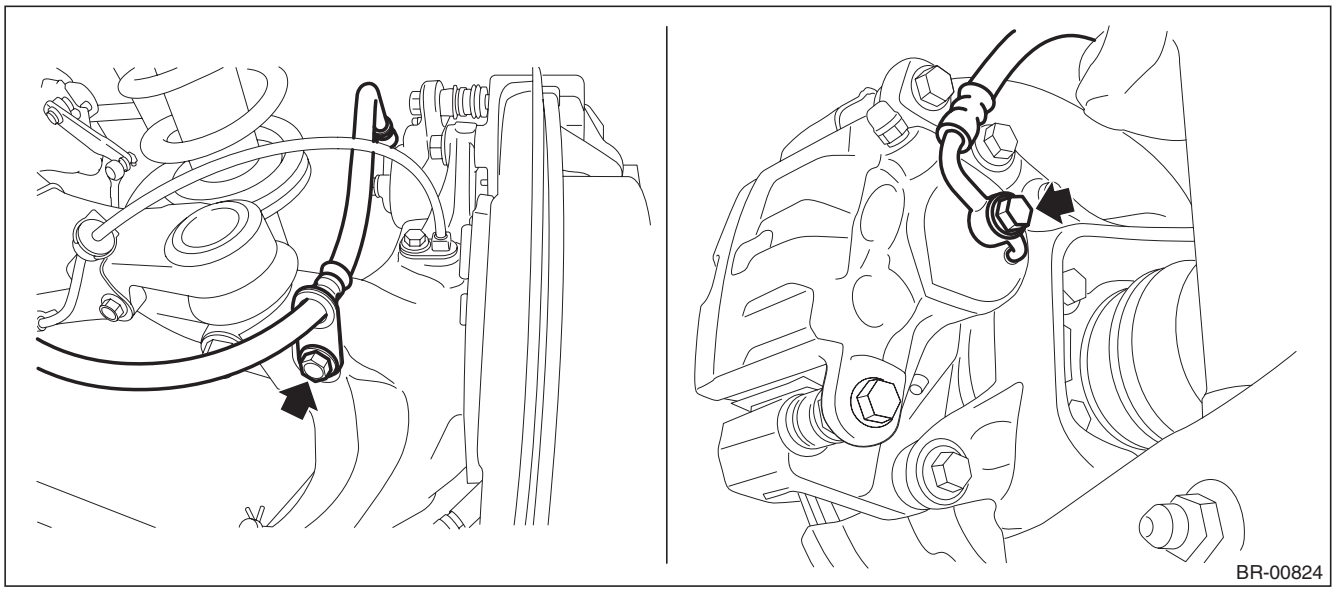

2) Separate the brake pipe (a) using a flare nut wrench.

GETtheMANUALS.org

3) Remove the brake hose clamp (b), and remove the rear brake hose (c).

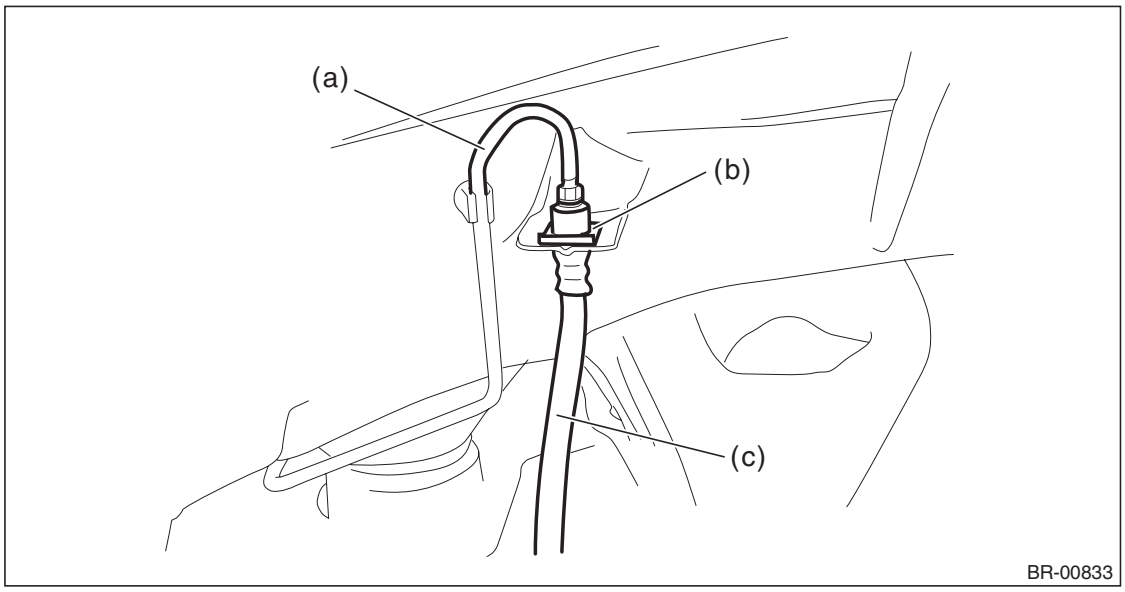

B: INSTALLATION

1. FRONT BRAKE HOSE

1) Secure the brake hose to strut mount.

Tightening torque:
Brake hose: 33 N·m (3.36 kgf-m, 24.3 ft-lb)

2) Connect the brake hose to the front caliper body using a new gasket.

Tightening torque:
Union bolt: 18 N·m (1.84 kgf-m, 13.3 ft-lb)

3) Position the disc in straight position and route the brake hose through the hole in the bracket on the wheel apron side.

CAUTION:
Do not twist the brake hose.

4) Temporarily tighten the flare nut which connects brake pipe and hose.
5) Secure the brake hose to wheel apron bracket with clamp.
6) Tighten the flare nut to the specified torque.

Tightening torque:
Brake pipe flare nut: 15 N·m (1.53 kgf-m, 11.1 ft-lb)

7) Bleed air from the brake system. <Ref. to BR-54, PROCEDURE, Air Bleeding.>

2. REAR BRAKE HOSE

1) Route the brake hose through the hole of bracket, and lightly tighten the flare nut to connect brake pipe.
2) Insert the clamp to secure brake hose.

Tightening torque:
Brake hose bracket: 33 N·m (3.36 kgf-m, 24.3 ft-lb)

3) Install the brake hose to rear caliper body using a new gasket.

Tightening torque:
Union bolt: 18 N·m (1.84 kgf-m, 13.3 ft-lb)

4) Tighten the flare nut to the specified torque.

Tightening torque:
Brake pipe flare nut: 15 N·m (1.53 kgf-m, 11.1 ft-lb)

5) Bleed air from the brake system. <Ref. to BR-54, PROCEDURE, Air Bleeding.>

GETtheMANUALS.org

C: INSPECTION

Check the hose for crack and damage, and also check the connection for fluid leakage. If any faulty is found, repair or replace the relevant part.

GETtheMANUALS.org

13. Brake Pipe

A: REMOVAL

CAUTION:
- **Airbag system wiring harness and connectors are colored yellow. Do not use electrical test equipment on these circuits.**
- **Be careful not to damage the airbag system wiring harness when servicing the center brake pipe.**
- **When removing the brake pipe, do not bend.**

NOTE:
The airbag system wiring harness is routed near the center brake pipe.

B: INSTALLATION

CAUTION:
- **Airbag system wiring harness and connectors are colored yellow. Do not use electrical test equipment on these circuits.**
- **Be careful not to damage the airbag system wiring harness when servicing the center brake pipe.**
- **When installing the brake pipe, do not bend.**
- **After installing the brake pipe and hose, perform air bleed.**
- **After installing the brake hoses, make sure that they do not contact the tires or suspension assembly, etc.**

NOTE:
The airbag system wiring harness is routed near the center brake pipe.

Tightening torque:
Front brake pipes & hoses: <Ref. to BR-7, FRONT BRAKE PIPES AND HOSES, COMPONENT, General Description.>
Center & rear brake pipes and hoses: <Ref. to BR-8, CENTER AND REAR BRAKE PIPES AND HOSES, COMPONENT, General Description.>

C: INSPECTION

Check the pipe for crack and damage, and also check the connection for fluid leakage. If any faulty is found, repair or replace the relevant part.

NOTE:
Use a mirror when inspecting back sides and other locations which are hard to see.

GETtheMANUALS.org

14. Brake Pedal

A: REMOVAL

1. AT MODELS AND CVT MODELS

1) Disconnect the ground cable from battery.
2) Remove the instrument panel lower cover.
   (1) Remove the clips, and remove the instrument panel side cover LH.

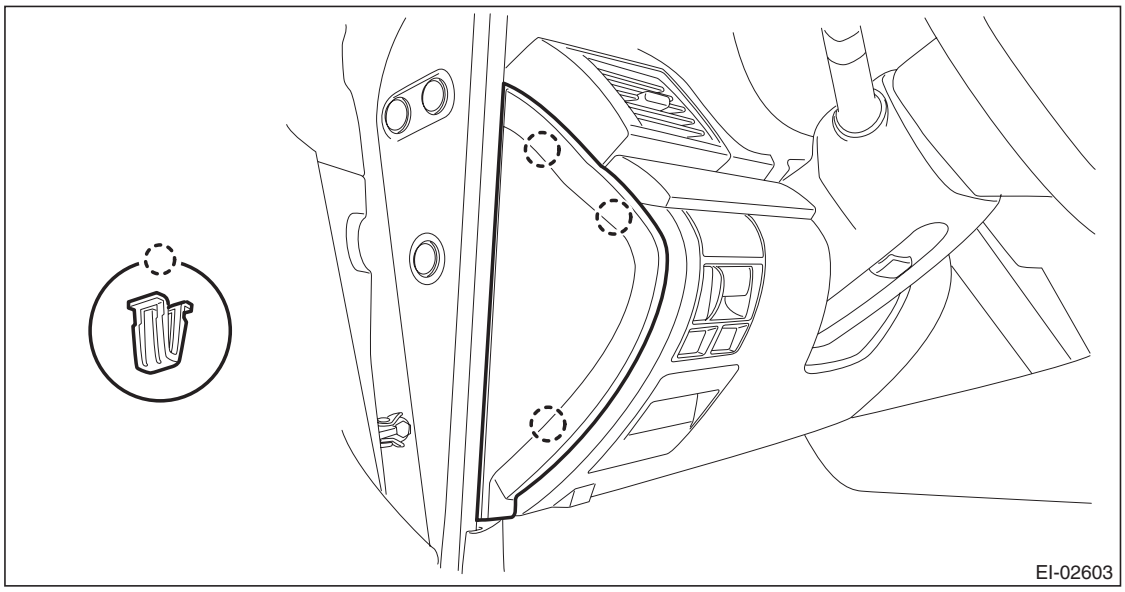

   (2) Remove the clips and data link connector, and remove the instrument panel lower cover under.

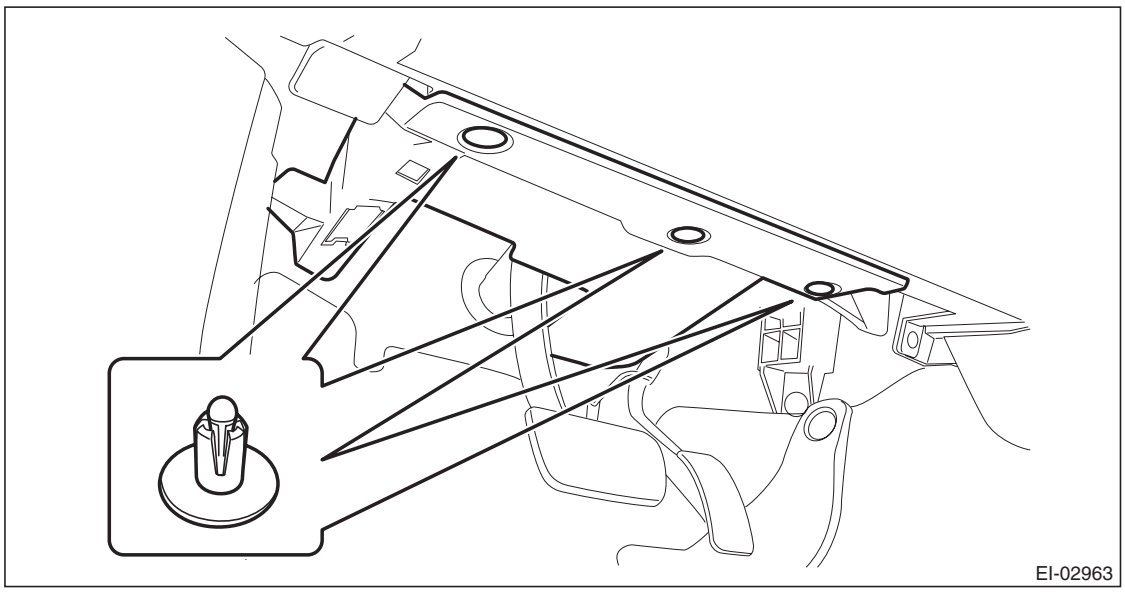

GETtheMANUALS.org

(3) Remove the bolts, and remove the knee guard panel.

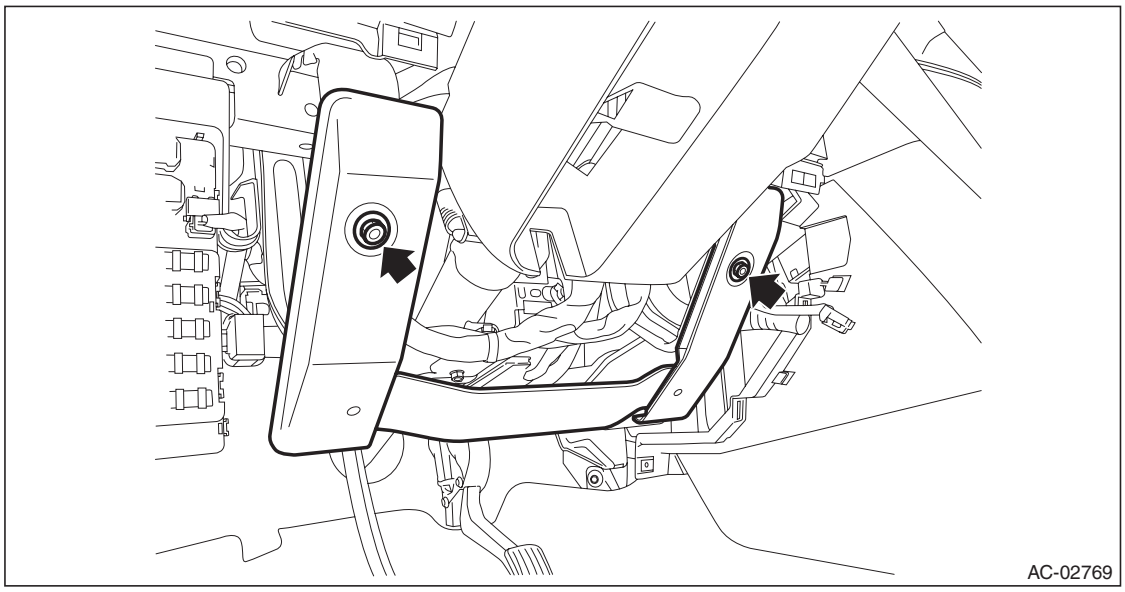

(4) Remove the screws and clips and release the claws, and remove the instrument panel lower cover while disconnecting the harness connectors.

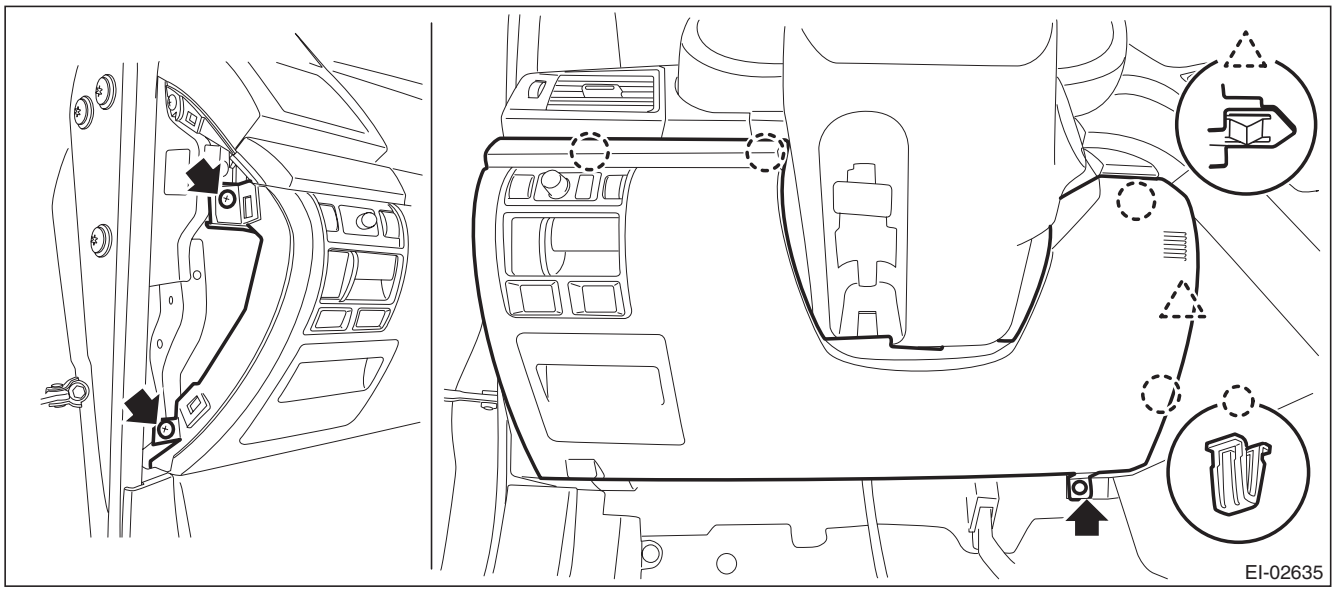

3) Remove the brake pedal assembly.
   (1) Disconnect the stop light switch connector.
   (2) Remove the snap pin (a) and clevis pin (b), and remove the operating rod from the brake pedal.

GETtheMANUALS.org

NOTE:
- Use special care when handling the operating rod. If excessive force is applied to the operating rod, the angle may change by ±3°, and it may result in damage to power piston cylinder.
- Do not change the push rod length.

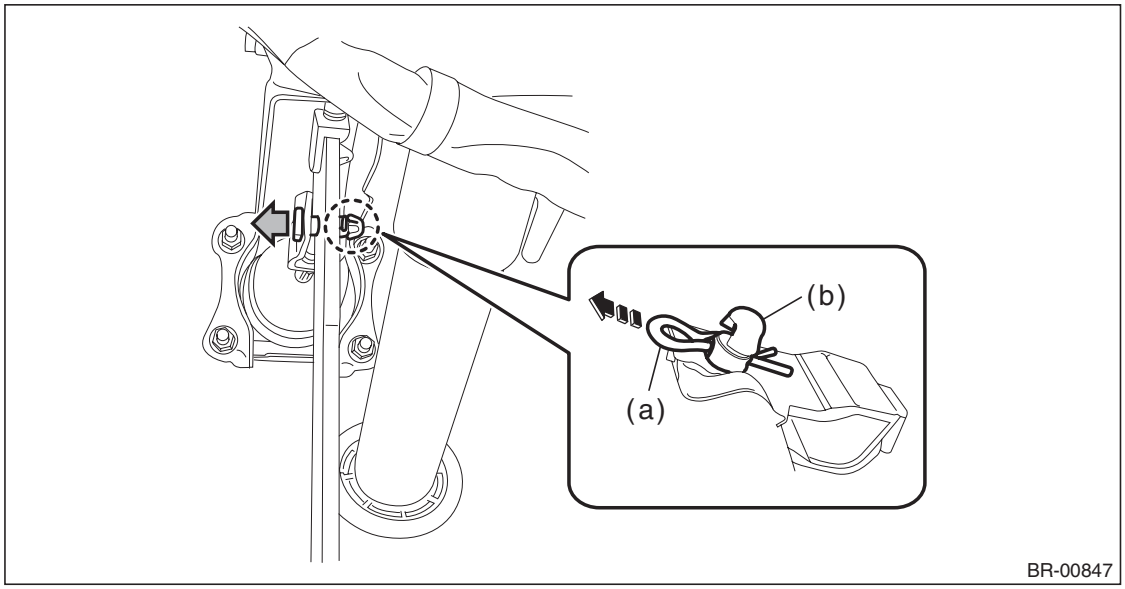

(3) Remove the bolt and nut, and then detach the brake pedal assembly.

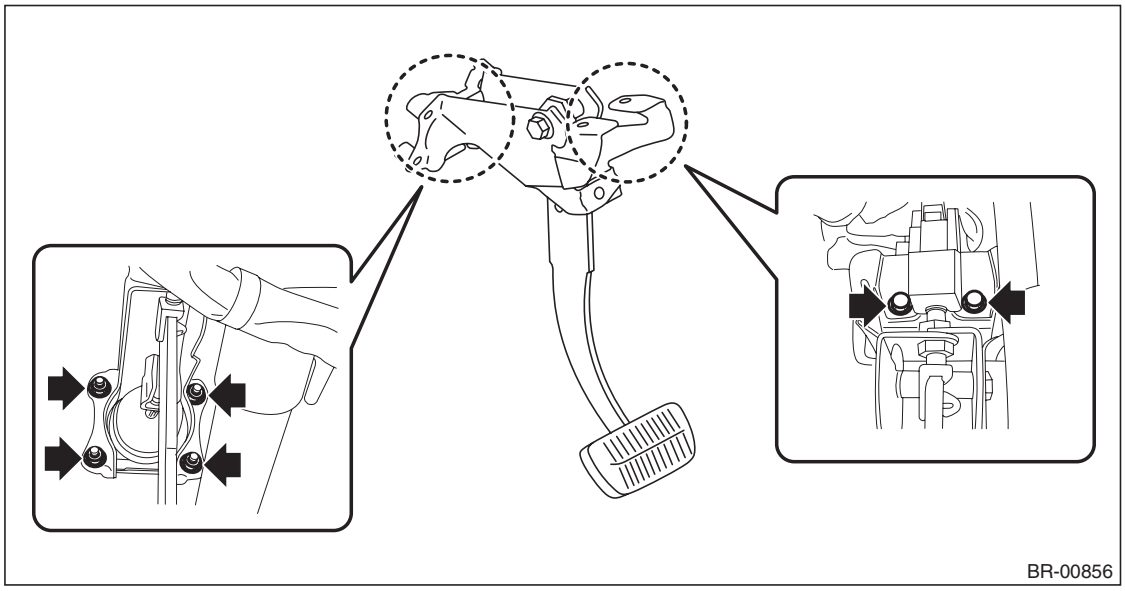

2. MT MODEL

NOTE:
Brake pedal is integrated with the clutch pedal.
For removal procedures of the brake pedal, refer to Clutch section. <Ref. to CL-26, REMOVAL, Clutch Pedal.>

B: INSTALLATION

1) Install each part in the reverse order of removal.

CAUTION:
- **Apply grease to the snap pin to prevent the operating rod from wear.**
- **Replace the clevis pin with new parts, and apply thin coat of NIGTIGHT LYW No. 2 grease to the clevis pin.**

Tightening torque:
Brake pedal: 18 N·m (1.84 kgf-m, 13.3 ft-lb)

GETtheMANUALS.org

2) Check that the brake light operate properly.
3) Check the brake pedal after installation. <Ref. to BR-63, INSPECTION, Brake Pedal.>

C: INSPECTION

1) Move the brake pedal pads in a horizontal direction with a force of approx. 10 N (1 kgf, 2 lbf), and check that the pedal deflection is in the range of specifications.

CAUTION:
If excessive deflection is noted, replace with a new bushing.

Deflection of brake pedal:
Wear limit: 5.0 mm (0.197 in) or less

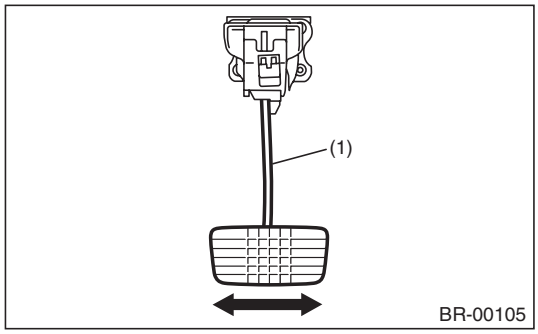

(1) Brake pedal

2) Check the position of the pedal pad.

Pedal height L:
140 — 150 mm (5.51 — 5.91 in)

Brake pedal free play A:
2 — 5 mm (0.079 — 0.197 in) [When pulling the brake pedal upward with a force of less than 10 N (1 kgf, 2 lbf).]

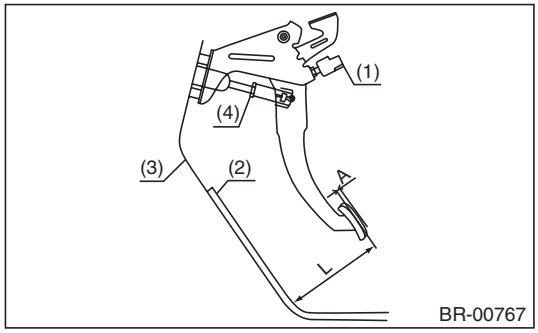

(1) Stop light switch
(2) Mat
(3) Toe board
(4) Brake booster operating rod

3) If it is not within the specification, loosen the lock nuts of brake booster operating rod, and rotate the rod to adjust the pedal height L within the specification.
4) Tighten the lock nut.

Tightening torque:
Operating lock nut: 22 N·m (2.24 kgf-m, 16.2 ft-lb)

GETtheMANUALS.org

15.Stop Light Switch

A: REMOVAL

1) Disconnect the ground cable from battery.
2) Remove the instrument panel lower cover.
   (1) Remove the clips, and remove the instrument panel side cover LH.

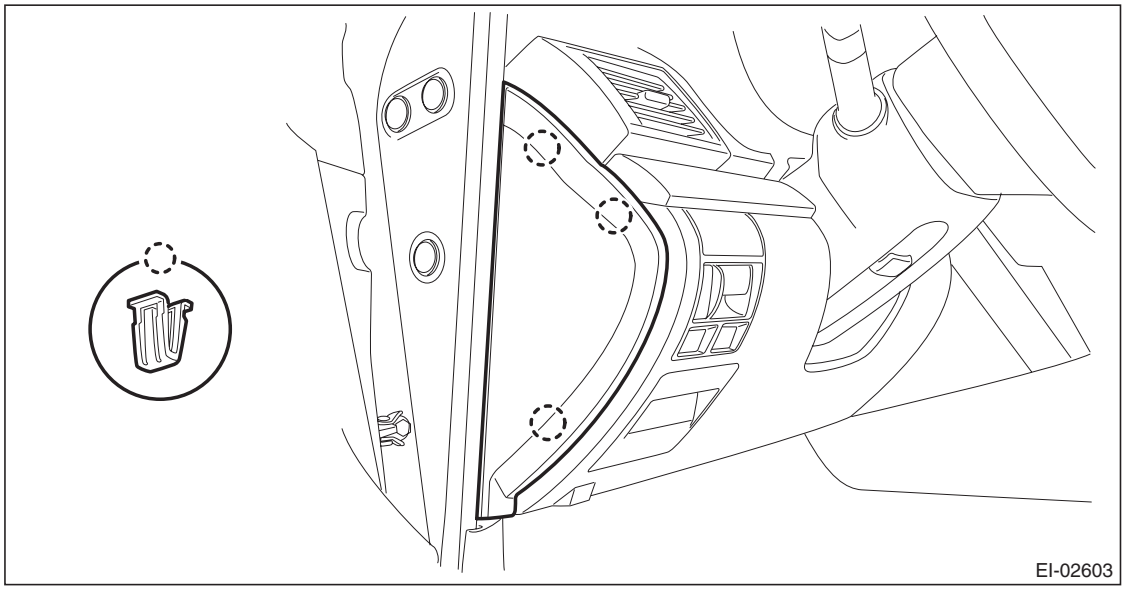

   (2) Remove the clips and data link connector, and remove the instrument panel lower cover under.

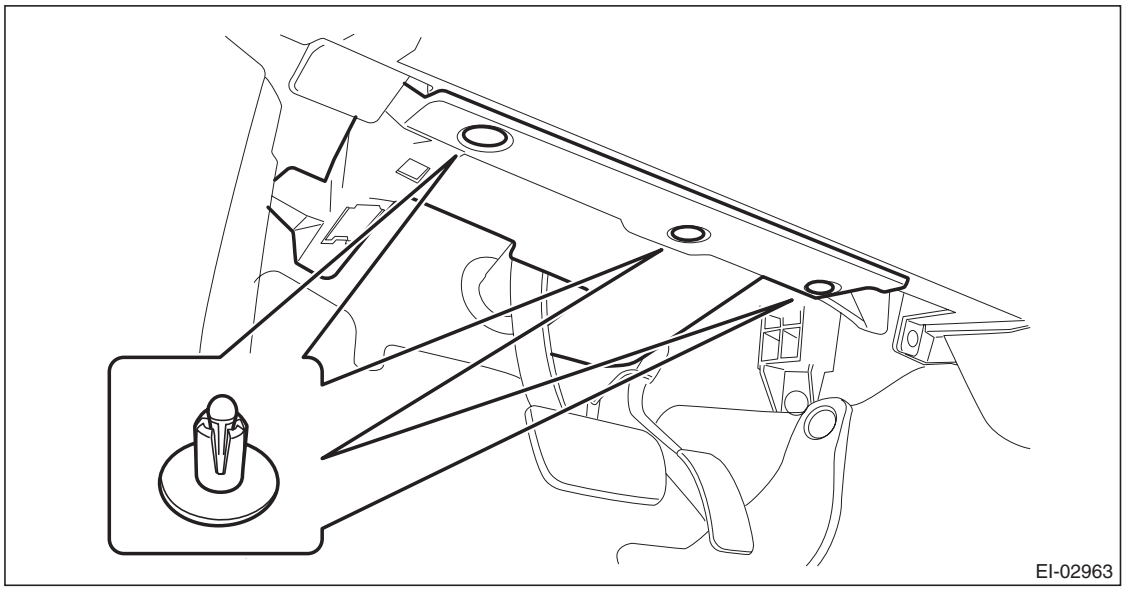

GETtheMANUALS.org

(3) Remove the bolts, and remove the knee guard panel.

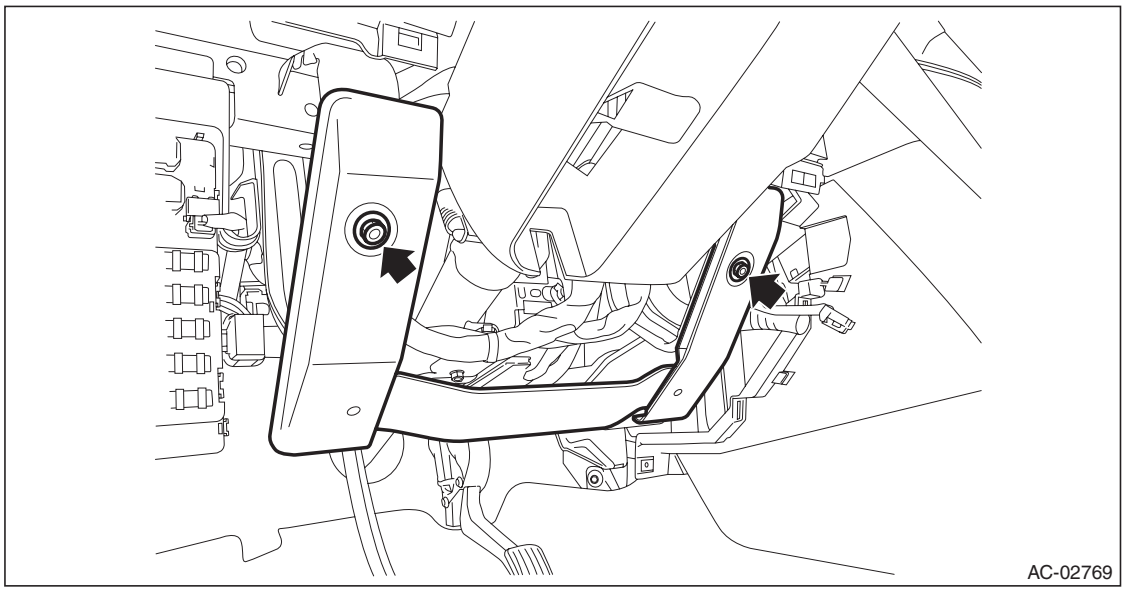

(4) Remove the screws and clips and release the claws, and remove the instrument panel lower cover while disconnecting the harness connectors.

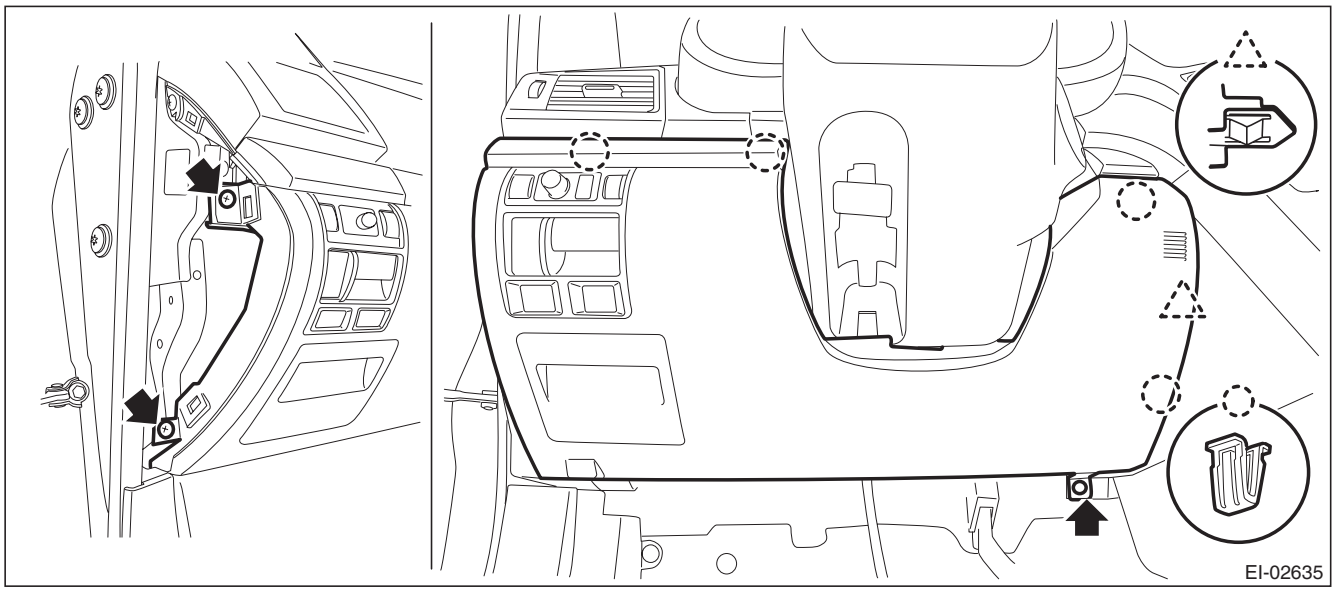

3) Remove the stop light switch.

(1) Disconnect the stop light switch connector (a).

GETtheMANUALS.org

(2) Remove the nut (b), and remove the stop light switch.

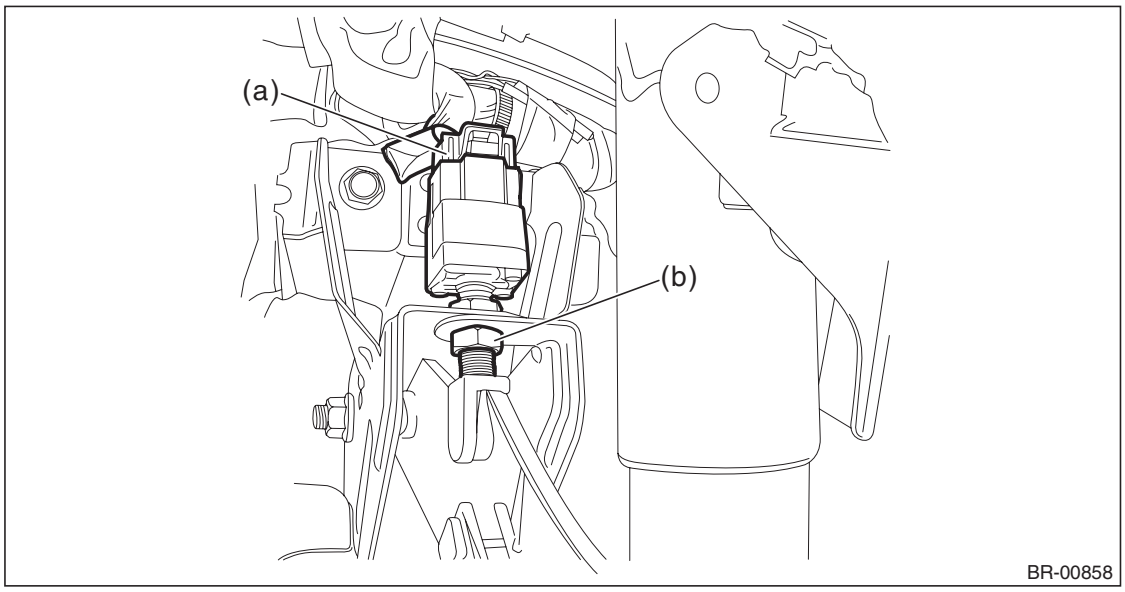

B: INSTALLATION

1) Install the stop light switch onto the bracket with screws and position it with the nut.
2) Adjust the stop light switch position, and then tighten the nut. <Ref. to BR-68, ADJUSTMENT, Stop Light Switch.>
3) Install each part in the reverse order of removal.

Tightening torque:
Stop light switch: 8 N·m (0.82 kgf-m, 5.9 ft-lb)

C: INSPECTION

1. CHECK SPECIFIED POSITION

1) If the stop light switch does not operate properly or if it is not secured at the specified position, replace with a new part.

Specified position L:
2.8 mm$^{+1.5\ mm}_{-0\ mm}$ (0.11 in$^{+0.06\ in}_{-0\ in}$)

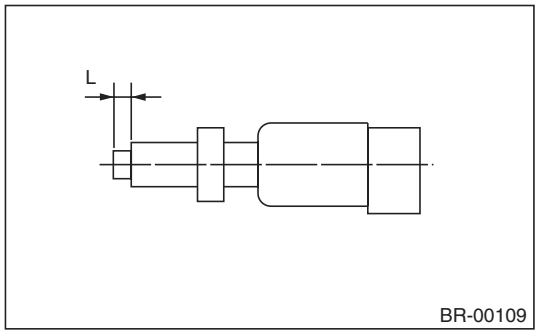

GETtheMANUALS.org

2) Measure the clearance between the threaded end of the stop light switch and the stopper.

CAUTION:
Be careful not to rotate the stop light switch.

Stop light switch clearance A:
0.8 mm (0.031 in)

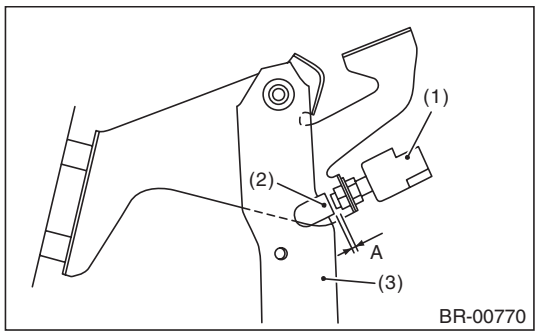

(1) Stop light switch
(2) Stopper
(3) Brake pedal

3) Adjust the position of the stop light switch if the inspection result is not within the standard value. <Ref. to BR-68, ADJUSTMENT, Stop Light Switch.>

2. CHECK RESISTANCE

1) Disconnect the stop light switch connector.
2) Measure the resistance between stop light switch terminals.

Preparation tool: Circuit tester

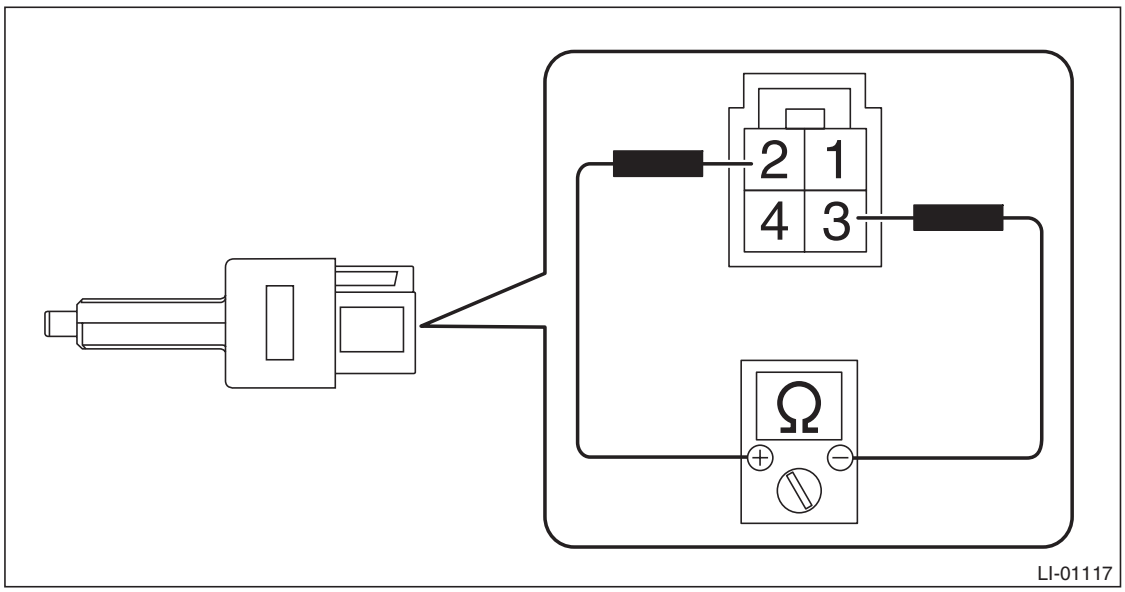

Terminal No.	Inspection conditions	Standard
2 — 3	When brake pedal is depressed	Less than 1 Ω
	When brake pedal is released	1 MΩ or more

3) Replace the stop light switch if the inspection result is not within the standard value.

GETtheMANUALS.org

D: ADJUSTMENT

1) Loosen the lock nut, and adjust the stop light switch position until the clearance (A) between the threaded end of the stop light switch and stopper becomes 0.8 mm (0.031 in). Then, tighten the lock nut.
2) Tighten the lock nut.

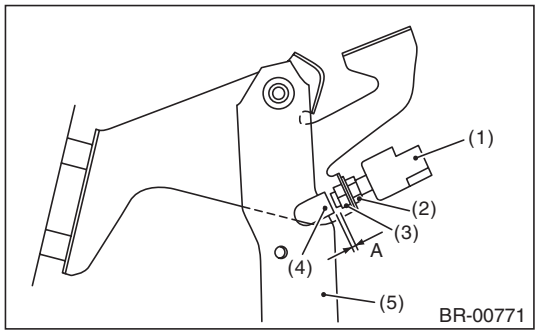

(1) Stop light switch
(2) Lock nut A
(3) Lock nut B
(4) Stopper
(5) Brake pedal

GETtheMANUALS.org

16. General Diagnostic Table

A: INSPECTION

	Trouble and possible cause	Corrective action
1. Insufficient braking	(1) Fluid leakage from the hydraulic mechanism	Repair or replace. (cup, piston seal, piston boot, master cylinder piston kit, pipe or hose)
	(2) Entry of air into the hydraulic mechanism	Bleed air.
	(3) Wear, deteriorated surface material, water or fluid on lining	Replace, grind or clean.
	(4) Improper operation of master cylinder, disc caliper, brake booster or check valve	Repair or replace.
2. Unstable or uneven braking	(1) Fluid on lining or rotor	Correct the cause of fluid leakage, and clean or replace.
	(2) Rotor defective	Repair or replace the rotor.
	(3) Improper lining contact, deteriorated surface, deteriorated or worn lining material	Repair by grinding, or replace.
	(4) Deformed back plate	Repair or replace.
	(5) Overinflation of tires	Adjust the air pressure.
	(6) Defective wheel alignment	Adjust alignment.
	(7) Loose back plate or support installation bolt	Tighten to the specified torque.
	(8) Faulty wheel bearing	Replace.
	(9) Defective hydraulic system	Replace the cylinder, brake pipe or hose.
	(10) Unstable performance of the parking brake	Check, adjust or replace the rear brake and cable system.
3. Excessive pedal stroke	(1) Entry of air into the hydraulic mechanism	Bleed air.
	(2) Excessive play in the master cylinder push rod	Adjust.
	(3) Fluid leakage from the hydraulic mechanism	Repair or replace. (cup, piston seal, piston boot, master cylinder piston kit, pipe or hose)
	(4) Improper lining contact or worn lining	Repair or replace.
4. Brake dragging or improper brake return	(1) Insufficient pedal play	Adjust play.
	(2) Improper master cylinder return	Clean or replace the cylinder.
	(3) Clogged hydraulic system	Replace.
	(4) Improper return or adjustment of parking brake	Repair or adjust.
	(5) Weakened spring tension or breakage of shoe return spring	Replace the spring.
	(6) Improper disc caliper operation	Repair or replace.
	(7) Faulty wheel bearing	Replace.
5. Brake noise (1) (creaking sound)	(1) Hardened or deteriorated brake pad	Replace the pad.
	(2) Worn brake pad	Replace the pad.
	(3) Loose back plate or support installation bolt	Tighten to the specified torque.
	(4) Loose wheel bearing	Tighten to the specified torque.
	(5) Dirty rotor	Clean the rotor, or clean and replace brake assembly.
6. Brake noise (2) (hissing sound)	(1) Worn brake pad	Replace the pad.
	(2) Improperly installed pad	Correct or replace the pad.
	(3) Loose or bent rotor	Retighten or replace.
7. Brake noise (3) (click sound)	Excessively worn pad or support	Replace the pad or the support.

GETtheMANUALS.org

GETtheMANUALS.org

PARKING BRAKE

PB

Page

1. General Description 2
2. Parking Brake System 5
3. Parking Brake Actuator 6
4. Parking Brake Assembly (Rear Disc Brake) 10
5. Parking Brake Switch 16
6. Emergency Release of Electronic Parking Brake 19
7. General Diagnostic Table 21

GETtheMANUALS.org

1. General Description

A: SPECIFICATION

Model		Rear disc brake
Type		Electronic type, drum in disc brakes
Effective drum diameter	mm (in)	190 (7.48)
Lining dimension (Length × Width × Thickness)	mm (in)	165.8 × 30.0 × 2.8 (6.53 × 1.181 × 0.11)
Clearance adjustment		Manual adjustment

B: COMPONENT

1. PARKING BRAKE (REAR DISC BRAKE)

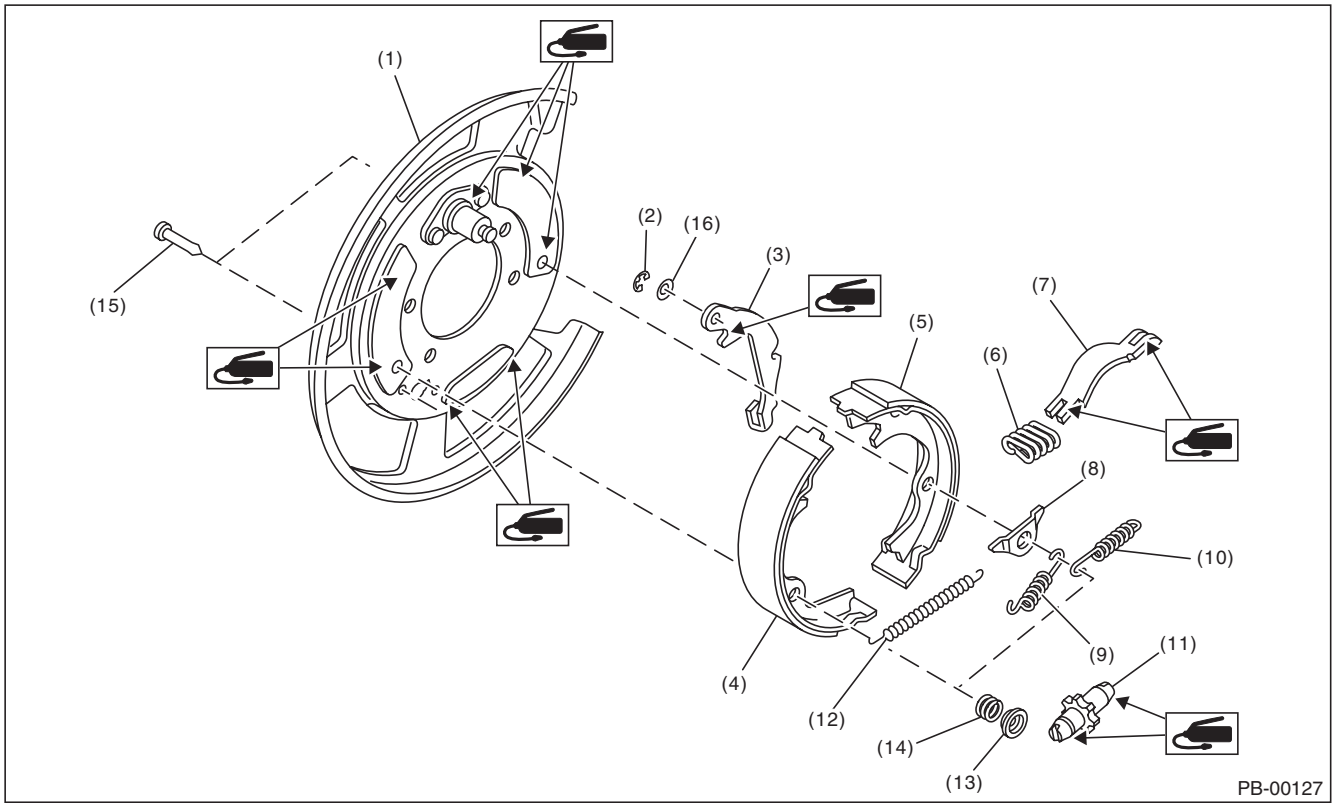

(1) Back plate
(2) Retainer
(3) Lever
(4) Parking brake shoe (Primary)
(5) Parking brake shoe (Secondary)
(6) Strut spring
(7) Strut
(8) Shoe guide plate
(9) Primary return spring
(10) Secondary return spring
(11) Adjusting screw
(12) Adjusting spring
(13) Shoe hold-down cup
(14) Shoe hold-down spring
(15) Shoe hold-down pin
(16) Wave washer

GETtheMANUALS.org

2. PARKING BRAKE ACTUATOR

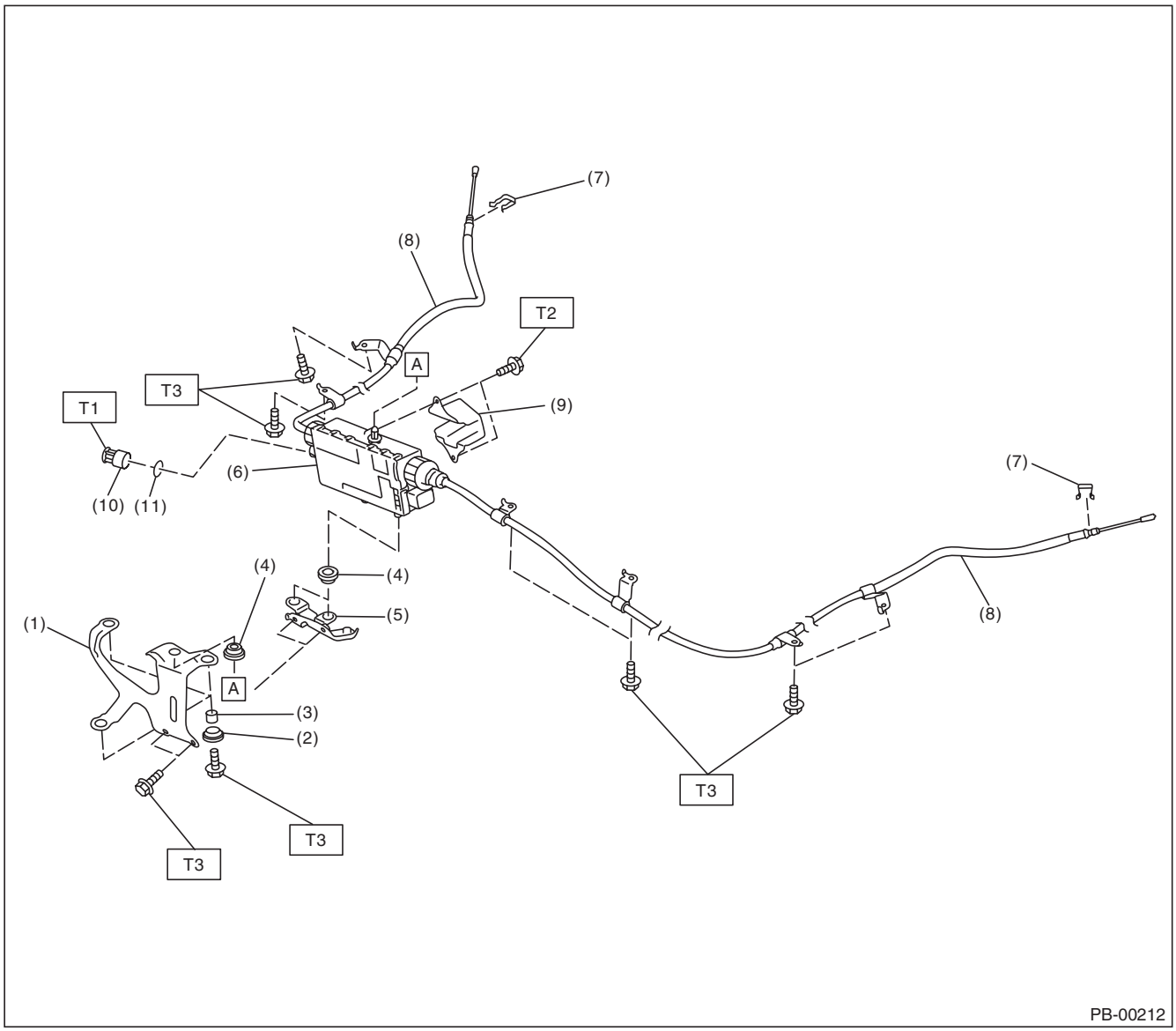

(1)	Upper bracket	(7)	Clamp	***Tightening torque:N·m (kgf-m, ft-lb)***
(2)	Bushing	(8)	Parking brake cable	***T1: 3 (0.31, 2.2)***
(3)	Spacer	(9)	Tank bracket	***T2: 7.5 (0.76, 5.5)***
(4)	Bushing	(10)	Cap	***T3: 18 (1.84, 13.3)***
(5)	Bracket	(11)	O-ring	
(6)	Brake actuator			

GETtheMANUALS.org

C: CAUTION

- Wear appropriate work clothing, including a helmet, protective goggles and protective shoes when performing any work.
- Before removal, installation or disassembly, be sure to clarify the failure. Avoid unnecessary removal, installation, disassembly and replacement.
- Vehicle components are extremely hot after driving. Be wary of receiving burns from heated parts.
- Use SUBARU genuine grease etc. or equivalent. Do not mix grease etc. of different grades or manufacturers.
- Be sure to tighten fasteners including bolts and nuts to the specified torque.
- Place shop jacks or rigid racks at the specified points.
- Make sure grease does not come into contact with the parking shoes.

D: PREPARATION TOOL

1. SPECIAL TOOL

ILLUSTRATION	TOOL NUMBER	DESCRIPTION	REMARKS
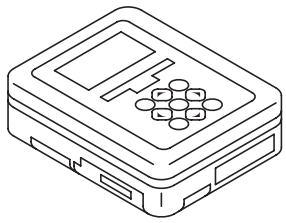 ST1B022XU0	1B022XU0	SUBARU SELECT MONITOR III KIT	Used for setting of each function and trouble-shooting for electrical system.

2. GENERAL TOOL

TOOL NAME	REMARKS
Circuit tester	Used for measuring resistance, voltage and current.

GETtheMANUALS.org

2. Parking Brake System

A: WIRING DIAGRAM

Refer to “Parking Brake / Brake Fluid Level Warning Light System” in the wiring diagram. <Ref. to WI-194, WIRING DIAGRAM, Parking Brake / Brake Fluid Level Warning Light System.>

B: ELECTRICAL SPECIFICATION

Refer to “Control Module I/O Signal” of “PARKING BRAKE (DIAGNOSTICS)”. <Ref. to PB(diag)-12, ELECTRICAL SPECIFICATION, Control Module I/O Signal.>

C: INSPECTION

Refer to “PARKING BRAKE (DIAGNOSTICS)”. <Ref. to PB(diag)-2, Basic Diagnostic Procedure.>

D: NOTE

For procedure of each component in the parking brake system, refer to the respective section.

- Parking brake actuator: <Ref. to PB-6, Parking Brake Actuator.>
- Parking brake assembly (rear disc brake): <Ref. to PB-10, Parking Brake Assembly (Rear Disc Brake).>
- Parking brake switch: <Ref. to PB-16, Parking Brake Switch.>
- Emergency release of electronic parking brake: <Ref. to PB-19, Emergency Release of Electronic Parking Brake.>

GETtheMANUALS.org

3. Parking Brake Actuator

A: REMOVAL

CAUTION:
Since the parking brake actuator and parking brake cable are integrated as a unit, do not disassemble them.

1) Lift up the vehicle, and then remove the rear wheels.
2) Perform “Parking Brake Removal Mode” after connecting the Subaru Select Monitor. <Ref. to PB(diag)-18, PARKING BRAKE REMOVAL MODE, OPERATION, Subaru Select Monitor.>

CAUTION:
Be sure to lift up the vehicle before performing the “Parking Brake Removal Mode”.

3) Disconnect the ground cable from battery.
4) Remove the fuel tank protector.
   (1) Remove the bolts, and remove the fuel tank protector.
   (2) Remove the clips.

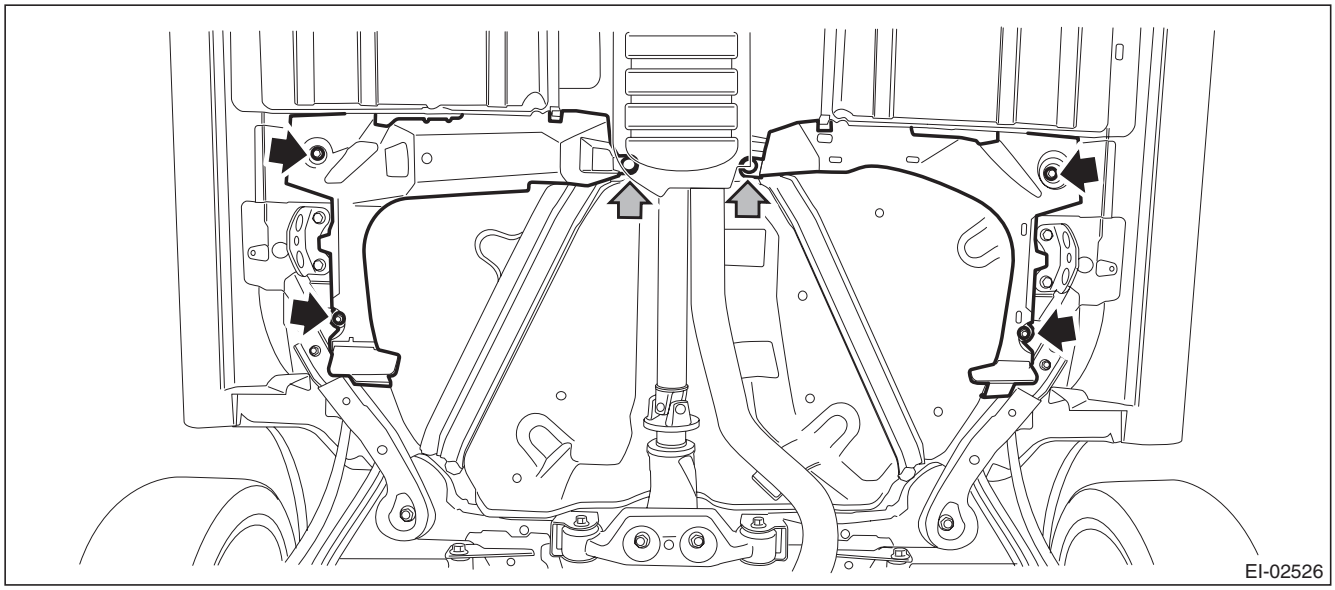

5) Remove the parking brake actuator.
   (1) Remove the parking brake cable from parking brake assembly. <Ref. to PB-10, REMOVAL, Parking Brake Assembly (Rear Disc Brake).>

GETtheMANUALS.org

(2) Remove the bolt and detach the cable clamp.

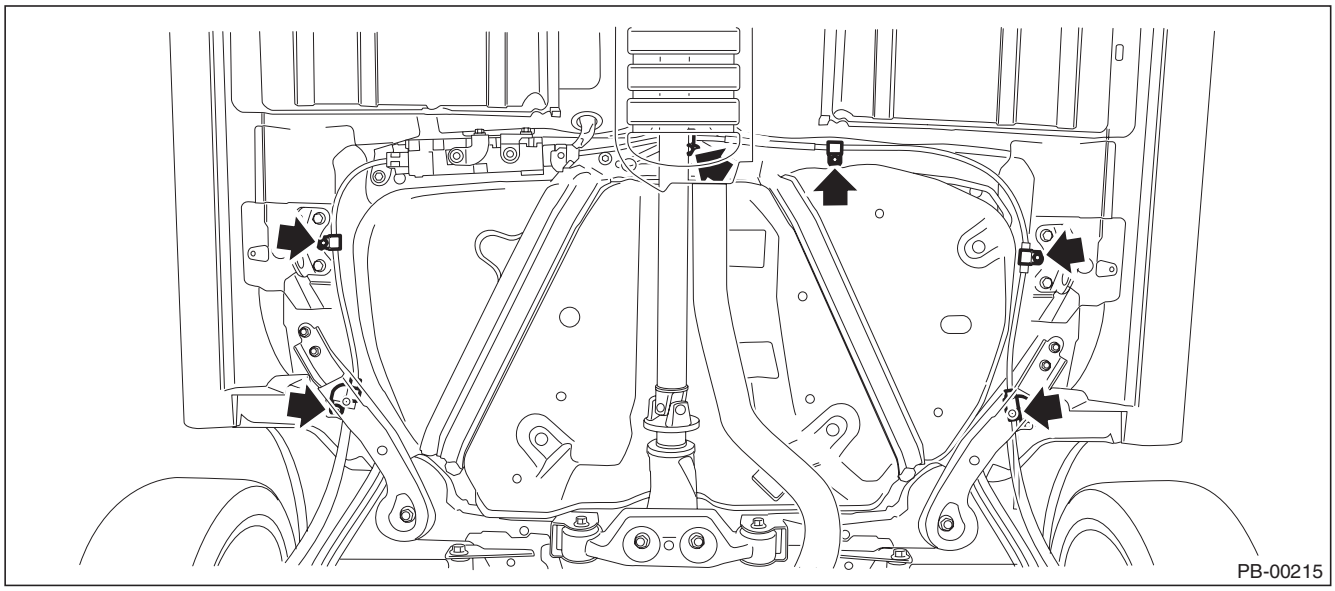

NOTE:
Make a line marking to confirm the twist of parking cable, and then perform the following procedures:

(3) Push the lock (a), and pull up the lock lever (b).
(4) With the lock lever pulled up, disconnect the parking brake actuator connector.
(5) Remove the bolts and remove the parking brake actuator.

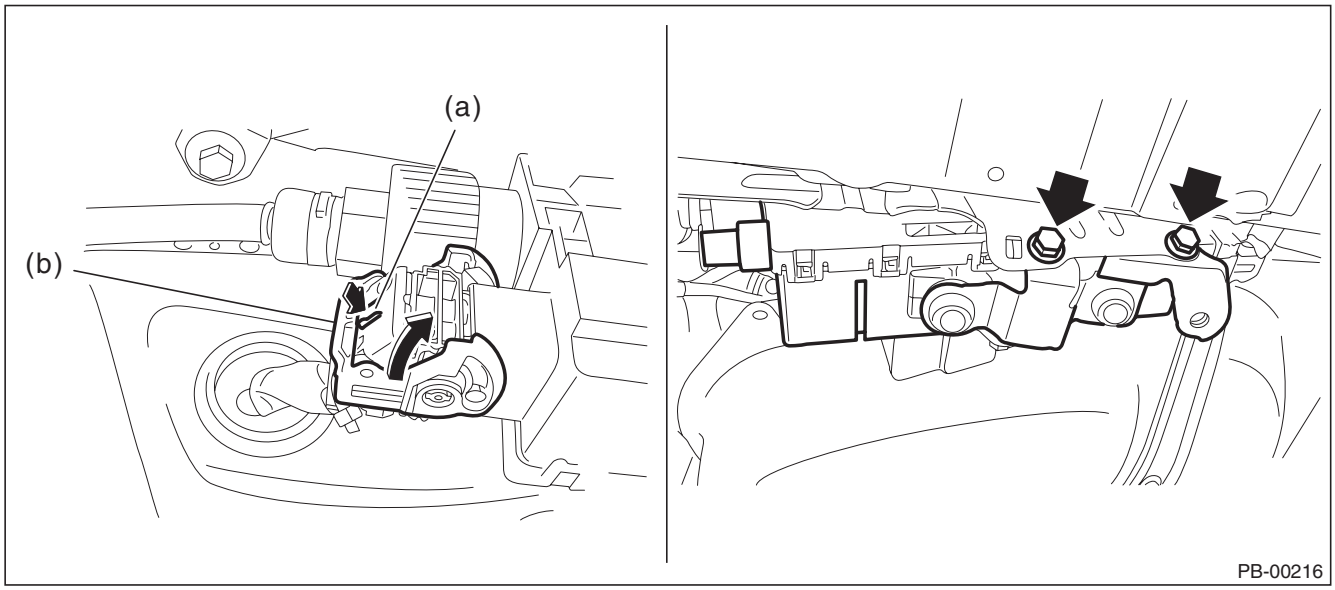

GETtheMANUALS.org

B: INSTALLATION

1) Install the parking brake actuator assembly.
   (1) Connect the parking brake actuator connector.

CAUTION:
Securely lock the locking connector (a).

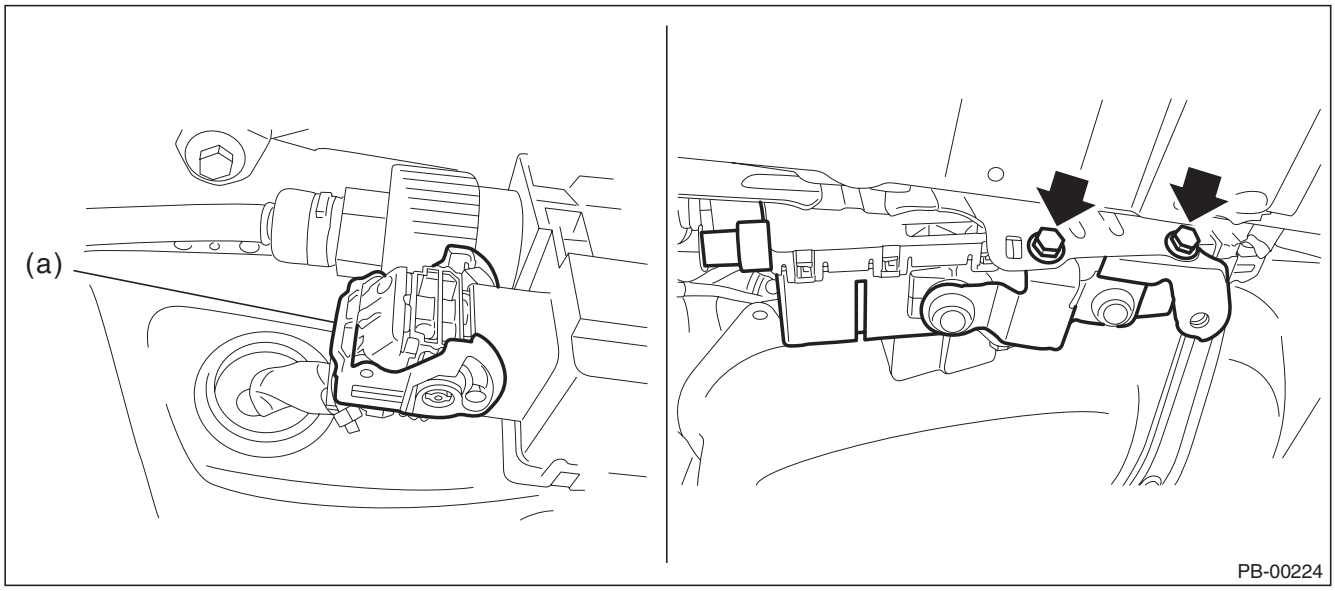

   (2) Install the parking brake actuator.

Tightening torque:
18 N·m (1.84 kgf-m, 13.3 ft-lb)

   (3) Check that the parking brake cable is not twisted, and install the cable clamps in the order of (a) to (f).

CAUTION:
- **Perform the installation with the line marking of the parking brake cable facing downward.**
- **Pay special attention to the cable clamps (d) and (f) because the cable is easy to be twisted due to these clamps.**

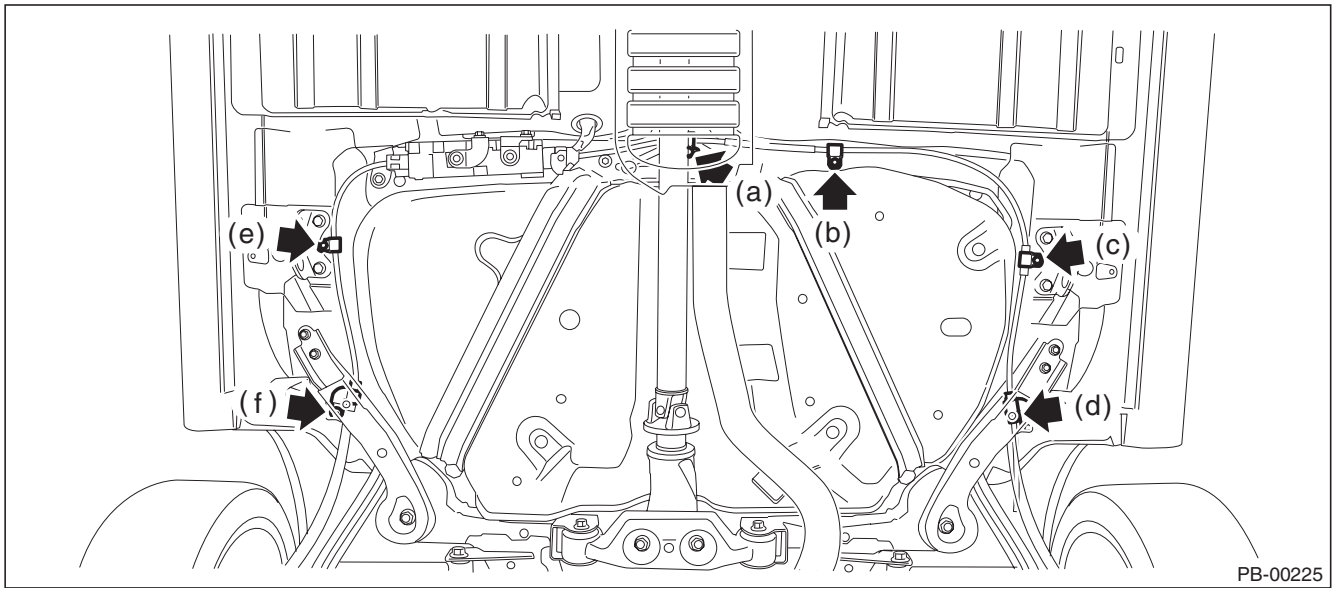

Tightening torque:
18 N·m (1.84 kgf-m, 13.3 ft-lb)

2) Install each part in the reverse order of removal.

GETtheMANUALS.org

3) Park the vehicle on a level ground with the four wheels on the ground.
4) Connect the Subaru Select Monitor to perform the following operations.
- “Force Sensor Calibration Mode”: <Ref. to PB(diag)-18, FORCE SENSOR CALIBRATION MODE, OPERATION, Subaru Select Monitor.>
- “Clutch Sensor Calibration Mode” (MT model only): <Ref. to PB(diag)-20, CLUTCH SENSOR CALIBRATION MODE, OPERATION, Subaru Select Monitor.>

GETtheMANUALS.org

4. Parking Brake Assembly (Rear Disc Brake)

A: REMOVAL

1) Lift up the vehicle, and then remove the rear wheels.
2) Perform “Parking Brake Removal Mode” after connecting the Subaru Select Monitor. <Ref. to PB(diag)-18, PARKING BRAKE REMOVAL MODE, OPERATION, Subaru Select Monitor.>

CAUTION:
Be sure to lift up the vehicle before performing the “Parking Brake Removal Mode”.

3) Disconnect the ground cable from battery.
4) Remove the rear disc brake caliper from the rear axle housing.
   (1) Remove the bolt from the brake hose bracket.
   (2) Remove the mounting bolts, and then remove the rear disc brake caliper.

   (3) Prepare wiring harnesses etc. to be discarded, and suspend the rear disc brake caliper from the shock absorber with the harnesses.

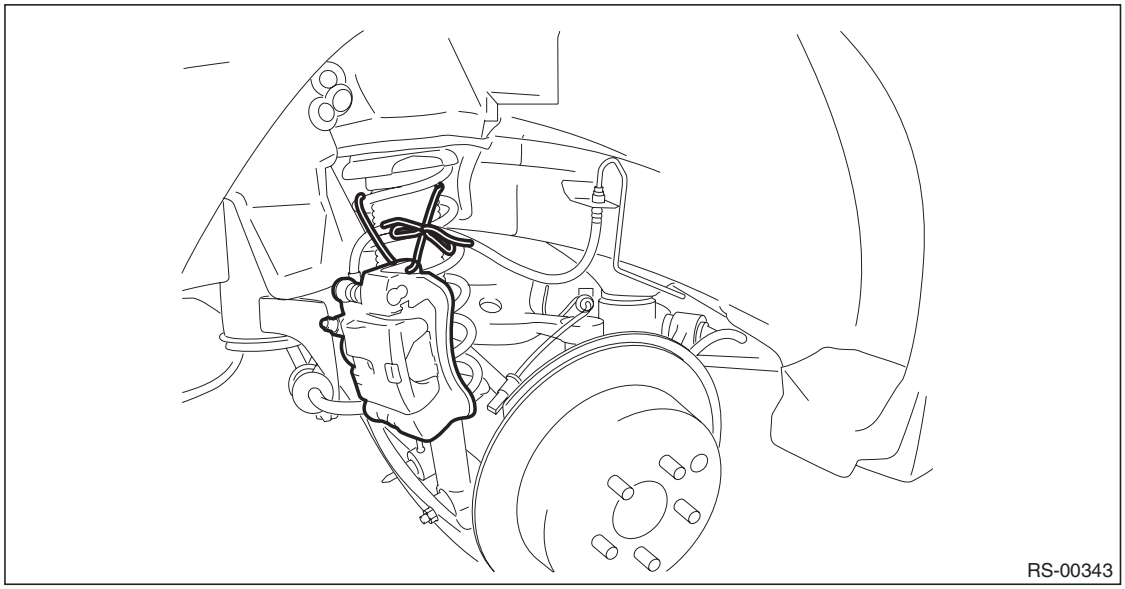

5) Remove the rear disc brake rotor.

NOTE:
If the disc rotor is difficult to remove, try the following two methods in order.

GETtheMANUALS.org

(1) Insert the flat tip screwdriver (b) into the brake adjustment hole (A), and rotate the adjusting screw (a) until the brake shoe moves far enough to remove the disc rotor (c).

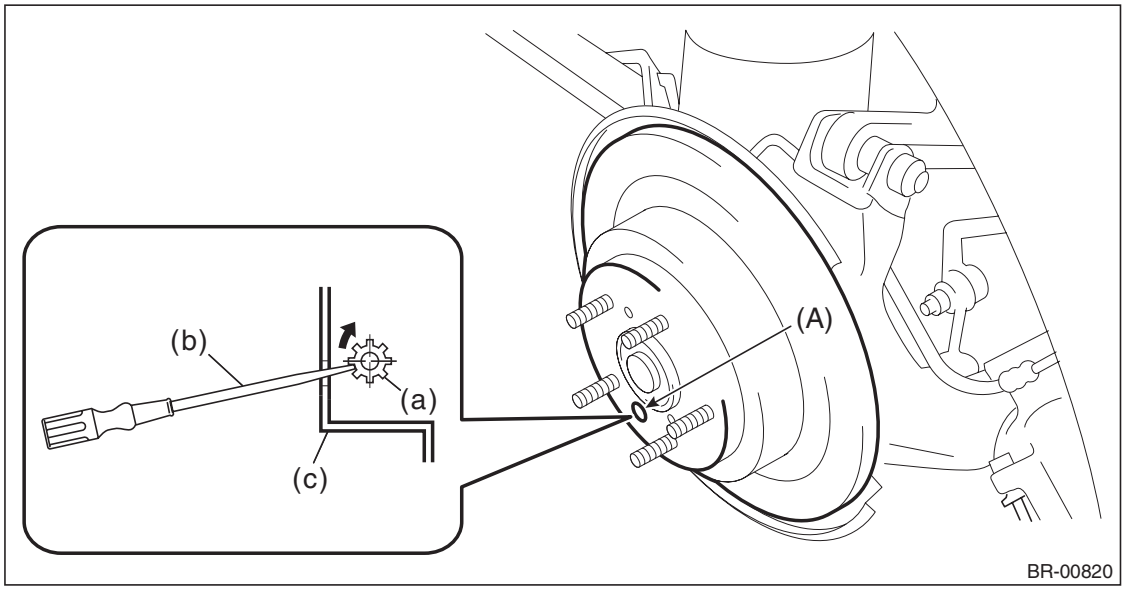

(2) When the disc rotor is difficult to be removed from the rear hub unit bearing, screw in 8 mm (0.31 in) bolt to the threaded part of the disc rotor (A), and remove the disc rotor.

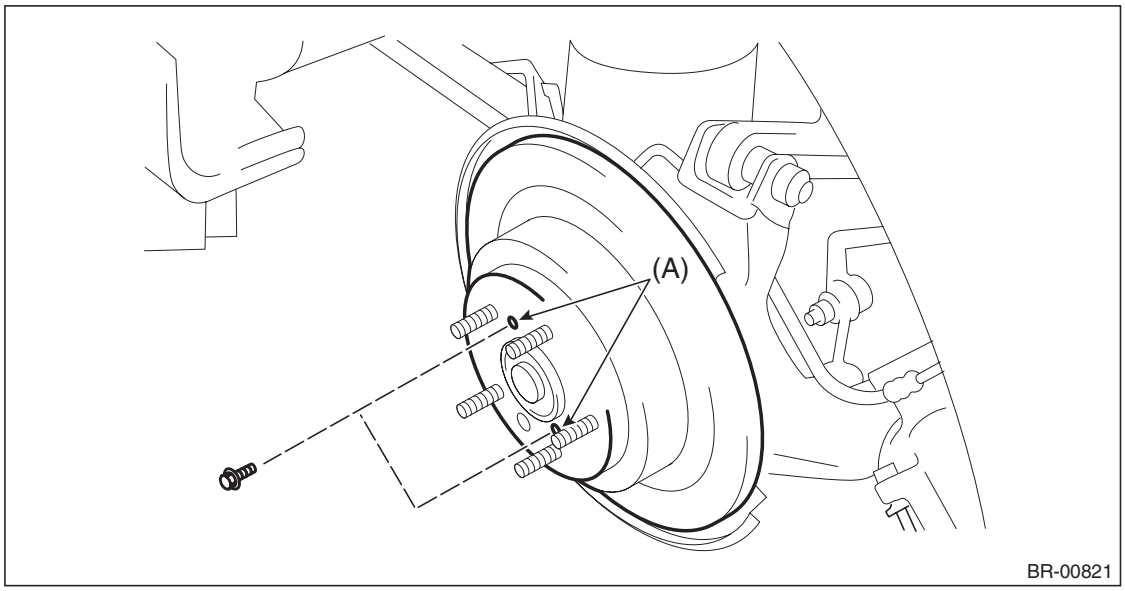

6) Remove the parking brake shoe (primary).
(1) Remove the primary and secondary return springs.

GETtheMANUALS.org

(2) Remove the shoe guide plate.

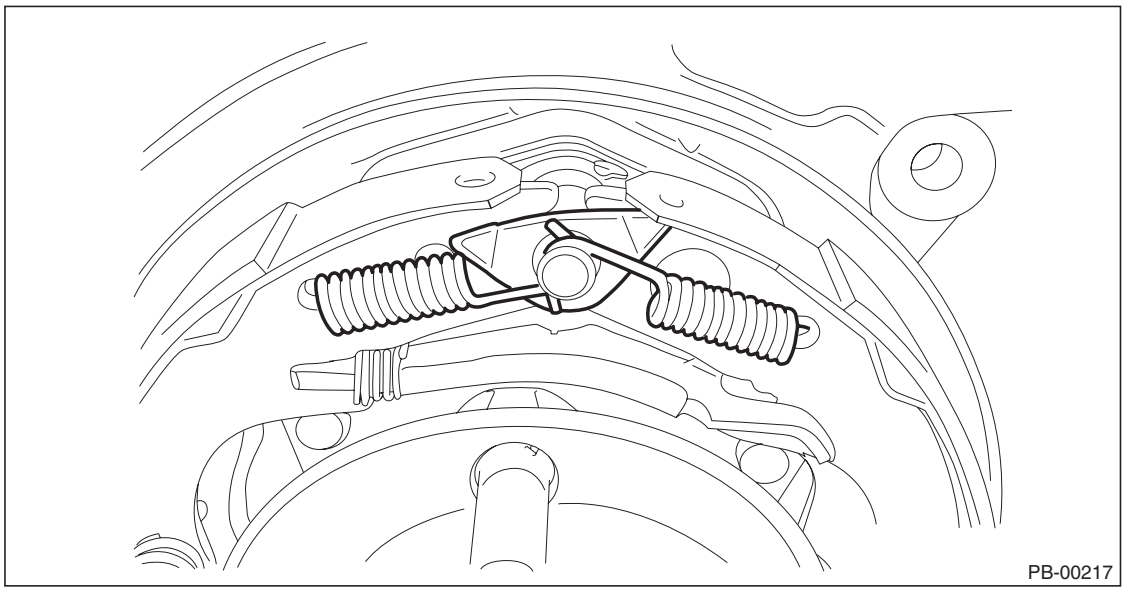

(3) Remove the shoe hold-down cup (a), and remove the shoe hold-down spring.
(4) Remove the parking brake shoe (primary) (b).

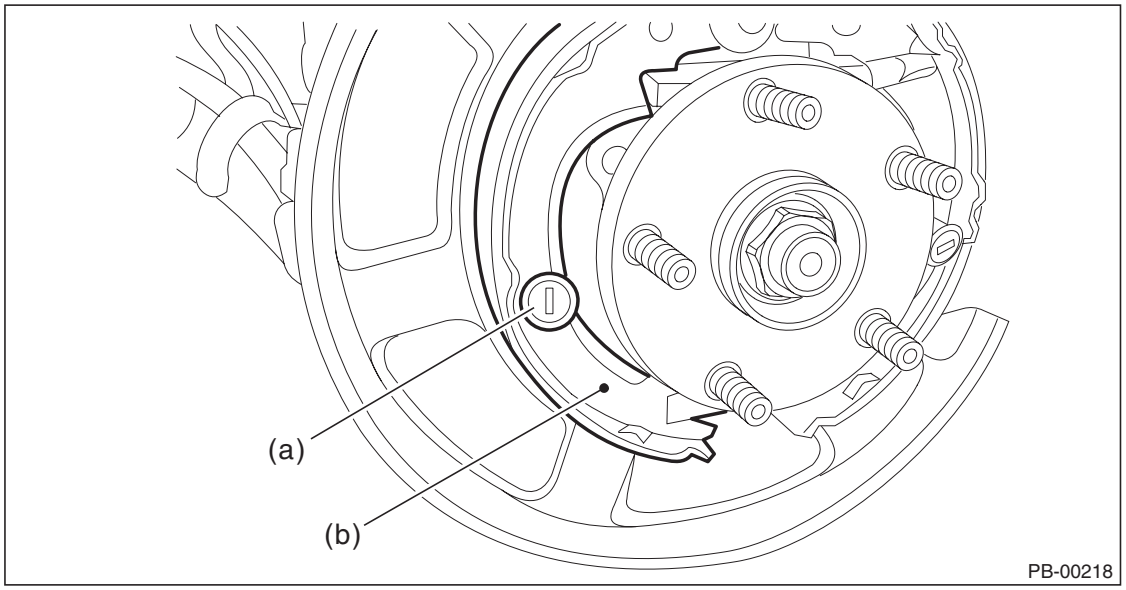

7) Remove the parking brake shoe (secondary).
(1) Remove the strut (a), strut spring (b), and adjusting screw (c).

GETtheMANUALS.org

(2) Remove the shoe hold-down cup (d), and remove the shoe hold-down spring (e).

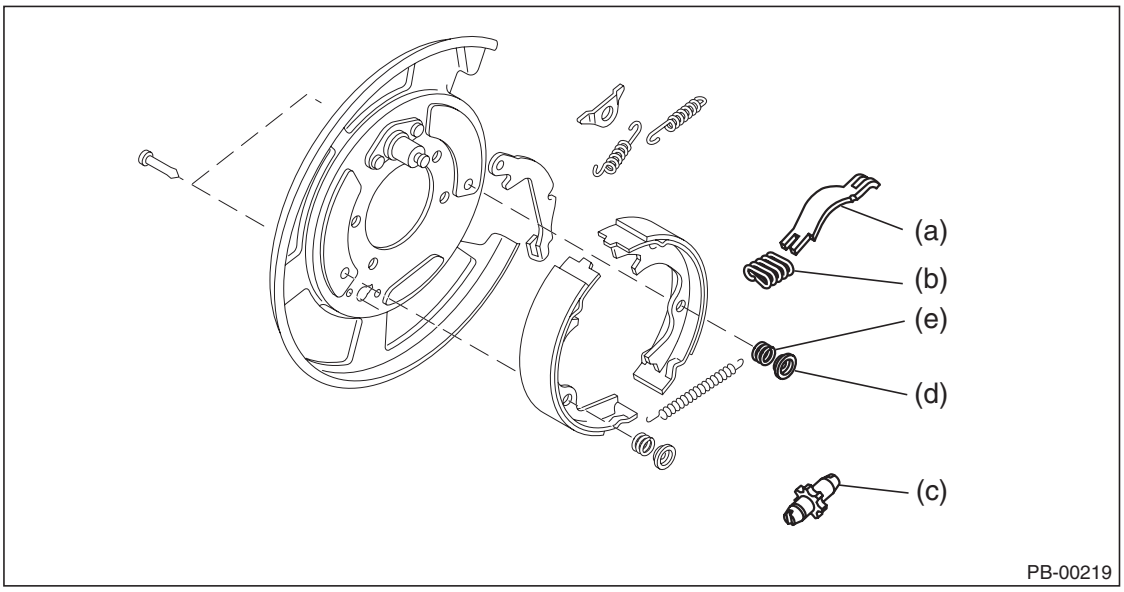

(3) Remove the parking brake cable (f) from lever (g).

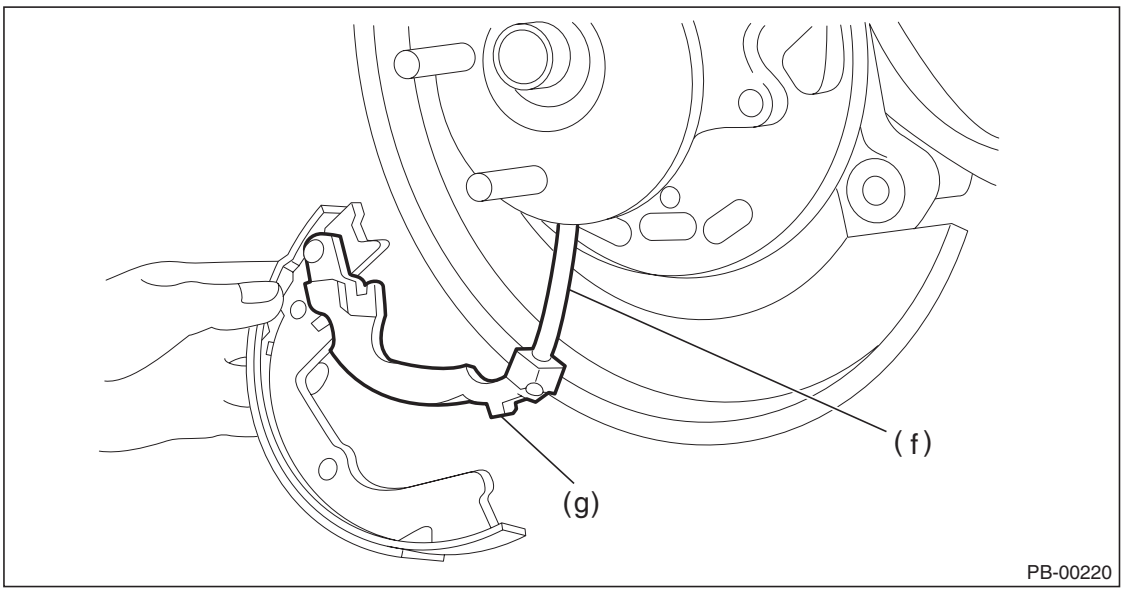

(4) Remove a retainer from the secondary side brake shoe.
(5) Remove the lever from the brake shoe.
(6) Remove the clamp, and remove the parking brake cable from the back plate.

GETtheMANUALS.org

B: INSTALLATION

1) Before assembly, check the brake disc rotor and brake shoe. <Ref. to PB-15, INSPECTION, Parking Brake Assembly (Rear Disc Brake).>
2) Install the parking brake cable to the back plate, and secure it with the clamp.

CAUTION:
Be sure the lining surface is free from brake fluid and grease.
3) Apply brake grease to the following locations.

Brake grease:
Brake Grease (Part No. 003602002)
- Six contact surfaces of the brake shoe rim and back plate gasket
- Contact surface of the brake shoe and the anchor pin
- Contact surface of the parking brake lever and strut
- Contact surface of the brake shoe and adjusting screw
- Contact surface of the brake shoe and strut
- Contact surface of the lever and brake shoe

4) Install the wave washer and lever to the secondary side brake shoe pin, and lock the retainer securely.
5) Install the parking brake cable to the lever.
6) Install the adjusting screw and adjusting spring to the brake shoe.

NOTE:
Install the adjusting screw with the screw section facing toward the direction shown in the figure below.

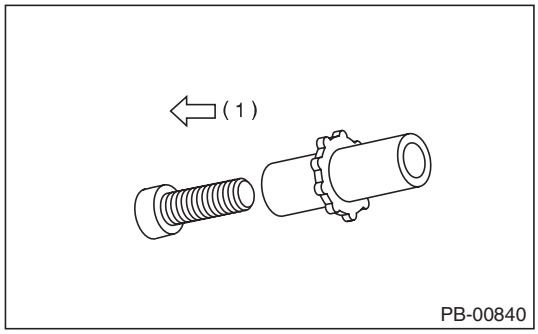

(1) Left wheel: front side of vehicle, right wheel: rear side of vehicle

7) Check that the parking brake cable does not fall from the cable guide.
8) Install the brake shoes to the back plate with shoe hold-down pins, shoe hold-down springs, and shoe hold-down cups.
9) Install the strut and strut spring to the brake shoes.

NOTE:
Install the strut springs on front side of the vehicle.
10) Install the return springs on the primary side first, and then the secondary side.
11) Install the brake disc rotor and brake caliper.
12) Install the brake hose bracket.

Tightening torque:
Refer to "COMPONENT" of "General Description". <Ref. to BR-4, COMPONENT, General Description.>
13) Adjust the parking brake. <Ref. to PB-15, ADJUSTMENT, Parking Brake Assembly (Rear Disc Brake).>
14) When replacing with the new brake shoe, connect the Subaru Select Monitor and perform the "Break-in Parking Brake Drive Mode". <Ref. to PB(diag)-19, BREAK-IN PARKING BRAKE DRIVE MODE, OPERATION, Subaru Select Monitor.>
15) After breaking-in, re-adjust the parking brakes. <Ref. to PB-15, ADJUSTMENT, Parking Brake Assembly (Rear Disc Brake).>

GETtheMANUALS.org

C: INSPECTION

1) Measure the inner diameter of the brake disc rotor.
If scoring or worn is found on the disk, replace the brake disc rotor.

Disc rotor inner diameter:
Specification: 190 mm (7.48 in)
Service limit: 191 mm (7.52 in)

2) Measure the lining thickness. If it exceeds the limit, replace the brake shoe.

Lining thickness:
Specification: 2.8 mm (0.11 in)
Service limit: 1.5 mm (0.059 in)

NOTE:
Replace the right and left brake shoe as a set.

D: ADJUSTMENT

1. SHOE CLEARANCE

1) Lift up the vehicle, and then remove the rear wheels.
2) Remove the adjusting hole cover from the disc rotor.
3) Insert the flat tip screwdriver (b) into the brake adjustment hole (A), and rotate the adjusting screw (a) until the brake shoe contacts the disc rotor (c).

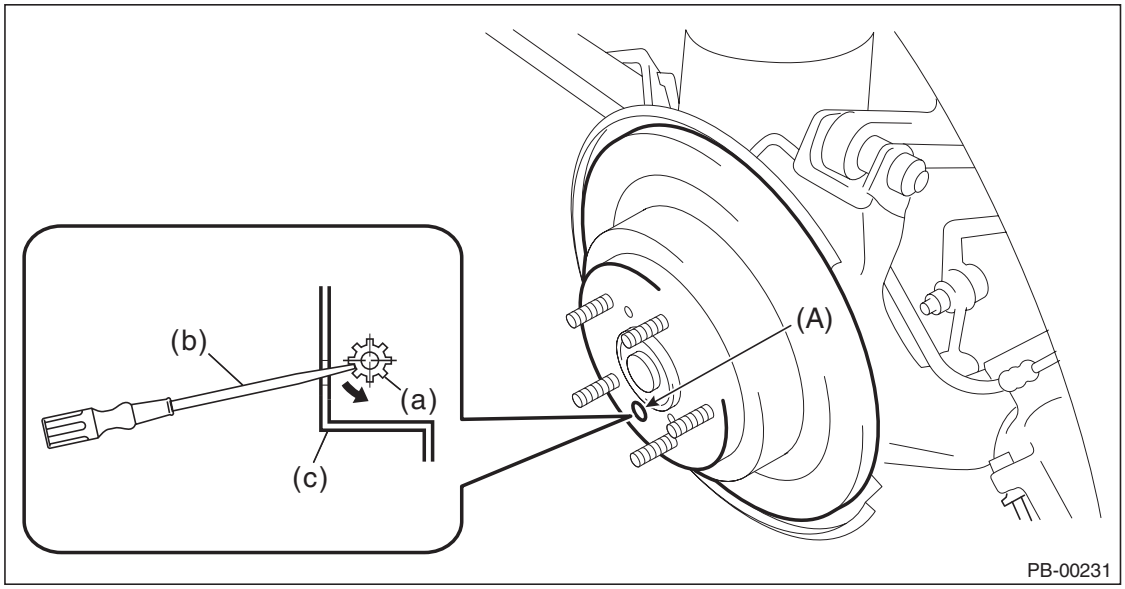

4) Loosen the adjusting screw by 5 notches to opposite direction of arrow.

CAUTION:
- **After operating the parking brake several times, check that there is no brake drag.**
- **If the amount that the adjusting screw is turned back is little, securely loosen it by 5 notches to avoid dragging.**

5) Install the adjusting hole cover to the disc rotor.
6) Install the rear wheels and lower the vehicle.
7) Park the vehicle on a level ground with the four wheels on the ground.
8) Connect the Subaru Select Monitor to perform the “Force Sensor Calibration Mode”. <Ref. to PB(diag)-18, FORCE SENSOR CALIBRATION MODE, OPERATION, Subaru Select Monitor.>

GETtheMANUALS.org

5. Parking Brake Switch

A: REMOVAL

1) Disconnect the ground cable from battery.
2) Remove the instrument panel lower cover.
   (1) Remove the clips, and remove the instrument panel side cover LH.

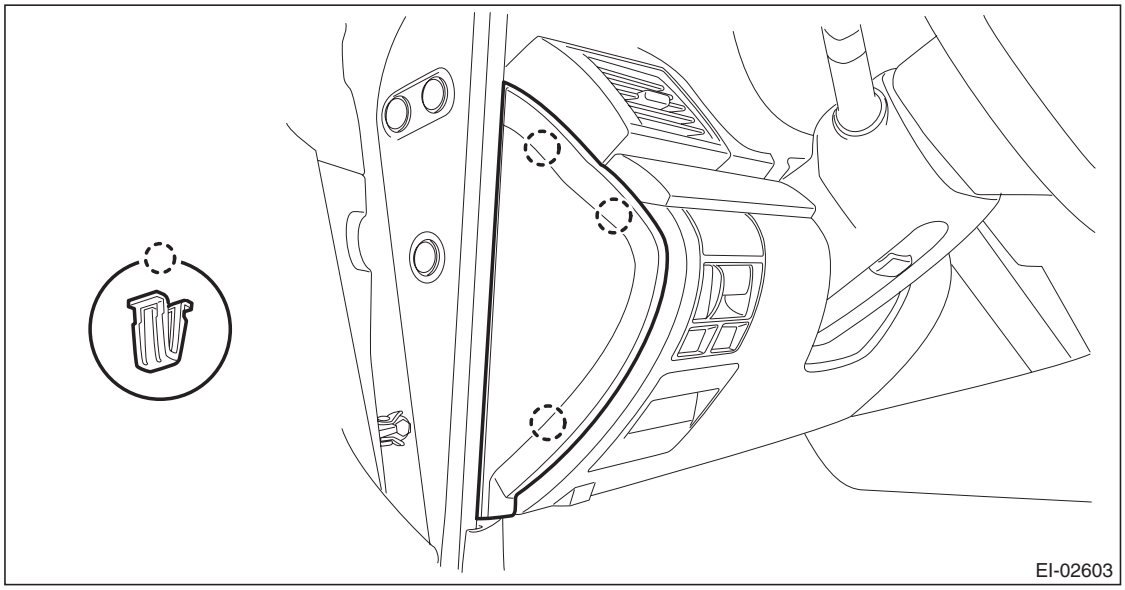

   (2) Remove the clips and data link connector, and remove the instrument panel lower cover under.

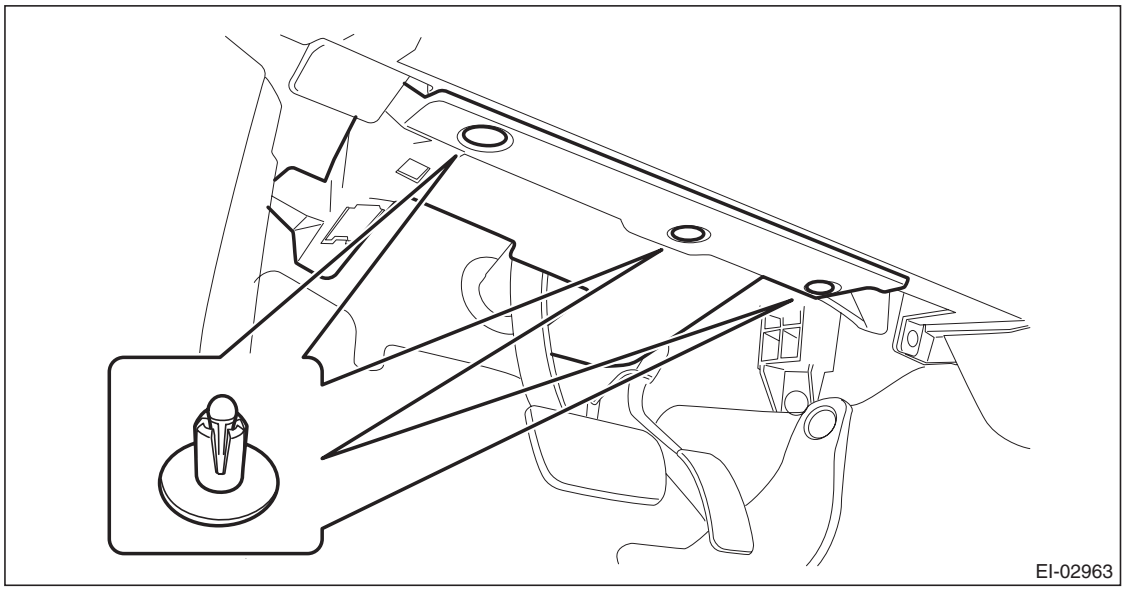

GETtheMANUALS.org

(3) Remove the screws and clips and release the claws, and remove the instrument panel lower cover while disconnecting the harness connectors.

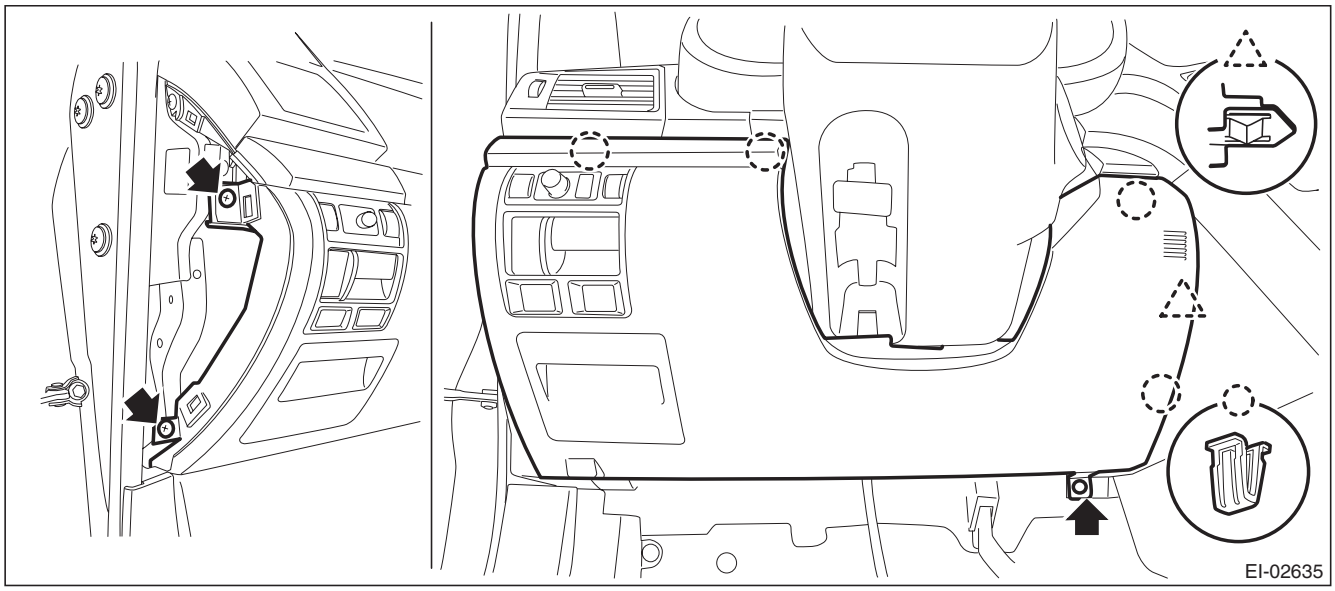

3) Remove the screws and remove the parking brake switch.

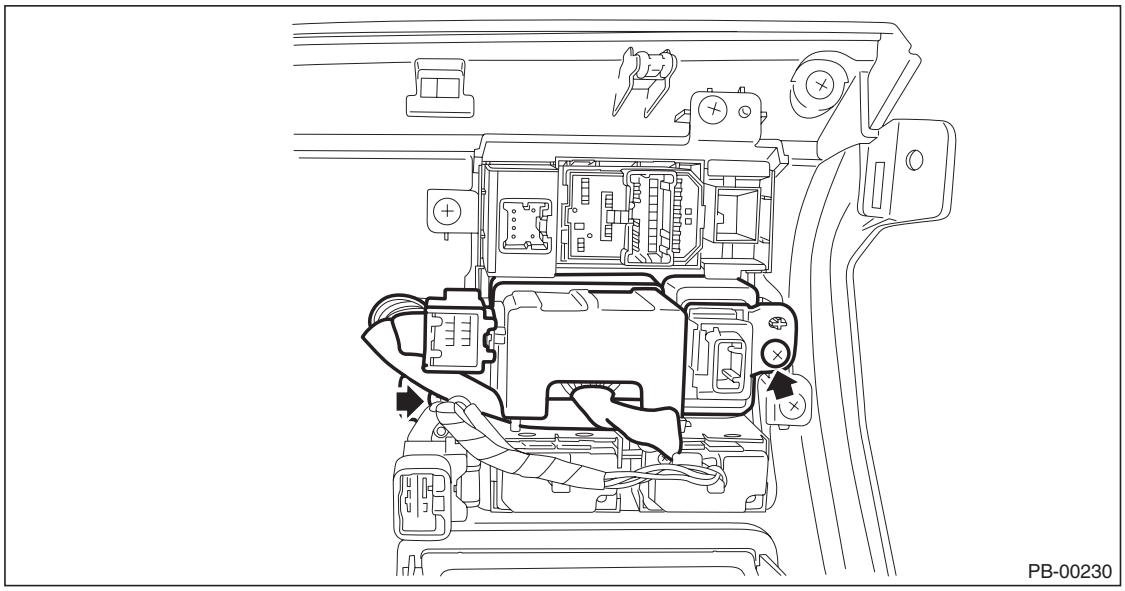

B: INSTALLATION

Install each part in the reverse order of removal.

GETtheMANUALS.org

C: INSPECTION

1. PARKING BRAKE CONTROL SWITCH

Check the resistance between parking brake control switch terminals.

Switch position	Terminal No.	Specification
Press	2 and 9 3 and 9	Less than 1 Ω
Neutral	2 and 9 1 and 3	Less than 1 Ω
Pull	1 and 3 2 and 3	Less than 1 Ω

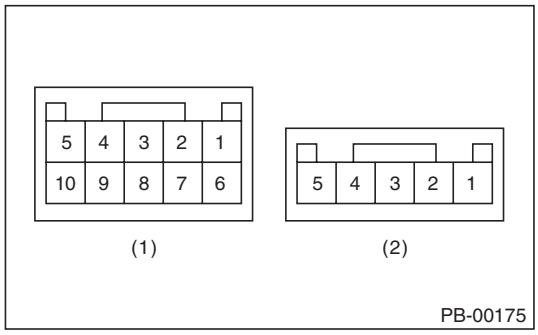

(1) Parking brake control switch
(2) Hill hold switch

NOTE:
Replace the switch if the inspection result is not within the standard value.

2. HILL HOLD SWITCH

Check the resistance between hill hold switch terminals.

Switch position	Terminal No.	Specification
ON	1 and 4	Less than 1 Ω
OFF	—	1 MΩ or more

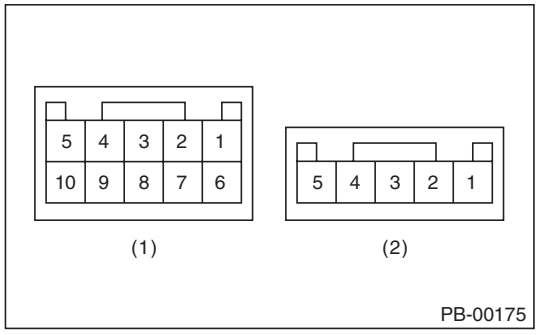

(1) Parking brake control switch
(2) Hill hold switch

NOTE:
Replace the switch if the inspection result is not within the standard value.

GETtheMANUALS.org

6. Emergency Release of Electronic Parking Brake

A: OPERATION

CAUTION:

- **Perform this operation only when the parking brake must be released in emergency situation such as a system malfunction.**
- **When the operation is performed on a slope or any uneven road, the vehicle may start to move and cause a serious accident; Be sure to fully confirm safety in the nearby area.**

1) Shift the select lever to “P” range (AT or CVT model), or set the shift lever to “1st ” or “R” position (MT model).
2) Stop the engine.
3) Set the wheel stoppers to tires.
4) Take out the electronic parking brake release tool from the vehicle service tools.
5) Insert the release tool to the parking brake actuator cap (a), and remove the cap by rotating it counterclockwise.

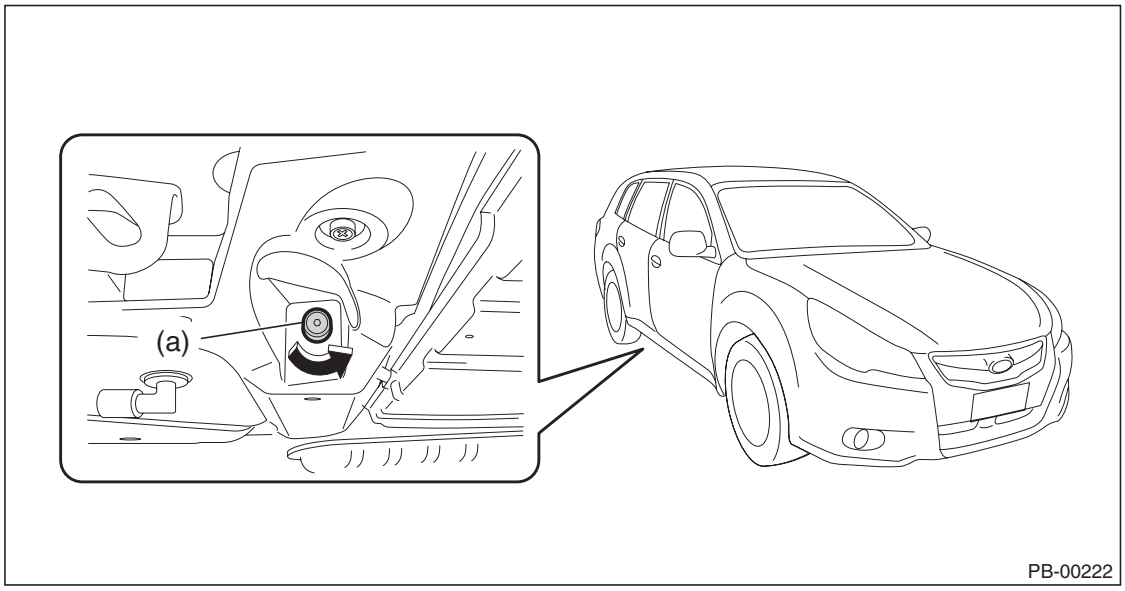

6) Insert the release tool through the film into the parking brake actuator, and rotate the tool clockwise 200 to 250 turns.

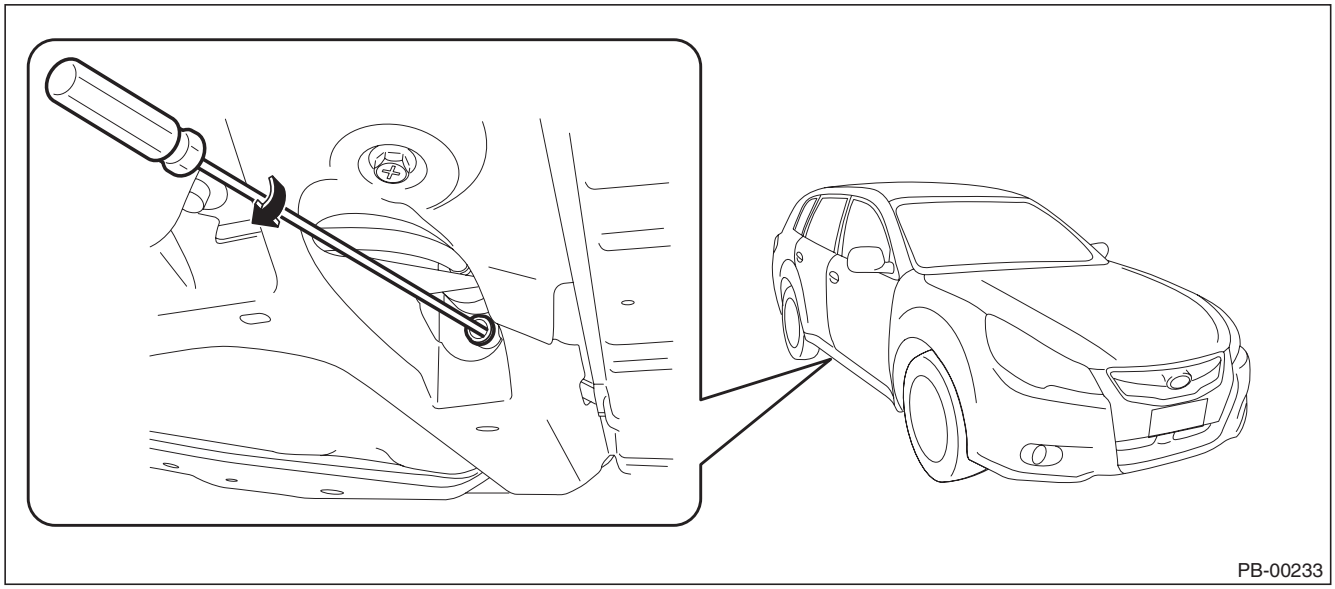

GETtheMANUALS.org

7) Install the cap removed in step 5).

Tightening torque:
3 N·m (0.31 kgf-m, 2.2 ft-lb)

8) When the emergency release of electronic parking brake was performed, be sure to perform the inspection related to the emergency release of electronic parking brake, regardless of whether the vehicle was running or not. <Ref. to PB-20, INSPECTION, Emergency Release of Electronic Parking Brake.>

B: INSPECTION

When the emergency release of electronic parking brake was performed, check the following points regardless of whether the vehicle was running or not.

- Check the operation of parking brake actuator when the parking brake switch is operated.

NOTE:
The actuator operates from lock to lock when recovering from the emergency release mode, and therefore it may take more than ten seconds to finish the operation.

- Check the illumination of brake warning light when the parking brake is operated. <Ref. to PB(diag)-26, Warning Light Illumination Pattern.>
- Check the noise when the parking brake is operated.
- Visually check the parking brake shoe. <Ref. to PB-10, Parking Brake Assembly (Rear Disc Brake).>
- Check the brake dragging when the parking brake is released. <Ref. to PB-15, ADJUSTMENT, Parking Brake Assembly (Rear Disc Brake).>

GETtheMANUALS.org

7. General Diagnostic Table

A: INSPECTION

Symptoms	Possible cause	Corrective action
Brake drag	Parking brake actuator is faulty.	Replace.
	Parking brake cable does not move.	Replace.
	Parking brake shoe clearance is maladjusted.	Adjust.
	Return spring is faulty.	Replace.
Noise from brake	Return spring is faulty.	Replace.
	Shoe hold-down spring faulty.	Replace.

GETtheMANUALS.org

GETtheMANUALS.org

PARKING BRAKE (DIAGNOSTICS)

PB(diag)

		Page
1.	Basic Diagnostic Procedure	2
2.	Check List for Interview	4
3.	General Description	8
4.	Electrical Component Location	10
5.	Control Module I/O Signal	12
6.	Subaru Select Monitor	14
7.	Read Diagnostic Trouble Code (DTC)	23
8.	Inspection Mode	24
9.	Clear Memory Mode	25
10.	Warning Light Illumination Pattern	26
11.	List of Diagnostic Trouble Code (DTC)	35
12.	Diagnostic Procedure with Diagnostic Trouble Code (DTC)	37
13.	General Diagnostic Table	67

GETtheMANUALS.org

1. Basic Diagnostic Procedure

A: PROCEDURE

CAUTION:
When removing or installing, remove all foreign matter (dust, water, and oil) from the electronic parking brake control module connectors.

NOTE:
- To check the harness for open or short circuits, shake problem spot or connector.
- Refer to “Check List for Interview”. <Ref. to PB(diag)-4, Check List for Interview.>

Step		Check	Yes	No
1	**CHECK PRE-INSPECTION.** 1) Ask the customer when and how the trouble occurred using the interview check list. <Ref. to PB(diag)-4, Check List for Interview.> 2) Before performing diagnosis, check the component which might affect parking brake system problems. <Ref. to PB(diag)-8, INSPECTION, General Description.>	Is the component that might influence the parking brake system problem normal?	Go to step **2**.	Repair or replace each component.
2	**CHECK INDICATION OF DTC.** 1) Turn the ignition switch to OFF. 2) Connect the Subaru Select Monitor to data link connector. 3) Turn the ignition switch to ON and run the Subaru Select Monitor. 4) Read the DTC using the Subaru Select Monitor. <Ref. to PB(diag)-23, OPERATION, Read Diagnostic Trouble Code (DTC).> NOTE: If the communication function of the Subaru Select Monitor cannot be executed properly, check the communication circuit. <Ref. to PB(diag)-21, COMMUNICATION FOR INITIALIZING IMPOSSIBLE, INSPECTION, Subaru Select Monitor.>	Is DTC displayed on Subaru Select Monitor?	Record the DTC. Go to step **4**.	Go to step **3**.

GETtheMANUALS.org

Step		Check	Yes	No
3	**PERFORM GENERAL DIAGNOSTICS.** 1) Perform the inspection by referring to “General Diagnostic Table”. <Ref. to PB(diag)-67, General Diagnostic Table.> 2) Perform the Clear Memory Mode. <Ref. to PB(diag)-25, OPERATION, Clear Memory Mode.> 3) Perform the Inspection Mode. <Ref. to PB(diag)-24, PROCEDURE, Inspection Mode.> 4) Read the DTC. <Ref. to PB(diag)-23, OPERATION, Read Diagnostic Trouble Code (DTC).> 5) Check the DTC is not displayed.	After starting the engine, do the electronic parking brake warning light (C6 model only), hill hold indicator light and brake warning light go off with the parking brake released?	Finish the diagnosis.	Check the combination meter circuit. <Ref. to PB(diag)-30, ELECTRONIC PARKING BRAKE WARNING LIGHT AND HILL HOLD INDICATOR LIGHT DO NOT GO OFF, Warning Light Illumination Pattern.> <Ref. to PB(diag)-31, BRAKE WARNING LIGHT DOES NOT GO OFF, Warning Light Illumination Pattern.> <Ref. to PB(diag)-29, HILL HOLD INDICATOR LIGHT DO NOT GO OFF, Warning Light Illumination Pattern.> <Ref. to PB(diag)-33, BRAKE WARNING LIGHT REMAINS BLINKING, Warning Light Illumination Pattern.>
4	**CHECK FREEZE FRAME DATA.** Using the Subaru Select Monitor, check the freeze frame data for the electronic parking brake control module.	Are freeze frame data recorded?	Record the freeze frame data. Go to step **5**.	Go to step **5**.
5	**PERFORM DIAGNOSIS.** 1) Refer to “List of Diagnostic Trouble Code (DTC)”. NOTE: For the DTC list, refer to “List of Diagnostic Trouble Code (DTC)”. <Ref. to PB(diag)-35, LIST, List of Diagnostic Trouble Code (DTC).> 2) Correct the cause of trouble. 3) Perform the Clear Memory Mode. <Ref. to PB(diag)-25, OPERATION, Clear Memory Mode.> 4) Perform the Inspection Mode. <Ref. to PB(diag)-24, PROCEDURE, Inspection Mode.> 5) Read the DTC. <Ref. to PB(diag)-23, OPERATION, Read Diagnostic Trouble Code (DTC).>	Is DTC displayed?	Repeat step 5 until DTC is not shown.	Finish the diagnosis.

GETthemANUALS.org

2. Check List for Interview

A: CHECK

Check the following item about the vehicle's state.

1. STATE OF BRAKE WARNING LIGHT

Brake warning light illuminates/goes off/ blinks.	❑ Always ❑ Sometimes ❑ Only once ❑ Does not illuminate ❑ Does not go off ❑ Blinks • When/How long does illuminate/go off/blink?		
Ignition key position	❑ LOCK ❑ ACC ❑ ON (Before starting engine) ❑ START ❑ ON (After starting engine, engine is running) ❑ ON (After starting engine, engine is at a standstill)		
Timing	❑ Immediately after turning the ignition switch to ON ❑ Immediately after turning the ignition switch to START ❑ When the parking brake switch is pressed ❑ When the parking brake switch is pulled ❑ When the parking brake switch is pressed continually (times) ❑ When the parking brake switch is pulled continually (times)		
	❑ When accelerating	—	km/h
		—	MPH
	❑ While driving at a constant speed	km/h	MPH
	❑ While decelerating	—	km/h
		—	MPH
	❑ When turning to the right	Steering angle:	deg
		Steering time:	Sec.
	❑ When turning to the left	Steering angle:	deg
		Steering time:	Sec.
	❑ When operating other electrical parts		
	• Part name: • Operating condition:		

GETthemANUALS.org

2. STATE OF ELECTRONIC PARKING BRAKE WARNING LIGHT (C6 MODEL ONLY)

Electronic parking brake warning light illuminates.	❑ Always ❑ Sometimes ❑ Only once ❑ Does not illuminate • When/How long does it illuminate?		
Ignition key position	❑ LOCK ❑ ACC ❑ ON (Before starting engine) ❑ START ❑ ON (After starting engine, engine is running) ❑ ON (After starting engine, engine is at a standstill)		
Timing	❑ Immediately after turning the ignition switch to ON ❑ Immediately after turning the ignition switch to START ❑ When the parking brake switch is pressed ❑ When the parking brake switch is pulled ❑ When the parking brake switch is pressed continually (times) ❑ When the parking brake switch is pulled continually (times)		
	❑ When accelerating	—	km/h
		—	MPH
	❑ While driving at a constant speed	km/h	MPH
	❑ While decelerating	—	km/h
		—	MPH
	❑ When turning to the right	Steering angle:	deg
		Steering time:	Sec.
	❑ When turning to the left	Steering angle:	deg
		Steering time:	Sec.
	❑ When operating other electrical parts		
	• Part name: • Operating condition:		

GETthemANUALS.org

3. HILL HOLD INDICATOR LIGHT CONDITION

Hill hold indicator light illuminates.	❑ Always ❑ Sometimes ❑ Only once ❑ Does not illuminate • When/How long does it illuminate?		
Ignition key position	❑ LOCK ❑ ACC ❑ ON (Before starting engine) ❑ START ❑ ON (After starting engine, engine is running) ❑ ON (After starting engine, engine is at a standstill)		
Timing	❑ Immediately after turning the ignition switch to ON ❑ Immediately after turning the ignition switch to START ❑ When the hill hold switch is pressed (seconds) ❑ When the parking brake switch is pressed ❑ When the parking brake switch is pulled ❑ When the parking brake switch is pressed continually (times) ❑ When the parking brake switch is pulled continually (times)		
	❑ When accelerating	—	km/h
		—	MPH
	❑ While driving at a constant speed	km/h	MPH
	❑ While decelerating	—	km/h
		—	MPH
	❑ When turning to the right	Steering angle:	deg
		Steering time:	Sec.
	❑ When turning to the left	Steering angle:	deg
		Steering time:	Sec.
	❑ When operating other electrical parts		
	• Part name: • Operating condition:		

GETtheMANUALS.org

4. CONDITIONS UNDER WHICH TROUBLE OCCURS

Environment	a) Weather	❑ Fine ❑ Cloudy ❑ Rainy ❑ Snowy ❑ Others:
	b) Ambient temperature	°C (°F)
	c) Road	❑ Inner city ❑ Suburbs ❑ Highway ❑ Local street ❑ Uphill ❑ Downhill ❑ Paved road ❑ Gravel road ❑ Muddy road ❑ Sandy place ❑ Straight road ❑ Sharp curve ❑ Gentle curve ❑ S-curve ❑ Road with a slope on both sides ❑ Others:
	d) Road surface	❑ Dry ❑ Wet ❑ Covered with fresh snow ❑ Covered with hardened snow ❑ Frozen slope ❑ Others:
Condition	a) Tire inflation pressure	Front RH tire: kPa
		Front LH tire: kPa
		Rear RH tire: kPa
		Rear LH tire: kPa
	b) Degree of wear	Front RH tire: mm (in)
		Front LH tire: mm (in)
		Rear RH tire: mm (in)
		Rear LH tire: mm (in)
	c) Tire/Wheel size	❑ Specified size ❑ Except specification ( )
	d) Tire variation	❑ Summer tire ❑ Studless tire (Brand:)
	e) Tire chain is attached: ❑ Yes / ❑ No	
	f) Using T-type tires: ❑ Yes / ❑ No	
	g) Condition of suspension alignment:	
	h) Loaded condition:	
	i) Repaired parts are used: ❑ Yes / ❑ No	
	• Content:	
	j) Others:	

GETtheMANUALS.org

3. General Description

A: CAUTION

1. SUPPLEMENTAL RESTRAINT SYSTEM "AIRBAG"

Airbag system wiring harness is routed near the parking brake switch, hill hold switch and electronic parking brake control module.

CAUTION:
- **Do not use electrical test equipment on the airbag system circuits.**
- **Be careful not to damage the airbag system wiring harness, when servicing the parking brake switch, hill hold switch and electronic parking brake control module.**

B: INSPECTION

Before performing diagnosis, inspect the following items which may influence parking brake system problems.

1. BATTERY

Measure the battery voltage and specific gravity of the electrolyte.

Standard voltage:
12 V or more

Specific gravity:
1.260 or more

2. GROUND

Check the tightening torque of ground (GB-9 and 10) bolts of the parking brake system.

Tightening torque:
13 N·m (1.3 kgf-m, 9.6 ft-lb)

3. BRAKE DRAG

Check for brake drag.

4. PARKING BRAKE ASSEMBLY

Check and adjust the parking brake assembly.
- Check the disc rotor inner diameter and lining thickness. <Ref. to PB-15, INSPECTION, Parking Brake Assembly (Rear Disc Brake).>
- Adjust the shoe clearance. <Ref. to PB-15, ADJUSTMENT, Parking Brake Assembly (Rear Disc Brake).>

5. TIRE

Check the tire specifications, tire wear and air pressure. <Ref. to WT-2, SPECIFICATION, General Description.>

GETtheMANUALS.org

C: PREPARATION TOOL

1. SPECIAL TOOL

ILLUSTRATION	TOOL NUMBER	DESCRIPTION	REMARKS
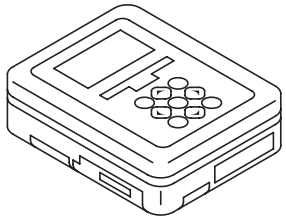 ST1B022XU0	1B022XU0	SUBARU SELECT MONITOR III KIT	Used for troubleshooting the electrical system.

2. GENERAL TOOL

TOOL NAME	REMARKS
Circuit tester	Used for measuring resistance, voltage and current.

GETtheMANUALS.org

4. Electrical Component Location

A: LOCATION

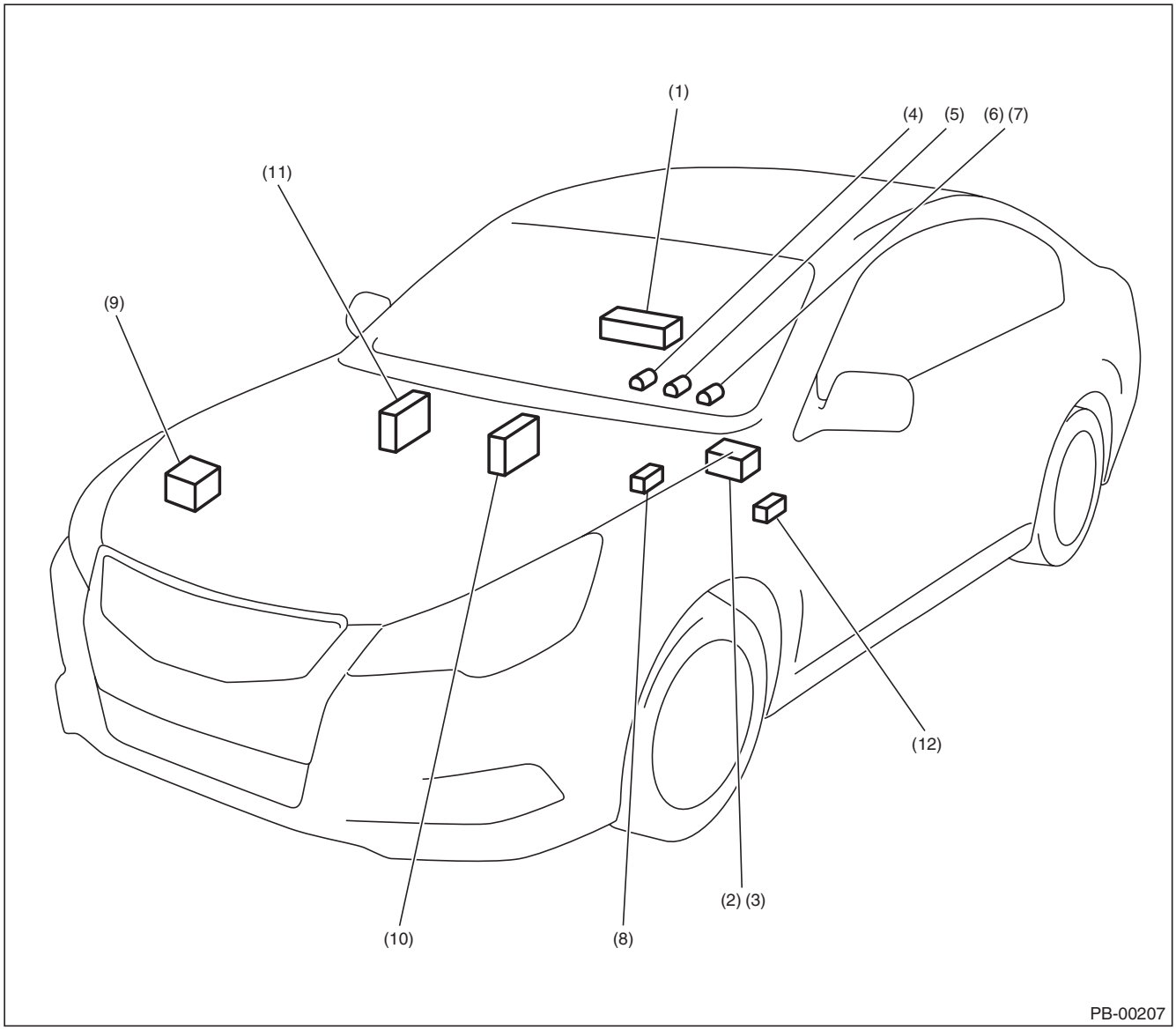

(1)	Electronic parking brake control module	(5)	Electronic parking brake warning light (C6 model only)	(9)	VDC control module and hydraulic control unit (VDCCM&H/U)
(2)	Parking brake switch	(6)	Brake warning light (C0, C5 and C6 models)	(10)	Body integrated unit
(3)	Hill hold switch	(7)	Brake warning light (U4, U5 and U6 models)	(11)	Engine control module (ECM)
(4)	Hill hold indicator light	(8)	Clutch stroke sensor (MT model only)	(12)	Data link connector

GETtheMANUALS.org

Electrical Component Location

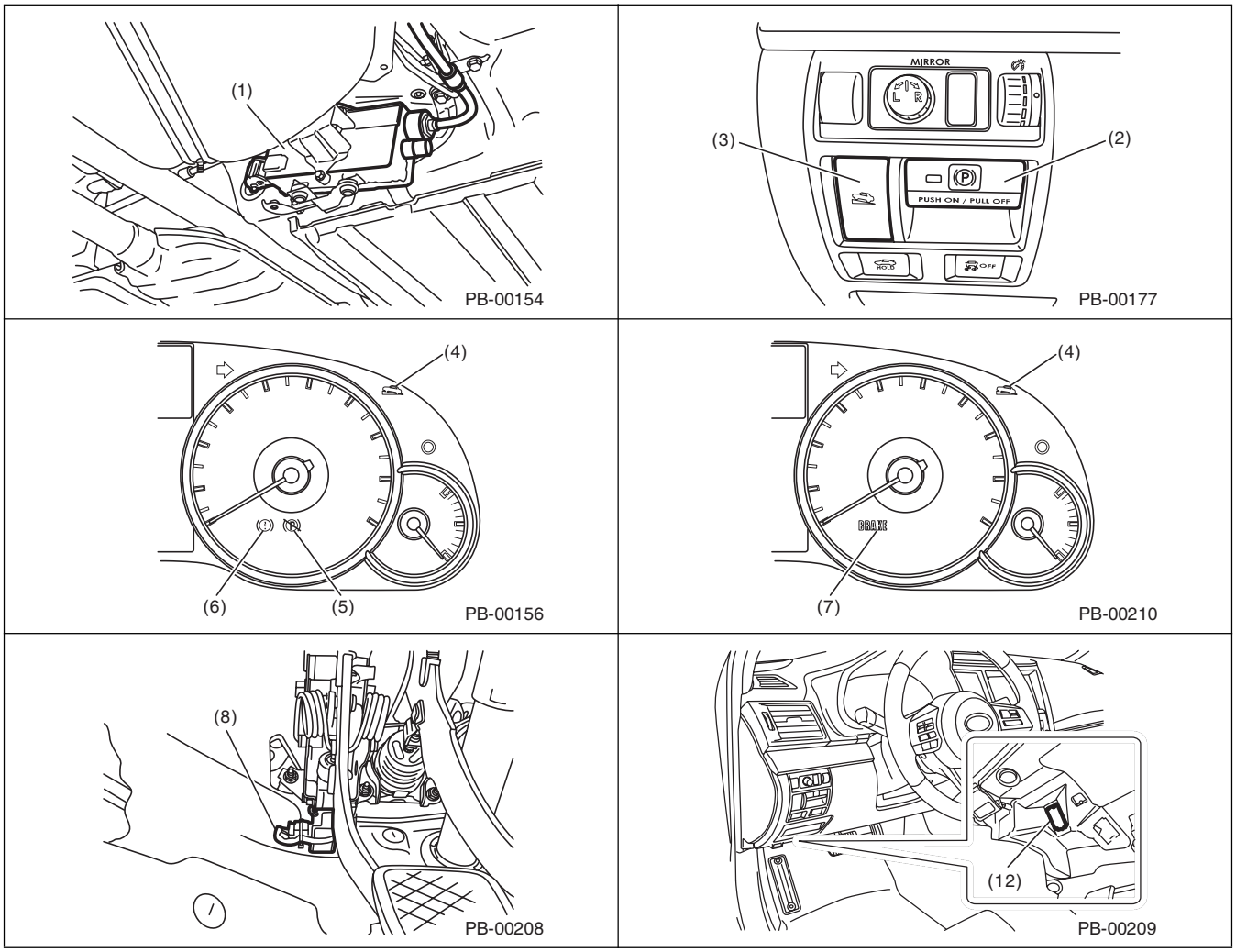

GETtheMANUALS.org

5. Control Module I/O Signal

A: ELECTRICAL SPECIFICATION

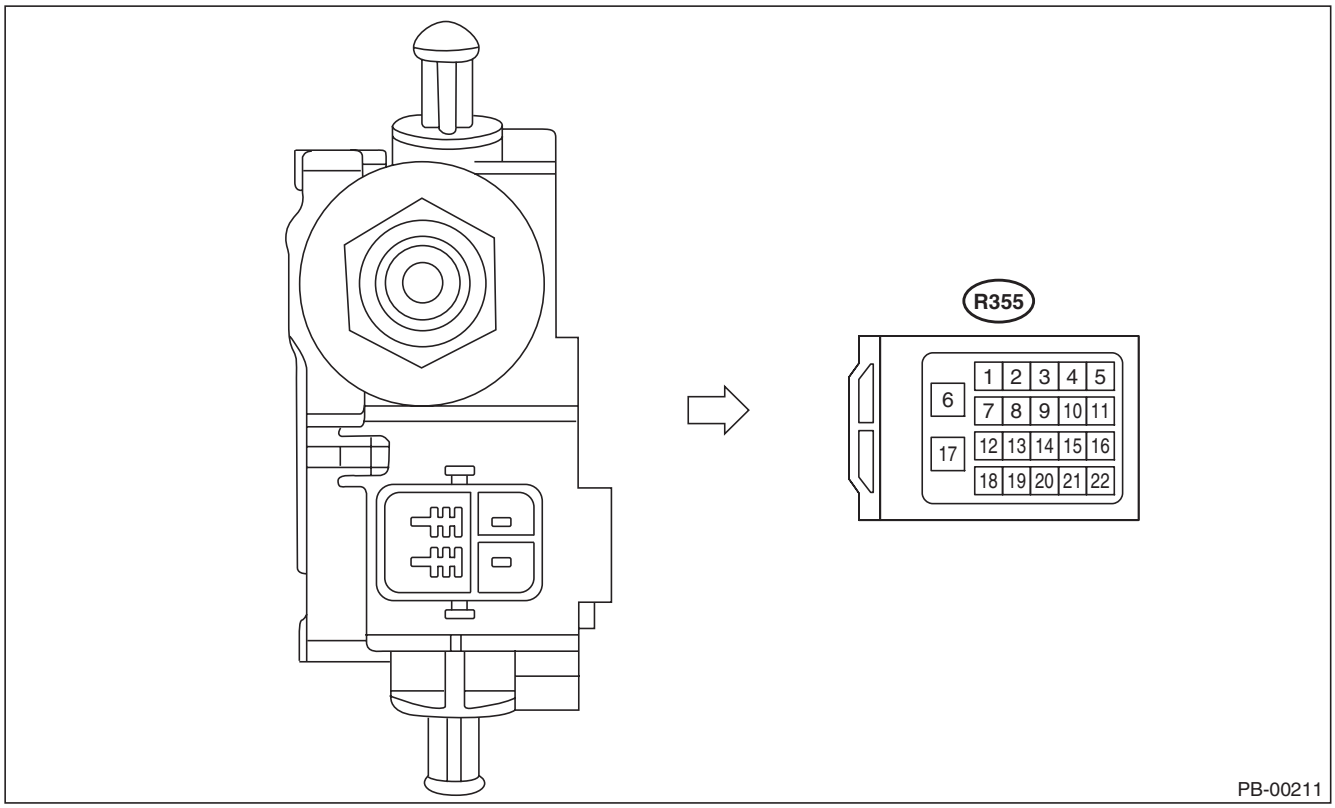

NOTE:
The terminal numbers of the electronic parking brake control module connectors are as indicated in the figure.

Content	Terminal No. (+) — (–)	Input/Output signal
		Measured value and measuring conditions
Battery power supply	17 — 6	Always 10 — 15 V
IGN power supply	18 — 6	10 — 15 V when the ignition switch is ON.
Parking brake switch	13	Pulse signal
Parking brake switch	14	Pulse signal
Parking brake switch	20	Pulse signal
Parking brake switch	19	Pulse signal
Hill hold switch	2 — 6	When hill hold switch is operated, 10 — 15 V
Parking brake switch indicator light	7 — 6	When the light is on: 0 V, when the light is off: 10 — 15 V
Clutch stroke sensor (MT model only)	12	Pulse signal
CAN-H	9	Serial communication
CAN-L	3	Serial communication
Ground	6	—

GETtheMANUALS.org

B: WIRING DIAGRAM

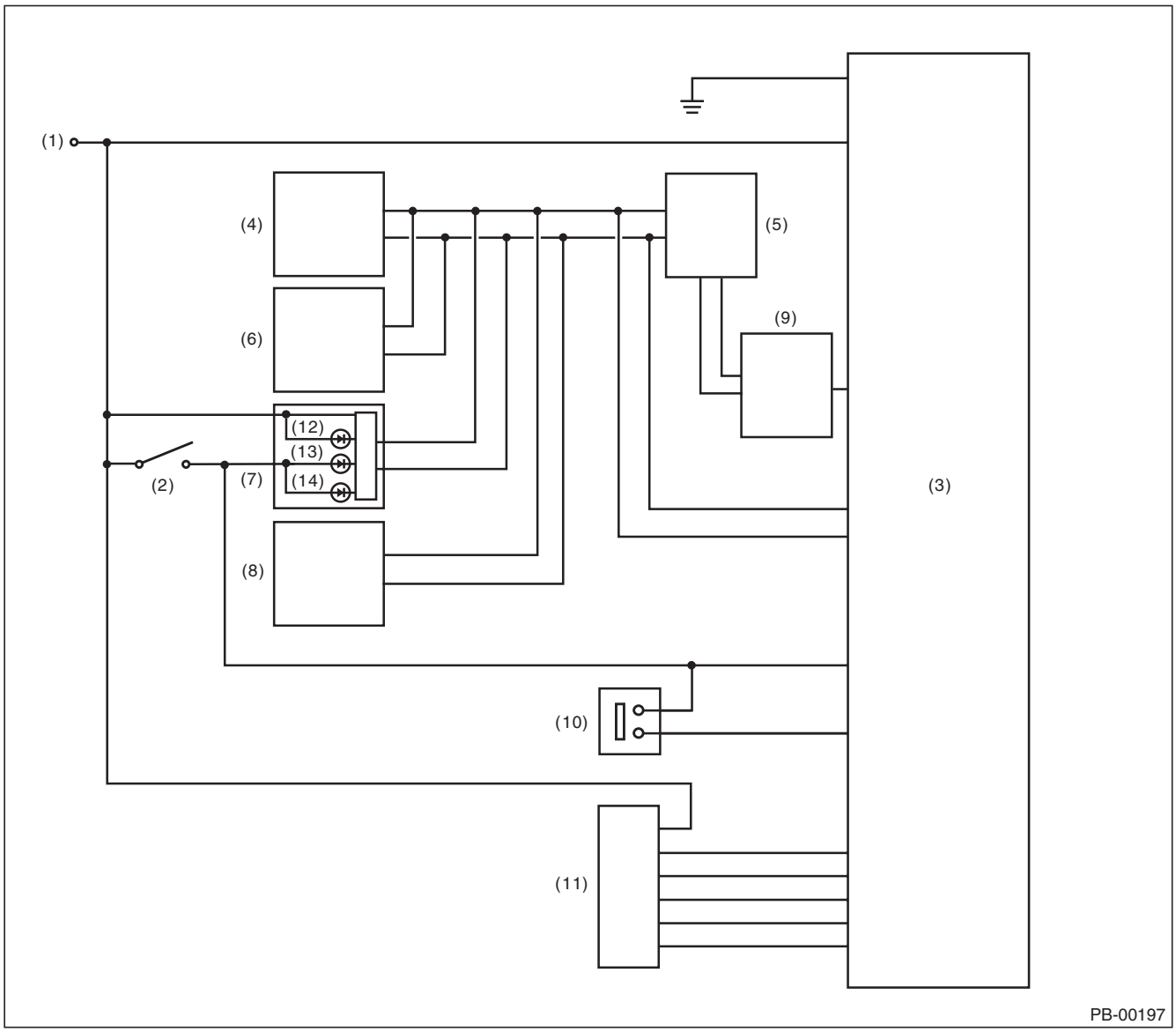

(1)	Battery	(6)	Transmission control module	(11)	Parking brake switch
(2)	Ignition switch	(7)	Combination meter	(12)	Hill hold indicator light
(3)	Electronic parking brake CM	(8)	Body integrated unit	(13)	Electronic parking brake warning light (C6 model only)
(4)	Engine control module (ECM)	(9)	Clutch stroke sensor (MT model only)	(14)	Brake warning light
(5)	VDC control module	(10)	Hill hold switch		

GETtheMANUALS.org

6. Subaru Select Monitor

A: OPERATION

1. HOW TO USE SUBARU SELECT MONITOR

NOTE:
- For detailed operation procedures, refer to “PC application help for Subaru Select Monitor”.
- If communication is not possible between the electronic parking brake control module and the Subaru Select Monitor, check the communication circuit. <Ref. to PB(diag)-21, COMMUNICATION FOR INITIALIZING IMPOSSIBLE, INSPECTION, Subaru Select Monitor.>

GETtheMANUALS.org

2. READ CURRENT DATA

NOTE:
- For detailed operation procedures, refer to “PC application help for Subaru Select Monitor”.
- A list of the support data is shown in the following table.

Display	Contents to be displayed	Unit
FR Wheel Speed	Wheel speed detected by front ABS wheel speed sensor RH is displayed.	km/h or MPH
FL Wheel Speed	Wheel speed detected by front ABS wheel speed sensor LH is displayed.	km/h or MPH
RR Wheel Speed	Wheel speed detected by rear ABS wheel speed sensor RH is displayed.	km/h or MPH
RL Wheel Speed	Wheel speed detected by rear ABS wheel speed sensor LH is displayed.	km/h or MPH
Power Supply Voltage	The voltage supplied to the electronic parking brake control module is displayed.	V
Engine Speed	Engine speed is displayed.	rpm
Accel. Opening Angle	Acceleration opening is displayed.	%
Reverse Signal	Input condition of reverse signal is displayed. (When reverse: ON)	ON or OFF
Force Sensor	The tension detected by the force sensor in the actuator is displayed.	N
Stroke Sensor	The parking brake cable stroke amount detected by the stroke sensor in the actuator is displayed.	mm
Clutch stroke sensor	The pedal stroke amount detected by the clutch stroke sensor is displayed.	%
Clutch engagement point	Clutch engagement position is displayed.	%
Actuator Inner Temperature (Primary)	Actuator inner temperature (PRY) is displayed.	°C
Actuator Inner Temperature (Secondary)	Actuator inner temperature (SEC) is displayed.	°C
Incline	Incline of the vehicle is displayed.	%
Total Operation Number	Total number of parking brake operation is displayed.	times
Hill Hold Operation Number	Operation number of hill hold function at uphill parking is displayed.	times
Auto Operation Number	“0” is always displayed.	times
Auto Cancel Number	Operation number of automatic accelerator interlock cancel function at starting is displayed.	times
Parking Operation Number when driving	Total number of parking brake operation while driving is displayed.	times
Engine Torque	Engine torque is displayed. (According to ECM specification, engine torque value may be displayed while engine stops.)	N·m
Manual Parking Operation	Parking brake operation condition is displayed. (At manual parking operation: 1)	1 or 0
Auto Parking Operation	Parking brake operation condition is displayed. (At automatic parking operation: 1)	1 or 0
Parking Operation when driving	Parking brake operation condition is displayed. (At parking operation when driving: 1)	1 or 0
Parking Cancel	Parking brake operation condition is displayed. (At parking cancel: 1)	1 or 0
Hill hold lamp	Hill hold indicator control condition is displayed. (When illuminating: ON)	ON or OFF
Ignition Signal	Input condition of ignition signal is displayed.	ON or OFF
Brake Warning Light	Brake warning light control condition is displayed. (When illuminating: ON)	ON or OFF

GETtheMANUALS.org

Display	Contents to be displayed	Unit
Parking System Warning Light	For C6 model, electric parking brake warning light control condition is displayed. (When illuminating: ON) For other than C6 model, brake warning light control condition is displayed. (When blinking: ON)	ON or OFF
Neutral Signal	Input condition of neutral signal is displayed. (When neutral: ON)	ON or OFF
Brake Switch	Input condition of brake pedal signal is displayed. (When depressed: ON)	ON or OFF
Engine idle flag	Engine speed condition is displayed. (When idling: ON)	ON or OFF
Door Signal	Input condition of door (4 locations) open/close signal is displayed. (When at least one door is open: OPEN)	OPEN or CLOSE
Driver Seat Belt Signal	Input condition of driver's seatbelt signal is displayed.	Not use or Use

3. MAINTENANCE OPERATION MODE

Display	Contents of display	Index No.
Force Sensor Calibration Mode	Perform the force sensor calibration.	<Ref. to PB(diag)-18, FORCE SENSOR CALIBRATION MODE, OPERATION, Subaru Select Monitor.>
Break-in Parking Brake Drive Mode	Perform the break-in parking brake drive mode after replacing the parking brake assembly.	<Ref. to PB(diag)-19, BREAK-IN PARKING BRAKE DRIVE MODE, OPERATION, Subaru Select Monitor.>
Parking Brake Removal Mode	Release the cable tension before removing the parking brake cable.	<Ref. to PB(diag)-18, PARKING BRAKE REMOVAL MODE, OPERATION, Subaru Select Monitor.>
Parameter Initialization Mode	Perform the parameter initialization.	<Ref. to PB(diag)-19, PARAMETER INITIALIZATION MODE, OPERATION, Subaru Select Monitor.>
Clutch Sensor Calibration Mode	Perform the clutch sensor calibration.	<Ref. to PB(diag)-20, CLUTCH SENSOR CALIBRATION MODE, OPERATION, Subaru Select Monitor.>
Clutch Engagement Position Setting	Perform the clutch sensor engagement position setting.	<Ref. to PB(diag)-20, CLUTCH ENGAGEMENT POSITION SETTING, OPERATION, Subaru Select Monitor.>

GETtheMANUALS.org

4. FREEZE FRAME DATA

NOTE:
- Data stored at the time of trouble occurrence is shown on display.
- Each time a trouble occurs, the latest information is stored in the Freeze Frame Data in memory.

Display	Contents to be displayed
FR Wheel Speed	Wheel speed detected by front ABS wheel speed sensor RH is displayed.
FL Wheel Speed	Wheel speed detected by front ABS wheel speed sensor LH is displayed.
RR Wheel Speed	Wheel speed detected by rear ABS wheel speed sensor RH is displayed.
RL Wheel Speed	Wheel speed detected by rear ABS wheel speed sensor LH is displayed.
Power Supply Voltage	The voltage supplied to the electronic parking brake control module is displayed.
Engine Speed	Engine speed is displayed.
Accel. Opening Angle	Acceleration opening is displayed.
Reverse Signal	Input condition of reverse signal is displayed. (When reverse: ON)
Brake Switch	Input condition of brake pedal signal is displayed. (When depressed: ON)
Force Sensor	The tension detected by the force sensor in the actuator is displayed.
Stroke Sensor	The parking brake cable stroke amount detected by the stroke sensor in the actuator is displayed.
Clutch stroke sensor	The pedal stroke amount detected by the clutch stroke sensor is displayed.
Clutch engagement point	Clutch engagement position is displayed.
Actuator Inner Temperature (Primary)	Actuator inner temperature (PRY) is displayed.
Actuator Inner Temperature (Secondary)	Actuator inner temperature (SEC) is displayed.
Incline	Incline of the vehicle is displayed.
Engine Torque	Engine torque is displayed.
Manual Parking Operation	Parking brake operation condition is displayed. (At manual parking operation: 1)
Auto Parking Operation	Parking brake operation condition is displayed. (At automatic parking operation: 1)
Parking Operation when driving	Parking brake operation condition is displayed. (At parking operation when driving: 1)
Parking Cancel	Parking brake operation condition is displayed. (At parking cancel: 1)
Hill hold lamp	Hill hold indicator control condition is displayed. (When illuminating: ON)
Ignition Signal	Input condition of ignition signal is displayed.

Display	Contents to be displayed
Neutral Signal	Input condition of neutral signal is displayed. (When neutral: ON)
Engine idle flag	Engine speed condition is displayed. (When idling: ON)
Door Signal	Input condition of door (4 locations) open/close signal is displayed. (When at least one door is open: OPEN)
Driver Seat Belt Signal	Input condition of driver's seatbelt signal is displayed.

GETtheMANUALS.org

5. PARKING BRAKE REMOVAL MODE

CAUTION:
- **Subaru Select Monitor is required for the parking brake removal mode.**
- **Make sure to perform this procedure with the vehicle lifted.**
- **When this mode is performed by mistake, operate and then release the parking brake.**

NOTE:
When disassembling the parking brake, use this function to set the parking brake cable at the release position.
1) Lift up the vehicle.
2) Connect the Subaru Select Monitor.
3) On «Main Menu» display, select {Each System Check}.
4) On «System Selection Menu» display, select {Brake Control System}.
5) Click the [OK] button after {Parking Brake System} is displayed.
6) On «Maintenance Operation Mode» display, select {Parking Brake Removal Mode}.
7) The confirmation screen, “Perform parking brake removal?”, is displayed. Click the [YES] button.
8) The message, “Releasing parking cable until removal position.”, is displayed on the screen, and the removal mode begins.
9) The message, “Parking cable released until removal position.”, is displayed on the screen. Turn the ignition switch to OFF to end the removal mode.

6. FORCE SENSOR CALIBRATION MODE

CAUTION:
- **Subaru Select Monitor is required for the Force Sensor Calibration Mode.**
- **Make sure to perform this procedure with the vehicle parked in a horizontal place and to use wheel chocks.**

NOTE:
- When the following work is performed, use this function to perform calibration of force sensor in the parking brake actuator.
  – Removing the parking brake assembly
  – Replacing the electronic parking brake control module
  – Adjusting the shoe clearance
- After replacing the electronic parking brake control module, if the calibration of the force sensor has not yet been performed, the brake warning light will blink and “Force Sensor Line (abnormal)” DTC will be detected.

1) Park the vehicle in a horizontal place using wheel chocks.
2) Connect the Subaru Select Monitor.
3) On «Main Menu» display, select {Each System Check}.
4) On «System Selection Menu» display, select {Brake Control System}.
5) Click the [OK] button after {Parking Brake System} is displayed.
6) On «Maintenance Operation Mode» display, select {Force Sensor Calibration Mode}.
7) The confirmation screen of vehicle parking condition and wheel chocks usage is displayed. Confirm the parking condition and wheel chocks, and click the [YES] button.
8) A message indicating the calibration mode in progress is displayed on the screen, and the Force Sensor Calibration Mode begins.
9) The message, “Force sensor calibration done. Turn Ignition Switch OFF.”, is displayed on the screen. Turn the ignition switch to OFF to end the calibration mode.

GETtheMANUALS.org

7. BREAK-IN PARKING BRAKE DRIVE MODE

CAUTION:
Subaru Select Monitor is required for the "Break-in Parking Brake Drive Mode".

NOTE:
• When the parking brake shoe is replaced, use this function to perform parking brake lining break-in drive after adjusting the shoe clearance of the parking brake. <Ref. to PB-15, SHOE CLEARANCE, ADJUSTMENT, Parking Brake Assembly (Rear Disc Brake).>
• After performing the "Break-in Parking Brake Drive Mode", adjust the shoe clearance of the parking brake again, and perform the "Force Sensor Calibration Mode". <Ref. to PB(diag)-18, FORCE SENSOR CALIBRATION MODE, OPERATION, Subaru Select Monitor.>

1) Connect the Subaru Select Monitor.
2) On «Main Menu» display, select {Each System Check}.
3) On «System Selection Menu» display, select {Brake Control System}.
4) Click the [OK] button after {Parking Brake System} is displayed.
5) On «Maintenance Operation Mode» display, select {Break-in Parking Brake Drive Mode}.
6) The confirmation message, "Perform break-in parking brake drive?", is displayed on the screen. With the vehicle parked, release the parking brake, and click the [YES] button.
7) Confirm the message indicating the break-in drive mode start on the screen and the blink of the brake warning light, and begin the break-in drive.
8) Drive the vehicle at approximately 35 km/h (22 MPH) or more.
9) C6 model
Drive the vehicle approximately 200 m (0.12 miles) with the parking brake switch pressed, until the brake warning light goes off.
10) Models other than C6 model
Drive the vehicle approximately 200 m (0.12 miles) with the parking brake switch pressed. Release a hand from the parking brake switch once to cancel. Drive the vehicle again with the parking brake switch pressed, and if brake drag is not felt, go to step 11). If brake drag is felt, repeat steps 8) and 10) again.
11) Turn the ignition switch to OFF, and wait for 5 to 10 minutes until the parking brake temperature drops.
12) Repeat steps 2) to 10) again.
13) Turn the ignition switch to OFF to end the break-in drive mode.
14) Adjust the shoe clearance of the parking brake again. <Ref. to PB-15, SHOE CLEARANCE, ADJUSTMENT, Parking Brake Assembly (Rear Disc Brake).>
15) Perform the Force Sensor Calibration Mode. <Ref. to PB(diag)-18, FORCE SENSOR CALIBRATION MODE, OPERATION, Subaru Select Monitor.>

8. PARAMETER INITIALIZATION MODE

CAUTION:
• Subaru Select Monitor is required for the Parameter Initialization Mode.
• This function can be used for replacement parts of the electronic parking brake control module.

NOTE:
• When DTC "Parameter selection error" is detected after replacing the electronic parking brake control module, use this function to perform parameter initialization of the electronic parking brake control module.
• After performing Parameter Initialization Mode, perform the Force Sensor Calibration Mode and Clutch Sensor Calibration Mode. <Ref. to PB(diag)-18, FORCE SENSOR CALIBRATION MODE, OPERATION, Subaru Select Monitor.> <Ref. to PB(diag)-20, CLUTCH SENSOR CALIBRATION MODE, OPERATION, Subaru Select Monitor.>

1) Connect the Subaru Select Monitor.
2) On «Main Menu» display, select {Each System Check}.
3) On «System Selection Menu» display, select {Brake Control System}.
4) Click the [OK] button after {Parking Brake System} is displayed.
5) On «Maintenance Operation Mode» display, select {Parameter Initialization Mode}.
6) The confirmation message, "Perform parameter initialization?", is displayed on the screen. Following the instructions on the screen, confirm the connections of all control modules, and click the [YES] button.
7) The message, "Parameter initialization in progress...", is displayed on the screen, and initialization begins.
8) The message, "Parameter initialization done.. Turn Ignition Switch OFF.", is displayed on the screen. Turn the ignition switch to OFF to end the Parameter Initialization Mode.

GETtheMANUALS.org

9. CLUTCH SENSOR CALIBRATION MODE

CAUTION:
Subaru Select Monitor is required for Clutch Sensor Calibration Mode.

NOTE:
• When the following parts are replaced, use this function to perform clutch sensor calibration.
– Clutch master cylinder assembly
– Electronic parking brake control module
– Clutch pedal
• After replacing the parts above, if the calibration of the clutch sensor has not yet been performed, “Clutch Sensor” DTC will be detected. At this time, the electronic parking brake warning light illuminates on C6 model, or the brake warning light blinks on models other than C6 model.

1) Connect the Subaru Select Monitor.
2) On «Main Menu» display, select {Each System Check}.
3) On «System Selection Menu» display, select {Brake Control System}.
4) Click the [OK] button after {Parking Brake System} is displayed.
5) On «Maintenance Operation Mode» display, select {Clutch Sensor Calibration Mode}.
6) The confirmation message, “Perform clutch sensor calibration?”, is displayed on the screen. Following the instructions on the screen, click the [YES] button with the clutch pedal not depressed.
7) The message, “Clutch sensor calibration done. Turn Ignition switch OFF.”, is displayed on the screen. Turn the ignition switch to OFF to end the calibration mode.

10.CLUTCH ENGAGEMENT POSITION SETTING

CAUTION:
Subaru Select Monitor is required for Clutch Engagement Position Setting.

NOTE:
• When the clutch master cylinder assembly is replaced, use this function to set the engagement position for the clutch stroke sensor.
• When the customer requested a change of the accelerator interlocking release timing, use this function to change the engagement position of the clutch stroke sensor in order to change the accelerator interlocking release timing.
• The clutch engagement position can be set between 50 — 80%.

1) Park the vehicle on a safe level surface without obstacles.
2) Start the engine to warm up.
3) Connect the Subaru Select Monitor.
4) On «Main Menu» display, select {Each System Check}.
5) On «System Selection Menu» display, select {Brake Control System}.
6) Click the [OK] button after {Parking Brake System} is displayed.
7) On «Maintenance Operation Mode» display, select {Clutch Engagement Position Setting}.
8) Release the parking brake. Shift the gear to 1st, then slowly release the clutch pedal, and read “Clutch position current value” on the screen when the vehicle starts to move.
9) Enter the reading to “Engagement position input value”, and press the [Execution] button.
10) Turn the ignition switch to OFF to end the clutch engagement position setting.
11) Drive the vehicle, and check the accelerator interlocking release timing.

CAUTION:
If the clutch engagement position is not set correctly, early release or release delay of the parking brake may occur at the accelerator interlocking release. After completing the setting, check the accelerator interlocking timing in a safe place, and confirm that neither early release nor release delay occurs.

NOTE:
• When a smaller value than “Engagement position learning value” is entered in “Engagement position input value”, the parking brake release timing delays.
• When a larger value than “Engagement position learning value” is entered in “Engagement position input value”, the parking brake release timing becomes early.

GETtheMANUALS.org

B: INSPECTION

1. COMMUNICATION FOR INITIALIZING IMPOSSIBLE

DETECTING CONDITION:
Defective harness connector
TROUBLE SYMPTOM:
Communication is impossible between the electronic parking brake control module and Subaru Select Monitor.
WIRING DIAGRAM:

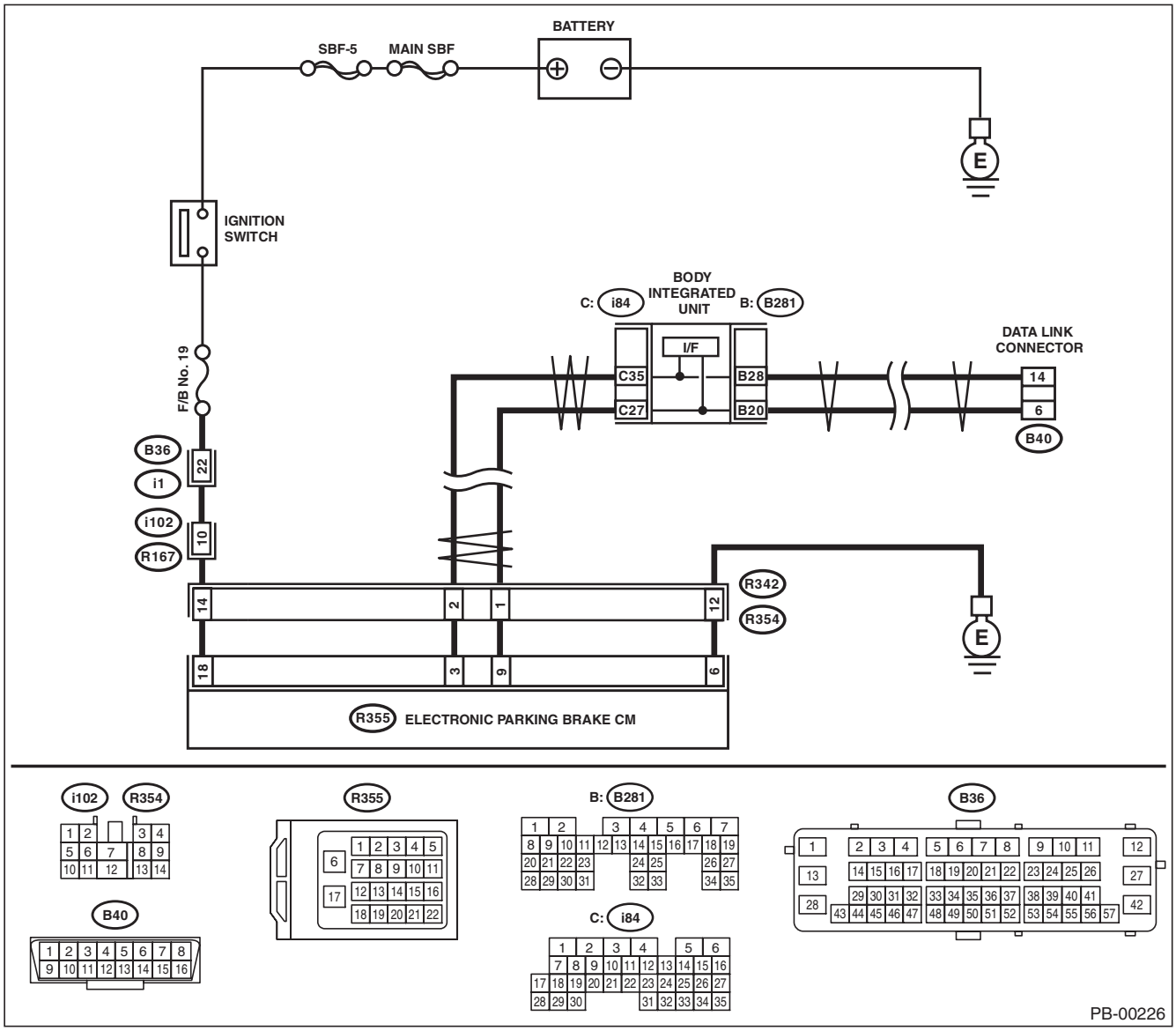

Step		Check	Yes	No
1	**CHECK IGNITION SWITCH.**	Is the ignition switch ON?	Go to step **2**.	Turn the ignition switch to ON, and select {Parking Brake System} using the Subaru Select Monitor.
2	**CHECK BATTERY.** 1) Turn the ignition switch to OFF. 2) Measure the battery voltage.	Is the voltage 11 V or more?	Go to step **3**.	Charge or replace the battery.

GETtheMANUALS.org

Step		Check	Yes	No
3	**CHECK BATTERY TERMINAL.**	Is there poor contact at battery terminal?	Repair or tighten the battery terminal.	Go to step **4**.
4	**CHECK LAN SYSTEM.** Perform the diagnosis for LAN system. <Ref. to LAN(diag)-2, Basic Diagnostic Procedure.>	Is there any fault in LAN system?	Perform the diagnosis according to DTC for LAN system. <Ref. to LAN(diag)-32, List of Diagnostic Trouble Code (DTC).>	Go to step **5**.
5	**CHECK SUBARU SELECT MONITOR COMMUNICATION.** 1) Press the parking brake switch once. 2) Check whether communication with the parking brake system can be executed normally.	Is the system name displayed on Subaru Select Monitor?	Check DTC of the parking brake system. <Ref. to PB(diag)-23, Read Diagnostic Trouble Code (DTC).>	Go to step **6**.
6	**CHECK INSTALLATION OF ELECTRONIC PARKING BRAKE CM CONNECTOR.** Turn the ignition switch to OFF.	Is the electronic parking brake CM connector inserted into the electronic parking brake CM until the clamp locks onto it?	Go to step **7**.	Insert the electronic parking brake CM connector into the electronic parking brake CM.
7	**CHECK HARNESS CONNECTOR BETWEEN ELECTRONIC PARKING BRAKE CM AND CHASSIS GROUND.** Measure the resistance of harness between electronic parking brake CM connector and chassis ground. ***Connector & terminal*** ***(B355) No. 6 — Chassis ground:***	Is the resistance less than 10 Ω?	Go to step **8**.	Repair the open circuit of the electronic parking brake CM ground circuit and poor contact of connector.
8	**CHECK POOR CONTACT OF CONNECTOR.**	Is there poor contact of control module power supply, ground circuit and data link connector?	Repair the connector.	Replace the electronic parking brake CM. <Ref. to PB-6, Parking Brake Actuator.>

GETtheMANUALS.org

7. Read Diagnostic Trouble Code (DTC)

A: OPERATION

NOTE:
- For detailed operation procedures, refer to “PC application help for Subaru Select Monitor”.
- For details concerning DTCs, refer to “List of Diagnostic Trouble Code (DTC)”. <Ref. to PB(diag)-35, List of Diagnostic Trouble Code (DTC).>
- Up to 3 DTCs are displayed in the order of detection.

Display	Contents to be displayed
(Current)	The current DTC is displayed on Subaru Select Monitor display screen.
(Old)	The latest DTC from the history of previous problems is displayed on Subaru Select Monitor display screen.
(Older)	The second latest DTC from the history of previous problems is displayed on the Subaru Select Monitor display screen.
(Before 3)	The third latest DTC from the history of previous problems is displayed on Subaru Select Monitor display screen.

GETtheMANUALS.org

8. Inspection Mode

A: PROCEDURE

Reproduce the malfunction occurrence condition as much as possible.
Drive the vehicle at least 10 minutes, and operate and release the parking brake a few times.

GETtheMANUALS.org

9. Clear Memory Mode

A: OPERATION

NOTE:
For detailed operation procedures, refer to “PC application help for Subaru Select Monitor”.

GETtheMANUALS.org

10. Warning Light Illumination Pattern

A: INSPECTION

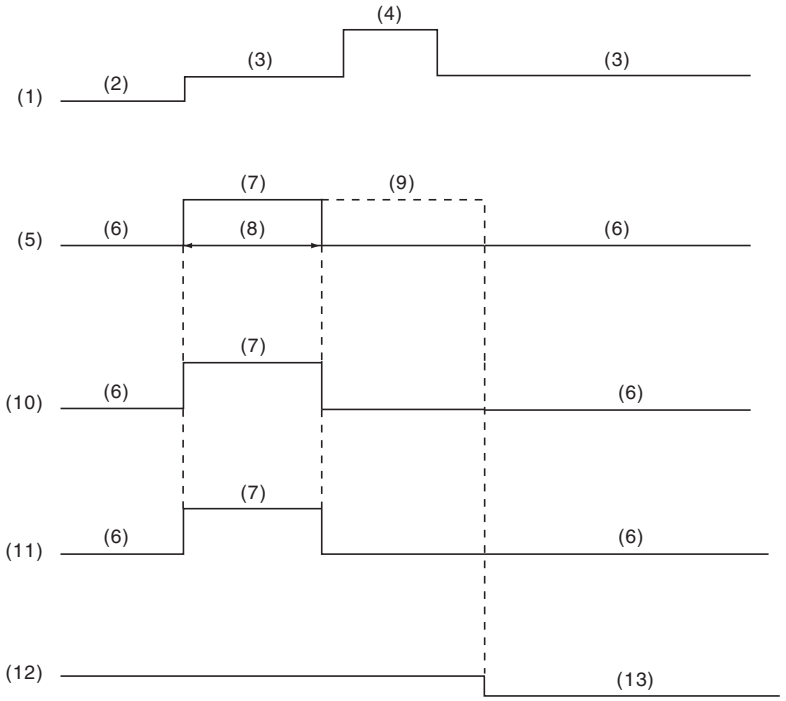

(1) Ignition switch
(2) OFF
(3) ON
(4) Engine start
(5) Brake warning light (EBD warning light)
(6) Light OFF
(7) Light ON
(8) Approx. 2 seconds
(9) If the parking brake is being operated, illumination continues until the brake is released.
(10) Electronic parking brake warning light (C6 model only)
(11) Hill hold indicator light
(12) Parking brake
(13) Released

GETtheMANUALS.org

1) When warning lights or indicator lights do not illuminate in accordance with this illumination pattern, there must be an electrical malfunction.
2) When warning lights or indicator lights remain constantly OFF, check the combination meter circuit or CAN communication circuit. <Ref. to PB(diag)-28, BRAKE WARNING LIGHT, ELECTRONIC PARKING BRAKE WARNING LIGHT AND HILL HOLD INDICATOR LIGHT DO NOT COME ON, Warning Light Illumination Pattern.>
3) When the electronic parking brake warning light (C6 model only) and hill hold indicator light do not go off, check the combination meter circuit, CAN communication circuit and electronic parking brake control module. <Ref. to PB(diag)-30, ELECTRONIC PARKING BRAKE WARNING LIGHT AND HILL HOLD INDICATOR LIGHT DO NOT GO OFF, Warning Light Illumination Pattern.> <Ref. to PB(diag)-29, HILL HOLD INDICATOR LIGHT DO NOT GO OFF, Warning Light Illumination Pattern.>
4) When the brake warning light does not go off, check the combination meter circuit, CAN communication circuit, electronic parking brake control module, and VDCCM&H/U. <Ref. to PB(diag)-31, BRAKE WARNING LIGHT DOES NOT GO OFF, Warning Light Illumination Pattern.> <Ref. to PB(diag)-33, BRAKE WARNING LIGHT REMAINS BLINKING, Warning Light Illumination Pattern.>
5) After replacing the electronic parking brake control module, the brake warning light blinks. Make sure to perform the Force Sensor Calibration Mode and Clutch Sensor Calibration Mode. <Ref. to PB(diag)-18, FORCE SENSOR CALIBRATION MODE, OPERATION, Subaru Select Monitor.> <Ref. to PB(diag)-20, CLUTCH SENSOR CALIBRATION MODE, OPERATION, Subaru Select Monitor.>
6) When operation and release of the parking brake is repeated excessively, the brake warning light blinks and the parking brake switch operation may not be accepted for several tens of seconds; this is not malfunction, however.

GETtheMANUALS.org

B: BRAKE WARNING LIGHT, ELECTRONIC PARKING BRAKE WARNING LIGHT AND HILL HOLD INDICATOR LIGHT DO NOT COME ON

DETECTING CONDITION:

- Defective combination meter
- Defective CAN communication

TROUBLE SYMPTOM:

When the ignition switch is turned to ON (engine OFF), brake warning light, electronic parking brake warning light (C6 model only) and hill hold indicator light do not come on.

Step		Check	Yes	No
1	**CHECK OTHER INDICATOR LIGHT.** Turn the ignition switch to ON.	Does other indicator light illuminate soon after “ON”?	Go to step **2**.	Perform the diagnosis for combination meter. <Ref. to IDI-6, SELF-DIAGNOSIS DISPLAY MODE, OPERATION, Combination Meter System.>
2	**CHECK LAN SYSTEM.** Check the DTC in LAN system. <Ref. to LAN(diag)-10, OPERATION, Read Diagnostic Trouble Code (DTC).>	Is DTC of LAN system displayed?	Perform the diagnosis according to DTC. <Ref. to LAN(diag)-32, List of Diagnostic Trouble Code (DTC).>	Replace the combination meter case assembly. <Ref. to IDI-21, REMOVAL, Combination Meter.>

GETtheMANUALS.org

C: HILL HOLD INDICATOR LIGHT DO NOT GO OFF

NOTE:
This diagnosis is applied to models other than C6 model.

DETECTING CONDITION:

- Defective combination meter
- Defective CAN communication

TROUBLE SYMPTOM:

When starting the engine, the hill hold indicator light remains lit.

Step		Check	Yes	No
1	**READ DTC.** Read the DTC. <Ref. to PB(diag)-23, Read Diagnostic Trouble Code (DTC).>	Is DTC displayed?	Perform the diagnosis according to DTC. <Ref. to PB(diag)-35, List of Diagnostic Trouble Code (DTC).>	Go to step **2**.
2	**CHECK LAN SYSTEM.** Check the DTC in LAN system. <Ref. to LAN(diag)-10, OPERATION, Read Diagnostic Trouble Code (DTC).>	Is DTC of LAN system displayed?	Perform the diagnosis according to DTC. <Ref. to LAN(diag)-32, List of Diagnostic Trouble Code (DTC).>	Go to step **3**.
3	**CHECK ELECTRONIC PARKING BRAKE CM.** With the engine started, display the current data of the electronic parking brake CM using Subaru Select Monitor.	When the hill hold switch is not operated after starting the engine, is the «Hill hold lamp» ON?	Replace the electronic parking brake CM. <Ref. to PB-6, Parking Brake Actuator.>	Go to step **4**.
4	**CHECK COMBINATION METER.** Check the combination meter. <Ref. to IDI-6, SELF-DIAGNOSIS DISPLAY MODE, OPERATION, Combination Meter System.>	Is combination meter OK?	Replace the electronic parking brake CM. <Ref. to PB-6, Parking Brake Actuator.>	Replace the combination meter case assembly. <Ref. to IDI-21, REMOVAL, Combination Meter.>

GETtheMANUALS.org

D: ELECTRONIC PARKING BRAKE WARNING LIGHT AND HILL HOLD INDICATOR LIGHT DO NOT GO OFF

NOTE:
This diagnosis is applied to C6 model.

DETECTING CONDITION:

- Defective combination meter
- Defective CAN communication

TROUBLE SYMPTOM:

When starting the engine, the electronic parking brake warning light and hill hold indicator light remain lit.

Step		Check	Yes	No
1	**READ DTC.** Read the DTC. <Ref. to PB(diag)-23, Read Diagnostic Trouble Code (DTC).>	Is DTC displayed?	Perform the diagnosis according to DTC. <Ref. to PB(diag)-35, List of Diagnostic Trouble Code (DTC).>	Go to step **2**.
2	**CHECK LAN SYSTEM.** Check the DTC in LAN system. <Ref. to LAN(diag)-10, OPERATION, Read Diagnostic Trouble Code (DTC).>	Is DTC of LAN system displayed?	Perform the diagnosis according to DTC. <Ref. to LAN(diag)-32, List of Diagnostic Trouble Code (DTC).>	Go to step **3**.
3	**CHECK ELECTRONIC PARKING BRAKE CM.** With the engine started, display the current data of the electronic parking brake CM using Subaru Select Monitor.	Is «Parking System Warning Light» ON?	Replace the electronic parking brake CM. <Ref. to PB-6, Parking Brake Actuator.>	Go to step **4**.
4	**CHECK ELECTRONIC PARKING BRAKE CM.** With the engine started, display the current data of the electronic parking brake CM using Subaru Select Monitor.	When the hill hold switch is not operated after starting the engine, is the «Hill hold lamp» ON?	Replace the electronic parking brake CM. <Ref. to PB-6, Parking Brake Actuator.>	Go to step **5**.
5	**CHECK COMBINATION METER.** Check the combination meter. <Ref. to IDI-6, SELF-DIAGNOSIS DISPLAY MODE, OPERATION, Combination Meter System.>	Is combination meter OK?	Replace the electronic parking brake CM. <Ref. to PB-6, Parking Brake Actuator.>	Replace the combination meter case assembly. <Ref. to IDI-21, REMOVAL, Combination Meter.>

GETtheMANUALS.org

E: BRAKE WARNING LIGHT DOES NOT GO OFF

DETECTING CONDITION:

- Brake warning light circuit is shorted.
- Defective sensor/connector

TROUBLE SYMPTOM:

After starting the engine, the brake warning light remains lit or blinking though the parking brake is released.

WIRING DIAGRAM:

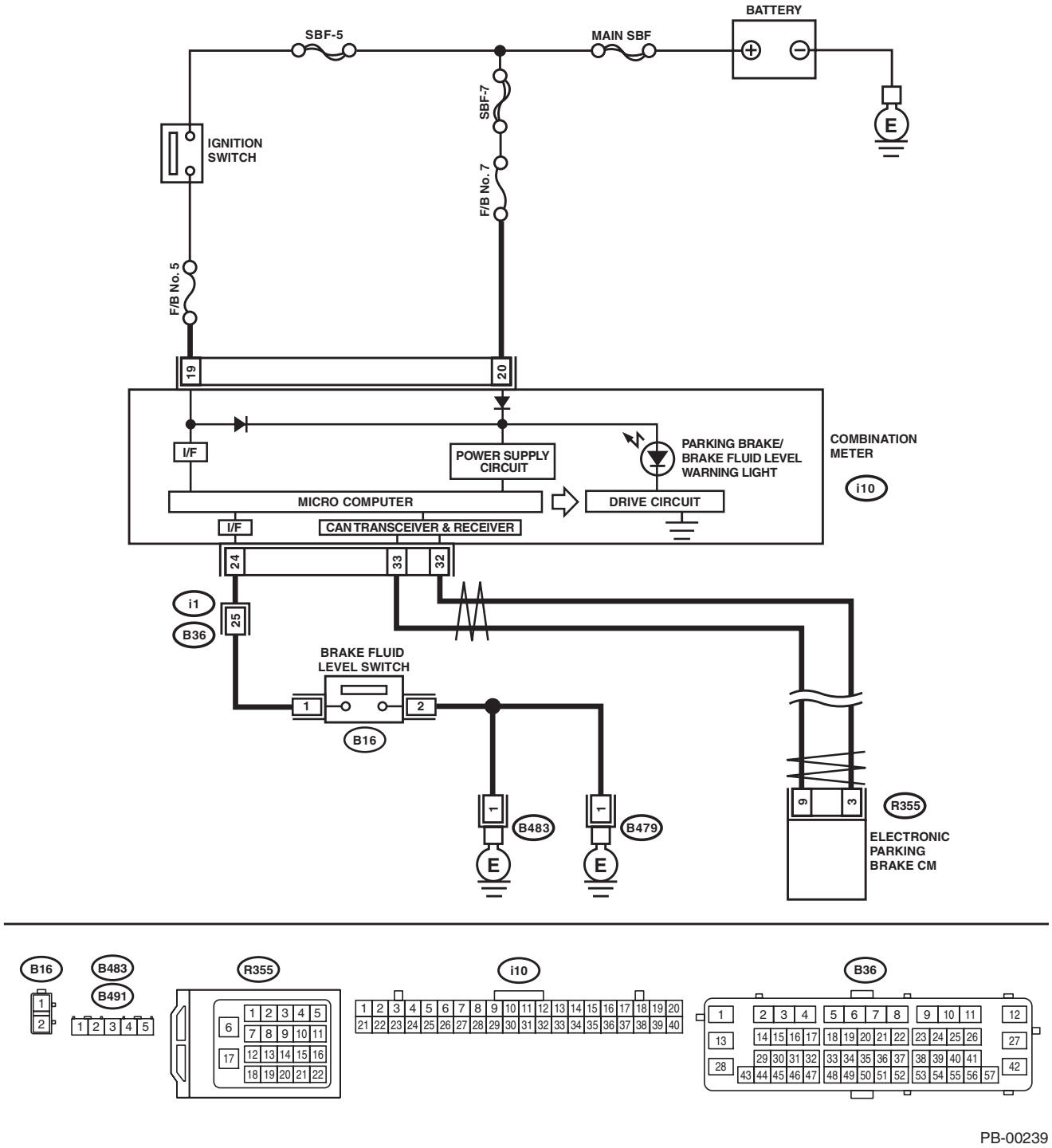

GETtheMANUALS.org

Step		Check	Yes	No
1	**READ DTC.** Read the DTC. <Ref. to PB(diag)-23, Read Diagnostic Trouble Code (DTC).>	Is DTC displayed?	Perform the diagnosis according to DTC. <Ref. to PB(diag)-35, List of Diagnostic Trouble Code (DTC).>	Go to step **2**.
2	**CHECK BRAKE FLUID AMOUNT.** Check the amount of brake fluid in the reservoir tank of master cylinder.	Does the level of the brake fluid amount fall between the lines of "MAX" and "MIN"?	Go to step **3**.	Replenish brake fluid to the specified value.
3	**CHECK BRAKE FLUID LEVEL SWITCH.** 1) Turn the ignition switch to OFF. 2) Disconnect the level switch connector (B16) from master cylinder. 3) Measure the resistance of master cylinder terminals. ***Terminals*** ***No. 1 — No. 2:***	Is the resistance 1 MΩ or more?	Go to step **4**.	Replace the master cylinder. <Ref. to BR-41, Master Cylinder.>
4	**CHECK GROUND SHORT OF HARNESS.** 1) Disconnect the connector (i10) from combination meter. 2) Measure the resistance between combination meter connector and chassis ground. ***Connector & terminal*** ***(i10) No. 24 — Chassis ground:***	Is the resistance 1 MΩ or more?	Go to step **5**.	Repair the harness connector between combination meter and brake fluid level switch.
5	**CHECK LAN SYSTEM.** Check the DTC in LAN system. <Ref. to LAN(diag)-10, OPERATION, Read Diagnostic Trouble Code (DTC).>	Is DTC of LAN system displayed?	Perform the diagnosis according to DTC. <Ref. to LAN(diag)-32, List of Diagnostic Trouble Code (DTC).>	Go to step **6**.
6	**CHECK COMBINATION METER.** Check the combination meter. <Ref. to IDI-6, SELF-DIAGNOSIS DISPLAY MODE, OPERATION, Combination Meter System.>	Is combination meter OK?	Go to step **7**.	Replace the combination meter case assembly. <Ref. to IDI-21, REMOVAL, Combination Meter.>
7	**CHECK VDC SYSTEM.** Check the DTC in VDC system. <Ref. to VDC(diag)-23, OPERATION, Read Diagnostic Trouble Code (DTC).>	Is DTC of VDC system displayed?	Perform the diagnosis according to DTC. <Ref. to VDC(diag)-35, List of Diagnostic Trouble Code (DTC).>	Go to step **8**.
8	**CHECK ELECTRONIC PARKING BRAKE CM.** With the parking brake released, display the current data of the electronic parking brake CM using Subaru Select Monitor.	Is the «Brake Warning Light» ON?	Replace the electronic parking brake CM. <Ref. to PB-6, Parking Brake Actuator.>	Go to step **9**.
9	**CHECK OTHER DTC DETECTION.**	Is any other DTC displayed?	Perform the diagnosis according to DTC.	It results from a temporary poor contact interference.

GETtheMANUALS.org

F: BRAKE WARNING LIGHT REMAINS BLINKING

NOTE:
This diagnosis is applied to models other than C6 model.

DETECTING CONDITION:

- Brake warning light circuit is shorted.
- Defective sensor/connector

TROUBLE SYMPTOM:

After starting the engine, the brake warning light remains lit or blinking though the parking brake is released.

WIRING DIAGRAM:

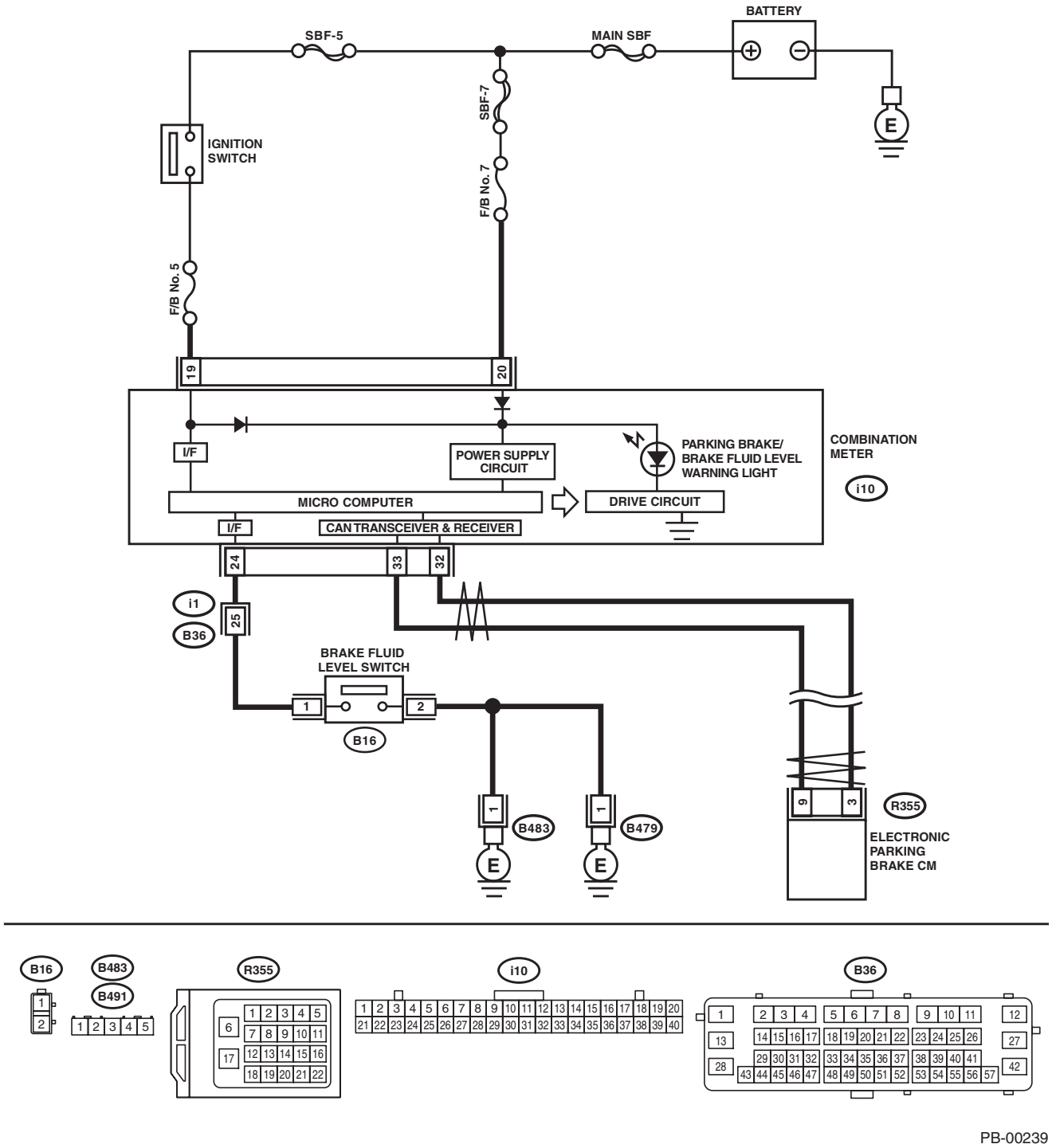

PB-00239

GETtheMANUALS.org

Warning Light Illumination Pattern

	Step	Check	Yes	No
1	**READ DTC.** Read the DTC. <Ref. to PB(diag)-23, Read Diagnostic Trouble Code (DTC).>	Is DTC displayed?	Perform the diagnosis according to DTC. <Ref. to PB(diag)-35, List of Diagnostic Trouble Code (DTC).>	Go to step **2**.
2	**CHECK BRAKE FLUID AMOUNT.** Check the amount of brake fluid in the reservoir tank of master cylinder.	Does the level of the brake fluid amount fall between the lines of “MAX” and “MIN”?	Go to step **3**.	Replenish brake fluid to the specified value.
3	**CHECK BRAKE FLUID LEVEL SWITCH.** 1) Turn the ignition switch to OFF. 2) Disconnect the level switch connector (B16) from master cylinder. 3) Measure the resistance of master cylinder terminals. ***Terminals*** ***No. 1 — No. 2:***	Is the resistance 1 MΩ or more?	Go to step **4**.	Replace the master cylinder. <Ref. to BR-41, Master Cylinder.>
4	**CHECK GROUND SHORT OF HARNESS.** 1) Disconnect the connector (i10) from combination meter. 2) Measure the resistance between combination meter connector and chassis ground. ***Connector & terminal*** ***(i10) No. 24 — Chassis ground:***	Is the resistance 1 MΩ or more?	Go to step **5**.	Repair the harness connector between combination meter and brake fluid level switch.
5	**CHECK LAN SYSTEM.** Check the DTC in LAN system. <Ref. to LAN(diag)-10, OPERATION, Read Diagnostic Trouble Code (DTC).>	Is DTC of LAN system displayed?	Perform the diagnosis according to DTC. <Ref. to LAN(diag)-32, List of Diagnostic Trouble Code (DTC).>	Go to step **6**.
6	**CHECK COMBINATION METER.** Check the combination meter. <Ref. to IDI-6, SELF-DIAGNOSIS DISPLAY MODE, OPERATION, Combination Meter System.>	Is combination meter OK?	Go to step **7**.	Replace the combination meter case assembly. <Ref. to IDI-21, REMOVAL, Combination Meter.>
7	**CHECK VDC SYSTEM.** Check the DTC in VDC system. <Ref. to VDC(diag)-23, OPERATION, Read Diagnostic Trouble Code (DTC).>	Is DTC of VDC system displayed?	Perform the diagnosis according to DTC. <Ref. to VDC(diag)-35, List of Diagnostic Trouble Code (DTC).>	Go to step **8**.
8	**CHECK ELECTRONIC PARKING BRAKE CM.** With the parking brake released, display the current data of the electronic parking brake CM using Subaru Select Monitor.	Is the «Brake Warning Light» ON?	Replace the electronic parking brake CM. <Ref. to PB-6, Parking Brake Actuator.>	Go to step **9**.
9	**CHECK ELECTRONIC PARKING BRAKE CM.** With the parking brake released, display the current data of the electronic parking brake CM using Subaru Select Monitor.	Is «Parking System Warning Light» ON?	Replace the electronic parking brake CM. <Ref. to PB-6, Parking Brake Actuator.>	Go to step **10**.
10	**CHECK OTHER DTC DETECTION.**	Is any other DTC displayed?	Perform the diagnosis according to DTC.	It results from a temporary poor contact interference.

GETtheMANUALS.org

11.List of Diagnostic Trouble Code (DTC)

A: LIST

DTC	Detailed code	Item	Content of diagnosis	Reference
C0221	504A 504B 504C	Parking Position Switch	Parking switch malfunction	<Ref. to PB(diag)-37, DTC C0221 PARKING POSITION SWITCH, Diagnostic Procedure with Diagnostic Trouble Code (DTC).>
C0222	504E	Hill Hold Switch Circuit	Hill hold switch malfunction	<Ref. to PB(diag)-39, DTC C0222 HILL HOLD SWITCH CIRCUIT, Diagnostic Procedure with Diagnostic Trouble Code (DTC).>
C0231	C110	ECM Failure	Malfunction signal reception from ECM	<Ref. to PB(diag)-41, DTC C0231 ECM FAILURE, Diagnostic Procedure with Diagnostic Trouble Code (DTC).>
C0232	C114	AT Abnormal	Malfunction signal reception from TCM	<Ref. to PB(diag)-41, DTC C0232 AT ABNORMAL, Diagnostic Procedure with Diagnostic Trouble Code (DTC).>
C0233	509E 509F	MT Shift Switch Circuit	Malfunction of neutral position switch, back-up light switch	<Ref. to PB(diag)-42, DTC C0233 MT SHIFT SWITCH CIRCUIT, Diagnostic Procedure with Diagnostic Trouble Code (DTC).>
C0234	C111	VDC Failure	Malfunction signal reception from VDC CM	<Ref. to PB(diag)-44, DTC C0234 VDC FAILURE, Diagnostic Procedure with Diagnostic Trouble Code (DTC).>
C0235	5046	Ignition Switch Circuit	No match of IGN input	<Ref. to PB(diag)-45, DTC C0235 IGNITION SWITCH CIRCUIT, Diagnostic Procedure with Diagnostic Trouble Code (DTC).>
C0241	5000 502A 5026 C100	Electrical Control Module	Electronic parking brake control module is faulty.	<Ref. to PB(diag)-47, DTC C0241 ELECTRICAL CONTROL MODULE, Diagnostic Procedure with Diagnostic Trouble Code (DTC).>
C0242	5040 5041	Power Supply Voltage Failure	Electronic parking brake control module power supply voltage is faulty.	<Ref. to PB(diag)-49, DTC C0242 POWER SUPPLY VOLTAGE FAILURE, Diagnostic Procedure with Diagnostic Trouble Code (DTC).>
	5042	Internal Power Supply Voltage Abnormal	Electronic parking brake control module inner power supply voltage is faulty.	<Ref. to PB(diag)-50, DTC C0242 INTERNAL POWER SUPPLY VOLTAGE ABNORMAL, Diagnostic Procedure with Diagnostic Trouble Code (DTC).>
C0243	50D1 50D3 50D4 50D5 50D6	Parameter Selection Error	Electronic parking brake control module parameter selection failure	<Ref. to PB(diag)-51, DTC C0243 PARAMETER SELECTION ERROR, Diagnostic Procedure with Diagnostic Trouble Code (DTC).>
C0251	5020 5022 5028 50CE 50CF	Actuator Line (Abnormal)	Actuator line of the electronic parking brake control module is faulty.	<Ref. to PB(diag)-52, DTC C0251 ACTUATOR LINE (ABNORMAL), Diagnostic Procedure with Diagnostic Trouble Code (DTC).>
C0252	5018 5019 501A 50A0	Motor Malfunction	Electronic parking brake control module motor is faulty.	<Ref. to PB(diag)-53, DTC C0252 MOTOR MALFUNCTION, Diagnostic Procedure with Diagnostic Trouble Code (DTC).>
C0253	501F 50C6	Actuator Stroke Excess	Actuator stroke excess	<Ref. to PB(diag)-54, DTC C0253 ACTUATOR STROKE EXCESS, Diagnostic Procedure with Diagnostic Trouble Code (DTC).>
C0261	C101 C13F	Improper CAN Communication	Defective CAN communication	<Ref. to PB(diag)-54, DTC C0261 IMPROPER CAN COMMUNICATION, Diagnostic Procedure with Diagnostic Trouble Code (DTC).>

GETtheMANUALS.org

DTC	Detailed code	Item	Content of diagnosis	Reference
C0262	C10B	TCM Communication Circuit	CAN signal not received from TCM	<Ref. to PB(diag)-55, DTC C0262 TCM COMMUNICATION CIRCUIT, Diagnostic Procedure with Diagnostic Trouble Code (DTC).>
C0263	C107	ECM Communication Circuit	CAN signal not received from ECM	<Ref. to PB(diag)-56, DTC C0263 ECM COMMUNICATION CIRCUIT, Diagnostic Procedure with Diagnostic Trouble Code (DTC).>
C0264	C108 C141	VDC Communication System	CAN signal not received from VDC CM	<Ref. to PB(diag)-57, DTC C0264 VDC COMMUNICATION SYSTEM, Diagnostic Procedure with Diagnostic Trouble Code (DTC).>
C0265	C109	Body Integrated Module Communication Circuit	CAN signal not received from body integrated unit	<Ref. to PB(diag)-58, DTC C0265 BODY INTEGRATED MODULE COMMUNICATION CIRCUIT, Diagnostic Procedure with Diagnostic Trouble Code (DTC).>
C0267	C13E	Meter Communication System	CAN signal not received from combination meter	<Ref. to PB(diag)-59, DTC C0267 METER COMMUNICATION SYSTEM, Diagnostic Procedure with Diagnostic Trouble Code (DTC).>
C0271	5030 5031 503C 50BE 50C5 50CB 50CC	Force Sensor Line (Abnormal)	Defective force sensor	<Ref. to PB(diag)-59, DTC C0271 FORCE SENSOR LINE (ABNORMAL), Diagnostic Procedure with Diagnostic Trouble Code (DTC).>
C0272	501B 503D 503E	Temperature Sensor Line (Abnormal)	Defective temperature sensor	<Ref. to PB(diag)-59, DTC C0272 TEMPERATURE SENSOR LINE (ABNORMAL), Diagnostic Procedure with Diagnostic Trouble Code (DTC).>
C0273	50B9 50BA	Stroke Sensor Line (Abnormal)	Defective stroke sensor	<Ref. to PB(diag)-59, DTC C0273 STROKE SENSOR LINE (ABNORMAL), Diagnostic Procedure with Diagnostic Trouble Code (DTC).>
C0274	5033 503A	Clutch Sensor Circuit	Defective clutch sensor	<Ref. to PB(diag)-60, DTC C0274 CLUTCH SENSOR CIRCUIT, Diagnostic Procedure with Diagnostic Trouble Code (DTC).>
C0275	5037	Longitudinal G Sensor Circuit	Defective longitudinal G sensor	<Ref. to PB(diag)-63, DTC C0275 LONGITUDINAL G SENSOR CIRCUIT, Diagnostic Procedure with Diagnostic Trouble Code (DTC).>
C0281	50CA	Mid Stop Condition	Stop in the middle of stroke while actuator operation	<Ref. to PB(diag)-65, DTC C0281 MID STOP CONDITION, Diagnostic Procedure with Diagnostic Trouble Code (DTC).>
C0282	50C9	Emergency Cancel Status	Perform the emergency cancel.	<Ref. to PB(diag)-66, DTC C0282 EMERGENCY CANCEL STATUS, Diagnostic Procedure with Diagnostic Trouble Code (DTC).>

GETtheMANUALS.org

12. Diagnostic Procedure with Diagnostic Trouble Code (DTC)

A: DTC C0221 PARKING POSITION SWITCH

DTC DETECTING CONDITION:
- Defective parking brake switch
- Defective harness connector

TROUBLE SYMPTOM:
- Electronic parking brake warning light illuminates. (C6 model)
- Brake warning light blinks. (Models other than C6 model)
- Parking brake system does not operate.

NOTE:
- When the parking brake switch is stopped at the mid-operation, or operated too slowly, this DTC may be stored; this is not malfunction, however.
- When the parking brake switch is pressed or pulled for 90 seconds or more, subsequent switch operations are not accepted. At this time, the electronic parking brake warning light illuminates on C6 model, or the brake warning light blinks on models other than C6 model. When turning the ignition switch from OFF to ON, the operation enabled status is restored.

WIRING DIAGRAM:

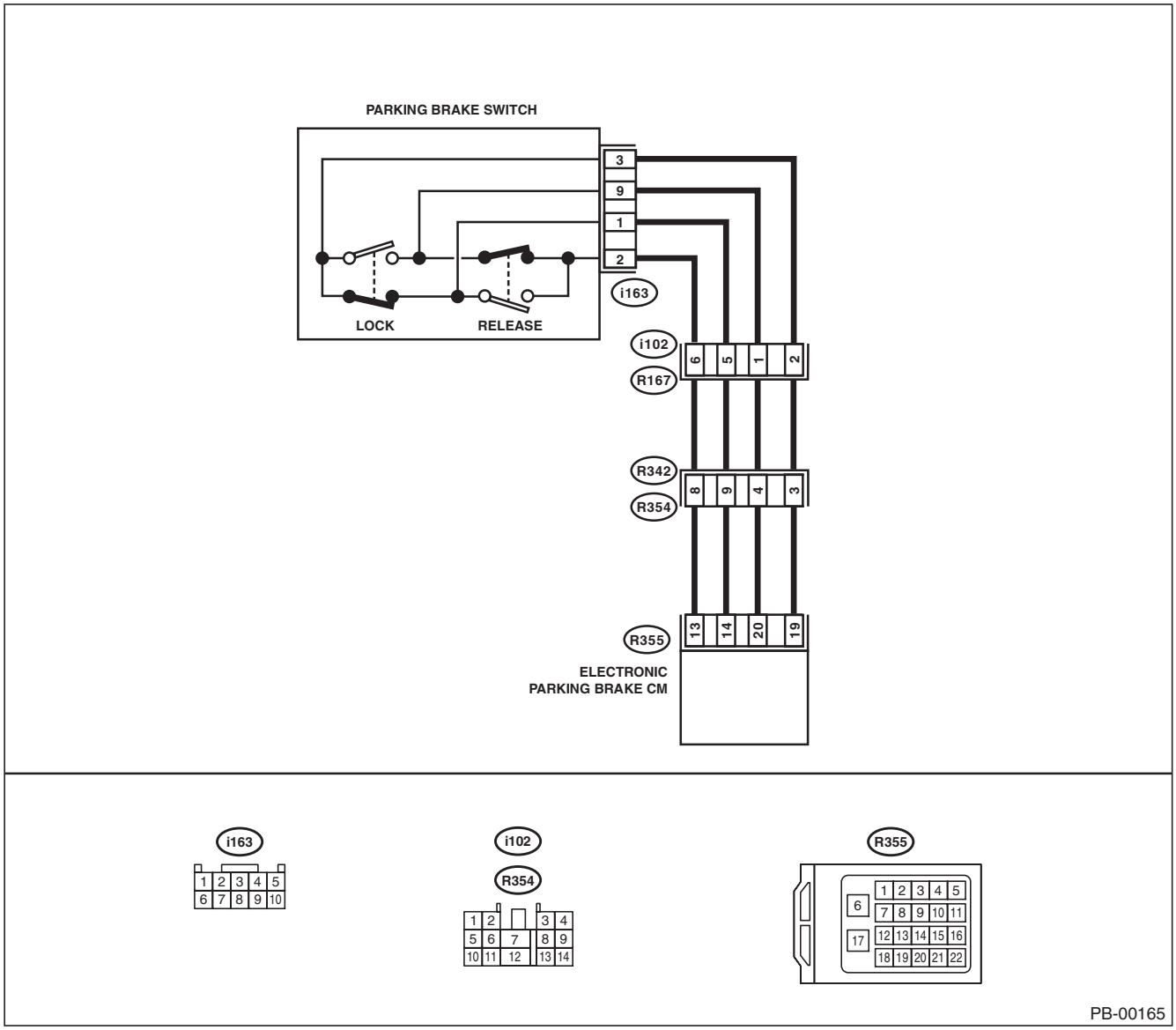

GETtheMANUALS.org

	Step	Check	Yes	No
1	**CHECK HARNESS.** 1) Turn the ignition switch to OFF. 2) Disconnect the connectors from the electronic parking brake CM, and parking brake switch. 3) Measure the resistance of harness between electronic parking brake CM and parking brake switch connector. ***Connector & terminal*** ***(R355) No. 13 — (i163) No. 2:*** ***(R355) No. 14 — (i163) No. 1:*** ***(R355) No. 20 — (i163) No. 9:*** ***(R355) No. 19 — (i163) No. 3:***	Is the resistance less than 1 Ω?	Go to step **2**.	Repair the harness and connector between electronic parking brake CM and parking brake switch connector.
2	**CHECK HARNESS.** Measure the resistance of harness between parking brake switch connector and chassis ground. ***Connector & terminal*** ***(i163) No. 2 — Chassis ground:*** ***(i163) No. 1 — Chassis ground:*** ***(i163) No. 9 — Chassis ground:*** ***(i163) No. 3 — Chassis ground:***	Is the resistance 1 MΩ or more?	Go to step **3**.	Repair ground short of harness between electronic parking brake CM and parking brake switch connector.
3	**CHECK HARNESS.** Measure the voltage between parking brake switch connector and chassis ground. ***Connector & terminal*** ***(i163) No. 2 (+) — Chassis ground (–):*** ***(i163) No. 1 (+) — Chassis ground (–):*** ***(i163) No. 9 (+) — Chassis ground (–):*** ***(i163) No. 3 (+) — Chassis ground (–):***	Is the voltage less than 1 V?	Go to step **4**.	Repair short to power supply of harness between electronic parking brake CM and parking brake switch connector.
4	**CHECK PARKING BRAKE SWITCH.** Check the parking brake switch. <Ref. to PB-18, INSPECTION, Parking Brake Switch.>	Is the parking brake switch normal?	Go to step **5**.	Replace the parking brake switch. <Ref. to PB-16, Parking Brake Switch.>
5	**CHECK ELECTRONIC PARKING BRAKE CM.** 1) Connect all connectors. 2) Clear the memory. <Ref. to PB(diag)-25, Clear Memory Mode.> 3) Perform the Inspection Mode. <Ref. to PB(diag)-24, Inspection Mode.> 4) Read the DTC.	Is the same DTC displayed?	Replace the electronic parking brake CM. <Ref. to PB-6, Parking Brake Actuator.>	Go to step **6**.
6	**CHECK OTHER DTC DETECTION.**	Is any other DTC displayed?	Perform the diagnosis according to DTC.	It results from a temporary noise interference.

GETtheMANUALS.org

B: DTC C0222 HILL HOLD SWITCH CIRCUIT

DTC DETECTING CONDITION:

- Defective hill hold switch
- Defective harness connector

TROUBLE SYMPTOM:

- Electronic parking brake warning light illuminates. (C6 model)
- Brake warning light blinks. (Models other than C6 model)
- Hill hold function cannot be set.

NOTE:
When hill hold switch is pressed for 30 seconds or more, hill hold indicator goes off, and subsequent switch operations are not accepted. At this time, the electronic parking brake warning light illuminates on C6 model, or the brake warning light blinks on models other than C6 model. When turning the ignition switch from OFF to ON, the operation enabled status is restored.

WIRING DIAGRAM:

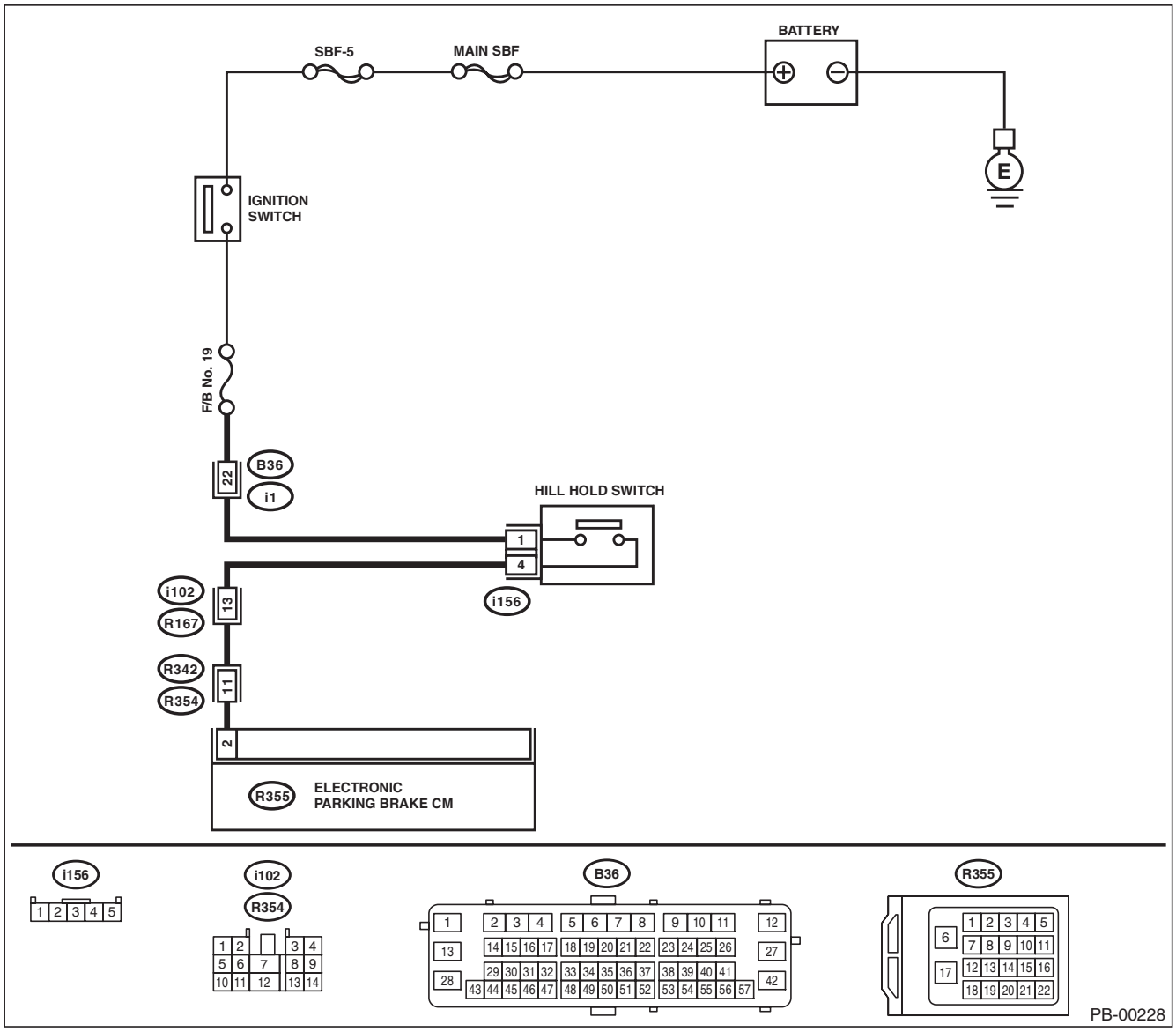

GETtheMANUALS.org

	Step	Check	Yes	No
1	**CHECK HILL HOLD SWITCH POWER SUPPLY.** 1) Turn the ignition switch to OFF. 2) Disconnect the connector from hill hold switch. 3) Turn the ignition switch to ON. 4) Measure the voltage between hill hold switch connector and chassis ground. ***Connector & terminal*** ***(i156) No. 1 (+) — Chassis ground (–):***	Is the voltage 10 — 15 V?	Go to step **2**.	Repair the power supply circuit of hill hold switch.
2	**CHECK HARNESS.** 1) Turn the ignition switch to OFF. 2) Disconnect the connectors from the electronic parking brake CM. 3) Measure the resistance of harness between hill hold switch and electronic parking brake CM connector. ***Connector & terminal*** ***(i156) No. 4 — (R355) No. 2:***	Is the resistance less than 1 Ω?	Go to step **3**.	Repair the harness and connector between hill hold switch and electronic parking brake CM connector.
3	**CHECK HARNESS.** Measure the resistance of harness between hill hold switch connector and chassis ground. ***Connector & terminal*** ***(i156) No. 4 — Chassis ground:***	Is the resistance less than 1 MΩ?	Go to step **4**.	Repair ground short of harness between hill hold switch and electronic parking brake CM connector.
4	**CHECK HARNESS.** Measure the voltage between hill hold switch connector and chassis ground. ***Connector & terminal*** ***(i156) No. 4 (+) — Chassis ground (–):***	Is the voltage less than 1 V?	Go to step **5**.	Repair short to power supply of harness between hill hold switch and electronic parking brake CM connector.
5	**CHECK HILL HOLD SWITCH.** Check the hill hold switch. <Ref. to PB-18, HILL HOLD SWITCH, INSPECTION, Parking Brake Switch.>	Is the hill hold switch normal?	Go to step **6**.	Replace the hill hold switch. <Ref. to PB-16, REMOVAL, Parking Brake Switch.>
6	**CHECK ELECTRONIC PARKING BRAKE CM.** 1) Connect all connectors. 2) Clear the memory. <Ref. to PB(diag)-25, Clear Memory Mode.> 3) Perform the Inspection Mode. <Ref. to PB(diag)-24, Inspection Mode.> 4) Read the DTC.	Is the same DTC displayed?	Replace the electronic parking brake CM. <Ref. to PB-6, Parking Brake Actuator.>	Go to step **7**.
7	**CHECK OTHER DTC DETECTION.**	Is any other DTC displayed?	Perform the diagnosis according to DTC.	It results from a temporary poor contact interference.

GETtheMANUALS.org

C: DTC C0231 ECM FAILURE

DTC DETECTING CONDITION:
Faulty signal received from engine control module (ECM)
TROUBLE SYMPTOM:
- Electronic parking brake warning light illuminates. (C6 model)
- Brake warning light blinks. (Models other than C6 model)
- Hill hold function and accelerator interlocking release function do not operate.

NOTE:
Refer to EN section for diagnostic procedure. <Ref. to EN(H4SO)(diag)-2, Basic Diagnostic Procedure.> <Ref. to EN(H4DOTC)(diag)-2, Basic Diagnostic Procedure.> <Ref. to EN(H6DO)(diag)-2, Basic Diagnostic Procedure.>

D: DTC C0232 AT ABNORMAL

DTC DETECTING CONDITION:
Faulty signal received from transmission control module (TCM)
TROUBLE SYMPTOM:
- Electronic parking brake warning light illuminates. (C6 model)
- Brake warning light blinks. (Models other than C6 model)
- Hill hold function and accelerator interlocking release function do not operate.

NOTE:
Refer to CVT or 5AT section for diagnostic procedure. <Ref. to CVT(diag)-2, Basic Diagnostic Procedure.> <Ref. to 5AT(diag)-2, Basic Diagnostic Procedure.>

GETtheMANUALS.org

E: DTC C0233 MT SHIFT SWITCH CIRCUIT

DTC DETECTING CONDITION:

- Defective neutral position switch
- Defective back-up light switch
- Defective harness connector

TROUBLE SYMPTOM:

- Electronic parking brake warning light illuminates. (C6 model)
- Brake warning light blinks. (Models other than C6 model)
- Hill hold function and accelerator interlocking release function do not operate.

GETtheMANUALS.org

WIRING DIAGRAM:

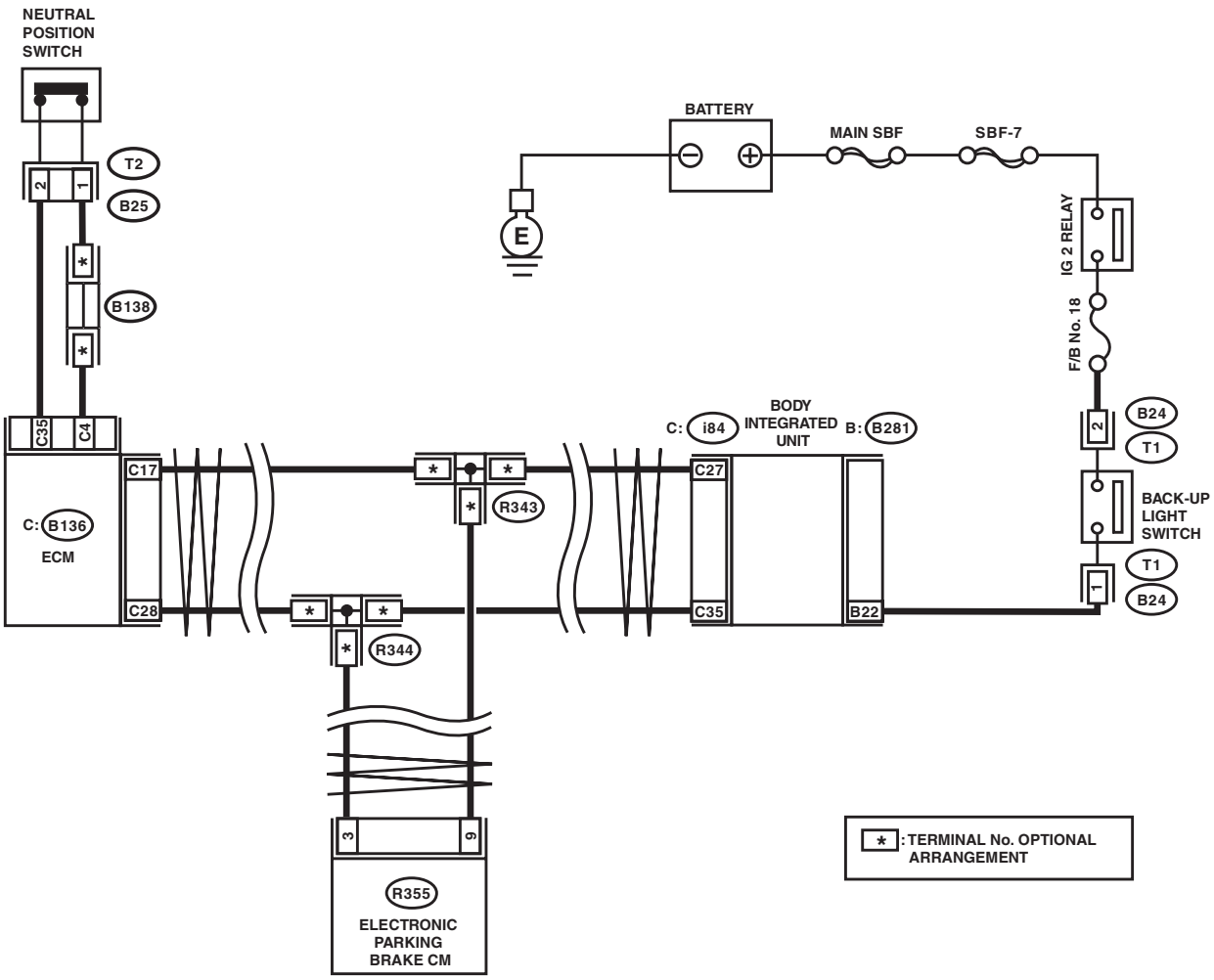

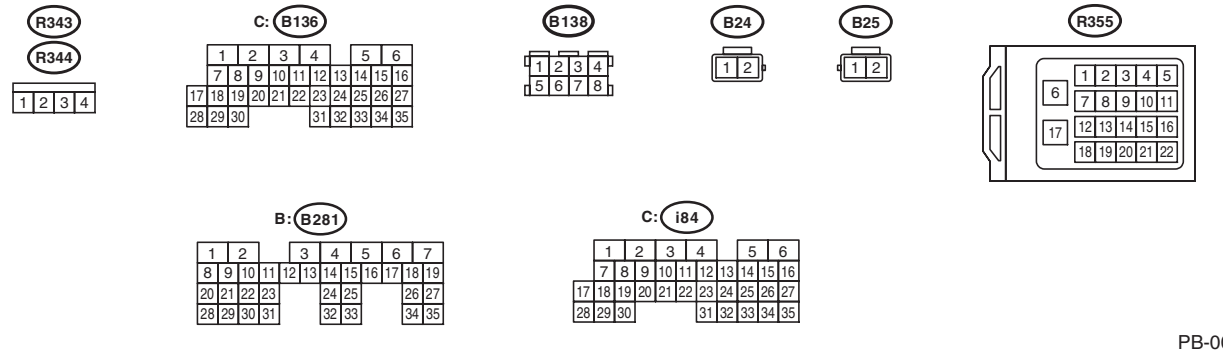

PB-00167

GETtheMANUALS.org

Step		Check	Yes	No
1	**CHECK OUTPUT OF NEUTRAL POSITION SWITCH USING SUBARU SELECT MONITOR.** 1) Select “Current Data Display & Save” for “Engine Control System” on Subaru Select Monitor. <Ref. to EN(H4SO)(diag)-33, Subaru Select Monitor.> <Ref. to EN(H4DOTC)(diag)-34, Subaru Select Monitor.> 2) Read the «Neutral switch» output displayed on the screen.	Is “Neutral” displayed on the screen at neutral state?	Go to step **2**.	Perform the diagnosis for the engine. <Ref. to EN(H4SO)(diag)-39, Read Diagnostic Trouble Code (DTC).> <Ref. to EN(H4DOTC)(diag)-40, Read Diagnostic Trouble Code (DTC).>
2	**CHECK OUTPUT OF BACK-UP LIGHT SWITCH USING SUBARU SELECT MONITOR.** 1) Select “Current Data Display & Save” for “Integ. unit mode” on Subaru Select Monitor. <Ref. to BC(diag)-12, Read Current Data.> 2) Read the «MT Reverse Switch» output displayed on the screen.	Is “ON” displayed on the screen at reverse state?	Go to step **3**.	Check DTC of integrated unit. <Ref. to BC(diag)-10, Read Diagnostic Trouble Code (DTC).>
3	**CHECK LAN SYSTEM.** Check the DTC in LAN system. <Ref. to LAN(diag)-10, OPERATION, Read Diagnostic Trouble Code (DTC).>	Is DTC of LAN system displayed?	Perform the diagnosis according to DTC. <Ref. to LAN(diag)-32, List of Diagnostic Trouble Code (DTC).>	Go to step **4**.
4	**CHECK ELECTRONIC PARKING BRAKE CM.** 1) Clear the memory. <Ref. to PB(diag)-25, Clear Memory Mode.> 2) Perform the Inspection Mode. <Ref. to PB(diag)-24, Inspection Mode.> 3) Read the DTC.	Is the same DTC displayed?	Replace the electronic parking brake CM. <Ref. to PB-6, Parking Brake Actuator.>	Go to step **5**.
5	**CHECK OTHER DTC DETECTION.**	Is any other DTC displayed?	Perform the diagnosis according to DTC.	It results from a temporary poor contact interference.

F: DTC C0234 VDC FAILURE

DTC DETECTING CONDITION:

Faulty signal received from VDC control module

TROUBLE SYMPTOM:

- Electronic parking brake warning light illuminates. (C6 model)
- Brake warning light blinks. (Models other than C6 model)
- Hill hold function and accelerator interlocking release function do not operate.
- Parking brake system occasionally may not operate.

NOTE:

Refer to VDC section for diagnostic procedure. <Ref. to VDC(diag)-2, Basic Diagnostic Procedure.>

GETtheMANUALS.org

G: DTC C0235 IGNITION SWITCH CIRCUIT

DTC DETECTING CONDITION:

IGN input of the electronic parking brake control module and IGN input of VDC control module do not match.

TROUBLE SYMPTOM:

- Parking brake cannot be released.
- Electronic parking brake warning light illuminates. (C6 model)
- Brake warning light blinks. (Models other than C6 model)
- Hill hold function and accelerator interlocking release function do not operate.

WIRING DIAGRAM:

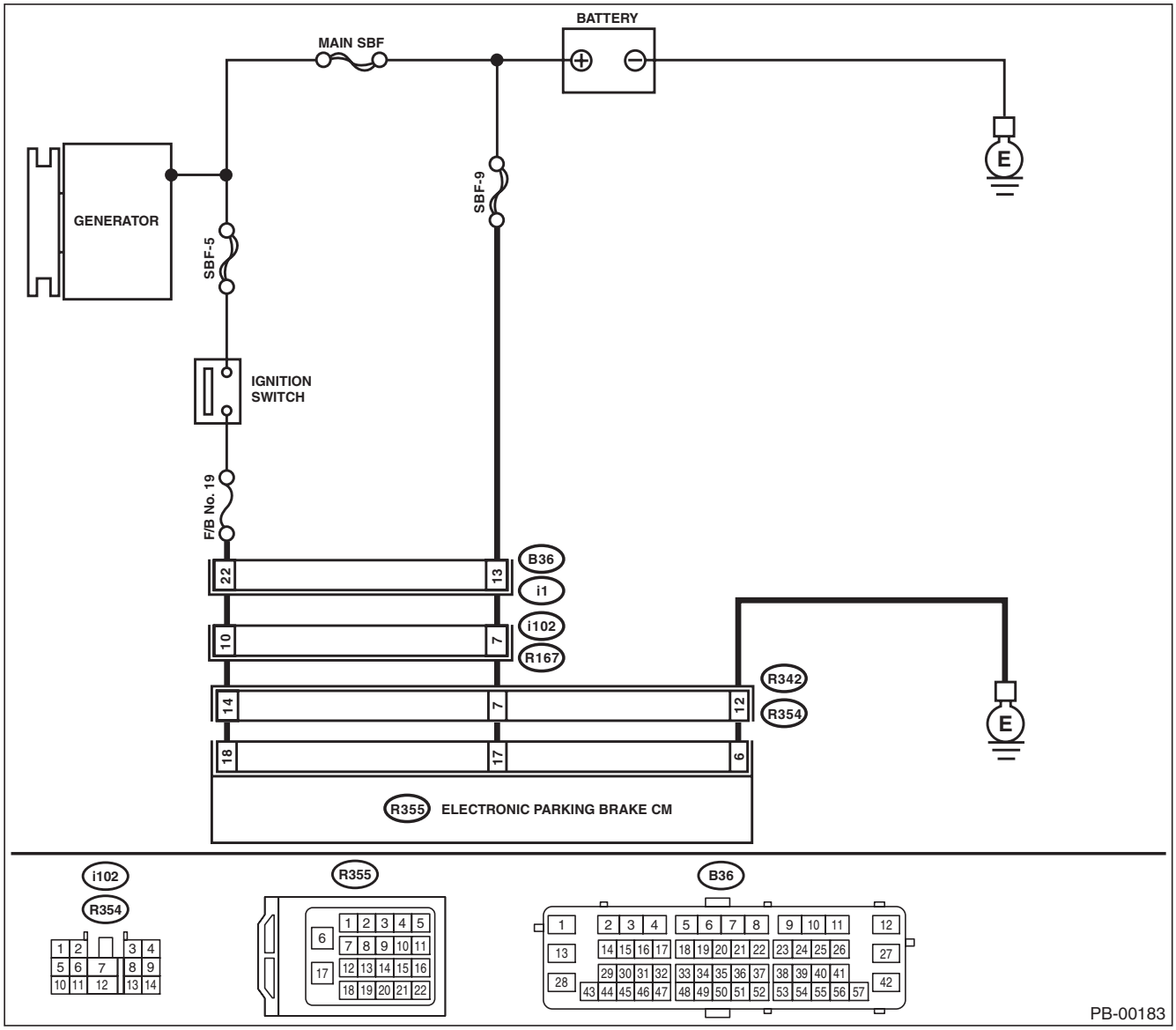

GETtheMANUALS.org

Diagnostic Procedure with Diagnostic Trouble Code (DTC)

	Step	Check	Yes	No
1	**CHECK INPUT VOLTAGE FOR ELECTRONIC PARKING BRAKE CM.** 1) Turn the ignition switch to OFF. 2) Disconnect the connectors from the electronic parking brake CM. 3) Turn the ignition switch to ON. 4) Measure the resistance between electronic parking brake CM connector and chassis ground. ***Connector & terminal*** ***(R355) No. 18 (+) — Chassis ground (–):***	Is the voltage 10 — 15 V?	Go to step **2**.	Repair the power supply circuit.
2	**CHECK GROUND CIRCUIT OF ELECTRONIC PARKING BRAKE CM.** 1) Turn the ignition switch to OFF. 2) Measure the resistance between electronic parking brake CM connector and chassis ground. ***Connector & terminal*** ***(R355) No. 6 — Chassis ground:***	Is the resistance less than 10 Ω?	Go to step **3**.	Repair the defective ground circuit of the electronic parking brake CM.
3	**CHECK VDC.** 1) Turn the ignition switch to ON. 2) Check DTC of VDC. <Ref. to VDC(diag)-23, OPERATION, Read Diagnostic Trouble Code (DTC).>	Is DTC of VDC displayed?	Perform the diagnosis according to DTC. <Ref. to VDC(diag)-35, List of Diagnostic Trouble Code (DTC).>	Go to step **4**.
4	**CHECK LAN SYSTEM.** Check the DTC in LAN system. <Ref. to LAN(diag)-10, OPERATION, Read Diagnostic Trouble Code (DTC).>	Is DTC of LAN system displayed?	Perform the diagnosis according to DTC. <Ref. to LAN(diag)-32, List of Diagnostic Trouble Code (DTC).>	Go to step **5**.
5	**CHECK POOR CONTACT OF CONNECTORS.**	Is there poor contact of power supply circuit, ground circuit and electronic parking brake CM connector?	Repair the connector.	Go to step **6**.
6	**CHECK ELECTRONIC PARKING BRAKE CM.** 1) Connect all connectors. 2) Clear the memory. <Ref. to PB(diag)-25, Clear Memory Mode.> 3) Perform the Inspection Mode. <Ref. to PB(diag)-24, Inspection Mode.> 4) Read the DTC.	Is the same DTC displayed?	Replace the electronic parking brake CM. <Ref. to PB-6, Parking Brake Actuator.>	Go to step **7**.
7	**CHECK OTHER DTC DETECTION.**	Is any other DTC displayed?	Perform the diagnosis according to DTC.	It results from a temporary poor contact interference.

GETtheMANUALS.org

H: DTC C0241 ELECTRICAL CONTROL MODULE

DTC DETECTING CONDITION:

Defective electronic parking brake control module

TROUBLE SYMPTOM:

- Electronic parking brake warning light illuminates. (C6 model)
- Brake warning light blinks. (Models other than C6 model)
- Parking brake system does not operate.

WIRING DIAGRAM:

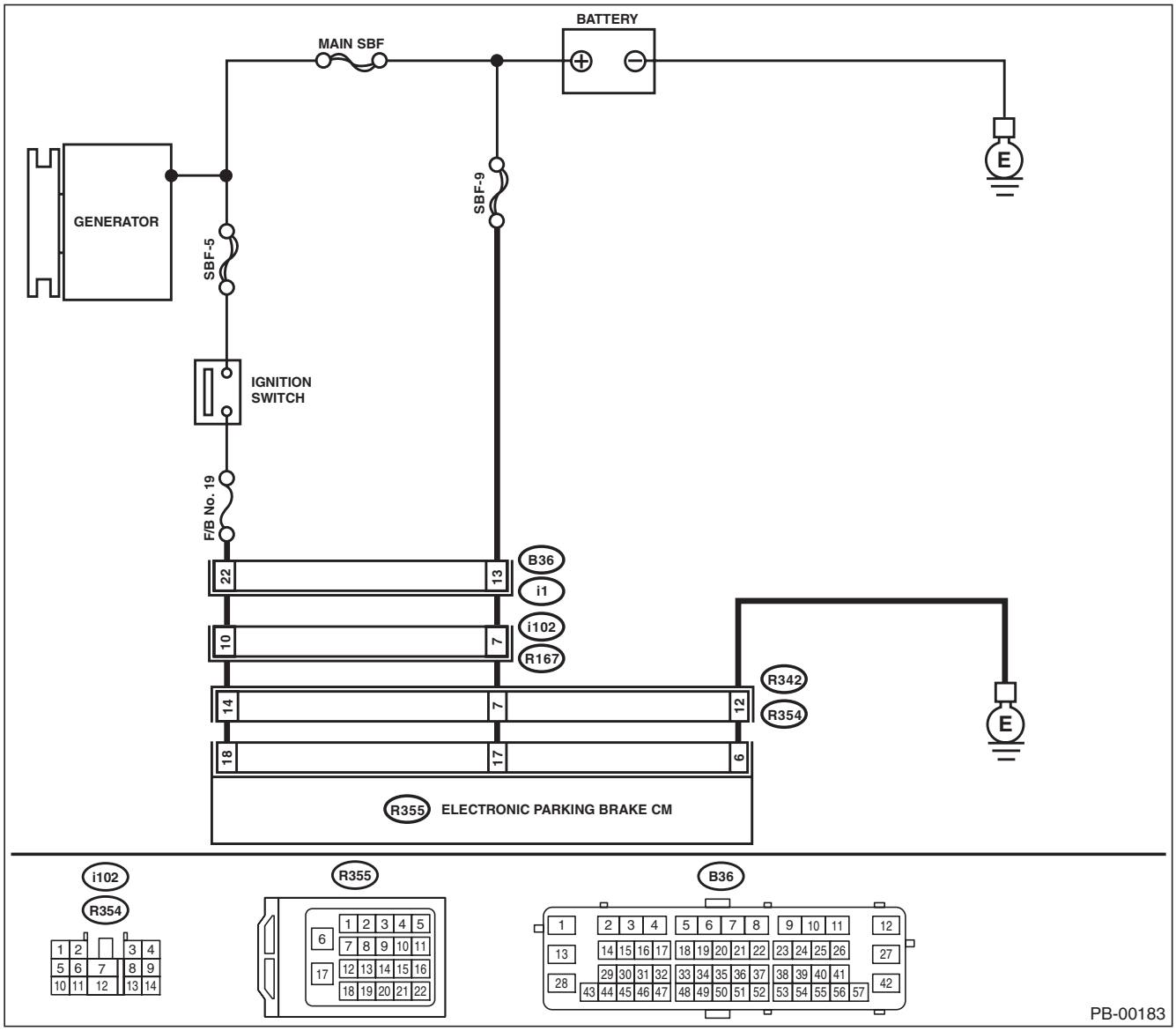

GETtheMANUALS.org

	Step	Check	Yes	No
1	**CHECK INPUT VOLTAGE FOR ELECTRONIC PARKING BRAKE CM.** 1) Turn the ignition switch to OFF. 2) Disconnect the connectors from the electronic parking brake CM. 3) Turn the ignition switch to ON. 4) Measure the voltage between electronic parking brake CM connector and chassis ground. ***Connector & terminal*** ***(R355) No. 18 (+) — Chassis ground (–):*** ***(R355) No. 17 (+) — Chassis ground (–):***	Is the voltage 10 — 15 V?	Go to step **2**.	Repair the power supply circuit.
2	**CHECK GROUND CIRCUIT OF ELECTRONIC PARKING BRAKE CM.** 1) Turn the ignition switch to OFF. 2) Measure the resistance between electronic parking brake CM connector and chassis ground. ***Connector & terminal*** ***(R355) No. 6 — Chassis ground:***	Is the resistance less than 10 Ω?	Go to step **3**.	Repair the defective ground circuit of the electronic parking brake CM.
3	**CHECK CAUSE OF SIGNAL NOISE.** Make sure the radio wave devices and electronic components are installed correctly.	Are the radio wave devices and electronic components installed correctly?	Go to step **4**.	Install the radio wave devices and electronic components properly.
4	**CHECK CAUSE OF SIGNAL NOISE.** Check if the noise sources (such as an antenna) are installed near the electronic parking brake CM harness.	Are noise sources installed?	Install the noise sources apart from the electronic parking brake CM harness.	Go to step **5**.
5	**CHECK POOR CONTACT OF CONNECTORS.**	Is there poor contact of power supply circuit, ground circuit and electronic parking brake CM connector?	Repair the connector.	Go to step **6**.
6	**CHECK ELECTRONIC PARKING BRAKE CM.** 1) Connect all connectors. 2) Clear the memory. <Ref. to PB(diag)-25, Clear Memory Mode.> 3) Perform the Inspection Mode. <Ref. to PB(diag)-24, Inspection Mode.> 4) Read the DTC.	Is the same DTC displayed?	Replace the electronic parking brake CM. <Ref. to PB-6, Parking Brake Actuator.>	Go to step **7**.
7	**CHECK OTHER DTC DETECTION.**	Is any other DTC displayed?	Perform the diagnosis according to DTC.	It results from a temporary poor contact interference.

GETtheMANUALS.org

I: DTC C0242 POWER SUPPLY VOLTAGE FAILURE

DTC DETECTING CONDITION:

Defective power supply voltage for the electronic parking brake control module

TROUBLE SYMPTOM:

- Electronic parking brake warning light illuminates. (C6 model)
- Brake warning light blinks. (Models other than C6 model)
- Parking brake system does not operate.

NOTE:

Warning lights go off if voltage returns.

WIRING DIAGRAM:

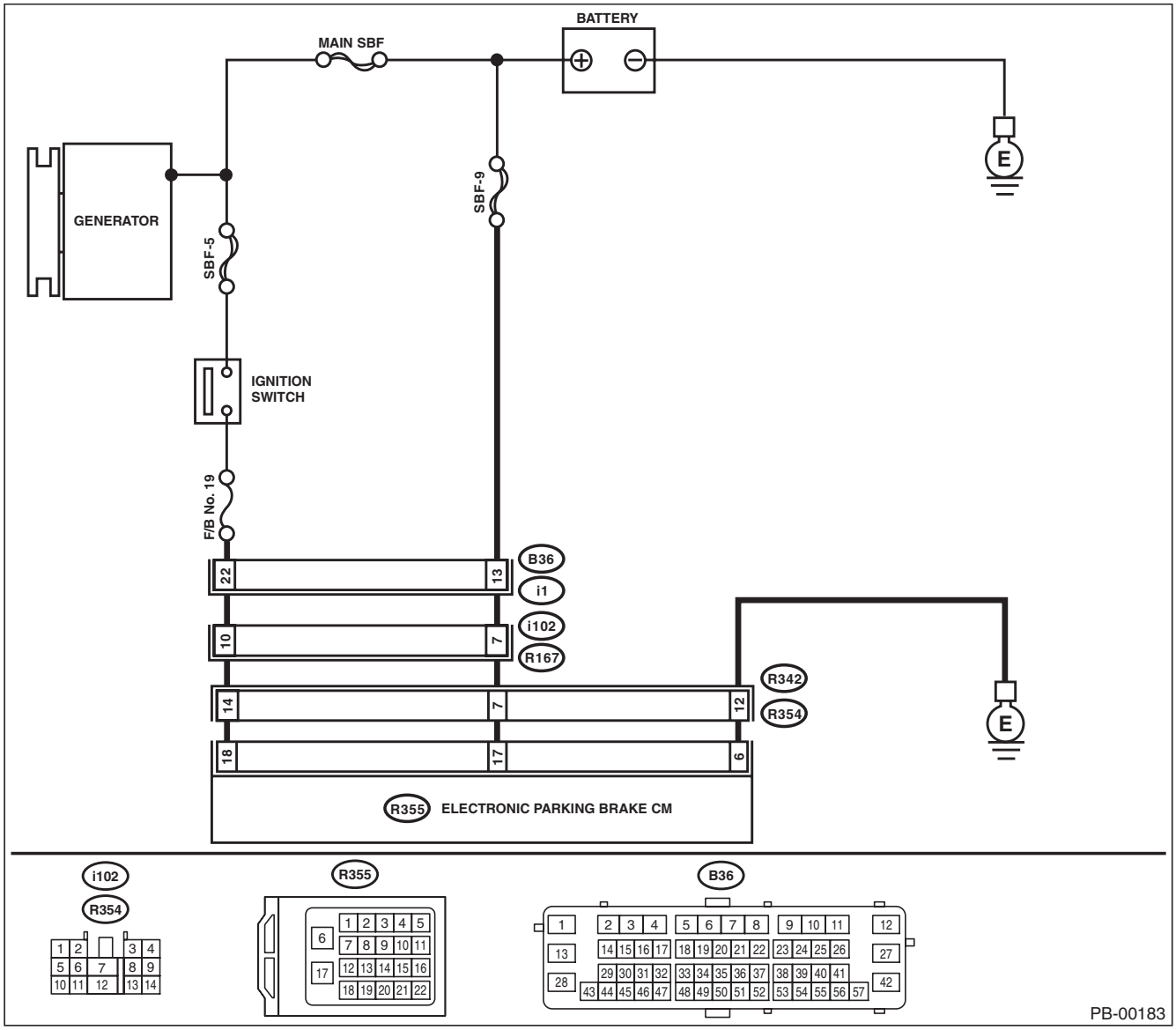

GETtheMANUALS.org

	Step	Check	Yes	No
1	**CHECK GENERATOR.** 1) Start the engine. 2) Run the engine at idle after warming up. 3) Measure the voltage between generator terminal B and chassis ground. ***Terminals*** ***Generator terminal B (+) — Chassis ground (–):***	Is the voltage 10 — 15 V?	Go to step **2**.	Repair the generator. <Ref. to SC(H4SO)-18, Generator.>
2	**CHECK BATTERY TERMINAL.** Turn the ignition switch to OFF.	Are the positive and negative battery terminals clamped tightly?	Go to step **3**.	Tighten the terminal.
3	**CHECK INPUT VOLTAGE FOR ELECTRONIC PARKING BRAKE CM.** 1) Disconnect the connectors from the electronic parking brake CM. 2) Run the engine at idle. 3) Operate devices such as headlights, air conditioner, defogger, etc. which produce an electrical load. 4) Measure the voltage between electronic parking brake CM connector and chassis ground. ***Connector & terminal*** ***(R355) No. 18 (+) — Chassis ground (–):***	Is the voltage 10 — 15 V?	Go to step **4**.	Repair the power supply circuit.
4	**CHECK GROUND CIRCUIT OF ELECTRONIC PARKING BRAKE CM.** 1) Turn the ignition switch to OFF. 2) Measure the resistance between electronic parking brake CM connector and chassis ground. ***Connector & terminal*** ***(R355) No. 6 — Chassis ground:***	Is the resistance less than 10 Ω?	Go to step **5**.	Repair the defective ground circuit of the electronic parking brake CM.
5	**CHECK POOR CONTACT OF CONNECTORS.**	Is there poor contact of power supply circuit, ground circuit and electronic parking brake CM connector?	Repair the connector.	Go to step **6**.
6	**CHECK ELECTRONIC PARKING BRAKE CM.** 1) Connect all connectors. 2) Clear the memory. <Ref. to PB(diag)-25, Clear Memory Mode.> 3) Perform the Inspection Mode. <Ref. to PB(diag)-24, Inspection Mode.> 4) Read the DTC.	Is the same DTC displayed?	Replace the electronic parking brake CM. <Ref. to PB-6, Parking Brake Actuator.>	Go to step **7**.
7	**CHECK OTHER DTC DETECTION.**	Is any other DTC displayed?	Perform the diagnosis according to DTC.	It results from a temporary poor contact interference.

J: DTC C0242 INTERNAL POWER SUPPLY VOLTAGE ABNORMAL

NOTE:
For the diagnostic procedure, refer to DTC C0242 “Power Supply Voltage Failure”. <Ref. to PB(diag)-49, DTC C0242 POWER SUPPLY VOLTAGE FAILURE, Diagnostic Procedure with Diagnostic Trouble Code (DTC).>

GETtheMANUALS.org

K: DTC C0243 PARAMETER SELECTION ERROR

DTC DETECTING CONDITION:

Parameter selection error for the electronic parking brake control module

TROUBLE SYMPTOM:

- Electronic parking brake warning light illuminates. (C6 model)
- Brake warning light blinks. (Models other than C6 model)
- Hill hold function and accelerator interlocking release function do not operate.

NOTE:

After performing Parameter Initialization Mode, make sure to perform the Force Sensor Calibration Mode and Clutch Sensor Calibration Mode. <Ref. to PB(diag)-18, FORCE SENSOR CALIBRATION MODE, OPERATION, Subaru Select Monitor.> <Ref. to PB(diag)-20, CLUTCH SENSOR CALIBRATION MODE, OPERATION, Subaru Select Monitor.>

	Step	Check	Yes	No
1	**CHECK ECM, TCM AND COMBINATION METER.** Check that ECM, TCM and combination meter with correct specifications are installed.	Are correct ECM, TCM and combination meter installed?	Go to step **2**.	Replace with parts with correct specifications.
2	**INITIALIZE PARAMETER USING SUBARU SELECT MONITOR.** 1) Using the Subaru Select Monitor, initialize the parameter for the electronic parking brake CM. <Ref. to PB(diag)-19, PARAMETER INITIALIZATION MODE, OPERATION, Subaru Select Monitor.> 2) Perform calibration of the force sensor. <Ref. to PB(diag)-18, FORCE SENSOR CALIBRATION MODE, OPERATION, Subaru Select Monitor.> 3) Perform calibration of the clutch sensor. <Ref. to PB(diag)-20, CLUTCH SENSOR CALIBRATION MODE, OPERATION, Subaru Select Monitor.> 4) Clear the memory. <Ref. to PB(diag)-25, Clear Memory Mode.> 5) Read the DTC.	Is the same DTC displayed?	Replace the electronic parking brake CM. <Ref. to PB-6, Parking Brake Actuator.>	It results from a temporary noise interference.

GETtheMANUALS.org

L: DTC C0251 ACTUATOR LINE (ABNORMAL)

DTC DETECTING CONDITION:

Defective electronic parking brake control module

TROUBLE SYMPTOM:

- Electronic parking brake warning light illuminates. (C6 model)
- Brake warning light blinks. (Models other than C6 model)
- Parking brake system does not operate.

WIRING DIAGRAM:

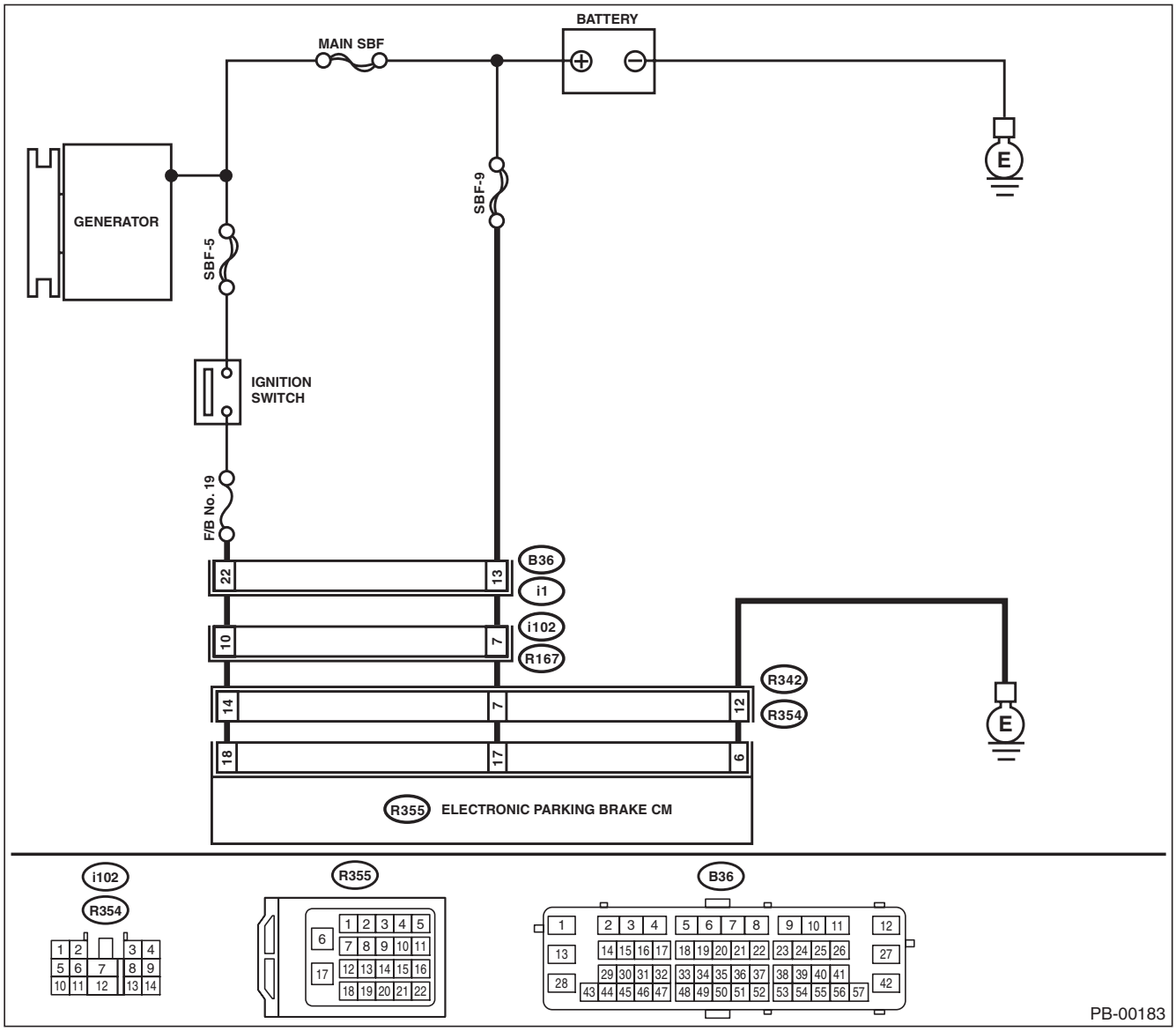

GETtheMANUALS.org

	Step	Check	Yes	No
1	**CHECK INPUT VOLTAGE FOR ELECTRONIC PARKING BRAKE CM.** 1) Turn the ignition switch to OFF. 2) Disconnect the connectors from the electronic parking brake CM. 3) Turn the ignition switch to ON. 4) Measure the voltage between electronic parking brake CM connector and chassis ground. ***Connector & terminal*** ***(R355) No. 18 (+) — Chassis ground (–):*** ***(R355) No. 17 (+) — Chassis ground (–):***	Is the voltage 10 — 15 V?	Go to step **2**.	Repair the power supply circuit.
2	**CHECK GROUND CIRCUIT OF ELECTRONIC PARKING BRAKE CM.** 1) Turn the ignition switch to OFF. 2) Measure the resistance between electronic parking brake CM connector and chassis ground. ***Connector & terminal*** ***(R355) No. 6 — Chassis ground:***	Is the resistance less than 10 Ω?	Go to step **3**.	Repair the defective ground circuit of the electronic parking brake CM.
3	**CHECK POOR CONTACT OF CONNECTORS.**	Is there poor contact of power supply circuit, ground circuit and electronic parking brake CM connector?	Repair the connector.	Go to step **4**.
4	**CHECK ELECTRONIC PARKING BRAKE CM.** 1) Connect all connectors. 2) Clear the memory. <Ref. to PB(diag)-25, Clear Memory Mode.> 3) Perform the Inspection Mode. <Ref. to PB(diag)-24, Inspection Mode.> 4) Release the parking brake, and then operate again. 5) Read the DTC.	Is the same DTC displayed?	Replace the electronic parking brake CM. <Ref. to PB-6, Parking Brake Actuator.>	Go to step **5**.
5	**CHECK OTHER DTC DETECTION.**	Is any other DTC displayed?	Perform the diagnosis according to DTC.	It results from a temporary poor contact interference.

M: DTC C0252 MOTOR MALFUNCTION

NOTE:
- For the diagnostic procedure, refer to DTC C0251 “Actuator Line (abnormal)”. <Ref. to PB(diag)-52, DTC C0251 ACTUATOR LINE (ABNORMAL), Diagnostic Procedure with Diagnostic Trouble Code (DTC).>
- When the operation and release of the parking brake is repeated excessively, this DTC may be stored.

GETtheMANUALS.org

N: DTC C0253 ACTUATOR STROKE EXCESS

DTC DETECTING CONDITION:
Actuator stroke too long
TROUBLE SYMPTOM:
- Brake warning light blinks.
- Electronic parking brake warning light illuminates. (C6 model)
- Parking brake system does not operate.

Step		Check	Yes	No
1	**CHECK PARKING BRAKE ASSEMBLY.** Check the parking brake cable connection of parking brake assembly.	Is there any trouble with the parking brake shoe lever or the parking brake cable connection?	Repair the parking brake cable connection. Go to step **2**.	Go to step **2**.
2	**CHECK PARKING BRAKE ASSEMBLY.** Check the parking brake assembly disc rotor and shoe assembly. <Ref. to PB-15, INSPECTION, Parking Brake Assembly (Rear Disc Brake).>	Are the disc rotor and shoe assembly normal?	Adjust the shoe clearance of the parking brake assembly. <Ref. to PB-15, ADJUSTMENT, Parking Brake Assembly (Rear Disc Brake).> Go to step **3**.	Replace the defective parts, and adjust the shoe clearance of the parking brake assembly. <Ref. to PB-15, ADJUSTMENT, Parking Brake Assembly (Rear Disc Brake).> Go to step **3**.
3	**PERFORM CALIBRATION OF FORCE SENSOR USING SUBARU SELECT MONITOR.** 1) Perform calibration of force sensor using the Subaru Select Monitor. <Ref. to PB(diag)-18, FORCE SENSOR CALIBRATION MODE, OPERATION, Subaru Select Monitor.> 2) Clear the memory. <Ref. to PB(diag)-25, Clear Memory Mode.> 3) Read the DTC.	Is the same DTC displayed?	Replace the electronic parking brake CM. <Ref. to PB-6, Parking Brake Actuator.>	It results from poor adjustment of the shoe clearance.

O: DTC C0261 IMPROPER CAN COMMUNICATION

DTC DETECTING CONDITION:
Defective CAN communication
TROUBLE SYMPTOM:
- Electronic parking brake warning light illuminates. (C6 model)
- Brake warning light blinks. (Models other than C6 model)
- Parking brake system does not operate.

NOTE:
Refer to LAN section for diagnostic procedure. <Ref. to LAN(diag)-2, Basic Diagnostic Procedure.>

GETtheMANUALS.org

P: DTC C0262 TCM COMMUNICATION CIRCUIT

DTC DETECTING CONDITION:

No CAN signal received from transmission control module (TCM).

TROUBLE SYMPTOM:

- Electronic parking brake warning light illuminates. (C6 model)
- Brake warning light blinks. (Models other than C6 model)
- Hill hold function and accelerator interlocking release function do not operate.

	Step	Check	Yes	No
1	**CHECK AT SYSTEM OR CVT SYSTEM.** 1) Start the engine. 2) Check the DTC in AT system or CVT system.	Is DTC of AT system or CVT system displayed?	Perform the diagnosis according to DTC of AT system or CVT system. <Ref. to 5AT(diag)-33, List of Diagnostic Trouble Code (DTC).> <Ref. to CVT(diag)-32, List of Diagnostic Trouble Code (DTC).>	Go to step **2**.
2	**CHECK LAN SYSTEM.** Check the DTC in LAN system. <Ref. to LAN(diag)-10, OPERATION, Read Diagnostic Trouble Code (DTC).>	Is there any fault in LAN system?	Perform the diagnosis according to DTC for LAN system. <Ref. to LAN(diag)-32, List of Diagnostic Trouble Code (DTC).>	Go to step **3**.
3	**CHECK ELECTRONIC PARKING BRAKE CM.** 1) Connect all connectors. 2) Clear the memory. <Ref. to PB(diag)-25, Clear Memory Mode.> 3) Perform the Inspection Mode. <Ref. to PB(diag)-24, Inspection Mode.> 4) Read the DTC.	Is the same DTC displayed?	Replace the electronic parking brake CM. <Ref. to PB-6, Parking Brake Actuator.>	Go to step **4**.
4	**CHECK OTHER DTC DETECTION.**	Is any other DTC displayed?	Perform the diagnosis according to DTC.	It results from a temporary noise interference.

GETtheMANUALS.org

Q: DTC C0263 ECM COMMUNICATION CIRCUIT

DTC DETECTING CONDITION:

No CAN signal received from engine control module (ECM).

TROUBLE SYMPTOM:

- Electronic parking brake warning light illuminates. (C6 model)
- Brake warning light blinks. (Models other than C6 model)
- Hill hold function and accelerator interlocking release function do not operate.

	Step	Check	Yes	No
1	**CHECK ECM.** 1) Start the engine. 2) Check DTC of ECM.	Is DTC of ECM displayed?	Perform the diagnosis according to DTC of ECM.	Go to step **2**.
2	**CHECK LAN SYSTEM.** Check the DTC in LAN system. <Ref. to LAN(diag)-10, OPERATION, Read Diagnostic Trouble Code (DTC).>	Is there any fault in LAN system?	Perform the diagnosis according to DTC for LAN system. <Ref. to LAN(diag)-32, List of Diagnostic Trouble Code (DTC).>	Go to step **3**.
3	**CHECK ELECTRONIC PARKING BRAKE CM.** 1) Connect all connectors. 2) Clear the memory. <Ref. to PB(diag)-25, Clear Memory Mode.> 3) Perform the Inspection Mode. <Ref. to PB(diag)-24, Inspection Mode.> 4) Read the DTC.	Is the same DTC displayed?	Replace the electronic parking brake CM. <Ref. to PB-6, Parking Brake Actuator.>	Go to step **4**.
4	**CHECK OTHER DTC DETECTION.**	Is any other DTC displayed?	Perform the diagnosis according to DTC.	It results from a temporary noise interference.

GETtheMANUALS.org

R: DTC C0264 VDC COMMUNICATION SYSTEM

DTC DETECTING CONDITION:

No CAN signal received from VDC control module.

TROUBLE SYMPTOM:

- Electronic parking brake warning light illuminates. (C6 model)
- Brake warning light blinks. (Models other than C6 model)
- Parking brake system does not operate.

	Step	Check	Yes	No
1	**CHECK VDC SYSTEM.** 1) Start the engine. 2) Check the DTC in VDC system. <Ref. to VDC(diag)-23, OPERATION, Read Diagnostic Trouble Code (DTC).>	Is DTC of VDC system displayed?	Perform the diagnosis according to DTC of VDC system. <Ref. to VDC(diag)-35, List of Diagnostic Trouble Code (DTC).>	Go to step **2**.
2	**CHECK LAN SYSTEM.** Check the DTC in LAN system. <Ref. to LAN(diag)-10, OPERATION, Read Diagnostic Trouble Code (DTC).>	Is there any fault in LAN system?	Perform the diagnosis according to DTC for LAN system. <Ref. to LAN(diag)-32, List of Diagnostic Trouble Code (DTC).>	Go to step **3**.
3	**CHECK ELECTRONIC PARKING BRAKE CM.** 1) Connect all connectors. 2) Clear the memory. <Ref. to PB(diag)-25, Clear Memory Mode.> 3) Perform the Inspection Mode. <Ref. to PB(diag)-24, Inspection Mode.> 4) Read the DTC.	Is the same DTC displayed?	Replace the electronic parking brake CM. <Ref. to PB-6, Parking Brake Actuator.>	Go to step **4**.
4	**CHECK OTHER DTC DETECTION.**	Is any other DTC displayed?	Perform the diagnosis according to DTC.	It results from a temporary noise interference.

GETtheMANUALS.org

S: DTC C0265 BODY INTEGRATED MODULE COMMUNICATION CIRCUIT

DTC DETECTING CONDITION:

No CAN signal received from body integrated unit.

TROUBLE SYMPTOM:

- Electronic parking brake warning light illuminates. (C6 model)
- Brake warning light blinks. (Models other than C6 model)
- Hill hold function and accelerator interlocking release function do not operate.

Step		Check	Yes	No
1	**CHECK BODY INTEGRATED UNIT.** 1) Start the engine. 2) Check DTC of body integrated unit. <Ref. to BC(diag)-10, OPERATION, Read Diagnostic Trouble Code (DTC).>	Is DTC of the body integrated unit displayed?	Perform the diagnosis according to DTC for the body integrated unit. <Ref. to BC(diag)-21, List of Diagnostic Trouble Code (DTC).>	Go to step **2**.
2	**CHECK ELECTRONIC PARKING BRAKE CM.** 1) Connect all connectors. 2) Clear the memory. <Ref. to PB(diag)-25, Clear Memory Mode.> 3) Perform the Inspection Mode. <Ref. to PB(diag)-24, Inspection Mode.> 4) Read the DTC.	Is the same DTC displayed?	Replace the electronic parking brake CM. <Ref. to PB-6, Parking Brake Actuator.>	Go to step **3**.
3	**CHECK OTHER DTC DETECTION.**	Is any other DTC displayed?	Perform the diagnosis according to DTC.	It results from a temporary noise interference.

GETtheMANUALS.org

T: DTC C0267 METER COMMUNICATION SYSTEM

DTC DETECTING CONDITION:
No CAN signal received from combination meter.
TROUBLE SYMPTOM:
- Electronic parking brake warning light illuminates. (C6 model)
- Brake warning light blinks. (Models other than C6 model)
- Hill hold function and accelerator interlocking release function do not operate.

Step		Check	Yes	No
1	**CHECK COMBINATION METER.** Check the DTC of combination meter. <Ref. to IDI-9, DTC DISPLAY MODE, OPERATION, Combination Meter System.>	Is DTC of combination meter displayed?	Perform the diagnosis according to DTC of the combination meter. <Ref. to IDI-9, DTC DISPLAY MODE, OPERATION, Combination Meter System.>	Go to step **2**.
2	**CHECK LAN SYSTEM.** Check the DTC in LAN system. <Ref. to LAN(diag)-10, OPERATION, Read Diagnostic Trouble Code (DTC).>	Is there any fault in LAN system?	Perform the diagnosis according to DTC for LAN system. <Ref. to LAN(diag)-32, List of Diagnostic Trouble Code (DTC).>	Go to step **3**.
3	**CHECK ELECTRONIC PARKING BRAKE CM.** 1) Connect all connectors. 2) Clear the memory. <Ref. to PB(diag)-25, Clear Memory Mode.> 3) Perform the Inspection Mode. <Ref. to PB(diag)-24, Inspection Mode.> 4) Read the DTC.	Is the same DTC displayed?	Replace the electronic parking brake CM. <Ref. to PB-6, Parking Brake Actuator.>	Go to step **4**.
4	**CHECK OTHER DTC DETECTION.**	Is any other DTC displayed?	Perform the diagnosis according to DTC.	It results from a temporary noise interference.

U: DTC C0271 FORCE SENSOR LINE (ABNORMAL)

NOTE:
For the diagnostic procedure, refer to DTC C0251 “Actuator Line (abnormal)”. <Ref. to PB(diag)-52, DTC C0251 ACTUATOR LINE (ABNORMAL), Diagnostic Procedure with Diagnostic Trouble Code (DTC).>

V: DTC C0272 TEMPERATURE SENSOR LINE (ABNORMAL)

NOTE:
- For the diagnostic procedure, refer to DTC C0251 “Actuator Line (abnormal)”. <Ref. to PB(diag)-52, DTC C0251 ACTUATOR LINE (ABNORMAL), Diagnostic Procedure with Diagnostic Trouble Code (DTC).>
- When the operation and release of the parking brake is repeated excessively, this DTC may be stored.

W: DTC C0273 STROKE SENSOR LINE (ABNORMAL)

NOTE:
For the diagnostic procedure, refer to DTC C0251 “Actuator Line (abnormal)”. <Ref. to PB(diag)-52, DTC C0251 ACTUATOR LINE (ABNORMAL), Diagnostic Procedure with Diagnostic Trouble Code (DTC).>

GETtheMANUALS.org

X: DTC C0274 CLUTCH SENSOR CIRCUIT

DTC DETECTING CONDITION:

- Defective clutch stroke sensor
- Defective harness connector

TROUBLE SYMPTOM:

- Electronic parking brake warning light illuminates. (C6 model)
- Brake warning light blinks. (Models other than C6 model)
- Hill hold function and accelerator interlocking release function do not operate.
- Parking brake is not released even after depressing the clutch pedal to release the parking brake switch.

WIRING DIAGRAM:

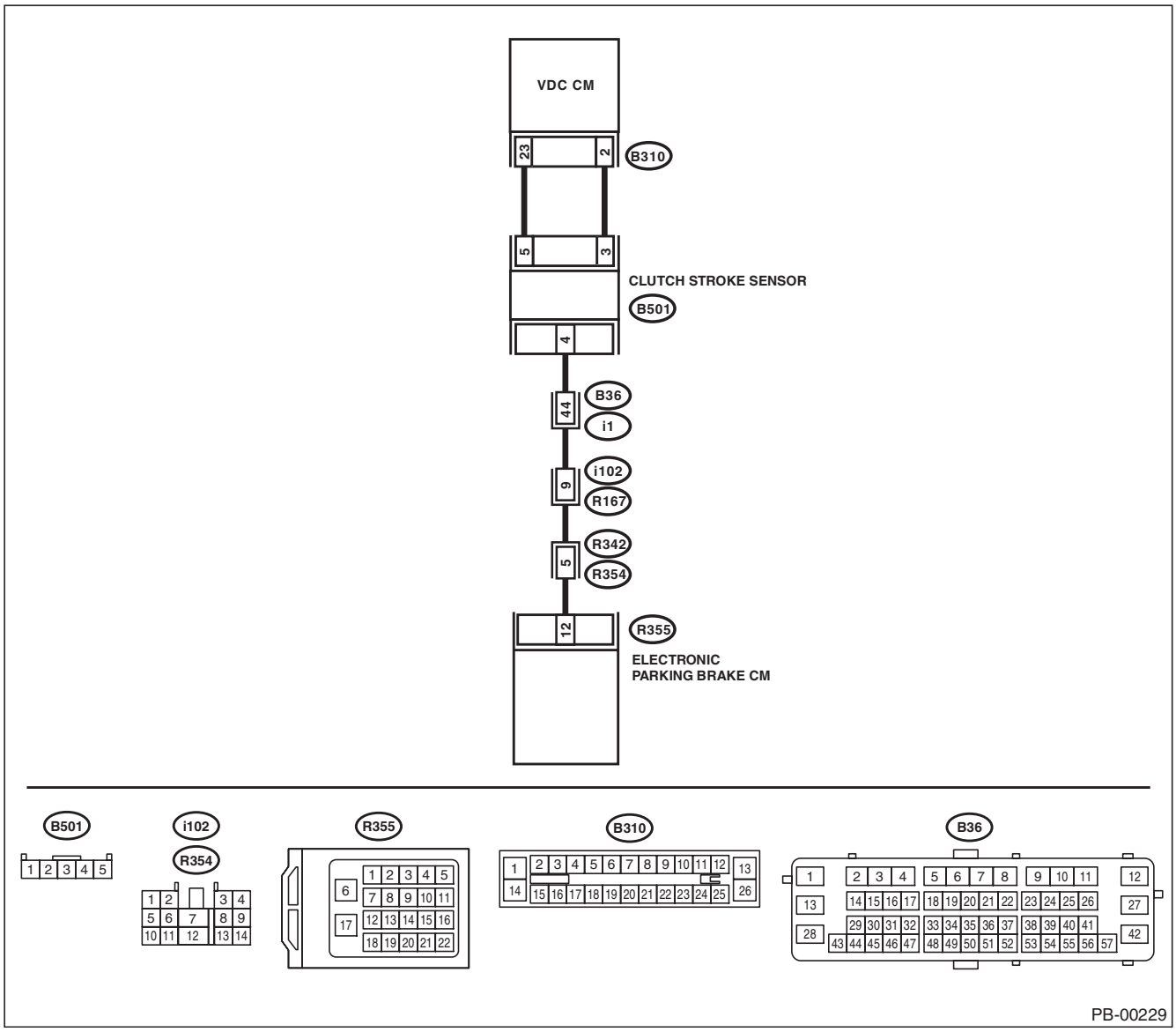

GETtheMANUALS.org

	Step	Check	Yes	No
1	**PERFORM CALIBRATION OF CLUTCH SENSOR USING SUBARU SELECT MONITOR.** 1) Select “Maintenance Operation Mode” on Subaru Select Monitor. 2) Perform the Clutch Sensor Calibration Mode. <Ref. to PB(diag)-20, CLUTCH SENSOR CALIBRATION MODE, OPERATION, Subaru Select Monitor.> 3) Clear the memory. <Ref. to PB(diag)-25, Clear Memory Mode.> 4) Perform the Inspection Mode. <Ref. to PB(diag)-24, Inspection Mode.> 5) Read the DTC.	Is the same DTC displayed?	Go to step **2**.	It results from poor calibration of the clutch stroke sensor.
2	**CHECK OUTPUT OF CLUTCH STROKE SENSOR USING SUBARU SELECT MONITOR.** 1) Select “Current Data Display & Save” on the Subaru Select Monitor. <Ref. to PB(diag)-14, Subaru Select Monitor.> 2) Read the clutch stroke sensor output displayed on the screen.	When the clutch pedal is operated, does the stroke sensor output value displayed on the screen change in accordance with the clutch pedal?	Go to step **11**.	Go to step **3**.
3	**CHECK HARNESS.** 1) Turn the ignition switch to OFF. 2) Disconnect the connector from clutch stroke sensor. 3) Turn the ignition switch to ON. 4) Measure the voltage between clutch stroke sensor connector terminals. ***Connector & terminal*** ***(B501) No. 3 (+) — (B501) No. 5 (–):***	Is the voltage 5 V or more?	Go to step **7**.	Go to step **4**.
4	**CHECK HARNESS.** 1) Turn the ignition switch to OFF. 2) Disconnect the connector from VDCCM. 3) Measure the resistance of harness between clutch stroke sensor and VDCCM connector. ***Connector & terminal*** ***(B501) No. 3 — (B310) No. 2:*** ***(B501) No. 5 — (B310) No. 23:***	Is the resistance less than 1 Ω?	Go to step **5**.	Repair the harness and connector between clutch stroke sensor and VDCCM connector.
5	**CHECK HARNESS.** Measure the resistance of harness between clutch stroke sensor and chassis ground. ***Connector & terminal*** ***(B501) No. 3 — Chassis ground:*** ***(B501) No. 5 — Chassis ground:***	Is the resistance 1 MΩ or more?	Go to step **6**.	Repair the ground short of harness between clutch stroke sensor and VDCCM connector.
6	**CHECK HARNESS.** Measure the voltage between clutch stroke sensor and chassis ground. ***Connector & terminal*** ***(B501) No. 3 (+) — Chassis ground (–):*** ***(B501) No. 5 (+) — Chassis ground (–):***	Is the voltage less than 1 V?	Check DTC of VDC. <Ref. to VDC(diag)-23, Read Diagnostic Trouble Code (DTC).>	Repair short to power supply of harness between clutch stroke sensor and VDCCM connector.
7	**CHECK HARNESS.** 1) Disconnect the connectors from the electronic parking brake CM. 2) Measure the resistance of harness between clutch stroke sensor and electronic parking brake CM connector. ***Connector & terminal*** ***(B501) No. 4 — (B355) No. 12:***	Is the resistance less than 1 Ω?	Go to step **8**.	Repair the harness and connector between clutch stroke sensor and electronic parking brake CM connector.

GETtheMANUALS.org

Step		Check	Yes	No
8	**CHECK HARNESS.** Measure the resistance of harness between clutch stroke sensor and chassis ground. ***Connector & terminal*** ***(B501) No. 4 — Chassis ground:***	Is the resistance 1 MΩ or more?	Go to step **9**.	Repair ground short of harness between clutch stroke sensor and electronic parking brake CM connector.
9	**CHECK HARNESS.** Measure the voltage between clutch stroke sensor and chassis ground. ***Connector & terminal*** ***(B501) No. 4 (+) — Chassis ground (–):***	Is the voltage less than 1 V?	Go to step **10**.	Repair short to power supply of harness between clutch stroke sensor and electronic parking brake CM connector.
10	**CHECK CLUTCH STROKE SENSOR OUTPUT.** 1) Connect all connectors. 2) Turn the ignition switch to ON. 3) Using an oscilloscope, check clutch stroke sensor output. ***Connector & terminal*** ***(B501) No. 4 (+) — Chassis ground (–):***	Is there any output?	Go to step **11**.	Replace the clutch master cylinder. <Ref. to CL-20, Master Cylinder.>
11	**CHECK ELECTRONIC PARKING BRAKE CM.** 1) Connect all connectors. 2) Clear the memory. <Ref. to PB(diag)-25, Clear Memory Mode.> 3) Perform the Inspection Mode. <Ref. to PB(diag)-24, Inspection Mode.> 4) Read the DTC.	Is the same DTC displayed?	Replace the electronic parking brake CM. <Ref. to PB-6, Parking Brake Actuator.>	Go to step **12**.
12	**CHECK OTHER DTC DETECTION.**	Is any other DTC displayed?	Perform the diagnosis according to DTC.	It results from a temporary poor contact interference.

GETtheMANUALS.org

Y: DTC C0275 LONGITUDINAL G SENSOR CIRCUIT

DTC DETECTING CONDITION:
- Defective longitudinal G sensor
- Defective harness connector

TROUBLE SYMPTOM:
- Electronic parking brake warning light illuminates. (C6 model)
- Brake warning light blinks. (Models other than C6 model)
- Hill hold function and accelerator interlocking release function do not operate.

Step		Check	Yes	No
1	**CHECK INSTALLATION OF VDCCM&H/U.**	Is VDCCM&H/U installed properly without being tilted? Is the bracket deformation-free? Are the VDCCM&H/U installation bolts installed without missing or getting loose?	Go to step **2**.	Repair the fault location. Go to step **2**. • Install VDCCM&H/U properly. • Replace the bracket if faulty. • Tighten the VDCCM&H/U installation bolt. <Ref. to VDC-5, VDC CONTROL MODULE & HYDRAULIC CONTROL UNIT (VDCCM&H/U), COMPONENT, General Description.>
2	**CHECK OUTPUT OF LONGITUDINAL G SENSOR USING SUBARU SELECT MONITOR.** 1) Park the vehicle on a level surface. 2) Connect Subaru Select Monitor, and select "VDC" and then "Current Data Display & Save". <Ref. to VDC(diag)-17, READ CURRENT DATA, OPERATION, Subaru Select Monitor.> 3) Read the «Fr Rr G sensor Output» displayed on display.	Is the indicated reading of the longitudinal G sensor on the monitor display –2 — 2 m/s^2?	Go to step **3**.	Recheck from step 1, and if the problem is not solved, go to next. Go to step **6**.
3	**SET 0 POINT FOR LONGITUDINAL G SENSOR USING SUBARU SELECT MONITOR.** 1) Select "VDC", and then "Function Check Sequence". 2) Perform the "Longitudinal G sensor & lateral G sensor 0 point setting mode". <Ref. to VDC-16, LONGITUDINAL G SENSOR & LATERAL G SENSOR 0 POINT SETTING MODE, ADJUSTMENT, VDC Control Module and Hydraulic Control Unit (VDCCM&H/U).>	Is the 0 point setting successful?	Go to step **4**.	Recheck from step 1, and when the 0 point setting is not possible, replace the VDCCM&H/U. <Ref. to VDC-9, VDC Control Module and Hydraulic Control Unit (VDCCM&H/U).>
4	**DRIVING INSPECTION.** Drive the vehicle approximately 10 minutes, and check if the warning lights illuminate/blink or improperly operate during driving. In a safe place, drive the vehicle while alternating acceleration and deceleration as much as possible.	Does the electronic parking brake warning light remain off without blinking? (C6 model) Does the brake warning light remain off? (Models other than C6 model) Does the parking brake operate without malfunction?	Go to step **5**.	Recheck from step 1, and if the warning lights illuminate/blink or there is abnormal operation, replace the electronic parking CM. <Ref. to PB-6, Parking Brake Actuator.>

GETtheMANUALS.org

Step		Check	Yes	No
5	**CHECK OUTPUT OF LONGITUDINAL G SENSOR USING SUBARU SELECT MONITOR.** 1) Park the vehicle on a level surface. 2) Connect Subaru Select Monitor, and select “VDC” and then “Current Data Display & Save”. <Ref. to VDC(diag)-17, READ CURRENT DATA, OPERATION, Subaru Select Monitor.> 3) Read the «Fr Rr G sensor Output» displayed on display.	Is the indicated reading of the longitudinal G sensor on the monitor display –1.5 — 1.5 m/s^2?	It results from a temporary noise interference.	Recheck from step 1, and if the problem is not solved, replace the VDCCM&H/U. <Ref. to VDC-9, VDC Control Module and Hydraulic Control Unit (VDCCM&H/U).>
6	**CHECK OUTPUT OF LONGITUDINAL G SENSOR USING SUBARU SELECT MONITOR.** 1) Remove the VDCCM&H/U installation bolt and bracket. 2) Keep VDCCM&H/U in a horizontal position. 3) Connect Subaru Select Monitor, and select “VDC” and then “Current Data Display & Save”. <Ref. to VDC(diag)-17, READ CURRENT DATA, OPERATION, Subaru Select Monitor.> 4) Read the «Fr Rr G sensor Output» displayed on display.	When the VDCCM&H/U is in a horizontal position, is the indicated reading of the longitudinal G sensor on the monitor display –1.5 — 1.5 m/s^2?	Check the bracket and brake pipe, and install VDCCM&H/U in a horizontal position to the vehicle.	Replace the VDCCM&H/U. <Ref. to VDC-9, VDC Control Module and Hydraulic Control Unit (VDCCM&H/U).>

GETtheMANUALS.org

Z: DTC C0281 MID STOP CONDITION

DTC DETECTING CONDITION:
Actuator stops in the mid-stroke
TROUBLE SYMPTOM:
Brake warning light blinks.

NOTE:
- When the actuator stops in the mid-stroke due to power supply error (ex. voltage drop during cranking) during the operation, this DTC is stored. If the actuator operates normally after operating and then releasing the parking brake again, this is not malfunction.
- When being restored from the mid-stroke stop state, the actuator will have full-stroke once, and therefore, operation time may take approximately 10 seconds.

Step		Check	Yes	No
1	**CHECK ELECTRONIC PARKING BRAKE CM USING SUBARU SELECT MONITOR.** 1) Turn the ignition switch to ON. 2) Release the parking brake. 3) Approximately 10 seconds after releasing the parking brake, clear the memory using the Subaru Select Monitor. <Ref. to PB(diag)-25, Clear Memory Mode.> 4) Read the DTC.	Is DTC displayed?	Perform the diagnosis according to DTC. <Ref. to PB(diag)-35, List of Diagnostic Trouble Code (DTC).>	It results from a temporary voltage drop.

GETtheMANUALS.org

AA:DTC C0282 EMERGENCY CANCEL STATUS

DTC DETECTING CONDITION:
Emergency release (manual release) of the parking brake was performed.
TROUBLE SYMPTOM:
Brake warning light blinks.

NOTE:
• When emergency release of the parking brake is performed, this DTC is stored. If the actuator operates normally after operating and then releasing the parking brake following the emergency release, this is not malfunction. When the actuator operates normally, the brake warning light goes off.
• When being restored from emergency release state, the actuator will have full-stroke once, and therefore, operation time may take approximately 10 seconds.
• When emergency release is performed, check the electronic parking brake control module and brake shoe. For details, refer to the restoring procedures after emergency release. <Ref. to PB-20, INSPECTION, Emergency Release of Electronic Parking Brake.>

Step		Check	Yes	No
1	**INTERVIEW CUSTOMERS.** Ask the user if emergency release was performed.	Was the emergency release performed?	Go to step **2**.	Go to step **3**.
2	**CHECK ELECTRONIC PARKING BRAKE CM.** 1) Turn the ignition switch to ON, and then release the parking brake. 2) After approximately 10 seconds, clear the memory using the Subaru Select Monitor. <Ref. to PB(diag)-25, Clear Memory Mode.> 3) Perform the Inspection Mode. <Ref. to PB(diag)-24, Inspection Mode.> 4) Read the DTC.	Is DTC displayed?	Perform the diagnosis according to DTC. <Ref. to PB(diag)-35, List of Diagnostic Trouble Code (DTC).>	End.
3	**CHECK PARKING BRAKE ASSEMBLY.** Check that the parking brake assembly does not have malfunction. <Ref. to PB-20, INSPECTION, Emergency Release of Electronic Parking Brake.>	Is the parking brake assembly free of malfunction?	Replace the electronic parking brake CM. <Ref. to PB-6, Parking Brake Actuator.>	Repair the parking brake assembly.

GETtheMANUALS.org

13. General Diagnostic Table

A: INSPECTION

Symptoms		Malfunction parts/Condition
• Electronic parking brake warning light illuminates. (C6 model) • Brake warning light blinks. (Models other than C6 model)	Parking brake system does not operate.	• Defective parking brake switch • Defective electronic parking brake control module • Defective power supply/ground for electronic parking brake control module • No CAN signal received from VDC control module • Defective actuator in the electronic parking brake control module • Defective force sensor in the electronic parking brake control module • Defective temperature sensor in the electronic parking brake control module • Defective stroke sensor in the electronic parking brake control module • Defective CAN communication
• Electronic parking brake warning light illuminates. (C6 model) • Brake warning light blinks. (Models other than C6 model)	Hill hold function and accelerator interlocking release function do not operate.	• Defective hill hold switch • Faulty signal received from engine control module • Faulty signal received from transmission control module • Faulty signal received from VDC control module • Defective neutral position switch (MT model only) • Defective back-up light switch (MT model only) • Defective parameter selection for the electronic parking brake control module • No CAN signal received from engine control module • No CAN signal received from transmission control module • No CAN signal received from body integrated unit • Defective clutch stroke sensor (MT model only) • Defective longitudinal G sensor
The brake warning light blinks, and the electronic parking brake warning light (C6 model only) and hill hold indicator light illuminate.	—	No CAN signal from the electronic parking brake control module to combination meter
Only the brake warning light blinks.	—	• Mid-course stop state • Emergency release state • The operation and release of the parking brake was repeated excessively
The brake warning light blinks, and the electronic parking brake warning light (C6 model only) illuminates.	Parking brake system does not operate.	Parking brake shoe clearance too large
When the hill hold function is set to ON, drugging of brake may occur when the vehicle starts to move.	—	Driver's seat belt is not fastened.
Noise emitted from the parking brake cable when applying/releasing the parking brake.	—	Deterioration has occurred inside the cable due to improper assembly of the parking brake cable.

GETtheMANUALS.org

GETtheMANUALS.org

POWER ASSISTED SYSTEM (POWER STEERING)

PS

		Page
1.	General Description	2
2.	Steering Wheel	16
3.	Universal Joint	21
4.	Steering Column	26
5.	Steering Gearbox	35
6.	Pipe Assembly	63
7.	Oil Pump	67
8.	Reservoir Tank	76
9.	Power Steering Fluid	77
10.	General Diagnostic Table	78

GETtheMANUALS.org

1. General Description

A: SPECIFICATION

Model			H4 non-turbo model	H6, H4 turbo model
Whole system	Minimum turning radius m (ft)		5.6 (18.4)	
	Steering angle	Inner wheel	225/50R17 tire: 37.4°±1.5° 225/45R18 tire: 37.4°±1.5° 215/50R17 tire: 37.6°±1.5° 205/60R16 tire: 37.6°±1.5° 225/60R17 tire: 38.4°±1.5° 215/70R16 tire: 38.4°±1.5°	
		Outer wheel	225/50R17 tire: 33.0°±1.5° 225/45R18 tire: 33.0°±1.5° 215/50R17 tire: 33.3°±1.5° 205/60R16 tire: 33.3°±1.5° 225/60R17 tire: 34.1°±1.5° 215/70R16 tire: 34.1°±1.5°	
	Steering wheel diameter mm (in)		375 (14.76)	
	Lock-to-lock revolution number		OUTBACK: 3.2 Except for OUTBACK: 2.8	
Gearbox	Type		Rack and Pinion, Integral	
	Backlash		0 (Automatic adjusting)	
	Valve (Power steering system)		Rotary valve	
Pump (Power steering system)	Type		Vane pump	
	Oil tank		Installed on body	
	Specific output	cm^3 (cu in)/rev.	8.5 (0.519)	8.5 (0.519)
	Relief pressure	kPa (kgf/cm^2, psi)	8,300 — 9,000 (85 — 92, 1,203 — 1,305)	8,900 — 9,600 (91 — 98, 1,290 — 1,392)
	Hydraulic fluid control		Engine speed sensitive	
	Hydraulic fluid	ℓ (US qt, Imp qt)	1,000 rpm: 6.5 (6.9, 5.7) 3,000 rpm: 5.3 (5.6, 4.7)	1,000 rpm: 6.8 (7.2, 6) 3,000 rpm: 5.8 (6.1, 5.1)
	RPM range	rpm	500 — 9,600	670 — 9,869
	Direction of rotation		Clockwise	
Hydraulic oil (Power steering system)	Capacity ℓ (US qt, Imp qt)	Oil tank	0.2 (0.2, 0.2)	
		Whole system	0.7 (0.7, 0.6)	

Steering wheel	Free play mm (in)	17 (0.67)
Steering shaft	Clearance between the steering wheel and column cover mm (in)	2 — 4 (0.08 — 0.16)

GETtheMANUALS.org

Steering gearbox (Power steering system)	Sliding resistance		N (kgf, lbf)	650 (66.2, 146) or less Difference between right and left sliding resistance: 20%
	Rack shaft play in the radial direction	Right-turn steering	mm (in)	Horizontal play: 0.6 (0.024) or less Vertical play: 0.4 (0.016) or less
		Left-turn steering	mm (in)	0.4 (0.016) or less
	Input shaft play	In radial direction	mm (in)	0.18 (0.0071) or less
		In axial direction	mm (in)	0.27 (0.0106) or less
	Rotational resistance		N (kgf, lbf)	Maximum allowable value: 30 (3.1, 6.7) or less Difference between right and left sliding resistance: 20%
Oil pump (Power steering system)	Pulley shaft	Radial play	mm (in)	0.2 (0.008) or less
		Axial play	mm (in)	0.9 (0.035) or less
	Pulley	Ditch deflection	mm (in)	1.0 (0.039) or less
		Rotational resistance	N (kgf, lbf)	9.22 (0.94, 2.07) or less
	Regular pressure (Unloaded)		kPa (kgf/cm^2, psi)	981 (10, 142) or less
Steering wheel effort (Power steering system)	At standstill with engine idling on paved road		N (kgf, lbf)	29.4 (3.0, 6.6) or less
	At standstill with engine stalled on paved road		N (kgf, lbf)	294.2 (30, 66.2) or less

Recommended power steering fluid	SUBARU ATF or DEXRON III

GETtheMANUALS.org

B: COMPONENT

1. STEERING WHEEL AND COLUMN

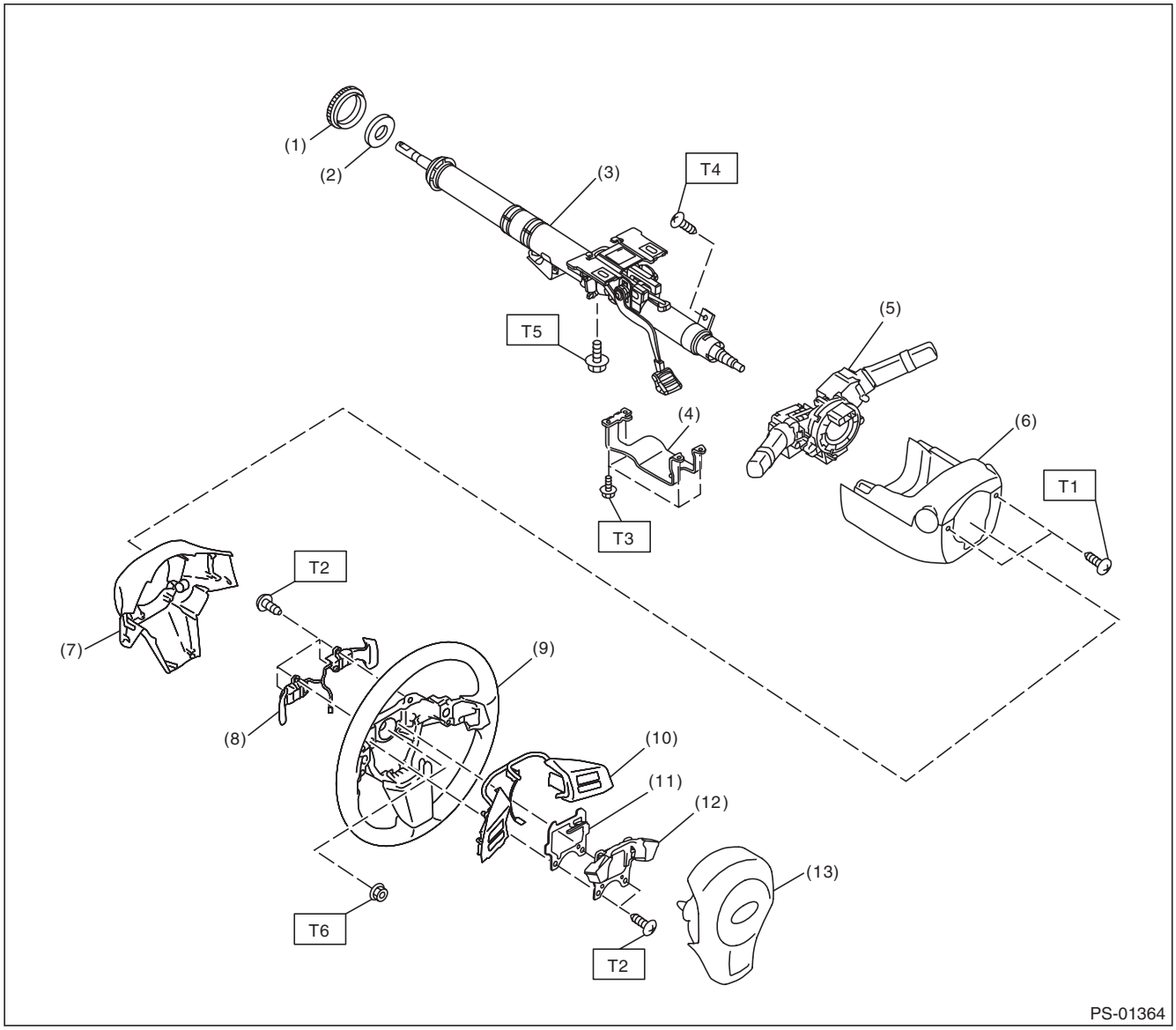

(1)	Bushing	(8)	Paddle shift
(2)	Insulator (CVT model)	(9)	Steering wheel
(3)	Steering shaft	(10)	Switch
(4)	Knee protector	(11)	Protector
(5)	Steering roll connector	(12)	Dynamic damper
(6)	Column cover	(13)	Airbag module
(7)	Steering wheel lower cover		

Tightening torque:N·m (kgf-m, ft-lb)

T1: 1.2 (0.12, 0.9)
T2: 1.7 (0.17, 1.3)
T3: 3.4 (0.35, 2.5)
T4: 3.5 (0.36, 2.6)
T5: 20 (2.04, 14.8)
T6: 39 (3.98, 28.8)

GETtheMANUALS.org

2. HOSE AND TANK

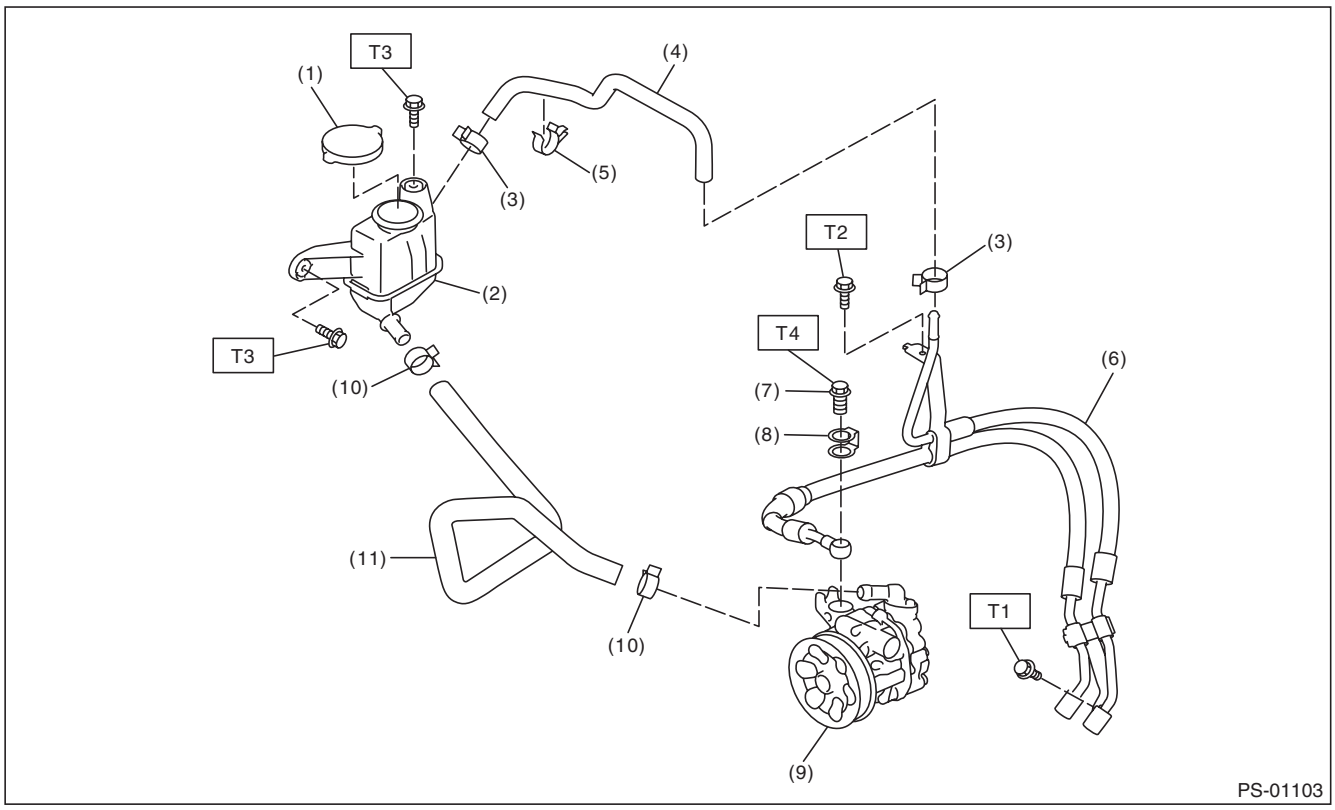

(1)	Cap	(7)	Eye bolt	***Tightening torque:N·m (kgf-m, ft-lb)***
(2)	Reservoir tank	(8)	Eye bolt gasket	***T1: 7.5 (0.76, 5.5)***
(3)	Clip	(9)	Oil pump	***T2: 10 (1.02, 7.4)***
(4)	Return hose	(10)	Clip	***T3: 13 (1.33, 9.6)***
(5)	Clip	(11)	Suction hose	***T4: 40 (4.08, 29.5)***
(6)	Hose ASSY			

GETtheMANUALS.org

3. STEERING GEARBOX

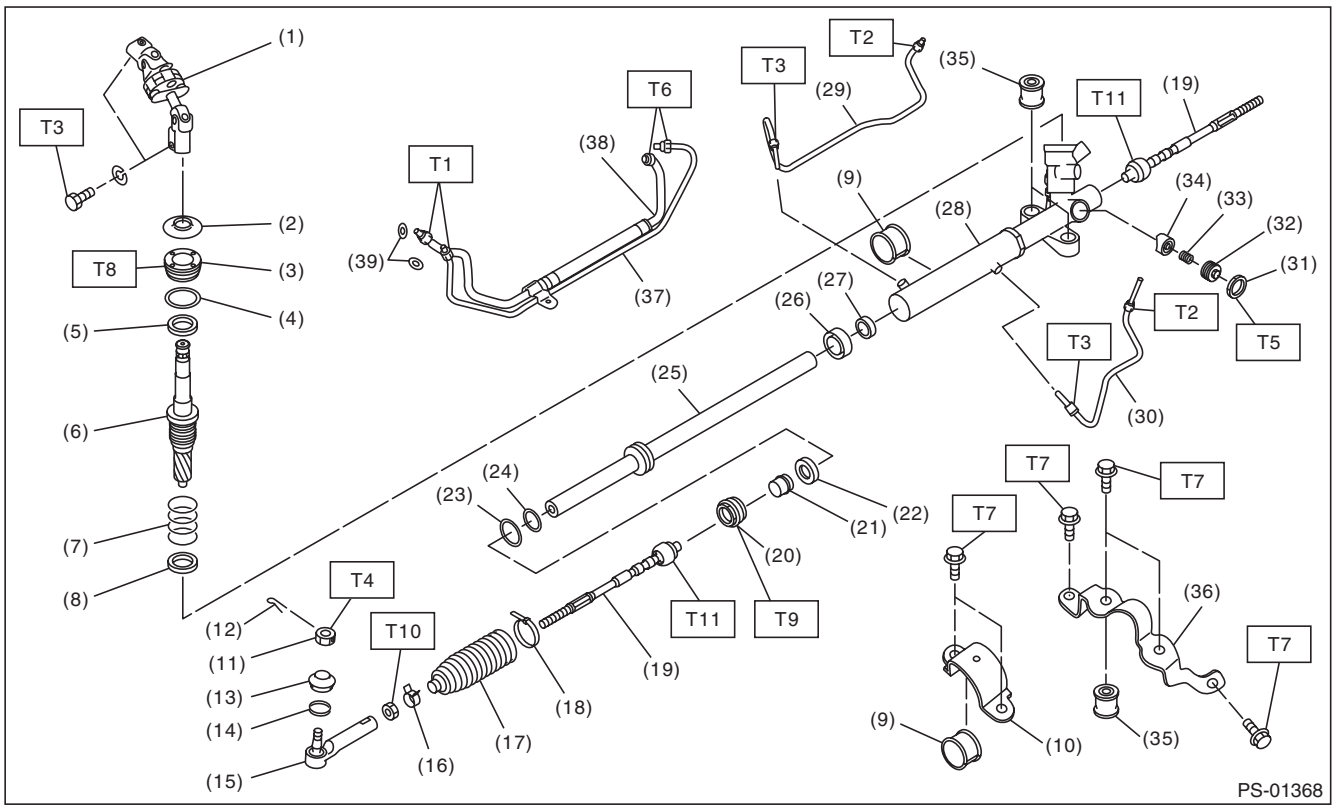

(1)	Universal joint	(19)	Tie-rod	(37)	Feed pipe
(2)	Dust cover	(20)	Holder	(38)	Return pipe
(3)	Plug	(21)	Bushing	(39)	O-ring
(4)	O-ring	(22)	Oil seal		
(5)	Oil seal	(23)	Seal ring		
(6)	Control valve	(24)	O-ring		
(7)	Seal ring	(25)	Rack		
(8)	Oil seal	(26)	Oil seal		
(9)	Adapter	(27)	Back-up ring		
(10)	Clamp	(28)	Steering body		
(11)	Castle nut	(29)	Pipe A		
(12)	Cotter pin	(30)	Pipe B		
(13)	Dust seal	(31)	Lock nut		
(14)	Clip	(32)	Adjusting screw		
(15)	Tie-rod end	(33)	Spring		
(16)	Clip	(34)	Sleeve		
(17)	Boot	(35)	Bushing		
(18)	Band	(36)	Stiffener		

Tightening torque:N·m (kgf-m, ft-lb)	
T1:	***15 (1.53, 11.1)***
T2:	***20 (2.04, 14.8)***
T3:	***24 (2.45, 17.7)***
T4:	***27 (2.75, 19.9)***
T5:	***39 (3.98, 28.8)***
T6:	***45 (4.59, 33.2)***
T7:	***60 (6.12, 44.3)***
T8:	***64 (6.53, 47.2)***
T9:	***75 (7.65, 55.3)***
T10:	***85 (8.67, 62.7)***
T11:	***90 (9.18, 66.4)***

GETtheMANUALS.org

4. OIL PUMP

- H4 non-turbo model

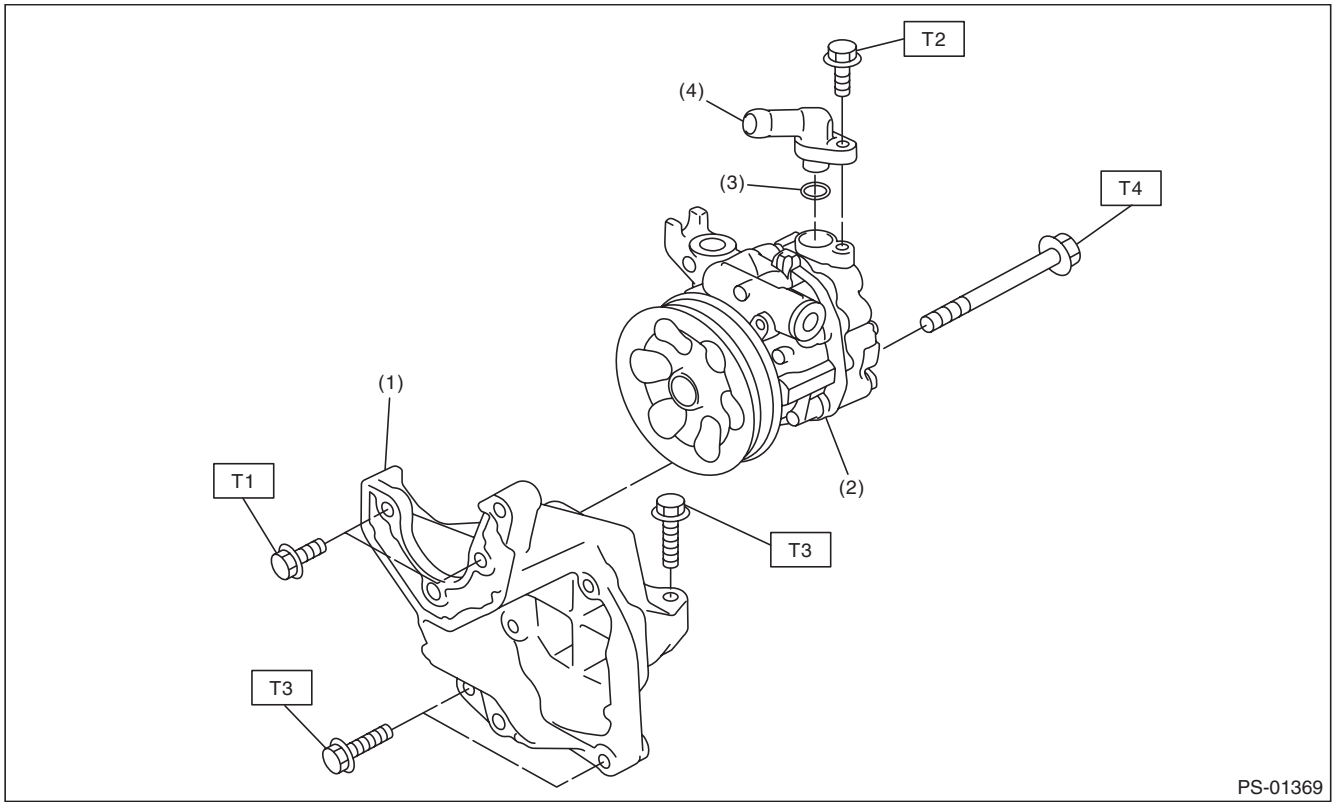

(1) Bracket
(2) Oil pump
(3) O-ring
(4) Joint

Tightening torque:N·m (kgf-m, ft-lb)
T1: 16 (1.63, 11.8)
T2: 21 (2.14, 15.5)
T3: 22 (2.24, 16.2)
T4: 36 (3.67, 26.6)

GETtheMANUALS.org

- H4 turbo model

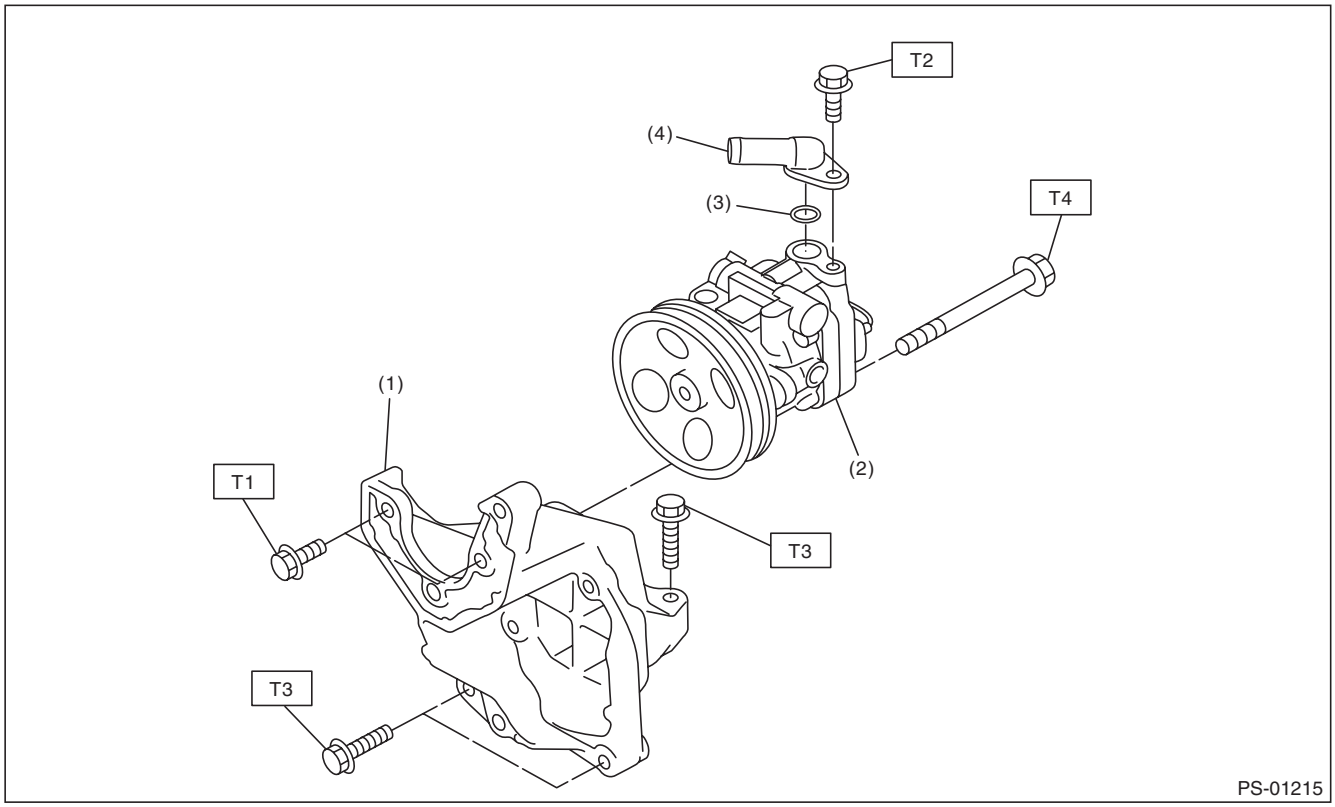

(1) Bracket
(2) Oil pump
(3) O-ring
(4) Joint

Tightening torque:N·m (kgf-m, ft-lb)
T1: 16 (1.63, 11.8)
T2: 21 (2.14, 15.5)
T3: 22 (2.24, 15.9)
T4: 36 (3.67, 26.6)

GETtheMANUALS.org

- H6 model

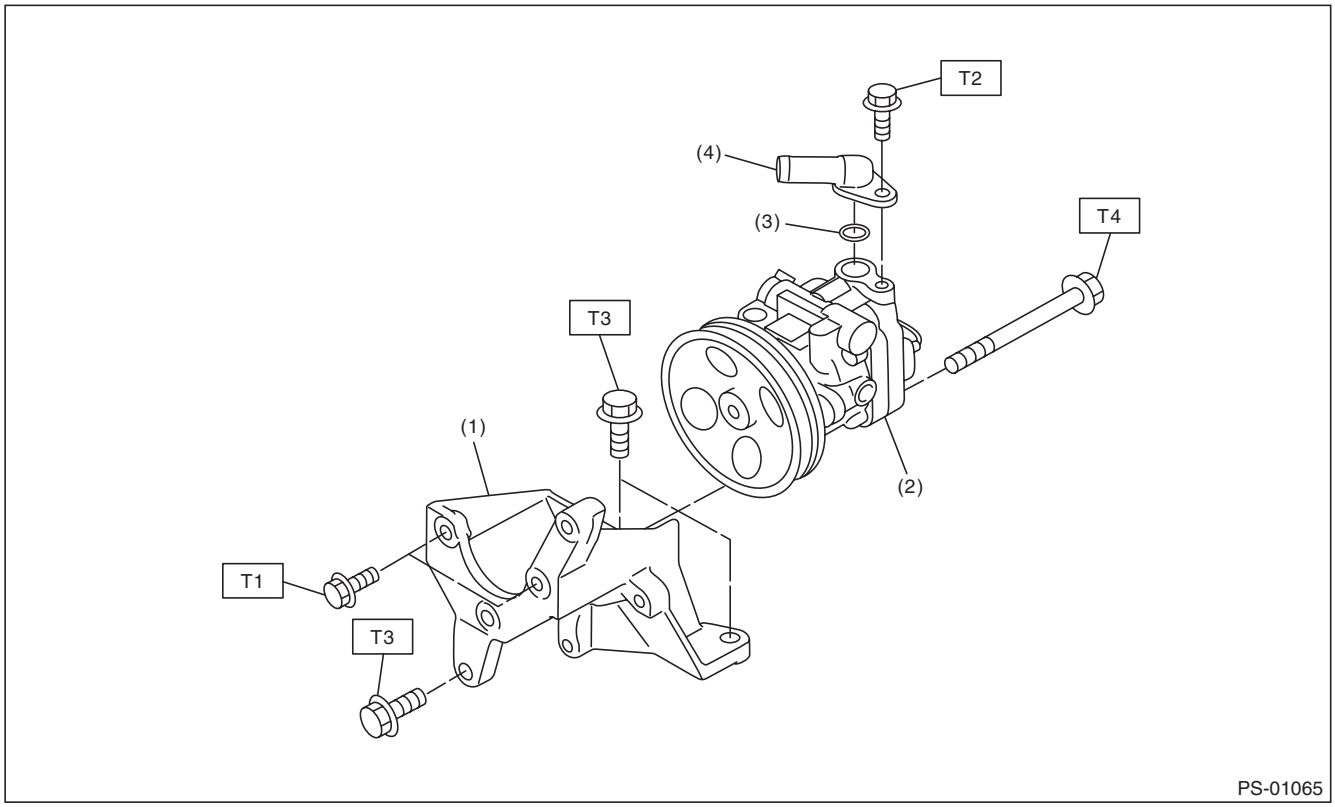

(1) Bracket
(2) Oil pump
(3) O-ring
(4) Joint

Tightening torque:N·m (kgf-m, ft-lb)
T1: 16 (1.63, 11.8)
T2: 21 (2.14, 15.5)
T3: 33 (3.36, 24.3)
T4: 36 (3.67, 26.6)

C: CAUTION

- Wear appropriate work clothing, including a helmet, protective goggles and protective shoes when performing any work.
- Before removal, installation or disassembly, be sure to clarify the failure. Avoid unnecessary removal, installation, disassembly and replacement.
- Vehicle components are extremely hot after driving. Be wary of receiving burns from heated parts.
- Use grease and oil of Subaru genuine or the equivalent products. Do not mix them of different grades or manufacturers.
- Be sure to tighten fasteners including bolts and nuts to the specified torque.
- Place shop jacks or rigid racks at the specified points.
- Before securing a part on a vise, place cushioning material such as wooden blocks, aluminum plate or cloth between the part and the vise.

GETtheMANUALS.org

D: PREPARATION TOOL

1. SPECIAL TOOL

ILLUSTRATION	TOOL NUMBER	DESCRIPTION	REMARKS
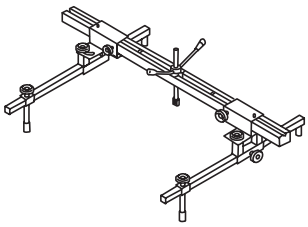 ST99099AJ000	99099AJ000	ENGINE HANGER	• Used for hanging power unit. • Used together with CHAIN BALANCER (99099AJ010).
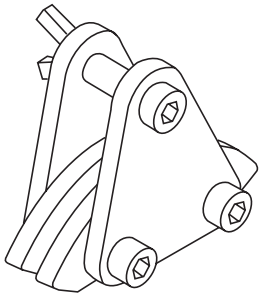 ST99099AJ010	99099AJ010	CHAIN BALANCER	• Used for hanging power unit. • Used together with ENGINE HANGER (99099AJ000).
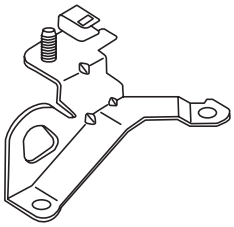 ST10004AA180	10004AA180 (SUBARU genuine part)	HANGER CP ENGINE RR	• Used for hanging power unit. • For H4 non-turbo model. • SUBARU genuine part
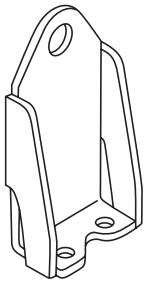 ST18360AA020	18360AA020	HANGER	• Used for hanging power unit. • For H6 model.

GETtheMANUALS.org

ILLUSTRATION	TOOL NUMBER	DESCRIPTION	REMARKS
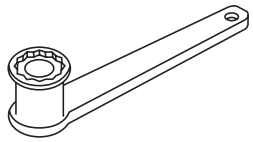 ST34199AJ060	34199AJ060	SPECIAL TOOL CPS	Used for adjusting the backlash of gearbox. (Lock nut side)
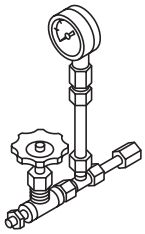 ST-925711000	925711000	PRESSURE GAUGE	Used for measuring oil pressure.
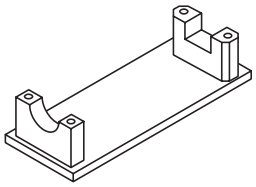 ST-926200000	926200000	STAND	• Used when inspecting characteristic of gear-box assembly and disassembling it. • Used together with BOSS D (34199AG000).
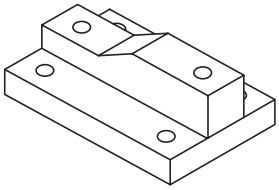 ST34199AG000	34199AG000	BOSS D	• Used when inspecting characteristic of gear-box assembly and disassembling it. • Used together with STAND (926200000).
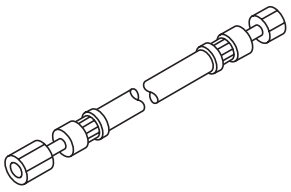 ST34099AC010	34099AC010	ADAPTER HOSE A	Used together with PRESSURE GAUGE (925711000).

GETtheMANUALS.org

ILLUSTRATION	TOOL NUMBER	DESCRIPTION	REMARKS
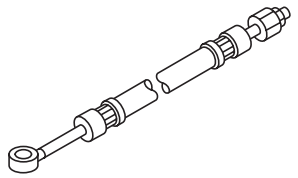 ST34099AC020	34099AC020	ADAPTER HOSE B	Used together with PRESSURE GAUGE (925711000).
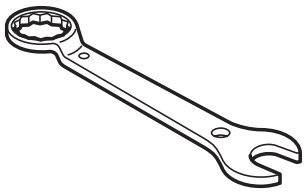 ST34099PA100	34099PA100	SPANNER	Used when measuring the rotational resistance of gearbox assembly.
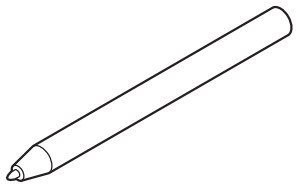 ST34099FA060	34099FA060	PUNCH HOLDER	Used for crimping.
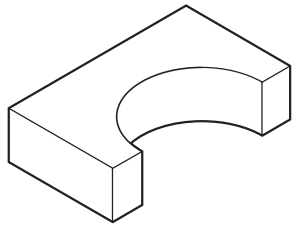 ST34199FE020	34199FE020	BASE	Used for crimping.
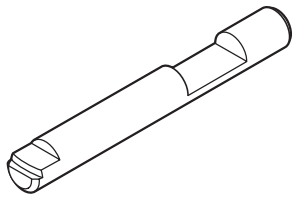 ST34099FA080	34099FA080	PUNCH	Used for removing crimps.

GETtheMANUALS.org

ILLUSTRATION	TOOL NUMBER	DESCRIPTION	REMARKS
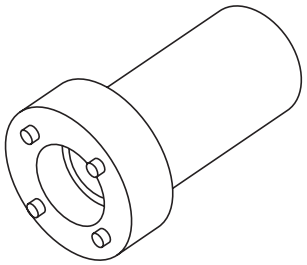 ST34199AE090	34199AE090	PLUG WRENCH	Used for removing the plug.
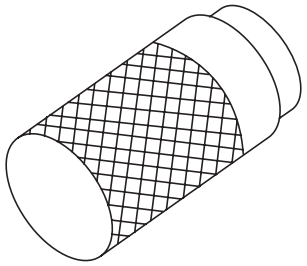 ST34199AE100	34199AE100	OIL SEAL PLUG REMOVER	Used for removing the oil seal plug.
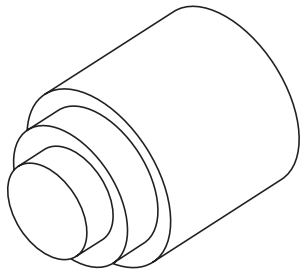 ST34199AE110	34199AE110	OIL SEAL PLUG INSTALLER	Used for installing the oil seal plug.
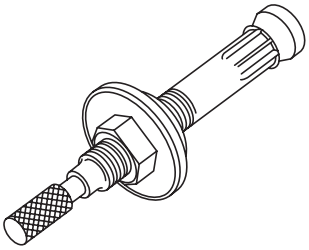 ST34199AE120	34199AE120	GEARBOX OIL SEAL REMOVER	Used for removing the gearbox oil seal.
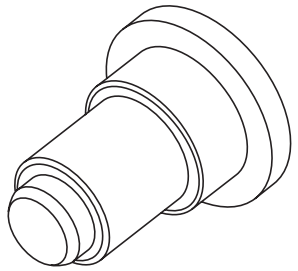 ST34199AE130	34199AE130	GEARBOX OIL SEAL INSTALLER	Used for installing the gearbox oil seal.

GETtheMANUALS.org

ILLUSTRATION	TOOL NUMBER	DESCRIPTION	REMARKS
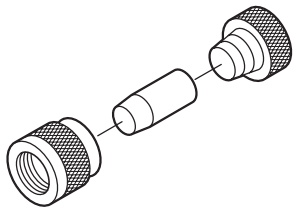 ST34199FE040	34199FE040	INSTALLER A, B, C	• Used for installing the oil seal to the rack assembly. • INSTALLER A: 34199FE070 • INSTALLER B: 34199FE080 • INSTALLER C: 34199FE090
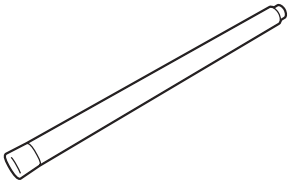 ST34199FE010	34199FE010	REMOVER	Used for removing the back-up ring and oil seal.
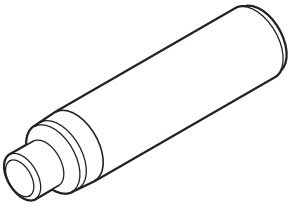 ST34199FE000	34199FE000	INSTALLER & REMOVER	Used for removing and installing the rack oil seal (outer and inner).
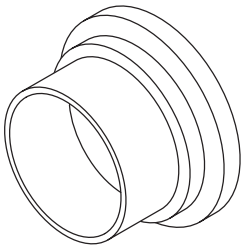 ST34199FE050	34199FE050	GUIDE	Used for installing the rack and seal into housing assembly.
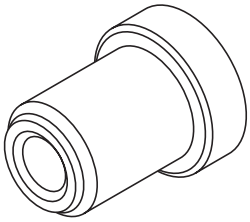 ST34199FE060	34199FE060	INSTALLER	Used for installing the rack oil seal (outer).

GETtheMANUALS.org

2. GENERAL TOOL

TOOL NAME	REMARKS
Chain sling	• Used for hanging power unit. • Diameter: 6 mm (0.24 in) or 6.3 mm (0.25 in) • Length: 0.8 — 1 m (2.6 — 3.3 ft) • Chain inner width: 8.5 mm (0.33 in) or more • Chain external width: 23.5 mm (0.93 in) or less • Load capacity: 1.2 t (2646 lb) or more
Shackle	• Two units used for hanging power unit. • Attached to both end of chain sling and connected to engine hook. • Load capacity: 250 kg (551 lb) or more
Sling belt	• Used to remove and install the cradle. • Width: 35 — 40 mm (1.38 — 1.57 in) • Length: 2 m (6.6 ft) • Load capacity: 1 t (2205 lb) or more
Shackle	• Used to remove and install the cradle. • Load capacity: 500 kg (1103 lb) or more
Steering wheel puller	Used for removing the steering wheel.

GETtheMANUALS.org

2. Steering Wheel

A: REMOVAL

1) Disconnect the negative terminal from the battery, and wait for 60 seconds or more.
2) Set the tire to the straight-ahead position.
3) Remove the driver's airbag module assembly.
   (1) Push in the snap pin using a hexagon wrench or equivalent wrapped with a protective tape to disengage the locks (3 locations).

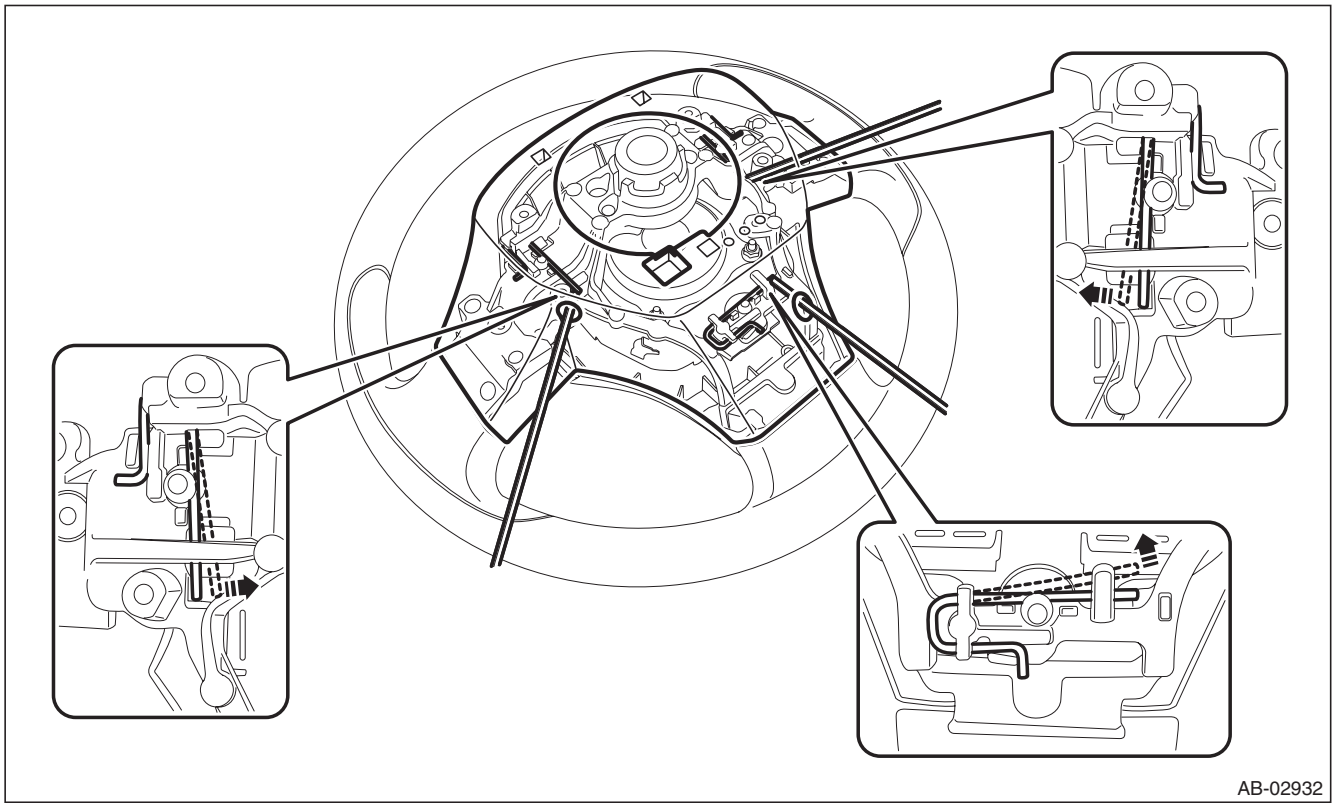

   (2) Disconnect the horn harness and airbag connector and remove the airbag module assembly. <Ref. to AB-21, DRIVER'S AIRBAG MODULE, CURTAIN AIRBAG MODULE & PRETENSIONER, PROCEDURE, Airbag Connector.>

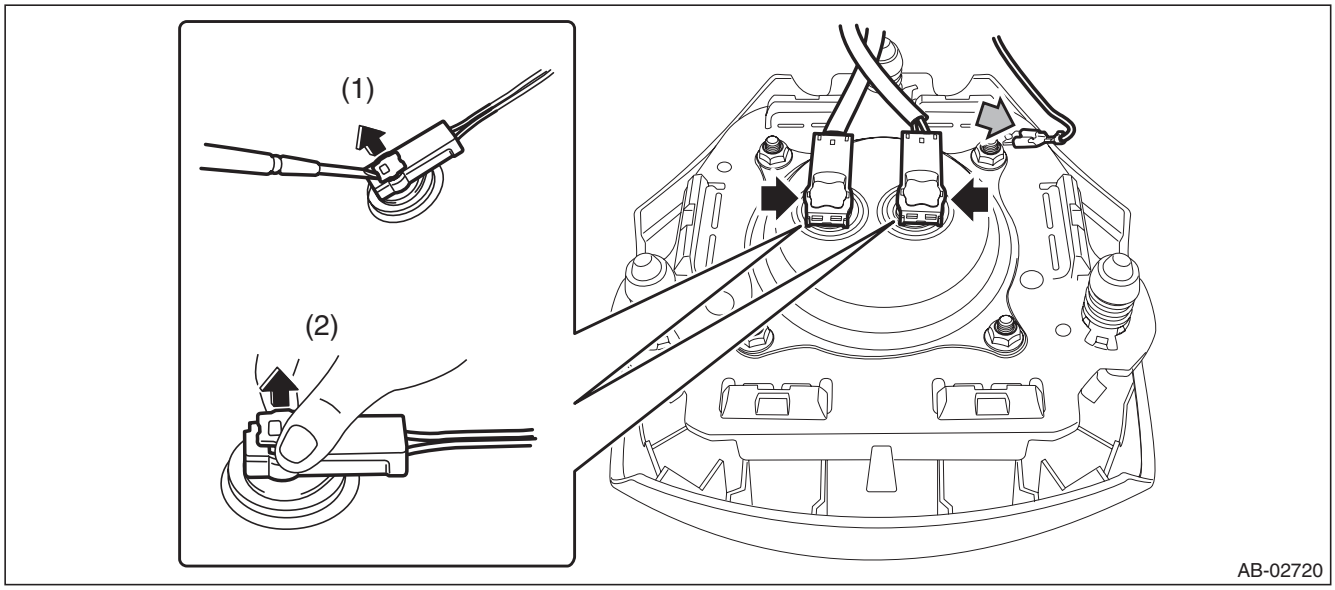

GETtheMANUALS.org

4) Remove the steering wheel.

CAUTION:
- **Always use the steering wheel puller for removal to avoid deforming the steering wheel.**
- **If the steering wheel has been removed, make sure that the roll connector is not turned from the original position.**

(1) Disconnect the connector and remove the nut.
(2) Put alignment marks and remove the steering wheel.

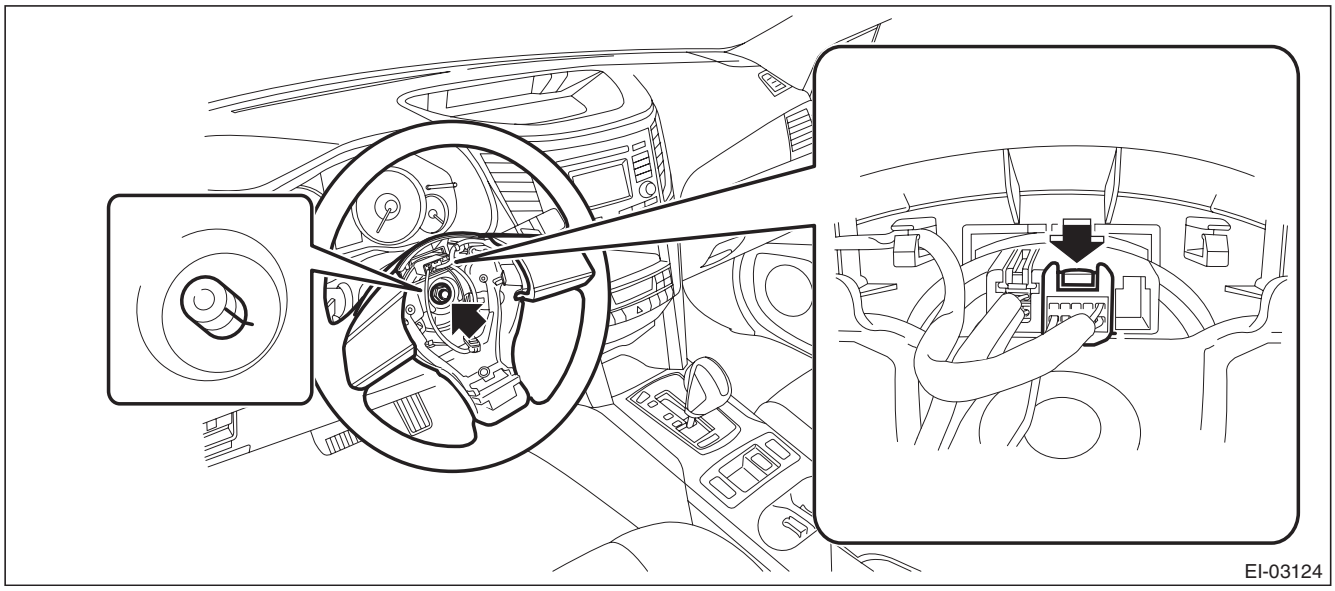

GETtheMANUALS.org

B: INSTALLATION

WARNING:
Always refer to "Airbag System" before performing service on the airbag modules. <Ref. to AB-9, CAUTION, General Description.>

1) Align the center position of the roll connector. <Ref. to AB-101, ADJUSTMENT, Roll Connector.>
2) Install each part in the reverse order of removal.

NOTE:
Align the alignment marks on the steering wheel and steering shaft.

Tightening torque:
Steering wheel: 39 N·m (4.0 kgf-m, 28.8 ft-lb)

Clearance:
Column cover to steering wheel: 2 — 4 mm (0.08 — 0.16 in)

C: DISASSEMBLY

1) Remove the screw, disconnect the connector and remove the paddle shift switch. (Model with paddle shift)

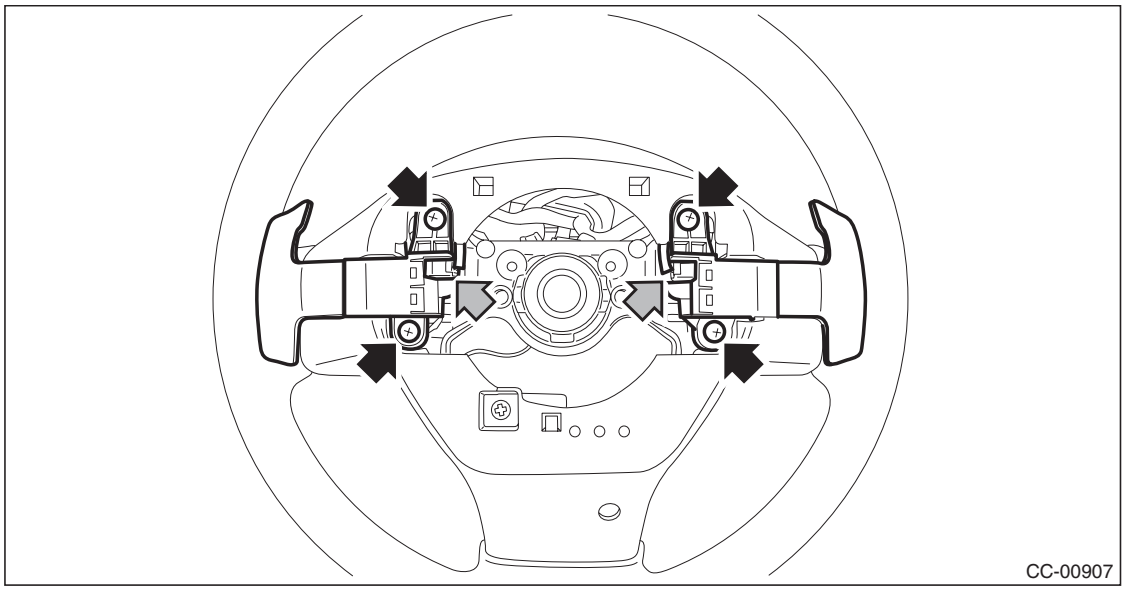

2) Disconnect the claws and then remove the lower cover.

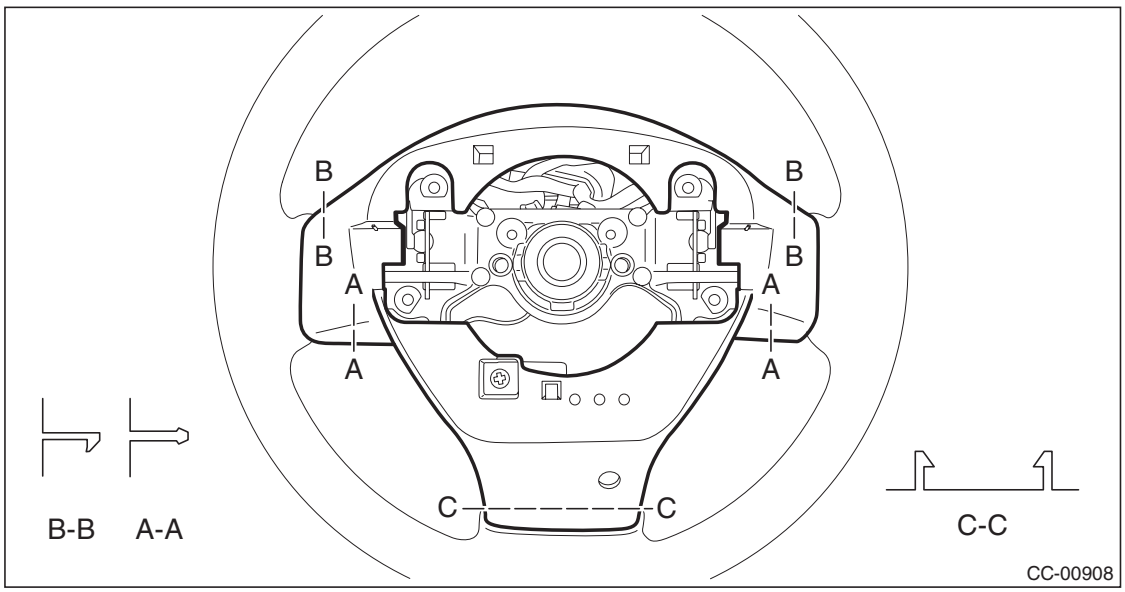

GETtheMANUALS.org

3) Remove the screw to remove the cruise control command switch assembly.

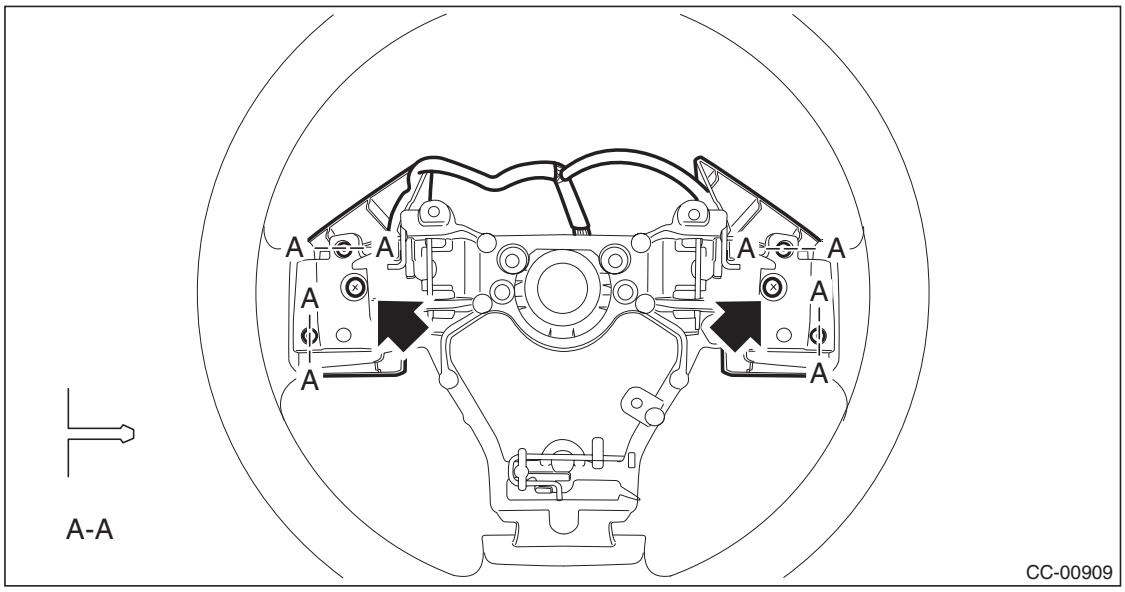

D: ASSEMBLY

Assemble each part in the reverse order of disassembly.

Tightening torque:

Paddle shift: 1.7 N·m (0.17 kgf-m, 1.3 ft-lb)

GETtheMANUALS.org

E: INSPECTION

Check the resistance of paddle switch.

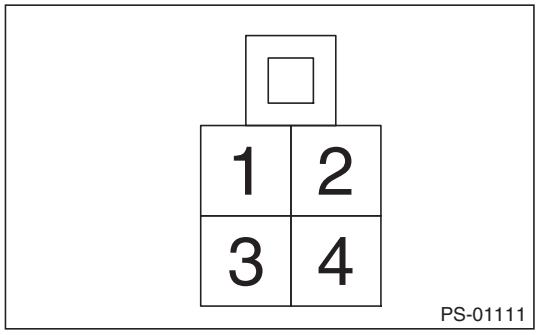

Step		Check	Yes	No
1	**SHIFT-UP SWITCH CONTINUITY CHECK.** 1) Operate the + side of paddle shift assembly and hold it. 2) Measure the resistance between terminals of the paddle shift assembly connector. ***Terminals*** ***No. 2 — No. 4:***	Is the resistance less than 10 Ω?	Go to step **2**.	Replace the paddle shift assembly.
2	**SHIFT-DOWN SWITCH CONTINUITY CHECK.** 1) Operate the – side of paddle shift assembly and hold it. 2) Measure the resistance between terminals of the paddle shift assembly connector. ***Terminals*** ***No. 2 — No. 3:***	Is the resistance less than 10 Ω?	Go to step **3**.	Replace the paddle shift assembly.
3	**CHECK SHIFT SWITCH INSULATION.** 1) Do not operate the paddle shift assembly. 2) Measure the resistance between terminals of the paddle shift assembly connector. ***Terminals*** ***No. 2 — No. 4:*** ***No. 2 — No. 3:***	Is the resistance 1 MΩ or more?	Paddle shift assembly is normal.	Replace the paddle shift assembly.

Replace the paddle switch if the inspection result is not within the standard value.

GETtheMANUALS.org

3. Universal Joint

A: REMOVAL

1) Adjust the tilt position of the steering column to the lowest position and lock the tilt lever.

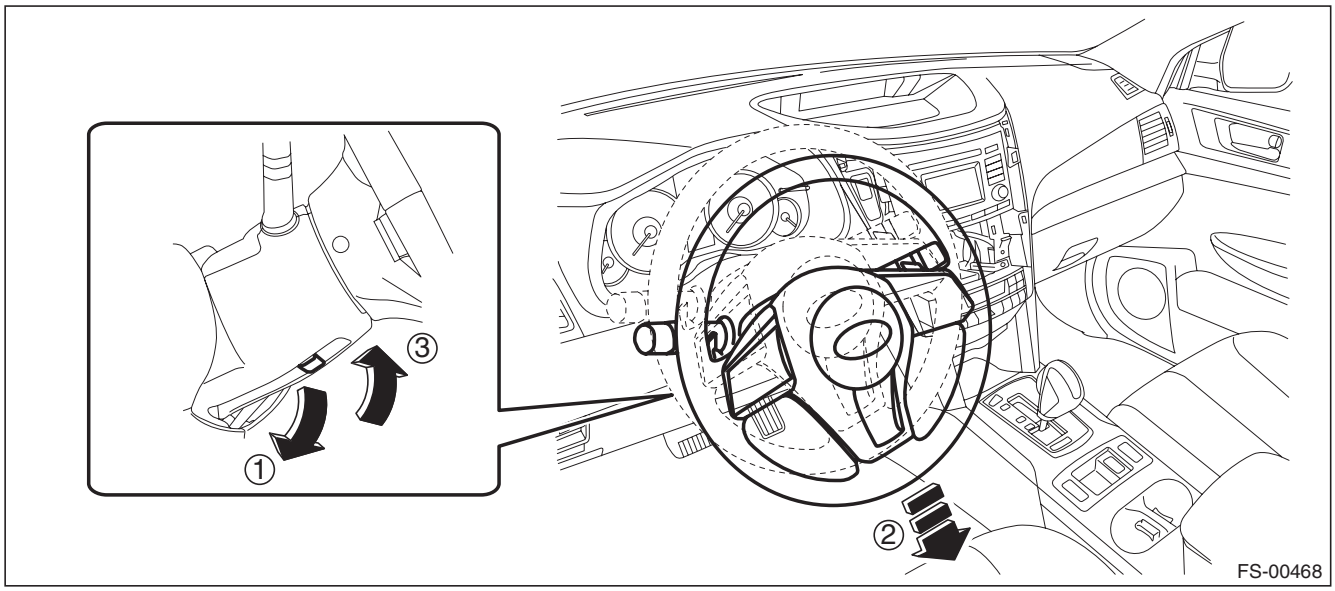

2) Prevent the steering wheel from turning using the seat belt.

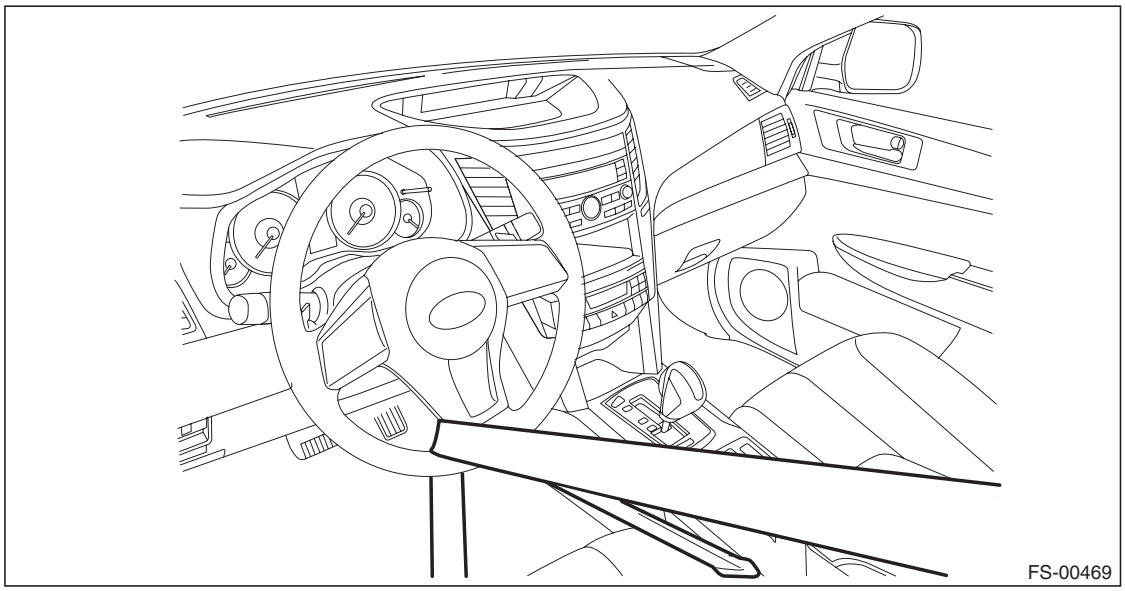

3) Remove the universal joint.
   (1) Place alignment marks on universal joint.

GETtheMANUALS.org

(2) Remove the universal joint bolt and remove the universal joint.

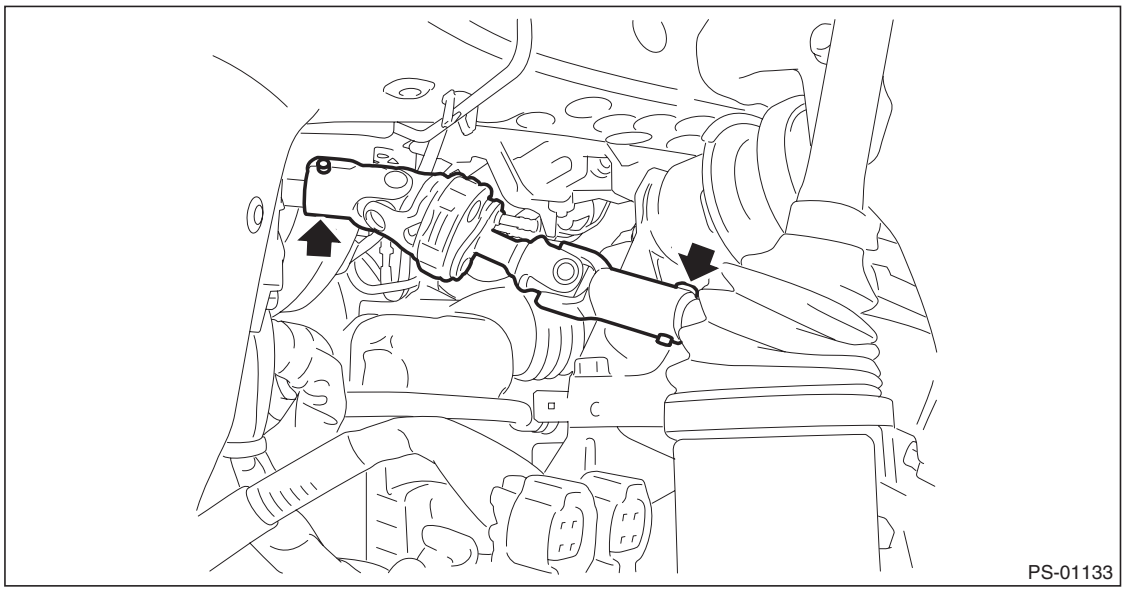

B: INSTALLATION

1) Before installation, check the universal joint. <Ref. to PS-23, INSPECTION, Universal Joint.>
2) Adjust the tilt position of the steering column to the lowest position and lock the tilt lever.

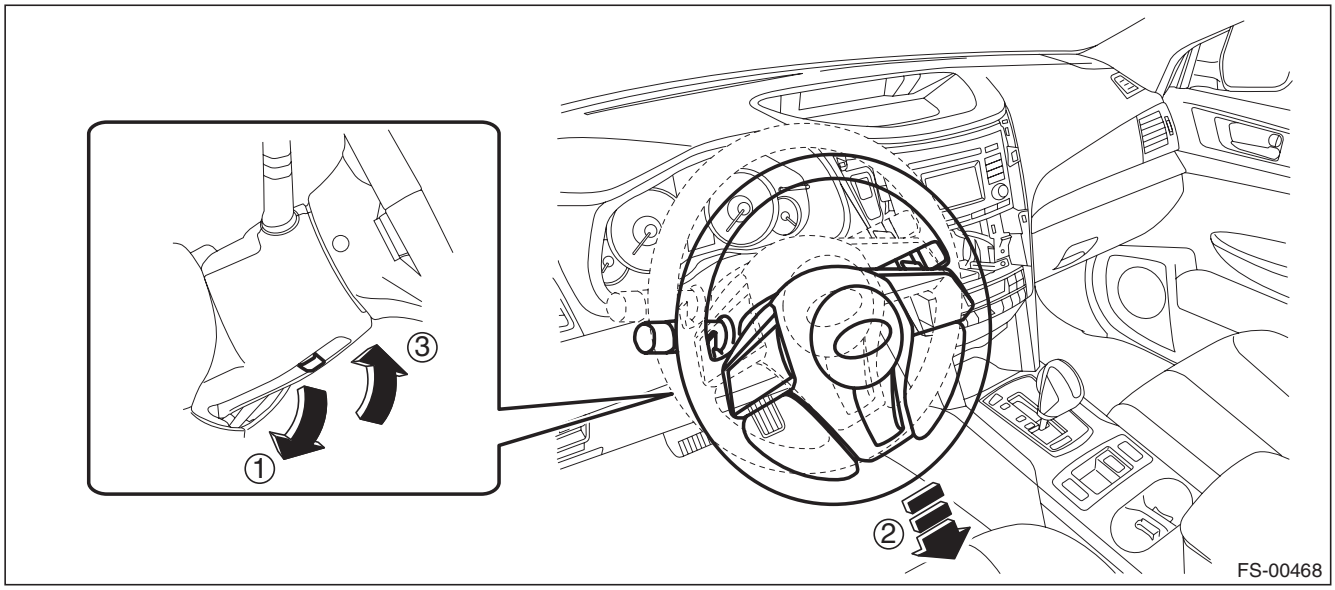

3) Align the cutout portion (a) at serrated section of the column shaft (c) and yoke (b), then install the universal joint into column shaft.

GETtheMANUALS.org

CAUTION:
Be sure to align the protrusion section (a) of the column shaft side with the cutout (a) of the serration. If the protrusion is aligned with the other cutout (d), the universal joint bolt cannot be assembled.

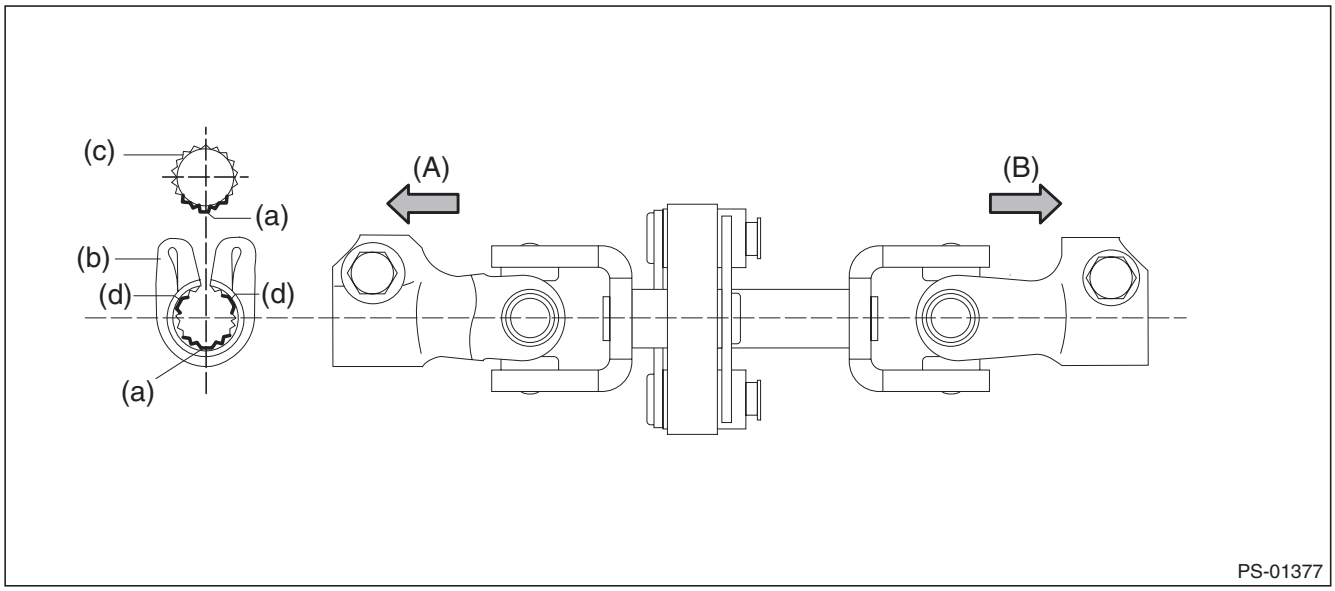

(A) Column shaft side (B) Gearbox side

4) Install the universal joint to the serrations of gearbox assembly by matching alignment marks.
5) Tighten the bolts on the gearbox side first, and then the column shaft side.

CAUTION:
Be sure to follow the tightening order and tightening torque of universal joint to avoid the steering effort from becoming heavy.

Tightening torque:
24 N·m (2.45 kgf-m, 17.7 ft-lb)

Clearance between universal joint coupling and adjacent parts:
15 mm (0.59 in) or more

C: INSPECTION

Check for wear, damage or any other faults.
1) Check the universal joint for excessive looseness.

GETtheMANUALS.org

Service limit:
Universal joint play: 0 mm (0 in)

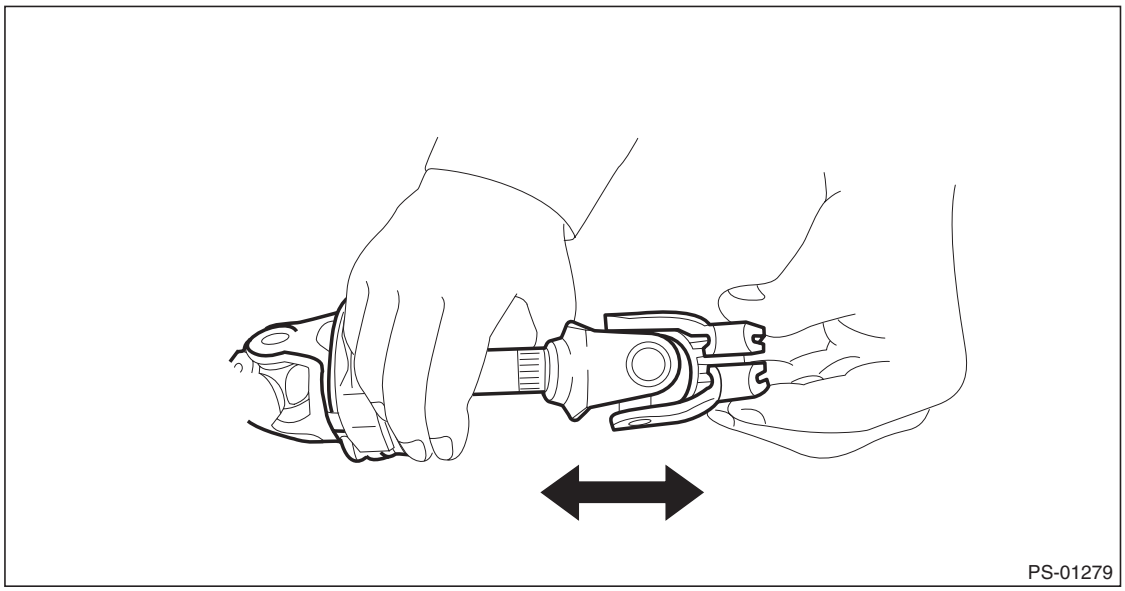

2) Measure the swing torque of universal joint.
(1) Place the universal joint between wooden blocks and fix it on a vise.
(2) With the yoke (a) of gearbox side facing up, measure the swing torque in two directions.

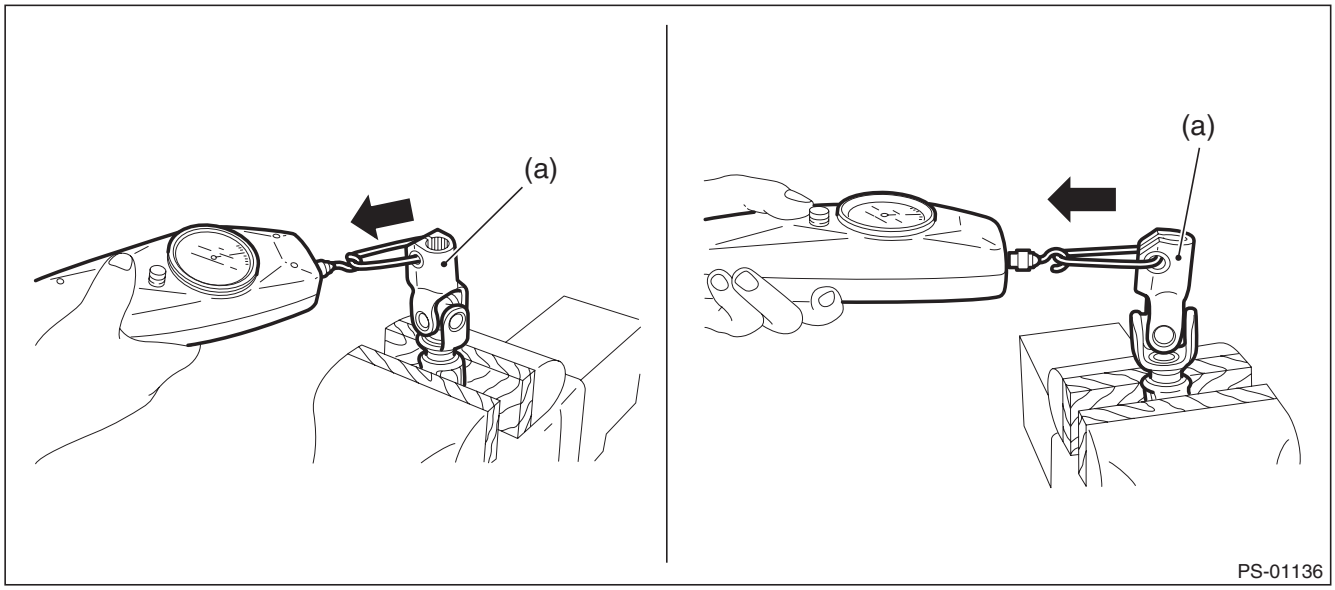

Service limit:
Maximum load: 3.8 N (0.39 kgf, 0.86 lbf) or less

GETtheMANUALS.org

(3) With the yoke (b) of steering column side facing up, measure the swing torque in two directions.

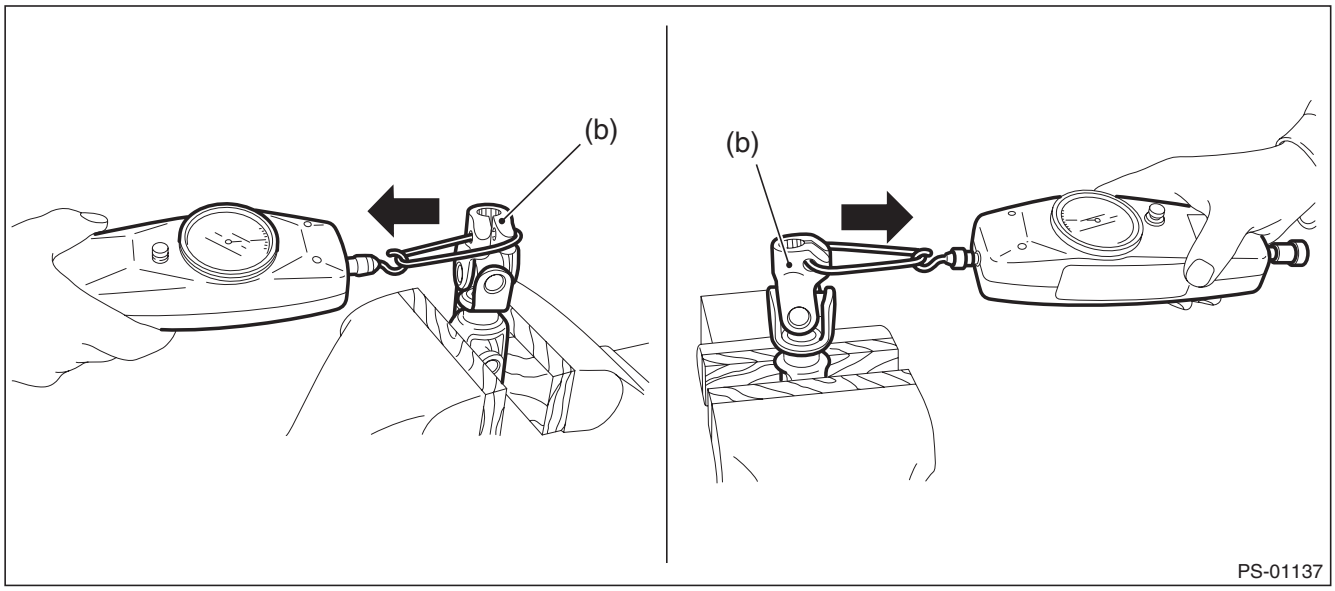

Service limit:

Maximum load: 7.3 N (0.74 kgf, 1.64 lbf) or less

(4) Replace as necessary, if it is found defective.

GETtheMANUALS.org

4. Steering Column

A: REMOVAL

1) Adjust the tilt position to the lowest position and lock the tilt lever.

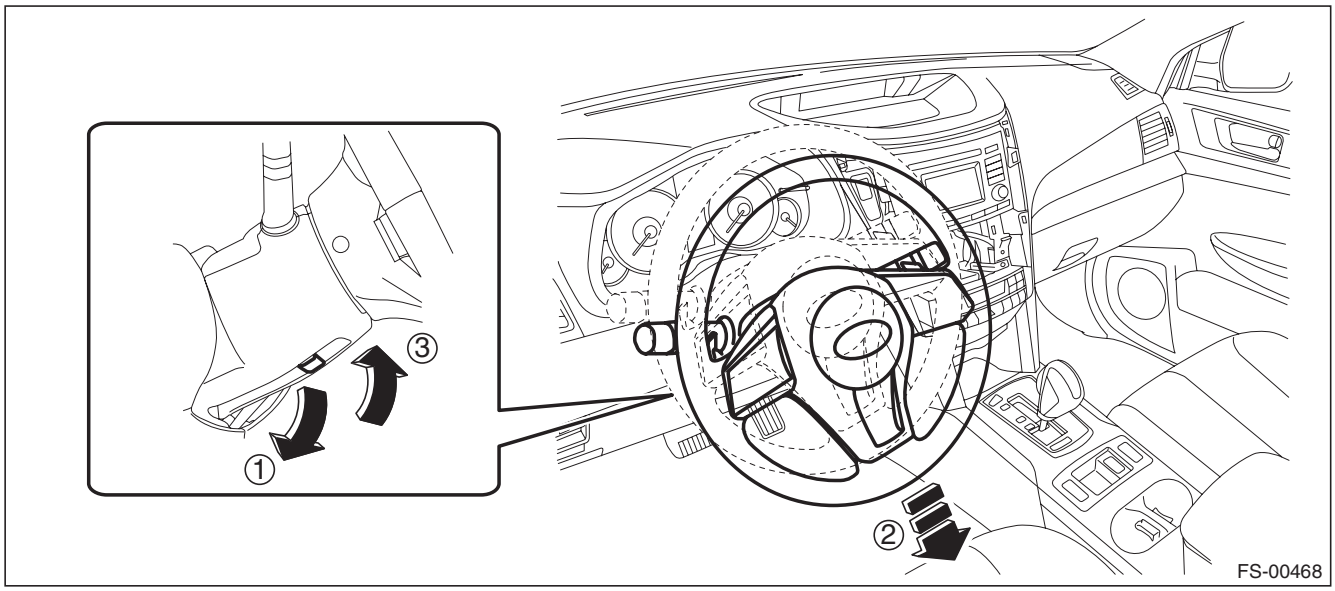

2) Remove the driver's airbag module assembly.
   (1) Push in the snap pin using a hexagon wrench or equivalent wrapped with a protective tape to disengage the locks (3 locations).

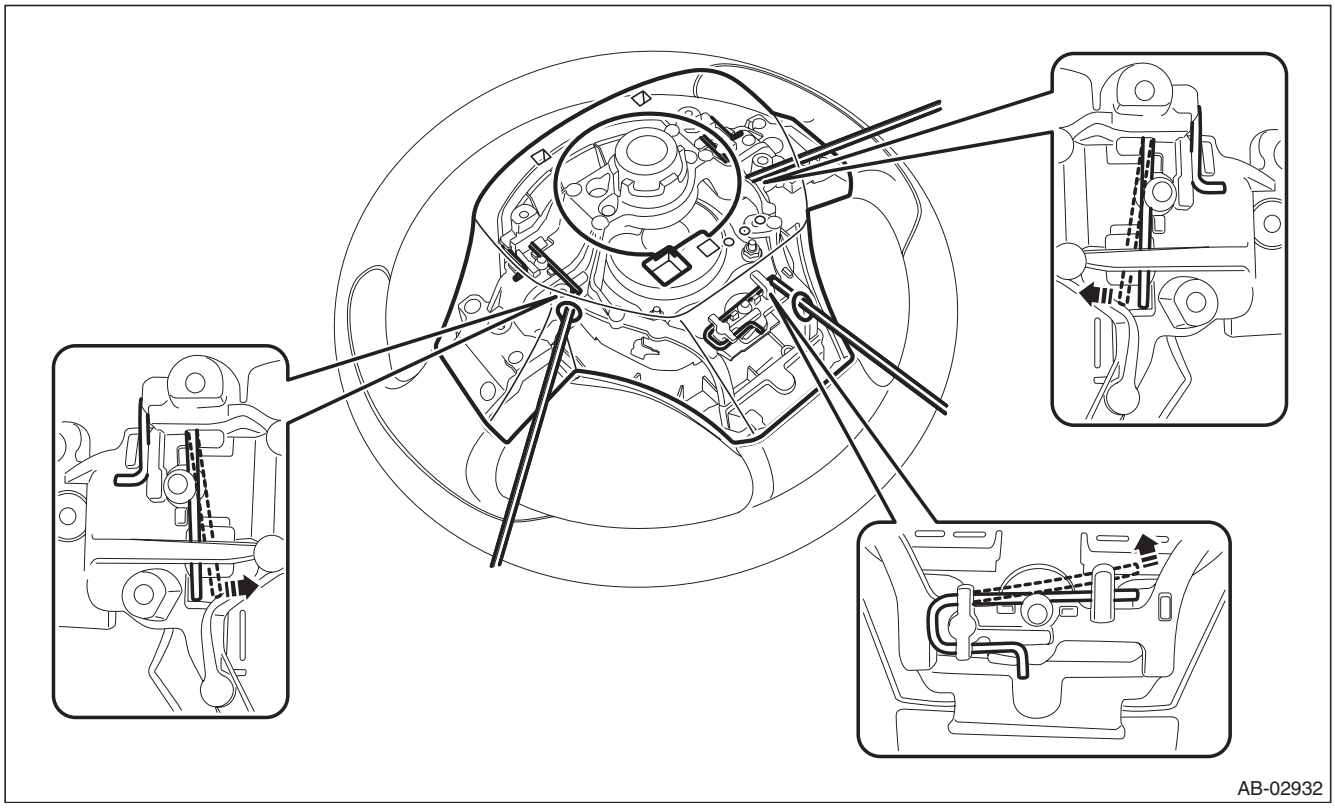

GETtheMANUALS.org

(2) Disconnect the horn harness and airbag connector and remove the airbag module assembly. <Ref. to AB-21, DRIVER'S AIRBAG MODULE, CURTAIN AIRBAG MODULE & PRETENSIONER, PROCEDURE, Airbag Connector.>

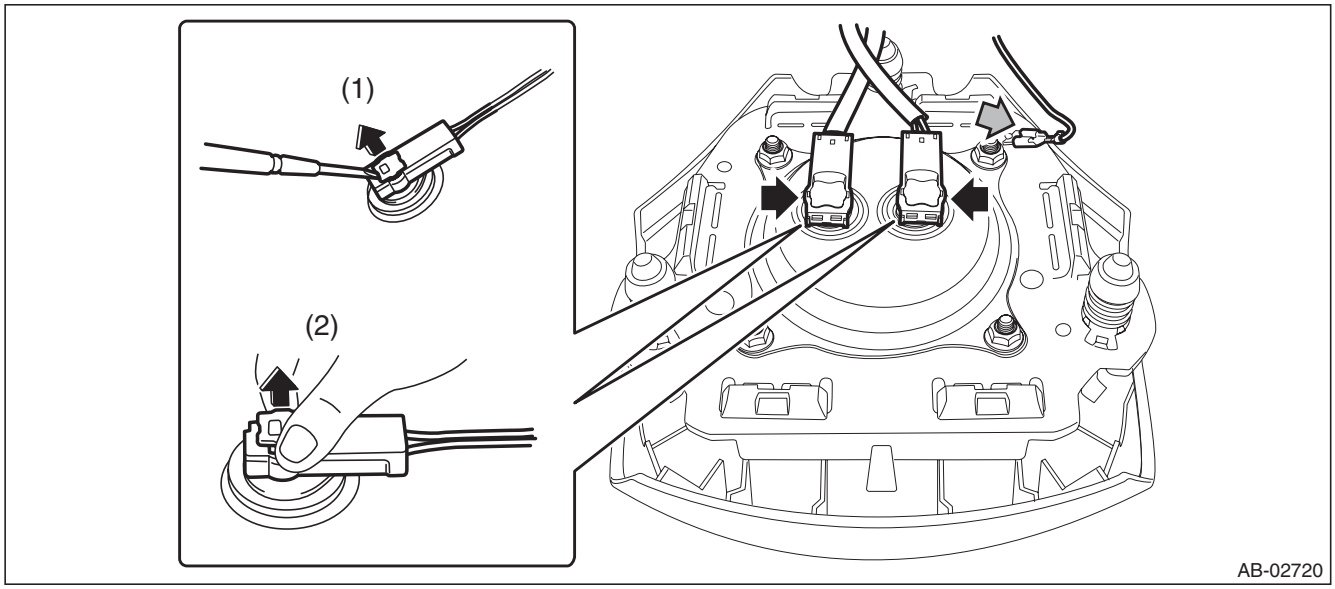

3) Remove the steering wheel.

CAUTION:

- **Always use the steering wheel puller for removal to avoid deforming the steering wheel.**
- **If the steering wheel has been removed, make sure that the roll connector is not turned from the original position.**

(1) Disconnect the connector and remove the nut.
(2) Put alignment marks and remove the steering wheel.

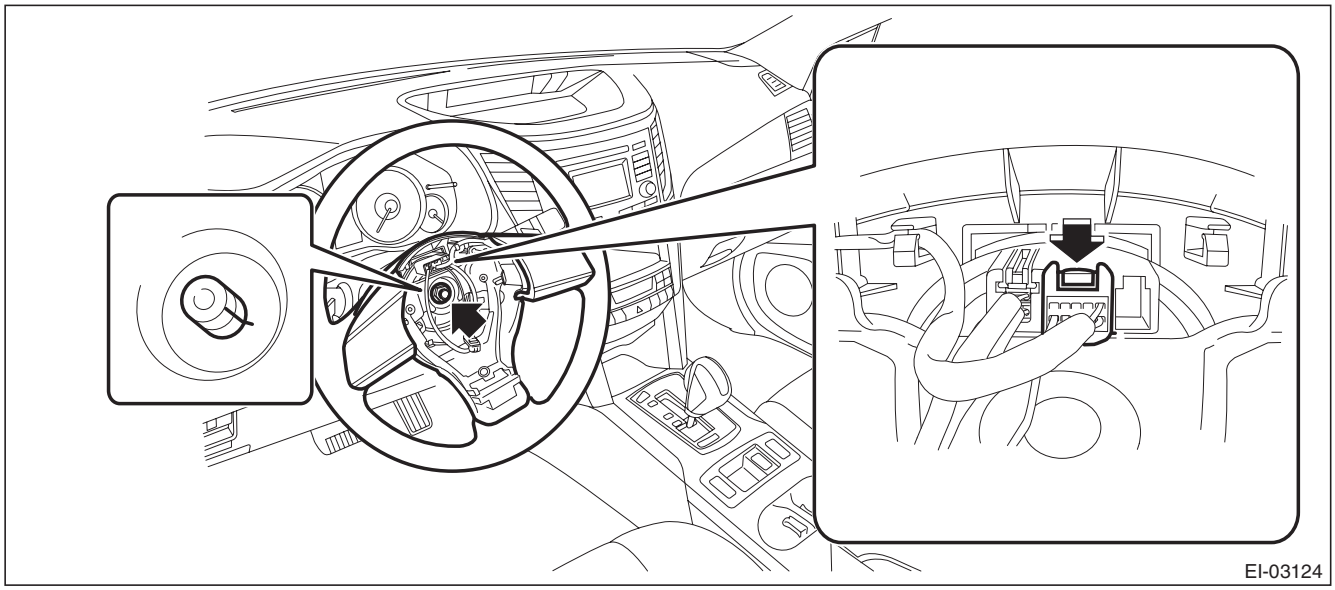

4) Remove the steering column cover.
(1) Lower the lever of the steering column.

GETtheMANUALS.org

(2) Release the claws and remove the screws, then detach the steering column lower cover.

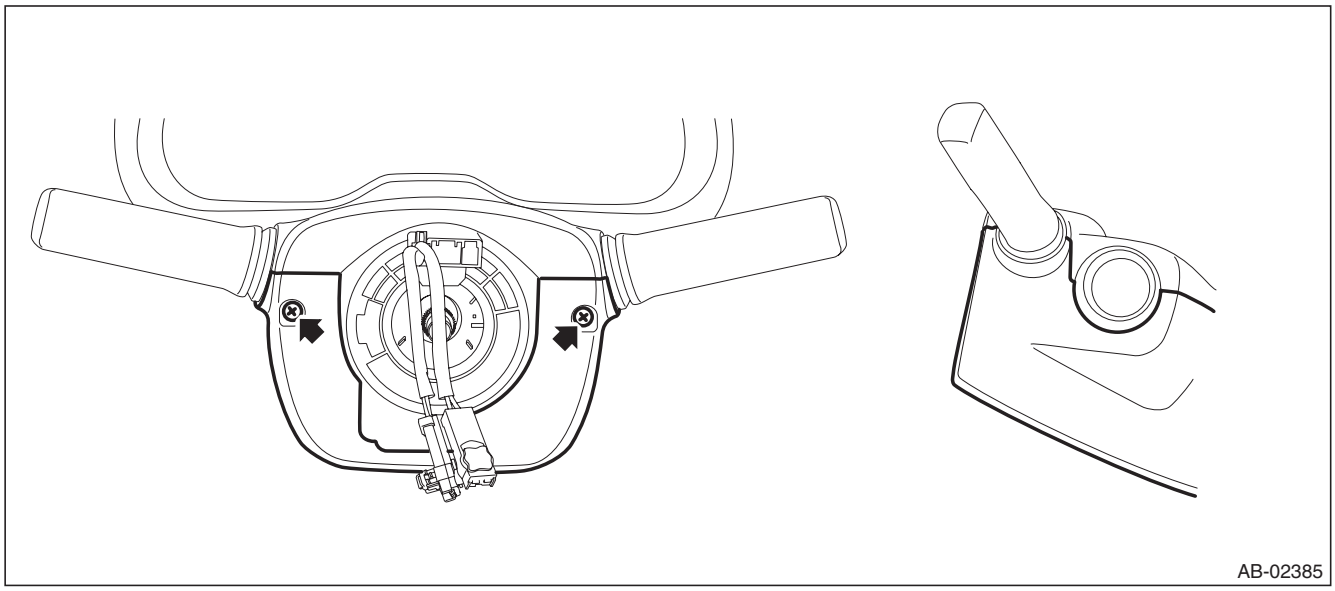

(3) Separate the steering column upper cover and steering upper cover, and remove the steering column upper cover.

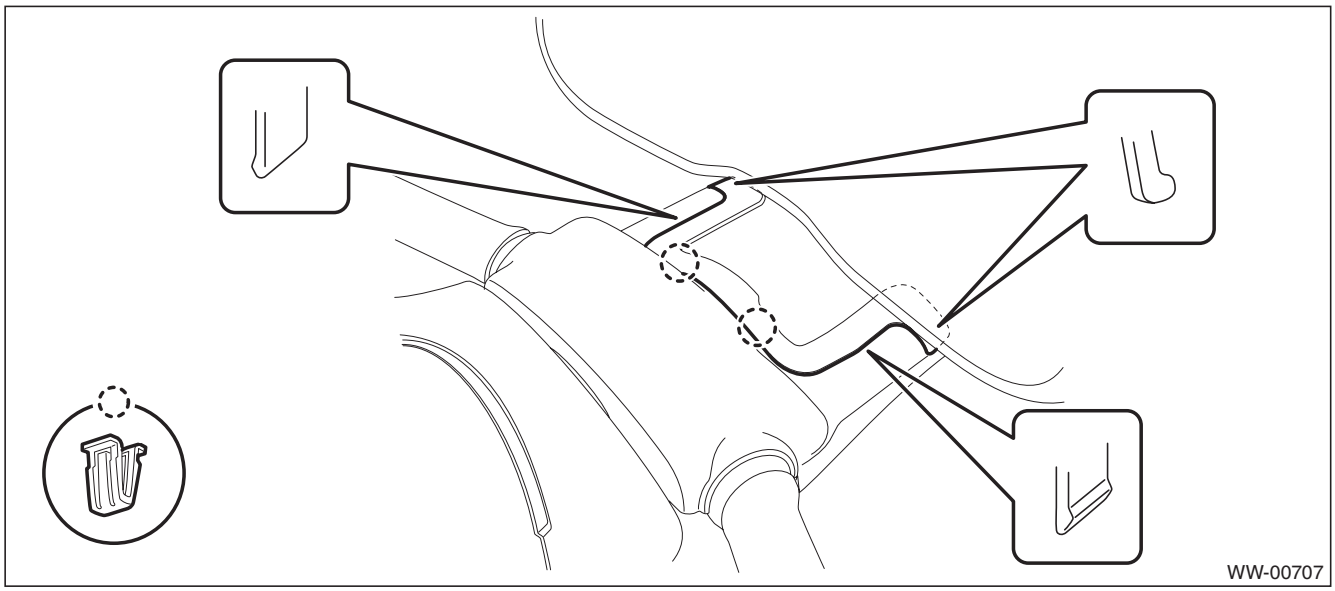

5) Remove the universal joint.

CAUTION:
To prevent damage to the universal joint and error of handling force, make sure to remove the universal joint.

(1) Place alignment marks on universal joint.

GETtheMANUALS.org

(2) Remove the universal joint bolt and remove the universal joint.

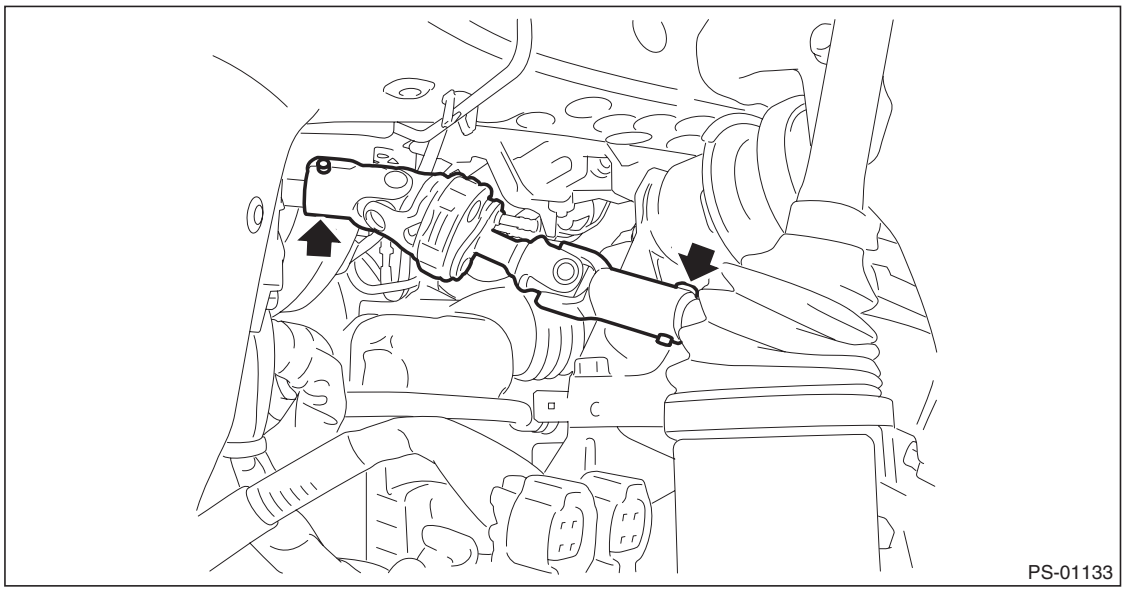

6) Remove the instrument panel lower cover.
(1) Remove the clips, and remove the instrument panel side cover LH.

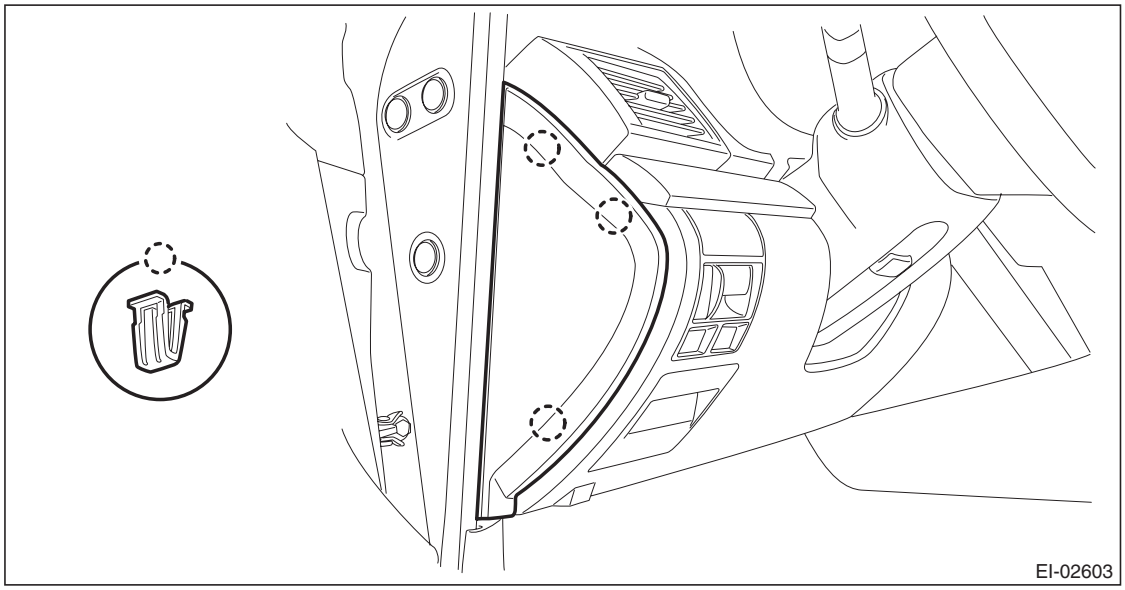

GETtheMANUALS.org

(2) Remove the clips and data link connector, and remove the instrument panel lower cover under.

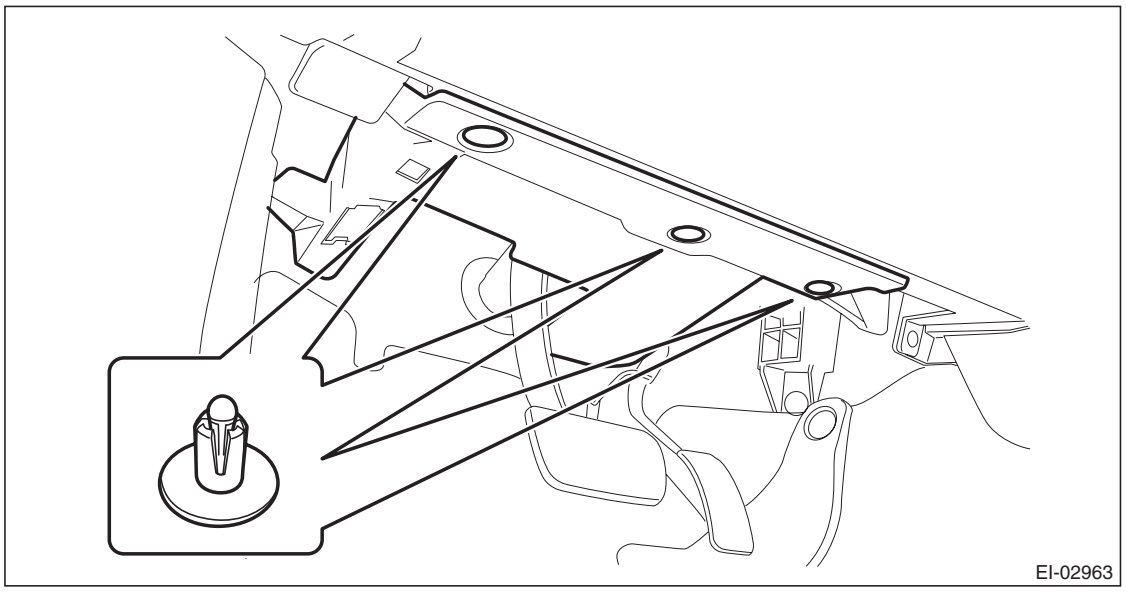

(3) Remove the screws and clips and release the claws, and remove the instrument panel lower cover while disconnecting the harness connectors.

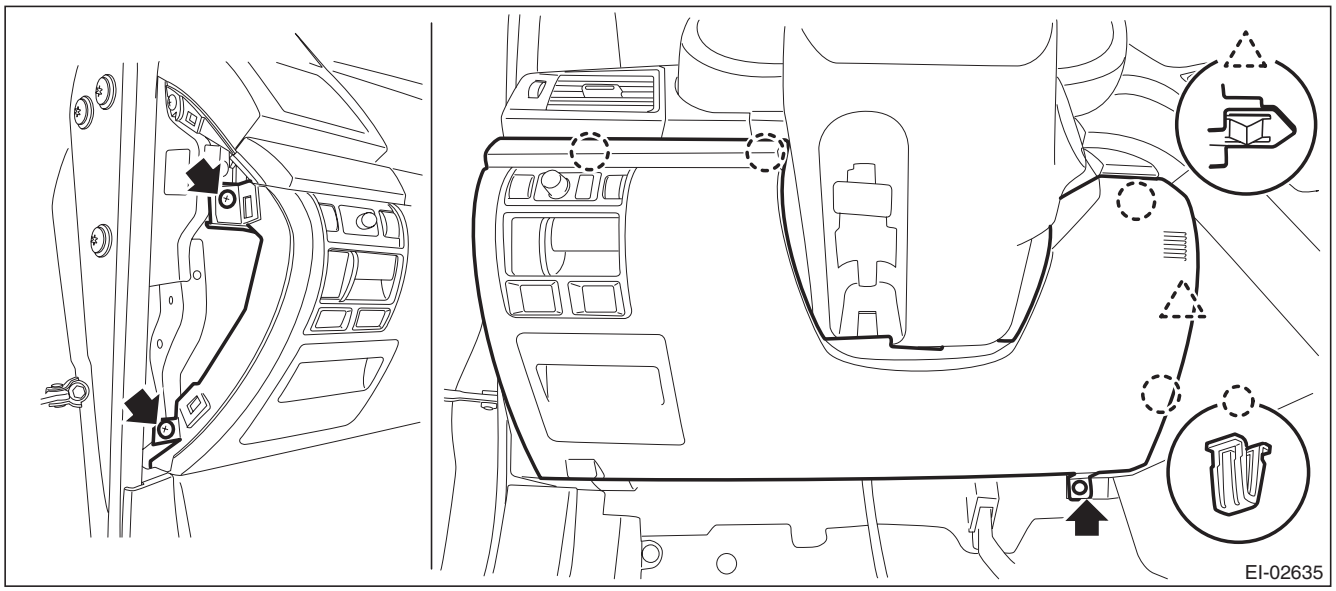

GETtheMANUALS.org

7) Remove the bolts, and remove the knee guard panel.

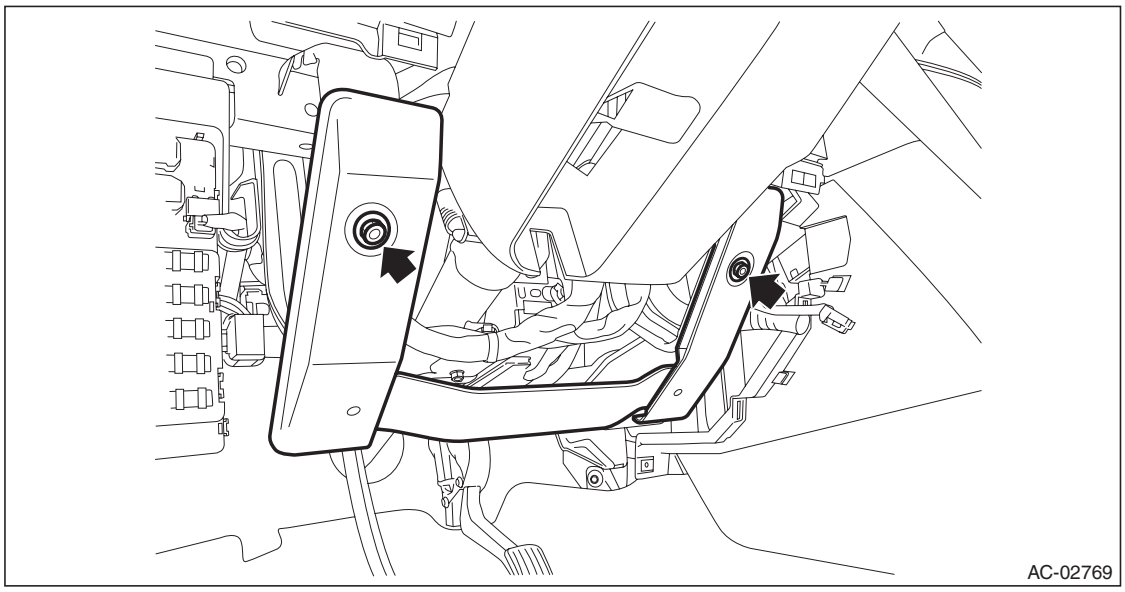

8) Remove all connectors from the steering column.
9) Remove the two bolts under instrument panel securing the steering column.

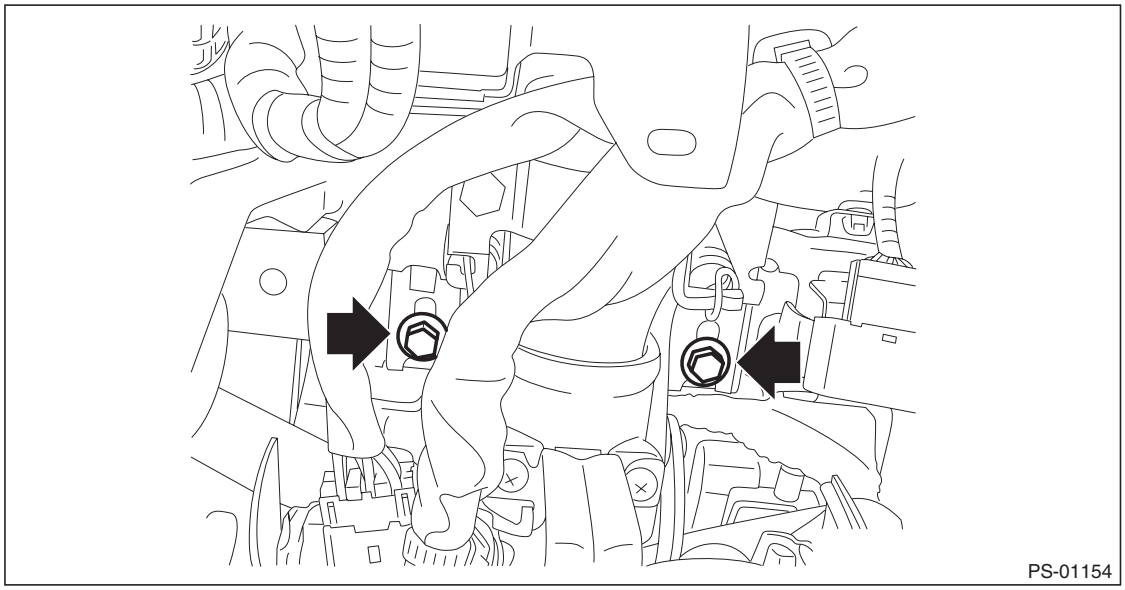

10) Pull out the steering shaft assembly from the hole on toe board.

CAUTION:
Do not loosen the tilt lever when the steering column is not secured to the vehicle.

GETtheMANUALS.org

B: INSTALLATION

1) Install the grommet to the toe board.

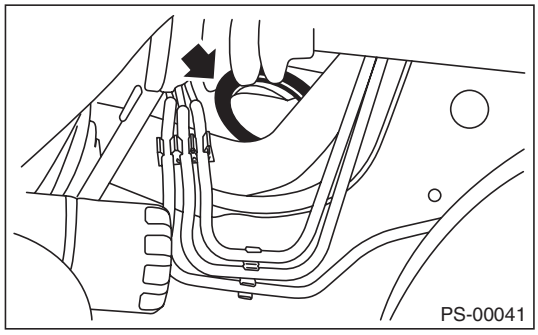

2) Insert the end of the steering shaft into the toe board grommet.
3) Tighten the steering column installation bolt located under the instrument panel with the tilt lever fixed.

Tightening torque:
20 N·m (2.04 kgf-m, 14.8 ft-lb)

4) Connect all the connectors under the instrument panel.
5) Connect the airbag system connector.
6) Install the instrument panel lower cover.
7) Install the universal joint. <Ref. to PS-22, INSTALLATION, Universal Joint.>

CAUTION:
- **Always install the universal joint after installing the steering column to avoid damage to the universal joint.**
- **Be sure to follow the tightening order and tightening torque of universal joint to avoid the steering effort from becoming heavy.**

8) Align the center position of the roll connector. <Ref. to AB-101, ADJUSTMENT, Roll Connector.>
9) Install the steering wheel. <Ref. to PS-18, INSTALLATION, Steering Wheel.>

C: DISASSEMBLY

1) Remove the steering column cover.
   (1) Lower the lever of the steering column.
   (2) Release the claws and remove the screws, then detach the steering column lower cover.

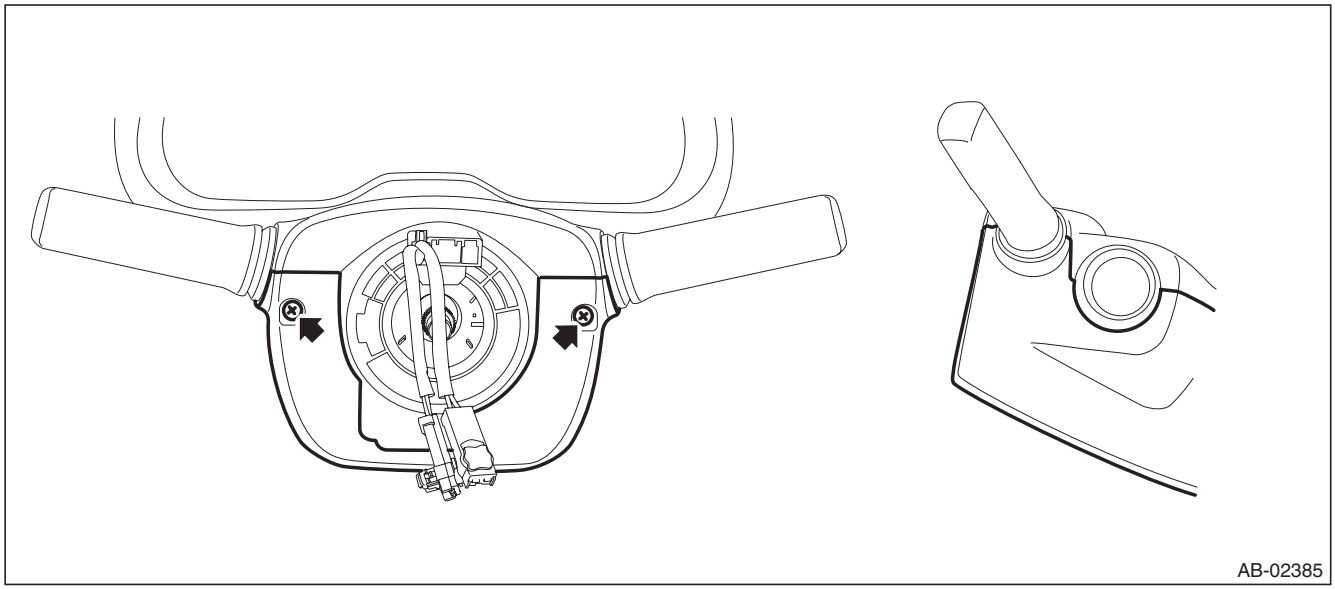

GETtheMANUALS.org

(3) Separate the steering column upper cover and steering upper cover, and remove the steering column upper cover.

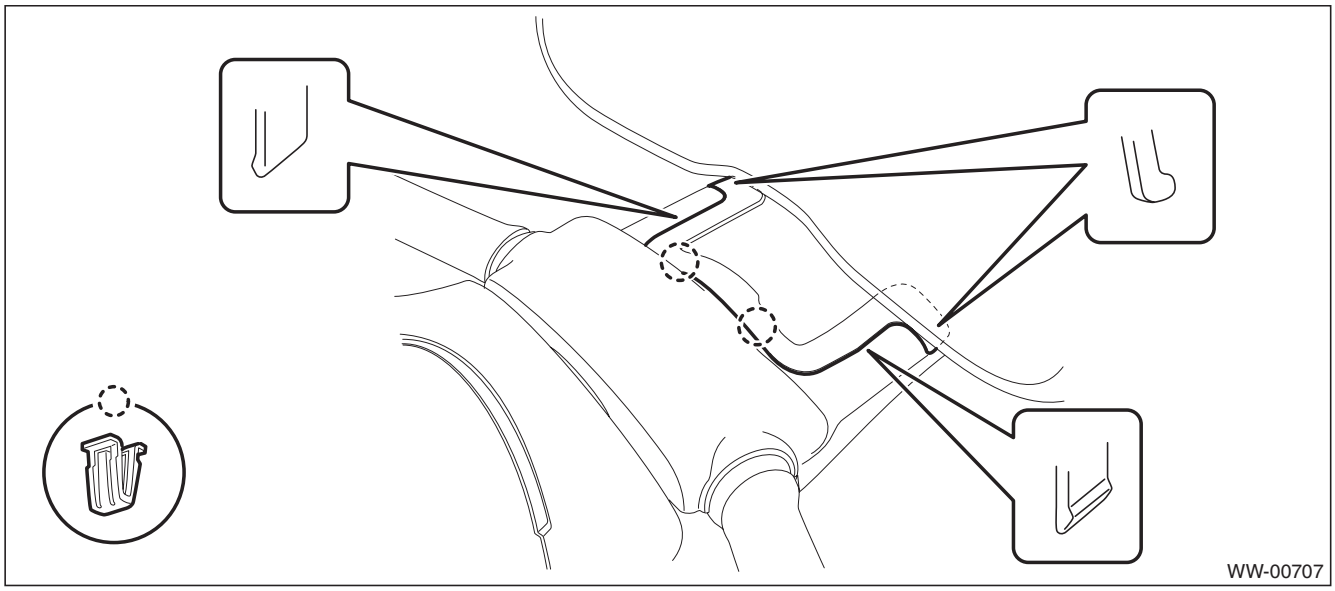

2) Remove the screw and remove the combination switch.

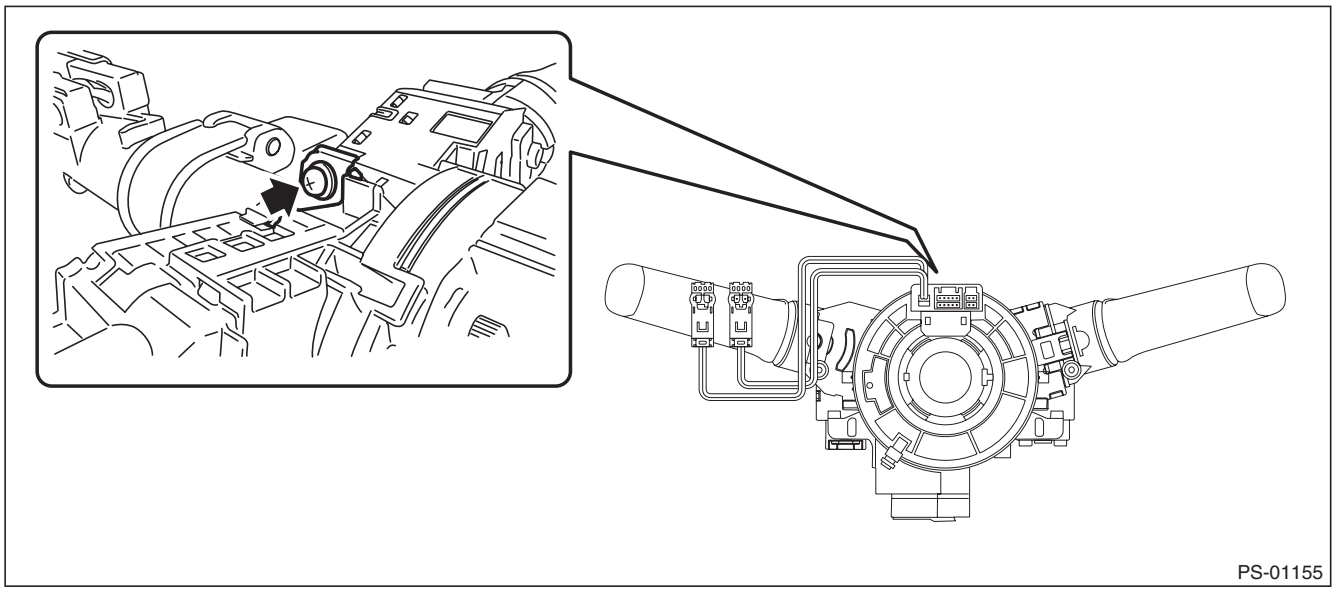

D: ASSEMBLY

Assemble each part in the reverse order of disassembly.

Tightening torque:

Combination switch: 3.5 N·m (0.36 kgf-m, 2.6 ft-lb)
Column cover: 1.2 N·m (0.12 kgf-m, 0.9 ft-lb)

GETtheMANUALS.org

E: INSPECTION

1. BASIC INSPECTION

Measure the overall length of steering column. If not within specification, replace it.

Standard: Overall length L

Tilt and telescopic column (measure while minimized):
$816.9^{+1.5}_{-1.5}$ mm ($32.2^{+0.059}_{-0.059}$ in)

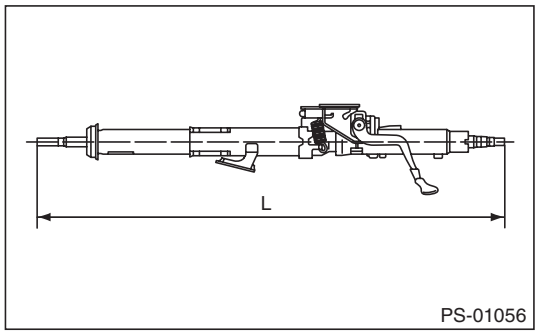

2. INSPECTION OF AIRBAG SYSTEM

Refer to “Airbag System” for airbag inspection procedure. <Ref. to AB-36, INSTALLATION, Driver’s Airbag Module.>

GETtheMANUALS.org

5. Steering Gearbox

A: REMOVAL

1) Remove the cradle. <Ref. to FS-20, REMOVAL, Cradle.>
2) Remove the bolts, and remove left and right main mounting brackets.

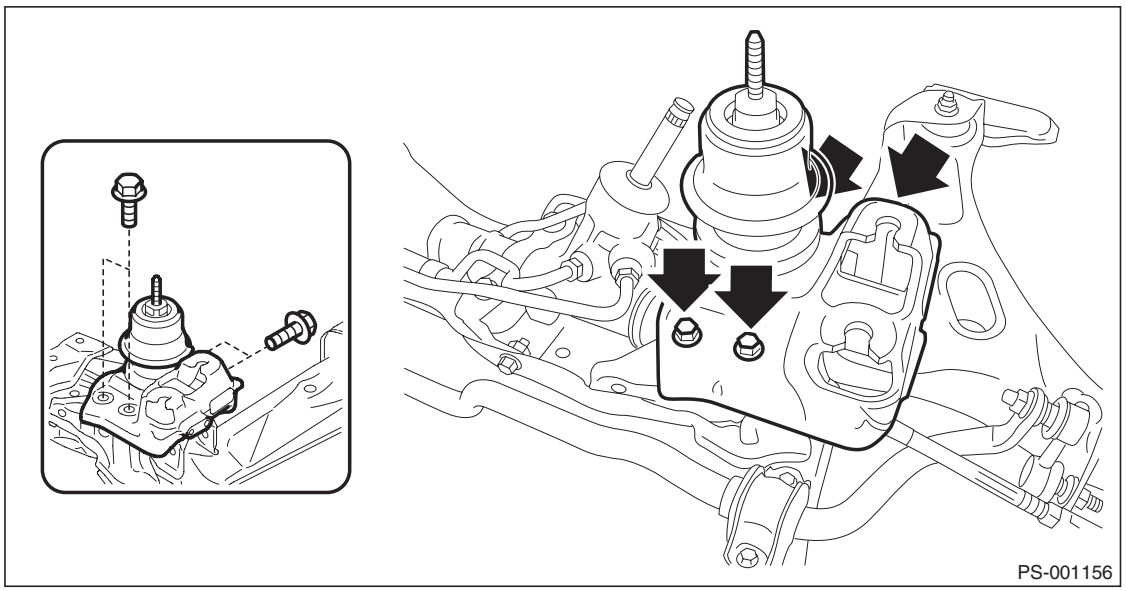

3) Remove the bolts and remove the steering gearbox.

CAUTION:
Be careful not to damage the steering boot.

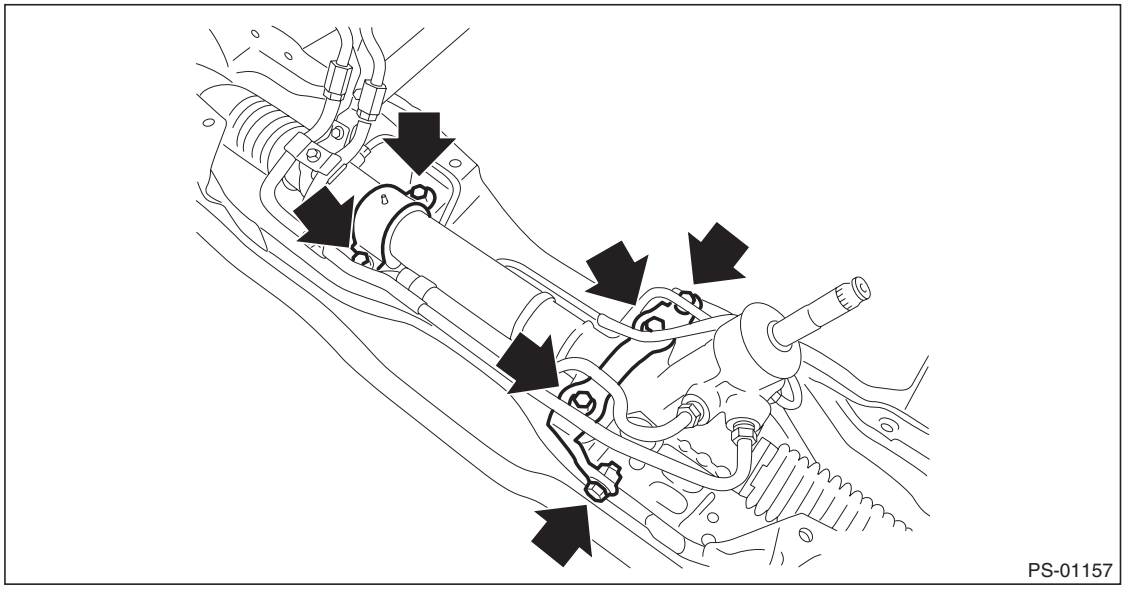

B: INSTALLATION

1) Before installation, check the steering gearbox. <Ref. to PS-56, INSPECTION, Steering Gearbox.>
2) Install each part in the reverse order of removal.

Tightening torque:
Steering gearbox parts: <Ref. to PS-4, COMPONENT, General Description.>
Front suspension parts: <Ref. to FS-3, COMPONENT, General Description.>

3) Inspect the wheel alignment and adjust if necessary.

GETtheMANUALS.org

C: DISASSEMBLY

1) Disconnect the four pipes from steering body and control valve housing.

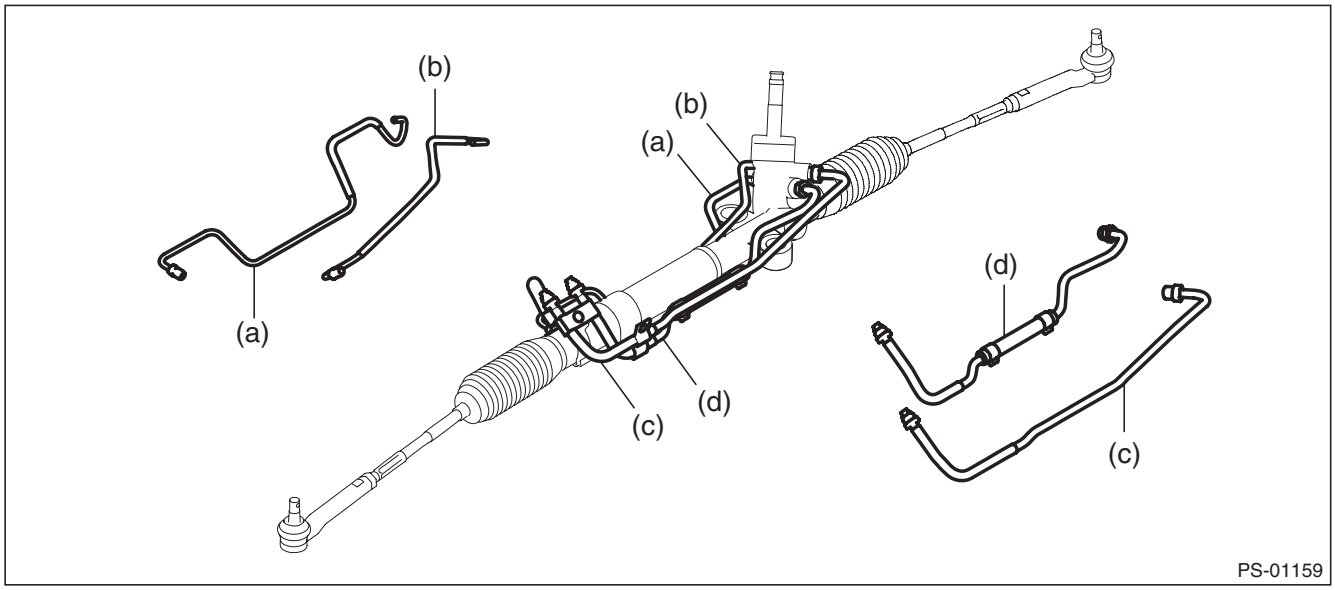

2) Secure the gearbox removed from vehicle in a vise using ST.

CAUTION:
Secure the gearbox assembly in a vise using ST as shown. Do not secure the gearbox without this ST.

PREPARATION TOOL:
ST1: STAND (926200000)
ST2: BOSS D (34199AG000)

(1) Replace BOSS of STAND (ST1) with BOSS D (ST2).
(2) Using the clamp (a) removed from vehicle body, attach the gearbox assembly to ST.

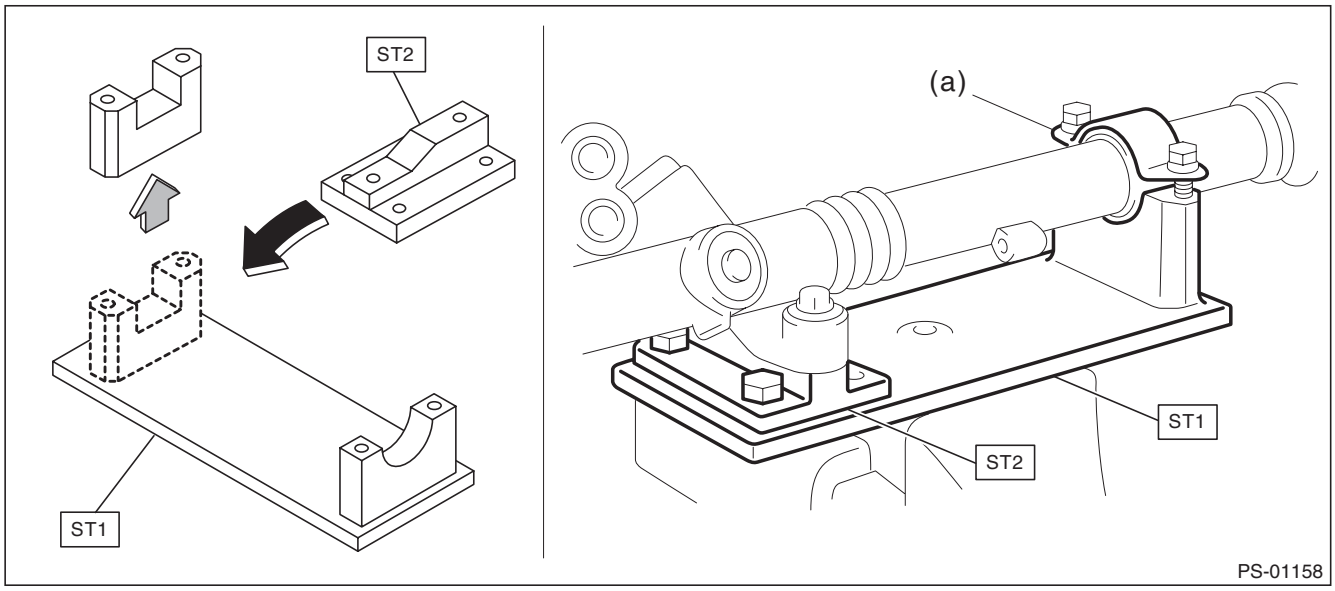

GETtheMANUALS.org

3) Remove the left and right boots from the gearbox.
   (1) Remove the tie-rod end and lock nut (a) from gearbox.
   (2) Remove the clip (b) located outside the boot using the pliers, and then slide the boot to the tie-rod end side.

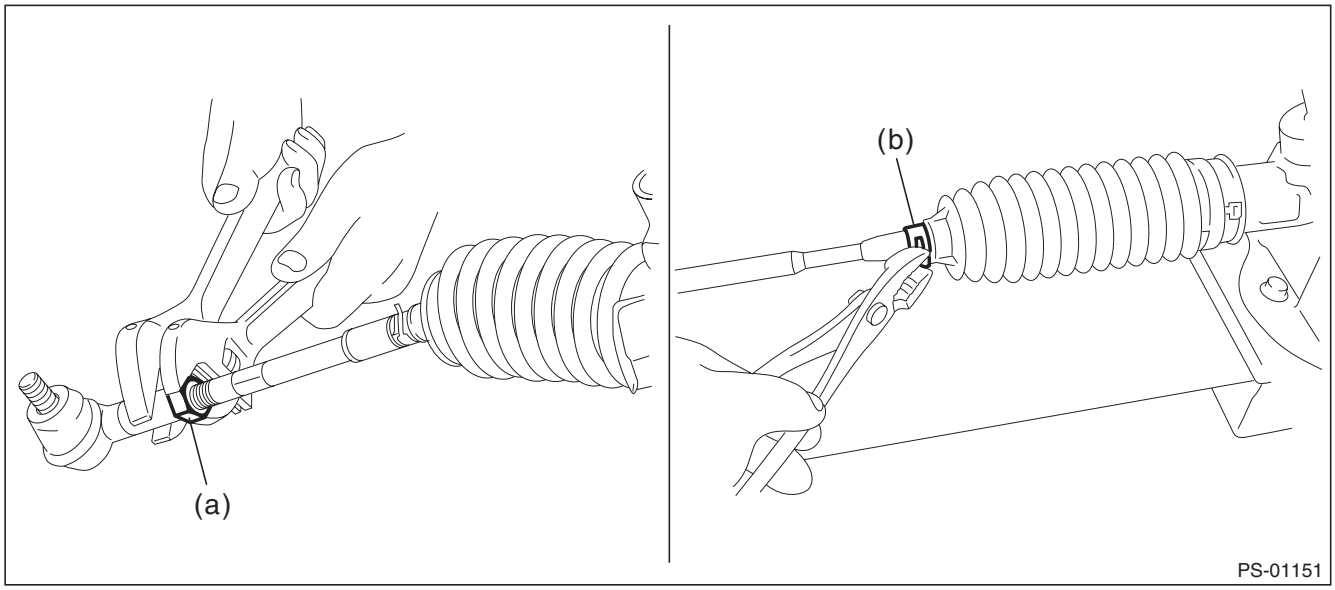

   (3) Using a flat tip screwdriver, remove the band from boot.

NOTE:
Replace the boot if there is damage, cracks or deterioration.

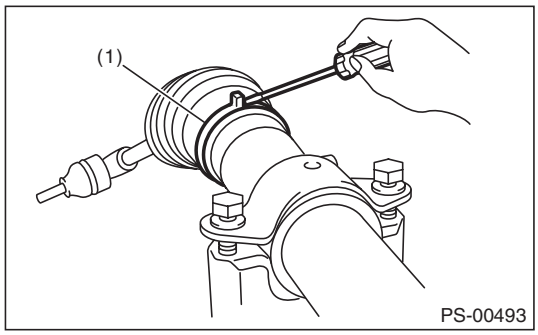

(1) Band

GETtheMANUALS.org

4) Remove the left and right tie-rods.
   (1) Using the ST, loosen the lock nut.

PREPARATION TOOL:
ST: SPECIAL TOOL CPS (34199AJ060)

   (2) Tighten the adjusting screw (a) until it can no longer be tightened.

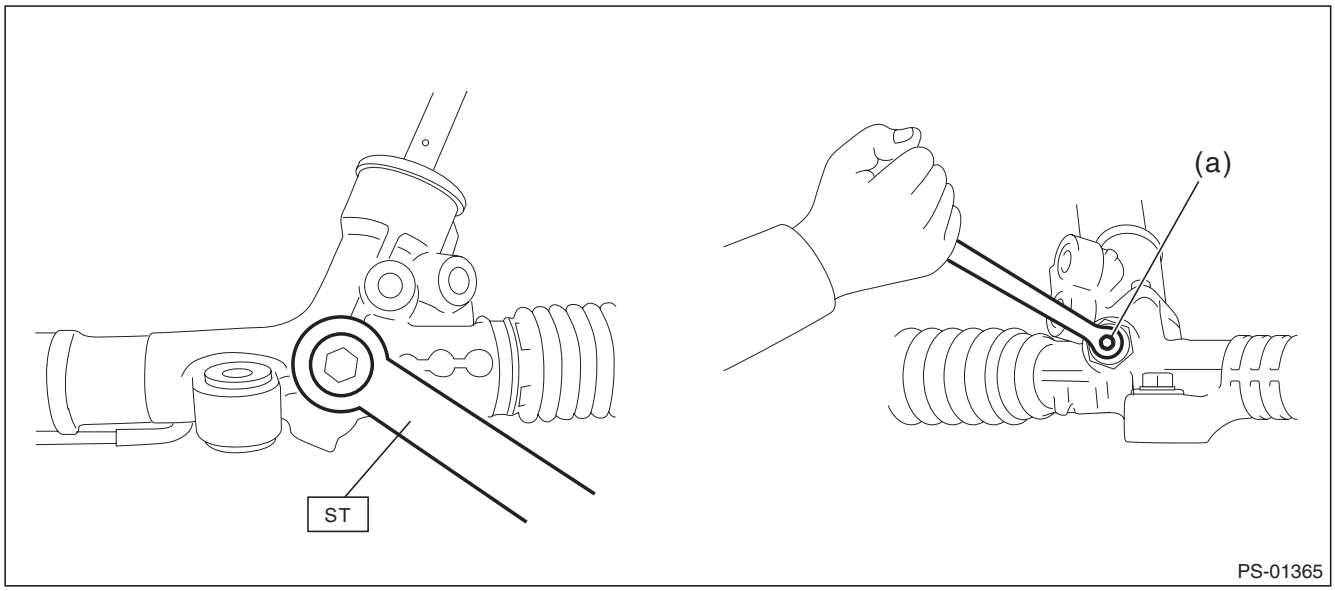

   (3) Remove the tie-rod.

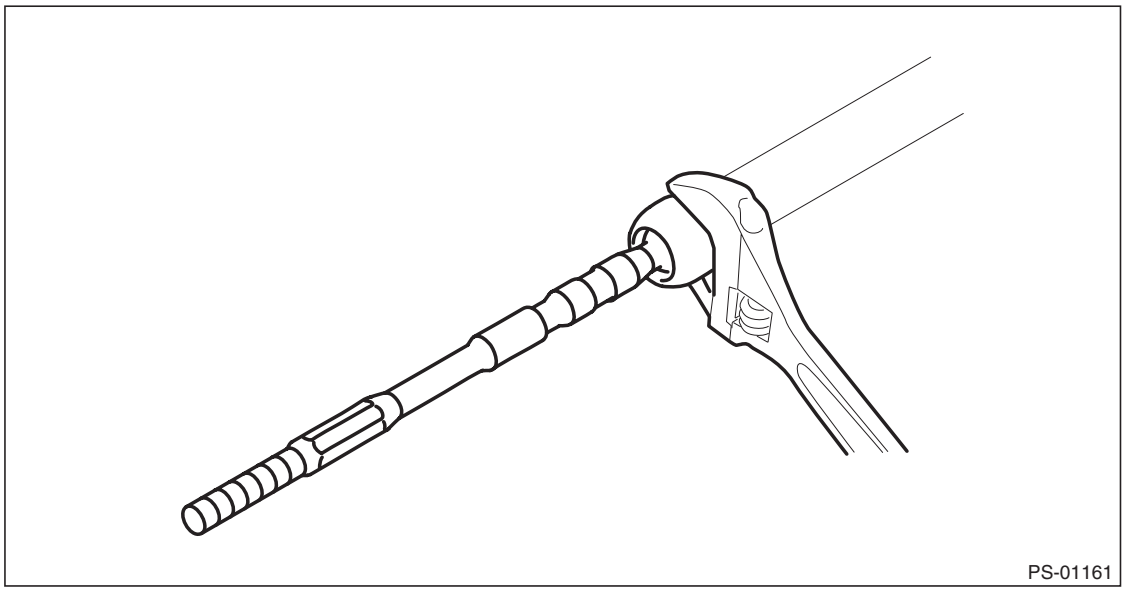

GETtheMANUALS.org

5) Remove the control valve.
   (1) Loosen the adjusting screw (a), and remove the spring (b) and sleeve (c).

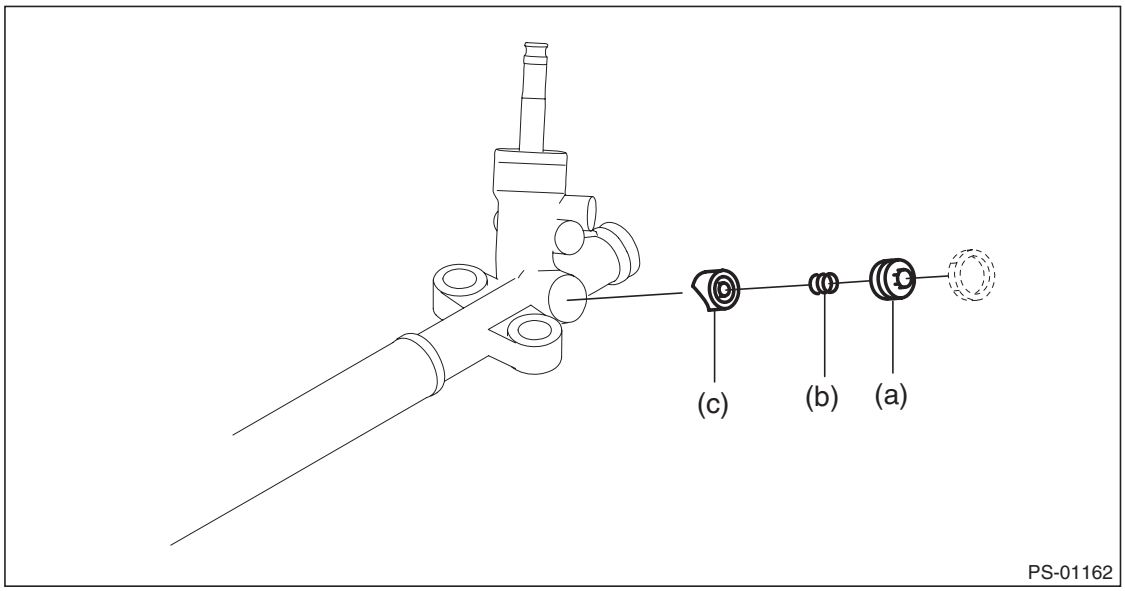

   (2) Clean any dirt adhered to the input shaft.
   (3) Remove the dust cover (a).

CAUTION:
- **Pay attention not to scratch the housing or input shaft and not to allow foreign matter to enter gearbox interior.**
- **Roll a vinyl tape around the input shaft spline to avoid scratching the dust cover.**

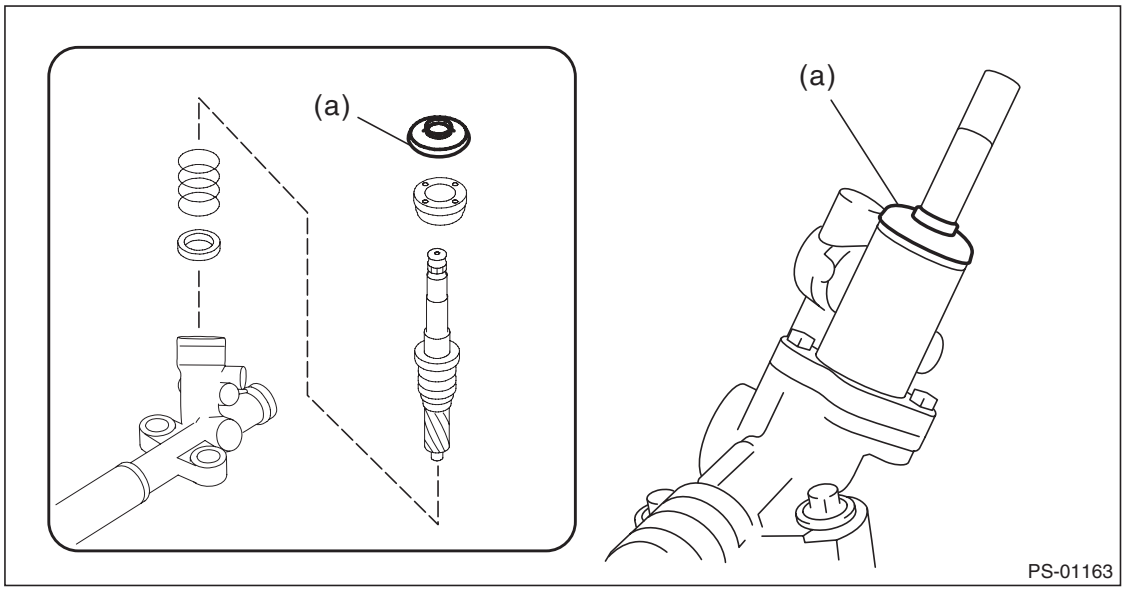

GETtheMANUALS.org

(4) Align the ST pin with plug hole to install, and then rotate the ST counterclockwise to remove plug (b).

PREPARATION TOOL:
ST: PLUG-WRENCH (34199AE090)

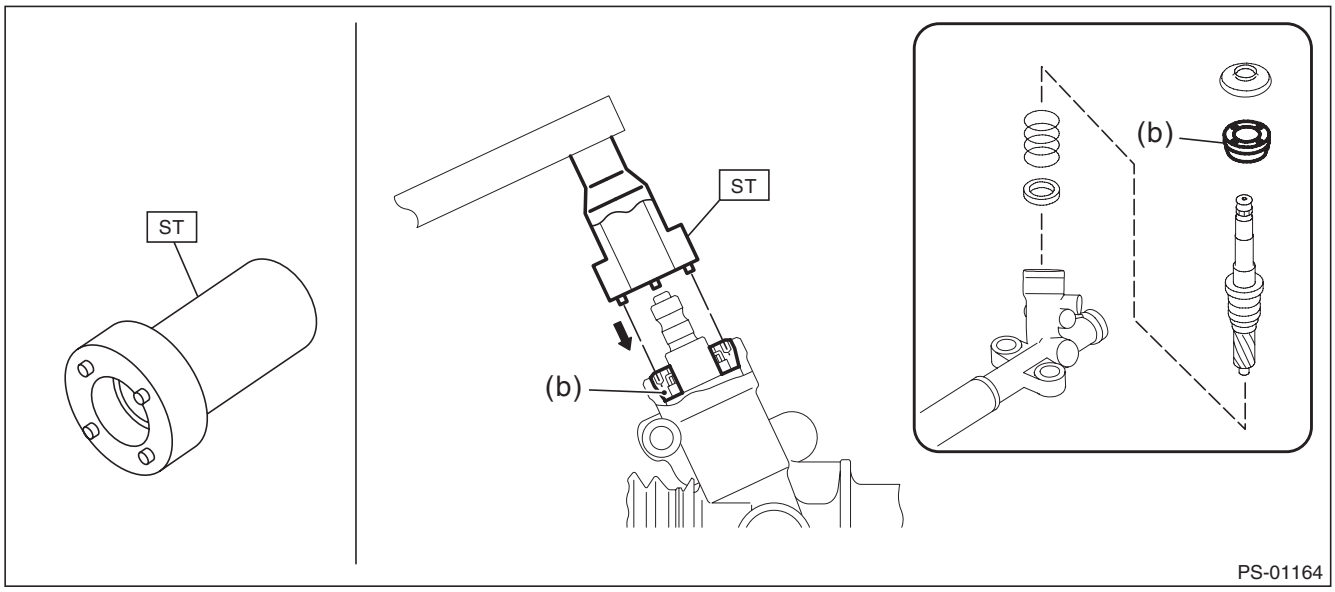

(5) Remove the valve assembly (c).

CAUTION:
Be careful not to scratch the seal rings (d) and inner surface of the valve housing.

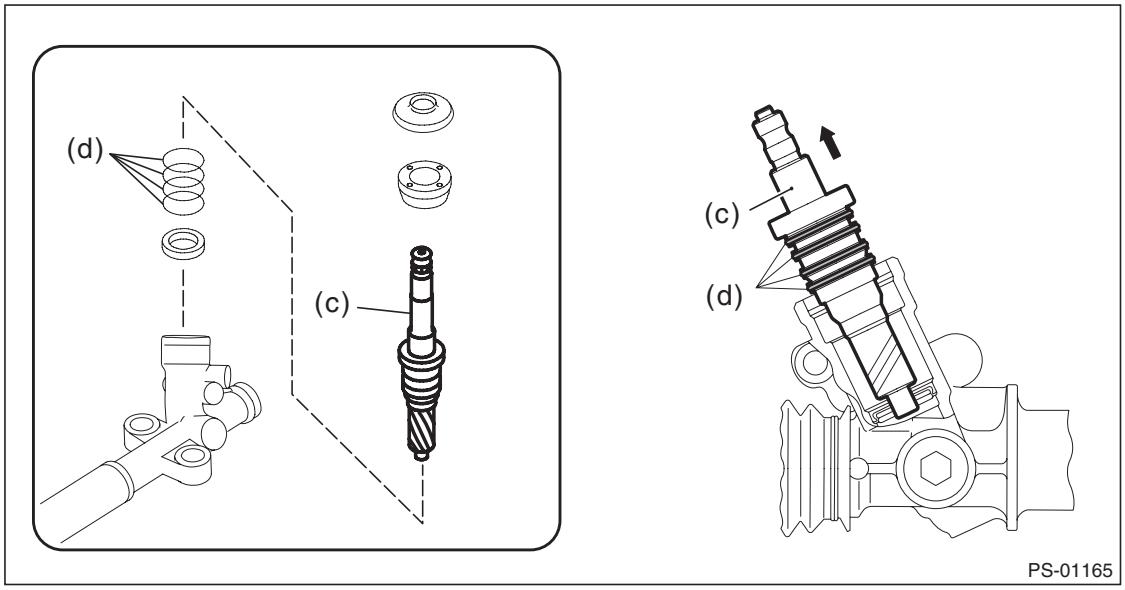

GETtheMANUALS.org

6) Remove the rack.
   (1) Remove the holder (a).

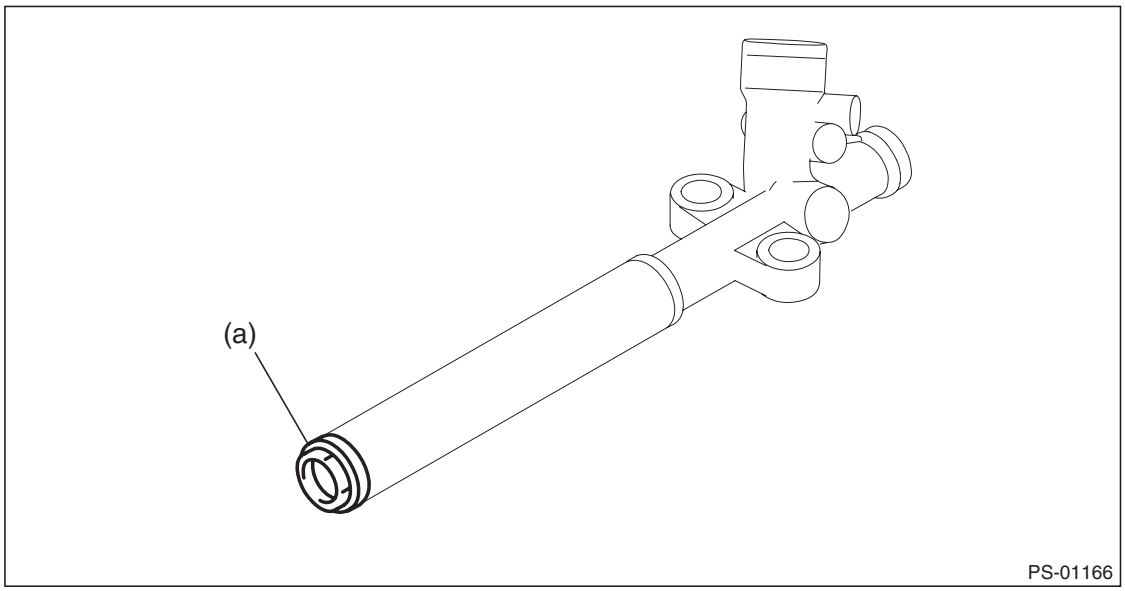

   (2) Attach the ST1 to the pinion housing side of the rack.
   (3) Push the rack so that the rack piston (b) pushes out the outer side oil seal (a) to be removed.

PREPARATION TOOL:
ST1: INSTALLER & REMOVER (34199FE000)

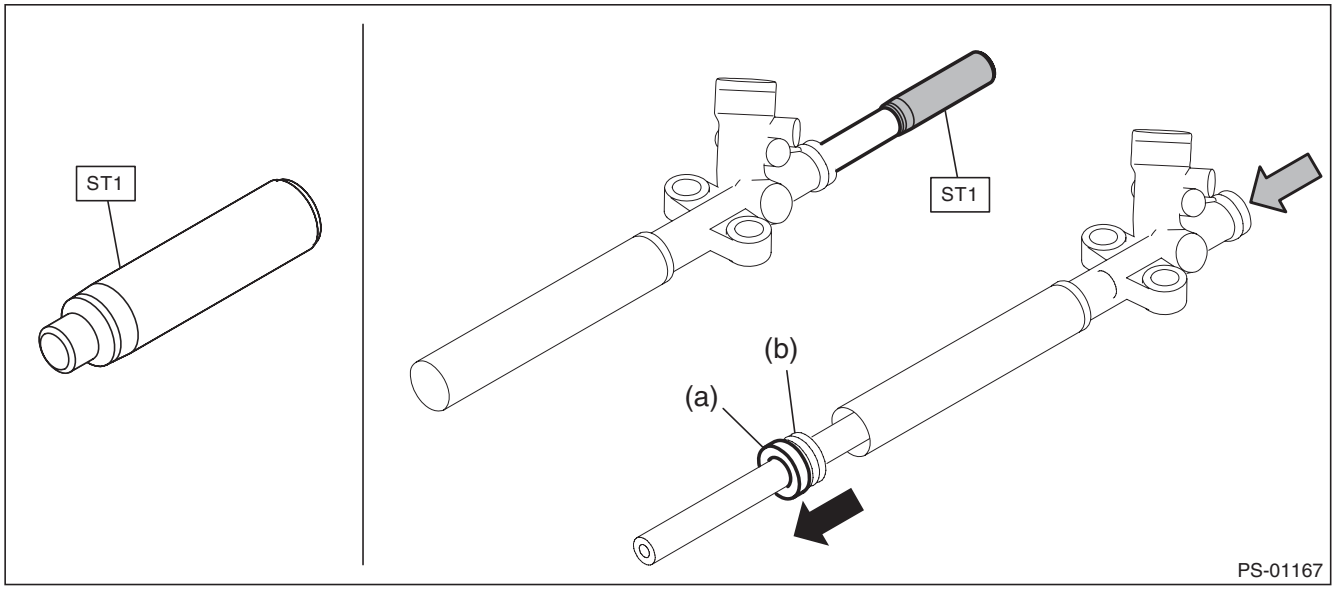

NOTE:
Block the pipe connection of steering body to prevent fluid from flowing out.

GETtheMANUALS.org

(4) Insert the ST2 from the valve side of the rack, and push out the back-up ring (c) and oil seal (d).

PREPARATION TOOL:
ST2: REMOVER (34199FE010)

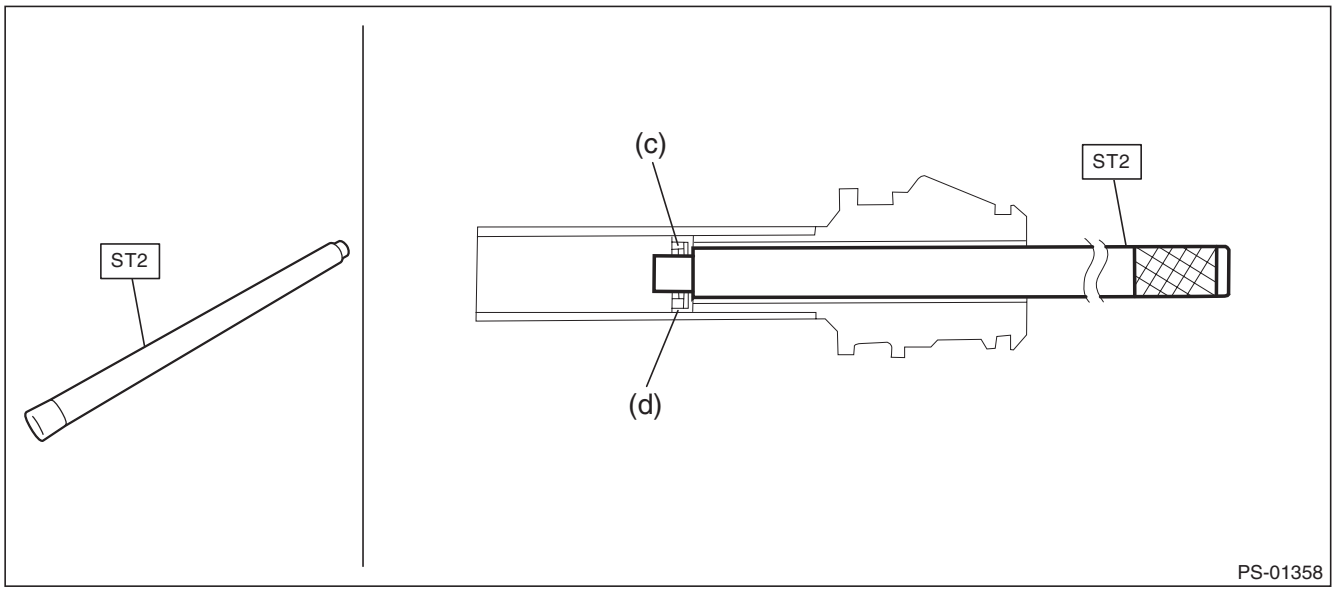

NOTE:
Block the pipe connection of steering body to prevent fluid from flowing out.
7) Repair the crimped portion of cylinder.
(1) Using ST, repair the crimped portion of cylinder (a).

PREPARATION TOOL:
ST1: PUNCH (34099FA080)
ST2: BASE (34199FE020)

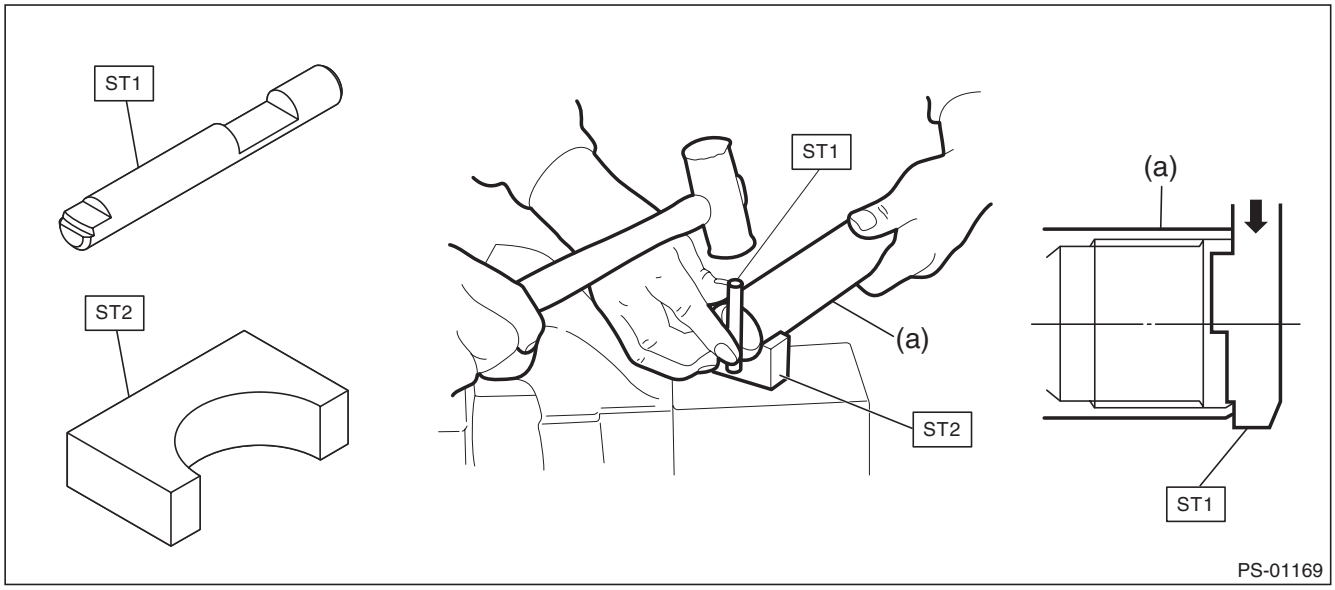

GETtheMANUALS.org

(2) If the cylinder edge is deformed in a convex shape, repair using an oil stone.

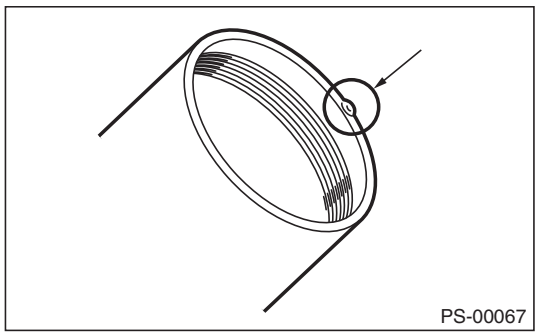

8) Using the ST, press the oil seal (a) out of plug.

CAUTION:
Do not apply force on the plug edge surface.

PREPARATION TOOL:
ST: OIL SEAL PLUG REMOVER (34199AE100)

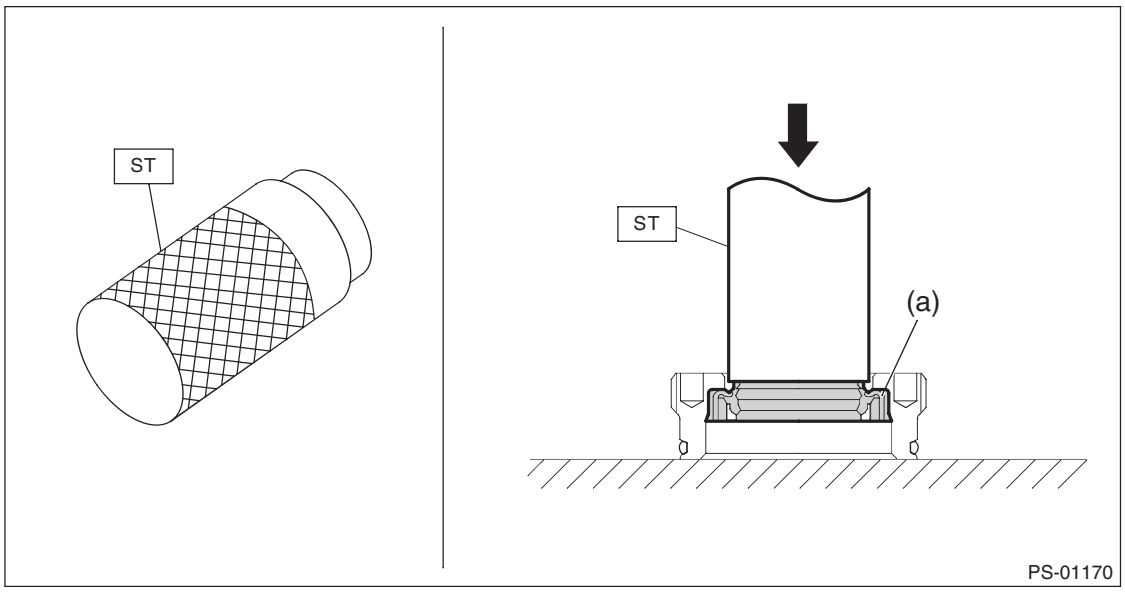

GETtheMANUALS.org

9) Remove the oil seal from the valve housing.
   (1) Set the ST at a size shown in the figure.

PREPARATION TOOL:
ST: GEARBOX OIL SEAL REMOVER (34199AE120)

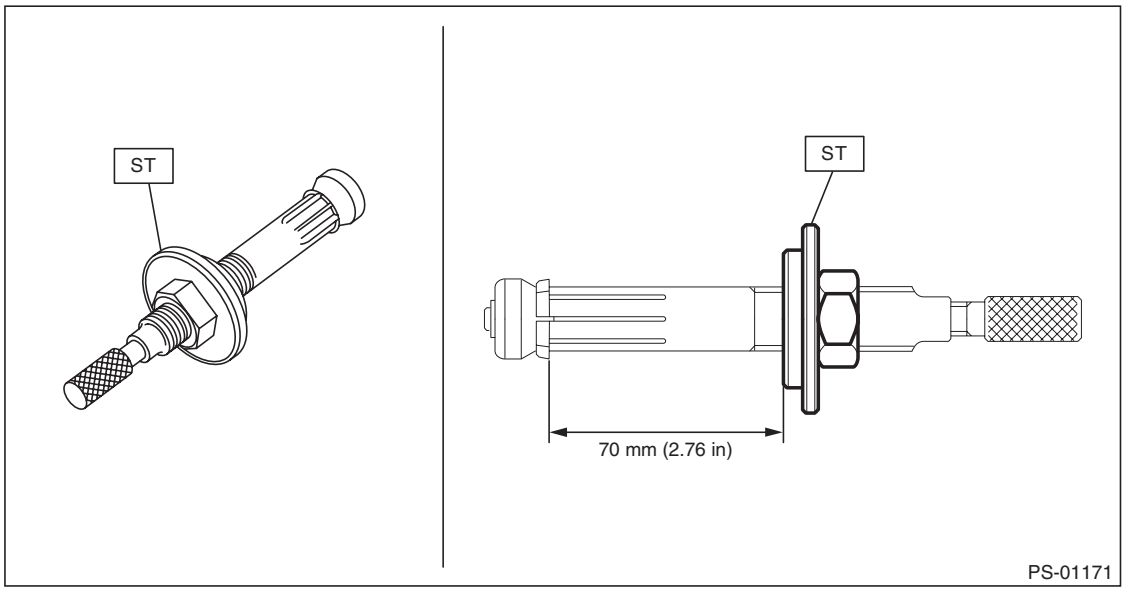

(2) Set the stopper (b) to gearbox, then insert the tip of the ST to the gearbox.

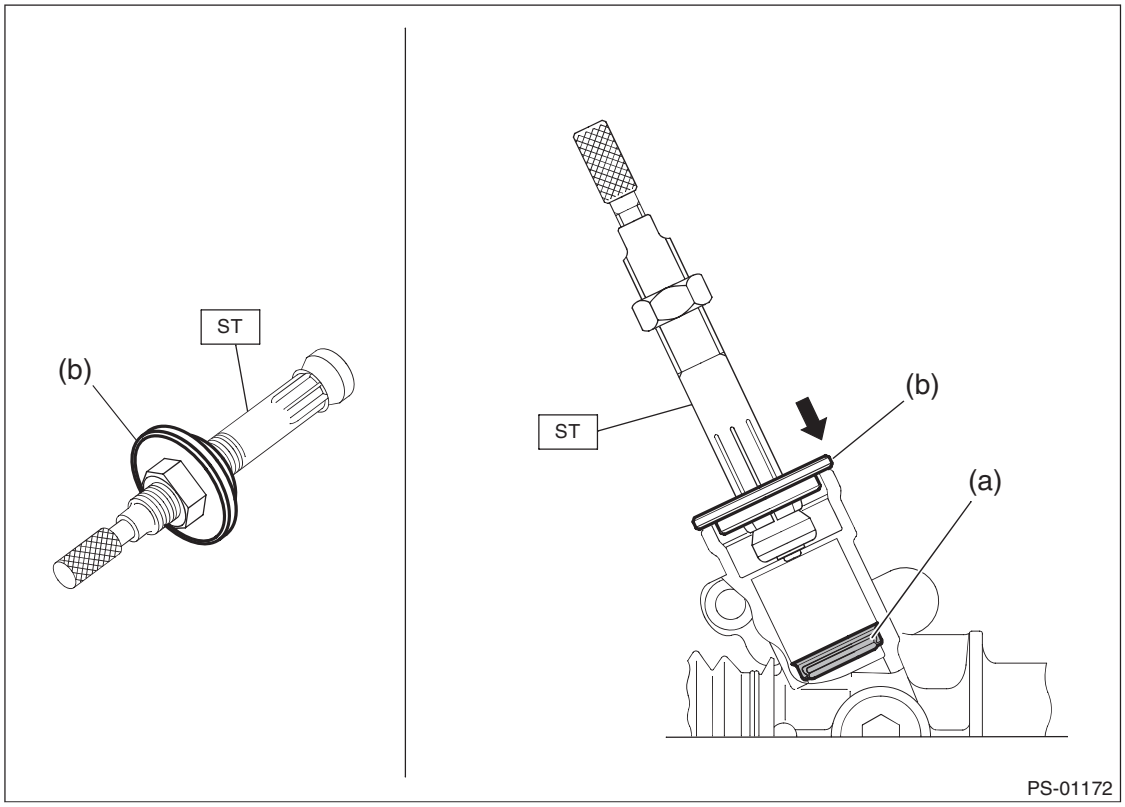

GETtheMANUALS.org

(3) By fixing section (A), press-in the rod (c) while rotating it and catch the oil seal (a).
(4) While fixing section (A), pull out the oil seal (a) by rotating nut (d).

CAUTION:
Take care not to scratch the gearbox inner surface.

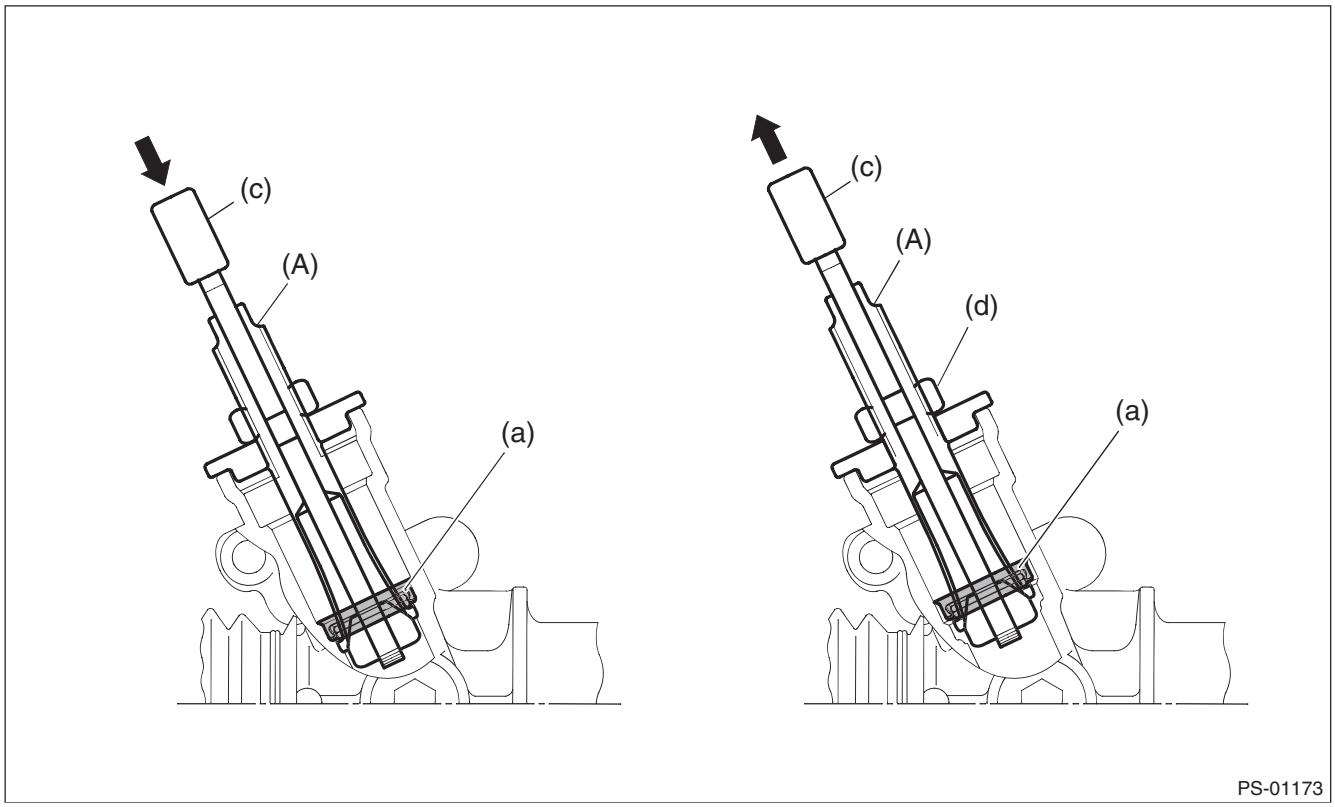

D: ASSEMBLY

1) Secure the gearbox to the ST.

CAUTION:
Secure the gearbox assembly in a vise using ST as shown. Do not secure the gearbox without this ST.

PREPARATION TOOL:
ST1: STAND (926200000)
ST2: BOSS D (34199AG000)

(1) Replace BOSS of STAND (ST1) with BOSS D (ST2).

GETtheMANUALS.org

(2) Using the clamp (a) removed from vehicle body, attach the gearbox assembly to ST.

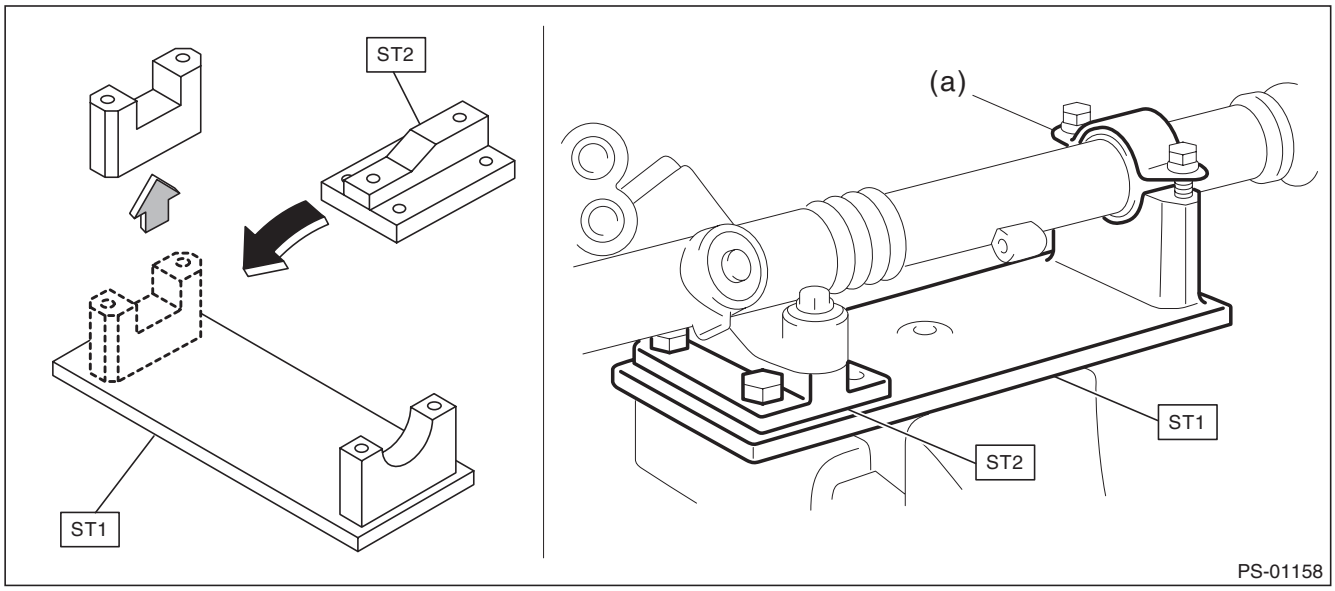

2) Apply a coat of grease to needle bearing.

CAUTION:
Make sure the needle bearing is free from defects. If it is faulty, replace the steering body with a new part.

3) Install the oil seal.
(1) Apply a coat of grease to the inside and outside of the new oil seal.

Steering grease:
VALIANT GREASE M2

(2) Verify the direction of the oil seal and installation position.
(3) Using the ST and a press, press-fit the oil seal (a) into the gearbox.

CAUTION:
- **Make sure to press fit the oil seal in all the way.**
- **The gap between the gearbox end face and the ST is to be approximately 4 mm (0.157 in) after press fitting.**

PREPARATION TOOL:
ST: GEARBOX OIL SEAL INSTALLER (34199AE130)

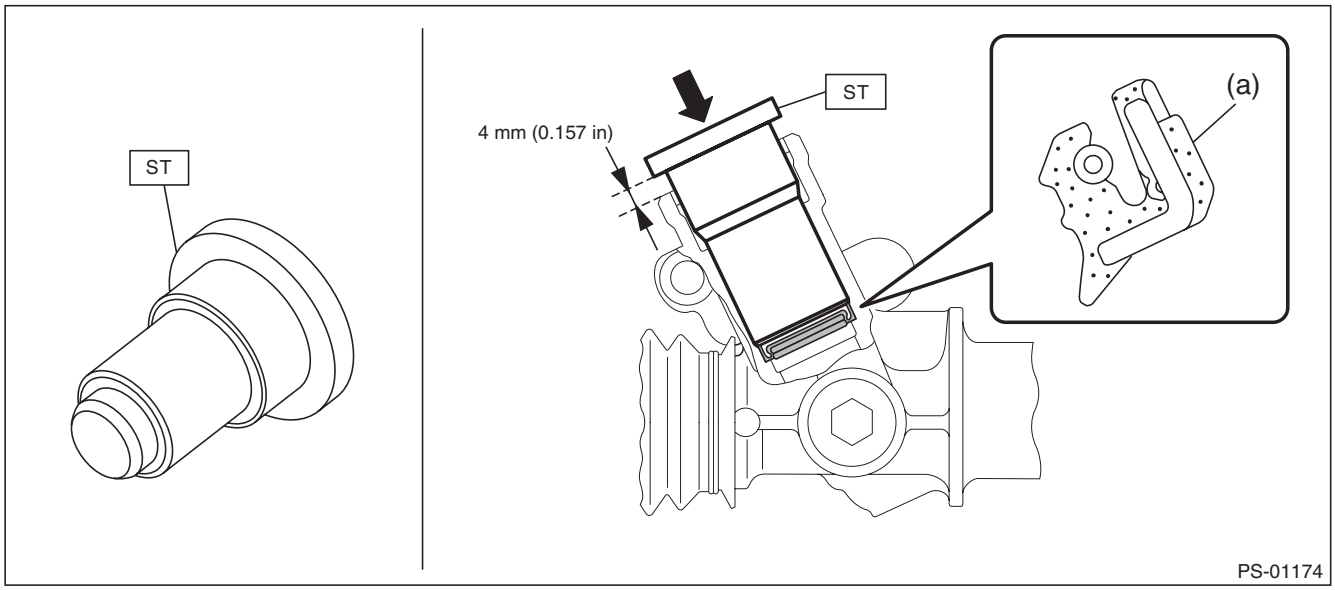

GETtheMANUALS.org

4) Using the ST, install the inner oil seal (a) to the rack.
   (1) Using (ST-A) and (ST-B), install the inner oil seal (a) to (ST-C).

CAUTION:
Pay attention to the orientation of the oil seal.

PREPARATION TOOL:
ST: INSTALLER A, B, C (34199FE040)

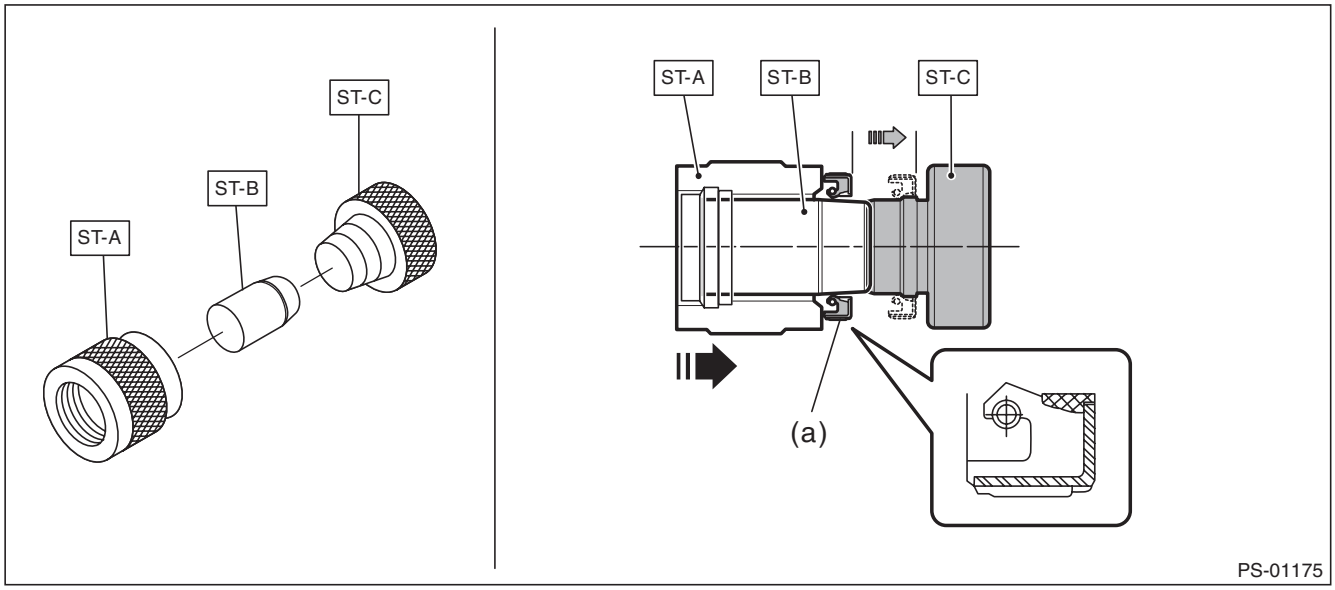

   (2) Insert (ST-C) with oil seal assembled from the gear side of rack (b).
   (3) Remove the inner oil seal (a) from (ST-C) near piston (c), and then remove (ST-C) from rack.
   (4) Install the back-up washer (d) from the gear side of rack (b).

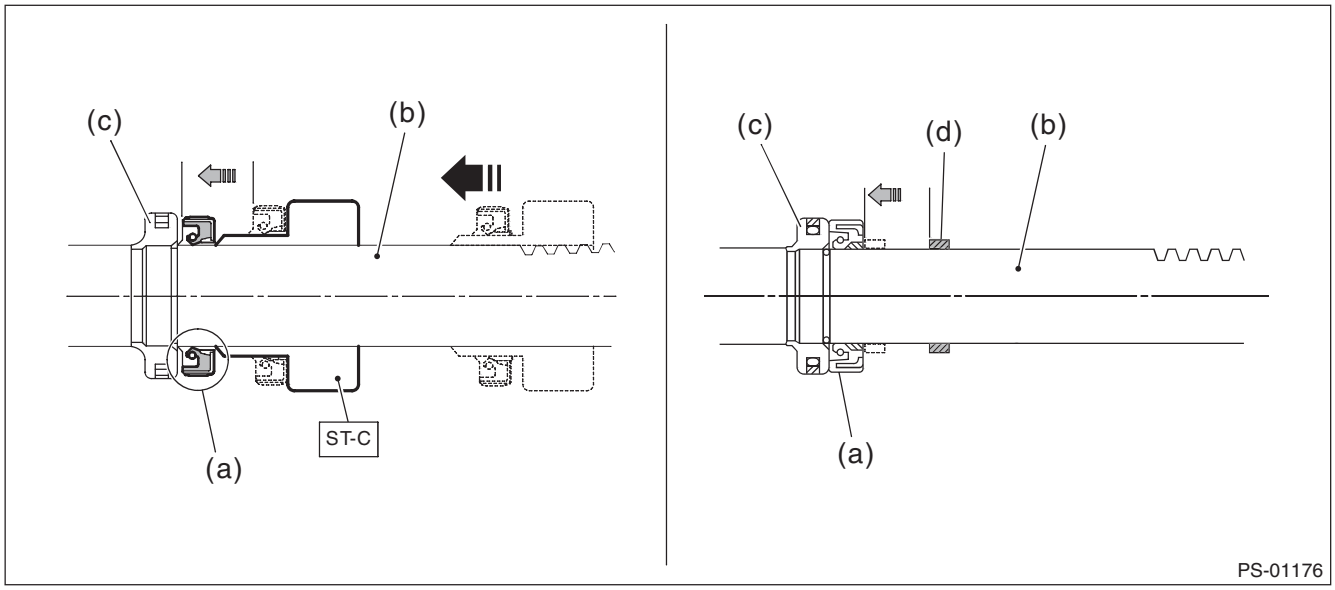

GETtheMANUALS.org

5) Then insert the rack into steering body.
   (1) Apply a coat of grease to the grooves in rack, sliding surface of sleeve and sealing surface of piston.
   (2) Then insert the rack into steering body from cylinder side.
   (3) Temporarily tighten the holder (a) to gearbox cylinder.

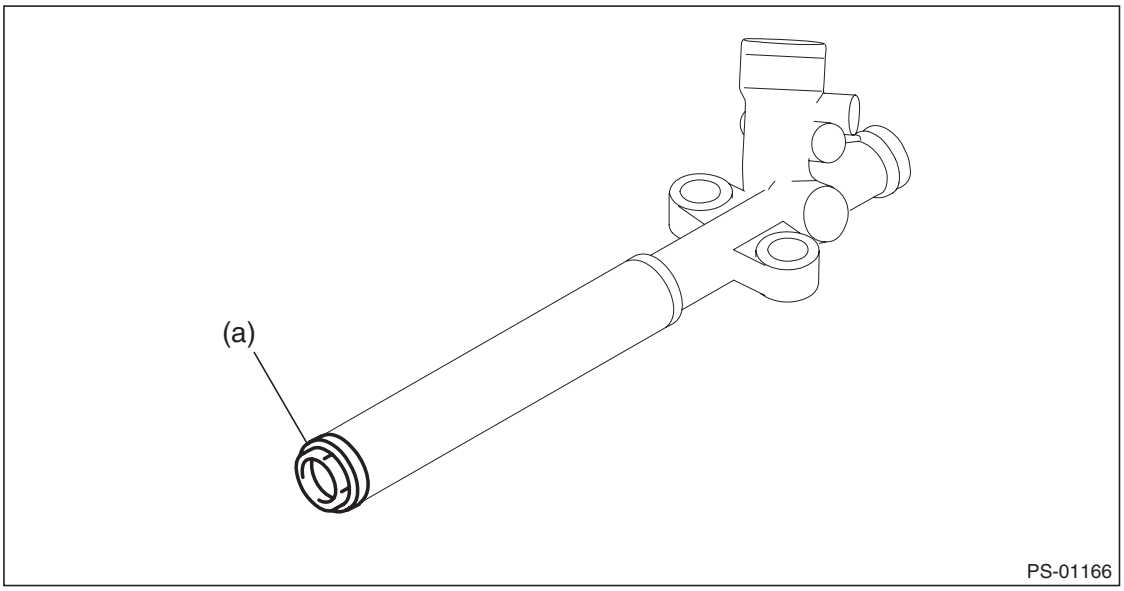

NOTE:
For temporarily tightening, reuse the holder removed during disassembly.
   (4) Place a mark (b) at the location 9 mm (0.35 in) from the ST end surface.

PREPARATION TOOL:
ST: INSTALLER & REMOVER (34199FE000)
   (5) Set the ST to the end of rack.
   (6) Using a press, press-fit until the mark (b) on the ST is aligned with the end surface of the holder.

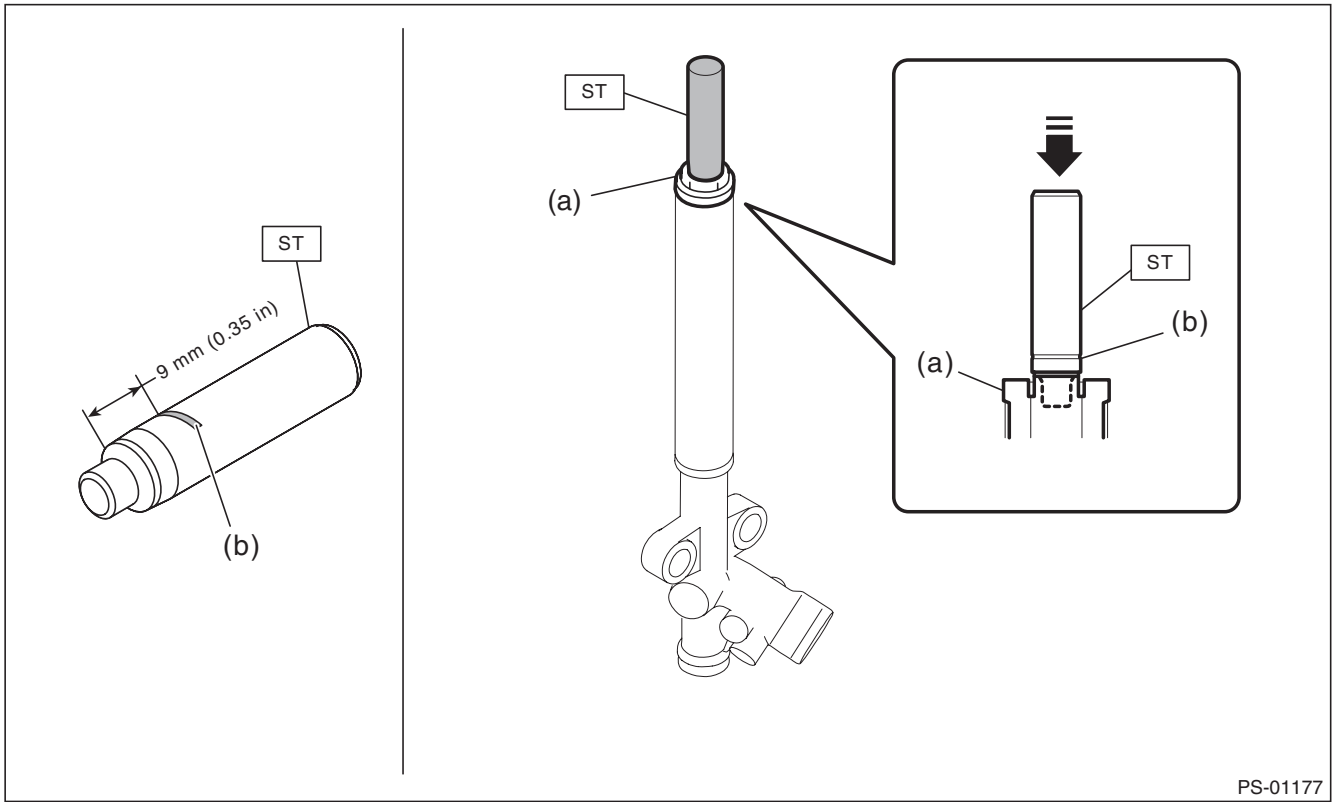

GETtheMANUALS.org

(7) Remove the ST and temporarily tightened holder.

6) Insert the outer oil seal (e) into the rack using the same procedure as step 4).

(1) Using (ST-A) and (ST-B), install the outer oil seal (e) to (ST-C).

CAUTION:
Pay attention to the orientation of the oil seal.

PREPARATION TOOL:
ST: INSTALLER A, B, C (34199FE040)

(2) Insert (ST-C) with outer oil seal (e) assembled into the rack (b).

(3) Remove the outer oil seal (e) from (ST-C), and then remove (ST-C) from rack (b).

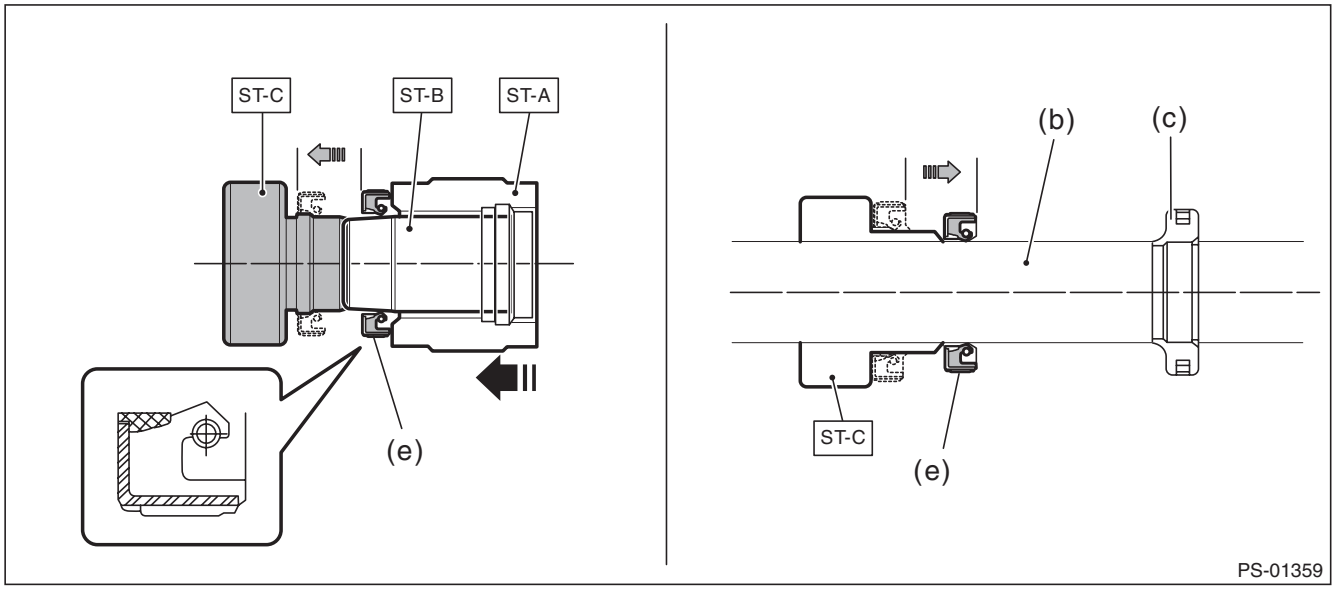

(4) Make the ST1 pass through the rack, and then press in the rack and ST2 using a press.

(5) Press in the outer oil seal (e) until ST1 and ST2 contact each other, and the rack end face is aligned with the end face of ST.

PREPARATION TOOL:
ST1: GUIDE (34199FE050)
ST2: INSTALLER (34199FE060)

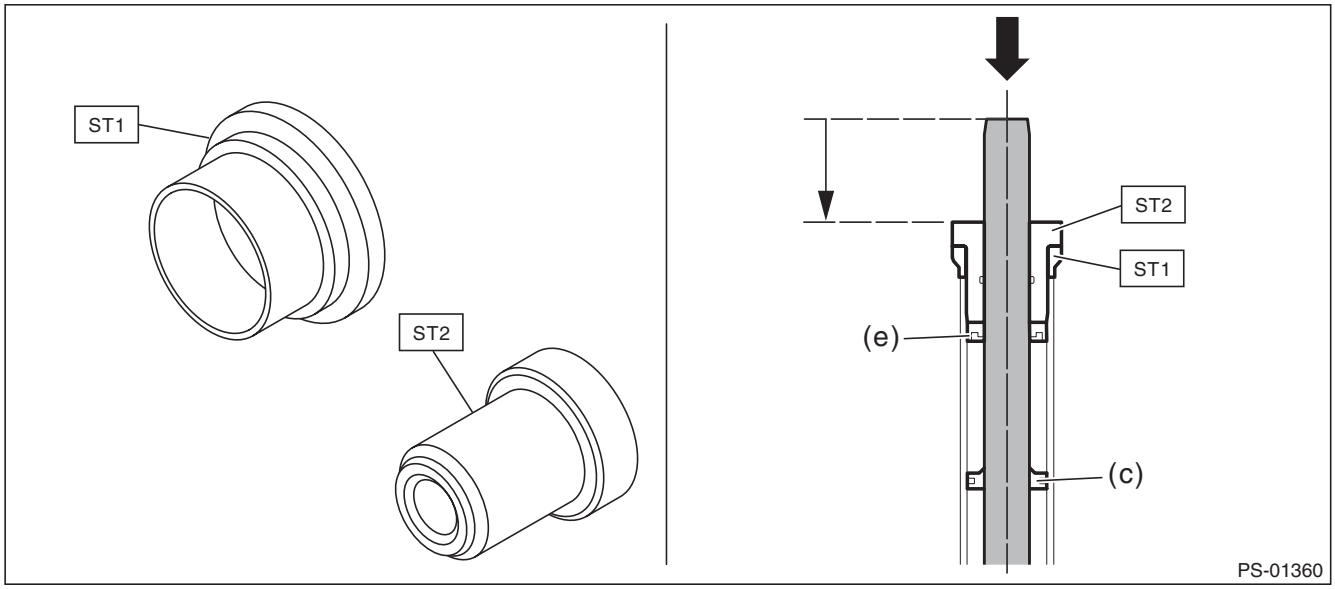

GETtheMANUALS.org

7) Install the holder (a) to the steering body (b).
   (1) Install a new holder to the cylinder side of steering body.

Tightening torque:
75 N·m (7.65 kgf-m, 55.3 ft-lb)
   (2) Using the ST, crimp one location less than 3 mm (0.12 in) from the holder.

CAUTION:
Be careful not to deform the holder.

PREPARATION TOOL:
ST1: PUNCH HOLDER (34099FA060)
ST2: BASE (34199FE020)

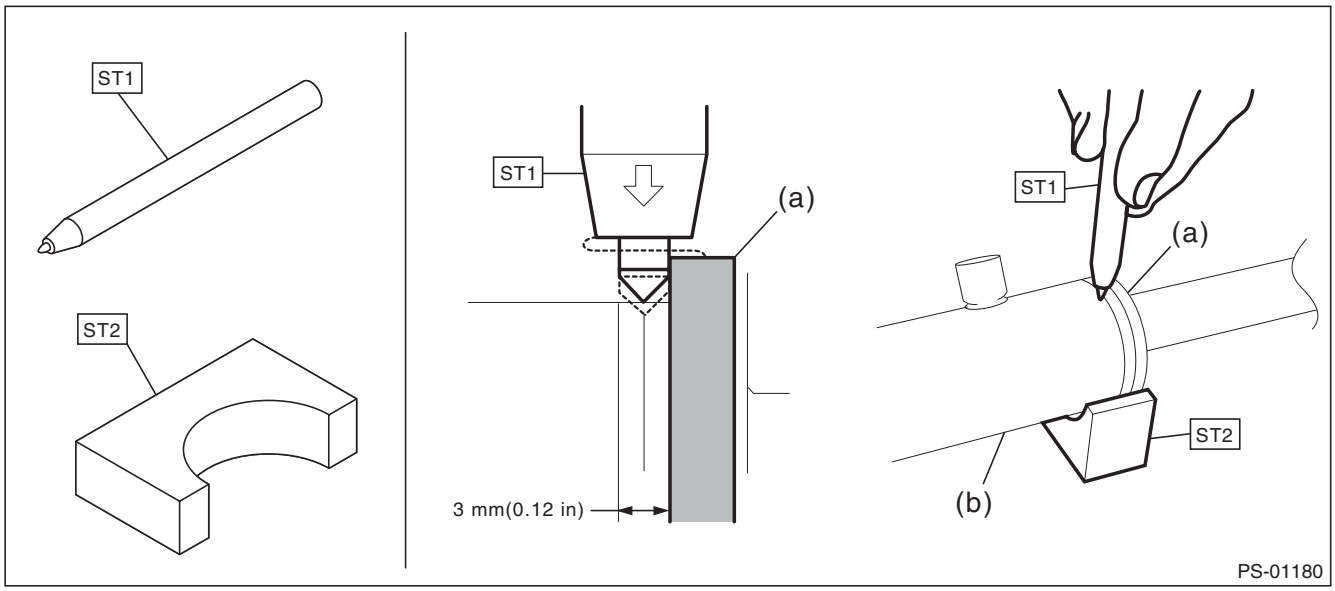

8) Install the valve assembly.
   (1) Replace the O-ring (c) of plug (b) circumference with a new O-ring.
   (2) Apply grease on the oil seal (a) circumference, and then press it into the plug using ST1 and a press.

CAUTION:
- **Install the oil seal paying attention to correct direction.**
- **Make sure to press fit the oil seal in all the way.**
- **The gap between the plug and the ST is to be approximately 1 mm (0.039 in) after press fitting.**

GETtheMANUALS.org

PREPARATION TOOL:
ST1: OIL SEAL PLUG INSTALLER (34199AE110)

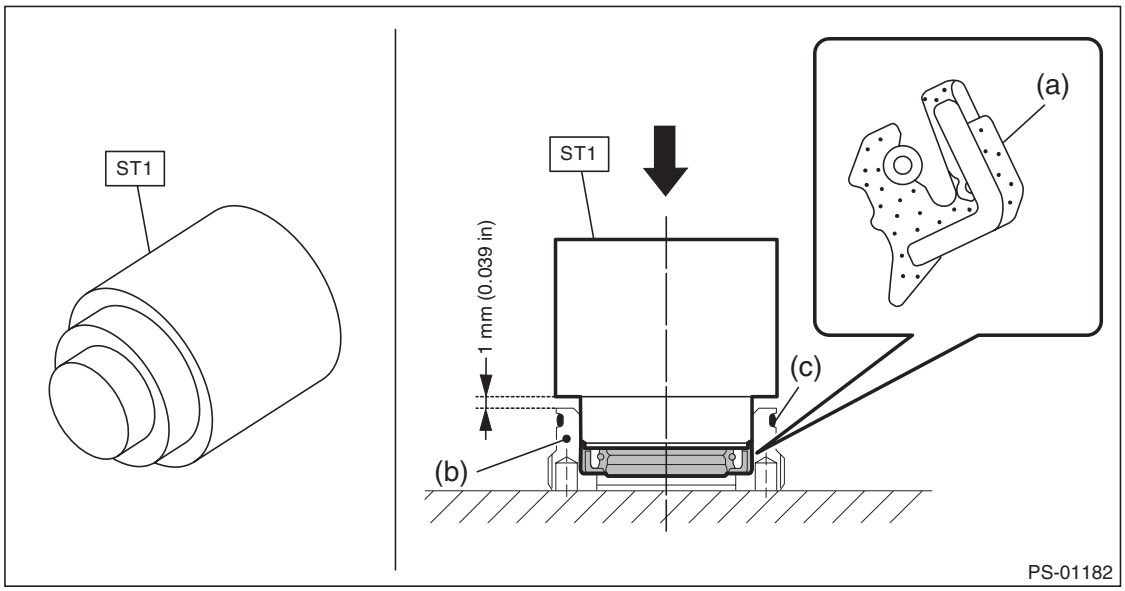

(3) Roll a vinyl tape (d) on the serration portion of valve assembly, and then apply grease on the tape surface.
(4) Apply a coat of grease on the gear teeth of the valve assembly, and then attach the valve assembly.

CAUTION:
Be careful not to scratch the oil seals (e) and seal ring (f).

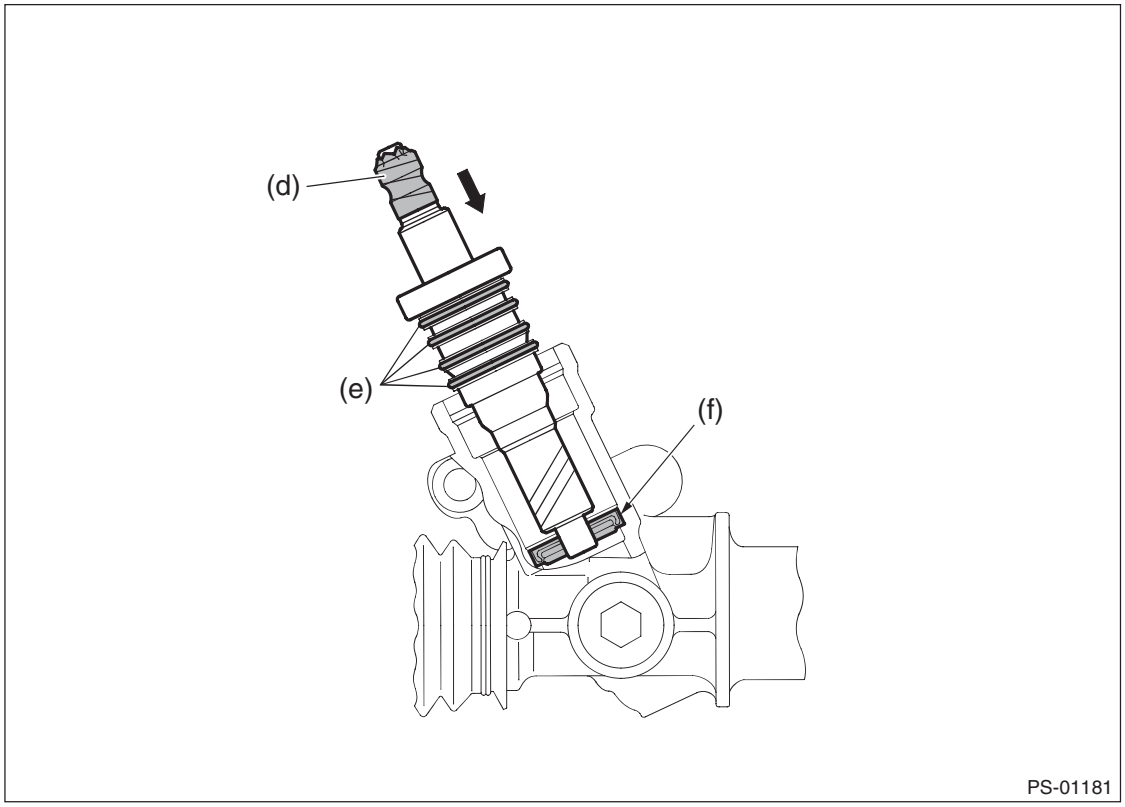

GETtheMANUALS.org

(5) Attach the plug (g) using ST2.

PREPARATION TOOL:
ST2: PLUG-WRENCH (34199AE090)

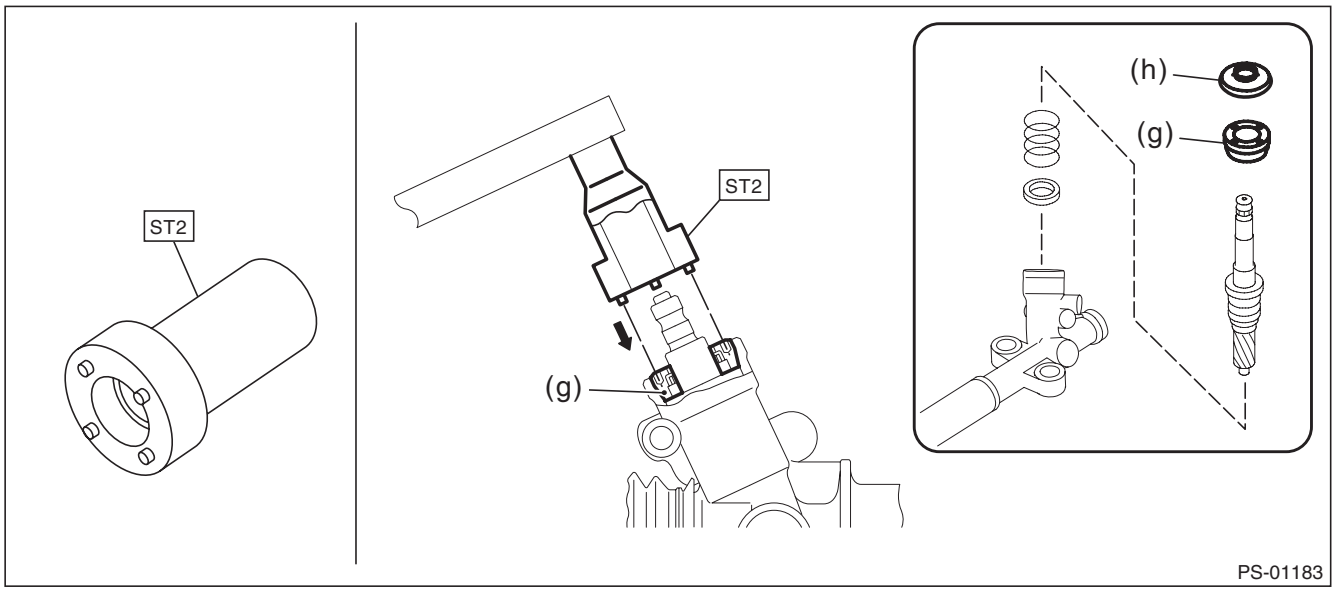

Tightening torque:
64 N·m (6.53 kgf-m, 47.2 ft-lb)

(6) Install the dust cover (h), and remove the vinyl tape (d).

9) Temporarily tighten the tie-rod to the rack end, and then operate the rack from lock to lock for two or three times to make it fit in.

CAUTION:
If operating the rack from lock to lock without installing tie-rods, it may damage the oil seal. Always install the tie-rods LH and RH.

10) Install the adjusting screw to the steering body.

(1) Apply liquid gasket to 1/3 or more (A) of entire perimeter of adjusting screw thread (c).

Liquid gasket:
THREE BOND 1102 or THREE BOND 1215

(2) Apply a coat of grease to the sliding surface (B) of sleeve (a) and seating surface (C) of spring (b), and then insert the sleeve into steering body.

GETtheMANUALS.org

(3) Charge the adjusting screw with grease (D), and then insert the spring into adjusting screw. Then install on the steering body.

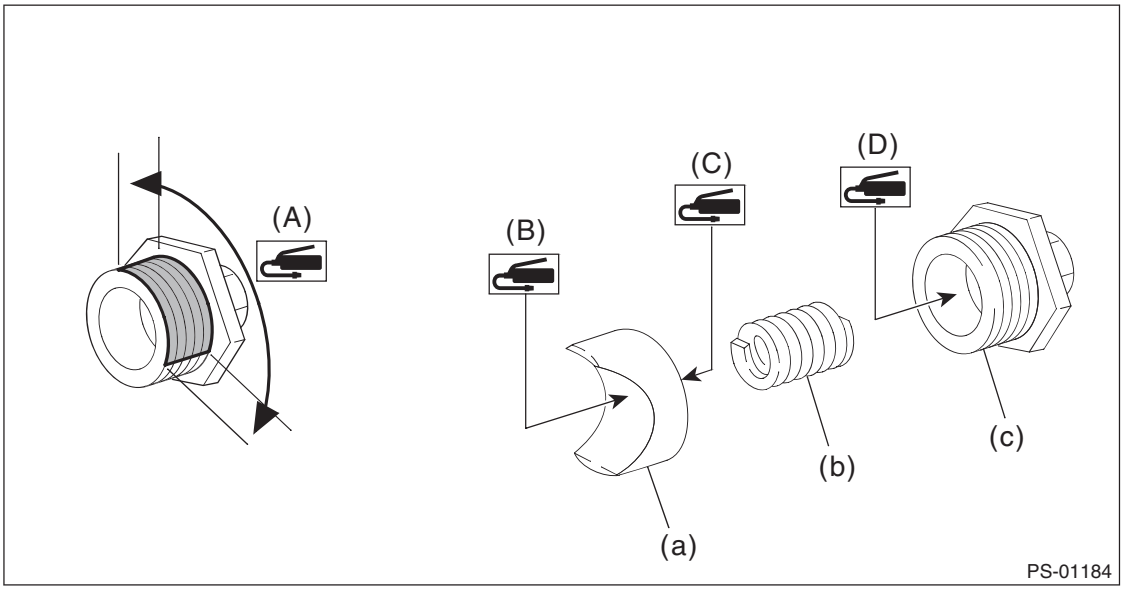

(4) Tighten the adjusting screw to the specified torque, then loosen it.

Tightening torque:
9.8 N·m (1.0 kgf-m, 7.2 ft-lb)

(5) Tighten the adjusting screw to the specified torque, then loosen it.

Tightening torque:
6.0 N·m (0.61 kgf-m, 4.4 ft-lb)

(6) Tighten the adjusting screw to the specified torque, then loosen it approx. 30°.

CAUTION:
Do not loosen 30° or more.

Tightening torque:
6.0 N·m (0.61 kgf-m, 4.4 ft-lb)

11) Remove the tie-rod which was temporarily tightened in step 9).
12) Check that play and looseness are within specifications. <Ref. to PS-56, SERVICE LIMIT, INSPECTION, Steering Gearbox.>
13) While holding the adjusting screw (a) with a wrench, tighten the lock nut using ST.

CAUTION:
Make sure that the screw is not turning while tightening the lock nut.

PREPARATION TOOL:
ST: SPECIAL TOOL CPS (34199AJ060)

Tightening torque (lock nut):
39 N·m (3.98 kgf-m, 28.8 ft-lb)

14) Install the tie-rod into rack.

CAUTION:
Check the mating face of rack and tie-rod for foreign matter such as dust etc.

Tightening torque:
90 N·m (9.18 kgf-m, 66.4 ft-lb)

15) Install the boot to the housing.

(1) Apply a coat of grease to the tie-rod groove, and then install the boot to the housing.

GETtheMANUALS.org

CAUTION:
Make sure that the boot is installed properly without unusual inflation or deflation.

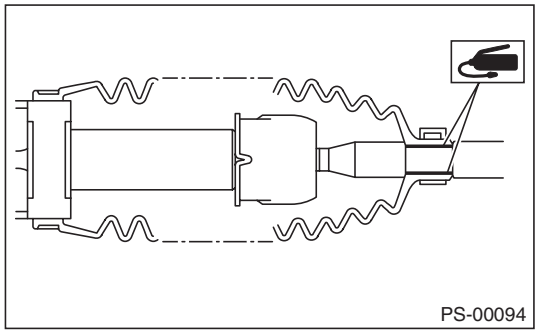

(2) Using the boot clamp pliers, crimp the boot so that the clearance (b) of the boot band (a) crimp portion becomes 2 mm (0.08 in) or less.

CAUTION:
Use a new boot band.

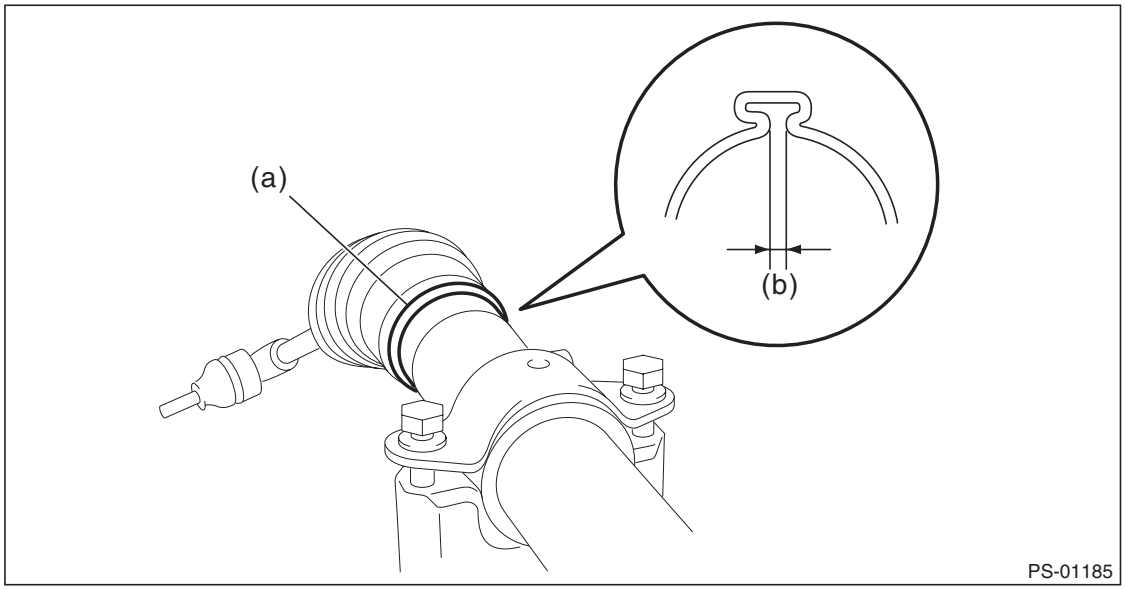

(3) Fix the boot end with small clip (1).

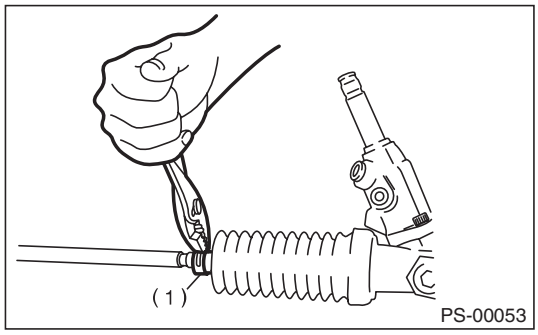

(4) After installing, check that the boot end is installed to the groove of the tie-rod.

GETtheMANUALS.org

(5) If the tie-rod end has been removed, screw in lock nut and tie-rod end to the screwed portion of tie-rod, and tighten the lock nut temporarily in a position as shown in the figure.

Installed tie-rod length L:
24 mm (0.9 in)

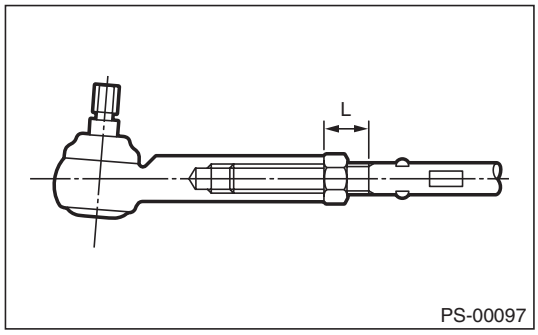

16) Inspect the gearbox as follows:
- "A" Holding the tie-rod end, repeat lock to lock several times as quickly as possible.
- "B" Holding the tie-rod end, turn it slowly at a radius several times as large as possible.
- Finally, make sure that the boot is installed in the specified position without inflating.

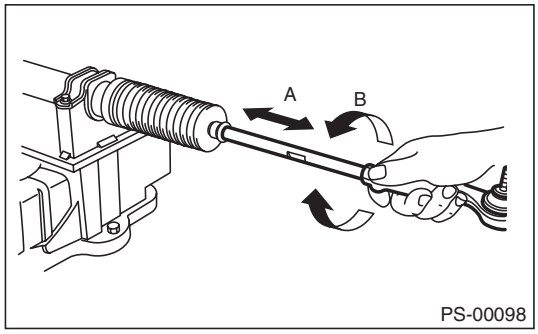

17) Remove the ST (STAND and BOSS D) from gearbox.
18) Attach the 4 pipes to the steering body and control valve housing.

GETtheMANUALS.org

E: INSPECTION

1. BASIC INSPECTION

1) Clean all the disassembled parts, and check for wear, damage or any other faults, then repair or replace as necessary.
2) When disassembling, check the inside of gearbox for water. If any water is found, carefully check the boot for damage, input shaft dust seal, adjusting screw and boot clips for poor sealing. If faulty, replace with new parts.

No.	Parts	Inspection	Corrective action
1	Input shaft	(1) Bent input shaft (2) Damage on serration	If the bend or damage is excessive, replace the entire gearbox.
2	Dust seal	(1) Crack or damage (2) Wear	If the outer wall slips, the lip is worn out or damage is found, replace it with a new part.
3	Rack and pinion	Poor mating of rack with pinion	(1) Adjust the backlash properly. By measuring the turning torque of the gearbox and sliding resistance of rack, check if the rack & pinion engage uniformly and smoothly with each other. (Refer to “Service limit”.) (2) Pull out the entire rack to allow viewing of the teeth, and check for damage. Even if abnormality is found in either (1) or (2), replace the entire gearbox.
4	Gearbox unit	(1) Bending of the rack shaft (2) Bending of the cylinder portion (3) Crack or damage on the aluminum portion	Replace the gearbox with a new part.
		(4) Wear or damage on rack bushing	If the free play of rack shaft in radial direction is out of the specified range, replace the gearbox with new part. (Refer to “Service limit”.)
		(5) Wear on input shaft bearing	If the free play of input shaft in radial and axial direction is out of the specified range, replace the gearbox with a new part. (Refer to “Service limit”.)
5	Boot	Crack, damage or deterioration	Replace.
6	Tie-rod	(1) Looseness of ball joint (2) Bend of tie-rod	Replace.
7	Tie-rod end	Damage or deterioration of dust seal	Replace.
8	Adjusting screw spring	Deterioration	Replace.
9	Boot clip	Deterioration	Replace.
10	Sleeve	Damage	Replace.
11	Pipe	(1) Damage to flared surface (2) Damage to flare nut (3) Damage to pipe	Replace.

2. SERVICE LIMIT

Make a measurements as follows. If it exceeds the specified service limits, adjust or replace.

CAUTION:
When making a measurement, secure the gearbox in a vise using ST.
When fixing the gearbox in a vise, apply a wooden piece on the flange portion.

PREPARATION TOOL:
ST1: STAND (926200000)
ST2: BOSS D (34199AG000)

GETtheMANUALS.org

Rack shaft sliding resistance

Measure the resistance with the rack shaft pulled.

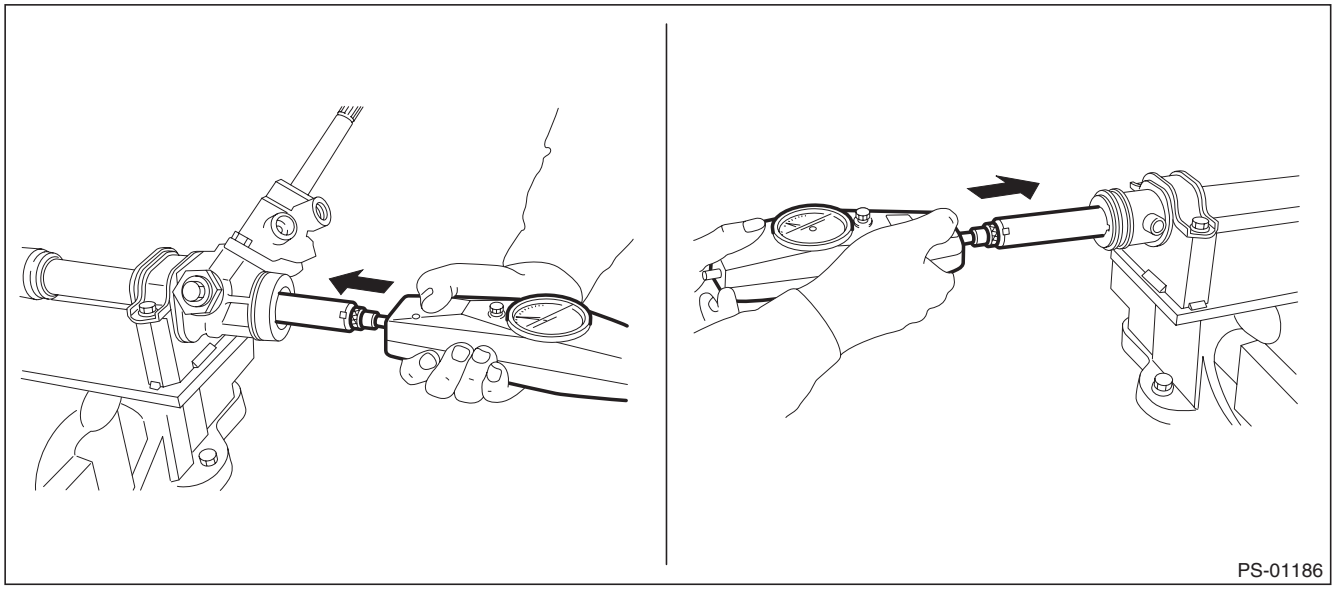

Limit: 650 N (66.2 kgf, 146 lbf) or less

Left/right differential of sliding resistance: 20 % or less

Rack shaft play in the radial direction

- **Right-turn steering**

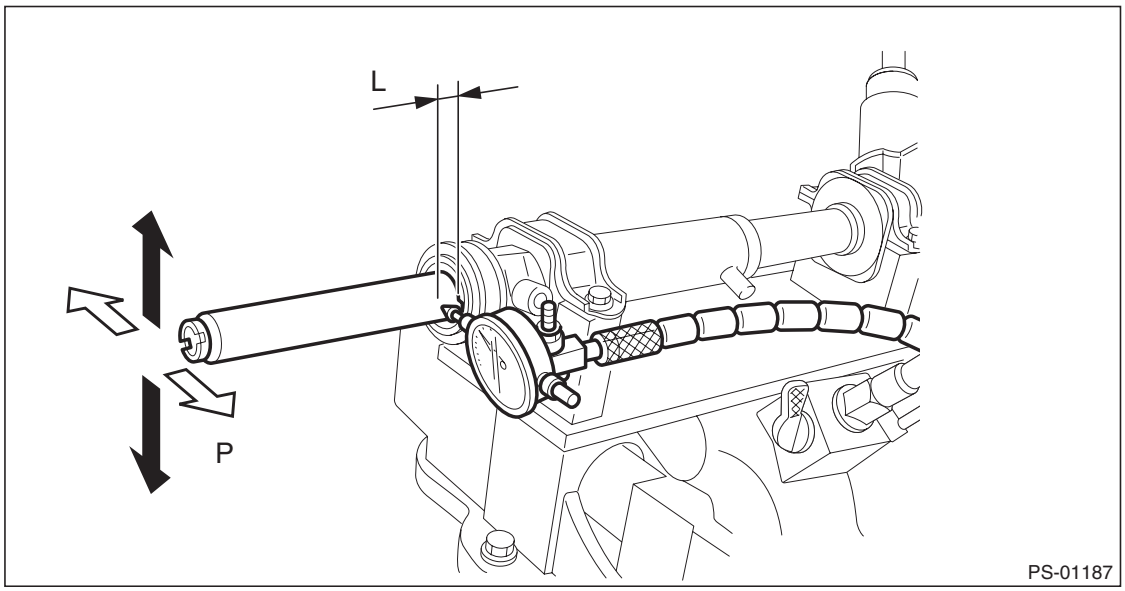

Limit

Direction ⬅ ➡: 0.4 mm (0.016 in) or less
Direction ⇦ ⇨: 0.6 mm (0.024 in) or less

Condition

L: 5 mm (0.20 in)
P: 98 N (10 kgf, 22 lbf)

GETtheMANUALS.org

- **Left-turn steering**

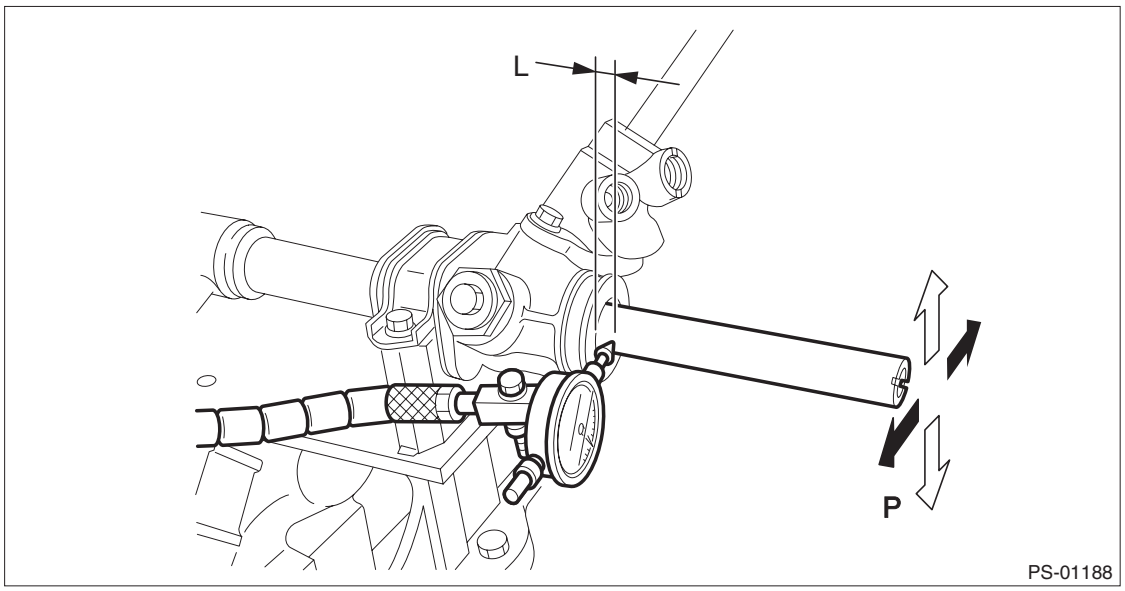

Service limit:
Direction ⇦ ⇨: 0.4 mm (0.016 in) or less
Direction ⬅ ➡: 0.4 mm (0.016 in) or less

Input shaft play

- **In radial direction**

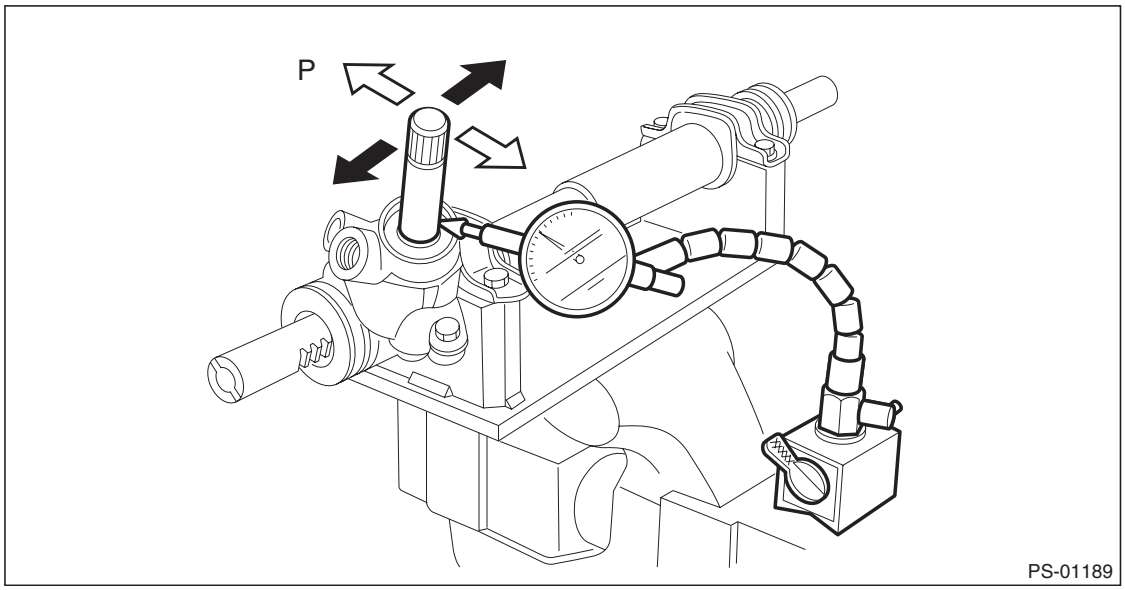

Limit
0.18 mm (0.0071 in) or less

Condition
P: 98 N (10 kgf, 22 lbf)

GETtheMANUALS.org

- **In axial direction**

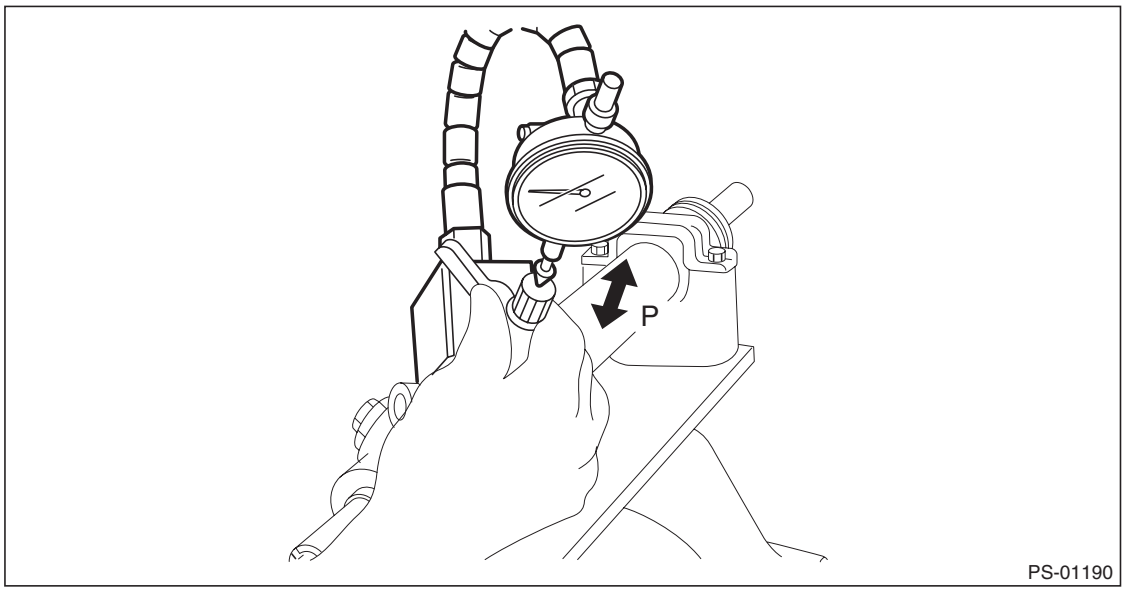

Service limit
0.27 mm (0.0106 in) or less

Condition
P: 20 — 49 N (2 — 5 kgf, 4 — 11 lbf)

ROTATIONAL RESISTANCE OF GEARBOX

Using the ST, measure the gearbox rotational resistance.

PREPARATION TOOL:
ST: SPECIAL TOOL EPS (34099PA100)

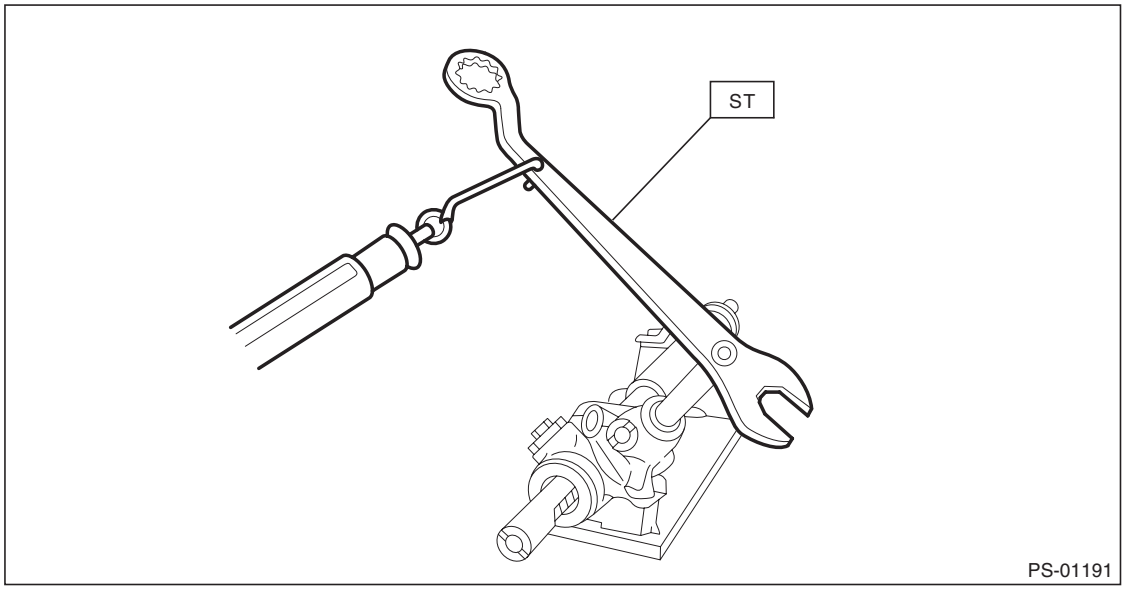

Service limit:
Maximum allowable resistance: 30 N (3.1 kgf, 6.7 lbf) or less
Difference between right and left rotational resistance: 20 % or less

GETtheMANUALS.org

3. OIL LEAKAGE

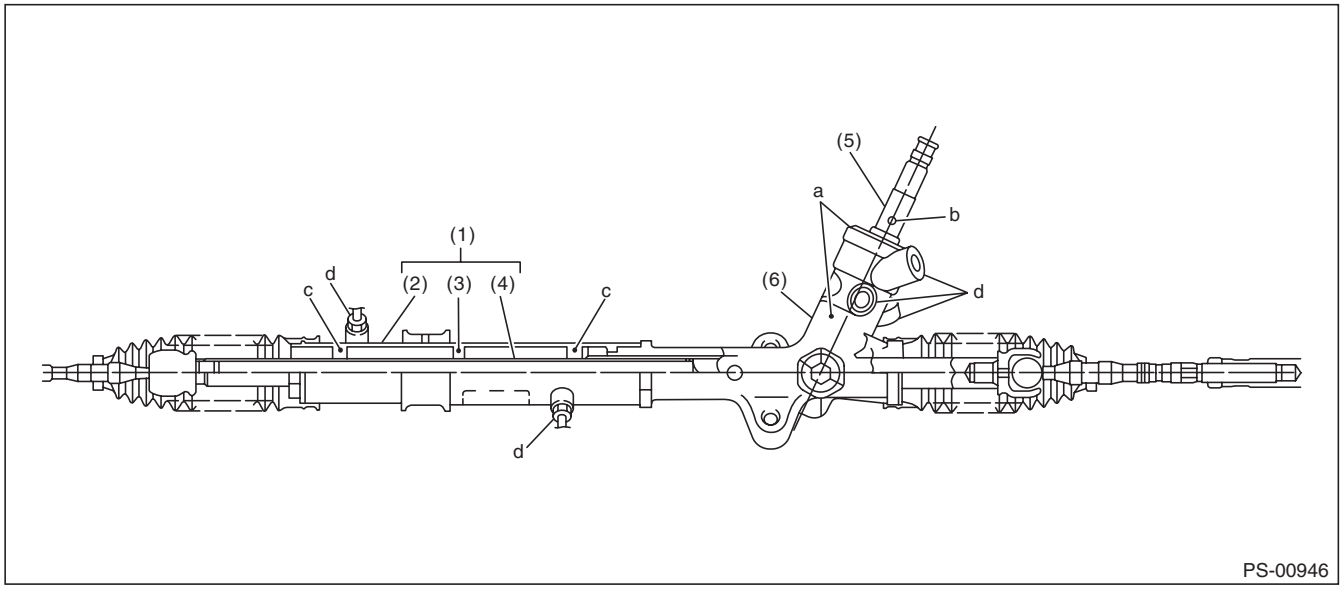

(1)	Power cylinder	(3)	Rack piston	(5)	Input shaft
(2)	Cylinder	(4)	Rack axle	(6)	Valve housing

1) Lift up the vehicle.
2) If a fluid leak is found, clean the fluid completely from the suspect area, and turn the steering wheel 30 to 40 times to the left and right from lock to lock, with the engine running, and check again for leaks immediately, and also after a few hours have passed.
3) **Cause and solution for oil leakage from “a”**
The oil seal is damaged. Replace the valve assembly or oil seal with a new part.
4) **Cause and solution for oil leakage from “b”**
The torsion bar O-ring is damaged. Replace the valve assembly with a new part.
5) **Cause and solution for oil leakage from “c”**
The oil seal is damaged. Replace the oil seal.
6) **Cause and solution for oil leakage from “d”**
The pipe is damaged. Replace the faulty pipe or O-ring.

GETtheMANUALS.org

F: ADJUSTMENT

1. GEARBOX BACKLASH ADJUSTMENT (SERVICING ON VEHICLE)

1) Using the ST, loosen the lock nut.
2) Loosen the adjusting screw by using ST, and apply liquid gasket to the entire area of the adjusting screw threads.

PREPARATION TOOL:
ST: SPECIAL TOOL CPS (34199AJ060)

Liquid gasket:
THREE BOND 1102 or THREE BOND 1215

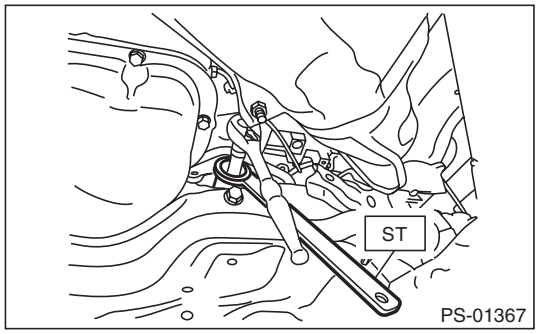

3) Tighten the adjusting screw to the specified torque, then loosen it.

Tightening torque:
9.8 N·m (1.0 kgf-m, 7.2 ft-lb)
4) Tighten the adjusting screw to the specified torque, then loosen it.

Tightening torque:
6.0 N·m (0.61 kgf-m, 4.4 ft-lb)
5) Tighten the adjusting screw to the specified torque, then loosen it approx. 30°.

CAUTION:
Do not loosen 30° or more.

Tightening torque:
6.0 N·m (0.61 kgf-m, 4.4 ft-lb)
6) Install the lock nut. While holding the adjusting screw, tighten the lock nut using ST.

Tightening torque (lock nut):
39 N·m (3.98 kgf-m, 28.8 ft-lb)

NOTE:
Secure the adjusting screw to prevent it from rotating while tightening the lock nut.

2. FRONT WHEEL ALIGNMENT ADJUSTMENT

1) Adjust the front toe.
<Ref. to FS-12, FRONT WHEEL TOE-IN, INSPECTION, Wheel Alignment.>
2) Check the steering angle of the wheels.

Standard of steering angle:

Model	Inner wheel	Outer wheel
225/50R17 tire	37.4°±1.5°	33.0°±1.5°
225/45R18 tire	37.4°±1.5°	33.0°±1.5°
215/50R17 tire	37.6°±1.5°	33.3°±1.5°
205/60R16 tire	37.6°±1.5°	33.3°±1.5°
225/60R17 tire	38.4°±1.5°	34.1°±1.5°
215/70R16 tire	38.4°±1.5°	34.1°±1.5°

GETtheMANUALS.org

3) If the steering wheel spokes are not horizontal when wheels are set in the straight ahead position, or error is more than 5° on the periphery of the steering wheel, correctly re-install the steering wheel.

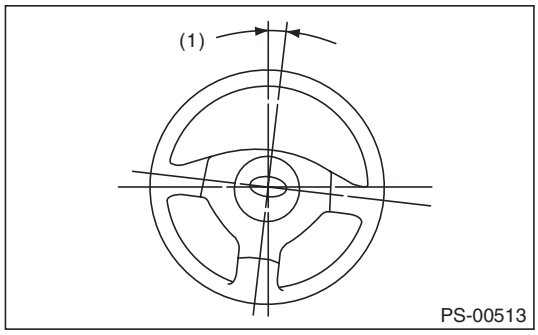

(1) 5° or less

4) If the steering wheel spokes are not horizontal with vehicle set in the straight ahead position after this adjustment, correct it by turning the right and left tie-rods in the opposite direction from each other by the same angle. Also check that there are no abnormal steering force, failure of the steering wheel to return or other faults.

GETtheMANUALS.org

6. Pipe Assembly

A: REMOVAL

1) Set the vehicle on a lift.
2) Remove the power steering hose bracket and power steering hose.

CAUTION:
Plug the removed hose and pipe to prevent foreign matter from entering.

(1) Remove the clip and disconnect the hose (a) from the pipe.
(2) Remove the power steering hose bracket (b).
(3) Remove the hose (c) from power steering pump.

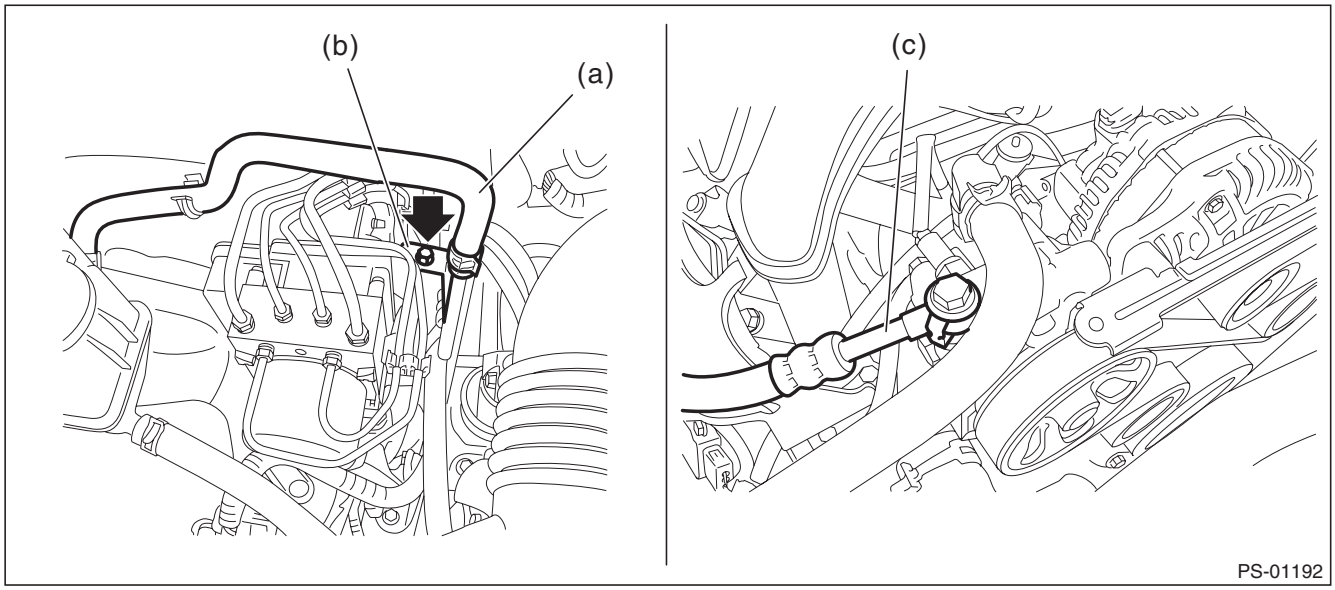

3) Lift up the vehicle, and then remove the under cover.

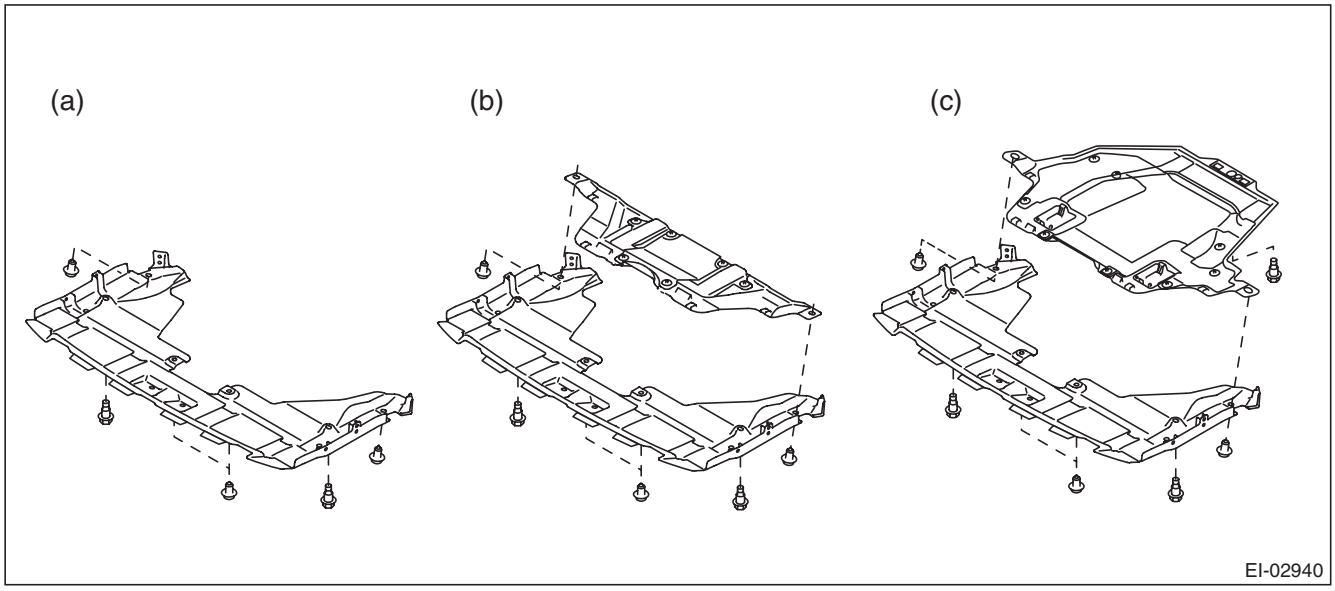

(a) Small type (b) Medium type (c) Large type

GETtheMANUALS.org

4) Disconnect the hose assembly from the steering gearbox.

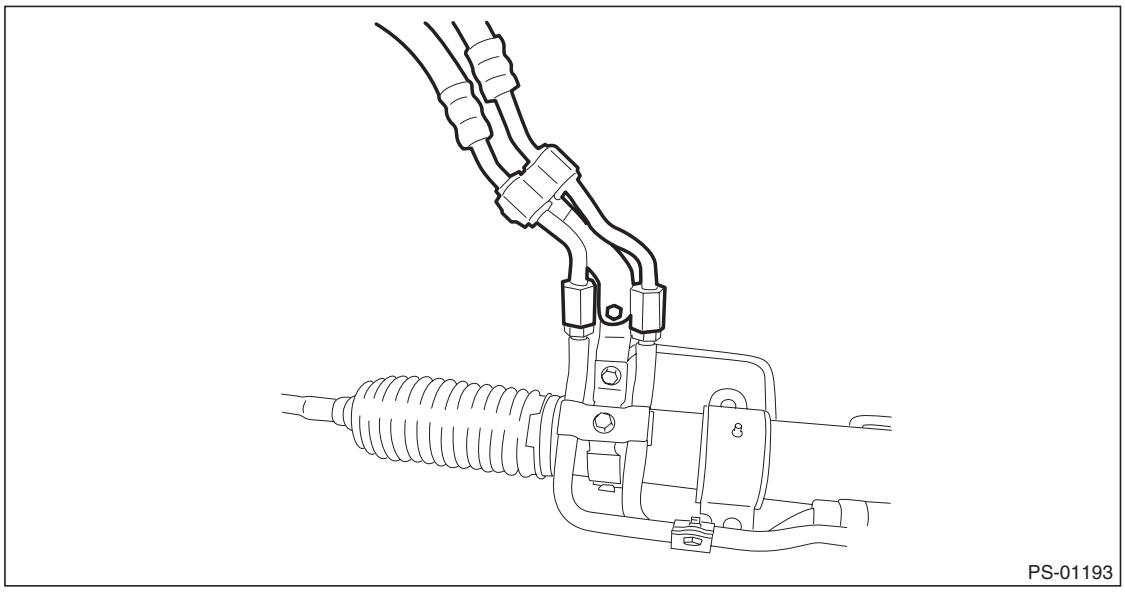

B: INSTALLATION

1) Install each part in the reverse order of removal.

Tightening torque:
Refer to "COMPONENT" of "General Description". <Ref. to PS-5, HOSE AND TANK, COMPONENT, General Description.>

2) Fill with recommended power steering fluid and perform air bleeding. <Ref. to PS-77, Power Steering Fluid.>

CAUTION:
Never start the engine before filling with fluid; otherwise the vane pump may become seized.

GETtheMANUALS.org

C: INSPECTION

Check all disassembled parts for wear, damage or other problems. Repair or replace the defective parts as necessary.

Part	Maintenance parts	Corrective action
Pipe	• O-ring fitting surface damage • Nut damage • Pipe damage	Replace with a new part.
Hose	• Flare surface damage • Flare nut damage • Outer surface cracks • Outer surface wear • Clip damage • End coupling or adapter deformation	Replace with a new part.

CAUTION:
Although the surface layer materials of rubber hoses have excellent weathering resistance, heat resistance and resistance for low temperature brittleness, they are likely to be damaged chemically by brake fluid, battery electrolyte, engine oil and automatic transmission fluid and their service lives are to be very shortened. Wipe off hoses immediately if any of these come into contact with the hoses.
Since resistances for heat or low temperature brittleness are gradually declining according to time accumulation of hot or cold conditions for the hoses and their service lives are shortening accordingly, it is necessary to perform careful inspection frequently when the vehicle is used in hot weather areas, cold weather areas and a driving condition in which many steering operations are required in short time.
Continuous discharge of the relief valve for 5 seconds or more will reduce the service lives of hoses, oil pump, fluid, etc., due to over heating.

Trouble	Possible cause	Corrective action
Pressure hose burst	Excessive holding time of relief status	Instruct customers.
	Malfunction of the relief valve	Replace the oil pump.
	Poor cold characteristic of fluid	Replace fluid.
Disconnection of the suction hose or return hose	Improper connection	Repair.
	Loosening of the clip	Replace the hose and clip.
	Poor cold characteristic of fluid	Replace fluid.
Fluid slightly leaking out of hose	Wrong layout, tensioned	Replace the hose.
	Excessive play of engine due to deterioration of engine mounting rubber	Replace the parts if defective.
	Improper stop position of pitching stopper	Replace the parts if defective.
Crack on hose	Excessive holding time of relief status	Replace. Instruct customers.
	Power steering fluid, engine oil, electrolyte adhere on the hose surface	Replace. Be careful during service work.
	Too many uses in extremely cold weather	Replace. Instruct customers.

GETtheMANUALS.org

Pipe Assembly

NOTE:
There are conditions in which a fluid leak is diagnosed, but is not actually leaking. This is because the fluid spilt during the last maintenance was not completely wiped off. Be sure to wipe off spilt fluid thoroughly after maintenance.

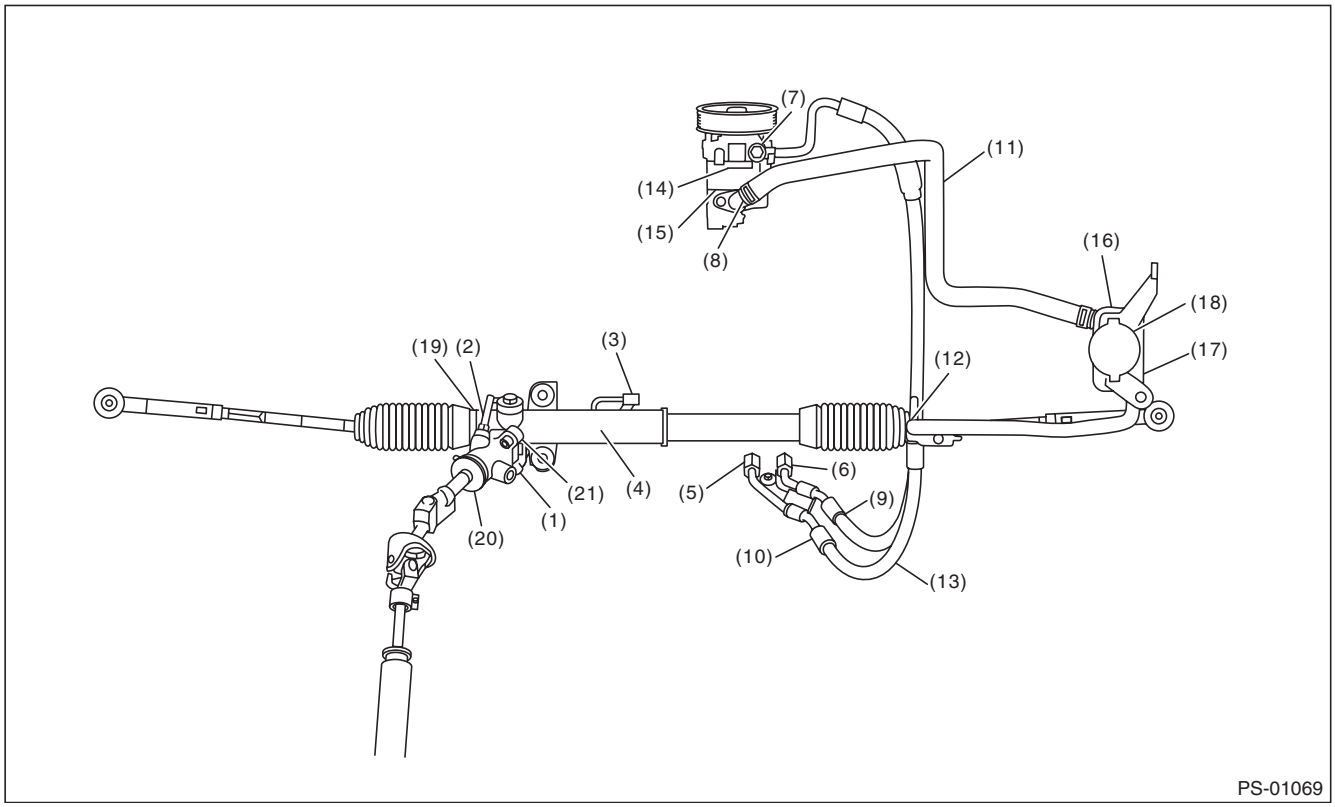

Fluid leaking area	Possible cause	Corrective action
Leakage from the connections of pipes and hoses, numbered (1) through (8) in the figure	Insufficient tightening of flare nut, adhesion of dirt, damage to flare or flare nut or eye bolt	Loosen and retighten. Replace if ineffective.
	Improper installation of hose or clamp	Replace.
	Damaged O-ring or gasket	Replace the O-ring, gasket pipe or hose with new part, if still no improvement, replace the gearbox or oil pump as well.
Leakage from hose (9) through (13) in the figure	Crack or damage in hose	Replace with a new part.
	Crack or damage in hose hardware	Replace with a new part.
Leakage from surrounding of aluminum portion of oil pump, (14) and (15) in the figure	Damaged O-ring	Replace the oil pump.
	Damaged gasket	Replace the oil pump.
Leakage from oil tank, (16) and (17) in the figure	Crack in oil tank	Replace the oil tank.
Leakage from filler neck of (18)	Damaged cap gasket	Replace the cap.
	Crack in root of filler neck	Replace the oil tank.
	Fluid level too high	Adjust the fluid level.
Leakage from power cylinder of gearbox area (19) in the figure	Damaged oil seal	Replace the oil seal.
Leakage from (20), (21) in the figure and control valve of gearbox	Damaged gasket or oil seal	Replace the faulty parts.
	Damage in control valve	Replace the control valve.

GETtheMANUALS.org

7. Oil Pump

A: REMOVAL

1) Disconnect the ground cable from battery.
2) Remove the V-belts. <Ref. to ME(H4SO)-43, REMOVAL, V-belt.>
3) Remove the power steering oil pump assembly.
   (1) Disconnect the connector from power steering pump switch.
   (2) Disconnect the pressure hose (b) and suction hose (a) from power steering oil pump.

CAUTION:
- **Do not allow fluid to come into contact with the pulley belt.**
- **Plug the ends of the hose and pipe to prevent foreign matter from entering.**

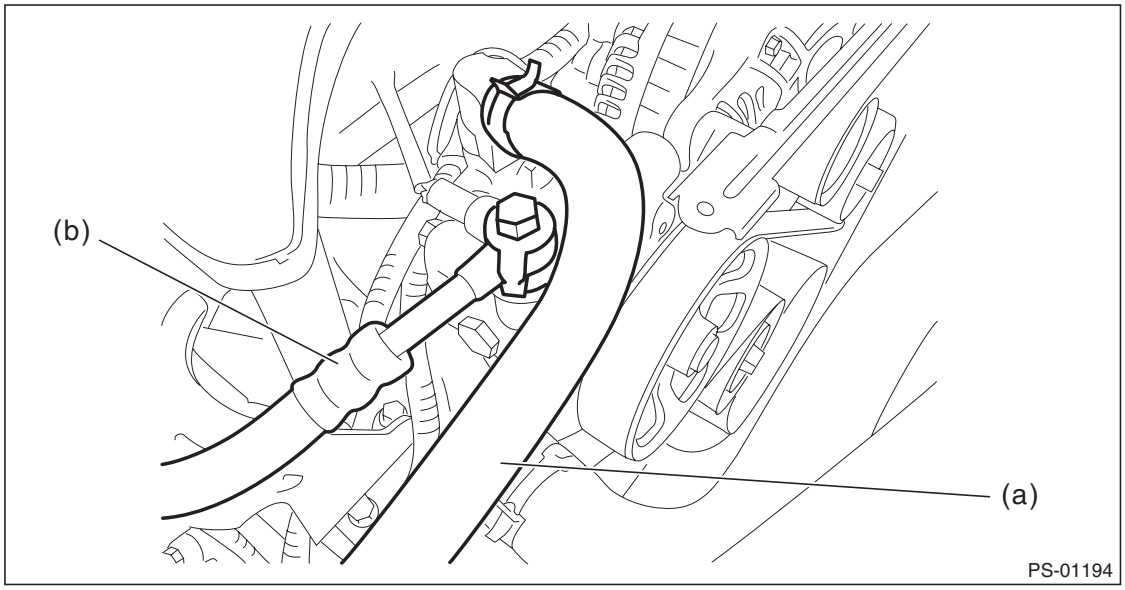

   (3) Remove the bolts, and remove the power steering oil pump assembly.

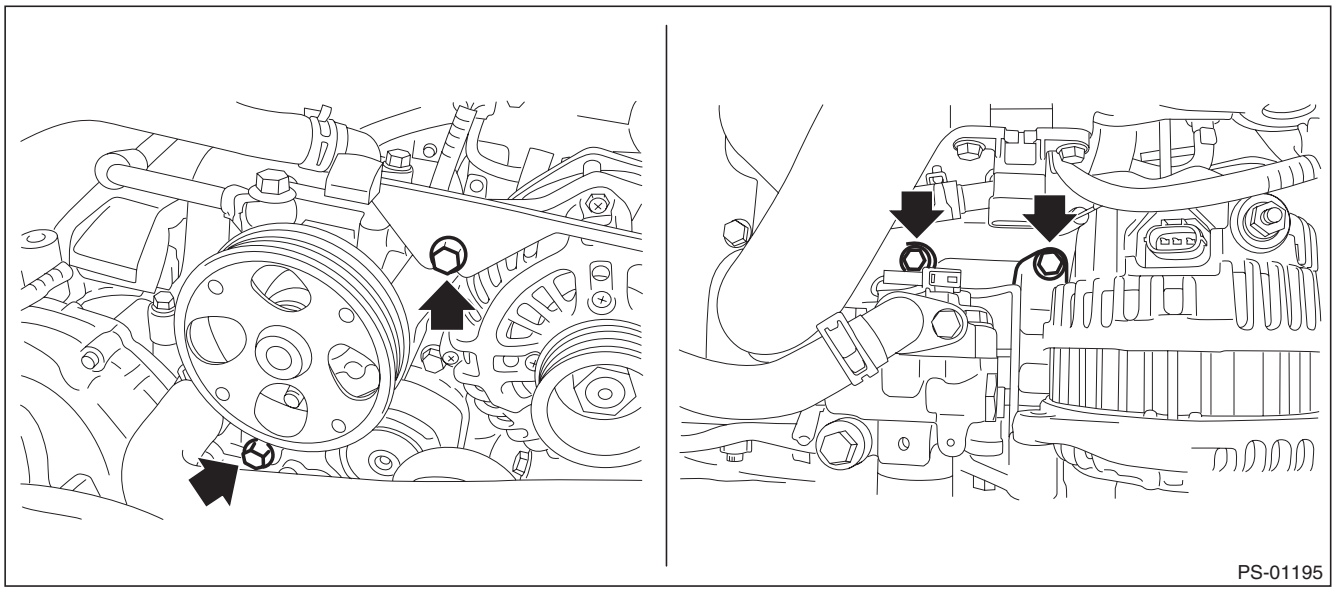

4) Secure the oil pump bracket in a vise, and remove the bolts from both front and rear sides of the oil pump.

GETtheMANUALS.org

CAUTION:
When securing the oil pump bracket in a vice, hold the oil pump bracket with the least possible force between two pieces of wood.

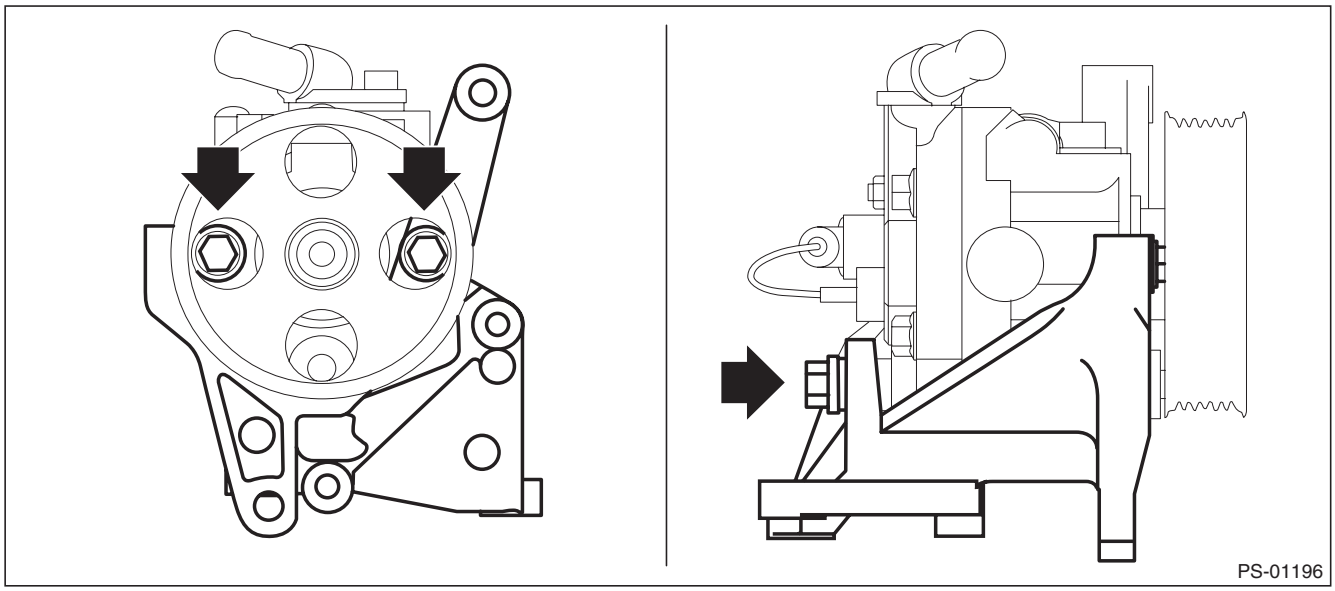

5) Remove the power steering oil pump assembly from the bracket.

B: INSTALLATION

1) Install the bracket to the power steering oil pump.

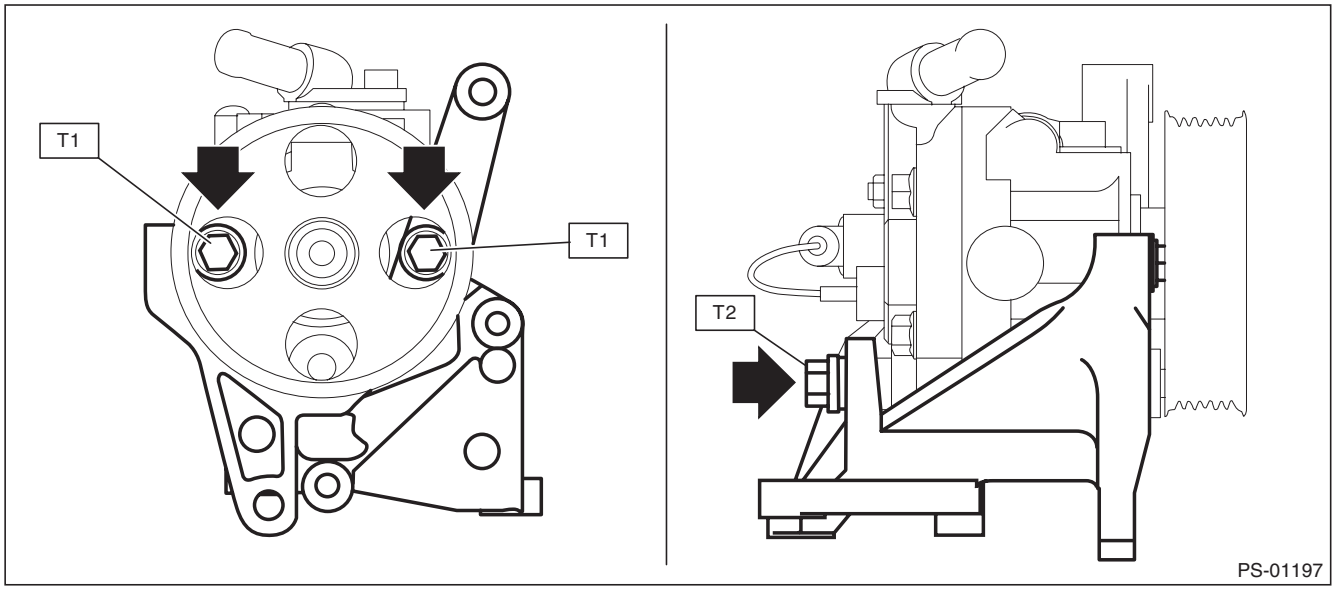

Tightening torque:
T1: 16 N·m (1.63 kgf-m, 11.8 ft-lb)
T2: 36 N·m (3.67 kgf-m, 26.6 ft-lb)

2) Install the power steering pump bracket.

Tightening torque:
H4 model: 22 N·m (2.24 kgf-m, 16.2 ft-lb)
H6 model: 33 N·m (3.36 kgf-m, 24.3 ft-lb)

3) Connect the pressure hose (b) and suction hose (a).

GETtheMANUALS.org

CAUTION:
Be careful when installing; If the hose is twisted it may come into contact with other parts.

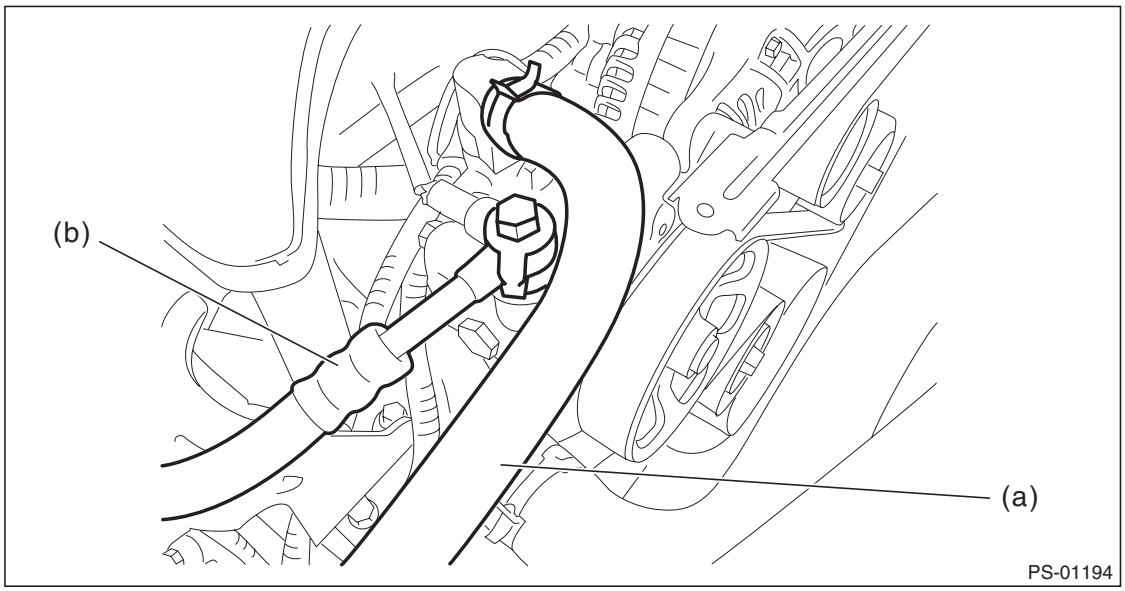

Tightening torque:
Eye bolt: 40 N·m (4.08 kgf-m, 29.5 ft-lb)

4) Connect the power steering pump switch to the connector.
5) After installing the oil pump, fill the oil pump with as much fluid as possible by rotating the pulley by hand.

CAUTION:
Always fill the oil pump with the fluid to prevent abnormal noise and seizure of the oil pump.

6) Install the V-belts. <Ref. to ME(H4SO)-43, INSTALLATION, V-belt.>
7) Connect the battery ground terminal.
8) Fill with recommended power steering fluid and perform air bleeding. <Ref. to PS-77, Power Steering Fluid.>

CAUTION:
Never start the engine before filling with fluid; otherwise the vane pump may become seized.

GETtheMANUALS.org

C: INSPECTION

1. BASIC INSPECTION

Perform the following inspection procedures and replace any faulty parts.

No.	Parts	Inspection	Corrective action
1	Oil pump (Exterior)	(1) Crack, damage or oil leakage	Replace the oil pump with a new part.
		(2) Play of pulley shaft	Measure the radial play and axial play. If any of these exceeds the service limit, replace the oil pump with a new part.
2	Pulley	(1) Damage	Replace with a new part.
		(2) Bend	Measure the V groove deflection. If it exceeds the service limit, replace the pulley with a new part.
3	Oil pump (Interior)	(1) Faulty or seized of vane pump	Check the rotating resistance of pulley. If it exceeds the service limit, replace the oil pump with a new part.
		(2) Bend in the shaft or damage to bearing	If the a string is wrapped on the pulley and rotated, and the oil pump emits a noise that is markedly different in tone and loudness from a sound of a new oil pump, replace the oil pump with a new part.
4	O-ring	Cracking or deterioration	Replace with a new part.
5	Bracket	Cracks	Replace with a new part.

2. SERVICE LIMIT

Make a measurements as follows. If it exceeds the service limit, replace with a new part.

CAUTION:

- **When securing the oil pump on a vise, hold the oil pump with the least possible force between two pieces of wood.**
- **Do not set the outside of flow control valve or pulley on a vise; otherwise outside or pulley might be deformed. Select properly sized wood pieces.**

GETtheMANUALS.org

1) Play of the pulley shaft

Condition:
P: When applying a force of 9.8 N (1.0 kgf, 2.2 lbf)

Service limit:
Play in the radial direction (Direction ⬅ ➡):
0.2 mm (0.008 in) or less
Axial play (Direction ⇦ ⇨):
0.9 mm (0.035 in) or less

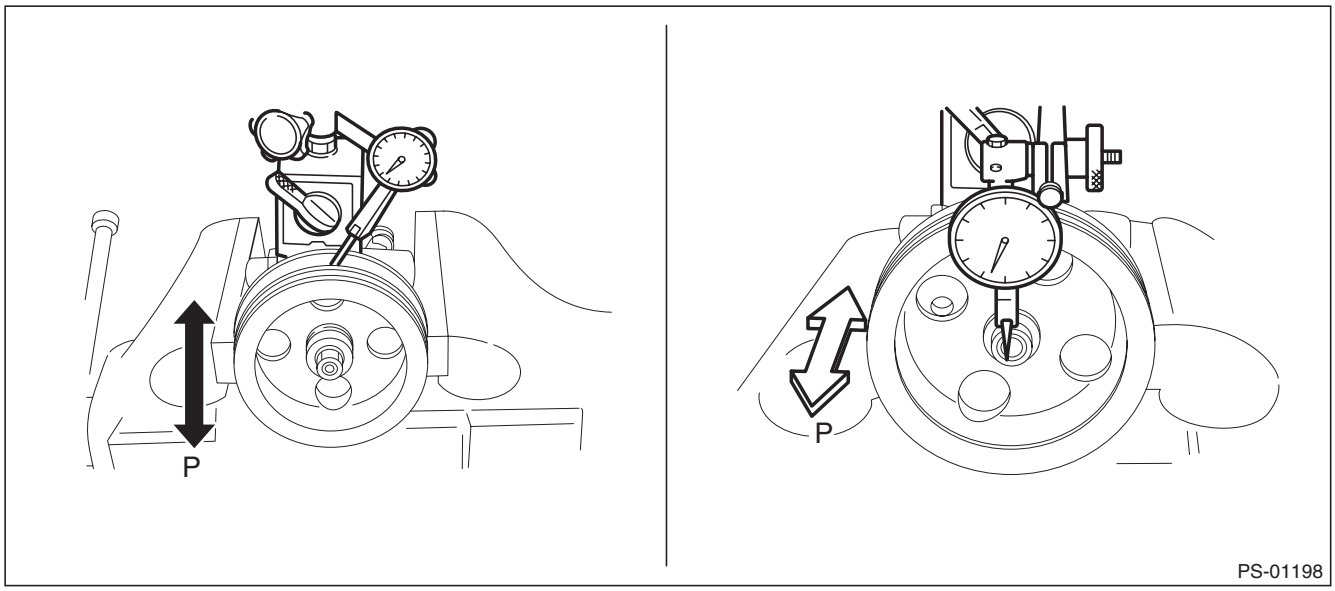

2) Deflection of the pulley groove

Service limit:
1.0 mm (0.039 in) or less

NOTE:
Read the value on one surface of V groove, set the dial gauge on the other surface, and read the value of the dial gauge.

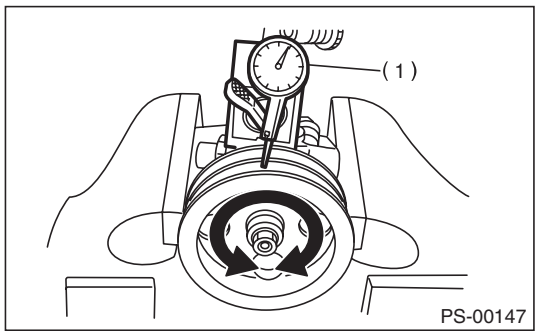

(1) Dial gauge

3) Rotating resistance of pulley

Service limit:
Maximum load: 9.22 N (0.94 kgf, 2.07 lbf) or less

NOTE:
- A rather higher value may be indicated when pulley starts turning.

GETtheMANUALS.org

- Measure the load during rotation to make a judgment.

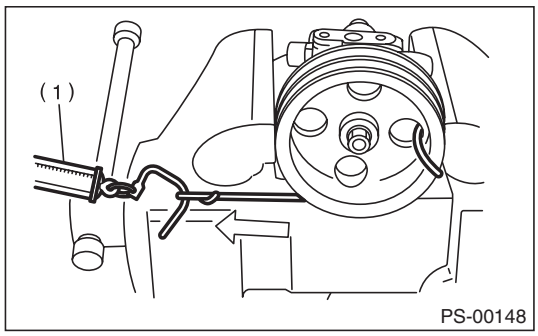

(1) Spring scale

3. HYDRAULIC PRESSURE

CAUTION:

- **To measure hydraulic pressure correctly, be sure to complete all the items in "INSPECTION", prior to performing the measurement. <Ref. to PS-78, INSPECTION, General Diagnostic Table.>**
- **Do not leave the valve of pressure gauge closed or hold the steering wheel at lock for 5 seconds or more in any case, this can damage the oil pump.**
- **Before attaching a pressure gauge, place cloth at locations where fluid is expected to spill. Wipe off any spilt fluid completely after the measurement.**

Regular pressure measurement

1) Connect the ST1, ST2 and ST3.

PREPARATION TOOL:
ST1: PRESSURE GAUGE (925711000)
ST2: ADAPTER HOSE B (34099AC020)
ST3: ADAPTER HOSE A (34099AC010)

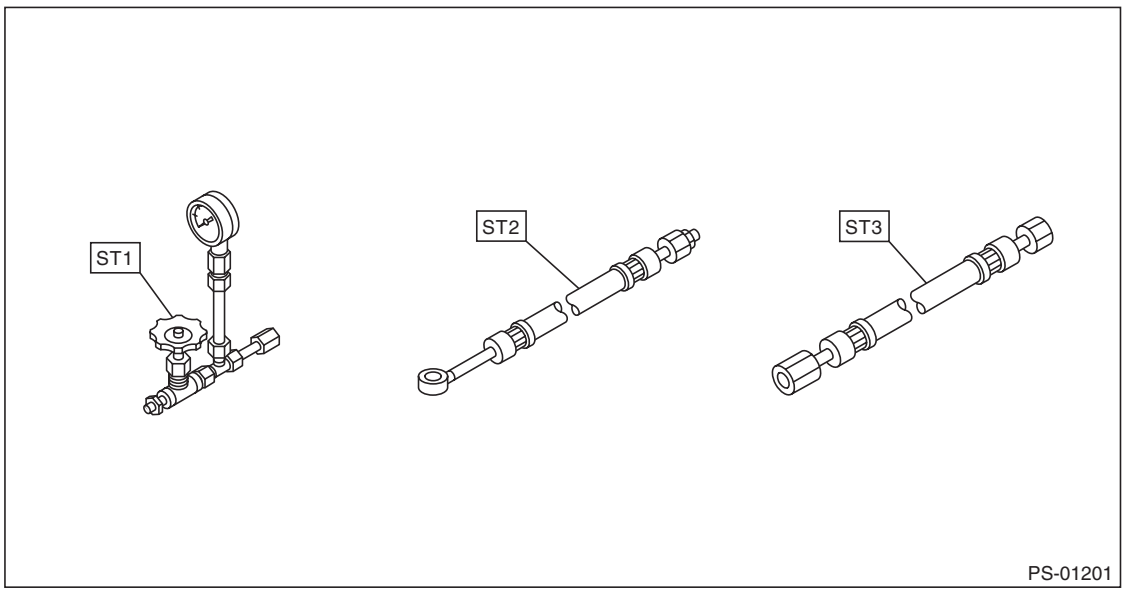

2) Remove the air intake duct.
3) Disconnect the pressure hose (a) from the pump.

GETtheMANUALS.org

4) Using the gasket (Part No. 34621AC021) and bolt (Part No. 34620AC010), install the ST2 to pump instead of pressure hose (a).

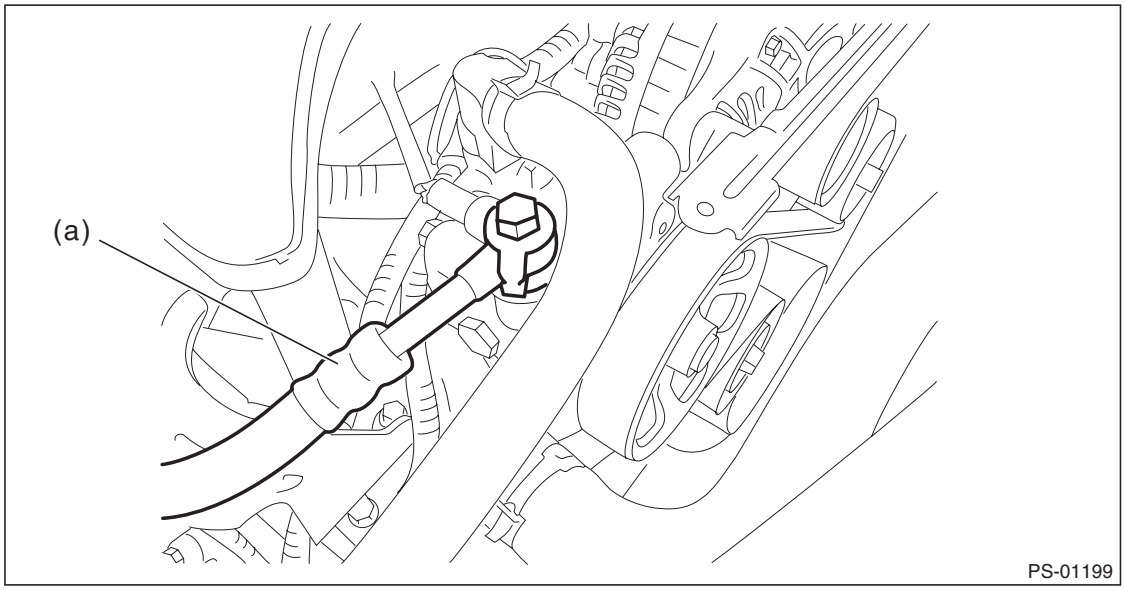

5) Attach the ST3 to the end of pressure hose which is removed from pump.
6) Replenish power steering fluid up to the specified level.
7) Open the valve, and start the engine.

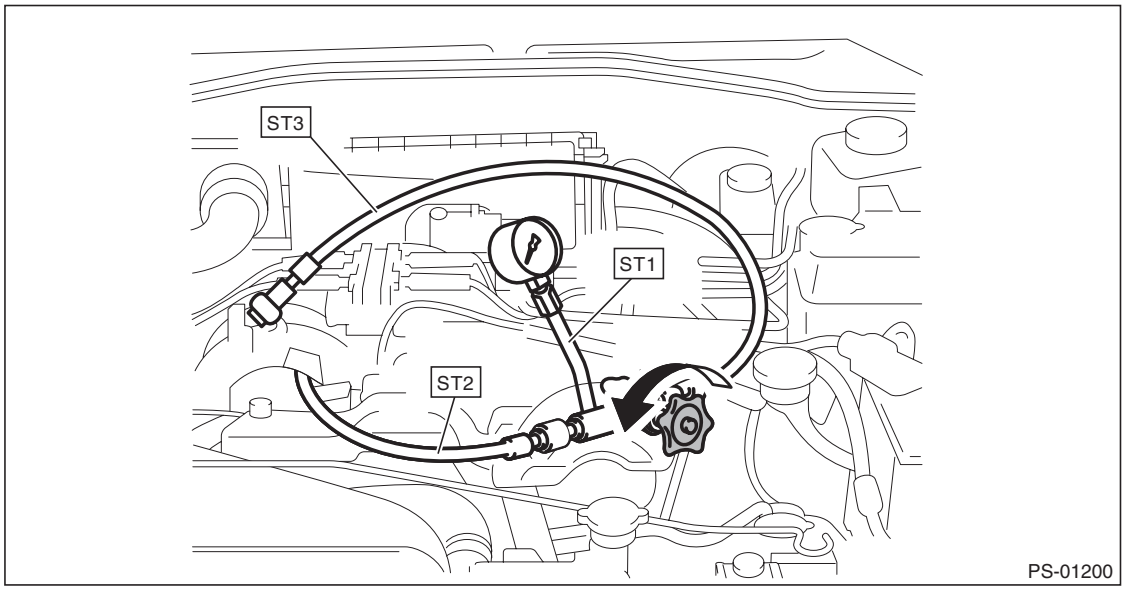

8) Measure the regular pressure.

Service limit:
981 kPa (10 kgf/cm^2, 142 psi) or less

9) If it is not within the specification, replace the faulty part for the following problems. (Pipe or hose clogged, leaks from fluid line, and mixture of foreign matter in fluid line)

GETtheMANUALS.org

Relief pressure measurement

1) Attach ST1, ST2 and ST3 to the vehicle body in the same way as for regular pressure measurement.

PREPARATION TOOL:
ST1: PRESSURE GAUGE (925711000)
ST2: ADAPTER HOSE B (34099AC020)
ST3: ADAPTER HOSE A (34099AC010)

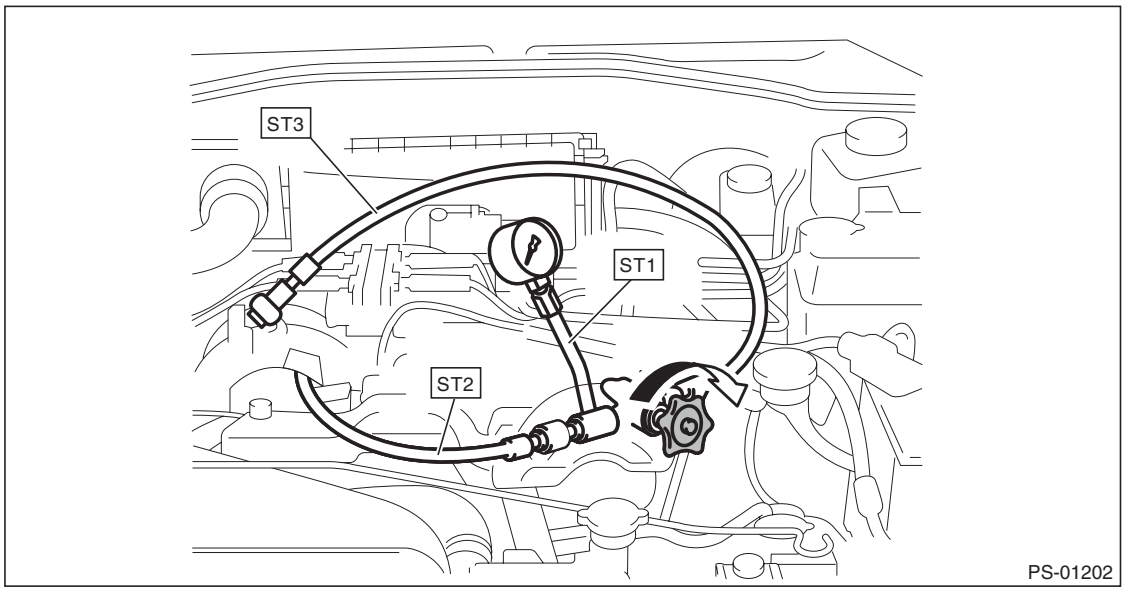

2) Close the valve.
3) Measure the relief pressure.

Service limit:
H4 non-turbo model:
8,300 — 9,000 kPa (85 — 92 kgf/cm^2, 1,203 — 1,305 psi)
H6, H4 turbo model:
8,900 — 9,600 kPa (91 — 98 kgf/cm^2, 1,290 — 1,392 psi)
4) If the torque is not within specified range, replace the oil pump.

GETtheMANUALS.org

Working pressure measurement

1) Attach ST1, ST2 and ST3 to the vehicle body in the same way as for regular pressure measurement.

PREPARATION TOOL:
ST1: PRESSURE GAUGE (925711000)
ST2: ADAPTER HOSE B (34099AC020)
ST3: ADAPTER HOSE A (34099AC010)

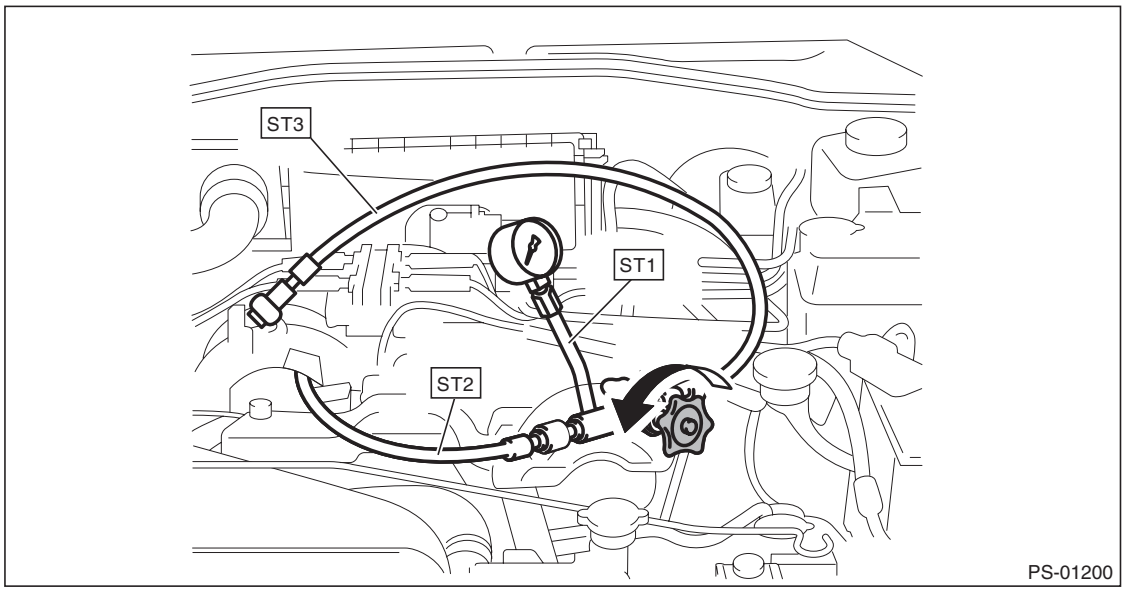

2) Open the valve.
3) Measure the working pressure of control valve by turning steering wheel from stop to stop.

Service limit:
H4 non-turbo model:
8,300 — 9,000 kPa (85 — 92 kgf/cm^2, 1,203 — 1,305 psi)
H6, H4 turbo model:
8,900 — 9,600 kPa (91 — 98 kgf/cm^2, 1,290 — 1,392 psi)

4) If it is out of specification, measure the steering effort. <Ref. to PS-82, MEASUREMENT OF STEERING EFFORT, INSPECTION, General Diagnostic Table.>
If the steering wheel effort is not within specification, replace the control valve itself or control valve and pinion as a single unit, using new parts.

GETtheMANUALS.org

8. Reservoir Tank

A: REMOVAL

1) Drain fluid from the reservoir tank.
2) Disconnect the hose from reservoir tank.

CAUTION:
Plug the ends of the hose and pipe to prevent foreign matter from entering.
3) Remove the reservoir tank from the body.

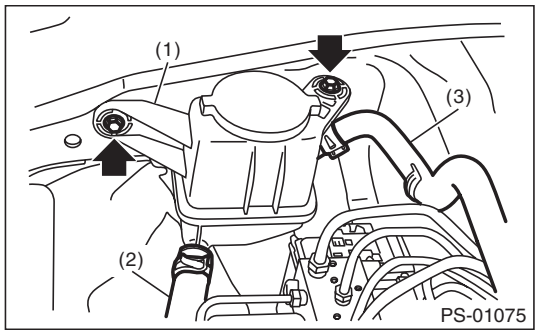

(1) Reservoir tank
(2) Suction hose
(3) Return hose

B: INSTALLATION

1) Install the reservoir tank to the body.

Tightening torque:
13 N·m (1.33 kgf-m, 9.6 ft-lb)
2) Connect the hose to the reservoir tank.

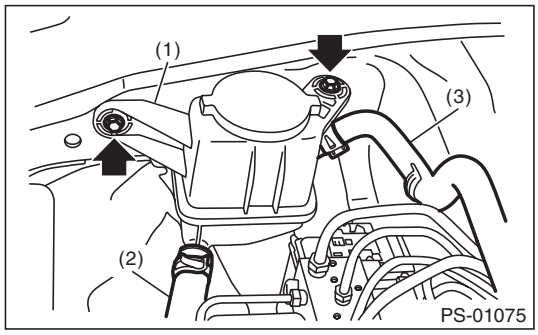

(1) Reservoir tank
(2) Suction hose
(3) Return hose

3) Replenish power steering fluid up to the specified level. <Ref. to PS-77, INSPECTION, Power Steering Fluid.>

C: INSPECTION

Check the reservoir tank for cracks, breakage or damage. If a failure is found, replace the reservoir tank.

GETtheMANUALS.org

9. Power Steering Fluid

A: SPECIFICATION

Recommended power steering fluid:
SUBARU ATF or DEXRON III

B: INSPECTION

1) Check the power steering fluid for deterioration or contamination. If the fluid is highly deteriorated or contaminated, drain it and refill with new fluid.
2) Check the joints and units for oil leakage. If any oil leaks are found, repair or replace the applicable part.
3) Inspect the fluid level of reservoir tank with vehicle on level surface and engine stopped.
If the level is at “MIN.” point or below, add fluid to keep the level in the specified range of the indicator. If at “MAX”. point or above, drain fluid by using a syringe or the like.
(1) Check at power steering fluid temperature 20°C (68°F); read the fluid level on the “COLD” side.
(2) Check at power steering fluid temperature 80°C (176°F); read the fluid level on the “HOT” side.

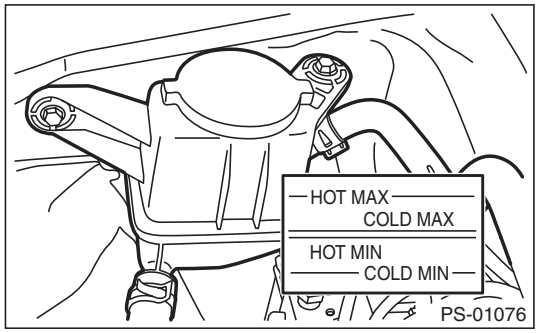

C: REPLACEMENT

1) Lift up the vehicle.
2) Drain the power steering fluid.
3) Add the specified fluid to reservoir tank at “MAX” level.
4) Continue to turn the steering wheel slowly from lock to lock until the bubbles stop appearing on oil surface while keeping the fluid at the level in the Step 3).
5) If the steering wheel is turned in a low fluid level condition, air will be sucked into the pipe. If air has entered, leave it for about half an hour and then repeat step 4) again.
6) Start the engine and let it idle.
7) Continue to turn the steering wheel slowly from lock to lock again until the bubbles stop appearing on oil surface, while keeping the fluid at the level in Step 3).
Normally bubbles will stop appearing after turning the steering wheel from lock to lock three times.
8) In case bubbles do not stop appearing in the tank, leave it for about half an hour and then repeat from step 3) again.
9) Lower the vehicle, and then idle the engine.
10) Continue to turn the steering wheel from lock to lock until the bubbles stop appearing and change of the fluid level is within 3 mm (0.12 in).
11) In case the following happens, leave it about half an hour and then perform step 7) to 10) again.
(1) The fluid level changes by 3 mm (0.12 in) or more.
(2) Bubbles remain on the upper surface of the fluid.
(3) Grinding noise is generated from oil pump.
12) Check the fluid leakage after turning steering wheel from lock to lock with engine running.

GETtheMANUALS.org

10. General Diagnostic Table

A: INSPECTION

Trouble	Possible cause	Corrective action
• Steering effort is heavy in all ranges. • Steering effort is heavy at stand still. • Steering wheel vibrates when turning.	1. Tire and wheel • Improper tire out of specifications*1 • Improper wheel out of specifications*1 • Tires not properly inflated	Replace or reinflate the tire and wheel. Perform above or instruct customer.
	2. Idle speed • Lower idle speed • Excessive drop of idle speed at start or when turning the steering wheel *3	Adjust the idle speed or instruct customer.
	3. Fluid • Low fluid level • Air entry in fluid • Dust entry in fluid • Fluid deterioration • Inadequate warm up of fluid *2	Refill the fluid, bleed air, replace or instruct customer.
	4. Pulley belt • Unequal length of pulley belts • Contact with oil or grease • Looseness or damage of the pulley belt • Poor uniformity of the pulley belt cross section • Pulley belt touches to pulley bottom • Poor revolution of pulleys (except oil pump pulley) • Poor revolution of oil pump pulley	Adjust or replace the faulty parts.
	5. Fluid line Fluid leakage from fluid line	Replace the faulty parts.
	6. Measure the hydraulic pressure. <Ref. to PS-70, INSPECTION, Oil Pump.>	Replace the faulty parts.
	7. Measure the steering wheel effort. <Ref. to PS-82, MEASUREMENT OF STEERING EFFORT, INSPECTION, General Diagnostic Table.>	Adjust or replace.
• Vehicle leads to one side or the other. • Returning force of steering wheel to center is poor. • Steering wheel vibrates when turning.	1. Tire and wheel • Flat tire • Mixed use of different tires • Mixed use of different wheels • Abnormal wear of tire • Unequal tread remaining • Unequal pressure of tire	Adjust, fix or replace.
	2. Front alignment • Improper or unequal caster • Improper or unequal toe-in • Loose suspension connections	Adjust or retighten.
	3. Others • Damaged joint assembly • Unbalance of ground clearance • Unbalance of load	Replace, adjust or instruct customer.
	4. Measure the steering wheel effort. <Ref. to PS-82, MEASUREMENT OF STEERING EFFORT, INSPECTION, General Diagnostic Table.>	Adjust or replace.

*1 If the tires or wheels are wider than standard, the load to power steering system is increased. Accordingly, in a condition, for example before fluid warms-up, relief valve may work before reaching maximum turning angle. In this case, steering effort may be heavy. When the measured hydraulic pressure is normal, there is no abnormal thing.
*2 In cold weather, steering effort may be heavy due to increased flow resistance of cold fluid. After warming-up engine, turn the steering wheel from stop to stop several times to warm up fluid. If steering effort reduces normally, function is normal.

GETtheMANUALS.org

*3 In cold weather or with insufficient warm up of the engine, steering effort may be heavy due to excessive drop of idling when turning the steering wheel. In this case, start the vehicle with increasing engine speed than usual. If steering effort reduces normally, function is normal.

GETtheMANUALS.org

General Diagnostic Table

1. NOISE AND VIBRATION

CAUTION:
Do not keep the relief valve operated for five seconds or more at any time or inner parts of the oil pump may be damaged due to rapid increase of fluid temperature.

NOTE:
- A screeching noise may be heard immediately after the engine start in extremely cold conditions. In this case, if the noise goes off during warm up there is no abnormal function in the system. This is due to the fluid characteristics in extremely cold condition.
- The oil pump normally makes a small whining noise due to its mechanism. Even if a noise is heard when steering wheel is turned at stand still, there is no abnormal function in the system provided that the noise eliminates when the vehicle is driving.
- When turning the steering wheel with the brake applied when the vehicle is parked, a screeching noise may be generated by the brake disc and pads. This is not a fault in the steering system.
- There may be a small vibration around the steering devices when turning the steering wheel at standstill, even though the component parts are operating properly.

Hydraulic systems are likely to generate this kind of vibration as well as working noise and fluid noise because of combined conditions, i.e., road surface and tire surface, engine speed and turning speed of steering wheel, fluid temperature and braking condition.
These conditions do not indicate a problem in the system.
Confirm vibration for an AT model, by applying the parking brake on a concrete surface, shifting into the “D” range, and turning the steering wheel repeatedly from slow to rapid, step by step.

Trouble	Possible cause	Corrective action
Hiss noise (continuous) While engine is running.	Relief valve emits operating sound when steering wheel is completely turned in either direction. (Do not keep this condition for 5 seconds or more.)	Normal
	Relief valve emits operating sound when steering wheel is not turned. This means that the relief valve is defective.	Replace the oil pump.
Rattling noise (intermittent) While engine is running.	Interference with adjacent parts	Check the parts for deformation. Replace or adjust if necessary.
	Loosened installation of oil pump, oil tank, pump bracket, gearbox or crossmember	Retighten.
	Loose oil pump pulley or other pulley(s)	Retighten.
	Looseness of linkage, play of steering, improper tightening (looseness) of suspension joint or steering column	Retighten or replace.
	Sound generates from the inside of gearbox or oil pump.	Replace faulty parts in the gearbox or oil pump.
Knocking When turning steering wheel in both directions with small angle repeatedly at engine ON or OFF.	Excessive backlash Loosened lock nut for adjusting backlash	Adjust and retighten.
	Insufficient tightening or play in the tie-rod or tie-rod end	Retighten or replace.
Grinding noise (continuous) While engine is running.	Air in vane pump	Inspect and retighten the fluid line connection. Refill the fluid and vent air.
	Vane pump seizing	Replace the oil pump.
	Oil pump pulley bearing seized	Replace the oil pump.
	Folded hose, flattened pipe	Replace.
Squeal, squeak (intermittent or continuous) While engine is running.	Improper adjustment of pulley belt Damaged or over tensioned pulley belt Unequal length of pulley belts	Adjust or replace.
	Runout or dirty V-groove surface of oil pump pulley	Clean or replace.

GETtheMANUALS.org

General Diagnostic Table

Trouble	Possible cause	Corrective action
Sizzling noise (continuous) While engine is running.	Fluid aeration	Fix the faulty part causing aeration. Replace the fluid and vent air.
	Damaged pipe of gearbox	Replace the pipe.
	Faulty inside of hose or pipe Flattened hose or pipe	Repair or replace.
	Abnormal inside of oil tank	Replace.
	Removed oil tank cap	Install cap.
Whistle (continuous) While engine is running.	Faulty pipe of gearbox or faulty hose	Replace the faulty parts of the gearbox or the hose.
Whine or growl (intermittent or continuous) While engine is running with/without steering turned.	Looseness of oil pump, oil pump bracket attachment	Retighten.
	Fault inside of oil pump or hose	Replace the oil pump or hose, if the noise can be heard when vehicle is running as well as being stopped.
	Torque converter growl, air conditioner compression growl	Remove the power steering pulley belt and check.
Grinding noise (continuous) When engine operates (when operating steering wheel)	Fault inside of gearbox	Replace the faulty parts of gearbox.
	Faulty steering shaft bearing	Apply grease or replace.
	Occurs when turning the steering wheel with brakes (service or parking) applied.	If the noise goes off when brake is released, it is normal.
Vibration While engine is running with/without steering turned.	Engine speed is too low.	Adjust, and notify customer.
	Air in vane pump	Repair faulty part Vent air.
	Damaged valve in oil pump or gearbox	Replace the faulty parts in gearbox and oil pump.
	Excessive play in steering, looseness of suspension parts	Retighten.

GETtheMANUALS.org

2. MEASUREMENT OF STEERING EFFORT

	Step	Check	Yes	No
1	**CHECK STEERING EFFORT.** 1) Stop the vehicle on paved road. 2) Start the engine. 3) Run the engine at idle. 4) Install a spring scale on the steering wheel. 5) Pull the spring scale at a right angle to the steering wheel, and measure both right and left steering wheel efforts. 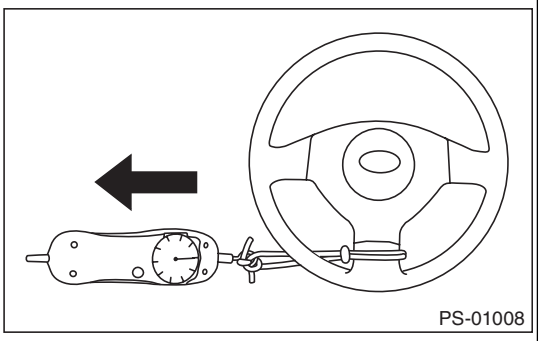 PS-01008 NOTE: When turning the steering more quickly than necessary from a direction to the other direction at an engine speed of 2,000 rpm or higher, steering effort may be heavy. This is caused by flow characteristic of the fluid in the oil pump and is not a defect.	Is the steering effort less than 29.4 N (3.0 kgf, 6.6 lbf)?	Steering effort is normal. (Finish the diagnosis)	Go to step **2**.
2	**CHECK STEERING EFFORT.** 1) Stop the engine and lift it up. 2) Pull the spring scale at a right angle to the steering wheel, and measure both right and left steering wheel efforts.	Is the steering effort less than 30 N (3.1 kgf, 6.7 lbf)?	Go to step **3**.	Perform the backlash adjustment.
3	**CHECK STEERING WHEEL EFFORT.** 1) Remove the universal joint. 2) Measure the steering wheel effort.	Is the steering effort less than 2.26 N (0.23 kgf, 0.51 lbf)?	Go to step **4**.	Replace the steering column.
4	**CHECK STEERING WHEEL EFFORT.** Measure the steering wheel effort.	Is the difference of steering effort between right and left less than 20%?	Go to step **5**.	Replace the steering column.
5	**CHECK UNIVERSAL JOINT.** Measure the swing torque of joint. (Yoke of steering column side) <Ref. to PS-23, INSPECTION, Universal Joint.>	Is the swing torque of the universal joint less than 7.3 N (0.74 kgf, 1.64 lbf)?	Go to step **6**.	Replace the universal joint.
6	**CHECK UNIVERSAL JOINT.** Measure the swing torque of joint. (Yoke of gearbox side) <Ref. to PS-23, INSPECTION, Universal Joint.>	Is the swing torque of the universal joint less than 3.8 N (0.39 kgf, 0.86 lbf)?	Go to step **7**.	Replace the universal joint.
7	**CHECK FRONT WHEEL.** Check the front wheels.	Does the front wheels have unsteady revolution or rattling, or does the brake drag?	Inspect, readjust and replace if necessary.	Go to step **8**.
8	**CHECK TIE-ROD ENDS.** Remove the tie-rod end from the front housing.	Does the tie-rod and tie-rod end have unsteady revolution or rattling?	Inspect and replace if necessary.	Go to step **9**.
9	**CHECK GEARBOX.** Measure the rotating of gearbox. <Ref. to PS-56, SERVICE LIMIT, INSPECTION, Steering Gearbox.>	Is the rotational resistance of the steering gearbox less than 13 N (1.3 kgf, 2.9 lbf)? Is the difference between the right and left rotational resistances less than 24%?	Go to step **10**.	Readjust the backlash, and if ineffective, replace the faulty parts.

GETtheMANUALS.org

Step		Check	Yes	No
10	**CHECK GEARBOX.** Measure the sliding of gearbox. <Ref. to PS-56, SERVICE LIMIT, INSPECTION, Steering Gearbox.>	Is the sliding resistance of the steering gearbox less than 314 N (32 kgf, 71 lbf)? Is the difference between the right and left sliding resistances less than 20%?	Steering effort is normal. Check the front suspension.	Readjust the backlash, and if ineffective, replace the faulty parts.

GETtheMANUALS.org

GETtheMANUALS.org