ANTI-LOCK BRAKE SYSTEM

DI4V4-01

HOW TO PROCEED WITH TROUBLESHOOTING

Troubleshooting in accordance with the procedure on the following pages.

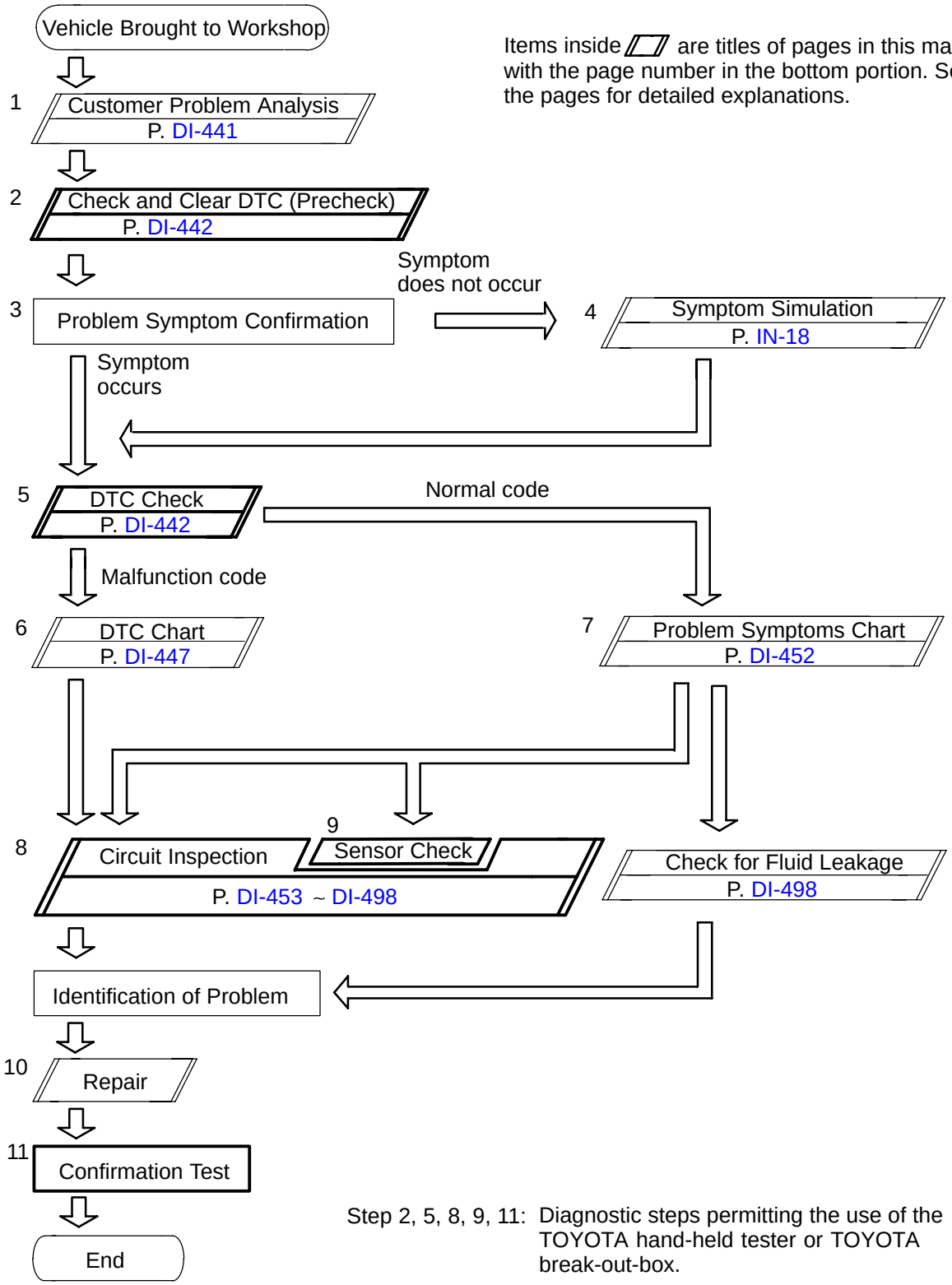

Step 2, 5, 8, 9, 11: Diagnostic steps permitting the use of the TOYOTA hand-held tester or TOYOTA break-out-box.

DI4V5-01

CUSTOMER PROBLEM ANALYSIS CHECK

ABS Check Sheet

Inspector's Name :

Customer's Name		**Registration No.**	
		Registration Year	/ /
		Frame No.	
Date Vehicle Brought In	/ /	**Odometer Reading**	km miles

Date Problem First Occurred	/ /
Frequency Problem Occurs	☐ Continuous ☐ Intermittent (times a day)

Symptoms	☐ ABS does not operate.	
	☐ ABS does not operate efficiently.	
	ABS Warning Light Abnormal	☐ Remains ON ☐ Does not Light Up

Check Item	**TRAC Indicator Light**	☐ Normal ☐ Does not Light Up

DTC Check	**1st Time**	☐ Normal Code ☐ Malfunction Code (Code)
	2nd Time	☐ Normal Code ☐ Malfunction Code (Code)

DI4V6-01

PRE-CHECK

1. DIAGNOSIS SYSTEM

(a) Check the Indicator,
When the ignition switch is turned ON, check that the ABS warning light goes on for 3 seconds.

HINT:
If the indicator check result is not normal, proceed to trouble-shooting for the ABS warning light circuit (See page DI-488).

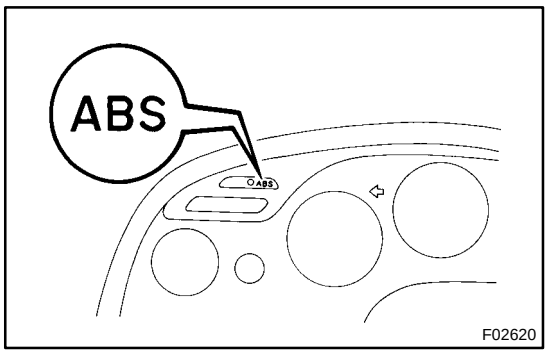

(b) Check the DTC.
(1) Turn the ignition switch ON.
(2) Disconnect the short pin from DLC1.

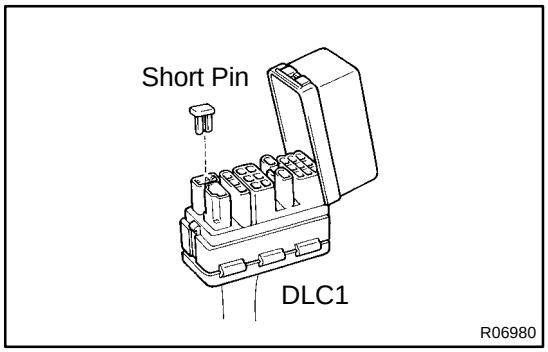

(3) Using SST, connect terminals Tc and E1 of DLC2 or DLC1.
SST 09843-18020
(4) Read the DTC from the ABS warning light on the combination meter.

HINT:
If no code appears, inspect the diagnostic circuit or ABS warning light circuit (See page DI-494 or DI-488).

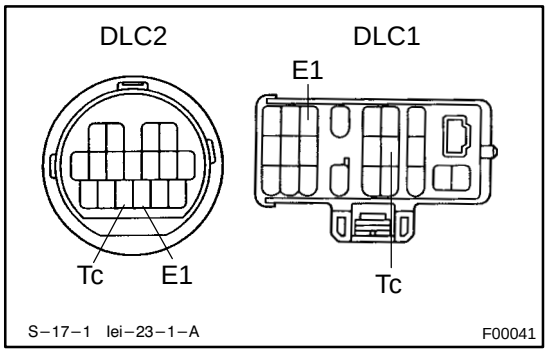

As an example, the blinking patterns for normal code and codes 11 and 21 are shown on the left.
(5) Codes are explained in the code table on page DI-447 .
(6) After completing the check, disconnect terminals Tc and E1, and turn off the display.

If 2 or more malfunctions are indicated at the same time, the lowest numbered DTC will be displayed 1st.

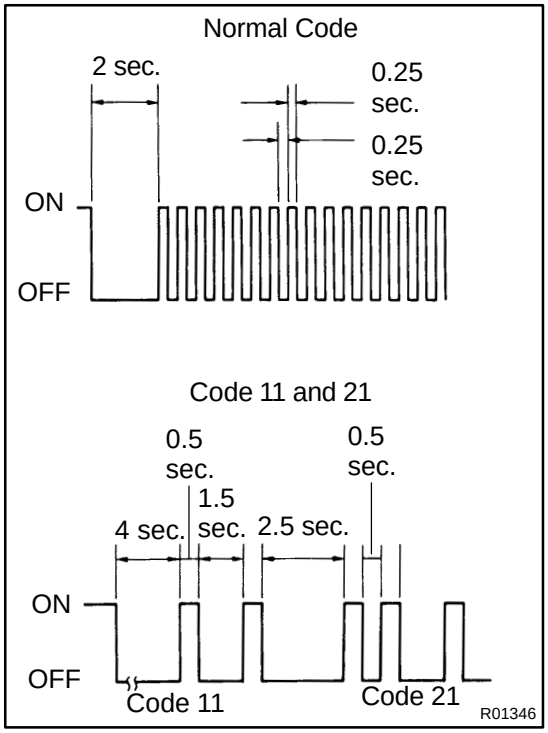

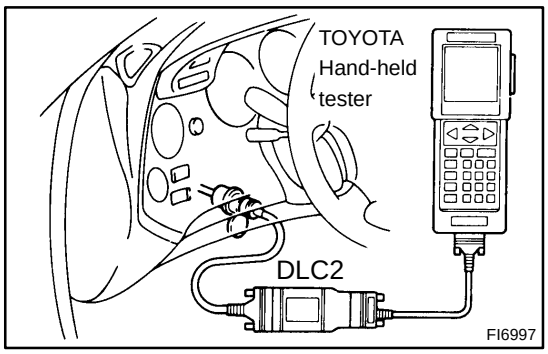

(c) Using TOYOTA hand-held tester, check the DTC.
(1) Hook up the TOYOTA hand- held tester to the DLC2.
(2) Read the DTC by following the prompts on the tester screen.
Please refer to the TOYOTA hand-held tester operator's manual for further details.

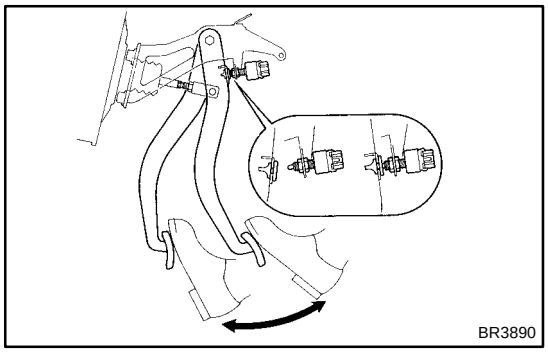

(d) Clear the DTC.
(1) Using SST, connect terminals Tc and E1 of DLC2 or DLC1 and remove the short pin from DLC1.
SST 09843-18020
(2) IG switch ON.
(3) Clear the DTC stored in ECU by depressing the brake pedal 8 or more times within 5 seconds.
(4) Check that the warning light shows the normal code.

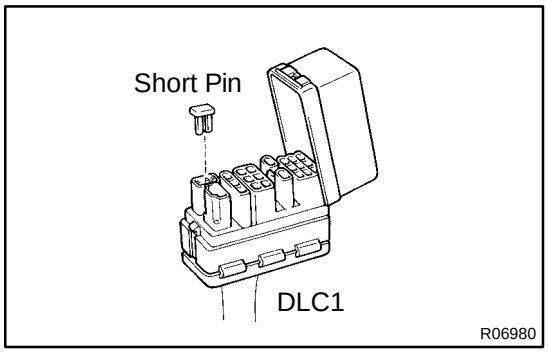

(5) Remove the SST from the terminals of DLC2 or DLC1.
SST 09843-18020
(6) Connect the short pin to DLC1.

HINT:
Disconnecting the battery cable during repairs will not erase the DTC in the ECU.

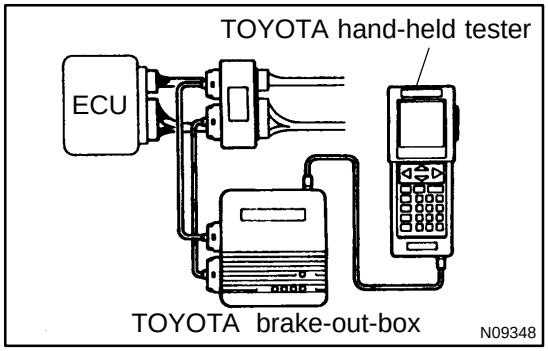

(e) Using TOYOTA brake-out-box and TOYOTA hand-held tester, measure the ECU terminal values.
(1) Turn the IG switch OFF.
(2) Hook up the TOYOTA hand-held tester and TOYOTA break-out-box to the vehicle.
(3) Turn the IG switch ON.
(4) Read the ECU input/output values by following the prompts on the tester screen.

HINT:
TOYOTA hand-held tester has a "Snapshot" function.
This records the measured values and is effective in the diagnosis of intermittent problems.
Please refer to the TOYOTA hand-held tester/TOYOTA break-out-box operator's manual for further details.

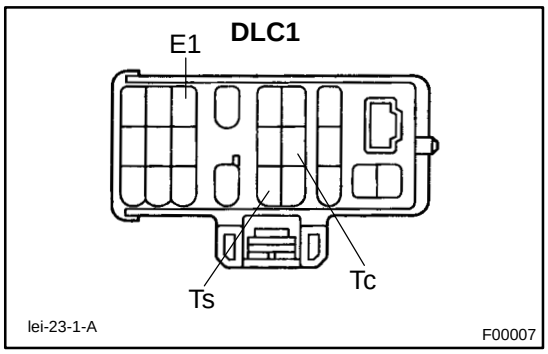

2. SPEED SENSOR SIGNAL AND DECELERATION SENSOR

(a) Check the speed sensor signal and deceleration sensor.

(1) Turn the ignition switch OFF

(2) Using SST, connect terminal Ts and E1 of DLC1.

SST 09843-18020

(3) Start the engine.

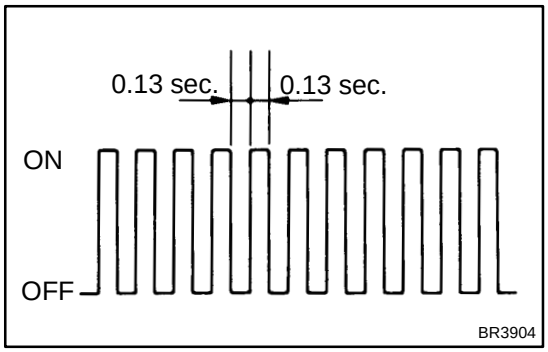

(4) Check that the ABS warning light blinks.

HINT:

- ☐ If the ABS warning light does not blink, inspect the ABS warning light circuit (See page DI-488).
- ☐ If the ABS warning light is always on, inspect and repair, deceleration sensor.

(5) Drive the vehicle faster than 45 km/h (28 mph) for several seconds.

(6) Stop the vehicle.

(7) Using SST, connect terminals Tc an E1 of DLC1.

SST 09843-18020

(8) Read the number of blinks of the ABS warning light.

HINT:

- ☐ See the list of DTC shown on the next page.
- ☐ If every sensor is normal, a normal code is output (A cycle of 0.25 sec. ON and 0.25 sec. OFF is repeated).
- ☐ If 2 or more malfunctions are indicated at the same time, the lowest numbered code will be displayed 1st.

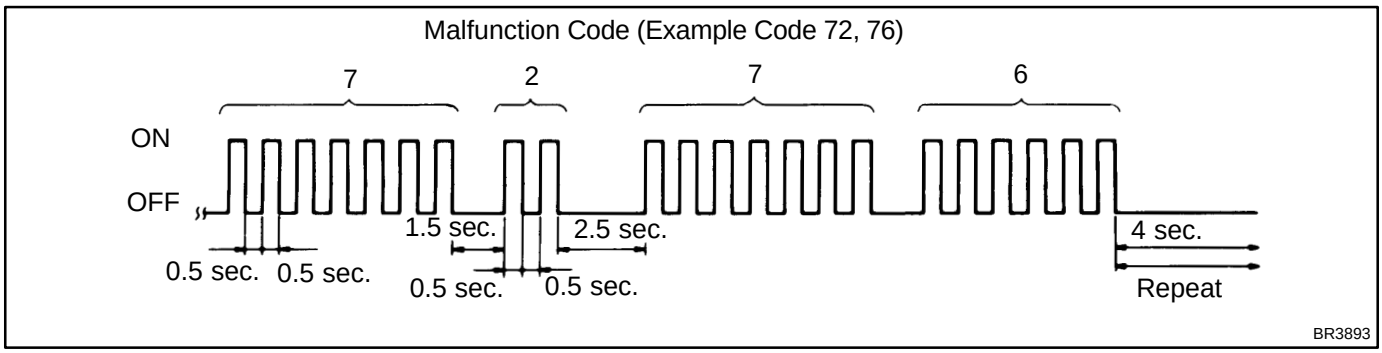

(9) After doing the check, disconnect terminals Ts and E1, Tc and E1 of DLC1, and turn ignition switch OFF.

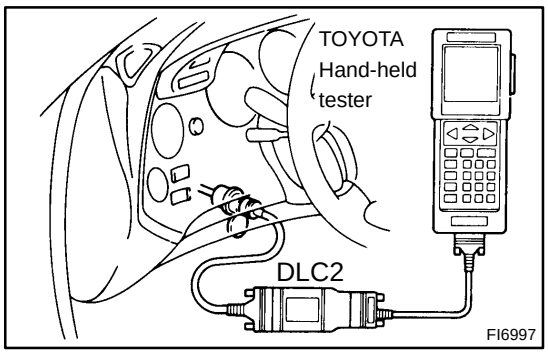

(b) Using TOYOTA hand-held tester, check the DTC.
(1) Do step (1) - (6) on the previous page.
(2) Hook up the TOYOTA hand- held tester to the DLC2.
(3) Read the DTC by following the prompts on the tester screen.
Please refer to the TOYOTA hand-held tester operator's manual for farther details.

DTC of speed sensor check function:

Code No.	Diagnosis	Trouble Area
71	Low output voltage of right front speed sensor	□Right front speed sensor □Sensor installation □Sensor Rotor
72	Low output voltage of left front speed sensor	□Left front speed sensor □Sensor installation □Sensor Rotor
73	Low output voltage of right rear speed sensor	□Right rear speed sensor □Sensor installation □Sensor Rotor
74	Low output voltage of left rear speed sensor	□Left rear speed sensor □Sensor installation □Sensor Rotor
75	Abnormal change in output voltage of right front speed sensor	□Right front speed sensor rotor
76	Abnormal change in output voltage of left front speed sensor	□Left front speed sensor rotor
77	Abnormal change in output voltage of right rear speed sensor	□Right rear speed sensor rotor
78	Abnormal change in output voltage of left rear speed sensor	□Left rear speed sensor rotor
79*	Deceleration sensor is faulty	□Deceleration sensor □Sensor installation

*: SPORT ABS (2JZ-GTE Engine) only

3. DECELERATION SENSOR OPERATION DIAGNOSIS SYSTEM

CAUTION:

While checking the deceleration sensor operating diagnosis system, the Anti-lock Brake System does not work and brake system works as a conventional brake system.

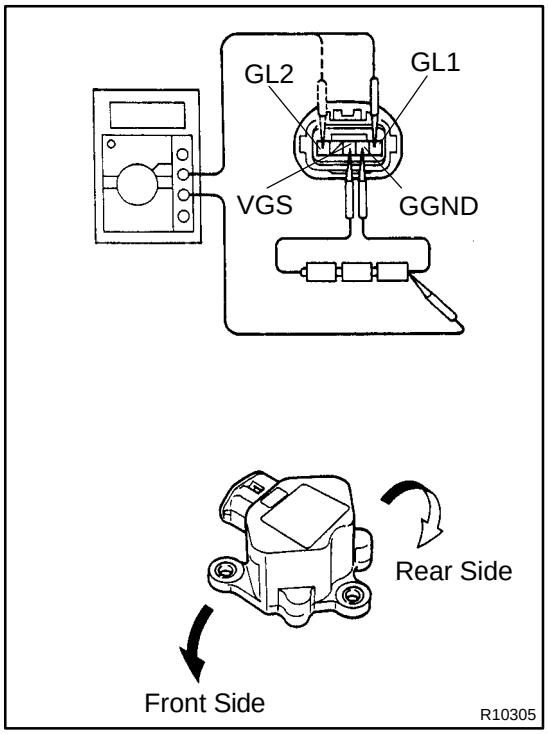

(a) Deceleration sensor inspection check of deceleration sensor output:

(1) Connect 3 dry batteries of 1.5 V in series.

(2) Connect VGS terminal to the batteries' positive (+) terminal, and GGND terminal to the batteries' negative (-) terminal, apply about 4.5 V between VGS-GGND terminals.

NOTICE:

Do not apply voltage of 6 V or more to terminals VGS and GGND.

(3) Check the output of GL1 and GL2 terminals.

Symbols	Condition	Standard Value
GL1	Horizontal	about 2.3 V
GL1	Lean forward	0.4 - about 2.3 V
GL1	Lean rearward	about 2.3 V - 4.1 V
GL2	Horizontal	about 2.3 V
GL2	Lean forward	about 2.3 V - 4.1 V
GL2	Lean rearward	0.4 - about 2.3 V

HINT:

- ☐ If the senor is tilted too much it may show the wrong value.
- ☐ If dropped, the sensor should be replaced with a new one.
- ☐ The sensor removed from the vehicle should not be placed upside down.

DI4V7-01

DIAGNOSTIC TROUBLE CODE CHART

If a malfunction code is displayed during the DTC check, check the circuit listed for that code. For details of each code, turn to the page referred to under the "See page" for the respective "DTC No." in the DTC chart.

HINT:

- Using SST 09843-18020, connect the terminals Tc and E1, and remove the short pin.
- If any abnormality is not found when inspect each inspection parts, inspect the ECU.

DTC No. (See Page)	Detection Item	Trouble Area
11 (DI-453)	Open circuit in ABS solenoid relay circuit	ABS solenoid relay Open or short in ABS solenoid relay circuit
12 (DI-453)	Short circuit in ABS solenoid relay circuit	ABS solenoid relay B+ short in ABS solenoid relay circuit
13*2 (DI-460)	Open circuit in ABS motor relay circuit	ABS motor relay Open or short in ABS motor relay circuit
14 (DI-460)	Short circuit in ABS motor relay circuit	ABS motor relay B+ short in ABS motor relay circuit
21 (DI-466)	Open or short circuit in 2-position solenoid circuit for right front wheel	ABS actuator Open or short in SFRH or SFRR circuit
22 (DI-466)	Open or short circuit in 2-position solenoid circuit for left front wheel	ABS actuator Open or short in SFLH or SFLR circuit
23 (DI-466)	Open or short circuit in 2-position solenoid circuit for right rear wheel	ABS actuator Open or short in SRH (SRRH) or SRR (SRRR) circuit
24*1 (DI-466)	Open or short circuit in 2-position solenoid circuit for left rear wheel	ABS actuator Open or short in SRLH or SRLR circuit
31*2 (DI-469)	Right front wheel speed sensor signal malfunction	Right front, left front, right rear and left rear speed sensor Open or short in each speed sensor circuit Speed sensor rotor
32*2 (DI-469)	Left front wheel speed sensor signal malfunction	
33*2 (DI-469)	Right rear wheel speed sensor signal malfunction	
34*2 (DI-469)	Left rear wheel speed sensor signal malfunction	
41 (DI-475)	Low battery positive voltage	Battery IC regulator Open or short in power source circuit
43*1 (DI-479)	Malfunction in deceleration sensor (constant output)	Deceleration sensor Wire harness for deceleration sensor system
44*1 (DI-480)	Open or short in deceleration sensor circuit	Deceleration sensor Open or short in deceleration sensor circuit
45*1 (DI-479)	Malfunction in deceleration sensor	Deceleration sensor Wire harness for deceleration sensor system
49 (DI-482)	Open circuit in stop light switch circuit	Open in stop light circuit
51*2 (DI-484)	Pump motor is locked Open in pump motor ground	ABS pump motor
Always ON (DI-485)	Malfunction in ECU IG power source circuit	Battery IC regulator Open or short in power source circuit

*1: Short ABS (2JZ-GTE Engine) only
*2: As DTC cannot be erased by replacing parts alone, do either of the following operations.
- Clear DTC (See page DI-442).
- At the vehicle speed of 20 km/h (12 mph), drive the vehicle for 30 sec. or more.

DI4V8-01

PARTS LOCATION

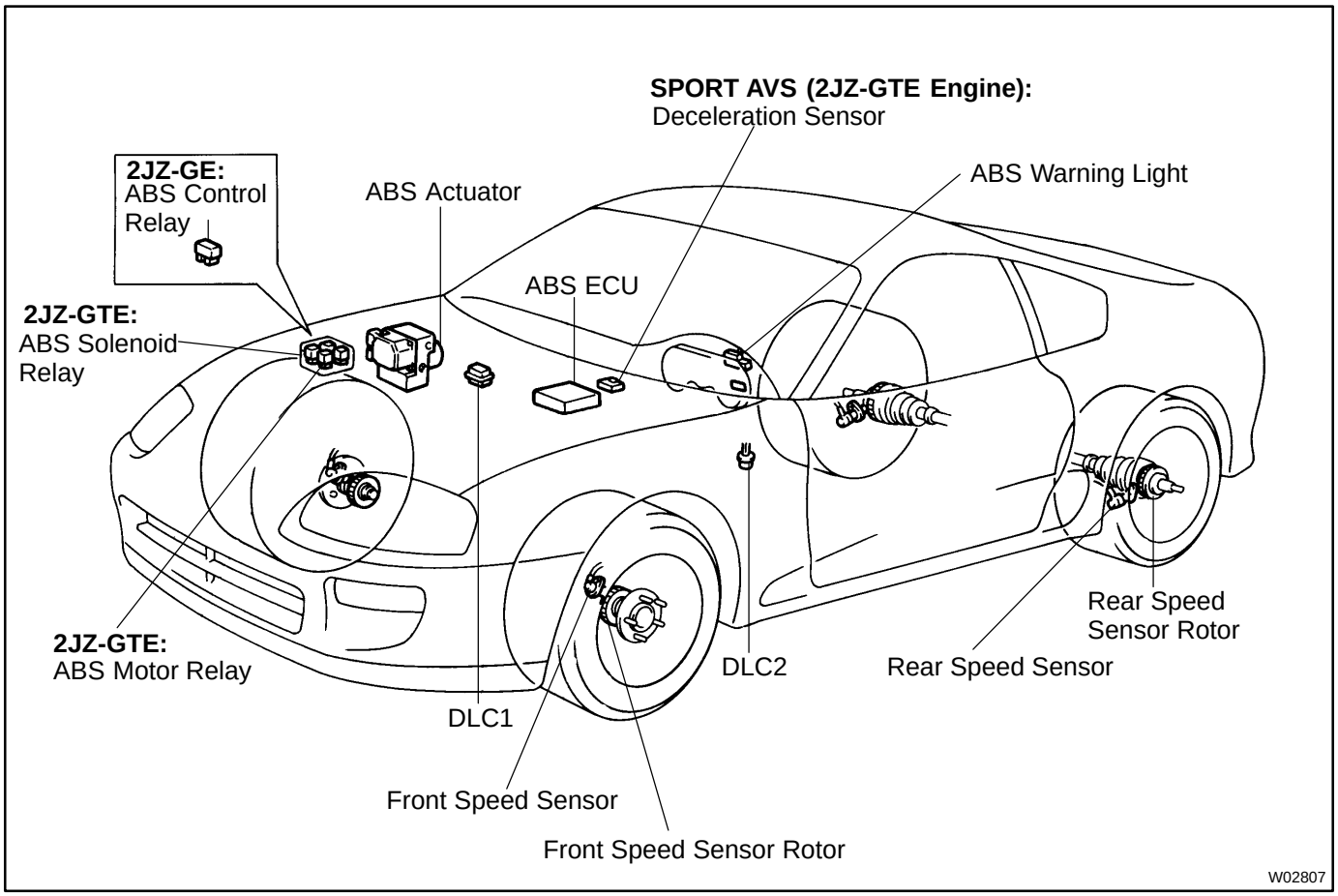

DI7HM-01

TERMINALS OF ECU

NORMAL ABS (2JZ-GE Engine):

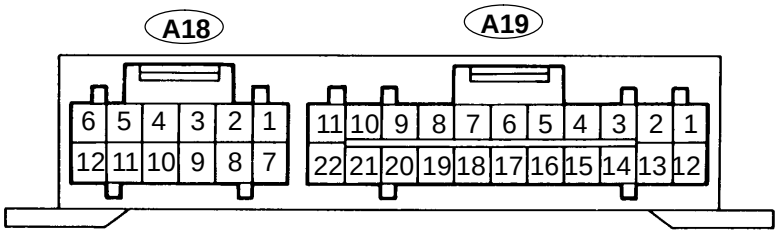

W01411

Symbols (Terminal No.)	STD Voltage (V)	Condition
IG1 (A18-2) - GND (A19-2,13)	10 - 14	IG switch ON
SR (A19-18) - R+ (A19-8)	Below 1.5	IG switch ON, ABS warning light OFF
MR (A19-7) - R+ (A19-8)	10 - 14	IG switch ON
SFRH (A19-4) - GND (A19-2,13)	10 - 14	IG switch ON, ABS warning light OFF
SFRR (A19-1) - GND (A19-2,13)	10 - 14	IG switch ON, ABS warning light OFF
SFLH (A19-10) - GND (A19-2,13)	10 - 14	IG switch ON, ABS warning light OFF
SFLR (A19-11) - GND (A19-2,13)	10 - 14	IG switch ON, ABS warning light OFF
SRR (A19-22) - GND (A19-2,13)	10 - 14	IG switch ON, ABS warning light OFF
SRH (A19-21) - GND (A19-2,13)	10 - 14	IG switch ON, ABS warning light OFF
AST (A19-16) - GND (A19-2,13)	10 - 14	IG switch ON, ABS warning light OFF
WA (A18-4) - GND (A19-2,13)	Below 2.0	IG switch ON, ABS warning light ON
	10 - 14	IG switch ON, ABS warning light OFF
STP (A18-12) - GND (A19-2,13)	Below 1.5	Stop light switch OFF
	8 - 14	Stop light switch ON
D/G (A18-11) - GND (A19-2,13)	10 - 14	IG switch ON, ABS warning light OFF
MT (A19-9) - GND (A19-2,13)	Below 1.5	IG switch ON
Tc (A18-9) - GND (A19-2,13)	10 - 14	IG switch ON
Ts (A18-8) - GND (A19-2,13)	10 - 14	IG switch ON
FR+ (A19-3) - FR- (A19-14)	AC generation	IG switch ON Slowly turn right front wheel
FL+ (A19-19) - FL- (A19-20)	AC generation	IG switch ON Slowly turn left front wheel
RR+ (A18-1) - RR- (A18-7)	AC generation	IG switch ON Slowly turn right rear wheel
RL+ (A18-3) - RL- (A18-10)	AC generation	IG switch ON Slowly turn left rear wheel

Sport ABS (2JZ-GTE Engine):

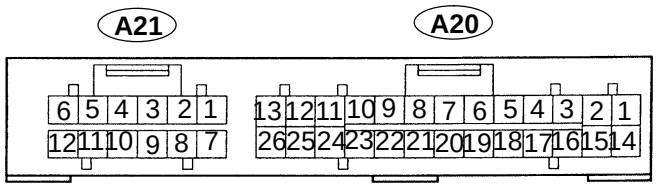

W02803

Symbols (Terminal No.)	STD Voltage (V)	Condition
IG1 (A20-13) - GND (A20-12,25)	10 - 14	IG switch ON
SR (A21-7) - R+ (A20-26)	10 - 14	IG switch ON, ABS warning light OFF
MR (A21-1) - R+ (A20-26)	Below 1.0	IG switch ON
SFRH (A20-2) - GND (A20-12,25)	10 - 14	IG switch ON, ABS warning light OFF
SFRR (A20-1) - GND (A20-12,25)	10 - 14	IG switch ON, ABS warning light OFF
SFLH (A21-5) - GND (A20-12,25)	10 - 14	IG switch ON, ABS warning light OFF
SFLR (A21-6) - GND (A20-12,25)	10 - 14	IG switch ON, ABS warning light OFF
SRRH (A21-11) - GND (A20-12,25)	10 - 14	IG switch ON, ABS warning light OFF
SRRR (A21-12) - GND (A20-12,25)	10 - 14	IG switch ON, ABS warning light OFF
SRLH (A20-15) - GND (A20-12,25)	10 - 14	IG switch ON, ABS warning light OFF
SRLR (A20-14) - GND (A20-12,25)	10 - 14	IG switch ON, ABS warning light OFF
AST (A21-4) - GND (A20-12,25)	10 - 14	IG switch ON, ABS warning light OFF
WA (A20-11) - GND (A20-12,25)	Below 2.0	IG switch ON, ABS warning light ON
	10 - 14	IG switch ON, ABS warning light OFF
STP (A20-5) - GND (A20-12,25)	Below 1.5	Stop light switch OFF
	8 - 14	Stop light switch ON
D/G (A20-24) - GND (A20-12,25)	10 - 14	IG switch ON, ABS warning light OFF
MT (A21-10) - GND (A20-12,25)	Below 1.5	IG switch ON
Tc (A20-8) - GND (A20-12,25)	10 - 14	IG switch ON
Ts (A20-21) - GND (A20-12,25)	10 - 14	IG switch ON
FR+ (A21-3) - FR- (A21-9)	AC generation	IG switch ON Slowly turn right front wheel
FL+ (A21-8) - FL- (A21-2)	AC generation	IG switch ON Slowly turn left front wheel
RR+ (A20-10) - RR- (A20-23)	AC generation	IG switch ON Slowly turn right rear wheel
RL+ (A20-22) - RL- (A20-9)	AC generation	IG switch ON Slowly turn left rear wheel
FRO (A20-7) - GND (A20-12,25)	Pulse generation	Vehicle driving at about 30 km/h (19 mph)
FLO (A20-20) - GND (A20-12,25)	Pulse generation	Vehicle driving at about 30 km/h (19 mph)
RRO (A20-6) - GND (A20-12,25)	Pulse generation	Vehicle driving at about 30 km/h (19 mph)
RLO (A20-19) - GND (A20-12,25)	Pulse generation	Vehicle driving at about 30 km/h (19 mph)
GL1 (A20-4) - GND (A20-12,25)	0.5 - 4.5 V	IG switch ON
GL2 (A20-16) - GND (A20-12,25)	0.5 - 4.5 V	IG switch ON
VGS (A20-3) - GND (A20-12,25)	4.5 - 5.5 V	IG switch ON

DI4VA-01

PROBLEM SYMPTOMS TABLE

If a normal code is displayed during the DTC check but the problem still occurs, check the circuits for each problem symptom in the order given in the table below and proceed to the relevant troubleshooting page.

NOTICE:

When removing the ECU, turn the IG switch OFF.

Symptoms	Inspection Circuit	See page
ABS does not operate.	Only when 1. - 4. are all normal and the problem is still occurring, replace the ABS ECU. 1. Check the DTC, reconfirming that the normal code is output. 2. IG power source circuit. 3. Speed sensor circuit. 4. Check the ABS actuator with a checker. If abnormal, check the hydraulic circuit for leakage (See page DI-498).	 DI-442 DI-475 DI-469 BR-66 or XXX
ABS does not operate efficiently.	Only when 1. - 4. are all normal and the problem is still occurring, replace the ABS ECU. 1. Check the DTC, reconfirming that the normal code is output. 2. Speed sensor circuit. 3. Stop light switch circuit. 4. Check the ABS actuator with a checker. If abnormal, check the hydraulic circuit for leakage (See page DI-498).	 DI-442 DI-469 DI-482 BR-66 or BR-66
ABS warning light abnormal.	1. ABS warning light circuit. 2. ABS ECU.	DI-488
DTC check cannot be done.	Only when 1. and 2. are all normal and the problem is still occurring, replace the ABS ECU. 1. ABS warning light circuit. 2. Tc terminal circuit.	 DI-488 DI-494
Speed sensor signal check cannot be done.	1. Ts terminal circuit. 2. ABS ECU.	DI-496 XXX

DI4VB-01

CIRCUIT INSPECTION

DTC	11, 12	ABS Solenoid Relay Circuit

CIRCUIT DESCRIPTION

This relay supplies power to each ABS solenoid. After the ignition switch is turned ON, if the initial check is OK, the relay goes on.

DTC No.	DTC Detecting Condition	Trouble Area
11	Conditions (1) and (2) continue for 0.2 sec. or more: (1) ABS solenoid relay terminal (SR) voltage: Below 1.5V (2) Solenoid relay monitor terminal (AST) voltage: 0 V	□ABS solenoid relay □Open or short in ABS solenoid relay circuit
12	Conditions (1) and (2) continue for 0.2 sec. or more: (1) ABS solenoid relay terminal (SR) voltage: Battery positive voltage (2) Solenoid relay monitor terminal (AST) voltage: Battery positive voltage	□ABS solenoid relay □B+ short in ABS solenoid relay circuit

Fail safe function:

If trouble occurs in the ABS solenoid relay circuit, the ECU cuts off current to the ABS solenoid relay and prohibits ABS control.

WIRING DIAGRAM

2JZ-GE Engine (NORMAL ABS):

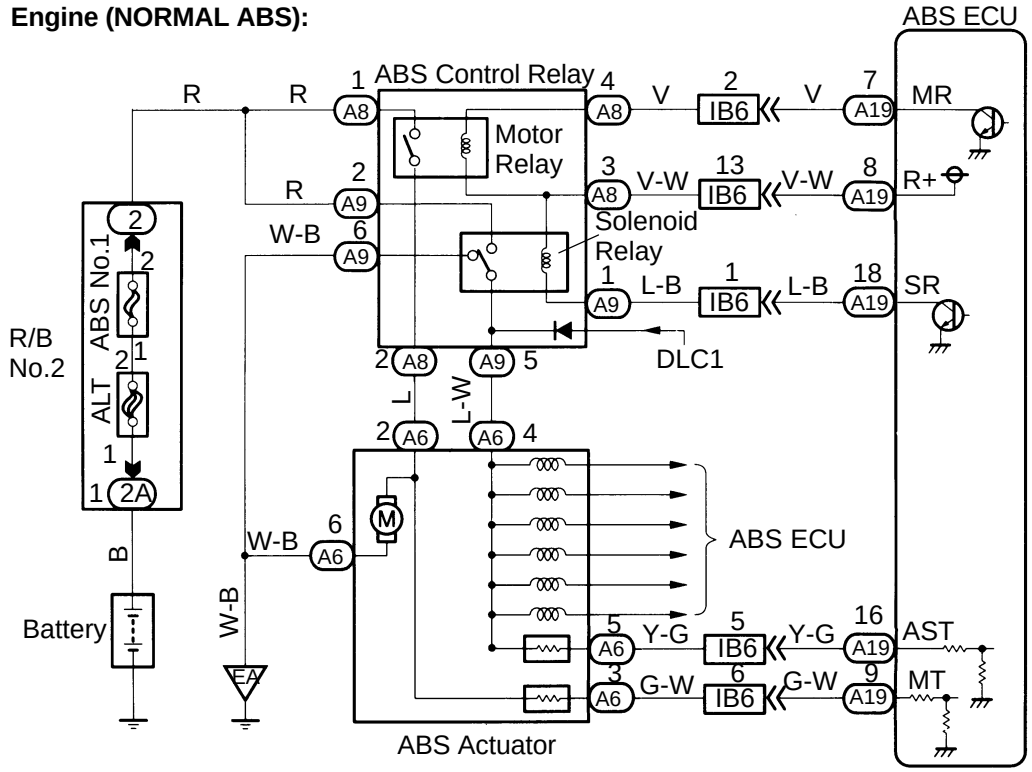

2JZ-GTE Engine (SPORT ABS):

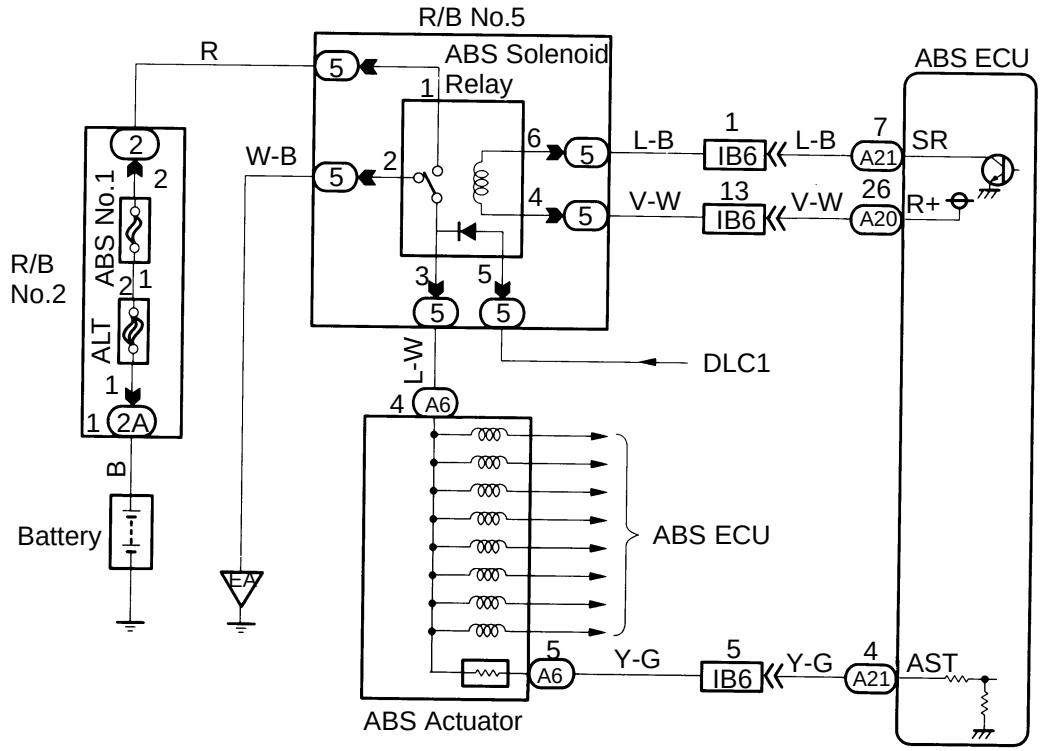

F02626
F02627

F02628

INSPECTION PROCEDURE (2JZ-GE Engine)

1	**Check voltage between terminals A9 - 2 and A9 - 6 of ABS control (solenoid) relay connector.**

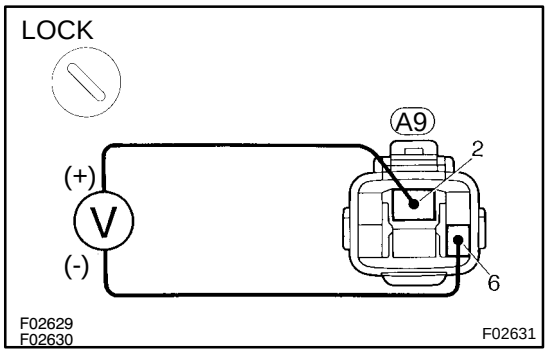

PREPARATION:
Disconnect the ABS control (solenoid) relay connector.
CHECK:
Measure voltage between terminals A9 - 2 and A9 - 6 of ABS control (solenoid) relay harness side connector.
OK:
Voltage: 10 - 14 V

NG → **Check and repair harness or connector.**

OK

2	**Check continuity between terminal A9 - 5 of ABS control (solenoid) relay connector and terminal A19 - 16 of ABS ECU.**

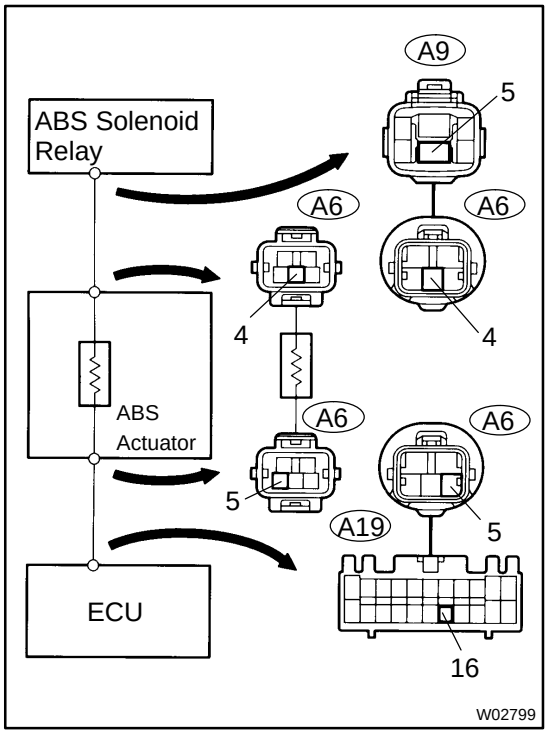

CHECK:
Check continuity between terminal A9 - 5 of ABS control (solenoid) relay connector and terminal A19 - 16 of ABS ECU.
OK:
Continuity
HINT:
There is a resistance of 26 ~ 40 Ω between terminals A6 - 4 and A6 - 5 of ABS actuator.

NG → **Repair or replace harness or ABS actuator.**

OK

3	Check ABS control (solenoid) relay.

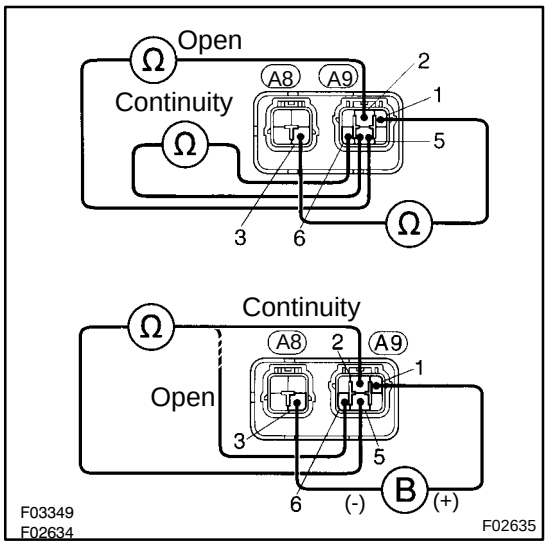

CHECK:

Check continuity between each terminal of ABS control (solenoid) relay.

OK:

Terminals A9 - 1 and A8 - 3	Continuity (Reference value 80 Ω)
Terminals A9 - 5 and A9 - 6	Continuity
Terminals A9 - 2 and A9 - 5	Open

CHECK:

(a) Apply battery voltage between terminals A9 - 1 and A8 - 3.

(b) Check continuity between each terminal of ABS control (solenoid) relay.

OK:

Terminals A9 - 5 and A9 - 6	Open
Terminals A9 - 2 and A9 - 5	Continuity

NG → **Replace ABS control relay.**

OK

4	Check for open and short in harness and connector between ABS control (solenoid) relay and ABS ECU (See page IN-28).

NG → **Repair or replace harness or connector.**

OK

If the same code is still output a after the DTC is deleted, check the contact condition of each connection.
If the connections are normal, the ECU may be defective.

INSPECTION PROCEDURE (2JZ-GTE Engine)

1	**Check voltage between terminals 1 and 2 of R/B No.5 (for ABS solenoid relay).**

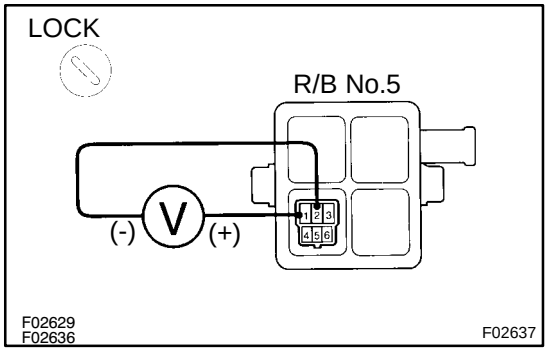

PREPARATION:
Remove ABS solenoid relay from R/B No.5.
CHECK:
Measure voltage between terminals 1 and 2 of R/B No.5 (for ABS solenoid relay).
OK:
Voltage: 10 - 14 V

NG → **Check and repair harness or connector.**

OK

2	**Check continuity between terminal 3 of R/B No.5 (for ABS solenoid relay) and terminal A21 - 4 of ABS ECU.**

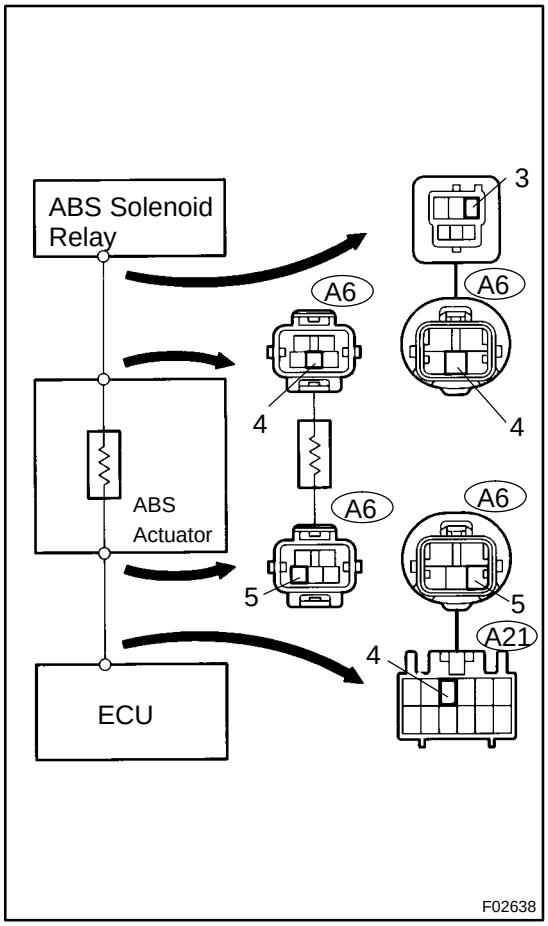

CHECK:

Check continuity between terminal 3 of R/B No.5 (for ABS solenoid relay) and terminal A21 - 4 of ABS ECU.

OK:

Continuity

HINT:

There is a resistance of 26 ~ 40 Ω between terminals A6 - 4 and A6 - 5 of ABS actuator.

NG → **Repair or replace harness or ABS actuator.**

OK

3	Check ABS solenoid relay.

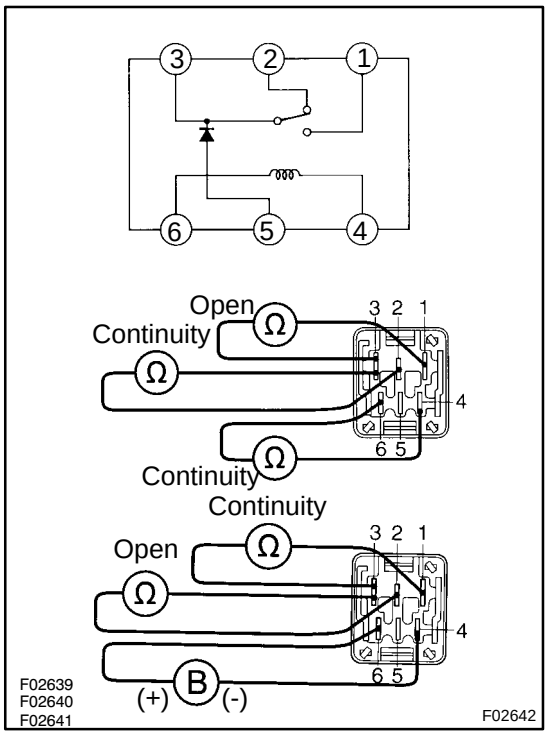

PREPARATION:

Remove solenoid relay from R/B No.5.

CHECK:

Check continuity between each terminal of ABS solenoid relay.

OK:

Terminals 4 and 6	Continuity (Reference value 80 Ω)
Terminals 2 and 3	Continuity
Terminals 1 and 3	Open

CHECK:

(a) Apply battery voltage between terminals 4 and 6.

(b) Check continuity between each terminal of ABS solenoid relay.

OK:

Terminals 2 and 3	Open
Terminals 1 and 3	Continuity

NG → **Replace ABS control relay.**

OK

4	Check for open and short in harness and connector between ABS solenoid relay and ABS ECU (See page IN-28).

NG → **Repair or replace harness or connector.**

OK

If the same code is still output after the DTC is deleted, check the contact condition of each connection.
If the connections are normal, the ECU may be defective.

DI4VD-01

DTC	21, 22, 23, 24	ABS Actuator Solenoid Circuit

CIRCUIT DESCRIPTION

This solenoid goes on when signals are received from the ECU and controls the fluid pressure acting on the brake cylinders, thus controlling the braking force.

DTC No.	DTC Detecting Condition	Trouble Area
21	Conditions (1) through (3) continue for 0.05 sec. or more: (1) ABS solenoid relay terminal (SR) voltage: Below 1.5V (2) Voltage of ABS ECU terminal AST: Battery positive voltage (3) When power transistor of ECU is ON, voltage of terminal SFR is 0 V or battery positive voltage.	□ABS actuator □Open or short in SFR circuit
22	Conditions (1) through (3) continue for 0.05 sec. or more: (1) ABS solenoid relay terminal (SR) voltage: Below 1.5V (2) Voltage of ABS ECU terminal AST: Battery positive voltage (3) When power transistor of ECU is ON, voltage of terminal SFL is 0 V or battery positive voltage.	□ABS actuator □Open or short in SFL circuit
23	Conditions (1) through (3) continue for 0.05 sec. or more: (1) ABS solenoid relay terminal (SR) voltage: Below 1.5V (2) Voltage of ABS ECU terminal AST: Battery positive voltage (3) When power transistor of ECU is ON, voltage of terminal SRH (SRRH) or SRR (SRRR) is 0 V or battery positive voltage.	□ABS actuator □Open or short in SRH (SRRH) or SRR (SRRR) circuit
24*	Conditions (1) through (3) continue for 0.05 sec. or more: (1) ABS solenoid relay terminal (SR) voltage: Below 1.5V (2) Voltage of ABS ECU terminal AST: Battery positive voltage (3) When power transistor of ECU is ON, voltage of terminal SRLH or SRLR is 0 V or battery positive voltage.	□ABS actuator □Open or short in SRLH or SRLR circuit

Fail safe function:
If trouble occurs in the ABS actuator solenoid circuit, the ECU cuts off current to the ABS solenoid relay and prohibits ABS control.
*: SPORT ABS (2JZ-GTE Engine) only

WIRING DIAGRAM

2JZ-GE Engine (NORMAL ABS):

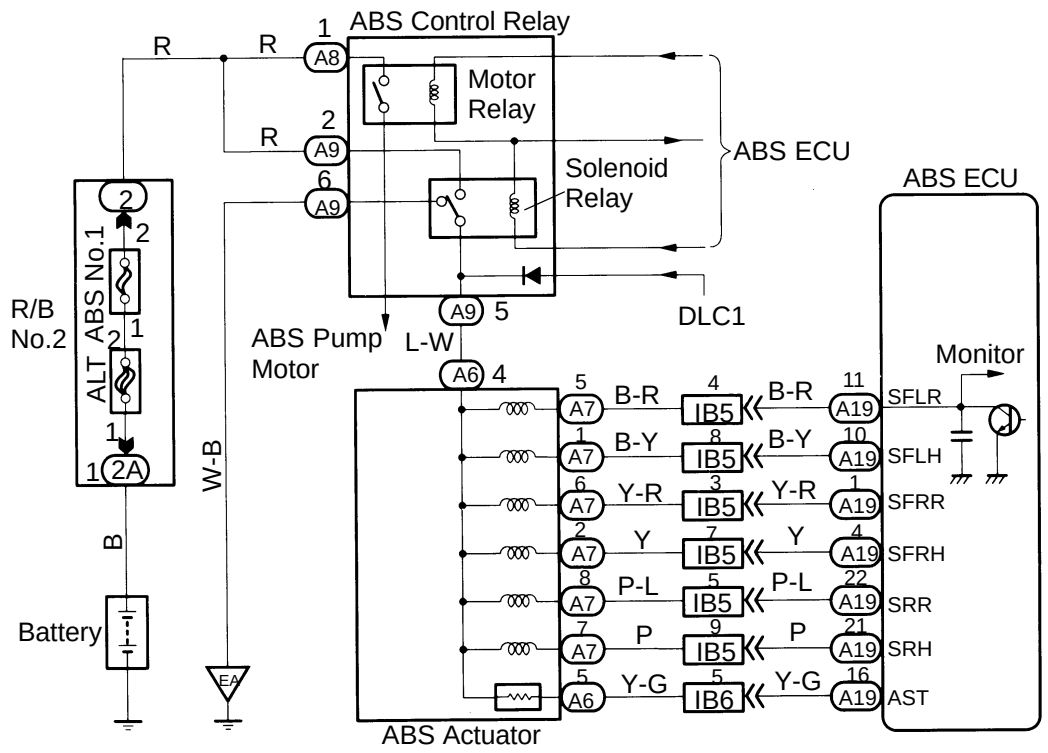

2JZ-GTE Engine (SPORT ABS):

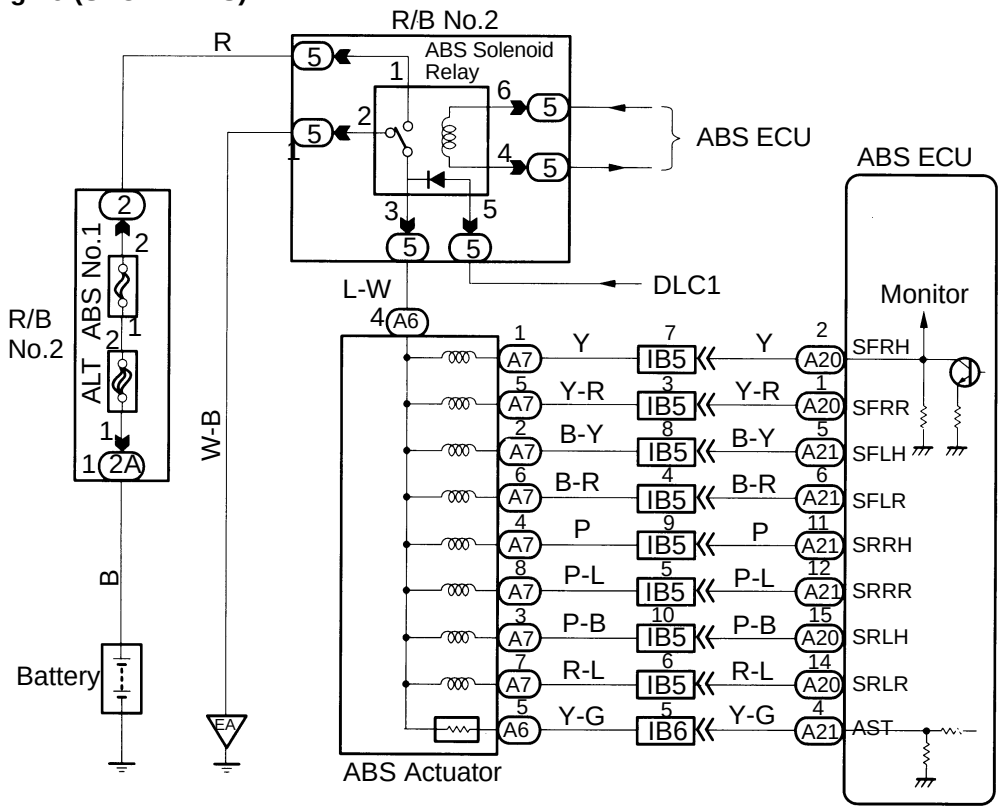

F03320
F03321

F03322

INSPECTION PROCEDURE

1	**Check ABS actuator solenoid.**

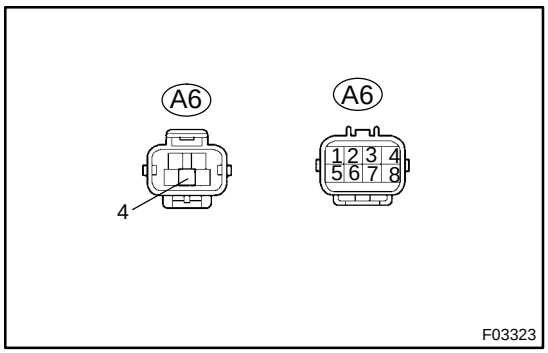

CHECK:

NORMAL ABS (2JZ-GE Engine):

Check continuity between terminal A6 - 4 and A7 - 1, 2, 5, 6, 7, 8 of ABS actuator connector.

SPORT ABS (2JZ-GTE Engine):

Check continuity between terminal A6 - 4 and A7 - 1, 2, 3, 4, 5, 6, 7, 8 of ABS actuator connector.

OK:

Continuity

HINT:

Resistance of each of the solenoids SFRH, SFLH, SRRH and SRLH is 5.0 Ω.

Resistance of each of the solenoids SFRR, SFLR, SRRR and SRLR is 2.2 Ω.

NG → **Replace ABS actuator.**

OK

2	**Check for open and short in harness and connector between ABS ECU and actuator (See page IN-28).**

NG → **Repair or replace harness or connector.**

OK

If the same code is still output after the DTC is deleted, check the contact condition of each connection.
If the connections are normal, the ECU may be defective.

DI4VC-01

DTC	13, 14	ABS Motor Relay Circuit

CIRCUIT DESCRIPTION

This ABS motor relay supplies power to the ABS pump motor. While the ABS is activated, the ECU switches the motor relay ON and operates the ABS pump motor.

DTC No.	DTC Detecting Condition	Trouble Area
13	Conditions (1) and (2) continue for 0.2 sec. or more: (1) ABS motor relay terminal (MR) voltage: Below 1.5V (2) Motor relay monitor terminal (MT) voltage: 0 V	□ABS motor relay □Open or short in ABS motor relay circuit
14	Conditions (1) and (2) continue for 4 sec. or more: (1) ABS motor relay terminal (MR) voltage: Battery positive voltage (2) Motor relay monitor terminal (MT) voltage: Battery positive voltage	□ABS motor relay □B+ short in ABS motor relay circuit

Fail safe function:
If trouble occurs in the ABS motor relay circuit, the ECU cuts off the current to the ABS solenoid relay and prohibits ABS control.

WIRING DIAGRAM

2JZ-GE Engine (NORMAL ABS):

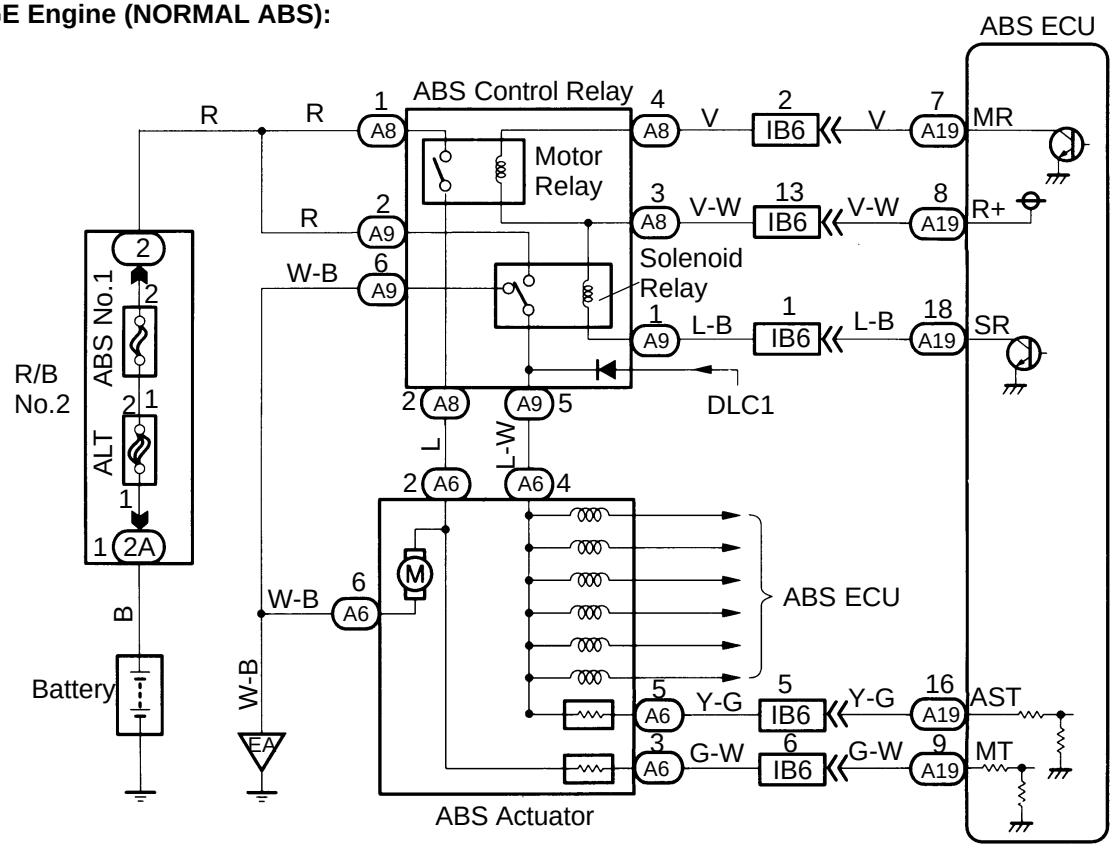

2JZ-GTE Engine (SPORT ABS):

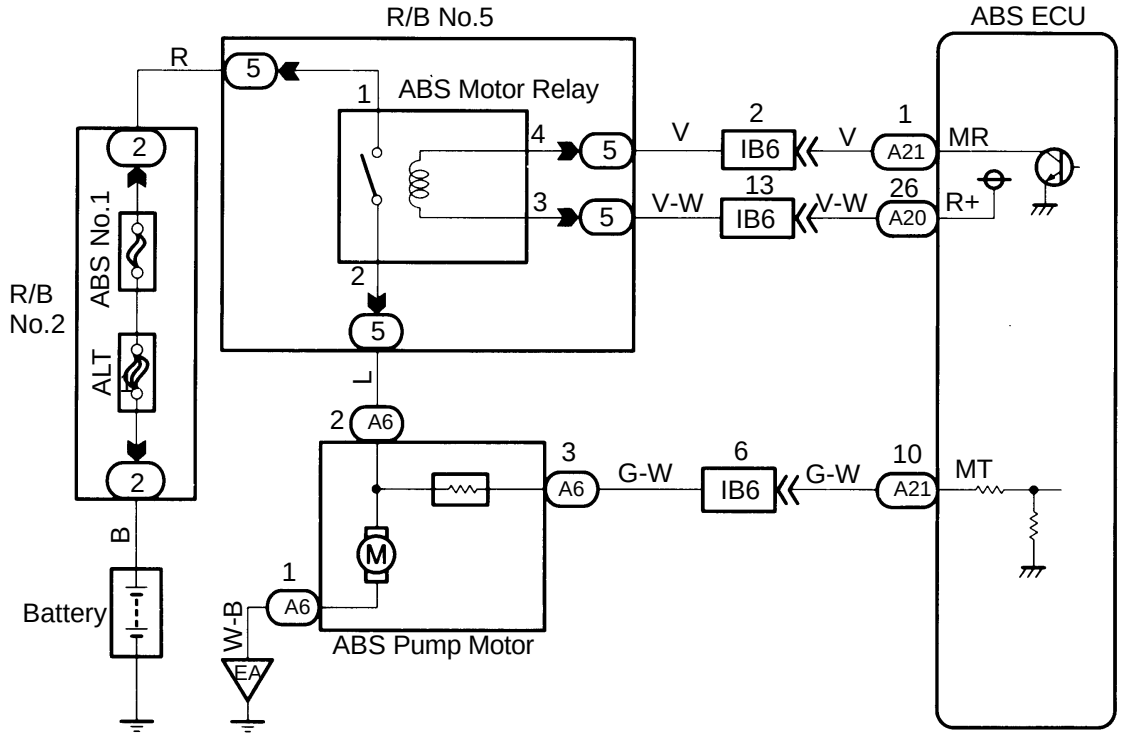

F02626
F02643

F02644

INSPECTION PROCEDURE (2JZ-GE Engine)

1	**Check voltage between terminal A8 - 1 of ABS control (motor) relay connector and body ground.**

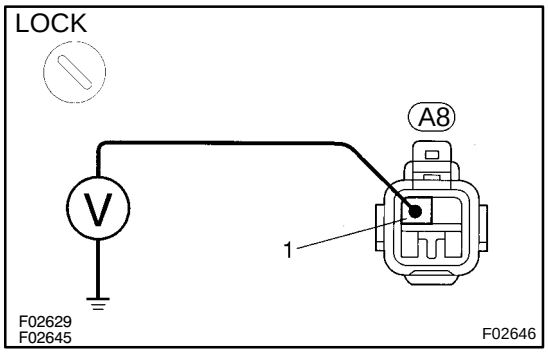

PREPARATION:
Disconnect the ABS control (motor) relay connector.
CHECK:
Measure voltage between terminal A8 - 1 of ABS control (motor) relay connector and body ground.
OK:
Voltage: 10 - 14 V

NG → **Check and repair harness or connector.**

OK

2	**Check continuity between terminal A8 - 2 of ABS control (motor) relay connector and terminal A19 - 9 of ABS ECU.**

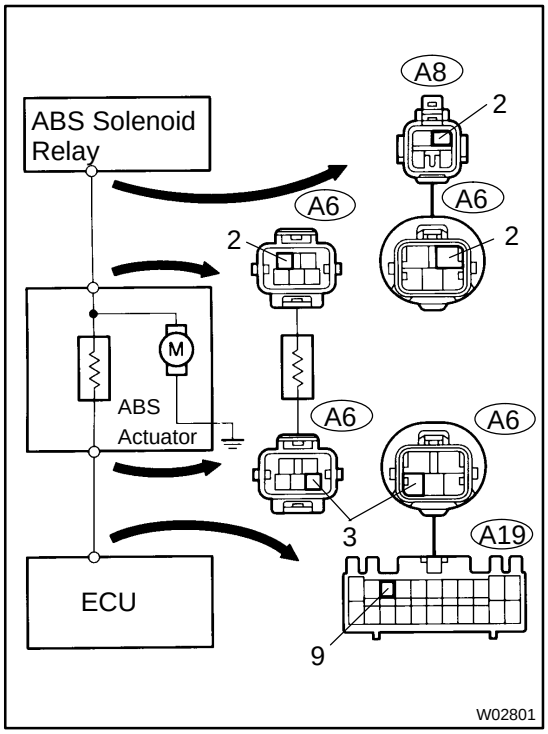

CHECK:
Check continuity between terminal A8 - 2 of ABS control (motor) relay connector and terminal A19 - 9 of ABS ECU.
OK:
Continuity
HINT:
There is a resistance of 26 ~ 40 Ω between terminals A6 - 2 and A6 - 3 of ABS actuator.

NG → **Repair or replace harness or ABS actuator.**

OK

3	**Check ABS control (motor) relay.**

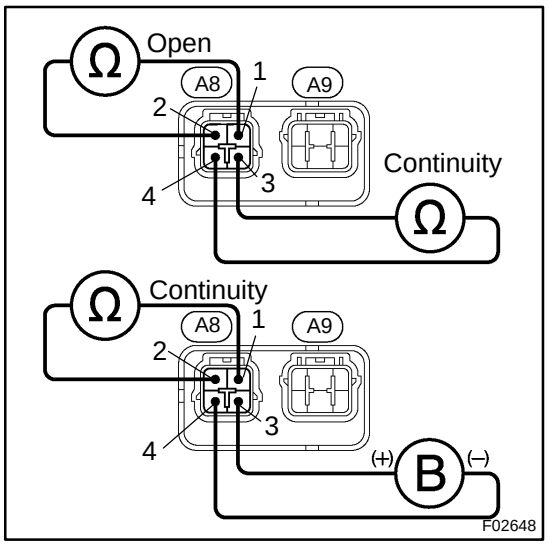

CHECK:

Check continuity between each terminal of ABS control (motor) relay.

OK:

Terminals A8 - 3 and A8 - 4	Continuity (Reference value 62 Ω)
Terminals A8 - 1 and A8 - 2	Open

CHECK:

(a) Apply battery voltage between terminals A8 - 3 and A8 - 4.

(b) Check continuity between terminals of ABS control (motor) relay.

OK:

Terminals A8 - 1 and A8 - 2	Continuity

NG → **Replace ABS control relay.**

OK

4	**Check for open and short in harness and connector between ABS motor relay and ABS ECU (See page IN-28).**

NG → **Repair or replace harness or connector.**

OK

If the same code is still output after the DTC is deleted, check the contact condition of each connection.
If the connections are normal, the ECU may be defective.

INSPECTION PROCEDURE (2JZ-GTE Engine)

1	**Check voltage between terminal 1 of R/B No.5 (for ABS motor relay) and body ground.**

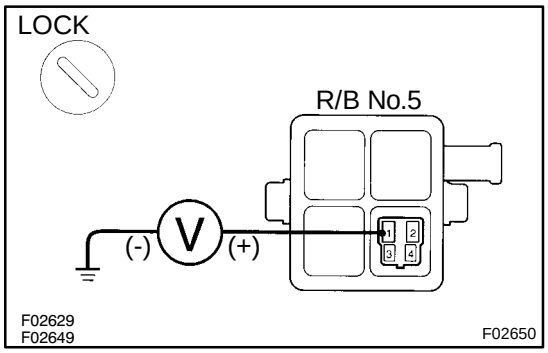

PREPARATION:
Remove ABS motor relay from R/B No.5.
CHECK:
Measure voltage between terminal 1 of R/B No.5 (for ABS motor relay) and body ground.
OK:
Voltage: 10 - 14 V

NG → **Check and repair harness or connector.**

OK

2	**Check continuity between terminal 2 of R/B No.5 (for ABS motor relay) and terminal A21 - 10 of ABS ECU.**

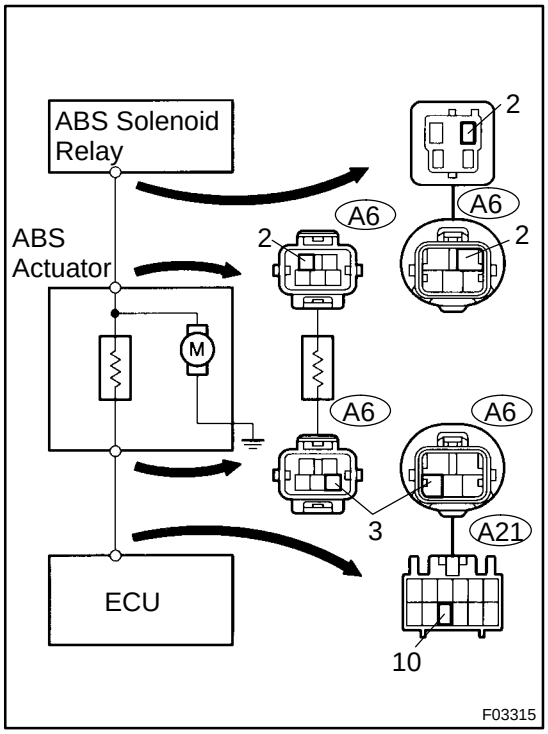

CHECK:
Check continuity between terminal 2 of R/B No.5 (for ABS motor relay) and terminal A21 - 10 of ABS ECU.
OK:
Continuity
HINT:
There is a resistance of 26 ~ 40 Ω between terminals A6 - 2 and A6 - 3 of ABS actuator.

NG → **Repair or replace harness or ABS actuator.**

OK

3	Check ABS motor relay.

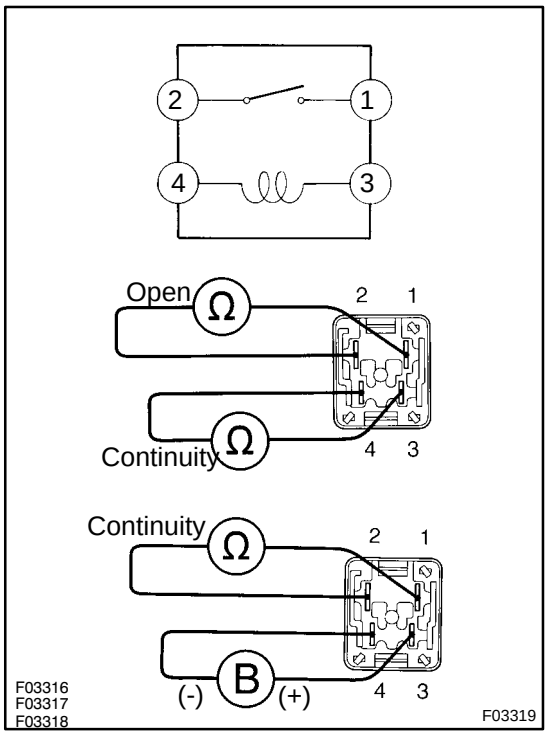

PREPARATION:

Remove motor relay from R/B No.5.

CHECK:

Check continuity between each terminal of motor relay.

OK:

Terminals 3 and 4	Continuity (Reference value 62 Ω)
Terminals 1 and 2	Open

CHECK:

(a) Apply battery voltage between terminals 3 and 4.

(b) Check continuity between terminals.

OK:

Terminals 1 and 2	Continuity

NG → **Replace ABS motor relay.**

OK

4	Check for open and short in harness and connector between ABS motor relay and ABS ECU (See page IN-28).

NG → **Repair or replace harness or connector.**

OK

If the same code is still output after the DTC is deleted, check the contact condition of each connection.
If the connections are normal, the ECU may be defective.

DI4VE-01

DTC	31, 32, 33, 34	Speed Sensor Circuit

CIRCUIT DESCRIPTION

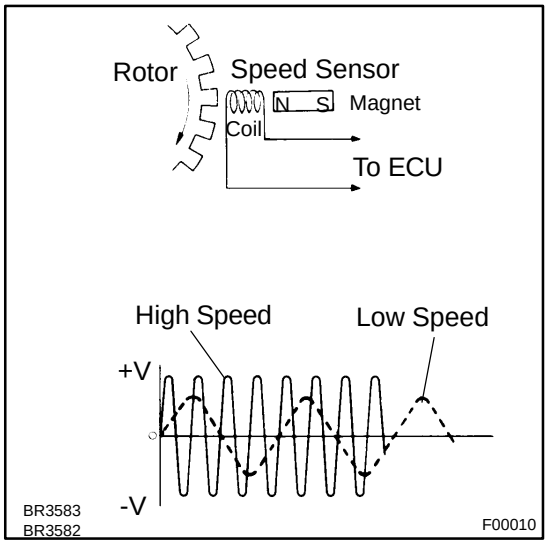

The speed sensor detects the wheel speed and sends the appropriate signals to the ECU. These signals are used to control the ABS control system. The front and rear rotors each have 48 serrations.
When the rotos rotate, the magnetic field emitted by the permanent magnet in the speed sensor generates an AC voltage. Since the frequency of this AC voltage changes in direct proportion to the speed of the rotor, the frequency is used by the ECU to detect the speed of each wheel.

DTC No.	DTC Detecting Condition	Trouble Area
31,32,33,34	Detection of any of conditions (1) through (3): (1) At vehicle speed of 10 km/h (6 mph) or more, pulses are not input for 15 sec. (2) Momentary interruption of the vehicle speed sensor signal occurs at least 7 times in the time between switching the ignition switch ON and switching it OFF. (3) Abnormal fluctuation of speed sensor signals with the vehicle speed 20 km/h (12 mph) or more.	□Right front, left front, right rear and left rear speed sensor □Open or short in each speed sensor circuit □Sensor rotor

HINT:
DTC No.31 is for the right front speed sensor.
DTC No.32 is for the left front speed sensor.
DTC No.33 is for the right rear speed sensor.
DTC No.34 is for the left rear speed sensor.
Fail safe function:
If trouble occurs in the speed sensor circuit, the ECU cuts off current to the ABS solenoid relay and prohibits ABS control.

WIRING DIAGRAM

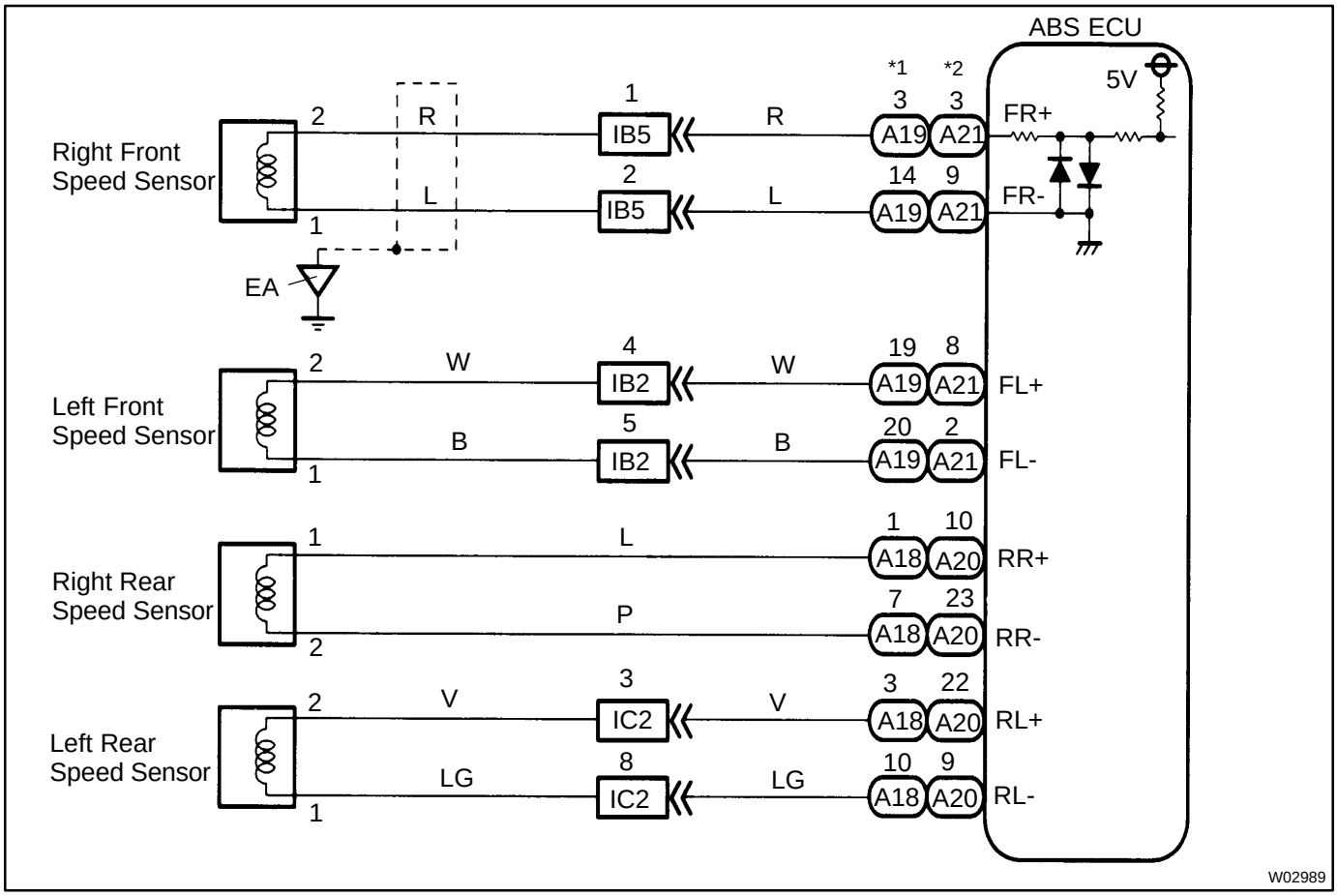

*1: NORMAL ABS (2JZ-GE Engine)
*2: SPORT ABS (2JZ-GTE Engine)

INSPECTION PROCEDURE

1	**Check speed sensor.**

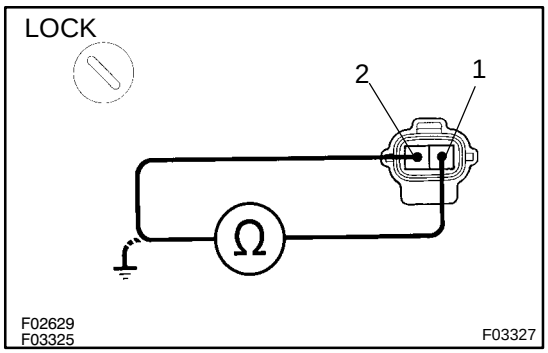

Front

PREPARATION:

(a) Remove front fender splash shield.

(b) Disconnect speed sensor connector.

CHECK:

Measure resistance between terminals 1 and 2 of speed sensor connector.

OK:

Resistance: 0.6 - 2.5 kΩ

CHECK:

Measure resistance between terminals 1 and 2 of speed sensor connector and body ground.

OK:

Resistance: 1 MΩ or higher

CHECK:

Check the sensor connector.

OK:

(1) There is not play on the connector connecting part.

(2) Connectors are connected each other securely.

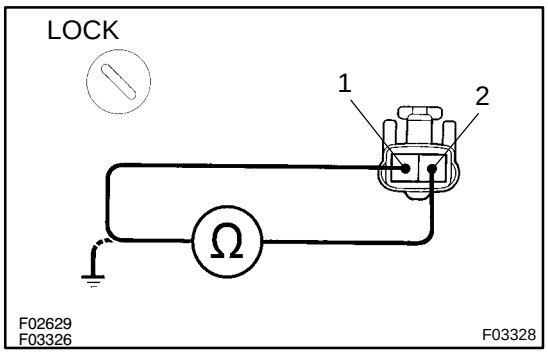

Rear

PREPARATION:

(a) Remove rear, seat cushion, seat back and quarter trim panel.

(b) Disconnect speed sensor connector.

CHECK:

Measure resistance between terminals 1 and 2 of speed sensor connector.

OK:

Resistance: 0.65 - 1.8 kΩ

CHECK:

Measure resistance between terminals 1 and 2 of speed sensor connector and body ground.

OK:

Resistance: 1 MΩ or higher

CHECK:

Check the sensor connector.

OK:

(1) There is not play on the connector connecting part.

(2) Connectors are connected each other securely.

NG → **Replace speed sensor.**

NOTICE:

Check the speed sensor signal last (See page DI-442).

OK

2	**Check for open and short in harness and connector between each speed sensor and ABS ECU (See page IN-28).**

NG → **Repair or replace harness or connector.**

OK

3	Check sensor rotor and sensor installation.

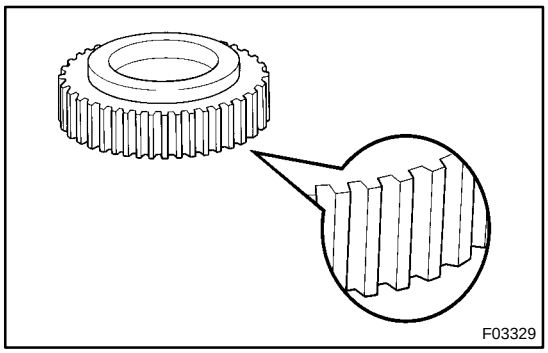

Front

PREPARATION:

Remove front speed sensor rotor (See page SA-12).

CHECK:

Check sensor rotor serrations.

OK:

No scratches, missing teeth or foreign objects.

CHECK:

Check the front speed sensor installation.

OK:

The installation bolt is tightened properly and there is no clearance between sensor and steering knuckle.

CHECK:

Check the sensor tip.

OK:

No scratches or foreign objects on the sensor tip.

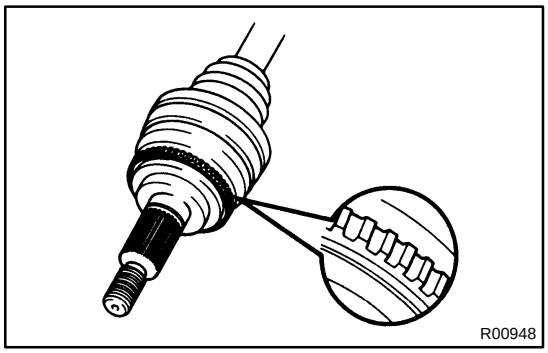

Rear

PREPARATION:

Remove the drive shaft (See page SA-43).

CHECK:

Check the sensor rotor serrations.

OK:

No scratches or missing teeth.

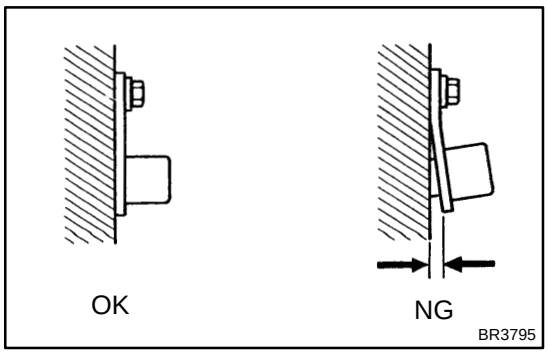

CHECK:
Check the rear speed sensor installation.
OK:
The installation bolt is tightened properly and there is no clearance between the sensor and rear axle carrier.
CHECK:
Check the sensor tip.
OK:
No scratches or foreign objects on the sensor tip.

NG → **Replace speed sensor and grease or rotor and grease.**

NOTICE:
Check the speed sensor signal last (See page DI-442).

OK

Check and replace ABS ECU.

DI4VF-01

DTC	41	IG Power Source Circuit

CIRCUIT DESCRIPTION

This is the power source for the ECU, hence the CPU and the actuators.

DTC No.	DTC Detecting Condition	Trouble Area
41	Voltage at ECU terminal IG1 is less than 9.5 V for more than 10 sec. while vehicle speed is 3 km/h (1.9 mph) or more.	□Battery □IC regulator □Open or short in power source circuit

Fail safe function:

If trouble occurs in the power source circuit, the ECU cuts off current to the ABS solenoid relay and prohibits ABS control.

WIRING DIAGRAM

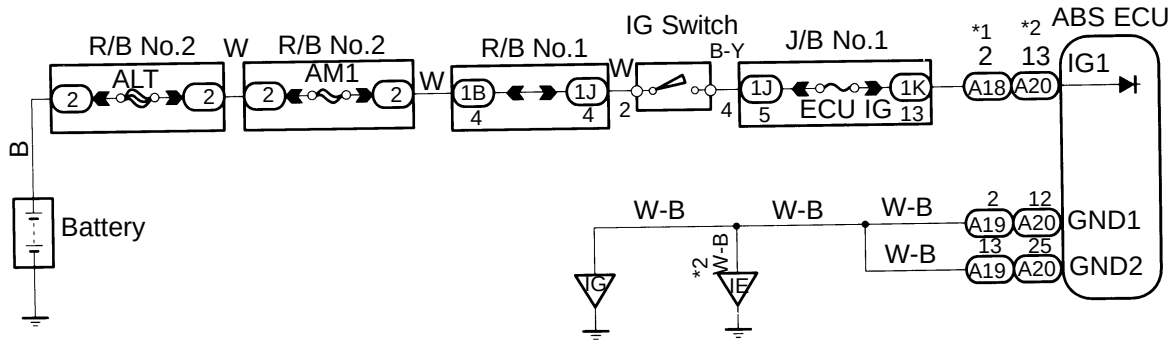

*1: NORMAL ABS (2JZ-GE Engine)
*2: SPORT ABS (2JZ-GTE Engine)

F03330

INSPECTION PROCEDURE

1	**Check battery positive voltage.**

OK:

Voltage: 10 - 14 V

NG → **Check and repair the charging system.**

OK

2	**Check voltage between terminals IG1 and GND of ABS ECU connector.**

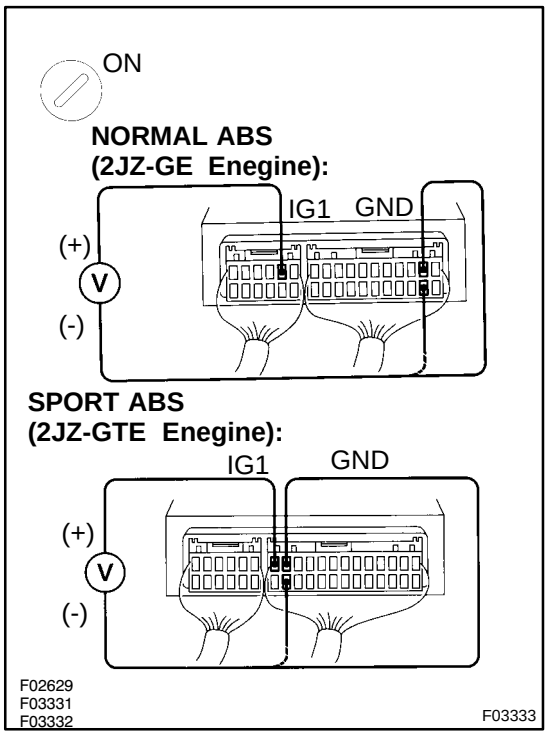

PREPARATION:

Remove ABS ECU with connectors still connected.

CHECK:

(a) Turn ignition switch ON.

(b) Measure voltage between terminals IG1 and GND of ABS ECU connector.

OK:

Voltage: 10 - 14 V

OK → **Check and replace ABS ECU.**

NG

3	**Check continuity between terminal GND of ABS ECU connector and body ground.**

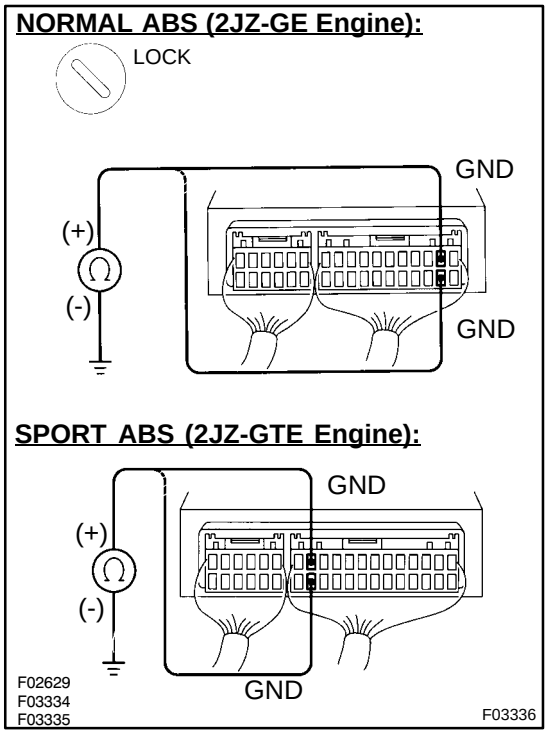

CHECK:

Measure resistance between terminals GND of ABS ECU connector and body ground.

OK:

Resistance: 1 Ω or less

NG → **Repair or replace harness or connector.**

OK

4	**Check ECU-IG fuse.**

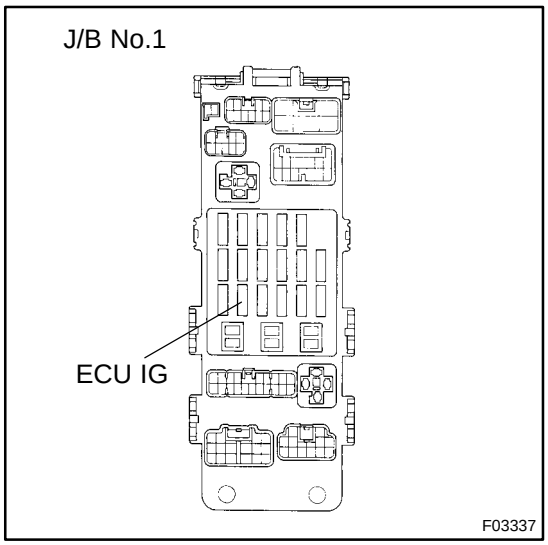

PREPARATION:

Remove ECU-IG fuse from J/B No.1.

CHECK:

Check continuity of ECU-IG fuse.

OK:

Continuity

NG → **Check for short in all the harness and components connected to ECU-IG fuse (See attached wiring diagram).**

OK →

Check for open in harness and connector between ABS ECU and battery (See page IN-28).

DI4VG-01

DTC	43, 45	Malfunction is Deceleration Sensor (SPORT ABS (2JZ-GTE Engine) only)

CIRCUIT DESCRIPTION

DTC No.	DTC Detecting Condition	Trouble Area
43	Either of the following (1) or (2) is detected: (1) Input from the deceleration sensor does not change at one cycle (0 km/h → more than 30km/h → 0 km/h) for 16 times continuously. (2) When the brake pedal is not depressed at vehicle speed of 5 km/h or more, forward and backward G (more than 0.4 G) is detected for 30 seconds or more.	□Deceleration sensor □Wire harness for deceleration sensor system
45	At vehicle speed of 30 km/h or more, the deceleration sensor output and vehicle acceleration from wheel speed remain abnormally different for 60 seconds or more.	□Deceleration sensor □Wire harness for deceleration sensor system

INSPECTION PROCEDURE

1 Check deceleration sensor (See page DI-442).

NG → Replace deceleration sensor.

OK

2 Check for open or short in harness and connector between sensor and ABS ECU (See page IN-28).

NG → Repair or replace harness and connector.

OK

Check and replace ABS ECU.

DI4VH-01

DTC	44	Deceleration Sensor Circuit (SPORT ABS (2JZ-GTE Engine) only)

CIRCUIT DESCRIPTION

This sensor detects deceleration on the vehicle. The sensor signal is used in ABS control. If the sensor functions abnormally, the ABS warning light comes on but the ABS still operates.

DTC No.	DTC Detecting Condition	Trouble Area
44	Either of the following (1), (2) or (3) is detected: (1) IG switch ON and output voltage of GL1 or GL2 remains 0.5 V or less or 4.5 V or more for more than 1.2 sec. (2) At vehicle speed of 0 km/h, outputs of GL1 and GL2 remains abnormally different for 60 sec. or more (3) IG switch ON and VGS ⊕ 4.4 V, VGS ⊖ 5.5 V continues for 1.2 sec. or more.	□Deceleration sensor □Open or short in deceleration sensor circuit

WIRING DIAGRAM

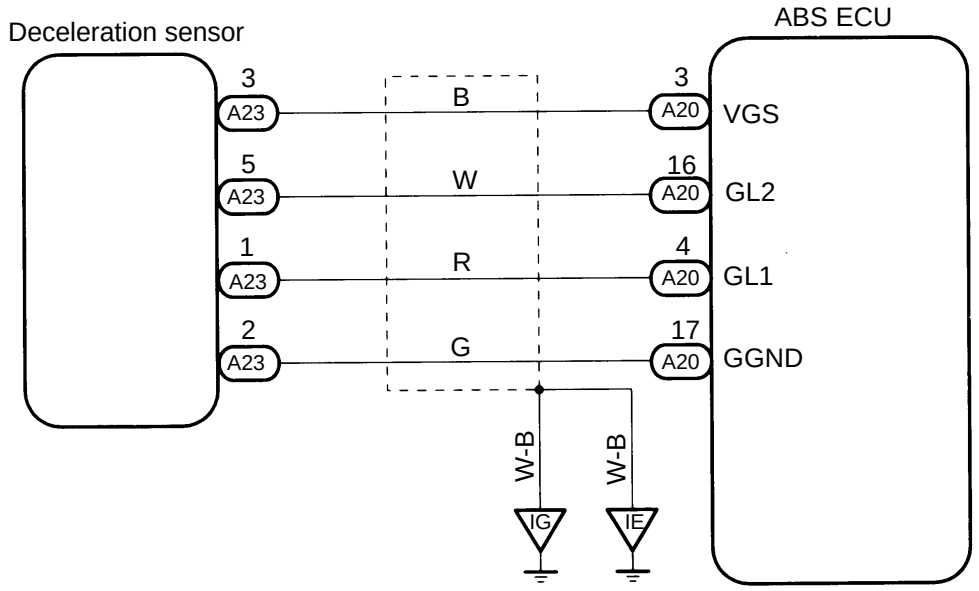

F03338

INSPECTION PROCEDURE

1	**Check for open and short in harness and connector between sensor and ABS ECU (See page IN-28).**

NG → **Repair or replace harness or connector.**

OK

2	**Check voltage between terminals GL1, GL2, VGS of ECU and body ground.**

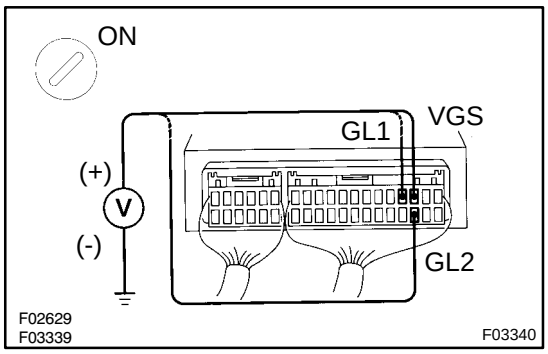

PREPARATION:

(a) Remove ABS ECU with connectors still connected.
(b) Disconnect sensor connector.
(c) Turn the ignition switch ON.

CHECK:

Measure voltage between terminals GL1, GL2, VGS of ECU and body ground.

OK:

Voltage:
GL1, GL2: 0.5 - 4.5 V
VGS: 4.5 - 5.5 V

NG → **Check and replace ABS ECU.**

OK

Check and replace deceleration sensor.

DI4VI-01

DTC	49	Stop Light Switch Circuit

CIRCUIT DESCRIPTION

This stop light switch senses whether the brake pedal is depressed or released, and sends a signal to the ECU.

DTC No.	DTC Detecting Condition	Trouble Area
49	1.2 - 1.7 V of STP voltage is continued for 0.3 sec. or more.	□Open in stop light circuit

WIRING DIAGRAM

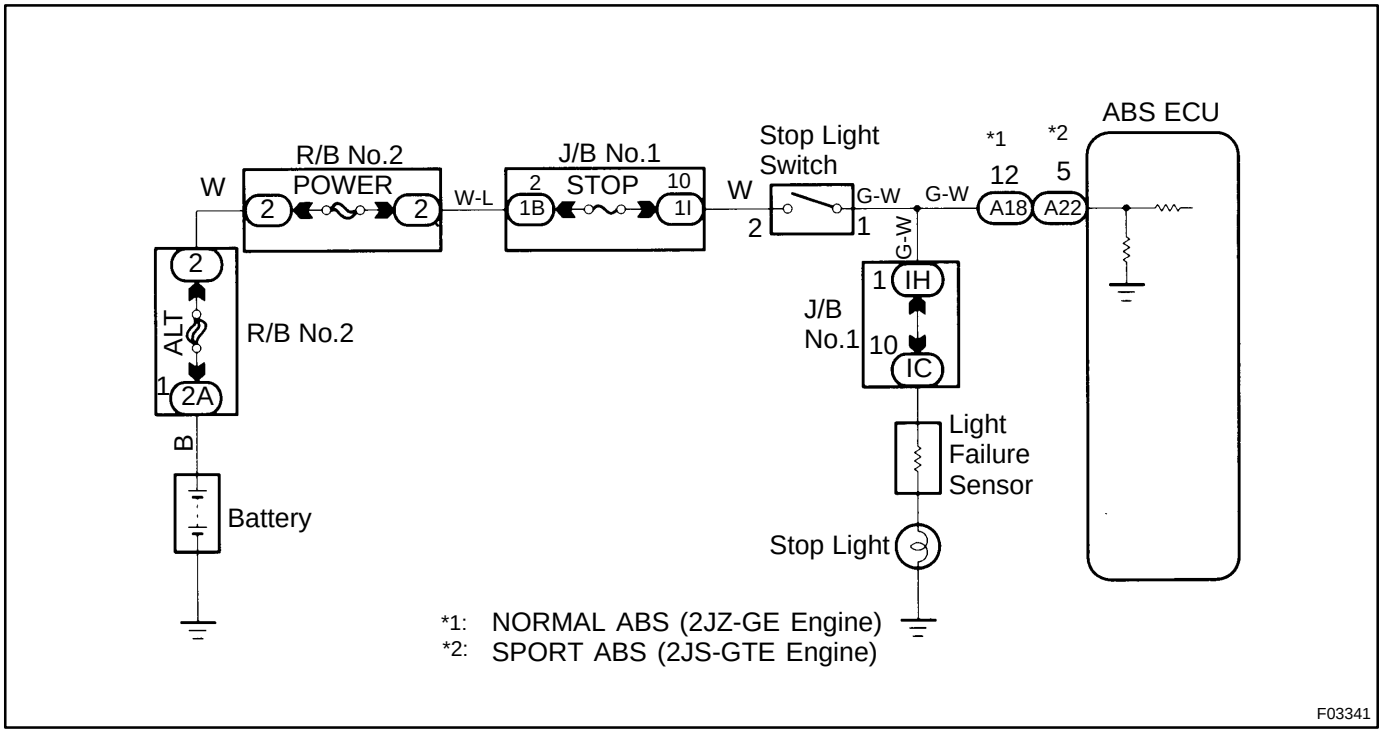

INSPECTION PROCEDURE

1	Check operation of stop light.

CHECK:

Check that stop light lights up when brake pedal is depressed and turns off when brake pedal is released.

NG → **Replace stop light bulb.**

OK

2	Check voltage between terminal STP of ABS ECU and body ground.

NORMAL ABS (2JZ-GE Engine):

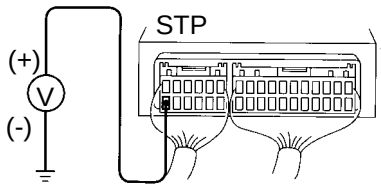

SPORT ABS (2JZ-GTE Engine):

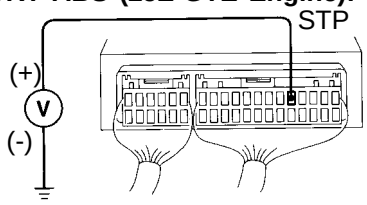

F03342
F03343
F03344

PREPARATION:

Remove ABS ECU with connectors still connected.

CHECK:

Measure voltage between terminal STP of ABS ECU and body ground when brake pedal is depressed.

OK:

Voltage: 8 - 14 V

OK → **Proceed to next circuit inspection shown on problem symptoms chart (See page DI-452).**

NG

3	Check for open in harness and connector between ABS ECU and stop light switch (See page IN-28).

NG → **Repair or replace harness or connector.**

OK

Check and replace ABS ECU.

DI4VJ-01

DTC	51	ABS Pump Motor Lock

CIRCUIT DESCRIPTION

DTC No.	DTC Detecting Condition	Trouble Area
51	Pump motor is not operating normally during initial check.	□ABS pump motor

Fail safe function:
If trouble occurs in the ABS pump motor, the ECU cuts off the current to the ABS solenoid relay and prohibits ABS control.

WIRING DIAGRAM

See page DI-460 .

INSPECTION PROCEDURE

See inspection of ABS actuator (See page BR-66 or BR-66).

DI4VK-01

DTC	Always ON	Malfunction in ECU IG Power Source Circuit

CIRCUIT DESCRIPTION

This is the power source for the ECU, hence the CPU, and the actuators.

DTC No.	DTC Detecting Condition	Trouble Area
Always ON	Voltage of ECU terminal IG1 remains at more than 17 V for 1 sec. or more.	□Battery □IC regulator □Open or short in power source circuit □ECU

Fail safe function:
If trouble occurs in the power source circuit, the ECU cuts off current to the ABS solenoid relay and prohibits ABS control.

WIRING DIAGRAM

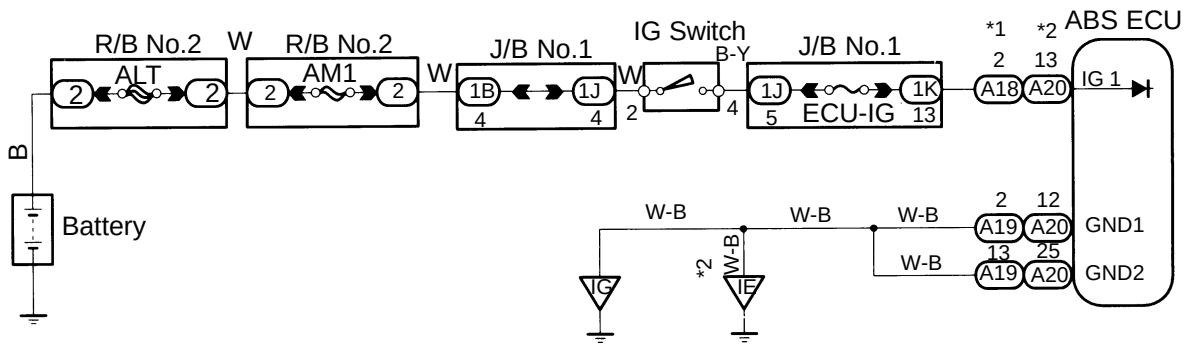

*1: NORMAL ABS (2JZ-GE Engine)
*2: SPORT ABS (2JZ-GTE Engine)

F03345

INSPECTION PROCEDURE

1	**Is DTC output?**

Check DTC on page DI-442 .

YES → **Repair circuit indicated by the code output.**

NO

2	**Is normal code displayed?**

YES → **Check ABS solenoid relay. Check for short in harness and connector between ABS solenoid relay and DLC1 (See page IN-28).**

NO

3	**Is ABS warning light go off?**

YES → **Check for open or short in harness and conector between ECU-IG Fuse and ECU (See page IN-28).**

NO

4	**Check battery positive voltage.**

PREPARATION:
Start the engine.
CHECK:
Check the battery positive voltage.
OK:
Voltage: 10 - 16 V

NG → **Check and repair the charging system.**

OK

5	**Check ABS warning light.**

PREPARATION:

(a) Turn the ignition switch OFF.

(b) Disconnect the conector from the ABS ECU.

(c) Turn the ignition switch ON.

CHECK:

Check the ABS warning light goes off.

OK → **Check and replace ABS ECU.**

NG

Check for short in harness and connector between combination meter and ABS ECU, combination meter and DLC1 (See page IN-28).

DI4VL-01

ABS Warning Light Circuit

CIRCUIT DESCRIPTION

If the ECU detects trouble, it lights the ABS warning light while at the same time prohibiting ABS control. At this time, the ECU records a DTC in memory.
After removing the short pin of the DLC1, connect terminals Tc and E1 of the DLC1 or DLC2 to make the ABS warning light to blink and output the DTC.

WIRING DIAGRAM

2JZ-GE Engine (NORMAL ABS):

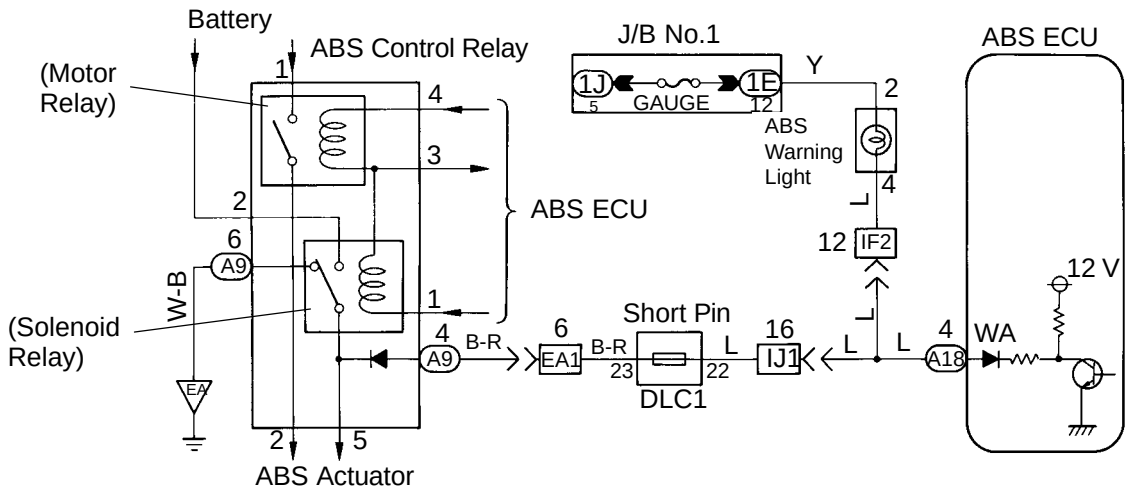

2JZ-GTE Engine (SPORT ABS):

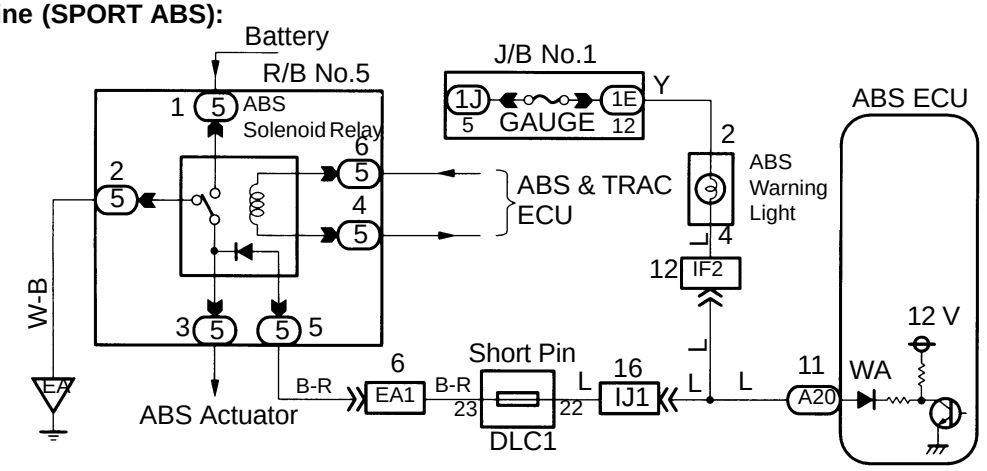

F03346
F03347

F03348

INSPECTION PROCEDURE
2JZ-GE Engine:

Troubleshooting in accordance with the chart below for each trouble symptom.

ABS warning light does not light up	Go to step 1
ABS warning light remains on	Go to step 3

1	**Check ABS warning light.**

See Combination Meter Troubleshooting on page BE-2 .

NG → **Replace bulb or combination meter assembly.**

OK

2	**Check ABS control (solenoid) relay.**

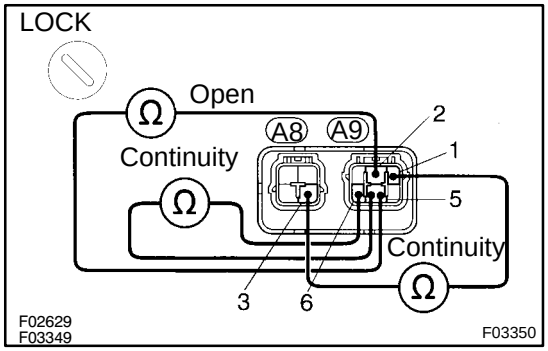

PREPARATION:

Disconnect the connectors from ABS control (solenoid) relay.

CHECK:

Check continuity between each terminal of ABS control (solenoid) relay.

OK:

Terminals A9 - 1 and A8 - 3	Continuity (Reference value 80 Ω)
Terminals A9 - 5 and A9 - 6	Continuity
Terminals A9 - 2 and A9 - 5	Open

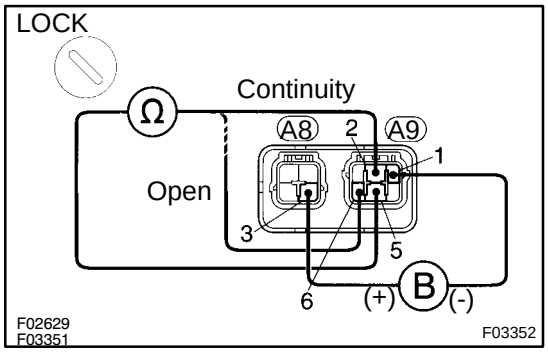

CHECK:

(a) Apply battery positive voltage between terminals A9 - 1 and A8 - 3.

(b) Check continuity between each terminal of ABS solenoid relay.

OK:

Terminals A9 - 5 and A9 - 6	Open
Terminals A9 - 2 and A9 - 5	Continuity

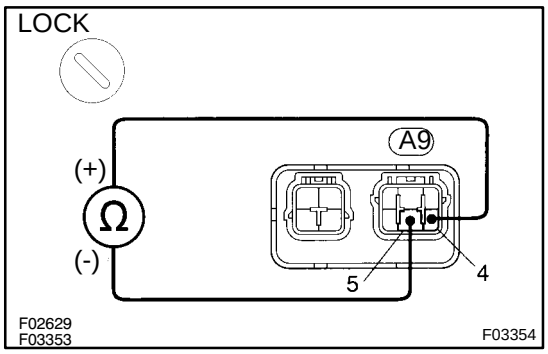

CHECK:

Connect the ⊕ test lead to terminal A9 - 4 and the ⊖ lead to terminal A9 - 5. Check continuity between terminals.

OK:

Continuity

If there is no continuity, connect the ⊖ test lead to terminal A9 - 4 and the ⊕ lead to terminal A9 - 5. Recheck continuity between terminals.

NG → **Replace ABS control relay.**

OK

Repair or replace and check for open in harness and connector between DLC1 and ABS control (solenoid) relay and body ground (See page IN-28).

3	**Is DTC output?**

Check DTC on page DI-442 .

YES → **Repair circuit indicated by the code output.**

NO

4	**Does ABS warning light go off if short pin is removed?**

NO → **Check for short in harness and connector between warning light and DLC1 and ECU (See page IN-28).**

YES

5	**Check ABS control (solenoid) relay (See step No.2).**

NG → **Replace ABS control relay.**

OK

Repair or replace and check for short in harness and connector between DLC1 and ABS control (solenoid) relay (See page IN-18).

2JZ-GTE Engine:

Troubleshoot in accordance with the chart below for each trouble symptom.

ABS warning light does not light up	Go to step 1
ABS warning light remains on	Go to step 3

1	**Check ABS warning light.**

See combination meter troubleshooting on page BE-2 .

NG → **Replace bulb or combination meter assembly.**

OK

2	**Check ABS solenoid relay.**

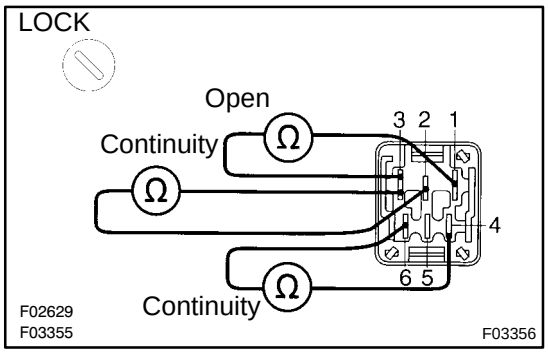

PREPARATION:

Remove solenoid relay from R/B No.5.

CHECK:

Check continuity between each terminal of ABS solenoid relay.

OK:

Terminals 4 and 6	Continuity (Reference value 80 Ω)
Terminals 2 and 3	Continuity
Terminals 1 and 3	Open

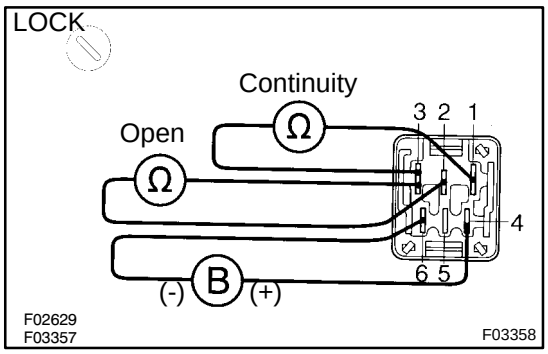

CHECK:

(a) Apply battery positive voltage between terminals 4 and 6.

(b) Check continuity between each terminal of ABS solenoid relay.

OK:

Terminals 2 and 3	Open
Terminals 1 and 3	Continuity

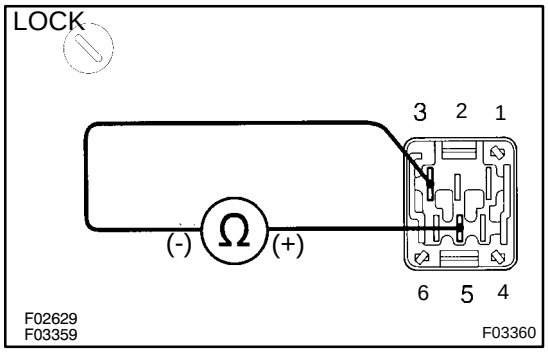

CHECK:

Connect the ⊕ test lead to terminal 5 and the ⊖ lead to terminal 3. Check continuity between the terminals.

OK:

Continuity

If there is not continuity, connect the ⊖ test lead to terminal 5 and the ⊕ lead to terminal 3. Recheck continuity between terminals.

NG → **Replace ABS solenoid relay.**

OK

Repair or replace and check for open in harness and connector between DLC1 and ABS solenoid relay and body ground (See page IN-28).

3	**Is DTC output?**

Check DTC on page DI-442 .

YES → **Repair circuit indicated by the code output.**

NO

4	**Does ABS warning light go off if short pin is removed?**

NO → **Check for short in harness and connector between warning light and DLC1 and ECU (See page IN-28).**

YES

5	**Check ABS solenoid relay (See step No.2).**

NG → **Replace ABS control relay.**

OK

Repair or replace and check for short in harness and connector between DLC1 and ABS solenoid relay (See page IN-28).

DI4VM-01

Tc Terminal Circuit

CIRCUIT DESCRIPTION

Connecting terminals Tc and E1 of the DLC1 or the DLC1 or the DLC2 causes the ECU to display the DTC by flashing the ABS warning light.

WIRING DIAGRAM

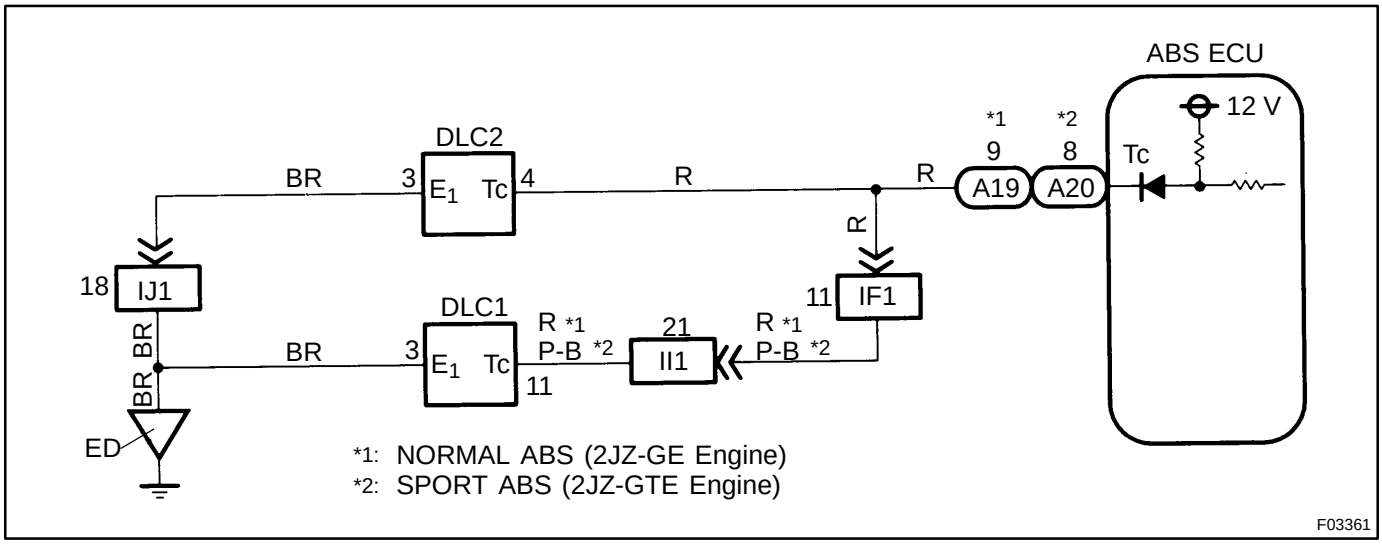

INSPECTION PROCEDURE

1	**Check voltage between terminals Tc and E1 of DLC2 or DLC1.**

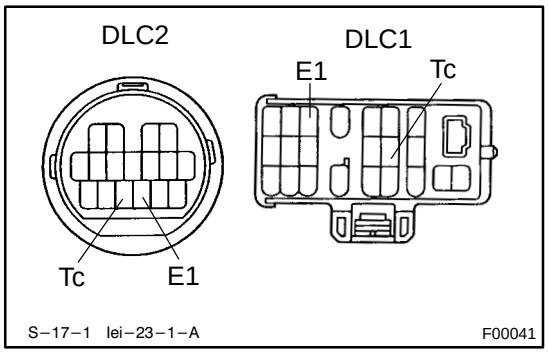

PREPARATION:

Turn ignition switch ON.

CHECK:

Measure voltage between terminals Tc and E1 of DLC2 or DLC1.

OK:

Voltage: 10 - 14 V

OK → **If ABS warning light does not blink even after Tc and E1 are connected, the ECU may be defective.**

NG

2	**Check for open and short in harness and connector between ABS ECU and DLC2 or DLC1, DLC2 or DLC1 and body ground (See page IN-28).**

NG → **Repair or replace harness or connector.**

OK

Check and replace ABS ECU.

DI4VN-01

Ts Terminal Circuit

CIRCUIT DESCRIPTION

The sensor check circuit detects abnormalities in the speed sensor signal which cannot be detected with the DTC check.
Connecting terminals Ts and E1 of the DLC1 in the engine compartment starts the check.

WIRING DIAGRAM

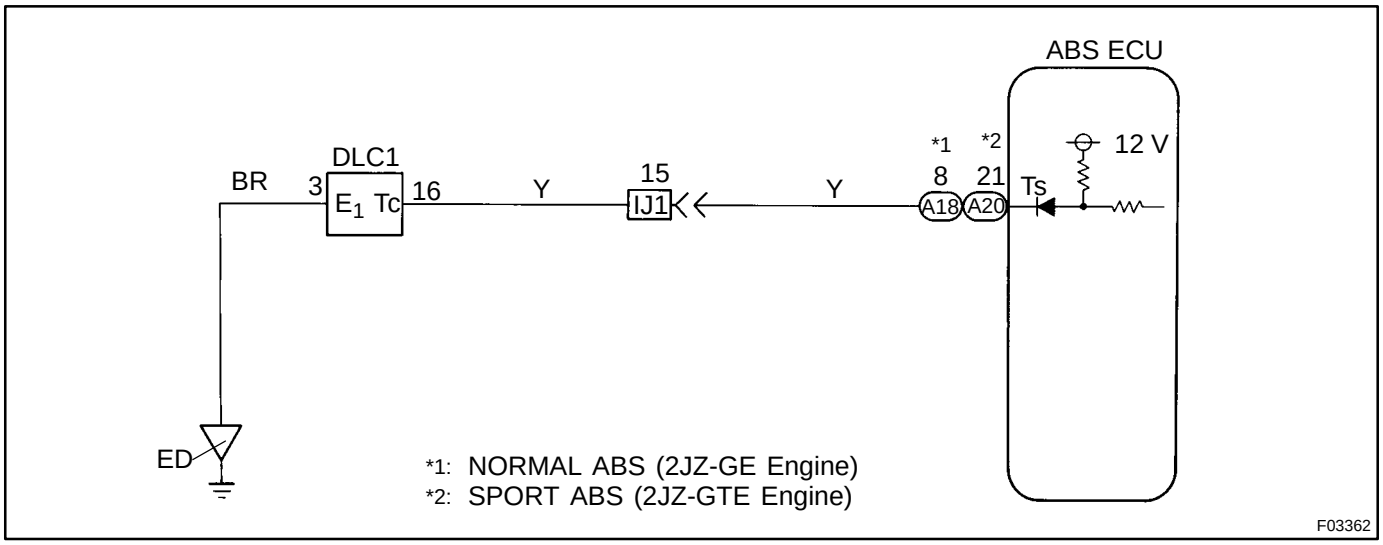

INSPECTION PROCEDURE

1	**Check voltage between terminals Ts and E1 of DLC1.**

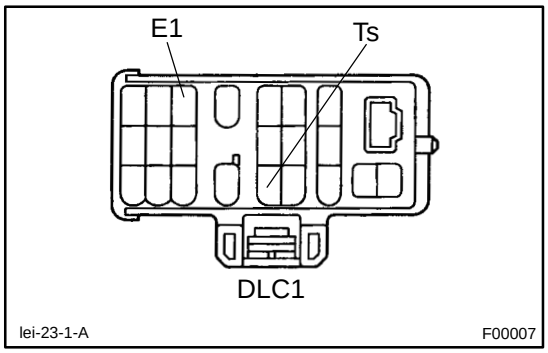

PREPARATION:
Turn ignition switch ON.
CHECK:
Measure voltage between terminals Ts and E1 of DLC1.
OK:
Voltage: 10 - 14 V

OK → **If ABS warning light does not blink even after Ts and E1 are connected, the ECU may be defective.**

NG

2	**Check for open and short in harness and connector between ABS ECU and DLC1, DLC1 and body ground (See page IN-28).**

NG → **Repair or replace harness or connector.**

OK

Check and replace ABS ECU.

DI4VO-01

Check for Fluid Leakage

Check for fluid leakage from actuators or hydraulic lines.

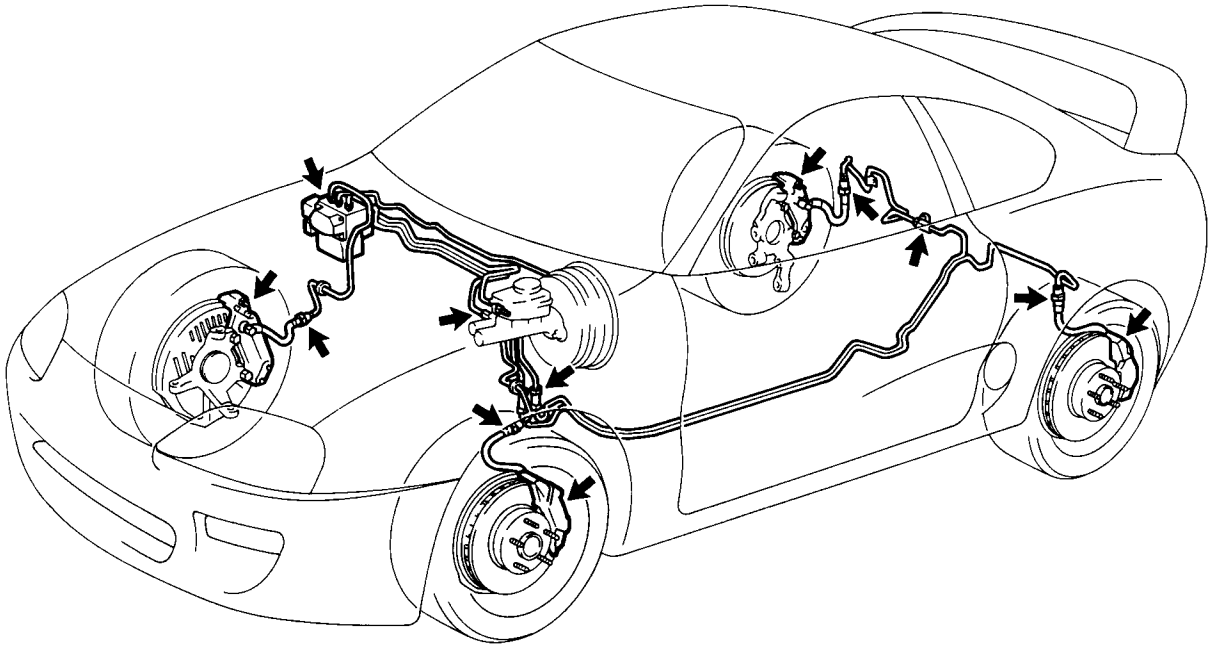

F03363

ABS & TRACTION CONTROL SYSTEM

DI4VP-01

HOW TO PROCEED WITH TROUBLESHOOTING

Troubleshooting in accordance with the procedure on the following pages.

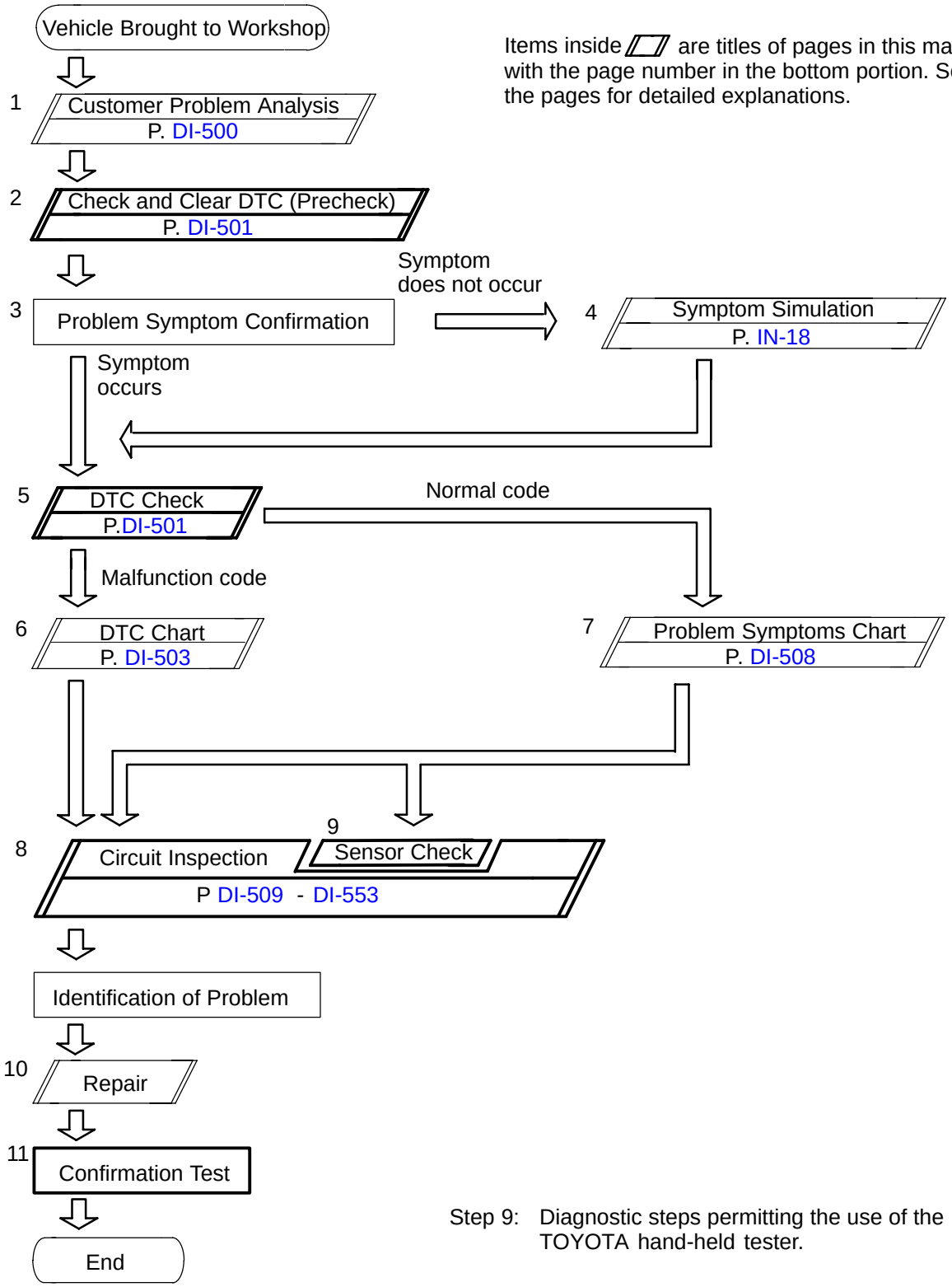

Step 9: Diagnostic steps permitting the use of the TOYOTA hand-held tester.

DI4VQ-01

CUSTOMER PROBLEM ANALYSIS CHECK

TRAC Check Sheet

Inspector's Name :

Customer's Name		**Registration No.**	
		Registration Year	/ /
		Frame No.	
Date Vehicle Brought In	/ /	**Odometer Reading**	km miles

Date Problem First Occurred	/ /
Frequency Problem Occurs	☐ Continuous ☐ Intermittent (times a day)

Symptoms	☐ TRAC does not operate. (Wheels spin when starting rapidly.)	
	TRAC OFF Indicator Light Abnormal	☐ Remains ON ☐ Blinks ☐ Does not Light Up
	SLIP Indicator Light Abnormal	☐ Remains ON ☐ Does not Light Up
	Snow Indicator Light Abnormal	☐ Remains ON ☐ Does not Light Up

Check Item	**Malfunction Indicator Light**	☐ Normal ☐ Malfunction Code (Code)

DTC Check	**1st Time**	☐ Normal Code ☐ Malfunction Code (Code)
	2nd Time	☐ Normal Code ☐ Malfunction Code (Code)

DI4VR-01

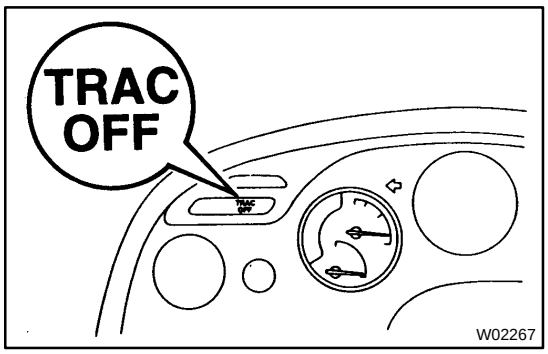

PRE-CHECK

1. DIAGNOSIS SYSTEM

(a) Check the indicator.

When the ignition switch is turned ON, check that the TRAC OFF indicator light goes on, and when the engine is started, check that the TRAC OFF indicator light goes off.

HINT:

If the indicator check result is not normal, proceed to trouble-shooting for the TRAC OFF indicator light circuit (See page DI-547).

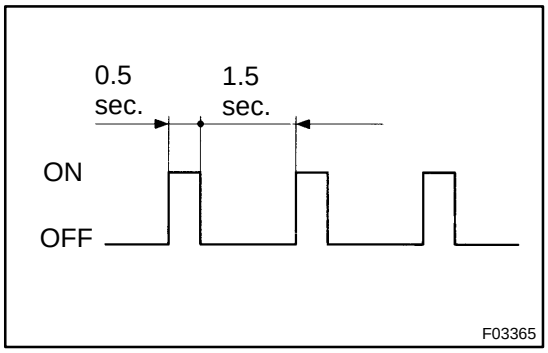

(b) Check the DTC.

(1) Turn the ignition switch ON.

If the ECU stores DTC, the TRAC OFF indicator light blinks after lighting up for 3 seconds.

The blinking pattern is shown on the left.

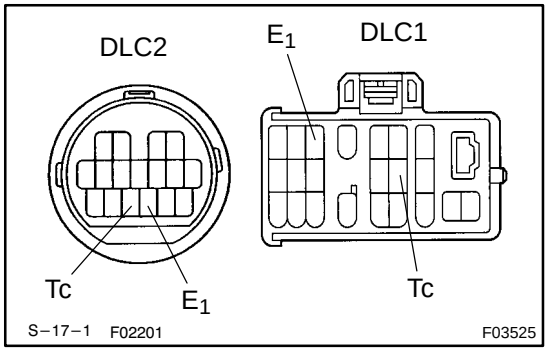

(2) Using SST, connect terminals Tc and E_1 of DLC2 or DLC1.

SST 09843-18020

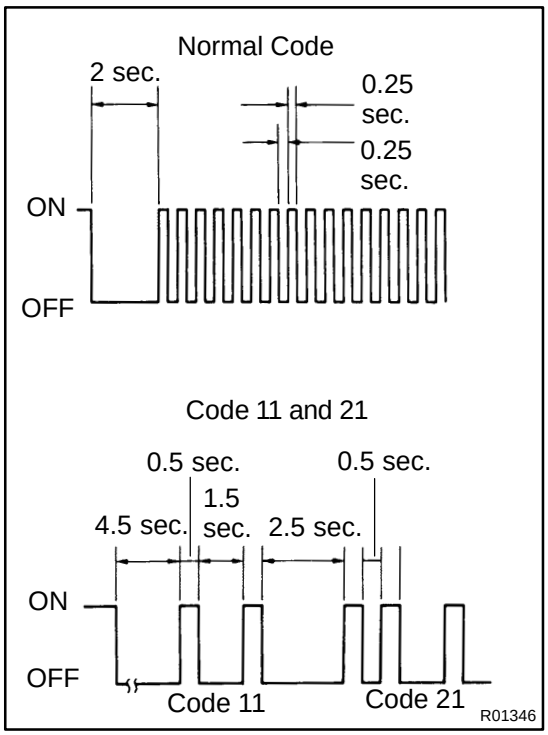

(3) Read the DTC from the TRAC OFF indicator light on the combination meter.

HINT:

- ☐ If no code appears, inspect the diagnostic circuit or TRAC OFF indicator light circuit (See page DI-553 or DI-547).
- ☐ As an example, the blinking patterns for normal code and codes 11 and 21 are shown on the left.
  - (4) Codes are explained in the code table on page DI-503 .
  - (5) After completing the check, disconnect terminals Tc and E1, and turn off the display.

If 2 or more malfunctions are indicated at the same time, the lowest numbered DTC will be displayed 1st.

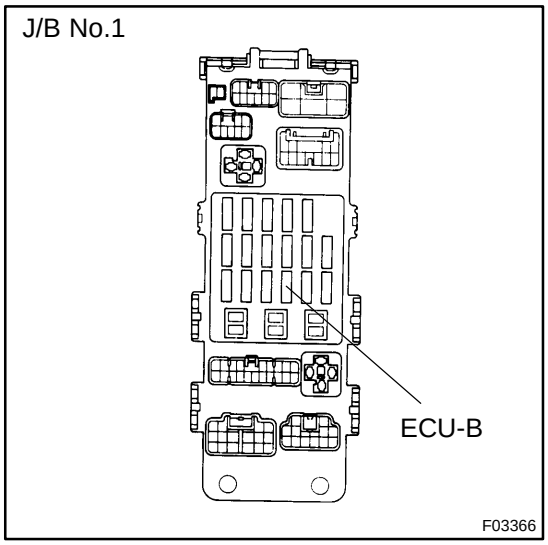

(c) Clear the DTC.
  - (1) Remove the ECU-B fuse from the J/B No.1 for 10 sec. or more.
  - (2) Install the ECU-B fuse.
  - (3) Confirm that the TRAC OFF indicator light shows the normal code.

DI4VS-01

DIAGNOSTIC TROUBLE CODE CHART

HINT:

Using SST 09843-18020, connect the terminals Tc and E_1.

If a malfunction code is displayed during the DTC check, check the circuit listed for that code. For details of each code, turn to the page referred to under the ”See page” for the respective ”DTC No.” in the DTC chart.

DTC No. (See Page)	Detection Item	Trouble Area
11 (DI-509)	Throttle control relay circuit open	□Throttle control relay □TRAC fuse □Wire harness and connector (throttle control relay circuit) □Throttle control ECU
12 (DI-509)	Throttle control relay circuit short	□Throttle control relay □Wire harness and connector (throttle control relay circuit) □Throttle control ECU
21 (DI-513)	Sub-throttle valve motor circuit open or short	□Sub-throttle valve motor □Wire harness and connector (sub-throttle valve motor and E01 circuit) □Throttle control ECU
22 (DI-513)	Sub-throttle valve motor malfunction	□Sub-throttle valve motor □Sub-throttle valve □Sub-throttle position sensor □Wire harness and connector (E1 circuit) □Throttle control ECU
23 (DI-516)	Throttle body malfunction	□Sub-throttle valve □Sub-throttle position sensor □Throttle control ECU
24 (DI-519)	Sub-throttle position sensor leakage/sub-throttle valve stuck	□Sub-throttle valve □Sub-throttle position sensor □Wire harness and connector (E1 circuit) □Throttle control ECU
31 (DI-522)	Throttle position sensor signal malfunction	□Throttle position sensor □Wire harness and connector (throttle position senor and E1 circuit) □Throttle control ECU
32 (DI-526)	Sub-throttle position sensor signal malfunction	□Sub-throttle position sensor □Sub-throttle valve motor □Sub-throttle valve □Wire harness and connector (sub-throttle position senor and E1 circuit) □Throttle control ECU
41 (DI-530)	Engine revolution signal open or short	□Wire harness and connector (NE circuit) □ECM □Throttle control ECU
42 (DI-532)	ECM malfunction	□Wire harness and connector (EFIF circuit) □ECM □Throttle control ECU
43 (DI-534)	ECM communication circuit malfunction	□Wire harness and connector (EFI+ and EFI- circuit) □ECM □Throttle control ECU
51 (DI-535)	Power source voltage down (sub-throttle valve in a bad condition)	□Wire harness and connector (+B and E01 circuit) □Throttle control ECU

52 (DI-535)	Power source voltage down	□Battery □IC regulator □Wire harness and connector (+B and E01 circuit) □Throttle control ECU
61 (DI-538)	Right front speed sensor circuit	□Right front, left front, right rear and left rear speed sensor □Wire harness and connector (FRO, FLO, RRO and RLO circuit) □Throttle control ECU
62 (DI-538)	Left front speed sensor circuit	
63 (DI-538)	Right rear speed sensor circuit	
64 (DI-538)	Left rear speed sensor circuit	
71 (DI-542)	Emergency fuel cut (sub-throttle motor circuit malfunction)	□Sub-throttle valve motor □Sub-throttle valve □Throttle control ECU
72 (DI-542)	Emergency fuel cut	
81 (DI-545)	ABS ECU malfunction	□Wire harness and connector (WA circuit) □ABS ECU □Throttle control ECU
Always ON	Throttle control ECU malfunction TRAC OFF switch ON	□Throttle control ECU

DI4VT-01

PARTS LOCATION

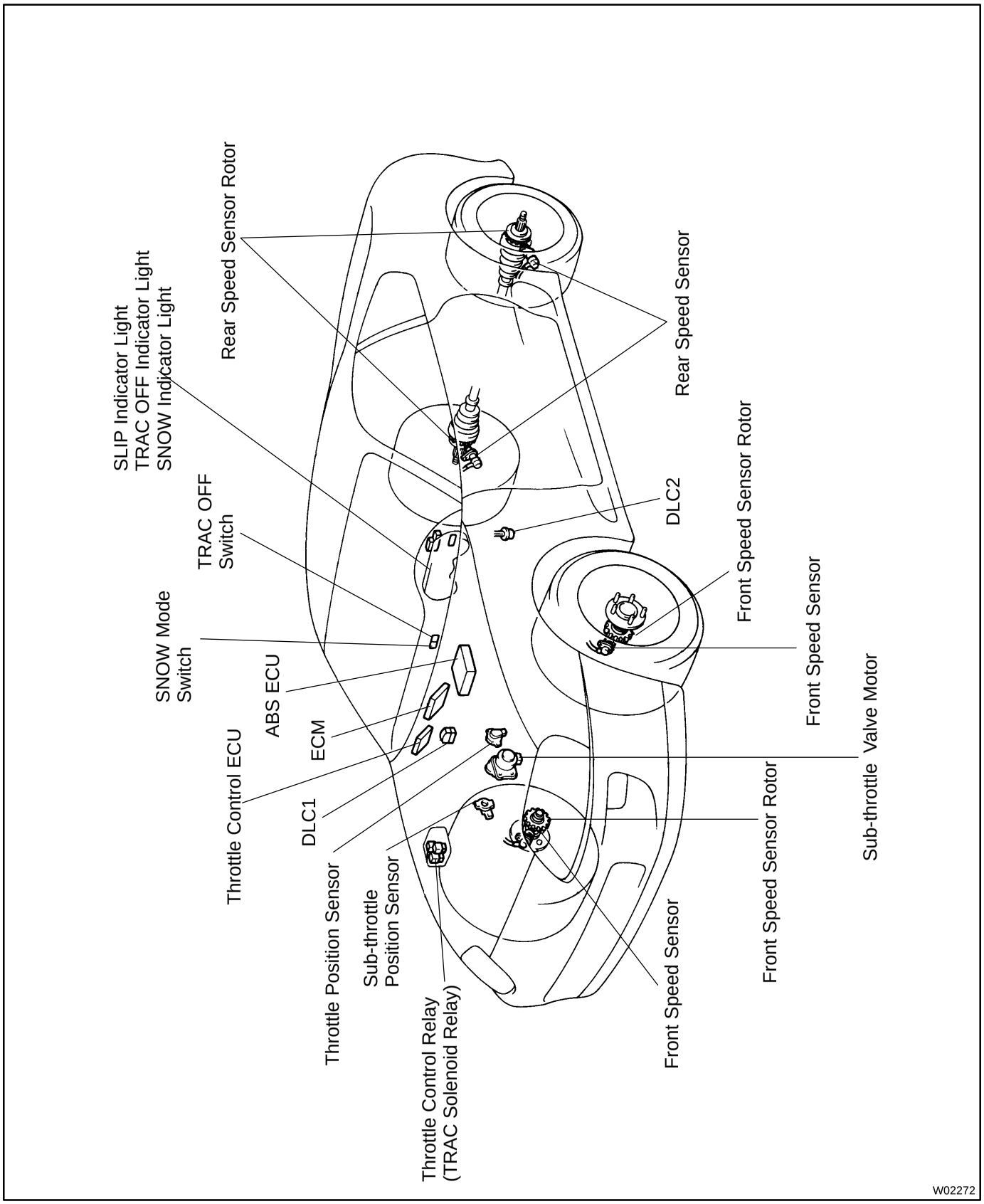

DI7HK-01

TERMINALS OF ECU

Throttle Contrl ECU

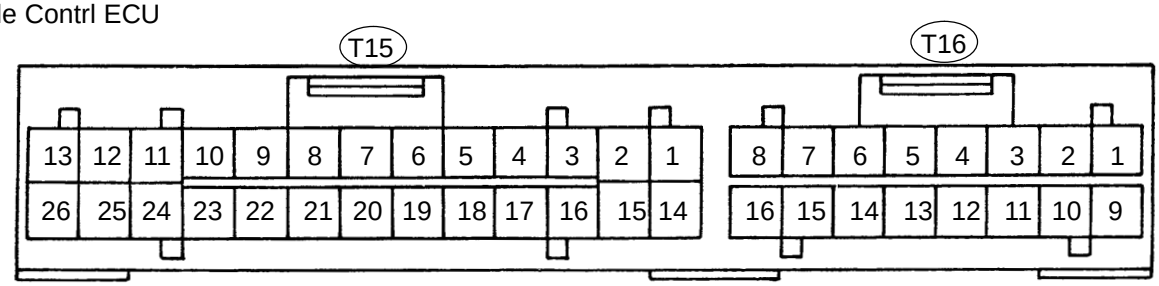

R00463

Symbols (Terminal No.)	STD Voltage (V)	Condition
BATT (T16-1) - E1 (T15-26)	9 - 14	Always
+B (T16-9) - E1 (T15-26)	9 - 14	IG switch ON, Engine stops
EFIB (T15-1) - E1 (T15-26)	9 - 14	IG switch ON, Engine stops
IDL1 (T15-4) - E1 (T15-26)	0 - 3	IG switch ON, Throttle valve fully closed
	9 - 14	IG switch ON, Throttle valve fully open
VTA1 (T15-6) - E1 (T15-26)	0.3 - 0.8	IG switch ON, Throttle valve fully closed
	3.2 - 4.9	IG switch ON, Throttle valve fully open
IDL2 (T15-3) - E1 (T15-26)	0 - 3	Engine running, Sub-throttle valve fully closed
	9 - 14	Engine running, Sub-throttle valve fully open
VTA2 (T15-19) - E1 (T15-26)	0.3 - 0.8	Engine running, Sub-throttle valve fully closed
	3.2 - 4.9	Engine running, Sub-throttle valve fully open
FRO (T16-16) - E1 (T15-26)	Pulse generation	Vehicle driving at about 30 km/h (19 mph)
FLO (T16-8) - E1 (T15-26)	Pulse generation	Vehicle driving at about 30 km/h (19 mph)
RRO (T16-15) - E1 (T15-26)	Pulse generation	Vehicle driving at about 30 km/h (19 mph)
RLO (T16-7) - E1 (T15-26)	Pulse generation	Vehicle driving at about 30 km/h (19 mph)
WT (T16-10) - E1 (T15-26)	0 - 3	IG switch ON, TRAC OFF indicator light ON
	9 - 14	IG switch ON, TRAC OFF indicator light OFF
IND (T16-2) - E1 (T15-26)	0 - 3	IG switch ON, SLIP indicator light ON
	9 - 14	IG switch ON, SLIP indicator light OFF
CSW (T16-6) - E1 (T15-26)	0 - 3	IG switch ON, TRAC OFF switch holded on pushing
	9 - 14	IG switch ON, TRAC OFF switch released
RLY+ (T16-4) - RLY- (T16-12)	9 - 14	IG switch ON
SIND (T16-11) - E1 (T15-26)	0 - 3	IG switch ON, SNOW indicator light ON
	9 - 14	IG switch ON, SNOW indicator light OFF
SNOW (T16-14) - E1 (T15-26)	0 - 3	IG switch ON, SNOW mode switch holded on pushing
	9 - 14	IG switch ON, SNOW mode switch released
A (T15-12) - E01 (T15-13)	Pulse generation	Engine running, Throttle valve fully closed
$\overline{A}$ (T15-11) - E01 (T15-13)	Pulse generation	Engine running, Throttle valve fully closed
B (T15-25) - E01 (T15-13)	Pulse generation	Engine running, Throttle valve fully closed
$\overline{B}$ (T15-24) - E01 (T15-13)	Pulse generation	Engine running, Throttle valve fully closed
NE (T15-16) - E1 (T15-26)	Pulse generation	Idling
FAIL (T15-9) - E1 (T15-26)	Pulse generation	IG switch ON (normal condition)
	9 - 14	IG switch ON (abnormal condition)
EFIF (T15-17) - E1 (T15-26)	0 - 2	IG switch ON, ECM normal condition
	4.5 - 5.5	IG switch ON, ECM abnormal condition

EFI+ (T15-7) - E1 (T15-26)	Pulse generation	IG switch ON
EFI- (T15-20) - E1 (T15-26)	Pulse generation	IG switch ON
ETC+ (T15-8) - E1 (T15-26)	Pulse generation	IG switch ON
ETC- (T15-21) - E1 (T15-26)	Pulse generation	IG switch ON
TC (T16-3) - E1 (T15-26)	4.5 - 5.5	IG switch ON, Engine stops
WA (T16-5) - E1 (T15-26)	9 - 14	IG switch ON, ABS ECU normal condition
	0 - 3	IG switch ON, ABS ECU abnormal condition

DI4VV-01

PROBLEM SYMPTOMS TABLE

If a normal code is displayed during the DTC check but the problem still occurs, check the circuits for each problem symptom in the order given in the table below and proceed to the relevant troubleshooting page.

Symptom	Inspection Circuit	See page
TRAC does not operate.	Only when inspection circuits for each problem symptom are all normal and the problem is still occurring,replace the throttle control ECU. 1. Check the DTC, reconfirming that the normal code is output. 2. Power source circuit. 3. Speed sensor circuit.	 DI-501 DI-535 DI-538
SLIP indicator light abnormal.	SLIP indicator light circuit.	DI-550
SNOW indicator light abnormal.	1. SNOW indicator light circuit. 2. SNOW made switch circuit.	DI-551 DI-551
TRAC OFF indicator light abnormal.	Only when inspection circuits for each problem symptom are all normal and the problem is still occurring,replace the throttle control ECU. 1. TRAC OFF indicator light circuit. 2. TRAC OFF switch circuit.	 DI-547 DI-547
DTC check cannot be done.	Only when inspection circuits for each problem symptom are all normal and the problem is still occurring,replace the throttle control ECU. 1. TRAC OFF indicator light circuit. 2. Tc terminal circuit.	 DI-547 DI-553

DI4VW-01

CIRCUIT INSPECTION

DTC	11, 12	Throttle Control Relay Circuit

CIRCUIT DESCRIPTION

DTC No.	DTC Detecting Condition	Trouble Area
11	Instead of throttle control relay is ON, voltage at +B of ECU terminal does not output 4 V or more for 1 sec. or more.	□Throttle control relay □TRAC fuse □Wire harness and connector (throttle control relay circuit) □Throttle control ECU
12	Instead of throttle control relay is OFF, voltage at +B of ECU terminal outputs 4 V or more for 2 sec. or more.	□Throttle control relay □Wire harness and connector (throttle control relay circuit) □Throttle control ECU

WIRING DIAGRAM

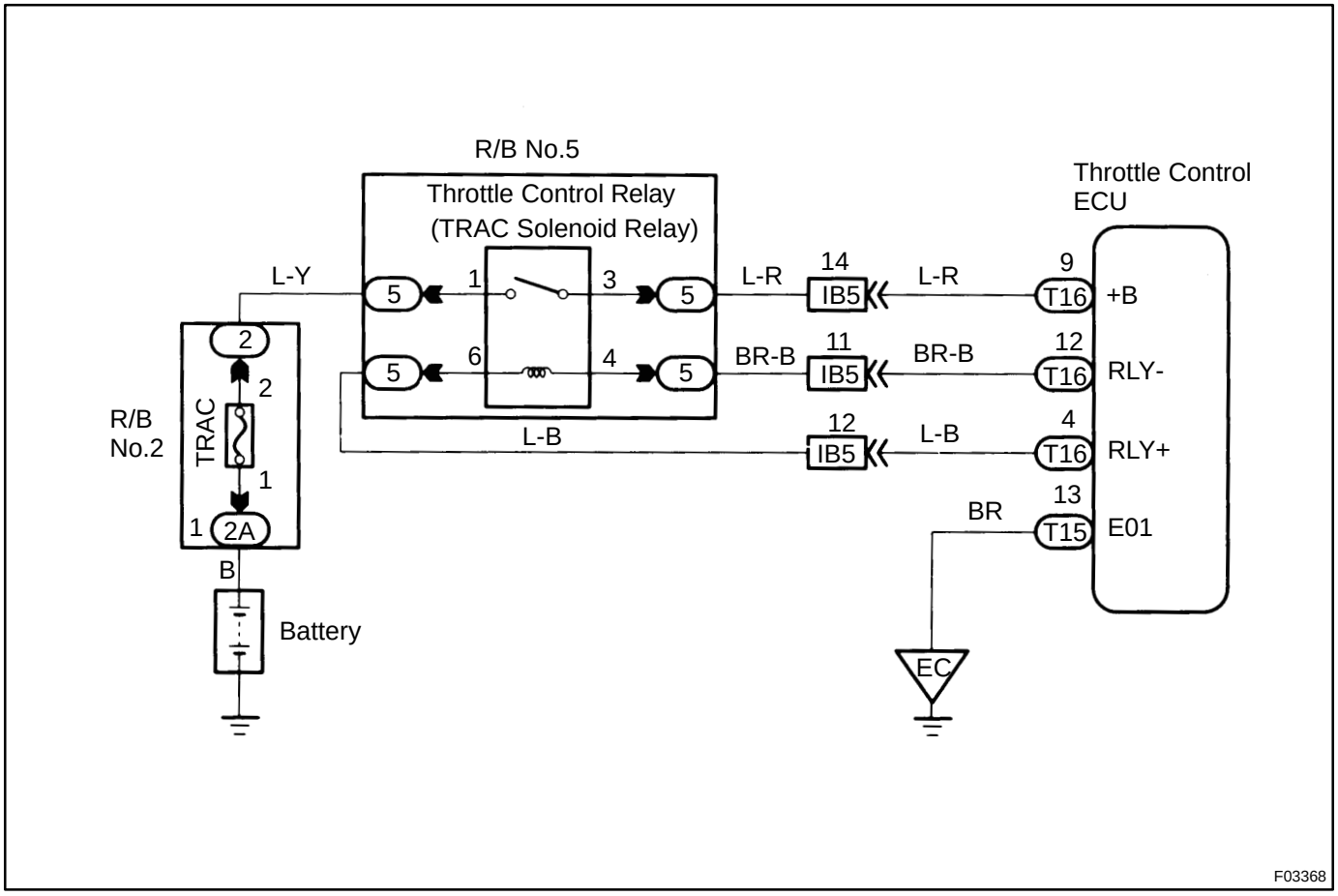

INSPECTION PROCEDURE

1	**Check TRAC fuse.**

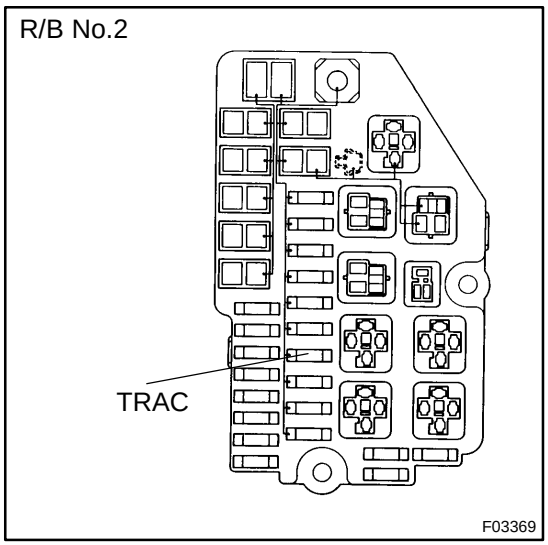

PREPARATION:
Remove TRAC fuse from R/B No.2.
CHECK:
Check continuity of TRAC fuse.
OK:
Continuity

NG → **Check for short in all harness and components connected to TRAC fuse.**

OK

2	**Check voltage between terminal 1 of R/B No.5 (for throttle control relay).**

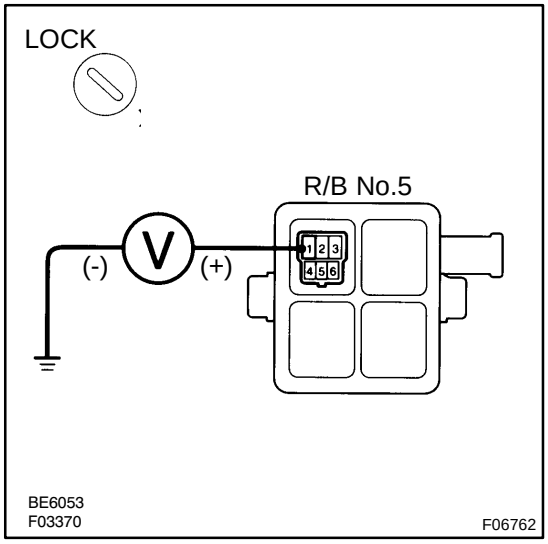

PREPARATION:
Remove throttle control relay from P/B No.5.
CHECK:
Measure voltage between terminal 1 of R/B No.5 (for throttle control relay).
OK:
Voltage: 10 - 14 V

NG → **Repair or replace harness or connector.**

OK

3	Check throttle control relay.

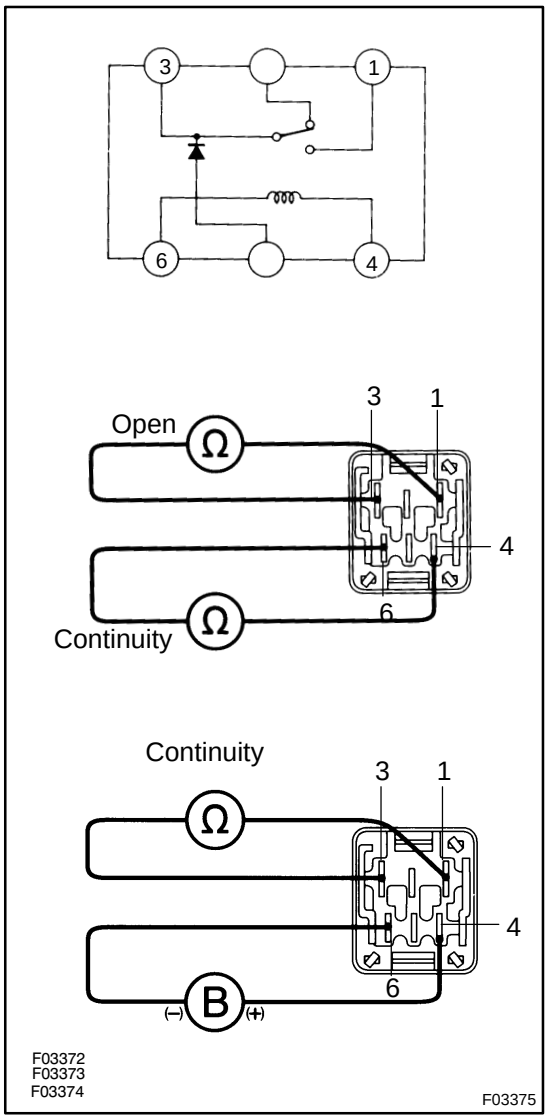

PREPARATION:

Remove throttle control relay from R/B No.5

CHECK:

Check continuity between each terminal of throttle control relay.

OK:

Terminals 4 and 6	Continuity (Reference value 80 Ω)
Terminals 1 and 3	Open

CHECK:

(a) Apply battery voltage between terminals 4 and 6.

(b) Check continuity between terminals.

OK:

Terminals 1 and 3	Continuity

NG → **Replace throttle control relay.**

OK

4	**Check for open and short in harness and connector between throttle control relay and throttle control ECU (See page IN-28).**

NG → **Repair or replace harness or connector.**

OK

If the same code is still output after the DTC is deleted, check the contact condition of each connection.
If the connections are normal, the ECU may be defective.

DI4VX-01

DTC	21, 22	Sub-Throttle Valve Motor Circuit

CIRCUIT DESCRIPTION

DTC No.	DTC Detecting Condition	Trouble Area
21	Sub-throttle valve motor circuit is open or short.	□Sub-throttle valve motor □Wire harness and connector (sub-throttle valve motor and E01 circuit) □Throttle control ECU
22	In case the sub-throttle valve open angle is tilted.	□Sub-throttle valve motor □Sub-throttle valve □Sub-throttle position senor □Wire harness and connector (E1 circuit) □Throttle control ECU

WIRING DIAGRAM

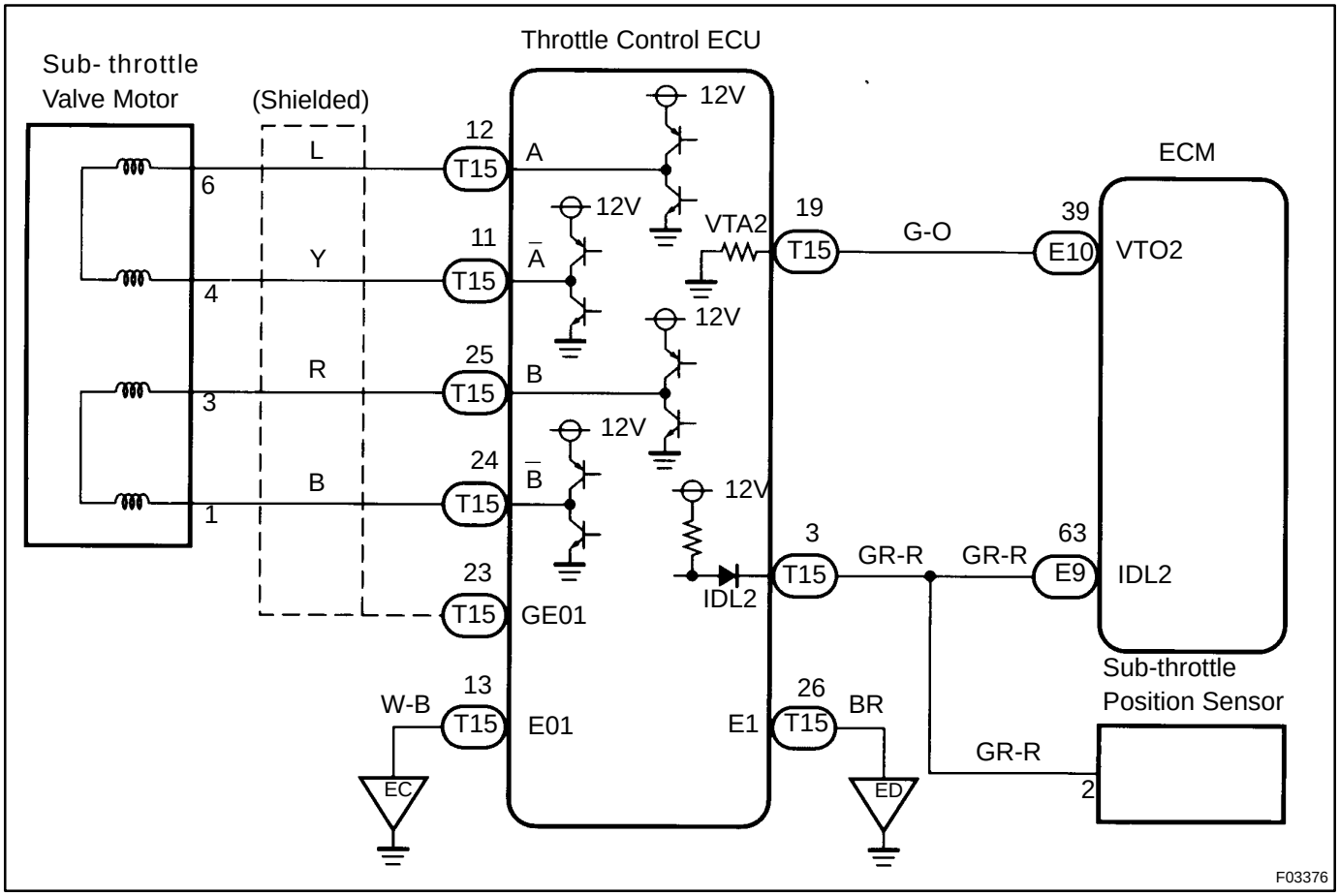

INSPECTION PROCEDURE

1	**Check sub-throttle valve motor.**

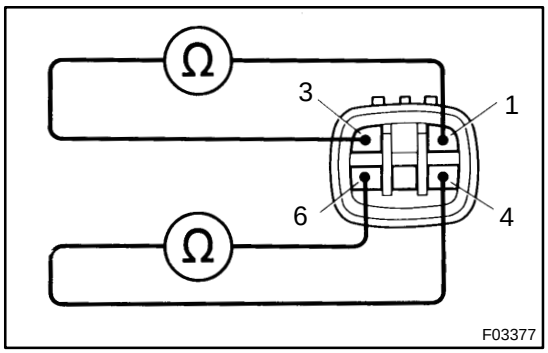

PREPARATION:

Disconnect sub-throttle valve motor connector.

CHECK:

Check continuity between each terminal of sub-throttle valve motor connector.

OK:

Terminals 1 and 3	Continuity (Reference value 0.40 - 0.48 Ω)
Terminals 4 and 6	

NG → **Replace sub-throttle valve motor.**

OK

2	**Check voltage between terminal IDL2 of throttle control ECU and body ground.**

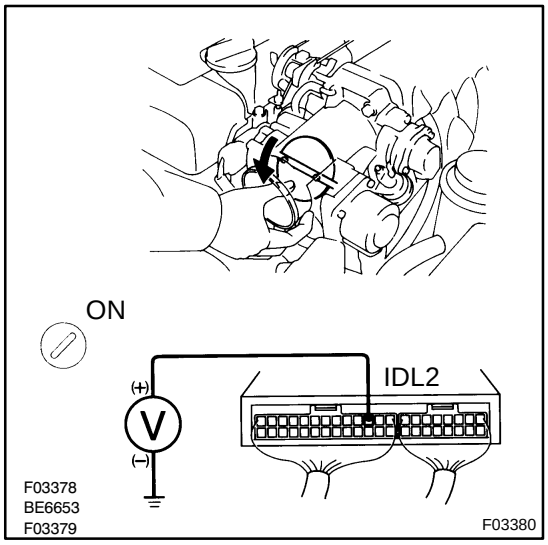

PREPARATION:

(a) Remove throttle control ECU with connectors still connected.
(b) Remove intake air duct.
(c) Disconnect sub-throttle valve motor connector.
(d) Turn ignition switch ON.

CHECK:

Measure voltage between terminal IDL2 of throttle control ECU and body ground, when the sub-throttle valve is fully closed and fully open.

OK:

Sub-throttle valve position	Voltage
Fully closed	0 - 3 V
Fully open	9 - 14 V

OK → **Go to step 4.**

NG

3	**Check for open and short in harness and connector between terminal IDL2 of throttle control ECU and sub-throttle position sensor (See page IN-28).**

NG → **Repair or replace harness or connector.**

OK

Check and replace throttle control ECU.

4	**Check sub-throttle position sensor (See page DI-243).**

NG → **Adjust or replace sub-throttle position sensor (See page SF-44).**

OK

5	**Check for open and short in harness and connector between terminals E01, E1 of throttle control ECU and body ground (See page IN-28).**

NG → **Repair or replace harness or connector.**

OK

Check and replace throttle control ECU.

DI4VY-01

DTC	23	Throttle Body Malfunction

CIRCUIT DESCRIPTION

DTC No.	DTC Detecting Condition	Trouble Area
23	In case the sub-throttle valve is fully open or full close angle become smaller.	□Sub-throttle valve □Sub-throttle position senor □Throttle control ECU

WIRING DIAGRAM

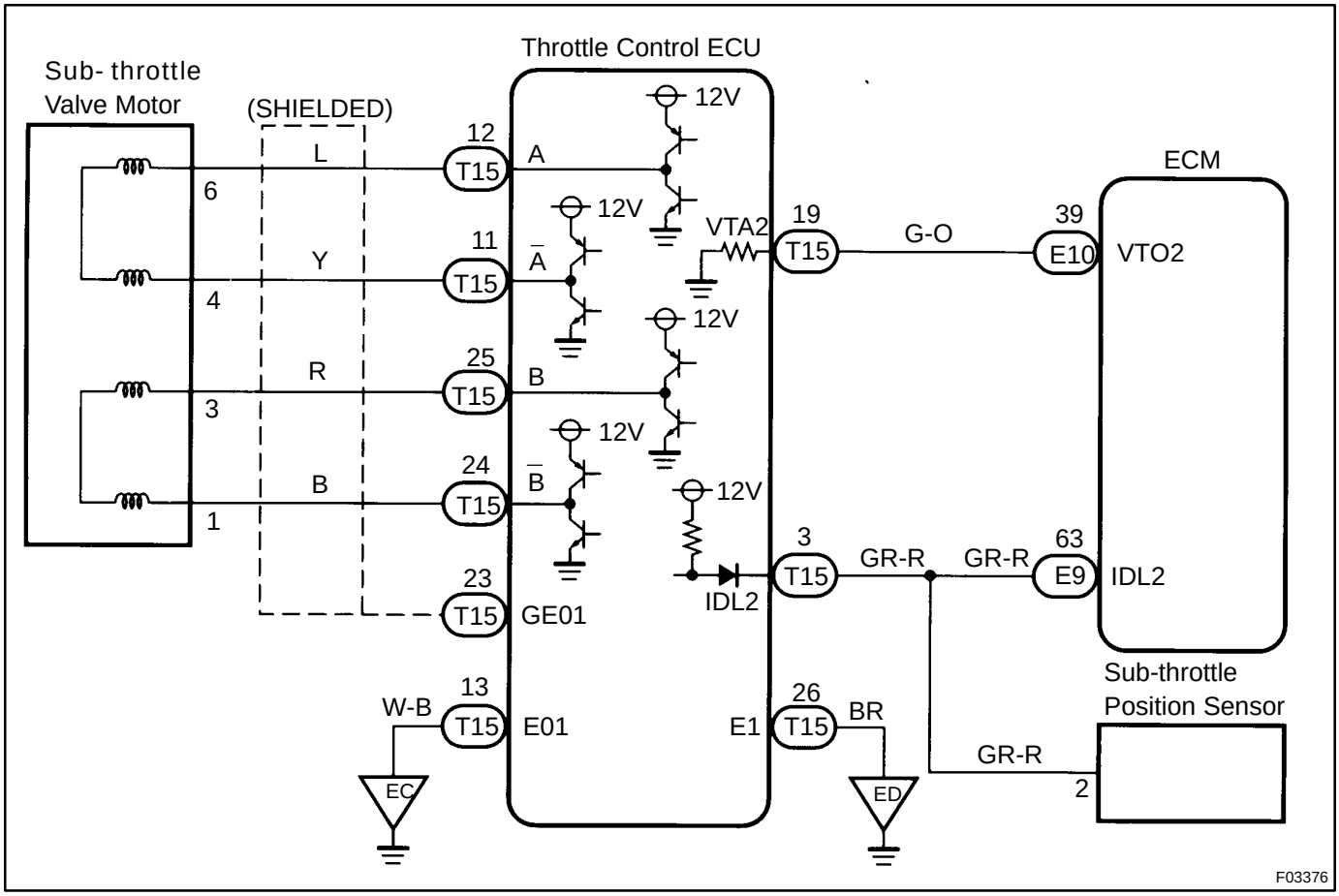

INSPECTION PROCEDURE

1	**Check voltage between terminal IDL2 of throttle control ECU and body ground.**

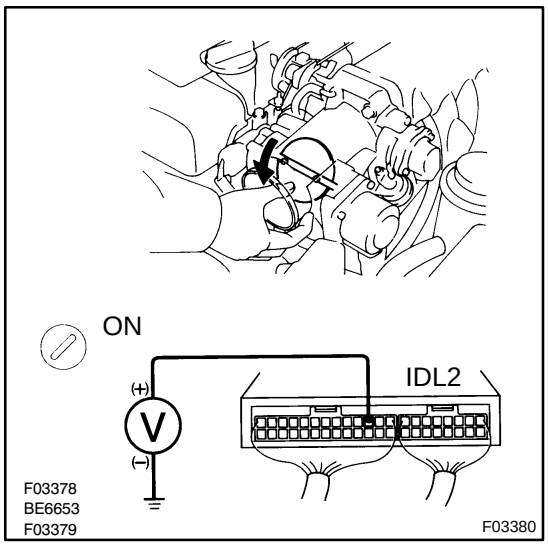

PREPARATION:

(a) Remove throttle control ECU with connectors still connected.
(b) Remove intake air duct.
(c) Disconnect sub-throttle valve motor connector.
(d) Turn ignition switch ON.

CHECK:

Measure voltage between terminal IDL2 of throttle control ECU and body ground, when the sub-throttle valve is fully closed and fully open.

OK:

Sub-throttle valve position	Voltage
Fully closed	0 - 3 V
Fully open	9 - 14 V

OK → **Go to step 3.**

NG

2	**Check for open and short in harness and connector between terminal IDL2 of throttle control ECU and sub-throttle position sensor (See page IN-28).**

NG → **Repair or replace harness or connector.**

OK

Check and replace throttle control ECU.

3	**Check sub-throttle position sensor (See page DI-243).**

NG → **Adjust or replace sub-throttle position sensor (See page SF-44).**

OK

Check and replace throttle control ECU.

DI4VZ-01

DTC	24	Sub-Throttle Position Sensor Leakage/ Sub-Throttle Valve Stuck

CIRCUIT DESCRIPTION

DTC No.	DTC Detecting Condition	Trouble Area
24	Instead of sub-throttle valve motor is driven fully open, voltage at VTA2 of ECU terminal does not output 3.2 V to 4.9 V or more.	□Sub-throttle valve □Sub-throttle position senor □Wire harness and connector (E1 circuit) □Throttle control ECU

WIRING DIAGRAM

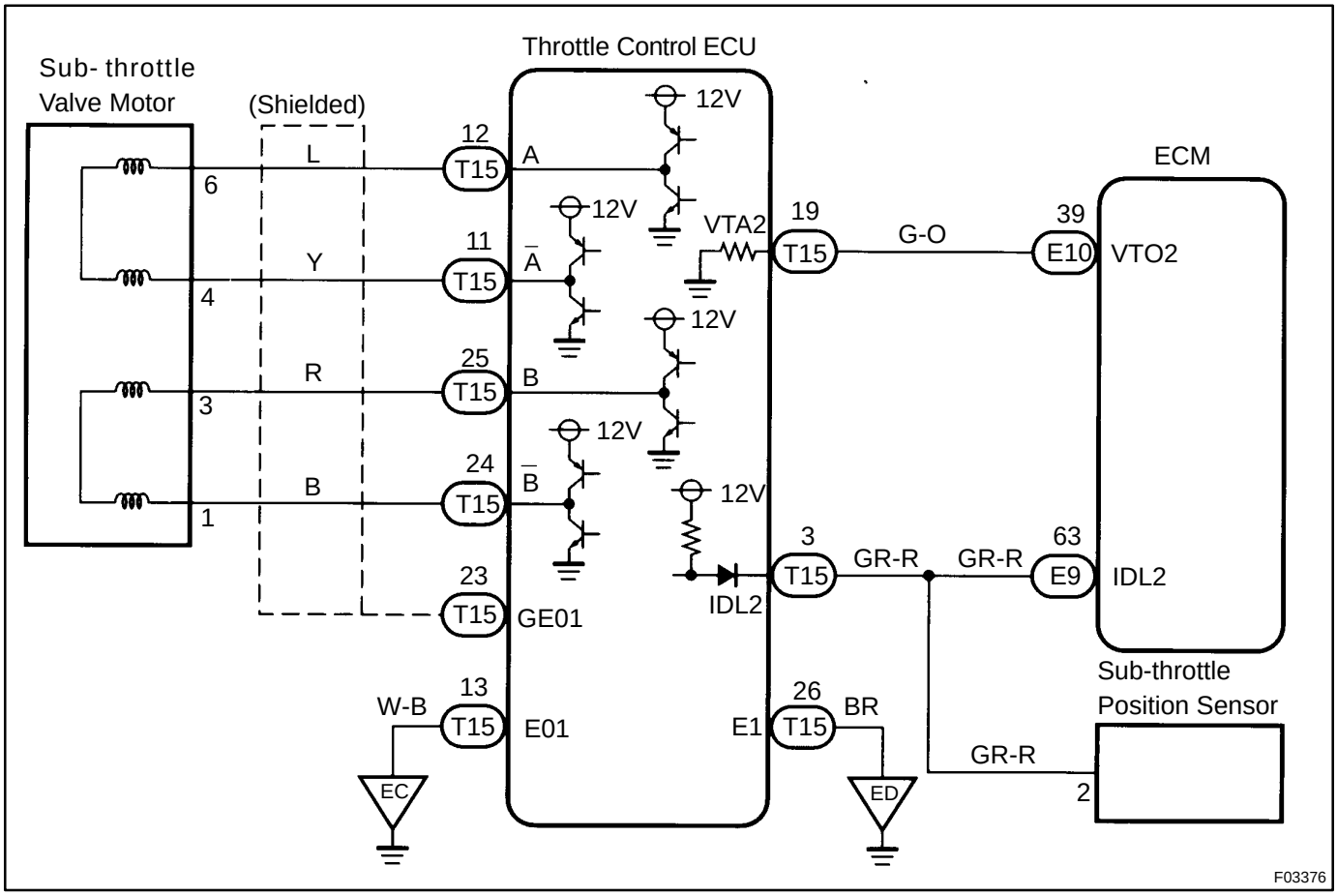

INSPECTION PROCEDURE

1	Check voltage between terminal VTA2 of throttle control ECU and body ground.

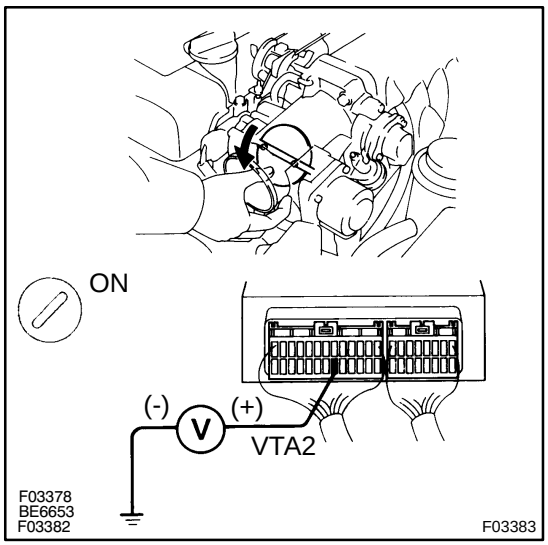

PREPARATION:

(a) Remove throttle control ECU with connectors still connected.
(b) Remove intake air duct.
(c) Disconnect sub-throttle valve motor connector.
(d) Turn ignition switch ON.

CHECK:

Measure voltage between terminal VTA2 of throttle control ECU and body ground, when the sub-throttle valve is fully closed and fully open.

OK:

Sub-throttle valve position	Voltage
Fully closed	0.3 - 0.8 V
Fully open	3.2 - 4.9 V

OK → **Go to step 3.**

NG

2	Check for open and short in harness and connector between terminal VTA2 of throttle control ECU and terminal VTO2 of ECM (See page IN-28).

NG → **Repair or replace harness or connector.**

OK

Check and replace throttle control ECU.

3	Check sub-throttle position sensor (See page DI-243).

NG → **Adjust or replace sub-throttle position sensor (See page SF-44).**

OK

4	**Check for open and short in harness and connector between terminal E1 of throttle control ECU and body ground (See page IN-28).**

NG → **Repair or replace harness or connector.**

OK

Check and replace throttle control ECU.

DI4W0-01

DTC	31	Throttle Position Sensor Circuit

CIRCUIT DESCRIPTION

This circuit is not directly related to the TRAC control, but as it has an influence on TRAC control when trouble occurs in this circuit, it is used to switch off the TRAC system as a fail safe function.

DTC No.	DTC Detecting Condition	Trouble Area
31	Throttle position sensor circuit is open circuit and E1 or +B circuit is short for 0.5 sec. or more.	□Throttle position senor □Wire harness and connector (throttle position sensor and E1 circuit) □Throttle control ECU

WIRING DIAGRAM

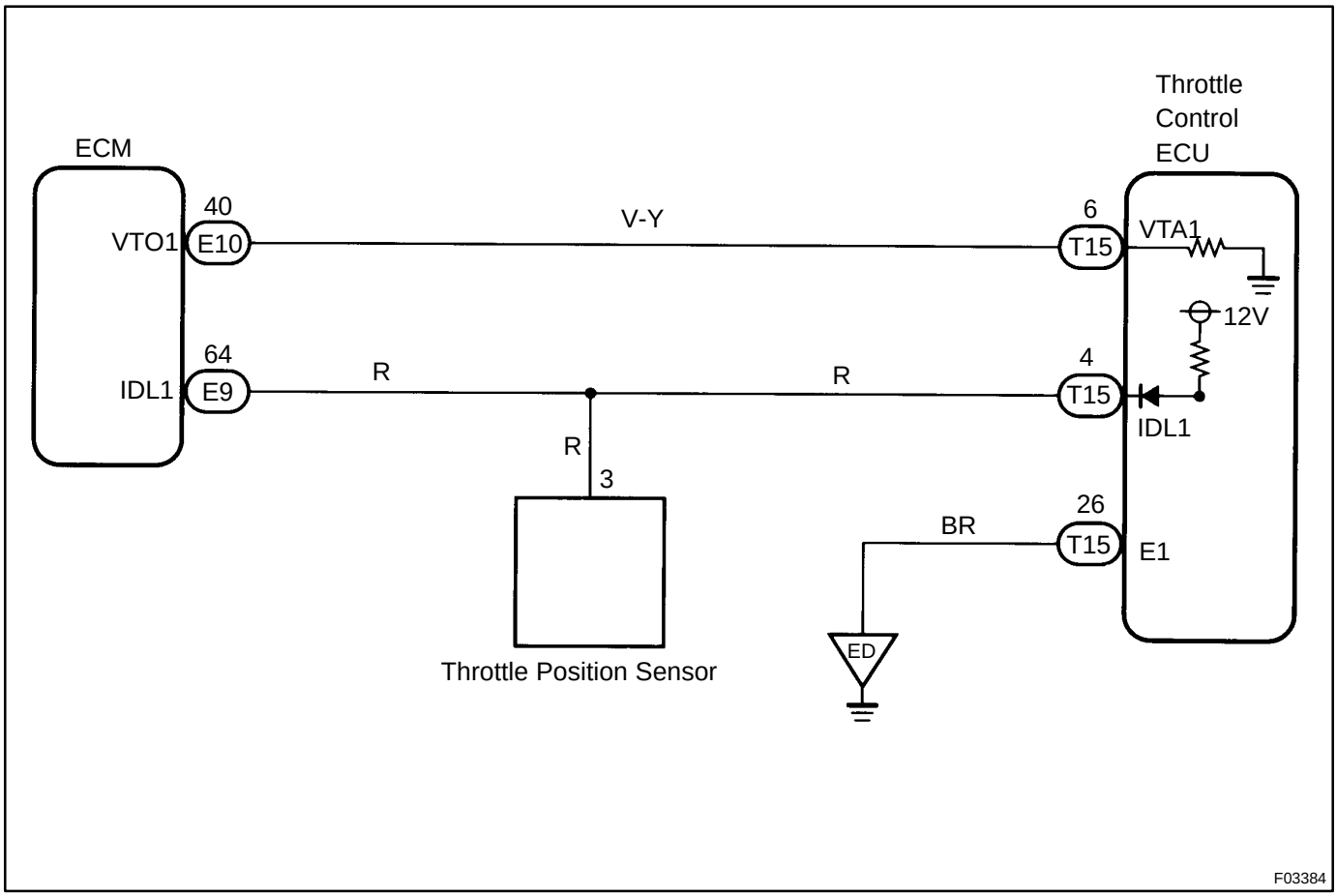

INSPECTION PROCEDURE

HINT:

The main throttle position sensor signal is transmitted to the throttle control ECU from ECM, so if an error occurs at the engine side, the throttle control ECU also detects it.

If DTC No. P0120 or P0121 is being output for the engine, troubleshoot the engine first.

1	**Is DTC output for the engine?**

Check DTC on page DI-147 .

YES → **Repair circuit indicated by the code output.**

NO

2	**Check voltage between terminal IDL1 of throttle control ECU and body ground.**

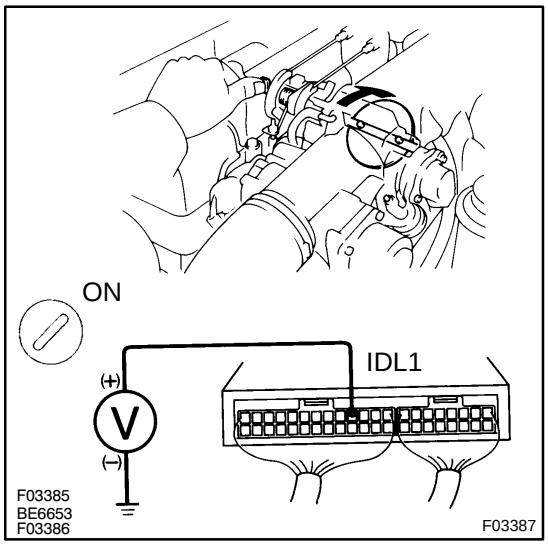

PREPARATION:

(a) Remove throttle control ECU with connectors still connected.

(b) Disconnect the vacuum hose from the throttle opener, and apply vacuum to the throttle opener.

(c) Turn ignition switch ON.

CHECK:

Measure voltage between terminal IDL1 of throttle control ECU and body ground, when the throttle valve is fully closed and fully open.

OK:

Throttle valve position	Voltage
Fully closed	0 - 3 V
Fully open	9 - 14 V

OK → **Go to step 4.**

NG

3	**Check for open and short in harness and connector between terminal IDL1 of throttle control ECU and throttle position sensor (See page IN-28).**

NG → **Repair or replace harness or connector.**

OK

Check and replace throttle control ECU.

4	**Check voltage between terminal VTA1 of throttle control ECU and body ground.**

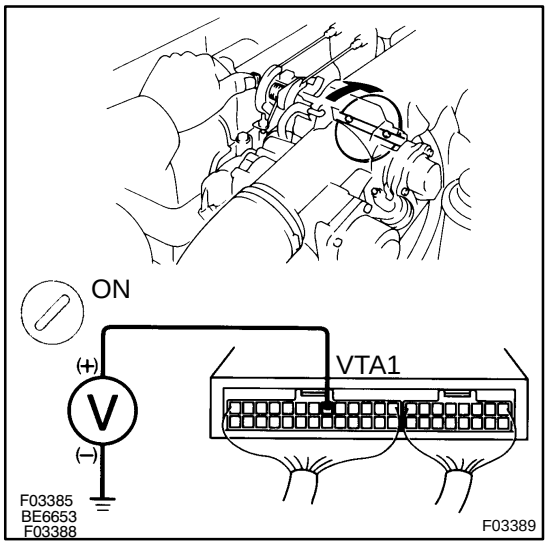

PREPARATION:

(a) Remove throttle control ECU with connectors still connected.

(b) Disconnect the vacuum hose from the throttle opener, and apply vacuum to the throttle opener.

(c) Turn ignition switch ON.

CHECK:

Measure voltage between terminal VTA1 of throttle control ECU and body ground, when the throttle valve is fully closed and fully open.

OK:

Throttle valve position	Voltage
Fully closed	0.3 - 0.8 V
Fully open	3.2 - 4.9 V

OK → **Go to step 6.**

NG

5	**Check for open and short in harness and connector between terminals VTA1 of throttle control ECU and VTO1 of ECM (See page IN-28).**

NG → **Repair or replace harness or connector.**

OK

Check and replace throttle control ECU.

6	**Check throttle position sensor (See page SF-44).**

NG → **Adjust or replace throttle position sensor (See page SF-44).**

OK

7	**Check for open and short in harness and connector between terminal E1 of throttle control ECU and body ground (See page IN-28).**

NG → **Repair or replace harness or connector.**

OK

Check and replace throttle control ECU.

DI4W1-01

DTC	32	Sub-Throttle Position Sensor Circuit

CIRCUIT DESCRIPTION

This sensor detects the opening angle of the sub-throttle valve and sends the appropriate signals to the ECU. If a trouble signal is input, the ECU prohibits TRAC control.

DTC No.	DTC Detecting Condition	Trouble Area
32	Conditions (1) and (2) continue for 0.5 sec. or more: (1) Sub-throttle position sensor circuit is open and E1 or +B circuit is short. (2) Instead of sub-throttle valve motor is driven fully close, IDL2 of sub-throttle position sensor will not come ON.	□Sub-throttle position senor □Sub-throttle valve motor □Sub-throttle valve □Wire harness and connector (sub-throttle position sensor and E1 circuit) □Throttle control ECU

WIRING DIAGRAM

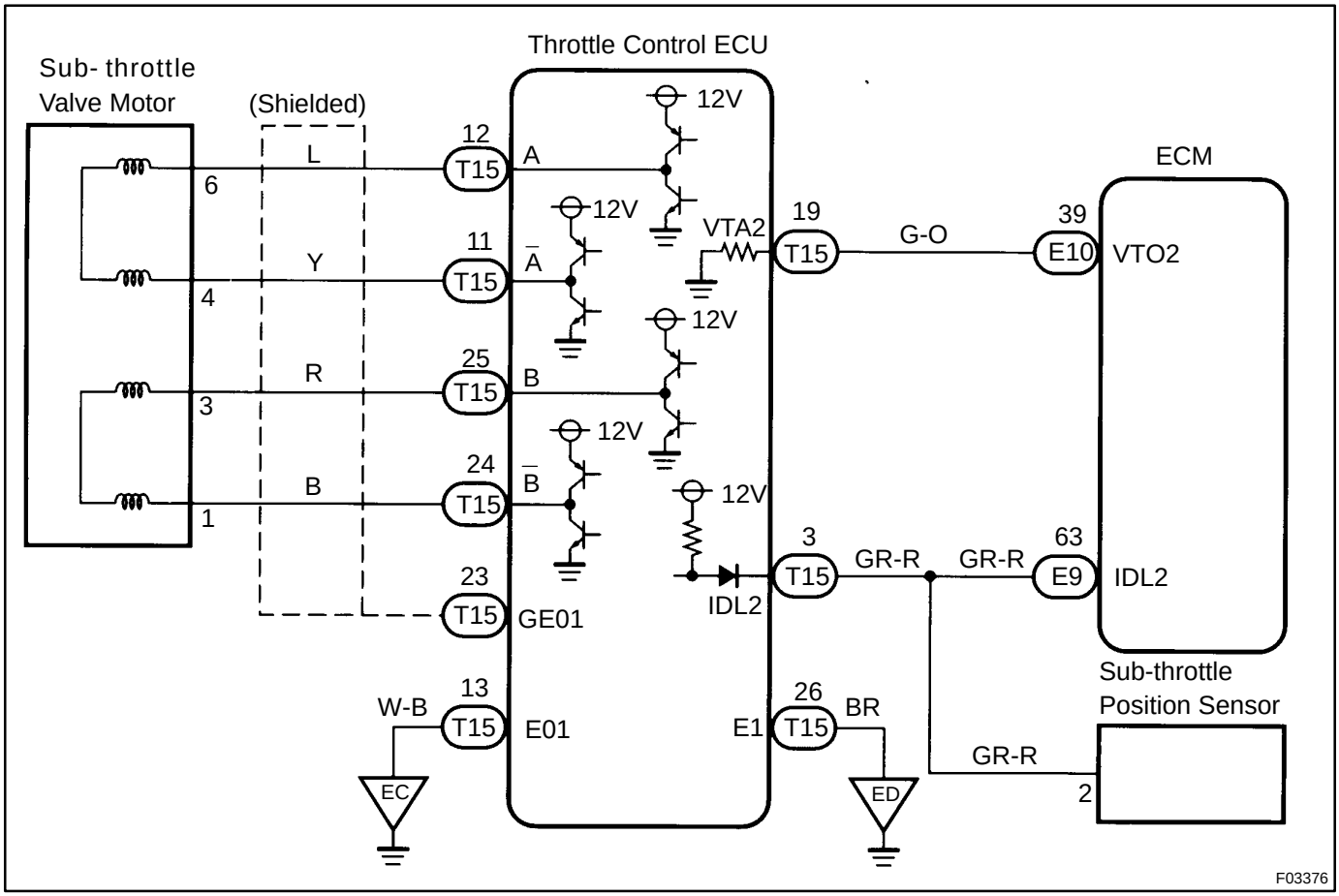

INSPECTION PROCEDURE

HINT:

The sub-throttle position sensor signal is transmitted to the throttle control ECU from ECM, so if an error occurs at the engine side, the throttle control ECU also detects it.

If DTC No. P1400 or P1401 is being output for the engine, troubleshoot the engine first.

1	**Is DTC output for the engine?**

Check DTC on page DI-147 .

YES → **Repair circuit indicated by the code output.**

NO

2	**Check voltage between terminal IDL2 of throttle control ECU and body ground.**

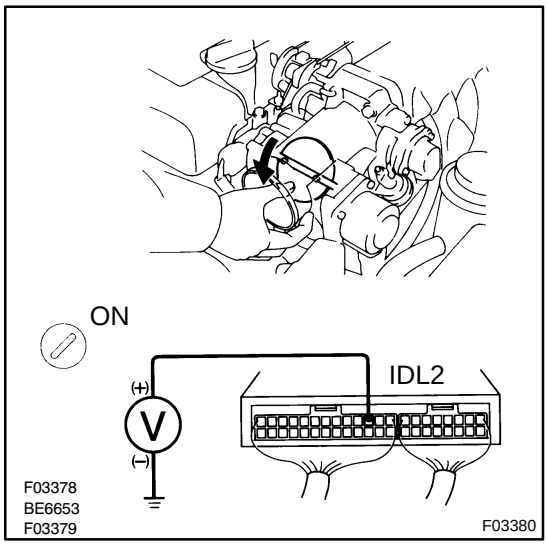

PREPARATION:

(a) Remove throttle control ECU with connectors still connected.

(b) Remove intake air duct.

(c) Disconnect sub-throttle valve motor connector.

(d) Turn ignition switch ON.

CHECK:

Measure voltage between terminal IDL2 of throttle control ECU and body ground, when the sub-throttle valve is fully closed and fully open.

OK:

Sub-throttle valve position	Voltage
Fully closed	0 - 3 V
Fully open	9 - 14 V

OK → **Go to step 4.**

NG

3	**Check for open and short in harness and connector between terminal IDL2 of throttle control ECU and sub-throttle position sensor (See page IN-28).**

NG → **Repair or replace harness or connector.**

OK

4	Check voltage between terminal VTA2 of throttle control ECU and body ground.

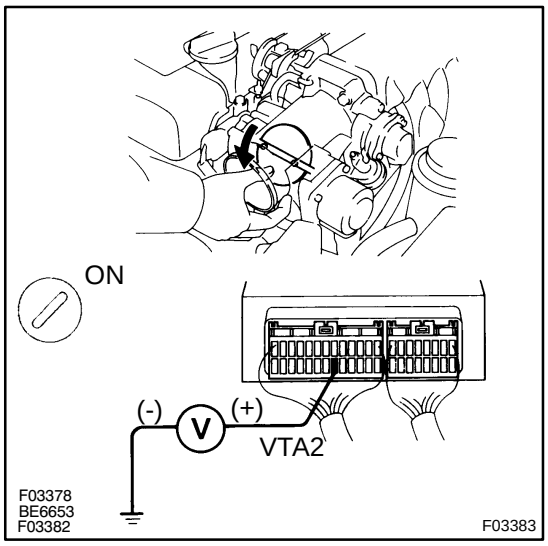

PREPARATION:

(a) Remove throttle control ECU with connectors still connected.
(b) Remove intake air duct.
(c) Disconnect sub-throttle valve motor connector.
(d) Turn ignition switch ON.

CHECK:

Measure voltage between terminal VTA2 of throttle control ECU and body ground, when the sub-throttle valve is fully closed and fully open.

OK:

Sub-throttle valve position	Voltage
Fully closed	0.3 - 0.8 V
Fully open	3.2 - 4.9 V

OK → **Go to step 6.**

NG

5	Check for open and short in harness and connector between terminals VTA2 of throttle control ECU and VTO2 of ECM (See page IN-28).

NG → **Repair or replace harness or connector.**

OK

Check and replace throttle control ECU.

6	Check sub-throttle position sensor (See page DI-243).

NG → **Adjust or replace sub-throttle position sensor (See page SF-44).**

OK

7	**Check sub-throttle valve motor.**

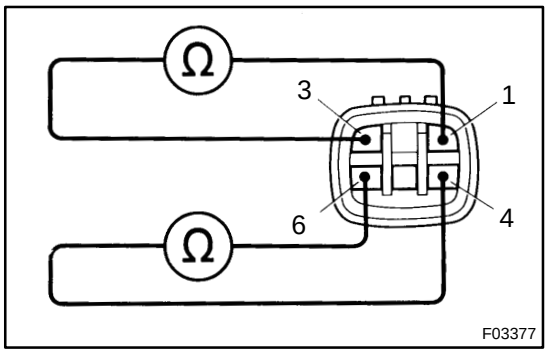

PREPARATION:

Disconnect sub-throttle valve motor connector.

CHECK:

Check continuity between each terminal of sub-throttle valve motor connector.

OK:

Terminals 1 and 3	Continuity (Reference value 0.40 - 0.48 Ω)
Terminls 4 and 6	

NG → **Replace sub-throttle valve motor.**

OK

8	**Check for open and short in harness and connector between terminal E1 of throttle control ECU and body ground (See page IN-28).**

NG → **Repair or replace harness or connector.**

OK

Check and replace throttle control ECU.

DI4W2-01

DTC	41	NE Signal Circuit

CIRCUIT DESCRIPTION

The throttle control ECU receives engine speed signals (NE signals) from the ECM.

DTC No.	DTC Detecting Condition	Trouble Area
41	While engine is running, throttle control ECU detected 0 rpm signal for 0.8 sec. or more.	□Wire harness and connector (NE circuit) □ECM □Throttle control ECU

WIRING DIAGRAM

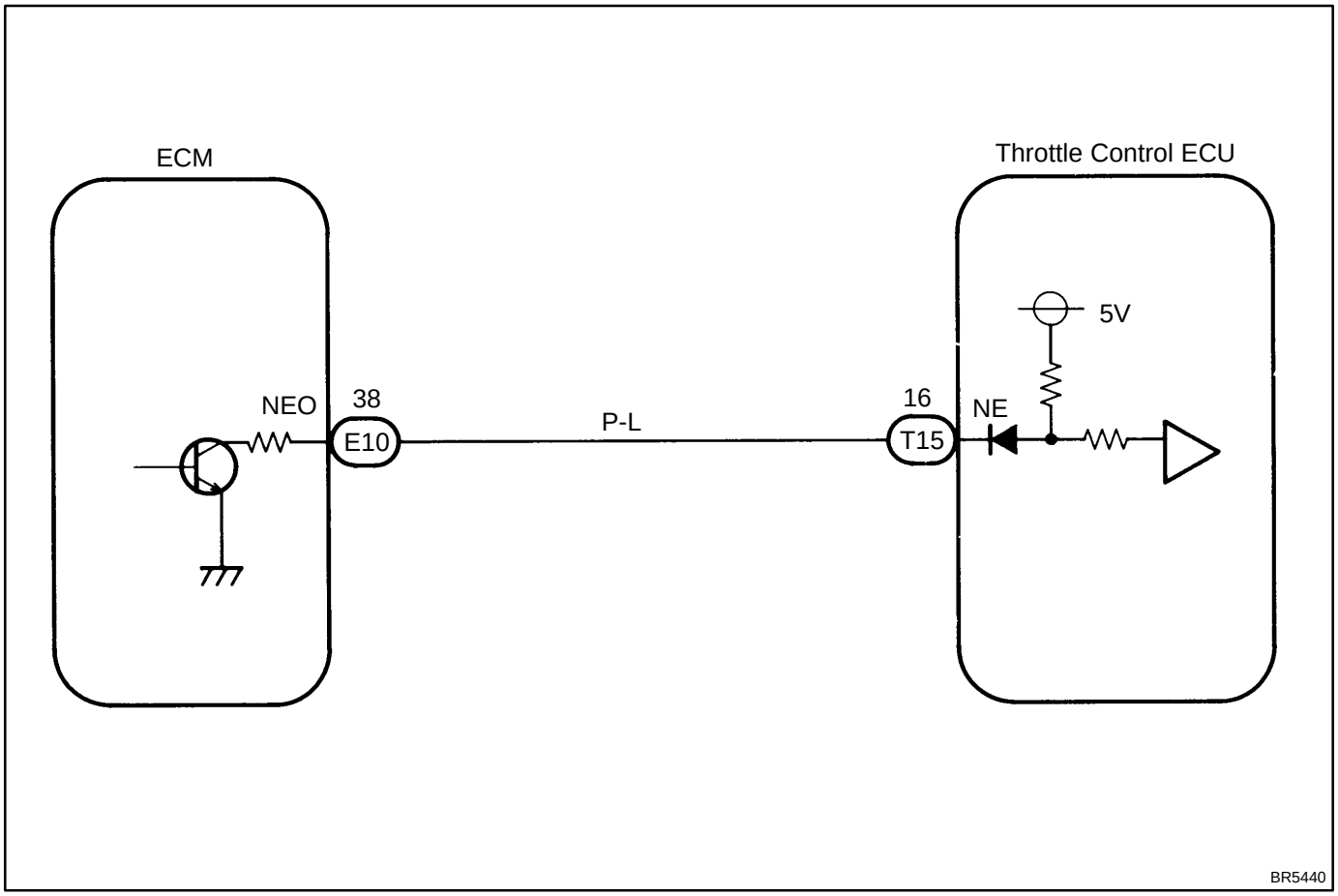

INSPECTION PROCEDURE

HINT:

If DTC No. P0335 is being output for the engine, troubleshoot the engine first.

1	**Check for open and short in harness and connector between terminal NE of throttle control ECU and terminal NEO of ECM (See page IN-28).**

NG → **Repair or replace harness or connector.**

OK

2	**Check voltage between terminal NE of throttle control ECU and body ground.**

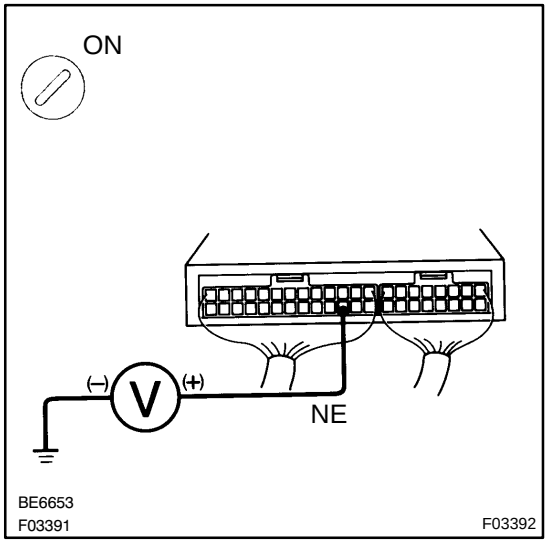

PREPARATION:

(a) Remove throttle control ECU with connectors still connected.

(b) Turn ignition switch ON.

CHECK:

Measure voltage between terminal NE of throttle control ECU and body ground for the engine conditions below.

OK:

Engine condition	Voltage
OFF (IG ON)	3 - 6 V or below 1 V
ON (Idling)	2 - 3 V (Pulse)

(Reference)

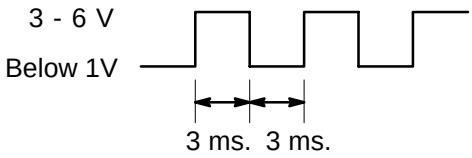

NG → **Check and replace ECM.**

OK

Check and replace throttle control ECU.

DI4W3-01

DTC	42	Engine Control System Malfunction

CIRCUIT DESCRIPTION

If trouble in the engine control system causes the malfunction indicator light to light up, this information is transmitted from the ECM to the throttle control ECU. Then throttle control ECU may prohibit TRAC control as a result.

DTC No.	DTC Detecting Condition	Trouble Area
42	ECM detected malfunction signal ON (output voltage at terminal EFIF is 4.5 V or more, or 5.5 V or less for 1 sec. or more).	□Wire harness and connector (EFIF circuit) □ECM □Throttle control ECU

WIRING DIAGRAM

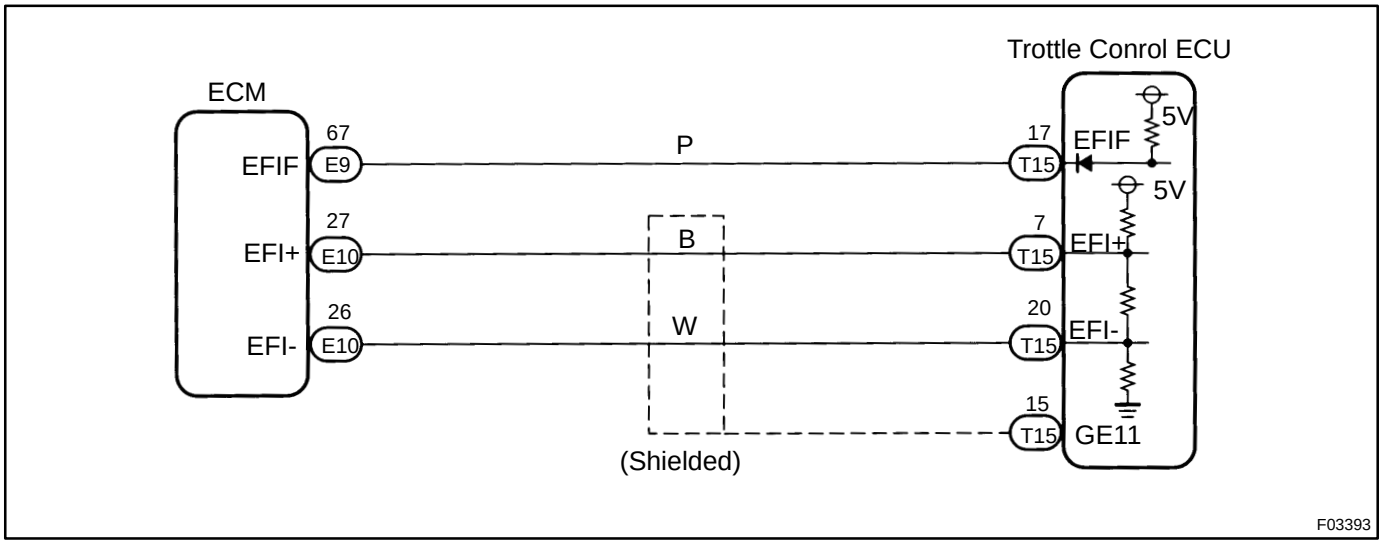

INSPECTION PROCEDURE

1	**Check the DTC for the engine (See page DI-147).**

*1 → **Repair engine control system according to the code output.**

*2

*1: Output NG code
*2: Malfunction indicator light remains ON

2	**Check for open and short in harness and connector between terminal EFIF of throttle control ECU and terminal EFIF of ECM (See page IN-28).**

NG → **Repair or replace harness or connector.**

OK

Check and replace throttle control ECU.

DI4W4-01

DTC	43	ECM Communication Circuit Malfunction

CIRCUIT DESCRIPTION

DTC No.	DTC Detecting Condition	Trouble Area
43	ECM normal communication data is not received for 5 sec. or more.	□Wire harness and connector (EFI+ and EFI- circuit) □ECM □Throttle control ECU

WIRING DIAGRAM

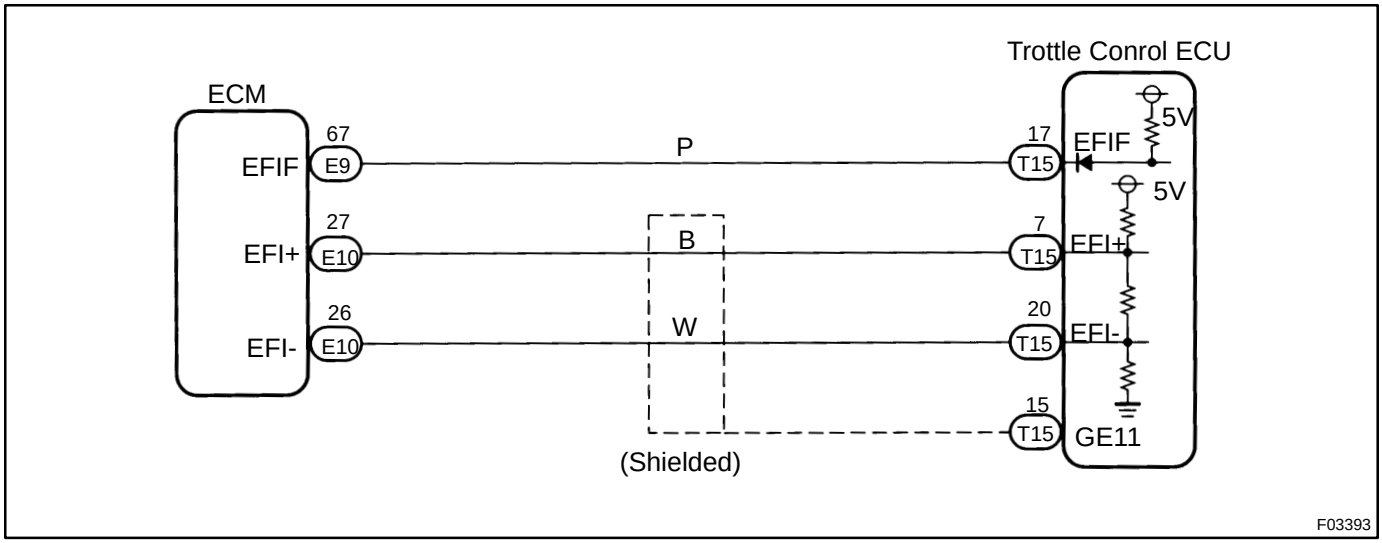

INSPECTION PROCEDURE

1	**Check for open and short in harness and connector between terminals EFI+ and EFI- of throttle control ECU and ECM (See page IN-28).**

NG → **Repair or replace harness or connector.**

OK

Check and replace ECM or throttle control ECU.

DI4W5-01

DTC	51, 52	Power Source Circuit

CIRCUIT DESCRIPTION

DTC No.	DTC Detecting Condition	Trouble Area
51	In case power source voltage comes down, sub-throttle valve angle difference occurs.	□Wire harness and connector (+B and E01 circuit) □Throttle control ECU
52	Engine speed is 500 rpm or more and throttle relay is ON and ECU terminal +B voltage is less than 8 V for 10 sec. or more.	□Battery □IC regulator □Wire harness and connector (+B and E01 circuit) □Throttle control ECU

WIRING DIAGRAM

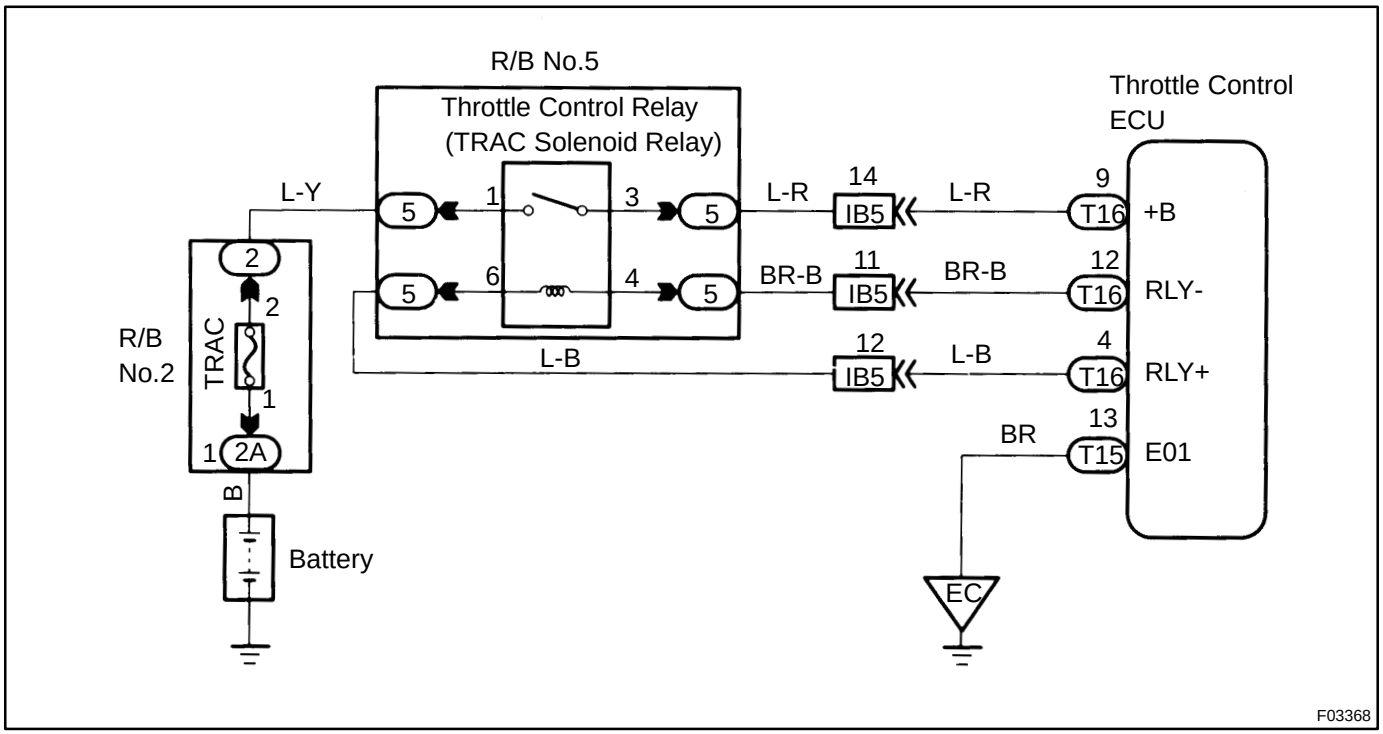

INSPECTION PROCEDURE

1	Check battery positive voltage.

OK:

Voltage: 10 - 14 V

NG → **Check and repair the charging system.**

OK

2	**Check for open and short in harness and connector between terminal +B of throttle control ECU and throttle control relay (See page IN-28).**

NG → **Repair or replace harness or connector.**

OK

3	**Check voltage between terminals +B and E01 of throttle control ECU connector.**

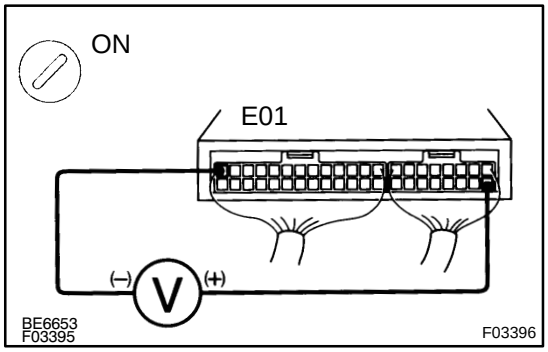

PREPARATION:

(a) Remove throttle control ECU with connectors still connected.

(b) Turn ignition switch ON.

CHECK:

Measure voltage between terminals +B and E01 of throttle control ECU connector.

OK:

Voltage: 9 - 14 V

OK → **Check and replace throttle control ECU.**

NG

4	**Check continuity between terminal E01 of throttle control ECU connector and body ground.**

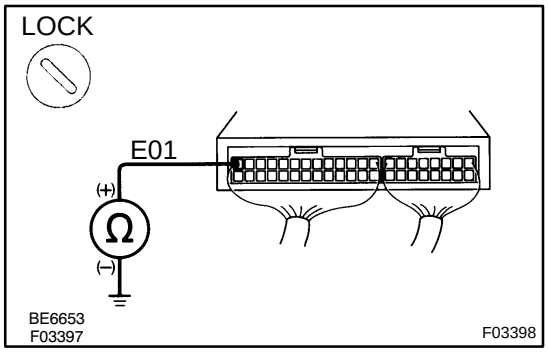

CHECK:

Measure resistance between terminal E01 of throttle control ECU connector and body ground.

OK:

Resistance: 1 Ω or less

NG → **Repair or replace harness or connector.**

OK

Check for open in harness and connector between throttle control ECU and battery (See page IN-28).

DI4W6-01

DTC	61, 62, 63, 64	Speed Sensor Circuit

CIRCUIT DESCRIPTION

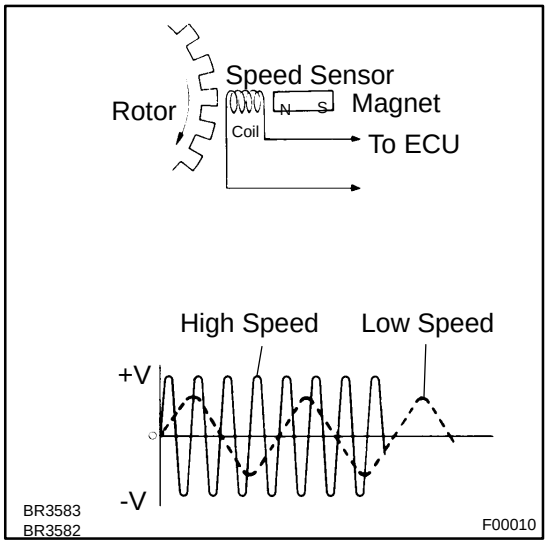

The speed sensor detects the wheel speed and sends the appropriate signals to the ECU. These signals are used to control both the ABS and TRAC control systems. The front and rear rotors each have 48 serrations.
When the rotors rotate, the magnetic field emitted by the permanent magnet in the speed sensor generates an AC voltage. Since the frequency of this AC voltage changes in direct proportion to the speed of the rotor, the frequency is used by the ECU to detect the speed of each wheel.

DTC No.	DTC Detecting Condition	Trouble Area
61,62,63,64	When the brake switch is OFF, one of the symmetrical wheels' speed becomes one eight or less of the slowest speed of other 3 wheels continuously for 10 sec. or more.	□Right front, left front, right rear and left rear speed sensor □Wire harness and connector (FRO, FLO, RRO and RLO circuit) □Throttle control ECU

HINT:
DTC No.61 is for the right front speed sensor.
DTC No.62 is for the left front speed sensor.
DTC No.63 is for the right rear speed sensor.
DTC No.64 is for the left rear speed sensor.

WIRING DIAGRAM

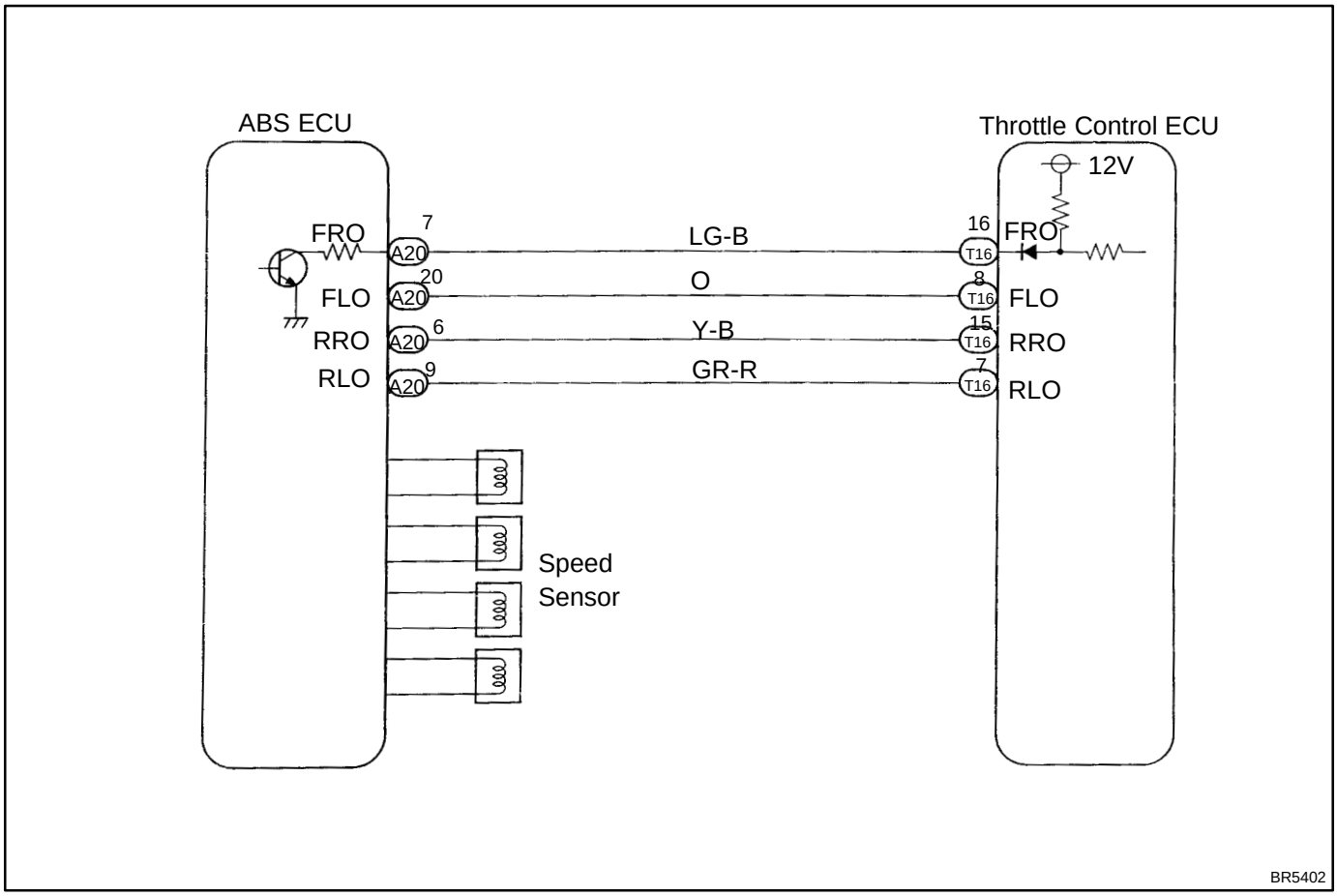

INSPECTION PROCEDURE

HINT:

If the DTC is output from the ABS warning light, troubleshoot the ABS first.

1	**Check for open and short in harness and connector between terminals FRO, FLO, RRO, RLO of ABS ECU and throttle control ECU (See page IN-28).**

NG → **Repair or replace harness or connector.**

OK

2	Check speed sensor.

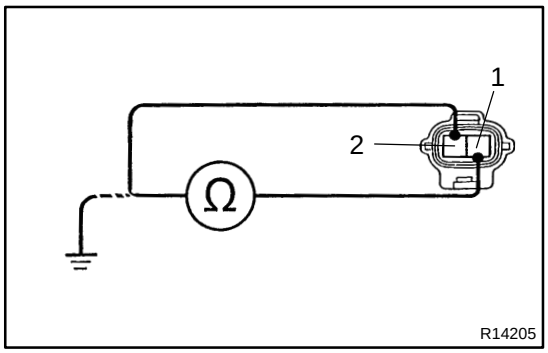

Front

PREPARATION:

(a) Remove front fender splash shield.

(b) Disconnect speed sensor connector.

CHECK:

Measure resistance between terminals 1 and 2 of speed sensor connector.

OK:

Resistance: 0.6 - 2.5 kΩ

CHECK:

Measure resistance between terminals 1 and 2 of speed sensor connector and body ground.

OK:

Resistance: 1 MΩ or higher

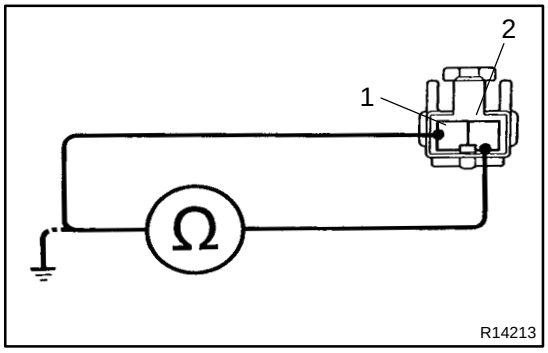

Rear

PREPARATION:

(a) Remove rear seat cushion, seat back and quarter trim panel.

(b) Disconnect speed sensor connector.

CHECK:

Measure resistance between terminals 1 and 2 of speed sensor connector.

OK:

Resistance: 0.65 - 1.8 kΩ

CHECK:

Measure resistance between terminals 1 and 2 of speed sensor connector and body ground.

OK:

Resistance: 1 MΩ or higher

NG → **Replace speed sensor.**

NOTICE:

Check the speed sensor signal last (See page DI-501).

OK

3	Check for open and short in harness and connector between each speed sensor and ABS ECU (See page IN-28).

NG → **Repair or replace harness or connector.**

OK

4	**Check for open and short in harness and connector between terminals FRO, FLO, RRO, RLO of throttle control ECU and ABS ECU (See page IN-28).**

NG → **Repair or replace harness or connector.**

OK

Check and replace throttle control ECU.

DI4W7-01

DTC	71, 72	Emergency Fuel Cut

CIRCUIT DESCRIPTION

DTC No.	DTC Detecting Condition	Trouble Area
71	Vehicle stability control required signal is received 2 times continuously from ECM and throttle control ECU is detected the motor system malfunction. The 2nd vehicle stability required signal is received more or less than 0.5 sec.	□Sub-throttle valve motor □Sub-throttle valve □Throttle control ECU
72	Vehicle stability control required signal is received 2 times continuously from ECM.	

WIRING DIAGRAM

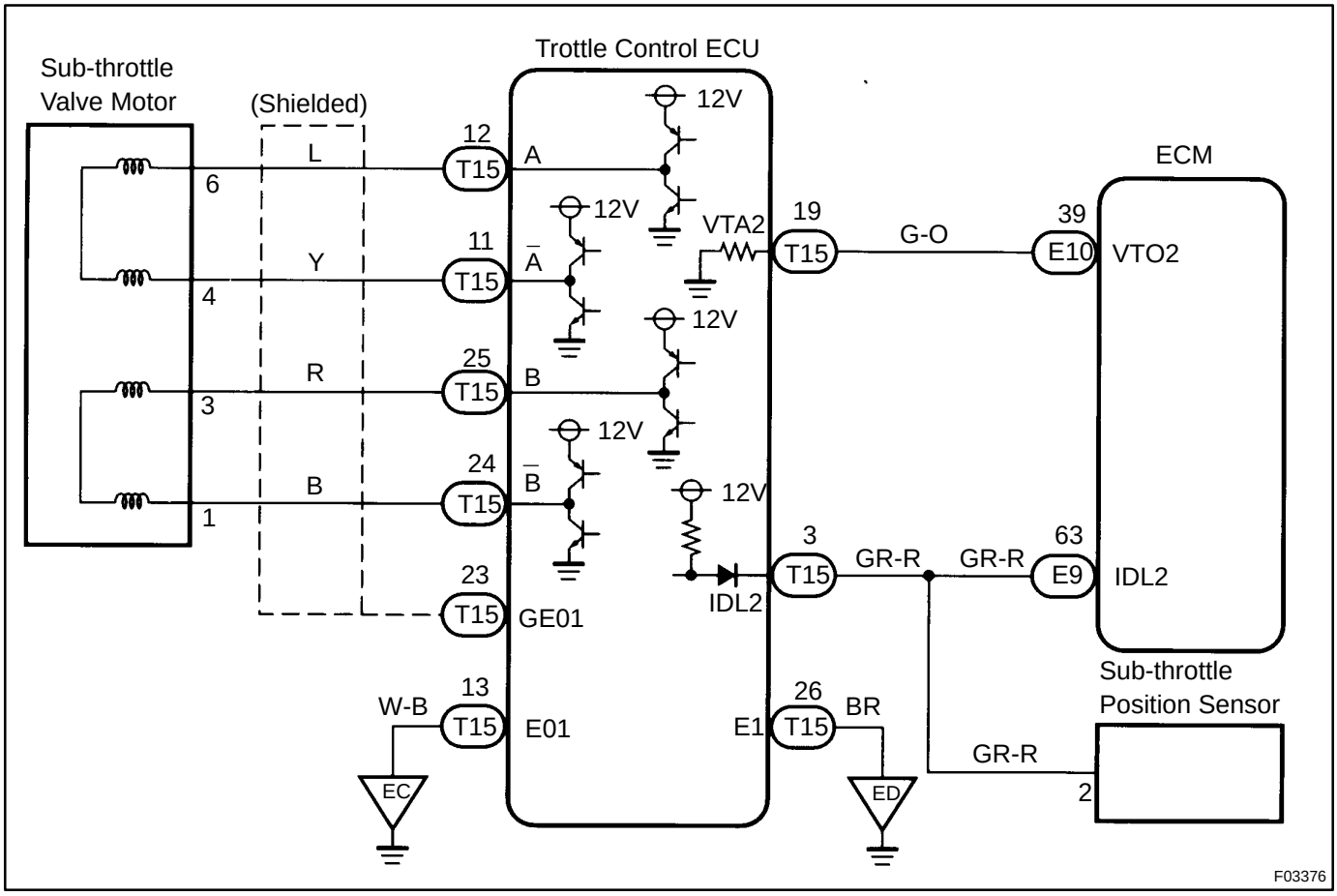

INSPECTION PROCEDURE

1	Check sub-throttle valve motor.

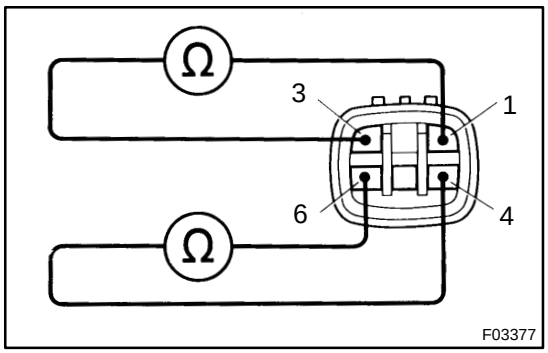

PREPARATION:

Disconnect sub-throttle valve motor connector.

CHECK:

Check continuity between each terminal of sub-throttle valve motor connector.

OK:

Terminals 1 and 3	Continuity (Reference value 0.40 - 0.48 Ω)
Terminal 4 and 6	

NG → **Replace sub-throttle valve motor.**

OK

2	Check voltage between terminal IDL2 of throttle control ECU and body ground.

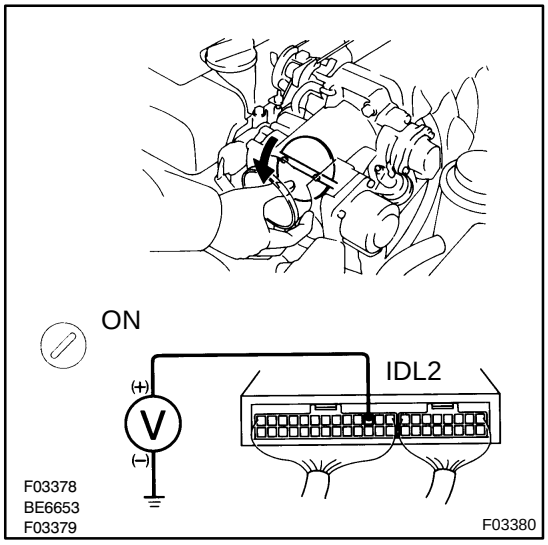

PREPARATION:

(a) Remove throttle control ECU with connectors still connected.
(b) Remove intake air duct.
(c) Disconnect sub-throttle valve motor connector.
(d) Turn ignition switch ON.

CHECK:

Measure voltage between terminal IDL2 of throttle control ECU and body ground, when the sub-throttle valve is fully closed and fully open.

OK:

Sub-throttle valve position	Voltage
Fully closed	0 - 3 V
Fully open	9 - 14 V

OK → **Go to step 4.**

NG

3	Check for open and short in harness and connector between terminal IDL2 of throttle control ECU and sub-throttle osition sensor (See page IN-28).

NG → Repair or replace harness or connector.

OK

Check and replace throttle control ECU.

4	Check sub-throttle position sensor (See page DI-243).

NG → Adjust or replace sub-throttle position sensor (See page SF-44).

OK

5	Check for open and short in harness and connector between terminal E01, E1 of throttle control ECU and body ground (See page IN-28).

NG → Repair or replace harness or connector.

OK

Check and replace throttle control ECU.

DI4W8-01

DTC	81	ABS Control System Malfunction

CIRCUIT DESCRIPTION

DTC No.	DTC Detecting Condition	Trouble Area
81	Engine speed is 500 rpm or more and ABS warning light is ON for 12 sec. or more.	□Wire harness and connector (WA circuit) □ABS ECU □Throttle control ECU

WIRING DIAGRAM

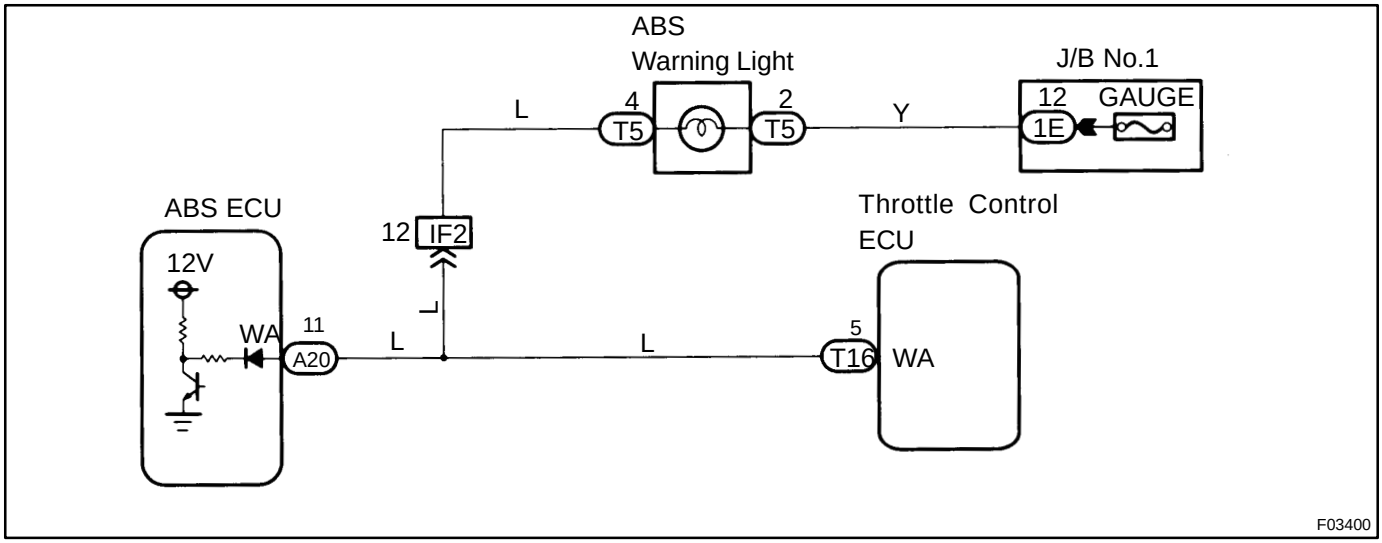

INSPECTION PROCEDURE

1	**Check the DTC for the ABS (See page DI-501).**

*1 **Repair ABS control system according to the code output.**

*2

*1: Output NG code
*2: Malfunction indicator light remains ON

2	**Check voltage between terminal WA of throttle control ECU and body ground (See page IN-28).**

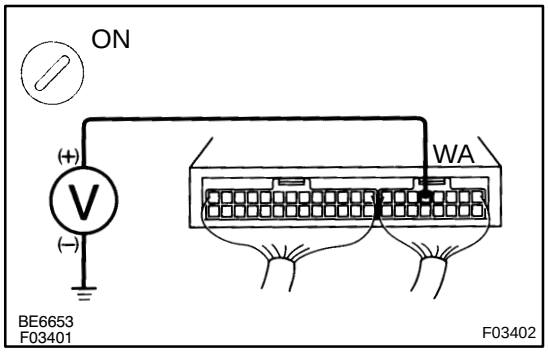

PREPARATION:

Remove throttle control ECU with connectors still connected.

CHECK:

Measure voltage between terminal WA of throttle control ECU and body ground.

OK:

Voltage: 9 - 14 V

NG → **Check and replace ABS ECU.**

OK

3	**Check for short in harness and connector between terminal WA of ABS ECU and throttle control ECU (See page IN-28).**

NG → **Repair or replace harness or connector.**

OK

Check and replace throttle control ECU.

DI4W9-01

TRAC OFF Indicator Light, TRAC OFF Switch Circuit

CIRCUIT DESCRIPTION

This is the TRAC control main switch. When the TRAC OFF switch is pushed on, TRAC control goes off and the TRAC OFF indicator lights up. This indicator blinks for warnings when the trouble occurs and for displaying DTC.

WIRING DIAGRAM

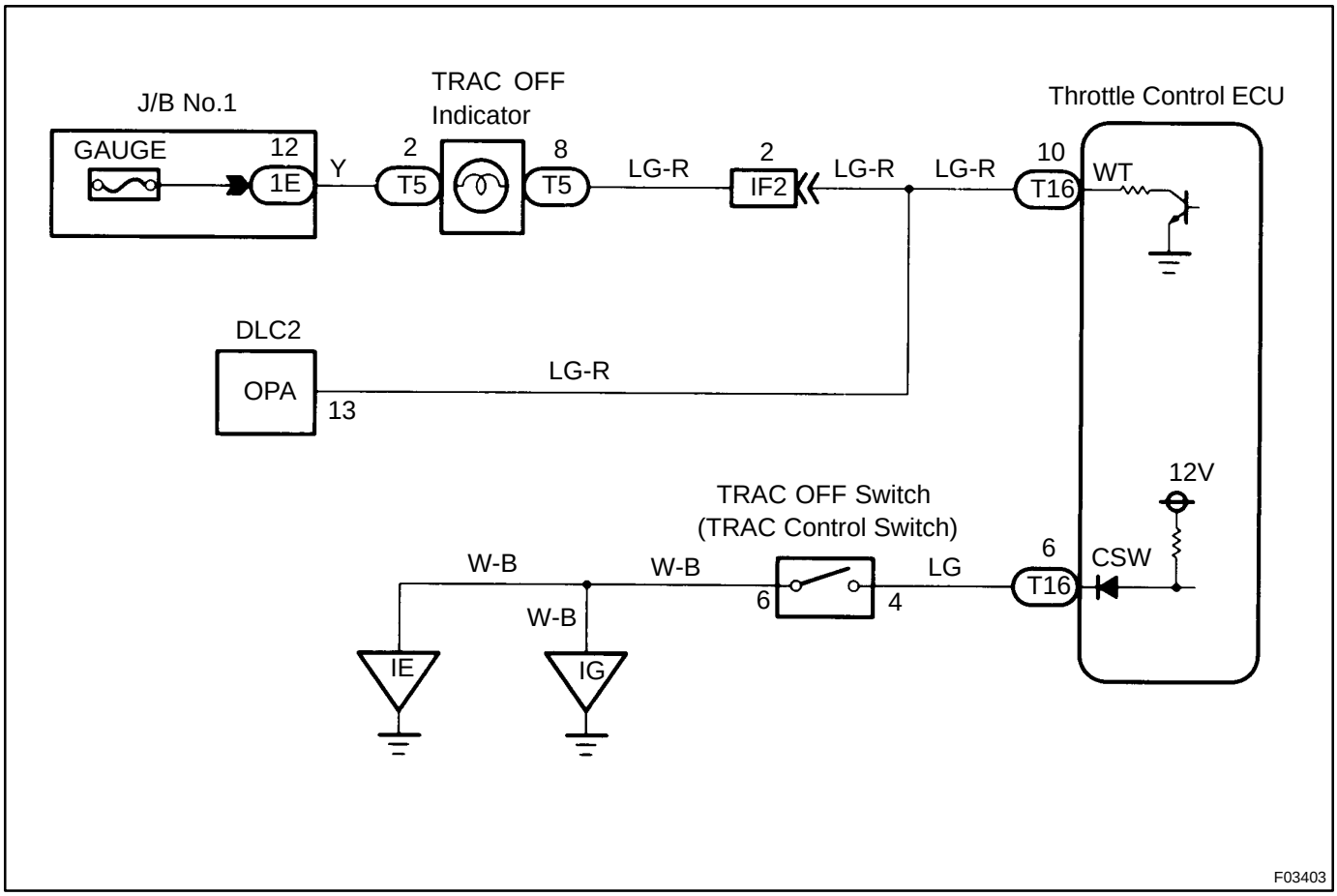

INSPECTION PROCEDURE

1	**Check DTC.**

Check DTC on page DI-501 .

YES → **Repair circuit indicated by the code output.**

NO

2	**Check TRAC OFF switch.**

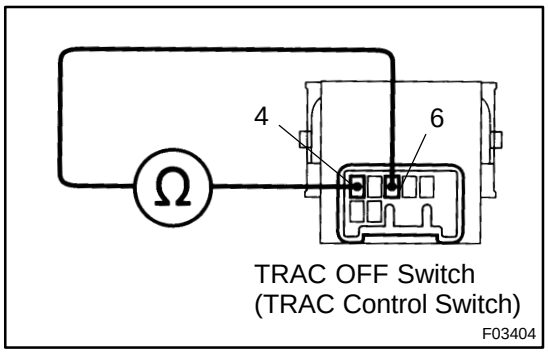

PREPARATION:

(a) Remove TRAC OFF switch (TRAC control switch).

(b) Disconnect TRAC control switch connector.

CHECK:

Measure resistance between terminals 4 and 6 of TRAC control switch when TRAC OFF switch is on and off.

OK:

TRAC OFF switch	Resistance
Pushed in	Continuity
Released	1 MΩ or higher

NG → **Replace TRAC control switch.**

OK

3	**Check for open and short in harness and connector between terminal CSW of throttle control ECU and TRAC control switch and body ground (See page IN-28).**

NG → **Repair or replace harness or connector.**

OK

4	**Check TRAC OFF indicator light.**

See combination meter troubleshooting on page BE-2 .

NG → **Repair or replace combination meter.**

OK

5	**Check for open and short in harness and connector between terminal WT of throttle control ECU and TRAC OFF indicator light (See page IN-28).**

NG → **Repair or replace harness or connector.**

OK

Check and replace throttle control ECU.

DI4WA-01

SLIP Indicator Light Circuit

CIRCUIT DESCRIPTION

The SLIP indicator blinks during TRAC operation.

WIRING DIAGRAM

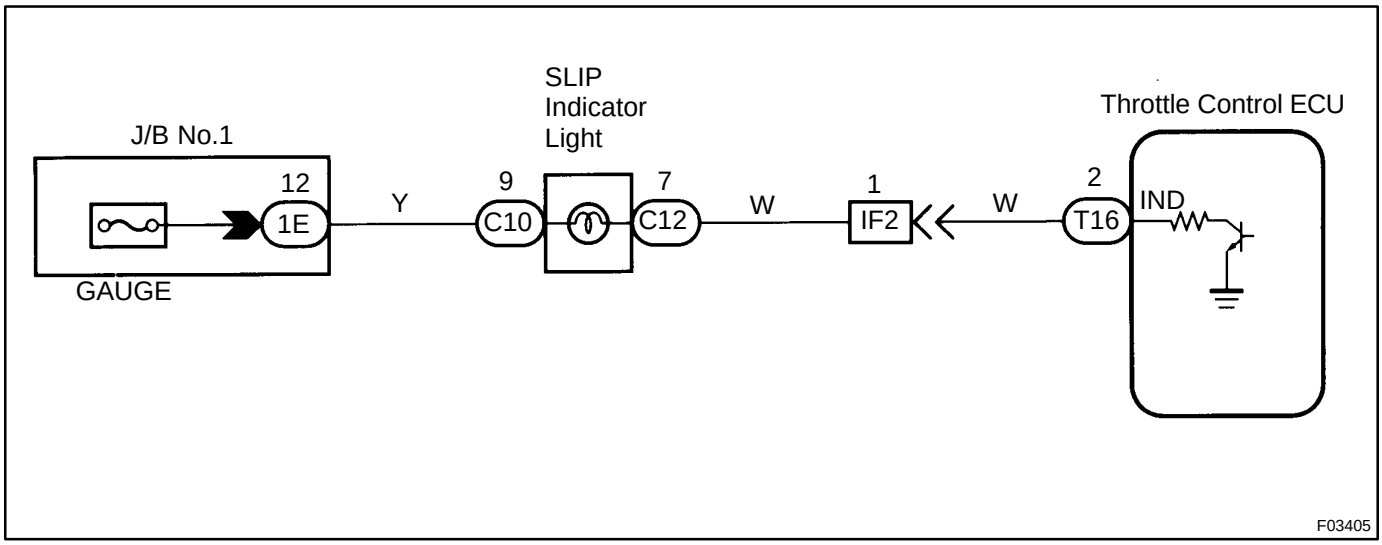

INSPECTION PROCEDURE

1	**Check SLIP indicator light.**

See combination meter troubleshooting on page BE-2 .

NG → **Repair or replace combination meter.**

OK

2	**Check for short in harness and connector between throttle control ECU and SLIP indicator light (See page IN-28).**

NG → **Repair or replace harness or connector.**

OK

Check and replace throttle control ECU.

DI4WB-01

SNOW Indicator Light, SNOW Mode Switch Circuit

CIRCUIT DESCRIPTION

When you push the SNOW mode switch, TRAC control becomes SNOW mode operation and the SNOW indicator light on, and when you push the TRAC OFF switch, TRAC control will be released to normal mode operation and the SNOW indicator light goes off.

WIRING DIAGRAM

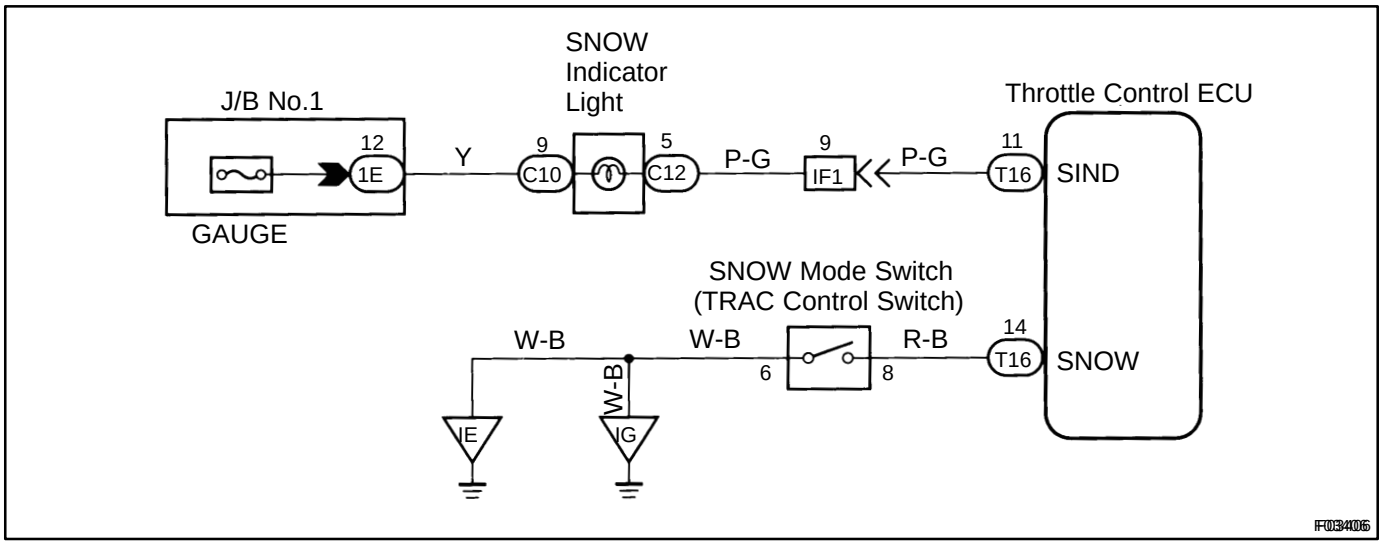

INSPECTION PROCEDURE

1	**Check SNOW mode switch.**

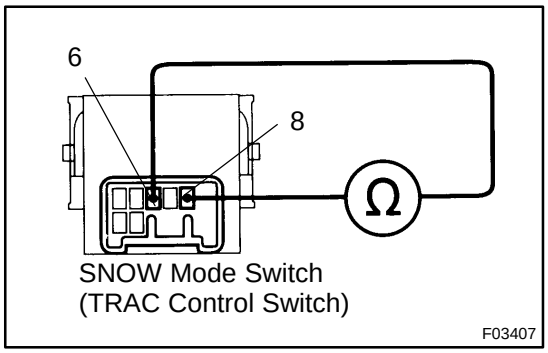

PREPARATION:

(a) Remove SNOW mode switch (TRAC control switch).

(b) Disconnect TRAC control switch connector.

CHECK:

Measure resistance between terminals 6 and 8 of TRAC control switch when SNOW mode switch on and off.

OK:

TRAC control switch	Resistance
SNOW mode switch pushed in	Continuity
TRAC OFF switch pushed in	1 MΩ or higher

NG → **Replace TRAC control switch.**

OK

2	**Check for open and short in harness and connector between SNSW of throttle control ECU and TRAC control switch and body ground (See page IN-28).**

NG → **Repair or replace harness or connector.**

OK

3	**Check SNOW indicator light.**

See combination meter troubleshooting on page BE-2 .

NG → **Repair or replace combination meter.**

OK

4	**Check for short in harness and connector between throttle control ECU and SNOW indicator light (See page IN-28).**

NG → **Repair or replace harness or connector.**

OK

Check and replace throttle control ECU.

DI4WC-01

Tc Terminal Circuit

CIRCUIT DESCRIPTION

By connecting terminals Tc and E1 of DLC1 or DLC2, the ECU displays the DTC by blinking the TRAC OFF indicator light.

WIRING DIAGRAM

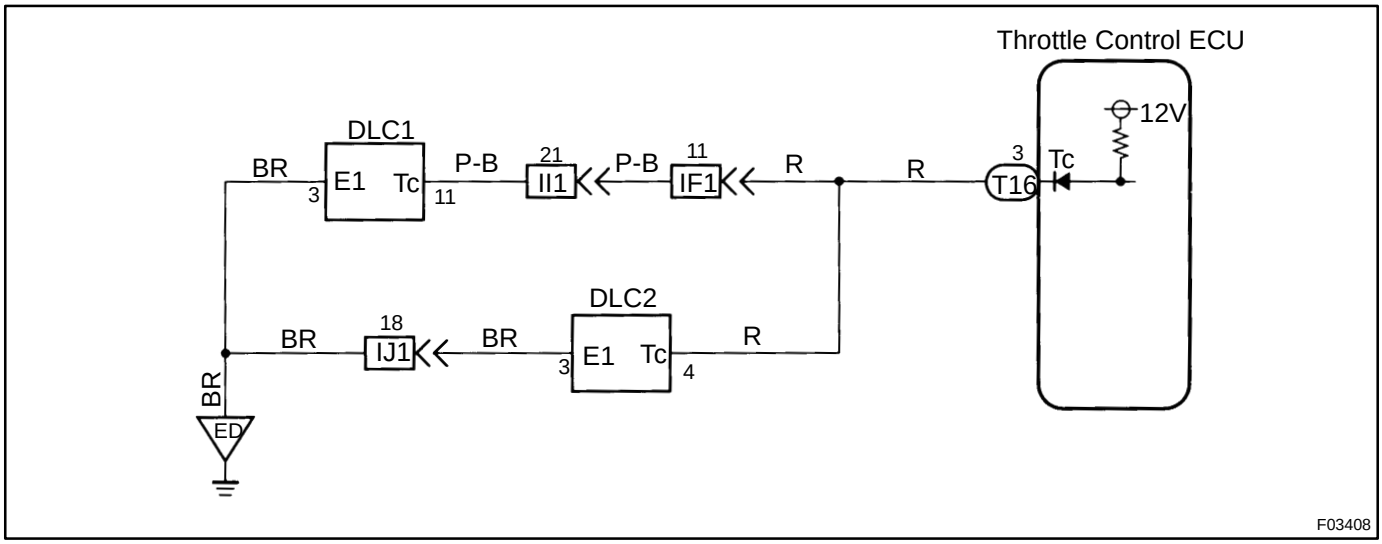

INSPECTION PROCEDURE

1	**Check voltage between terminals Tc and E1 of DLC2 or DLC1.**

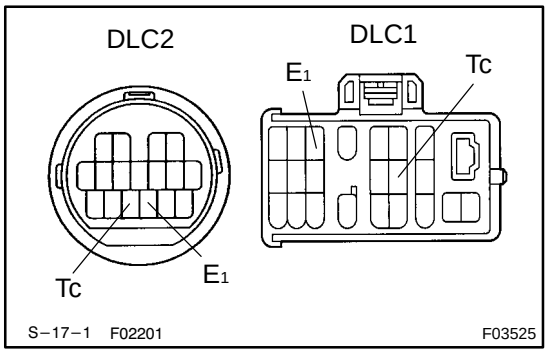

PREPARATION:

Turn ignition switch ON.

CHECK:

Measure voltage between terminals Tc and E1 of DLC2 or DLC1.

OK:

Voltage: 10 - 14 V

OK → **Proceed to next circuit inspection shown on problem symptoms chart (See page DI-508).**

NG

2	**Check for open and short in harness and connector between throttle control ECU and DLC2 or DLC1, DLC2 or DLC1 and body ground (See page IN-28).**

NG → **Repair or replace harness or connector.**

OK

Check and replace throttle control ECU.

SUPPLEMENTAL RESTRAINT SYSTEM

DI4WD-01

HOW TO PROCEED WITH TROUBLESHOOTING

Perform troubleshooting in accordance with the procedure on the following pages.

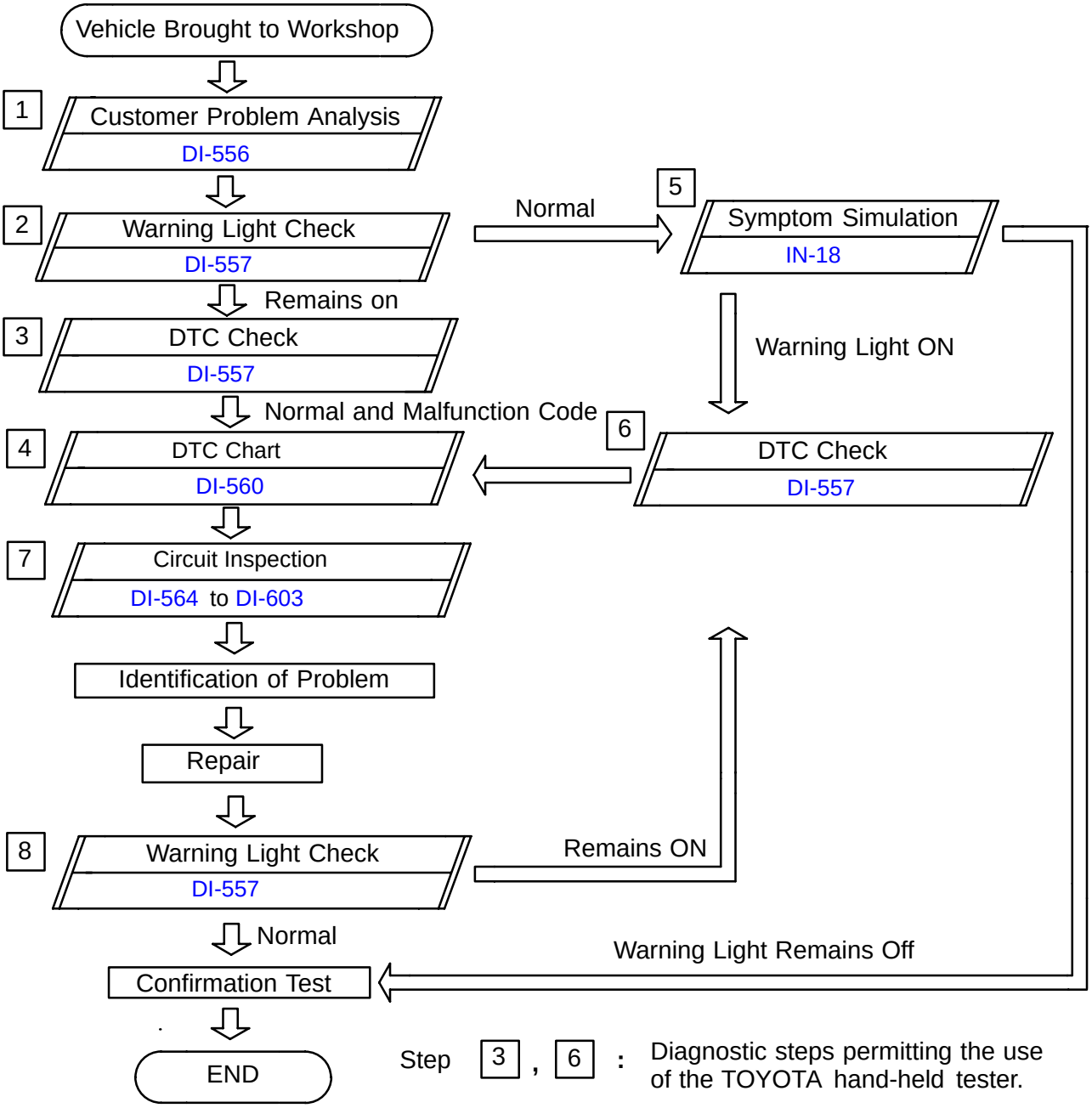

DI4WE-01

CUSTOMER PROBLEM ANALYSIS CHECK

Supplemental Restraint System Check Sheet

Inspector's Name _____

Customer's Name		**Registration No.**	
		Registration Year	/ /
		Frame No.	
Date Vehicle Brought In	/ /	**Odometer Reading**	km Miles

Date Problem Occurred	/ /
Weather	☐ Fine ☐ Cloudy ☐ Rainy ☐ Snowy ☐ Other
Temperature	Approx.

Vehicle Operation	☐ Starting ☐ Idling ☐ Driving [☐ Constant speed ☐ Acceleration ☐ Deceleration ☐ Other]
Road Conditions	
Details Of Problem	

Vehicle Inspection, Repair History¿Prior to Occurrence of Malfunction(Including Supplemental Restraint System)	

Diagnosis System Inspection

SRS Warning Light Inspection	**1st Time**	☐ Remains ON ☐ Sometimes Light Up ☐ Does Not Light Up
	2nd Time	☐ Remains ON ☐ Sometimes Light Up ☐ Does Not Light Up
DTC Inspection	**1st Time**	☐ Normal Code ☐ Malfunction Code [Code.]
	2nd Time	☐ Normal Code ☐ Malfunction Code [Code.]

DI4WF-01

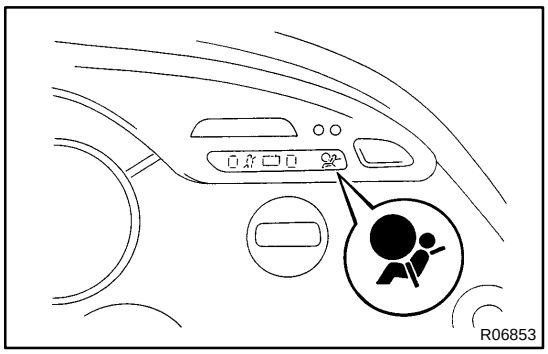

PRE-CHECK

1. CHECK SRS WARING LIGHT

(a) Turn the ignition switch to ACC or ON and check that the SRS warning light lights up.

(b) Check that the SRS warning light goes out after approx. 6 seconds.

HINT:

- ☐ When the ignition switch is at ACC or ON and the SRS warning light remains on or flashes, the airbag sensor assembly has detected a malfunction code.
- ☐ If, after approx. 6 seconds have elapsed, the SRS warning light sometimes lights up or the SRS warning light lights up even when the ignition switch is OFF, a short in the SRS warning light circuit can be considered likely. Proceed to ”SRS warning light system malfunction” on page DI-598 , DI-600 .

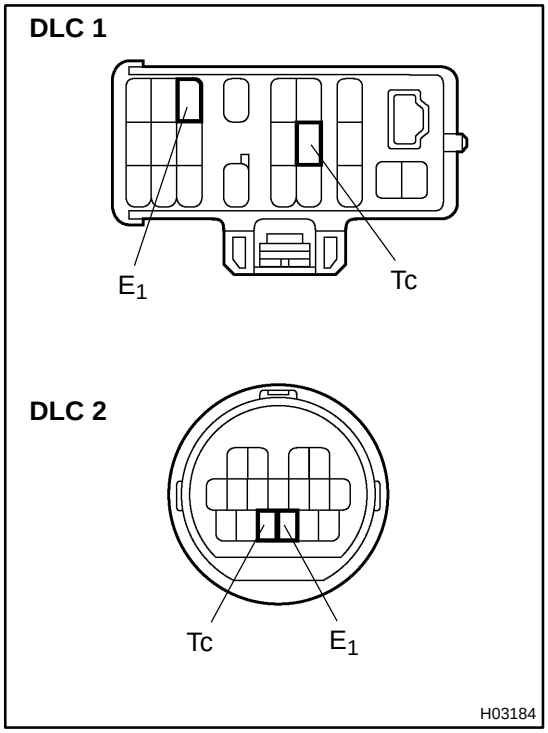

2. CHECK DTC (Using diagnosis check wire)

(a) Using diagnosis check wire, check the output of DTC.

(1) Turn the ignition switch to ACC or ON position and wait approx. 20 seconds.

(2) Using SST, connect the terminals Tc and E_1 of the DLC1.

HINT:

DTC check and troubleshooting of each DTC can also be done using DLC2.

SST 09843-18020

NOTICE:

Never make a mistake with the terminal connection position as this will cause a malfunction.

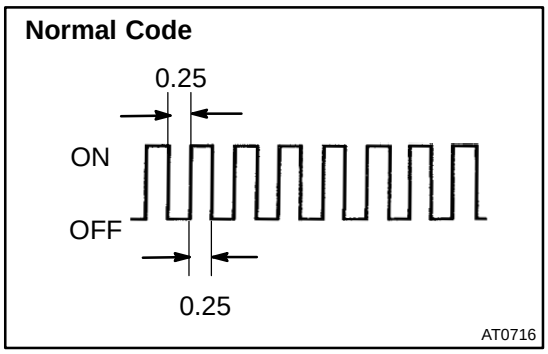

(b) Read the DTC.
Read the 2-digit DTC as indicated by the number of times the SRS warning light blinks. As an example, the blinking patterns, normal, 11 and 31 are as shown on the illustration.

- ☐ Normal code indication
  The light will blink 2 times per second.
- ☐ Malfunction code indication
  The first blinking output indicates the first digit of a 2-digit DTC. After a 1.5 second pause, the second blinking output will indicate the second digit.

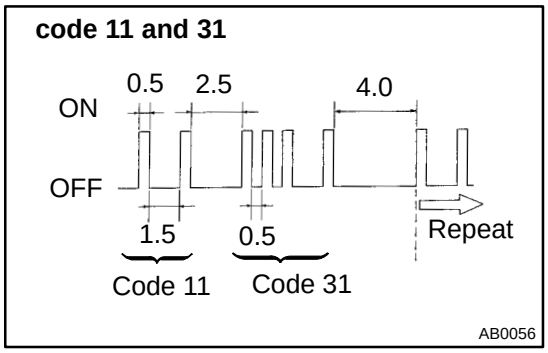

If there are 2 or more codes, there will be a 2.5 second pause between each code. After all the codes have been output, there will be a 4.0 second pause and they will all be repeated.
HINT:

- ☐ In the event of a number of trouble codes, indication will start from the smallest numbered code.
- ☐ If it does not output a DTC or outputs a DTC without terminal connection, proceed to the Tc terminal circuit inspection on page DI-603 .

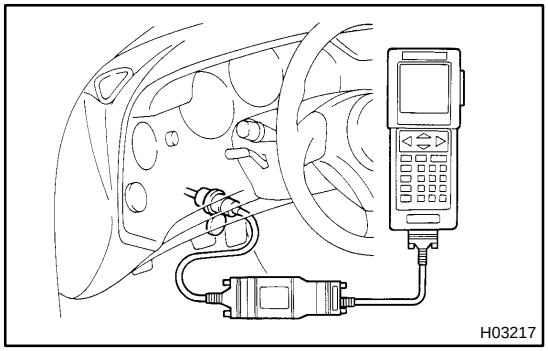

3. CHECK DTC (Using TOYOTA hand-held tester)

(a) Hook up the TOYOTA hand-held tester to the check connector.

(b) Read the DTCs by following the prompts on the tester screen.

HINT:
Please refer to the TOYOTA hand-held tester operator's manual, for further details.

4. CLEAR DTC (Using diagnosis check wire)

When the ignition switch is turned off, the DTC is cleared.

5. RELEASE METHOD OF AIRBAG ACTIVATION PREVENTION MECHANISM

An airbag activation prevention mechanism is built into the connecter for the squib circuit of the SRS. When release of the airbag activation prevention mechanism is directed in the troubleshooting procedure, as shown in the illustration of the connectors (1) and 839 below, insert paper which is the same thickness as the male terminal, between the terminal and the short spring.

CAUTION:

- **NEVER RELEASE the airbag activation prevention mechanism on the steering wheel pad connector.**

NOTICE:

- **Do not release the airbag activation prevention mechanism unless specifically directed by the troubleshooting procedure.**
- **If the paper inserted is too thick the terminal and short spring may be damaged, so always use paper the same thickness as the male terminal.**

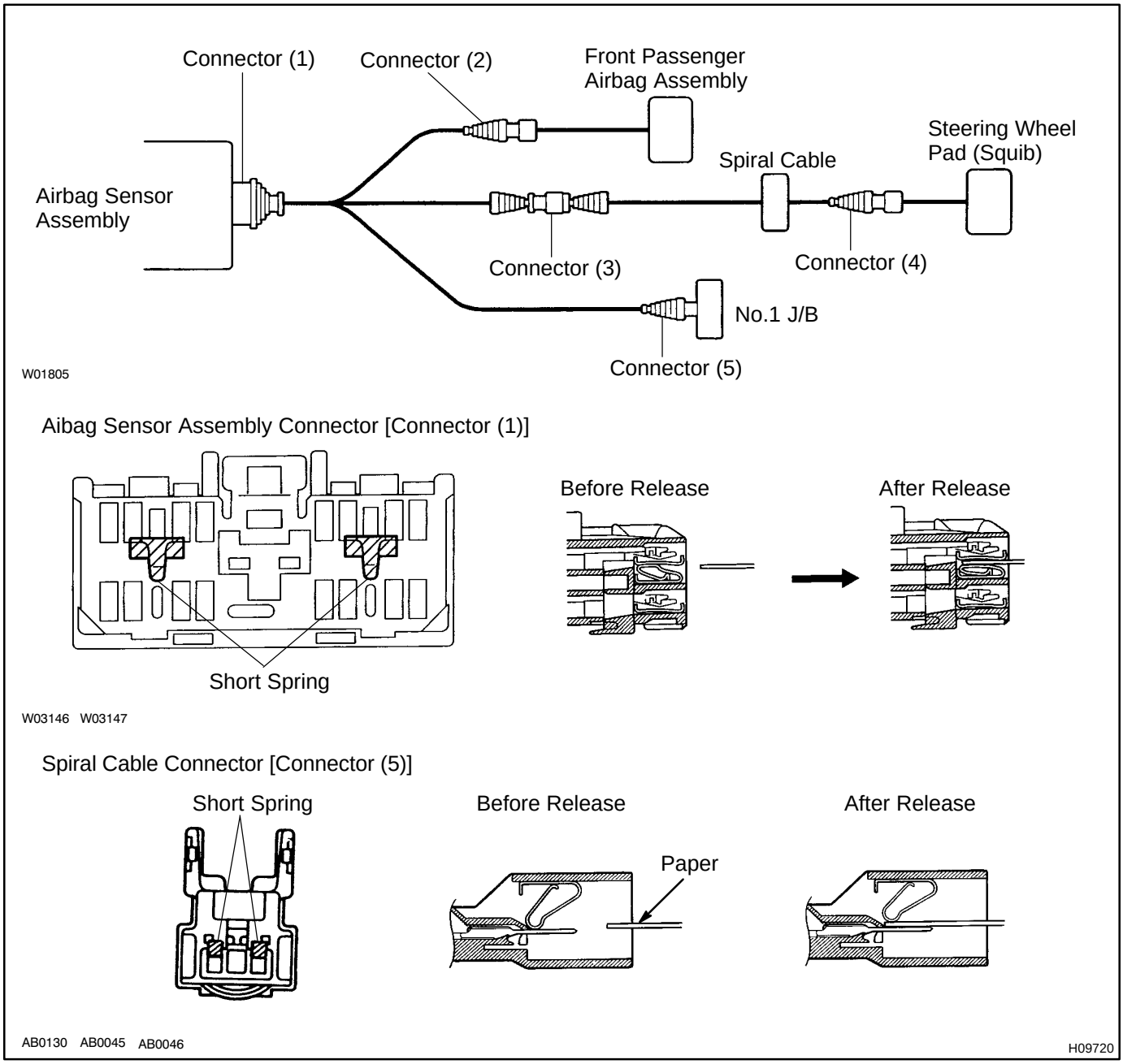

DI4WG-01

DIAGNOSTIC TROUBLE CODE CHART

DTC No. (See Page)	Detection Item	Trouble Area	SRS Warning Light
(Normal) (DI-595)	□System normal	-	OFF
	□Source voltage drop	□Battery □Airbag sensor assembly	ON
11 (DI-564)	□Short in squib circuit (to ground)	□Steering wheel pad (D squib) □Front passenger airbag assembly (P squib) □Spiral cable □Airbag sensor assembly □Wire harness	ON
12 (DI-571)	□Short in squib circuit (to B+)	□Steering wheel pad (D squib) □Front passenger airbag assembly (P squib) □Spiral cable □Airbag sensor assembly □Wire harness	ON
13 (DI-577)	□Short in D squib circuit	□Steering wheel pad (D squib) □Spiral cable □Airbag sensor assembly □Wire harness	ON
14 (DI-582)	□Open in D squib circuit	□Steering wheel pad (D squib) □Spiral cable □Airbag sensor assembly □Wire harness	ON
31 (DI-586)	□Airbag sensor assembly malfunction	□Airbag sensor assembly	ON
53 (DI-588)	□Short in P squib circuit	□Front passenger airbag assembly (P squib) □Airbag sensor assembly □Wire harness	ON
54 (DI-592)	□Open in P squib circuit	□Front passenger airbag assembly (P squib) □Airbag sensor assembly □Wire harness	ON

HINT:

- □ When the SRS warning light remains lit up and the DTC is the normal code, this means a source voltage drop.
  This malfunction is not stored in memory by the airbag sensor assembly and if the power source voltage returns to normal, after approx. 10 seconds the SRS warning light will automatically go out.
- □ When 2 or more codes are indicated, the codes will be displayed in numeral order starting from the lowest numbered code.
- □ If a code not listed on the chart is displayed, the airbag sensor assembly is faulty.

DI4WH-01

PARTS LOCATION

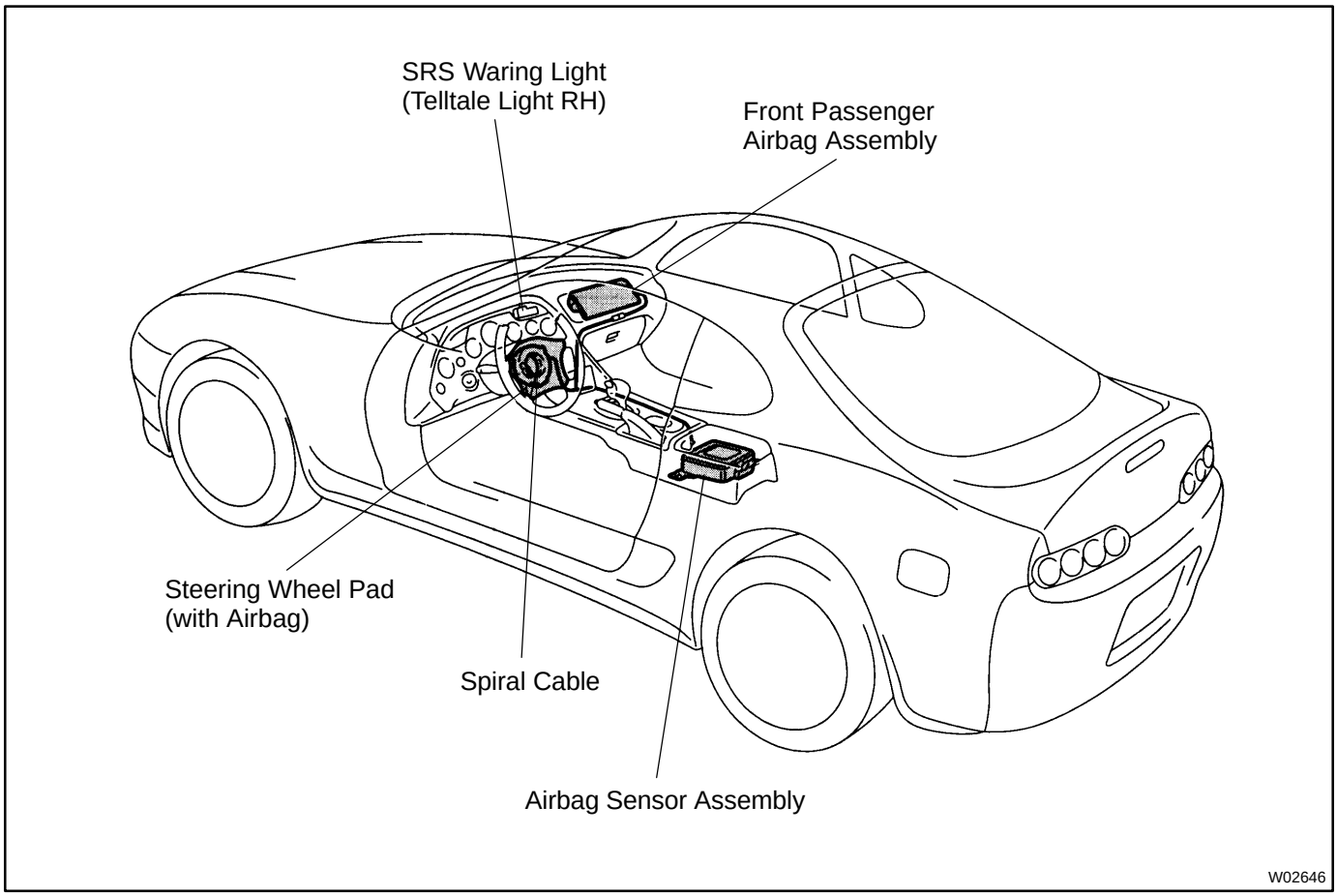

DI4WI-01

TERMINALS OF ECM

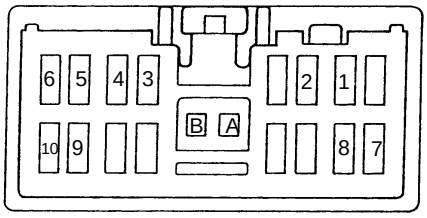

W02759

No.	Symbol	Terminal Name
A	-	Electrical Connection Check Mechanism
B	-	Electrical Connection Check Mechanism
1	P^-	Squib ⊖ (Passenger)
2	P^+	Squib ⊕ (Passenger)
3	LA	SRS Warning Light
4	D^-	Squib ⊖ (Driver)
5	D^+	Squib ⊕ (Driver)
6	Tc	Diagnosis
7	E_2	Ground
8	E_1	Ground
9	IG_2	Power Source (IGN Fuse)
10	ACC	Power Source (CIG Fuse)

DI4WJ-01

PROBLEM SYMPTOMS TABLE

Proceed with troubleshooting of each circuit in the table below.

Problem Symptom	Inspection Item	Page
□With the ignition switch at ACC or ON, the SRS warning light sometimes lights up after approx. 6 seconds have elapsed. □SRS warning light lights up even when ignition switch is in the LOCK position.	□SRS warning light system malfunction (Always lit up when ignition switch is in LOCK position.)	DI-598
□With the ignition switch at ACC or ON, the SRS warning light does not light up.	□SRS warning light system malfunction (Does not light up when ignition switch is turned to ACC or ON.)	DI-600
□DTC not displayed. □SRS warning light is always lit up with a DTC check procedure. □DTC displayed without Tc and E_1 terminal connection.	□Tc terminal circuit	DI-603

DI4WK-01

CIRCUIT INSPECTION

DTC	11	Short in Squib Circuit (to Ground)

CIRCUIT DESCRIPTION

The squib circuit consists of the airbag sensor assembly, spiral cable, steering wheel pad and front passenger airbag assembly. It causes the SRS to deploy when the SRS deployment conditions are satisfied.
For details of the function of each component, see FUNCTION OF COMPONENTS on page RS-2 .
DTC 11 is recorded a when ground short is detected in the squib circuit.

DTC No.	DTC Detecting Condition	Trouble Area
11	□Short circuit in squib wire harness (to ground). □Squib malfunction. □Spiral cable malfunction. □Airbag sensor assembly malfunction.	□Steering wheel pad (D squib) □Front passenger airbag assembly (P squib) □Spiral cable □Airbag sensor assembly □Wire harness

WIRING DIAGRAM

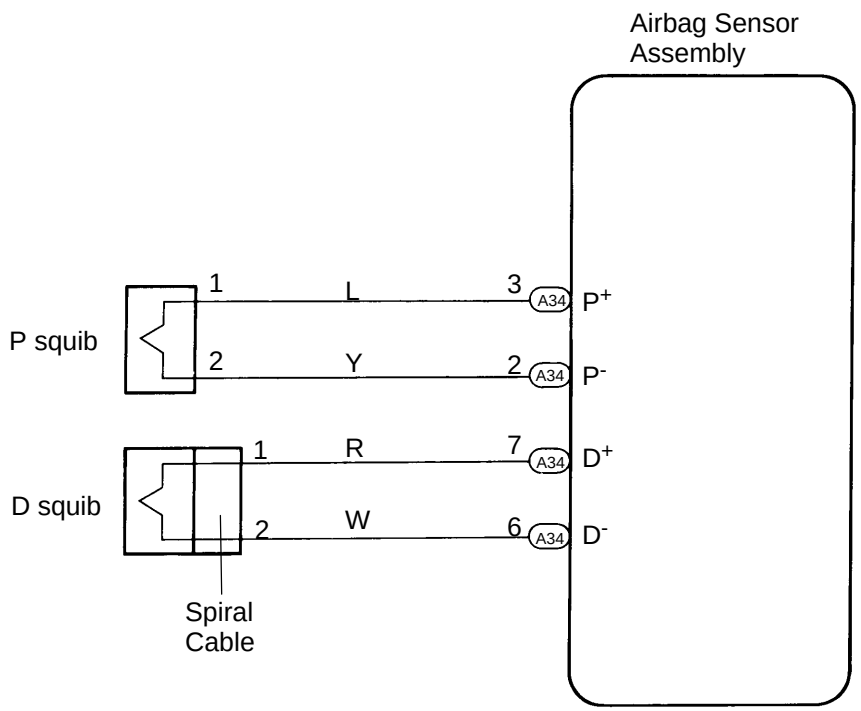

W01021

INSPECTION PROCEDURES

1	**Preparation (See step 1 on page DI-595).**

2	**Check D squib circuit.**

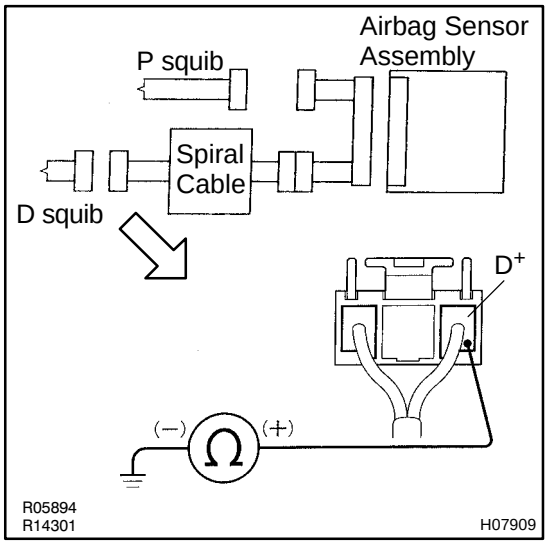

CHECK:

For the connector (on the spiral cable side) between the spiral cable and steering wheel pad, measure the resistance between D^+ and body ground.

OK:

Resistance: 1 MΩ or higher

NG → **Go to step 7.**

OK

3	**Check P squib circuit.**

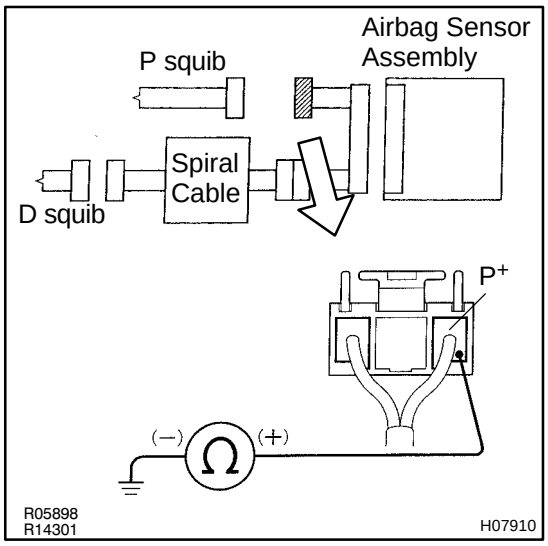

PREPARATION:

For the connector (on the airbag sensor assembly side) between the airbag sensor assembly and front passenger airbag assembly, measure the resistance between P^+ and body ground.

OK:

Resistance: 1 MΩ or higher

NG → **Repair or replace harness or connector between the airbag sensor assembly and front passenger airbag assembly.**

OK

4	**Check airbag sensor assembly.**

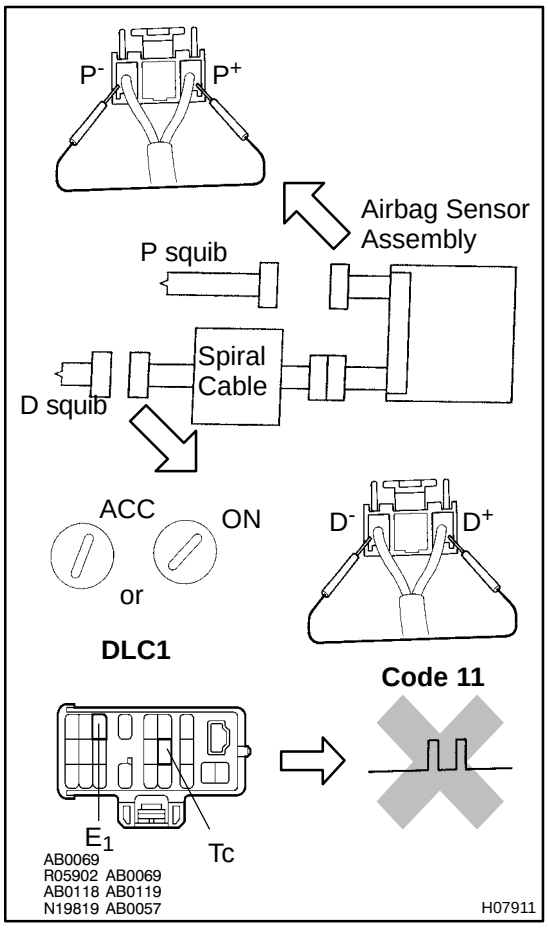

PREPARATION:

(a) Connect the connector to airbag sensor assembly.

(b) Using a service wire, connect D^+ and D^- on spiral cable side of connector between spiral cable and steering wheel pad.

(c) Using a service wire, connect P^+ and P^- on airbag sensor assembly side of connector between airbag sensor assembly and front passenger airbag assembly.

(d) Connect negative (-) terminal cable to battery, and wait at least 2 seconds.

CHECK:

(a) Turn the ignition switch to ACC or ON and wait at least 20 seconds.

(b) Clear malfunction code stored in memory.
(See page DI-557)

(c) Turn the ignition switch to LOCK, and wait at least 20 seconds.

(d) Turn the ignition switch to ACC or ON, and wait at least 20 seconds.

(e) Using SST, connect the terminals Tc and E_1 of DLC1.
SST 09843-18020

(f) Check DTC.

OK:

DTC 11 is not output.

HINT:
Codes other than code 11 may be output at this time, but they are not relevant to this check.

NG	**Replace airbag sensor assembly.**

OK

5	**Check D squib.**

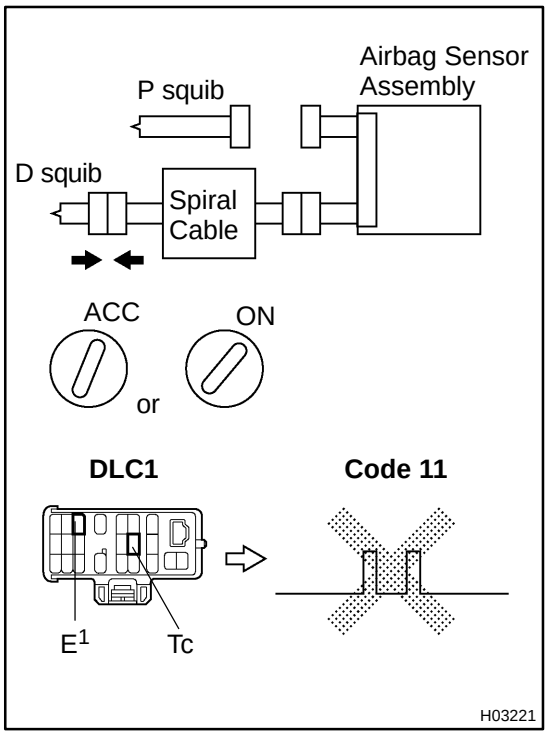

PREPARATION:

(a) Turn the ignition switch to LOCK.

(b) Disconnect negative (-) terminal cable from the battery, and wait at least 90 seconds.

(c) Connect the steering wheel pad connector.

(d) Connect negative (-) terminal cable to battery, and wait at least 2 seconds.

CHECK:

(a) Turn the ignition switch to ACC or ON and wait at least 20 seconds.

(b) Clear malfunction code stored in memory.
(See page DI-557)

(c) Turn the ignition switch to LOCK, and wait at least 20 seconds.

(d) Turn the ignition switch to ACC or ON, and wait at least 20 seconds.

(e) Using SST, connect the terminals Tc and E_1 of DLC1.
SST 09843-18020

(f) Check DTC.

OK:

DTC 11 is not output.

HINT:
Codes other than code 11 may be output at this time, but they are not relevant to this check.

NG → **Replace steering wheel pad.**

OK

6	**Check P squib.**

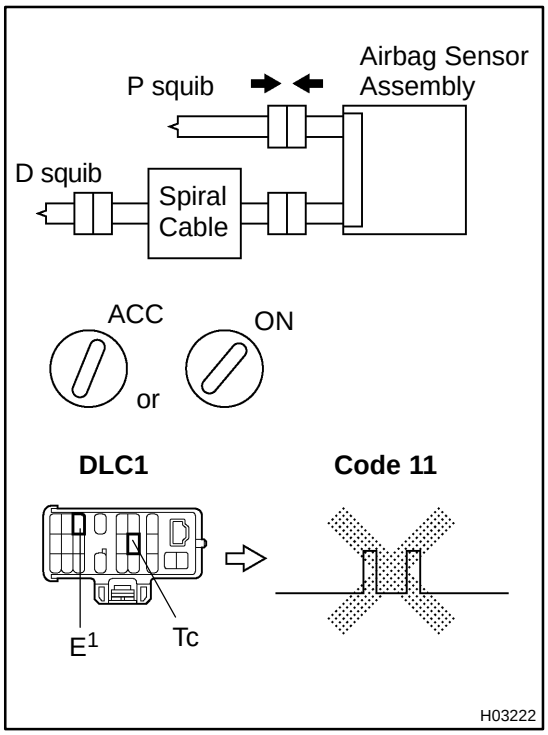

PREPARATION:

(a) Turn the ignition switch to LOCK.

(b) Disconnect negative (-) terminal cable from the battery, and wait at least 90 seconds.

(c) Connect the front passenger airbag assembly connector.

(d) Connect negative (-) terminal cable to battery, and wait at least 2 seconds.

CHECK:

(a) Turn the ignition switch to ACC or ON, and wait at least 20 seconds.

(b) Clear malfunction code stored in memory.
(See page DI-557)

(c) Turn the ignition switch to LOCK, and wait at least 20 seconds.

(d) Turn the ignition switch to ACC or ON, and wait at least 20 seconds.

(e) Using SST, connect the terminals Tc and E_1 of DLC1.
SST 09843-18020

(f) Check DTC.

OK:

DTC 11 is not output.

HINT:
Codes other than code 11 may be output at this time, but they are not relevant to this check.

NG → **Replace front passenger airbag assembly.**

OK

From the results of the above inspection, the malfunctioning part can now be considered normal. To make sure of this, use the simulation method to check. If the malfunctioning part can not be detected by the simulation method, replace all SRS components including the wire harness.

7	**Check spiral cable.**

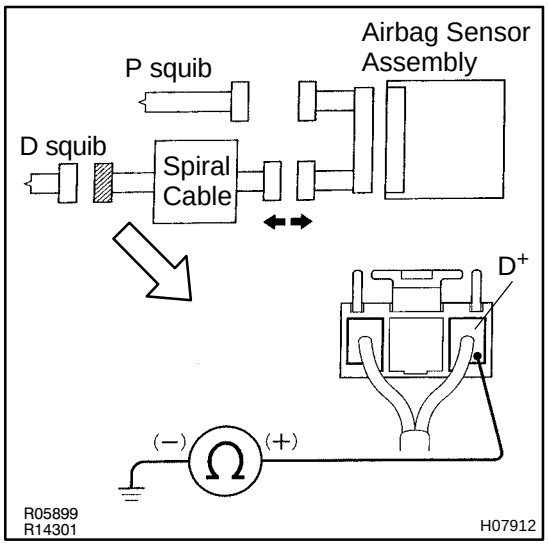

PREPARATION:

Disconnect the connector between airbag sensor assembly and spiral cable.

CHECK:

Measure the resistance between D^+ on spiral cable side of connector between spiral cable and steering wheel pad and body ground.

OK:

Resistance: 1 MΩ or higher

NG → **Repair or replace spiral cable.**

OK

Repair or replace harness or connector between airbag sensor assembly and spiral cable.

DI4WL-01

DTC	12	Short in Squib Circuit (to B+)

CIRCUIT DESCRIPTION

The squib circuit consists of the airbag sensor assembly, spiral cable, steering wheel pad and front passenger airbag assembly. It causes the SRS to deploy when the SRS deployment conditions are satisfied.
For details of the function of each component, see FUNCTION OF COMPONENTS on page RS-2 .
DTC 12 is recorded when a B+ short is detected in the squib circuit.

DTC No.	DTC Detecting Condition	Trouble Area
12	□Short circuit in squib wire harness (to B+). □Squib malfunction. □Spiral cable malfunction. □Airbag sensor assembly malfunction.	□Steering wheel pad (D squib) □Front passenger airbag assembly (P squib) □Spiral cable □Airbag sensor assembly □Wire harness

WIRING DIAGRAM

Refer to page DI-564 for the WIRING DIAGRAM.

INSPECTION PROCEDURES

1	**Preparation (See step 1 on page DI-595).**

2	**Check D squib circuit.**

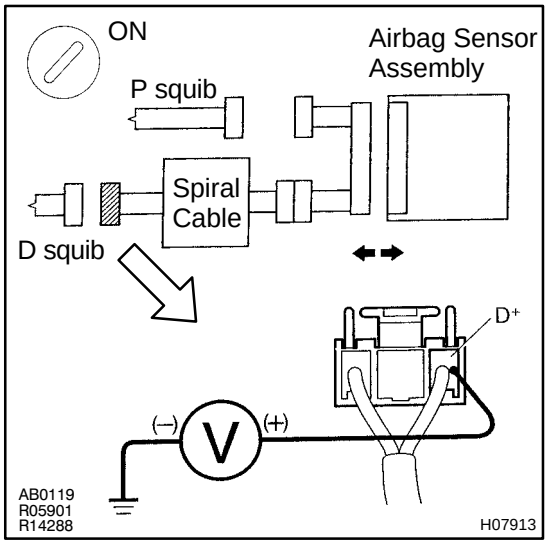

CHECK:
For the connector (on the spiral cable side) between the spiral cable and steering wheel pad, measure the voltage between D^+ and body ground.
OK:
Voltage: 0 V

NG → **Go to step 7.**

OK

3	**Check P squib circuit.**

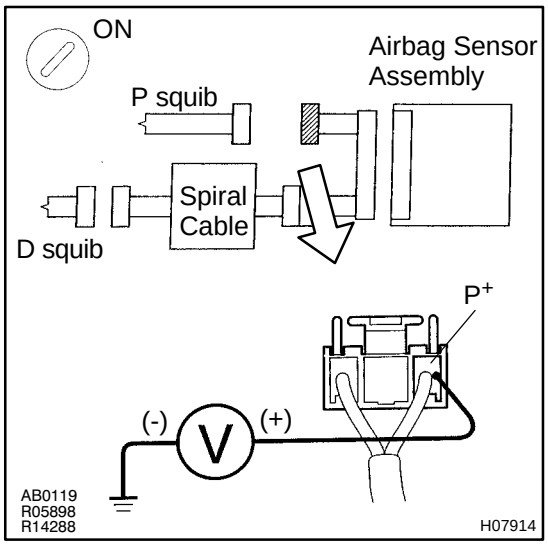

CHECK:

For the connector (on the airbag sensor assembly side) between airbag sensor assembly and front passenger airbag assembly, measure the voltage between P^+ and body ground.

OK:

Voltage: 0 V

NG → **Repair or replace harness or connector between the airbag sensor assembly and front passenger airbag assembly.**

OK

4	**Check airbag sensor assembly.**

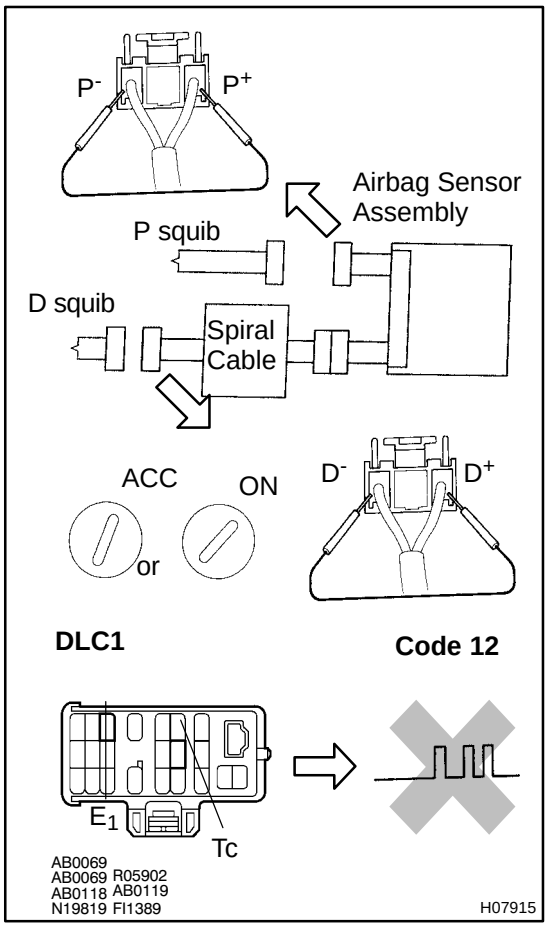

PREPARATION:

(a) Connect the connector to airbag sensor assembly.

(b) Using a service wire, connect D^+ and D^- on spiral cable side of connector between spiral cable and steering wheel pad.

(c) Using a service wire, connect P^+ and P^- on airbag sensor assembly side of connector between airbag sensor assembly and front passenger airbag assembly.

(d) Connect negative (-) terminal cable to battery, and wait at least 2 seconds.

CHECK:

(a) Turn the ignition switch to ACC or ON and wait at least 20 seconds.

(b) Clear malfunction code stored in memory.
(See page DI-557)

(c) Turn the ignition switch to LOCK, and wait at least 20 seconds.

(d) Turn the ignition switch to ACC or ON, and wait at least 20 seconds.

(e) Using SST, connect the terminals Tc and E_1 of DLC1.
SST 09843-18020

(f) Check DTC.

OK:

DTC 12 is not output.

HINT:
Codes other than code 12 may be output at this time, but they are not relevant to this check.

NG → **Replace airbag sensor assembly.**

OK

5	**Check D squib.**

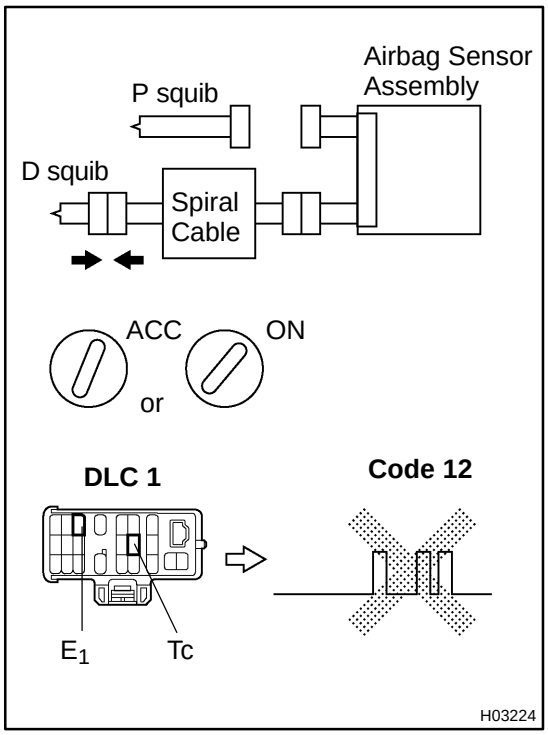

PREPARATION:

(a) Turn the ignition switch to LOCK.

(b) Disconnect negative (-) terminal cable from the battery, and wait at least 90 seconds.

(c) Connect the steering wheel pad connector.

(d) Connect negative (-) terminal cable to battery, and wait at least 2 seconds.

CHECK:

(a) Turn the ignition switch to ACC or ON, and wait at least 20 seconds.

(b) Clear malfunction code stored in memory.
(See page DI-557)

(c) Turn the ignition switch to LOCK, and wait at least 20 seconds.

(d) Turn the ignition switch to ACC or ON, and wait at least 20 seconds.

(e) Using SST, connect the terminals Tc and E_1 of DLC1.
SST 09843-18020

(f) Check DTC.

OK:

DTC 12 is not output.

HINT:
Codes other than code 12 may be output at this time, but they are not relevant to this check.

NG	**Replace steering wheel pad.**

OK

6	**Check P squib.**

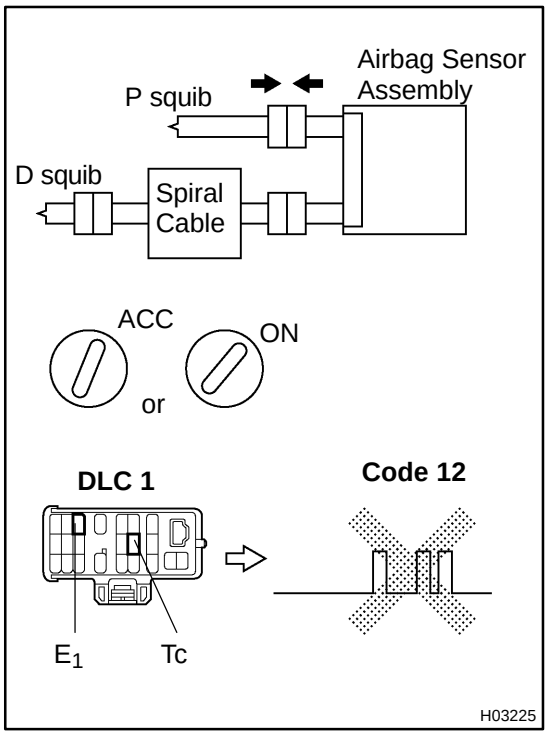

PREPARATION:

(a) Turn the ignition switch to LOCK.

(b) Disconnect negative (-) terminal cable from the battery, and wait at least 90 seconds.

(c) Connect the front passenger airbag assembly connector.

(d) Connect negative (-) terminal cable to battery, and wait at least 2 seconds.

CHECK:

(a) Turn the ignition switch to ACC or ON and wait at least 20 seconds.

(b) Clear malfunction code stored in memory.
(See page DI-557)

(c) Turn the ignition switch to LOCK, and wait at least 20 seconds.

(d) Turn the ignition switch to ACC or ON, and wait at least 20 seconds.

(e) Using SST, connect the the terminals Tc and E_1 of DLC1.
SST 09843-18020

(f) Check DTC.

OK:

DTC 12 is not output.

HINT:
Codes other than code 12 may be output at this time, but they are not relevant to this check.

NG → **Replace front passenger airbag assembly.**

OK

From the results of the above inspection, the malfunctioning part can now be considered normal. To make sure of this, use the simulation method to check.

7	**Check spiral cable.**

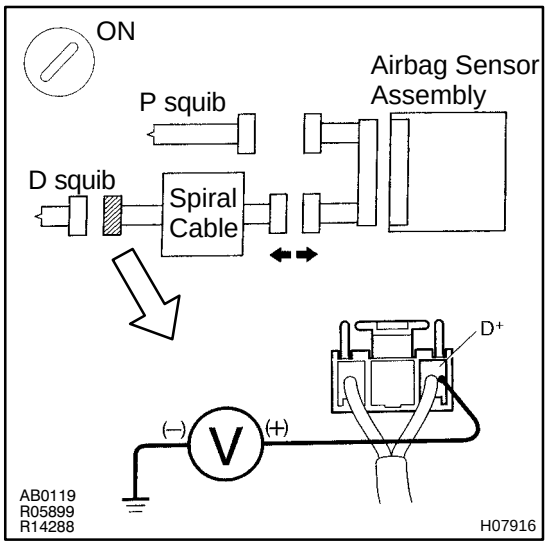

PREPARATION:

(a) Turn the ignition switch to LOCK.

(b) Disconnect the connector between airbag sensor assembly and spiral cable.

(c) Turn the ignition switch ON.

CHECK:

Measure voltage at D^+ on spiral cable side of connector between spiral cable and steering wheel pad and body ground.

OK:

Voltage: 0 V

NG → **Repair or replace spiral cable.**

OK

Repair or replace harness or connector between airbag sensor assembly and spiral cable.

DI4WM-01

DTC	13	Short in D Squib Circuit

CIRCUIT DESCRIPTION

The D squib circuit consists of the airbag sensor assembly, spiral cable and steering wheel pad.
It causes the airbag to deploy when the airbag deployment conditions are satisfied.
For details of the function of each component, see FUNCTION OF COMPONENTS on page RS-2 .
DTC 13 is recorded when a short is detected in the D squib circuit.

DTC No.	DTC Detecting Condition	Trouble Area
13	□Short circuit between D^+ wire harness and D^- wire harness of squib. □D squib malfunction. □Spiral cable malfunction. □Airbag sensor assembly malfunction.	□Steering wheel pad (D squib) □Spiral cable □Airbag sensor assembly □Wire harness

WIRING DIAGRAM

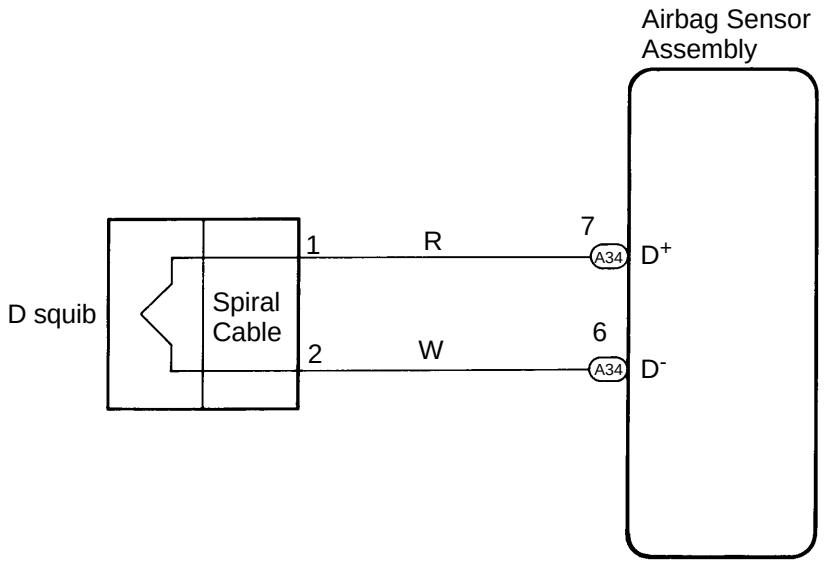

R16015

INSPECTION PROCEDURES

1	**Preparation (See step 1 on page DI-595).**

2	**Check D squib circuit.**

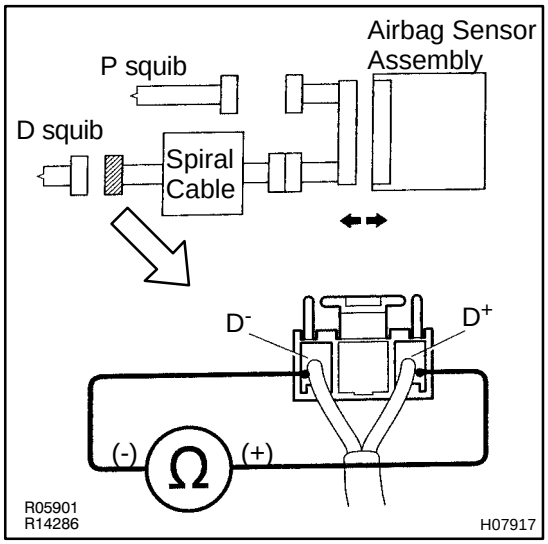

PREPARATION:

Release airbag activation prevention mechanism on airbag sensor assembly side of airbag squib connector.
(See page DI-557)

CHECK:

For the connector (on the spiral cable side) between the spiral cable and steering wheel pad, measure the resistance between D^+ and D^- .

OK:

Resistance: 1MΩ or Higher

NG	**Go to step 5.**

OK

3	**Check airbag sensor assembly.**

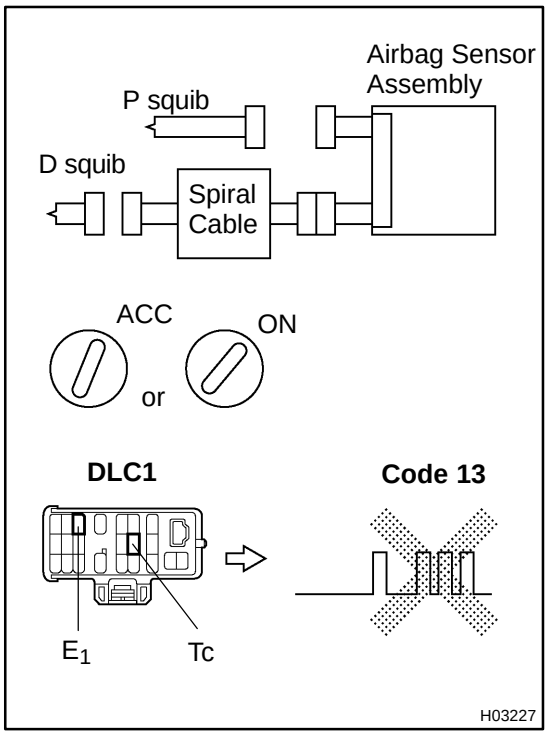

PREPARATION:

(a) Connect the connector to airbag sensor assembly.

(b) Connect negative (-) terminal cable to battery, and wait at least 2 seconds.

CHECK:

(a) Turn the ignition switch to ACC or ON and wait at least 20 seconds.

(b) Clear malfunction code stored in memory.
(See page DI-557)

(c) Turn the ignition switch to LOCK, and wait at least 20 seconds.

(d) Turn the ignition switch to ACC or ON, and wait at least 20 seconds.

(e) Using SST, connect the terminals Tc and E_1 of DLC1.
SST 09843-18020

(f) Check DTC.

OK:

DTC 13 is not output.

HINT:

Codes other than code 13 may be output at this time, but they are not relevant to this check.

NG	**Replace airbag sensor assembly.**

OK

4	**Check D squib.**

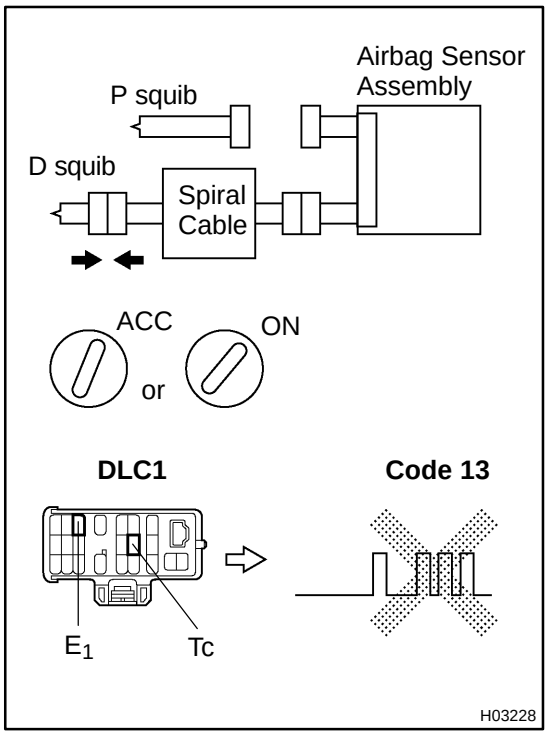

PREPARATION:

(a) Turn the ignition switch to LOCK.
(b) Disconnect negative (-) terminal cable from the battery, and wait at least 90 seconds.
(c) Connect the steering wheel pad connector.
(d) Connect negative (-) terminal cable to battery, and wait at least 2 seconds.

CHECK:

(a) Turn the ignition switch to LOCK, and wait at least 20 seconds.
(b) Turn the ignition switch to ACC or ON, and wait at least 20 seconds.
(c) Clear malfunction code stored in memory.
(See page DI-557)
(d) Turn the ignition switch to LOCK, and wait at least 20 seconds.
(e) Turn the ignition switch to ACC or ON, and wait at least 20 seconds.
(f) Using SST, connect the terminals Tc and E_1 of DLC1.
SST 09843-18020
(g) Check DTC.

OK:

DTC 13 is not output.

HINT:
Codes other than code 13 may be output at this time, but they are not relevant to this check.

NG → **Replace steering wheel pad.**

OK

From the results of the above inspection, the malfunctioning part can now be considered normal. To make sure of this, use the simulation method to check.

5	**Check spiral cable.**

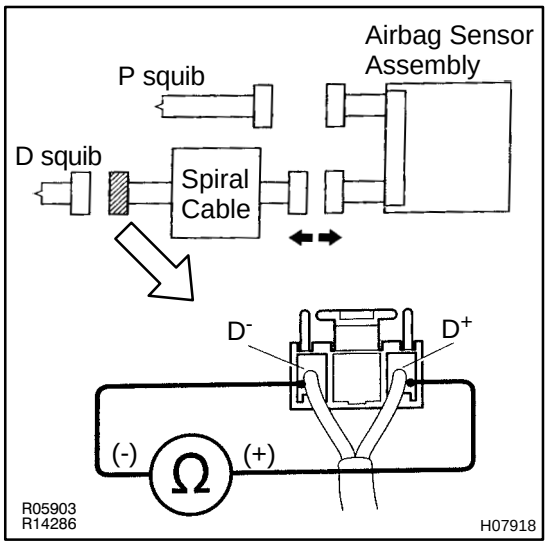

PREPARATION:

(a) Disconnect the connector between airbag sensor assembly and spiral cable.

(b) Release airbag activation prevention mechanism on airbag sensor assembly side of airbag squib connector (See page DI-557).

CHECK:

For the connector (on the spiral cable side) between the spiral cable and steering wheel pad, measure the resistance between D^+ and D^- .

OK:

Resistance: 1MΩ or Higher

NG → **Repair or replace spiral cable.**

OK

6	**Check harness between airbag sensor assembly and spiral cable.**

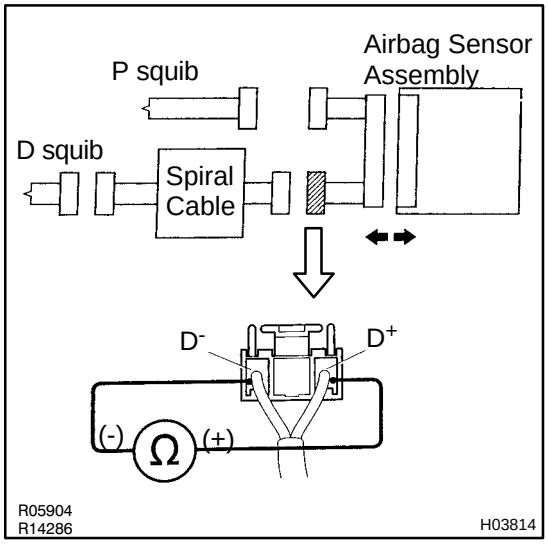

PREPARATION:

Release airbag activation prevention mechanism on airbag sensor assembly side of airbag squib connector (See page DI-557).

CHECK:

For the connector (on the airbag sensor assembly side) between the spiral cable and airbag sensor assembly, measure the resistance between D^+ and D^- .

OK:

Resistance: 1 MΩ or higher

NG → **Repair or replace harness or connector between airbag sensor assembly and spiral cable.**

OK

From the results of the above inspection, the malfunctioning part can now be considered normal. To make sure of this, use the simulation method to check.

DI4WN-01

DTC	14	Open in D Squib Circuit

CIRCUIT DESCRIPTION

The D squib circuit consists of the airbag sensor assembly, spiral cable and steering wheel pad.
It causes the airbag to deploy when the airbag deployment conditions are satisfied.
For details of the function of each component, see FUNCTION OF COMPONENTS on page RS-2 .
DTC 14 is recorded when an open is detected in the D squib circuit.

DTC No.	DTC Detecting Condition	Trouble Area
14	□Open circuit in D^+ wire harness or D^- wire harness of squib. □D squib malfunction. □Spiral cable malfunction. □Airbag sensor assembly malfunction.	□Steering wheel pad (D squib) □Spiral cable □Airbag sensor assembly □Wire harness

WIRING DIAGRAM

Refer to page DI-577 for the WIRING DIAGRAM.

INSPECTION PROCEDURES

1	**Preparation (See step 1 on page DI-595).**

2	**Check D squib circuit.**

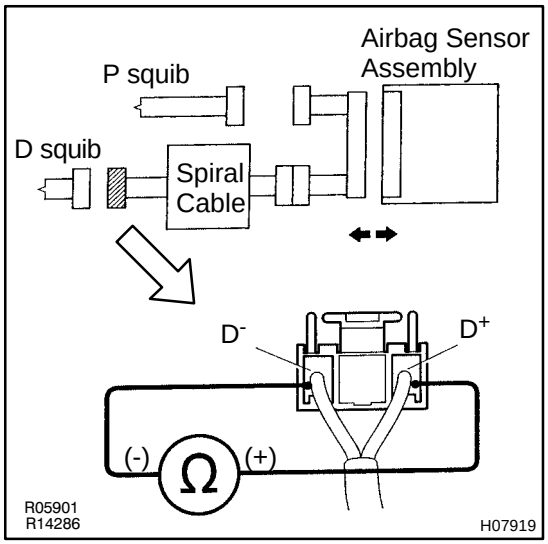

CHECK:
For the connector (on the spiral cable side) between the spiral cable and steering wheel pad, measure the resistance between D^+ and D^- .
OK:
Resistance: Below 1Ω

NG → **Go to step 5.**

OK

3	**Check airbag sensor assembly.**

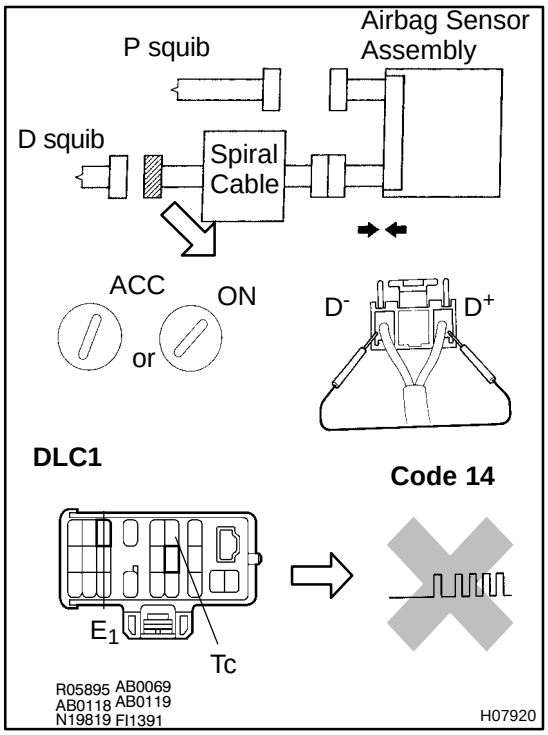

PREPARATION:

(a) Connect the connector to airbag sensor assembly.

(b) Using a service wire, connect D^+ and D^- on spiral cable side of connector between spiral cable and steering wheel pad.

(c) Connect negative (-) terminal cable to battery, and wait at least 2 seconds.

CHECK:

(a) Turn the ignition switch to LOCK, and wait at least 20 seconds.

(b) Clear malfunction code stored in memory.
(See page DI-557)

(c) Turn the ignition switch to LOCK, and wait at least 20 seconds.

(d) Turn the ignition switch to ACC or ON, and wait at least 20 seconds.

(e) Using SST, connect the terminals Tc and E_1 of DLC1.
SST 09843-18020

(f) Check DTC.

OK:

DTC 14 is not output.

HINT:
Codes other than code 14 may be output at this time, but they are not relevant to this check.

NG → **Replace airbag sensor assembly.**

OK

4	**Check D squib.**

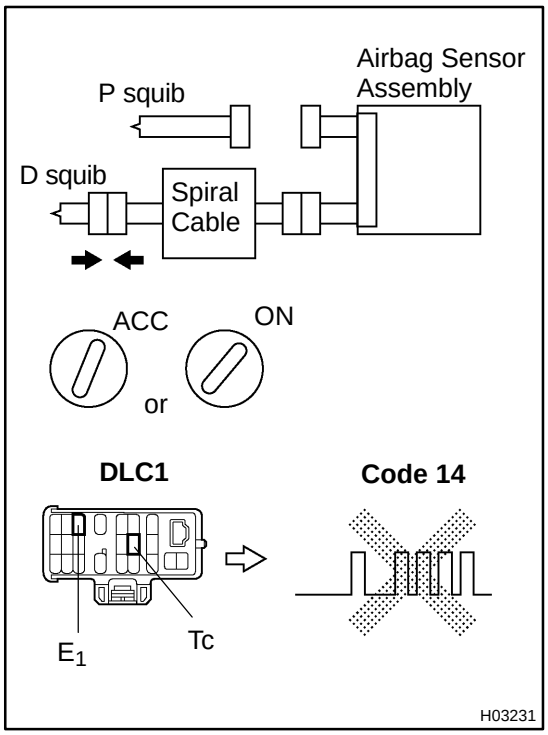

PREPARATION:

(a) Turn the ignition switch to LOCK.

(b) Disconnect negative (-) terminal cable from the battery, and wait at least 90 seconds.

(c) Connect the steering wheel pad connector.

(d) Connect negative (-) terminal cable to battery, and wait at least 2 seconds.

CHECK:

(a) Turn the ignition switch to ACC or ON and wait at least 20 seconds.

(b) Clear malfunction code stored in memory.
(See page DI-557)

(c) Turn the ignition switch to LOCK, and wait at least 20 seconds.

(d) Turn the ignition switch to ACC or ON, and wait at least 20 seconds.

(e) Using SST, connect the terminals Tc and E_1 of DLC1.
SST 09843-18020

(f) Check DTC.

OK:

DTC 14 is not output.

HINT:
Codes other than code 14 may be output at this time, but they are not relevant to this check.

NG → **Replace steering wheel pad.**

OK

From the results of the above inspection, the malfunctioning part can now be considered normal. To make sure of this, use the simulation method to check.

5	**Check spiral cable.**

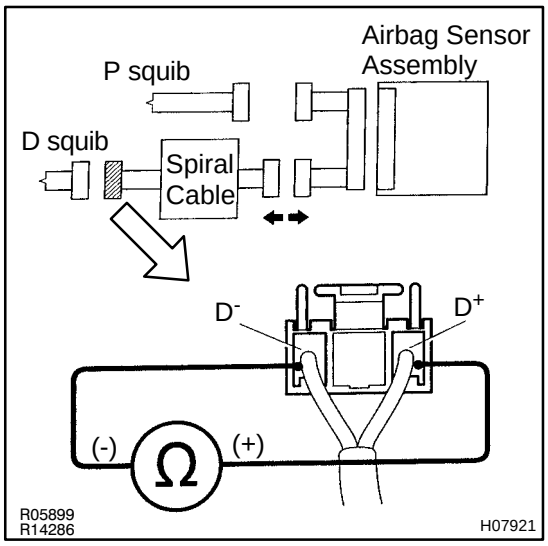

PREPARATION:
Disconnect the connector between airbag sensor assembly and spiral cable.

CHECK:
For the connector (on the spiral cable side) between the spiral cable and steering wheel pad, measure the resistance between D^+ and D^-.

OK:
Resistance: Below 1 Ω

NG → **Repair or replace spiral cable.**

OK

6	**Check harness between airbag sensor assembly and spiral cable.**

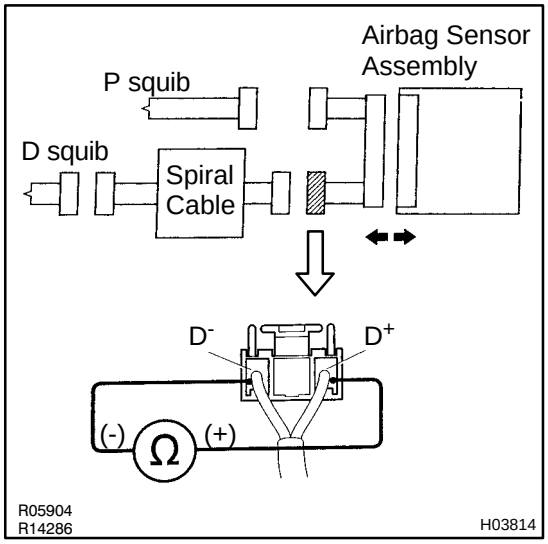

CHECK:
For the connector (on the airbag sensor assembly side) between the airbag sensor assembly and spiral cable, measure the resistance between D^+ and D^-.

OK:
Resistance: Below 1Ω

NG → **Repair or replace harness or connector between airbag sensor assembly and spiral cable.**

OK

From the results of the above inspection, the malfunctioning part can now be considered normal. To make sure of this, use the simulation method to check.

DI4WO-01

DTC	31	Airbag Sensor Assembly Malfunction

CIRCUIT DESCRIPTION

The airbag sensor assembly consists of a airbag sensor, safing sensor, drive circuit, diagnosis circuit and ignition control, etc.
It receives signals from the airbag sensors, judges whether or not the SRS must be activated, and diagnosis system malfunction.
DTC 31 is recorded when occurrence of a malfunction in the airbag sensor assembly is detected.

DTC No.	DTC Detecting Condition	Trouble Area
31	□Airbag sensor assembly malfunction.	□Airbag sensor assembly

INSPECTION PROCEDURES

HINT:
When a malfunction code other than code 31 is displayed at the same time, first repair the malfunction indicated by the malfunction code other than code 31.

1	**Preparation (See step 1 on page DI-595).**

2	**Check voltage at IG2 and ACC of airbag sensor assembly.**

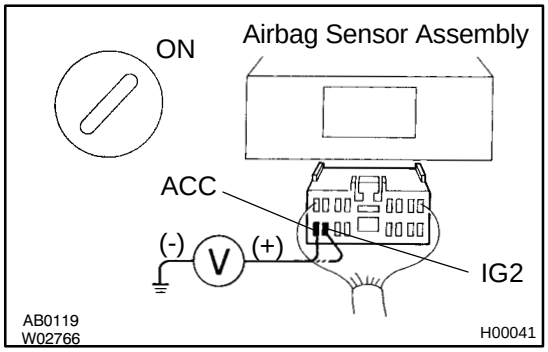

PREPARATION:
Turn the ignition switch ON.
CHECK:
Measure the voltage between terminals IG2 and ACC of airbag sensor assembly and body ground.
OK:
Voltage: Below 16 V

NG → **Check battery and charging system. (See charging system section)**

OK

3	**Is DTC 31 output again?**

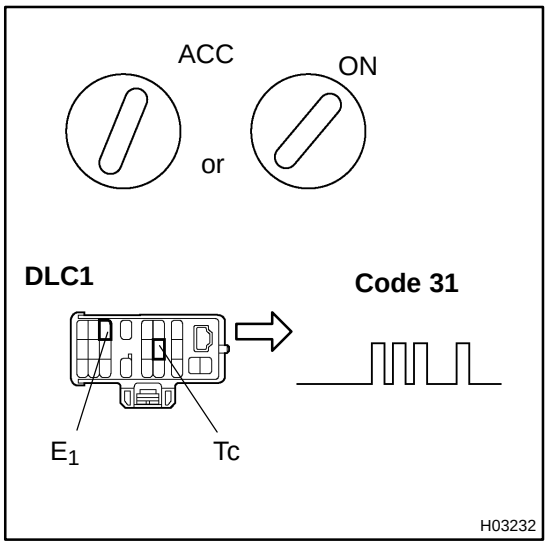

PREPARATION:

Clear malfunction code.

CHECK:

(a) Turn the ignition switch to LOCK, and wait at least 20 seconds.

(b) Turn the ignition switch to ACC or ON, and wait at least 20 seconds.

(c) Repeat operation in step (1) and (2) at least 5 times.

(d) Using SST, connect the terminals Tc and E_1 of DLC1.
SST 09843-18020

(e) Check DTC.

NO → **Using simulation method, reproduce malfunction symptoms (See page IN-18).**

YES

Replace airbag sensor assembly.

DI4WP-01

DTC	53	Short in P Squib Circuit

CIRCUIT DESCRIPTION

The P squib circuit consists of the airbag sensor assembly and front passenger airbag assembly.
It causes the airbag to deploy when the airbag deployment conditions are satisfied.
For details of the function of each component, see FUNCTION OF COMPONENTS on page RS-2 .
DTC 53 is recorded when a short is detected in the P squib circuit.

DTC No.	DTC Detecting Condition	Trouble Area
53	□Short circuit between P^+ wire harness or P^- wire harness of squib. □P squib malfunction. □Airbag sensor assembly malfunction.	□Front passenger airbag assembly (P squib) □Airbag sensor assembly □Wire harness

WIRING DIAGRAM

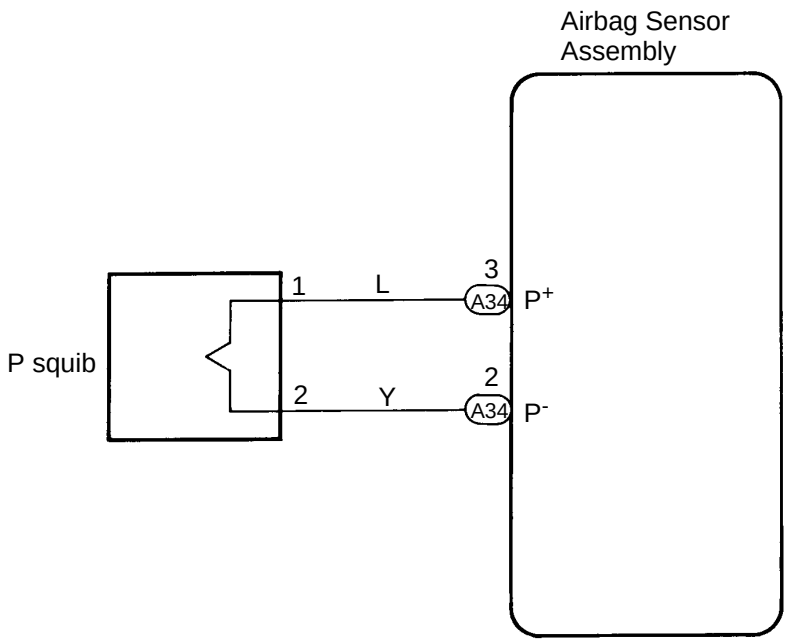

R16016

INSPECTION PROCEDURES

1	**Preparation (See step 1 on page DI-595).**

2	**Check P squib circuit.**

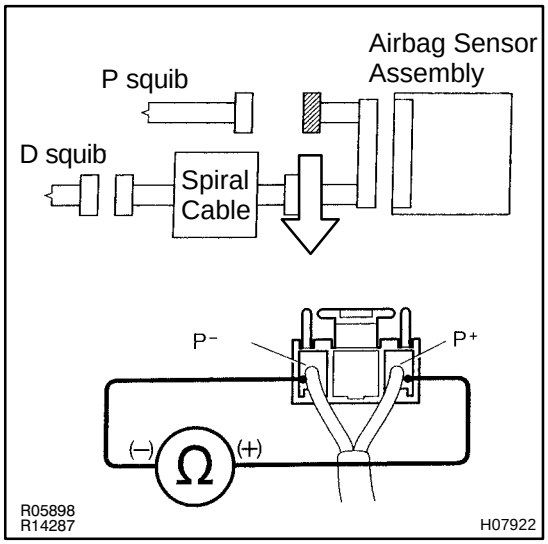

PREPARATION:

Release airbag activation prevention mechanism on airbag sensor assembly side of airbag squib connector (See page DI-557)

CHECK:

For the connector (on the airbag sensor assembly side) between the airbag sensor assembly and front passenger airbag assembly, measure the resistance between P^+ and P^- .

OK:

Resistance: 1 MΩ or Higher

NG → **Repair or replace harness or connector between airbag sensor assembly and front passenger airbag assembly.**

OK

3	**Check airbag sensor assembly.**

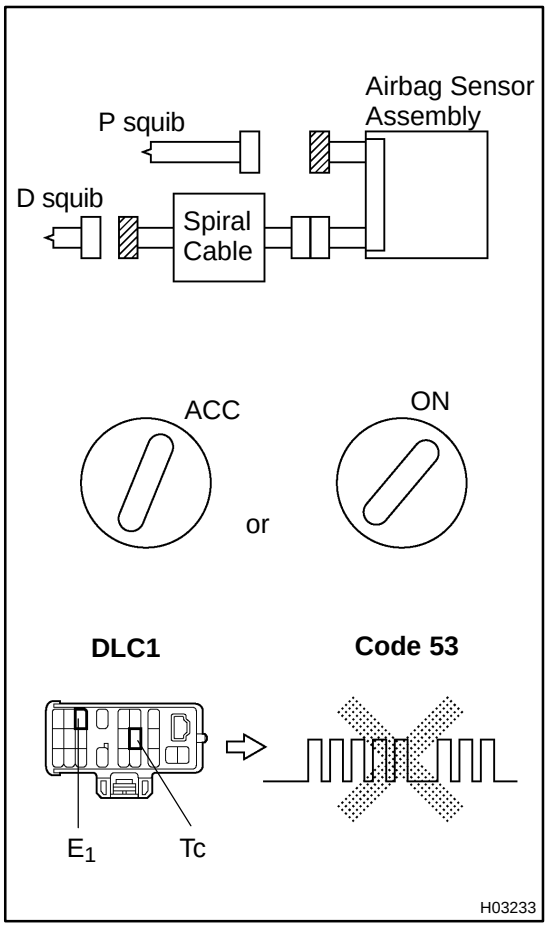

PREPARATION:

(a) Connect the connector to airbag sensor assembly.

(b) Connect negative (-) terminal cable to battery, and wait at least 2 seconds.

CHECK:

(a) Turn the ignition switch to ACC or ON and wait at least 20 seconds.

(b) Clear malfunction code stored in memory.
(See page DI-557)

(c) Turn the ignition switch to LOCK, and wait at least 20 seconds.

(d) Turn the ignition switch to ACC or ON, and wait at least 20 seconds.

(e) Using SST, connect the terminals Tc and E_1 of DLC1.
SST 09843-18020

(f) Check DTC.

OK:

DTC 53 is not output.

HINT:

Codes other than code 53 may be output at this time, but they are not relevant to this check.

NG → **Replace airbag sensor assembly.**

OK

4	Check P squib.

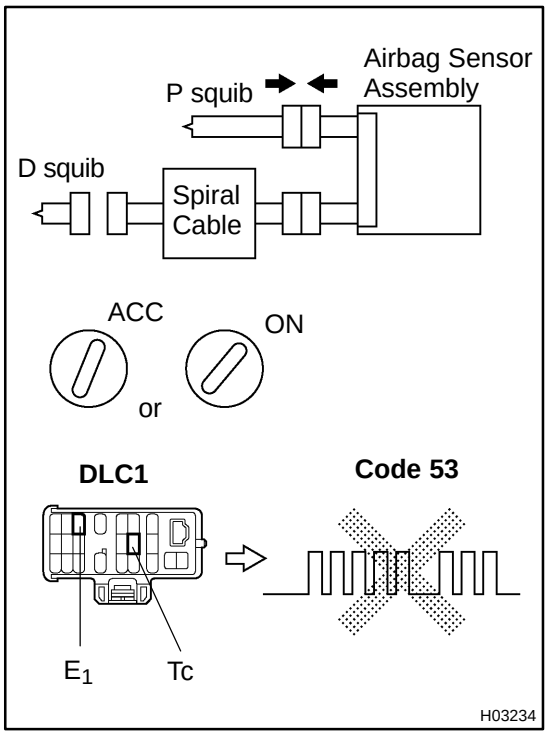

PREPARATION:

(a) Turn the ignition switch to LOCK.

(b) Disconnect negative (-) terminal cable from the battery, and wait at least 90 seconds.

(c) Connect the front passenger airbag assembly connector.

(d) Connect negative (-) terminal cable to battery, and wait at least 2 seconds.

CHECK:

(a) Turn the ignition switch to LOCK, and wait at least 20 seconds.

(b) Turn the ignition switch to ACC or ON and wait at least 20 seconds.

(c) Clear malfunction code stored in memory.
(See page DI-557)

(d) Turn the ignition switch to LOCK, and wait at least 20 seconds.

(e) Turn the ignition switch to ACC or ON, and wait at least 20 seconds.

(f) Using SST, connect the terminals Tc and E_1 of DLC1.
SST 09843-18020

(g) Check DTC.

OK:

DTC 53 is not output.

HINT:
Codes other than code 53 may be output at this time, but they are not relevant to this check.

NG → **Replace front passenger airbag assembly.**

OK

From the results of the above inspection, the malfunctioning part can now be considered normal. To make sure of this, use the simulation method to check.

DI4WQ-01

1 DTC	54	Open in P Squib Circuit

CIRCUIT DESCRIPTION

The P squib circuit consists of the airbag sensor assembly and front passenger airbag assembly.
It causes the airbag to deploy when the airbag deployment conditions are satisfied.
For details of the function of each component, see FUNCTION OF COMPONENTS on page RS-2 .
DTC 54 is recorded when an open is detected in the P squib circuit.

DTC No.	DTC Detecting Condition	Trouble Area
54	□Open circuit in P^+ wire harness or P^- wire harness of squib. □P squib malfunction. □Airbag sensor assembly malfunction.	□Front passenger airbag assembly (P squib) □Airbag sensor assembly □Wire harness

WIRING DIAGRAM

Refer to page DI-588 for the WIRING DIAGRAM.

INSPECTION PROCEDURES

1	**Preparation (See step 1 on page DI-595).**

2	**Check P squib circuit.**

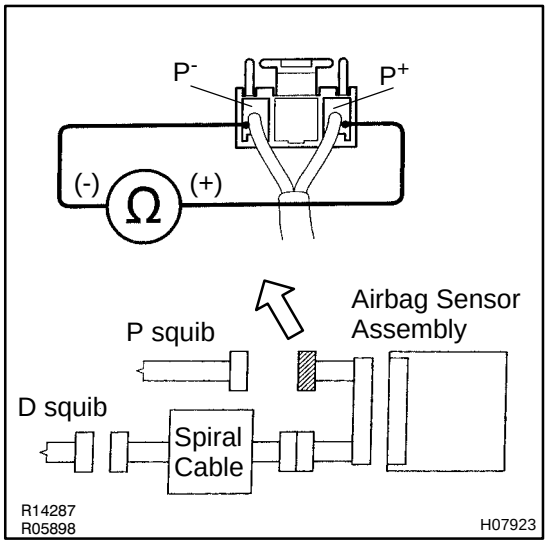

CHECK:

For the connector (on the airbag sensor assembly side) between the airbag sensor assembly and front passenger airbag assembly measure the resistance between P^+ and P^-.

OK:

Resistance: Below 1Ω

NG → **Repair or replace harness or connector between airbag sensor assembly and front passenger airbag assembly.**

OK

3	**Check airbag sensor assembly.**

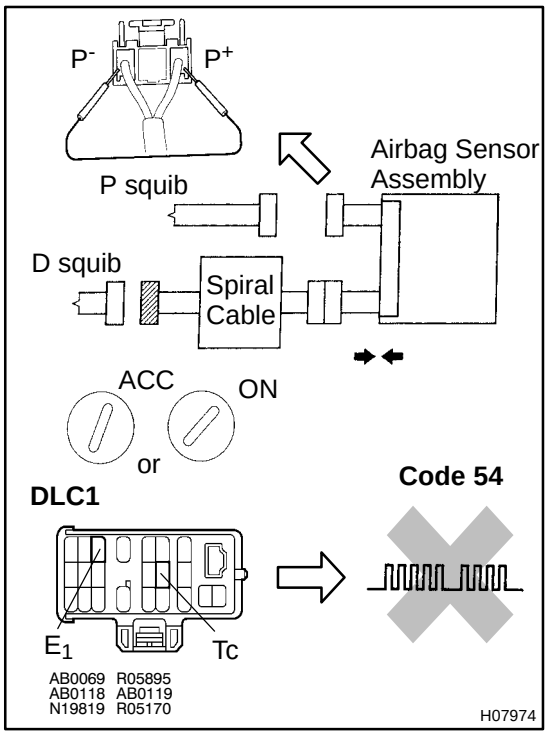

PREPARATION:

(a) Connect the connector to airbag sensor assembly.

(b) Using a service wire, connect P^+ and P^- on airbag sensor assembly side of connector between airbag sensor assembly and front passenger airbag assembly.

(c) Connect negative (-) terminal cable to battery, and wait at least 2 seconds.

CHECK:

(a) Turn the ignition switch to ACC or ON and wait at least 20 seconds.

(b) Clear malfunction code stored in memory.
(See page DI-557)

(c) Turn the ignition switch to LOCK, and wait at least 20 seconds.

(d) Turn the ignition switch to ACC or ON, and wait at least 20 seconds.

(e) Using SST, connect the terminals Tc and E_1 of DLC1.
SST 09843-18020

(f) Check DTC.

OK:

DTC 54 is not output.

HINT:
Codes other than code 54 may be output at this time, but they are not relevant to this check.

NG	**Replace airbag sensor assembly.**

OK

4	**Check P squib.**

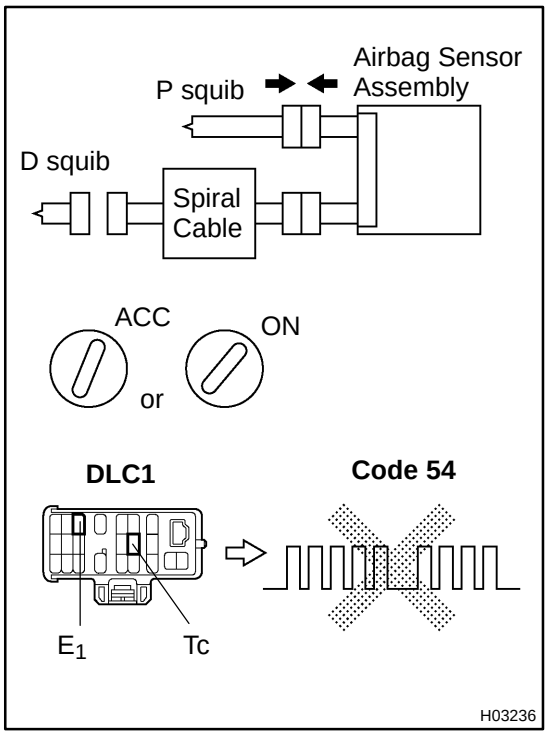

PREPARATION:

(a) Turn the ignition switch to LOCK.

(b) Disconnect negative (-) terminal cable from the battery, and wait at least 90 seconds.

(c) Connect the front passenger airbag assembly connector.

(d) Connect negative (-) terminal cable to battery, and wait at least 2 seconds.

CHECK:

(a) Turn the ignition switch to ACC or ON, and wait at least 20 seconds.

(b) Clear malfunction code stored in memory.
(See page DI-557)

(c) Turn the ignition switch to LOCK, and wait at least 20 seconds.

(d) Turn the ignition switch to ACC or ON, and wait at least 20 seconds.

(e) Using SST, connect the terminals Tc and E_1 of DLC_1.
SST 09843-18020

(f) Check DTC.

OK:

DTC 54 is not output.

HINT:
Codes other than code 54 may be output at this time, but they are not relevant to this check.

NG → **Replace front passenger airbag assembly.**

OK

From the results of the above inspection, the malfunctioning part can now be considered normal. To make sure of this, use the simulation method to check.

DI4WR-01

DTC	Normal	Source Voltage Drop

CIRCUIT DESCRIPTION

The SRS is equipped with a voltage-increase circuit (DC-DC converter) in the airbag sensor assembly in case the source voltage drops.
When the battery voltage drops, the voltage-increase circuit (DC-DC converter)functions to increase the voltage of the SRS to normal voltage.
The diagnosis system malfunction display for this circuit is different to other circuits-when the SRS warning light remains lit up and the DTC is a normal code, source voltage drop is indicated.
Malfunction in this circuit is not recorded in the airbag sensor assembly, and the source voltage returns to normal, the SRS warning light automatically goes off.

DTC No.	DTC Detecting Condition	Trouble Area
Normal	Source voltage drop.	□Battery □Airbag sensor assembly

WIRING DIAGRAM

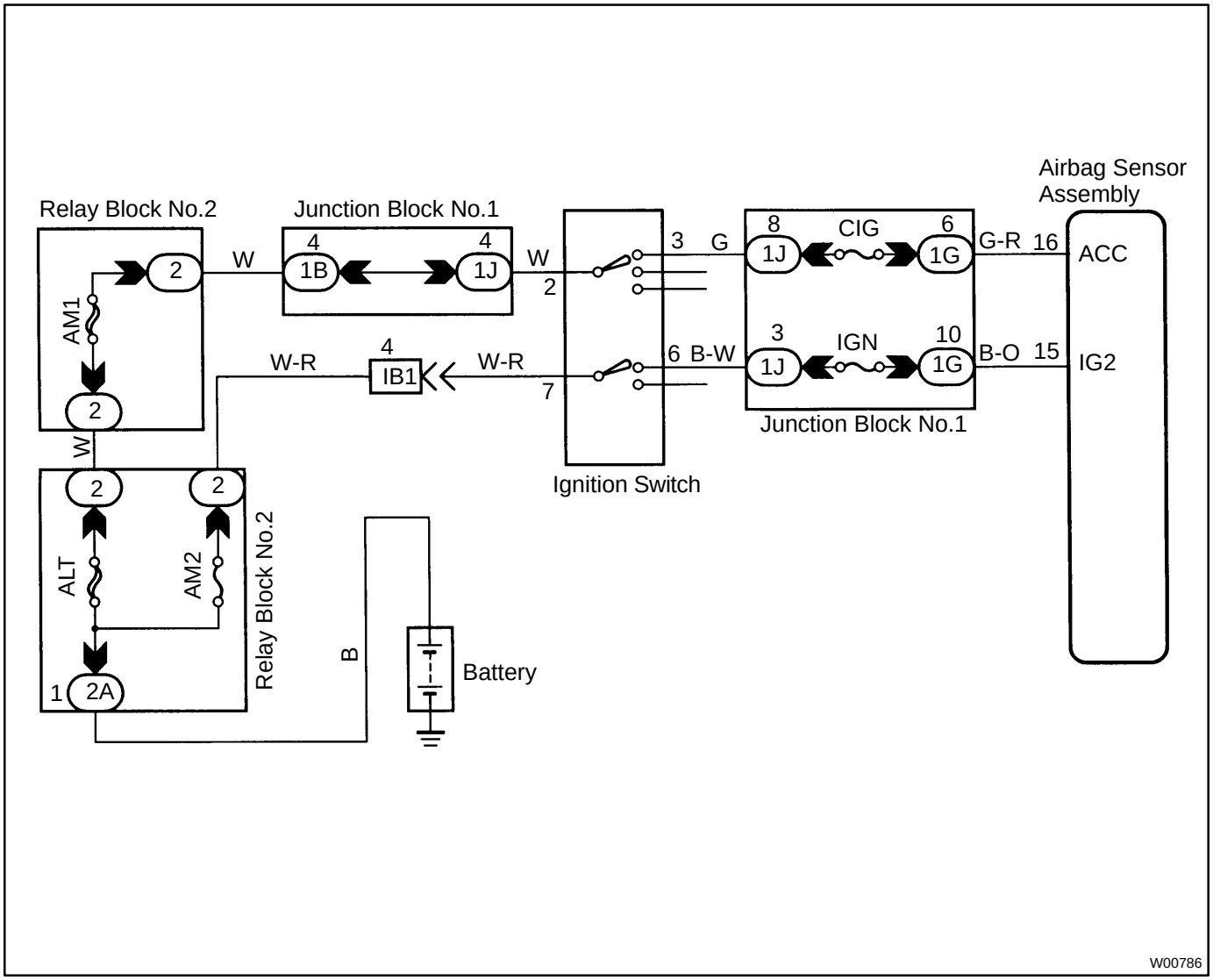

INSPECTION PROCEDURES

1	**Preparation.**

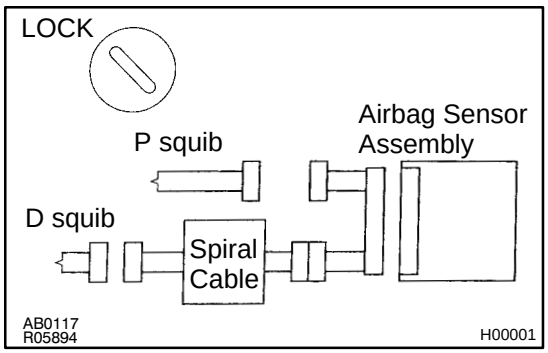

PREPARATION:

(a) Disconnect negative (-) terminal cable from the battery, and wait at least 90 seconds.

(b) Remove the steering wheel pad (See SR Section).

(c) Disconnect the connector of front passenger airbag assembly (See page RS-21).

(d) DIsconnect the connector of airbag sensor assembly (See page RS-33).

CAUTION:

Store the steering wheel pad with the front surface facing upward.

2	**Check source voltage.**

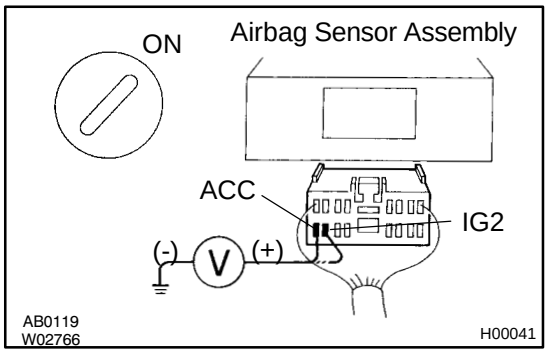

PREPARATION:

(a) Connect negative (-) terminal cable to the battery.

(b) Turn the ignition switch ON.

CHECK:

Measure the voltage at IG2 or ACC on sensor and operate electric system. (defogger, wiper, headlight, heater blower, etc)

OK:

Voltage: 10 - 14 V

NG → **Check the harness between battery and airbag sensor assembly, and check the battery and charging system.**

OK

3	**Does SRS warning light turn off ?**

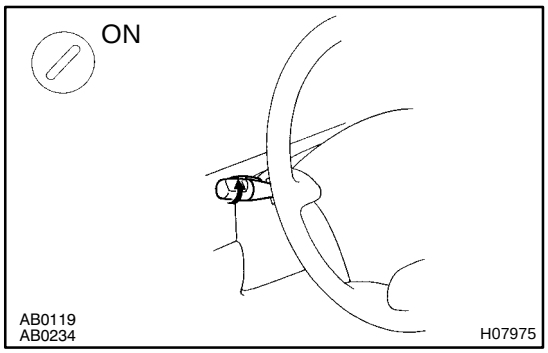

PREPARATION:

(a) Turn the ignition switch to LOCK.
(b) Connect the steering wheel pad connector.
(c) Connect the front passenger airbag assembly connector.
(d) Connect the airbag sensor assembly connector.
(e) Turn the ignition switch ON.

CHECK:

Operate electric system checked in (defogger, wiper, headlight, heater blower, etc.) and check that SRS warning light goes off.

NO → **Check for DTCs. If a DTC is output, trouble-shooting for the DTC. If a normal code is output, replace airbag sensor assembly.**

YES

From the results of the above inspection, the malfunctioning part can now be considered normal. To make sure of this, use the simulation method to check.

DI4WS-01

SRS Warning Light System Malfunction (Always lit up, when ignition switch is in LOCK position.)

CIRCUIT DESCRIPTION

The SRS warning light is located on the combination meter.
When the SRS is normal, the SRS warning light lights up for approx. 6 seconds after the ignition switch is turned from LOCK position to ACC or ON position, and then turns off automatically.
If there is a malfunction in the SRS, the SRS warning light lights up to inform the driver of the abnormality.
When terminals Tc and E_1 of the DLC1 are connected, the DTC is displayed by the blinking of the SRS warning light.

WIRING DIAGRAM

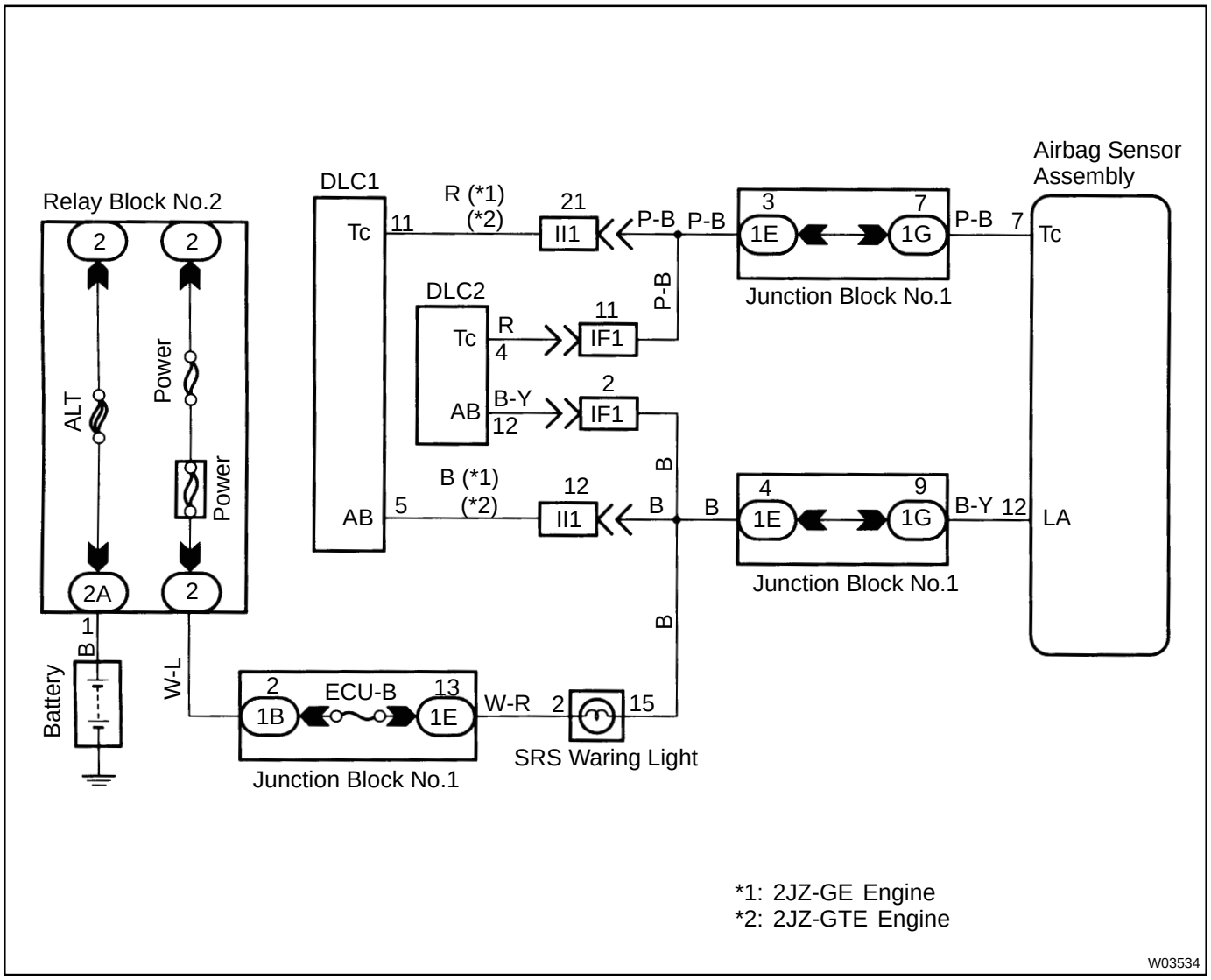

INSPECTION PROCEDURES

1	**Preparation.**

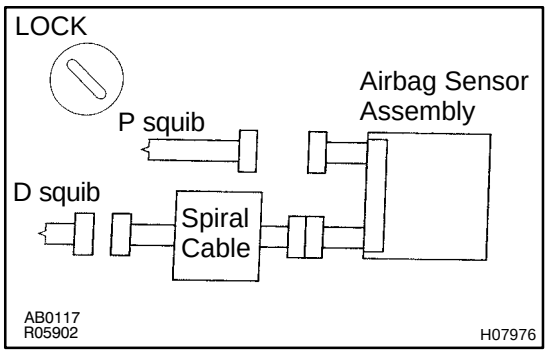

PREPARATION:

(a) Disconnect negative (-) terminal cable from the battery, and wait at least 90 seconds.

(b) Remove the steering wheel pad (See SR Section).

(c) Disconnect the connector of front passenger airbag assembly (See page RS-21).

CAUTION:

Store the steering wheel pad with the front surface facing upward.

2	**Does SRS warning light turn off?**

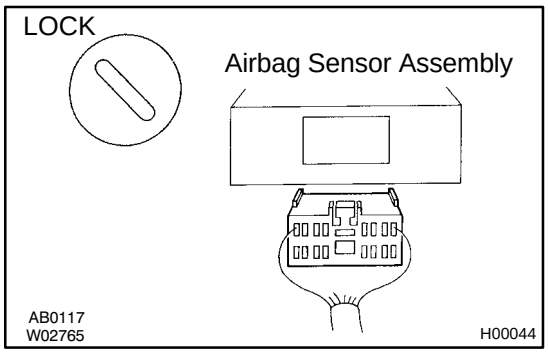

PREPARATION:

(a) Turn the ignition switch to LOCK.

(b) Disconnect negative (-) terminal cable from the battery, and wait at least 90 seconds.

(c) Disconnect the airbag sensor assembly connector.

(d) Connect negative (-) terminal cable to battery.

CHECK:

Check operation of SRS warning light.

NG → **Check SRS warning light circuit or terminal AB circuit of DLC1.**

OK

Replace airbag sensor assembly.

DI4WT-01

SRS Warning Light System Malfunction (Does not light up, when ignition switch is in turned to ACC or ON.)

CIRCUIT DESCRIPTION

The SRS warning light is located on the combination meter.
When the SRS is normal, the SRS warning light lights up for approx. 6 seconds after the ignition switch is turned from LOCK position to ACC or ON position, and then turns off automatically.
If there is a malfunction in the SRS, the SRS warning light lights up to inform the driver of the abnormality.
When terminals Tc and E_1 of the DLC1 are connected, the DTC is displayed by the blinking of the SRS warning light.

WIRING DIAGRAM

Refer to page DI-598 for the WIRING DIAGRAM.

INSPECTION PROCEDURES

1	**Check ECU-B Fuse.**

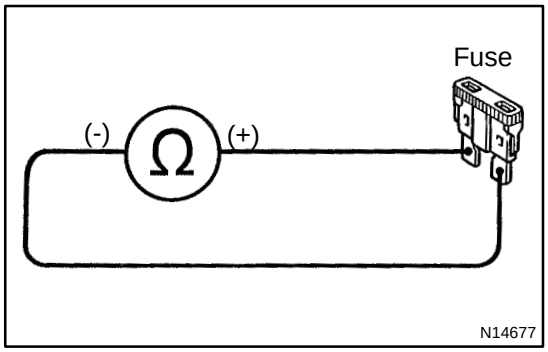

PREPARATION:
Remove the ECU-B fuse.
CHECK:
Check the continuity of ECU-B fuse.
OK:
Continuity
HINT:
- ☐ Fuse may be burnt out even if it appears to be OK during visual inspection.
- ☐ If fuse is OK, install it.

NG → **Go to step 5.**

OK

2	**Preparation (See step 1 on page DI-595).**

3	Check SRS warning light circuit.

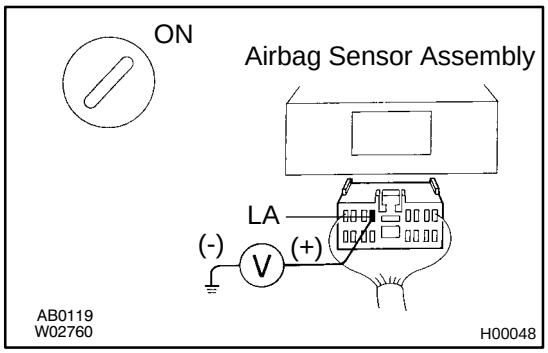

PREPARATION:

(a) Connect negative (-) terminal cable to battery.

(b) Turn the ignition switch to ACC or ON.

CHECK:

Measure the voltage LA terminal of harness side connector of airbag sensor assembly.

OK:

Voltage: 10 - 14 V

NG → **Check SRS warning light balb/repair SRS warning light circuit.**

OK

4	Does SRS warning light come on?

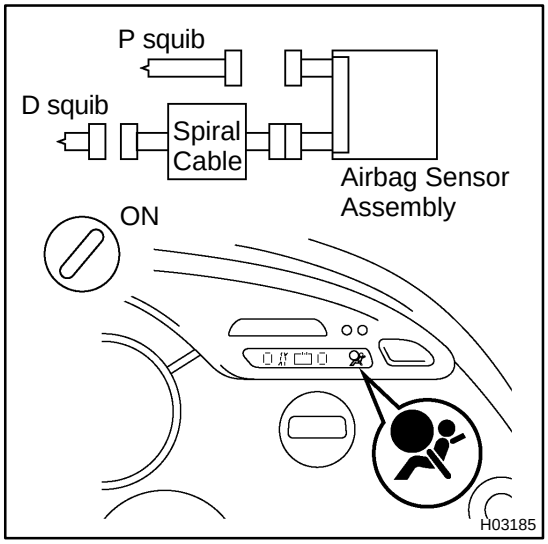

PREPARATION:

(a) Disconnect negative (-) terminal cable from the battery.

(b) Connect the airbag sensor assembly connector.

(c) Connect negative (-) terminal cable to battery, and wait at least 2 seconds.

(d) Turn the ignition switch to ACC or ON.

CHECK:

Check operation of SRS warning light.

NO → **Check terminal LA of airbag sensor assembly. If normal, replace airbag sensor assembly.**

YES

From the results of the above inspection, the malfunctioning part can now be considered normal. To make sure of this, use the simulation method to check.

5	**Is new ECU-B fuse burnt out again?**

NO → **Using simulation method, reproduce malfunction symptoms (See page IN-18).**

YES ↓

Check harness between ECU- B fuse and SRS warning light.

DI4WU-02

Tc Terminal Circuit

CIRCUIT DESCRIPTION

By connecting terminals Tc and E_1 of the DLC1 the airbag sensor assembly is set in the DTC output mode. The DTCs are displayed by the blinking of the SRS warning light.

WIRING DIAGRAM

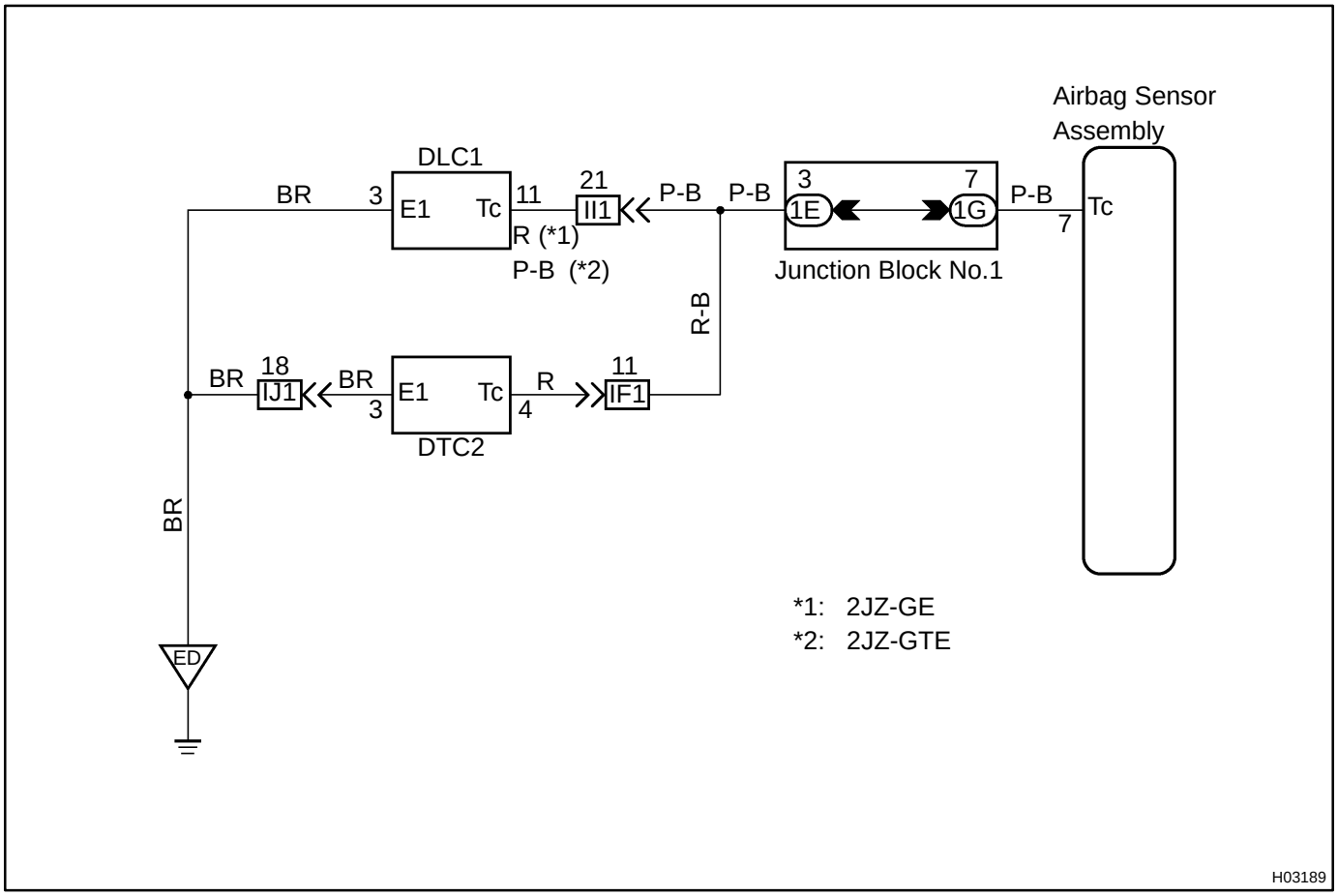

INSPECTION PROCEDURES

HINT:

If the DTC is not displayed, perform the following troubleshooting.

1	**Does SRS warning light light up for approx. 6 seconds?**

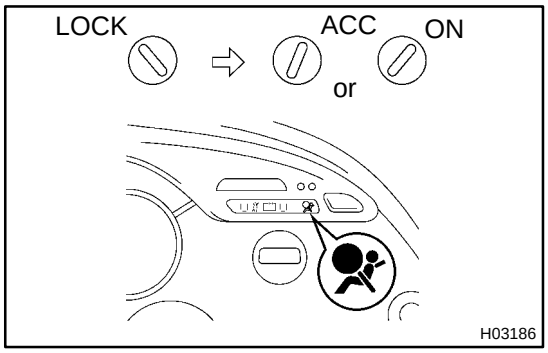

CHECK:

Check operation of SRS warning light after ignition switch is turned from LOCK position to ACC or ON position.

NO → **Check SRS warning lights system (See page DI-557).**

YES

2	**Check voltage between terminals Tc and E_1 of DLC1.**

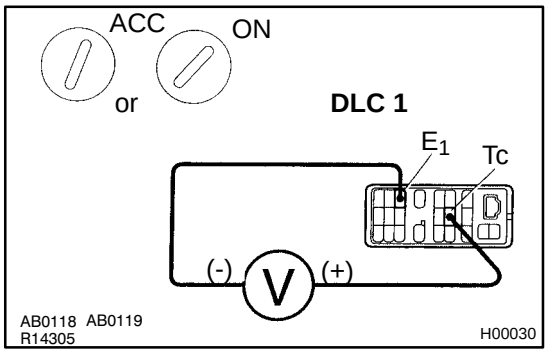

PREPARATION:

Turn the ignition switch to ACC or ON.

CHECK:

Measure the voltage between terminals Tc and E_1 of DLC1.

OK:

Voltage: 10 - 14 V

OK → **Go to step 4.**

NG

3	**Check voltage between terminal Tc of DLC1 and body ground.**

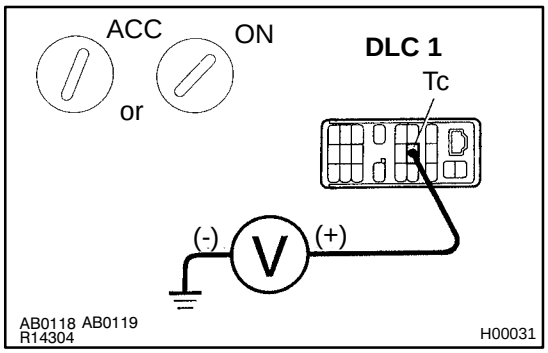

CHECK:

Measure the voltage between terminals Tc of DLC1 and body ground.

OK:

Voltage: 10 - 14 V

OK → **Check harness between terminal E_1 of DLC1 and body ground.**

NG

4	**Check airbag sensor assembly.**

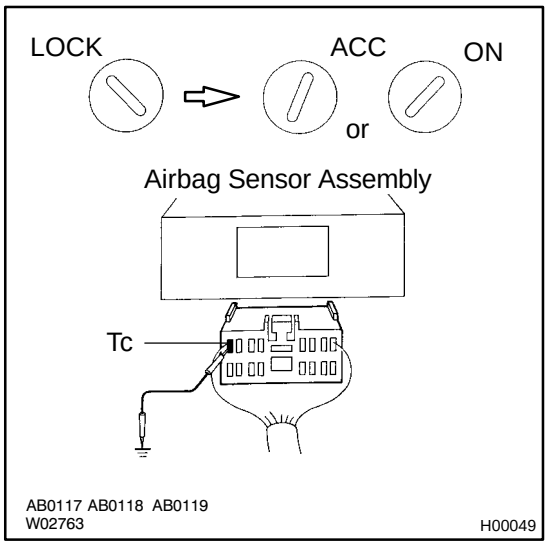

PREPARATION:

(a) Turn the ignition switch to LOCK.
(b) Disconnect negative (-) terminal cable from the battery, and wait at least 90 seconds.
(c) Remove the steering wheel pad. (See SR section)
(d) Disconnect the connector of front passenger airbag assembly. (See page RS-21)
(e) Disconnect the connector of airbag sensor assembly. (See page RS-33)
(f) Insert the service wire into terminal Tc from back side as shown.
(g) Connect the airbag sensor assembly connector with service wire.
(h) Connect negative (-) terminal cable to battery.
(i) Turn the ignition switch to ACC or ON, and wait at least 20 seconds.
(j) Connect the service wire of terminal Tc to body ground.

CHECK:

Check operation of SRS warning light.

OK:

SRS warning light comes on.

NOTICE:

Never make a mistake with the terminal connection position as this will cause a malfunction.

OK → **Check harness between airbag sensor assembly and DLC1.**

NG →

Replace airbag sensor assembly.

If the DTC is displayed without a DTC check procedure, perform the following troubleshooting.

1	**Check resistance between terminal Tc of airbag sensor assembly and body ground.**

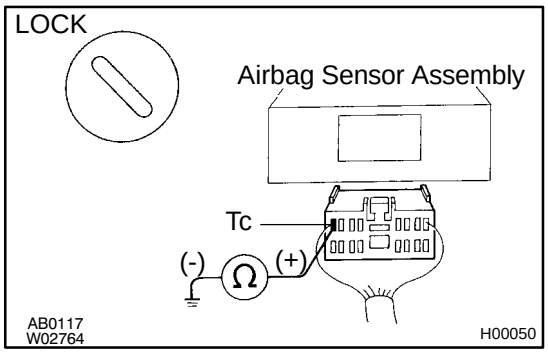

PREPARATION:

(a) Turn the ignition switch to LOCK.

(b) Disconnect negative (-) terminal cable from the battery, and wait at least 90 seconds.

(c) Disconnect the airbag sensor assembly connector.

CHECK:

Check the resistance between terminal Tc of airbag sensor assembly connector and body ground.

OK:

Resistance: 1 MΩ or higher

NG → **Repair or replace harness or connector.**

OK ↓

Replace airbag sensor assembly.

THEFT DETERRENT SYSTEM

DI4WV-01

HOW TO PROCEED WITH TROUBLESHOOTING

HINT:
Troubleshooting of the theft deterrent system is based on the premise that the door lock control system is operating normally. Accordingly, before troubleshooting the theft deterrent system, first make certain that the door lock control system is operating normally.
For troubleshooting using a volt/ohm meter, see page DI-615 .
Be sure to use troubleshooting procedure appropriate to the diagnostic tool being used.
Perform troubleshooting in accordance with the procedure on the following page.

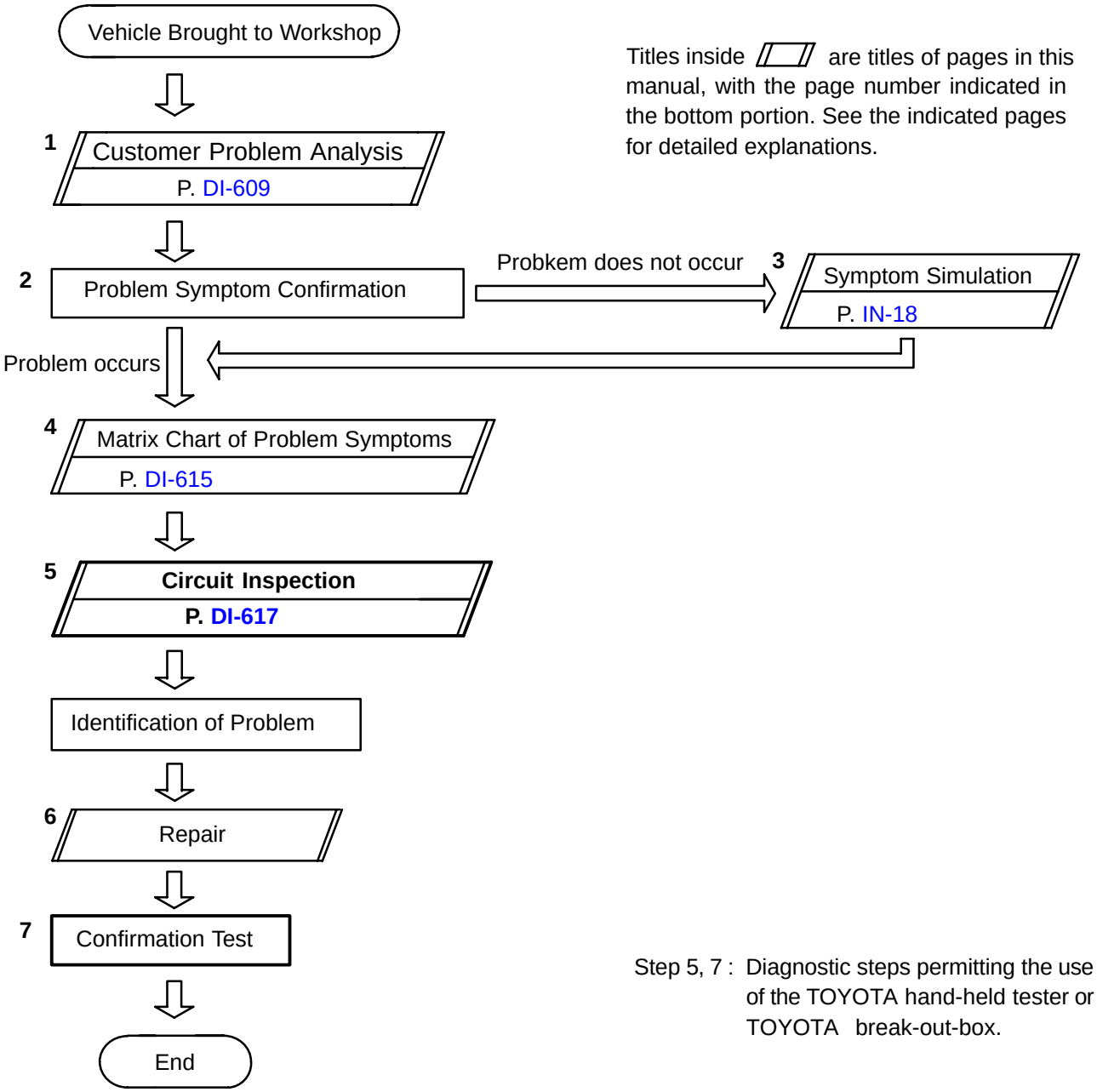

DI4WW-01

CUSTOMER PROBLEM ANALYSIS CHECK

THEFT DETERRENT SYSTEM Check Sheet

Inspector's name: _____

Customer's Name		**Registration No.**	
		Registration Year	
		Frame No.	
Date of Vehicle Brought in	/ /	**Odometer Reading**	km Mile

Date Problem First Occurred		/ /
Frequency Problem Occurs		☐ Constant ☐ Sometimes (Times per day, month) ☐ Once only
Weather Conditions When Problem Occurred	**Weather**	☐ Fine ☐ Cloudy ☐ Rainy ☐ Snowy ☐ Various/Others
	Outdoor temperature	☐ Hot ☐ Warm ☐ Cool ☐ Cold (Approx. °F (°C))

Problem Symptom	☐ Theft deterrent system cannot be set.		
	☐ Indicator light does not flash when the theft deterrent system is set. (It stays on or does not light at all.)		
	☐ Theft deterrent system does not operate.	☐ When unlocked using the door lock knob. ☐ When the engine hood is opened.	<u>Malfunction</u> ☐ Horns only ☐ Theft deterrent horn only ☐ Headlights only ☐ Taillights only ☐ Starter cut only ☐ Door lock operation only
	☐ System cannot be canceled once set.	☐ When door is unlocked using key or wireless door lock control system. ☐ When the key is inserted in the ignition key cylinder and turned to ACC or ON position. (However, only when the system has never operated) ☐ When the luggage compartment door is opened with the key.	
	☐ System cannot be canceled during warning operation.	☐ When door is unlocked using key or wireless door lock control system. ☐ When the key is inserted in the ignition key cylinder and turned to ACC or ON position.	
	☐ Warning operation starts when the system is set and the door or luggage compartment door is opened with the key.		
	☐ Others.		

DI4WX-01

PRE-CHECK

1. Setting Conditions:

SETTING OF THE THEFT DETERRENT SYSTEM

(a) Close all the doors.
(b) Close the engine hood and luggage compartment door.
(c) Remove the ignition key from the ignition key cylinder.

2. Setting Operation:

SETTING OF THE THEFT DETERRENT SYSTEM

When any of the following operations (a) or (c) is done, the theft deterrent indicator light will light up as described.

(1) Lock the left or right front door using the key. (All doors are locked by key-interlinked lock operation)
(2) With the rear doors locked and with one of the front doors locked, lock the other front door without using the key (keyless door lock).

Elapsed time after operation	Indicator light
Within about 30 seconds	Light up
After about 30 seconds	Blinks *1

*1: 1 sec. on, 1 sec. off

HINT:

When the theft deterrent system is set, doors cannot be locked or unlocked with the door lock control switch and the luggage compartment door cannot be unlocked with the luggage compartment door opener switch.

3. Cancelling Operation:

CANCELING OF THE THEFT DETERRENT SYSTEM IN THE SET CONDITION

HINT:

- Check if the theft deterrent indicator light is blinking.
- When any of the following operation (a), (b), (c) or (d) is done, the theft deterrent system is canceled and indicator light will go off.

(a) Unlock the left or right front door using the key.
(b) Insert the ignition key in the ignition key cylinder and turn it to the ACC or ON position. (This is operative only when the theft deterrent system has never operated.)
(c) Unlock the luggage compartment door with the key. *1

*1: The theft deterrent systems is temporarily canceled only while the luggage compartment door is open. Approximately 2 seconds after the luggage compartment door is closed, the theft deterrent system is reset.

4. CHECK OF THE THEFT DETERRENT SYSTEM OPERATION.

HINT:

Check if the theft deterrent indicator light is blinking.

When any of the following operations (a) or (b) is done, the system sounds the horns as theft deterrent horn and flashes the headlights and taillights for about one minute to alert. At the same time, the system disconnects the starter motor circuit and locks all doors (if all doors are not locked, the system repeats door locking operation every 2 seconds during the one minute alert time).

(a) Open the engine hood using the engine hood opener lever.

(b) Unlock any of the front or rear doors without key operation.

5. CANCELING OF THE THEFT DETERRENT SYSTEM IN OPERATING CONDITION.

The theft deterrent operation can be cancelled when any of the following conditions is met:

No.	Condition	Cancelling Operation
1	Unlock left or right door with the key.	●
2	Unlock doors with wireless door lock control system.	●
3	Insert key into ignition key cylinder and turn it to the ACC or ON position.	● *2
4	About 1 minute passes after theft deterrent operation begins.	Automatic stop*1

*1: In this case, the theft deterrent system resets in about 2 seconds if all doors are closed.

*2: The alarm will be off, but the engine will not operate. To restart the engine, see No.1

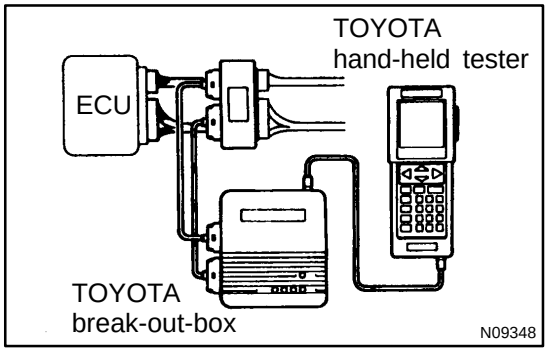

6. ECU TERMINAL VALUES MEASUREMENT USING TOYOTA BRAKE-OUT-BOX AND TOYOTA HAND-HEID TESTER

(a) Hook up the TOYOTA brake- out- box and TOYOTA hand-held tester to the vehicle.

(b) Read the ECU input/output values by following the prompts on the hand-held tester screen.

HINT:

TOYOTA hand-held tester has a ”Snapshot” function. This records the measured values and is effective in the diagnosis of intermittent problems.

Please refer to the TOYOTA hand-held tester/TOYOTA break-out-box operator’s manual for further details.

DI4WY-01

PARTS LOCATION

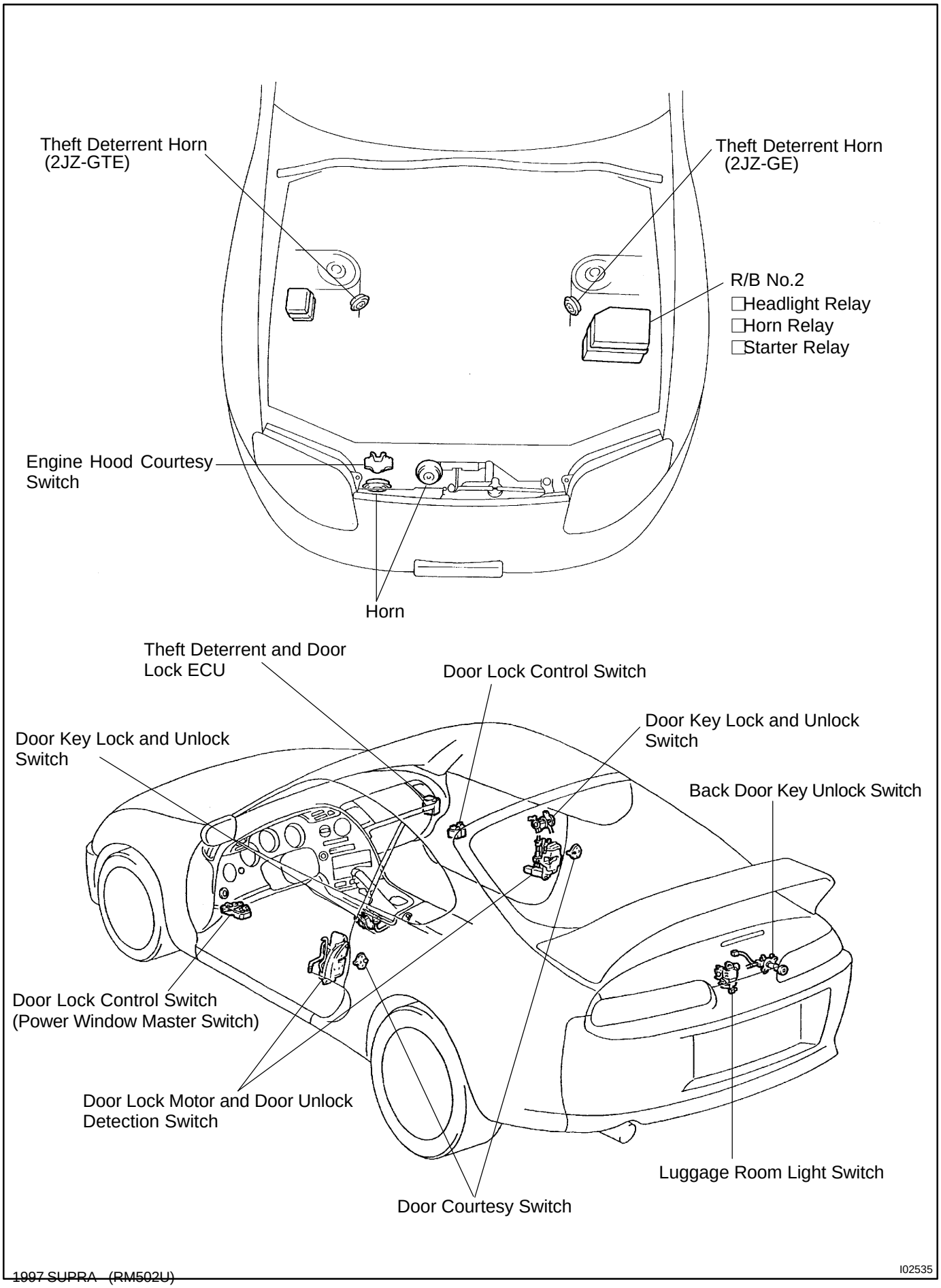

I02535

DI4WZ-01

TERMINALS OF ECM

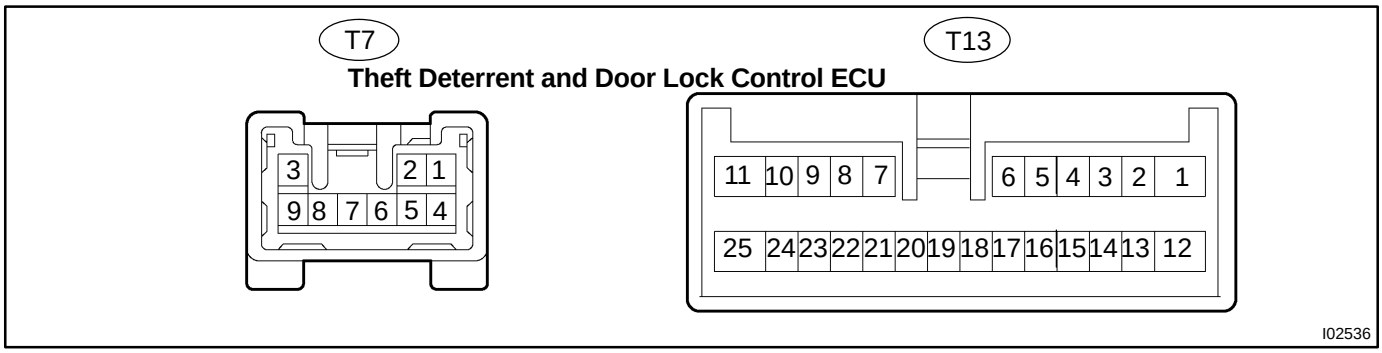

Terminals	Symbols	Condition	Standard Value
+B2 ↔ Ground (T7-9 ↔ Ground)	L-W ↔ Ground	Always.	10 - 14 V
ACT⁻ ↔ ACT⁺ (T7-2 ↔ T7-3)	L-Y ↔ L-R	Ignition switch is turned to ”OFF” position.	Below 50Ω
RLY ↔ Ground (T7-6 ↔ Ground)	Y ↔ Ground	Ignition switch is turned to ”ON” position.	10 - 14 V
IG ↔ Ground (T7-7 ↔ Ground)	B-R ↔ Ground	Ignition switch is turned to ”ON” position.	10 - 14 V
ACC ↔ E (T7-8 ↔ T7-4)	L-R ↔ W-B	Ignition switch is turned to ”ACC” position.	10 - 14 V
+B1 ↔ Ground (T13-1 ↔ Ground)	R ↔ Ground	Always.	10 - 14 V
DSWL ↔ E (T13-4 ↔ T7-4)	LG ↔ W-B	Luggage compartment door courtesy switch ON (door opened).	Below 1 Ω
		Luggage compartment door courtesy switch OFF (door closed).	1 MΩ or higher
L1 ↔ E (T13-5 ↔ T7-4)	R-W ↔ W-B	Door lock control switch ”lock” position.	Below 1 Ω
		Door lock control switch OFF or ”unlock” position.	1 MΩ or higher
UL3 ↔ E (T13-6 ↔ T7-4)	G ↔ W-B	Door key lock and unlock switch ”unlock” position.	Below 1Ω
		Door key lock and unlock switch OFF or ”lock” position.	1MΩ or higher
DSWD ↔ E (T13-7 ↔ T7-4)	R-B ↔ W-B	Door open detection switch (driver’s) ON (door opened).	Below 1Ω
		Door open detection switch (driver’s) OFF (door closed).	1MΩ or higher
UL1 ↔ E (T13-8 ↔ T7-4)	G-R ↔ W-B	Door lock control switch ”unlock” position.	Below 1Ω
		Door lock control switch OFF or ”lock” position.	1MΩ or higher
LUG ↔ E (T13-9 ↔ T7-4)	L ↔ W-B	Luggage compartment door key lock and unlock switch ON.	Below 1Ω
		Luggage compartment door key lock and unlock switch OFF.	1MΩ or higher
HEAD ↔ E (T13-10↔ T7-4)	R-Y ↔ W-B	Light control switch other than ”HEAD” position.	10 - 14 V
SH ↔ E (T13-11 ↔ T7-4)	P-B ↔ W-B	Always.	10 - 14 V
IND ↔ Ground (T13-12 ↔ Ground)	W-L ↔ Ground	Always.	Below 270 Ω
DSWH ↔ E (T13-14 ↔ T7-4)	G-R ↔ W-B	Engine hood courtesy switch ON (hood opened).	Below 1Ω
		Engine hood courtesy switch OFF (hood closed).	1MΩ or higher
LSWD ↔ E (T13-15 ↔ T7-4)	L-W ↔ W-B	Door unlock detection switch ON (door opened).	Below 1Ω
		Door unlock detection switch OFF (door closed).	1MΩ or higher
UL2 ↔ E (T13-16 ↔ T7-4)	W ↔ W-B	Door key lock and unlock switch ”unlock” position.	Below 1Ω
		Door key lock and unlock switch OFF or ”lock” position.	1MΩ or higher
DSWP ↔ E (T13-19 ↔ T7-4)	R-L ↔ W-B	Door open detection switch (passenger’s) ON (door opened).	Below 1Ω
		Door open detection switch (passenger’s) OFF (door closed).	1MΩ or higher
KSW ↔ E (T13-20 ↔ T7-4)	Y ↔ W-B	Key unlock warning switch ON.	Below 1Ω
		Key unlock warning switch OFF.	1MΩ or higher

LSWP ↔ E (T13-21 ↔ T7-4)	G-B ↔ W-B	Door unlock detection switch ON (door opened).	Below 1Ω
		Door unlock detection switch OFF (door closed).	1MΩ or higher
L2 ↔ E (T13-22 ↔ T7-4)	G-Y ↔ W-B	Door key lock and unlock switch ”lock” position.	Below 1Ω
		Door key lock and unlock switch OFF or ”unlock” position.	1MΩ or higher
TAIL ↔ E (T13-23 ↔ T7-4)	G-W ↔ W-B	Light control switch ”TAIL” position.	10 - 14 V
HORN ↔ E (T13-24 ↔ T7-4)	L-R ↔ W-B	Horn switch OFF.	10 - 14 V
SRLY ↔ Ground (T13-25 ↔ Ground)	L-O ↔ Ground	Ignition switch is turned to ”ST” position. (When park/neutral position switch ”P” position.)	10 - 14 V

DI4X0-01

PROBLEM SYMPTOMS TABLE

Proceed to the reference page shown in the matrix chart below for each malfunction symptom and trouble-shoot for each circuit.

HINT:

Troubleshooting of the theft deterrent system is based on the premise that the door lock control system is operating normally. Accordingly, before troubleshooting the theft deterrent system, first make certain that the door lock control system is operating normally.

Theft Deterrent System:

Details of Problem	Inspecting Circuit *1	See page
The theft deterrent system cannot be set	1. Indicator light circuit	DI-617
	2. Luggage compartment door key lock and unlock switch circuit	DI-633
	3. Luggage compartment door courtesy switch circuit	DI-636
	4. Door courtesy switch circuit	DI-640
	5. Engine hood courtesy switch circuit	DI-642
The indicator light does not blink when system is set	Indicator light circuit	DI-617
□When the system is set □When the back door is opened by a method other than the key □The system does not operate	Luggage compartment door courtesy switch circuit	DI-636
□When the system is set □When the engine hood is opened □The system does not operate	Engine hood courtesy switch circuit	DI-642
□While the system is in warning operation □Horns do not sound	Horn relay circuit	DI-621
□While the system is in warning operation □Theft deterrent horn does not sound	Theft deterrent horn circuit	DI-623
□While the system is in warning operation □Headlights do not flash	Headlight control relay circuit	DI-626
□While the system is in warning operation □Taillights do not flash	Taillight control relay circuit	DI-628
□While the system is in warning operation □The starter cut is not cut off	Starter relay circuit	DI-619
□When the system is set □It is not canceled when the ignition key is turned to ACC or ON position	Ignition switch circuit	DI-630
□When the system is set □It still operates when the back door is opened with the key	Luggage compartment door key lock and unlock switch circuit	DI-633
System is still set even when a rear door is open	Door courtesy switch circuit	DI-640
□Even when the system is not set □Horns sound	Horn relay circuit	DI-621
□Even when the system is not set □Theft deterrent horn sounds	Theft deterrent horn circuit	DI-623
□Even when the system is not set □Headlights stay on	Headlight control relay circuit	DI-626
□Even when the system is not set □Taillights stay on	Taillight control relay circuit	DI-628

*1: If numbers are given to the circuit proceed with troubleshooting in the order indicated by those numbers.

Door Lock System:

Trouble	Suspect Area	See page
Whole function of the door lock control system does not operate.	1. ECU Power Source Circuit 2. Actuator Power Source Circuit 3. Door Lock Motor Circuit 4. Theft Deterrent and Door Lock Control ECU	DI-644 DI-647 DI-650 DI-623
All doors or some doors are not locked and unlocked with the door lock control switch and key lock and unlock switch.	1. Door Lock Control Switch Circuit 2. Door key Lock and Unlock Switch Circuit 3. Door Lock Motor Circuit 4. Theft Deterrent and Door Lock Control ECU	DI-653 DI-656 DI-650 DI-623
Doors cannot be locked with the door lock control switch. (Doors lock and unlock normally with the key lock and unlock switch.)	1. Door Lock Control Switch Circuit 2. Key Unlock Warning Switch Circuit 3. Door Courtesy Switch Circuit 4. Theft Deterrent and Door Lock Control ECU	DI-653 DI-658 DI-640 DI-623
Doors are not locked or unlocked with the door key lock and unlock switch. (Doors lock and unlock normally with the door lock control switch.)	1. Door Key Lock and Unlock Switch Circuit 2.Theft Deterrent and Door Lock Control ECU	DI-656 DI-623
Key confinement prevention function does not operate. (Doors lock and unlock normally with the door key lock and unlock switch.)	1. Key Unlock Warning Switch Circuit 2. Door Unlock Detection Switch CIrcuit 3. Theft Deterrent and Door Lock Control ECU	DI-658 DI-638 DI-623

DI4X1-01

CIRCUIT INSPECTION

Indicator Light Circuit

CIRCUIT DESCRIPTION

When the theft deterrent system is preparing to set, this circuit lights up the indicator light. When the system has been set, it continually turns the indicator light on for 1 second and turns it off for 1 second, thus blinking the indicator light.

WIRING DIAGRAM

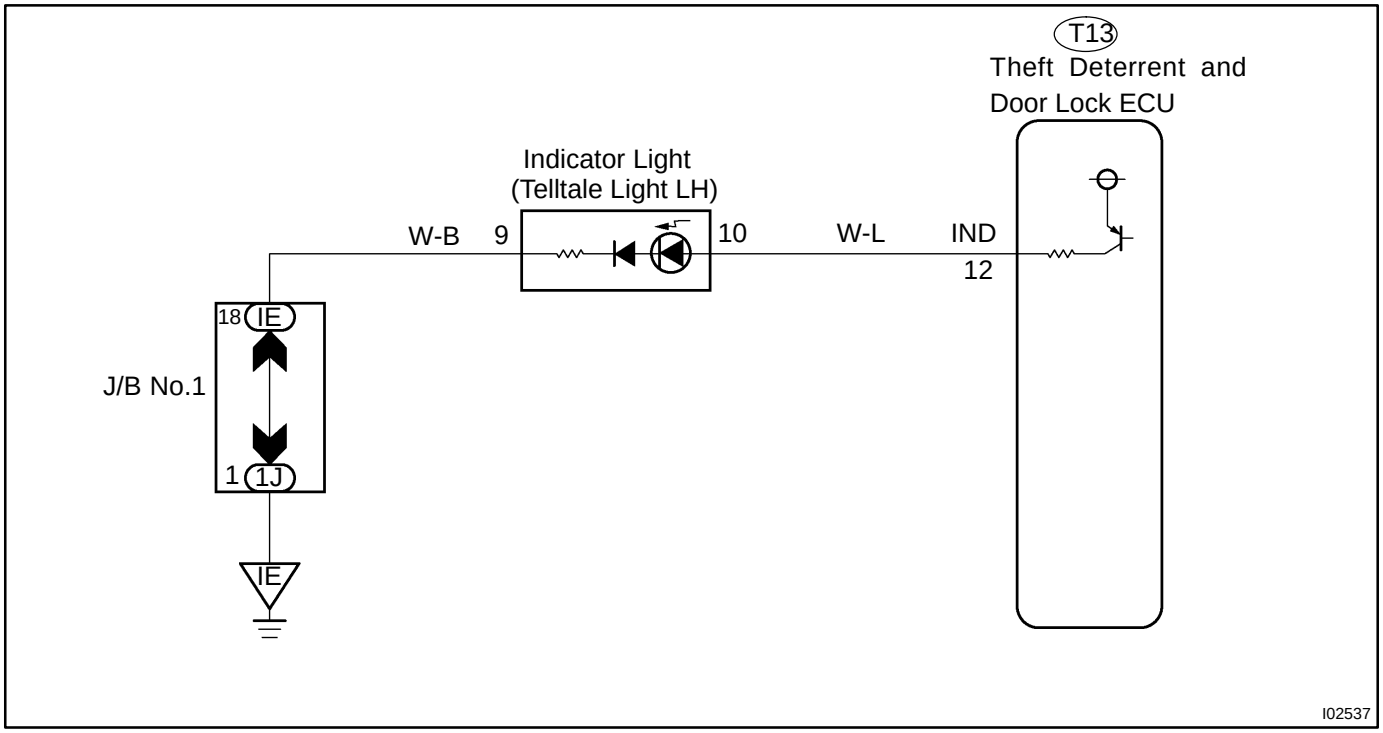

INSPECTION PROCEDURE

1	Check indicator light.

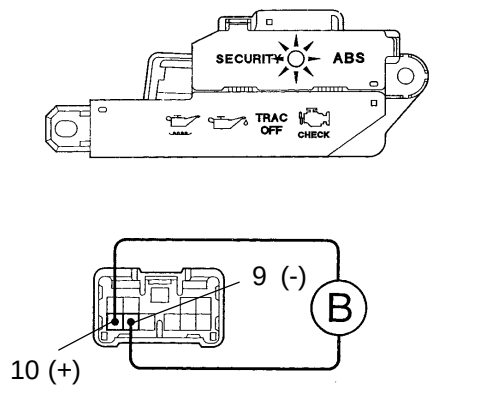

PREPARATION:

(a) Remove instrument panel cluster finish panel.

(b) Disconnect telltale light RH connector.

CHECK:

Connect positive ⊕ lead to terminal 10 and negative ⊖ lead to terminal 9 of indicator light connector.

OK:

Indicator light comes on.

NG → **Replace telltale light RH.**

OK

2	Check harness and connector between theft deterrent and door lock ECU and indicator light, indicator light and body ground (See page IN-28).

NG → **Repair or replace harness or connector.**

OK

Check and replace theft deterrent and door lock ECU. *1

*1: When there is a malfunction that the theft deterrent system cannot be set, proceed to the next numbered circuit inspection shown on matrix chart (See page DI-615).

DI4X2-01

Starter Relay Circuit

CIRCUIT DESCRIPTION

When the theft deterrent system is activated, contact ”a” in the ECU becomes open, creating an open circuit in terminal ST circuit and making the starter inoperative (starter cut).
In this condition, if one of the following operations is done, the contact ”a” in the ECU is grounded, thus canceling the starter cut:

(1) The front LH and RH door is unlocked with a key.

WIRING DIAGRAM

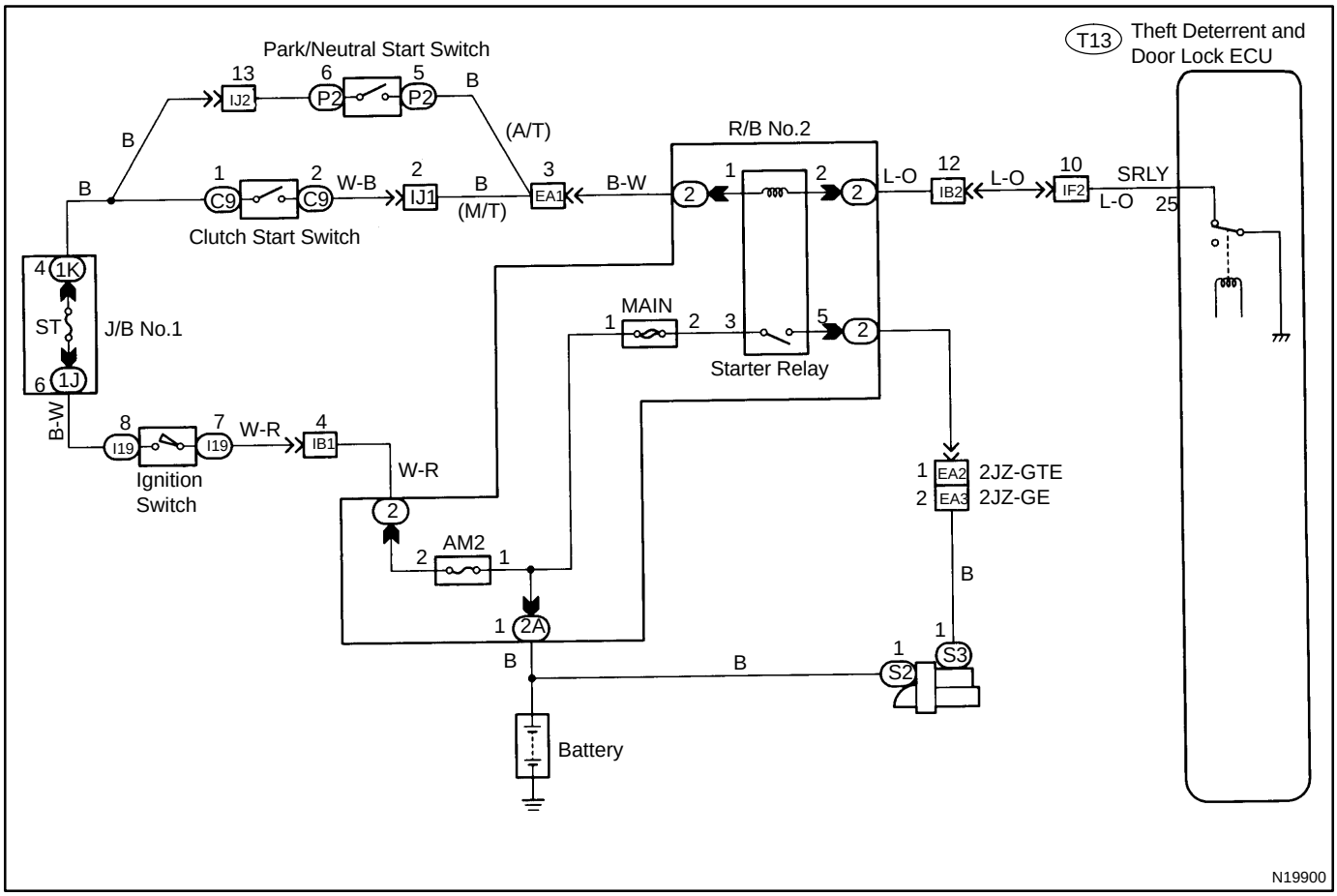

INSPECTION PROCEDURE

HINT:

This troubleshooting is based on the premise that engine cranking occurs.

If the engine does not crank, proceed to the engine troubleshooting on page DI-3 or DI-141 (Vol. 1).

1	**Check voltage between terminal SRLY of theft deterrent and door lock ECU connector and body ground.**

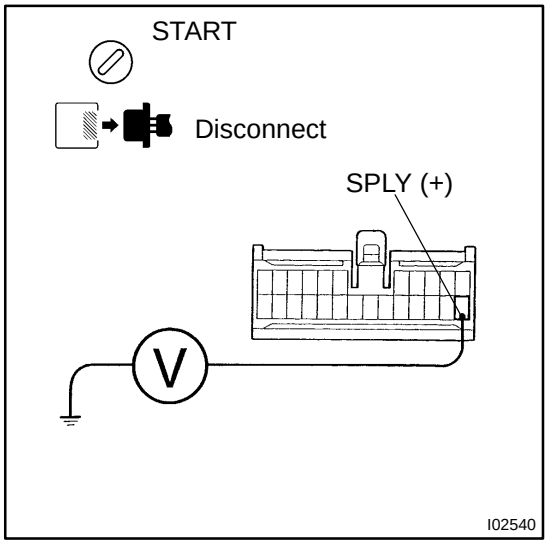

PREPARATION:

(a) Remove the instrument panel. (See page BO-50)

(b) Disconnect the ECU connector.

CHECK:

Measure voltage between terminal SRLY of theft deterrent ECU connector and body ground, when ignition switch is turned to ST position.

OK:

Voltage: 10 - 14 V

OK → **Check and replace theft deterrent ECU.**

NG

Check and repair harness and connector between starter and theft deterrent and door lock ECU (See page IN-28).

DI4X3-01

Horn Relay Circuit

CIRCUIT DESCRIPTION

When the theft deterrent system is activated, it causes the Tr in the ECU to switch on and off in approximately 0.2 sec. cycles. This switches the horn relay on and off, thus the horn blow (See the wiring diagram below). In this condition, if any of the following operations is done, the Tr in the ECU goes off and the horn relay switches off, thus the horns stop blowing:

(1) The front LH or RH door is unlocked with a key.
(2) The ignition switch is turned to the ACC or ON position.
(3) Approximately 1 minute elapses.

WIRING DIAGRAM

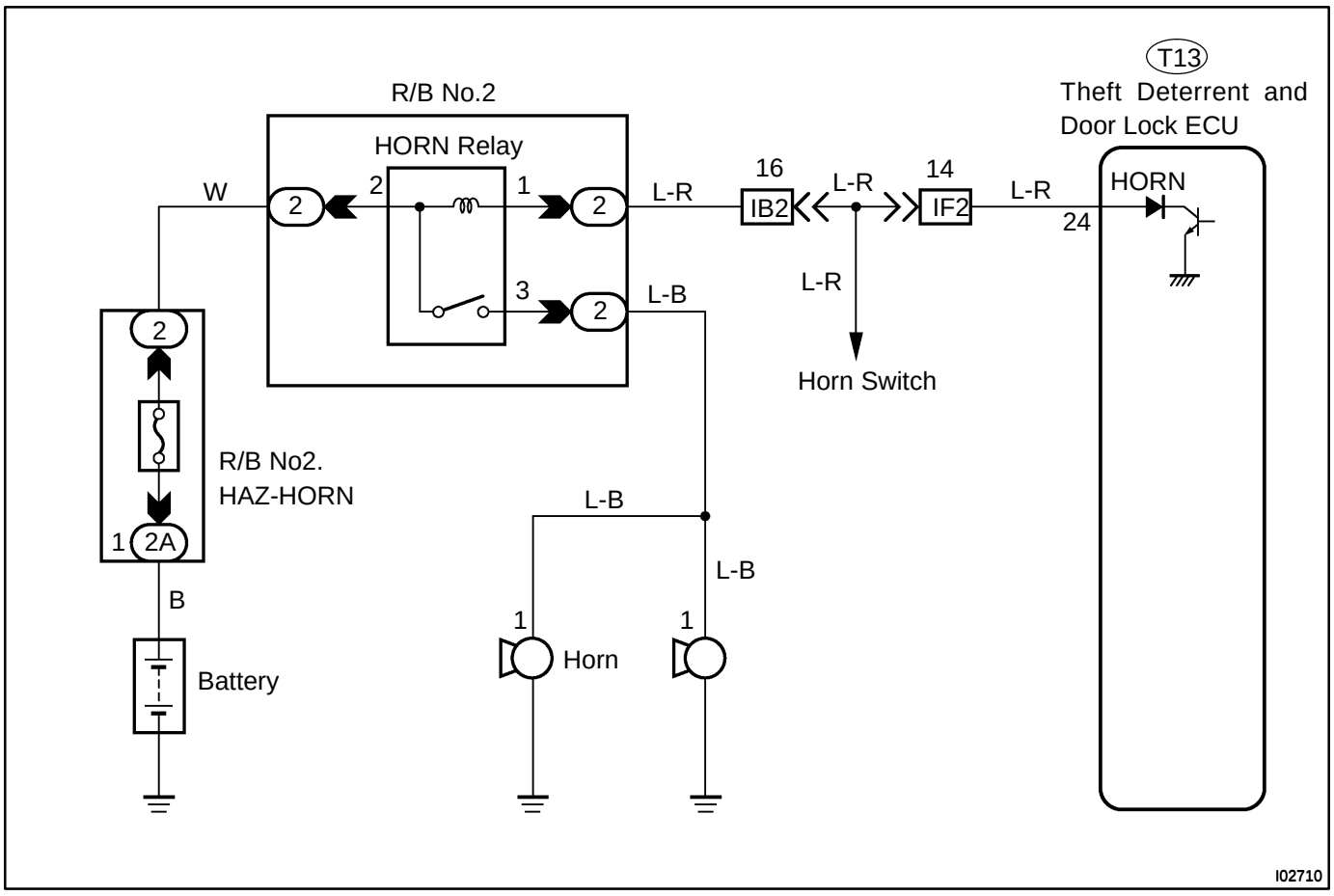

INSPECTION PROCEDURE

1	**Check voltage between terminal HORN of theft deterrent and door lock ECU connector and body ground.**

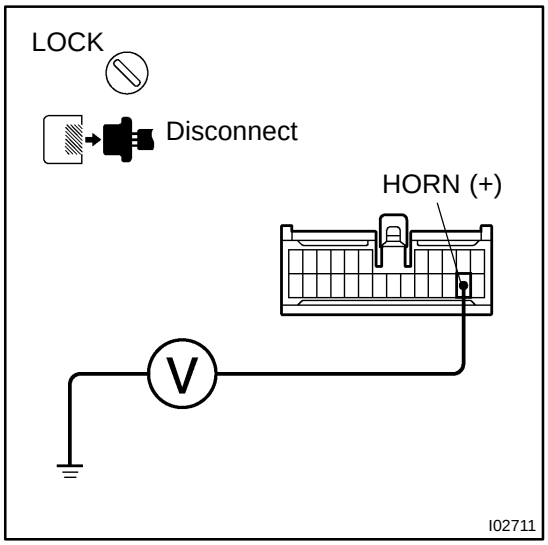

PREPARATION:

(a) Remove the instrument panel. (See page BO-50).

(b) Disconnect the ECU connector.

CHECK:

Measure voltage between terminal HORN of theft deterrent ECU connector and body ground.

OK:

Voltage : 10 - 14 V

OK → **Check and replace theft deterrent and door lock ECU.**

NG

Check and repair harness and connector between theft deterrent and door lock ECU and horn relay (See page IN-28).

DI4X4-01

Theft Deterrent Horn Circuit

CIRCUIT DESCRIPTION

When the theft deterrent system is activated, contact ”a” and contact ”b” in the ECU close alternately in cycles of approximately 0.2 sec., causing the theft deterrent horn to blow (See the wiring diagram below).
In this condition, if any of the following operations is done, the contact ”a” in the ECU opens, thus stopping the theft deterrent horn from blowing:

(1) The front LH or RH door is unlocked with a key.
(2) The ignition switch is turned to the ACC or ON position.
(3) Approximately 1 minute elapses.

WIRING DIAGRAM

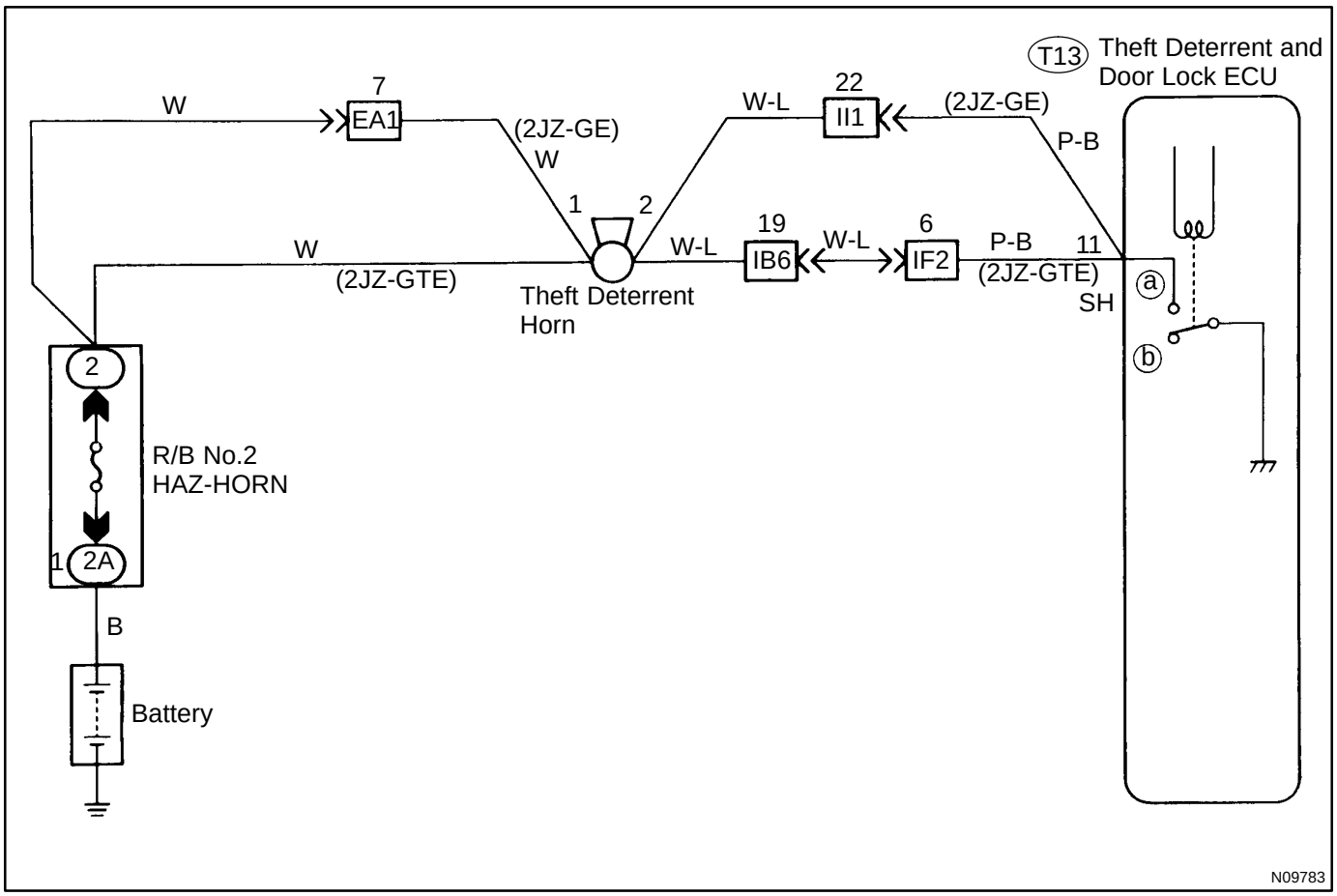

INSPECTION PROCEDURE

1	**Check voltage between terminal SH of theft deterrent horn connector and body ground.**

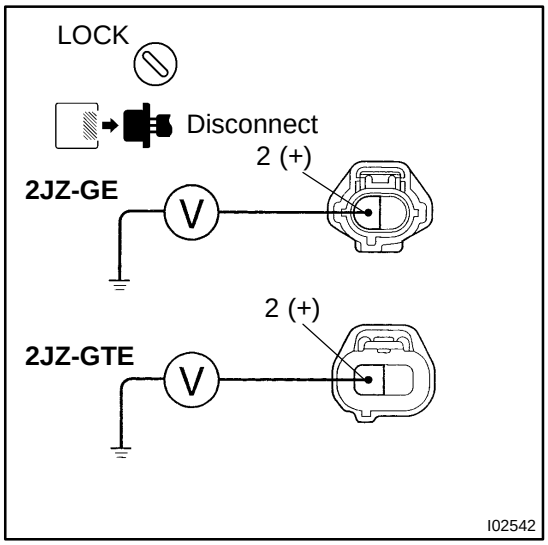

PREPARATION:
Remove the theft deterrent horn and disconnect the connector.
CHECK:
Measure voltage between terminal 1 of theft deterrent horn connector and body ground.
OK:
Voltage : 10 - 14 V

NG → **Check and repair harness and connector between HORN fuse and theft deterrent horn.**

OK

2	**Check theft deterrent horn.**

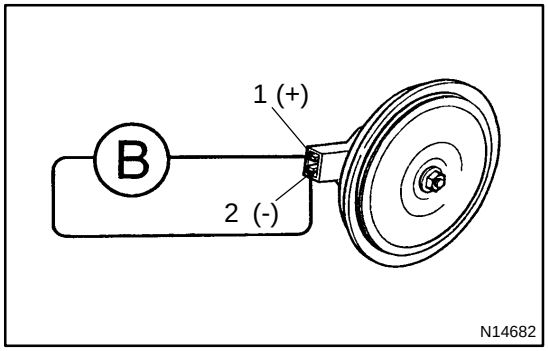

CHECK:
Connect positive ⊕ lead to terminal 1 and negative ⊖ lead to terminal 2 of theft deterrent horn connector.
OK:
Theft deterrent horn blows.

NG → **Replace theft deterrent horn.**

OK

3	**Check harness and connector between theft deterrent and door lock ECU and theft deterrent horn (See page IN-28).**

NG → **Check and repair harness or connector.**

OK

Check and replace theft deterrent ECU.

DI4X5-01

Headlight Control Relay Circuit

CIRCUIT DESCRIPTION

When the theft deterrent system is activated, it causes the Tr in the ECU to switch on and off at approximately 0.2 sec. intervals. This switches the headlight control relay on and off, thus flashing the headlights (See the wiring diagram below).

In this condition, if any of the following operations is done, the Tr in the ECU goes off and the headlight control relay switches off, thus stopping the headlights flashing:

(1) The front LH or RH door is unlocked with a key.
(2) The ignition switch is turned to the ACC or ON position.
(3) Approximately 1 minute elapses.

WIRING DIAGRAM

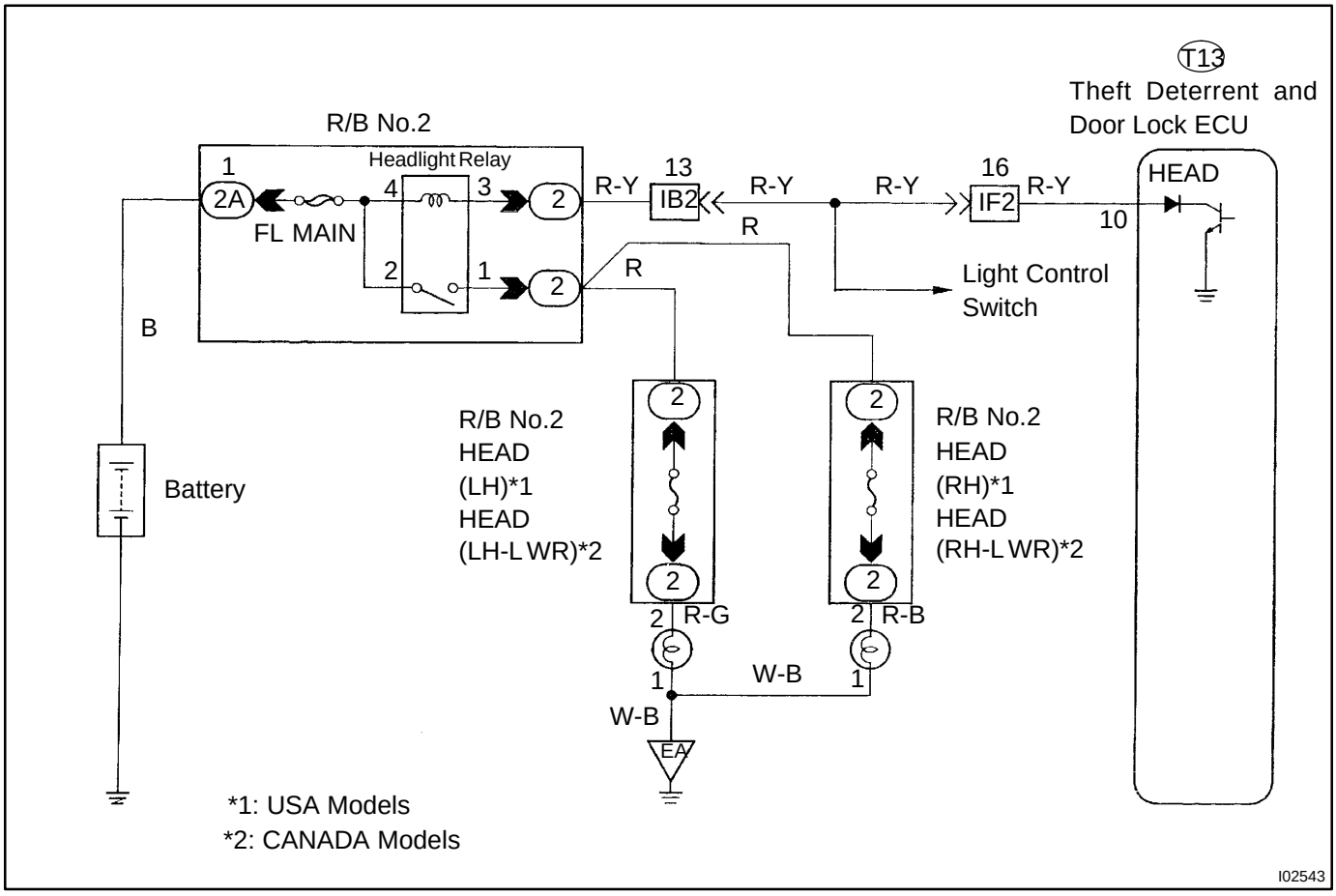

INSPECTION PROCEDURE

HINT:

The flow chart below is based on the premise that the headlights light up normally whenever the light control switch is operated. If headlight operation is not normal when the light control switch is operated, proceed to troubleshooting on page BE-2 .

1	**Check voltage between terminal HEAD of theft deterrent and door lock ECU connector and body ground.**

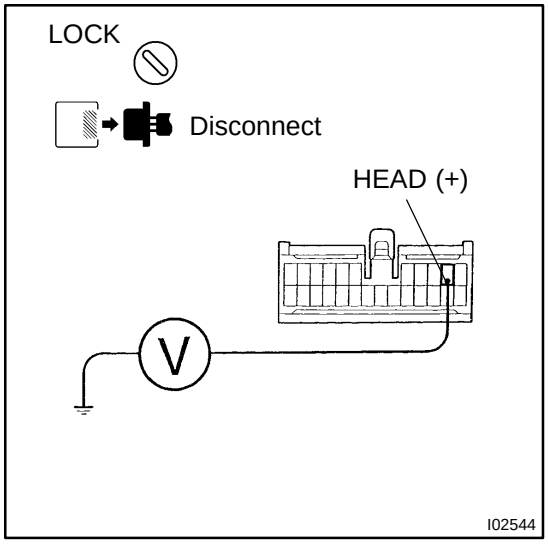

PREPARATION:

(a) Remove the instrument panel. (See page BO-50)

(b) Disconnect the ECU connector.

CHECK:

Measure voltage between terminal HEAD of theft deterrent ECU connector and body ground.

OK:

Voltage: 10 - 14 V

OK → **Check and replace theft deterrent and door lock ECU.**

NG

Check and repair harness and connector between theft deterrent and door lock ECU and headlight control relay (See page IN-28).

DI4X6-01

Taillight Control Relay Circuit

CIRCUIT DESCRIPTION

When the theft deterrent system is activated, it causes the Tr in the ECU to switch on and off at approximately 0.2 sec. intervals. This switches the taillight control relay on and off, thus the taillights flash (See the wiring diagram below).

In this condition, if any of the following operations is done, the Tr in the ECU goes off and the taillight control relay switches off, thus stopping the taillights flashing:

(1) The front LH or RH door is unlocked with a key.
(2) The ignition switch is turned to the ACC or ON position.
(3) Approximately 1 minute elapses.

WIRING DIAGRAM

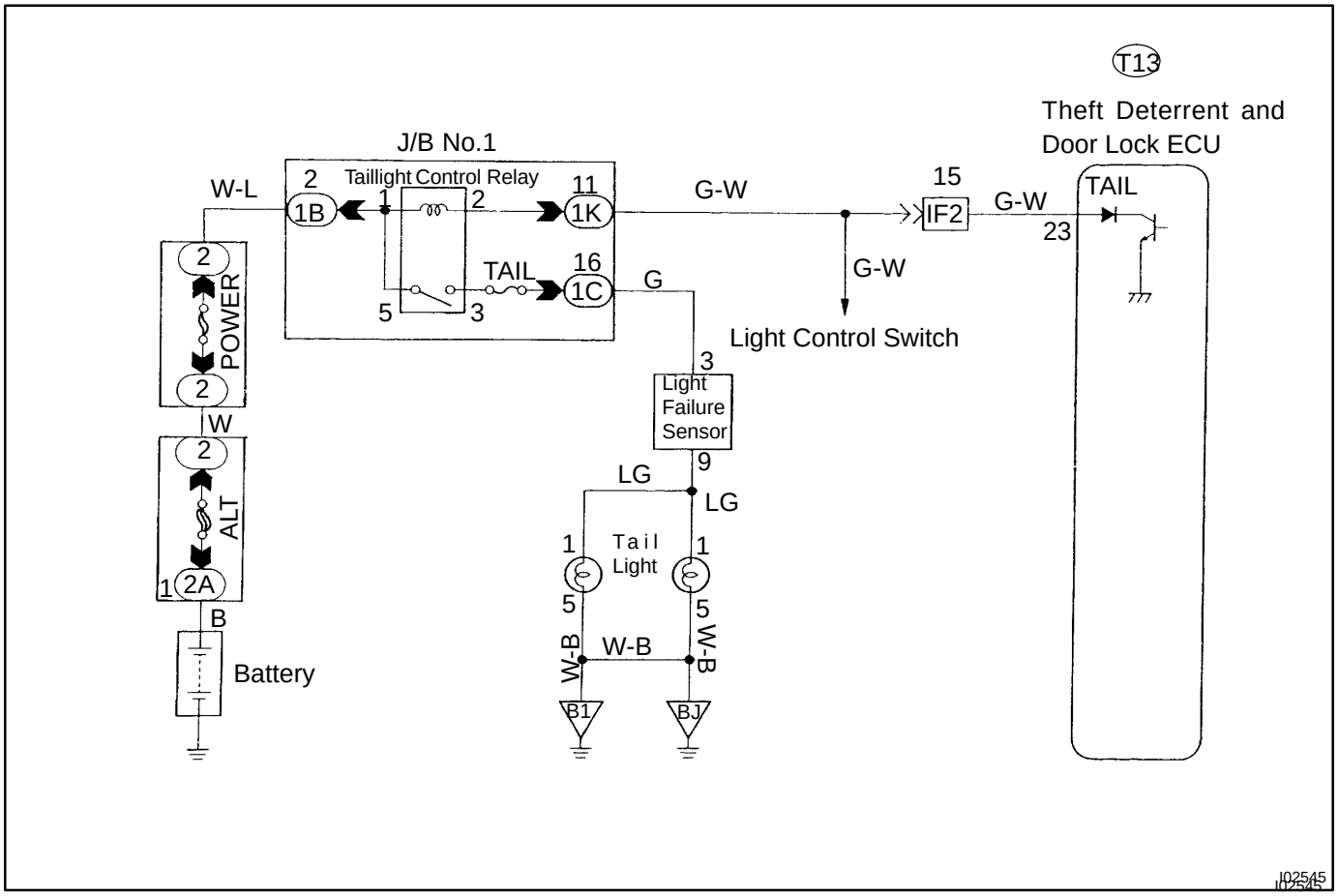

INSPECTION PROCEDURE

1	**Check voltage between terminal TAIL of theft deterrent door lock ECU connector and body ground.**

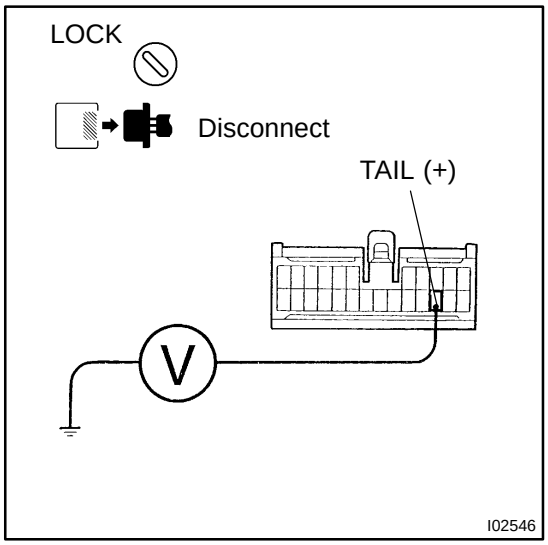

PREPARATION:

(a) Remove the instrument panel. (See page BO-50)

(b) Disconnect the ECU connector.

CHECK:

Measure voltage between terminal TAIL of theft deterrent and door lock ECU connector and body ground.

OK:

Voltage: 10 - 14 V

OK → **Check and replace theft deterrent ECU.**

NG

Check and repair harness and connector between theft deterrent and door lock ECU and taillight control relay (See page IN-28).

DI4X7-01

Ignition Switch Circuit

CIRCUIT DESCRIPTION

When the ignition switch is turned to the ACC position, battery positive voltage is applied to the terminal ACC of the ECU. Also, if the ignition switch is turned to the ON position, battery positive voltage is applied to the terminals ACC and IG of the ECU. When the battery positive voltage is applied to the terminal ACC of the ECU while the theft deterrent system is activated, the warning stops. Furthermore, power supplied from the terminals ACC and IG of the ECU is used as power for the door courtesy switch, and position switch, etc.

WIRING DIAGRAM

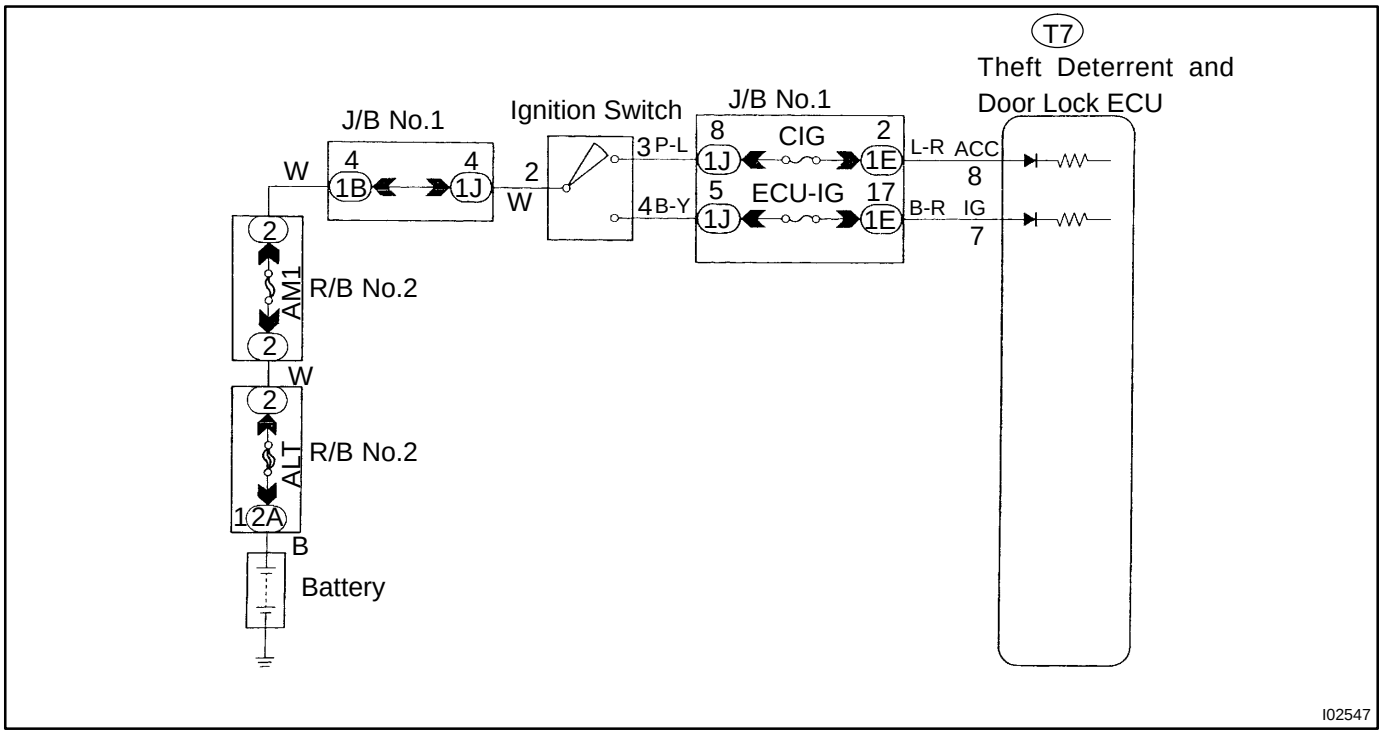

INSPECTION PROCEDURE

1	**Check CIG and ECU-IG fuses.**

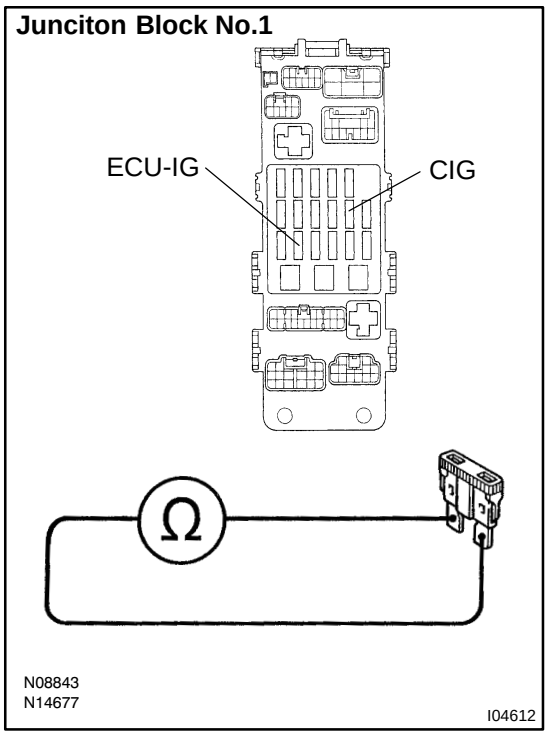

PREPARATION:

Remove CIG and ECU-IG fuses from J/B No.1.

CHECK:

Check continuity of CIG and ECU-IG fuses.

OK:

Continuity

NG → **Check for short in all the harness and components connected to the CIG and ECU-IG fuses (See attached wiring diagram).**

OK

2	**Check voltage between terminals IG and ACC of theft deterrent and door lock ECU and body ground.**

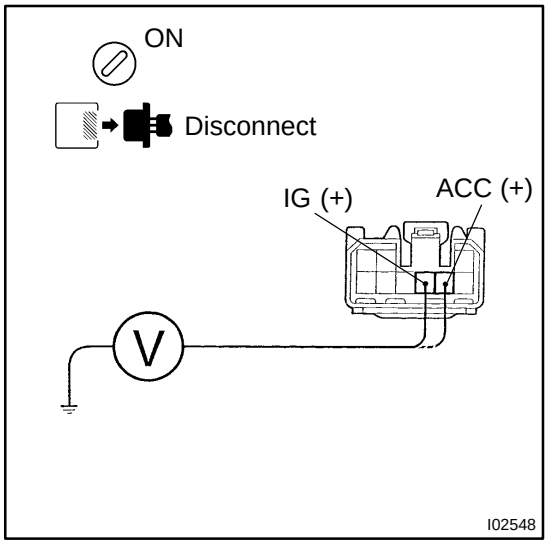

PREPARATION:

(a) Remove the instrument panel. (See page BO-50)

(b) Disconnect the ECU connector.

(c) Turn the ignition switch ON.

CHECK:

Measure voltage between terminals IG and ACC of theft deterrent ECU connector and body ground.

OK:

Voltage: 10 - 14 V

OK → **Check and replace theft deterrent and door lock ECU.**

NG

Check and repair harness and connector between theft deterrent and door lock ECU and battery (See page IN-28).

DI4X9-01

Luggage Compartment Door Courtesy Switch Circuit

CIRCUIT DESCRIPTION

The luggage compartment door courtesy switch goes on when the back door is opened and goes off when the back door is closed.

WIRING DIAGRAM

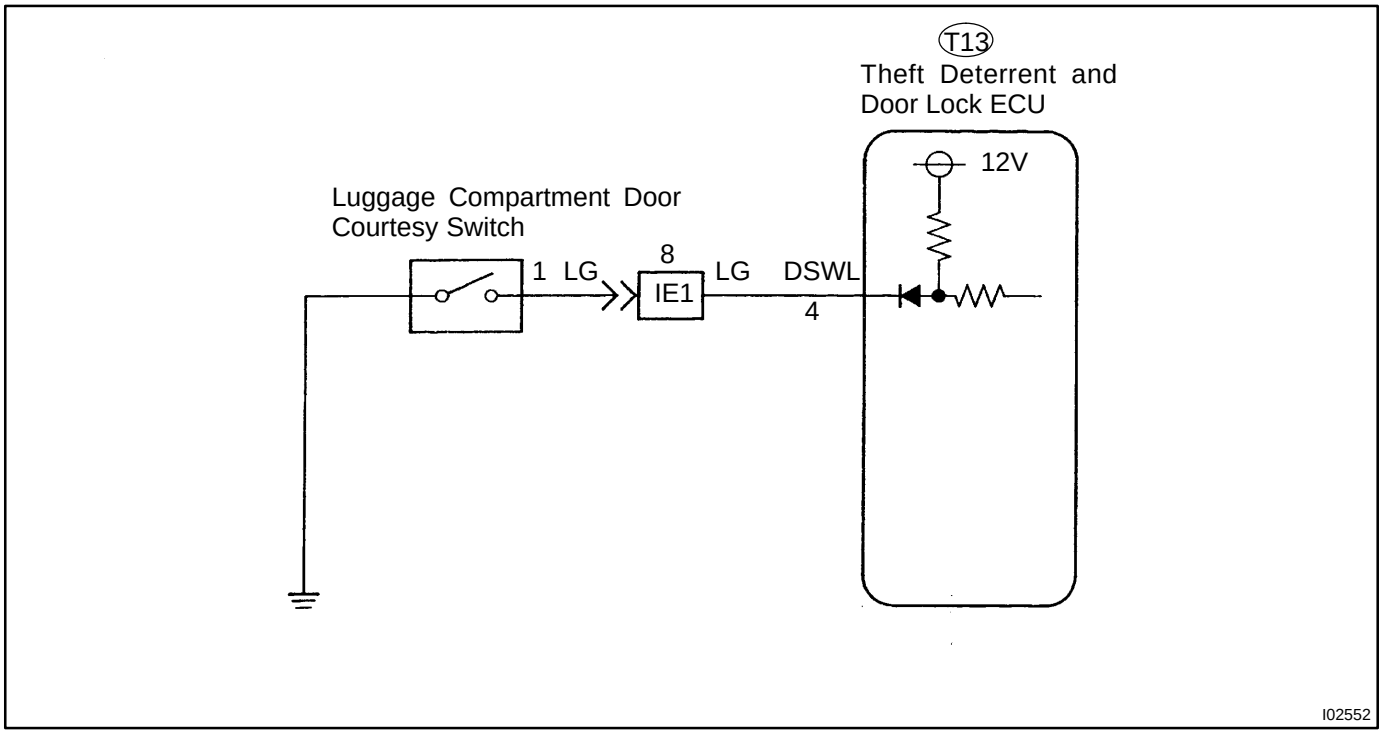

INSPECTION PROCEDURE

1	**Check operation of luggage room light.**

CHECK:

Check that luggage room light goes off when luggage room light switch is pushed, and comes on when switch is not pushed.

NG → **Check and repair luggage compartment door courtesy light circuit (See page DI-636).**

OK

2	**Check for open in harness and connector between theft deterrent and door lock ECU and luggage compartment door courtesy switch (See page IN-28).**

NG → **Repair or replace harness or connectors.**

OK

Check and replace theft deterrent ECU. *1

*1: When there is a malfunction that the theft deterrent system cannot be set, proceed to the next numbered circuit inspection shown on matrix chart (See page DI-615).

DI4XA-01

Door Unlock Detection Switch Circuit

CIRCUIT DESCRIPTION

The door unlock detection switch goes off when the door lock knob is operated to the lock position, and comes on when the door lock knob is operated to the unlock position.

WIRING DIAGRAM

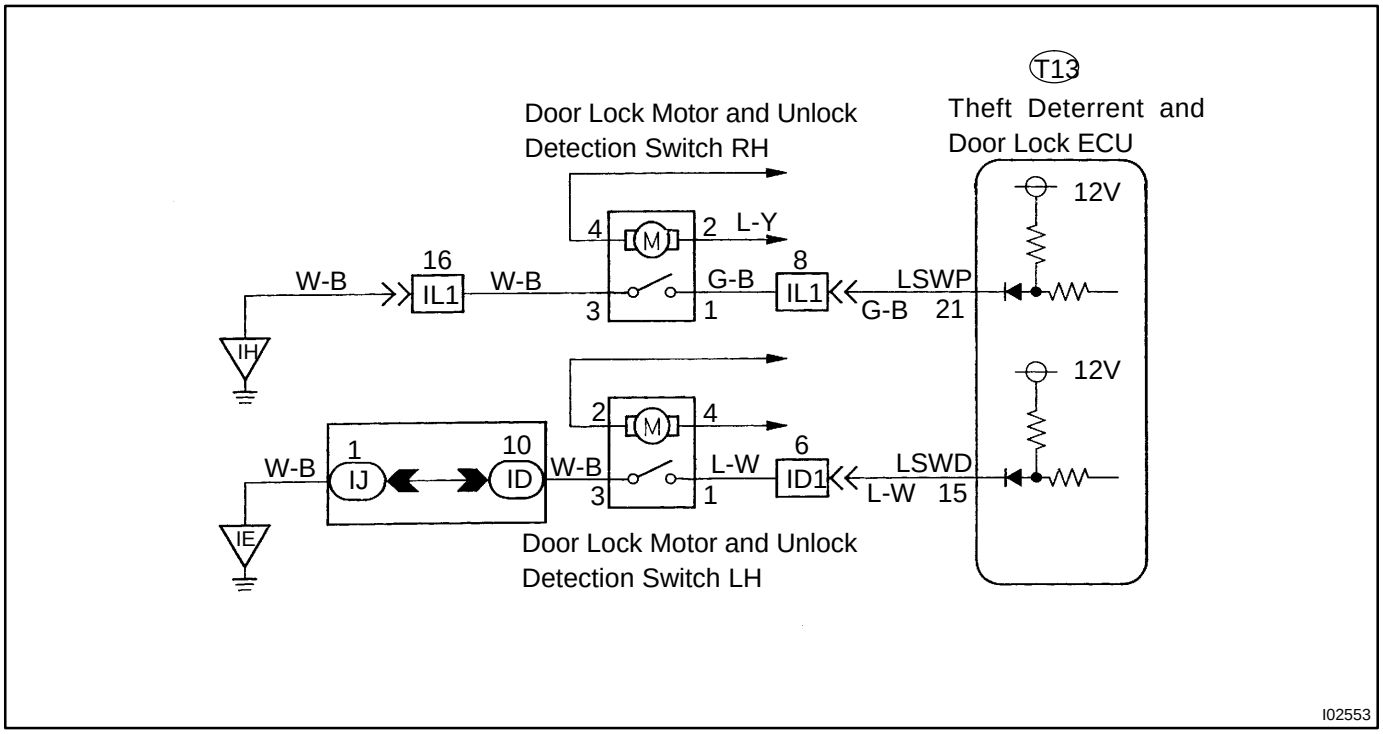

INSPECTION PROCEDURE

1	**Check door unlock detection switch.**

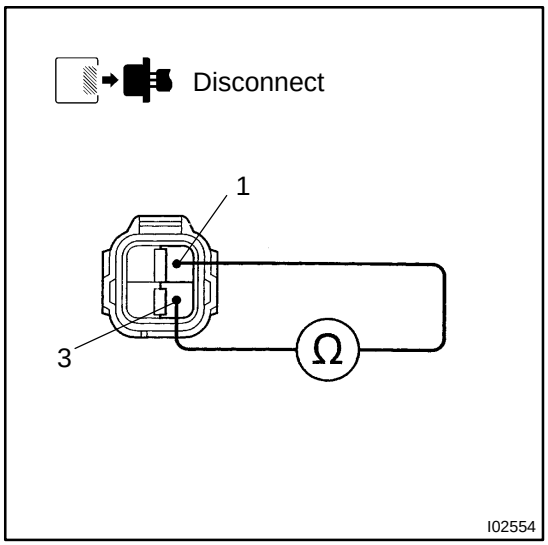

PREPARATION:

(a) Remove the door trim.

(b) Disconnect door lock motor and door unlock detection switch connector.

CHECK:

Check continuity between terminals 1 and 3 of door unlock detection switch connector, when door lock knob is operated to the lock side and to the unlock side.

OK:

Switch condition	Terminal No. to continuity
Door unlock	1 - 3
Door lock	-

NG → **Replace door unlock detection switch.**

OK

2	**Check harness and connector between theft deterrent and door lock ECU and door unlock detection switch, door unlock detection switch and body ground (See page IN-28).**

NG → **Repair or replace harness or connector.**

OK

Check and replace theft deterrent and door lock ECU. *1

*1: When there is a malfunction that the theft deterrent system cannot be set, proceed to the next numbered circuit inspection shown on matrix chart (See page DI-615).

DI4XB-01

Door Courtesy Switch Circuit

CIRCUIT DESCRIPTION

The door courtesy switch goes on when the door is opened and goes off when the door is closed.

WIRING DIAGRAM

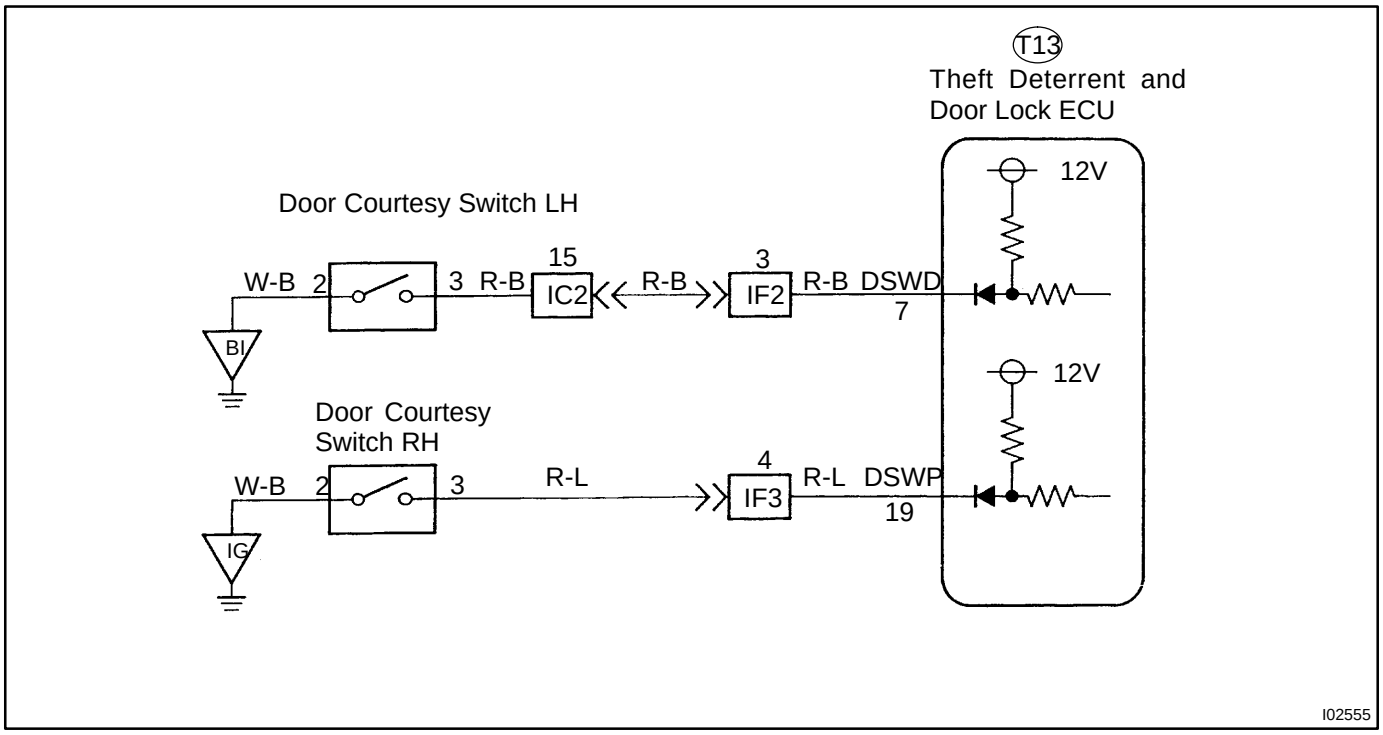

INSPECTION PROCEDURE

1	**Check operation of open door warning light.**

CHECK:

Check that open door warning light comes on when each door is opened, and goes off when all doors are closed.

NG → **Check and repair open door warning light circuit.**

OK

2	**Check for open in harness and connector between theft deterrent and door lock ECU and door courtesy switch (See page IN-28).**

OK → **Check and replace theft deterrent ECU. *1**

NG

Repair or replace harness or connector.

*1: When there is a malfunction that the theft deterrent system cannot be set, proceed to the next numbered circuit inspection shown on matrix chart (See page DI-615).

DI4XC-01

Engine Hood Courtesy Switch Circuit

CIRCUIT DESCRIPTION

The engine hood courtesy switch is built into the engine hood lock assembly and goes on when the engine hood is opened and goes off when the engine hood is closed.

WIRING DIAGRAM

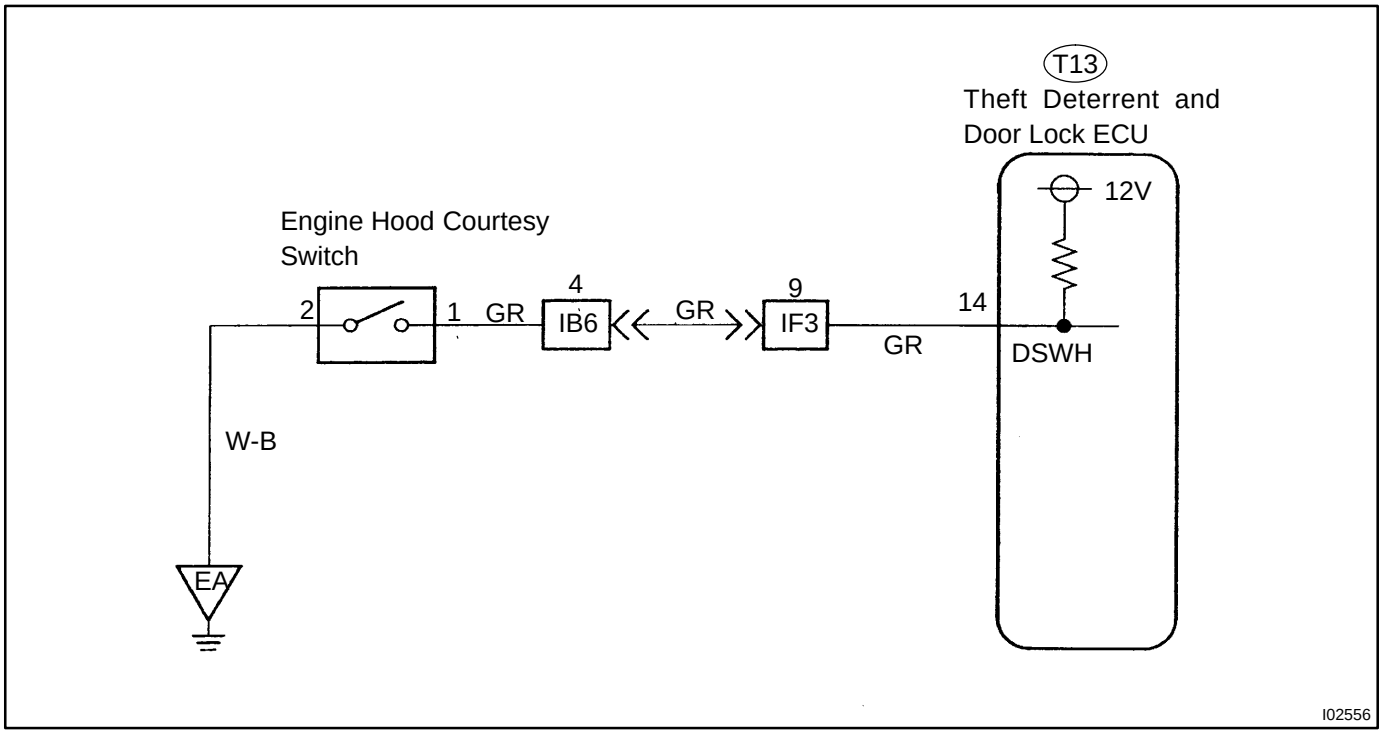

INSPECTION PROCEDURE

1	Check engine hood courtesy switch.

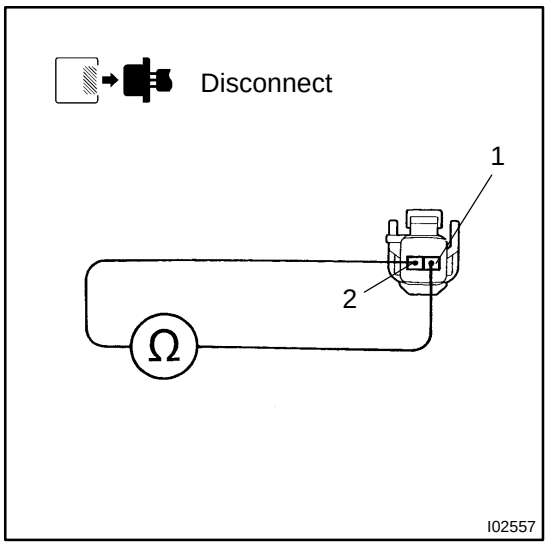

PREPARATION:

(a) Remove engine hood lock assembly.

(b) Disconnect engine hood courtesy switch connector.

CHECK:

Check continuity between terminals 1 and 2 when engine hood lock is locked and unlocked.

OK:

Engine hood lock	Terminal No. to continuity
Lock	-
Unlock	1 - 2

NG → **Replace engine hood courtesy switch.**

OK

2	Check harness and connector between theft deterrent and door lock ECU and switch, switch and body ground (See page IN-28).

NG → **Repair or replace harness or connector.**

OK

Check and replace theft deterrent and door lock ECU (See page IN-28).

DI4X8-01

Luggage Compartment Door Key Lock and Unlock Switch Circuit

CIRCUIT DESCRIPTION

The luggage compartment door key lock and unlock switch goes on when the back door key cylinder is turned to the unlock side with the key.

WIRING DIAGRAM

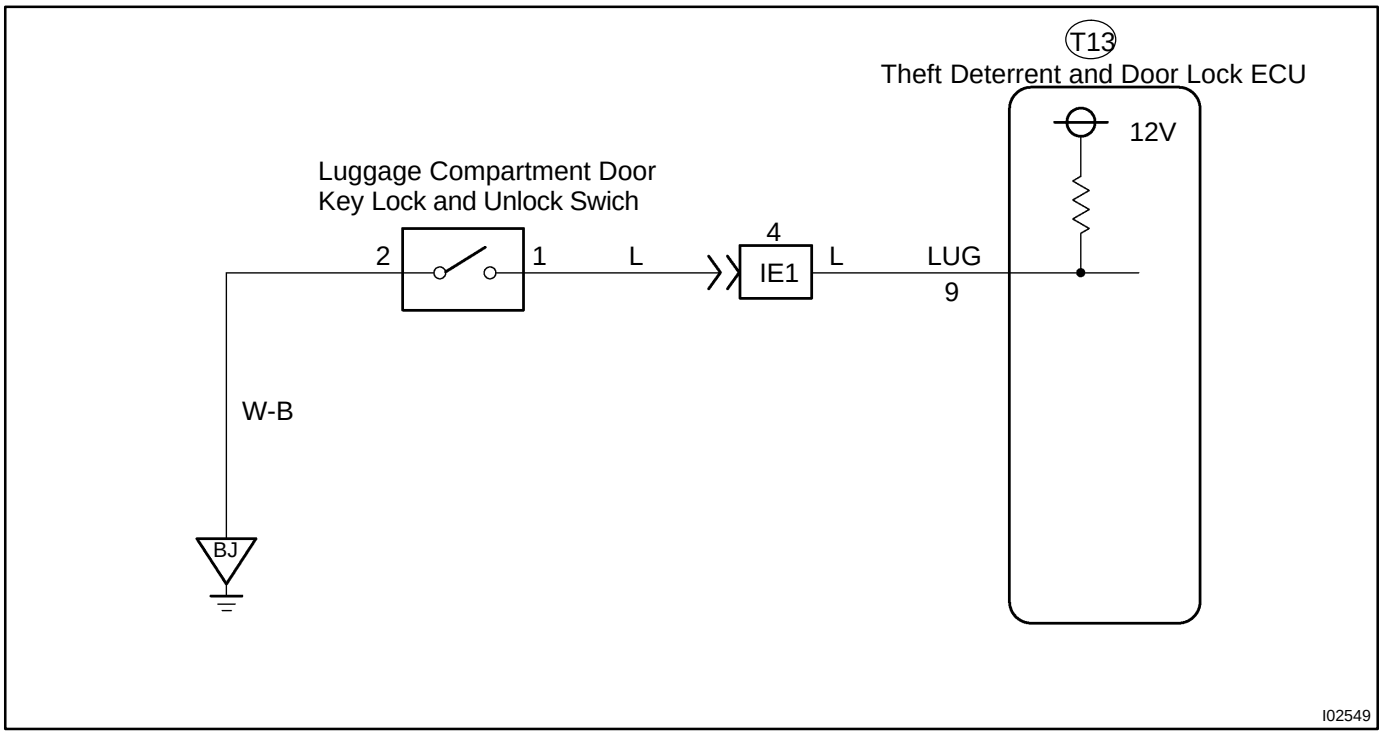

INSPECTION PROCEDURE

1	**Check voltage between terminal 1 of luggage compartment door key lock and unlock switch connector and body ground.**

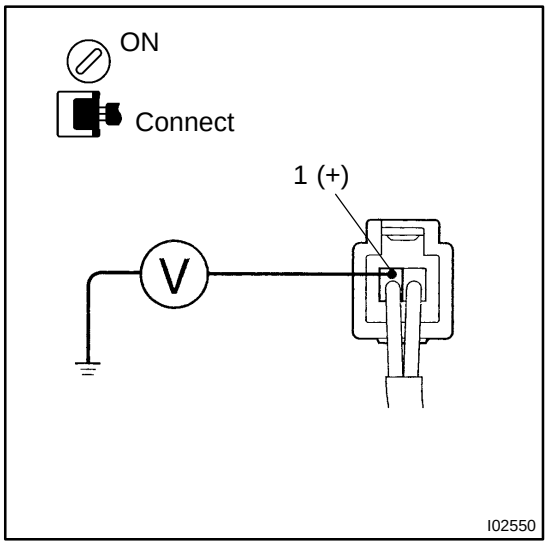

PREPARATION:

(a) Remove deck trim rear cover.

(b) Turn the ignition switch ON.

CHECK:

Measure voltage between terminal 1 of luggage compartment door key lock and unlock switch connector and body ground, when the key is turned to the unlock side and not turned.

OK:

Key operation	Voltage
Turned to the unlock side	0 V
Not turned	Battery positive voltage

OK → **Check and replace theft deterrent and door lock ECU. *1**

NG

2	**Check luggage compartment door key lock and unlock switch.**

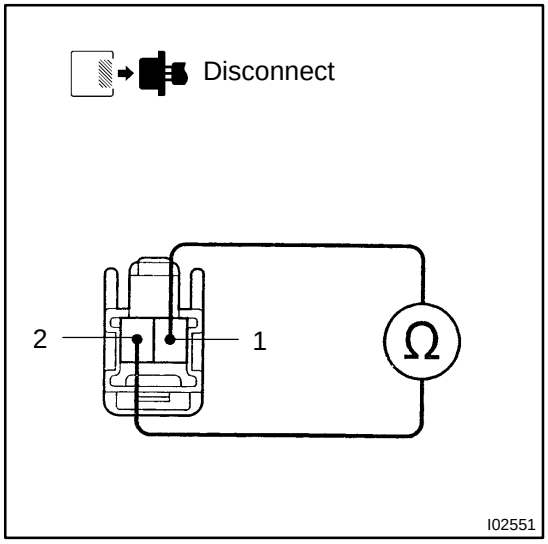

PREPARATION:

Disconnect luggage compartment door key lock and unlock switch connector.

CHECK:

Check continuity between terminals 1 and 2, when the key is turned to the unlock side and not turned.

OK:

Key position	Terminal No. to continuity
Turned to unlock side	1 - 2
Not turned	-

NG → **Repair or replace luggage compartment door key lock and unlock switch.**

OK

3	**Check harness and connector between theft deterrent and door lock ECU and key unlock switch, key unlock switch and body ground (See page IN-28).**

NG → **Repair or replace harness or connector.**

OK

Check and replace theft deterrent and door lock ECU.

*1: When there is a malfunction that the theft deterrent system cannot be set, proceed to the next numbered circuit inspection shown on matrix chart (See page DI-615).

DI4XD-01

ECU Power Source-Circuit

CIRCUIT DESCRIPTION

This circuit provides power to operate the theft deterrent and door lock ECU.

WIRING DIAGRAM

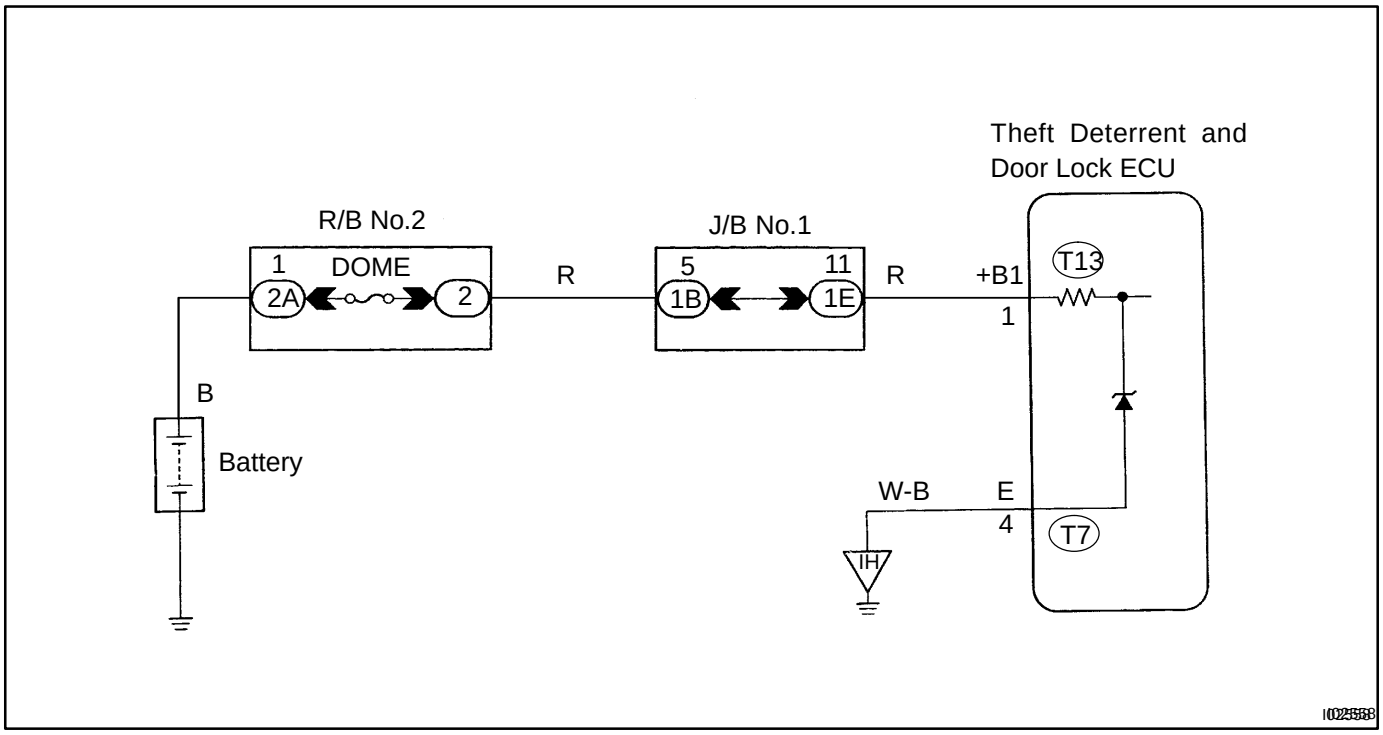

INSPECTION PROCEDURE

1	**Check DOME fuse.**

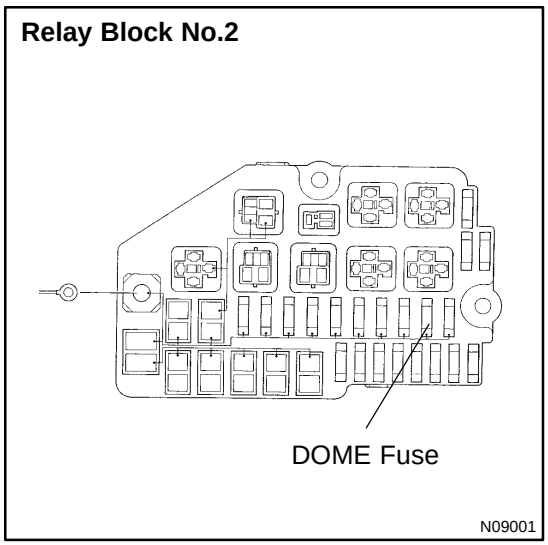

PREPARATION:

Remove DOME fuse from R/B No.2.

CHECK:

Check continuity of DOME fuse.

OK:

Continuity

NG → **Check for short in all the harness and components connected to the DOME fuse (See attached wiring diagram).**

OK

2	Check voltage between terminals +B1 and E of ECU connector.

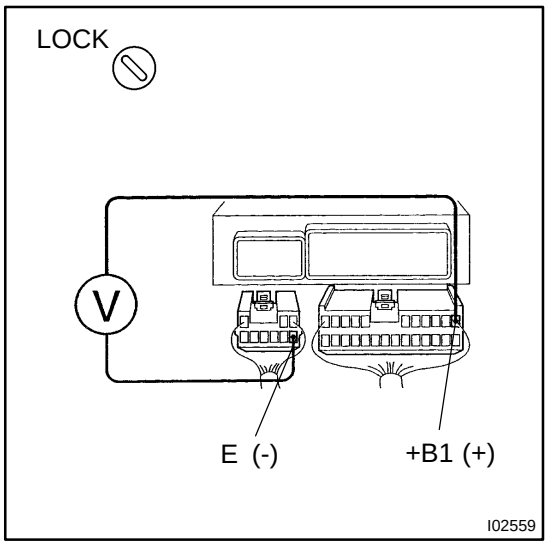

PREPARATION:

(a) Remove the No.1 under cover and heater duct.

(b) Disconnect the theft deterrent and door lock ECU connectors.

CHECK:

Measure voltage between terminals +B1 and E of ECU connector.

OK:

Voltage: 10 - 14 V

OK → **Proceed to next circuit inspection shown on matrix chart (See page DI-615).**

NG

3	Check for open in harness and connector between ECU and body ground (See page IN-28).

NG → **Repair or replace harness or connector.**

OK

Check and repair harness and connector between ECU and battery (See page IN-28).

DI4XE-01

Actuator Power Source Circuit

CIRCUIT DESCRIPTION

This circuit provides power to drive the door lock motor.

WIRING DIAGRAM

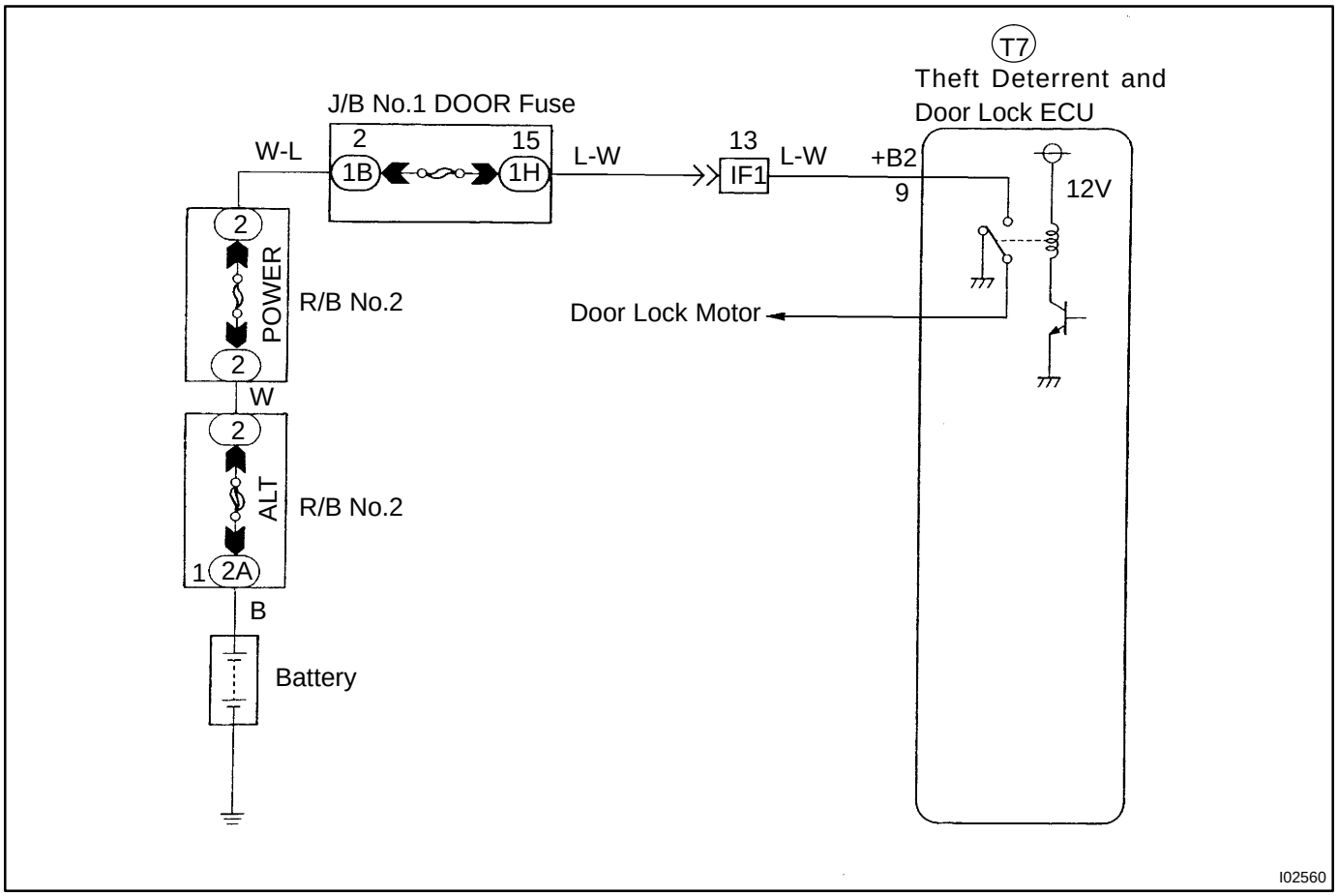

INSPECTION PROCEDURE

1	**Check POWER M-fuse.**

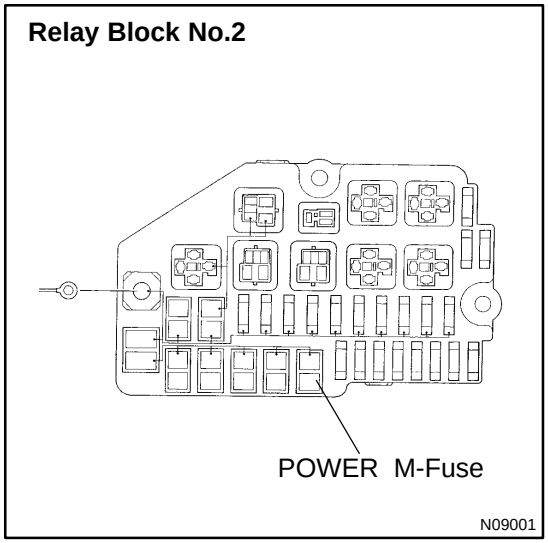

PREPARATION:
Remove POWER M fuse from R/B No.2.
CHECK:
Check continuity of POWER M-fuse.
OK:
Continuity

NG → **Check for short in all the harness and components connected to the DOOR fusible link (See attached wiring diagram). *1**

OK

2	Check voltage between terminal +B2 of ECU connector and body ground.

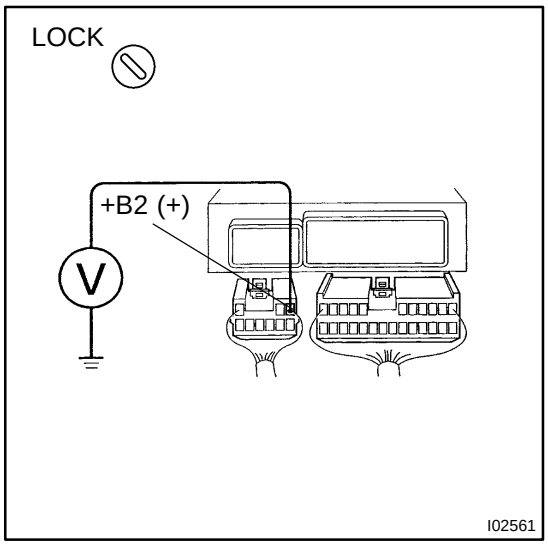

PREPARATION:

(a) Remove the instrument panel. (See page BO-50)

(b) Disconnect the ECU connector.

CHECK:

Measure voltage between terminal +B2 of ECU connector and body ground.

OK:

Voltage: 10 - 14 V

OK → **Proceed to next circuit inspection shown on matrix chart (See page DI-615).**

NG

Check and repair harness and connector between ECU and battery (See page IN-28).

*1: The power source is supplied to the actuator (door lock motor, through the theft deterrent and door lock ECU. Accordingly, if a short circuit of the W/H or actuator occurs in the actuator circuit the POWER M-Fuse may become OPEN, so also inspect the actuator (door lock motor circuit on page DI-647).

DI4XF-01

Door Lock Motor Circuit

CIRCUIT DESCRIPTION

This door lock motor locks and unlocks the door according to signals from the ECU.

WIRING DIAGRAM

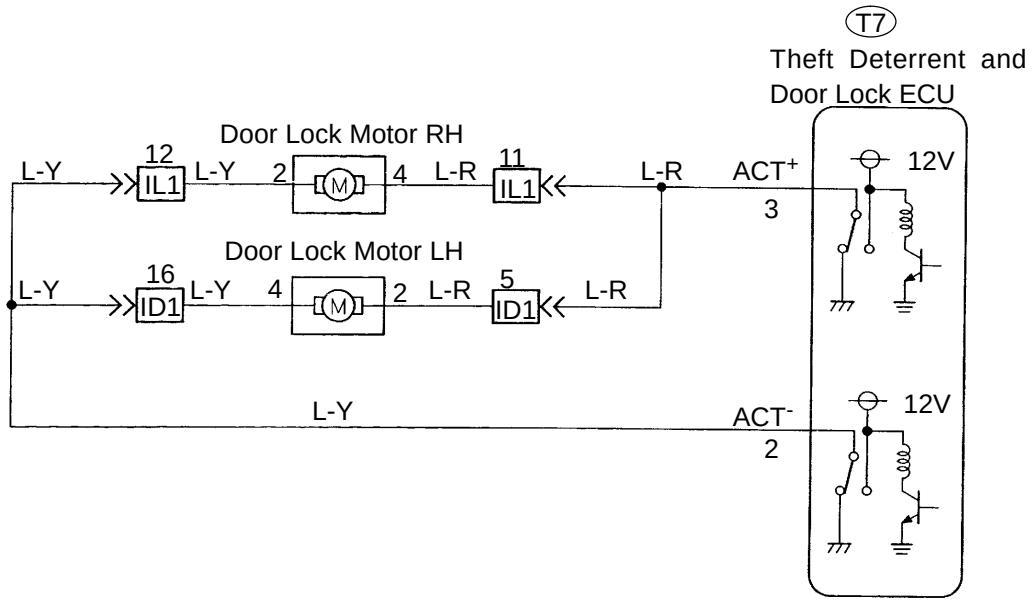

I02562

INSPECTION PROCEDURE

1	**Check operating sound of door lock motor.**

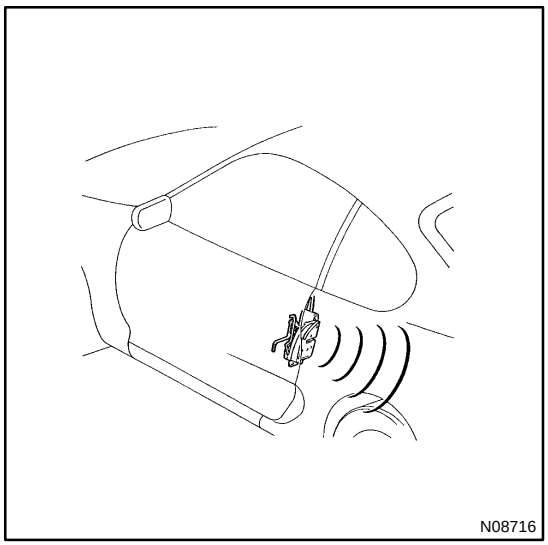

CHECK:
Check operating sound of door lock motor, when door lock control switch is pushed to the lock side and unlock side.
OK:
Can hear operating sound of door lock motor.
HINT:
Inspect the door which is malfunctioning.

OK → **Repair or replace door lock control link.**

NG

2	**Check door lock motor.**

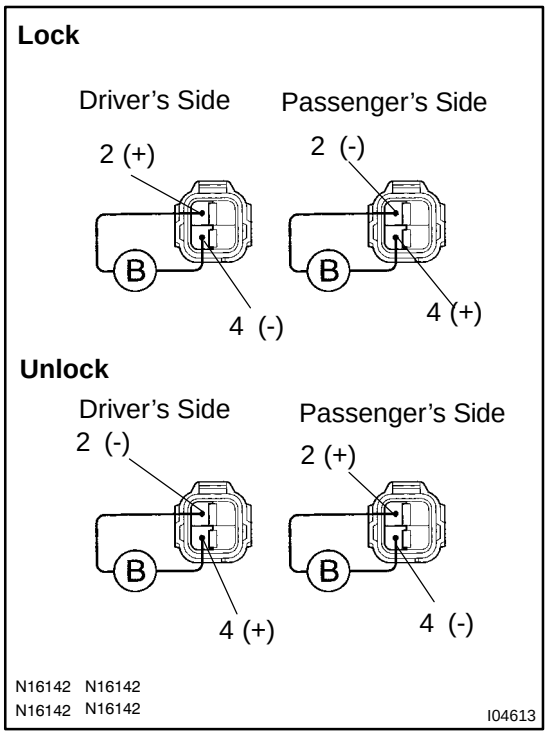

PREPARATION:

(a) Remove the door trim and service hole cover.

(b) Disconnect the door lock motor connector.

CHECK:

(a) Connect positive ⊕ lead to terminal 2 (4) and negative ⊖ lead to terminal 4 (2) of door lock motor connector.

(b) Connect positive ⊕ lead to terminal 4 (2) and negative ⊖ lead to terminal 2 (4) of door lock motor connector.
( ): Passenger's Side.

OK:

(1) Door lock motor locks door.

(2) Door lock motor unlocks door.

HINT:

This inspection must be carried out within 2 seconds.

OK → **Replace door lock motor.**

NG

3	**Check harness and connectors between ECU and door lock motor (See page IN-28).**

NG → **Repair or replace harness or connector.**

OK

Proceed to next circuit inspection shown on matrix chart (See page DI-615).

DI4XG-01

Door Lock Control Switch Circuit

CIRCUIT DESCRIPTION

When the door lock control switch is pushed to the lock side, Lock terminal of the switch is grounded, and when the switch is pushed to the unlock side, unlock terminal is grounded (See wiring diagram below).

WIRING DIAGRAM

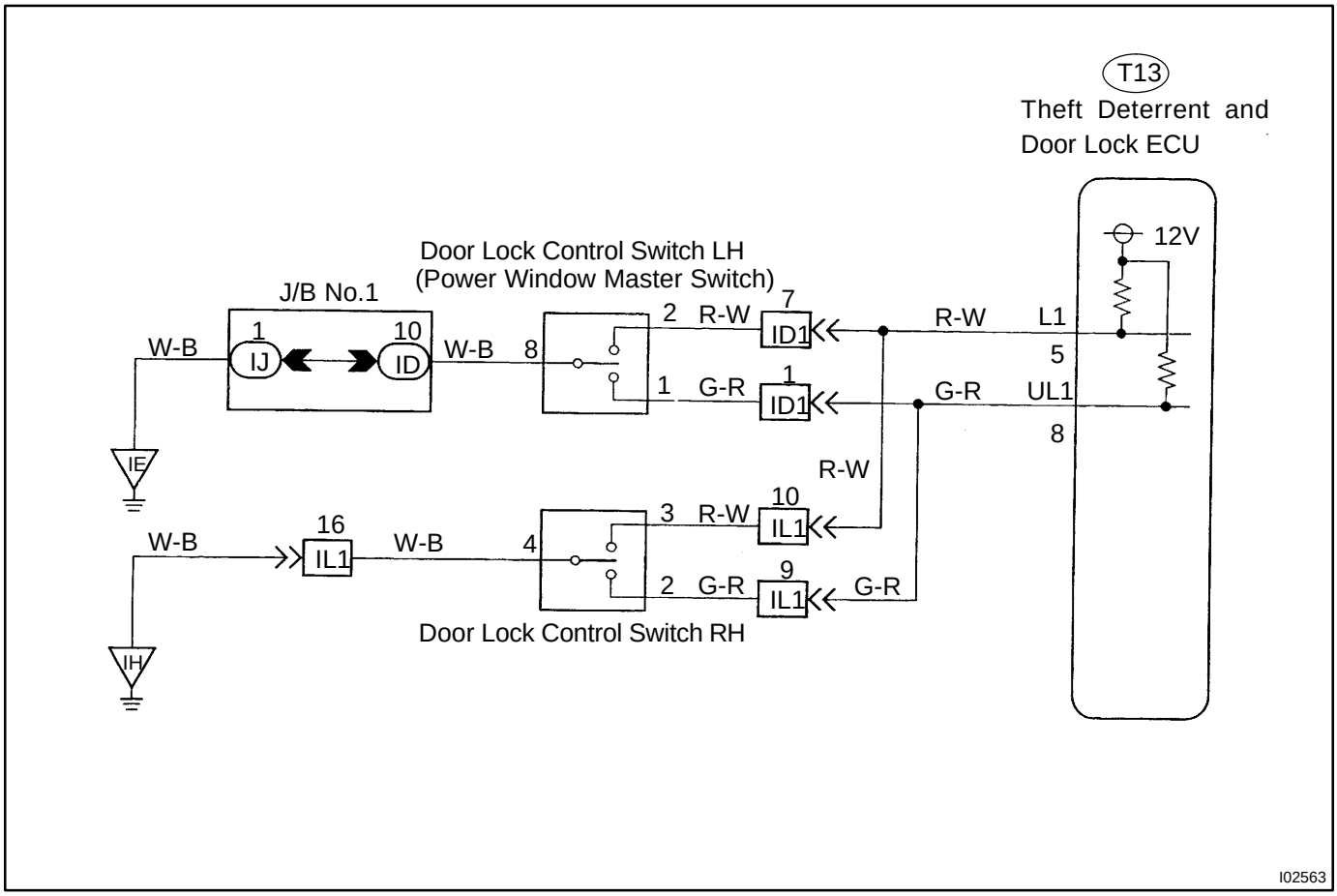

INSPECTION PROCEDURE

1	**Check voltage between terminals 2(3), 1(1) of door lock control switch connector and body ground.**

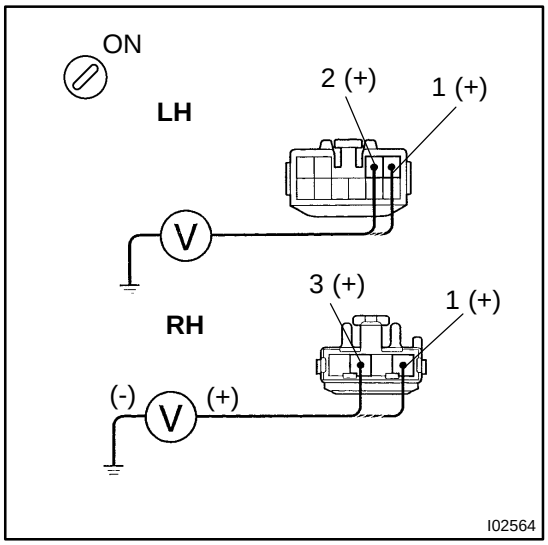

PREPARATION:

Remove the door trim.

CHECK:

(a) Turn the ignition switch ON.

(b) Measure voltage between terminals 2(3), 1(1) of door lock control switch connector and body ground, when door lock control switch is pressed to the lock side, unlock side and OFF position.

OK:

Switch position	Terminal 2(3)	Terminal 1(1)
Lock side	Below 1 V	8 - 10 V
Unlock side	8 - 10 V	Below 1 V
OFF	8 - 10 V	8 - 10 V

HINT:

The terminal number without brackets is for the LH, the number with brackets is for the RH.

OK → **Proceed to next circuit inspection shown on matrix chart (See page DI-615).**

NG

2	Check door lock control switch.

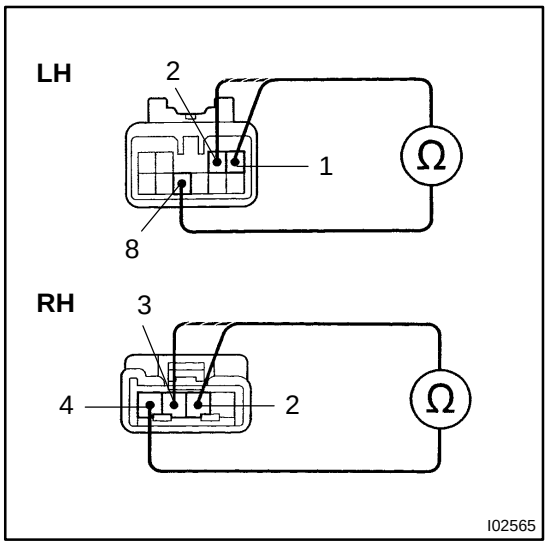

PREPARATION:

Disconnect the door lock control switch connector.

CHECK:

Check continuity between terminals 2(3), 1(2), 8(4) of door lock control switch connector, when door lock control switch is pressed to the lock side, and unlock side and OFF position.

OK:

Switch position	Terminal No. to continuity
Lock side	2(3) - 8(4)
Unlock side	1(2) - 8(4)
OFF	

HINT:

The terminal number without brackets is for the LH, the number with brackets is for the RH.

NG → **Replace door lock control switch.**

OK

3	Check harness and connectors between ECU and door lock control switch, switch and body ground (See page IN-28).

NG → **Repair or replace harness or connector.**

OK

Check and replace ECU. *1

*1: Malfunction of the ECU can be considered possible only when the problem symptom as follows:

- Lock and/or unlock using the Door Lock Control Switch cannot be done, neither on the driver's side nor on the passenger's side.

DI4XH-01

Door Key Lock and Unlock Switch Circuit

CIRCUIT DESCRIPTION

The door key lock and unlock switch is built in the door key cylinder.
When the key is turned to the lock side, terminal 3 of the switch is grounded and when the key is turned to the unlock side, terminal 1 of the switch is grounded.

WIRING DIAGRAM

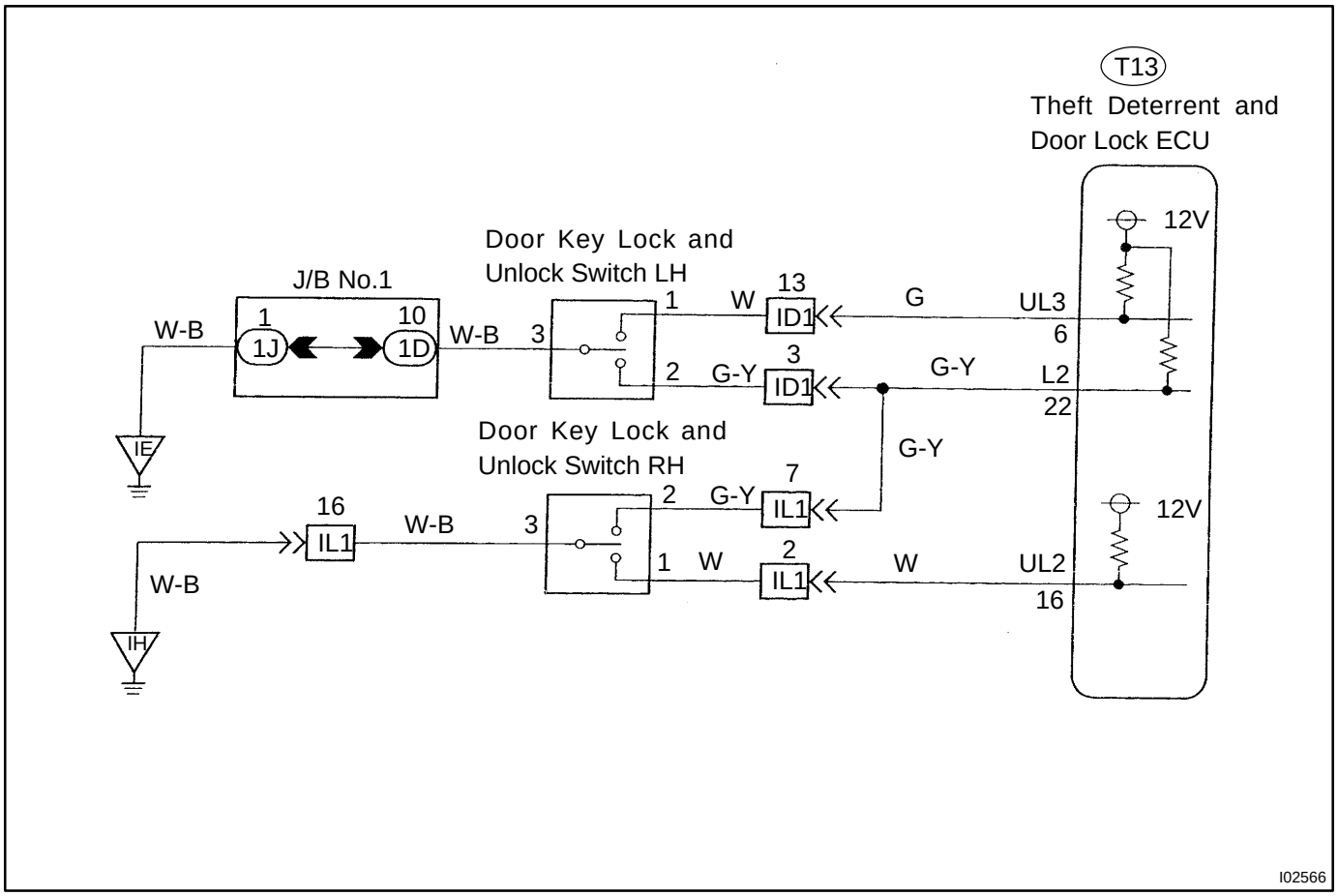

INSPECTION PROCEDURE

1	Check door key lock and unlock switch.

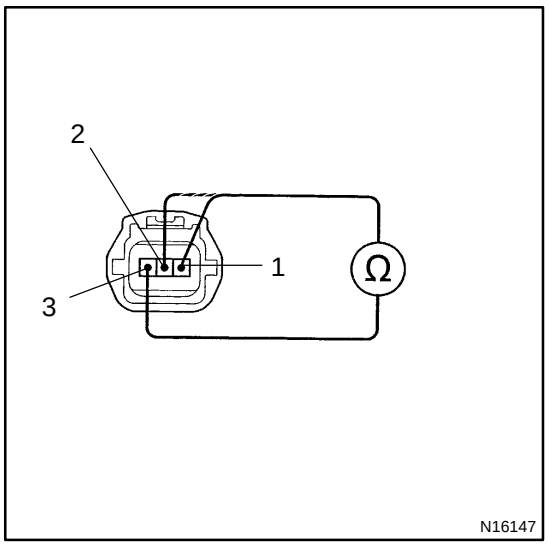

PREPARATION:

(a) Remove the door trim and service hole cover.

(b) Disconnect the door key lock and unlock switch connector.

CHECK:

Check continuity between terminals 1, 2 and 3 of door key lock and unlock switch connector, when door key lock and unlock switch is turned to the lock side, unlock side and when it is not turned.

OK:

Switch position	Terminal No. to continuity
Lock side	2 - 3
Unlock side	1 - 3
OFF	-

NG → **Replace door key lock and unlock switch.**

OK

2	Check harness and connectors between ECU and switch, switch and body ground (See page IN-28).

NG → **Repair or replace harness or connector.**

OK

Proceed to next circuit inspection shown on matrix chart (See page DI-615).

DI4XI-01

Key Unlock Warning Switch Circuit

CIRCUIT DESCRIPTION

The key unlock warning switch goes on when the ignition key is inserted in the key cylinder and goes off when the ignition key is removed.
The ECU operates the key confinement prevention function while the key unlock warning switch is on.

WIRING DIAGRAM

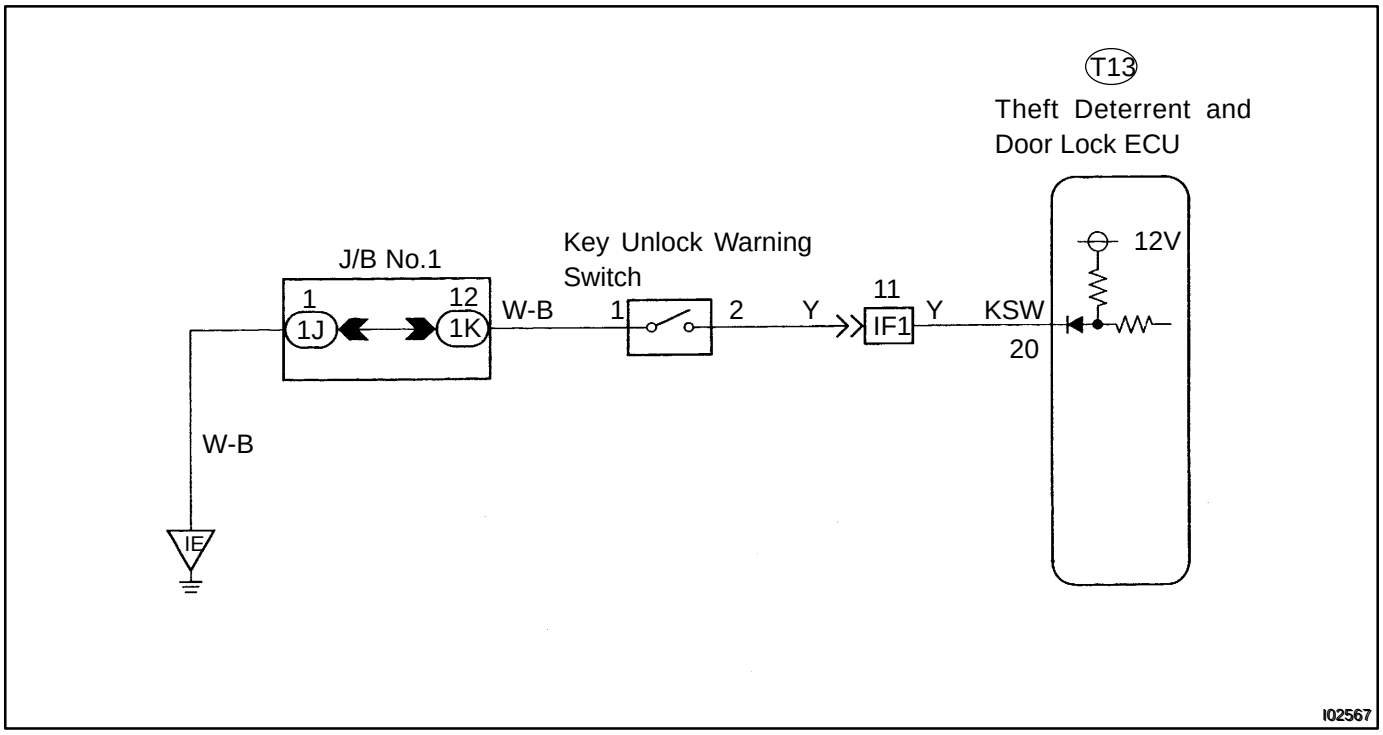

INSPECTION PROCEDURE

1	Check key unlock warning switch.

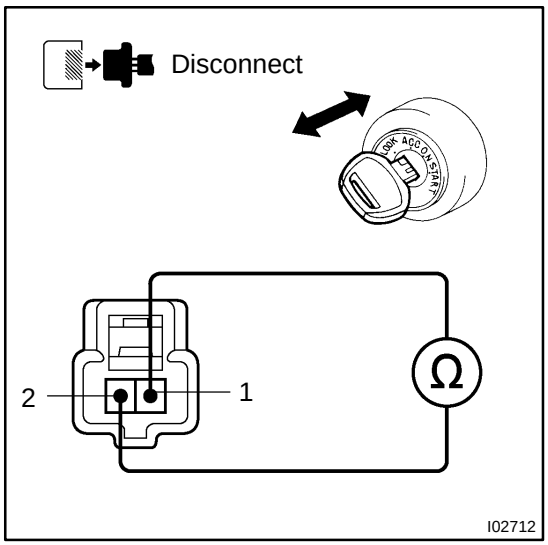

PREPARATION:

Disconnect key unlock warning switch connector.

CHECK:

Check continuity between terminal 1 and 2 of key unlock warning switch connector, when the key is inserted to the key cylinder or removed.

OK:

Switch position	Terminal No. to continuity
ON (Key inserted)	1 - 2
OFF (Key removed)	-

NG → **Replace key unlock warning switch.**

OK

2	Check harness and connectors between ECU and key unlock warning switch, key unlock warning switch and body ground (See page IN-28).

NG → **Repair or replace harness or connector.**

OK

Proceed to next circuit inspection shown on matrix chart (See page DI-615).

CRUISE CONTROL SYSTEM

DI4XJ-01

HOW TO PROCEED WITH TROUBLESHOOTING

Troubleshoot in accordance with the procedure on the following page.

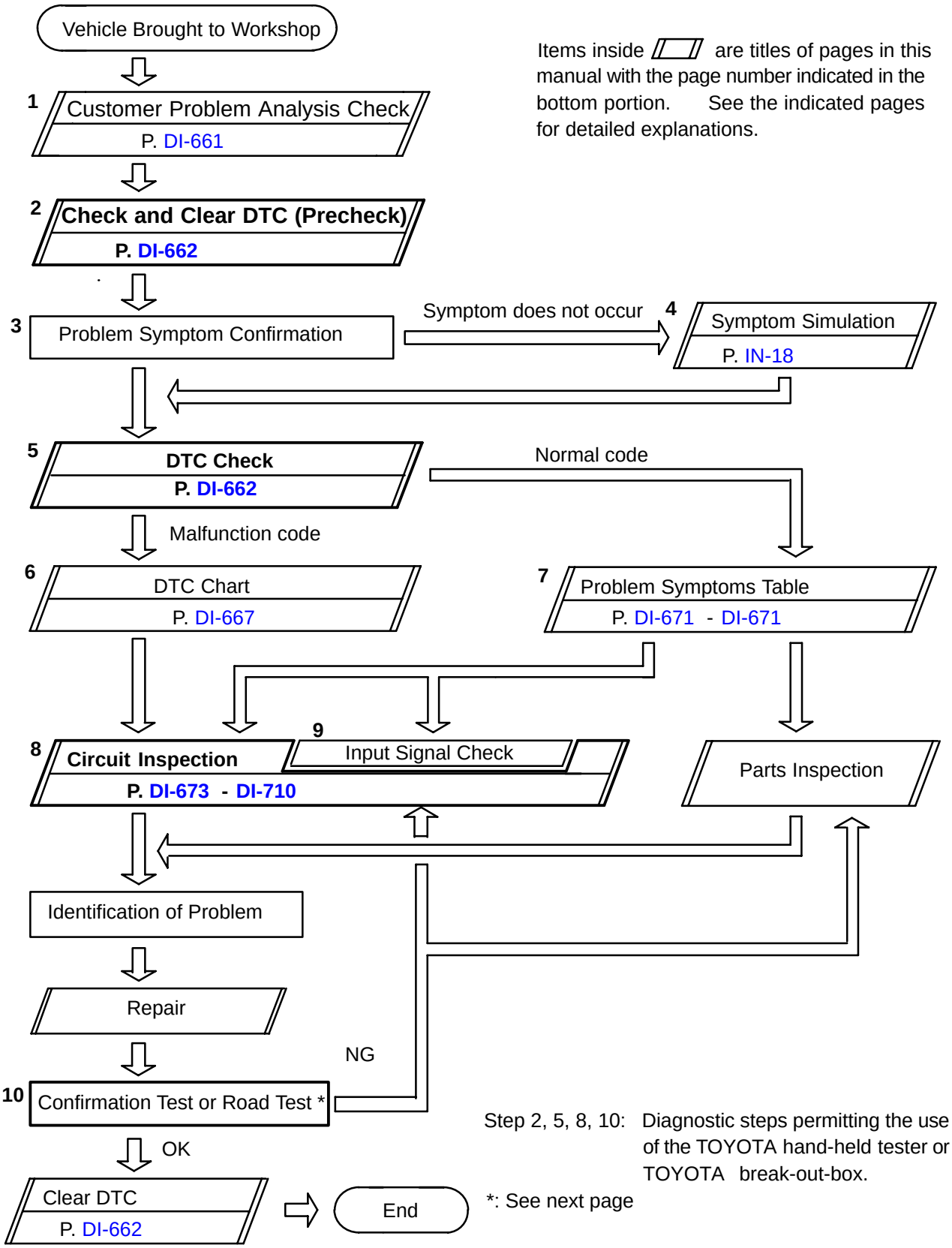

DI4XK-01

CUSTOMER PROBLEM ANALYSIS CHECK

CRUISE CONTROL SYSTEM Check Sheet

Inspector's name: _____

Customer's Name		**Registration No.**	
		Registration Year	
		Frame No.	
Date of Vehicle Brought in	/ /	**Odometer Reading**	**km** **Mile**

Condition of Problem Occurrence	**Date of Problem Occurrence**	/ /
	How Often does Problem Occur?	¿ Continuous ¿ Intermittent (Times a day)
	Vehicle Speed when Problem Occurred	**km** **Mile**

Symptoms	¿ Auto cancel occurs	□Driving condition ● City driving ● Freeway ● Up hill ● Down hill □After cancel occurred, did the driver activate cruise control again? ● Yes ● No
	● Cancel does not occur	● With brake ON ● Except D position shift ● When control SW turns to CANCEL position
	● Cruise control malfunction	● Slip to acceleration side ● Slip to deceleration side ● Hunting occurs ● O/D cut off does not occur ● O/D does not return
	● Switch malfunction	● SET ● ACCEL ● COAST ● RESUME ● CANCEL
	●	● Remains ON ● Does not light up ● Blinking

DTC Check	**1st Time**	● Normal Code ● Malfunction Code (Code)
	2nd Time	● Normal Code ● Malfunction Code (Code)

DI4XL-01

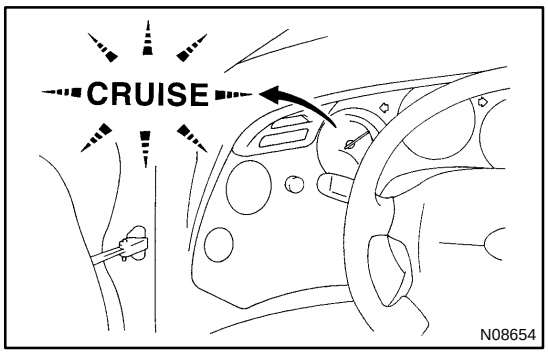

PRE-CHECK

1. DIAGNOSIS SYSTEM

(a) Check the indicator.

(1) Turn the ignition switch to ON.

(2) Check that the CRUISE MAIN indicator light comes on when the cruise control main switch is turned on, and that the indicator light goes off when the main switch is turned OFF.

HINT:

If the indicator check result is not normal, proceed to trouble-shooting (See page BE-2) for the combination meter section.

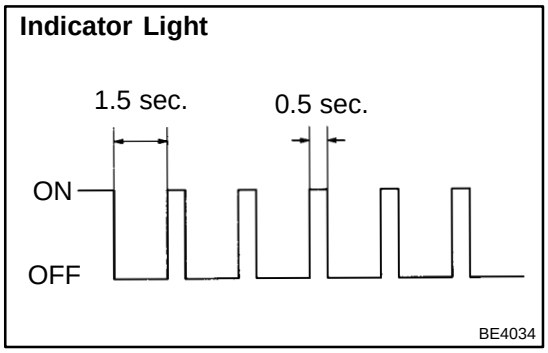

(b) Clear the DTC.

HINT:

If a malfunction occurs in the No.1 vehicle speed sensors or actuator, etc. during cruise control driving, the ECU actuates AUTO CANCEL of the cruise control and turns on and off the CRUISE MAIN indicator light to inform the driver of a malfunction. At the same time, the malfunction is stopped in memory as a DTC.

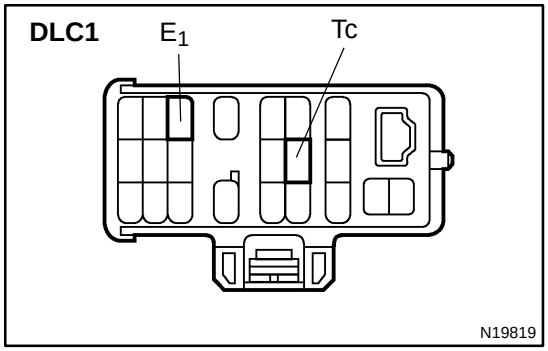

(c) Output of DTC using diagnosis check wire.

(1) Turn the ignition switch ON.

(2) Using SST, connect terminals Tc and E_1 of DLC1.

SST 09843-18020

(3) Read the DTC on the CRUISE MAIN indicator light.

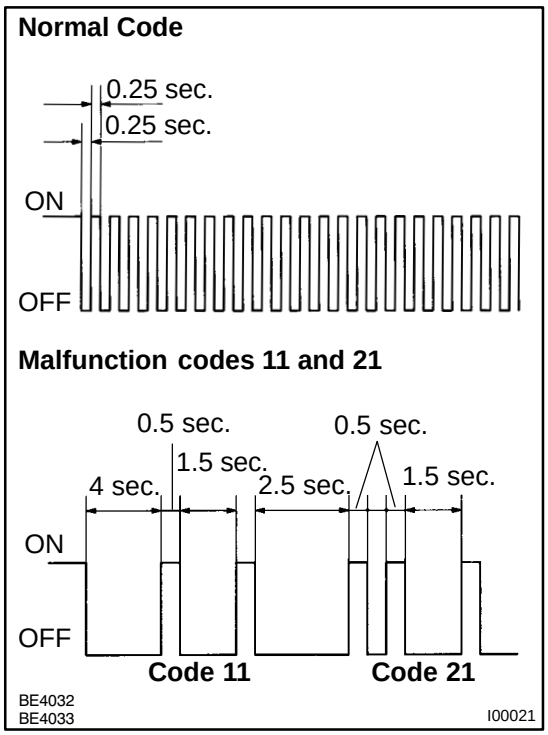

HINT:

- ☐ If the DTC is not output, inspect the diagnosis circuit (See page DI-708).
- ☐ As an example, the blinking patterns for codes; normal, 11 and 21 are shown in the illustration.

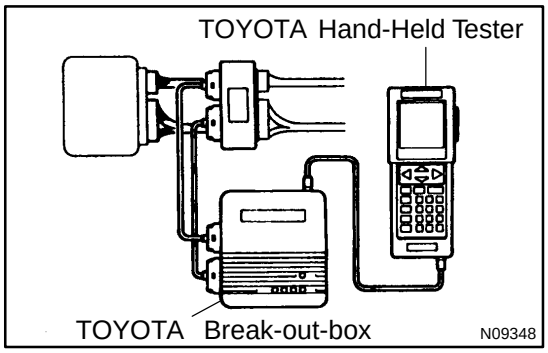

2. ECU TERMINAL VALUES MEASUREMENT BY USING TOYOTA BRAKE-OUT-BOX AND TOYOTA HAND-HELD TESTER

(a) Hook up the TOYOTA break- out- box and TOYOTA hand-held tester to the vehicle.

(b) Read the ECU input/output values by following the prompts on the tester screen.

(c) Please refer to the TOYOTA hand-held tester has a ”Snapshot” function. This records the measured data and is effective in the diagnosis of intermittent problems.

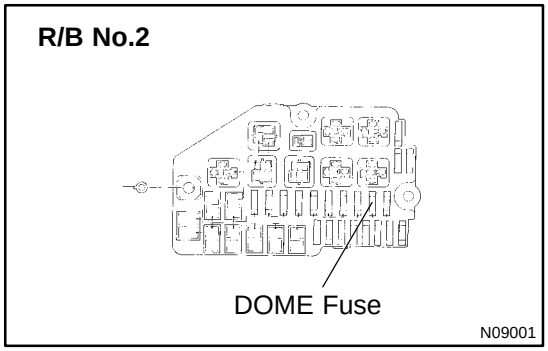

3. DTC CLEARANCE

(a) After completing repairs, the DTC retained in memory can be cleared by removing the DOME fuse for 10 seconds or more, with the ignition switch off.

(b) Check that the normal code is displayed after connecting the fuse.

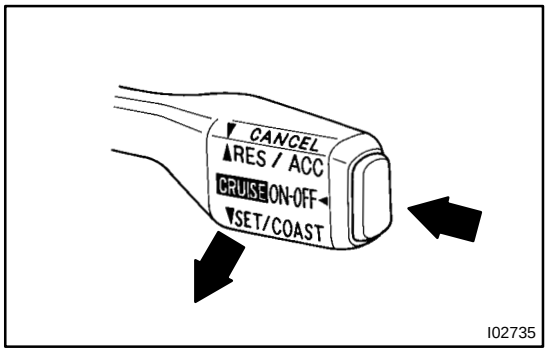

4. PROBLEM SYMPTOM CONFIRMATION (Road Test)

(a) Inspection the SET switch.

(1) Push the main switch ON.

(2) Drive at a desired speed (40 km/h (25 mph) or higher).

(3) Press the control switch to the SET/COAST.

(4) After releasing the switch, check that the vehicle cruises at the desired speed.

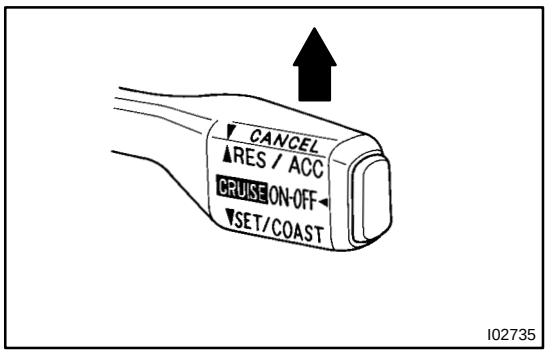

(b) Inspect the ACCEL switch.
- (1) Push the main switch ON.
- (2) Drive at a desired speed (40 km/h (25 mph) or higher).
- (3) Check that the vehicle speed is increased while the control switch turned to RES/ACC, and that the vehicle cruise at the set speed when the switch is released.
- (4) Momentarily press the control switch upward in the RES/ACC and then immediately release it. Check that the vehicle speed increases by about 1.5 km/h (Tap-up function).

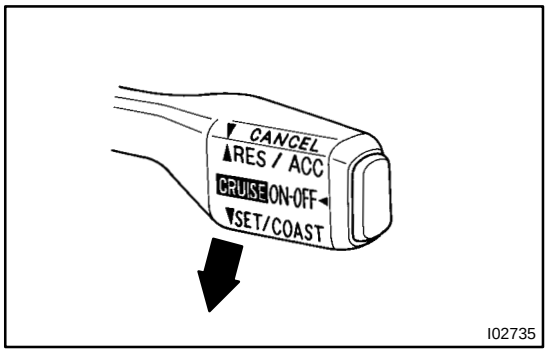

(c) Inspect the COAST switch.
- (1) Push the main switch ON.
- (2) Drive at a desired speed (40 km/h (25 mph) or higher).
- (3) Check that the vehicle speed is decreased while the control switch is turned to SET/COAST, and the vehicle cruise at the set speed when the switch is released.
- (4) Momentarily press the control switch is turned to SET/COAST, and then immediately release it. Check that the vehicle speed decreases by about 1.5 km/h (Tap-down function).

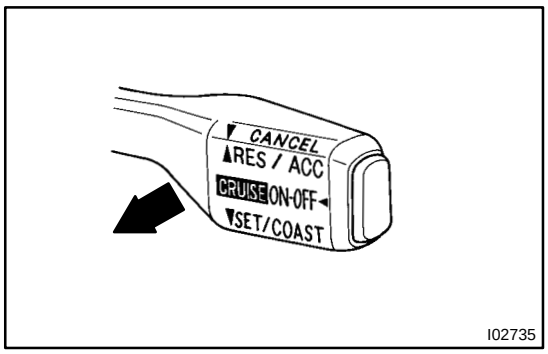

(d) Inspect the CANCEL switch.
  (1) Push the main switch ON.
  (2) Drive at a desired speed (40 km/h (25 mph) or higher).
  (3) When operating one of the followings, check that the cruise control system is cancelled and that the normal driving mode is reset.
    - ☐ Depress the brake pedal
    - ☐ Depress the clutch pedal (M/T)
    - ☐ Shift to except D position (A/T)
    - ☐ Turn the main switch OFF
    - ☐ Pull the cruise control switch to CANCEL

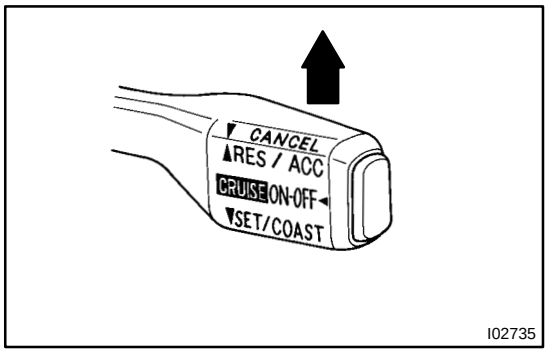

(e) Inspect the RESUME switch.
  (1) Push the main switch ON.
  (2) Drive at a desired speed (40 km/h (25 mph) or higher).
  (3) When operating one of the followings, check that the cruise control system is cancelled and that the normal driving mode is reset.
    - ☐ Depress the brake pedal
    - ☐ Depress the clutch pedal (M/T)
    - ☐ Shift to except D position (A/T)
    - ☐ Turn the main switch OFF
    - ☐ Pull the cruise control switch to CANCEL
  (4) After the control switch is turned to RES/ACC at the driving speed of more than 40 km/h (25 mph), check that the vehicle restores the speed prior to the cancellation.

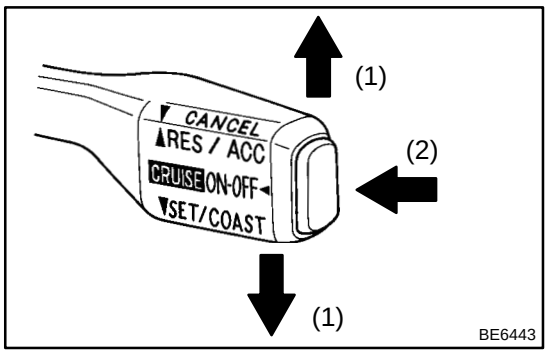

5. Using TOYOTA hand-held tester: INPUT SIGNAL CHECK

HINT:

(1) For check No.1 – No.2

☐ Turn the ignition switch ON.

(2) For check No.3

☐ Turn ignition switch ON.

☐ Shift to D position.

(3) For check No.4

☐ Jack up the vehicle.

☐ Start the engine.

☐ Shift to D position.

(a) Press the control switch to SET/COAST or RES/ACC position and hold it down or hold it up ”1”.

(b) Push the main switch ON ”2”.

(c) Check that the CRUISE MAIN indicator light blinks twice or 3 times repeatedly after 3 seconds.

(d) Turn the SET/COAST or RES/ACC switch OFF.

(e) Operate each switch as listed in the table below.

(f) Read the blinking pattern of the CRUISE MAIN indicator light.

(g) After performing the check, turn the main switch OFF.

HINT:

When 2 or more signals are input to the ECU, the lowest numbered code will be displayed first.

No.	Operation Method	CRUISE MAIN Indicator Light Blinking Pattern	Diagnosis
1	Turn SET/COAST switch ON	Light ON / OFF; 0.25 sec. 0.25 sec. 1 sec.	SET / COAST switch circuit is normal
2	Turn RES/ACC switch ON	Light ON / OFF	RES / ACC switch circuit is normal
3	Turn CANCEL switch ON	Light ON / OFF; Switch OFF; Switch ON	CANCEL switch circuit is normal
	Turn stop light switch ON Depress brake pedal		Stop light switch circuit is normal
	Turn PNP switch OFF (Shift to except D position)	Light ON / OFF; Switch ON; Switch OFF	PNP switch circuit is normal
	Turn clutch switch OFF (Depress clutch pedal)		Clutch switch circuit is normal
4	Drive at about 40 km/h (25 mph) or higher	Light ON / OFF	Vehicle Speed Sensor is normal
	Drive at about 40 km/h (25 mph) or below	Light ON / OFF	

DI4XM-01

DIAGNOSTIC TROUBLE CODE CHART

If a malfunction code is displayed during the DTC check, check the circuit listed for that code in the table below and proceed to the appropriate page.

DTC No. (See Page)	Detection Item	Trouble Area
11, 15 (DI-673)	□Actuator Motor Circuit	□Cruise control actuator motor □Harness or connector between actuator motor and ECU □ECU
12 (DI-675)	□Actuator Magnetic Clutch Circuit	□Cruise control magnetic clutch □Harness or connector between ECU and magnetic clutch, magnetic clutch and body ground □ECU
14 (DI-677)	□Actuator Motor Circuit	□Cruise control actuator motor □Harness or connector between actuator motor and ECU □ECU
21 (DI-679)	□Vehicle Speed Sensor Circuit	□Vehicle speed sensor □ECU □Combination meter □Harness or connector between vehicle speed sensor and ECM, ECM and combination meter, combination meter and ECU □ECU
23 (DI-681)	□Vehicle Speed Sensor Circuit	□Vehicle speed sensor □Harness or connector (SPD) □ECU
32 (DI-682)	□Control Switch Circuit (Cruise Control Switch)	□Cruise control switch □Harness or connector between control switch and ECU □ECU
41	□Cruise Control ECU	□ECU
42	□Source voltage drop	□Power source
51 (DI-685)	□Idle switch circuit	□Throttle position sensor □Harness or connector between cruise control ECU and throttle position sensor □ECU

HINT:

□ 1. When 2 or more codes are indicated, the lowest numbered code will be displayed first.

□ 2. If the inspection ”Proceed to next circuit inspection shown on matrix chart” is given in the flow chart for each circuit, proceed to the circuit with the next highest number in the table to continue check.

□ 3. If the trouble still reappears even though there are no abnormalities in any of the other circuit, then check or replace the cruise control ECU as the last step.

□ (*) When the vehicle speed decrease on uphill roads, the speed can be set again and driving continued. (This is not a malfunction.)

DI4XN-01

PARTS LOCATION

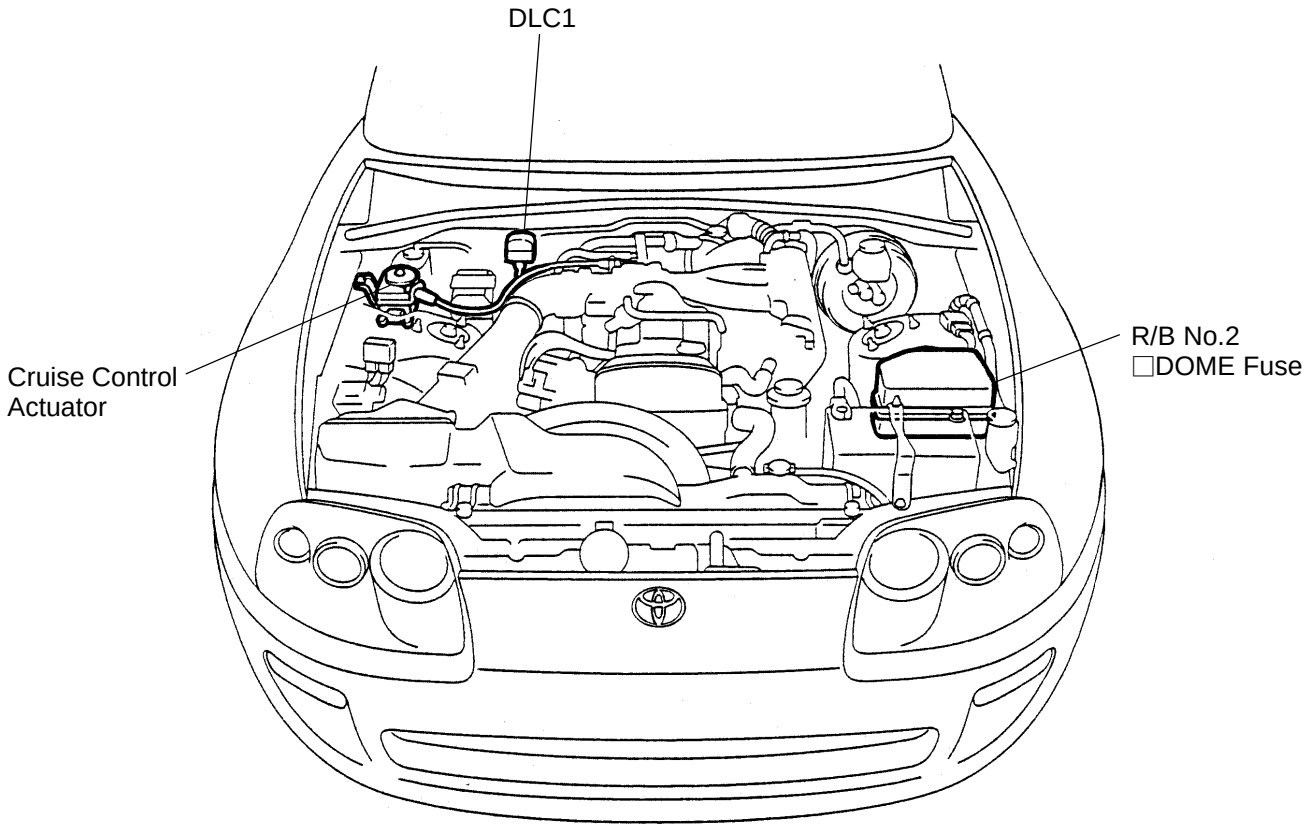

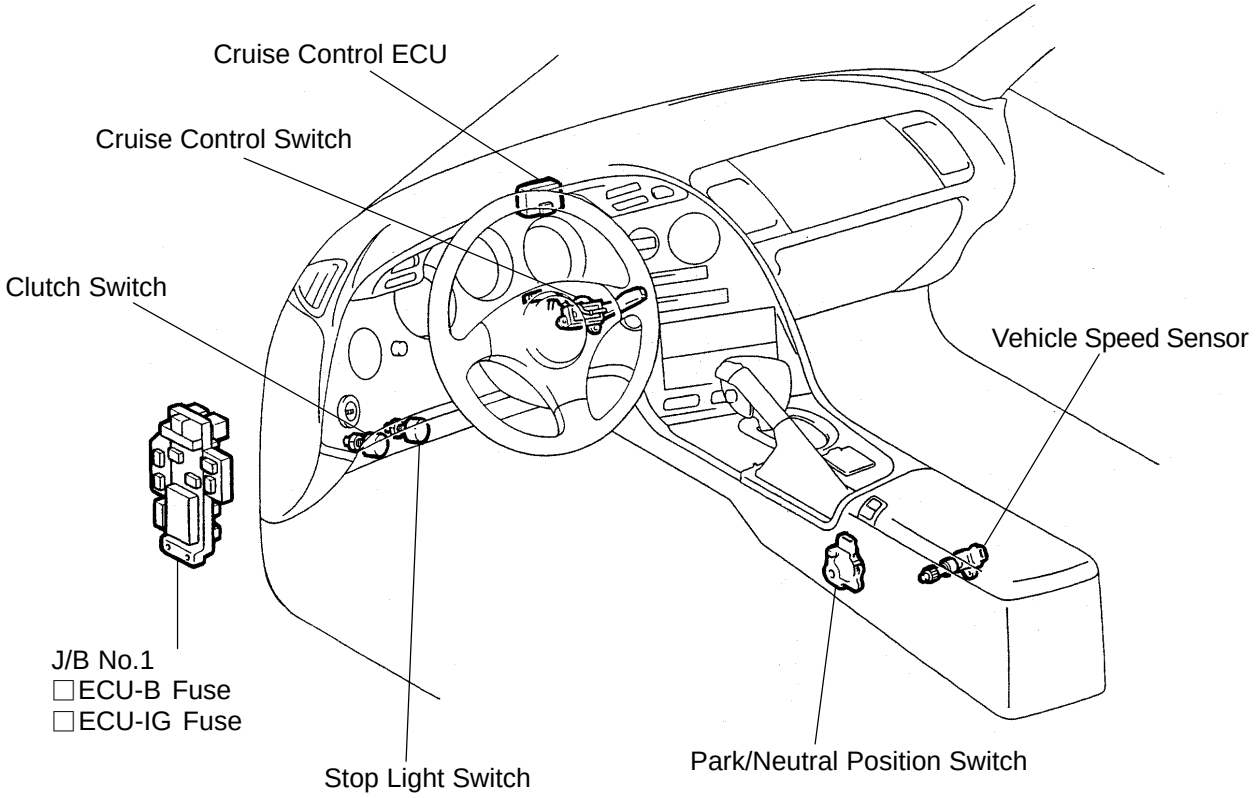

I02713
I02713

DI4XO-01

TERMINALS OF ECM

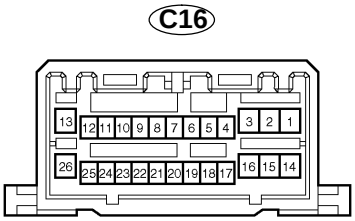

I04621

Symbols (Terminals No.)	Wiring Color	Condition	STD Voltage (V)
D ↔ GND (C16-2 ↔ C16-13)	G-R ↔ W-B	M/T: Depress clutch pedal A/T: Shift to except D position	Below 1 V
		M/T: Release clutch pedal A/T: Shift to D position	10 - 16 V
PI ↔ GND (C16-7 ↔ C16-13)	O ↔ W-B	Ignition switch ON Cruise control main switch ON	Below 1.2 V
		Ignition switch ON Cruise control main switch OFF	10 - 16 V
TC ↔ GND (C16-8 ↔ C16-13)	R ↔ W-B	Ignition switch ON	10 - 16 V
		Ignition switch ON Connect terminals TC and E_1 of DLC1	Below 1 V
OD ↔ GND (C16-9 ↔ C16-13)	LG-B ↔ W-B	During cruise control driving OD switch ON	10 - 16 V
		During cruise control driving OD switch OFF (3rd driving)	Below 1 V
L ↔ GND (C16-10 ↔ C16-13)	B-W ↔ W-B	During cruise control driving	9 - 15 V
		Except during cruise control driving	Below 1 V
MC ↔ GND (C16-11 ↔ C16-13)	G-R ↔ W-B	During cruise control driving COAST switch hold ON	9 - 15 V
		During cruise control driving ACC switch hold ON	Below 1 V
MO ↔ GND (C16-12 ↔ C16-13)	LG ↔ W-B	During cruise control driving ACC switch hold ON	9 - 15 V
		During cruise control driving COAST switch hold ON	Below 1 V
GND ↔ Body Ground (C16-13 ↔ Body Ground)	W-B ↔ Body Ground	Constant	Below 1 V
B ↔ GND (C16-14 ↔ C16-13)	B-R ↔ W-B	Ignition switch ON	10 - 16 V
BATT ↔ GND (C16-15 ↔ C16-13)	W-R ↔ W-B	Constant	10 - 16 V
STP ↔ GND (C16-16 ↔ C16-13)	G-W ↔ W-B	Depress brake pedal	10 - 16 V
	G-W ↔ W-B	Release brake pedal	Below 1 V

CCS ↔ GND (C16-18 ↔ C16-13)	L ↔ W-B	Ignition switch ON	10 - 16 V
		Ignition switch ON CANCEL switch hold ON	4.2 - 8.7 V
		Ignition switch ON SET/COAST switch hold ON	2.5 - 6.2 V
		Ignition switch ON RES/ACC switch hold ON	0.8 - 3.6 V
CMS ↔ GND (C16-19 ↔ C16-13)	R-Y ↔ W-B	Ignition switch ON Main switch ON	Below 1 V
		Ignition switch ON Main switch OFF	10 - 16 V
SPD ↔ GND (C16-20 ↔ C16-13)	P ↔ W-B	Ignition switch ON	10 - 16 V
		During driving	Repeatedly change from below 1 V to 10 - 16 V
IDL ↔ GND (C16-21 ↔ C16-13)	R-B ↔ W-B	Ignition switch ON Throttle valve fully closed	Below 1 V
		Ignition switch ON Throttle valve fully opened	10 - 16 V
ECT ↔ GND (C16-22 ↔ C16-13)	R-L ↔ W-B	During driving Gear position O/D	Below 1 V
		During driving Gear position 3rd	10 - 16 V

DI4XP-01

PROBLEM SYMPTOMS TABLE

Symptom	Suspect Area	See page
Cruise control system does not set. Cruise control system does not operate.	Input signal check No.4: OK 1. ECU Power Source Circuit 2. Wire Harness 3. Main Switch Circuit 4. Control Switch Circuit 5. Stop Light Switch Circuit 6. PNP Switch or Clutch Switch Circuit 7. Actuator Control Cable 8. Actuator Motor Circuit 9. Cruise Control ECU Input signal check No.4: NG 1. Vehicle Speed Sensor Circuit 2. Cruise Control ECU	 DI-699 DI-704 DI-682 DI-687 DI-694 , DI-697 DI-710 DI-673 IN-28 DI-679 IIN-28
Indicator light does not light up.	1. Wire Harness 2. CRUISE MAIN Indicator Light Circuit 3. Cruise Control ECU	 DI-706 IIN-28
Vehicle speed drop when the cruise control switch turned to SET.	1. Actuator Control Cable 2. ECU Power Source Circuit 3. Idle Signal Circuit 4. Actuator Motor Circuit 5. Cruise Control ECU	DI-710 DI-699 DI-685 DI-673 IN-28
Set speed deviates on high or low side.	Input signal check No.4: OK 1. Vehicle Speed Sensor Circuit 2. Actuator Control Cable 3. ECU Power Source Circuit 4. Actuator Motor Circuit 5. Cruise Control ECU Input signal check No.4: NG 1. Cruise Control ECU	 DI-679 DI-710 DI-699 DI-673 IN-28 IN-28
Vehicle speed fluctuates when cruise control switch turn to SET.	1. Vehicle Speed Sensor Circuit 2. Actuator Control Cable 3. Idle Signal Circuit 4. ECT Communication Circuit 5. Actuator Motor Circuit 6. Cruise Control ECU	DI-679 DI-710 DI-685 DI-690 DI-673 IN-28
Acceleration response is sluggish when cruise control switch turn to ”ACCEL” or ”RESUME”.	Input signal check No.4: OK 1. Actuator Control Cable 2. Vehicle Speed Sensor Circuit 3. Actuator Motor Circuit 4. Cruise Control ECU Input signal check No.4: NG 1. Control Switch Circuit 2. Cruise Control ECU	 DI-673 DI-679 DI-710 IN-28 DI-682 IN-28
Set speed does not cancel when brake pedal depressed.	Input signal check No.3: OK 1. Cruise Control ECU Input signal check No.3: NG 1. Stop Light Switch Circuit 2. Cruise Control ECU	 IN-28 DI-687 IIN-28
Cruise control does not cancel when transmission is shifted to except D position. (A/T)	Input signal check No.3: OK 1. Cruise Control ECU Input signal check No.3: NG 1. PNP Switch Circuit 2. Cruise Control ECU	 IIN-28 DI-694 IN-28

Cruise control does not cancel when clutch pedal depressed.	Input signal check No.3: OK 1. Cruise Control ECU Input signal check No.3: NG 1. Clutch Switch Circuit 2. Cruise Control ECU	 IN-28 DI-697 IN-28
Cruise control does not cancel when cruise control switch turned to CANCEL.	Input signal check No.3: OK 1. Cruise Control ECU Input signal check No.3: NG 1. Control Switch Circuit 2. Cruise Control ECU	 IN-28 DI-682 IN-28
Vehicle speed does not decrease when cruise control switch turned to COAST.	Input signal check No.1: OK 1. Actuator Motor Circuit 2. Actuator Control Cable 3. Vehicle Speed Sensor Circuit 4. Cruise Control ECU Input signal check No.1: NG 1. Control Switch Circuit 2. Cruise Control ECU	 DI-673 DI-710 DI-679 IIN-28 DI-682 IN-28
Vehicle speed does not accelerate when cruise control switch turned to ACCEL.	Input signal check No.2: OK 1. Actuator Motor Circuit 2. Actuator Control Cable 3. Vehicle Speed Sensor Circuit 4. Cruise Control ECU Input signal check No.2: NG 1. Control Switch Circuit 2. Cruise Control ECU	 DI-673 DI-710 DI-679 IIN-28 DI-682 IN-28
Vehicle speed does not return to memorized speed when cruise control switch turned to RESUME.	Input signal check No.2: OK 1. Actuator Motor Circuit 2. Actuator Control Cable 3. Vehicle Speed Sensor Circuit 4. Cruise Control ECU Input signal check No.2: NG 1. Control Switch Circuit 2. Cruise Control ECU	 DI-673 DI-710 DI-679 IN-28 DI-682 IN-28
Speed can be set below about 40 km/h (25 mph).	Input signal check No.4: OK 1. Cruise Control ECU Input signal check No.4: NG 1. Vehicle Speed Sensor Circuit 2. Cruise Control ECU	 IN-28 DI-679 IN-28
Cruise control does not cancel when speed is less than 40 km/h (25 mph).	Input signal check No.4: OK 1. Actuator Motor Circuit 2. Cruise Control ECU Input signal check No.4: NG 1. Vehicle Speed Sensor Circuit 2. Cruise Control ECU	 DI-673 IIN-28 DI-679 IIN-28

DI4XQ-01

CIRCUIT INSPECTION

DTC	11, 15	Actuator Motor Circuit

CIRCUIT DESCRIPTION

The actuator motor is operated by signals from the ECU. Acceleration and deceleration signals are transmitted by changes in the Duty Ratio (See note below).Duty Ratio

The duty ratio is the ratio of the period of continuity in one cycle. For example, if A is the period of continuity in one cycle, and B is the period of non-continuity, then.

$$\text{Duty Ratio} = \frac{A}{A + B} \times 100\ (\%)$$

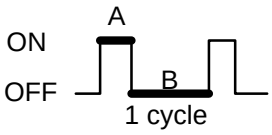

DTC No.	Detection Item	Trouble Area
11	Short in actuator motor circuit	□Cruise control actuator □Harness or connector between actuator and cruise control ECU □Cruise control ECU
15	Open in actuator motor circuit	□Cruise control actuator

WIRING DIAGRAM

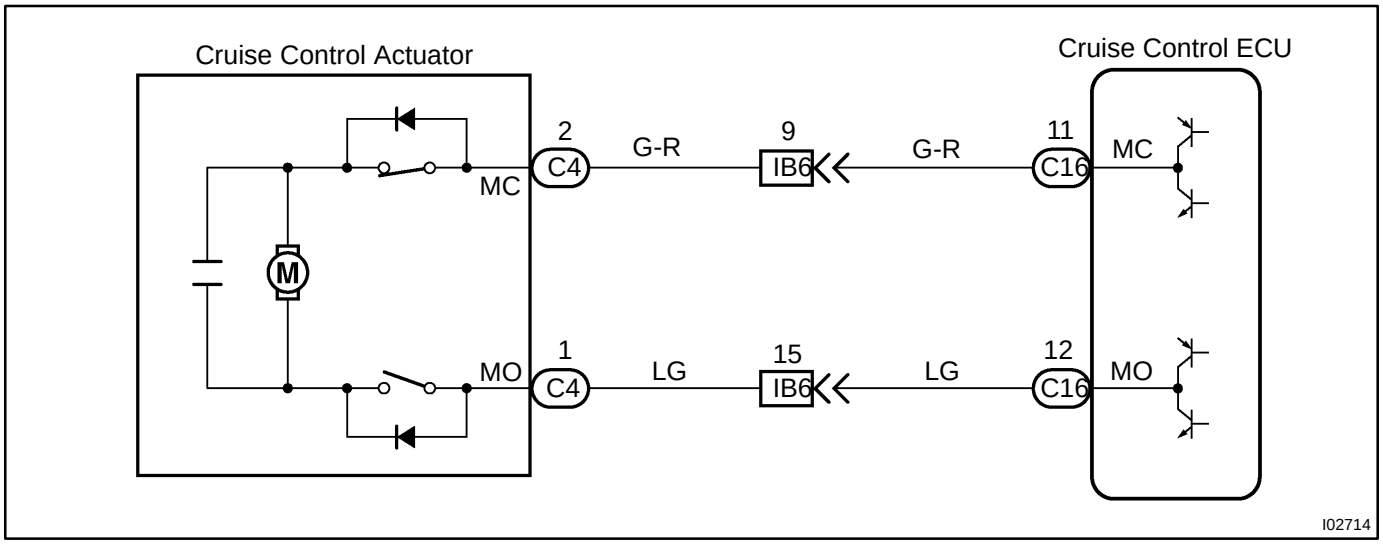

INSPECTION PROCEDURE

1	Check resistance between terminals MO and MC of cruise control actuator.

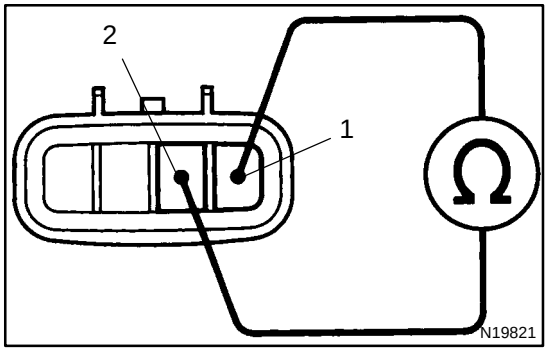

PREPARATION:

(a) Ignition switch ON.

(b) Disconnect actuator connector.

CHECK:

Measure resistance between terminals 1 and 2.

HINT:

If control plate position is fully opened or fully closed, resistance can not measure.

OK:

Resistance: more than 4.2 Ω

NG → **Replace cruise control actuator.**

OK

2	Check wire harness and connector between terminals MO of cruise control ECU and MO of cruise control actuator (See page IN-28).

NG → **Repair or replace harness or connector.**

OK

Replace cruise control ECU (See page IN-28).

DI4XR-01

DTC	12	Magnetic Clutch Circuit

CIRCUIT DESCRIPTION

This circuit turns on the magnetic clutch inside the actuator during cruise control operation according to the signal from the ECU. If a malfunction occurs in the actuator or speed sensor, etc. during cruise control operation, the rotor shaft between the motor and control plate is released.
When the brake pedal is depressed, the stoplight switch turns on, supplying electrical power to the stoplight. Power supply to the magnetic clutch is mechanically cut and the magnetic clutch is turned OFF.
When driving downhill, if the vehicle speed exceeds the set speed by 15 km/h (6 mph) above the set speed, then cruise control at the set speed is resumed.

DTC No.	Detection Item	Trouble Area
12	Short in magnetic clutch circuit Open (0.8 sec.) in magnetic clutch circuit	□Cruise contorl actuator magnetic clutch □Harness or connector between ECU and magnetic clutch, magnetic clutch and body ground □Cruise control ECU

WIRING DIAGRAM

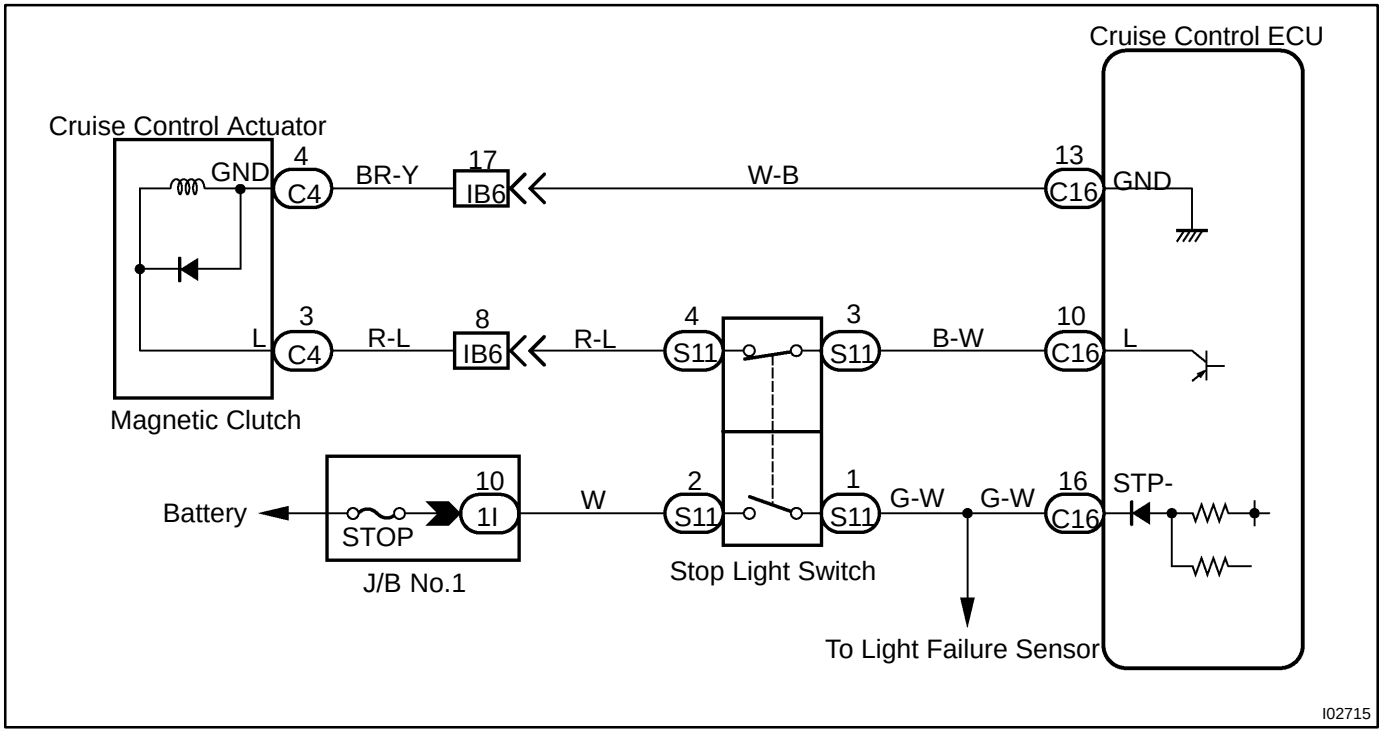

INSPECTION PROCEDURE

1	**Check STOP fuse.**

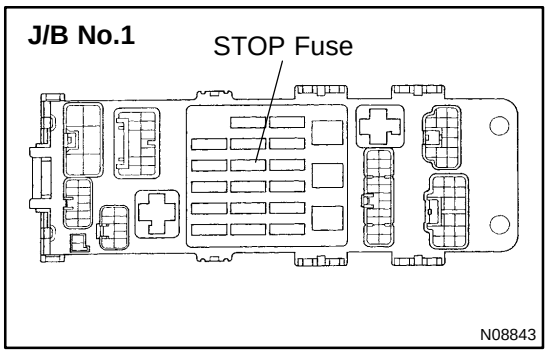

PREPARATION:
Remove STOP fuse from J/B No.1.
CHECK:
Check fuse continuity.
OK:
There is continuity.

NG → **Replace STOP fuse.**

OK

2	**Check harness and connector between actuator and cruise control actuator (See page IN-28).**

NG → **Repair or replace harness or connector.**

OK

Check and replace cruise control ECU (See page IN-28).

DI4XS-01

DTC	14	Actuator Mechanical Malfunction

CIRCUIT DESCRIPTION

See page DI-673 .

WIRING DIAGRAM

See page DI-673 .

INSPECTION PROCEDURE

1	Check actuator arm locking operation.

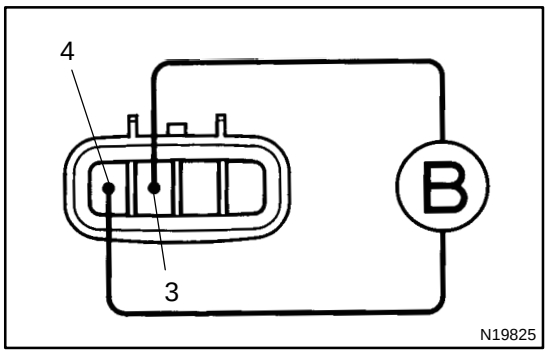

PREPARATION:

(a) Ignition switch OFF.

(b) Disconnect actuator connector.

CHECK:

(a) Connect the positive ⊕ lead from the battery to the terminal 3 of actuator and the negative ⊖ lead to terminal 4.

NOTICE:

Do not connect the high tension cables to the wrong battery terminal. You will damage the cruise control actuator.

(b) Move the control plate by hand.

OK:

Control plate does not move.

NG	Replace cruise control actuator.

OK

2	**Check actuator operation.**

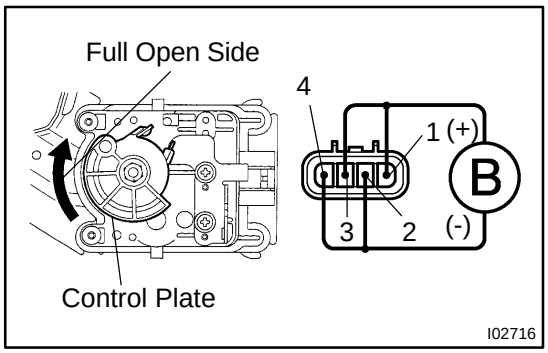

PREPARATION:

Disconnect the actuator connector.

CHECK:

Connect the positive ⊕ lead from the battery to terminals 3 and 1 of actuator, connect the negative ⊖ lead to terminals 4 and 2 of actuator.

OK:

Control arm moves to full open side

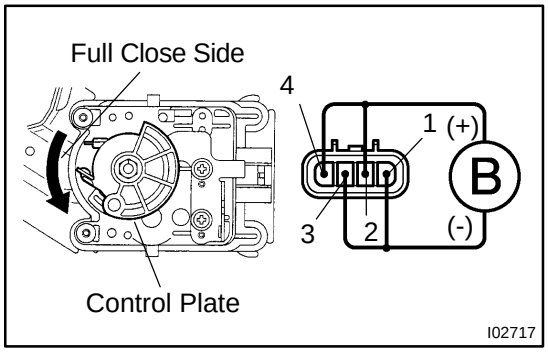

CHECK:

Connect the positive ⊕ lead from the battery to the terminals 4 and 2 of actuator, connect the negative ⊖ lead to terminals 3 and 1 of actuator.

OK:

Control arm moves to full close side

NG → **Replace actuator.**

OK

3	**Check harness and connector between actuator and cruise control ECU (See page IN-28).**

NG → **Repair or replace harness or connector.**

OK

Check and replace cruise control ECU (See page IN-28).

DI4XT-01

DTC	21	Open in Vehicle Speed Sensor Circuit

CIRCUIT DESCRIPTION

The vehicle speed sensor circuit is sent to cruise control ECU as vehicle speed signal. For each rotation of the shaft, the vehicle speed sensor sends a signal through the combination meter to the cruise control ECU (See the following). The ECU calculates the vehicle speed from this pulse frequency.

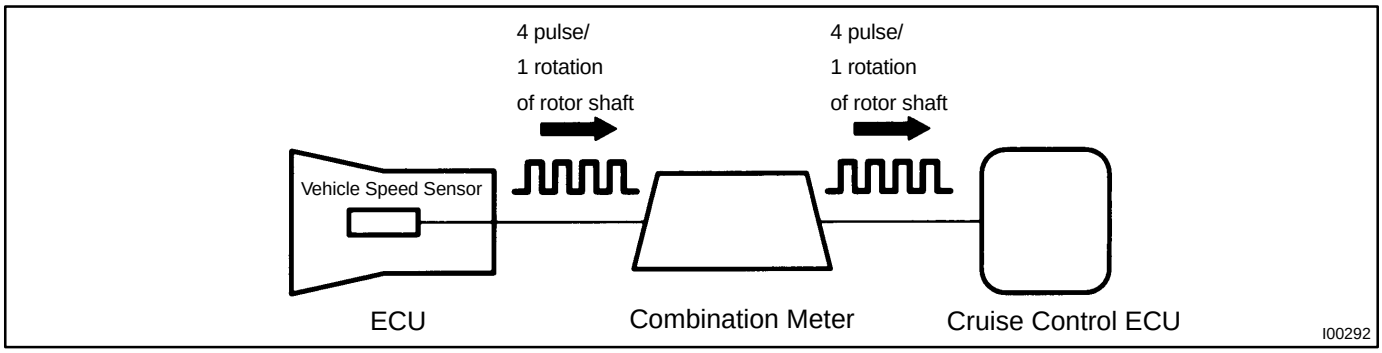

DTC No.	Detection Item	Trouble Area
21	Speed signal is not input to the cruise control ECU while cruise control is set.	□Vehicle speed sensor □Combination meter □Cruise control ECU

WIRING DIAGRAM

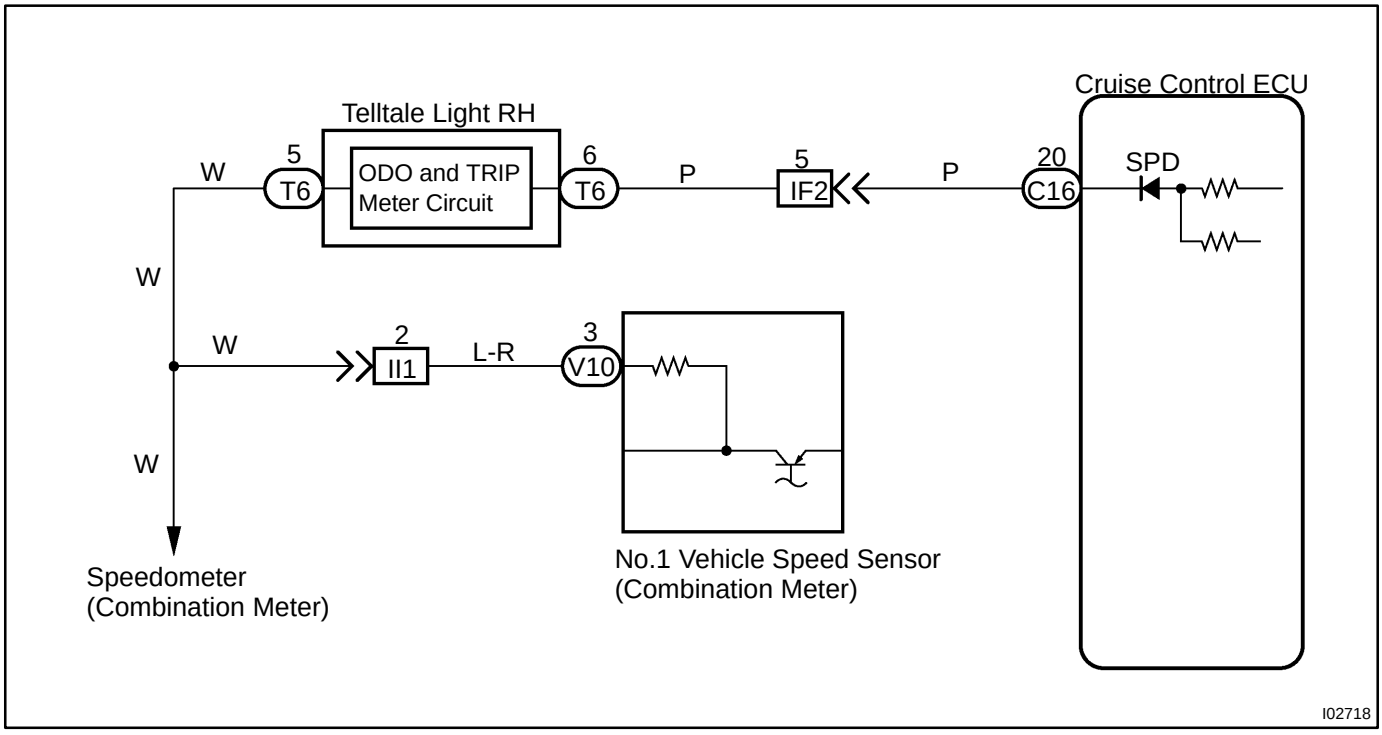

INSPECTION PROCEDURE

1	**Input signal check.**

Input Signal	Indicator Light Blinking Pattern
Drive at about 40 km/h (25 mph) or below	Light ON / OFF
Drive at about 40 km/h (25 mph) or higher	Light ON / OFF

CHECK:

(a) See input signal check on page

(b) Check indicator light operation when driving with vehicle speed above 40 km/h (25 mph), and with vehicle speed below 40 km/h (25 mph).

OK:

Vehicle speed above 40 km/h (25 mph):
Indicator light blinks
Vehicle speed below 40 km/h (25 mph):
Indicator light stays on

OK → **Check and replace cruise control ECU (See page IN-28).**

NG

2	**Check harness and connector between speed meter and cruise control ECU (See page IN-28).**

NG → **Repair or replace harness or connector.**

OK

3	**Check vehicle speed sensor (See page BE-43).**

NG → **Replace vehicle speed sensor.**

OK

Check and replace cruise control ECU (See page IN-28).

DI4XU-01

DTC	23	Vehicle Speed Signal Abnormal

CIRCUIT DESCRIPTION

See page DI-679 .

DTC No.	Detection Item	Trouble Area
23	□Vehicle speed sensor pulse is abnormal. (When sped signal is not input to the ECU below 0.2 sec., code will be displayed.)	□Vehicle speed sensor □Cruise control ECU

WIRING DIAGRAM

See page DI-679 .

INSPECTION PROCEDURE

1	**Check vehicle speed sensor (See page BE-43).**

NG → **Replace vehicle speed sensor.**

OK

Check and replace cruise control ECU (See page IN-28).

DI4XV-01

DTC	32	Control Switch Circuit (Cruise Control Switch)

CIRCUIT DESCRIPTION

This circuit carries the SET/COAST, RESUME/ACCEL and CANCEl signals (each voltage) to the ECU.

DTC No.	Detection Item	Trouble Area
32	Short in control switch circuit	□Cruise control switch □Harness or connector between control switch and cruise control ECU. □Cruise control ECU

WIRING DIAGRAM

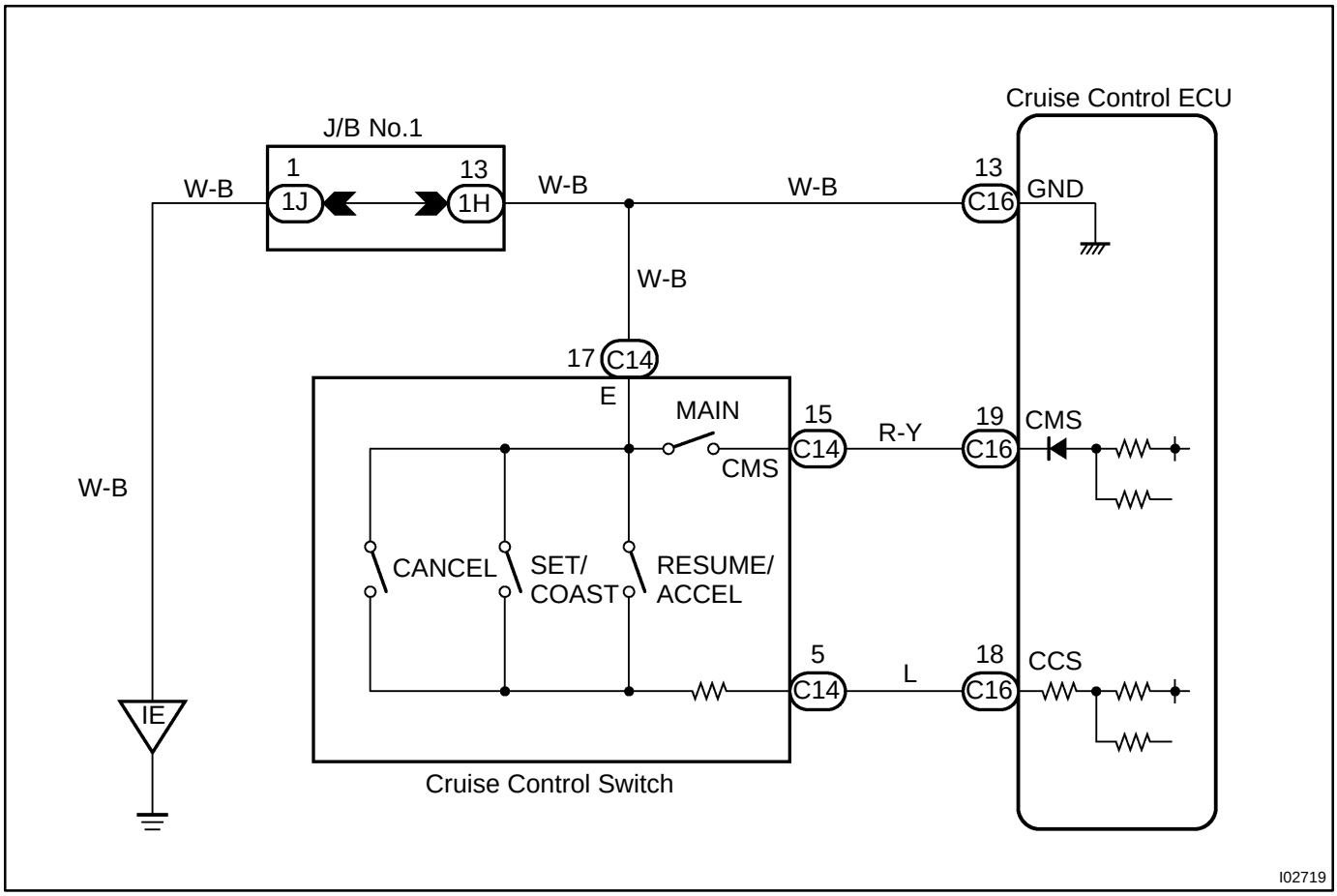

INSPECTION PROCEDURE

1	Input signal check.

Input Signal	Indicator Light Blinking Pattern
SET/COAST switch	ON / OFF — 2 Pulses
RESUME/ACCEL switch	ON / OFF — 3 Pulses
CANCEL switch	ON / OFF — SW OFF, SW ON

PREPARATION:

See input signal check on page DI-662 .

CHECK:

Check the indicator light operation when each of the SET/COAST, RESUME/ACCEL and CANCEL is turned on.

OK:

SET/COAST, RESUME/ACCEL switch

The signals shown in the table on the left should be output when each switch is ON. The signal should disappear when the switch is turned OFF.

CANCEL switch

The indicator light goes off when the cancel switch is turned on.

OK → **Wait and see.**

NG

2	Check control switch.

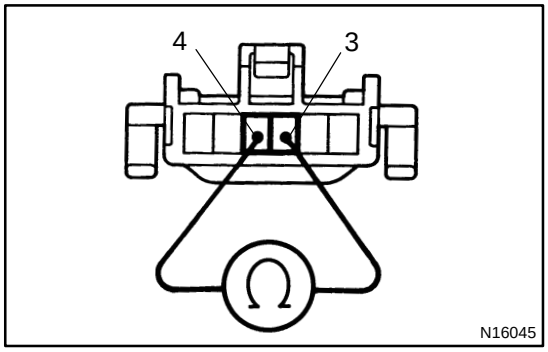

PREPARATION:

(a) Remove steering wheel center pad (See page SR-1 1).

(b) Disconnect control switch connector.

CHECK:

Measure resistance between terminals 3 and 4 of control switch connector when control switch is operated.

Switch position	Resistance (Ω)
Neutral	∞ (No continuity)
RES/ACC	50 - 80
SET/COAST	180 - 220
CANCEL	400 - 440

OK → **Repair control switch.**

NG

3	**Check harness and connector between cruise control switch and cruise control ECU (See page IN-28).**

NG → **Repair or replace harness or connector.**

OK

4	**Input signal check (See step 1).**

OK → **Wait and see.**

NG

Check and replace cruise control ECU (See page IN-28).

DI4XW-01

DTC	51	Idle Signal Circuit

CIRCUIT DESCRIPTION

When the idle switch in turned ON, a signal is sent to the ECU. The ECU uses this signal to correct the discrepancy between the throttle valve position and the actuator position sensor value to enable accurate cruise control at the set speed. If the idle switch is malfunctioning, problem symptoms also occur in the engine, so also inspect the engine.

DTC No.	Detection Item	Trouble Area
51	Short in idle signal circuit	□Harness or connector between cruise control ECU and throttle position sensor □Throttle position sensor □Cruise control ECU

WIRING DIAGRAM

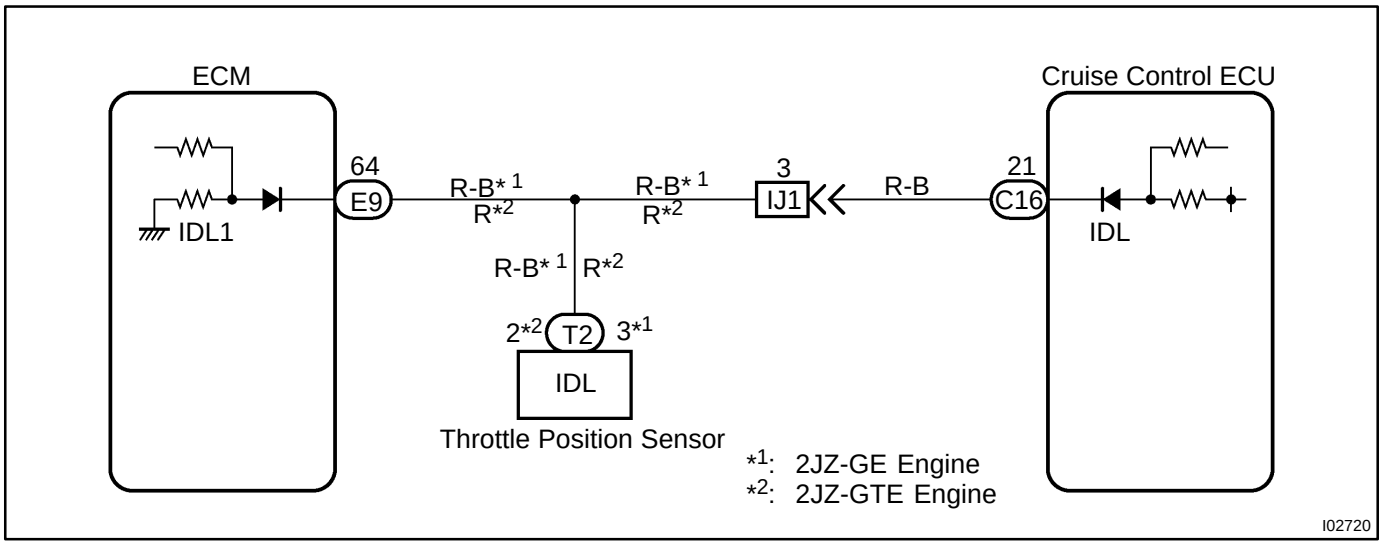

INSPECTION PROCEDURE

1	**Check throttle position sensor circuit (2JZ-GE: See page SF-42 , 2JZ-GTE: See page SF-44).**

NG → **Replace throttle position sensor.**

OK

2	**Check harness and connector between ECM and throttle position sensor (See page IN-28).**

NG → **Repair or replace harness or connector.**

OK

3	**Check harness and connector between cruise control ECU and throttle position sensor (See page IN-28).**

NG → **Repair or replace harness or connector.**

OK

Check and replace cruise control ECU (See page IN-28).

DI4XX-01

Stop Light Switch Circuit

CIRCUIT DESCRIPTION

When the brake is on, battery positive voltage normally applies through the STOP fuse and stop light switch to terminal STP- of the ECU, and the ECU turns the cruise control off.
A fail-safe function is provided so that cancel functions normally, even if there is a malfunction in the stop light signal circuit.
If the harness connected to terminal STP- has an open circuit, terminal STP- will have battery positive voltage and the cruise control will be turned off.
Also, when the brake is on, the magnetic clutch is cut mechanically by the stop light switch, turning the cruise control off. (See page DI-675 for operation of the magnetic clutch)

WIRING DIAGRAM

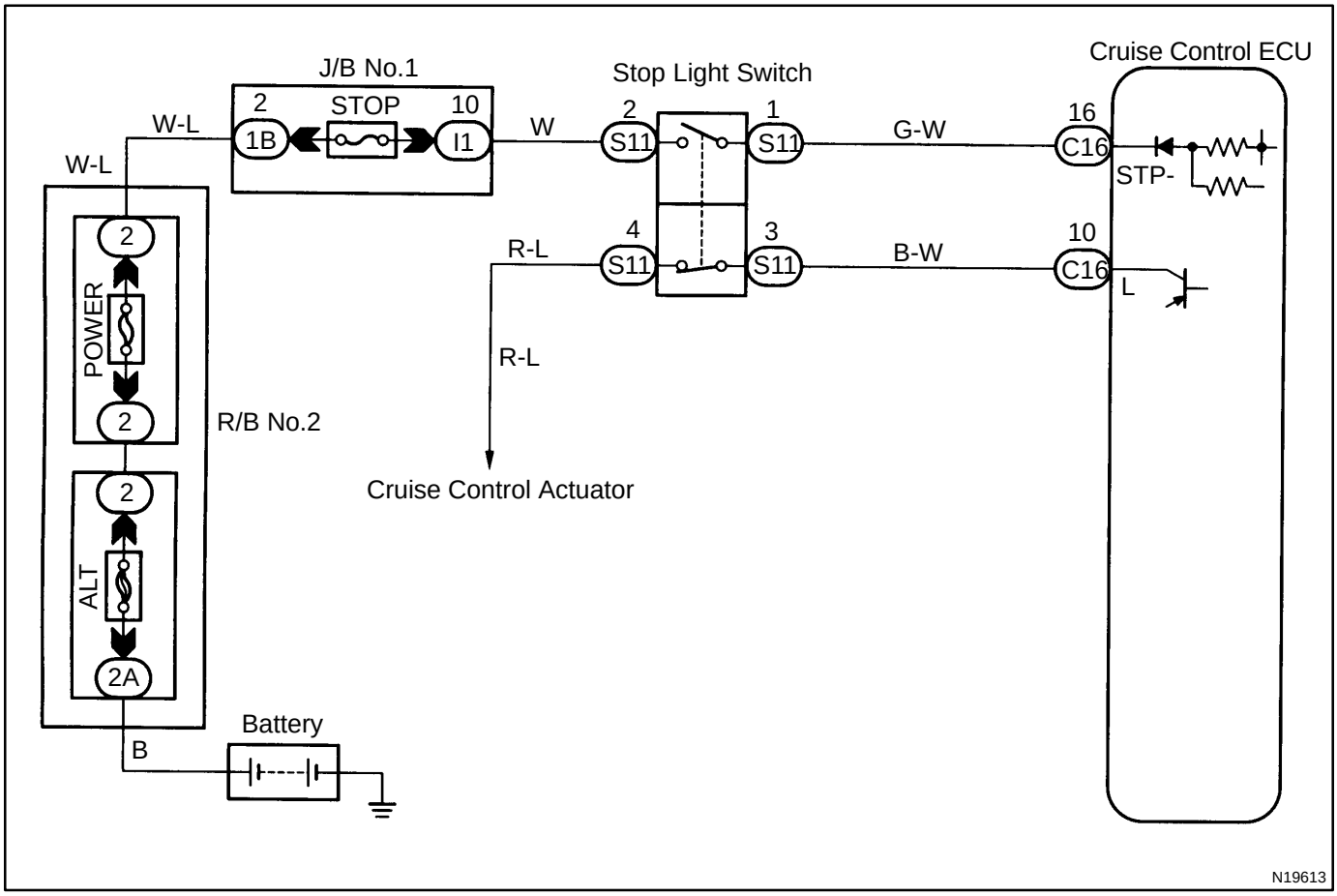

INSPECTION PROCEDURE

1	**Check operation of stop light.**

CHECK:

Check that stop light comes on when brake pedal is depressed, and turns off when brake pedal is released.

NG → **Check stop light system.**

OK

2	**Input signal check.**

Input Signal	Indicator Light Blinking Pattern
Stop Light switch ON	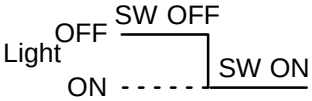

CHECK:

(a) See input signal check on DI-662 .

(b) Check the indicator light when the brake pedal is depressed.

OK:

The indicator light goes off when the brake pedal is depressed.

OK → **Proceed to next circuit inspection shown on problem symptoms table (See page DI-671).**

NG

3	**Check voltage between terminal STP- of cruise control ECU connector and body ground.**

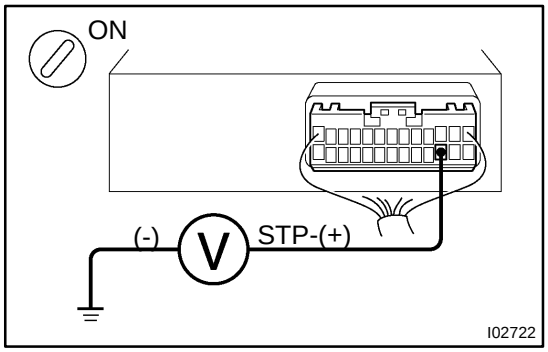

PREPARATION:

Remove cruise control ECU with connectors still connected.

CHECK:

(a) Turn ignition switch ON.

(b) Measure voltage between terminal STP-of cruise control ECU connector and body ground, when the brake pedal is depressed and released.

OK:

Depressed	10 - 14 V
Released	Below 1 V

OK → **Proceed to next circuit inspection shown on problem symptoms table (See page DI-671).**

NG

4	**Check for open in harness and connectors between terminal STP- of cruise control ECU and stop light switch (See page IN-28).**

NG → **Repair or replace harness or connector.**

OK

Check and replace cruise control ECU (See page IN-28).

DI4XY-01

Electronically Controlled Transmission Communication Circuit

CIRCUIT DESCRIPTION

When driving uphill under cruise control, in order to reduce shifting due to ON-OFF overdrive operation and to provide smooth driving, when down shifting in the electronically controlled transmission occurs, a signal to prevent upshift until the end of the uphill slope is sent from the cruise control ECU to the electronically controlled transmission.
Terminal ECM of the cruise control ECU detects the shift change signal (output to electronically controlled transmission No.2 solenoid) from the electronically controlled transmission.
If vehicle speed down, also when terminal electronically controlled transmission of the cruise control ECU receive down shifting signal, it sends a signal from terminal OD to ECM to cut overdrive until the end of the uphill slope, and the gear shifts are reduced and gear shift points in the electronically controlled transmission are changed.

WIRING DIAGRAM

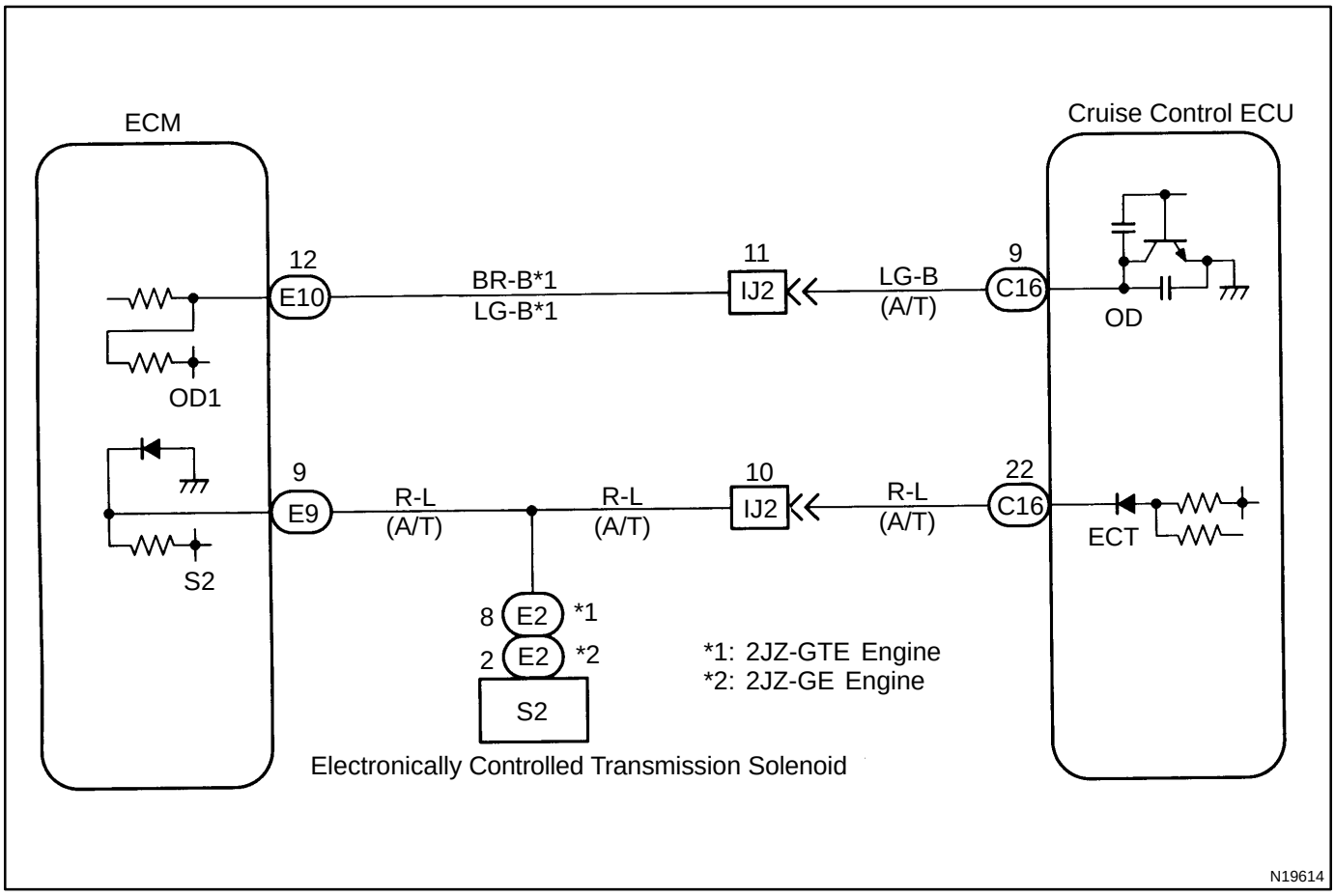

INSPECTION PROCEDURE

1	**Check operation of overdrive.**

PREPARATION:
Test drive after engine warms up.
CHECK:
Check that overdrive ON ↔ OFF occurs with operation of OD switch ON ↔ OFF.

NG → **Check and repair electronically controlled transmission (See page DI-371).**

OK

2	**Check voltage between terminal OD of harness side connector of cruise control ECU and body ground.**

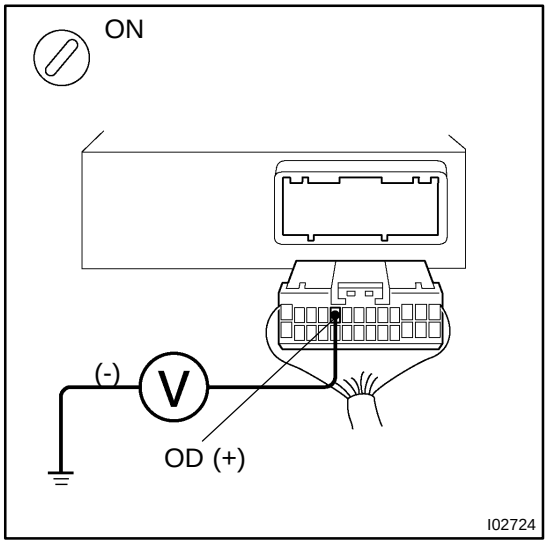

PREPARATION:
Remove cruise control ECU with connector still connected.
CHECK:
(a) Disconnect cruise control ECU connector.
(b) Turn ignition switch ON.
(c) Measure voltage between terminal OD of harness side connector of cruise control ECU and body ground.

OK:
Voltage: 10 - 14 V

NG → **Go to step 5.**

OK

3	**Check voltage between terminal ECT of cruise control ECU connector and body ground (On test drive).**

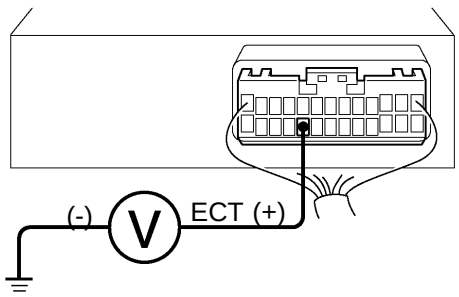

N19837

PREPARATION:

(a) Connect cruise control ECU connector.

(b) Test drive after engine warms up.

CHECK:

Check voltage between terminal ECT of cruise control ECU connector and body ground when OD switch is ON and OFF.

OK:

OD switch position	Voltage
ON	8 - 14 V
OFF	Below 0.5 V

OK → **Proceed to next circuit inspection shown on problem symptoms table (See page DI-671).**

NG

4	**Check harness and connector between terminal ECT of cruise control ECU and electronically controlled transmission solenoid (See page IN-28).**

NG → **Repair or replace harness or connector.**

OK

Check and replace cruise control ECU.

5	**Check harness and connector between terminal OD of cruise control ECU and terminal OD1 of ECM (See page IN-28).**

NG → **Repair or replace harness or connector.**

OK

Check and replace cruise control ECU (See page IN-28).

DI4XZ-01

Park/Neutral Position Switch Circuit

CIRCUIT DESCRIPTION

When the shift position is put in except D position, a signal is sent from the park/neutral position switch to the ECU. When this signal is input during cruise control driving, the ECU cancels the cruise control.

WIRING DIAGRAM

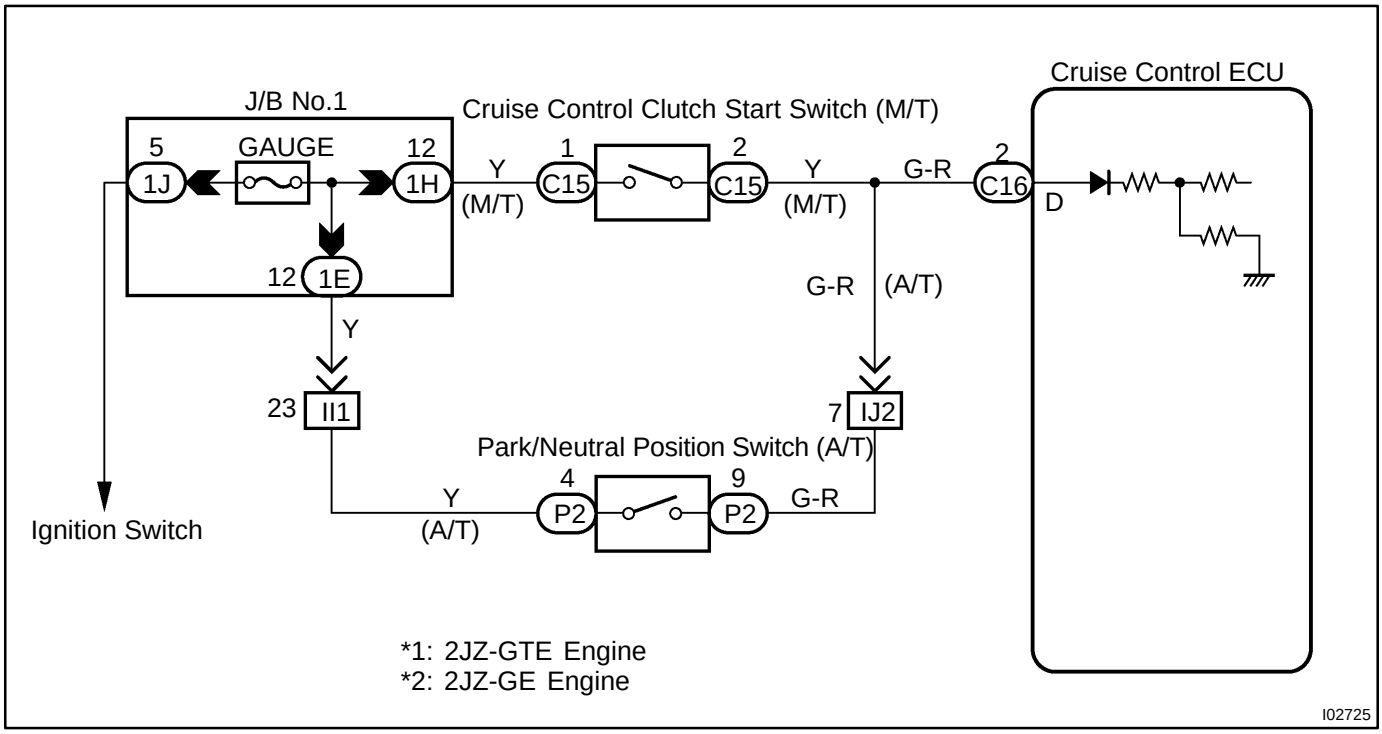

INSPECTION PROCEDURE

1	**Check starter operation.**

CHECK:

Check that the starter operates normally and that the engine starts.

NG → **Proceed to engine troubleshooting (2JZ-GE: See page DI-24 , 2JZ-GTE: See page DI-169).**

OK

2	Input signal check.

Input Signal	Indicator Light Blinking Pattern
Turn PNP switch OFF (Shift to except D range)	Light ON SW ON / OFF- - - SW OFF

PREPARATION:
See input signal check on page DI-662 .
CHECK:
Check the indicator light when shifting into except D position.
OK:
The indicator light goes off when shifting into except D position.

OK → **Proceed to next circuit inspection shown on problem symptoms table (See page DI-671).**

NG

3	Check voltage between terminal D of cruise control ECU and body ground.

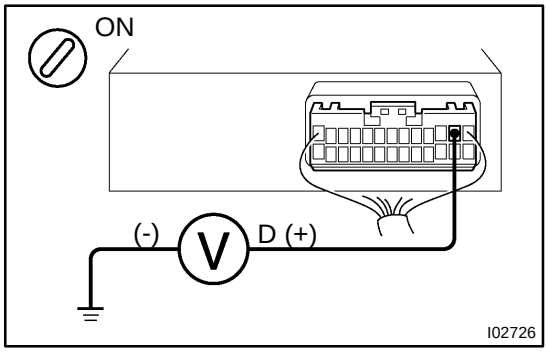

PREPARATION:
Turn ignition switch ON.
CHECK:
Measure voltage between terminal D of cruise control ECU connector and body ground when shifting into D position and other positions.
OK:

Shift Position	Voltage
D position	10 - 14 V
Other positions	Below 1 V

OK → **Proceed to next circuit inspection shown on problem symptoms table (See page DI-671).**

NG

4	**Check harness and connector between PNP switch and cruise control ECU (See page IN-28).**

NG → **Repair or replace harness or connector.**

OK

Check and replace cruise control ECU (See page IN-28).

DI4Y0-01

Clutch Switch Circuit

CIRCUIT DESCRIPTION

When the clutch pedal is depressed, the clutch switch sends a signal to the cruise control ECU. When the signal is input to the cruise control ECU during cruise control driving, the cruise control ECU cancels cruise control.

WIRING DIAGRAM

Refer to park/neutral position switch circuit on page DI-694 .

INSPECTION PROCEDURE

1	**Check starter operation.**

CHECK:

Check that the starter operates normally and that the engine starts.

NG → **Proceed to engine troubleshooting (2JZ-GE: See page DI-24 , 2JZ-GTE: See page DI-169).**

OK

2	**Input signal check.**

Input Signal	Indicator Light Blinking Pattern
Clutch switch OFF (Depress clutch pedal)	Light ON SW ON / OFF - - - - - SW OFF

PREPARATION:

See input signal check on page DI-662 .

CHECK:

Check the indicator light when the clutch pedal is depressed.

OK:

The indicator light goes off when the clutch pedal is depressed.

OK → **Proceed to next circuit inspection shown on problem symptoms table (See page DI-671).**

NG

3	Check voltage between terminal D of cruise control ECU and body ground.

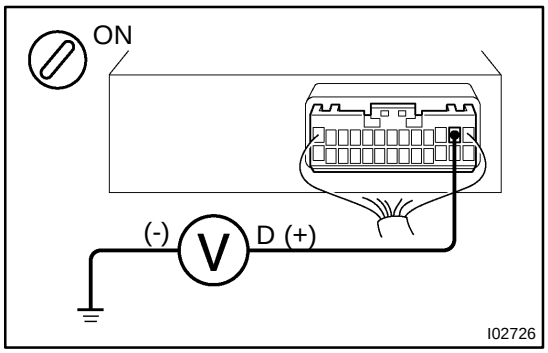

PREPARATION:

Turn ignition switch ON.

CHECK:

Measure voltage between terminal D of cruise control ECU connector and body ground when the clutch pedal is depressed.

OK:

Shift Position	Voltage
ON (Pedal depressed)	Below 1 V
OFF	10 - 14 V

OK → **Proceed to next circuit inspection shown on problem symptoms table (See page DI-671).**

NG

4	Check for open in harness and connector between ECU and GAUGE fuse (See page IN-28).

NG → **Repair or replace harness or connector.**

OK

Check and replace cruise control ECU (See page IN-28).

DI4Y1-01

ECU Power Source Circuit

CIRCUIT DESCRIPTION

The ECU power source supplies power to the actuator and sensors, etc.. When terminal GND and the cruise control ECU case are grounded.

WIRING DIAGRAM

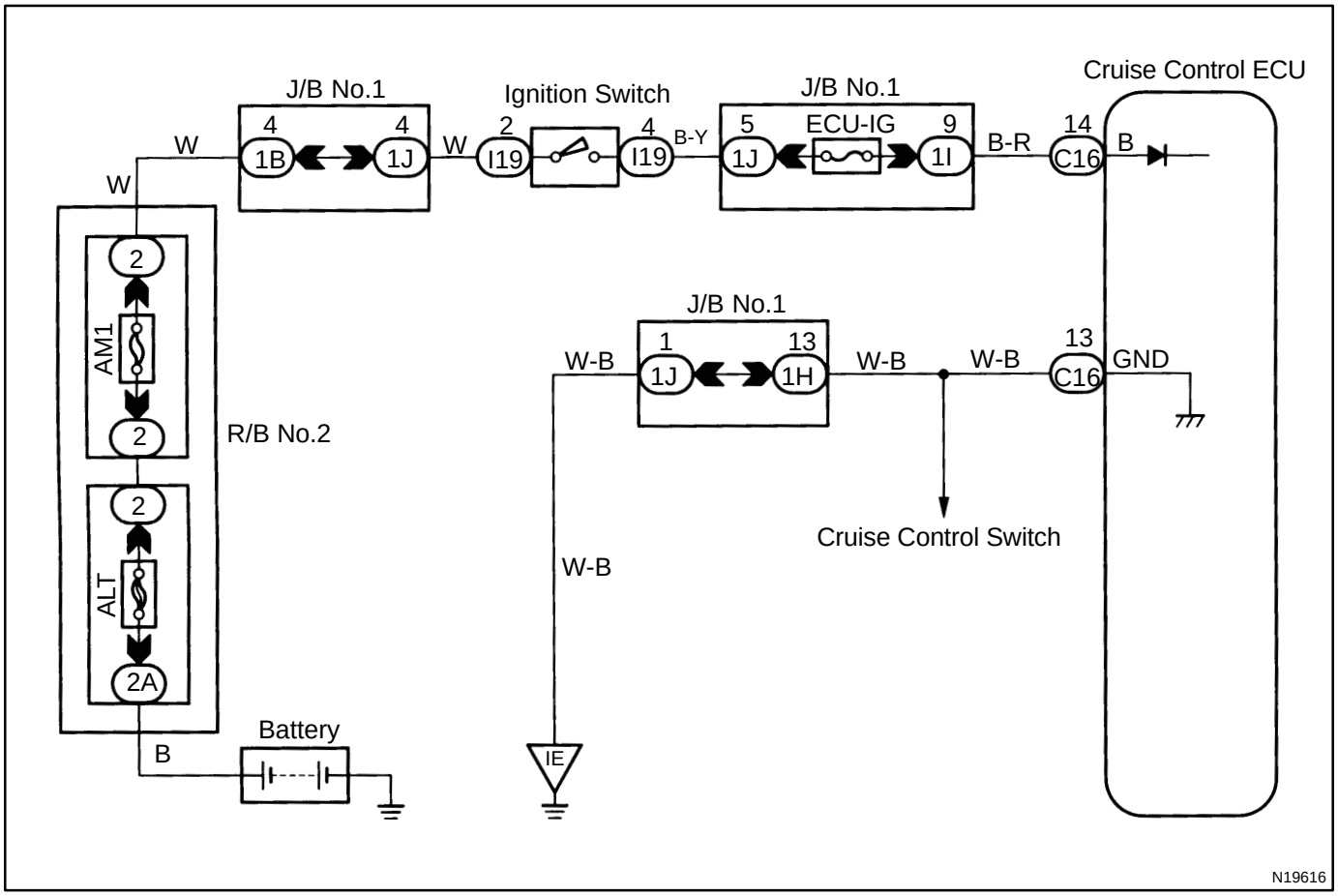

INSPECTION PROCEDURE

1	Check ECU-IG fuse.

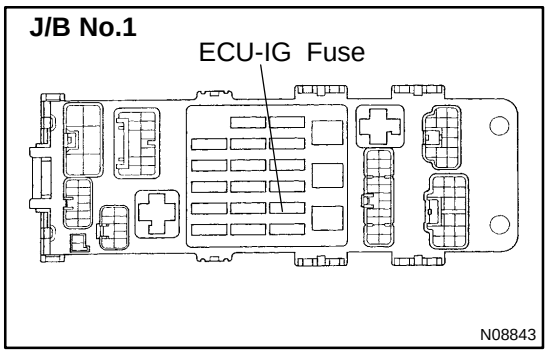

PREPARATION:
Remove ECU-IG fuse from junction block No.1.
CHECK:
Check continuity of ECU-IG fuse.
OK:
Continuity

NG → **Check for short in all the harness and components connected to ECU-IG fuse.**

OK

2	Check voltage between terminals B and GND of cruise control ECU connector.

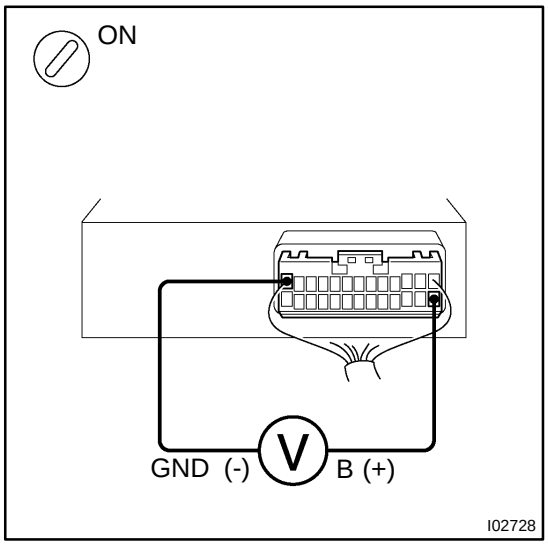

PREPARATION:
Remove cruise control ECU with connector still connected.
CHECK:
(a) Turn ignition switch ON.
(b) Measure voltage between terminals B and GND of cruise control ECU connector.
OK:
Voltage 10 - 14 V

OK → **Proceed to next circuit inspection shown on problem symptoms table (See page DI-671).**

NG

3	**Check resistance between terminal GND of cruise control ECU connector and body ground (See page IN-28).**

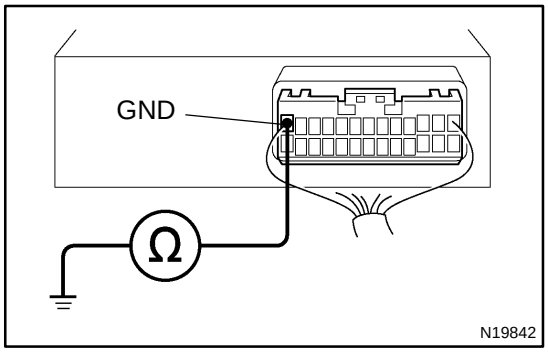

CHECK:

Measure resistance between terminal GND of cruise control ECU connector and body ground.

OK:

Resistance: Below 1 Ω

NG → **Repair or replace harness or connector.**

OK ↓

Check and repair harness and connector between battery and cruise control ECU (See page IN-28).

DI4Y2-01

Back-up Power Source Circuit

CIRCUIT DESCRIPTION

The ECU back-up power source provides power even when the ignition is off and is used for DTC memory, etc..

WIRING DIAGRAM

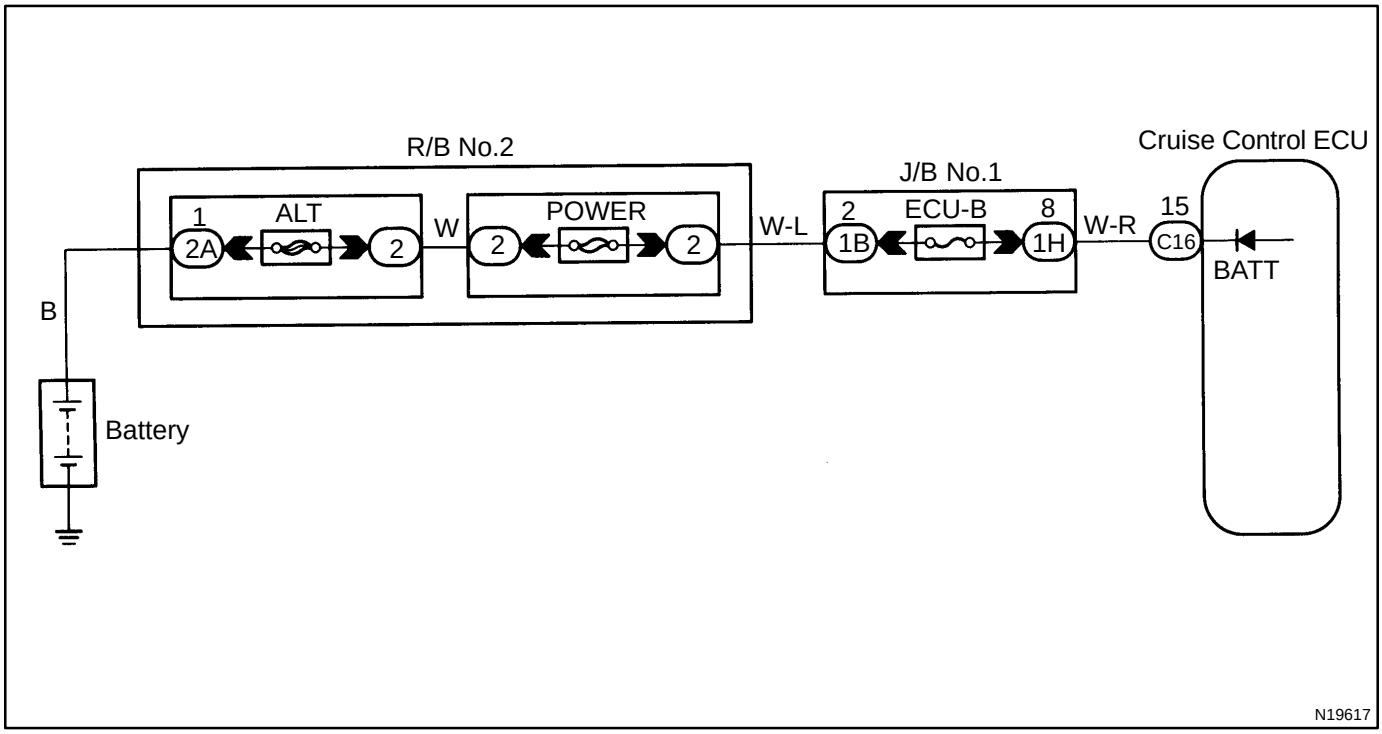

INSPECTION PROCEDURE

1	Check DOME fuse.

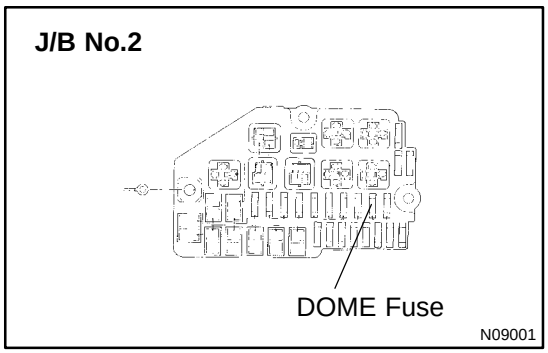

PREPARATION:
Remove DOME fuse from relay block No.2.
CHECK:
Check continuity of DOME fuse.
OK:
Continuity

NG → **Check for short in all the harness and components connected to the DOME fuse.**

OK

2	Check voltage between terminal BATT of cruise control ECU connector and body ground (See page IN-28).

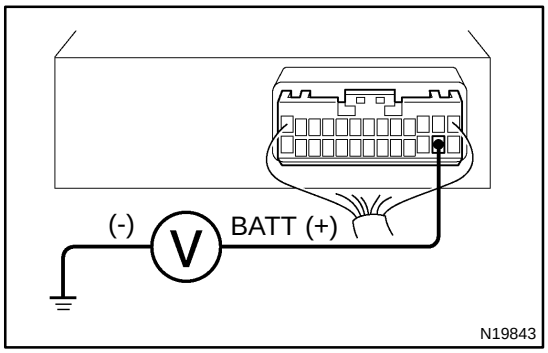

PREPARATION:
Remove cruise control ECU with connector still connected.
CHECK:
Measure voltage between terminal BATT of cruise control ECU connector and body ground.
OK:
Voltage: 10 - 14 V

OK → **Proceed to next circuit inspection shown on problem symptoms table (See page DI-671).**

NG

Check and repair harness and connector between battery and cruise control ECU (See page IN-28).

DI4Y3-01

Main Switch Circuit (Cruise Control Switch)

CIRCUIT DESCRIPTION

When the cruise control main switch is turned off, the cruise control does not operate.

WIRING DIAGRAM

See page DI-682 .

INSPECTION PROCEDURE

1	**Check voltage between terminal CMS of cruise control ECU connector and body ground.**

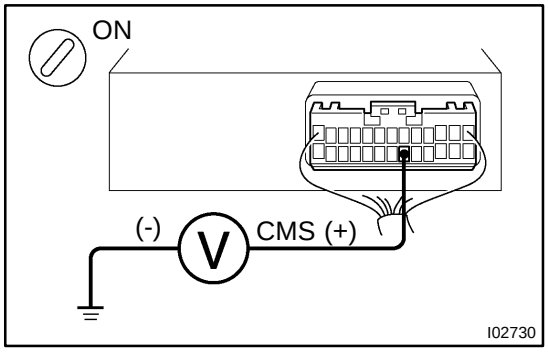

PREPARATION:

Remove cruise control ECU with connector still connected.

CHECK:

(a) Turn ignition switch ON.

(b) Measure voltage between terminal CMS of cruise control ECU connector when main switch is held on and off.

OK:

Main switch	Voltage
OFF	10 - 14 V
ON	Below 1 V

OK → **Proceed to next circuit inspection shown on problem symptoms table (See page DI-671).**

NG

2	Check main switch continuity.

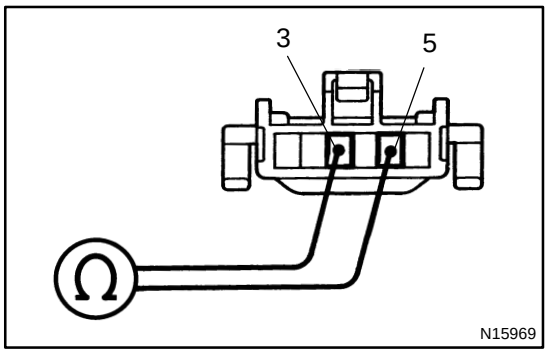

PREPARATION:

(a) Remove steering wheel center pad (See page SR-1 1).

(b) Disconnect cruise control switch connector.

CHECK:

Check continuity between terminals 3 and 5 of cruise control switch connector when main switch is held on and off.

OK:

Switch position	Tester connection	Specified condition
OFF	3 - 5	No continuity
Hold ON	3 - 5	Continuity

NG → **Replace control switch.**

OK

3	Check harness and connector between cruise control ECU and main switch (See page IN-28).

NG → **Repair or replace harness or connector.**

OK

Check and replace cruise control ECU (See page IN-28).

DI4Y4-01

CRUISE MAIN Indicator Light Circuit

CIRCUIT DESCRIPTION

When the cruise control main switch is turned ON, CRUISE MAIN indicator light lights up.

WIRING DIAGRAM

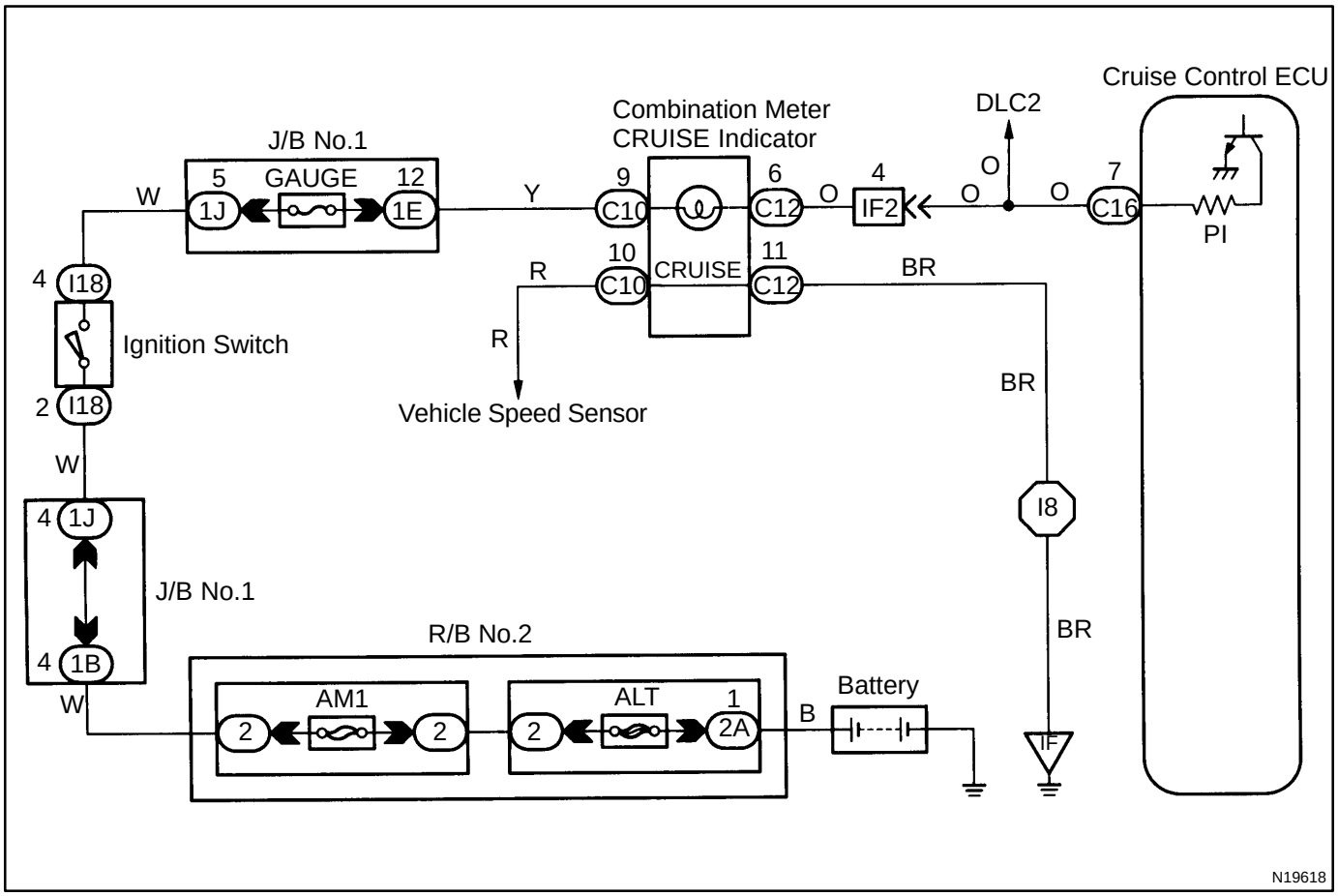

INSPECTION PROCEDURE

1	Check voltage between terminals PI and GND of cruise control ECU connector.

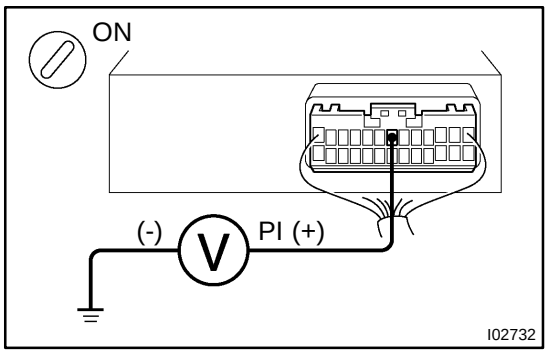

PREPARATION:
Ignition switch ON.

CHECK:
Measure voltage between terminals PI and GND of cruise control ECU connector when main switch on and off.

OK:

Switch position	Voltage
OFF	10 - 16 V
ON	Below 1.2 V

OK → **Proceed to next circuit inspection shown on problem symptoms table (See page DI-671).**

NG

2	Check combination meter (See page BE-43).

NG → **Replace combination meter.**

OK

Check and replace cruise control ECU (See page IN-28).

DI4Y5-01

Diagnosis Circuit

CIRCUIT DESCRIPTION

This circuit sends a signal to the ECU that DTC output is required.

WIRING DIAGRAM

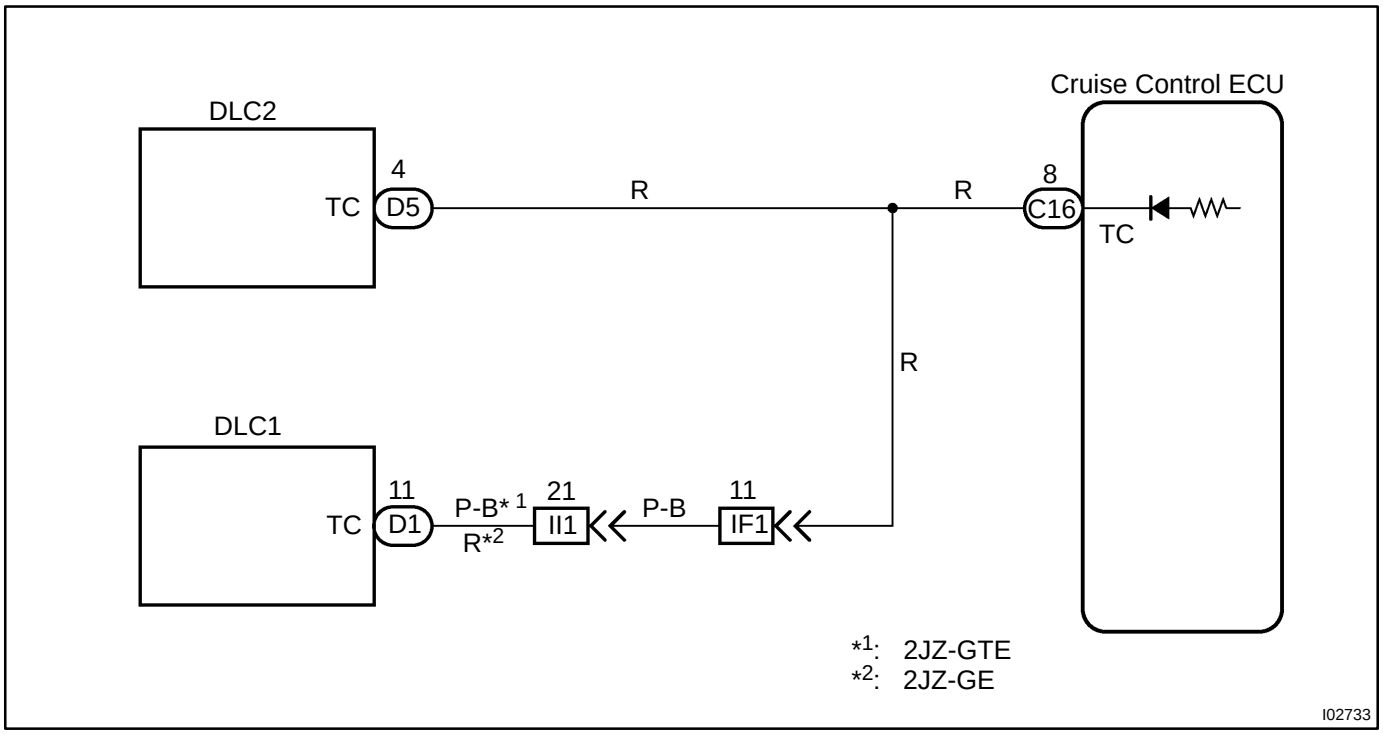

INSPECTION PROCEDURE

1	**Check voltage between terminals Tc and E_1 of DLC2.**

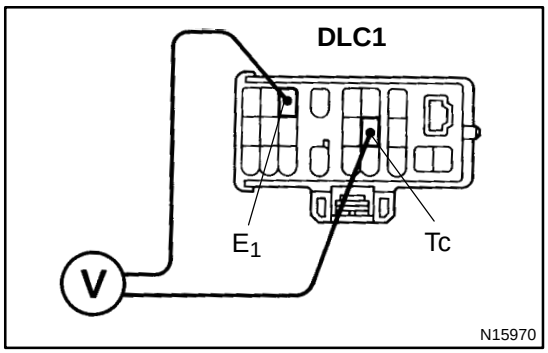

CHECK:

(a) Turn ignition switch ON.

(b) Measure voltage between terminals Tc and E_1 of DLC2.

OK:

Voltage: 10 - 14 V

OK → **Proceed to next circuit inspection shown on problem symptoms table (See page DI-671).**

NG

2	**Check harness and connector between cruise control ECU and DLC2, DLC2 and body ground (See page IN-28).**

NG → **Repair or replace harness or connector.**

OK

Check and replace cruise control ECU (See page IN-28).