2005 ACCESSORIES & EQUIPMENT

Cruise Control System - Diagnostics - RAV4

HOW TO PROCEED WITH TROUBLESHOOTING

Troubleshoot in accordance with the following procedures.

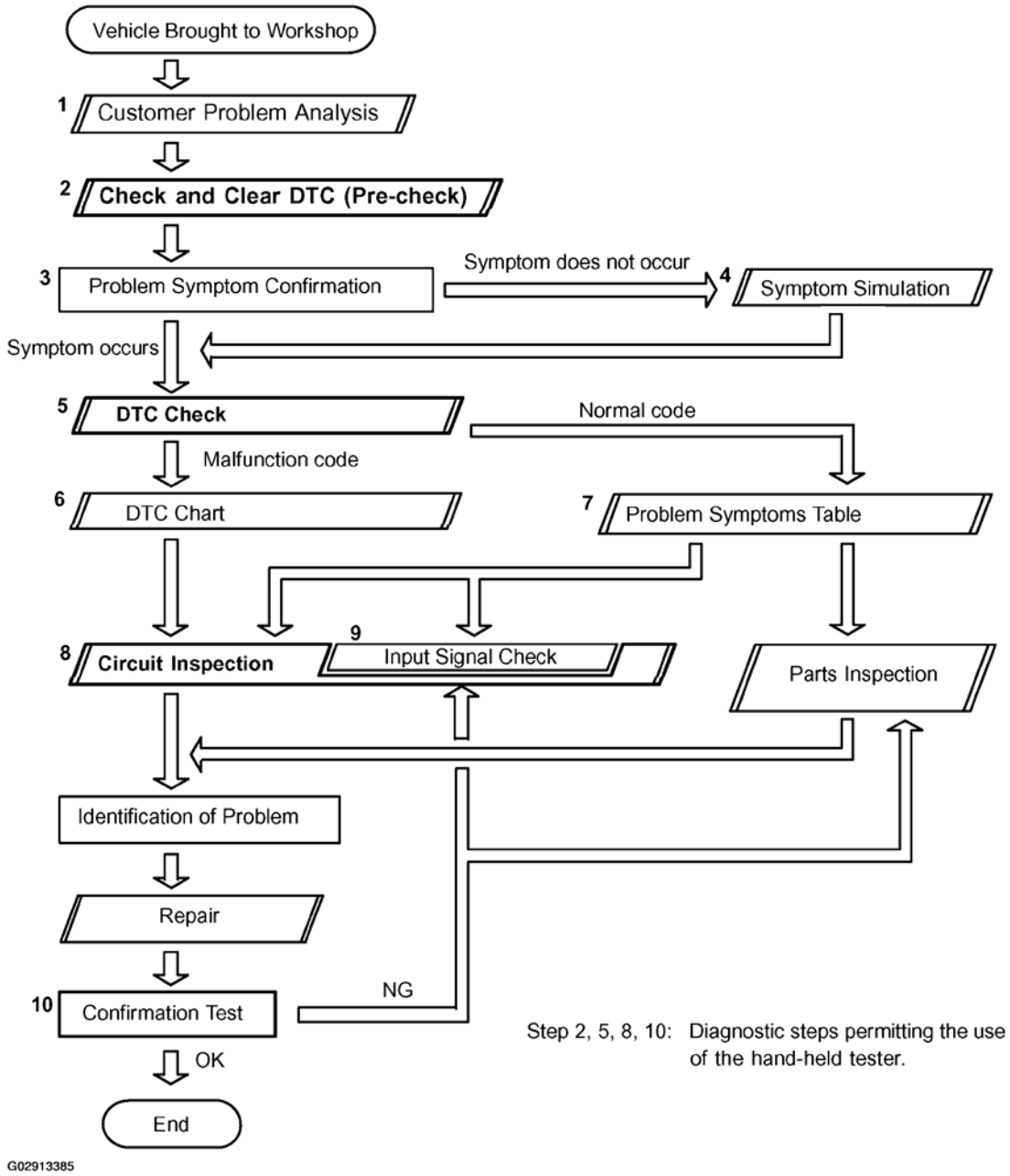

Fig. 1: Troubleshooting Procedure Chart

cardiagn.com

Courtesy of TOYOTA MOTOR SALES, U.S.A., INC.

CUSTOMER PROBLEM ANALYSIS CHECK

CRUISE CONTROL SYSTEM Check Sheet

Inspector's name: _____

Customer's Name		**VIN**	
		Production Date.	
		License Plate No.	
Date Vehicle Brought in	/ /	**Odometer Reading**	km Mile

Condition of Problem Occurrence	**Date of Problem Occurrence**	/ /
	Frequency Problem Occurs	☐ Continuous ☐ Intermittent (Times a day)
	Vehicle Speed When Problem Occurred	km/h mph

Symptoms	☐ Auto cancel occurs	• Driving condition ☐ City driving ☐ Freeway ☐ Uphill ☐ Downhill • After cancel occurred, did the driver activate cruise control again? ☐ Yes ☐ No
	☐ Cancel does not occur	☐ With brake ON ☐ Except D position shift ☐ When control switch turns to CANCEL position
	☐ Cruise control malfunction	☐ Slip to acceleration side ☐ Slip to deceleration side ☐ Hunting occurs ☐ O/D cut off does not occur ☐ O/D does not return
	☐ Switch malfunction	☐ + ☐ RES ☐ – ☐ SET ☐ CANCEL
	☐ Cruise main indicator light	☐ Remains ON ☐ Does not light up ☐ Blinks

DTC Check	**1st Time**	☐ Normal Code ☐ Malfunction Code (Code)
	2nd Time	☐ Normal Code ☐ Malfunction Code (Code)

G02642761

Fig. 2: Customer Problem Analysis Check Sheet
Courtesy of TOYOTA MOTOR SALES, U.S.A., INC.

PRE-CHECK

cardiagn.com

1. **DIAGNOSIS SYSTEM**
   a. Description

   The ECM controls the cruise control function on this vehicle. Data of the cruise control or DTC can be read from the DLC3 of the vehicle. When cruise control function is malfunctioning the CRUISE main indicator does not light up but DTC inspection is performed.

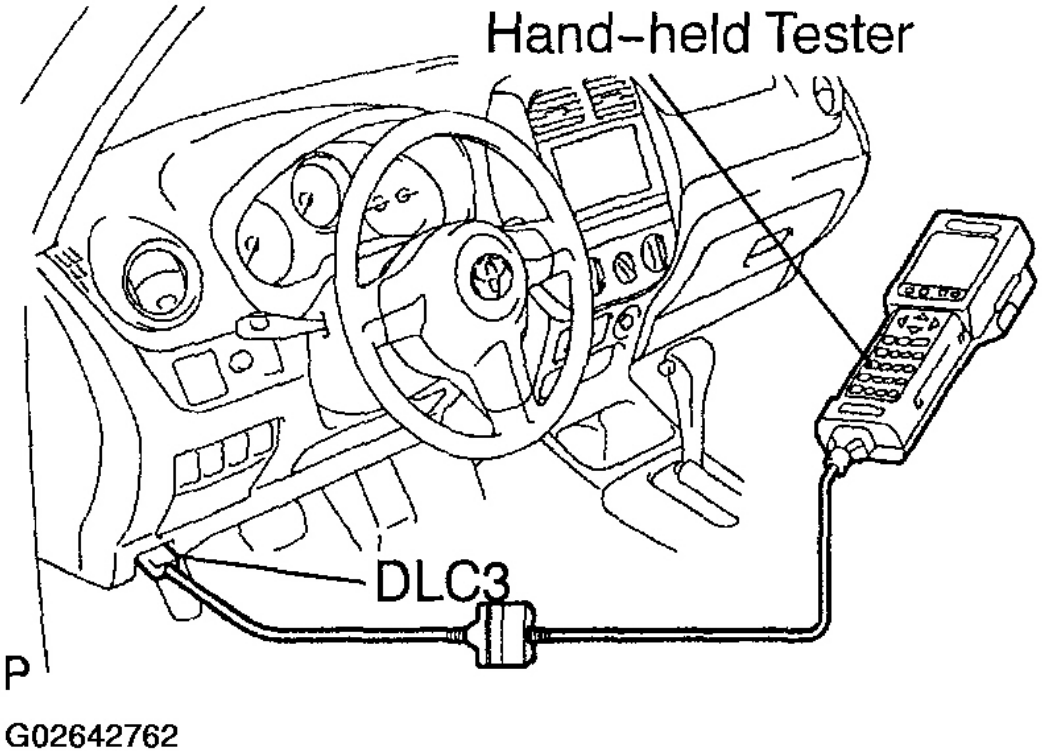

Fig. 3: Connecting Hand-Held Tester To DLC3
Courtesy of TOYOTA MOTOR SALES, U.S.A., INC.

Therefore, when the cruise control function seems to have a malfunction, use the hand-held tester or SST to check and troubleshoot it.

   b. Check the DLC3.

   The vehicle's ECM uses the ISO 9141-2 for communication. The terminal arrangement of the DLC3 complies with the SAE J1962 and matches the ISO 9141-2 format.

cardiagn.com

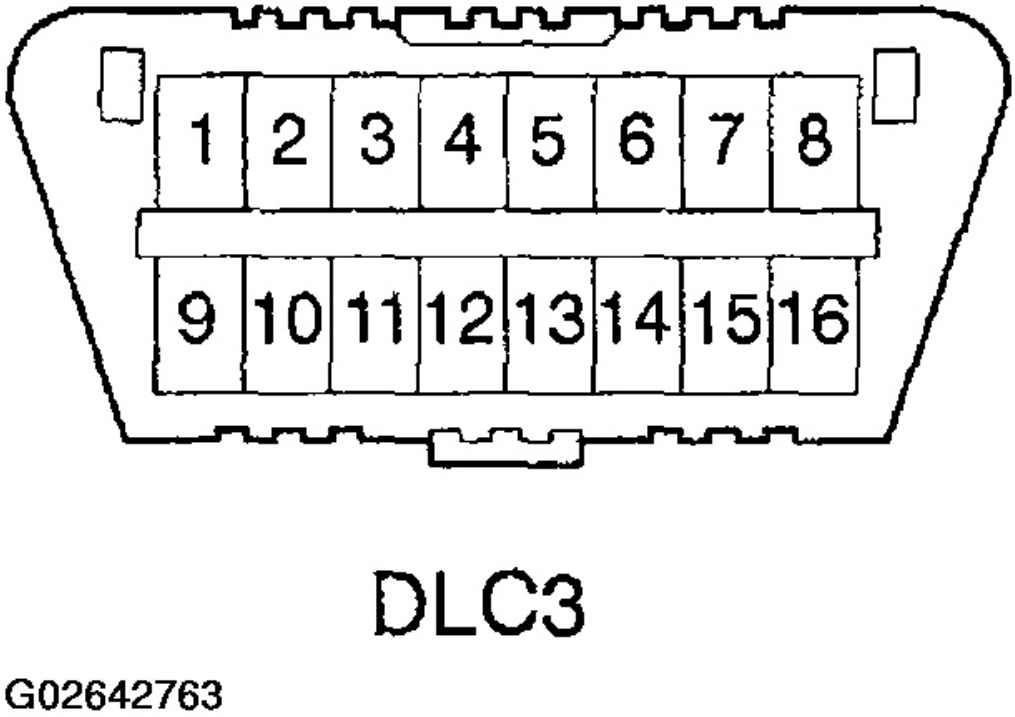

Fig. 4: Identifying DLC3 Terminals
Courtesy of TOYOTA MOTOR SALES, U.S.A., INC.

Terminal No.	Connection/Specified Condition	Condition
7	Bus+ line/Pulse generation	During transmission
4	Chassis ground ↔ Body ground/below 1 Ω	Always
16	Battery positive ↔ Body ground/9 to 14 V	Always

G02642764

Fig. 5: DLC3 Terminals Number And Specified Condition
Courtesy of TOYOTA MOTOR SALES, U.S.A., INC.

HINT:

If the display shows "UNABLE TO CONNECT TO VEHICLE" when you have connected the cable of the hand-held tester to the DLC3, turned the ignition switch ON and operated the hand-held tester, there is a problem on the vehicle side or tester side.

- If the communication is normal when the tester is connected to another vehicle, inspect the DLC3 on the original vehicle.

cardiagn.com

- If the communication is still impossible when the tester is connected to another vehicle, the problem is probably in the tester itself. Consult the Service Department listed in the tester's instruction manual.

c. Check the indicator.
   1. Turn the ignition switch ON.
   2. Check that the CRUISE main indicator turns on when the cruise control main switch is turned ON, and that the indicator light turns off when the main switch is turned OFF.

HINT:

If the indicator check result is not as specified, proceed to troubleshooting for the combination meter (see **PROBLEM SYMPTOMS TABLE**).

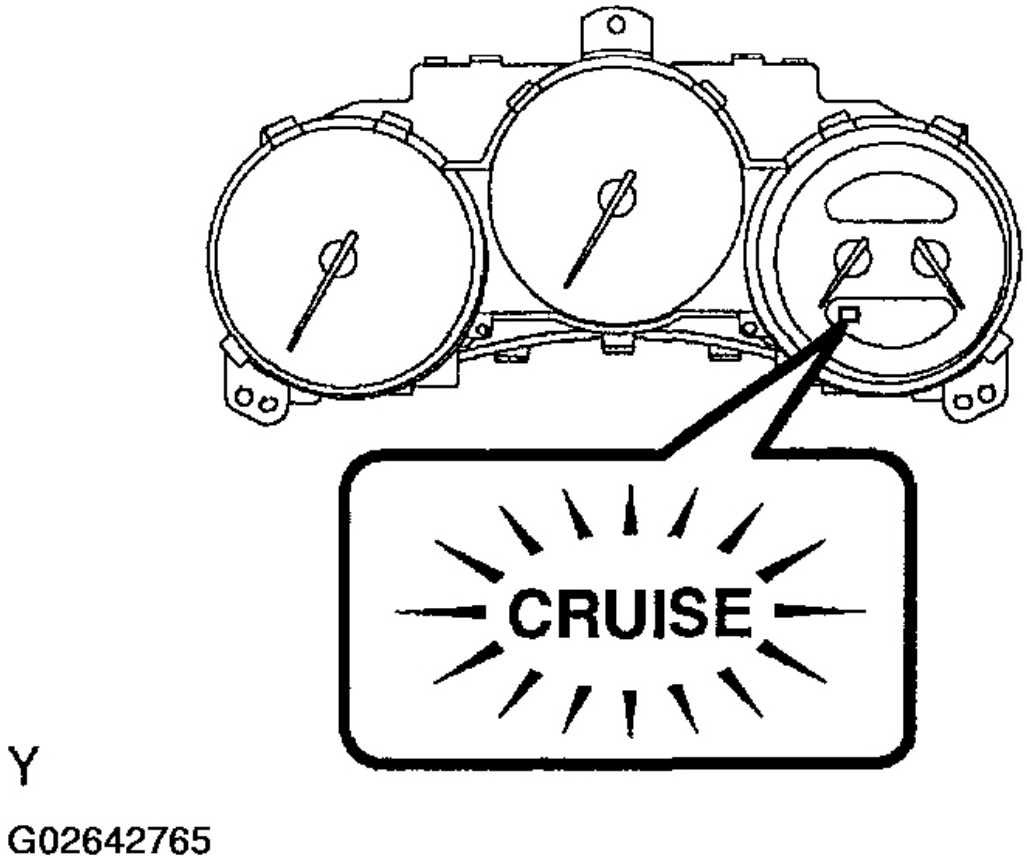

Fig. 6: Identifying CRUISE Main Indicator Light Location
Courtesy of TOYOTA MOTOR SALES, U.S.A., INC.

cardiagn.com

d. Check the DTC.

HINT:

If a malfunction occurs in the speed sensor or actuator, etc. during cruise control driving, the ECM actuates AUTO CANCEL of the cruise control and turns ON and OFF the CRUISE main indicator light to inform the driver of a malfunction. At the same time, the malfunction is stored in the memory as a DTC.

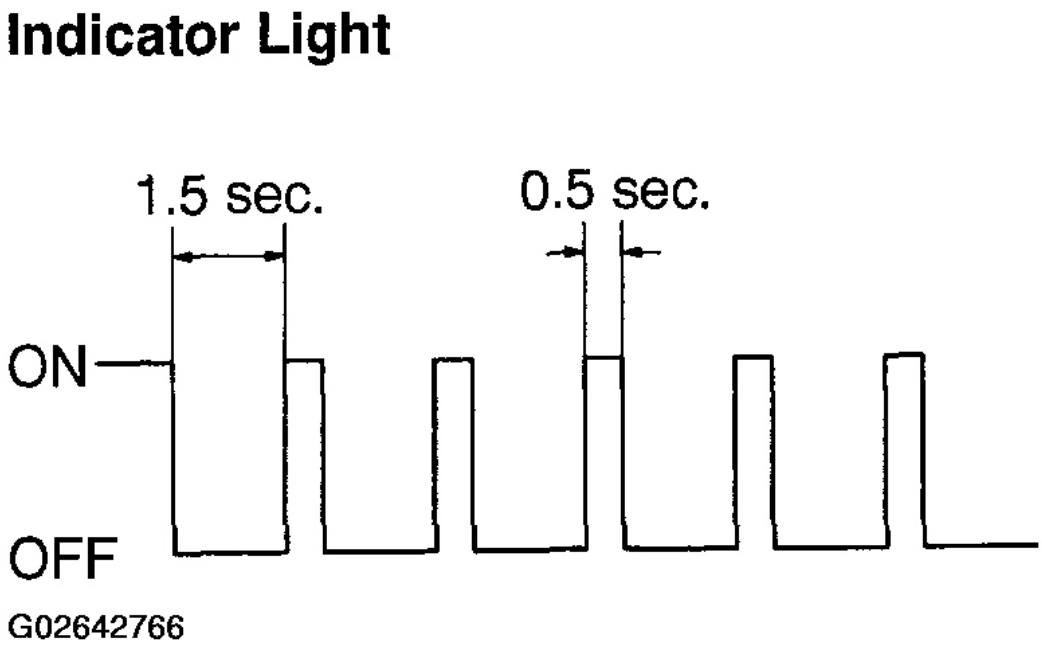

Fig. 7: CRUISE Main Indicator Light Blinking Pattern
Courtesy of TOYOTA MOTOR SALES, U.S.A., INC.

e. Output a DTC using diagnosis check wire.
   1. Turn the ignition switch ON.
   2. Using SST, connect terminals TC and CG of the DLC3.

      SST 09843-18040

   3. Read the DTC on the CRUISE main indicator light.

cardiagn.com

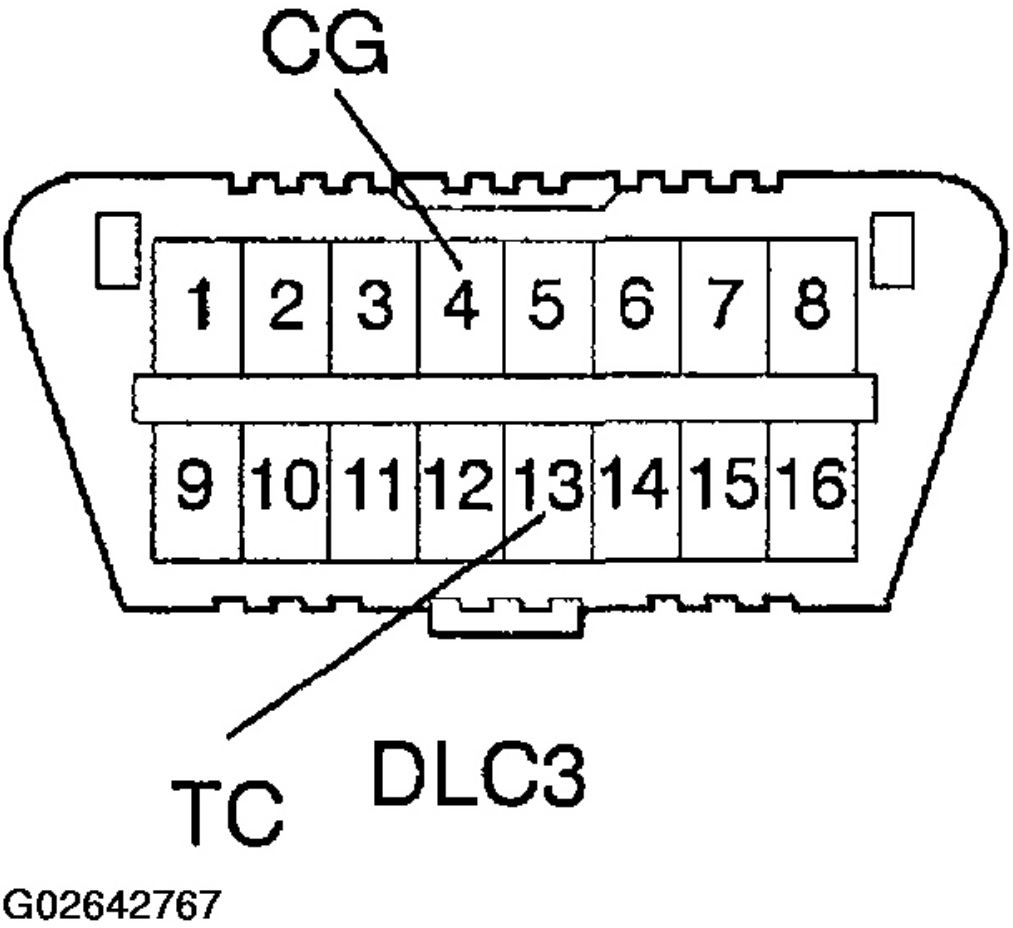

Fig. 8: Identifying Terminals TC And CG Of DLC3
Courtesy of TOYOTA MOTOR SALES, U.S.A., INC.

HINT:

- If a DTC is not output, inspect the diagnosis circuit.
- As an example, the blinking patterns for codes; normal and 52 are shown in the illustration.

cardiagn.com

Normal Code

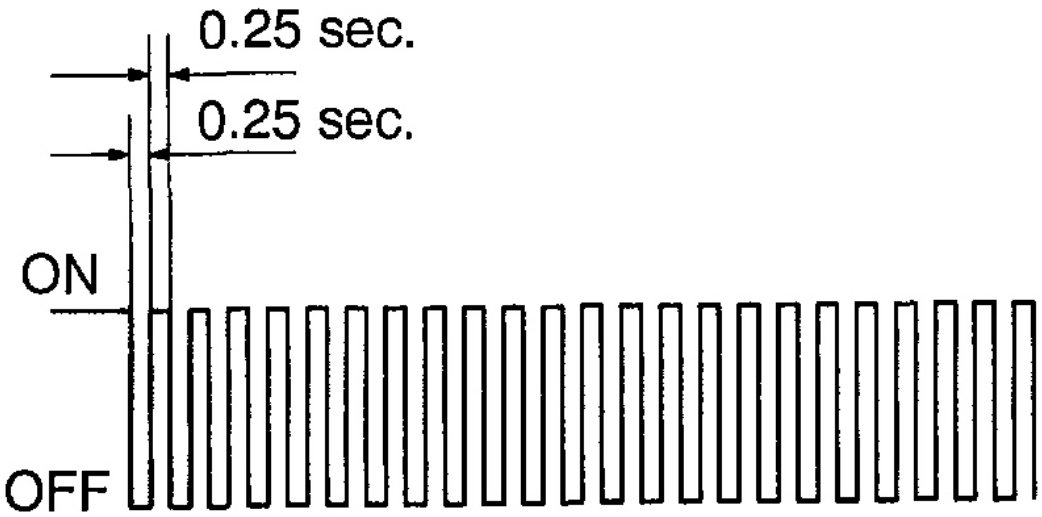

Malfunction Code 52

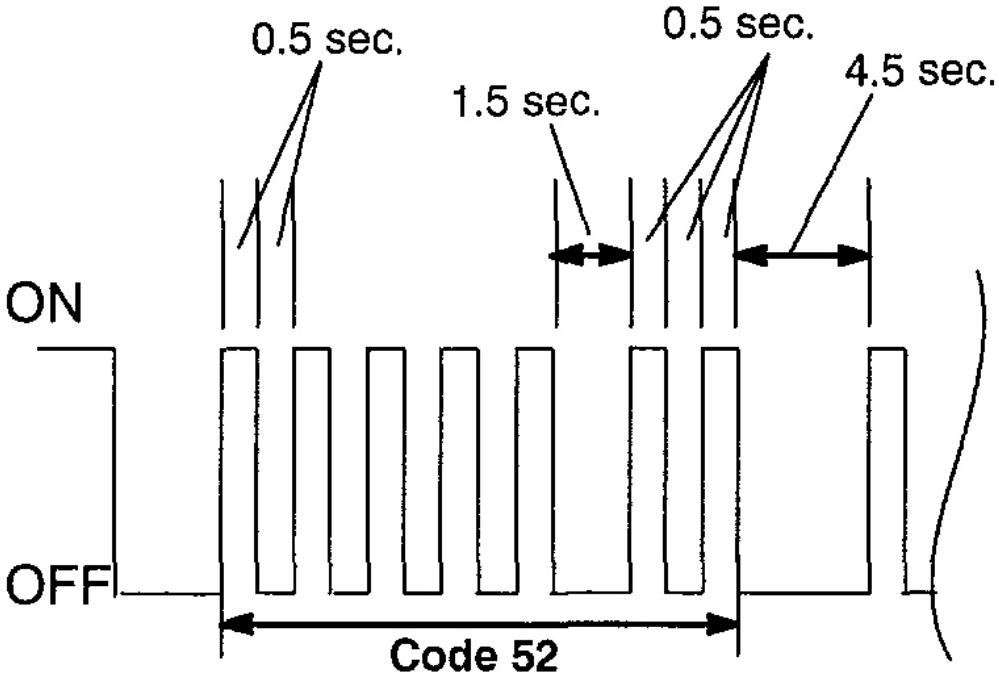

G02642768

cardiagn.com

Fig. 9: DTC Codes Blinking Patterns
Courtesy of TOYOTA MOTOR SALES, U.S.A., INC.

2. **MONITOR ECM DATA BY USING HAND-HELD TESTER**
   a. Connect the hand-held tester to the DLC3.
   b. Monitor the ECM data by following the prompts on the tester screen.

HINT:

The hand-held tester has a "Snapshot" function which records the monitored data.

Please Refer to the for further details.

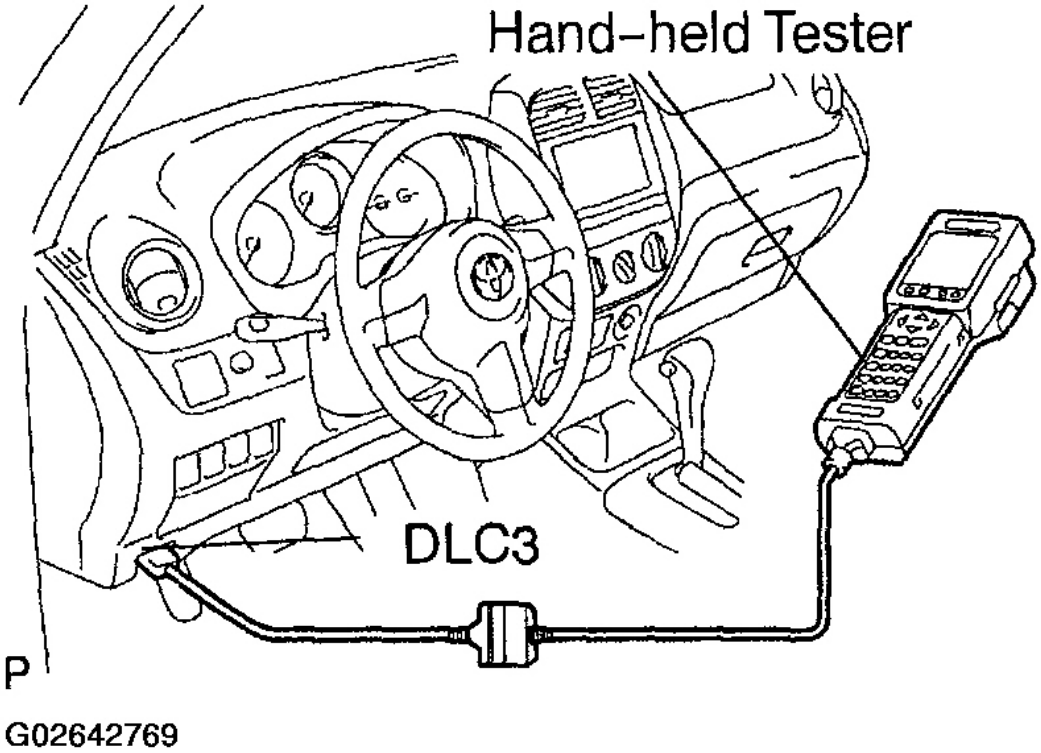

Fig. 10: Connecting Hand-Held Tester To DLC3
Courtesy of TOYOTA MOTOR SALES, U.S.A., INC.

3. DATA LIST

HINT:

cardiagn.com

According to the DATA LIST displayed by the hand-held tester, you can read the value of the switch, sensor, actuator and so on without parts removal. Reading the DATA LIST as a first step of troubleshooting is one of the method to shorten the labor time.

a. Connect the hand-held to the DLC3.
b. Turn the ignition switch ON.
c. Read the "DATA LIST" on the tester.

Item	Measurement Item / Display (Range)	Normal Condition	Diagnostic Note
VEHICLE SPD	Vehicle speed / min.: 0km/h (0 mph), max.: 255 km/h (158 mph)	Actual vehicle speed	-
MEMORY SPD	Cruise control memorized speed / min.: 36 km/h (22.5 mph), max.: 200 km/h (125 mph)	Memorized speed: Cruise control activated	-
THROTTLE	Required throttle opening angle / min.: 0°, max.: 125°	Required throttle opening angle (0° – 84°): Cruise control activated	-
CCS READY S	Cruise control system stand by condition (Sub CPU) / ON or OFF	ON ⇔ OFF: Change ON/OFF each time Main switch is pressed in.	"1"
CCS READY M	Cruise control system stand by condition (Main CPU) / ON or OFF	ON ⇔ OFF: Change ON/OFF each time Main switch is pressed in.	"1"
CANCEL SW	CANCEL SW signal / ON or OFF	ON: CANCEL switch ON OFF: CANCEL switch OFF	-
SET/– SW	SET/– SW signal / ON or OFF	ON: SET/– switch ON OFF: SET/– switch OFF	-
RES/+ SW	RES/+ SW signal / ON or OFF	ON: RES/ + switch ON OFF: RES/+ switch OFF	-
STP LIGHT SW1 M	Stop light SW signal (Main CPU) / ON or OFF	ON: Brake pedal depressed OFF: Brake pedal released	-
STP LIGHT SW2 S	Stop light SW signal (Sub CPU) / ON or OFF	ON: Brake pedal depressed OFF: Brake pedal released	-
STP LIGHT SW1 S	Stop light SW signal (Sub CPU) / ON or OFF	ON: Brake pedal depressed OFF: Brake pedal released	-
SHIFT D POS	PNP SW signal (D position) / ON or OFF	ON: Shift D position OFF: Except shift D position	-

G02642770

Fig. 11: Data List (1 Of 2)
Courtesy of TOYOTA MOTOR SALES, U.S.A., INC.

cardiagn.com

Item	Measurement Item / Display (Range)	Normal Condition	Diagnostic Note
CRUISE CTRL	Cruise control system active condition / ON or OFF	ON: Cruise control activated OFF: Cruise control inactivated	–
CCS INDICATOR M	Cruise indicator signal (Main CPU) / ON or OFF	ON: "CCS READY" ON OFF: "CCS READY" OFF	"2"
CCS INDICATOR S	Cruise indicator signal (Sub CPU) / ON or OFF	ON: "CCS READY" ON OFF: "CCS READY" OFF	"2"
MAIN SW (SUB)	Main SW signal (Sub CPU) / ON or OFF	ON: Main switch ON (Pressed in) OFF: Main switch OFF (Pressed out)	"3"
MAIN SW (MAIN)	Main SW signal (Main CPU) / ON or OFF	ON: Main switch ON (Pressed in) OFF: Main switch OFF (Pressed out)	"3"

G02642771

Fig. 12: Data List (2 Of 2)
Courtesy of TOYOTA MOTOR SALES, U.S.A., INC.

DIAGNOSTIC NOTES:

"3" is OK but "1" is NG --> ECM failure

"1" is OK but "2" is NG --> DTC output or ECM failure

"3" is OK but cruise indicator does not turn on --> Indicator or wire harness or ECM failure

4. **DTC CLEARANCE**
   a. The following actions will erase DTCs and freeze frame data.
      1. Operating the hand-held tester to erase the codes (see the instruction).
      2. Disconnecting the battery terminals or EFI1 fuse.
   b. After completing repairs, the DTC retained in the memory can be cleared by removing the ECU-B fuse for 10 seconds or more with the ignition switch OFF.
   c. Check that the normal code is displayed after connecting the fuse.
5. **PROBLEM SYMPTOM CONFIRMATION (ROAD TEST)**
   a. Inspect the SET switch.
      1. Push the main switch ON.
      2. Drive at the set speed (40 km/h (25 mph) or higher).
      3. Press the control switch downward for the -/SET.
      4. Release the switch, and check that the vehicle cruises at the set speed.

cardiagn.com

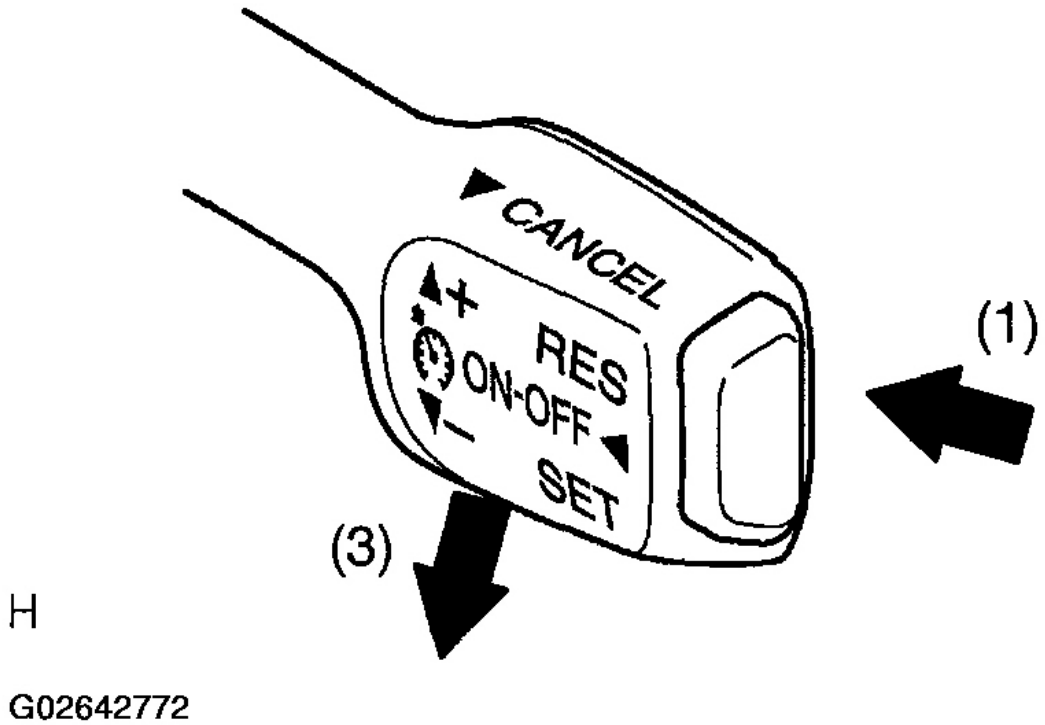

Fig. 13: Identifying SET Switch
Courtesy of TOYOTA MOTOR SALES, U.S.A., INC.

b. Inspect the ACCEL switch.
   1. Push the main switch ON.
   2. Drive at the set speed (40 km/h (25 mph) or higher).
   3. Check that the vehicle speed increases while the control switch is turned to +/RES, and that the vehicle cruises at the set speed when the switch is released.

cardiagn.com

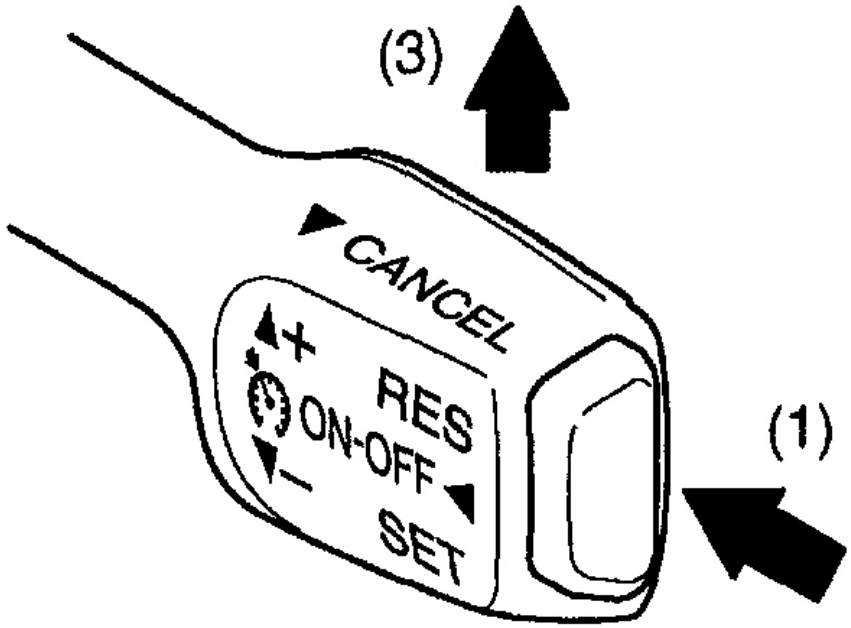

H

G02642773

Fig. 14: Identifying ACCEL Switch
Courtesy of TOYOTA MOTOR SALES, U.S.A., INC.

4. Momentarily push the control switch upward in the +/RES direction and then immediately release it. Check that the vehicle speed increases by about 1.5 km/h (0.9 mph) (tap-up function).

c. Inspect the COAST switch.
   1. Push the main switch ON.
   2. Drive at the set speed (40 km/h (25 mph) or higher).
   3. Check that the vehicle speed decreases while the control switch is turned to -/SET, and the vehicle cruises at the set speed when the switch is released.
   4. Momentarily push the control switch downward for the -/SET, and then immediately release it. Check that the vehicle speed decreases by about 1.5 km/h (0.9 mph) (tap-down function).

cardiagn.com

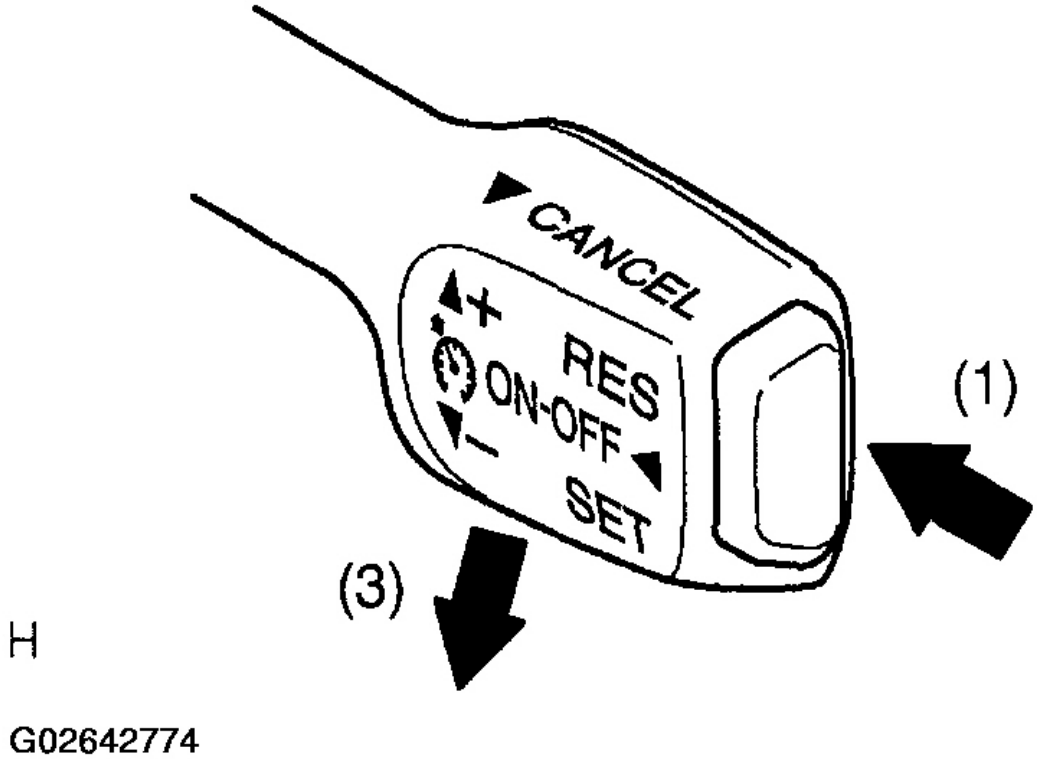

Fig. 15: Identifying COAST Switch
Courtesy of TOYOTA MOTOR SALES, U.S.A., INC.

d. Inspect the CANCEL switch.
   1. Push the main switch ON.
   2. Drive at the set speed (40 km/h (25 mph) or higher).
   3. When operating one of the followings, check that the cruise control system is cancelled and that the normal driving mode is reset.
      - Depress the brake pedal.
      - Shift into any positions except the D position.
      - Push the main switch OFF.
      - Pull the cruise control switch for CANCEL.

cardiagn.com

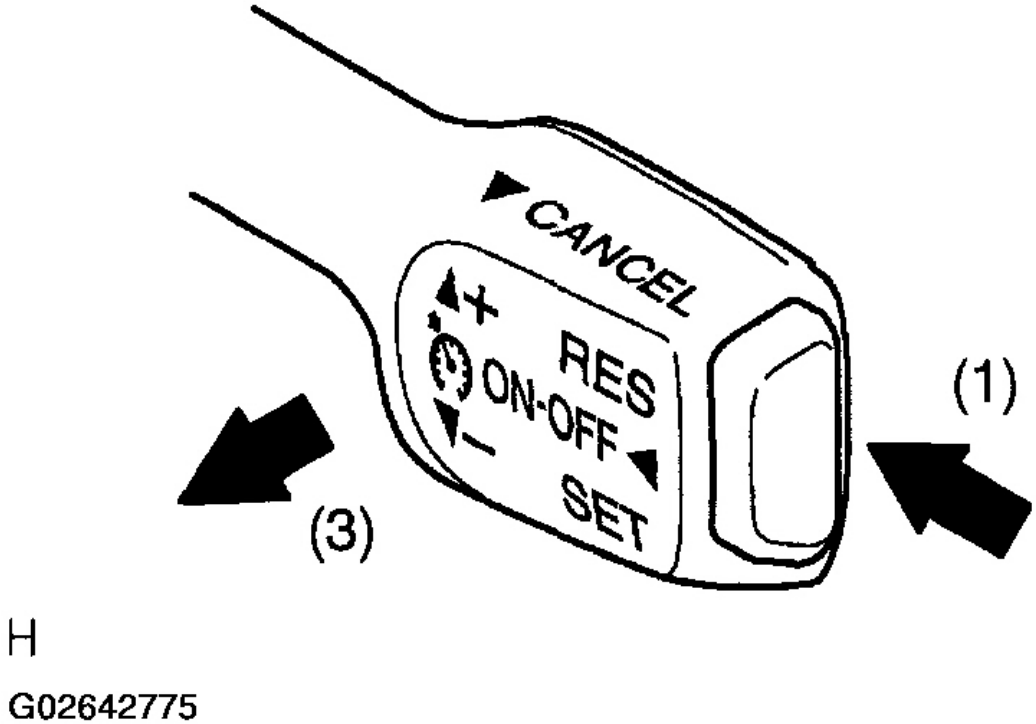

Fig. 16: Identifying CANCEL Switch
Courtesy of TOYOTA MOTOR SALES, U.S.A., INC.

e. Inspect the RESUME switch.
   1. Push the main switch ON.
   2. Drive at the set speed (40 km/h (25 mph) or higher).
   3. When operating one of the followings, check that the cruise control system is cancelled and that the normal driving mode is reset.
      - Depress the brake pedal.
      - Shift into any positions except the D position.
      - Pull the cruise control switch for CANCEL.

cardiagn.com

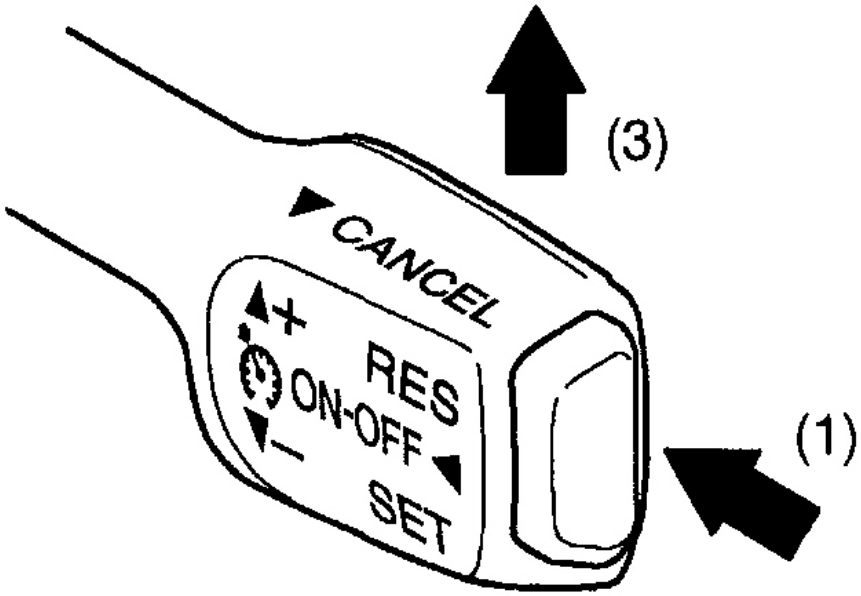

H

G02642776

Fig. 17: Identifying RESUME Switch
Courtesy of TOYOTA MOTOR SALES, U.S.A., INC.

4. Turn the control switch to +/RES at the driving speed of more than 40 km/h (25 mph), and check that the vehicle restores the speed before the cancellation.

6. **INPUT SIGNAL CHECK BY USING HAND-HELD TESTER**
   a. Connect the hand-held tester to the DLC3.
   b. Check the control switches (ON-OFF, CANCEL, -/SET, +/RES).

cardiagn.com

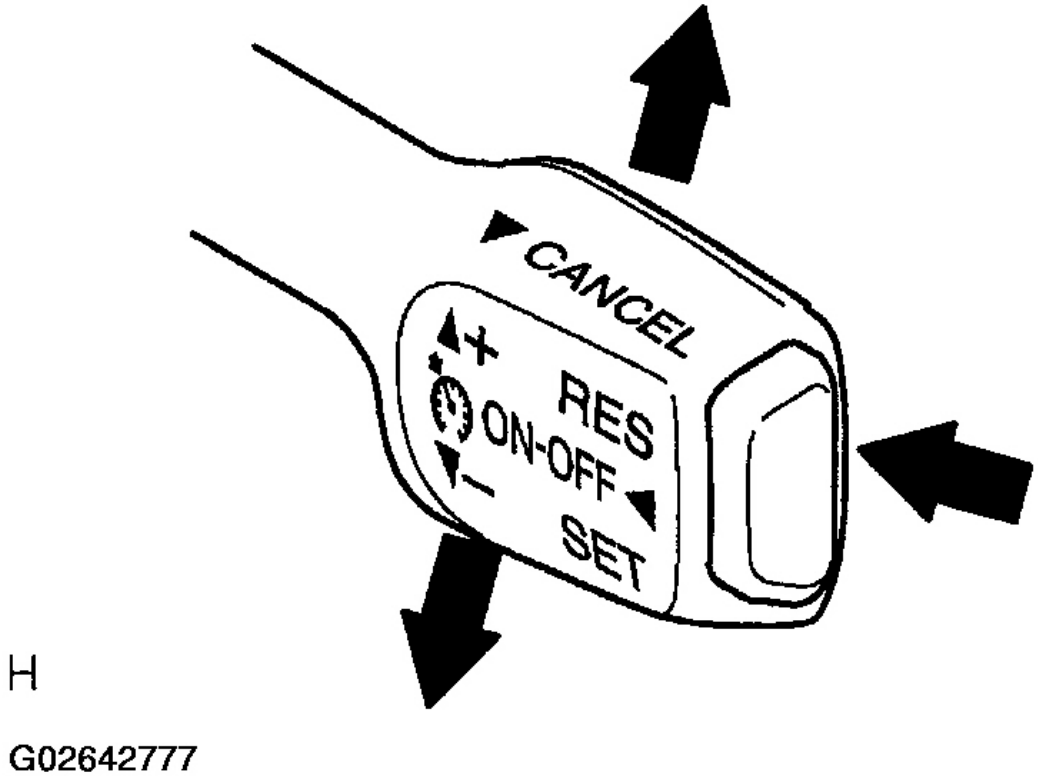

Fig. 18: Identifying Control Switch
Courtesy of TOYOTA MOTOR SALES, U.S.A., INC.

DIAGNOSTIC TROUBLE CODE CHART

DIAGNOSTIC TROUBLE CODES (DTC) LIST

DTC	Description
DTC P0500/21, P0503/23	Vehicle Speed Sensor "A" Intermittent/Erratic/High
DTC P0571/52	Brake Switch "A" Circuit
DTC P0607/54	Control Module Performance

If a malfunction code is displayed during the DTC check, check the circuit listed by code in the table below and proceed to the appropriate page.

cardiagn.com

DTC No.	Detection Item	Trouble Area
P0500/21	Vehicle Speed Sensor "A"	• Combination meter • Open or short in vehicle speed sensor Circuit • Vehicle speed sensor • ECM
P0503/23	Vehicle Speed Sensor "A" Intermittent/Erratic/High	
P0571/52	Brake Switch "A" Circuit	• Stop light switch • Wire harness or connector • ECM
P0607/54	Control Module Performance	• ECM

G02913403

Fig. 19: Diagnostic Trouble Code Chart
Courtesy of TOYOTA MOTOR SALES, U.S.A., INC.

PARTS LOCATION

cardiagn.com

cardiagn.com

Fig. 20: Identifying Location Of Cruise Control System Components (1 Of 2)
Courtesy of TOYOTA MOTOR SALES, U.S.A., INC.

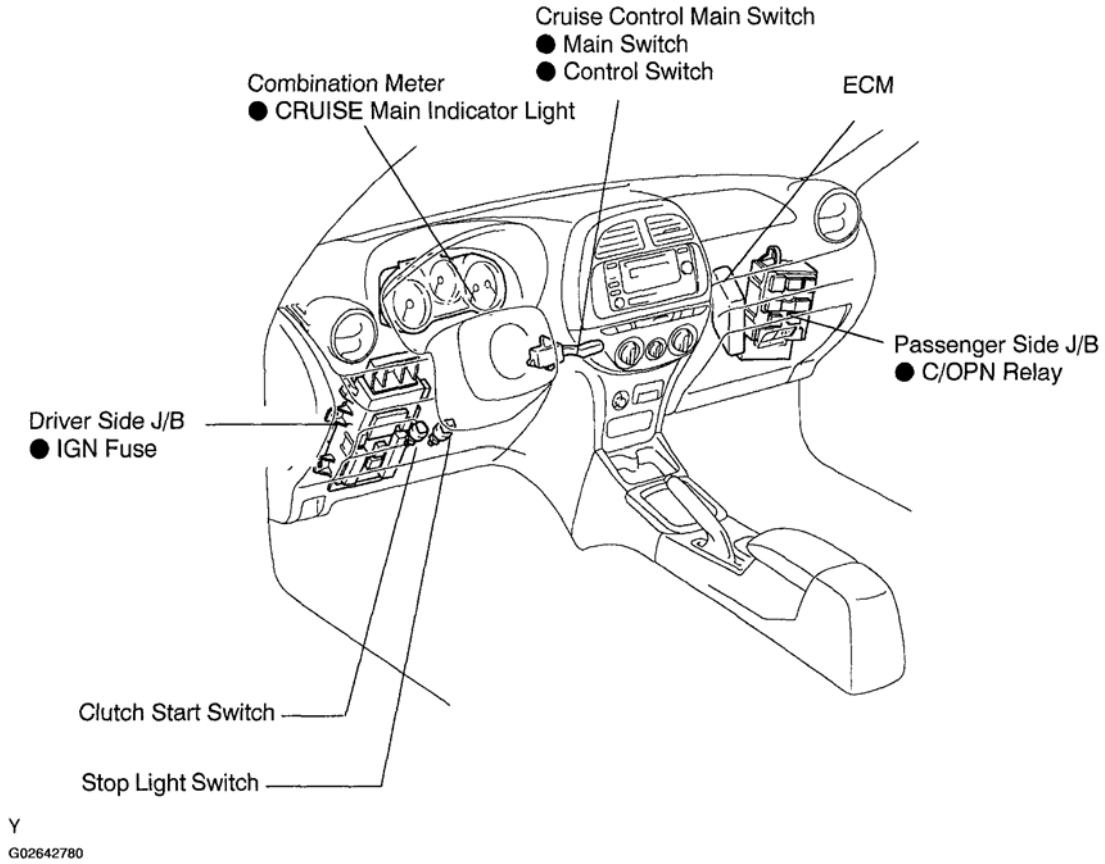

Fig. 21: Identifying Location Of Cruise Control System Components (2 Of 2)
Courtesy of TOYOTA MOTOR SALES, U.S.A., INC.

TERMINALS OF ECM

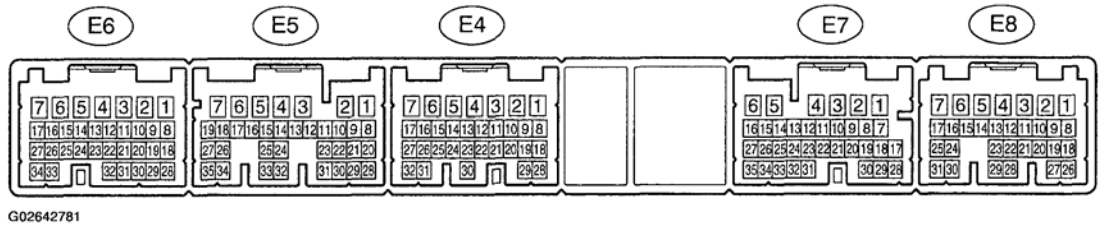

Fig. 22: Identifying ECM Terminals
Courtesy of TOYOTA MOTOR SALES, U.S.A., INC.

TERMINAL NUMBER AND SPECIFIED CONDITION

Symbols (Terminal No.)	Wiring Color	Condition	Specified Condition

cardiagn.com

STP (E7-19) - E1 (E4-1)	G-W (W) - BR	Brake pedal is depressed (stop light switch ON)	7.5 to 14 V
		Brake pedal is released (stop light switch OFF)	Below 1 V
CCS (E7-24) - E1 (E4-1)	G-Y - BR	Ignition switch ON	9.0 to 14 V
		Ignition switch ON CANCEL switch held ON	6.0 to 10.1 V
		Ignition switch ON -/SET switch held ON	4.0 to 7.1 V
		Ignition switch ON +/RES switch held ON	2.1 to 4.0 V
		Ignition switch ON Main switch held ON	Below 1 V
PI (E7-13) - E1 (E4-1)	G-R (W) - BR	Ignition switch ON Cruise control main switch ON	0 to 3.0 V
		Ignition switch ON Cruise control main switch OFF	9 to 14 V
ST1- (E7-12) - E1 (E4-1)	L-B (SB) - BR	Brake pedal is depressed Brake pedal is released	7.5 to 14 V
D (E7-10) - E1 (E4-1)	L-B (W)* - BR	Ignition switch ON A/T models: Shifting into D position M/T modes: Clutch pedal is released	9 to 14 V
		Ignition switch ON A/T models: Shifting into any positions except D position M/T modes: Clutch pedal is depressed	0 to 1.5 V
*:M/T			

PROBLEM SYMPTOMS TABLE

cardiagn.com

Symptom	Suspected Area
SET not occurring or CANCEL occurring (DTC is normal)	5. Input signal circuit 6. Vehicle speed sensor circuit 7. Stop light switch circuit 8. Park/neutral position switch circuit (A/T) 9. Clutch switch circuit (M/T) 10.ECM
SET not occurring or CANCEL occurring (DTC is not output)	ECM
Actual vehicle speed deviates above or below the set speed	1. Input signal circuit 2. ECM
Cruise control not cancelled even when brake pedal is depressed	1. Stop light switch circuit 2. ECM
Cruise control not cancelled even when transmission is shifted to except "D" position	1. Transmission control ECU 2. ECM
Control switch does not operate (-/SET, +/RES, CANCEL not possible)	ECM
SET is possible at 40 km/h (25 mph) or less, or CANCEL does not operate at 40 km/h (25 mph) or less	1. Input signal circuit 2. ECM
Poor response is ACCEL and RESUME modes	ECM
DTC memory is erased	ECM
DTC is not output, or is output when should not be	1. Diagnosis circuit 2. ECM
CRUISE main indicator light remains ON or fails to light up	ECM
CRUISE main indicator does not light up	CRUISE main indicator light circuit

HINT:
*1: U140F
*2: U241E
G02913408

Fig. 23: Problem Symptoms Table
Courtesy of TOYOTA MOTOR SALES, U.S.A., INC.

CIRCUIT INSPECTION

DTC P0500/21, P0503/23: VEHICLE SPEED SENSOR "A" INTERMITTENT/ERRATIC/HIGH

CIRCUIT DESCRIPTION

Refer to **CIRCUIT DESCRIPTION** under DTC P0500 VEHICLE SPEED SENSOR MALFUNCTION.

cardiagn.com

DTC No.	DTC Detection Condition	Trouble Area
P0500/21 P0503/23	No vehicle speed sensor signal to ECM under following conditions (a) and (b): (1 trip detection logic) (a) Park/Neutral position switch is OFF (b) Vehicle is being driven	• Combination meter • Open or short in vehicle speed sensor Circuit • Vehicle speed sensor • ECM

G02642783

Fig. 24: DTC P0500/21 & P0503/23 - Detection Condition Chart
Courtesy of TOYOTA MOTOR SALES, U.S.A., INC.

WIRING DIAGRAM

Refer to **WIRING DIAGRAM** under DTC P0500 VEHICLE SPEED SENSOR MALFUNCTION.

INSPECTION PROCEDURE

Refer to **INSPECTION PROCEDURE** under DTC P0500 VEHICLE SPEED SENSOR MALFUNCTION.

DTC P0571/52: BRAKE SWITCH "A" CIRCUIT

CIRCUIT DESCRIPTION

When the brake pedal is depressed, the stop light switch sends a signal to the ECM. When the ECM receives this signal, it cancels the cruise control.

A fail-safe function is provided so that the vehicle functions normally if there is a malfunction in the stop light signal circuit.

The cancel condition occurs when the battery positive voltage is supplied to terminal STP.

When the stop light switch is on, battery positive voltage is applied through the STOP fuse and the stop light switch to terminal STP of the ECM, and the ECM turns the cruise control OFF.

If the harness connected to terminal STP has an open circuit, terminal STP will have battery positive voltage and the cruise control will be turned OFF.

DTC No.	DTC Detection Condition	Trouble Area
P0571/52	Stop light switch does not turn off even once the vehicle is driven	• Stop light switch • Harness or connector between ECM and stop light switch circuit • ECM

G02642784

Fig. 25: DTC P0571/52 Detection Condition And Trouble Area Description Chart
Courtesy of TOYOTA MOTOR SALES, U.S.A., INC.

WIRING DIAGRAM

cardiagn.com

cardiagn.com

Fig. 26: Brake Switch Wiring Diagram
Courtesy of TOYOTA MOTOR SALES, U.S.A., INC.

INSPECTION PROCEDURE

HINT:

When using the hand-held tester, start the inspection from step 1. Otherwise, start from step 2.

1. **Check stop light switch using hand-held tester.**

   PREPARATION:

   a. Connect the hand-held tester to the DLC3.
   b. Turn the ignition switch ON and push the hand-held tester main switch ON.

   CHECK:

   Select the item "STOP LIGHT SW" in the DATA LIST and read the displayed value.

   OK:

   ON: Brake pedal depressed

   OFF: Brake pedal released

   OK: Proceed to next circuit inspection shown in problem symptoms table (See PROBLEM SYMPTOMS TABLE).

   NG: Go To Next Step.

2. **Check operation of stop light.**

   CHECK:

   Check that the stop light turns on when the brake pedal is depressed, and turns off when the brake pedal is released.

   NG: Check stop light system (See INSPECTION).

   OK: Go To Next Step.

3. **Measure voltage between terminal STP of ECM connector and body ground.**

   PREPARATION:

   a. Remove the ECM with the connectors being connected.
   b. Turn the ignition switch ON.

   CHECK:

   Measure the voltage between terminal STP of the ECM connector and body ground when the brake pedal is depressed and released.

cardiagn.com

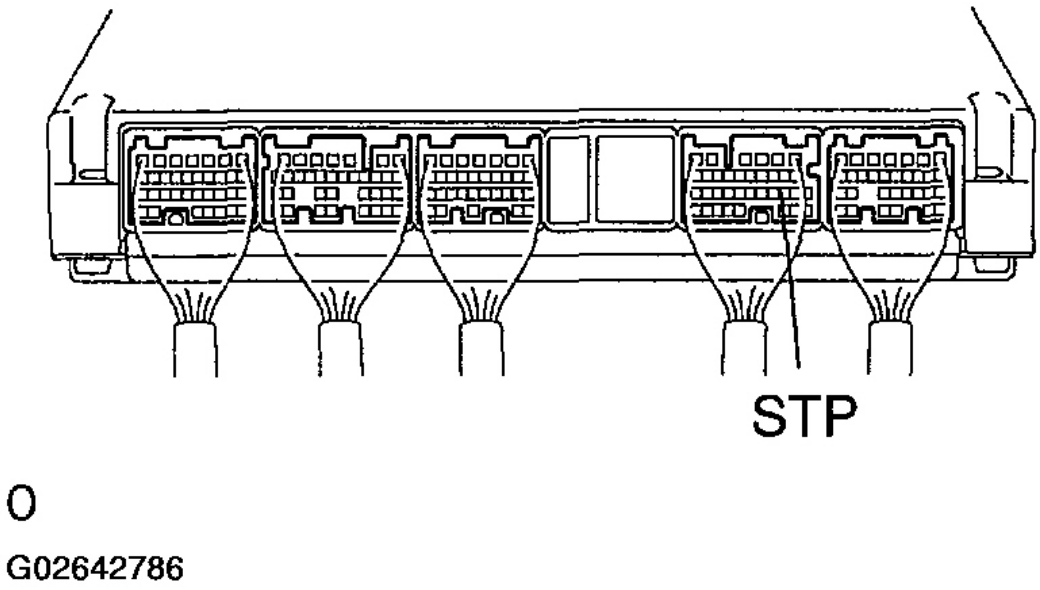

Fig. 27: Identifying STP Of ECM Connector Terminals
Courtesy of TOYOTA MOTOR SALES, U.S.A., INC.

OK:

BRAKE PEDAL CONDITION AND SPECIFIED CONDITION

Brake Pedal Condition	Specified Condition
Depressed	10 to 14 V
Released	Below 1 V

OK: Proceed to next circuit inspection shown in problem symptoms table (See PROBLEM SYMPTOMS TABLE).

NG: Go To Next Step.

4. **Measure voltage between terminal ST1- of ECM connector and body ground.**

PREPARATION:

a. Remove the ECM with the connectors being connected.
b. Turn the ignition switch ON.

CHECK:

Measure the voltage between terminal ST1- of the ECM connector and body ground when the brake pedal is depressed and released.

cardiagn.com

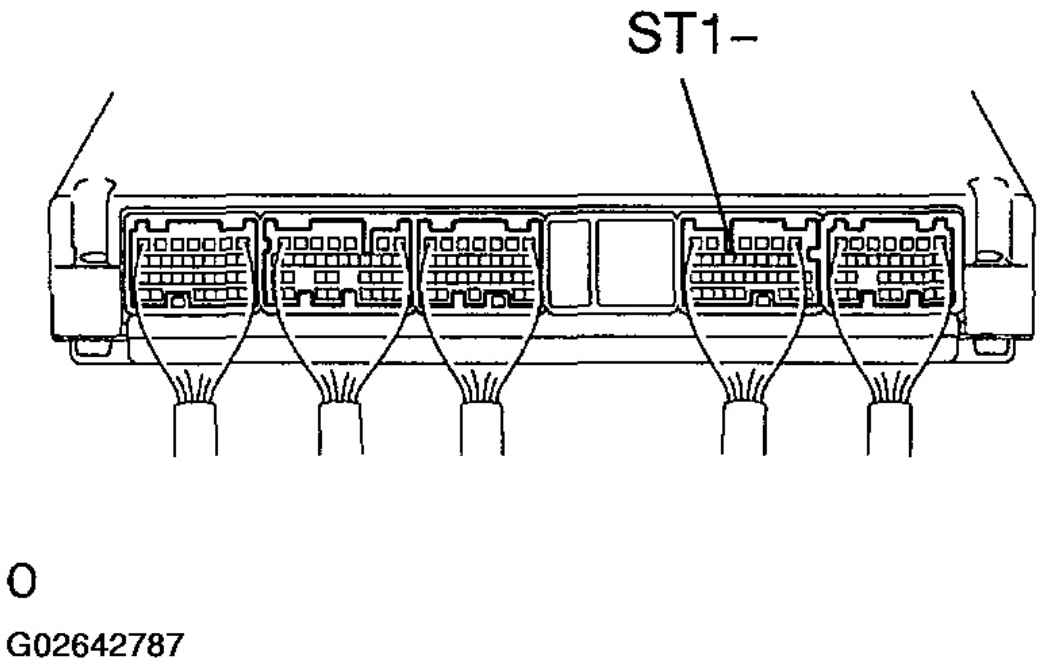

Fig. 28: Identifying ST1- Of ECM Connector Terminals
Courtesy of TOYOTA MOTOR SALES, U.S.A., INC.

OK

BRAKE PEDAL CONDITION DESCRIPTION

Brake Pedal Condition	Specified Condition
Depressed	Below 1 V
Released	10 to 14 V

OK: Proceed to next circuit inspection shown in problem symptoms table (See PROBLEM SYMPTOMS TABLE).

NG: Go To Next Step.

5. **Check wire harness and connector between terminal STP of ECM and stop light switch, and terminal ST1- of ECM and stop light switch (See HOW TO USE THE DIAGNOSTIC CHART AND INSPECTION PROCEDURE).**

   NG: Repair or replace harness or connector.

   OK: Check and replace ECM (See HOW TO USE THE DIAGNOSTIC CHART AND INSPECTION PROCEDURE).

DTC P0607/54: CONTROL MODULE PERFORMANCE

cardiagn.com

Circuit Description

This DTC is output when the ECM has a malfunction.

DTC No.	DTC Detection Condition	Trouble Area
P0607/54	• Cruise control input signal abnormal. • Stop light switch input signal abnormal.	• ECM

G02642788

Fig. 29: DTC P0607/54 Detection Condition And Trouble Area Description Chart
Courtesy of TOYOTA MOTOR SALES, U.S.A., INC.

Inspection Procedure

Check and replace ECM (See HOW TO USE THE DIAGNOSTIC CHART AND INSPECTION PROCEDURE).

CLUTCH SWITCH CIRCUIT (ONLY FOR M/T)

CIRCUIT DESCRIPTION

When the clutch pedal is depressed, the clutch switch sends a signal to the ECM. When the signal is input to the ECM during the cruise control driving, the cruise control ECU cancels the cruise control

WIRING DIAGRAM

cardiagn.com

cardiagn.com

Fig. 30: Clutch Switch Wiring Diagram (For M/T)
Courtesy of TOYOTA MOTOR SALES, U.S.A., INC.

INSPECTION PROCEDURE

1. **Input signal check.**

   PREPARATION:

   See input signal check on **PRE-CHECK**.

CHECK:

Check the indicator lights when the clutch pedal is depressed.

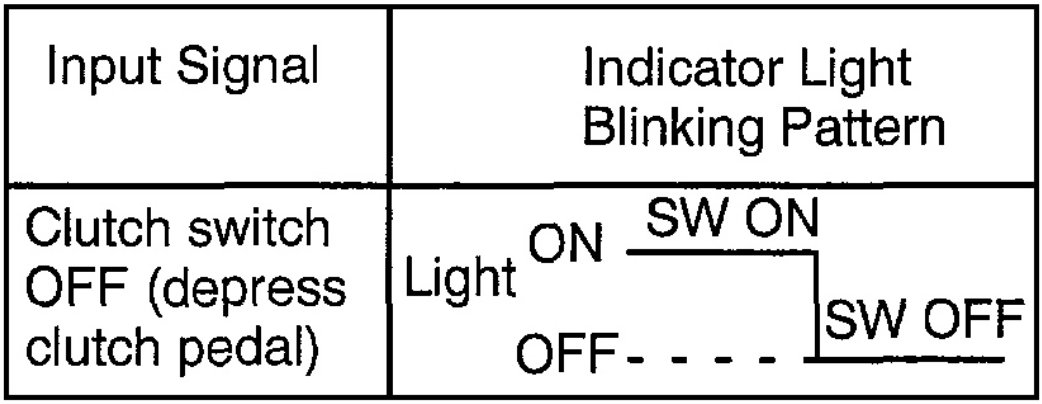

Fig. 31: Indicator Lights Blinking Pattern
Courtesy of TOYOTA MOTOR SALES, U.S.A., INC.

OK:

The indicator light turns off when the clutch pedal is depressed.

OK: Proceed to next circuit inspection shown in problem symptom table (See PROBLEM SYMPTOMS TABLE).

NG: Go To Next Step.

2. **Inspect clutch switch.**
   a. Disconnect the clutch switch connector.
   b. Check the continuity between terminals when the switch is ON and OFF.

OK:

CLUTCH SWITCH SPECIFIED CONDITION

Switch Condition	Specified Condition
ON (pushed)	Continuity
OFF (free)	No continuity

cardiagn.com

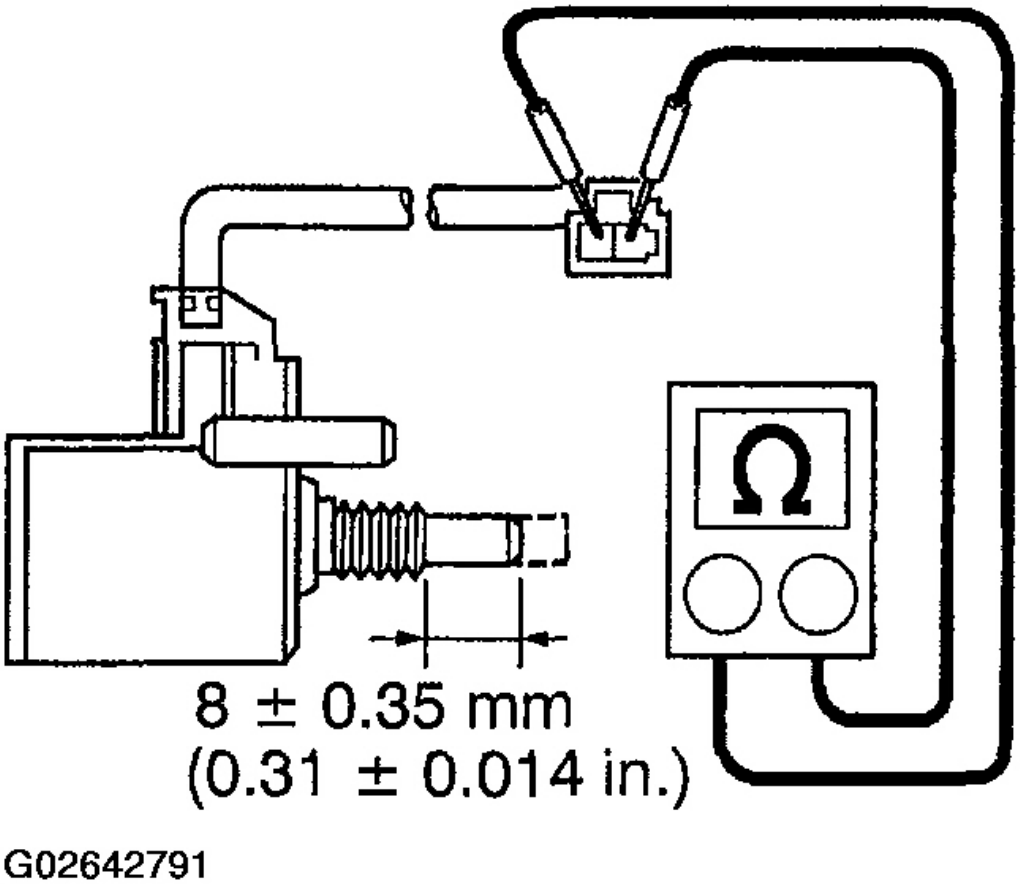

Fig. 32: Inspecting Clutch Switch
Courtesy of TOYOTA MOTOR SALES, U.S.A., INC.

NG: Replace clutch switch.

OK: Go To Next Step.

3. **Check for open in harness and connector between ECU and GAUGE fuse (See HOW TO USE THE DIAGNOSTIC CHART AND INSPECTION PROCEDURE).**

   NG: Repair or replace harness or connector.

   OK: Check and replace ECM (See HOW TO USE THE DIAGNOSTIC CHART AND INSPECTION PROCEDURE).

CRUISE MAIN INDICATOR LIGHT CIRCUIT

CIRCUIT DESCRIPTION

cardiagn.com

When the cruise control main switch is turned ON, the CRUISE main indicator light illuminates.

WIRING DIAGRAM

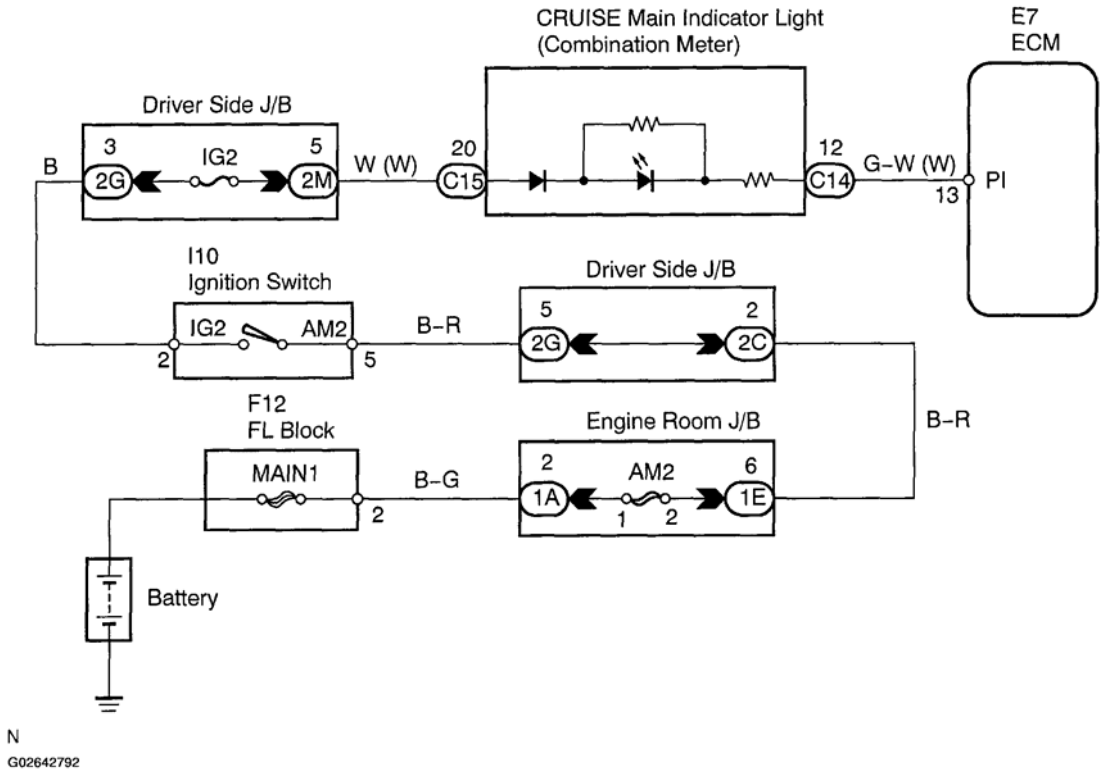

Fig. 33: Cruise MAIN Indicator Light Wiring Diagram
Courtesy of TOYOTA MOTOR SALES, U.S.A., INC.

INSPECTION PROCEDURE

1. **Check voltage between terminal PI of ECM connector and body ground.**

   PREPARATION

   a. Remove the ECM with the connectors being connected.
   b. Turn the ignition switch ON.

   CHECK:

   Measure the voltage between terminal PI of the ECM connector and the body ground when the main switch is ON and OFF.

cardiagn.com

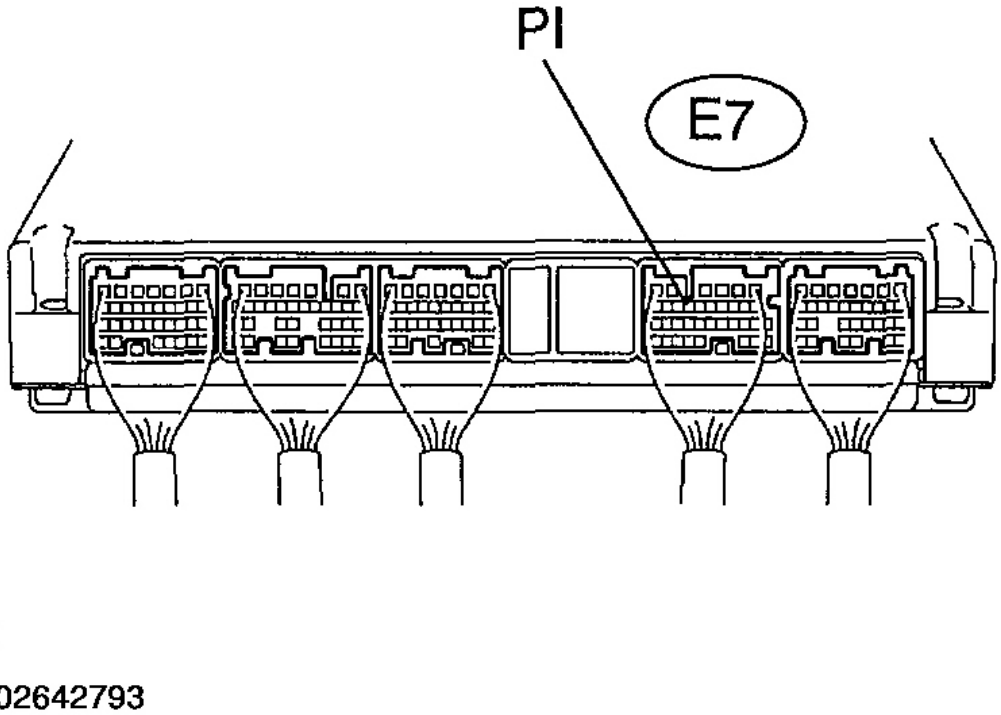

Fig. 34: Identifying PI Of ECM Connector Terminals
Courtesy of TOYOTA MOTOR SALES, U.S.A., INC.

OK:

SWITCH CONDITION AND SPECIFIED CONDITION

Switch Condition	Specified Condition
OFF	10 to 14 V
ON	0 to 3 V

OK: Proceed to next circuit inspection shown on problem symptoms table (See PROBLEM SYMPTOMS TABLE).

NG: Go To Next Step.

2. **Check combination meter (See COMBINATION METER).**

NG: Replace combination meter.

OK: Check and replace engine ECU (See HOW TO USE THE DIAGNOSTIC CHART AND INSPECTION PROCEDURE).

CONTROL SWITCH CIRCUIT (CRUISE CONTROL SWITCH)

cardiagn.com

CIRCUIT DESCRIPTION

This circuit sends SET/COAST, RESUME/ACCEL and CANCEL signals (each voltage) to the ECM.

WIRING DIAGRAM

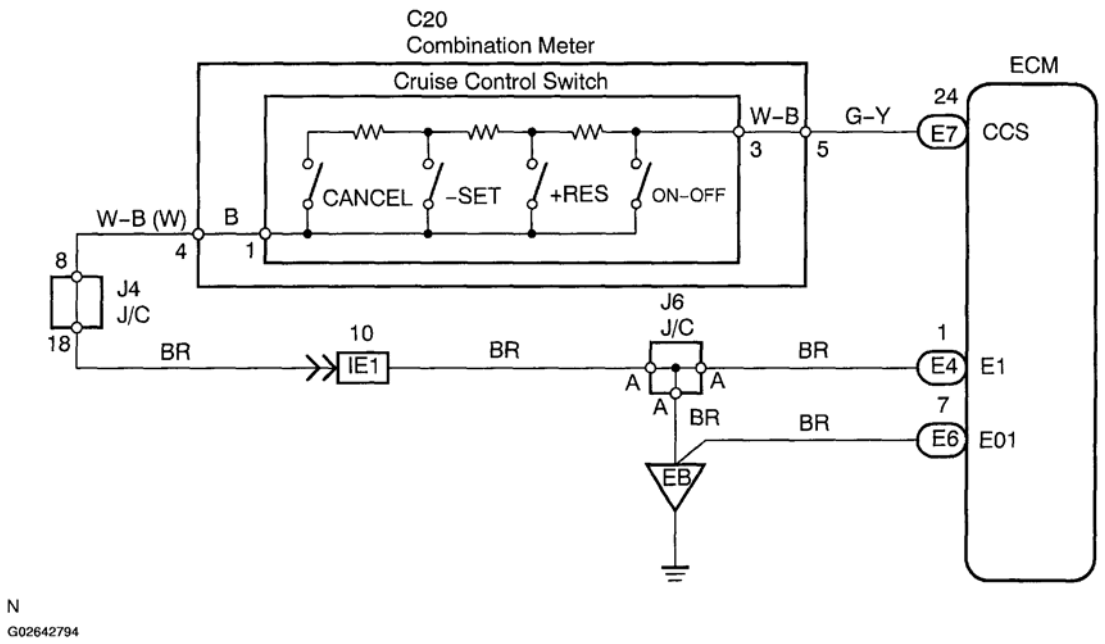

Fig. 35: Wiring Diagram - Control Switch Circuit
Courtesy of TOYOTA MOTOR SALES, U.S.A., INC.

INSPECTION PROCEDURE

1. **Check voltage between terminal CCS of ECM connector and body ground.**

   PREPARATION:

   a. Remove the ECM with the connector still connected.
   b. Turn the ignition switch ON.

   CHECK:

   Measure the voltage between terminal CCS of the ECM connector and body ground when each of the -/SET, +/RES and CANCEL is turned ON.

cardiagn.com

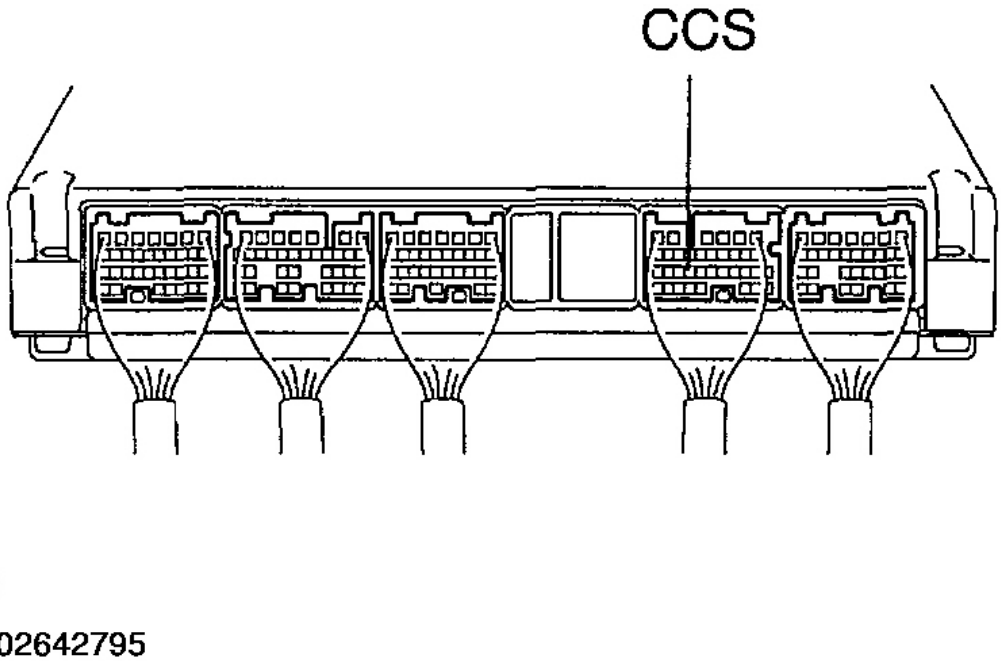

Fig. 36: CCS Of ECM Connector Terminals
Courtesy of TOYOTA MOTOR SALES, U.S.A., INC.

SWITCH CONDITION AND SPECIFIED CONDITION

Switch Condition	Specified Condition
Neutral	10 to 16 V
+/RES	2.3 to 4.5 V
/SET	4.5 to 8.1 V
CANCEL	6.6 to 11.4 V

NG: Proceed to next circuit inspection shown in problem symptoms table (See PROBLEM SYMPTOMS TABLE).

OK: Go To Next Step.

2. **Check cruise control switch resistance.**

PREPARATION:

a. Remove steering wheel center pad.
b. Disconnect the cruise control switch connector.

CHECK:

cardiagn.com

a. Measure the resistance between terminals 4 and 5 of the cruise control switch connector when the control switch is operated.

OK:

SWITCH CONDITION AND SPECIFIED CONDITION

Switch Condition	Specified Condition
Neutral	1 kohm or higher
CRUISE	Below 1 ohm
+/RES	220 to 260 ohm
/SET	600 to 660 ohm
CANCEL	1,500 to 1,600 ohm

b. Measure the resistance between terminals 4 and 5 of the control switch connector when the main switch is held on and off.

cardiagn.com

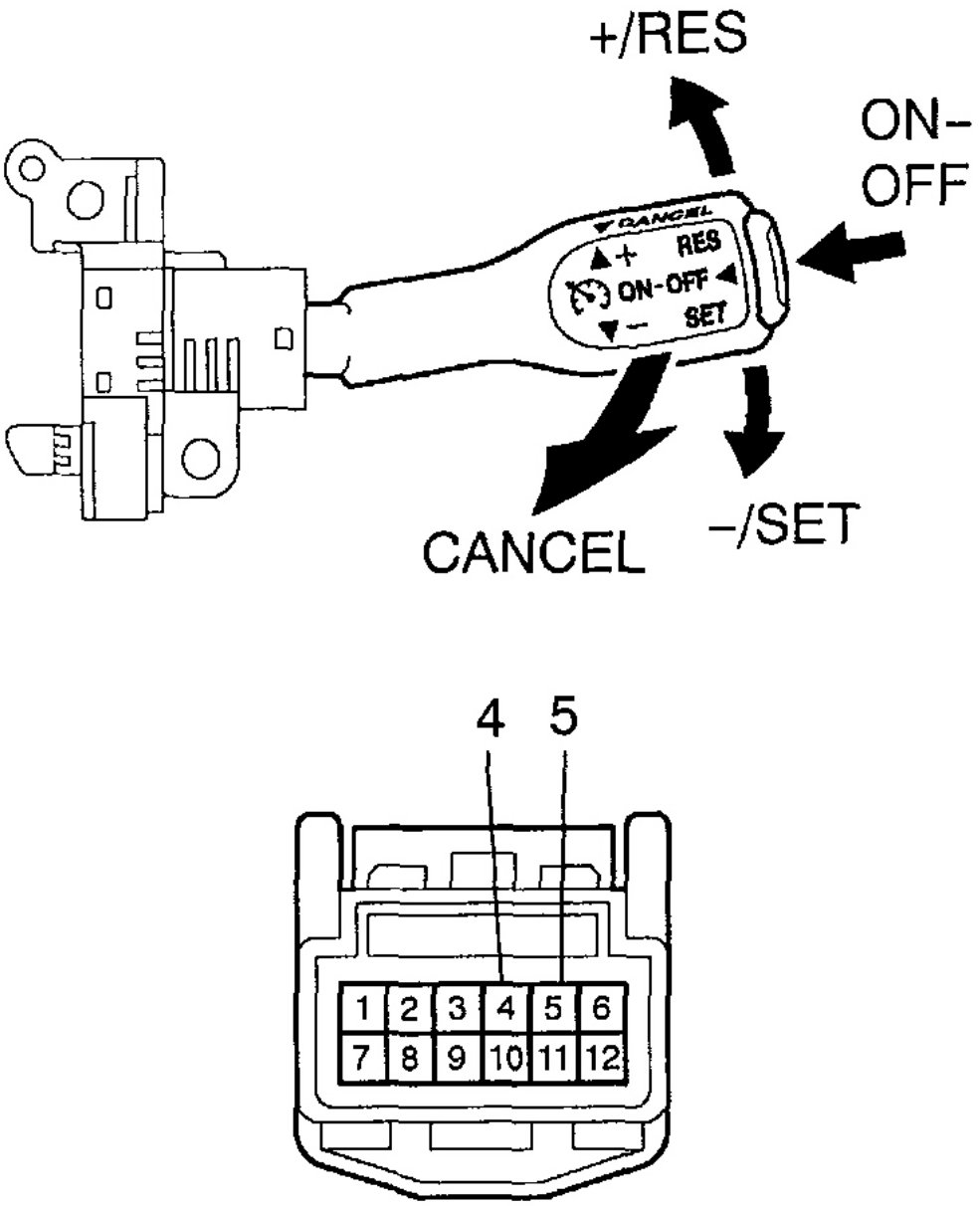

Fig. 37: Identifying Cruise Control Switch Terminals
Courtesy of TOYOTA MOTOR SALES, U.S.A., INC.

cardiagn.com

OK:

TESTER CONNECTION SPECIFIED CONDITION

Switch Condition	Tester Connection	Specified Condition
OFF	4-5	1 kohm or higher
ON	4-5	Below 1 ohm

NG: Replace control switch.

OK: Go To Next Step.

3. **Check harness and connector between ECM and cruise control switch, and cruise control switch and body ground (See HOW TO USE THE DIAGNOSTIC CHART AND INSPECTION PROCEDURE).**

   NG: Repair or replace harness or connector.

   OK: Go To Next Step.

4. **Check cruise control indicator light (See combination meter).**

   NG: Replace combination meter.

   OK: Check and replace ECM (See HOW TO USE THE DIAGNOSTIC CHART AND INSPECTION PROCEDURE).

DIAGNOSIS CIRCUIT

CIRCUIT DESCRIPTION

This circuit operates when DTC check is performed.

WIRING DIAGRAM

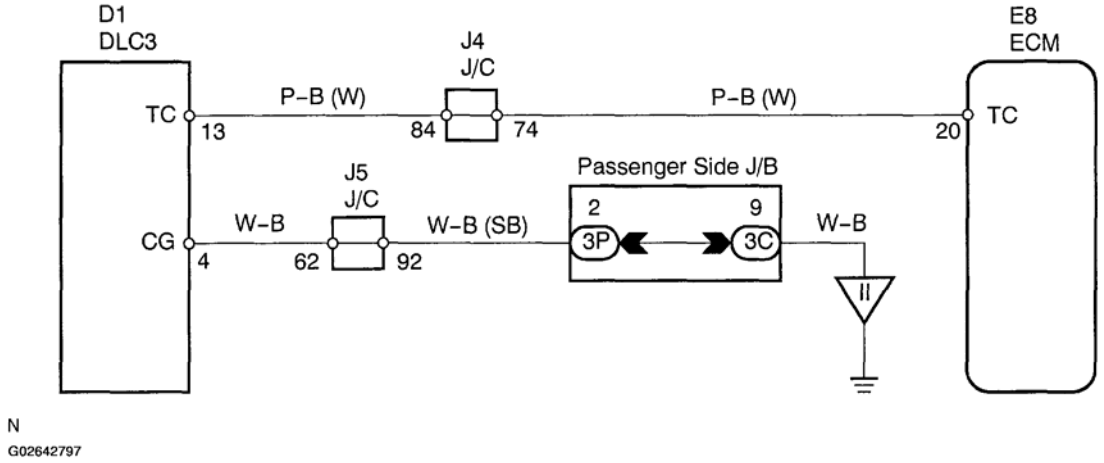

Fig. 38: Wiring Diagram - DLC3 Diagnosis Circuit
Courtesy of TOYOTA MOTOR SALES, U.S.A., INC.

cardiagn.com

INSPECTION PROCEDURE

1. **Inspect DLC3 terminal voltage.**
   a. Turn the ignition switch to ON.
   b. Measure the voltage between terminal 13 (TC) and 4 (CG) of the DLC3.

   OK:

   Voltage: 10 to 16 V

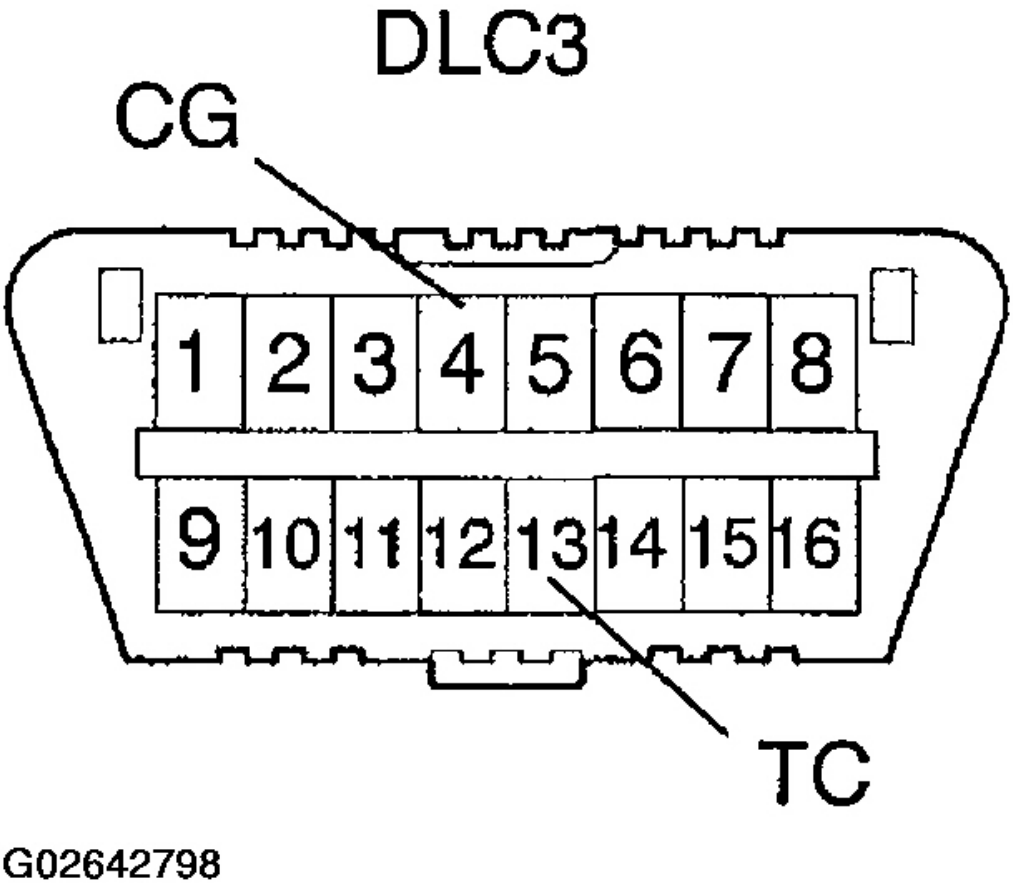

Fig. 39: Identifying DLC3 Connector Terminals
Courtesy of TOYOTA MOTOR SALES, U.S.A., INC.

OK: Proceed to next circuit inspection shown in problem symptoms table (See PROBLEM SYMPTOMS TABLE).

cardiagn.com

NG: Go To Next Step.

2. **Check harness and connector.**
   a. Check for open and short circuit in the harness and connector between the ECM and DLC3 (see **HOW TO USE THE DIAGNOSTIC CHART AND INSPECTION PROCEDURE**).
   b. Check for open and short circuit in the harness and connector between the DLC3 and body ground (see **HOW TO USE THE DIAGNOSTIC CHART AND INSPECTION PROCEDURE**).

   NG: Repair or replace harness or connector.

   OK: Proceed to next circuit inspection shown in problem symptoms table (See PROBLEM SYMPTOMS TABLE)

cardiagn.com