FIT STANDARDS

After doors and the engine hood are installed, be sure to perform fit adjustment to prevent abnormal wind noise and ensure a good appearance.

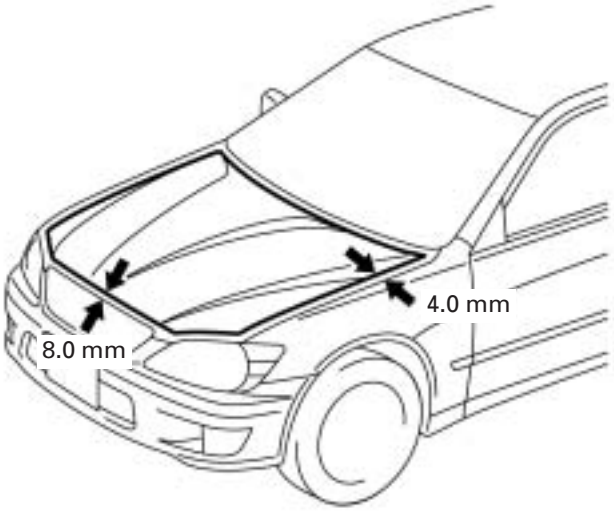

mm	in.
4.0	0.157
4.5	0.177
4.6	0.181
5.0	0.197
5.1	0.201
8.0	0.315

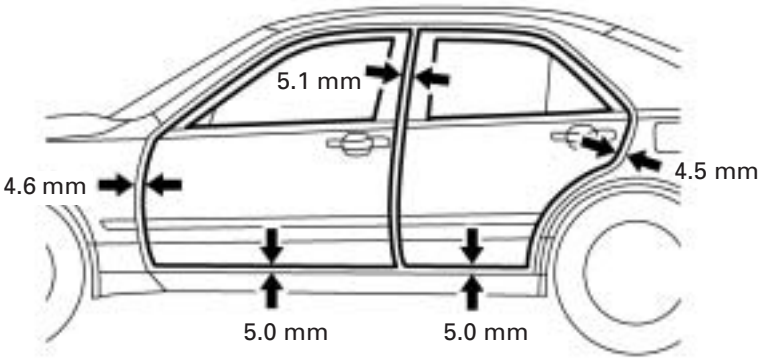

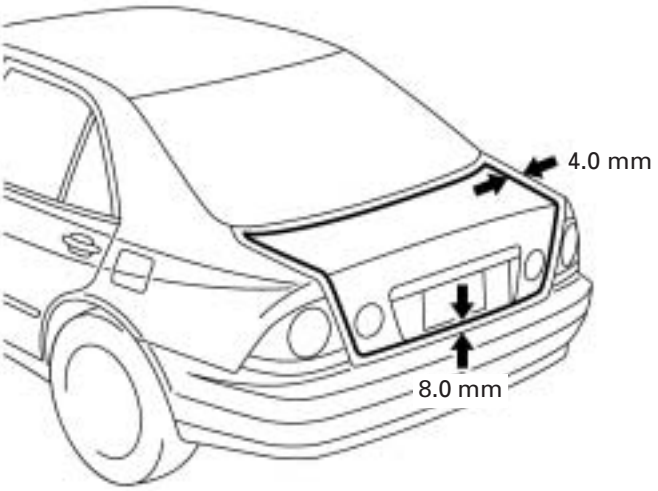

SILENCER SHEET INSTALLATION AREAS

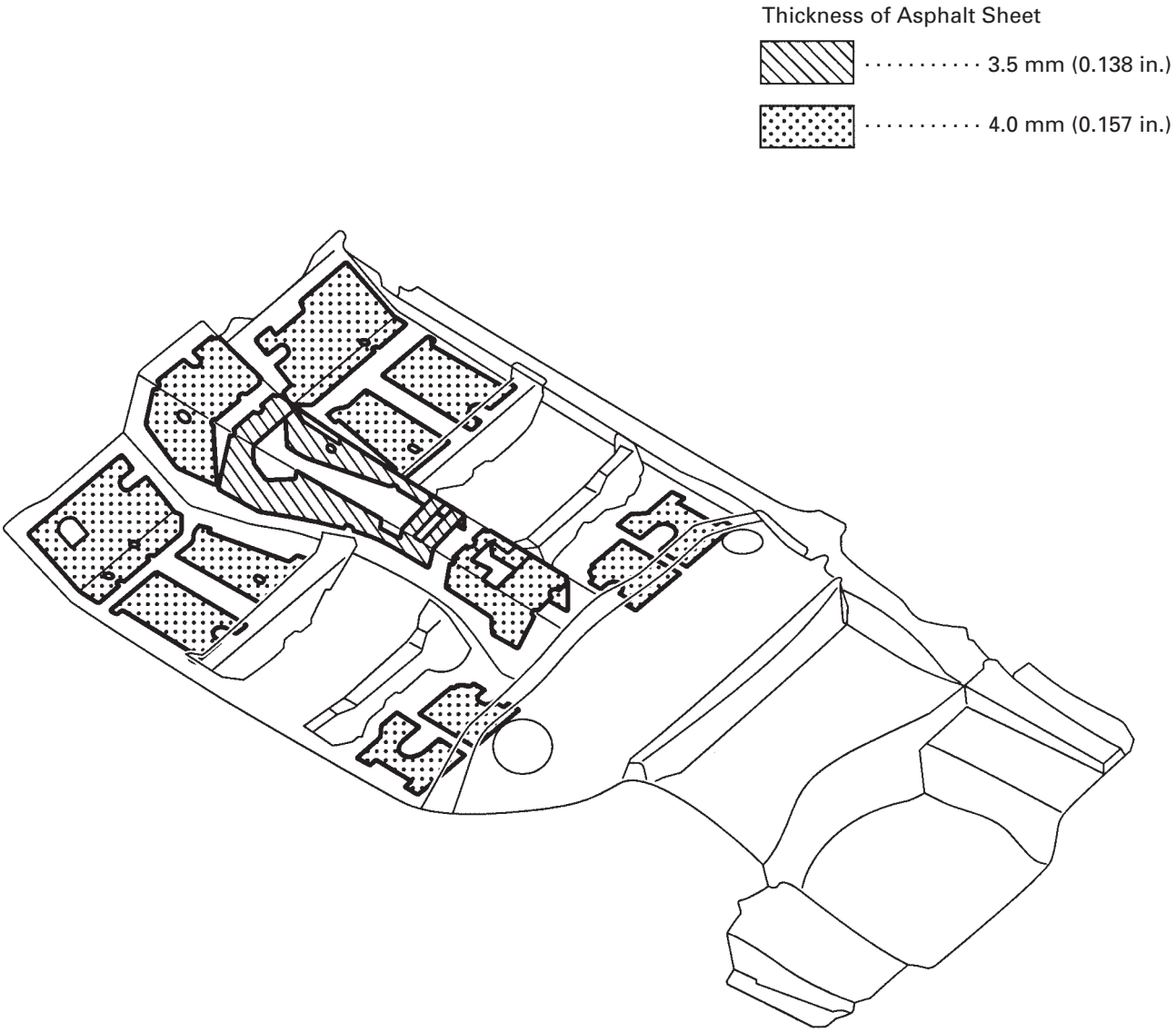

GENERAL INFORMATION

Anti-rust treatment is necessary before welding and before and after the painting process.

ANTI-RUST TREATMENT BEFORE WELDING

1. WELD-THROUGH PRIMER (SPOT SEALER)APPLICATION

For anti-corrosion measures, always apply the weld-through primer (spot sealer) to welding surfaces where the paint film has been removed.

HINT: Apply the weld-through primer (spot sealer) so that it does not ooze out from the joining surfaces.

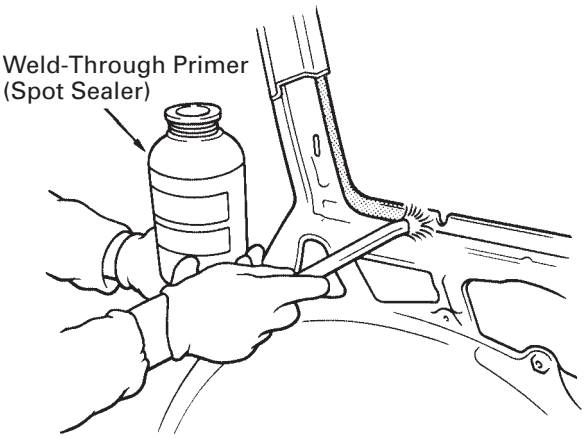

WELD-THROUGH PRIMER (SPOT SEALER) APPLICATION

ANTI-RUST TREATMENT BEFORE PAINTING PROCESS

1. BODY SEALER APPLICATION

For water-proofing and anti-corrosion measures, always apply the body sealer to the body panel seams and hems of the doors, hoods, etc.

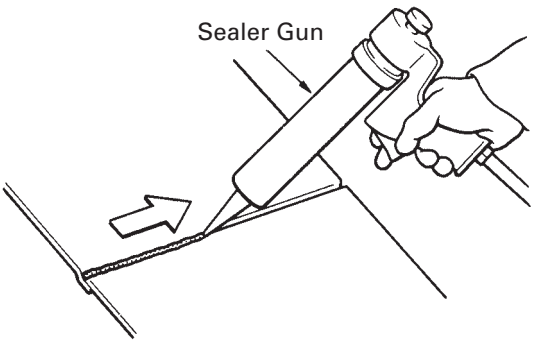

BODY SEALER APPLICATION

2. UNDERCOAT APPLICATION

To prevent corrosion and protect the body from damage by flying stones, always apply sufficient undercoat to the bottom surface of the under body and inside of the wheel housings.

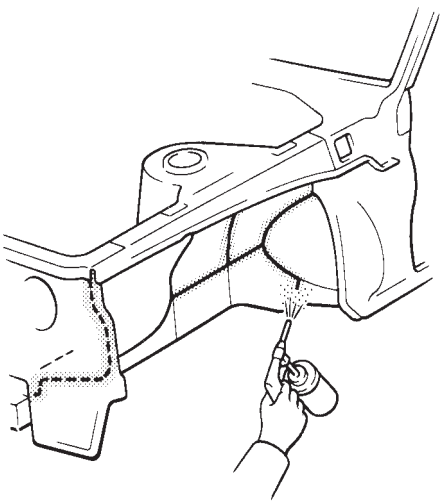

UNDERCOAT APPLICATION

ANTI-RUST TREATMENT AFTER PAINTING PROCESS

1. ANTI-RUST AGENT (WAX) APPLICATION

To preserve impossible to paint areas from corrosion, always apply sufficient anti-rust agent (wax) to the inside of the hemming areas of the doors and hoods, and around the hinges, or the welded surfaces inside the boxed cross-section structure of the side member, body pillar, etc.

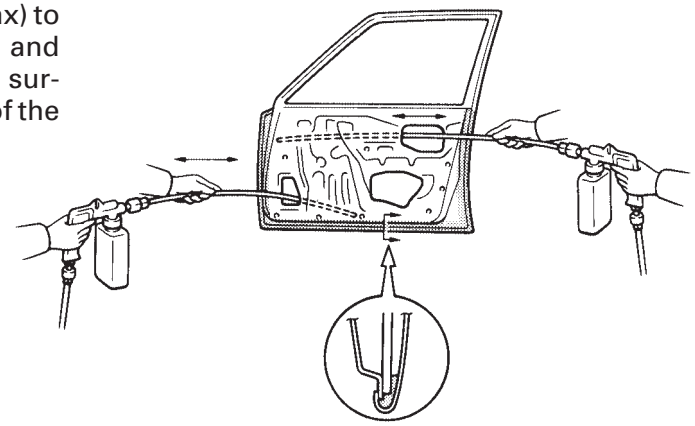

ANTI-RUST AGENT (WAX) APPLICATION

REFERENCE: ANTI-RUST TREATMENT BY PAINTING

Painting prevents corrosion and protects the sheet metal from damage. In this section, anti-chipping paint only for anti-corrosion purpose is described.

1. ANTI-CHIPPING PAINT

To prevent corrosion and protect the body from damage by flying stones, etc., apply anti-chipping paint to the rocker panel, wheel arch areas, valance panel, etc.

HINT:
Depending on the model or the application area, there are cases where the application of anti-chipping paint is necessary before the second coat or after the top coat.

- Apply the anti-chipping paint after the top coat.

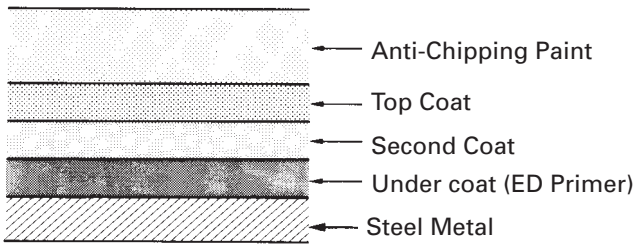

- Apply the anti-chipping paint before the second coat.

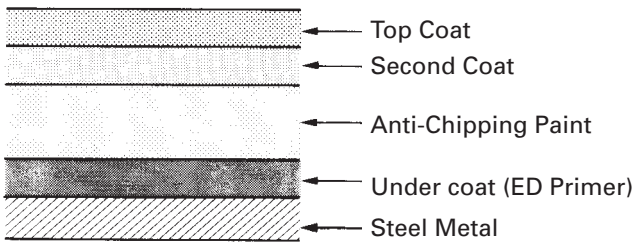

BODY PANEL SEALING AREAS

HINT:

1. *Prior to applying body sealer, clean the area with a rag soaked in a grease, wax and silicone remover.*
2. *If weld-through primer was used, first wipe off any excess and coat with anti-corrosion primer before applying body sealer.*
3. *Wipe off excess body sealer with a rag soaked in a grease, wax and silicone remover.*
4. *If body sealer is damaged by peeling, cracks, etc., be sure to repair as necessary.*

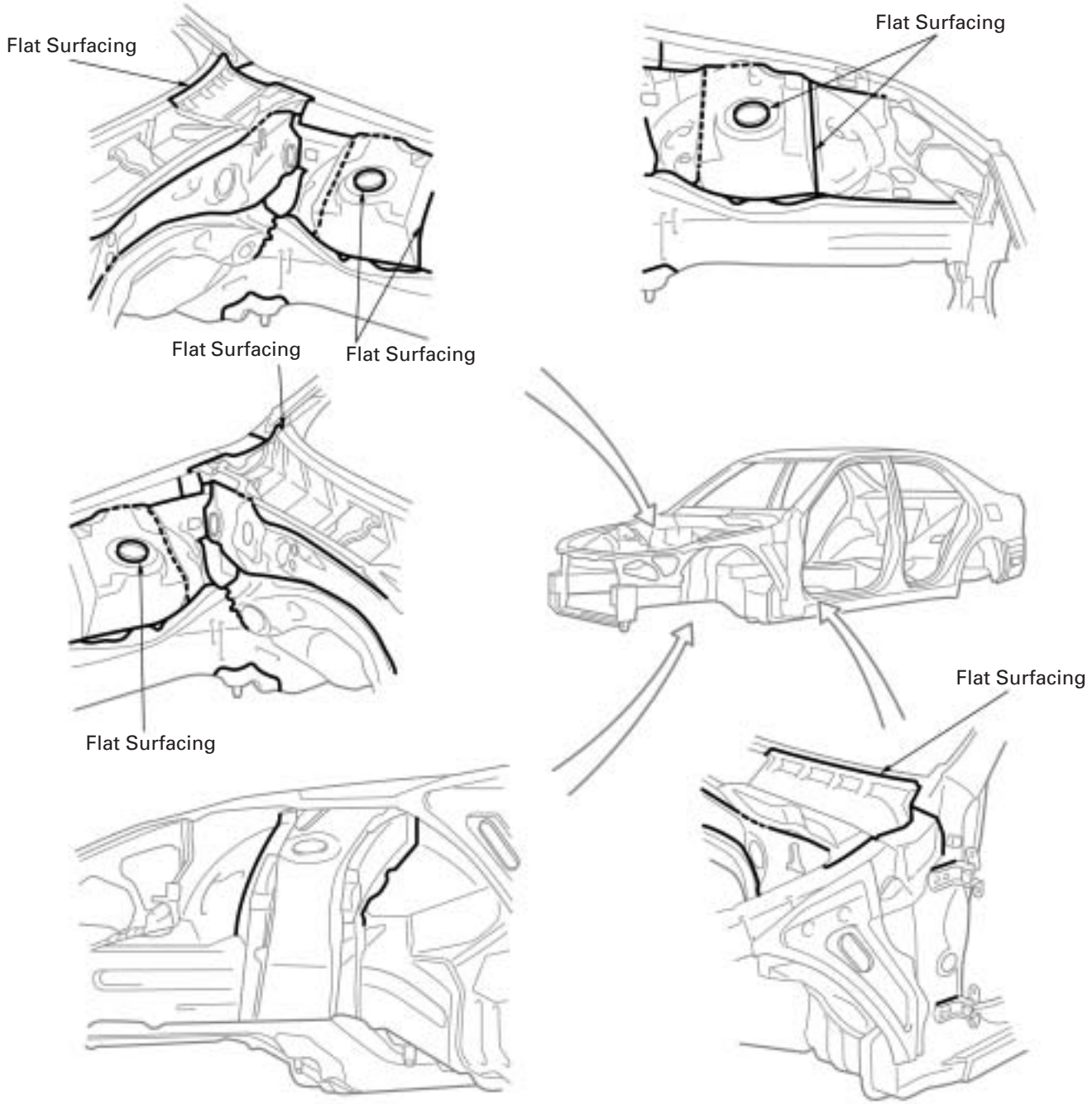

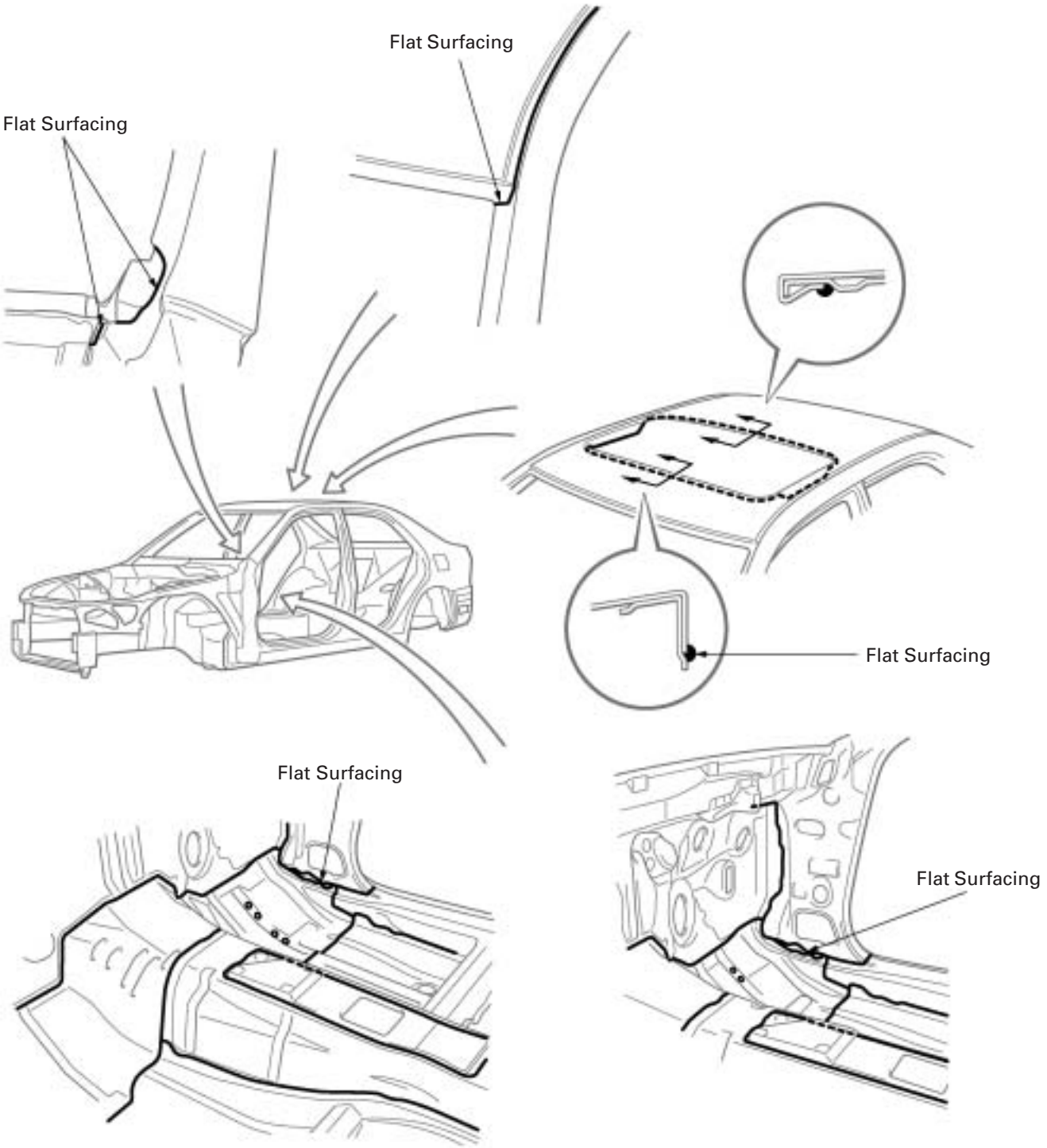
Flat Surfacing
Flat Surfacing
Flat Surfacing
Flat Surfacing
Flat Surfacing

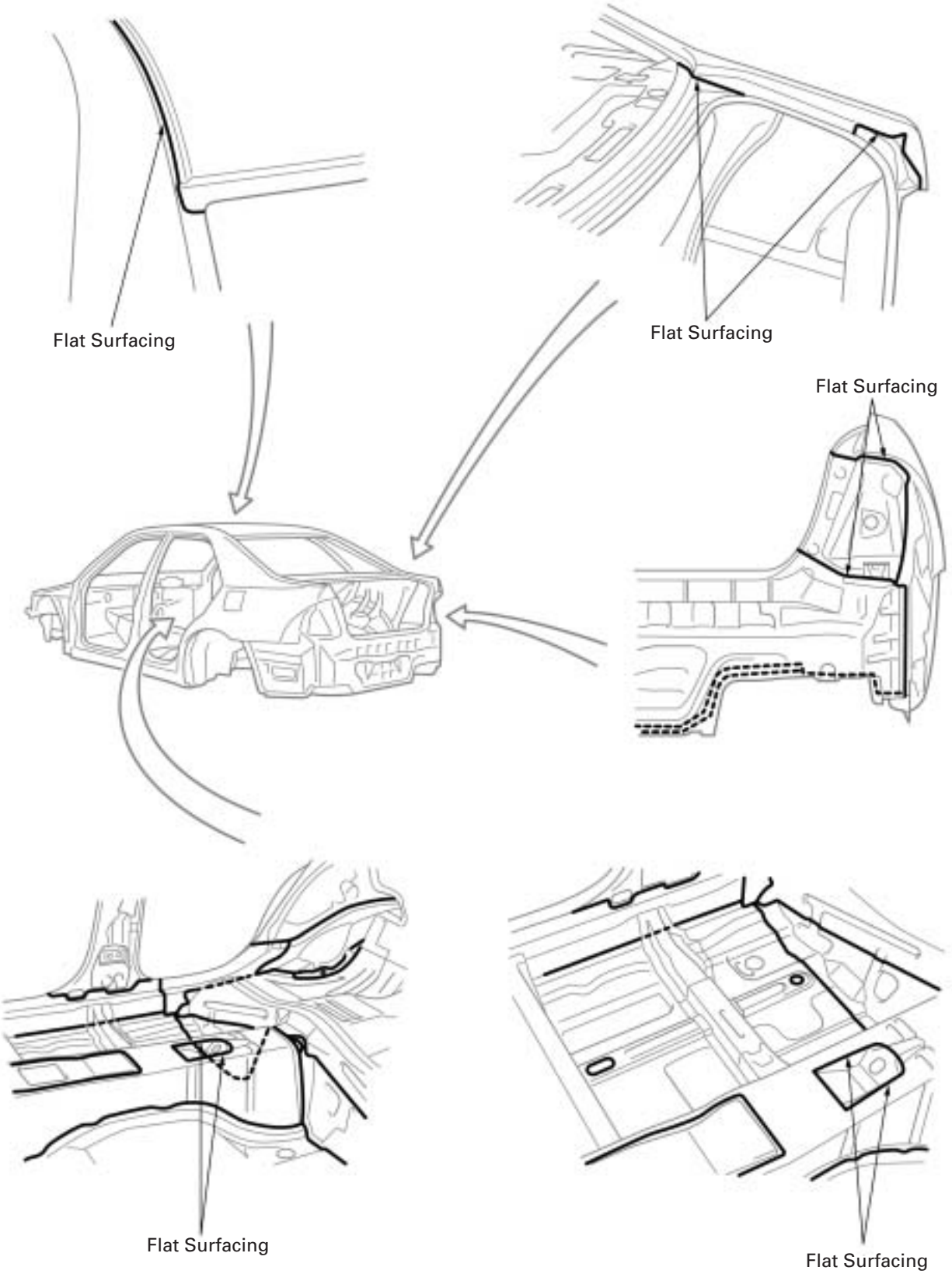
Flat Surfacing
Flat Surfacing
Flat Surfacing
Flat Surfacing
Flat Surfacing

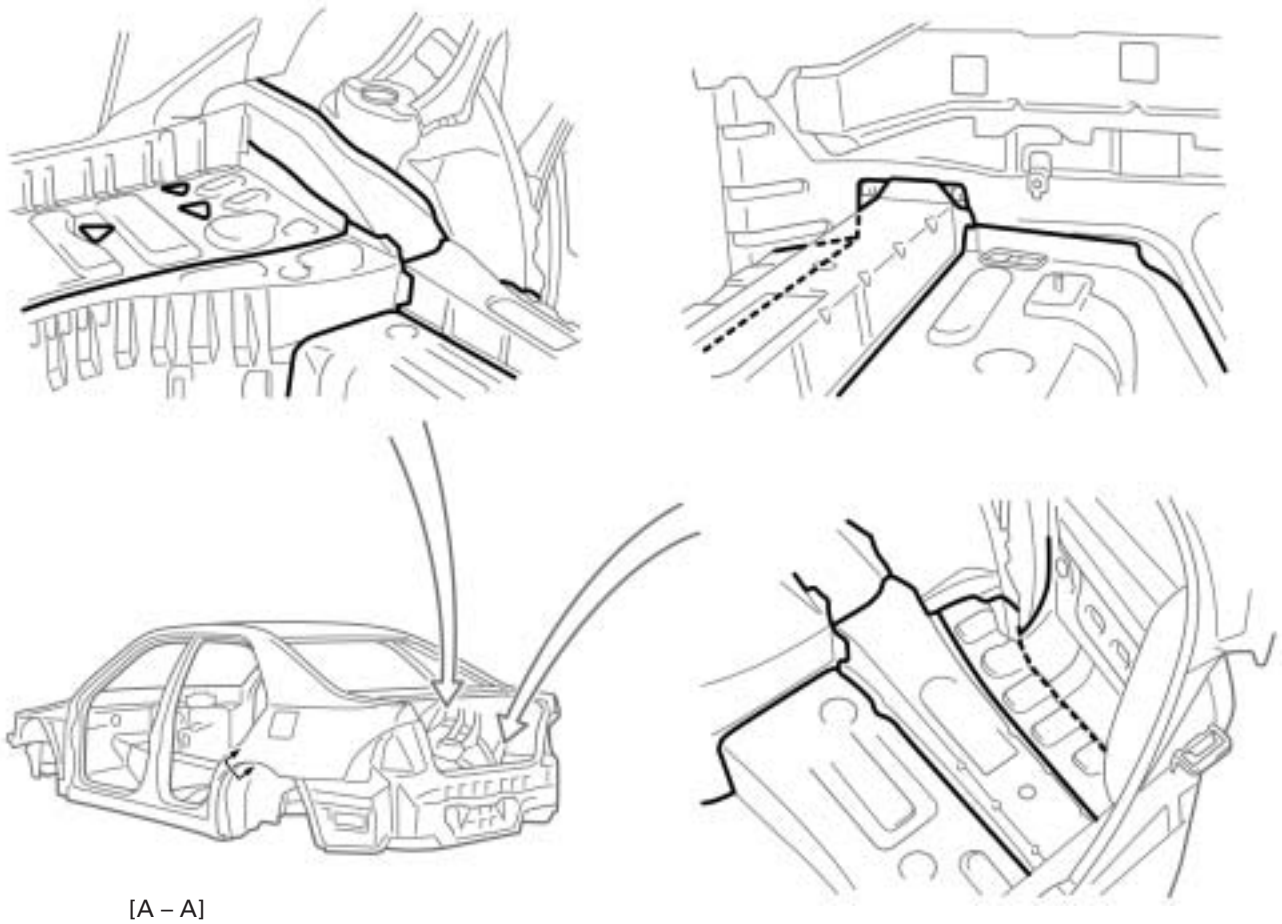

[A – A]

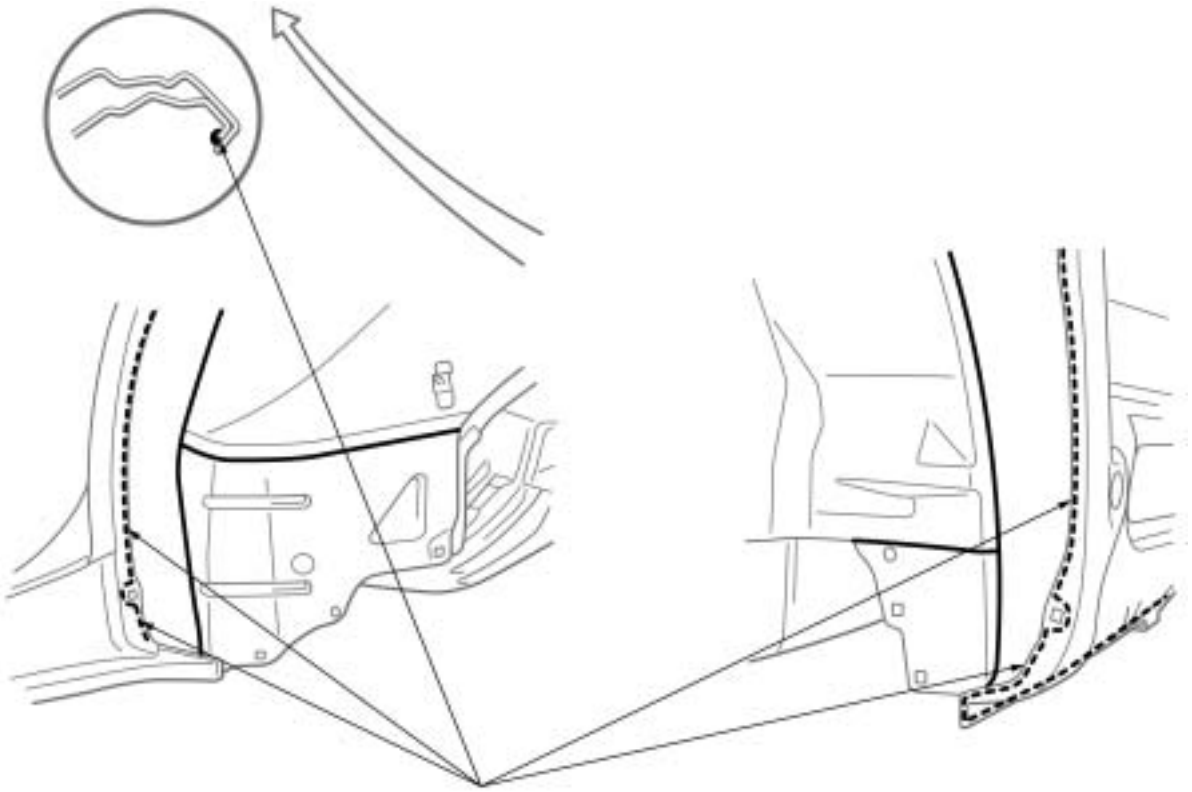

Flat Surfacing

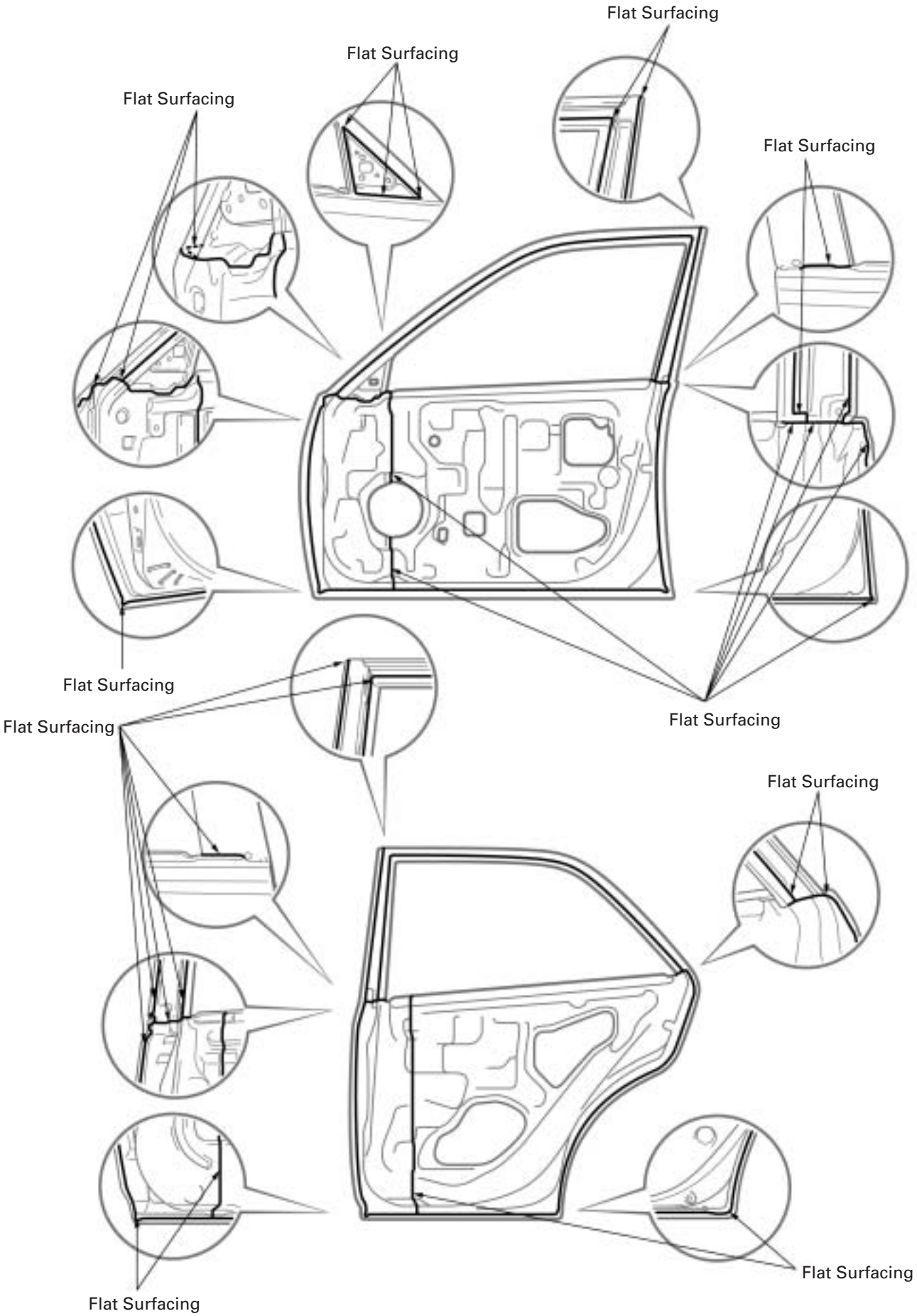
Flat Surfacing
Flat Surfacing
Flat Surfacing
Flat Surfacing
Flat Surfacing
Flat Surfacing
Flat Surfacing
Flat Surfacing
Flat Surfacing
Flat Surfacing

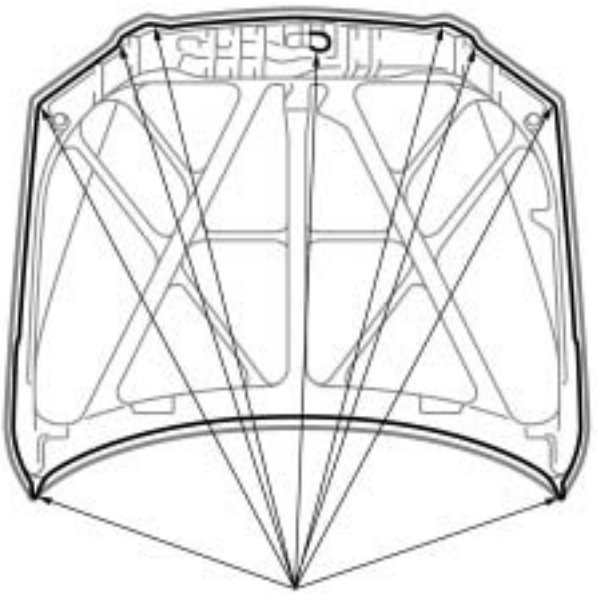
Flat Surfacing

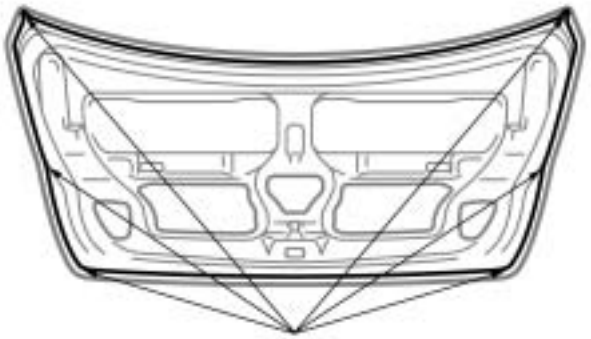
Flat Surfacing

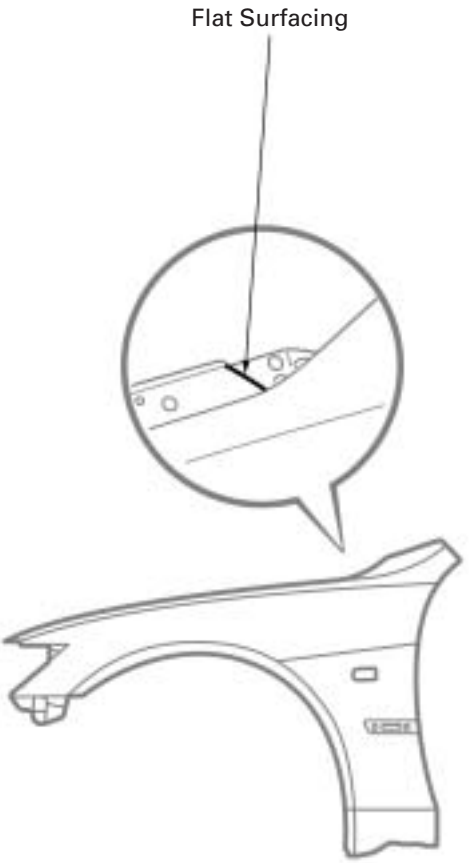
Flat Surfacing

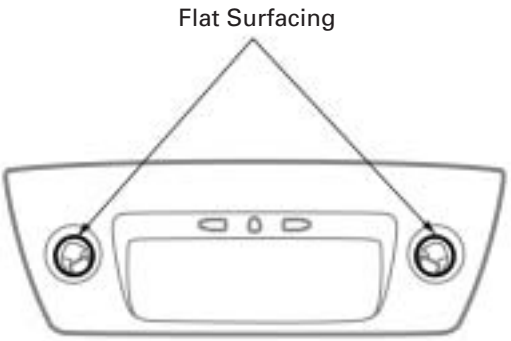
Flat Surfacing

BODY PANEL UNDERCOATING AREAS

HINT:

1. *First wipe off any dirt, grease or oil with a rag soaked in a grease, wax and silicone remover.*
2. *Cover the surrounding areas with masking paper to avoid coating unnecessary areas. If other areas are accidently coated, wipe off the coating immediately.*
3. *Apply the first coating of undercoat to all welded areas and panel joints, then apply a second coat over the entire area.*
4. *Do not coat parts which become hot, such as the tailpipe, or moving parts, such as the propeller shaft.*
5. *Besides the locations described below, apply undercoating to all weld points under the body to insure corrosion prevention.*
6. *Be sure to seal the edge of the flange of the member and bracket with undercoating.*
7. *If undercoat is damaged by peeling, cracks, etc., be sure to repair as necessary.*
8. *Before the undercoat apply sealer allowing rust prevention to be attained.*

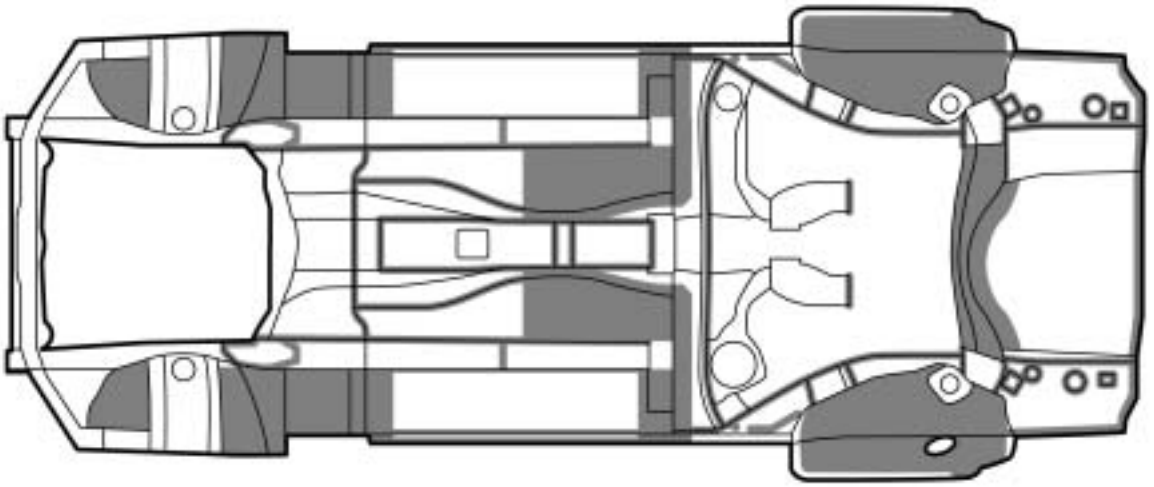

BODY PANEL ANTI-RUST AGENT (WAX) APPLICATION AREAS

HINT:

1. *Whenever adjusting the doors and hoods, apply anti-rust agent (wax) around the hinges.*
2. *Even if partially repairing a part, apply anti-rust agent (wax) over the entire application area of the part.*
3. *Wipe off the anti-rust agent immediately with a rag soaked in a grease, wax and silicone remover, if accidently applied to other areas.*

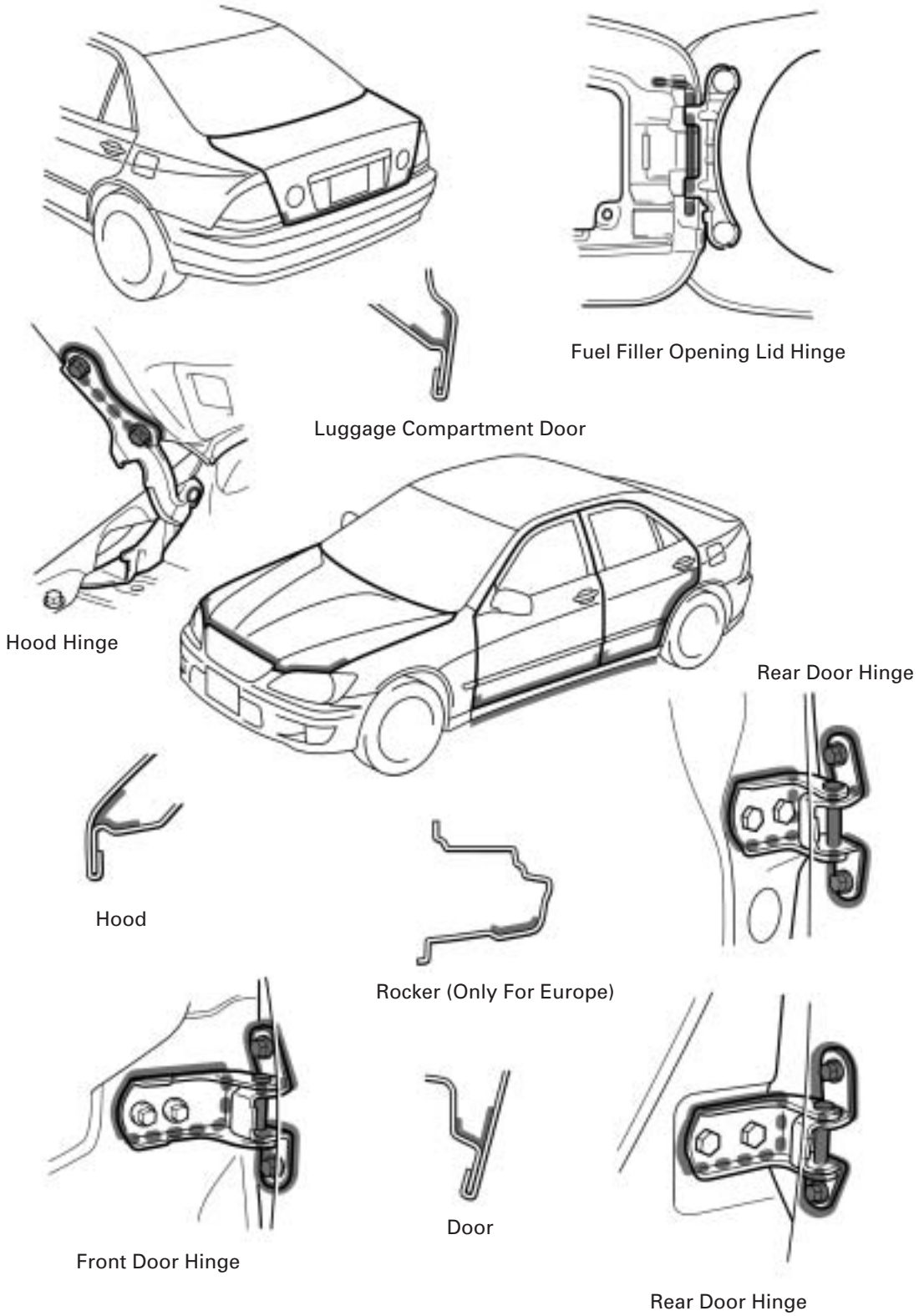

BODY PANEL ANTI-CHIPPING PAINT APPLICATION AREAS

HINT:

1. *Anti-chipping paint should be applied to some areas before the second coat and to others after the top coat.*
2. *If other areas are accidentally coated, wipe off the paint immediately with a rag soaked in grease, wax and silicone remover.*

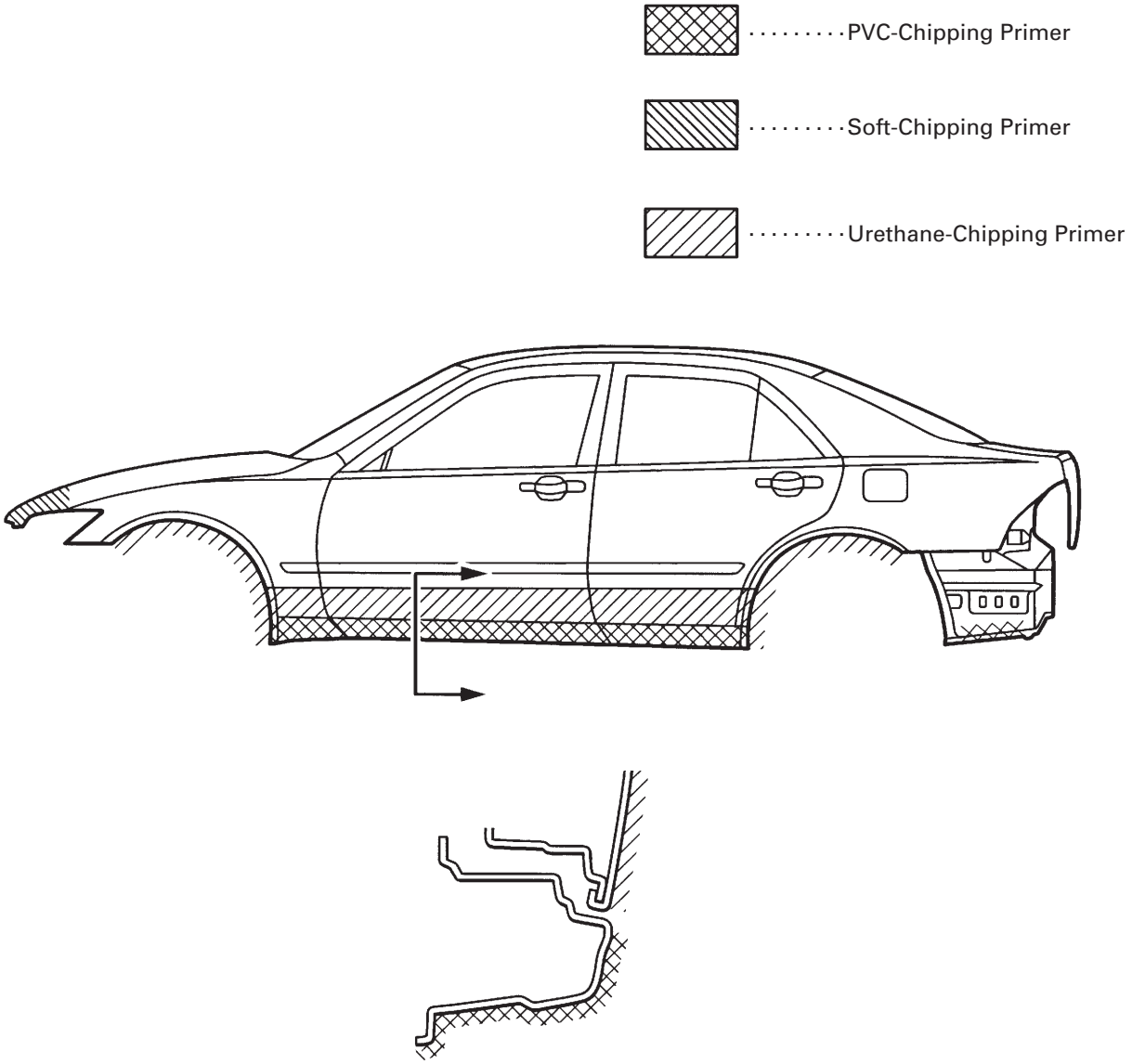

HIGH-STRENGTH STEEL (HSS) PARTS

Generally, High-Strength Steel (HSS) is that which has an intensity value of at 35 kgf/mm^2 (343 MPa), and distinguished from mild steel.

The handling of HSS is the same as for mild steel, but the following should be observed.

1. Panel Hammering: Because HSS is thinner than mild steel, care should be taken to avoid warping during hammering operations.
2. Removing Spot Welds: Because HSS is tougher than mild steel, damage will occur more easily to a regular drill. Therefore, an HSS Spot Cutter is recommended.
   Also, use a high-torque drill at low speed, and supply grinding oil to the drill use.
3. Panel Welding: Panel welding procedures for HSS are exactly the same as for mild steel. Plug welding should be done with MIG (Metal Inert Gas) welder. Do not gas weld or braze panels at areas other than specified.

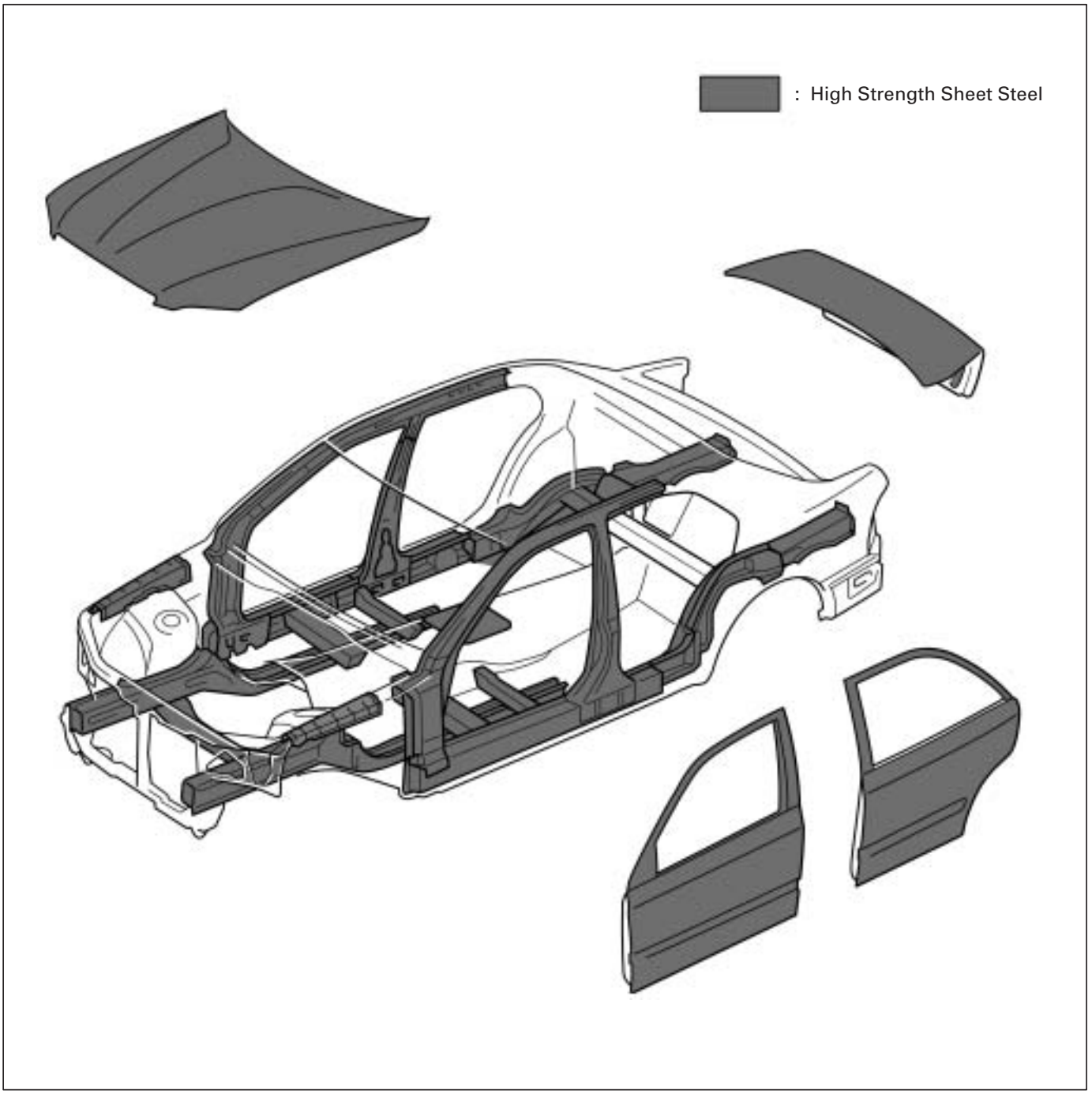

RUST-RESISTANT SHEET STEEL PARTS

Rust-Resistant Sheet Steel have zinc, tin or aluminum etc, plating over the base metal surface in order to improve the corrosion resistance of the sheet metal. This sheeting is used on areas that require anti-corrosive abilities but there is no need to distinguish the differences between rust resistant sheet steel and ordinary sheet steel in body repair.
Body panels on TOYOTA models are made of two different melted galvannealed sheet steel. The ordinary melted galvannealed sheet has a zinc plating over the base metal surface and when heated a zinc-iron alloy plating. The zinc-iron double layered galvannealed sheet has a iron rich and another zinc-rich layer above the sheet steel. These 2 layers improve paint adhesion. These two melted galvannealed sheet steels are used selectively according to need.

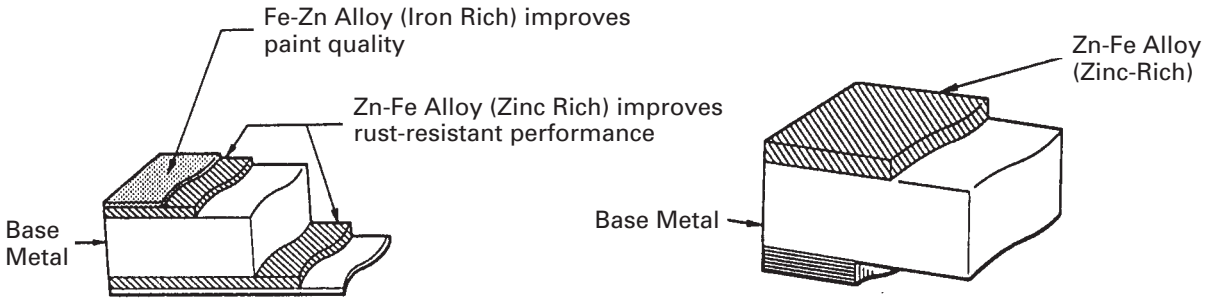

Double Layered Zinc-Iron Galvannealed Sheet Steel

Galvannealed Sheet Steel

The handling of Rust-Resistant Sheet Steel is the same as for ordinary sheet steel, but the following should be observed.

1. Panel Welding: The paint as well as the zinc portion must be removed completely from the welding area to guarantee good welding integrity.
2. Anti-Rust Treatment: Since the zinc plating is lost after welding, anti-rust treatment of the welded area must be thoroughly performed (refer to section AR).

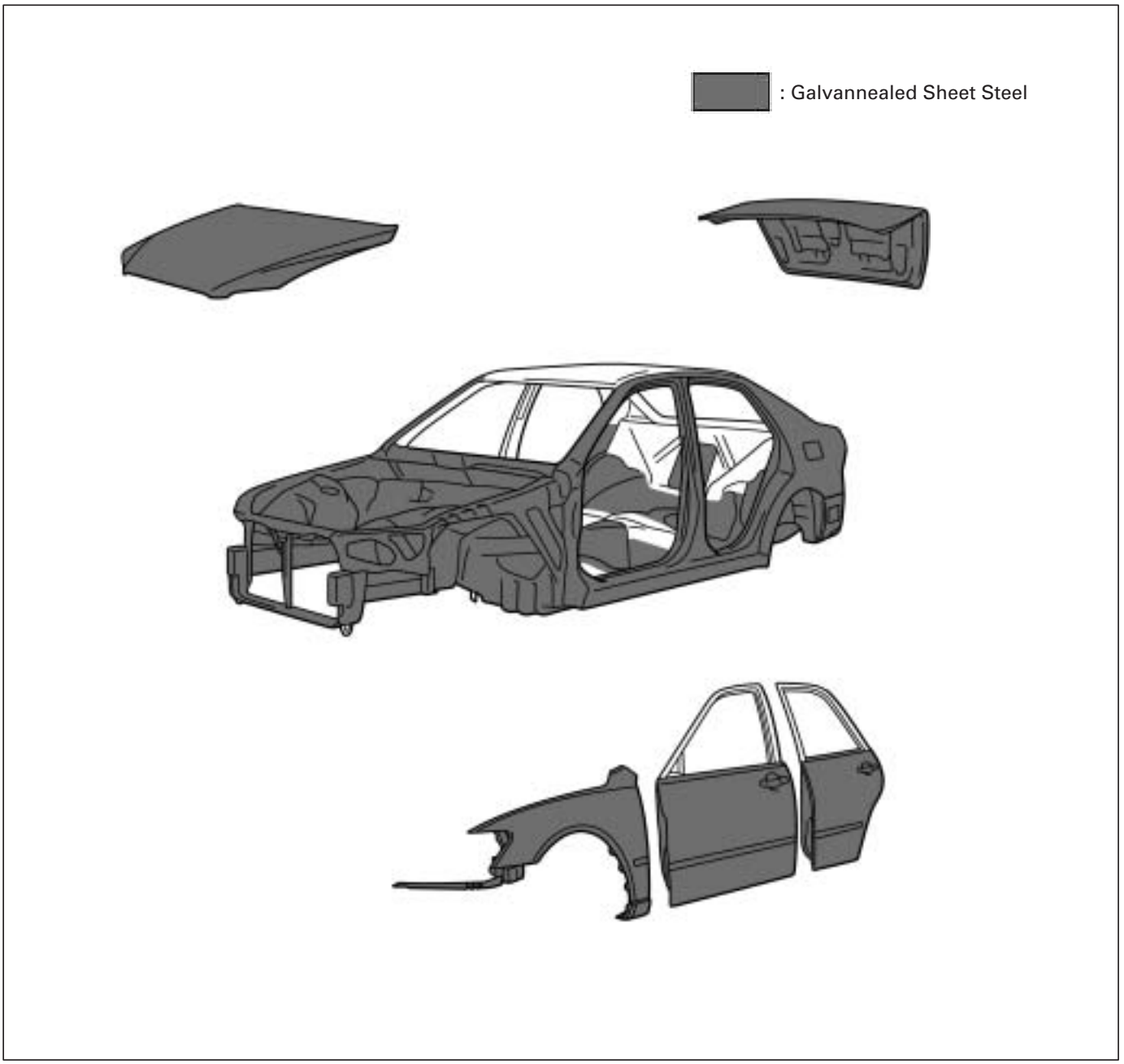
: Galvannealed Sheet Steel

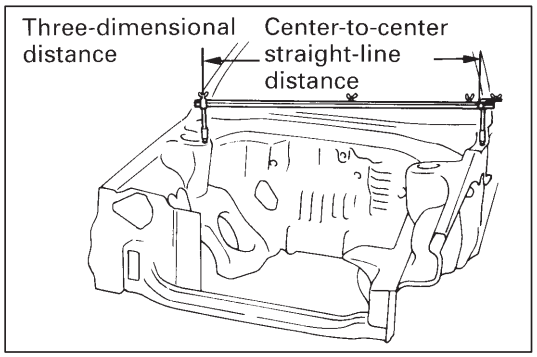

GENERAL INFORMATION

1. BASIC DIMENSIONS

(a) There are two types of dimensions in the diagram.
(Three-dimensional distance)

- Straight-line distance between the centers of two measuring points.

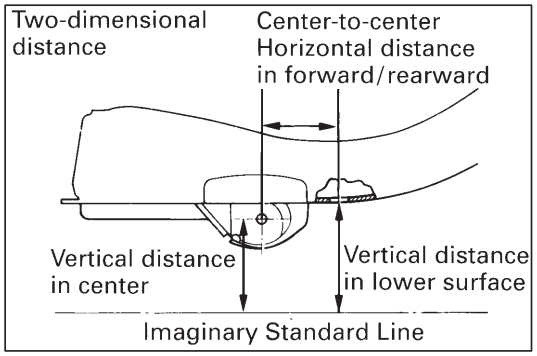

(Two-dimensional distance)

- Horizontal distance in forward/rearward between the centers of two measuring points.
- The height from an imaginary standard line.

(b) Incases in which only one dimension is given, left and right are symmetrical.

(c) The dimensions in the following drawing indicate actual distance. Therefore, please use the dimensions as a reference.

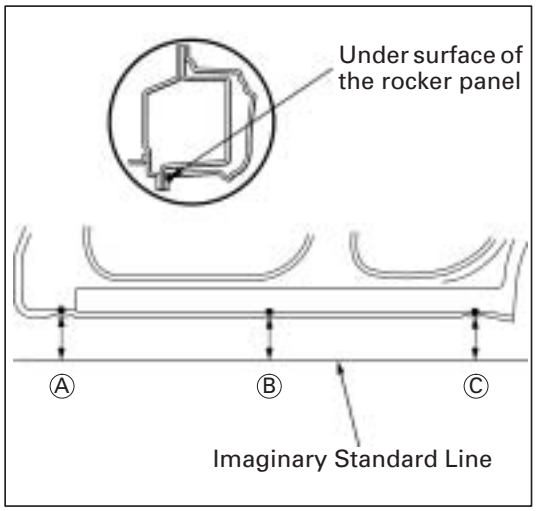

(d) The line that connects the places listed below is the imaginary standard line when measuring the height. (The dimensions are printed in this text.)
Ⓐ: The place that was lowered A mm from the centered on the front jack up point.
Ⓑ: The place that was lowered B mm from the under surface of the rocker panel centered between Ⓐ & Ⓒ.
Ⓒ: The place that was lowered C mm from the under surface of the rocker panel centered on the rear jack up point.

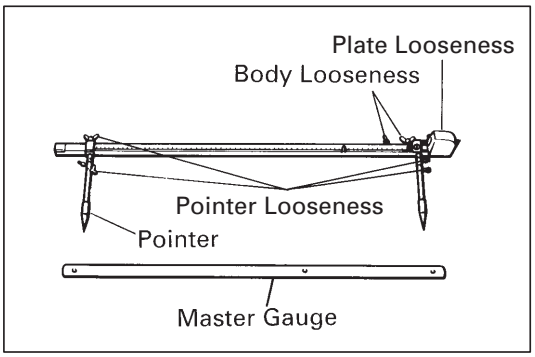

2. MEASURING

(a) Basically, all measurements are to be done with a tracking gauge. For portions where it is not possible to use a tracking gauge, a tape measure should be used.

(b) Use only a tracking gauge that has no looseness in the body, measuring plate, or pointers.

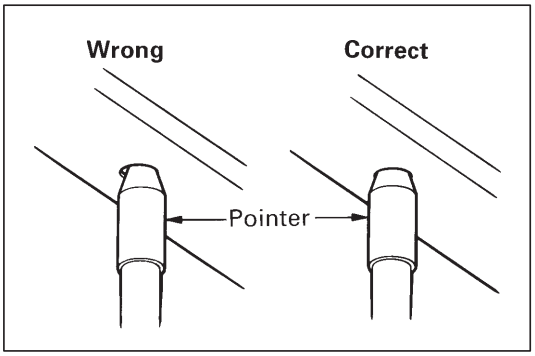

HINT:

1. *The height of the left and right pointers must be equal.*
2. *Always calibrate the tracking gauge before measuring or after adjusting the pointer height.*
3. *Take care not to drop the tracking gauge or otherwise shock it.*
4. *Confirm that the pointers are securely in the holes.*

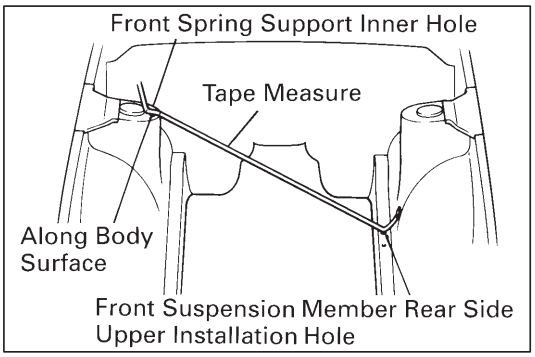

(c) When using a tape measure, avoid twists and bends in the tape.

(d) When tracking a diagonal measurement from the front spring support inner hole to the suspension member upper rear installation hole, measure along the front spring support panel surface.

BODY DIMENSION DRAWINGS

ENGINE COMPARTMENT

(Three-Dimensional Distance)

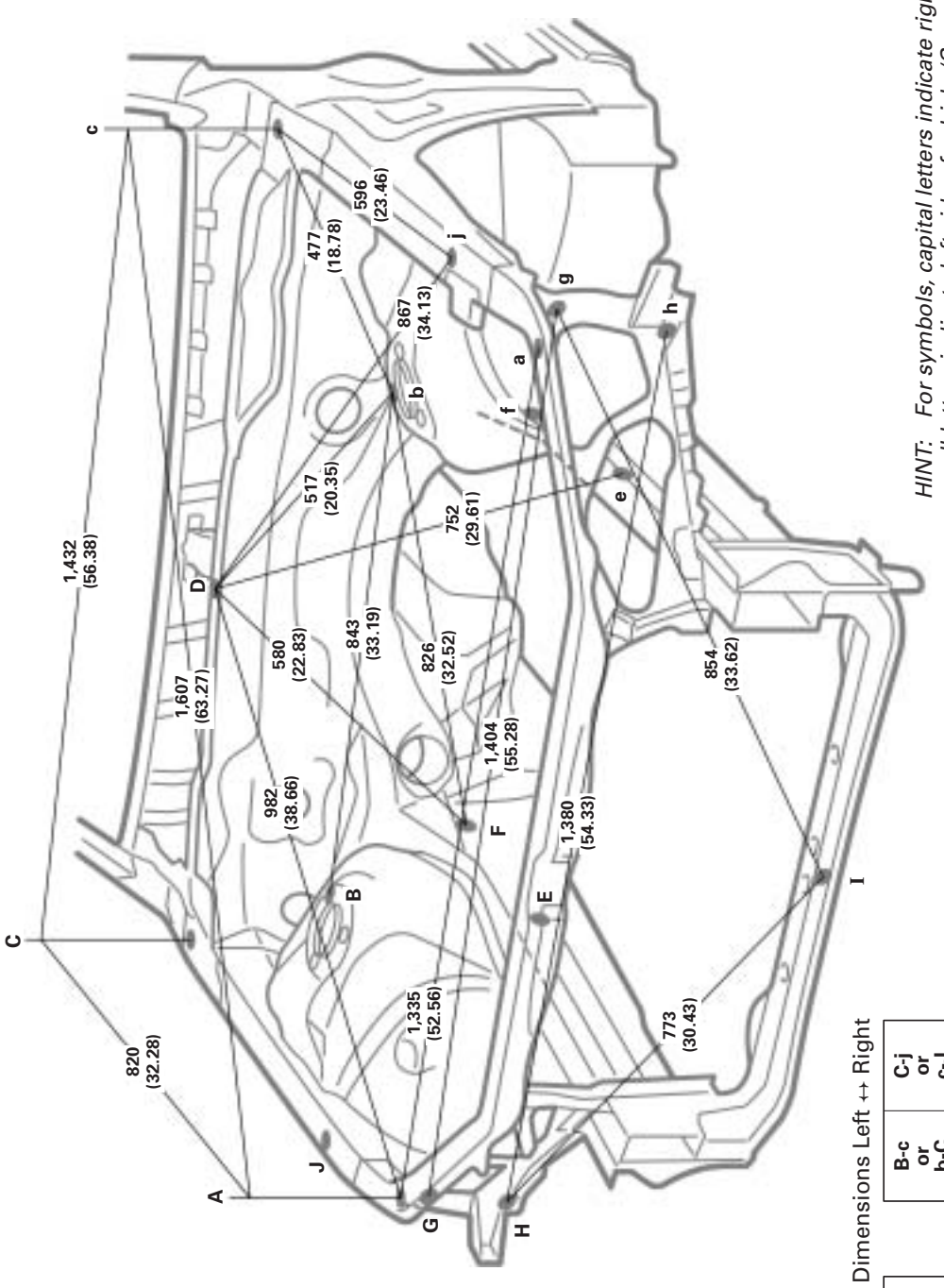

HINT: For symbols, capital letters indicate right side of vehicle, small letters indicate left side of vehicle (Seen from rear).

Vehicle Dimensions Left ↔ Right

J-j
1,420 (55.91)

B-c or b-C	C-j or c-J
1,198 (47.17)	1,545 (60.83)

mm (in.)

Symbol	Name	Hole dia.
A, a	Front fender installation nut	6 (0.24) nut
B, b	Front spring support hole-inner	12 (0.47)
C, c	Front fender installation nut	6 (0.24) nut
D	Cowl top panel center mark	1 (0.04) R
E, e	Front side member working hole	13 (0.51)

Symbol	Name	Hole dia.
F, f	Front side member working hole	18 (0.71)
G, g	Radiator support standard hole	10 (0.39)
H, h	Radiator support standard hole	10 (0.39)
I	Hood lock support installation nut	6 (0.24) nut
J, j	Front fender apron standard hole	16 (0.63)

BODY OPENING AREAS (Side View: Front)

(Three-Dimensional Distance)

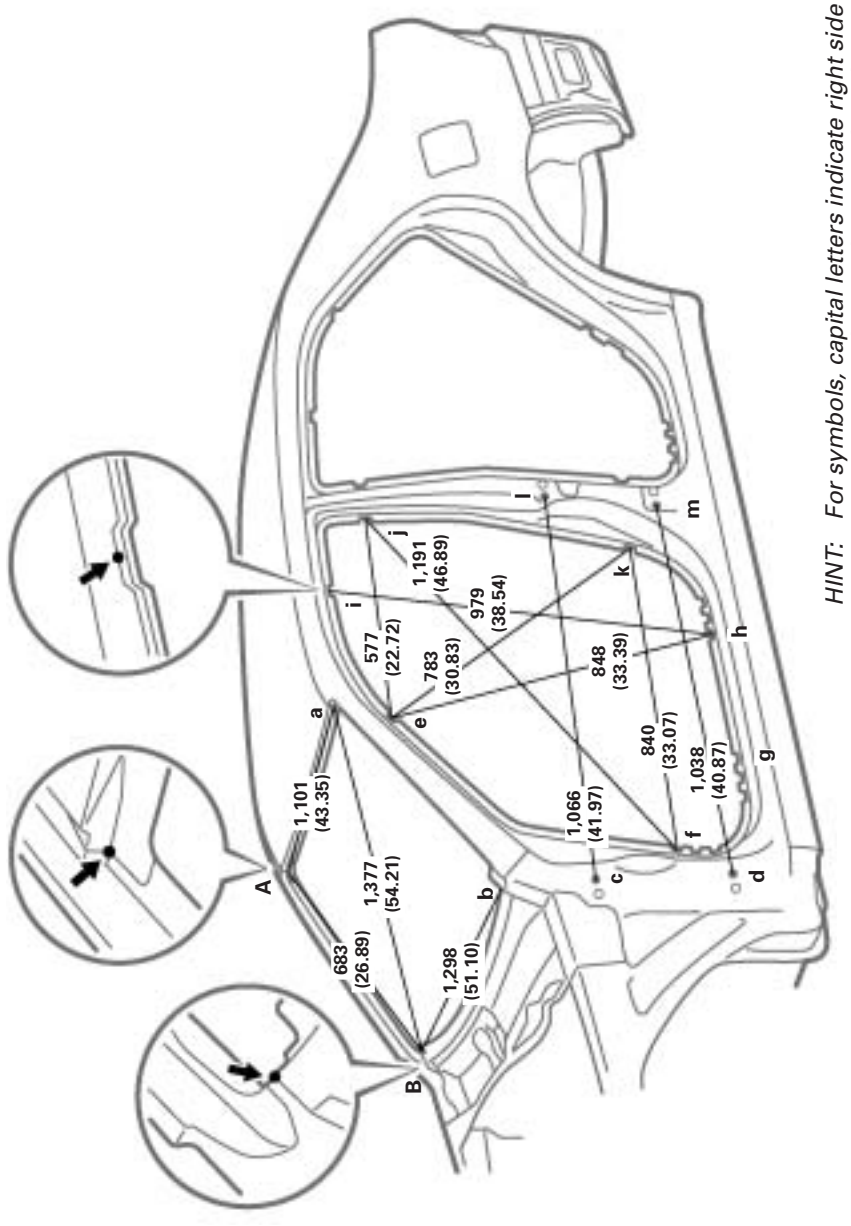

mm (in.)

Vehicle Dimensions Left ↔ Right

E-e	F-f	G-g	H-h	I-i	J-j	K-k
1,207 (47.52)	1,438 (56.61)	1,450 (57.09)	1,450 (57.09)	1,097 (43.19)	1,214 (47.80)	1,432 (56.38)

HINT: For symbols, capital letters indicate right side of vehicle, small letters indicate left side of vehicle (Seen from rear).

E-f or e-F	E-h or e-H	E-j or e-J	F-j or f-J	F-k or f-K	H-i or h-I	J-k or j-K
1,522 (59.92)	1,571 (61.85)	1,341 (52.80)	1,779 (70.04)	1,663 (65.47)	1,597 (62.87)	1,490 (58.66)

Symbol	Name	Hole dia.	Symbol	Name	Hole dia.
A, a	Roof panel/Front body pillar adjoining portion	—	H, h	Rocker panel assembly mark	—
B, b	Cowl panel/Front body pillar adjoining portion	—	I, i	Roof side rail assembly mark	—
C, c	Front door hinge installation nut	8 (0.31) nut	J, j	Center body pillar assembly mark	—
D, d	Front door hinge installation nut	8 (0.31) nut	K, k	Center body pillar assembly mark	—
E, e	Front body pillar assembly mark	—	L, l	Rear door hinge installation hole	13 (0.51)
F, f	Front body pillar assembly mark	—	M, m	Rear door hinge installation hole	13 (0.51)
G, g	Rocker panel assembly mark	—	—	—	—

BODY OPENING AREAS (Side View: Rear)

(Three-Dimensional Distance)

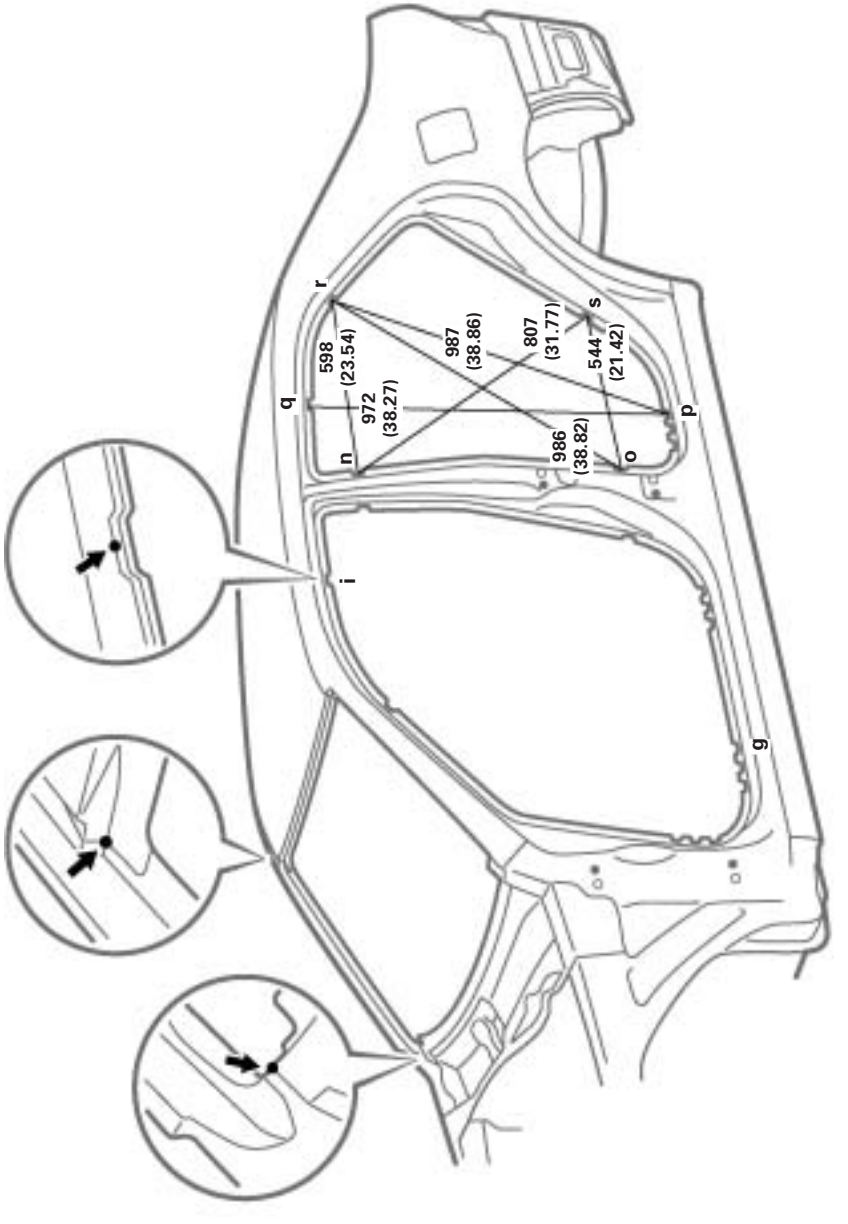

HINT: For symbols, capital letters indicate right side of vehicle, small letters indicate left side of vehicle (Seen from rear).

Vehicle Dimensions Left ↔ Right

N-n	O-o	P-p	Q-q	R-r	S-s
1,228 (48.35)	1,434 (56.46)	1,450 (57.09)	1,098 (43.23)	1,184 (46.61)	1,433 (56.42)

G-p or g-P	I-q or i-Q	N-r or n-R	N-s or n-S	O-s or o-S	P-q or p-Q	R-s or r-S
1,768 (69.61)	1,229 (48.39)	1,346 (52.99)	1,553 (61.14)	1,533 (60.35)	1,593 (62.72)	1,484 (58.43)

mm (in.)

Symbol	Name	Hole dia.	Symbol	Name	Hole dia.
G, g	Rocker panel assembly mark	—	P, p	Rocker panel assembly mark	—
I, i	Roof side rail assembly mark	—	Q, q	Roof side rail assembly mark	—
N, n	Center body pillar assembly mark	—	R, r	Quarter panel assembly mark	—
O, o	Center body pillar assembly mark	—	S, s	Quarter panel assembly mark	—

BODY OPENING AREAS (Rear View)

(Three-Dimensional Distance)

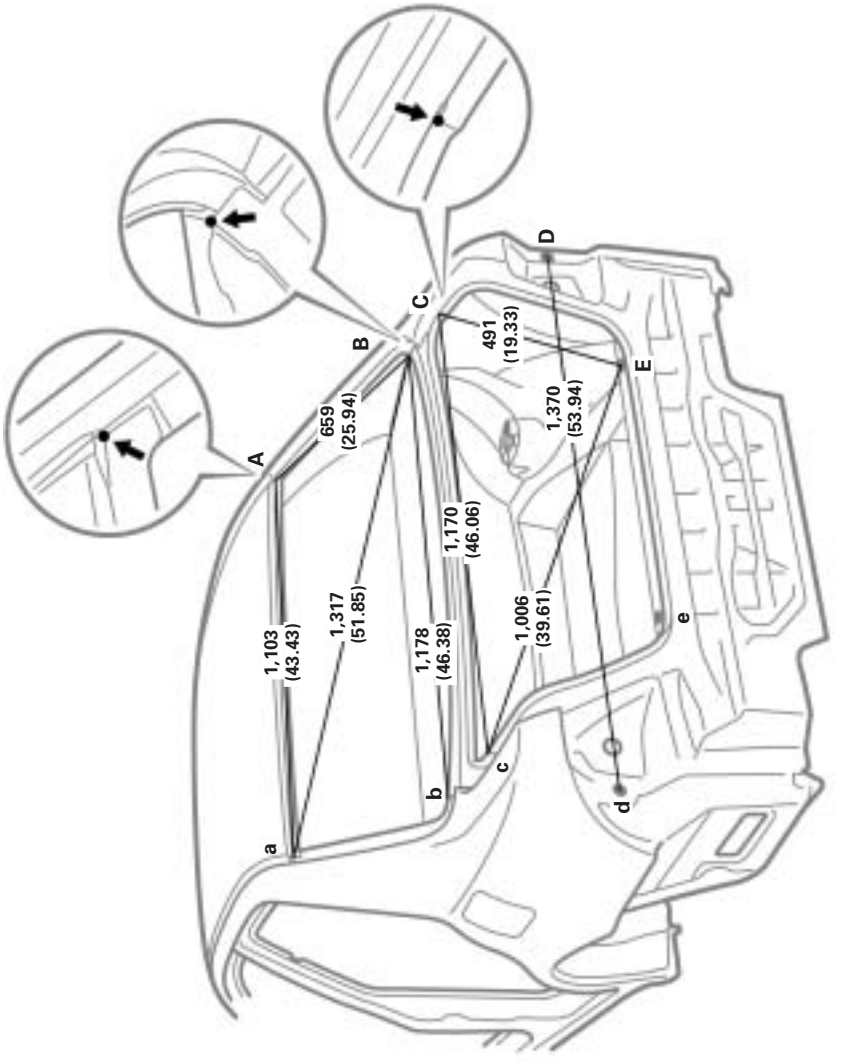

HINT: For symbols, capital letters indicate right side of vehicle, small letters indicate left side of vehicle (Seen from rear).

mm (in.)

Symbol	Name	Hole dia.	Symbol	Name	Hole dia.
A, a	Roof panel/Quarter panel adjoining portion	—	D, d	Quarter panel standard hole	10 (0.39)
B, b	Upper back panel/Quarter panel adjoining portion	—	E, e	Rear floor finish plate installation hole	9 (0.35)
C, c	Quarter panel/Upper back panel adjoining portion	—	—	—	—

UNDER BODY

(Three-Dimensional Distance)

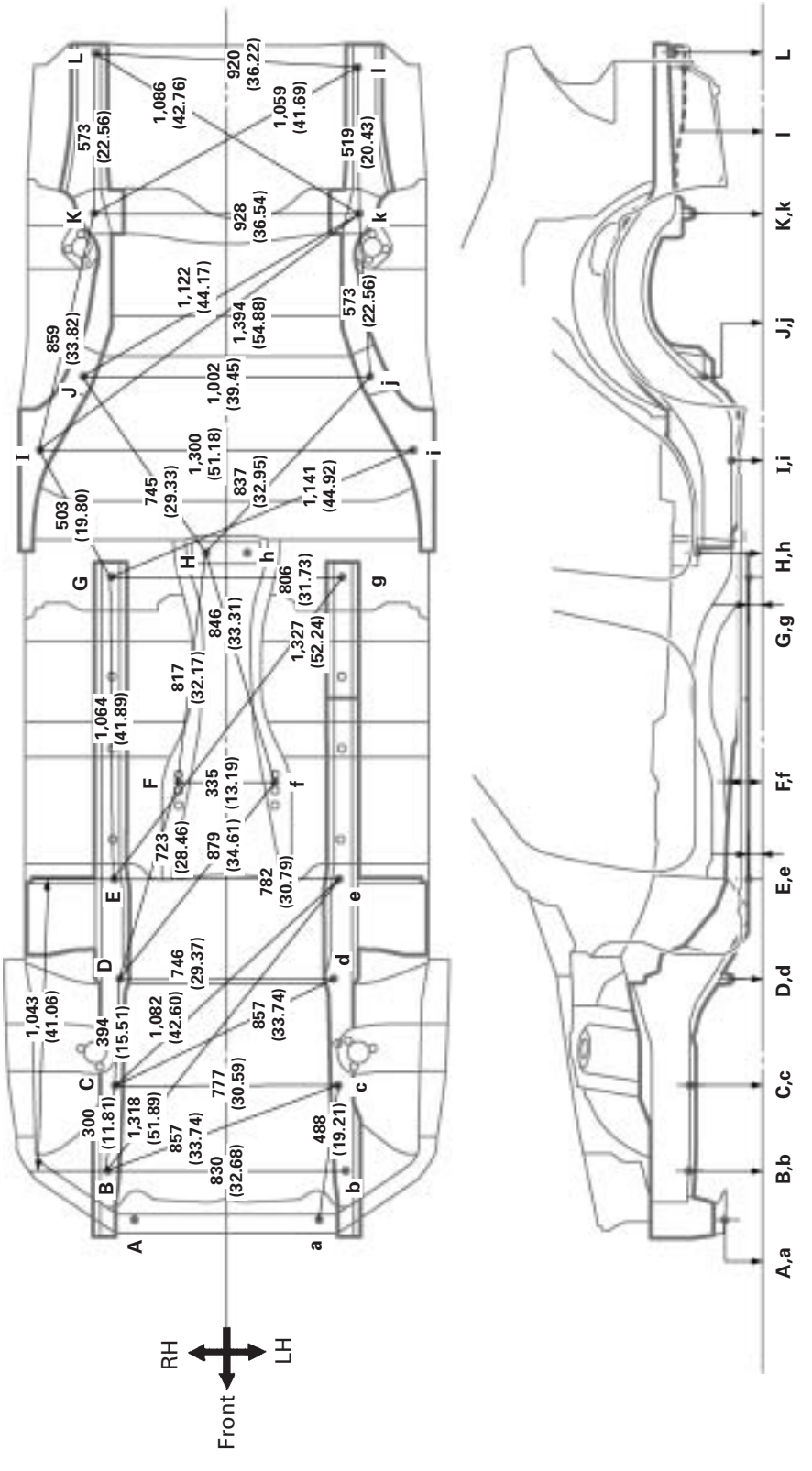

mm (in.)

Symbol	Name	Hole dia.
A, a	Front crossmember standard hole	10 (0.39)
B, b	Front side member standard hole	25 (0.98)
C, c	Front suspension crossmember installation nut	14 (0.55) nut
D, d	Strut bar bracket installation nut	12 (0.47) nut
E, e	Front side member standard hole	25 (0.98)
F, f	Engine mounting member bracket standard hole	10 (0.39)
G, g	Front floor under reinforcement standard hole	18 (0.71)

Symbol	Name	Hole dia.
H, h	Drive shaft center support bearing installation nut	10 (0.39) nut
I, i	Rear floor side member standard hole	25 (0.98)
J, j	Rear suspension member installation nut	14 (0.55) nut
K, k	Rear suspension member installation nut	14 (0.55) nut
L	Exhaust pipe installation bolt	8 (0.31) bolt
l	Transport hook installation nut	12 (0.47) nut
—	—	—

UNDER BODY (Cont'd)

(Two-Dimensional Distance)

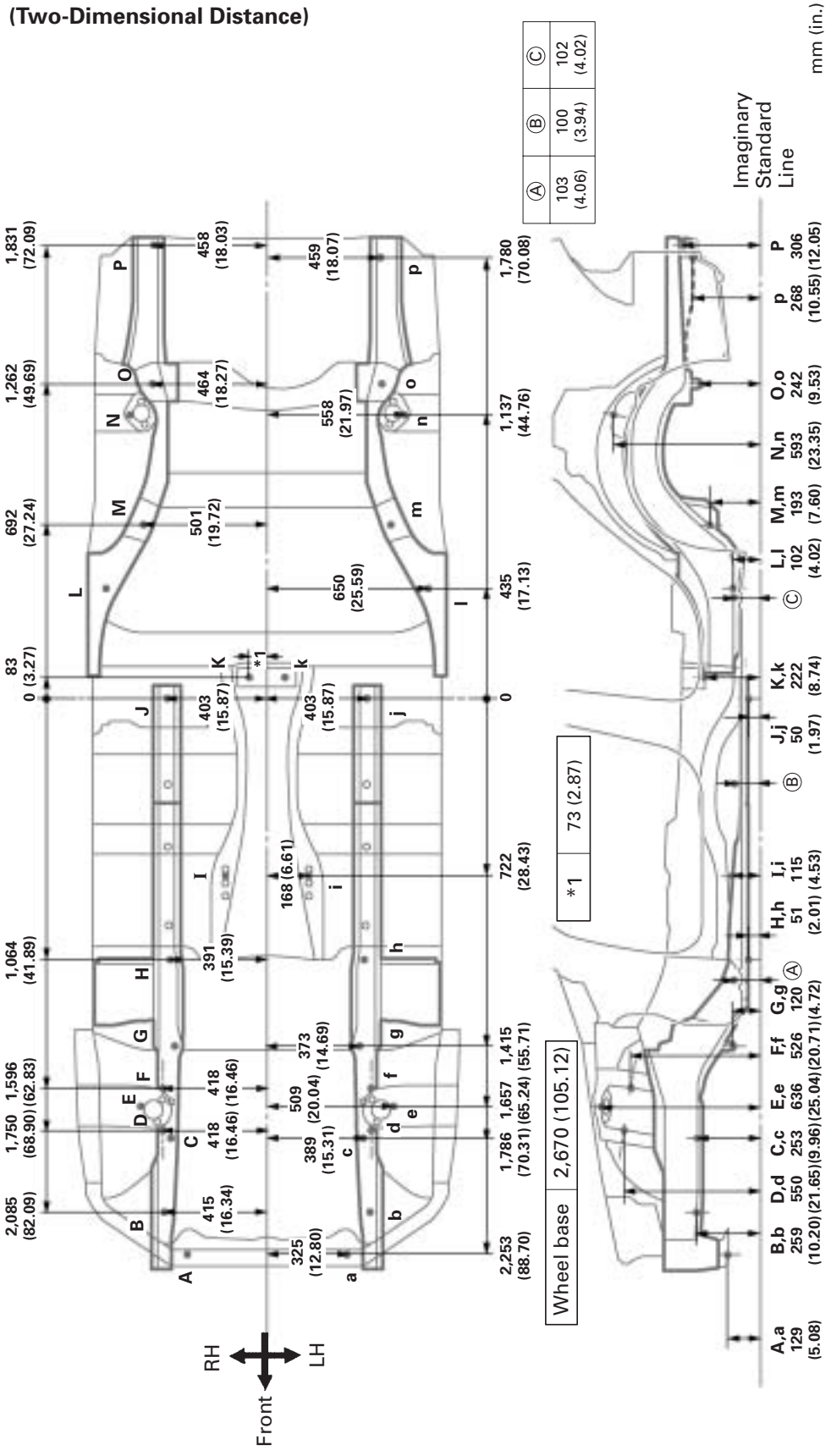

Symbol	Name	Hole dia.
A, a	Front crossmember standard hole	10 (0.39)
B, b	Front side member standard hole	25 (0.98)
C, c	Front suspension crossmember installation nut	14 (0.55) nut
D, d	Front suspension upper arm installation hole front – rear	10.3 (0.406)
E, e	Front spring support hole outer	11 (0.43)
F, f	Front suspension upper arm installation hole rear – front	10.3 (0.406)
G, g	Strut bar bracket installation nut	12 (0.47) nut
H, h	Front side member standard hole	25 (0.98)
I, i	Engine mounting member bracket standard hole	10 (0.39)

Symbol	Name	Hole dia.
J, j	Front floor under reinforcement standard hole	18 (0.71)
K, k	Drive shaft center support bearing installaiton nut	10 (0.39) nut
L, l	Rear floor side member standard hole	25 (0.98)
M, m	Rear suspension member installation nut	14 (0.55) nut
N, n	Rear spring support hole-outer	11 (0.43)
O, o	Rear suspension member installation nut	14 (0.55) nut
P	Exhaust pipe installation bolt	8 (0.31) bolt
p	Transport hook installation nut	12 (0.47) nut
—	—	—

FRONT SUSPENSION CROSSMEMBER (LHD)

(Three-Dimensional Distance)

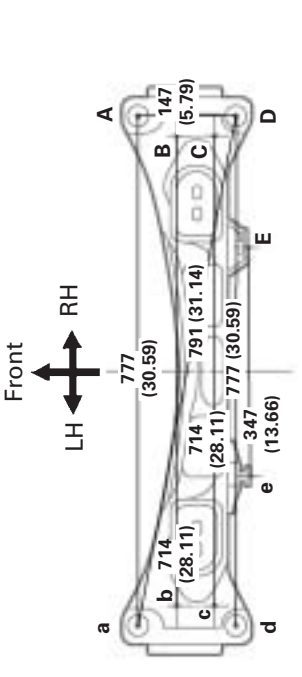

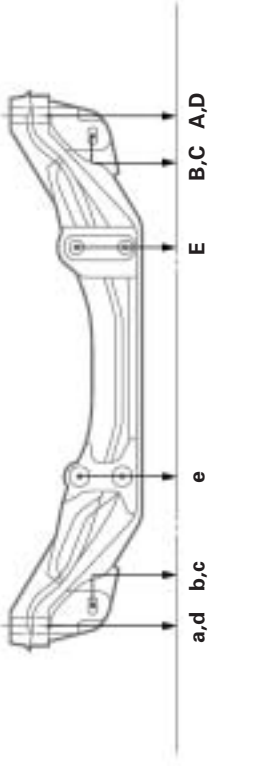

(Two-Dimensional Distance)

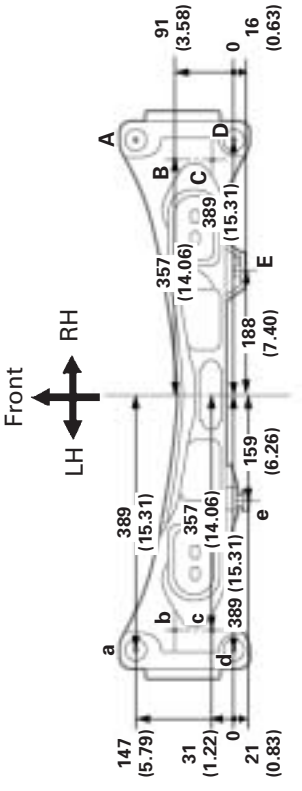

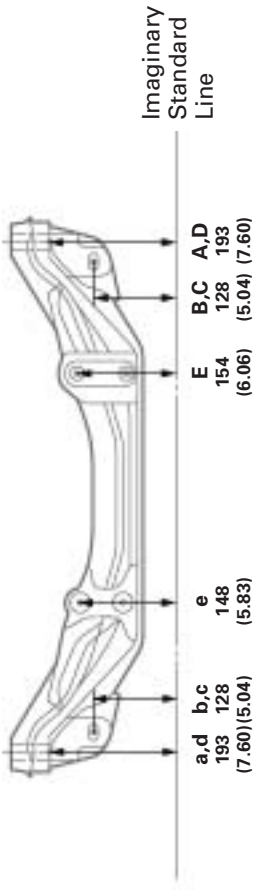

mm (in.)

Symbol	Name	Hole dia.
A, a	Front suspension crossmember installation hole-lower	18 (0.71)
B, b	Lower arm installation hole-front	26.5 (1.043) x 14.5 (0.571)
C, c	Lower arm installation hole-rear	26.5 (1.043) x 14.5 (0.571)

Symbol	Name	Hole dia.
D, d	Front suspension crossmember installation hole-lower	18 (0.71)
E, e	Steering gear box installaiton nut	10 (0.39) nut
—	—	—

FRONT SUSPENSION CROSSMEMBER (RHD)

(Three-Dimensional Distance)

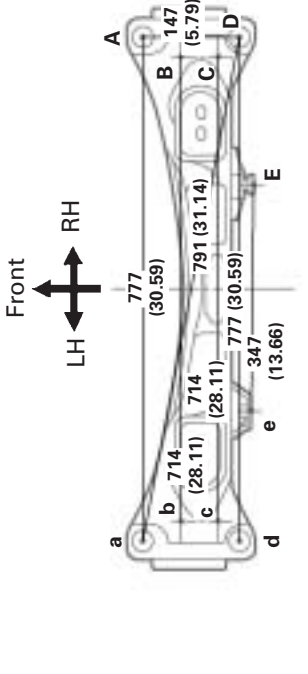

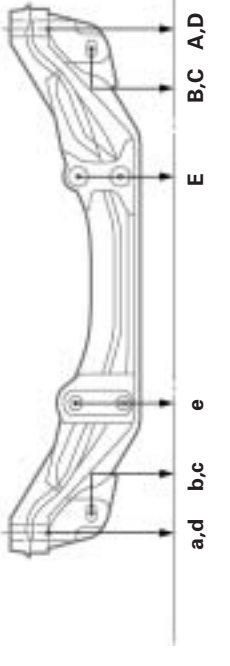

(Two-Dimensional Distance)

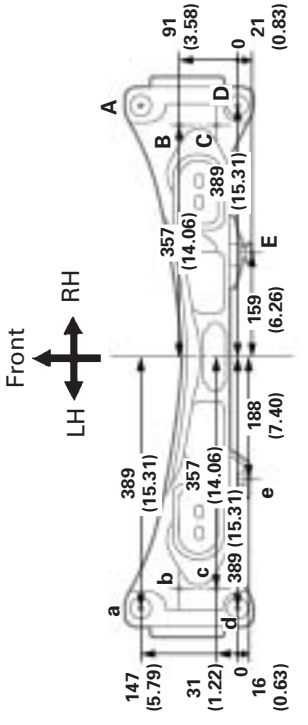

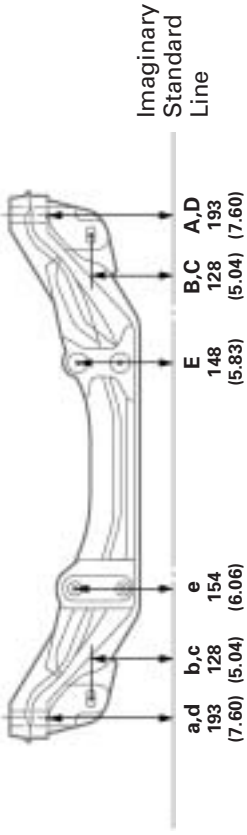

mm (in.)

Symbol	Name	Hole dia.
A, a	Front suspension crossmember installation hole-lower	18 (0.71)
B, b	Lower arm installation hole-front	26.5 (1.043) x 14.5 (0.571)
C, c	Lower arm installation hole-rear	26.5 (1.043) x 14.5 (0.571)

Symbol	Name	Hole dia.
D, d	Front suspension crossmember installation hole-lower	18 (0.71)
E, e	Steering gear box installaiton nut	10 (0.39) nut
—	—	—

REAR SUSPENSION MEMBER

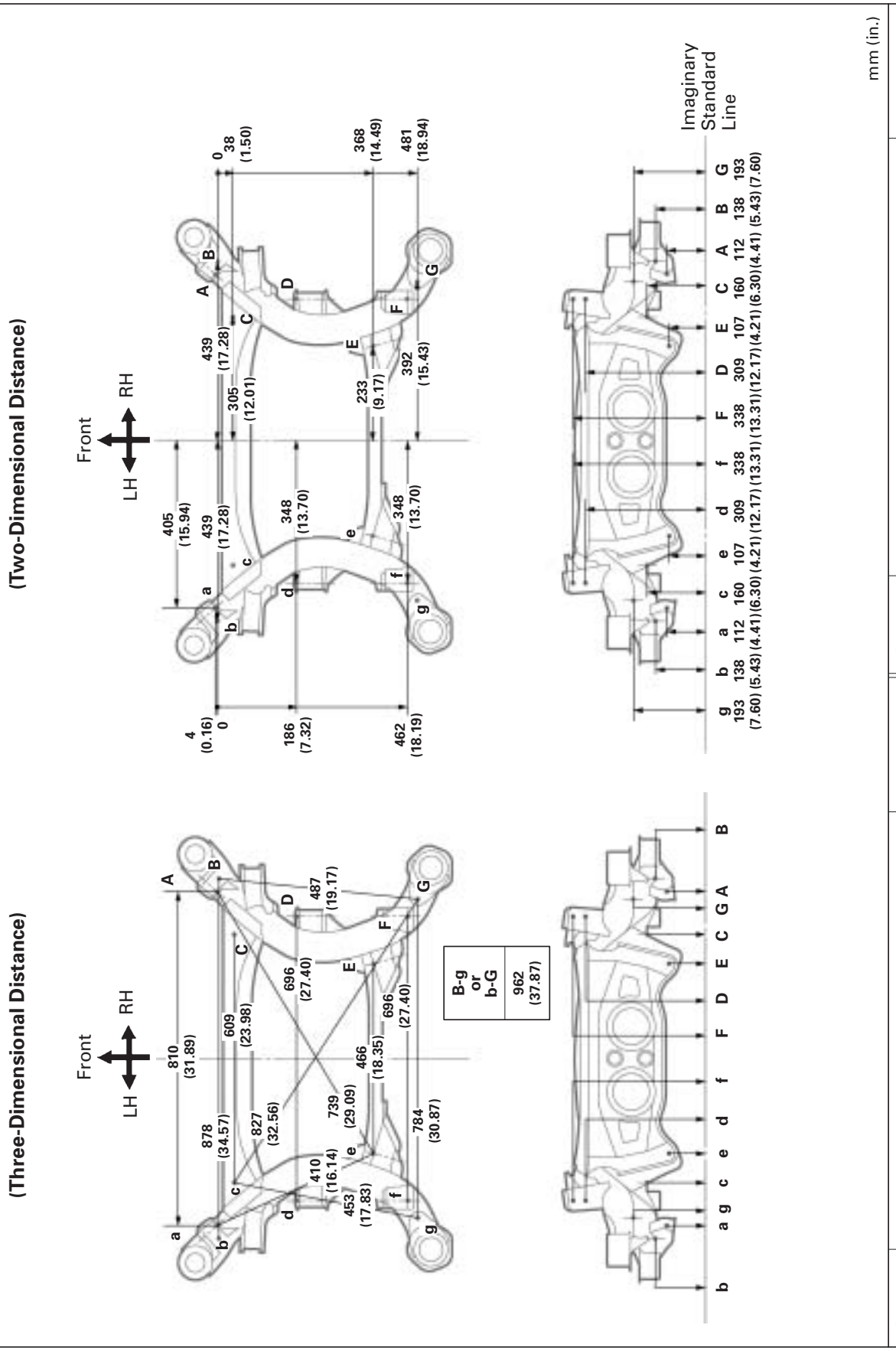

mm (in.)

Symbol	Name	Hole dia.	Symbol	Name	Hole dia.
A, a	Lower arm installation hole-rear	12.2 (0.480)	E, e	Lower arm installation hole-front	14.2 (0.559)
B, b	Rear suspension member standard hole	15 (0.59)	F, f	Upper arm installation hole-rear	12.2 (0.480)
C, c	Rear suspension member standard hole	15 (0.59)	G, g	Rear suspension member standard hole	15 (0.59)
D, d	Upper arm installation hole-front	12.2 (0.480)	—	—	—

HOW TO USE THIS MANUAL

Each repair method description provided in Section RE of this manual comprises two pages, divided into 2 blocks (REMOVAL AND INSTALLATION) and includes illustrations to facilitate body repair.

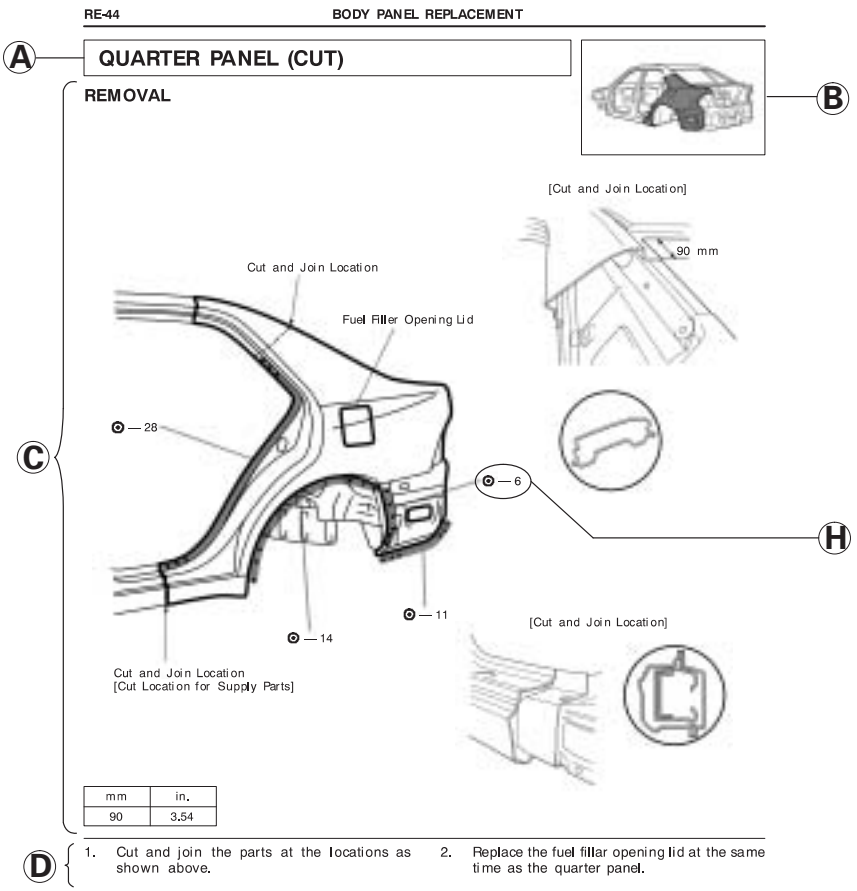

A : REPLACEMENT PARTS AND METHOD

QUARTER PANEL (CUT)

- Replacement method
  - (ASSY) .... Assembly replacement
  - (CUT) ..... Major cutting (less than 1/2 of parts used)
  - (CUT-H) .... Half cutting (about 1/2 of parts used)
  - (CUT-P) .... Partial cutting (most of parts used)
- Replacement Parts

B : PARTS LOCATION

C : REMOVAL DIAGRAM

Describes in detail removal of the damaged parts involving repair by cutting.

D : REMOVAL GUIDE

Provides additional information to more efficiently help you perform the removal.

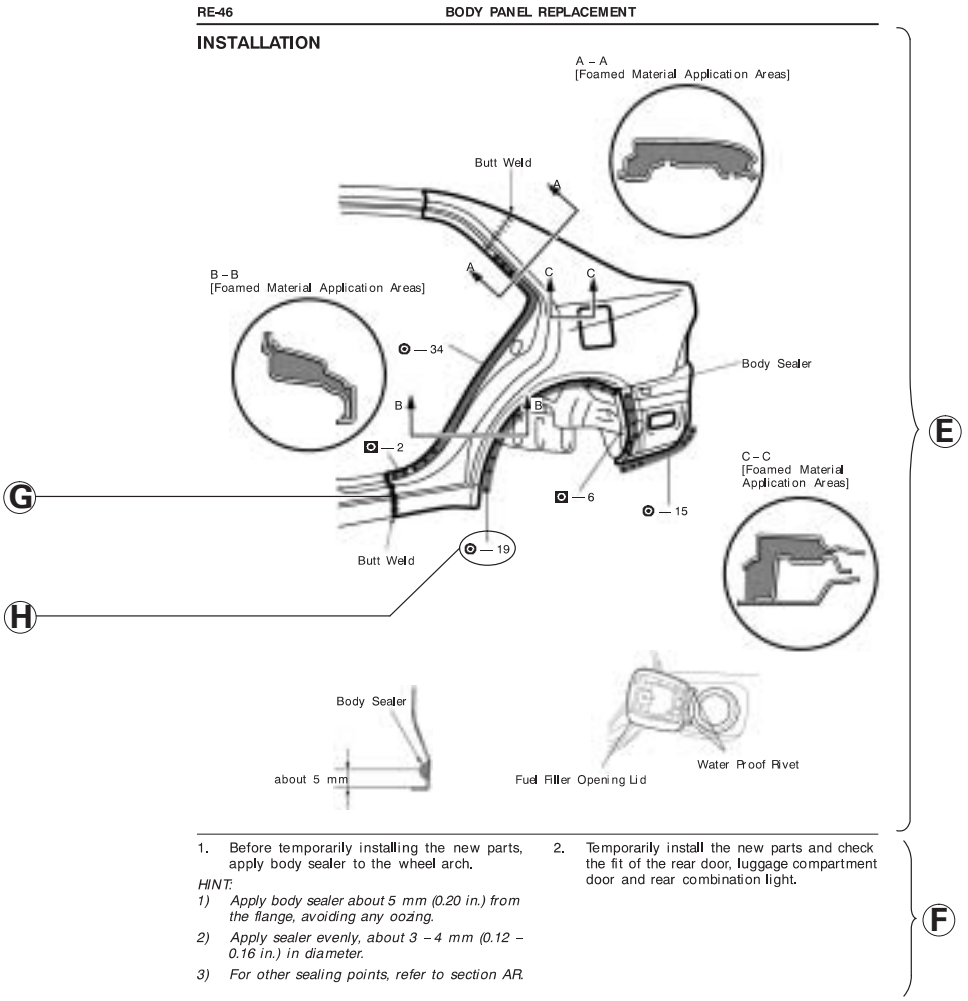

Ⓔ : **INSTALLATION DIAGRAM**

Describes in detail installation of the new parts involving repair by welding and/or cutting, but excluding painting.

Ⓕ : **INSTALLATION GUIDE**

Provides additional information to more efficiently help you perform the installation.

Ⓖ : **SYMBOLS**

See page IN-4.

Ⓗ : **ILLUSTRATION OF WELD POINTS**

Weld method and panel position symbols.

See page IN-5.

SYMBOLS

The following symbols are used in the Welding Diagrams in Section RE of this manual to indicate cutting areas and the types of weld required.

SYMBOLS	MEANING	ILLUSTRATION
	SAW CUT OR ROUGH CUT	
	REMOVE BRAZE	
	WELD POINTS SPOT WELD OR MIG PLUG WELD (See page IN-5)	
	CONTINUOUS MIG WELD (BUTT WELD OR TACK WELD)	
	BRAZE	
	BODY SEALER	

Illustration of Weld Point Symbols

EXAMPLE:

REMOVAL

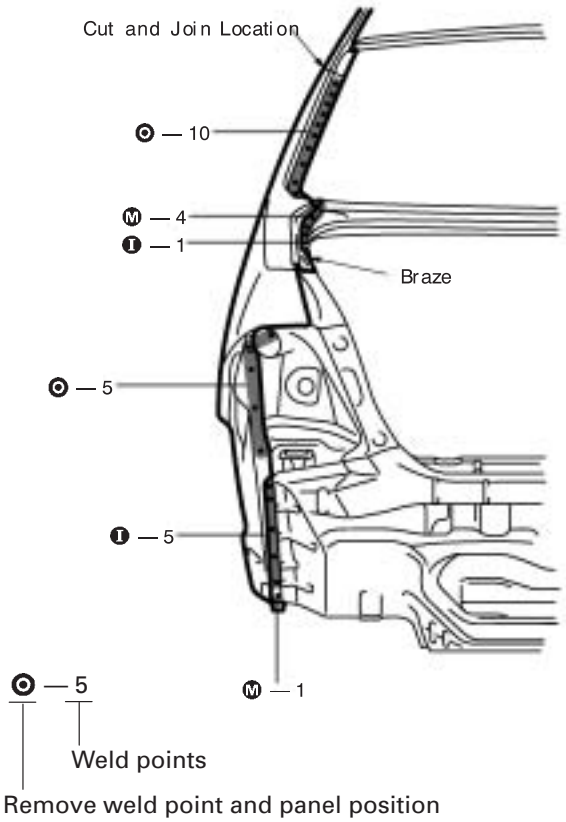

INSTALLATION

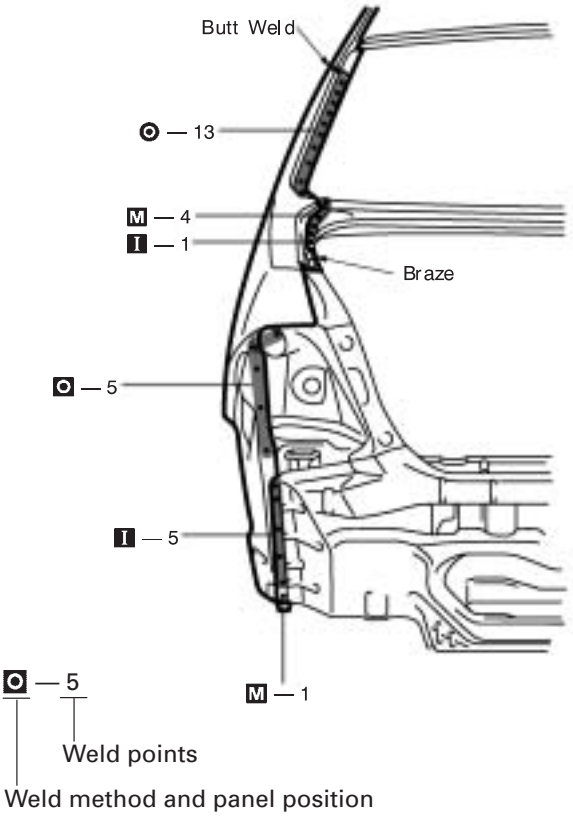

SYMBOL	MEANING	ILLUSTRATION
⊙ Ⓜ Ⓘ	Remove Weld Points	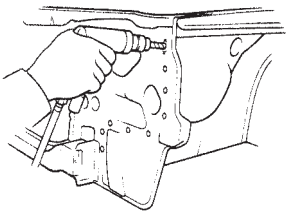
⊙	(Outside)	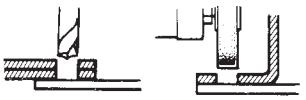
Ⓜ	(Middle)	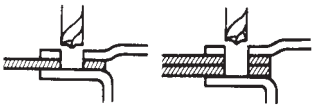
Ⓘ	(Inside)	

HINT: Panel position symbols are as seen from the working posture.

SYMBOL	MEANING	ILLUSTRATION
⊙ Ⓜ Ⓘ	Spot Weld	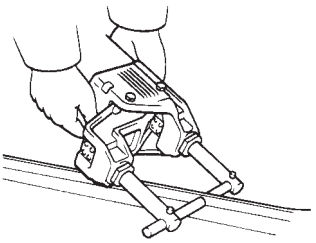
⊡ Ⓜ Ⓘ	Mig Plug Weld	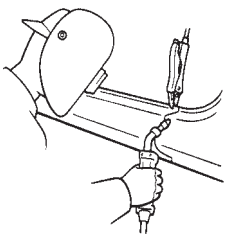
+	Spot MIG Weld	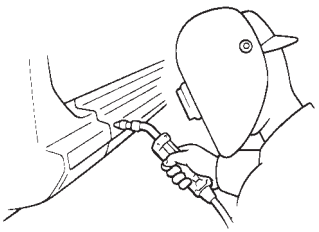

HANDLING PRECAUTIONS ON RELATED COMPONENTS

1. FOR VEHICLES EQUIPPED WITH SRS AIRBAG AND SEAT BELT PRETENSIONER

The LEXUS IS200 is equipped with an SRS (Supplemental Restraint System), such as the driver airbag and front passenger airbag and seat belt pretensioners.
Failure to carry out service operations in the correct sequence could cause the supplemental restraint system to unexpectedly deploy during servicing, possibly leading to a serious accident.
Further, if a mistake is made in servicing the supplemental restraint system, it is possible the SRS may fail to operate when required. Before servicing (including removal or installation of parts, inspection or replacement), be sure to read the following items carefully, then follow the correct procedure described in this manual.

- Malfunction symptoms of the supplemental restraint system are difficult to confirm, so the diagnostic trouble codes become the most important source of information when troubleshooting.
  When troubleshooting the supplemental restraint system, always inspect the diagnostic trouble codes before disconnecting the battery.
- Work must be started after 90 seconds from the time the ignition switch is turned to the "LOCK" position and the negative (–) terminal cable is disconnected from the battery.
  (The supplemental restraint system is equipped with a back-up power source so that if work is started within 90 seconds of disconnecting the negative (–) terminal cable from the battery, the SRS may deploy.)
  When the negative (–) terminal cable is disconnected from the battery, memory of the clock and audio systems will be cancelled. So before starting work, make a record of the contents memorized by the audio memory system.
  Then when work is finished, reset the clock and audio systems as before.
  To avoid erasing the memory of each memory system, never use a back-up power supply from outside the vehicle.
- Even in cases of a minor collision where the SRS does not deploy, the passenger's airbag assembly, the steering wheel pad and seat belt pretensioners should be in spected.
- Never use SRS parts from another vehicle. When replacing parts, replace them with new parts.
- Before repairs, remove the airbag sensor if shocks are likely to be applied to the sensor during repairs.
- Never disassemble and repair the airbag sensor assembly, steering wheel pad in order to reuse it.
- If the airbag sensor assembly, steering wheel pad have been dropped, or if there are cracks, dents or other defects in the case, bracket or connector, replace them with new ones.
- Do not expose the airbag sensor assembly, steering wheel pad directly to hot air or flames.
- Use a volt/ohmmeter with high impedance (10 kΩ/V minimum) for troubleshooting of the electrical circuit.
- Information labels are attached to the periphery of the SRS components. Follow the instructions on the notices.
- After work on the supplemental restraint system is completed, check the SRS warning light.

- Before repairing the body, remove the SRS parts if, during repair, shocks are likely to be applied to the sensors due to vibrations of the body or direct tapping with tools or other parts.
- Do not expose the SRS parts directly to hot air or flames.

  NOTICE:

  1) The maximum ambient temperature tolerance is 120° C (248° F) for the front airbag sensor, 105° C (221° F) for the center airbag sensor assembly and 93° C (200° F) for the steering wheel pad, and front passenger airbag assembly. If it is possible that the ambient temperature may reach or exceed the temperature limit, remove the sensors and the steering wheel pad from the vehicle or protect them with a hot insulation material before starting work.

  2) Prior to welding, remove adjacent SRS parts from the vehicle or protect them with fire-proof covers.
- If the vehicle is damaged, visually inspect for damage to the steering wheel pad using the inspection procedures described in section RS of the repair manual for the relevant model year.

STEERING WHEEL PAD (with Airbag)

- When removing the steering wheel pad or handling a new steering wheel pad, it should be placed with the pad top surface facing up.
  In this case, the twin-lock type connector lock lever should be in the locked state and care should be taken to place it so the connector will not be damaged. In addition, do not store a steering wheel pad on top of another one. Storing the pad with its metallic surface up may lead to a serious accident if the airbag inflates for some reason.
- Never measure the resistance of the airbag squib. (This may cause the airbag to deploy, which is very dangerous.)
- Grease should not be applied to the steering wheel pad and the pad should not be cleaned with detergents of any kind.
- Store the steering wheel pad where the ambient temperature remains below 93°C (200°F), without high humidity and away from electrical noise.
- When using electric welding, first disconnect the airbag connector (yellow color and 2 pins) under the steering column near the combination switch connector before starting work.
- When disposing of a vehicle or the steering wheel pad alone, the airbag should be deployed using an SST before disposal.
  Carry out the operation in a safe place away from electrical noise.

FRONT PASSENGER AIRBAG ASSEMBLY

- Always store a removed or new front passenger airbag assembly with the airbag deployment direction facing up. Storing the airbag assembly with the airbag deployment direction facing down could cause a serious accident if the airbag inflates.
- Never measure the resistance of the airbag squib.
  (This may cause the airbag deploy, which is very dangerous.)
- Grease should not be applied to the front passenger airbag assembly and the airbag door should not be cleaned with detergents of any kind.
- Store the airbag assembly where the ambient temperature remains below 93°C (200°F), without high humidity and away from electrical noise.
- When using electric welding, first disconnect the airbag connector (yellow color and 2 pins) installed on the glove compartment finish plate at the left side of the glove compartment before starting work.
- When disposing of a vehicle or the airbag assembly alone, the airbag should be deployed using an SST before disposal.
  Perform the operation in a safe place away from electrical noise.

SEAT BELT PRETENSIONER

- Before doing any operation which will apply a strong shock to the vehicle, or before removing the seat belt pretensioner, be sure to apply the sensor shock.
- Never disassemble the seat belt pretensioner.
- Do not subject the seat belt pretensioner to shocks or bring magnets close to it.
- Do not expose the seat belt pretensioner to high temperature or fire.
- Do not drop the seat belt pretensioner. Never use a seat belt pretensioner which has been dropped.
- Never install the seat belt pretensioner in another vehicle.
- Store removed seat belt pretensioners on a flat, stable surface.
- Afer frontal collision, always check whether the seat belt pretensioners have been activated.
- When disposing of a vehicle or the pretensioner by itself, always activate the pretensioner before disposal.
- The seat belt pretensioner is hot when activated, so let it cool down fully before you dispose of it. Never apply water to the seat belt pretensioner.

AIRBAG SENSOR ASSEMBLY

- Never reuse the airbag sensor assembly involved in a collision when the SRS has deployed.
- The connectors to the airbag sensor assembly should be connected or disconnected with the sensor mounted on the floor. If the connectors are connected or disconnected while the airbag sensor assembly is not mounted to the floor, it could cause undesired ignition of the supplemental restraint system.
- Work must be started after 90 seconds from the time the ignition switch is turned to the "LOCK" position and the negative (–) terminal cable is disconnected from the battery, even if only loosening the set bolts of the airbag sensor assembly.

WIRE HARNESS AND CONNECTOR

- The SRS wire harness is integrated with the cowl wire harness assembly and floor wire harness assembly. The wires for the SRS wire harness are encased in a yellow corrugated tube. All the connectors for the system are also a standard yellow color. If the SRS wire harness becomes disconnected or the connector becomes broken due to an accident, etc., repair or replace it as shown on page.

2. COMPONENTS ADJACENT TO THE BODY PANELS

Various types of component parts are mounted directly on or adjacently to the body panels. Strictly observe the following precautions to prevent damaging these components and the body panels during handling.

- Before repairing the body panels, remove their components or apply protective covers over the components.
- Before prying components off using a screwdriver or a scraper, etc., attach protective tape to the tool tip or blade to prevent damaging the components and the body paint.
- Before removing components from the outer surface of the body, attach protective tape to the body to ensure no damage to painted areas.

  HINT: Apply touch-up paint to any damaged paint surfaces.
- Before drilling or cutting sections, make sure that there are no wires, etc. on the reverse side.

3. BRAKE SYSTEM

The brake system is one of the most important safety components. Always follow the directions and notes given in section BR of the repair manual for the relevant model year when handling brake system parts.

NOTICE: When repairing the brake master cylinder or TRAC system, bleed the air out of the TRAC system.

4. DRIVE TRAIN AND CHASSIS

The drive train and chassis are components that can have great effects on the running performance and vibration resistance of the vehicle. After installing components in the sections listed in the table below, perform alignments to ensure correct mounting angles and dimensions. Particularly accurate repair of the body must also be done to ensure correct alignment.

HINT: Correct procedures and special tools are required for alignment. Always follow the directions given in the repair manual for the relevant model year during alignment and section DI of this manual.

Component to be aligned	Section of repair manual for relevant model year
Front Wheels	Suspension and Axle (SA) section
Rear Wheels	Suspension and Axle (SA) section
Propeller Shaft	Propeller Shaft (PR) section

5. ECU (ELECTRONIC CONTROL UNIT)

Many ECUs are mounted in this vehicle.
Take the following precautions during body repair to prevent damage to the ECUs.

- Before starting electric welding operations, disconnect the negative (–) terminal cable from the battery.
  When the negative (–) terminal cable is disconnected from the battery, memory of the clock and audio systems will be cancelled. So before starting work, make a record of the contents memorized by each memory system. Then when work is finished, reset the clock and audio systems as before.
  When the vehicle has tilt and telescopic steering, power seat and outside rear view mirror, which are all equipped with memory function, it is not possible to make a record of the memory contents.
  So when the operation is finished, it will be necessary to explain this fact to the customer, and request the customer to adjust the features and reset the memory.
- Do not expose the ECUs to ambient temperatures above 80°C (176°F).

  NOTICE: If it is possible the ambient temperature may reach 80° (176°F) or more, remove the ECUs from the vehicle before starting work.
- Be careful not to drop the ECUs and not to apply physical shocks to them.

GENERAL REPAIR INSTRUCTIONS

Work Precautions

SAFETY
Never stand in direct line with the chain when using a puller on the body or frame, and be sure to attach a safety cable.

VEHICLE PROTECTION
When welding, protect the painted surfaces,windows, seats and carpet with heat-resistant, fire-proof covers.

SAFETY
1. Before performing repair work, check for fuel leaks. If a leak is found, be sure to close the opening totally.
2. If it is necessary to use a frame in the area of the fuel tank, first remove the tank and plug the fuel line.

WRONG

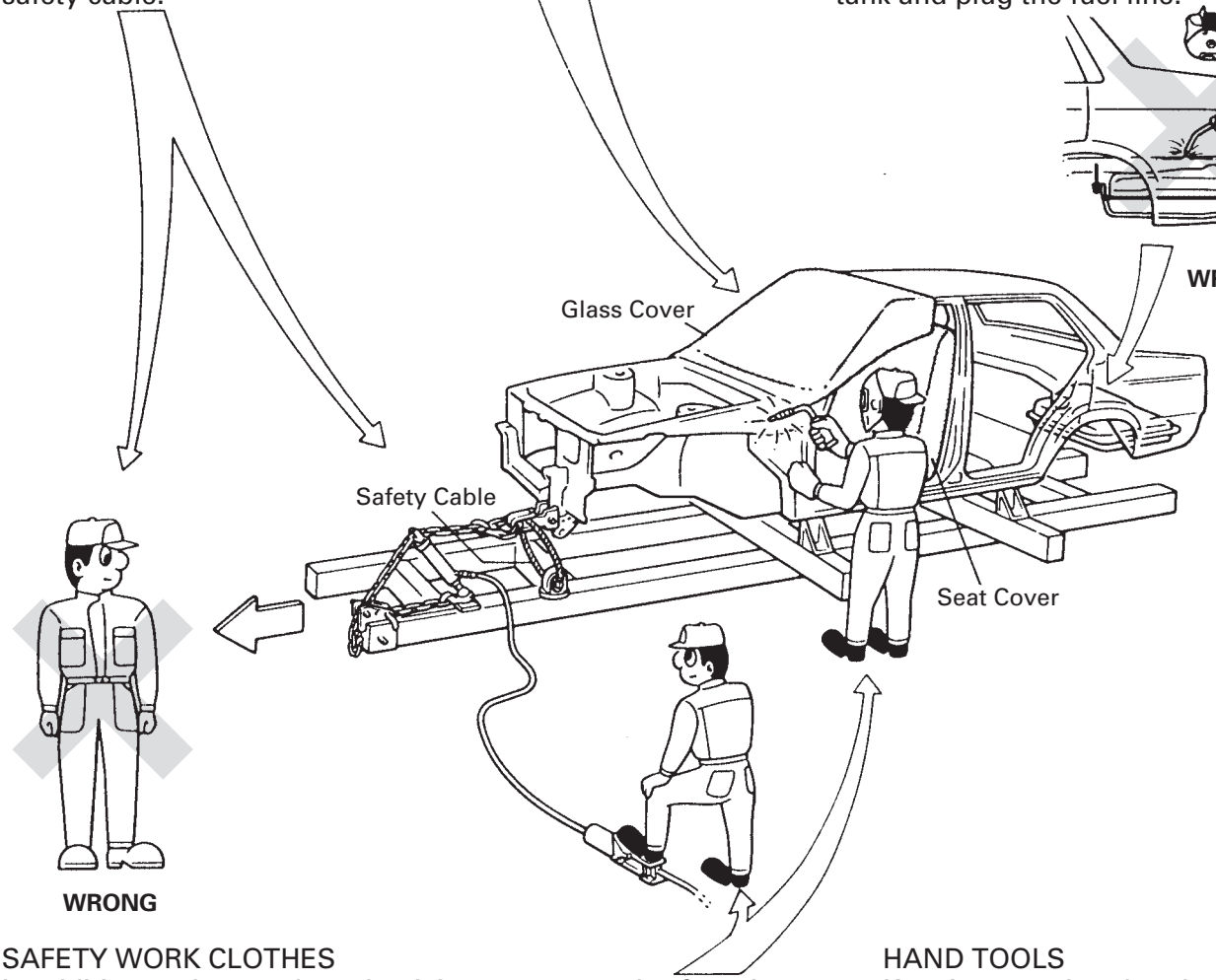

WRONG

SAFETY WORK CLOTHES
In addition to the usual mechanic's wear, cap and safety shoes, the appropriate gloves, head protector, glasses, ear plugs, face protector, dust-prevention mask, etc. should be worn as the situation demands.

HAND TOOLS
Keeping your hand tools in neat order improve your work efficiency.

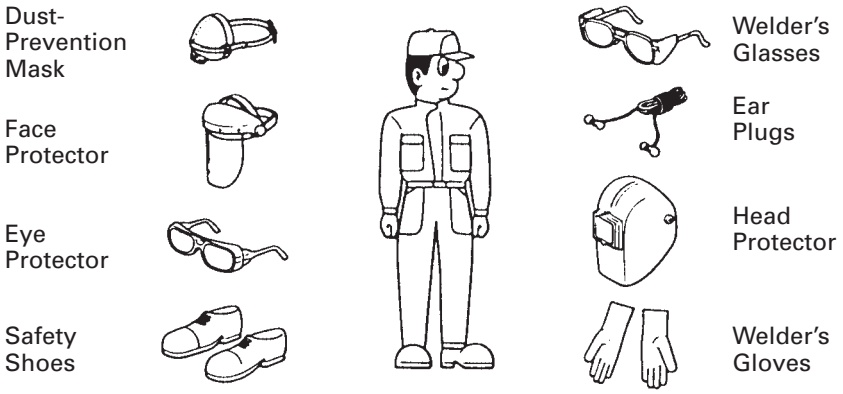

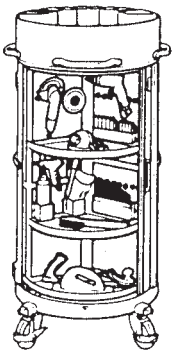

Body Tools Stand

Proper and Efficient Work Procedures

REMOVAL

PRE-REMOVAL MEASURING
Before removal or cutting operations, take measurements in accordance with the dimension diagram. Always use a puller to straighten a damaged body or frame.

NUMBER OF SPOT WELDS AND PANEL POSITIONS
The number of spot welds and the panel positions to be removed are shown for your reference.
HINT: See "Symbols" on page IN-4,5.

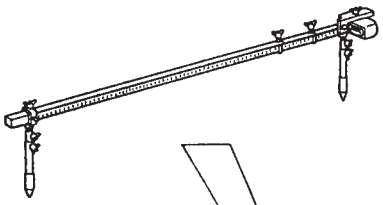

REMOVAL OF ADJACENT COMPONENTS
When removing adjacent components, apply protective tape to the surrounding body and your tools to prevent damage.
HINT: See "Handling Precautions on Related Components" on page IN-6.

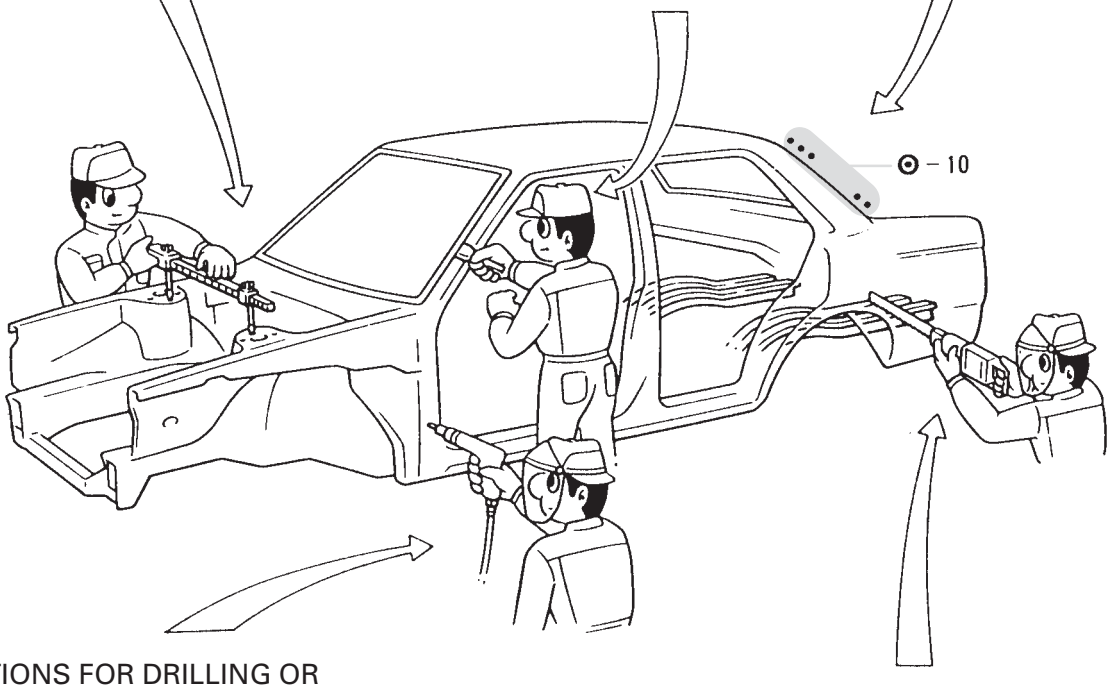

PRECAUTIONS FOR DRILLING OR CUTTING
Check behind any area to be drilled or cut to insure that there are no hoses, wires, etc., that may be damaged.
HINT: See "Handling Precautions on Related Components" on page IN-6.

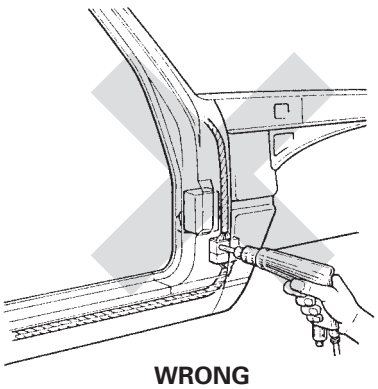

WRONG

CUTTING AREA
Always cut in a straight line and avoid reinforced area.

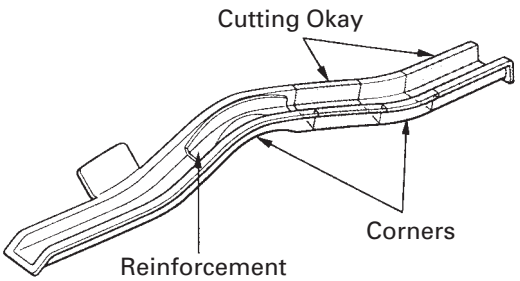

PREPARATION FOR INSTALLATION

SPOT WELD POINTS

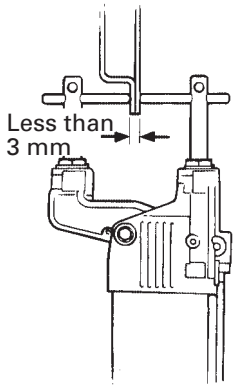

When welding panels with a combined thickness of over 3 mm (0.12in.), use a MIG (Metal Inert Gas) welder for plug welding.
HINT: Spot welding will not provide sufficient durability for panels over 3 mm (0.12in.) thick.

APPLICATION OF WELD-THROUGH PRIMER (SPOT SEALER)

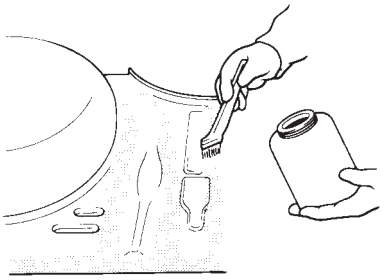

Remove the paint from the portion of the new parts and body to be welded, and apply weld-through primer.
HINT: See "ANTI-RUST TREATMENT" on page AR-2.

Parts Name	Parts Number
Spot Sealer	08839-00070

※ The above SSM or equivalent

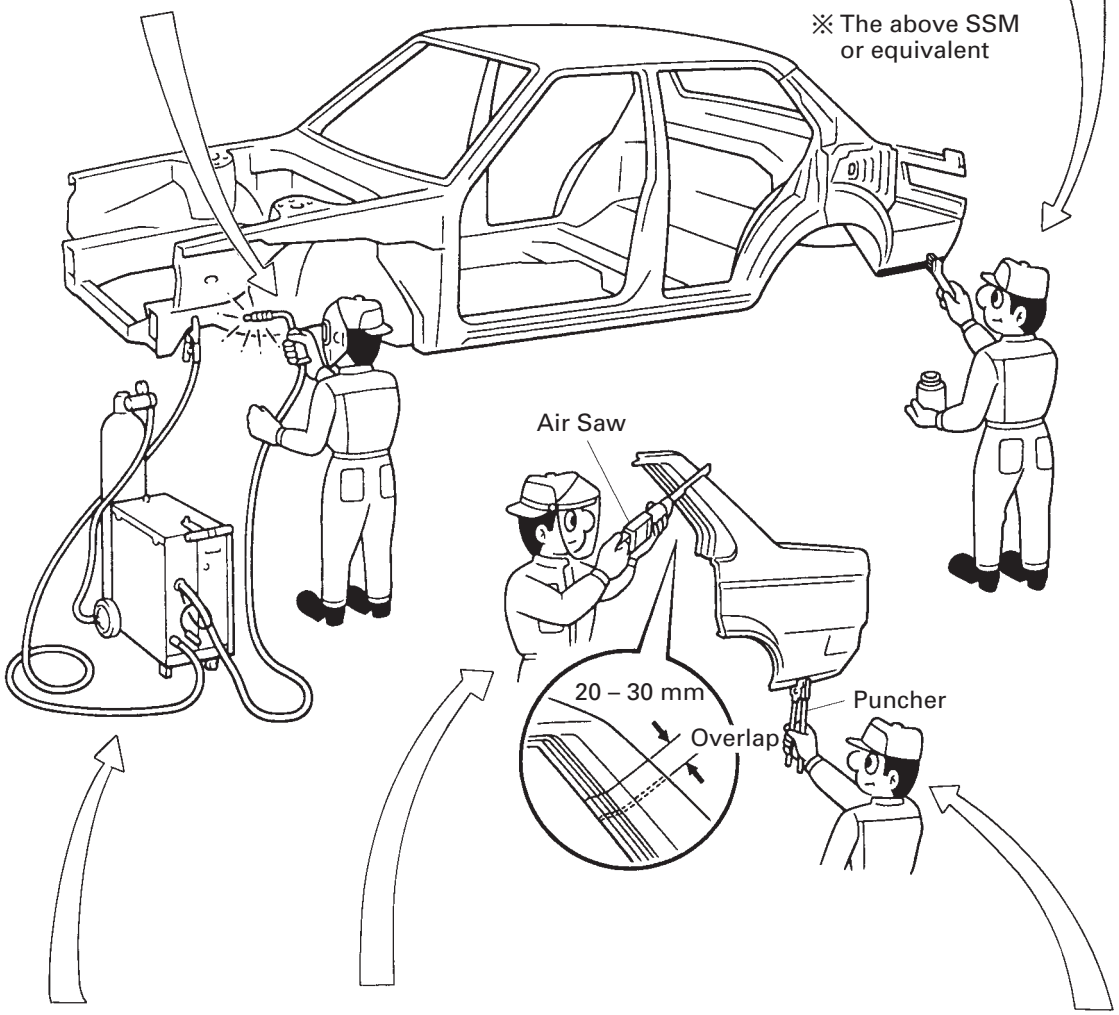

SAFETY PRECAUTIONS FOR ELECTRICAL COMPONENTS.
When welding there is a danger that electrical components will be damaged by the electrical current flowing through the body.
Before starting work disconnect the negative terminal of the battery and ground the welder near the welding location of the body.

ROUGH CUTTING OF JOINTS
For joint areas, rough cut the new parts, leaving 20 – 30 mm (0.79 – 1.18in.) overlap.

MAKING HOLES FOR PLUG WELDING
For areas where a spot welder cannot be used, use a puncher or drill to make holes for plug welding.

REFERENCE: mm (in.)

Thickness of welded portion	Size of plug hole
1.0 (0.04) under	5 (0.20) ø over
1.0 (0.04) – 1.5 (0.06)	6.5 (0.26) ø over
1.5 (0.06) over	8 (0.31) ø over

INSTALLATION

PRE-WELDING MEASUREMENTS
Always take measurements before installing underbody or engine components to insure correct assembly. After installation, confirm proper fit.

WELDING PRECAUTIONS
1. The number of welding spots should be as follows.
   Spot weld: 1.3 x No. of manufacturer's spots.
   Plug weld: More than No. of manufacturer's plugs.

POST-WELDING REFINISHING
1. Always check the welded spots to insure they are secure.
2. When smoothing out the weld spots with a disc grinder, be careful not to grind off too much as this would weaken the weld.

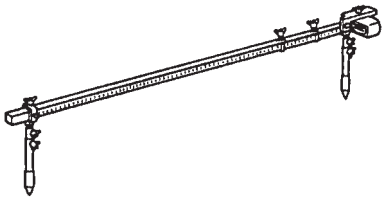

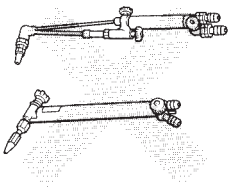

WRONG

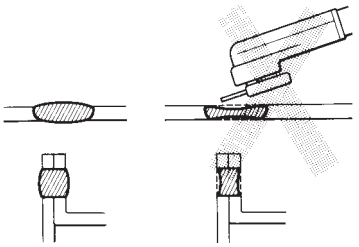

OKAY **WRONG**

2. Plug welding should be done with a MIG (Metal Inert Gas) welder. Do not gas weld or braze panels at areas other than specified.

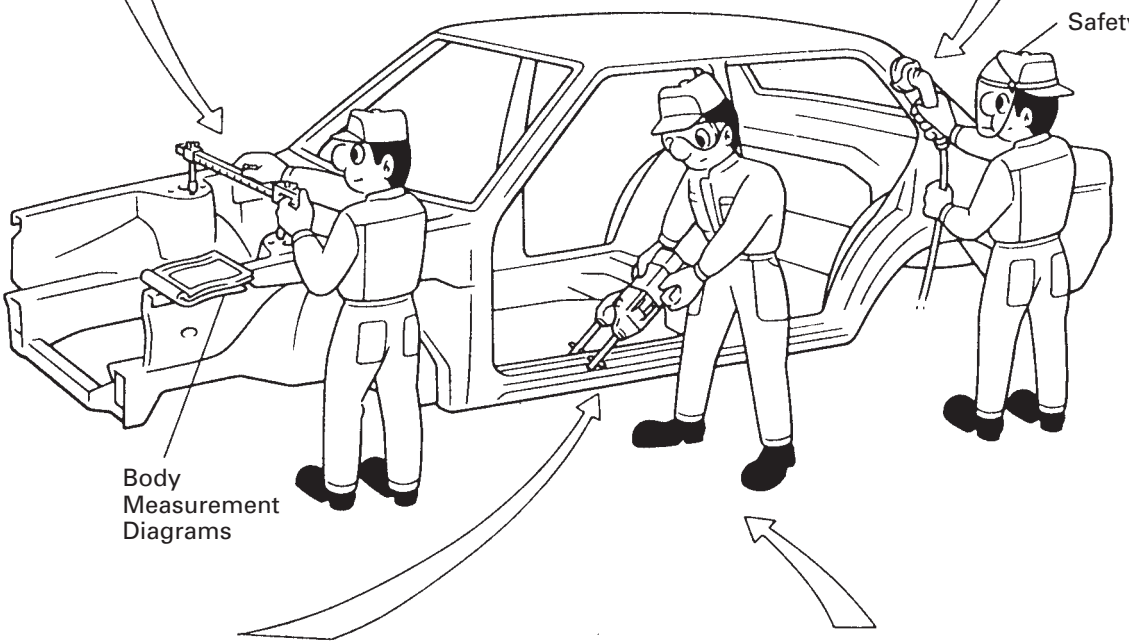

SPOT WELD LOCATIONS
Try to avoid welding over previous spots.

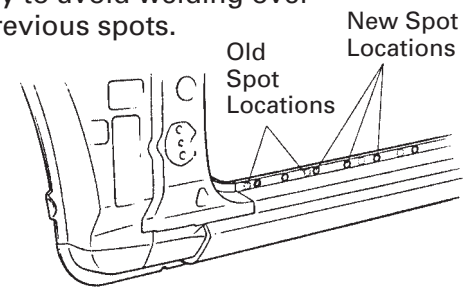

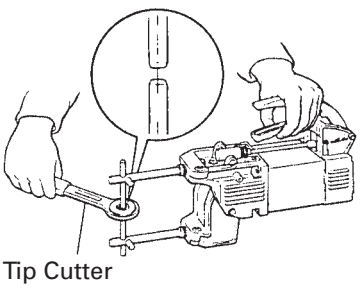

SPOT WELDING PRECAUTIONS
1. The shape of the welding tip point has an effect on the strength of the weld.
2. Always insure that the seams and welding tip are free of paint.

ANTI-RUST TREATMENT

When replacing body panels, always apply body sealer, anti-rust agent or undercoat according to the requirements of your country.

HINT: For further details, see the description given in Section AR of this manual.

BODY SEALER
Apply body sealer to the required areas.

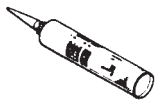

Cartridge Type

Tube Type

ANTI-RUST AGENT (WAX)
Apply anti-rust agent to following sections.

- Inside of the hems of the doors and hood.
- Around the hinges of the doors and hood.
- Inside of the welded parts with boxed cross-section.

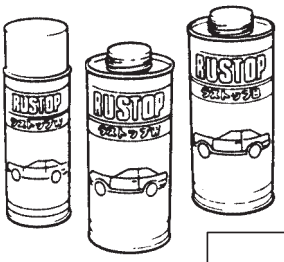

Parts Name	Parts Number
Rustop W (Aerosol)	08860-00200
Rustop W (1ℓ Milky White)	08860-00210
Rustop W (18ℓ Milky White)	08860-00230
Rustop B (1ℓ Black)	08860-00220
Rustop B (18ℓ Black)	08860-00240

※ The above SSM or equivalent

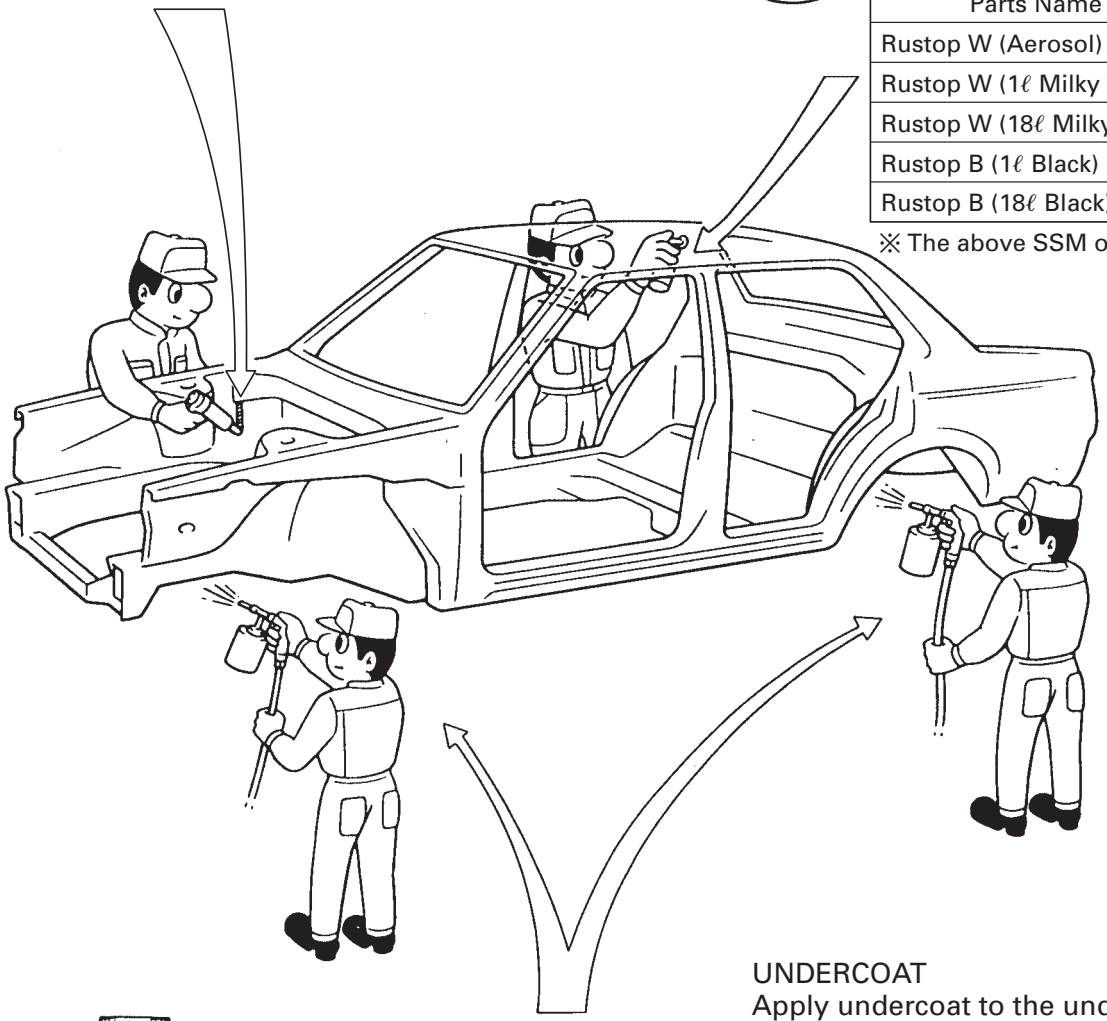

UNDERCOAT
Apply undercoat to the underbody and wheel housings.

Parts Name	Parts Number
Pastar UC (Oil Base)	08836-00155
Pastar UW (Water Base)	08836-00115
Pastar Gun (For thick application)	08836-00091

※ The above SSM or equivalent

Undercoating (Oil base)

Undercoating (Water base)

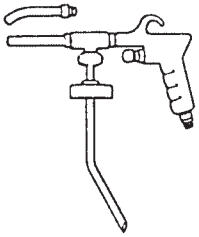

Spray Gun

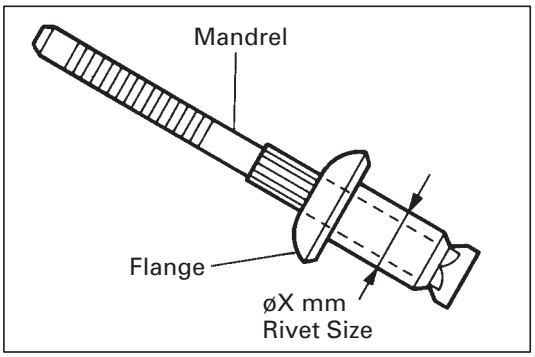

RIVET REMOVAL AND INSTALLATION

PARTS NAME AND VARIETY OF RIVET

	Aluminum-Rivet	Steel-Rivet	Waterproof-Rivet	T-Rivet
External Appearance	Before installation 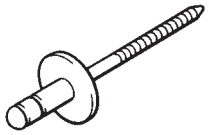 After installation 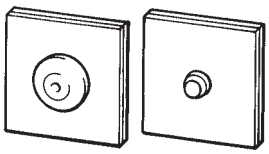 Outer Inner	Before installation 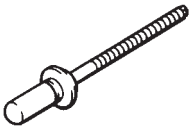 After installation 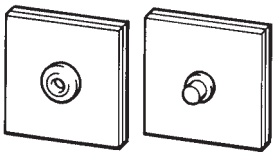 Outer Inner	Before installation 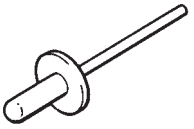 After installation Waterproof Seal 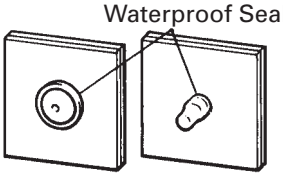 Outer Inner	Before installation 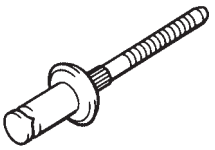 After installation Mandrel 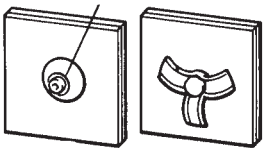 Outer Inner
Charac-teristics	• Small nonwaterproof rivet • No magnetic adherence	• Small nonwaterproof rivet • Magnetic adherence	• Small waterproof rivet • Waterproof seal	• Large waterproof rivet • Mandrel sticks out after installation

RIVET REMOVAL

1. SELECTION OF CUTTING TOOL

	Cutting tool	Note
Aluminum-Rivet Steel-Rivet T-Rivet with ø6.4 mm	Drill blade Rivet size / Blade size ø4 mm / ø4 mm ø4.8 mm / ø5 mm ø6.4 mm / ø6.5 mm	• Cutting can be done with drill blade or rivet cutter for an aluminum-rivet with ø4.8 mm. • When a rivet cutter is used for an aluminum-rivet (except ø4.8 mm), a steel-rivet, or a T-rivet with ø6.4 mm, it is possible that the drill will spin abnormally damaging the rivet hole and breaking the rivet cutter.
Waterproof special-Rivet with ø4.0 mm	Drill blade with ø4.0 mm	
Aluminum-Rivet with ø4.8 mm Waterproof-Rivet with ø4.8 mm or ø6.0 mm	Rivet Cutter (P/N 09060-60350) 	• When a ordinary cutter is used for a waterproof-rivet with ø4.8 mm or ø6.0 mm, the rivet can not be cut as it spins with the cutter.

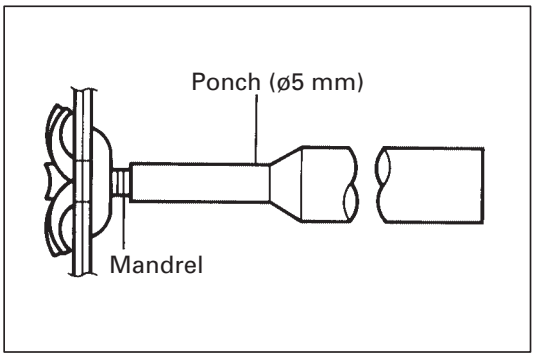

2. RIVET REMOVAL

(1) T-Rivet with ø6.4 mm:
Using a ponch with ø5 mm, stamp out the mandrel.

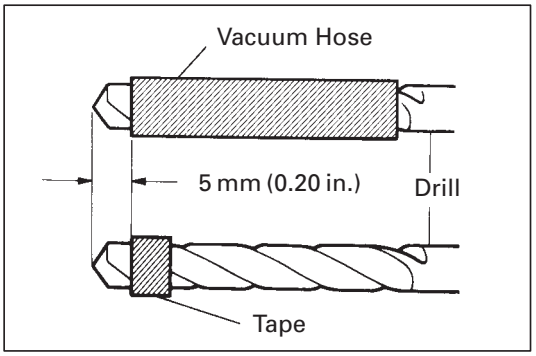

(2) Put tape around the drill blade 5 mm (0.20 in.) from the tip to prevent damage to the rivet hole.

NOTE: Use of tape or a vacuum hose prevents damage to the rivet hole.

(3) Attach the drill blade or a rivet cutter to the drill.

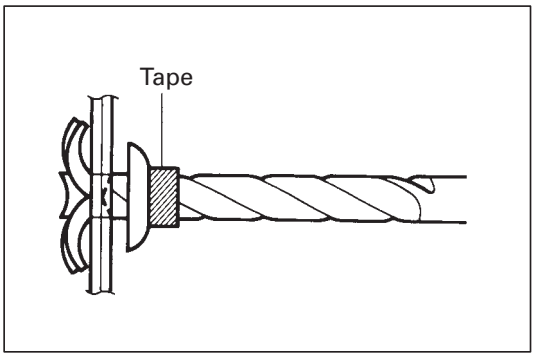

(4) Gently and vertically put the drill to the rivet, and cut the rivets flange.

NOTE:

- **While upward drilling, wear a protective glasses.**
- **If a drill is strongly pushed deeply in to a rivet, the rivet can't be cut as it spins together with the drill.**
- **Prizing the hole with a drill can lead to damage to the rivet hole or the breaking of the rivet cutter.**
- **Take care as the cut rivet is hot.**

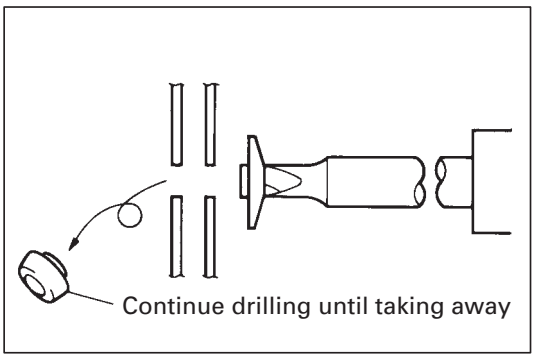

(5) Aluminum-Rivet and Waterproof-Rivet with ø4.8 mm or ø6.0 mm:
Even if flange is taken off, continue drilling and push out remaining fragments with the drill.

(6) Steel-Rivet:
If the flange is taken off, stop drilling and pull out the remaining fragments with a pliers.

(7) T-Rivet with ø6.4 mm:
If the flange is taken off, stop drilling and push out the remaining fragments with a ponch with ø5 mm or pull out the remaining fragments with pliers.

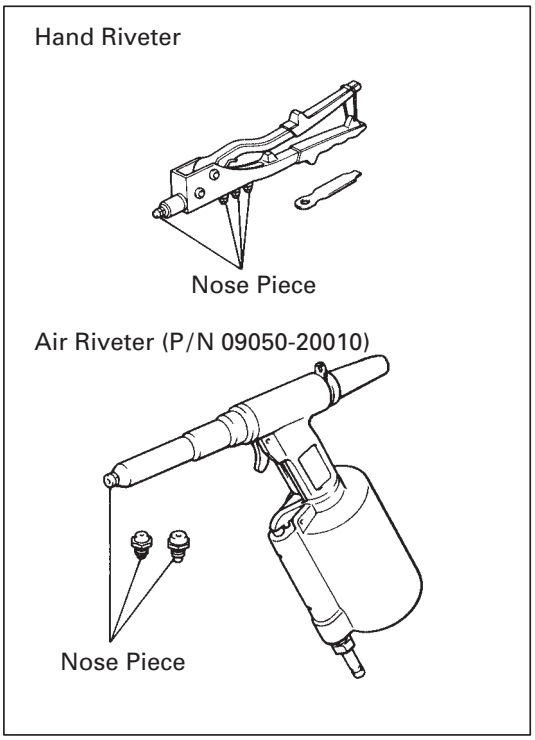

RIVET INSTALLATION

1. RIVET INSTALLATION

(1) Apply touch-up paint at the area.

(2) Select an installation tool.

Item	Installation tool
Aluminum-Rivet Waterproof-Rivet with ø4.8 mm	Hand Riveter or Air Riveter
Steel-Rivet T-Rivet with ø6.4 mm	Air Riveter

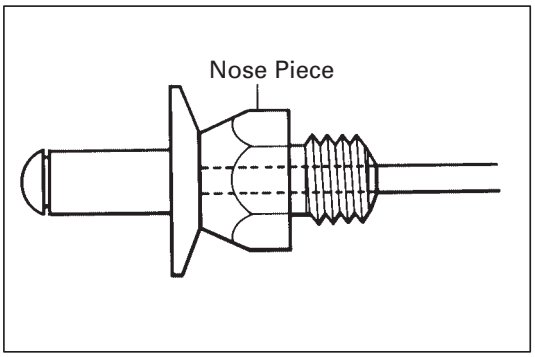

(3) Select the smallest nose piece possible for a rivets mandrel.

NOTE: Wrong selection of a nose piece may cause the riveter to be damaged or bad tightening.

<Reference> Nose piece of Air Riveter

Parts Name	Parts Number	Color	Rivet type
Nose piece No. 1	09050 -02020	Silver	ø4.0 mm Aluminum ø4.0 mm Steel ø4.8 mm Waterproof
Nose piece No. 2	09050 -02030	Copper	ø4.8 mm Aluminum ø4.8 mm Steel
Nose piece No. 3	09050 -02040	Black	ø6.4 mm T-Rivet
Nose piece No. 4	09050 -02050	Black	ø4.0 mm Waterproof Special

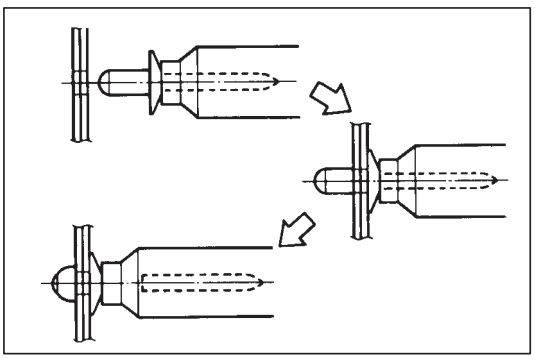

(4) Insert the nose piece to the riveter and then the mandrel of the new rivet into the nose piece.

(5) Vertically insert the rivet into a hole and keep place it strongly.

NOTE:

- **If the tip of the rivet is not deformed or the mandrel is not cut, repeat process (5) again.**

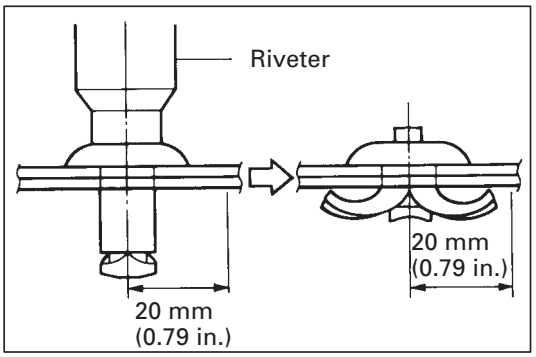

- **T-Rivet with ø6.4 mm:**
  Do not place your hands or the wire harness within a radius of 20 mm (0.70 in.) from the rivet, as the rivet is cut and opened in this area.

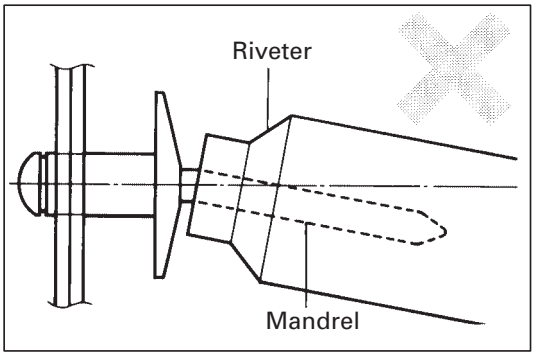

- **Prizing a riveter damages the riveter showing that it is not tightened correctly and bends the mandrel.**

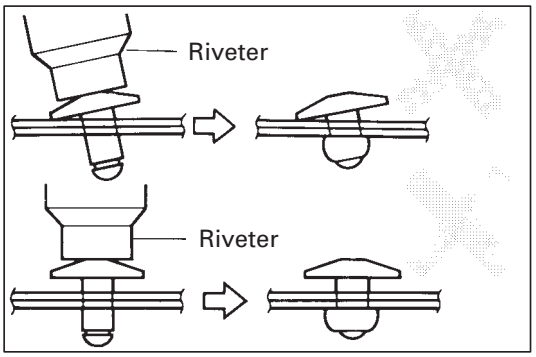

- **Loose tightening may result from either tilting the riveter while handling or the riveter not connecting to the material.**

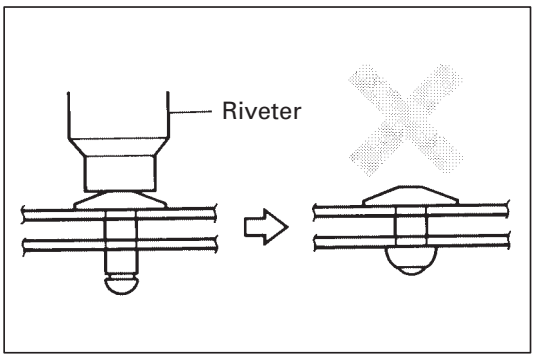

- **Loose tightening also occurs when a rivet is applied between materials without touching.**

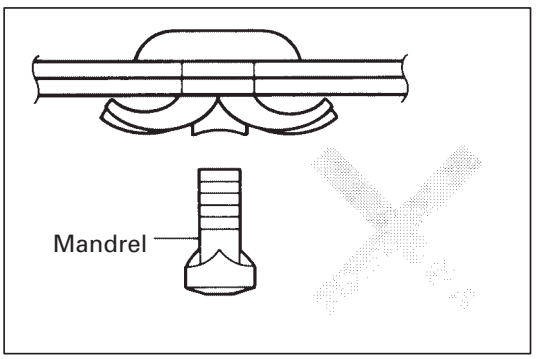

- **T-Rivet with ø6.4 mm:**
  When a mandrel of a rivet is lost, the rivet should be replaced to prevent loose tightening.

ABBREVIATIONS USED IN THIS MANUAL

For convenience, the following abbreviations are used in this manual.

ABS	Antilock Brake System
A/C	Air Conditioner
assy	assembly
ECT	Electronic Controlled Transmission
ECU	Electronic Control Unit
e.g.	Exempli Gratia (for Example)
Ex.	Except
FWD	Front Wheel Drive Vehicles
4WD	Four Wheel Drive Vehicles
in.	inch
LH	Left-hand
LHD	Left-hand Drive
MIG	Metal Inert Gas
M/Y	Model Year
PPS	Progressive Power Steering
RH	Right-hand
RHD	Right-hand Drive
SRS	Supplemental Restraint System
SSM	Special Service Materials
w/	with
w/o	without

HANDLING PRECAUTIONS

1. The repair procedure for plastic body parts must conform with the type of plastic material.
2. Plastic body parts are identified by the codes in the following chart.
3. When repairing metal body parts adjoining plastic body parts (by brazing, frame cutting, welding, painting etc.), consideration must given to the property of the plastic.

Code	Material name	Heat* resistant temperature limit °C (°F)	Resistance to alcohol or gasoline	Notes
AAS	Acrylonitrile Acrylic Styrene	80 (176)	Alcohol is harmless if applied only for short time in small amounts (e.g., quick wiping to remove grease).	Avoid gasoline and organic or aromatic solvents.
ABS	Acrylonitrile Butadiene Styrene	80 (176)	Alcohol is harmless if applied only for short time in small amounts (e.g., quick wiping to remove grease).	Avoid gasoline and organic or aromatic solvents.
AES	Acrylonitrile Ethylene Styrene	80 (176)	Alcohol is harmless if applied only for short time in small amounts (e.g., quick wiping to remove grease).	Avoid gasoline and organic or aromatic solvents.
ASA	Acrylonitrile Styrene Acrylate	80 (176)	Alcohol is harmless if applied only for short time in small amounts (e.g., quick wiping to remove grease).	Avoid gasoline and organic or aromatic solvents.
CAB	Cellulose Acetate	80 (176)	Alcohol is harmless if applied only for short time in small amounts (e.g., quick wiping to remove grease).	Avoid gasoline and organic or aromatic solvents.
EPDM	Ethylene Propylene	100 (212)	Alcohol is harmless. Gasoline is harmless if applied only for short time in small amounts.	Most solvents are harmless but avoid dipping in gasoline, solvents, etc.
FRP	Fiber Reinforced Plastics	180 (356)	Alcohol and gasoline are harmless.	Avoid alkali.
EVA	Ethylene Acetate	70 (158)	Alcohol is harmless if applied only for short time in small amounts (e.g., quick wiping to remove grease).	Avoid gasoline and organic or aromatic solvents.
PA	Polyamide (Nylon)	80 (176)	Alcohol and gasoline are harmless.	Avoid battery acid.
PBT	Polybutylene Terephthalate	160 (320)	Alcohol and gasoline are harmless.	Most solvents are harmless.
PC	Polycarbonate	120 (248)	Alcohol is harmless.	Avoid gasoline, brake fluid, wax, wax removers and organic solvents. Avoid alkali.

*Temperatures higher than those listed here may result in material deformation during repair.

Code	Material name	Heat* resistant temperature limit °C (°F)	Resistance to alcohol or gasoline	Notes
PE	Polyethylene	80 (176)	Alcohol and gasoline are harmless.	Most solvents are harmless.
PET	Polyethylene Terephthalate	75 (167)	Alcohol and gasoline are harmless.	Avoid dipping in water.
PMMA	Polymethyl Methacrylate	80 (176)	Alcohol is harmless if applied only for short time in small amounts.	Avoid dipping or immersing in alcohol, gasoline, solvents, etc.
POM	Polyoxymethylene (Polyacetal)	100 (212)	Alcohol and gasoline are harmless.	Most solvents are harmless.
PP	Polypropylene	80 (176)	Alcohol and gasoline are harmless.	Most solvents are harmless.
PPO	Modified Polyphenylene Oxide	100 (212)	Alcohol is harmless.	Gasoline is harmless if applied only for quick wiping to remove grease.
PS	Polystyrene	60 (140)	Alcohol and gasoline are harmless if applied only for short time in small amounts.	Avoid dipping or immersing in alcohol, gasoline, solvents, etc.
PUR	Polyurethane	80 (176)	Alcohol is harmless if applied only for very short time in small amounts (e.g., quick wiping to remove grease).	Avoid dipping or immersing in alcohol, gasoline, solvents, etc.
PVC	Polyvinylchloride (Vinyl)	80 (176)	Alcohol and gasoline are harmless if applied only for short time in small amounts (e.g., quick wiping to remove grease).	Avoid dipping or immersing in alcohol, gasoline, solvents, etc.
SAN	Styrene Acrylonitrile	80 (176)	Alcohol is harmless if applied only for short time in small amounts (e.g., quick wiping to remove grease).	Avoid dipping or immersing in alcohol, gasoline, solvents etc.
TPO	Thermoplastic Olefine	80 (176)	Alcohol is harmless. Gasoline is harmless if applied only for short time in small amounts.	Most solvents are harmless but avoid dipping in gasoline, solvents, etc.
TPU	Thermoplastic Polyurethane	80 (176)	Alcohol is harmless if applied only for short time in small amounts (e.g., quick wiping to remove grease).	Avoid dipping or immersing in alcohol, gasoline, solvents, etc.
TSOP	TOYOTA Super Olefine Polymer	80 (176)	Alcohol and gasoline are harmless.	Most solvents are harmless.
UP	Unsaturated Polyester	110 (233)	Alcohol and gasoline are harmless.	Avoid alkali.

*Temperatures higher than those listed here may result in material deformation during repair.

LOCATION OF PLASTIC BODY PARTS

Parts Name	Code
Front Bumper Cover	TSOP
Radiator Grille	ABS
Headlight	PC/PP
Fog Light	PC/PET
Side Turn Signal Light	PMMA/ABS
Front Fender Outside Rear Moulding	PVC
Cowl Top Ventirator Louver	PP
Outer Rear View Mirror	AAS/ABS/PA
Front Door Outside Handle	PC/PET
Front Door Outside Moulding	PVC
Rear Door Outside Handle	PC/PET
Rear Door Outside Moulding	PVC
Rear Bumper Cover	TSOP
Luggage Compartment Door Outside Garnish	ABS
Licence Plate Light	PC
Rear Combination Light	PMMA/ABS
Rear Light	PC

HINT:
- *Resin material differs with model.*

/ *Made up of 2 or more kinds of materials.*