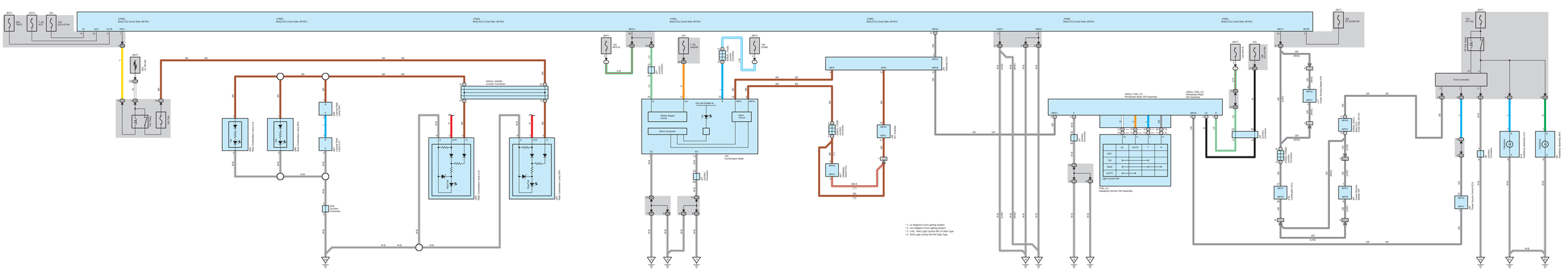
(BAT)
10A
METER
(ACC)
7.5A
AUDIO
(IG)
10A
ECU-IG RH
Z76(B)
Body ECU (Cowl Side JB RH)
IG
ACC
ALT8
TRL7
(BAT)
30A
CTY-Cowl
Fuse Box
Relay Box
Relay Box
Fuse Box
G2(IG), G3(IB)
Junction Connector
Rear Combination Lamp (LH)
Rear Combination Lamp (RH)
Rear Combination Lamp (LH)
Rear Combination Lamp (RH)
Left Tail Lamp (LH)
Left Tail Lamp (LH)
Z18(B)
Junction Connector
BECU
(BAT)
10A
MPX-B
(IG)
7.5A
GAUGE
Z18(B)
Junction Connector
Z18(B)
Junction Connector
(BAT)
10A
DOME
K12 DR DOME+B
Power Supply Circuit
Micro Computer
Input Circuit
J34
Combination Meter
Z18(B)
Junction Connector
Z18(B)
Junction Connector
MPX2
Z18(B)
Junction Connector
Z18(B)
Junction Connector
Z18(B)
Junction Connector
Z18(B)
Junction Connector
GND1
GND2
Z18(B)
Junction Connector
Z18(B)
Junction Connector
Z18(B)
Junction Connector
Z18(B)
Junction Connector