# REPAIR MANUAL

# 5 HP - 24

ProCarManuals.com

**ZF GETRIEBE GMBH SAARBRÜCKEN**

Status 98/08/01

ProCarManuals.com

subject to alterations

© Copyright 1998 all rights reserved and published by
ZF Getriebe GmbH, Saarbrücken, Department MKTD

No part of this manual may be reproduced or transmitted in any form or
by any means, electronic or mechanical, including photocopying and recording,
for any purpose without the express written permission of
**ZF Getriebe GmbH, Saarbrücken**

Printed in Germany

# Table of Contents


| | | | | Page |
|---|---|---|---|---|
| **Preliminary information** | | | | **II** |
| **1.** | **General information** | | | **1.1/1** |
| 1.1 | Picture of the transmission | | | 1.1/1 |
| 1.2 | Diagram of power flow | | | 1.2/1 |
| 1.3 | (Previously used for the oil supply diagrams, not currently used) | | | |
| 1.4 | Making adjustments | | | 1.4/1 |
| | 1.4.0 | Measuring the disc sets (procedure) | | 1.4/1 |
| | 1.4.1 | Adjusting clearance of brake F | (snap ring) | 1.4/2 |
| | 1.4.2 | Adjusting clearance of brake D | (snap ring) | 1.4/4 |
| | 1.4.3 | Adjusting clearance of brake E | (snap ring) | 1.4/6 |
| | 1.4.4 | Adjusting clearance of clutch C | (snap ring) | 1.4/8 |
| | 1.4.5 | Adjusting clearance of clutch A | (snap ring) | 1.4/10 |
| | 1.4.6 | Adjusting clearance of clutch B | (snap ring) | 1.4/12 |
| | 1.4.7 | Output play | (shim) | 1.4.14 |
| | 1.4.8 | Input play | (shim) | 1.4.15 |
| | 1.4.9 | Adjusting switch | (detent spring) | 1.4.16 |
| 1.5 | Tightening torques | | | 1.5/1 |
| 1.6 | Transmission test (test bench/vehicle) | | | 1.6/1 |
| 1.7 | Special tools | | | 1.7/1 |
| 1.8 | Function tests | | | 1.8/1 |
| | 1.8.1 | Position switch | | 1.8/1 |
| **2.** | **Disassembly** | | | **2.1/1** |
| 2.1 | Disassembly of the transmission as of the assembly group | | | 2.1/1 |
| 2.2 | Brake F with freewheel, 1st gear | | | 2.2/1 |
| 2.3 | Output | | | 2.3/1 |
| 2.4 | Tower I | | | 2.4/1 |
| | 2.4.1 | Brake D, E and clutch C | | 2.4/1 |
| | 2.4.2 | Planetary drive (III, II and I) | | 2.4/6 |
| 2.5 | Tower II | | | 2.5/1 |
| 2.6 | Oil supply | | | 2.6/1 |
| 2.7 | Transmission with flow control valve and breather | | | 2.7/1 |
| 2.8 | Transmission with selector mechanism and parking lock | | | 2.8/1 |
| **3.** | **Assembly** | | | **3.1/1** |
| 3.1 | Transmission with selector mechanism and parking lock | | | 3.1/1 |
| 3.2 | Brake F with freewheel, 1st gear | | | 3.2/1 |
| 3.3 | Tower I | | | 3.3/1 |
| | 3.3.1 | Planetary drive (III, II and I) | | 3.3/1 |
| | 3.3.2 | Brake (E and D) | | 3.3/4 |
| | 3.3.3 | Assembly, clutch C | | 3.3/9 |
| 3.4 | Output | | | 3.4/1 |
| 3.5 | Tower II (input with clutches A and B) | | | 3.5/1 |
| | 3.5.1 | Clutch A (input) | | 3.5/1 |
| | 3.5.2 | Clutch B (input) | | 3.5/3 |
| 3.6 | Oil supply | | | 3.6/1 |
| 3.7 | Control unit, oil pan and converter | | | 3.7/1 |
| | (Complete control unit, see parts list, technical cover sheet, position Y02) | | | |


ProCarManuals.com

# Preliminary information

This manual covers the procedure for repairing the complete transmission.

The repairing of this transmission is only allowed to persons with an specific training from ZF Getriebe GmbH.

The entire disassembly and assembly procedure is described in chronological order.

The photographs were kept general in nature so that they can be used with various applications; they are not binding in every case.

We use *Service Bulletines* and training to announce important information and application-specific changes that must be taken into consideration in maintenance work.
If this repair manual is given to a third party, there will be no modification service.

The *Service Bulletines* regulations and specifications must be followed when making repairs.

Depending on the type of damage that has occured, the repair work can be limited to that which is necessary to repair the damage.

ProCarManuals.com

Here, you must observe the following:

- Seals (such as O-rings, shaft seals, gaskets and filters) must always be renewed.
- All O-rings, rectangular-section rings, and other sealing rings must always be lubricated with white petroleum jelly before installation.
- All bearings must always be in a slightly oiled condition when installed.
- For transmissions that have been used for a large number of kilometers (> 80,000 km), all lined clutch discs and steel discs must be replaced.
- After clutches/ brakes have been damaged, the converter, oil tubes, and oil cooler, must be cleaned thoroughly.
- If brake F has been damaged, or if a considerable distance has been covered (> 150,000 km), piston F must be replaced.

The following requirements should be met before the repair work is started:

- The required special tools should be available.
  (The complete set of special tools is listed in Chapter 1.7)
- A suitable transmission testing rig should be available.
  The required testing values can be found in the *Service Bulletines*.

**Note:**

This manual treats the automatic control unit as a complete unit, which should not be disassembled without special knowledge; it should be exchanged as a complete unit.

A separate repair manual is planned for the automatic control unit.

**Important:**

The transmission is filled with life-time oil.

**The oil does not have to be changed until it has been in use for ten years.**

The transmission may only be delivered with the oil type and oil amount specified in the corresponding parts list documentation (see ELCAT), otherwise there is danger of gearbox failure.

ProCarManuals.com

| | | |
|---|---|---|
| Techn. After Sales Service | Techn. Documentation | After Sales Service School |
| Bach | Reus | Schultz |

ProCarManuals.com

# 1. General information

## 1.1 Picture of the transmission

ProCarManuals.com

ProCarManuals.com

## 1.2 Power flow diagram

Gang = Gear ratio

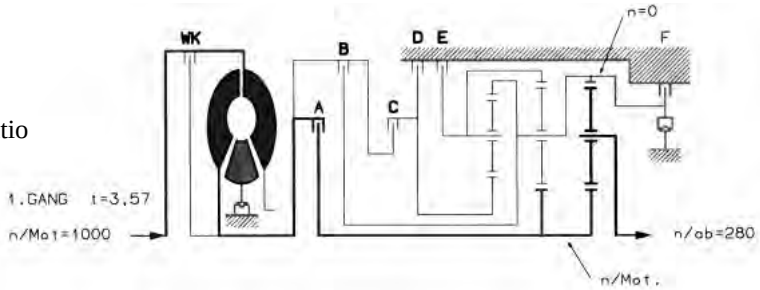


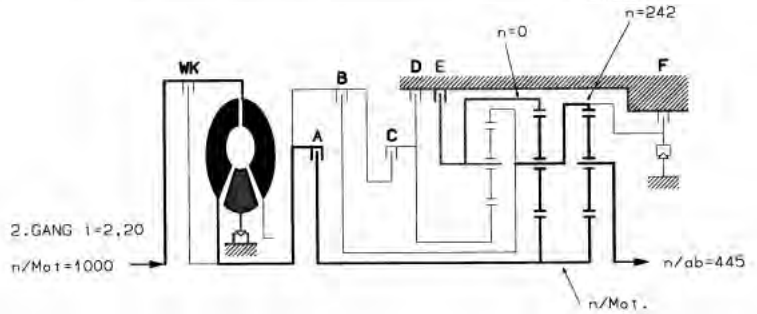


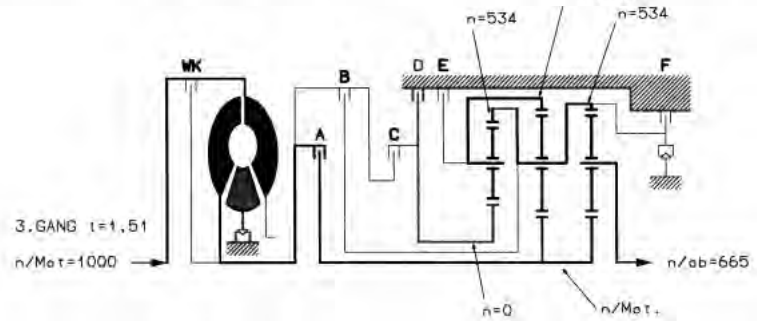


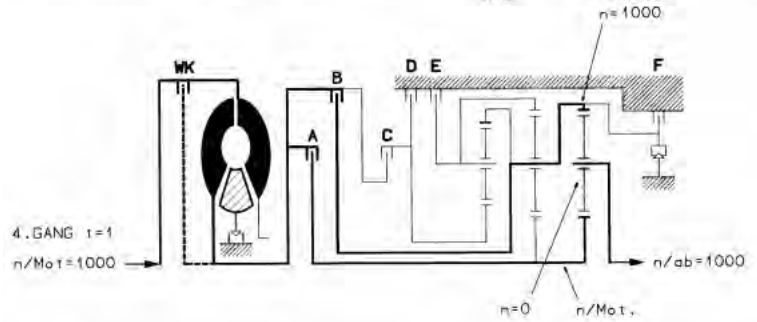


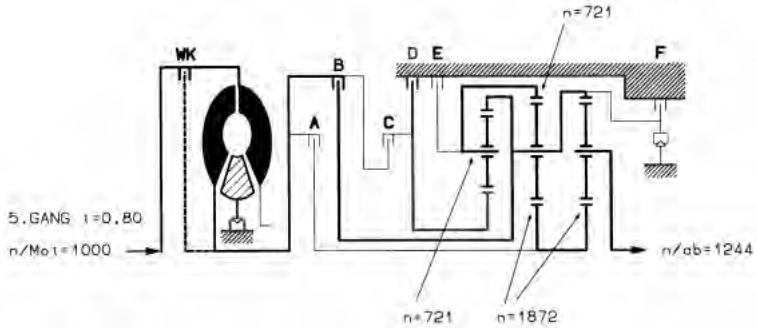


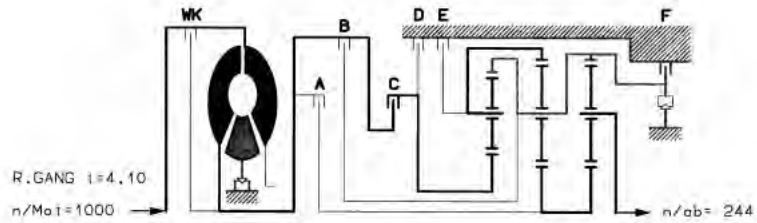


ProCarManuals.com

ProCarManuals.com

## 1.4 Making adjustments
### 1.4.0 Measuring the clutch pack (procedure)

98009

Place the two intermediate pieces 5p01 000 329 on the marked positions on measuring fixture 5p01 000 330.

98011

Use knurled screw to turn adjusting device 5p01 001 458 to upper limit position.
Attach force-measuring unit 5p01 000 329 to adjusting device 5p01 001 458.

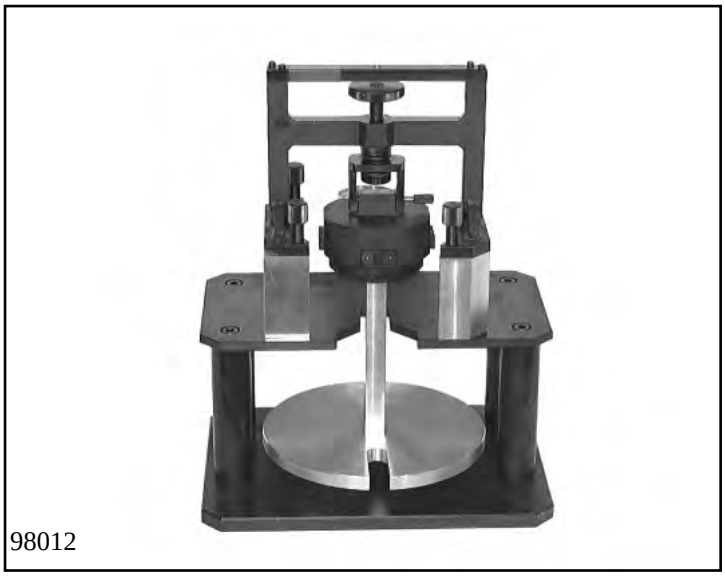
98012

Fasten adjusting device with 4 knurled screws to the measuring fixture using the intermediate pieces.
Connect measuring plate 5p01 040 330 to force-measuring unit using fixing pin.

Use knurled screw to clamp the clutch pack to be measured (with corrugated steel clutch plate – if present – at the bottom) in device at 200 N.

ProCarManuals.com

Check the value on the force-measuring unit.

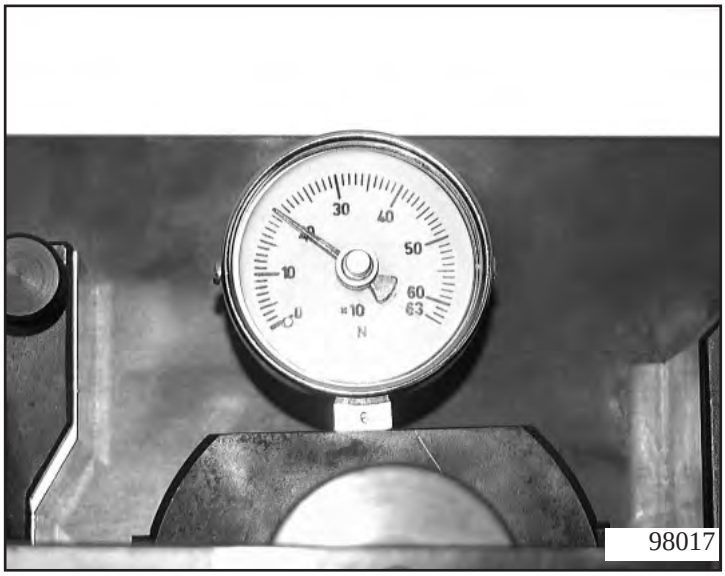

98017

Then put measuring bar 5p01 060 330 on the measuring plate, insert the measuring base of the dial gauge into the groove of the measuring plate on the top plate of the pack and set the dial gauge to zero.

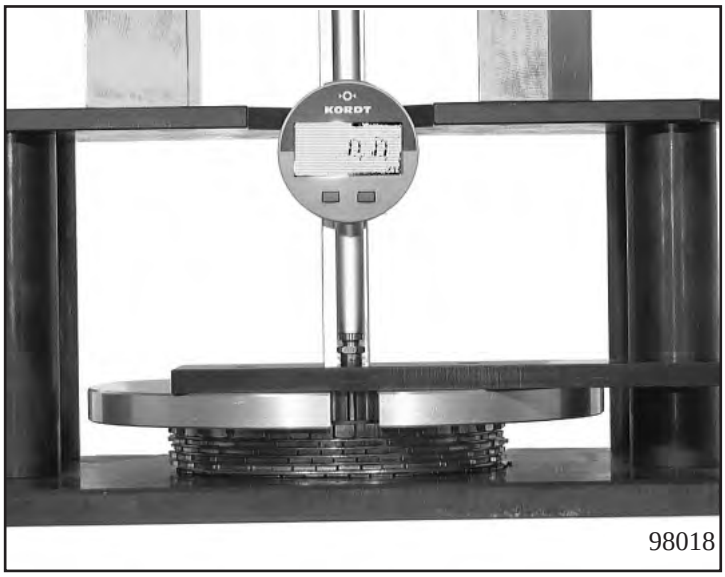

98018

Now measure down to the base plate using the measuring bar.

Read off the measurement value ➪ $\mathbf{M_X}$

**Note!**
In each case, index **X** in $\mathbf{M_X}$ stands for the clutch pack that was put in for the clutches/brakes (A, B, C, D, E, F)



ProCarManuals.com

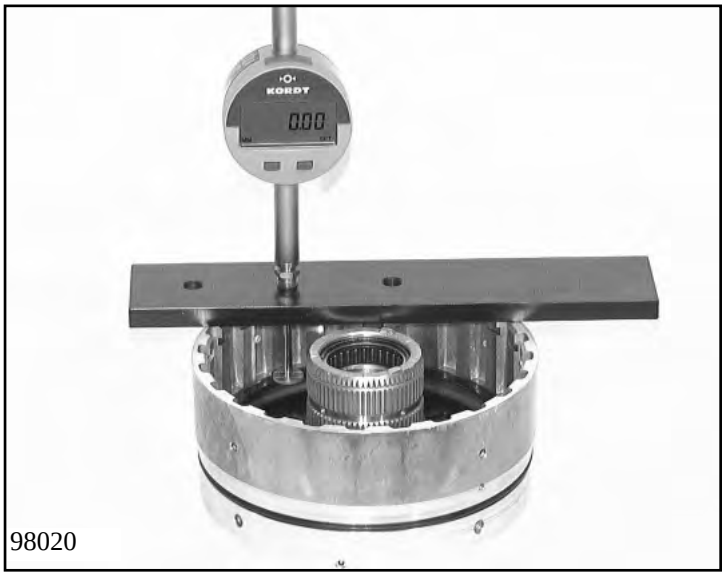

98020

### 1.4.1 Adjusting clearance of brake F (snap ring)

Determine installation space $\mathbf{E_F}$ for brake F with measuring bar 5p01 000 330. To do this, put measuring bar 5p01 000 330 on the edge of the cylinder for brake F. Put the measuring base on the highest point of the disc supporting surface on the piston and set the dial gauge to“0”. Pull the measuring sensor upwards, guide it into the snap-ring groove and press it there against the groove’s upper edge.

Read measured value on the dial ➪ $\mathbf{W_F}$

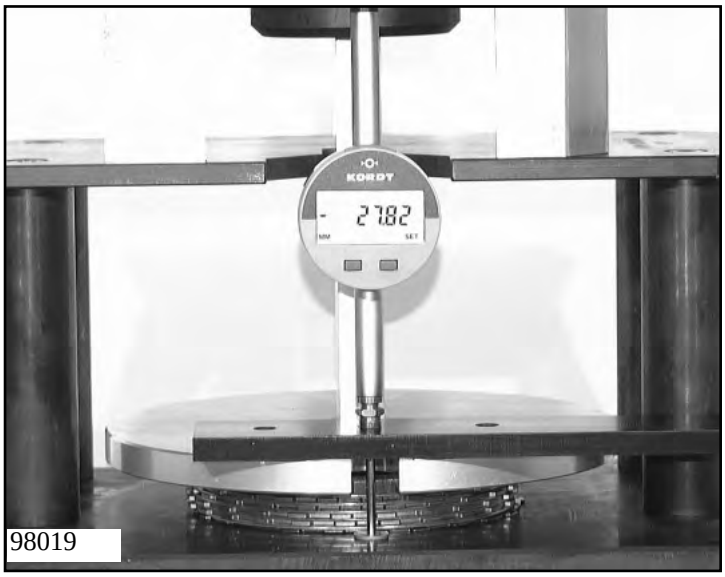

98019

Determine thickness $\mathbf{M_F}$ of the brake F clutch pack according to
**Chapter 1.4.0: Measuring the clutch pack**.

➪ $\mathbf{M_F}$

Installation space $\mathbf{E_F}$ is equal to $\mathbf{W_F}$ plus the thickness of the base **F**. ➪ $\mathbf{E_F}$

Test value $\mathbf{P_F}$ is equal to installation space $\mathbf{E_F}$ minus $\mathbf{M_F}$

The $\mathbf{P_F}$ value must lie between 5.0-6.6 mm.
**Setting specification 1055 700 100**.

Use test value $\mathbf{P_F}$ to select snap ring $\mathbf{S_F}$.

**Calculation:**
$\mathbf{E_F = W_F + F}$
$\mathbf{P_F = E_F - M_F}$

Clutch clearance $\mathbf{L_F}$ should be 2.4 - 2.9 mm with 6 lined clutch discs.

ProCarManuals.com

**Example (for 1.4.2):**

**$F$ = 1.48 mm (base thickness)**
**$W_F$ = 32.32 mm**
**$M_F$ = 27.82 mm**

**$E_F$ = 32.32 + 1.48**
**= 33.8 mm**
**$P_F$ = 33.8 - 27.82**
**= 5.98 mm**

**$S_F$ = 3.4 mm**

**$L_F$ = 5.98 - 3.4**
**⇨ $L_F$ = 2.58 mm**

ProCarManuals.com

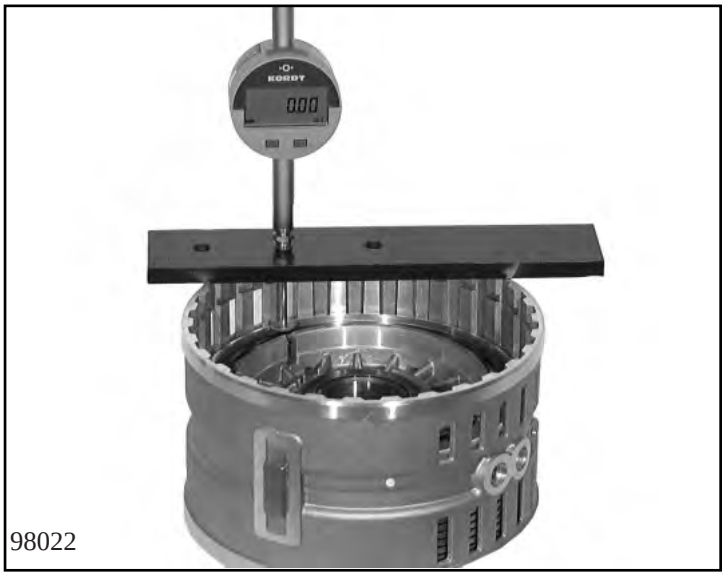

98022

### 1.4.2 Adjusting clearance of brake D (snap ring)

Determine installation space $\mathbf{E_D}$ for brake D with measuring bar 5p01 000 330. To do this, put measuring bar 5p01 000 330 on the edge of the cylinder for brake D. Put the measuring base on the highest point of the disc supporting surface on the piston and set the dial gauge to“0”. Pull the measuring sensor upwards, guide it into the snap-ring groove and press it there against the groove’s upper edge.

Read measured value on the dial ➪ $\mathbf{W_D}$

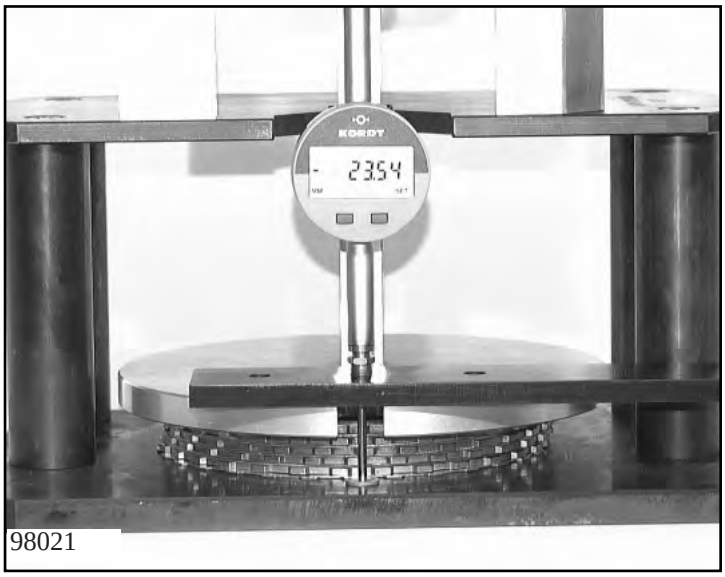

98021

Determine thickness $\mathbf{M_D}$ of the brake D clutch pack according to
**Chapter 1.4.0: Measuring the clutch pack**.

➪ $\mathbf{M_D}$

Installation space $\mathbf{E_D}$ is equal to $\mathbf{W_F}$ plus the thickness of the base **F**. ➪ $\mathbf{E_D}$

Test value $\mathbf{P_D}$ is equal to installation space $\mathbf{E_D}$ minus $\mathbf{M_D}$.

The $\mathbf{P_D}$ value must lie between 3.72 - 5.52 mm.
**Setting specification 1058 700 067** - Version ***B***

Use test value $\mathbf{P_D}$ to select snap ring $\mathbf{S_D}$.

**Calculation:**
$\mathbf{E_D = W_D + F}$
$\mathbf{P_D = E_D - M_D}$

Clutch clearance $\mathbf{L_D}$ should be 1.35 - 1.65 mm with 4 lined clutch discs.

ProCarManuals.com

**Example (for 1.4.2):**

**F = 1.48 mm (base thickness)**
**$W_D$ = 26.6 mm**
**$M_D$ = 23.54 mm**

**$E_D$ = 26.6 + 1.48**
**= 28.08 mm**
**$P_D$ = 28.08 - 23.54**
**= 4.54 mm**

**$S_D$ = 3.0 mm**

**$L_D$ = 4.54 - 3.0**
**⇨ $L_D$ = 1.54 mm**

ProCarManuals.com

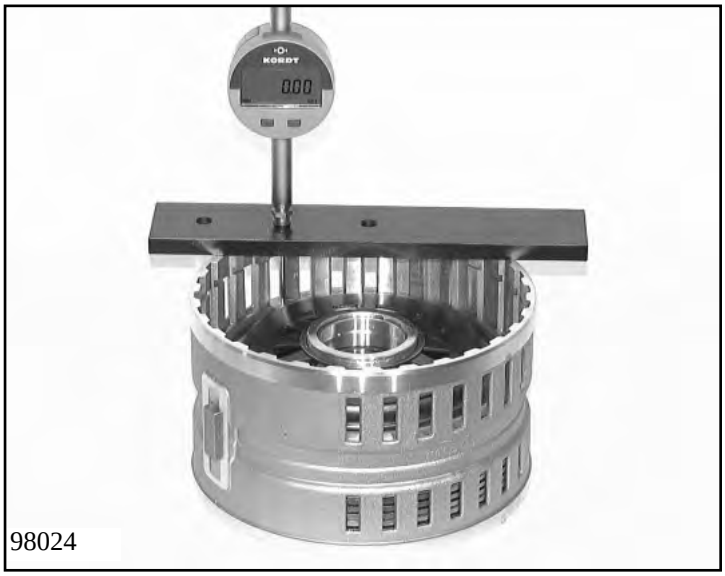

98024

### 1.4.3 Adjusting clearance of brake E (snap ring)

Determine installation space $\mathbf{E_E}$ for brake E with measuring bar 5p01 000 330. To do this, put measuring bar 5p01 000 330 on the edge of the cylinder for brake E. Put the measuring base on the highest point of the disc supporting surface on the piston and set the dial gauge to“0”. Pull the measuring sensor upwards, guide it into the snap-ring groove and press it there against the groove’s upper edge.

Read measured value on the dial ➪ $\mathbf{W_E}$

98025

Determine thickness $\mathbf{M_E}$ of the brake E clutch pack according to
**Chapter 1.4.0: Measuring the clutch pack**.

➪ $\mathbf{M_E}$

Installation space $\mathbf{E_E}$ is equal to $\mathbf{W_E}$ plus the thickness of the base **F**. ➪ $\mathbf{E_E}$

Test value $\mathbf{P_E}$ is equal to installation space $\mathbf{E_E}$ minus $\mathbf{M_E}$.

The $\mathbf{P_E}$ value must lie between 3.8 -5.4 mm.
**Setting specification 1058 700 029**
Version ***B***

Use test value $\mathbf{P_E}$ to select snap ring $\mathbf{S_E}$.

**Calculation:**
$\mathbf{E_E = W_E + F}$
$\mathbf{P_E = E_E - M_E}$

Clutch clearance $\mathbf{L_E}$ should be 1.4 - 1.7 mm with 5 lined clutch discs.

ProCarManuals.com

**Example (for 1.4.3):**

**F = 1.48 mm (base thickness)**
**$W_E$ = 30.0 mm**
**$M_E$ = 26.83 mm**

**$E_E$ = 30.0 + 1.48**
**= 31.48 mm**
**$P_E$ = 31.48 - 26.83**
**= 4.65 mm**

**$S_E$ = 3.2 mm**

**$L_E$ = 4.65 - 3.2**
**⇨ $L_E$ = 1.45 mm**

ProCarManuals.com

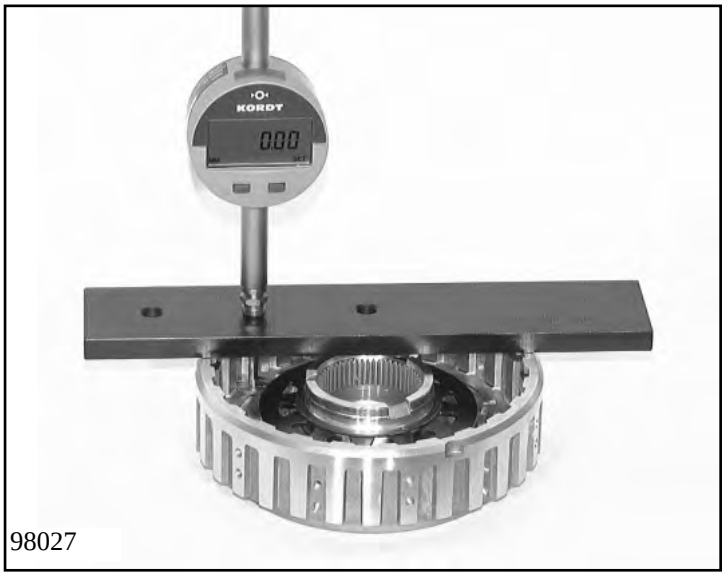

98027

### 1.4.4 Adjusting clearance of clutch C (snap ring)

Determine installation space $\mathbf{E_C}$ for clutch C with measuring bar 5p01 000 330. To do this, put measuring bar 5p01 000 330 on the edge of the cylinder for clutch C. Put the measuring base on the highest point of the disc supporting surface on the piston and set the dial gauge to“0”. Pull the measuring sensor upwards, guide it into the snap-ring groove and press it there against the groove’s upper edge.

Read measured value on the dial ➪ $\mathbf{W_C}$

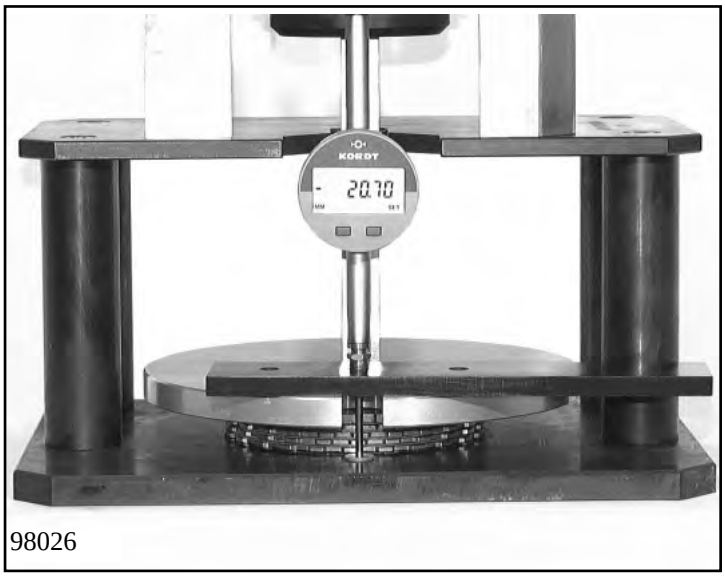

98026

Determine thickness $\mathbf{M_C}$ of the clutch C clutch pack according to
**Chapter 1.4.0: Measuring the clutch pack**.

➪ $\mathbf{M_C}$

Installation space $\mathbf{E_C}$ is equal to $\mathbf{W_C}$ plus the thickness of the base **F**. ➪ $\mathbf{E_C}$

Test value $\mathbf{P_C}$ is equal to installation space $\mathbf{E_C}$ minus $\mathbf{M_C}$.

The $\mathbf{P_C}$ value should be between 3.55 -4.95 mm.
**Setting specification 1058 700 087**

Use test value $\mathbf{P_C}$ to select snap ring $\mathbf{S_C}$.

**Calculation:**
$\mathbf{E_C = W_C + F}$
$\mathbf{P_C = E_C - M_C}$

Clutch clearance $\mathbf{L_C}$ should be 1.35 - 1.65 mm with 4 lined clutch discs.

ProCarManuals.com

**Example (for 1.4.4):**

**F = 1.48 mm (base thickness)**
**$W_C$ = 23.55 mm**
**$M_C$ = 20.7 mm**

**$E_C$ = 23.55 + 1.48**
**= 25.03 mm**
**$P_C$ = 25.03 - 20.7**
**= 4.33 mm**

**$S_C$ = 2.8 mm**

**$L_C$ = 4.33 - 2.8**
**⇨ $L_C$ = 1.53 mm**

ProCarManuals.com

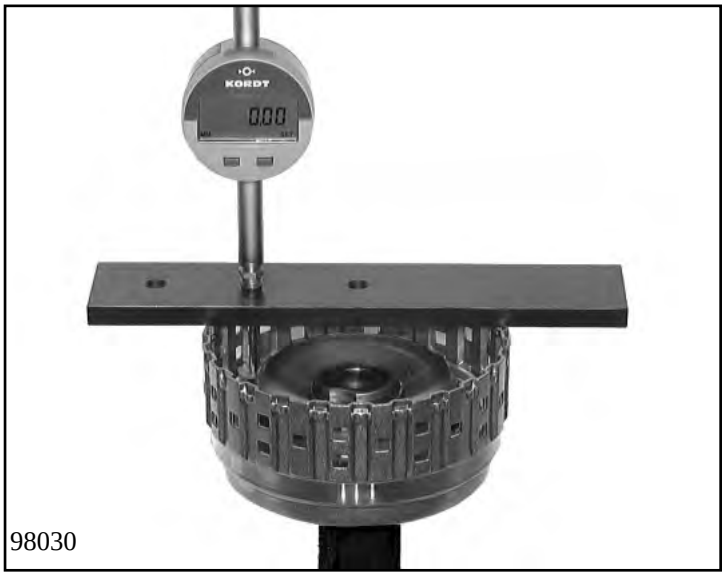

98030

### 1.4.5 Adjusting clearance of clutch A (snap ring)

Determine installation space $\mathbf{E_A}$ for clutch A with measuring bar 5p01 000 330. To do this, put measuring bar 5p01 000 330 on the edge of the cylinder for clutch A. Put the measuring base on the highest point of the disc supporting surface on the piston and set the dial gauge to“0”. Pull the measuring sensor upwards, guide it into the snap-ring groove and press it there against the groove’s upper edge.

Read measured value on the dial ➪ $\mathbf{W_A}$

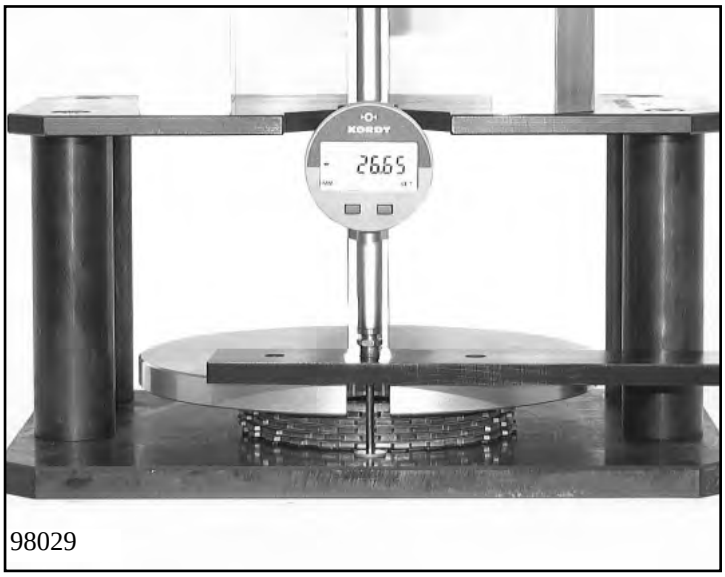

98029

Determine thickness $\mathbf{M_A}$ of the clutch A clutch pack according to
**Chapter 1.4.0: Measuring the clutch pack**.

➪ $\mathbf{M_A}$

Installation space $\mathbf{E_A}$ is equal to $\mathbf{W_A}$ plus the thickness of the base **F**. ➪ $\mathbf{E_A}$

**Important!**
The final disc has a step in it.
When measuring the set thicknes, measure down to the final disc’s <u>lowest</u> step.

Test value $\mathbf{P_A}$ is equal to installation space $\mathbf{E_A}$ minus $\mathbf{M_A}$.
Value $\mathbf{P_A}$ should be between 3.75 -5.75 mm.
**Setting specification 1058 700 021**

Use test value $\mathbf{P_A}$ to select snap ring $\mathbf{S_A}$.

**Calculation:**
$\mathbf{E_A = W_A + F}$
$\mathbf{P_A = E_A - M_A}$

Clutch clearance $\mathbf{L_A}$ should be 1.95 - 2.25 mm with 6 lined clutch discs.

ProCarManuals.com

**Example (for 1.4.5):**

**F = 1.48 mm (base thickness)**
**$W_A$ = 30.26 mm**
**$M_A$ = 26.65 mm**

**$E_A$ = 30.26 + 1.48**
**= 31.74 mm**
**$P_A$ = 31.74 - 26.65**
**= 5.09 mm**

**$S_A$ = 3.0 mm**

**$L_A$ = 5.09 - 3.0**
**⇨ $L_A$ = 2.09 mm**

ProCarManuals.com

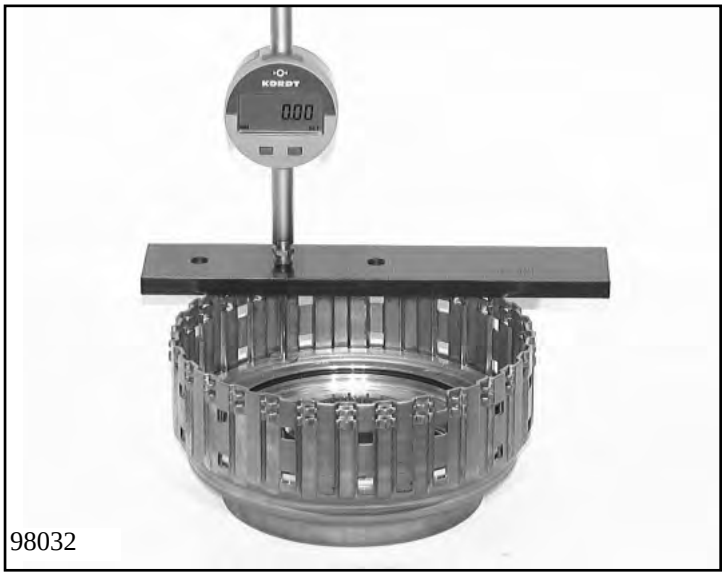

98032

### 1.4.6 Adjusting clearance of clutch B (snap ring)

Determine installation space $\mathbf{E_B}$ for clutch B with measuring bar 5p01 000 330. To do this, put measuring bar 5p01 000 330 on the edge of the cylinder for clutch B. Put the measuring base on the highest point of the disc supporting surface on the piston and set the dial gauge to“0”. Pull the measuring sensor upwards, guide it into the snap-ring groove and press it there against the groove’s upper edge.

Read measured value on dial ➪ $\mathbf{W_B}$

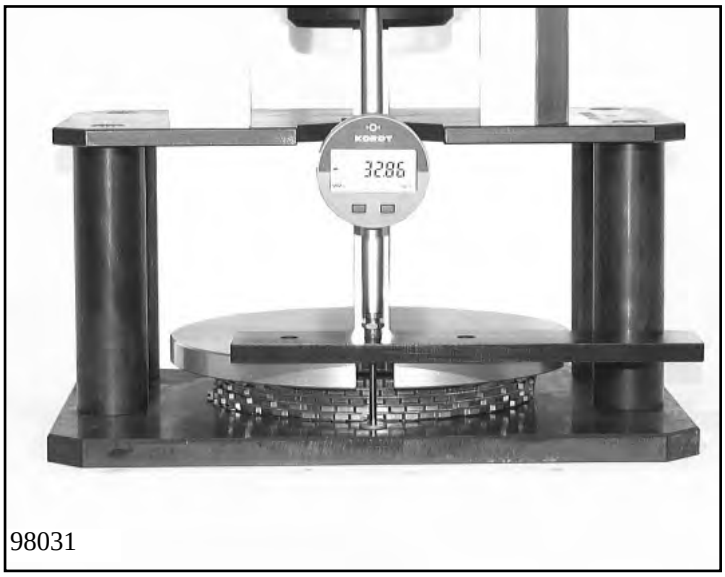

98031

Determine thickness $\mathbf{M_B}$ of the clutch B clutch pack according to
**Chapter 1.4.0: Measuring the clutch pack**.

➪ $\mathbf{M_B}$

Installation space $\mathbf{E_B}$ is equal to $\mathbf{W_B}$ plus the thickness of the base **F**. ➪ $\mathbf{E_B}$

The test value $\mathbf{P_B}$ is equal to installation space $\mathbf{E_B}$ minus $\mathbf{M_B}$.

Value $\mathbf{P_B}$ should be between 4.52 - 6.72 mm.
**Setting specification 1058 700 065**

Use test value $\mathbf{P_B}$ to select snap ring $\mathbf{S_B}$.

**Calculation:**
$\mathbf{E_B = W_B + F}$
$\mathbf{P_B = E_B - M_B}$

Clutch clearance $\mathbf{L_B}$ should be 1.95 - 2.25 mm with 6 lined clutch discs.

ProCarManuals.com

**Example (for 1.4.6):**

**F = 1.48 mm (base thickness)**
**$W_B$ = 36.64 mm**
**$M_B$ = 32.86 mm**

**$E_B$ = 36.64 + 1.48**
**= 38.12 mm**
**$P_B$ = 38.12 - 32.86**
**= 5.26 mm**

**$S_B$ = 3.2 mm**

**$L_B$ = 5.26 mm - 3.2 mm**
**⇨ $L_B$ = 2.06 mm**

ProCarManuals.com

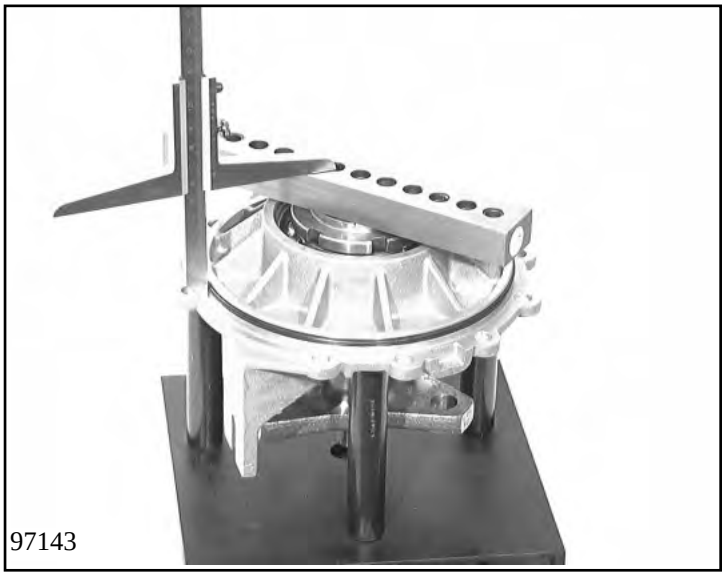
97143

### 1.4.7 Output play (shim)

Determine distance **A** between the machined face on the extension and the output flange hub using a depth gauge and measuring bar.

**Important!**
To prevent falsification of the measurement, press down the hub and do not place the gearbox extension on the output flange during measuring.

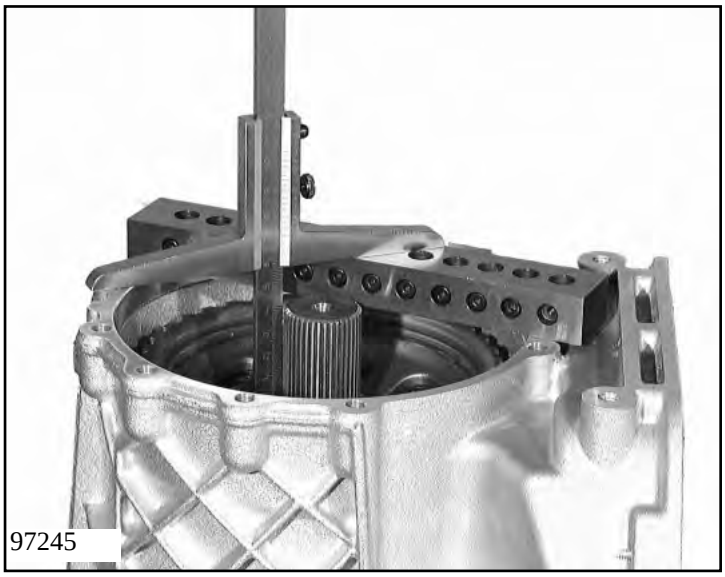
97245

Using a depth gauge and a measuring bar, determine distance **B** between the machined face of the transmission housing and the machined face of the parking lock wheel.

Nominal axial play **C** = 0.25 to 0.45 mm (acc. to **Setting specification 1058 700 122**).

Thickness of washer **S** is now equal to **B** minus **A** minus **C**.

**Calculation:**
**S = B - A - C**

**Example: (for 1.4.7)**

**A = 42.7 mm**
**B = 44.9 mm**
**C = 0.25 to 0.45 mm**

**S = 44.9 - 42.7 - (0.25 to 0.45)**
**= 2.2 mm - (0.25 to 0.45)**

➪ **S = 1.75 to 1.95 mm**

**Note!**
The dimensions A and B are indicated without the thickness of measuring bar.

ProCarManuals.com

### 1.4.8 Input play (shim)

Fasten the converter bell in the inner ring using two long, machine screws 22.100 on opposite sides.

(See Chapter 1.5 for tightening torque)

**Requirement:**
Axial needle roller bearing 02.250 and spacer 02.260 (thickness = 1.4 mm, thinnest acc. to optional technical kit), the gasket, intermediate plate, and converter bell housing must be in place.

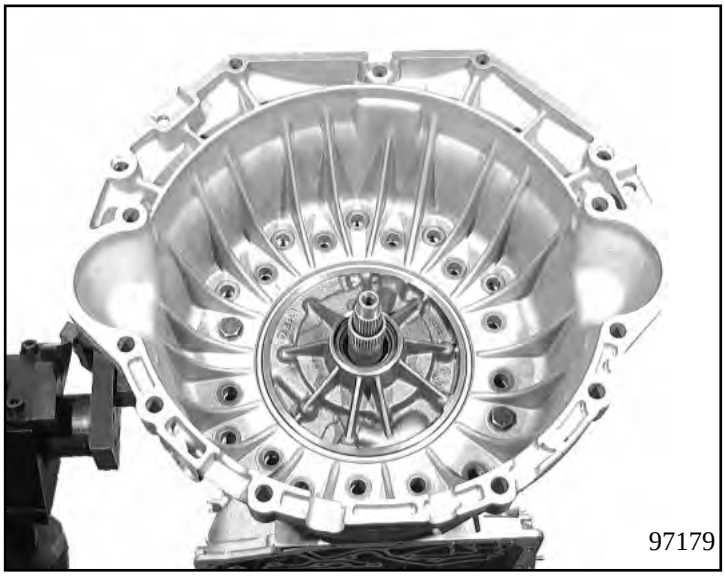
97179

Clamp the measuring sleeve for device 5p01 001 415 on to the stator shaft using the three fastening screws, no play allowed.
Push measuring device 5p01 001 415 over the splines of the input shaft and secure with set screw about 2 mm above the meausurement sleeve in such a way that it can not tilt.

Set dial gauge to “0”.

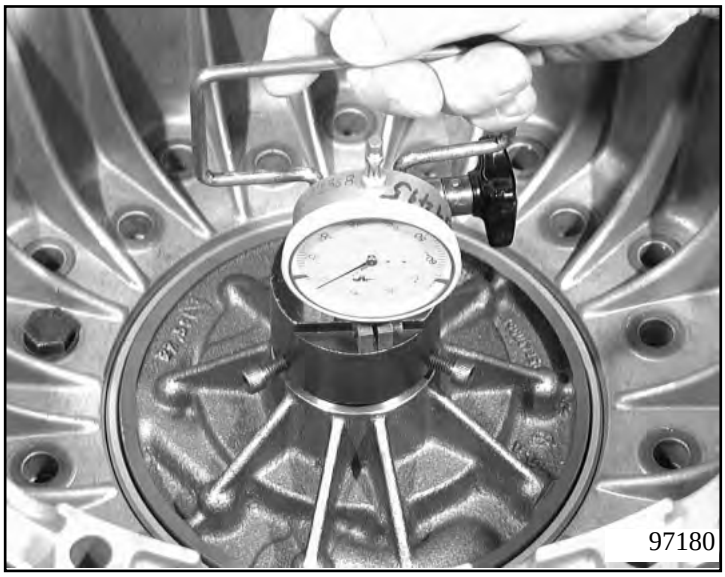
97180

Determine axial play by pressing and pulling on the handle (repeat measurement several times)

Nominal axial play = 0.2 - 0.4 mm at a force of 200 N (dry in acc.with **Setting specification 1058 700 119**)

If a deviation arises, compensate with a washer 02.260 with the appropriate thickness. Pre-check the axial play.

ProCarManuals.com

ProCarManuals.com

### 1.4.9 Adjusting the switch (detent spring)

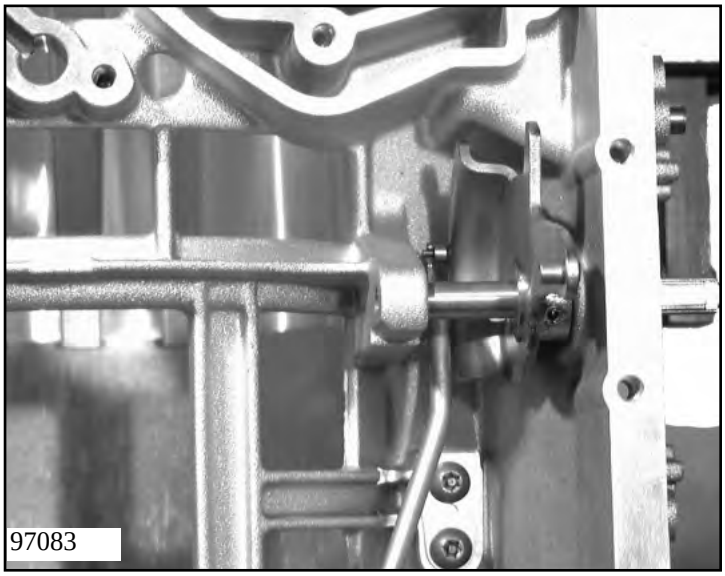
97083

Move the detent disc to the N (neutral) position with a suitable tool or by hand.

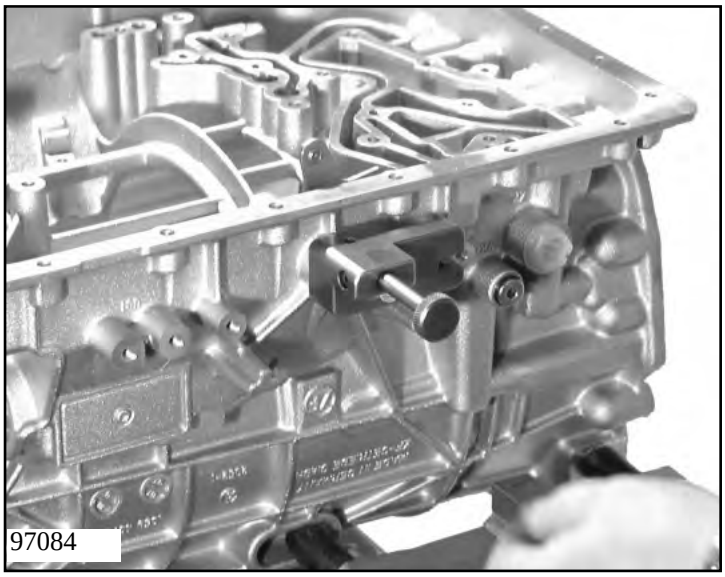
97084

Place position gauge 5p01 002 839 on the selector shaft, turn the position gauge so that the locating pin in the transmission housing enters the cutout in the position gauge and eliminate any play by turning the knurled screw.

**Important!**
For JAGUAR and older BMW transmission housings 1058 301 077, use position gauge 5p01 002 567 (follow the ELCAT instructions).

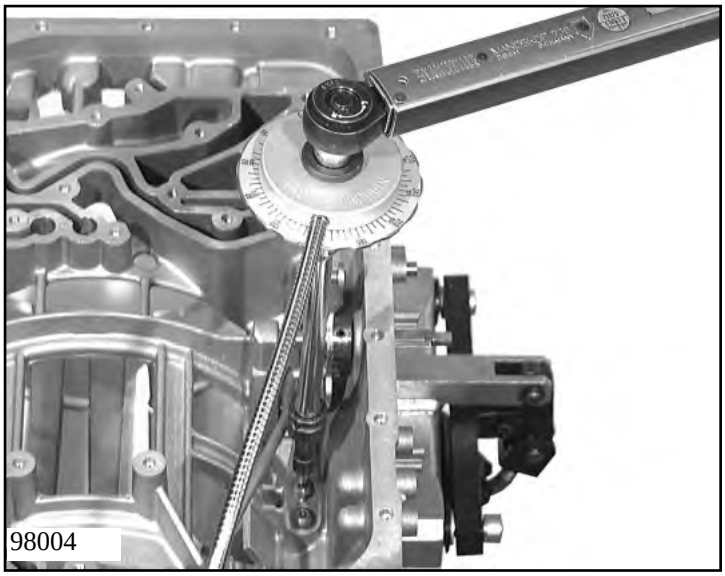
98004

Align the detent spring's roller on the center of the detent disc, and screw it tight with helping tool 5w04 000 583 in this position.

(See Chapter 1.5 for tightening torque)

Release the position gauge and move the selector shaft from position N to P and then back to position N.
If the installation has been performed correctly, the position gauge can easily be placed on the selector shaft until it comes into contact with the transmission housing.

ProCarManuals.com

## 1.5 Tightening torques

| No. | Designation | ELCAT-Pos.-No. | Wrench size No. | Page | Tightening torque |
|---|---|---|---|---|---|
| 1 | Screw plug (Transmission housing) | 01.650 | Hexagonal socket SAF = 5 mm | 3.1/3 | 12 Nm (±1.2Nm) |
| 2 | Screw plug (Transmission housing) | 01.210 | Hexagonal socket SAF = 6 mm | 3.1/3 | 25 Nm (±2.5 Nm) |
| 3 | Transport plug (Transmission housing) | 01.230 01.240 | Hexagonal SAF = 17 mm | 3.1/3 | 2 Nm (±0.2 Nm) |
| 4 | Screw plug M14x1.5 (Leg spring) | 01.090 | Hexagonal socket SAF = 6 mm | 3.1/5 | 20 Nm (±2.0 Nm) |
| 5 | Machine screw (Guiding plate) | 01.080 | TORX - TX 27 | 3.1/5 | 10 Nm (±1.0 Nm) |
| 6 | Machine screw (Detent spring) | 01.010/200 | TORX - TX 27 H | 1.4/17 | 10 Nm + 30° (±0.3 Nm ±10°) |
| 7 | Hexagon screw (Selector mechanism) | 01.590 01.620 | Hexagonal SAF = 10 mm | 3.1/5 | 10 Nm (±1.0 Nm) |
| 8 | Countersunk screw (Cylinder F) | 77.210 | TORX - TX 40 | 3.2/6 | 23 Nm (±2.3 Nm) |
| 9 | Slotted nut (Output) | 14.030 | Socket wrench 5x46 000 787 | 3.4/2 | 120 Nm (±12.0 Nm) |
| 10 | Hexagon screw (Output) | 14.070 | Hexagonal SAF = 13 mm | 3.4/3 | 23 Nm (±2.3 Nm) |
| 11 | Machine screw (Stator shaft/ centering plate) | 10.020/130 | TORX - TX 27 | 3.6/3 | 10 Nm (±1.0 Nm) |
| 12 | Screw plug, M14x1.5 (Intermediate plate/lub. pressure) | 10.090 | Hexagonal socket SAF = 6 mm | 3.6/3 | 25 Nm (±2.5 Nm) |
| 13 | Screw plug, M22x1.5 (Intermediate plate/flow reg.valve) | 01.020/180 | Hexagonal SAF = 19 mm | 3.6/3 | 50 Nm (±5.0 Nm) |
| 14 | Countersunk screw (Intermediate plate/ pump) | 10.070 | TORX - TX 27 | 3.6/4 | 10 Nm (±1.0 Nm) |
| 15 | Countersunk screw (Intermediate plate/ pump) | 10.074 | TORX - TX 27 | 3.6/4 | 5 Nm (±0.5 Nm) |

ProCarManuals.com

| No. | Designation | ELCAT-Pos.-No. | Wrench size No. | Page | Tightening torque |
|---|---|---|---|---|---|
| 16 | Hexagon screw<br>(Bell housing) | 22.090<br>22.100 | <br>SAF = 17 mm | 1.4/16<br>3.6/5 | 46 Nm<br>(±4.6 Nm) |
| 17 | Machine screw<br>(Oil tube bracket) | 10.150 | TORX - TX 27 | 3.7/2 | 10 Nm<br>(±1.0 Nm) |
| 18 | Machine screw<br>(Control unit) | 27.400<br>27.410 | TORX - TX 27 | 3.7/3 | 8 Nm<br>(±0.8 Nm) |
| 19 | Machine screw<br>(Inductive transmitter) | 27.520 | TORX - TX 27 | 3.7/4 | 8 Nm<br>(±0.8 Nm) |
| 20 | Machine screw<br>(Filter) | 27.470 | TORX - TX 27 | 3.7/4 | 5 Nm<br>(±0.5 Nm) |
| 21 | Machine screw<br>(Oil pan) | 03.050 | TORX - TX 27 | 3.7/4 | 10 Nm<br>(±1.0 Nm) |
| 22 | Screw plug, M18x1.5<br>(Transmission housing) | 01.220 | Hexagonal socket<br>SAF = 8 mm | 3.7/5 | 35 Nm<br>(±3.5 Nm) |
| 23 | Screw plug, M16x1.5<br>(Oil pan) | 03.010/130 | Hexagonal socket<br>SAF = 8 mm | 3.7/5 | 30 Nm<br>(±3.0 Nm) |
| 24 | Hexagonal screw<br>(Cable clip) | 01.580 | <br>SAF = 10mm | 3.7/5 | 10 Nm<br>(±1.0 Nm) |
| 25 | Hexagon screw M8x55<br>(Converter retaining bracket) | 22.410 | <br>SAF = 13 mm | 3.7/6 | 20 Nm<br>(±2.0 Nm) |
| 26 | Hexagon screw, M10x16<br>(Converter retaining bracket) | 22.430 | <br>SAF = 17 mm | 3.7/6 | 20 Nm<br>(±2.0 Nm) |

ProCarManuals.com

## 1.6 Transmission test (test bench)

The following points must be checked:

**Oil level correct**

Proper oil level; observe the vehicle manufacturer's specifications and ELCAT.

**Oil level too low**

This can result in:
- Engine over-reving or no power flow in curves or when starting from a stop
- Valve chatter due to air pockets in the oil
- General malfunctions

Among other things, burned clutches can be the result.

**Oil level too high**

Danger of loss due to splashing, formation of foam, strong increases in temperature at high road speeds. Loss of oil via breather; among other things, burned clutches and shifting problems can be the result.

**Proper engine settings**

Correct idle speed; follow specifications from vehicle manufacturer.

**Power flow, forward and reverse**

Correct adjustment of selector linkage or control cable; observe the vehicle manufacturer's specifications.

**Cooler bypass respectively cooler connection on test bench**

Do not overheat transmission, maximum +120° C

ProCarManuals.com

ProCarManuals.com

## 1.7 Special tools

| OBJECT | Order No. / Application | Remarks |
|---|---|---|
| **1**<br> <br>98008 | 5p01 000 329<br>- Force measuring unit | |
| **2**<br> 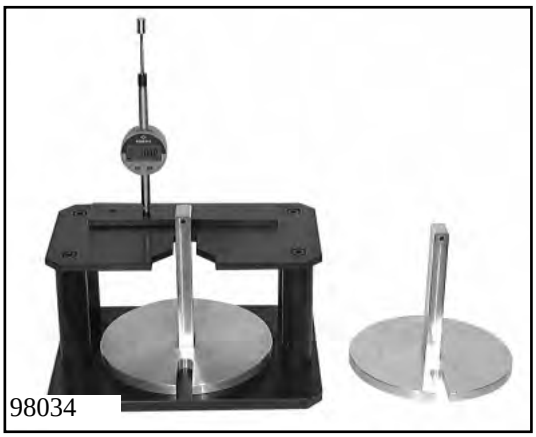 <br>98034 | 5p01 000 330<br>- Measurement device for clutch pack play<br><br>(measuring plate:<br>- short neck >20 mm<br>- long neck <20 mm<br>clutch pack thickness) | |
| **3**<br> <br>82183 | 5p01 001 415<br>- Measurement device for axial play | Identical<br><br>4 HP 22<br>5 HP 18<br>5 HP 30 |

ProCarManuals.com

| Remarks | Order No. / Application | OBJECT |
|---|---|---|
| Identical<br><br>4 HP 18 Q | 5p01 001 458<br>- Measurement device, bearing play<br><br>- Measurement device, clutch clearance (top piece) | **4**<br> 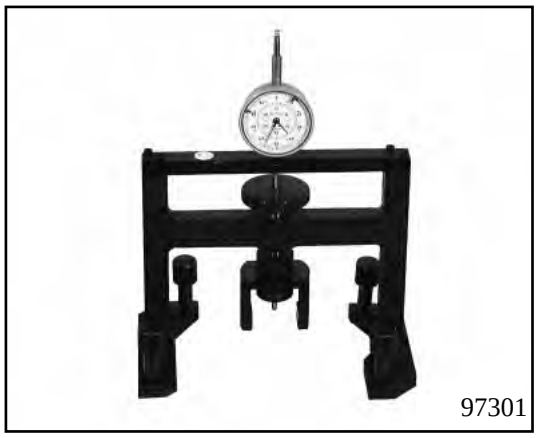 <br>97301 |
| | 5p01 002 567<br>- Adjustment tool, detent spring (BMW transmission housings up to #7128 (= 1058 301 072) and all JAGUAR transmission housings ) | **5**<br> 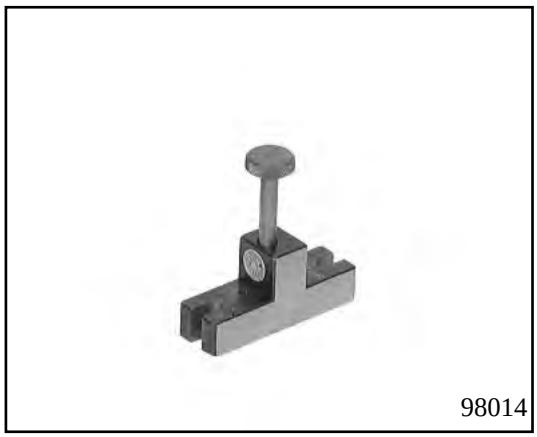 <br>98014 |
| | 5p01 002 839<br>- Adustment tool, detent spring (BMW transmission housing as from transm. serial N°. greater #7129 (= 1058 301 082 or newer)) | **6**<br> <br>97303 |

ProCarManuals.com

| OBJECT | Order No. / Application | Remarks |
|---|---|---|
| **7**<br> <br>98006 | 5p01 003 040<br>- Test plate for clutches A-F | |
| **8**<br> <br>97205 | 5w46 000 003<br>- Adapter piece for lifting device | Identical<br><br>5 HP 30 |
| **9**<br> <br>97206 | 5w46 000 004<br>- Handle for lifting device | Alternative to<br><br>5w46 000 003 |

ProCarManuals.com

| Remarks | Order No. / Application | OBJECT |
|---|---|---|
| Identical<br><br>4 HP 14 Q<br>4 HP 18 Q<br>4 HP 22<br>5 HP 18 | 5x46 000 167<br>- Assembly bracket for pressing down cup spring C<br><br>(equivalent to part 3 of device 5x46 000 167) | **10**<br> <br>97305 |
| Identical<br><br>4 HP 18 Q | 5x46 000 291<br>- Drift for dowel pin in the selector shaft | **11**<br> <br>97306 |
| Identical<br><br>5 HP 18<br>5 HP 30 | 5x46 000 763<br>- Work bench holder for assembly bracket | **12**<br> 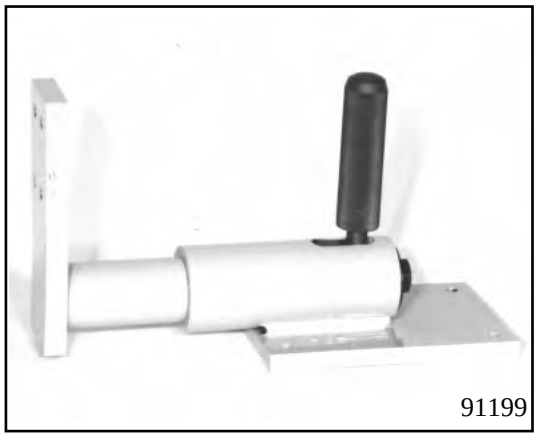 <br>91199 |

ProCarManuals.com

| OBJECT | Order No. / Application | Remarks |
|---|---|---|
| **13**<br> <br>92208 | 5x46 000 787<br>- Slotted-nut wrench | Identical<br><br>5 HP 30 |
| **14**<br> <br>92209 | 5x46 000 831<br>- Lifting device for cylinder F | Identical<br><br>5 HP 30 |
| **15**<br> <br>92213 | 5x46 000 916<br>- Supporting fixture for tower I | Identical<br><br>5 HP 30 |

ProCarManuals.com

| Remarks | Order No. / Application | OBJECT |
|---|---|---|
| Identical<br><br>5 HP 30 | 5x46 000 917<br>- Supporting fixture for tower II | **16**<br> <br>97214 |
| Identical<br><br>5 HP 30 | 5x46 000 931<br>- Assembly bracket for pressing down cup spring F | **17**<br> <br>97216 |
| Identical<br><br>5 HP 30 | 5x46 000 945<br>- Press-in fixture for ball thrust bearing, transmission extension | **18**<br> 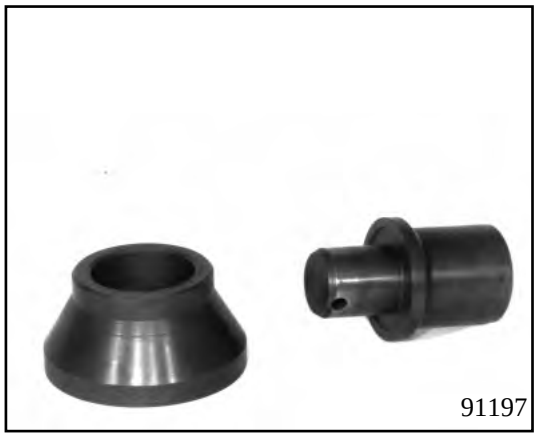 <br>91197 |

ProCarManuals.com

| OBJECT | Order No. / Application | Remarks |
|---|---|---|
| **19**<br> 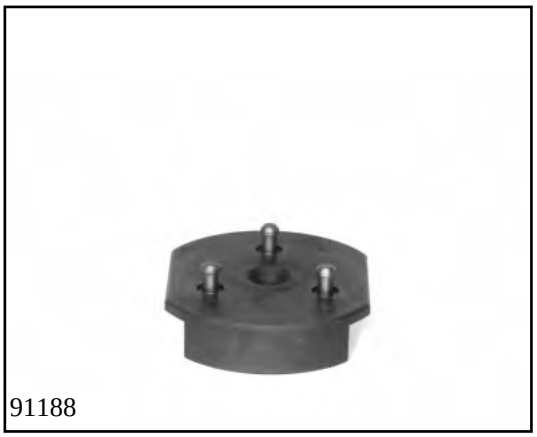 <br>91188 | 5x46 000 946<br>- Counter support for output flange | Identical<br><br>5 HP 30 |
| **20**<br> <br>92217 | 5x46 000 949<br>- Lifting device fixture for tower II | Identical<br><br>5 HP 30 |
| **21**<br> <br>97219 | 5x46 000 953<br>- Assembly drift for shaft seal, pump | Identical<br><br>5 HP 30 |

ProCarManuals.com

| Remarks | Order No. / Application | OBJECT |
|---|---|---|
| Identical<br><br>5 HP 30 | 5x46 000 954<br>- Assembly for needle roller bearing, pump | **22**<br> 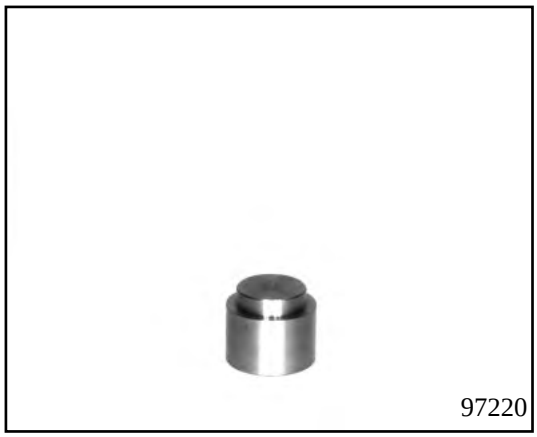 <br>97220 |
| Identical<br><br>5 HP 30 | 5x46 001 006<br>- Assembly drift for needle roller bearing, cylinder F | **23**<br> 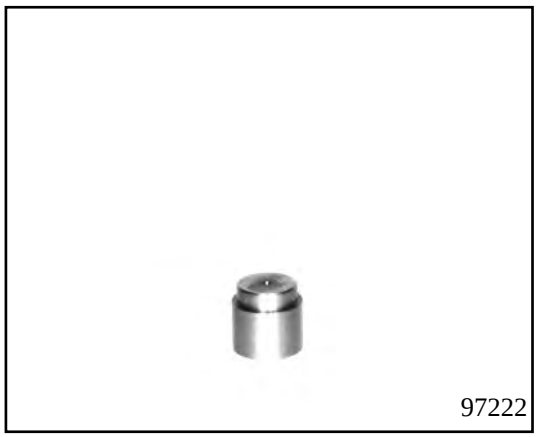 <br>97222 |
| Identical<br><br>5 HP 30 | 5x46 001 007<br>- Locating pin for oil supply (2 items) | **24**<br> 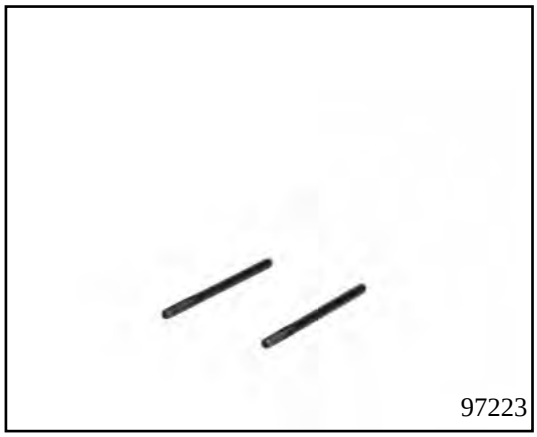 <br>97223 |

ProCarManuals.com

| OBJECT | Order No. / Application | Remarks |
|---|---|---|
| **25**<br> 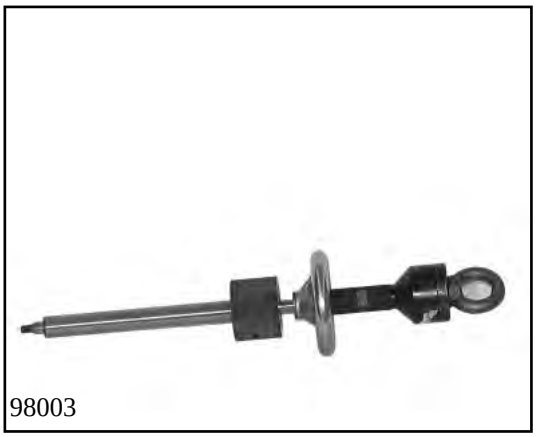 <br>98003 | 5x46 001 077<br>- Lifting device, tower I | |
| **26**<br> <br>97307 | 5x46 001 135<br>- Drift for plug in transmission housing | |
| **27**<br> 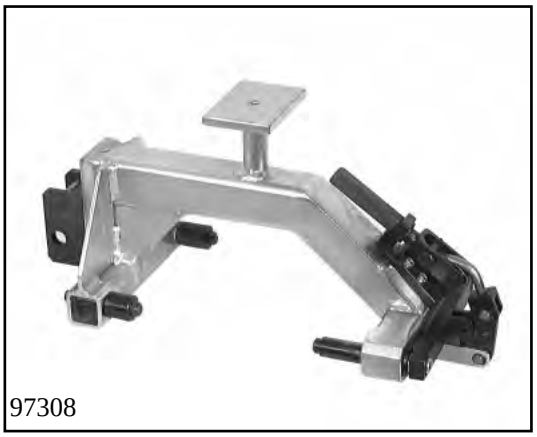 <br>97308 | 5x46 001 208<br>- Assembly bracket, transmission, complete | |

ProCarManuals.com

| Remarks | Order No. / Application | OBJECT |
|---|---|---|
| | 5x46 001 261<br>- Drift, shaft seal, selector shaft | **28**<br> <br>98001 |
| | 5x46 001 534<br>- Drift for oil pipe | **29**<br> <br>97314 |
| | 5x46 001 499<br>- Assembly bracket for pressing down cup spring A | **30**<br> <br>97310 |

ProCarManuals.com

| OBJECT | Order No. / Application | Remarks |
|---|---|---|
| **31**<br> <br>97311 | 5x46 001 500<br>- Assembly bracket for pressing down cup spring B | |
| **32**<br> <br>97312 | 5x46 001 501<br>- Assembly bracket for pressing down cup spring D | |
| **33**<br> <br>97313 | 5x46 001 502<br>- Assembly bracket for pressing down cup spring E | |

ProCarManuals.com

| Remarks | Order No. / Application | OBJECT |
|---|---|---|
| | 5x46 001 930<br>- Driving tool for snap ring in the groove of the housing | **34**<br> <br>97315 |
| | 5x46 001 949<br>- Drift, shaft seal for transmission extension | **35**<br> 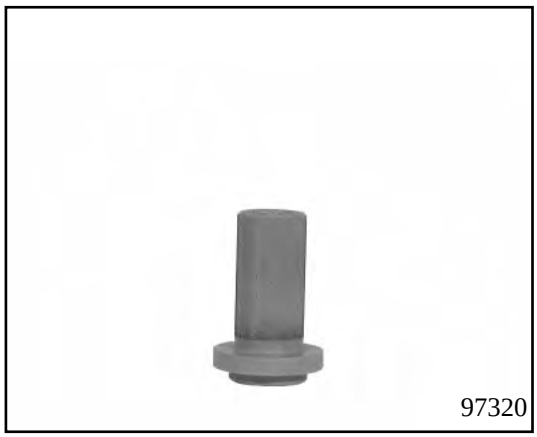 <br>97320 |
| | 5p95 000 410<br>- Extracting handle for sealing sleeves | **36**<br> 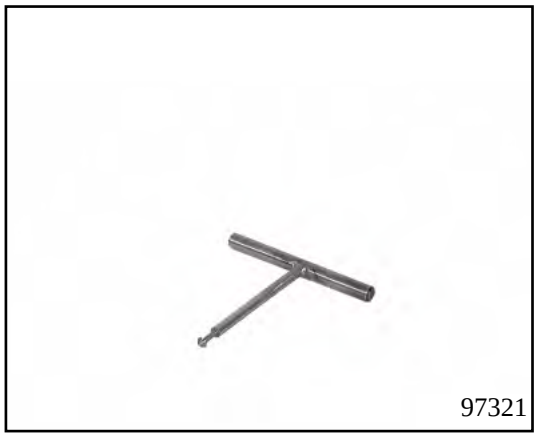 <br>97321 |

ProCarManuals.com

| OBJECT | Order No. / Application | Remarks |
|---|---|---|
| **37**<br> <br>76047 | 5x56 000 021<br>- Sleeve for pump test | Identical<br><br>3 HP 22<br>4 HP 22<br>5 HP 18<br>5 HP 30 |
| **38**<br> <br>76046 | 5x56 000 090<br>- Extracting handles for converter (2 items) | Identical<br><br>3 HP 22<br>4 HP 22<br>5 HP 18<br>5 HP 30 |
| **39**<br> 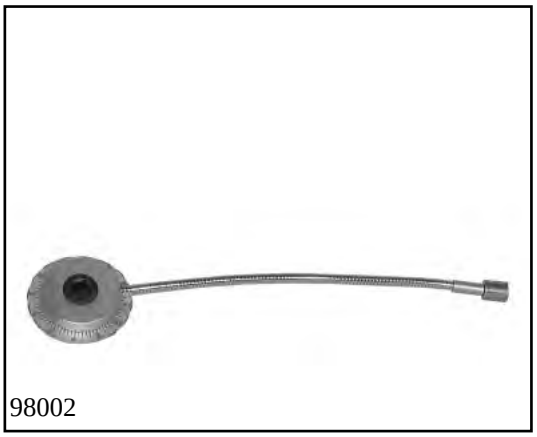 <br>98002 | 5w04 000 583<br>- Torsion measuring unit (Stahlwille 7380) | |

ProCarManuals.com

ProCarManuals.com

## 1.8 Funktion tests

### 1.8.1 Position switch

#### 1.8.1.1 Typ BMW

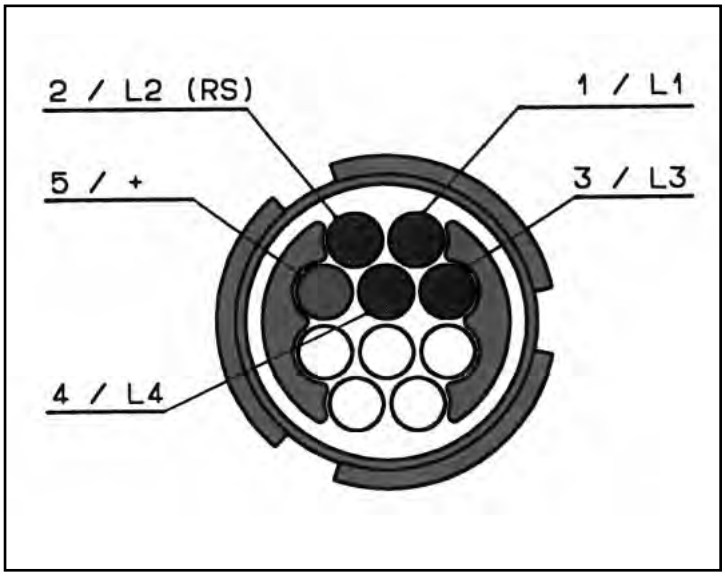


Use a multimeter to make a resistance test of the position switch according to the function table.

**Codiertabelle**

| | P | Z1 | R | Z2 | N | Z2 | D | Z3 | 4 | 3 | 2 |
|---|---|---|---|---|---|---|---|---|---|---|---|
| **L1** | 1 | 1 | 1 | 1 | 1 | 1 | 0 | 0 | 0 | 0 | 1 |
| **L2** | 1 | 0 | 0 | 0 | 1 | 0 | 0 | 0 | 0 | 0 | 0 |
| **L3** | 0 | 0 | 0 | 1 | 1 | 1 | 1 | 0 | 0 | 1 | 1 |
| **L4** | 1 | 1 | 0 | 0 | 0 | 0 | 0 | 0 | 1 | 1 | 1 |
| **RF** | 0 | 0 | 1 | 0 | 0 | 0 | 0 | 0 | 0 | 0 | 0 |

#### 1.8.1.1 Typ JAGUAR

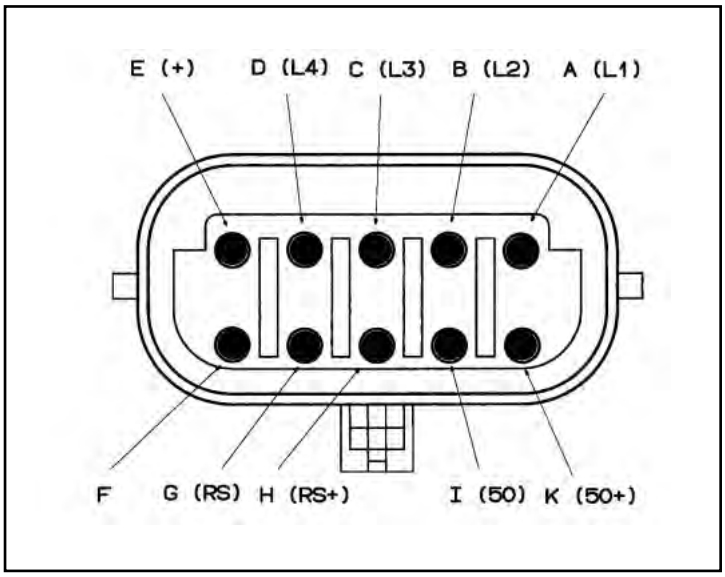


Use a multimeter to make a resistance test of the position switch according to the function table.

**Codiertabelle**

| Selector Position | L1 | L2 | L3 | L4 | D zu 4 | 50 (AS) | RS |
|---|---|---|---|---|---|---|---|
| Parken | 1 | 0 | 0 | 0 | 0 | 1 | 0 |
| R. Gang | 0 | 1 | 0 | 0 | 0 | 0 | 1 |
| Neutral | 1 | 1 | 1 | 0 | 0 | 1 | 0 |
| Pos. D | 1 | 0 | 1 | 1 | 0 | 0 | 0 |
| Pos. 4 | 1 | 0 | 1 | 1 | 1 | 0 | 0 |
| Pos. 3 | 0 | 1 | 1 | 1 | 1 | 0 | 0 |
| Pos. 2 | 0 | 0 | 0 | 1 | 1 | 0 | 0 |
| Pos. 1 | 0 | 0 | 1 | 0 | 1 | | |

ProCarManuals.com

ProCarManuals.com

## 2. Disassembly

### 2.1 Disassembly of the transmission as of assembly group

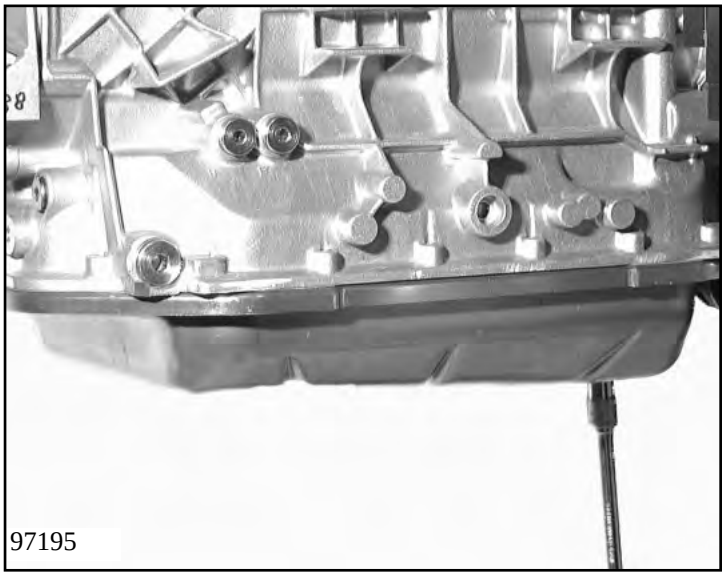
97195

Clamp transmission onto retaining bracket 5x46 001 208 and, fasten on to assembly trolley or to work bench holder 5x46 000 763.
Remove the oil drain plug and let the oil run out.

<u>Wrench size</u>
Oil drain plug = Allen screw, 8mm
Oil filler plug = Allen screw, 8mm

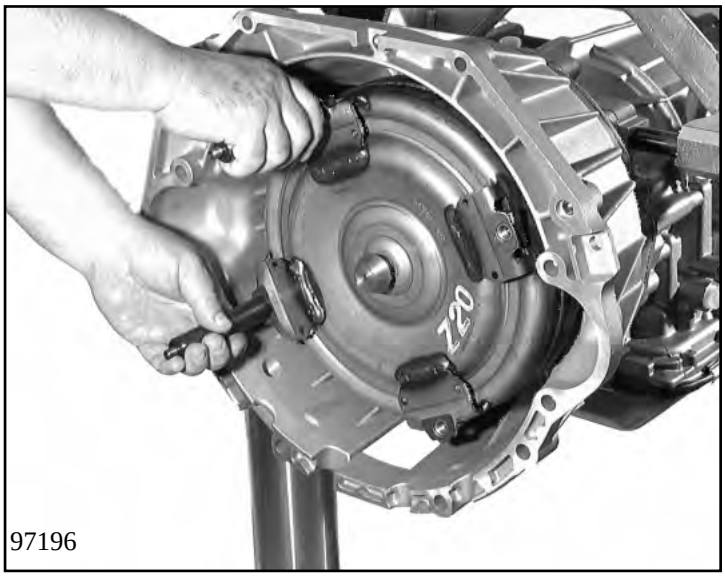
97196

Remove the converter bracket and remove the converter using two extractor handles 5x56 000 090.

(Wrench size = 13 mm)
(Wrench size = 17 mm)

**Important!**
Draining oil.
Do not damage the converter bearing and shaft seal of the pump.

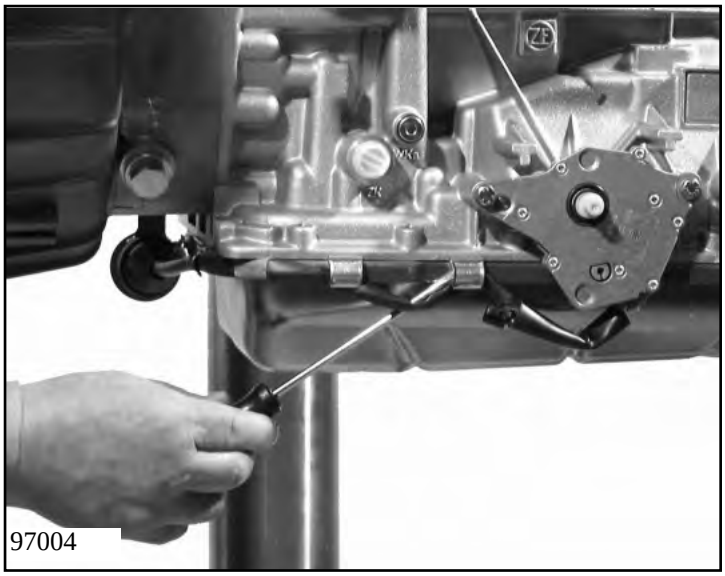
97004

Use a screwdriver to lift out the wiring harness at the cable clamps.

ProCarManuals.com

Turn the transmission 180°.
Disconnect the wiring harness plug and pull it out.
Remove the plug holder by unscrewing the machine screw.

(Wrench size = hexagon, 10 mm)

97005

Remove the protective transport cap from the selector shaft.
Move selector lever to the “N” position.
Unscrew the two hexagonal screws and remove the position switch.

(Wrench size = hexagonal, 10 mm)

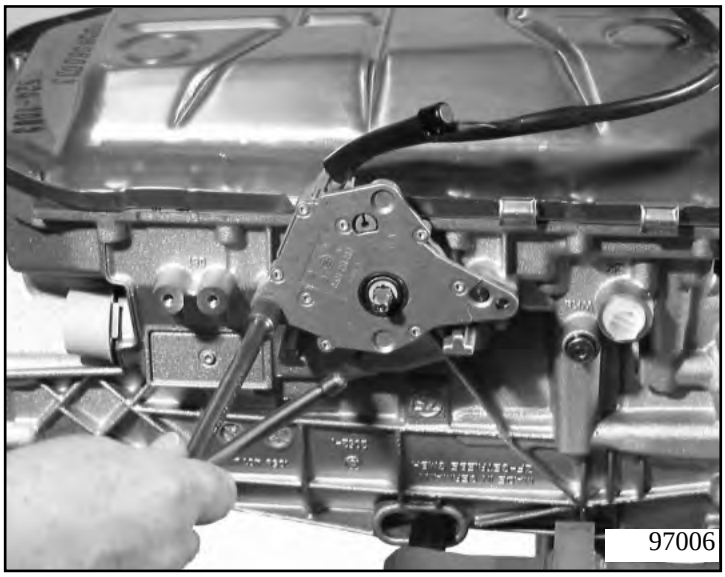
97006

Remove the 22 machine screws used to fasten the oil pan, and lift off the oil pan and gasket.

(Wrench size = Torx - TX 27)

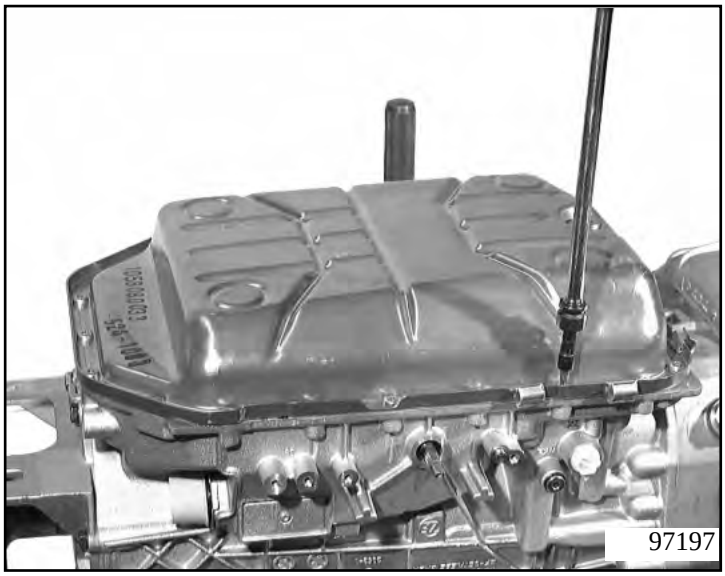
97197

**Important!**
Remove any remains of the gasket from the sealing surface.

ProCarManuals.com

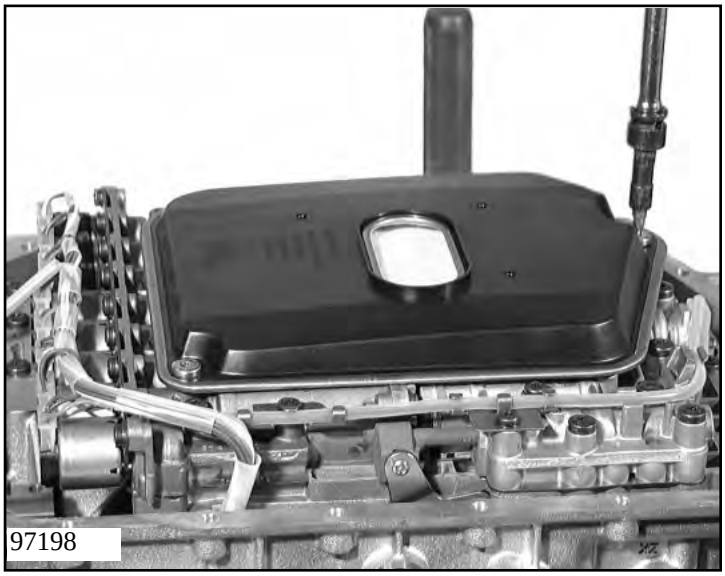
97198

Remove the filter and the O-ring by unscrewing the 2 machine screws.

(Wrench size = Torx - TX 27)

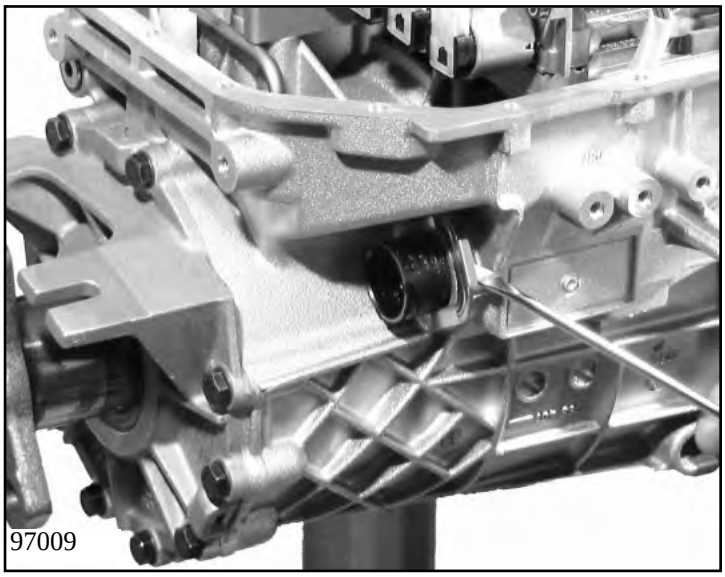
97009

Disconnect the transport protection cap from the wiring harness socket, unlock the retaining clip using a suitable screwdriver, and press the socket into the housing by hand.

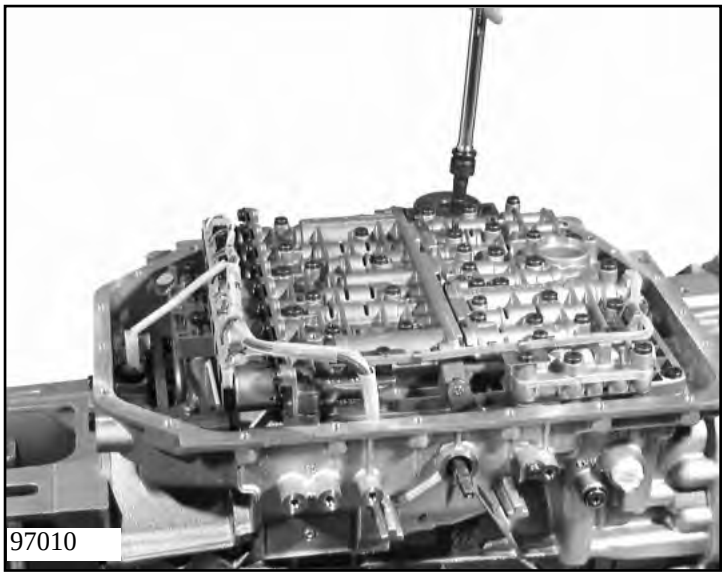
97010

Loosen the inductive transmitter screw and remove together with holder. Unscrew the screws with **large heads** (M6), und remove the control unit as a complete unit.

(Wrench size = Torx - TX 27)

ProCarManuals.com

Unscrew the fixing screws for the oil pipe brackets.
Always use a suitable tool to remove the oil pipe from brake E.
Due to the risk of contamination, we recommend you to renew all the pipes.

(Wrench size = Torx - TX 27)

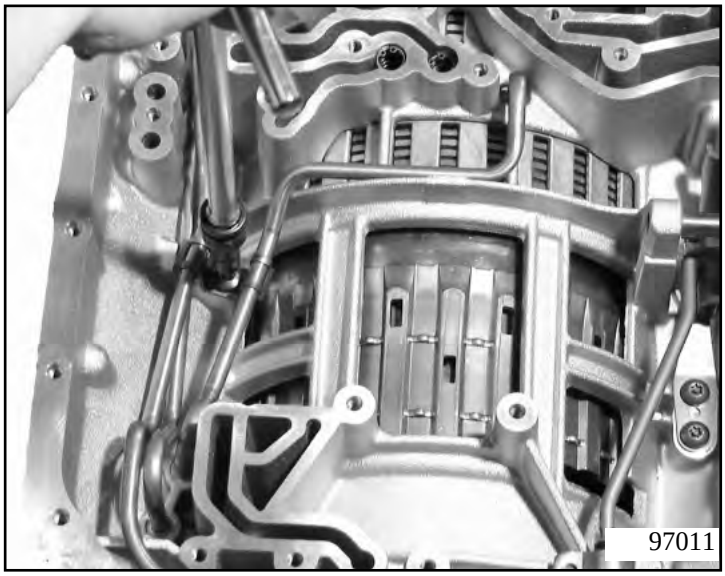


Release the two retaining rings for locking the pressure springs and remove them both.

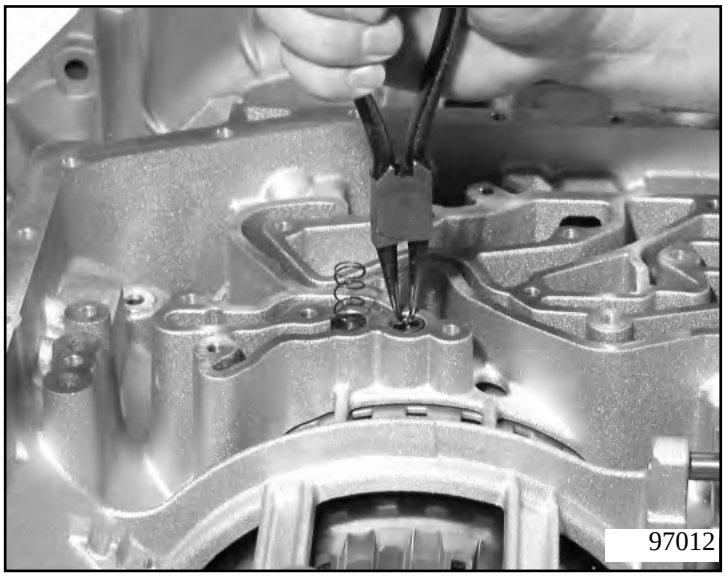


Using the extractor handle (similar to 5p95 000 410), pull out the two sealing sleeves at the base of the bores.

ProCarManuals.com

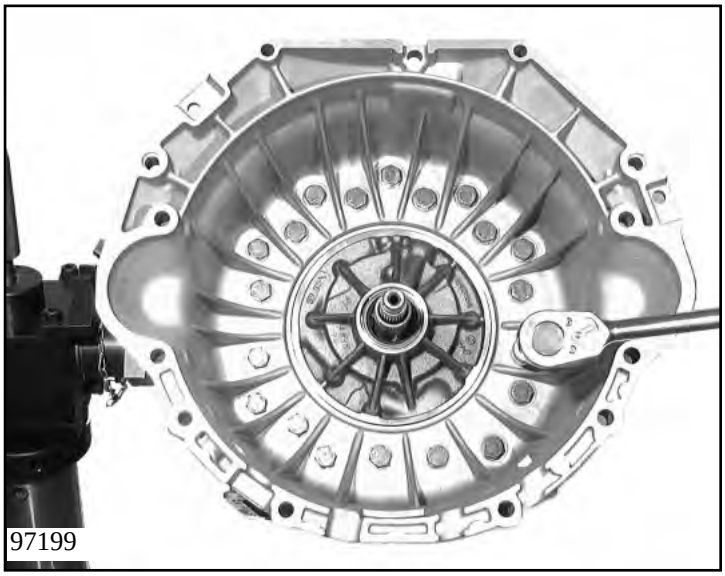
97199

Turn the transmission 90° and remove the converter bell housing. Normally, it should be removed together with the intermediate plate. To do this, loosen and remove the 14 hexagonal screws.
Pull off the gasket.

(Size accross flats = 17 mm)

**Note!**
The 6 other screws should be loosed now to simplify the later disassembly (see next picture).

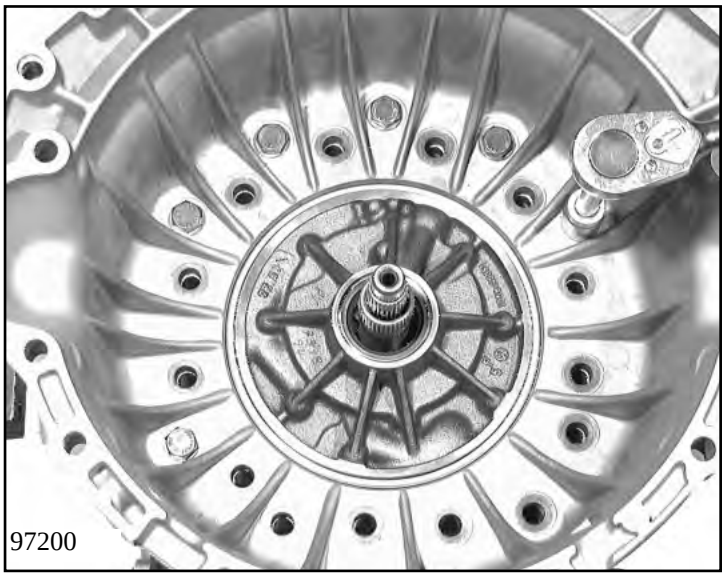
97200

If only the converter bell housing is to be removed (damage!) unscrew the six remaining hexagonal screws and separate the converter bell housing from the intermediate plate. The intermediate plate remains on the transmission housing.

(Size accross flats = 17 mm)

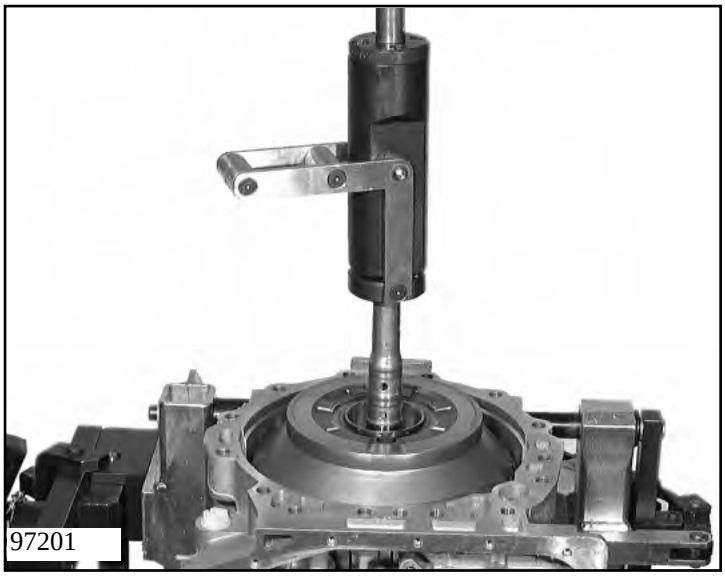
97201

Take off the shim and the axial needle roller bearing.
Remove tower II (input with clutches A and B).
To do this, lock lifting device 5x46 000 949 (fastened together with the 5w46 000 004 adapter piece) onto the input shaft.
Remove the complete unit and device by hand.
Turn tower II 180°, and put it into supporting fixture 5x46 000 917.

ProCarManuals.com

Use a screwdriver to remove the snap ring from the housing.
Take off the axial needle roller bearing from the hub for cylinder C.

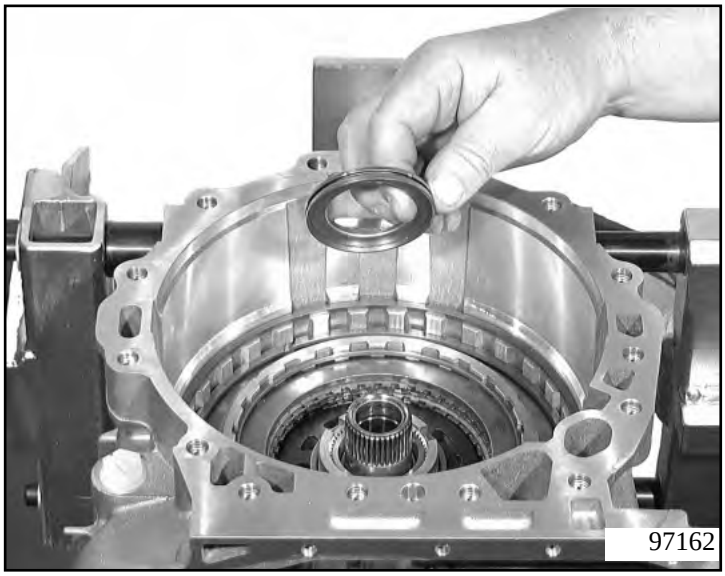


**Caution!**
The second angle thrust washer is installed in the hub of the inner disc carrier C and might become loose during washing.

**Part might be lost!**

Screw lifting device 5x46 001 077 (screwed together with the adapter piece 5w46 000 003) into the tower's planet carrier and use a crane to lift it out.
Put tower I into supporting fixture 5x46 000 916 and remove the lifting device.

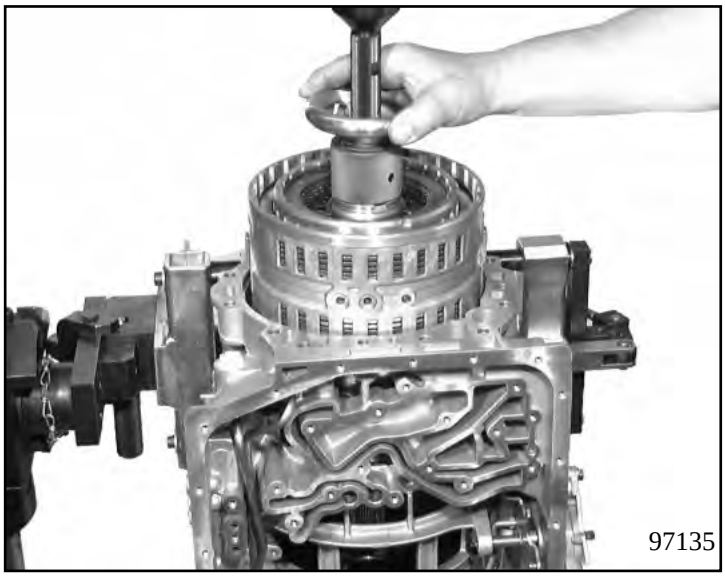


Turn the transmission 180° and loosen the 10 hexagonal screws.
Now the complete output assembly can be removed.

(Wrench size = 13 mm)

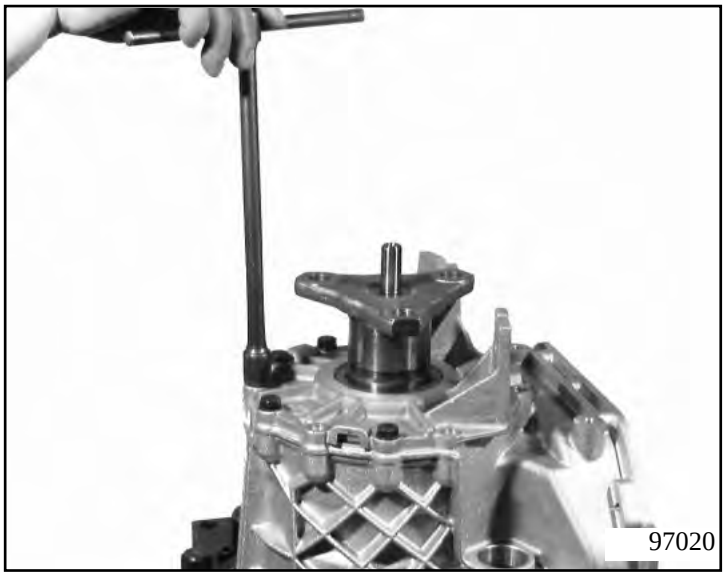


ProCarManuals.com

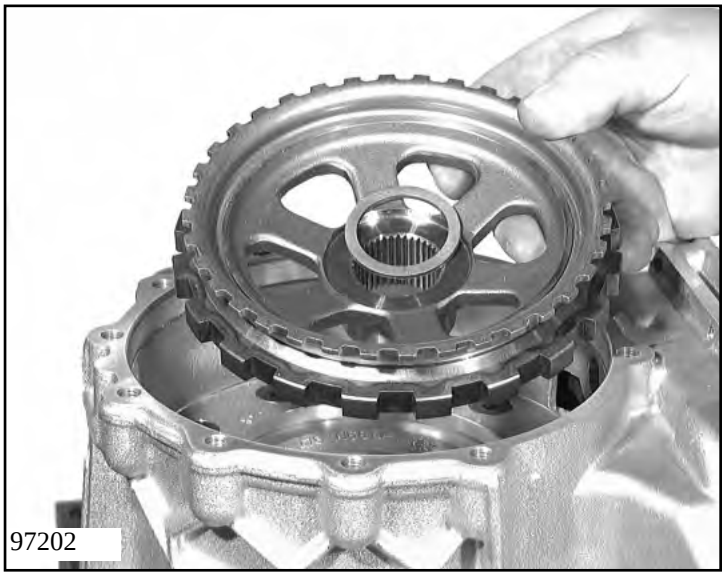
97202

Take out the shim and the parking lock wheel of the transmission housing.

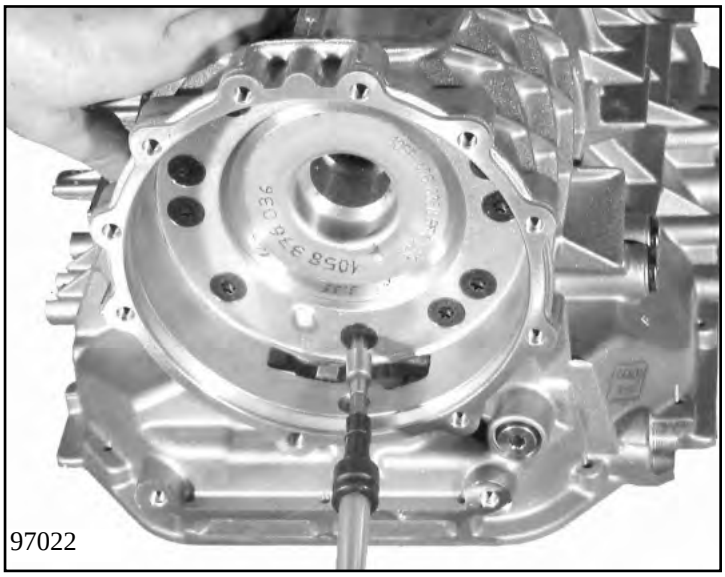
97022

Turn the transmission 90° and unscrew the 12 countersunk screws used to secure cylinder F.

(Wrench size = Torx - TX 40)

**Note!**
Turning is necessary to prevent brake F from falling out.

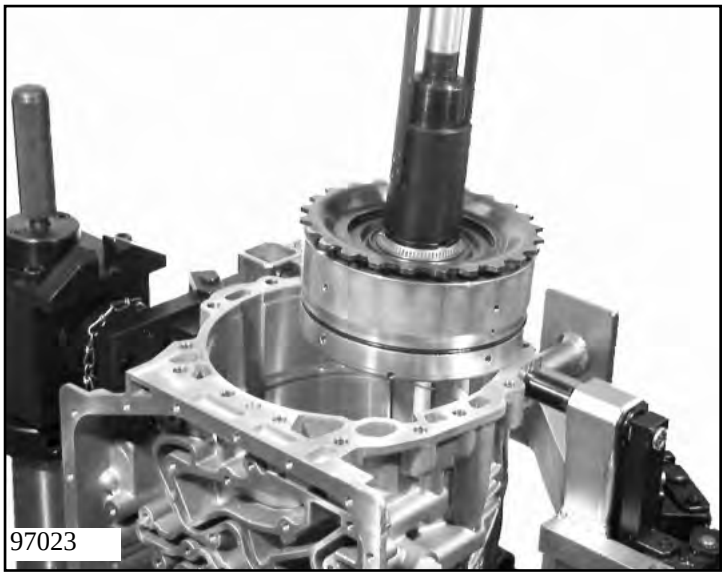
97023

Turn the transmission by 90° and insert lifting device 5x46 000 831 into cylinder F by lifting the bracket handle. Releasing the bracket handle locks the device.
Turn the device until it latches into place.

**Important!**
Do not lift with the bracket handle. Lift out cylinder F using the regular handle.

ProCarManuals.com

ProCarManuals.com

## 2.2 Brake F with freewheel, 1st gear

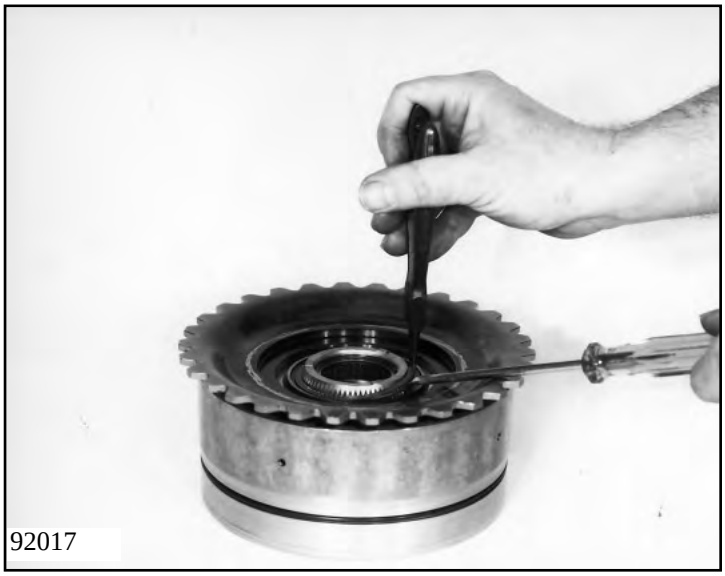
92017

The freewheel can be separated from cylinder F as a complete unit. To do this, take out the snap ring using suitable pliers and a screwdriver, and take out the complete freewheel.

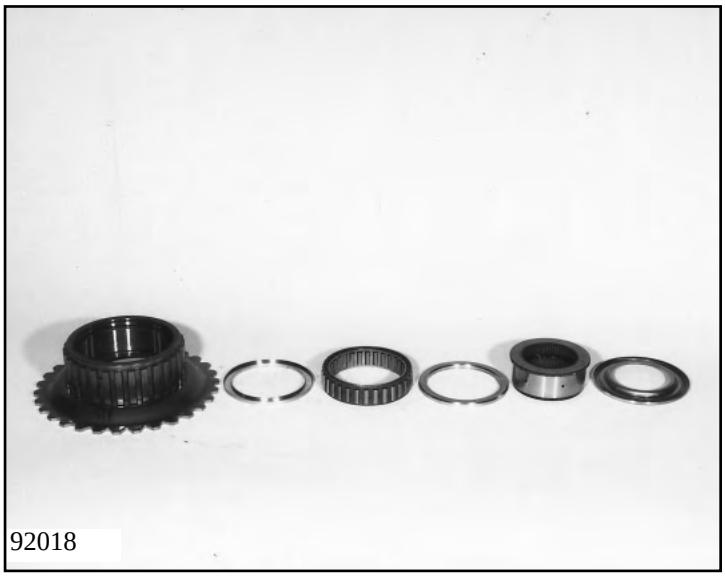
92018

Remove the snap ring and disassemble the complete freewheel down to the following parts: fixing washer, inner sprag race, cover disc, freewheel cage, cover disc, and outer sprag race.

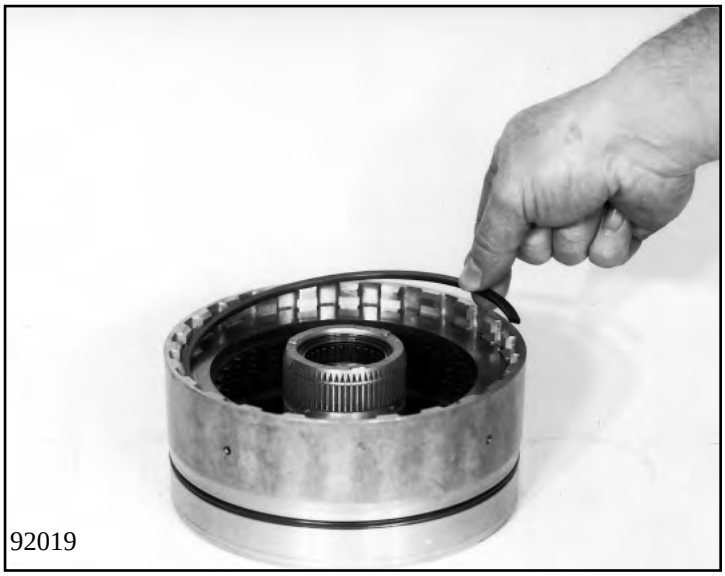
92019

Take out the snap ring and lift out the complete clutch pack of brake F.

ProCarManuals.com

Take the O-ring off cylinder F; using assembly bracket 5x46 000 931, press down the cup spring in the mandrel press and then remove the split ring.
Take out the cup spring.

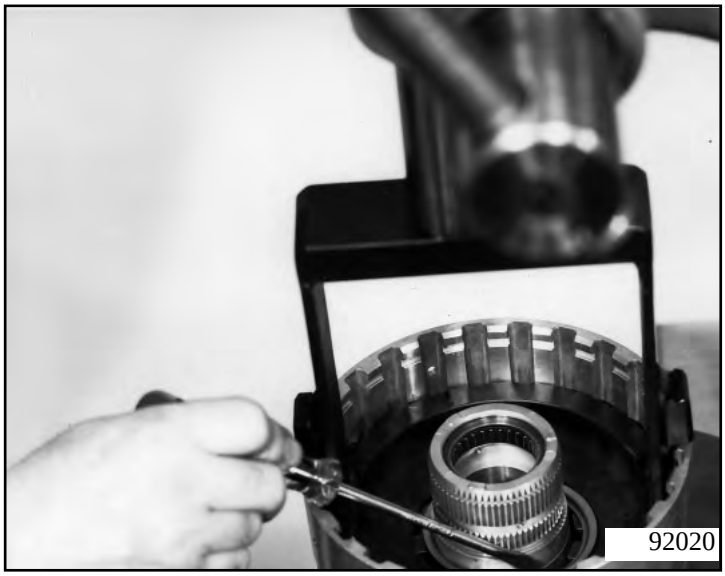


Push cylinder F out using two plastic punches.

**Important!**
Store the piston in such a way that the sealing lip is neither folded nor damaged.

Take out the snap ring and use a suitable drift to drive the needle roller bearing out of the cylinder hub.
You can use assembly bracket 5x46 000 931 as a support.

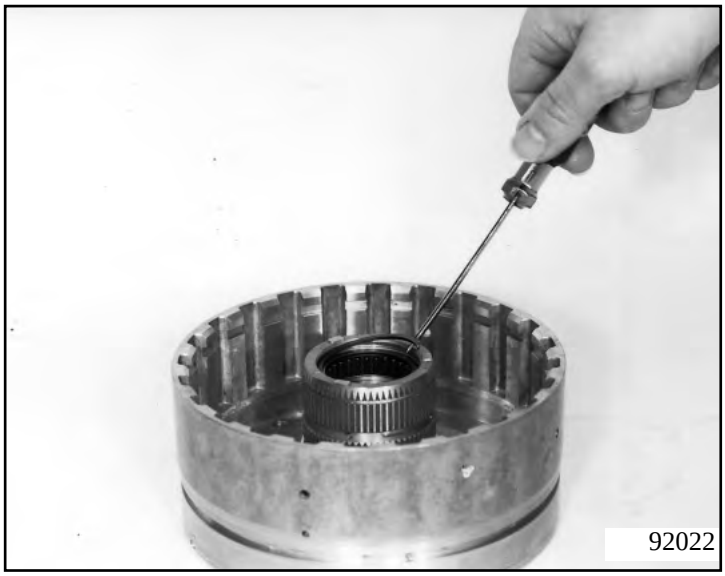


ProCarManuals.com

## 2.3 Output assembly

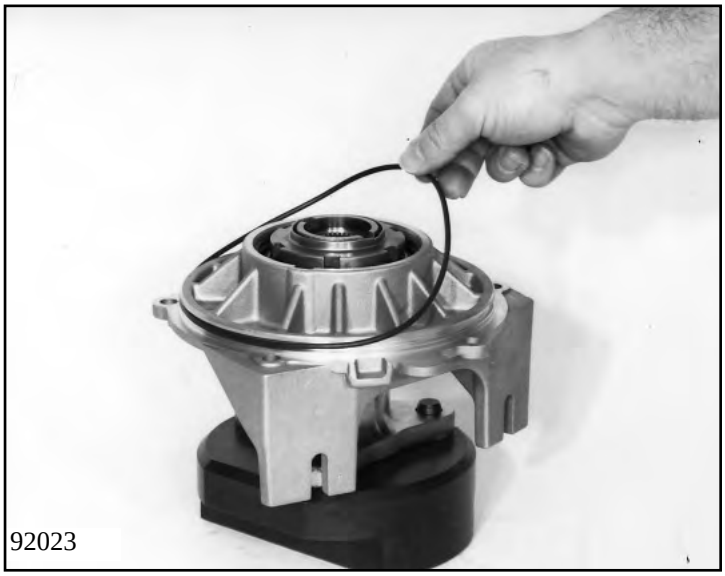
92023

Put the output assembly on counter support 5x46 000 946 and clamp the holding device in a vice.

**Important!**
Different versions are possible. Take off the O-ring from the extension.

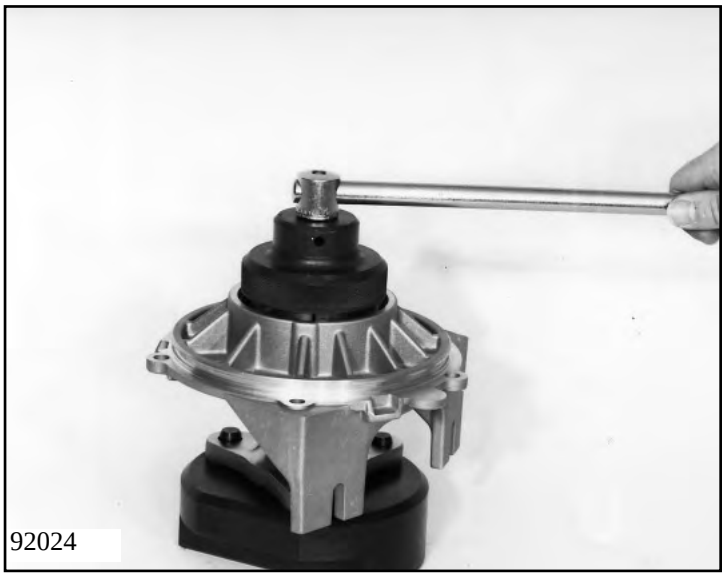
92024

Unlock the slotted nut using a suitable chisel and loosen it with slotted nut wrench 5x46 000 787.

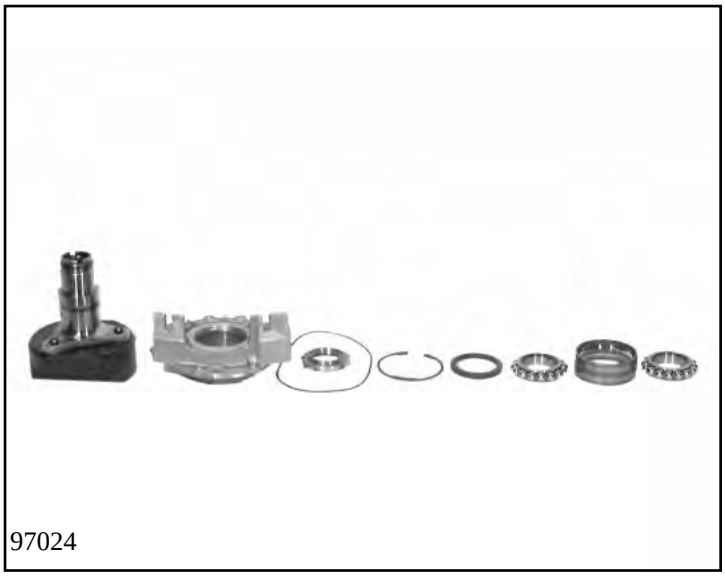
97024

Take out the snap ring with pliers and lift the extension off the output flange.
Then lever out the shaft seal using a suitable screwdriver and push out the ball bearing in the mandrel press.
If necessary, heat up the extension to approx. 70° C using a fan heater or similar device.

**Important!**
Do not mixup the two bearing inner rings; they are not interchangeable.

ProCarManuals.com

ProCarManuals.com

## 2.4 Tower I

### 2.4.1 Brake D, E and clutch C

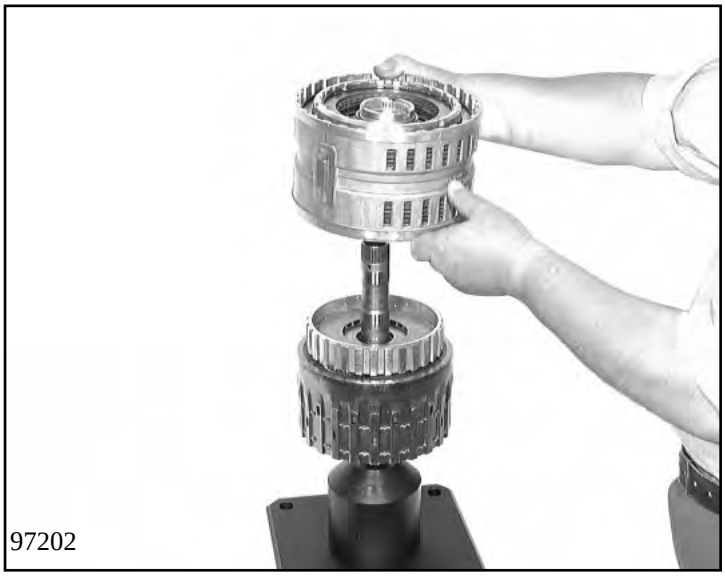
97202

Lift off brake D/E as a complete unit with clutch C.

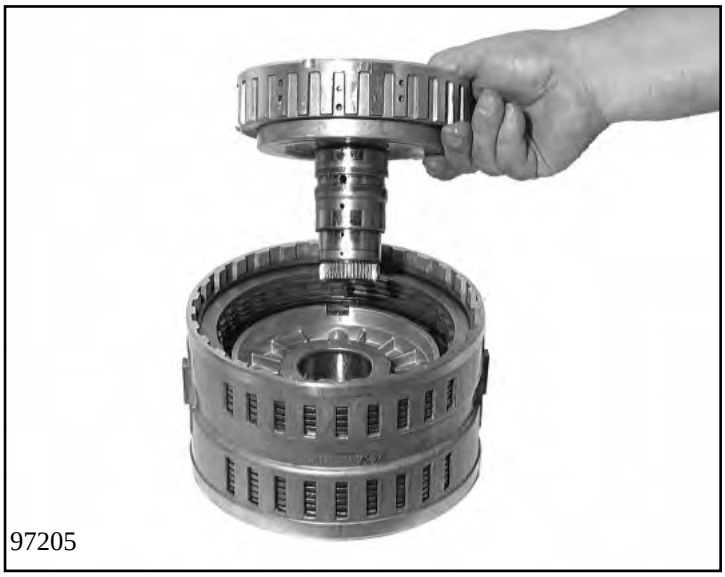
97205

Take out clutch C with the sun wheel shaft.
Remove the axial needle roller bearing from the hub of cylinder D.

97206

Unsnap the snap ring from brake D and take out the complete clutch pack.

ProCarManuals.com

Using assembly bracket 5x46 001 501, press down cup spring D with the mandrel press, take out the snap ring, and remove the cup spring.

Turn over cylinder D/E, take out the brake E snap ring, and remove the complete clutch pack.

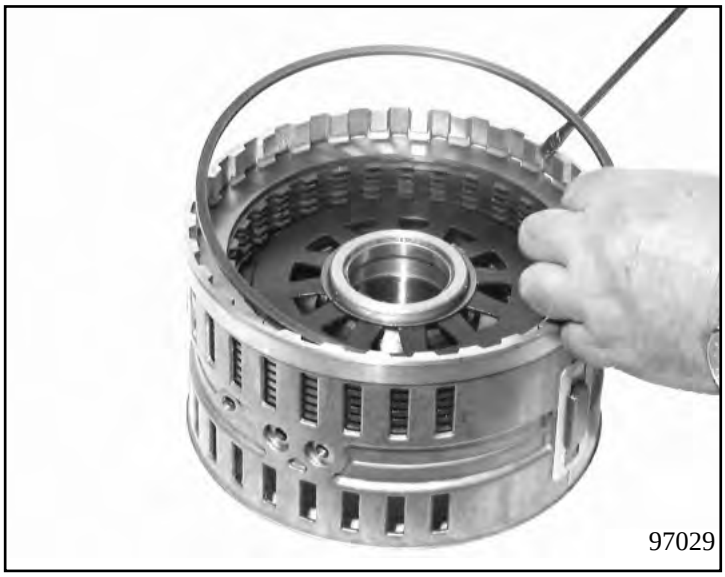


Using assembly bracket 5x46 001 502, press down cup spring E in the mandrel press, take out the split stop ring, and remove the cup spring.

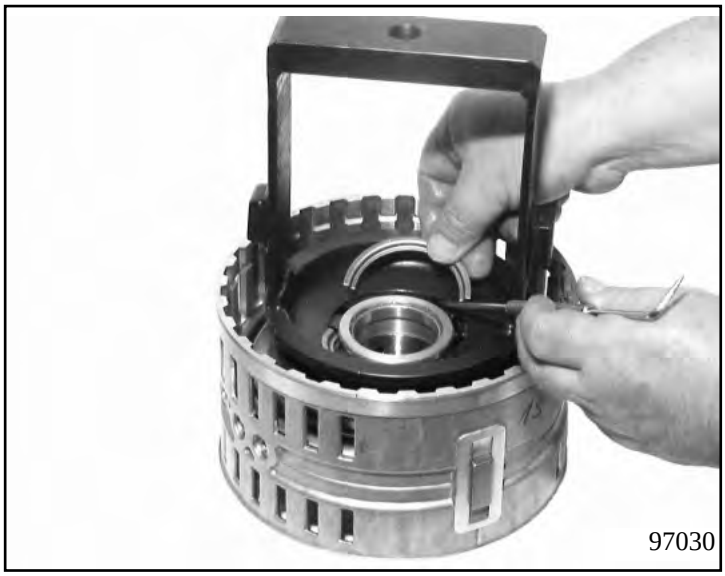


ProCarManuals.com

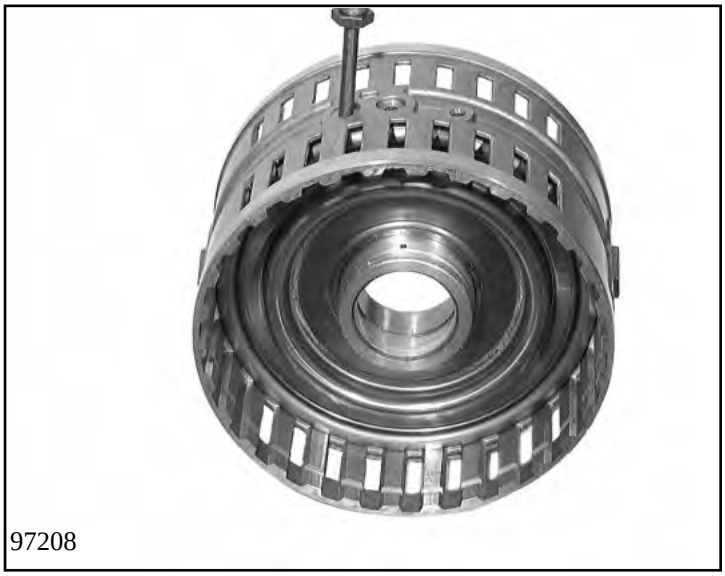
97208

Apply the compressed-air gun to the oil feed bore and force out pistons D and E with compressed air.
Remove the O-rings on the cylinder and piston E and the two O-rings on piston D.

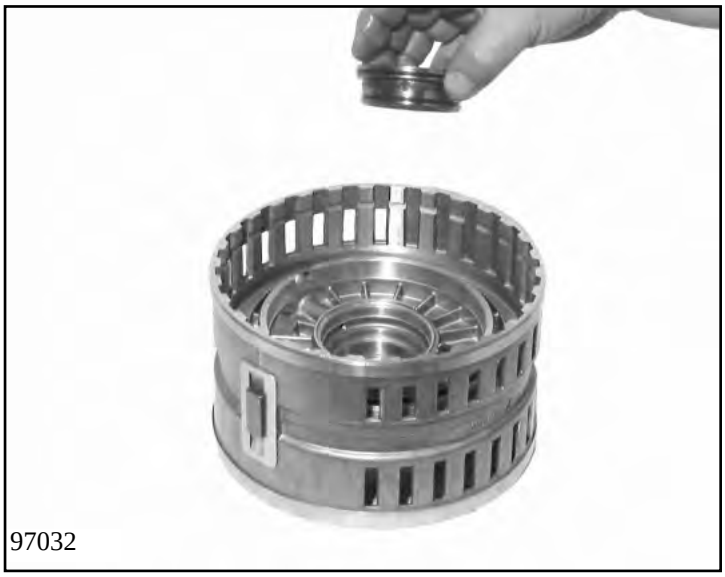
97032

Force the bushing out of cylinder D/E.
Remove the two O-rings from the bushing.

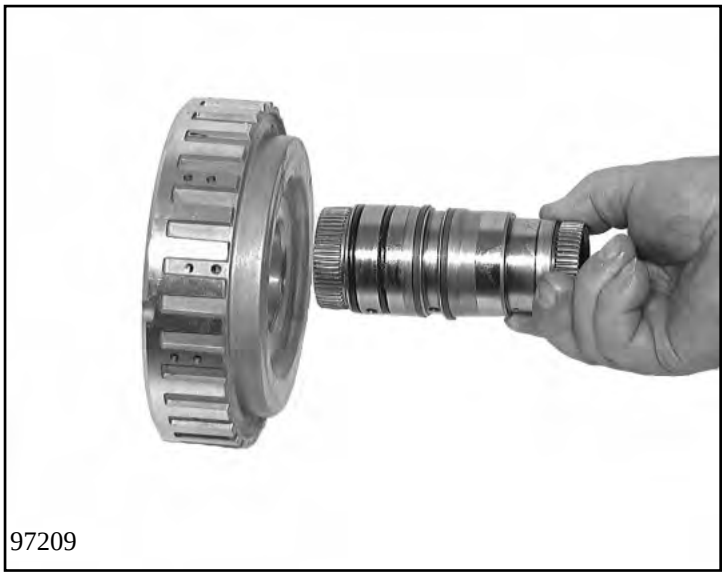
97209

Press out the sun wheel shaft of the cylinder C using a suitable mandrel. Take the two O-rings and the two rectangular-section rings off the shaft.

ProCarManuals.com

Unsnap the snap ring for clutch C and remove the complete clutch pack.

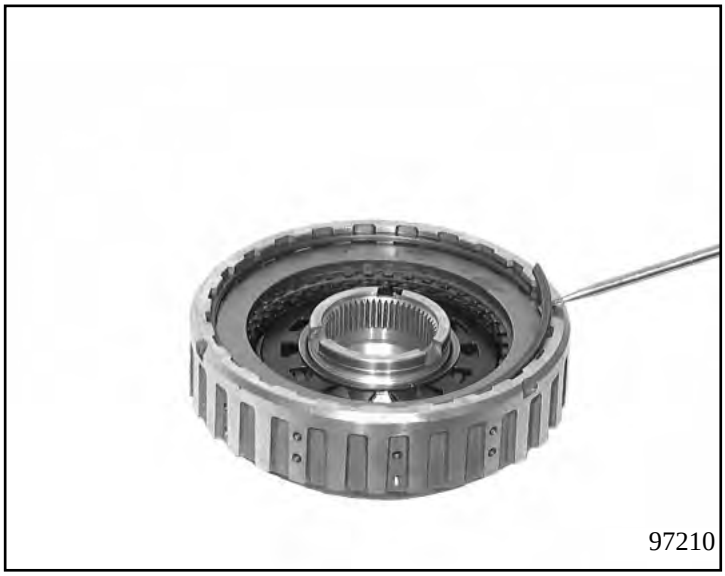
97210

Using assembly bracket 5x46 030 167, press down cup spring C with the mandrel press, take out the split stop ring and remove the cup spring.

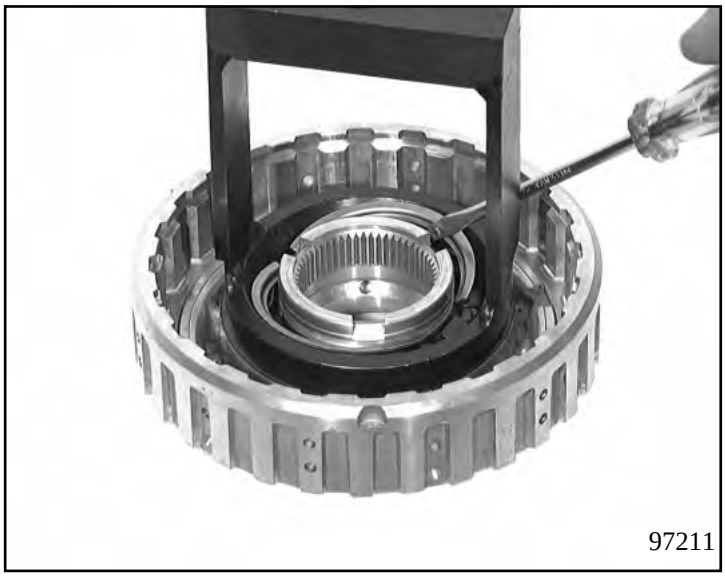
97211

Carefully press out piston C using compressed-air via the oil feed bore.
When doing this, block the other two bores.

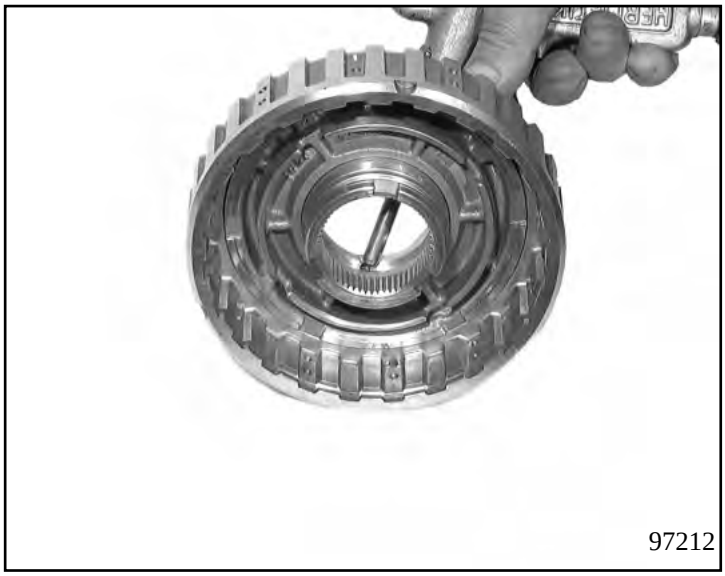
97212

**Important!**
Remove the two O-rings from the piston.

ProCarManuals.com

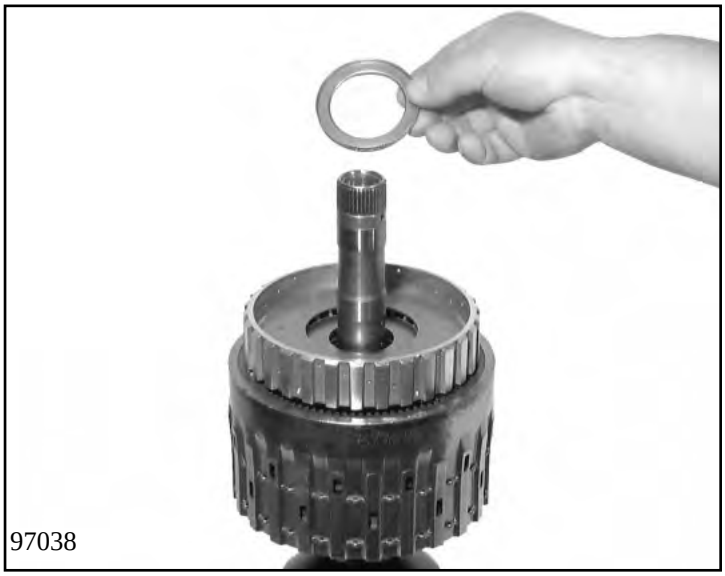


Lift off the needle roller bearing.

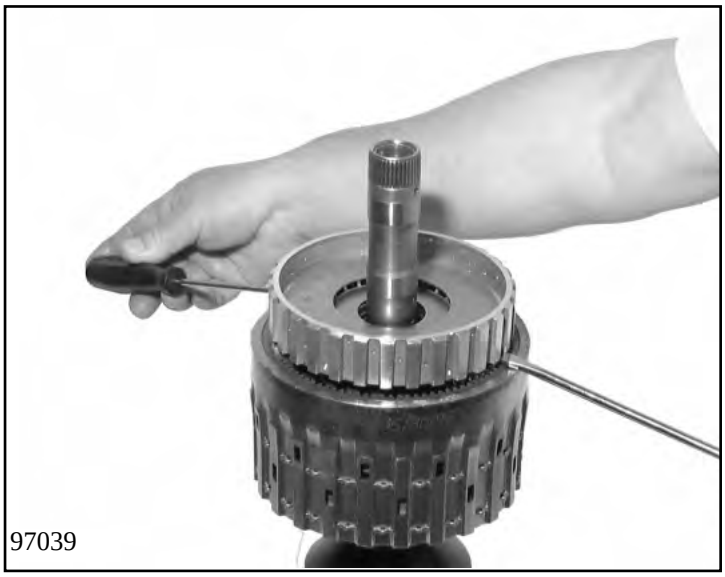


Using two screwdrivers, lift up planet carrier E and take off the thrust washer.

ProCarManuals.com

### 2.4.2 Planetary drive (III, II and I)

Lift off planetary drive I + II from planetary drive III.

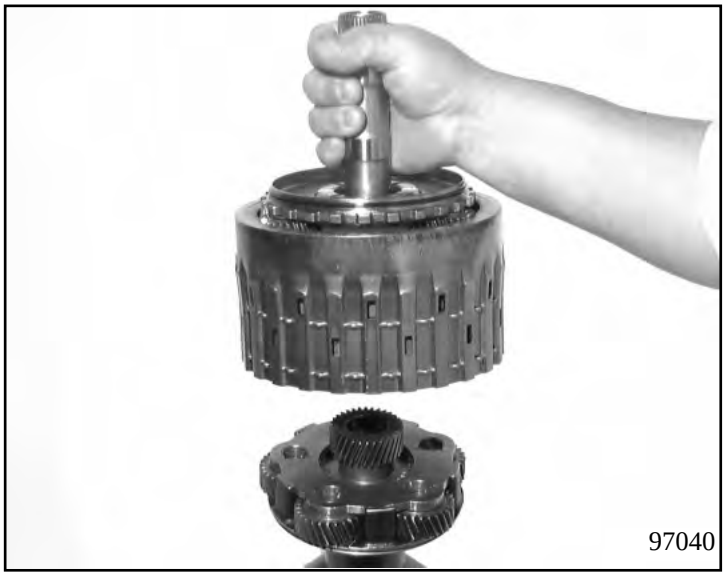


Disassemble planetary drive III by taking the sun wheel shaft out of planet carrier III.

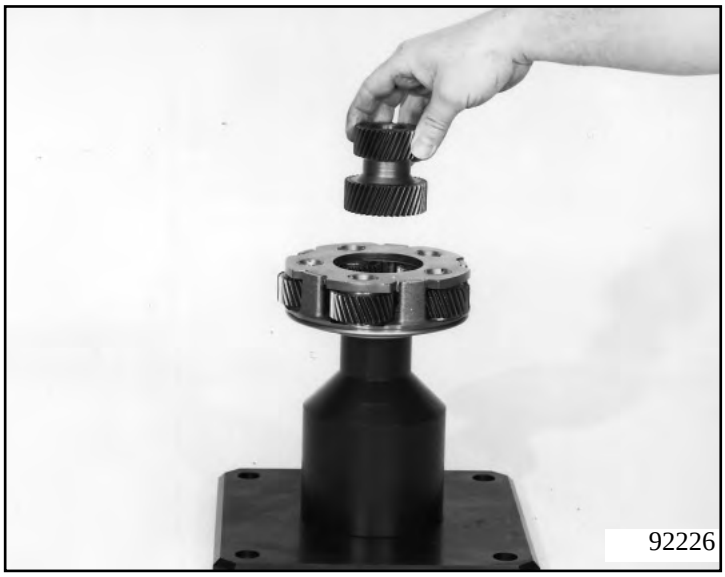


Put planetary drive I + II into device 5x46 000 916. Take out the snap ring and remove ring gear III.

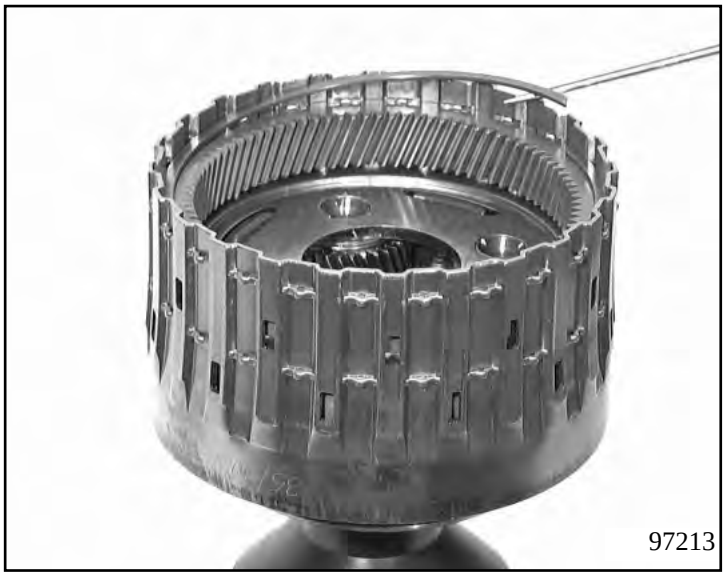


ProCarManuals.com

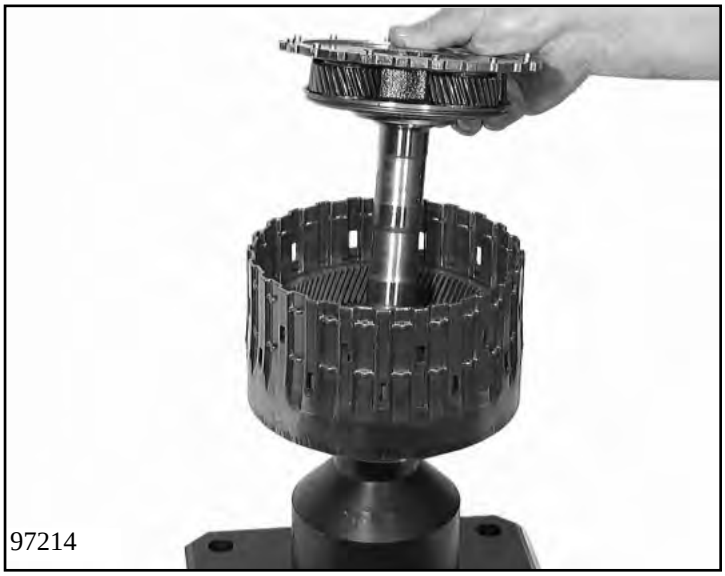


Lift out planet carrier II.

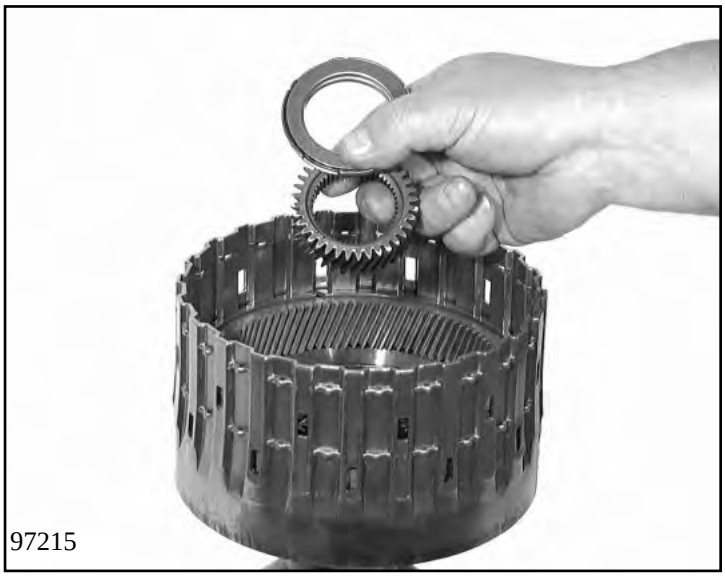


Take out the axial needle roller bearing and sun wheel.

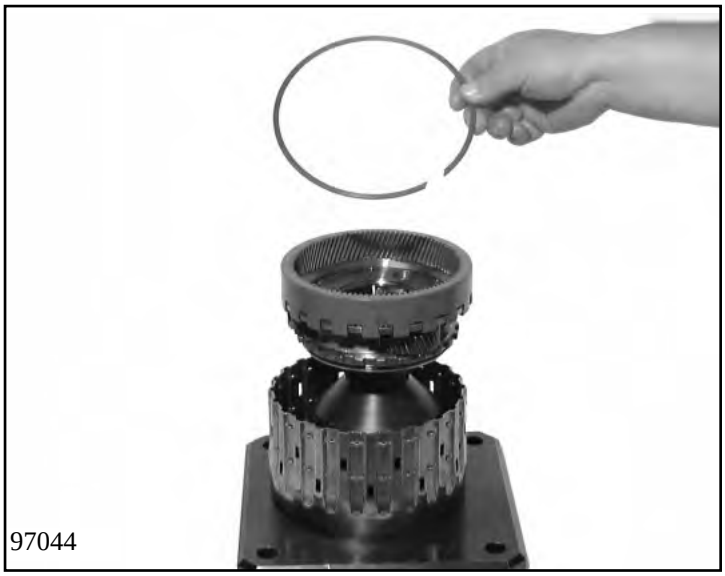


Take out the snap ring and separate planet carrier I and ring gear II from ring gear I.

ProCarManuals.com

Ring gear II can be separated from planet carrier I by taking out the snap ring. Remove the O-ring from planet carrier I.

ProCarManuals.com

## 2.5 Tower II

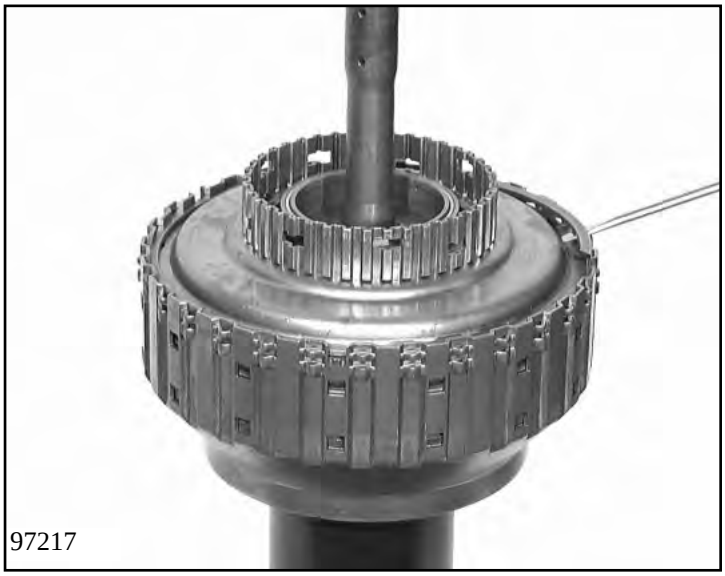
97217

Take out the snap ring and remove inner disc carrier C.

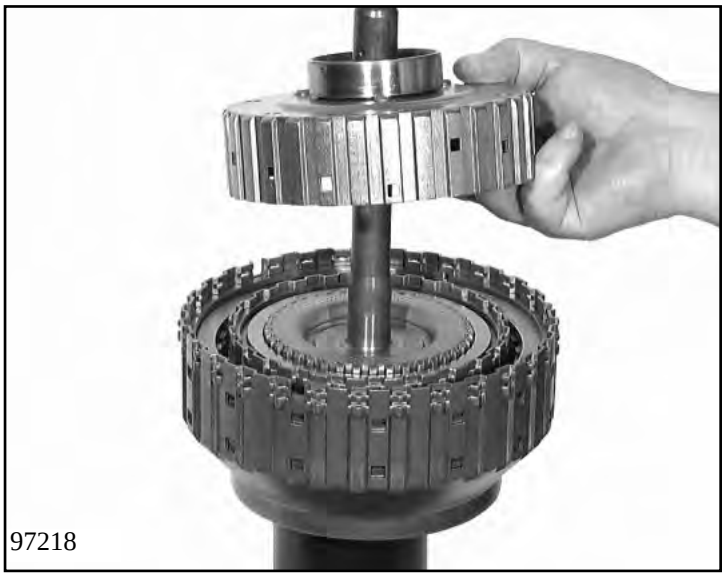
97218

Take out inner disc carrier B and lift off the axial needle roller bearing from the intermediate shaft.

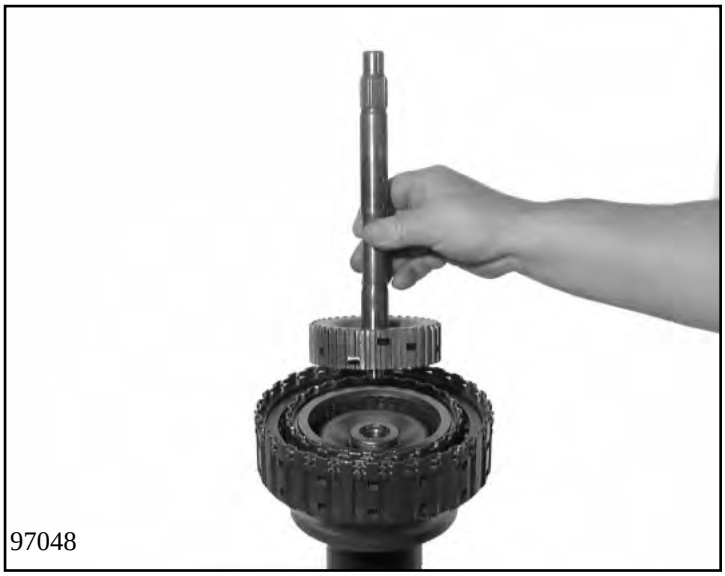
97048

Lift up the intermediate shaft with inner disc carrier A. Remove axial needle bearing.

Now turn the set by 180° and put it back into the supporting fixture.

ProCarManuals.com

Take off clutch B from clutch A/ input shaft.

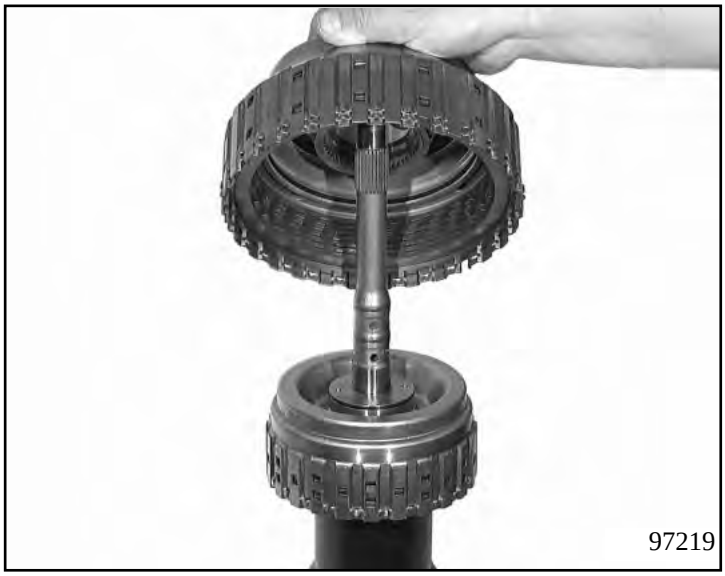


**Note!**
The input shaft is meshed with clutch B.

Unsnap clutch B's snap ring and take out the complete clutch pack.

Press down the cup spring in the mandrel press using assembly bracket 5x46 001 500. Remove the snap ring with suitable pliers. Take out the fixing washer and the cup spring.

ProCarManuals.com

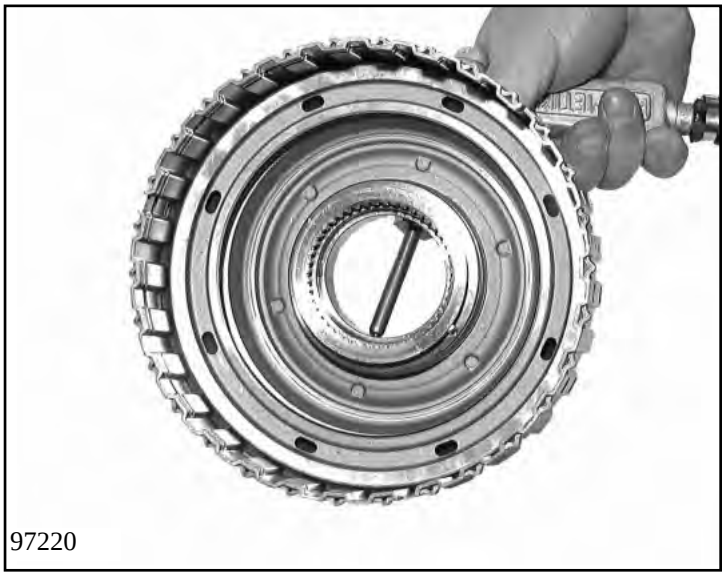


Cover one of the two oil supply bores and press out the piston with compressed air. Remove three O-rings from piston B.

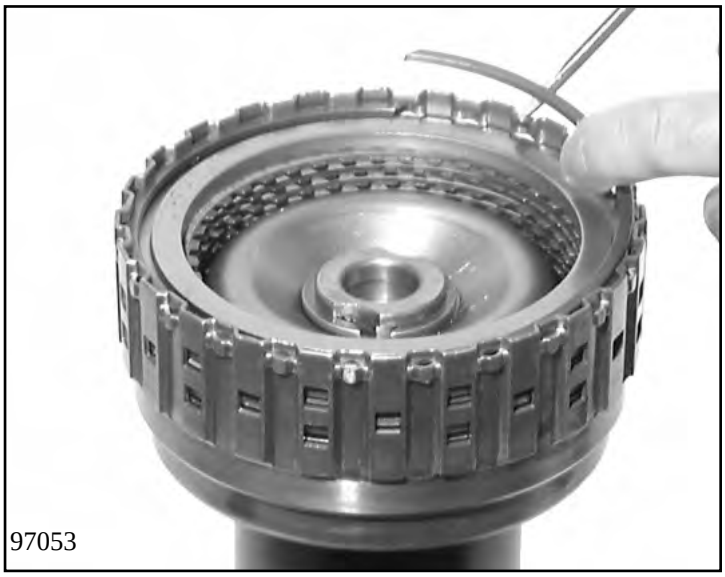


Take out the snap ring for clutch A and remove its complete clutch pack.

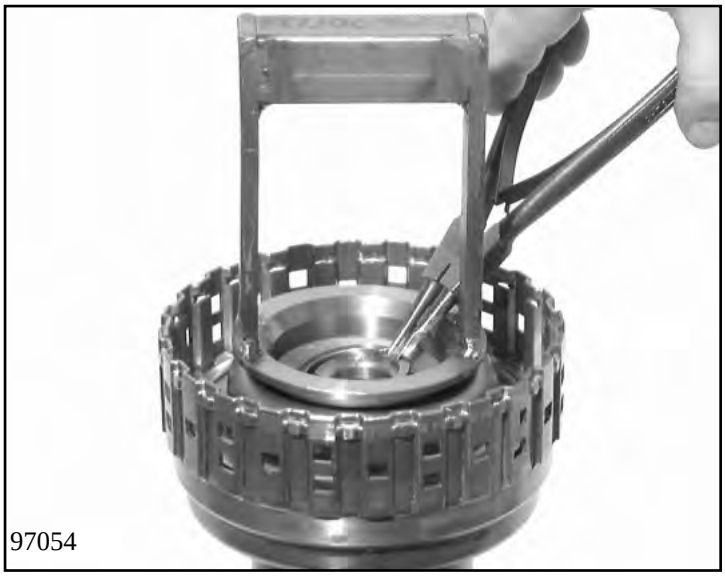


Using assembly bracket 5x46 001 499, press down the oil dam and remove the snap ring with suitable pliers. Take out the oil dam and cup spring, and pull the O-ring off the oil dam.

ProCarManuals.com

Cover one of the two oil supply bores and press out piston A with compressed air. Take off the two O-rings.

Take off the O-ring and the two rectangular-section rings from the drive shaft.

ProCarManuals.com

## 2.6 Oil supply

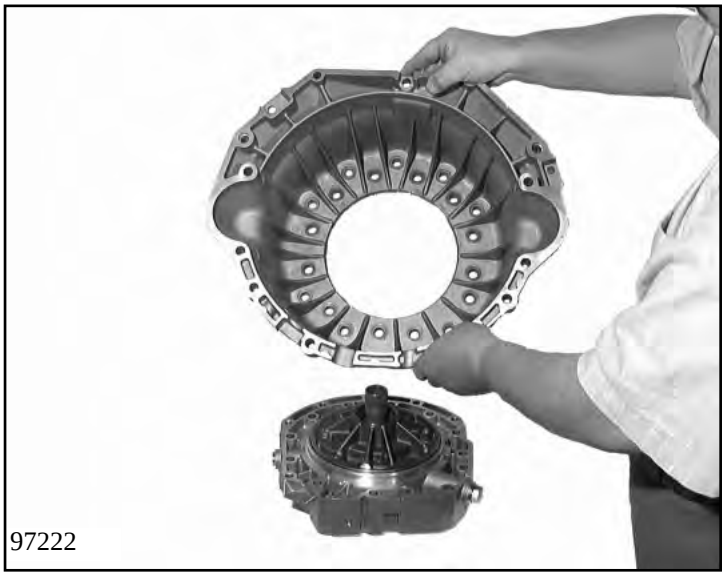


Remove the 6 hexagon screws between the converter bell housing and the oil supply.

(Wrench size = SAF 17)

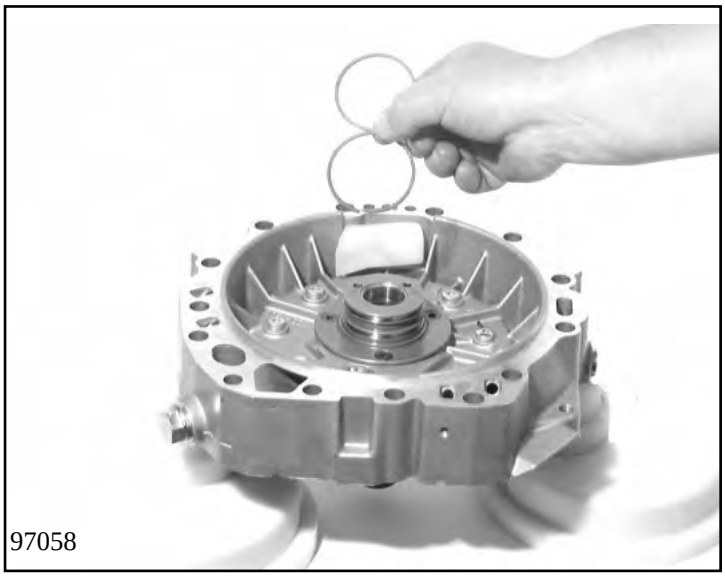


Place the complete oil supply on suitable supports. Take off the two rectangular-section rings from the stator shaft.

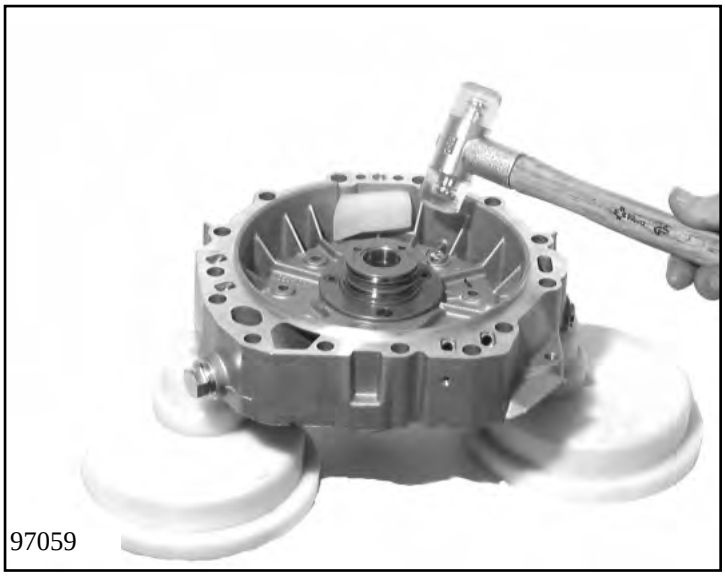


Loosen 10 machine screws (countersunk); two opposing machine screws should not be unscrewed all the way. Drive out the pump by striking these two screws carefully with a plastic-faced hammer.

(Wrench size = Torx - TX 27)

ProCarManuals.com

Remove the intermediate metal sheet and O-ring. The pump can be dismantled by removing the pump wheel and ring gear. Pull out the sleeve (fixing pin).

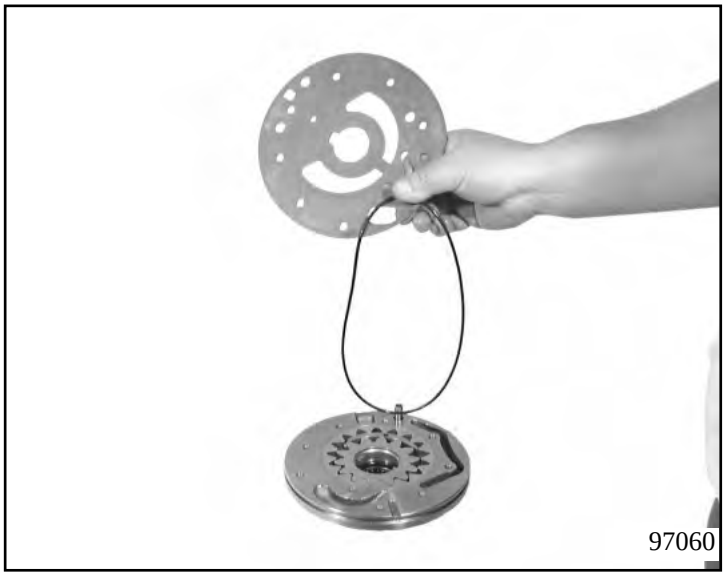


Take out the snap ring and lift out the shaft seal with a suitable screwdriver. Take out the plate.

Press out the sealing ring with the needle roller bearing in the mandrel press. The diameter of the pressure bolt should be approx. 42 mm.

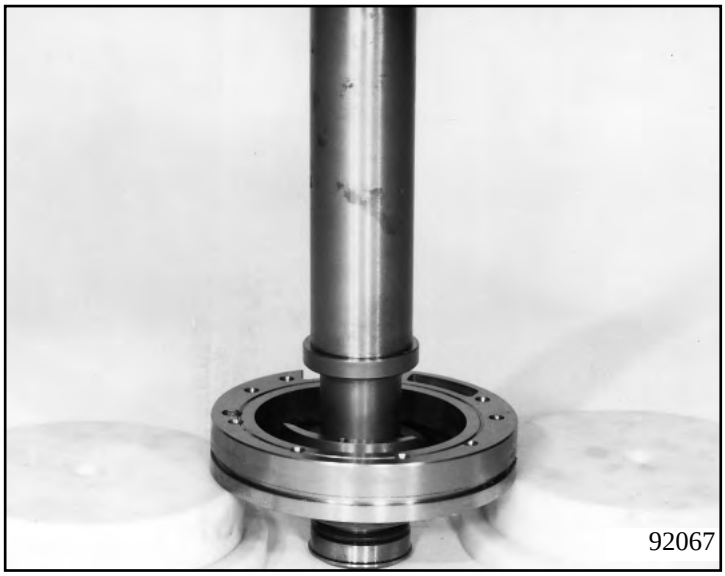


ProCarManuals.com

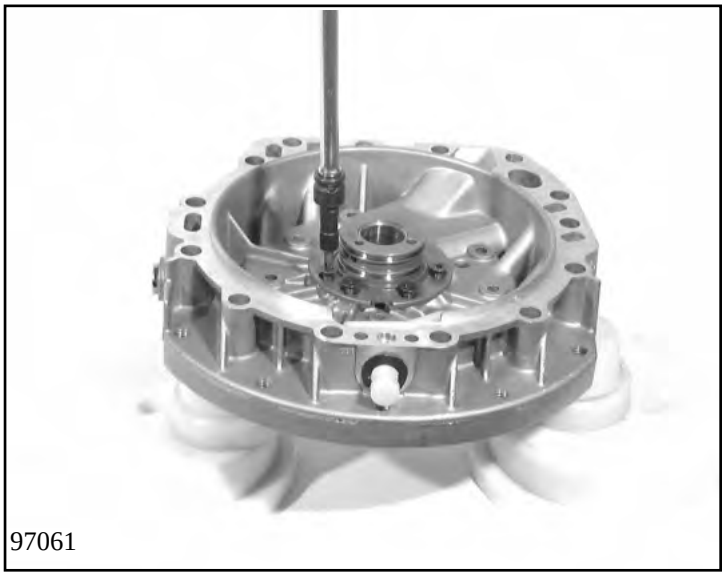


Unscrew 5 countersunk screws, warm up the housing around the stator shaft to approx. 70° C and drive the stator shaft out of the intermediate plate using the plastic-faced hammer.

(Wrench size = Torx - TX 30)

ProCarManuals.com

ProCarManuals.com

## 2.7 Housing with flow control valve and breather

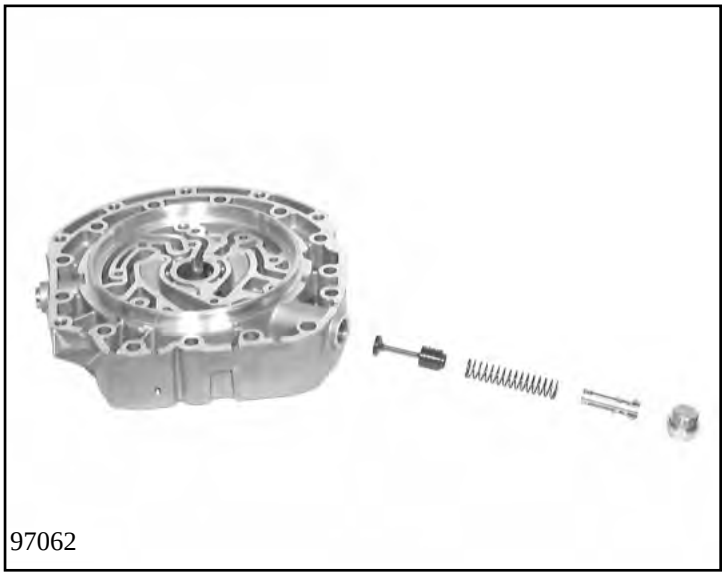
97062

Unscrew and remove the two fastening screws. Take out the piston, pressure spring and sleeve.

(Wrench size = hex. socket, 6 mm)
(Wrench size = hexagonal, 19 mm)

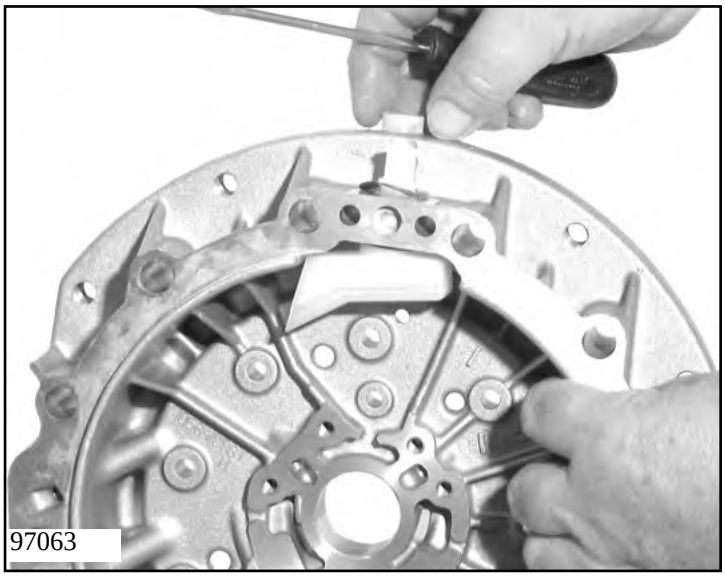
97063

Take off the cover from the breather. Remove the breather's locking disc and push out the breather and the O-ring.

ProCarManuals.com

ProCarManuals.com

## 2.8 Housing with selector mechanism and parking lock

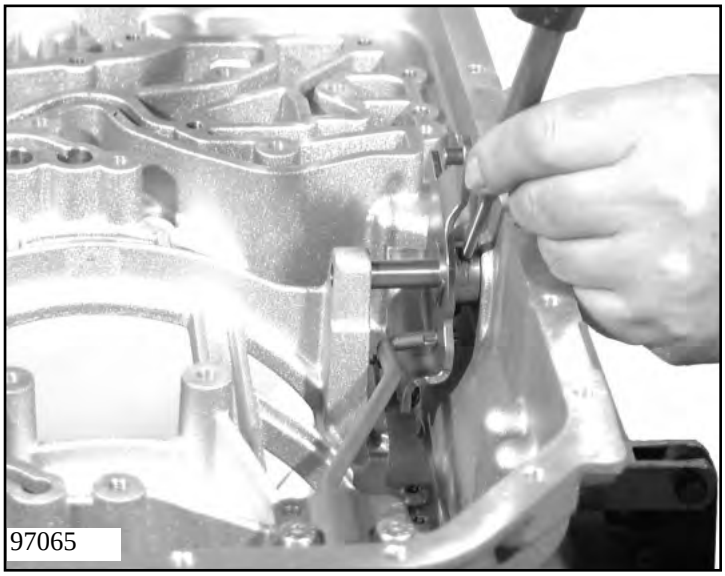
97065

Using a suitable drift, drive the clamping sleeve out of the detent spring and pull out the selector shaft.

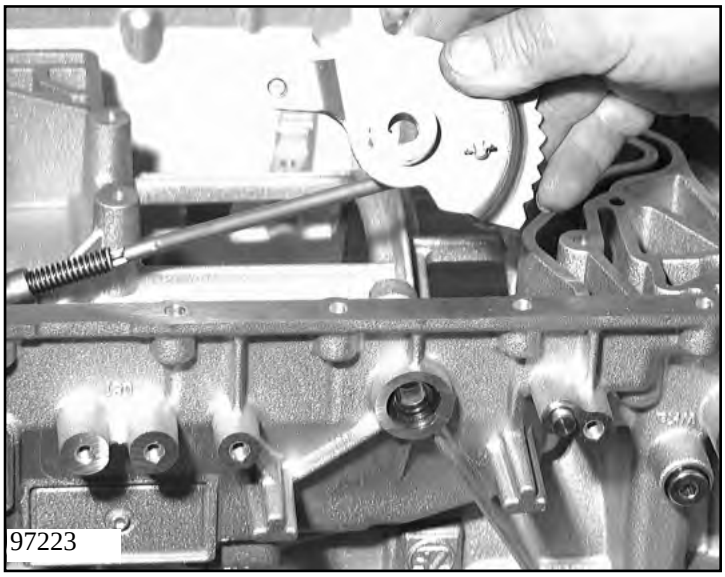
97223

Now the detent disc and the connecting rod can be taken out. Lift off the shaft seal using a screwdriver.

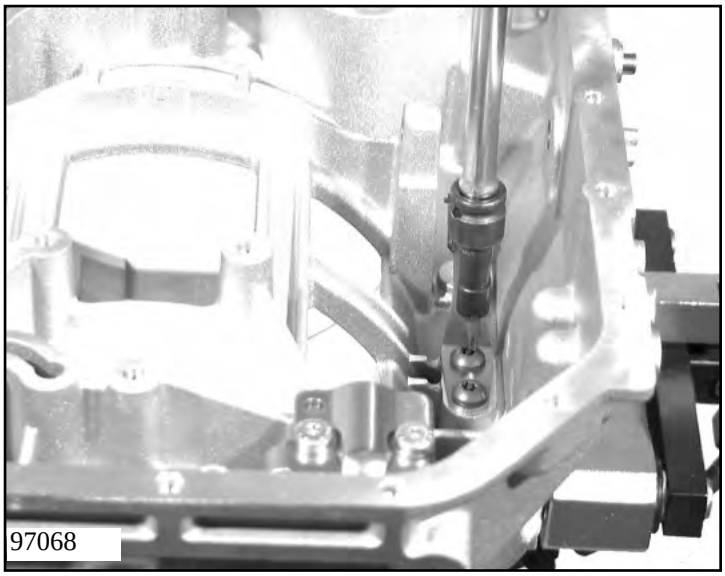
97068

The detent spring normally remains in the transmission housing.
If it is to be removed, unscrew the two Torx screws.

(Wrench size = Torx - TX 27 H)

ProCarManuals.com

Loosen the four machine screws and remove the guide plate.

(Wrench size = Torx - TX 27)

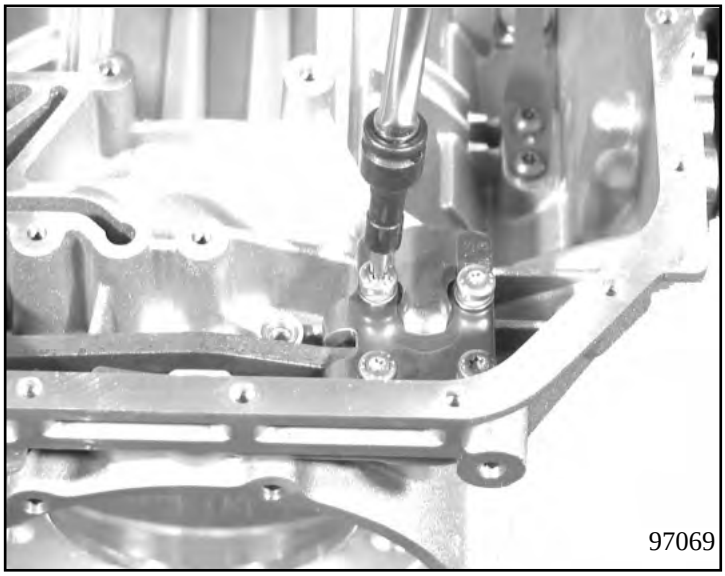


Remove the screw plug and sealing ring.

(Wrench size = Allen screw, 6 mm)

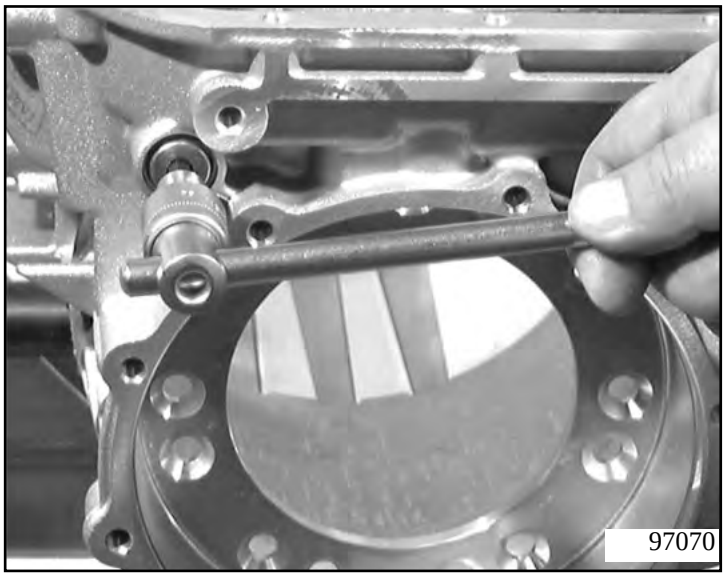


Lever out the bolt of the transmission housing. Now the pawl and spring can be removed.

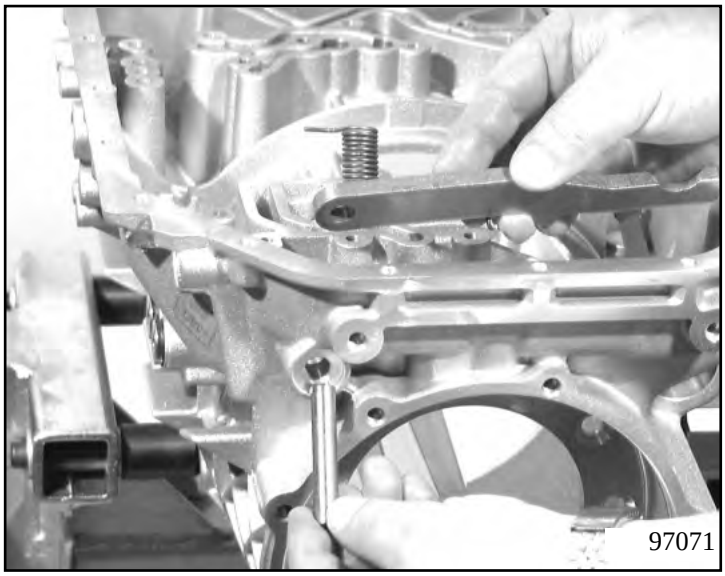


ProCarManuals.com

To clean the transmission housing, you have to unscrew and remove all screw plugs. These include:

2 screw plugs for clutch B and brake E.
(Wrench size = Allen screw, 6 mm)

1 screw plug for the converter clutch.
(Wrench size = Allen screw 5 mm)

2 plastic screw plugs from the cooler inlet and outlet
(Wrench size = hexagonal, 17 mm)

**Supplement:**

The newer transmission housing 1058 301 082 has now only **1** screw plug (Allen screw, 5 mm).

Note that the old transmission housing 1058 301 077 has **7** screw plugs (Allen screw, 5 mm).

ProCarManuals.com

ProCarManuals.com

# 3. Assembly
## 3.1 Housing with selector mechanism and parking lock

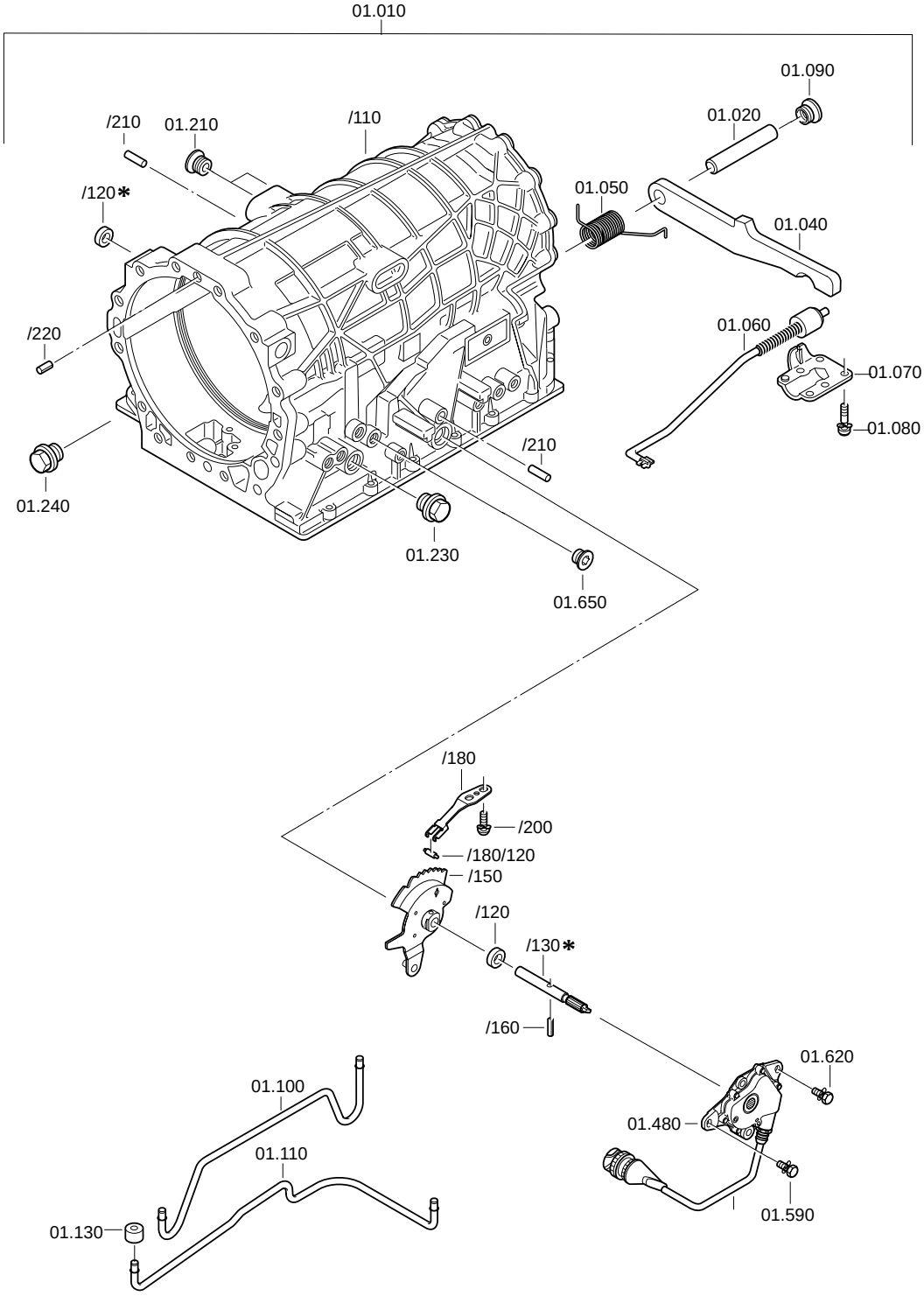


ProCarManuals.com

Drive the plug 01.130 into transmission housing 01.010/110 by using the tool 5x46 001 135.

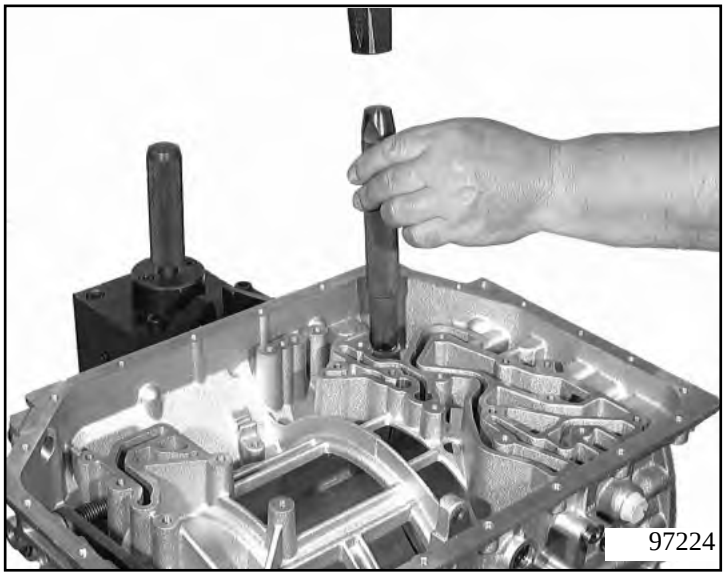


**Important!**
Only required when the transmission housing is new!

Drive slotted pin 01.010/220 into the transmission housing using the plastic hammer.

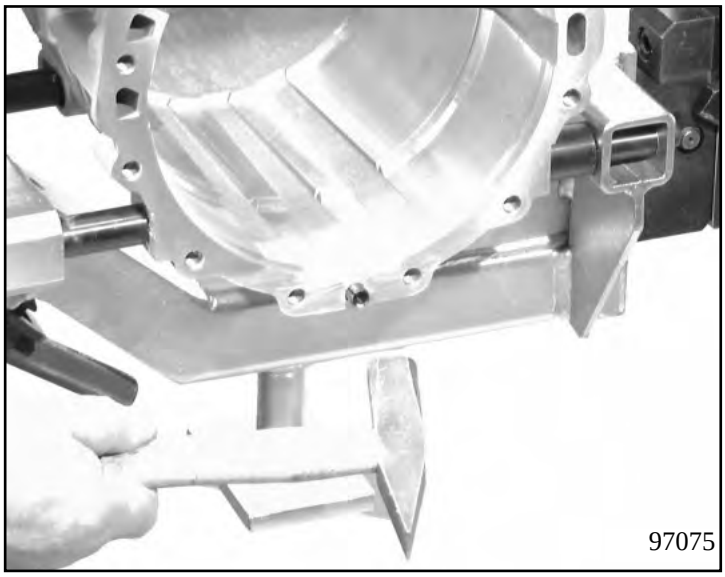


**Important!**
Only required for a new transmission housing!

Hammer in the cylindrical pin 01.010/210 until it protrudes 5.0 - 5.5 mm.

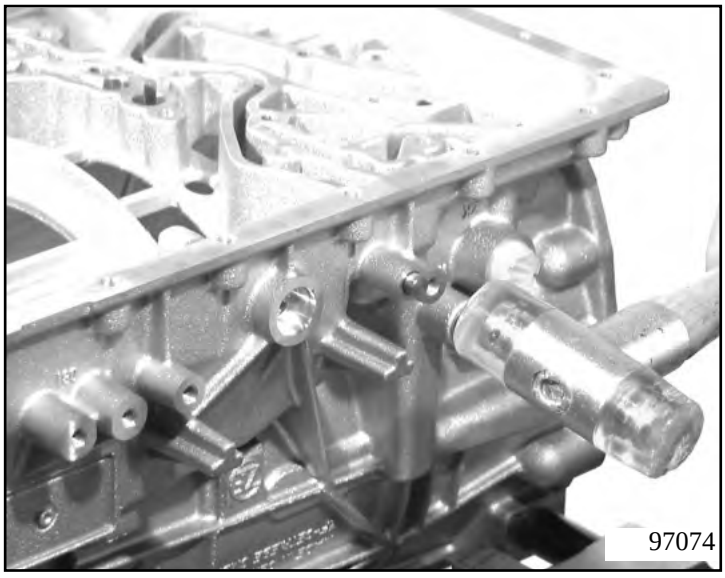


**Important!**
Only required for a new transmission housing!

ProCarManuals.com

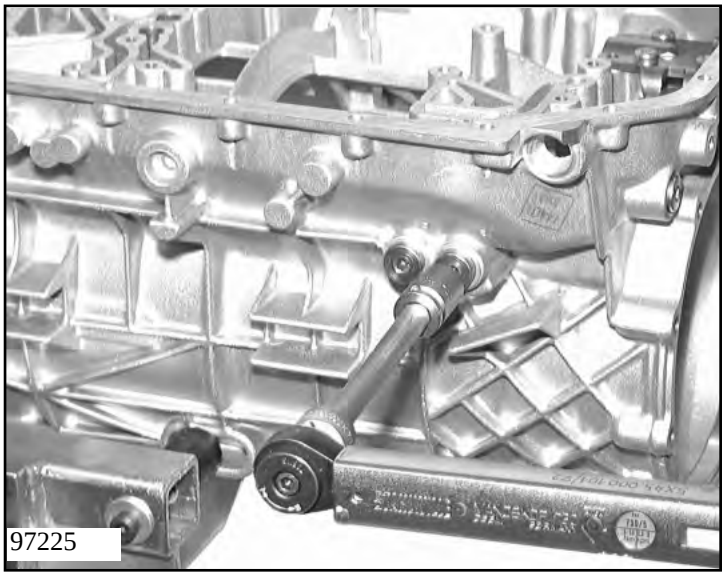
97225

Screw new screw plugs 1x 01.650 and 2x 01.210 into the transmission housing. Insert transport plugs 01.230 and 01.240 hand-tight.

(Tightening torque see Chapter 1.5)

**Important!**
Seven screws 01.650 are needed for older transmission housings!

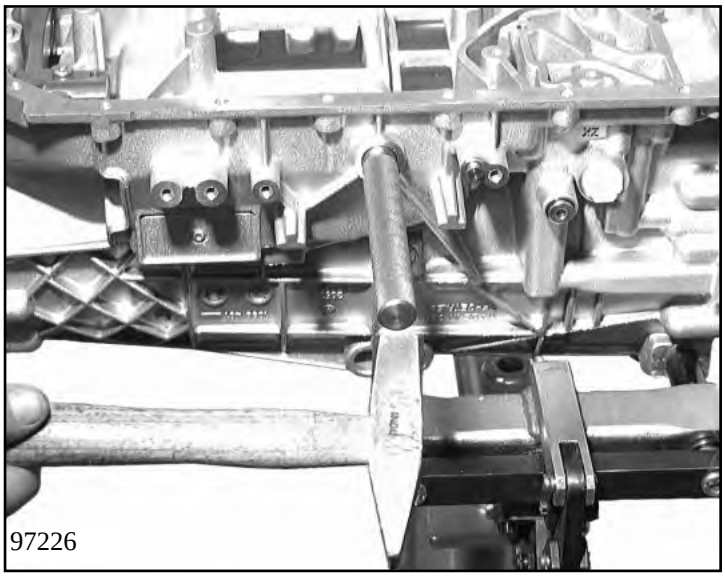
97226

Install shaft seal 01.010/120 into the transmission housing using the drift 5x46 001 261.

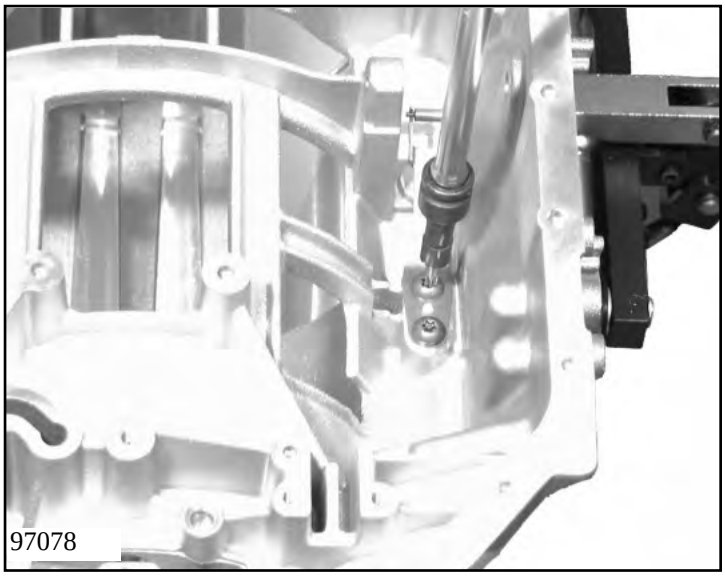
97078

Attach the 01.010/180 detent spring with two 01.010/200 Torx screws but do not tighten them, so that the detent spring can still slide easily.

**Important!**
If the transmission housing, detent spring, detent disc, or selector shaft were replaced, or if the detent spring was detached, the switch (detent spring) has to be readjusted.

<u>Adjustment required !! **Chapter 1.4.9**</u>

ProCarManuals.com

Latch connector rod 01.060 into detent disc 01.010/150 and turn it.

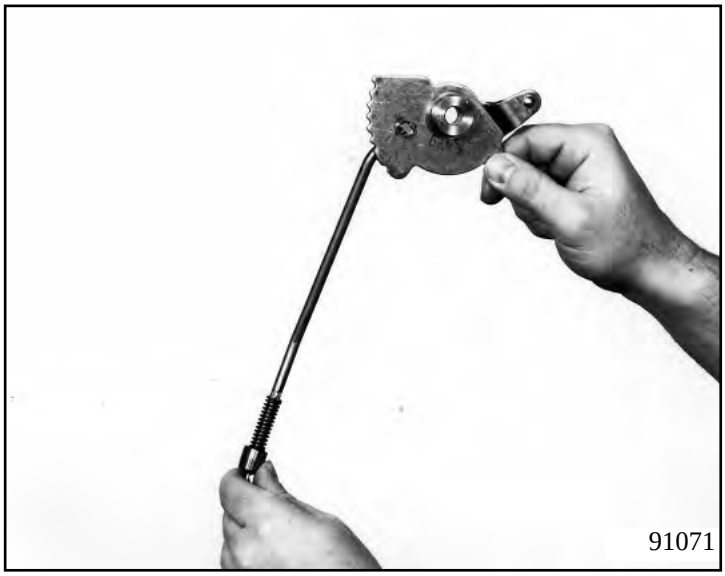


Insert the detent disc and connector rod into the transmission housing and push selector shaft 01.010/130 through the detent disc.

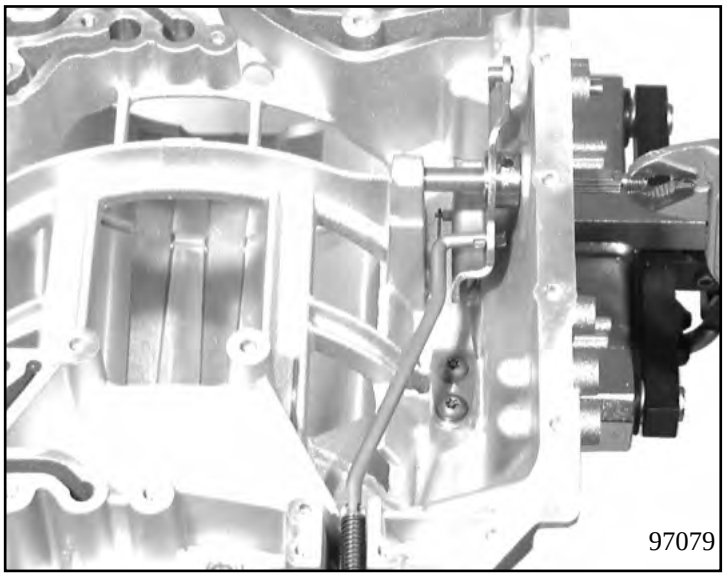


**Important!**
For right-hand-drive vehicles, the selector shaft has to be led through tube 01.010/140.

Using a 5x46 000 291 driving pin or a suitable drift, drive a new slotted pin 01.010/160 into its position so that the flattened area on the selector shaft gears points to the oil pan.

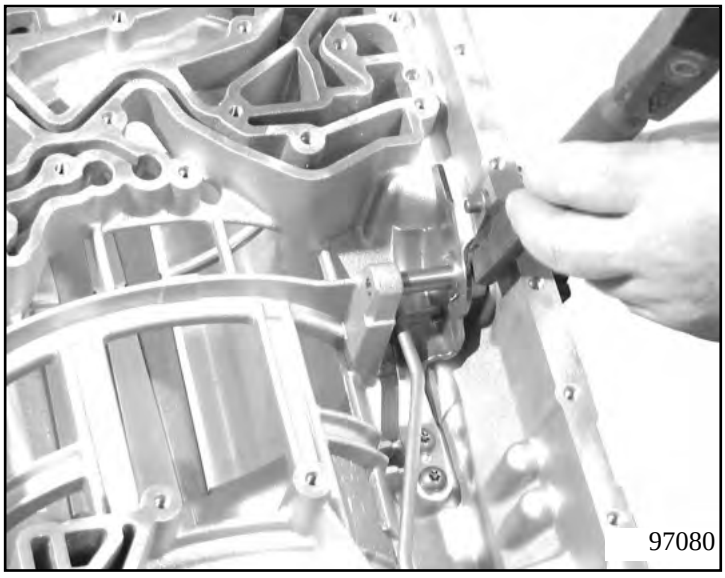


ProCarManuals.com

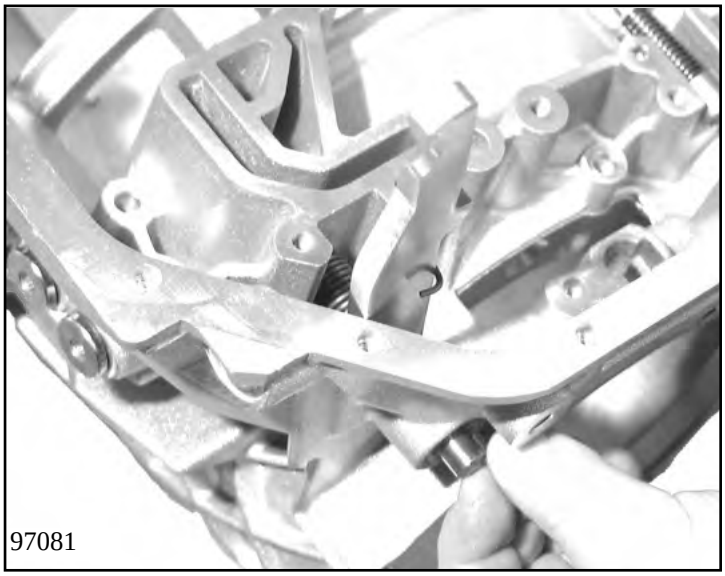


Insert pawl 01.040 and leg spring 01.050 into the transmission housing and fix it in place by pressing in bolt 01.020. Then plug up the bore using a screw plug with seal 01.090.

(See Chapter 1.5 for tightening torque)

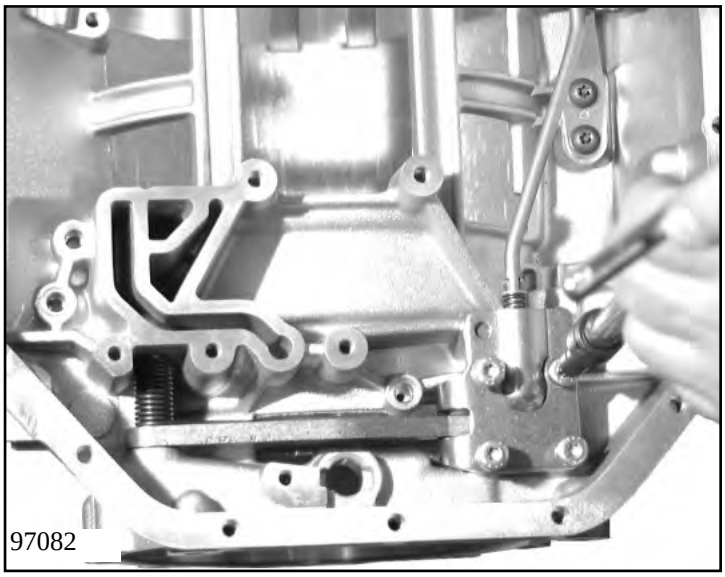


Press the pawl down, and fasten guiding plate 01.070 with four Torx screws 01.080.

(See Chapter 1.5 for tightening torque)

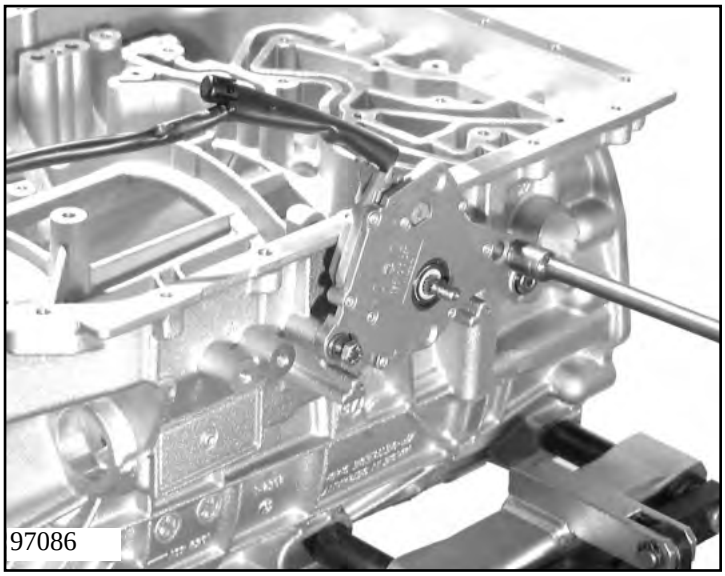


Put the 01.480 switch on the selector shaft and tighten it with two hexagonal screws (01.590 and 01.620) on to the transmission housing.

(See Chapter 1.5 for tightening torque)

ProCarManuals.com

First hammer in oil pipe 01.100 (to clutch B) using the drift 5x46 001 534; then hammer in oil pipe 01.110.

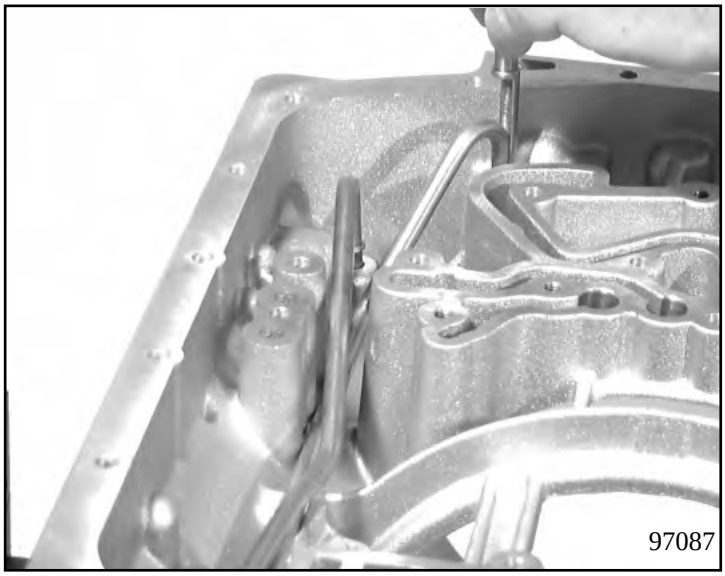


ProCarManuals.com

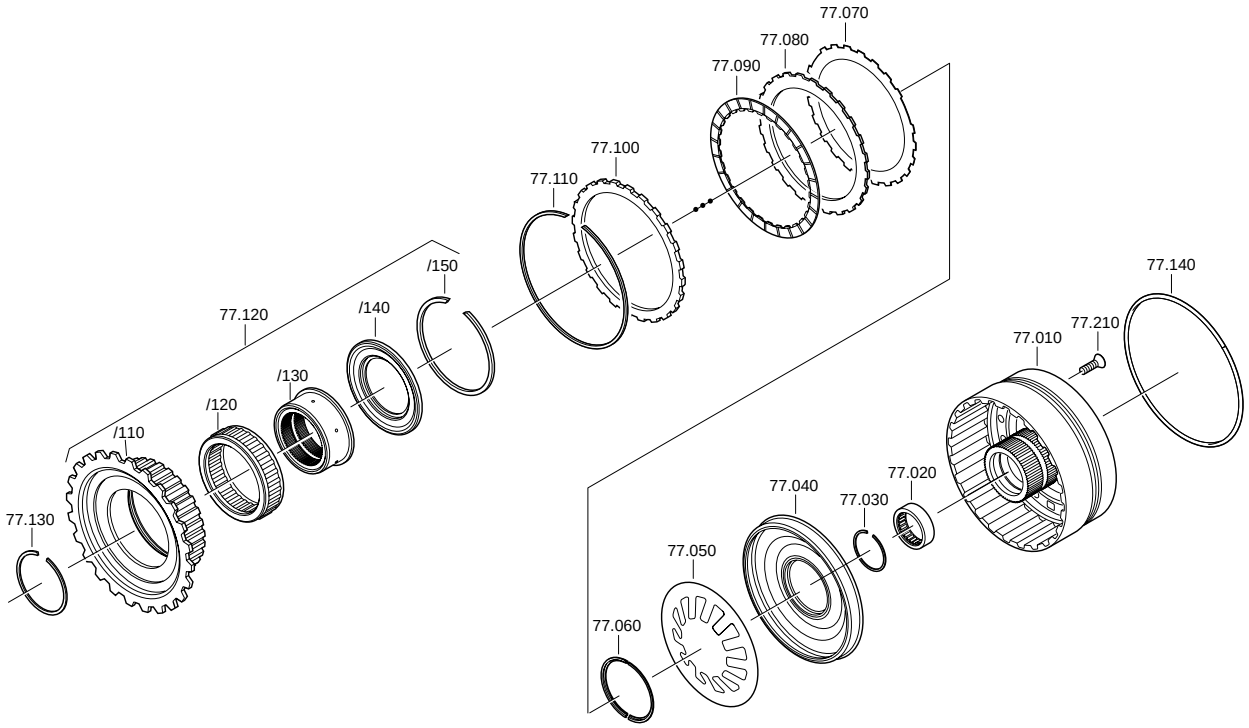


ProCarManuals.com

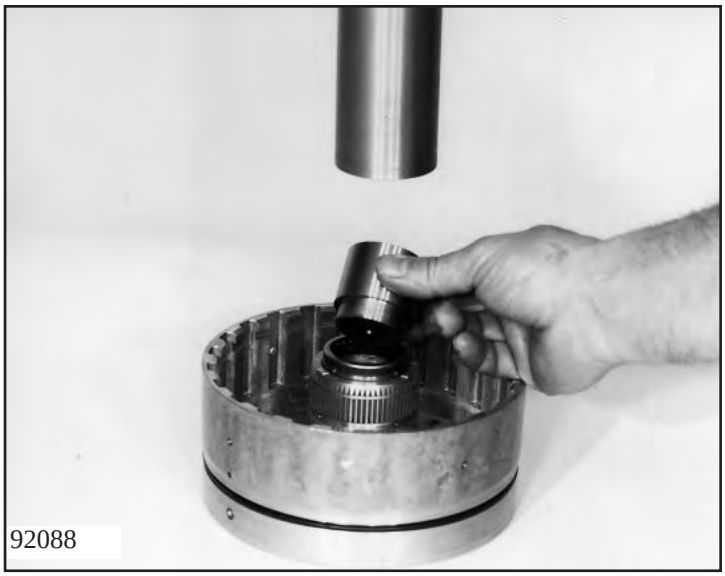


Put O-ring 75.140 on cylinder F 75.010. Press needle roller bearing 75.020 into cylinder F with press-in fixture 5x46 001 006 in the mandrel press, and secure it with snap ring 75.030.

Put a light coat of grease (petroleum jelly) on the inner and outer sealing lips of piston F 75.040, and press it into cylinder F.

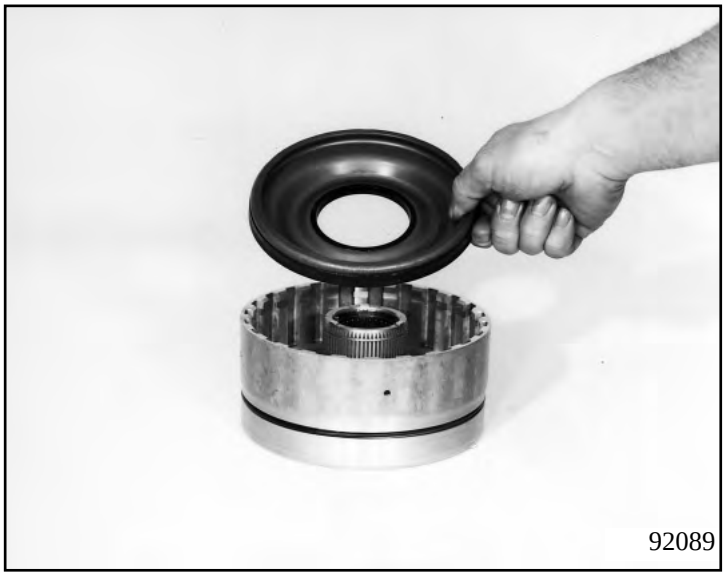
92089

**Important!**
Ensure that the piston is not misaligned. Do not fold down the sealing lips.

Insert cup spring 75.050 and press it down in the mandrel press with assembly bracket 5x46 000 931; assemble the split stop-ring 77.060.

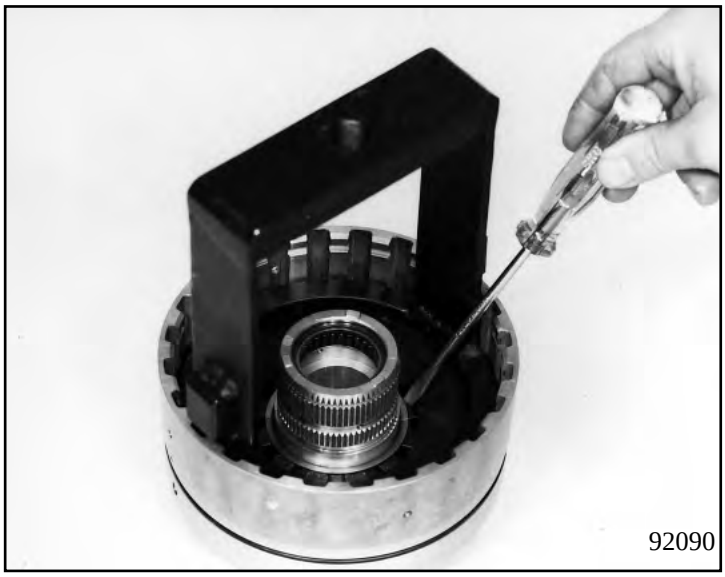
92090

Insert the complete clutch pack, beginning with spring clutch disc 77.070. This is then followed by outer clutch disc 77.080 and lined clutch disc 77.090. Secure outer clutch disc 77.100 with snap ring 77.110.

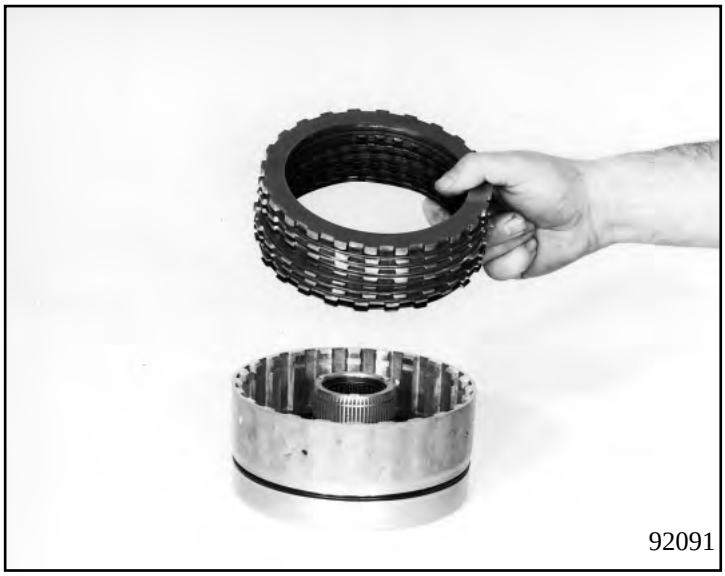
92091

**Important!**
Making adjustments, **Chapter 1.4.1**

ProCarManuals.com

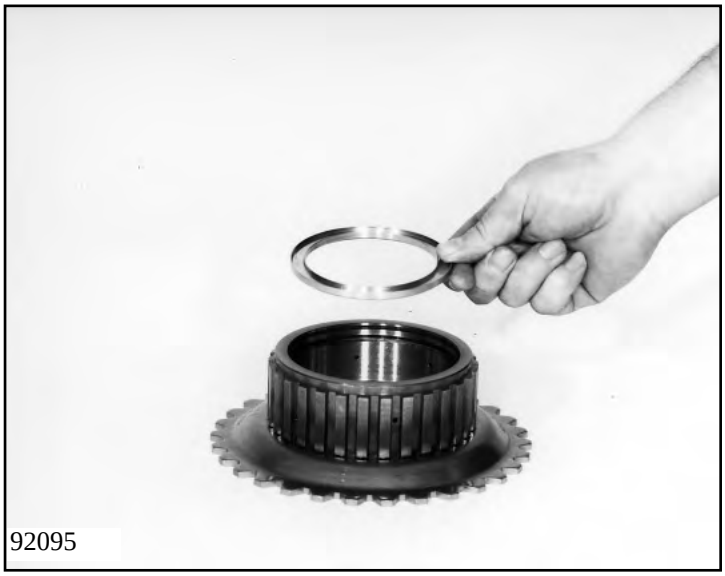


Complete first gear freewheel 77.120 by first pressing one of the freewheel's two covering washers completely into freewheel ring F.

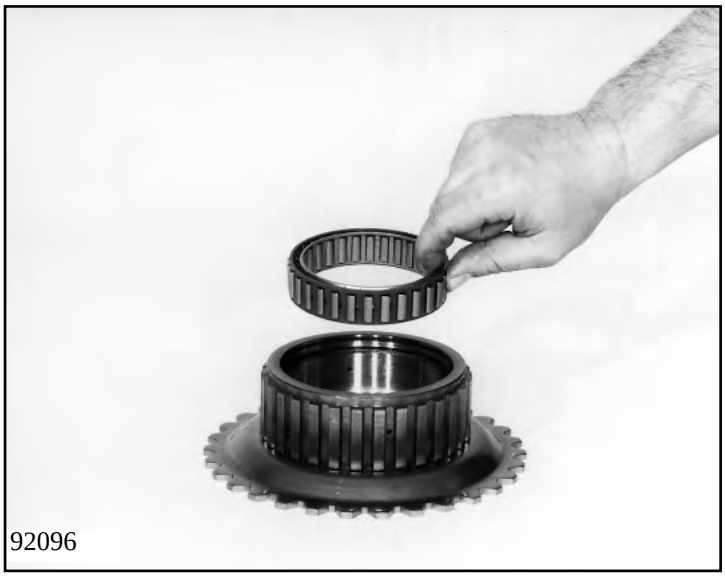


Insert the freewheel cage (with the collar at the top) into the freewheel outer race.

**Important!**
If installed incorrectly (upside down), it will lock in the wrong direction.

Put on the covering washer for the freewheel and press it in.

ProCarManuals.com

Insert the inner sprag race, turning it clockwise as you put it in.

92098

**Important!**
Function check:
The internal sprag race must turn freely in the clockwise direction when the outer ring is hold tight.

Press in fixing washer 77.120/140 and secure it with snap ring 77.120/150.

92099

Insert the complete freewheel into brake F, turning it as you put it in. Now insert snap ring 77.130 using assembly tool 5x46 000 892 (or by hand).

92100

ProCarManuals.com

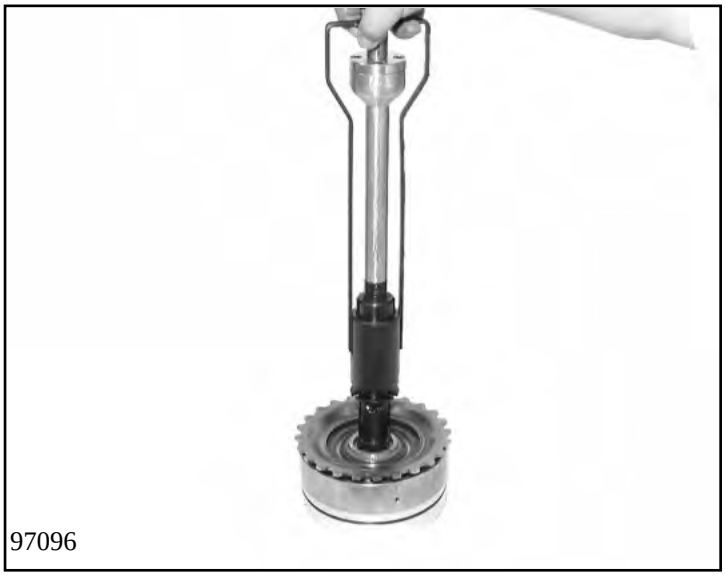


Insert lifting device 5x46 000 831 into brake F in such a way that the three raised areas on the cylinder hub engages into the recesses of the lifting device's collar.

Screw the fitting pin (an M8 bolt with its head cut off) into the single threaded bore between the oil feed and the lubricating oil feed.

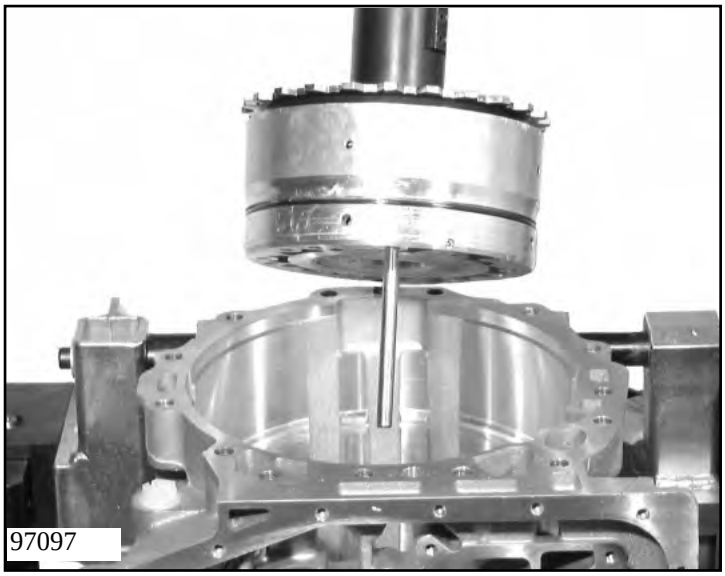


Turn the transmission housing by 90°. Insert the complete unit so that the dowel pin can be led into the top hole in the center of the transmission housing.

**Note:**
This is important so that the duct in the transmission housing is properly aligned with the brake F filling bore.

ProCarManuals.com

Turn the housing in a horizontal position.
Secure cylinder F with two countersunk screws 77.210
Remove the dowel pin and fasten the 10 remaining countersunk screws 77.210.
Remove lifting device 5x46 000 831.

(See Chapter 1.5 for tightening torque)

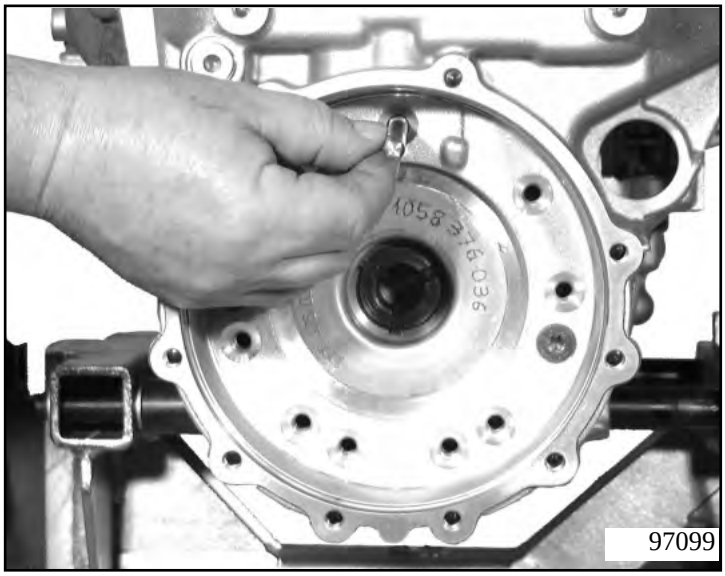


ProCarManuals.com

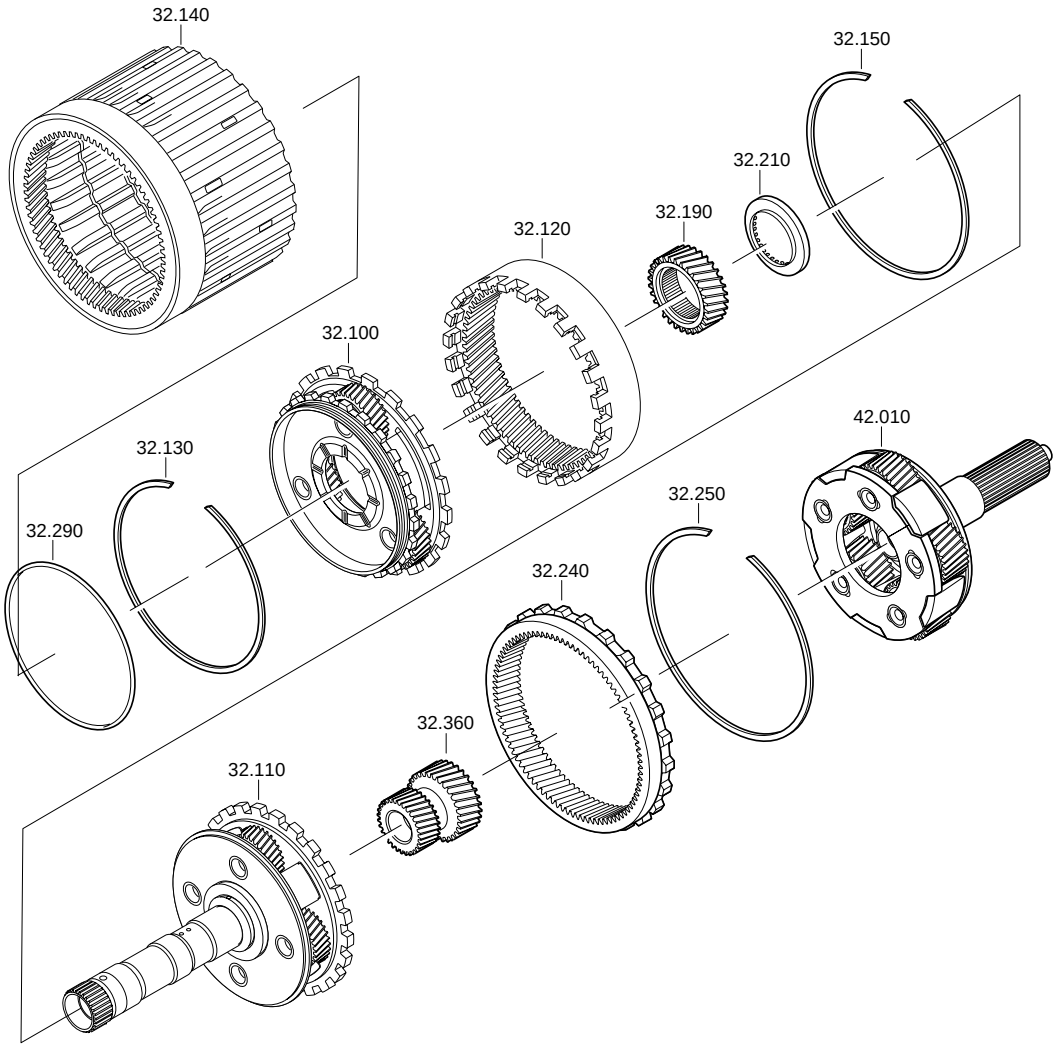


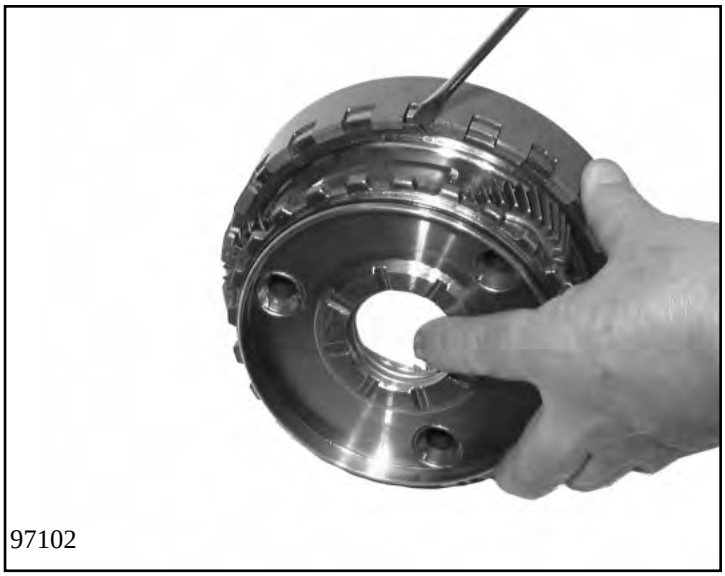


Place a new O-ring 32.290 on planet carrier I 32.100. Insert the planet carrier into ring gear II 32.120, and secure it with snap ring 32.130.

ProCarManuals.com

Insert the complete unit into ring gear I 32.140 and snap it in with snap ring 32.150.
Put the ring gear on a suitable support to accomplish this task.

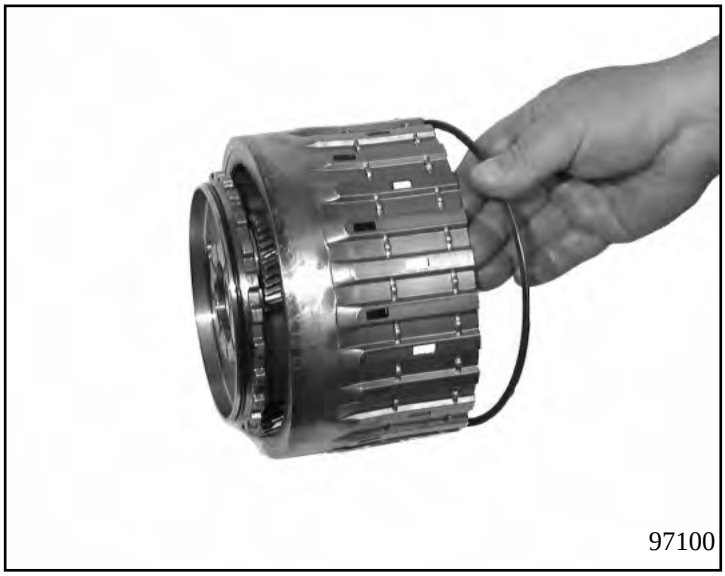


Insert sun wheel I 32.190 with the notch on the toothtip looking downwards. (Towards the output side to optimize the meshing sound.)
Insert axial needle roller bearing 32.210.

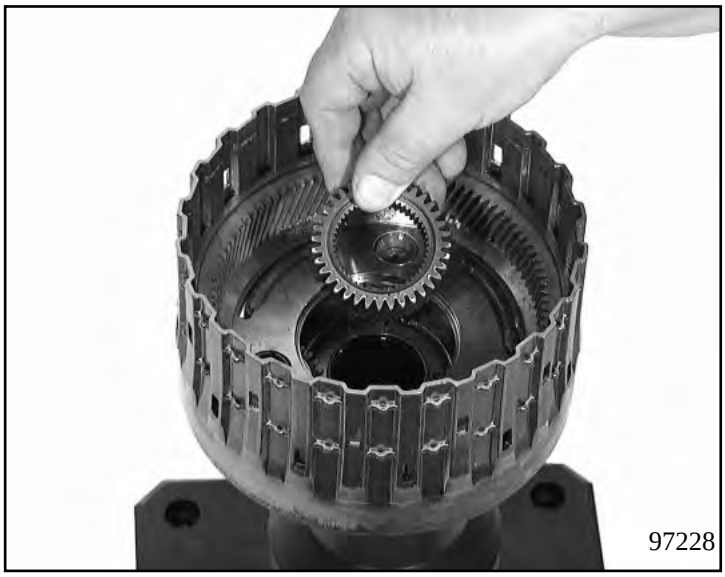


Insert planet carrier II 32.110 into ring gear I.
Put it onto the support fixture for tower I 5x46 000 916 to make assembly easier.

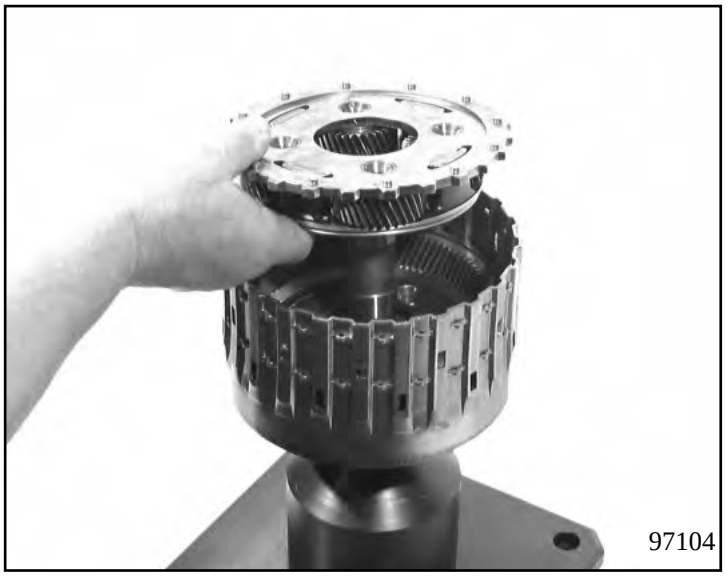


ProCarManuals.com

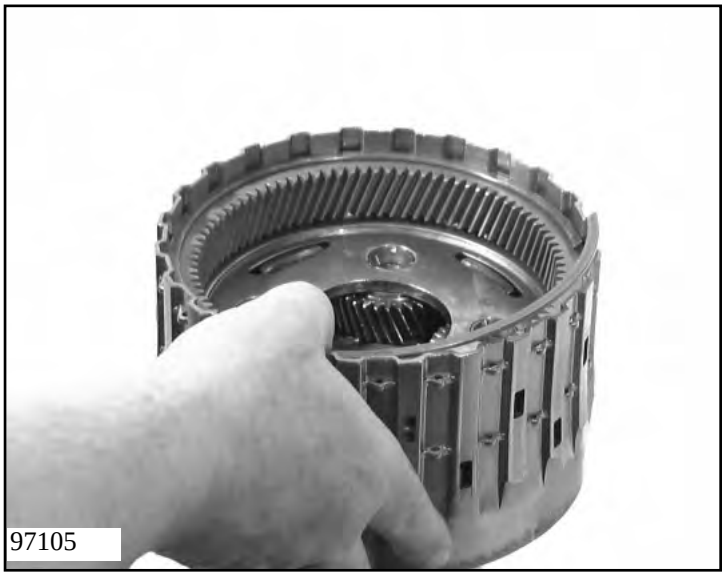


Insert ring gear III 32.240 with the outer engaging gears towards the top and secure it with snap ring 32.250. To put the snap ring in position, lift ring gear I slightly.

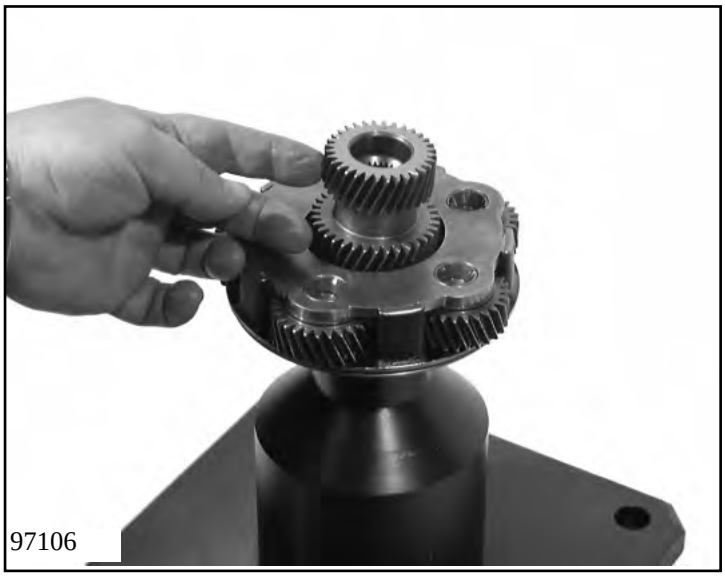


Take planetary drive (I and II with ring gear III) off the device.
Put planet carrier III 42.010 onto the device and insert sun wheel 32.360.

Turn the planetary drive as you put it on the planet carrier.

ProCarManuals.com

### 3.3.2 Brakes (E and D)

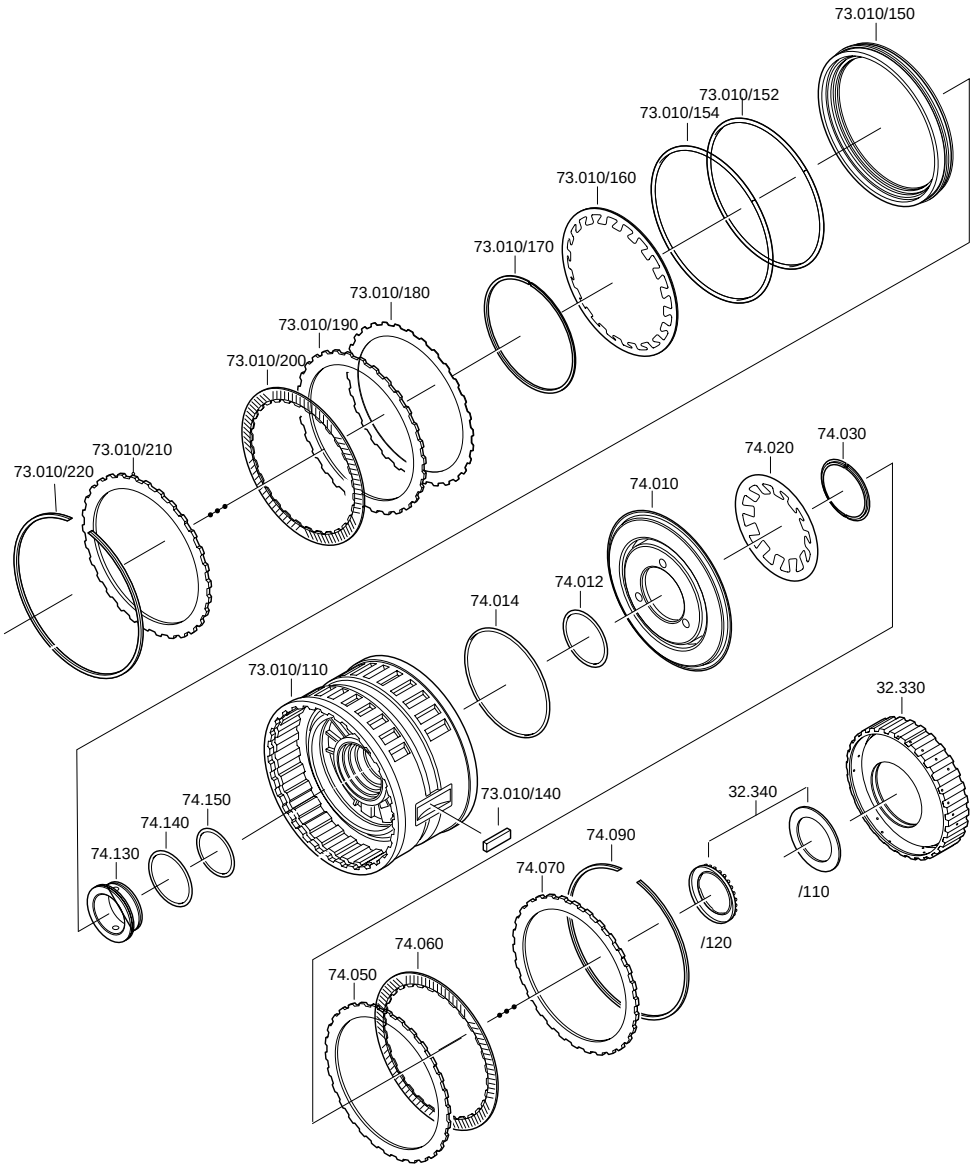


Press disc carrier E 32.330 on to the planetary drive.

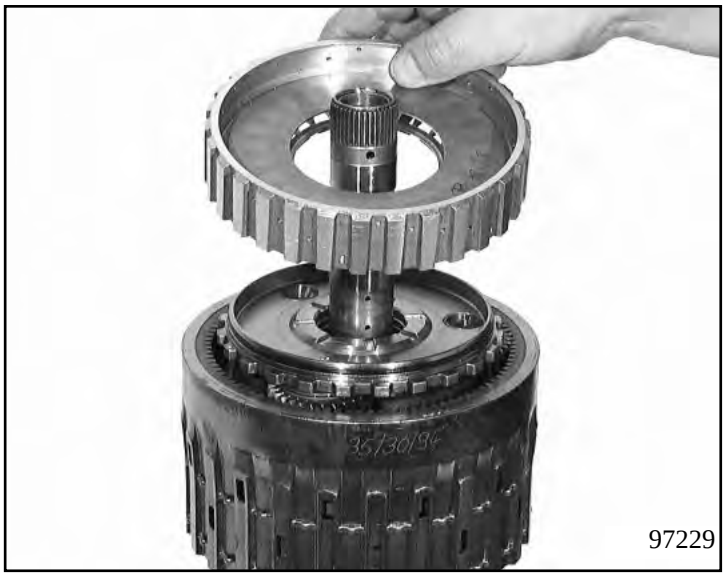


ProCarManuals.com

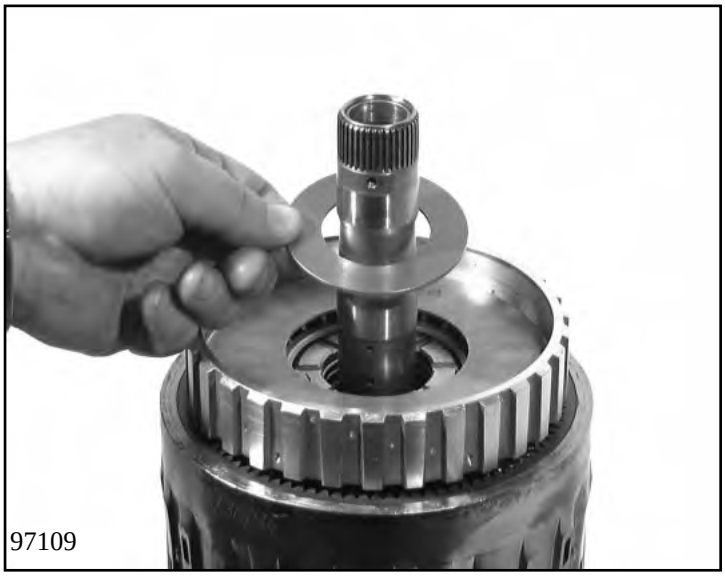


Assemble axial washer 32.340/110.

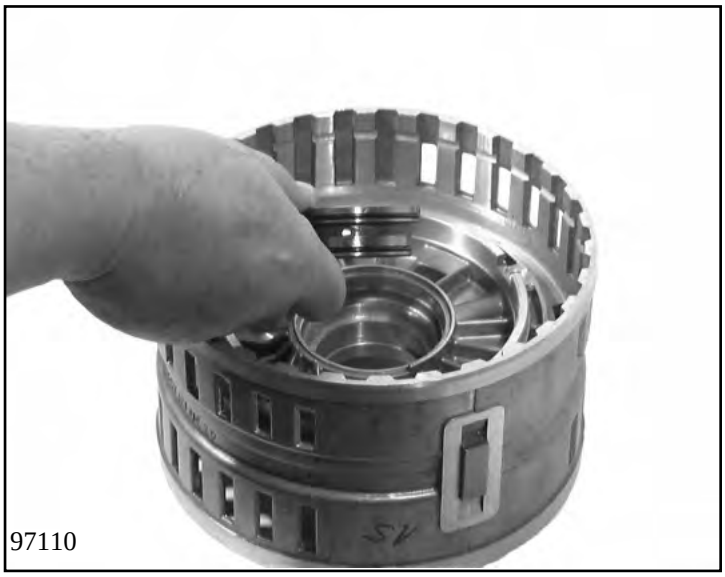


Complete cylinder DE 73.010/110.
First put on two O-rings (74.010/140, 74.010/150) to the bushing 74.010/130 and press it into cylinder DE.
Drive two shaft keys 73.010/140 onto the center of cylinder DE using the plastic hammer.

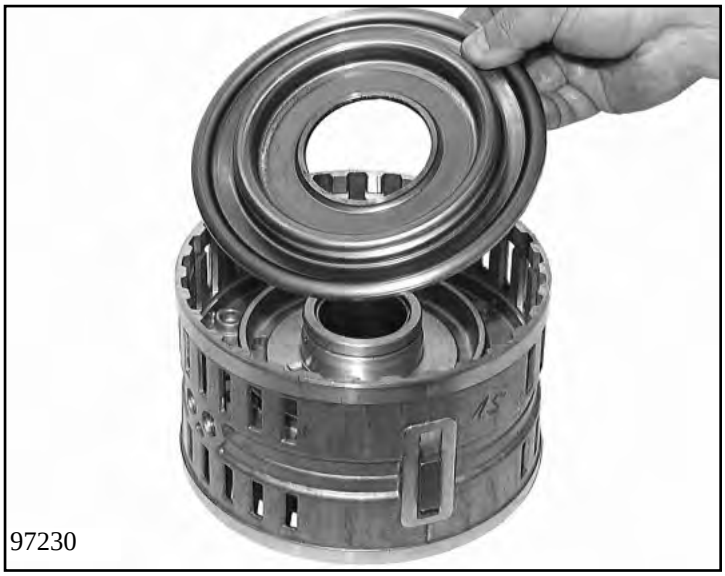


Turn cylinder DE over.
Put new O-ring 74.012 on piston E 74.010 and O-ring 74.014 on the cylinder E.
Press piston E into cylinder DE.

ProCarManuals.com

Insert cup spring 74.020.
Use assembly bracket 5x46 001 502 to press the cup spring down in the mandrel press and secure it with the split stop-ring 74.030.

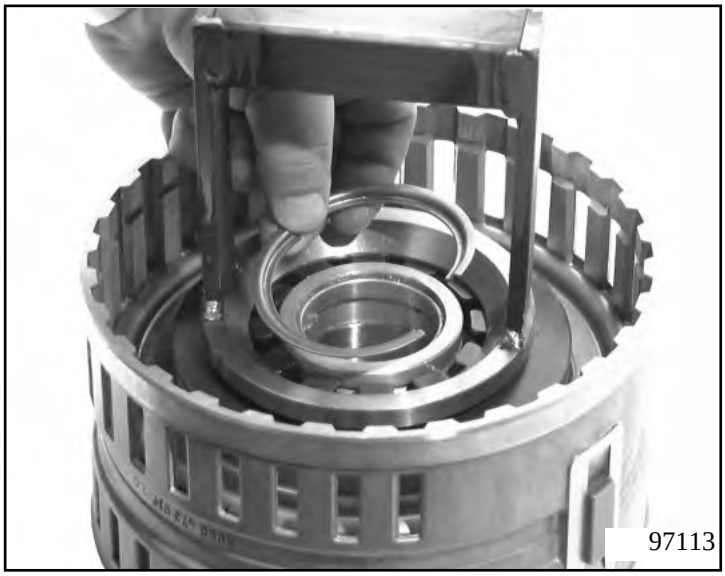


Turn over cylinder DE by 180°. Put two O-rings (73.010/152 and 73.010/154) on piston D 73.010/150 and press it into the cylinder.

Insert cup spring D 73.010/160.
Using assembly bracket 5x46 001 501, press down cup spring D in the mandrel press and secure it with snap ring 73.101/170 (flat side upwards).

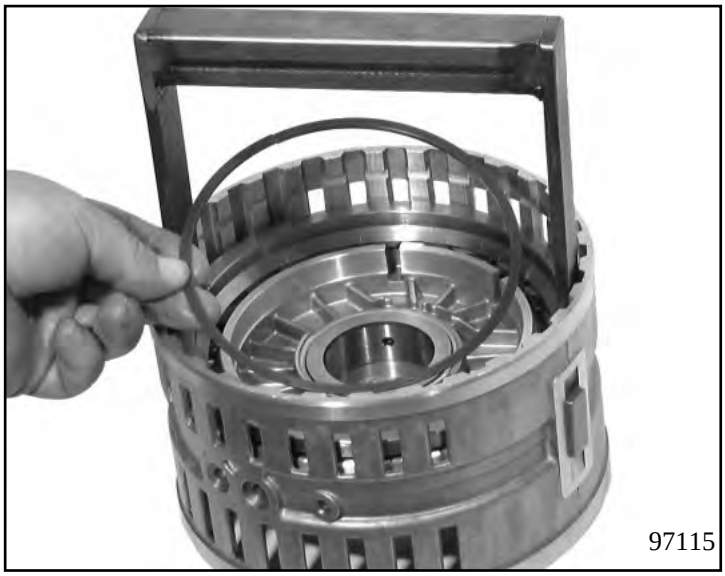


ProCarManuals.com

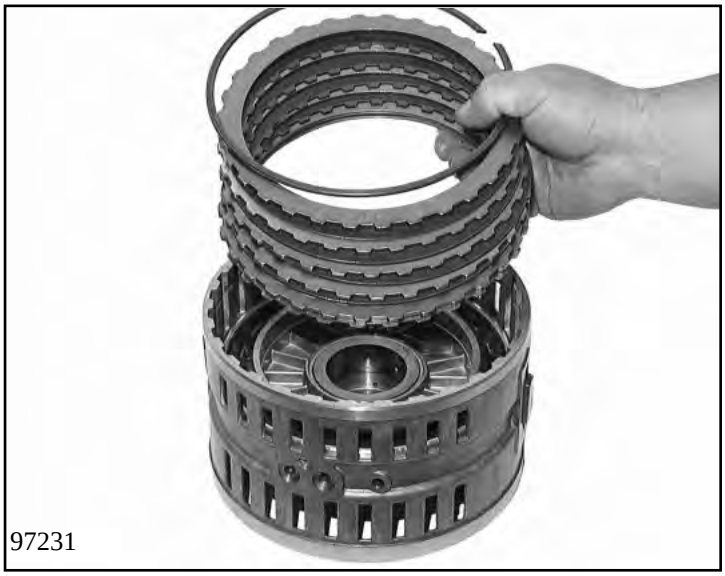
97231

Insert the complete clutch pack D, beginning with spring clutch disc 73.010/180. This is followed by outer clutch disc 73.010/190 and lined clutch disc 73.010/200.
Secure top outer clutch disc 73.010/210 with snap ring 73.010/220.

**Important!**
Making adjustments: see **Chapter 1.4.2**

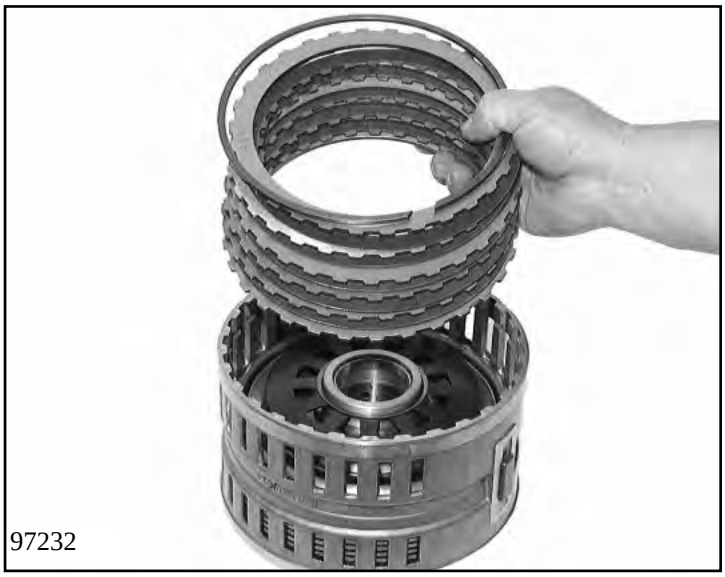
97232

Turnover cylinder DE and insert complete clutch pack E beginning with outer disc 74.050 followed alternately by clutch lined disc 74.060 and outer disc. Secure top outer disc 74.070 with snap ring 74.090.

**Important!**
Making adjustments: see **Chapter 1.4.3**

97233

Lubricate axial needle roller bearing 32.340/120 with petroleum jelly and attach it to the cylinder ridge 73.010/110 (on the brake E side).

ProCarManuals.com

Put brakes (E and D) on the planetary drive, turning it backwards and forwards until the clutch pack engages fully with the splines. Control dimension: shaft (planet spider) to bushing (cylinder DE) approx. 61.5 mm.

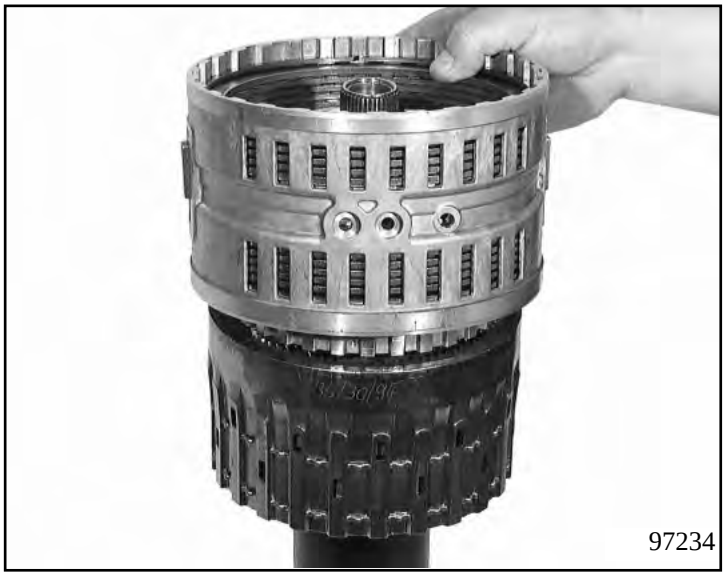


ProCarManuals.com

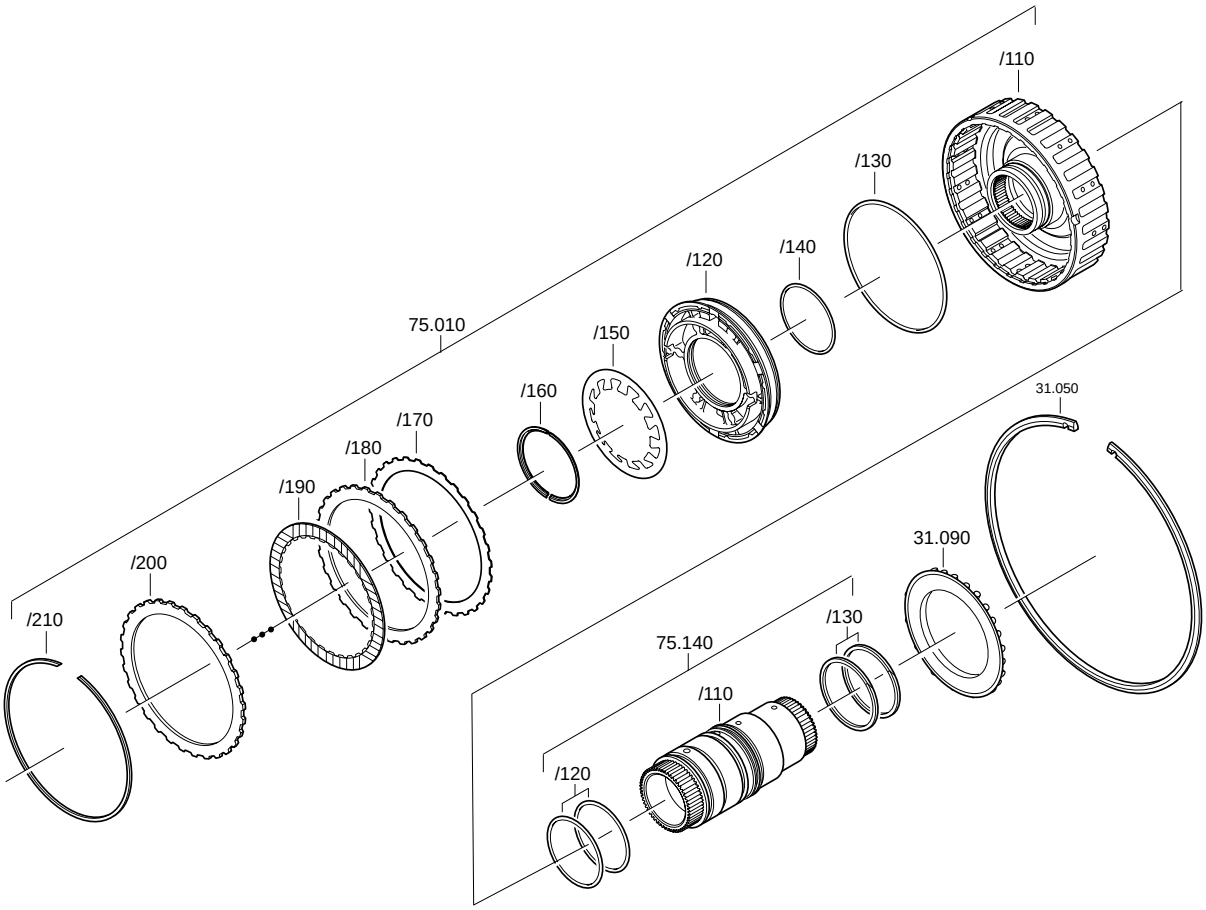

Mount new O-rings (75.010/130 and 75.010/140) on piston C 75.010/120. Press the piston into cylinder C 75.010/110.

ProCarManuals.com

Put in cup spring C 75.010/150 and press it down with assembly bracket 5x46 030 167 in the mandrel press. Secure it with split stop-ring 75.010/160.

97236

Put in complete clutch pack C beginning with spring clutch disc 75.010/170. This is followed by outer clutch disc 75.010/180 and lined clutch disc 75.010/190.
Secure the top outer clutch disc 75.010/200 with snap ring 75.010/210.

97237

**Important!**
Making adjustments: see **Chapter 1.4.4**

Put two O-rings 75.140/120, and two seals 75.140/130 on to the sun wheel shaft 75.140/110.
Put the sun wheel shaft onto cylinder C by hand.

97238

**Important!**
When new rectangular-section rings are used, attach them to the groove with a small amount of petroleum jelly.

ProCarManuals.com

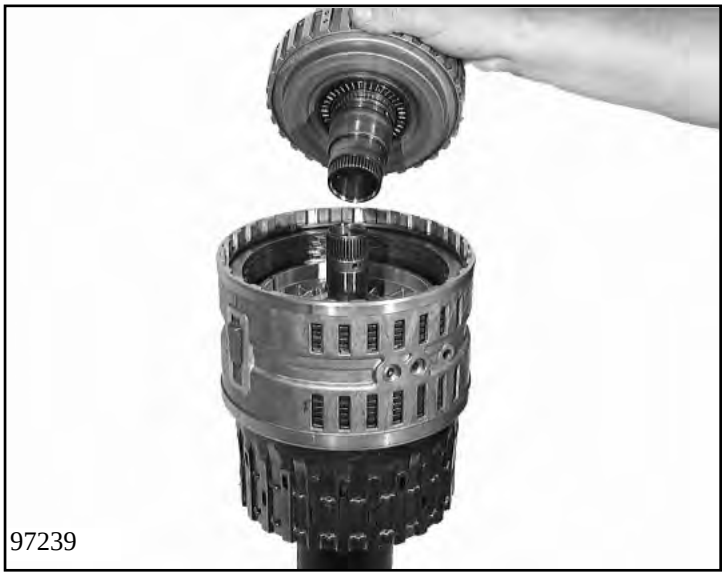


Attach axial needle roller bearing 31.090 to cylinder C on the sun wheel shaft side. Put clutch C into brake D, turning it backwards and forwards until the clutch pack fully mesh with the gears.

**Note!**
Control dimension: shaft (planet spider to cylinder ridge C, approx. 22 mm)

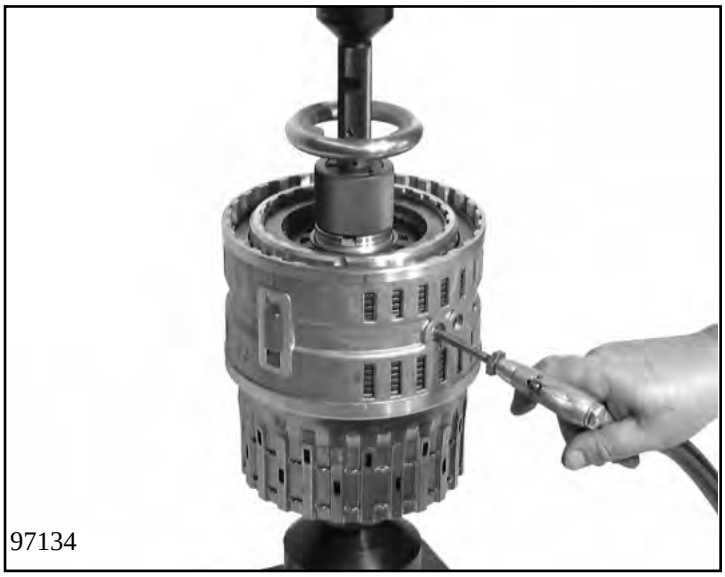


Screw lifting device 5x46 001 077 (fastened together with adapter 5w46 000 003) into tower I.
Ensure the proper function of clutch C / brakes D/E by applying compressed air via the bores.

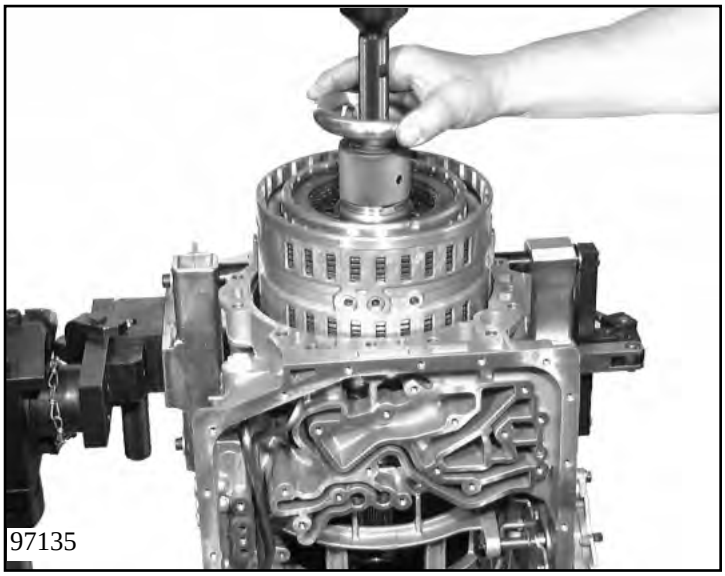


Align the bores for the oil pipes.
Using a crane, carefully insert tower I into the transmission housing.

ProCarManuals.com

Insert snap ring 31.050 with the slant on top. Remove the lifting device.
Using driving tool 5x46 001 930, hammer the snap ring all around into the housing groove.
Re-attach the lifting device.

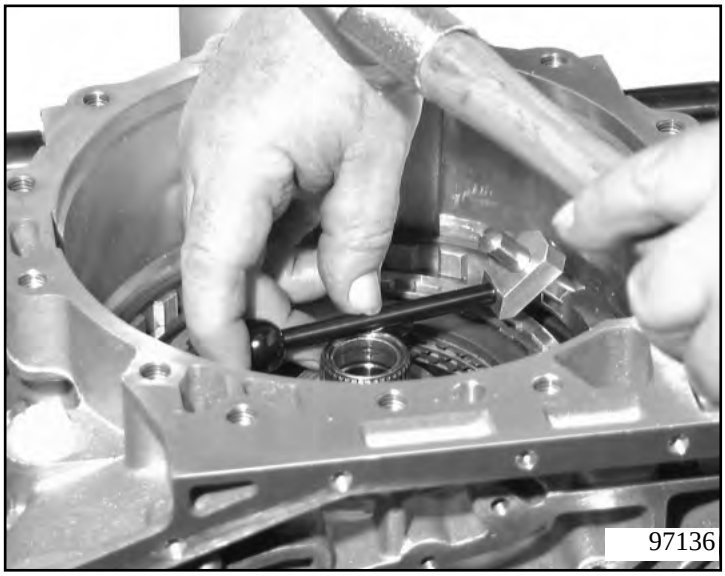


**Important!**
The lifting device keeps clutch C from falling out.

ProCarManuals.com

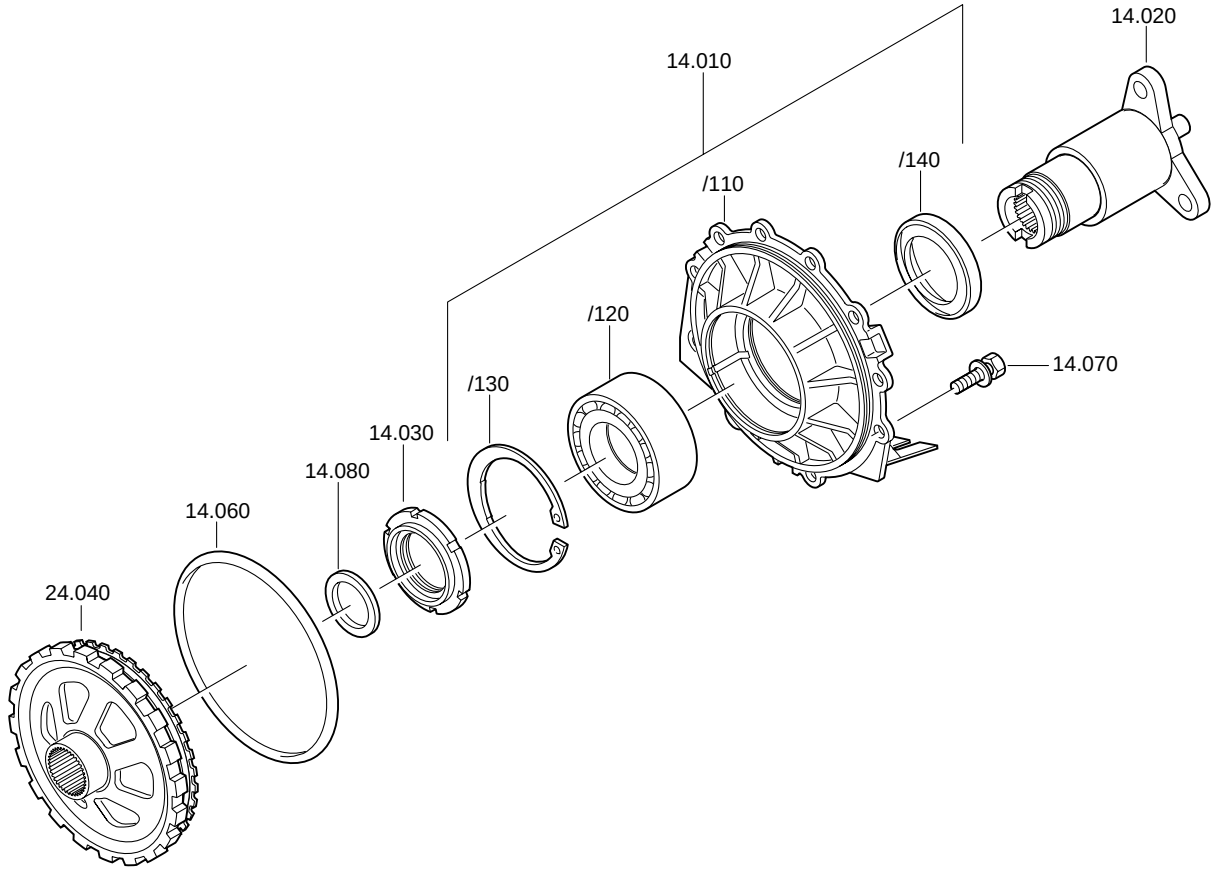


ProCarManuals.com

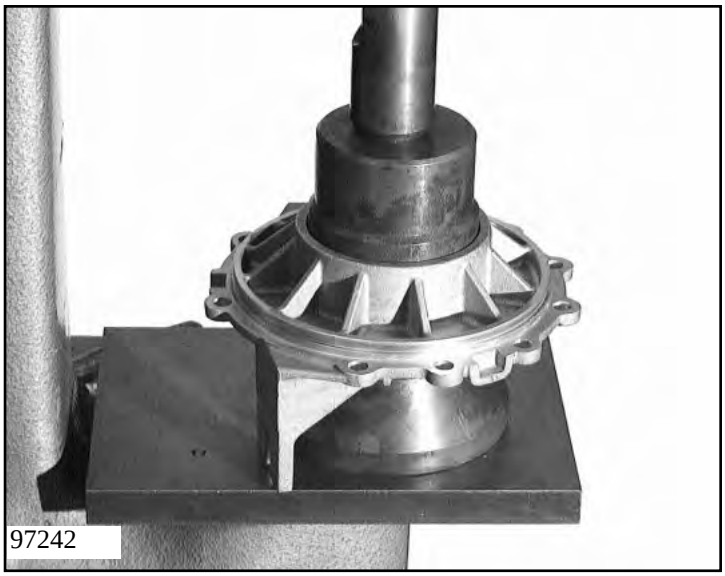


Place extension 14.010/110 onto the support surface of the press-in device 5x46 000 945.
Put ball bearing 14.010/120 onto the tool's press-in bolt. Press it into the extension in the mandrel press and secure it with snap ring 14.010/130.

**Important!**
Make sure that the two bearings are not mixed up (they are not interchangeable) nor installed in the wrong position.

Turn over the extension, making sure that the bearing outer rings do not fall out. Using assembly drift 5x46 001 949, mount shaft seal 14.010/140 in the mandrel press.

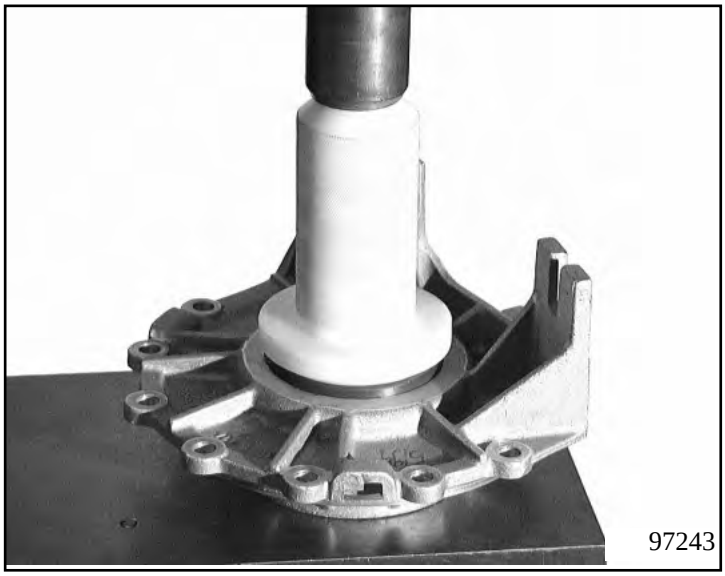


Put output flange 14.020 on counter support 5x46 000 946. Put the extension on the output flange. Place O-ring 14.060 on the extension.

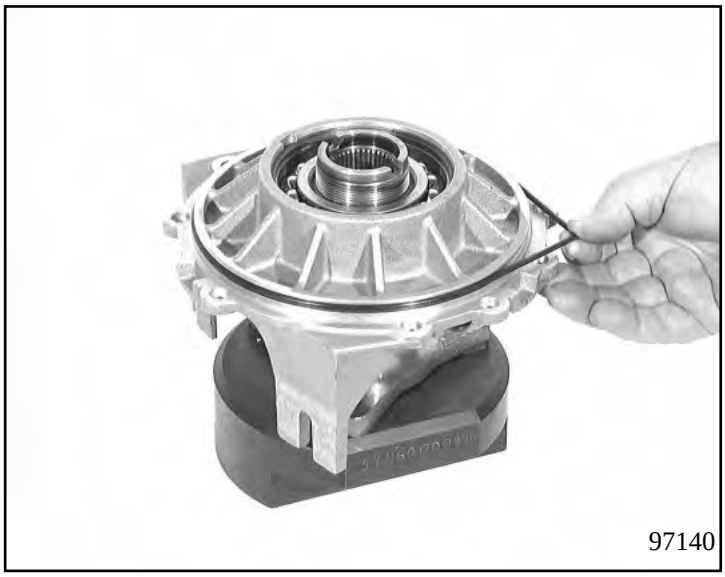


**Working with a vice**

Screw slotted nut 14.030 on to the output flange, tighten it with slotted nut wrench 5x46 000 787 and secure it.

(See Chapter 1.5 for tightening torque)

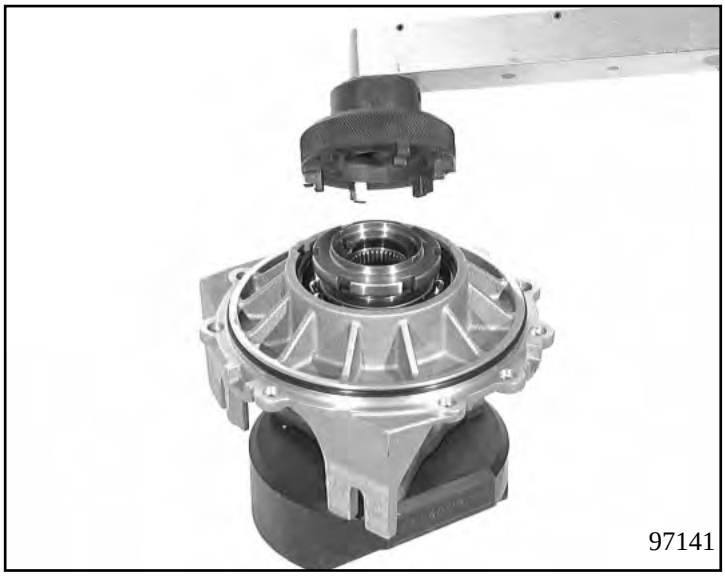


ProCarManuals.com

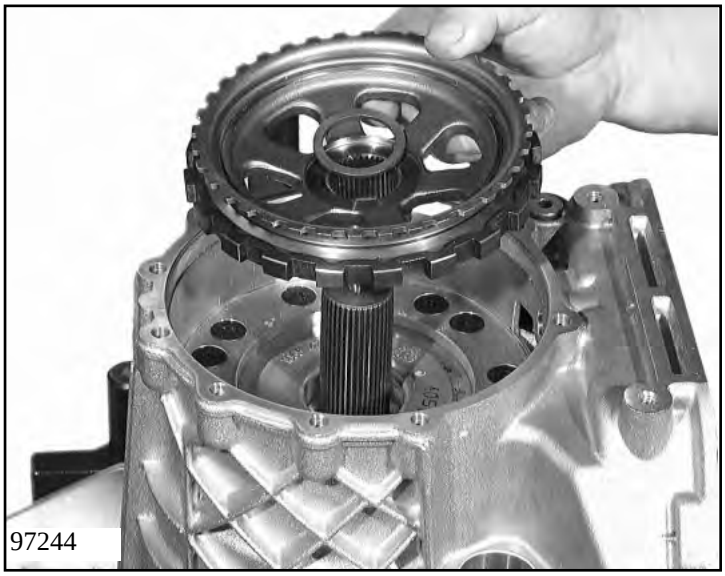


Turn the transmission 180°. Put in parking lock wheel 24.040, and place shim 14.080 on top of it.

**Important!**
Making adjustments, **Chapter 1.4.5**

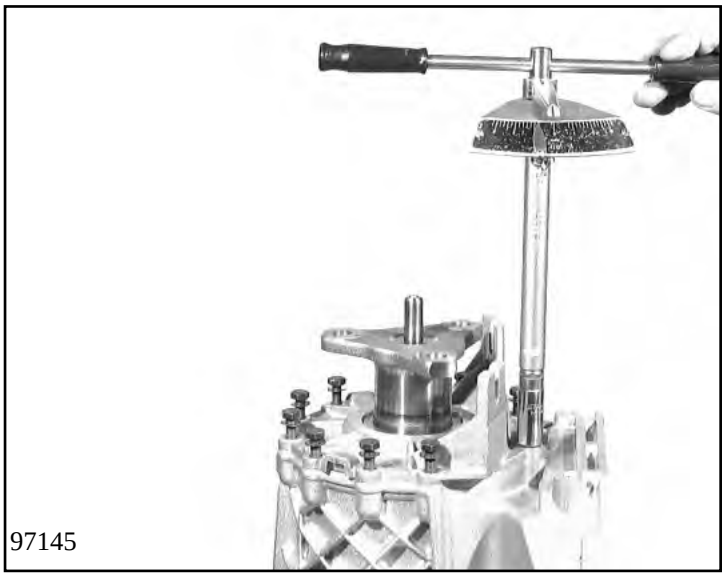


Put on the output assembly and fasten it with 10 hexagonal screws 14.070.
Turn the housing 180°.
Remove assembly fixture 5x46 001 077.

(See Chapter 1.5 for tightening torque)

ProCarManuals.com

ProCarManuals.com

## 3.5 Tower II (input with clutches A and B)
### 3.5.1 Clutch A (input)

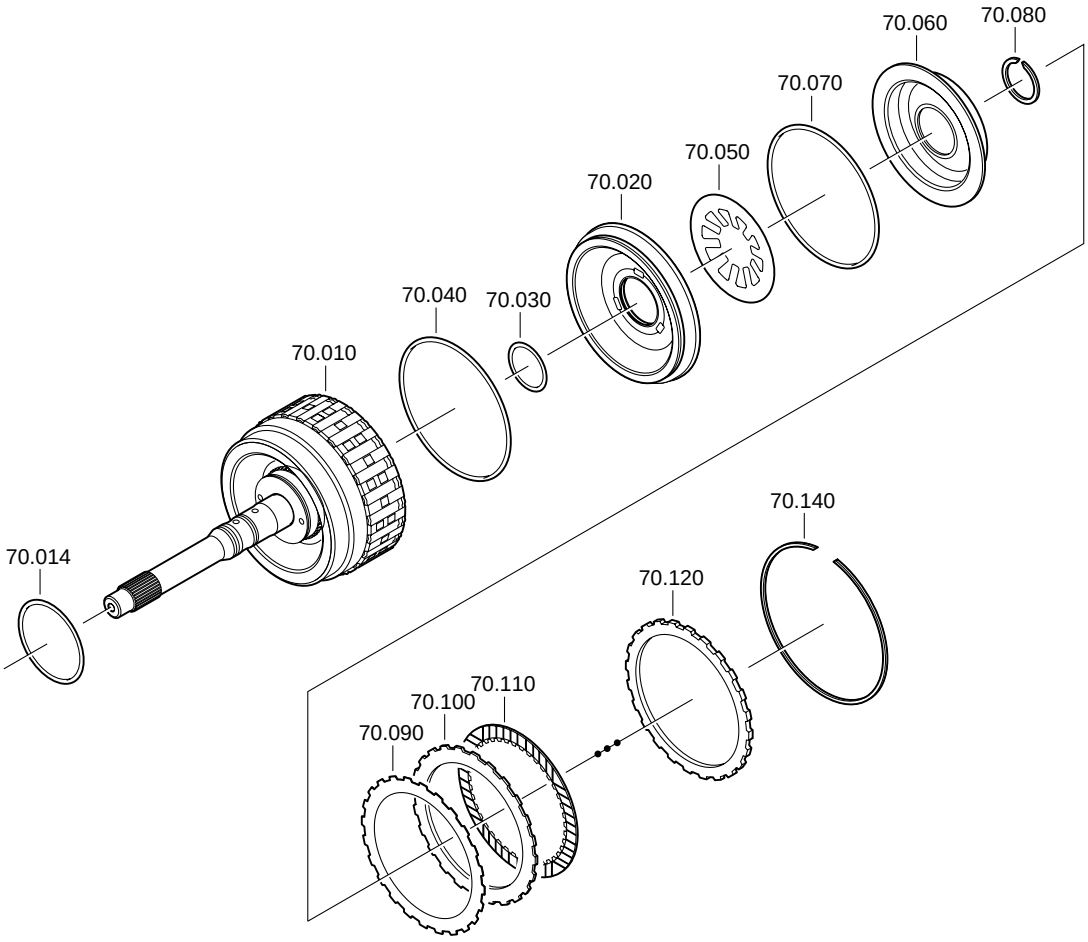


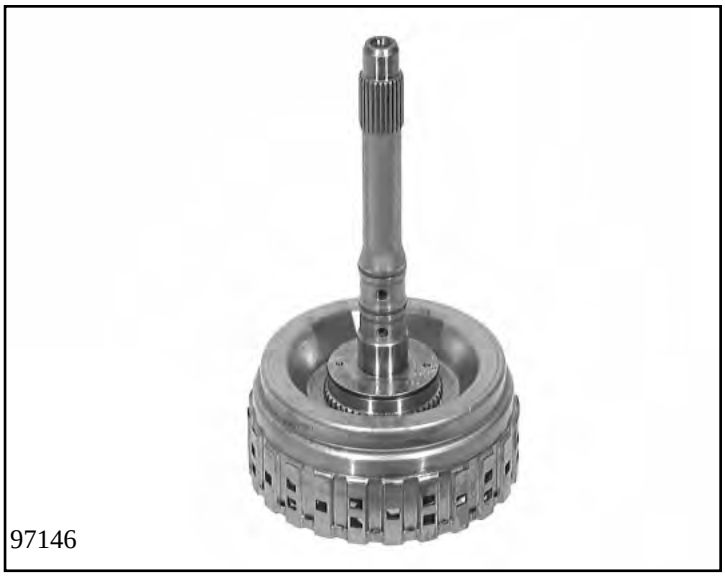


Place a new O-ring 70.014 and two rectangular-section rings 72.140 on cylinder A 70.010 with the input shaft.

ProCarManuals.com

Put new O-rings 70.030 and 70.040 on piston 70.020.
Press the piston into cylinder A.

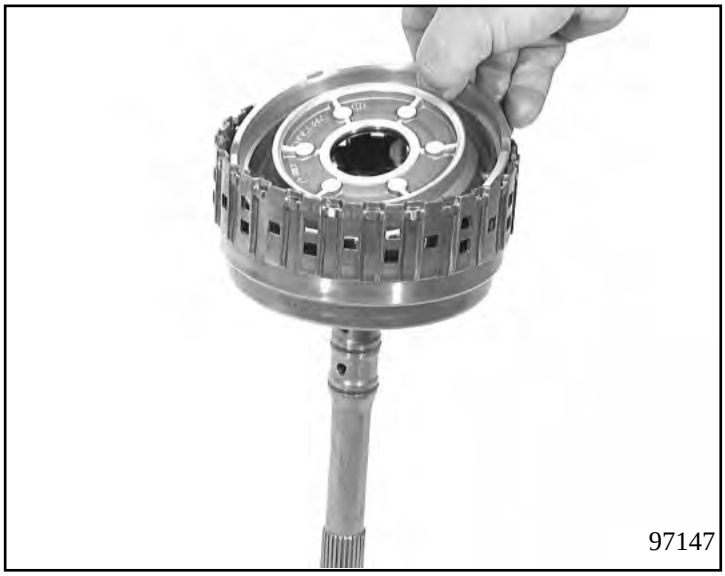


Put a new O-ring 70.070 onto oil dam 70.060. Insert cup spring 70.050 into cylinder A and press in the oil dam. Using assembly bracket 5x46 001 499, press down the oil dam in the mandrel press, and secure it with snap ring 70.080.

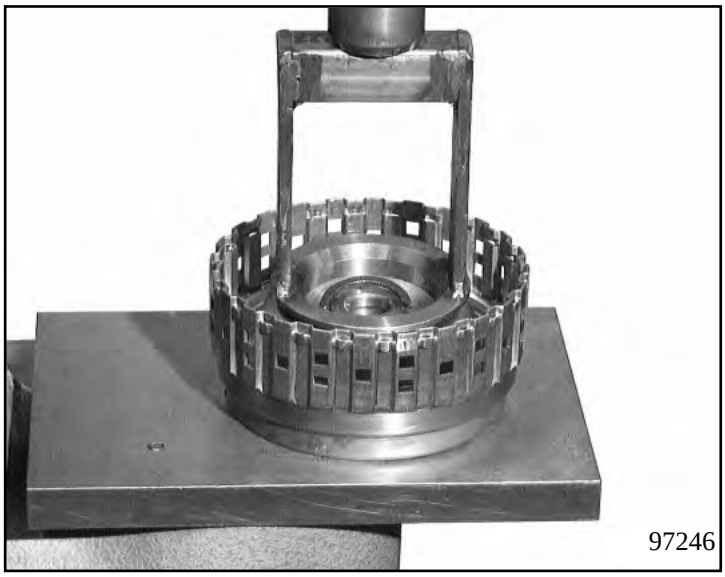


Insert the complete clutch pack A. Begin with spring clutch disc 70.090, followed alternately by outer clutch disc 70.100 and lined clutch disc 70.110.
Insert end disc 70.120 and secure it with snap ring 70.140.

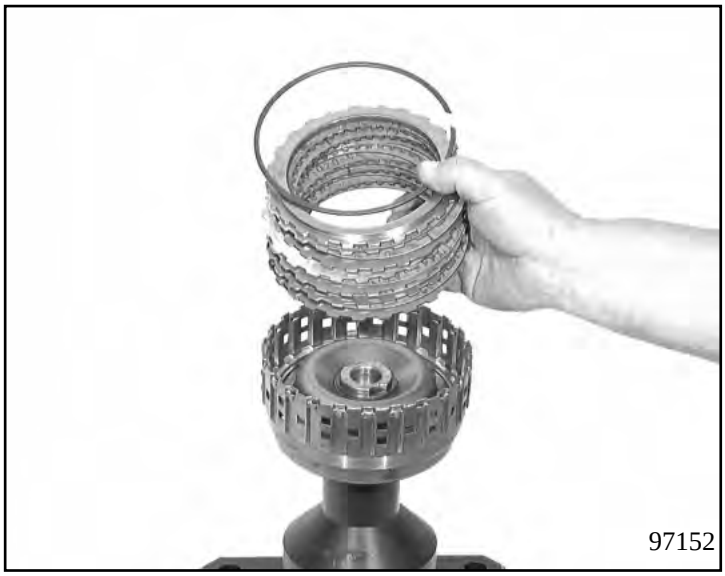


**Important!**
Making adjustments: see **Chapter 1.4.7**

ProCarManuals.com

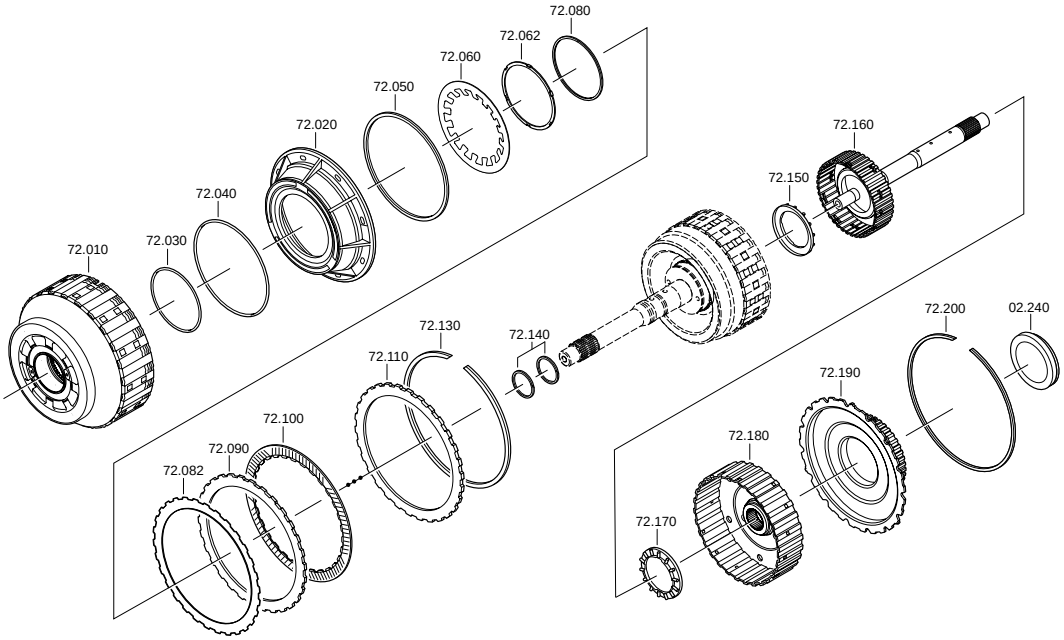

Put two O-rings (72.030, 72.040) and sealing ring 72.050 on piston B 72.010. Press piston B into cylinder B.

ProCarManuals.com

Insert cup spring 72.060 and press it down in the mandrel press using assembly bracket 5x46 001 500; insert retaining ring 72.062 and secure it with retaining ring 72.080.

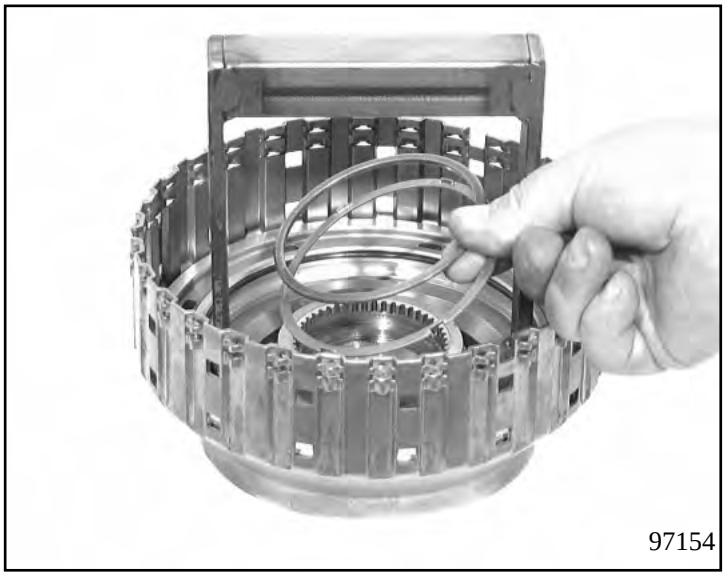
97154

Insert the complete clutch pack B. Begin with spring clutch disc 72.082 followed alternatingly by outer clutch disc 72.090 and lined clutch disc 72.100.
Secure the top outer clutch disc 72.110 with snap ring 72.130.

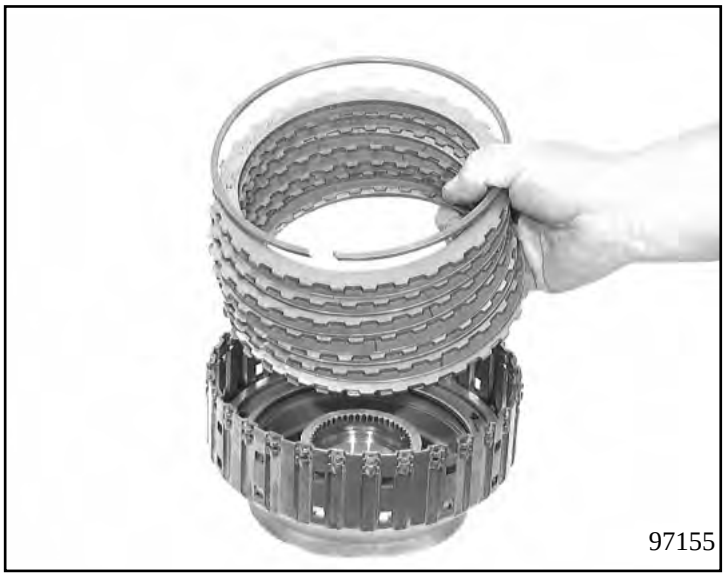
97155

**Important!**
Making adjustments: see **Chapter 1.4.8**

Insert the complete clutch A into clutch B. Place axial needle roller bearing 72.150 on the hub of cylinder A.
See the picture beside for the correct installation of the bearing.

97159

ProCarManuals.com

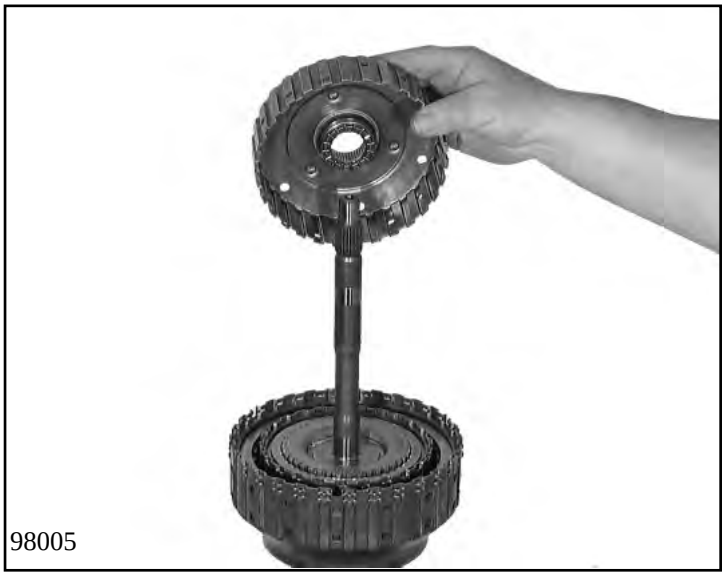


Align the discs for clutches A and B, and insert intermediate shaft 72.160, turning it as you put it in.
Attach axial needle roller bearing 72.170 to the hub of inner disc carrier B using petroleum jelly.
Insert inner disc carrier B 72.180, turning it as you put it in.

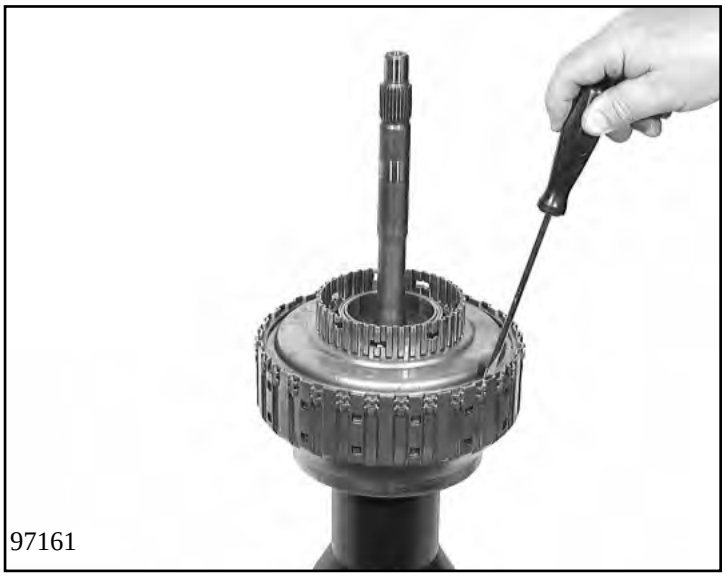


Put inner disc carrier C 72.190 into cylinder B and secure it with snap ring 72.200.

**Important!**
The snap ring should be 2.6 mm thick.

Ensure that the angle thrust bearing from the axial needle bearing is pressed into the hub.

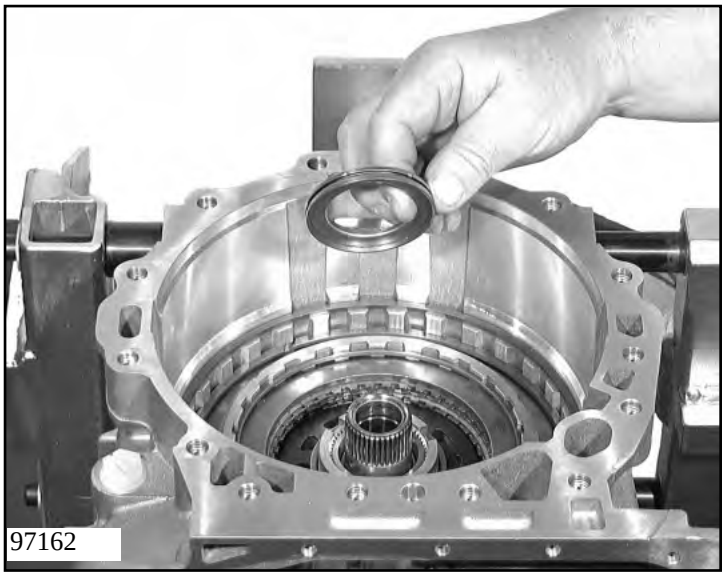


Place axial needle roller bearing 02.240 on tower I.
See the picture on the left hand side for the correct installation of the bearing.

ProCarManuals.com

Turn tower II 180° in the support fixture. Align the discs for brake C. Then put in tower II by hand, turning it backwards and forwards until the discs engage completely in disc carrier C.

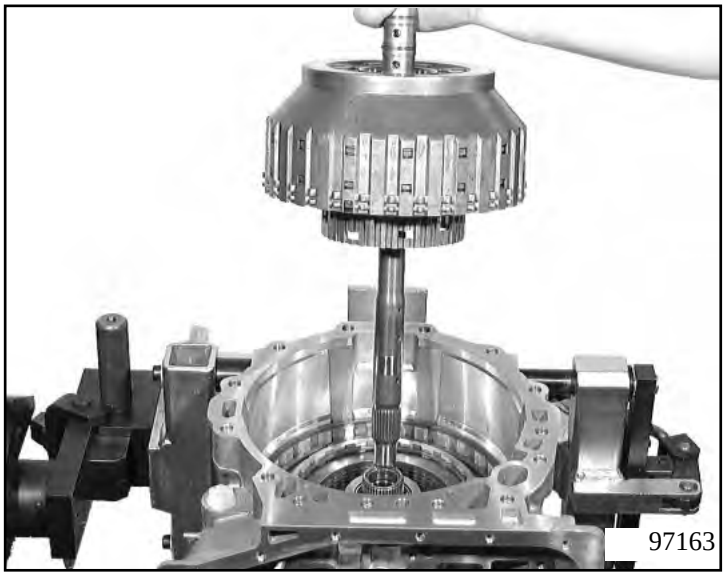


**Control dimension:**
Cylinder AB to the transmission housing's sealing area: approx. 20 mm.

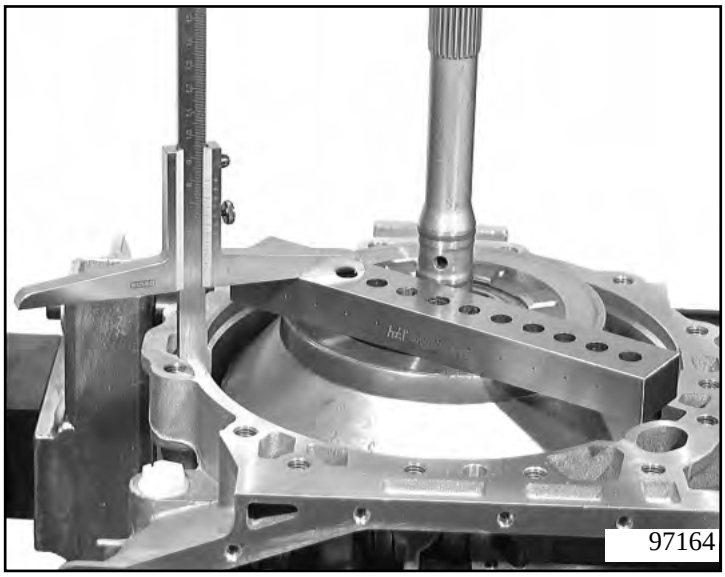


**Note!**
Dimensions is indicated without the measuring bar thickness.

ProCarManuals.com

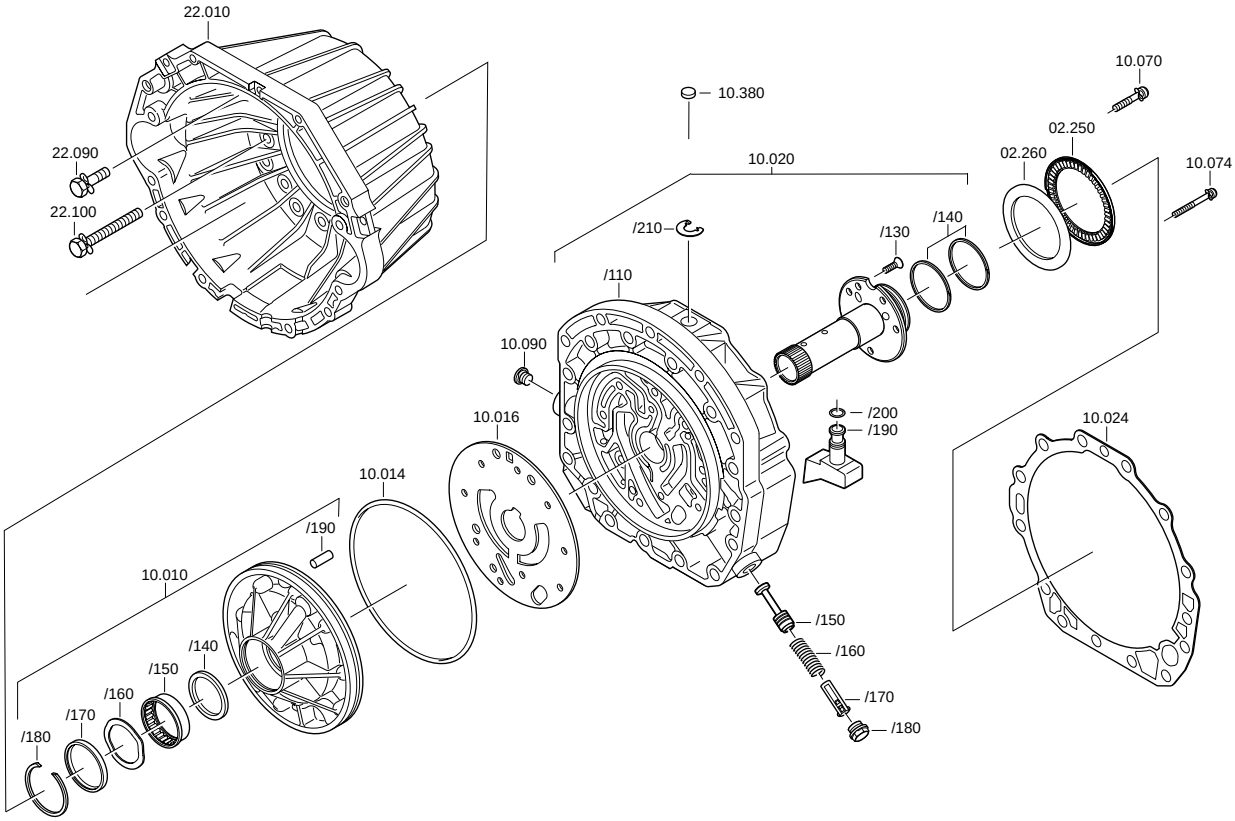

Complete pump 10.010.
First put sealing ring 10.010/140 into the pump housing and press in the needle bearing 10.010/150 with assembly drift 5x46 000 954 in the mandrel press.

ProCarManuals.com

Insert plate 10.010/160. Using assembly sleeve 5x46 000 953, mount shaft seal 10.010/170 into the pump housing and secure it with snap ring 10.010/180.

Press in sleeve 10.010/190.
Assemble a new O-ring 10.014.
Before putting the pump gear and pump ring gear together, lubricate them slightly with oil.
After this, put the pump together in such a way that one marking can be seen on the pump ring gear and two can be seen on the pump gear.

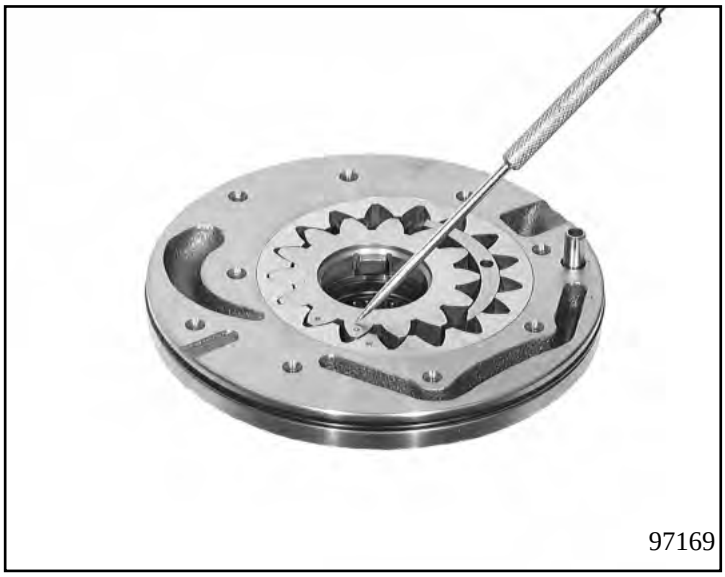


Put two rectangular-section rings 10.020/140 on stator shaft 10.020/120. In order to be able to mount the stator shaft on the intermediate plate, the two parts have to be positioned together properly. The procedure for doing this is described on the next page.

ProCarManuals.com

97171

Warm the intermediate plate 10.020/110 up to 70° C using a hot-air blower.
Screw two locating pins 5x46 001 007 into the intermediate plate.
Guide in the stator shaft using the locating pins and secure it first with three countersunk screws 10.020/130. Remove the locating pins and screw in the rest of the counter-
sunk screws.

(See Chapter 1.5 for tightening torque)

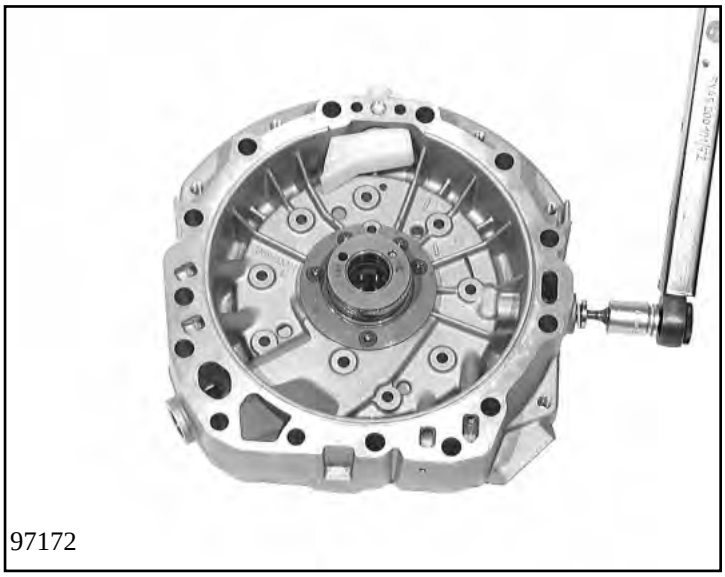
97172

Mount breather 10.020/190 (with a new O-ring 10.020/200) into the intermediate plate and secure it with retaining disc 10.020/210.
Put breather cover 10.380 on the breather.
Screw plug 10.090 into the intermediate plate.

(See Chapter 1.5 for tightening torque)

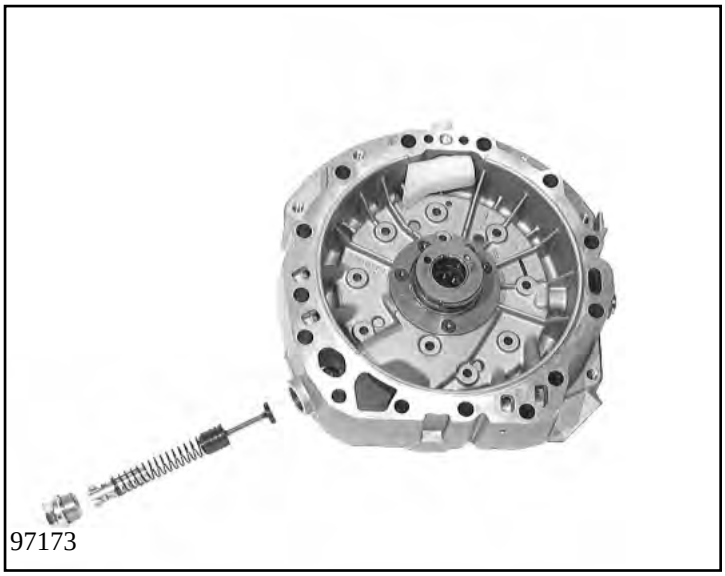
97173

Insert the flow control valve (consisting of piston 10.020/150, pressure spring 10.020/160, sleeve 10.020/170) into the intermediate plate and secure it with screw plug 10.020/180.

(See Chapter 1.5 for tightening torque)

ProCarManuals.com

Screw locating pin 5x46 001 007 into the pump. Mount the complete pump (including intermediate metal sheet 10.016) over the stator shaft onto the intermediate plate. Remove the locating pins and fasten tight with 9 machine screws 10.070 and 1 cylinder screw 10.074.

(See Chapter 1.5 for tightening torque)

**Note!**
Check pump with sleeve 5x56 000 021 to ensure that it moves freely. The pump wheels must turn freely and easily.

97174

Attach shim 02.260 to the stator shaft using petroleum jelly.

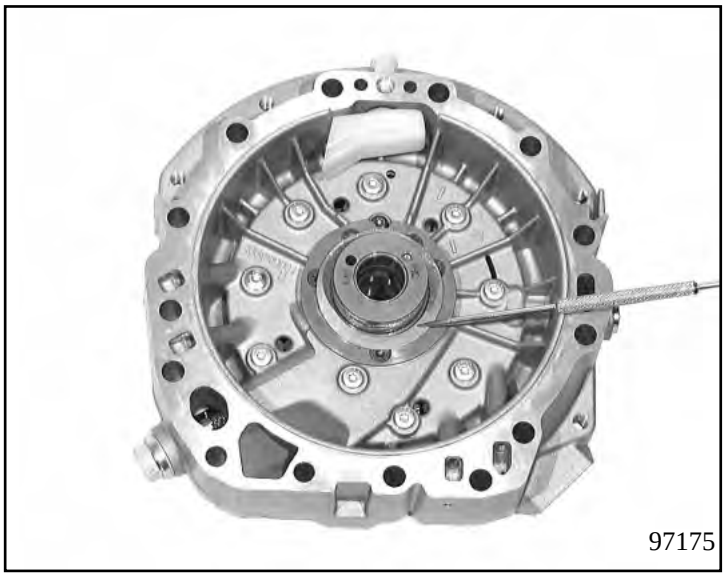
97175

Attach seal 10. 024 to the transmission housing using petroleum jelly.
Put axial needle roller bearing 02.250 over the drive shaft onto clutch B.

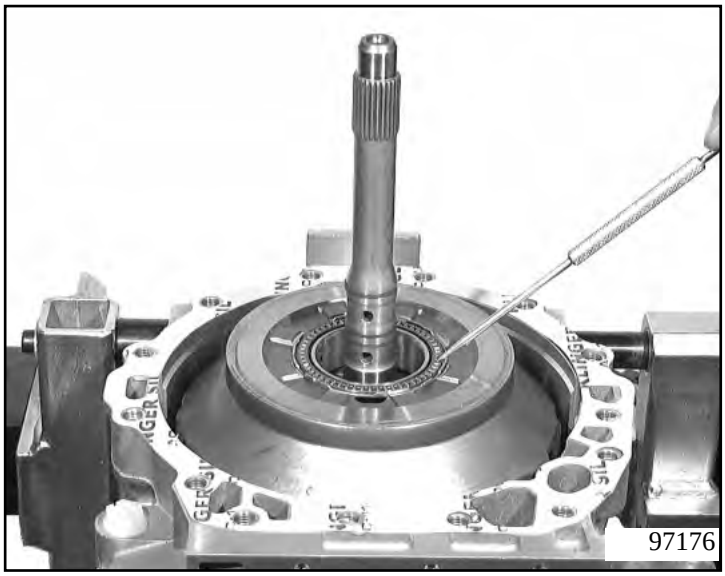
97176

ProCarManuals.com

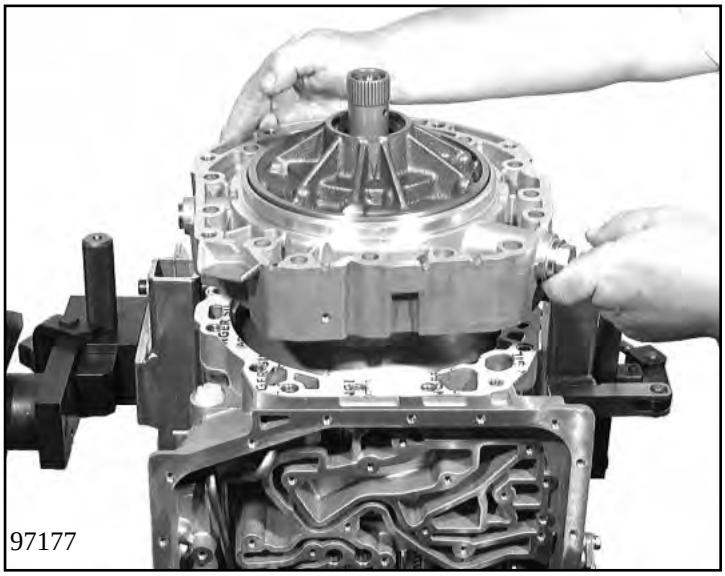


Coat the rectangular-section rings on the drive shaft with some petroleum jelly. Put the intermediate plate carefully onto the transmission housing and align it.

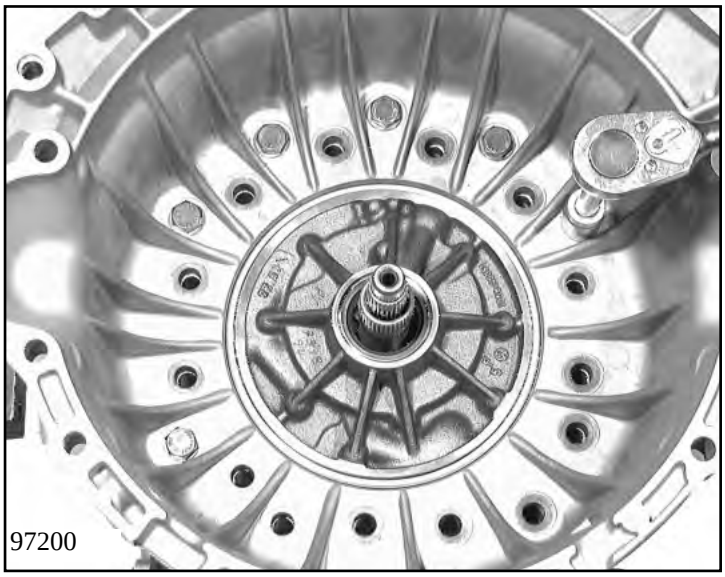


Put converter bell housing 22.010 onto the intermediate plate so that 20 hexagonal screws can be screwed in as follows:
- 6 screws: 22.090 (see picture)
  35mm long
- 14 screws: 22.100 (rest of the screws)
  90mm long

(See Chapter 1.5 for tightening torque)

**Important!**
Making adjustments: see **Chapter 1.4.8**

ProCarManuals.com

ProCarManuals.com

## 3.7 Control unit, oil pan and converter
## (complete control unit, see spare parts list, technical cover sheet, position YO2)

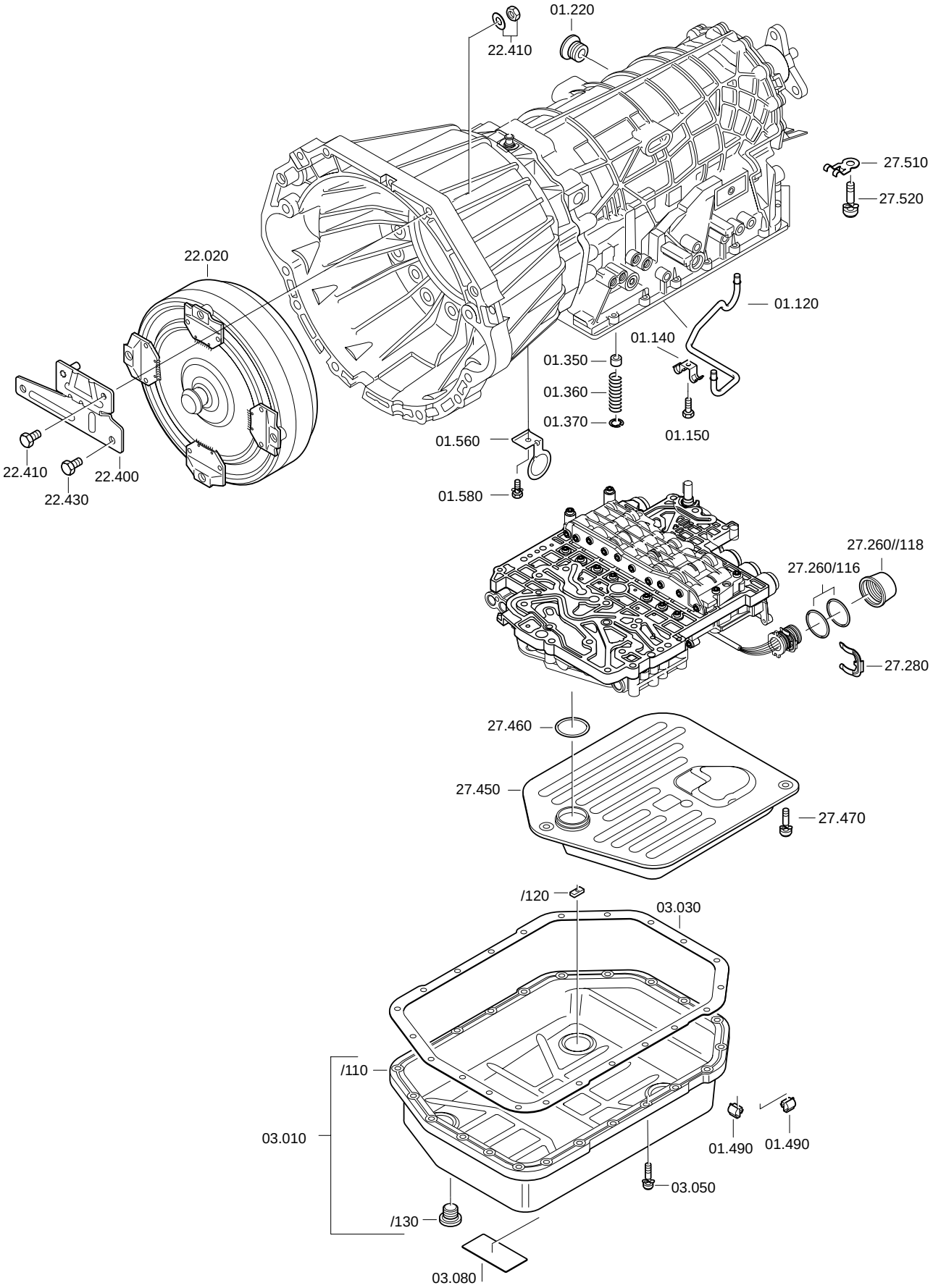


ProCarManuals.com

Turn the housing 90°.
Mount the remaining oil pipe (01.120) into the cylinder E bore and the transmission housing using driving tool 5x46 001 534.
Attach with retainer 01.140 and machine screw 01.150.

(See Chapter 1.5 for tightening torque)

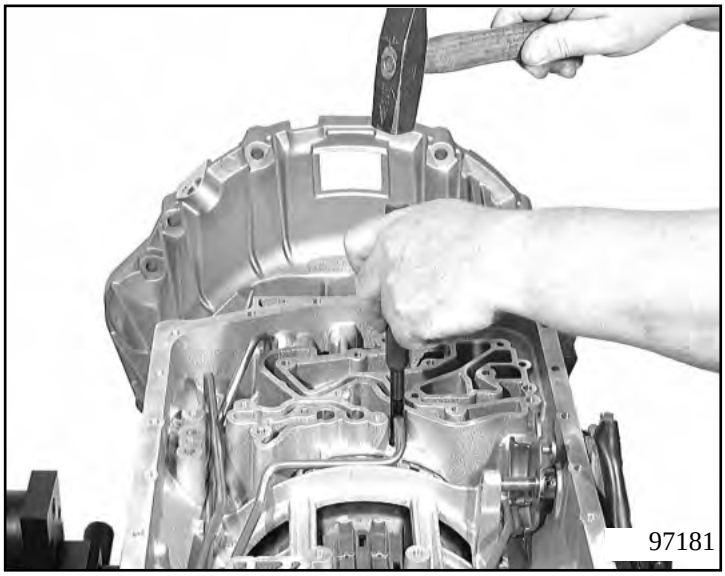
97181

Using a suitable tool, drive in two sealing bushes 01.350 between the transmission housing and cylinder DE.
Insert one 01.360 pressure spring for each sealing bushing and secure with retaining ring 01.370.

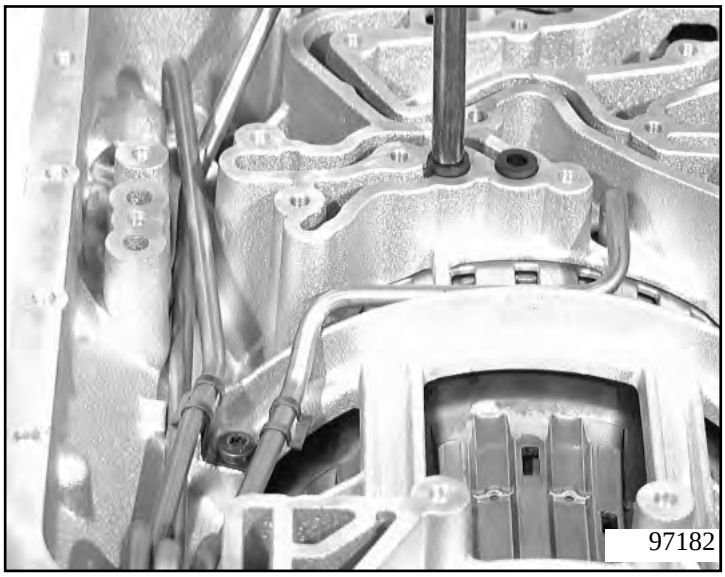
97182

Screw testing plate 5p01 003 040 onto the control unit connection on the housing and check the function of all clutches/brakes by applying compressed air to the marked bores.
Then remove the device again.

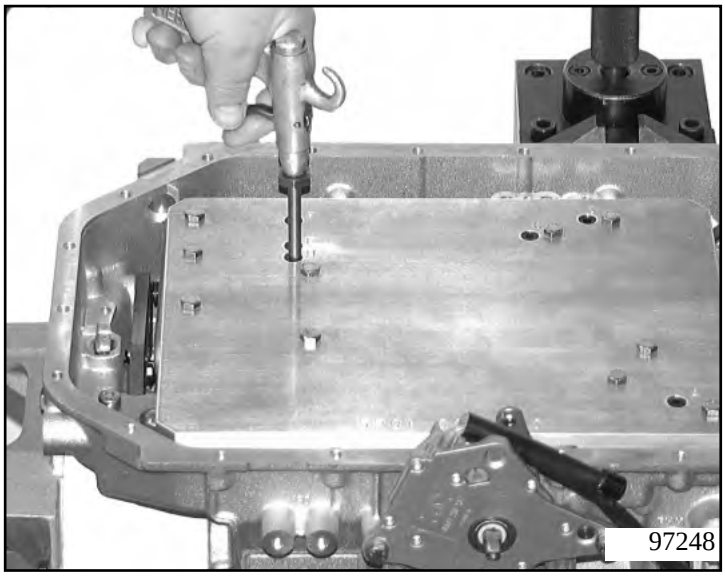
97248

**Important!**
Tighten screws of testing plate with 8 Nm on the transmission housing.

ProCarManuals.com

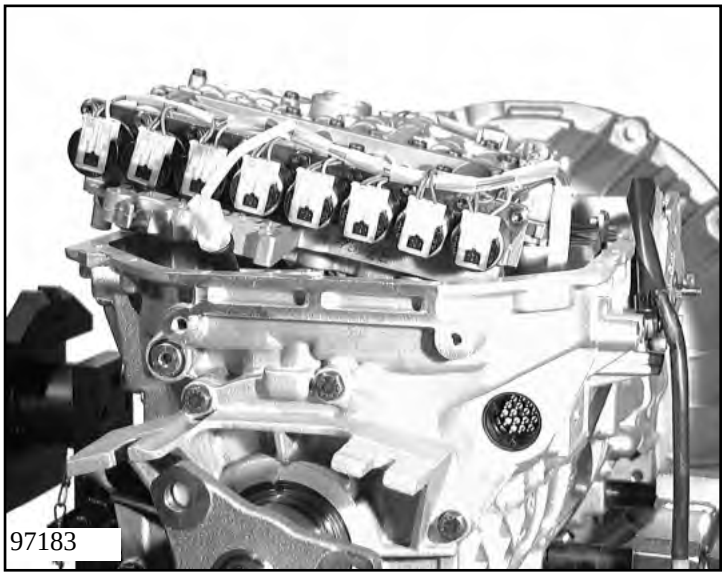


Put the control unit on loosely.
Put two new O-rings 27.260/116 on the wiring harness socket outlet.
Align the socket outlet so that the two lugs on the socket outlet can engage in the lug on the transmission housing.

Press in the socket outlet and secure with retaining clip.

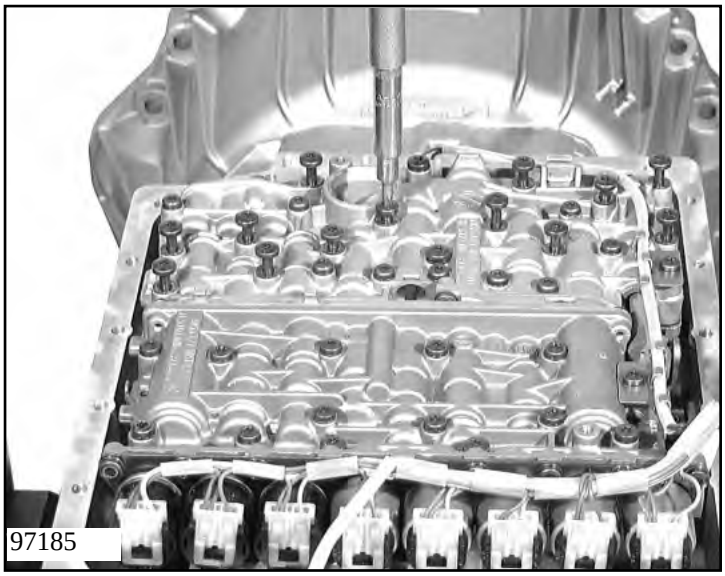


Put the detent disc in the neutral position. Align the control unit, move it into position by hand, and fasten it with 17 machine screws 27.400, and 5 machine screws 27.410.

(See Chapter 1.5 for tightening torque)

**Important!**
The groove on the selector valve must engage to the detent disc stud.

ProCarManuals.com

Press the inductive transmitter into the transmission housing and fasten it with retainer 27.510 and a Torx screw 27.520.

(See Chapter 1.5 for tightening torque)

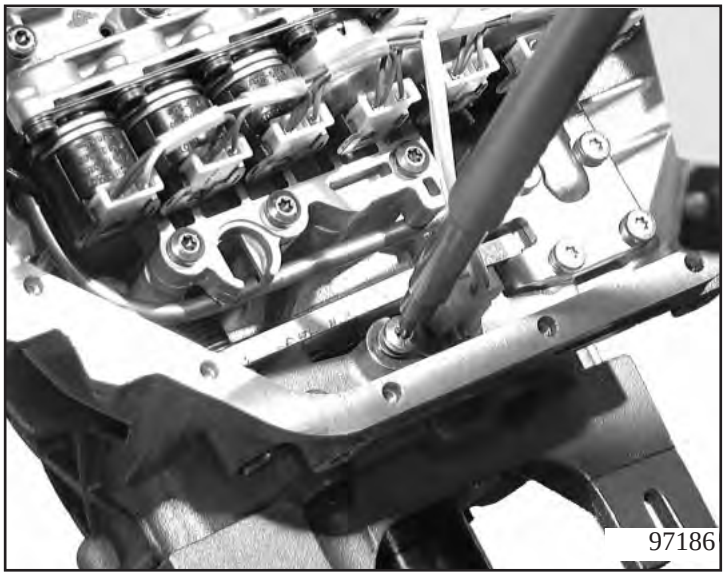
97186

Put O-ring 27.460 on the stub pipes from filter 27.450. Fasten the filter with two machine screws 27.470.

(See Chapter 1.5 for tightening torque)

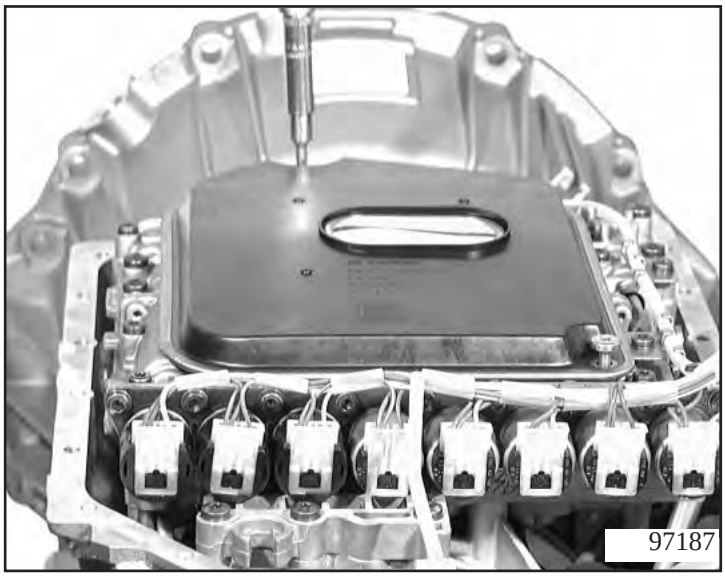
97187

Use grease (petroleum jelly) to attach and align seal 03.030 to the transmission housing.
Fasten four magnets 03.010/120 onto the corners of oil pan.
Put on oil pan 03.010/110 and fasten it with 22 machine screws 03.050.

(See Chapter 1.5 for tightening torque)

**Important!**
On BMW oil pans has a sticker 03.080 (oil filling) to be fixed

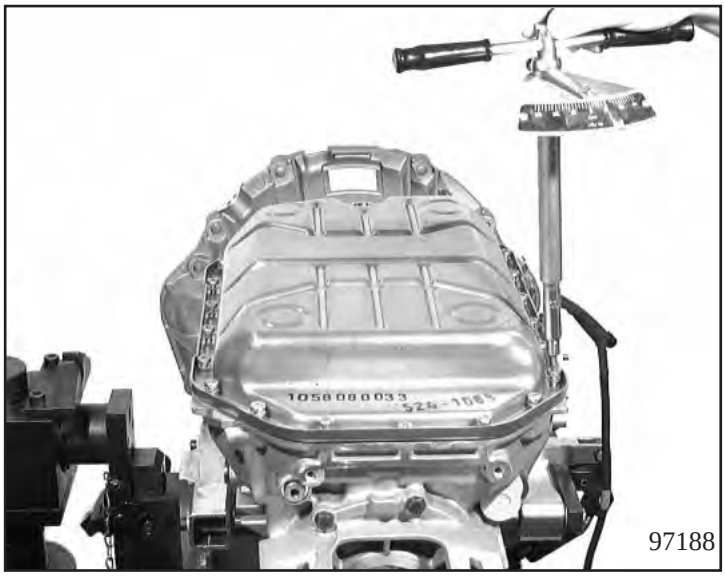
97188

ProCarManuals.com

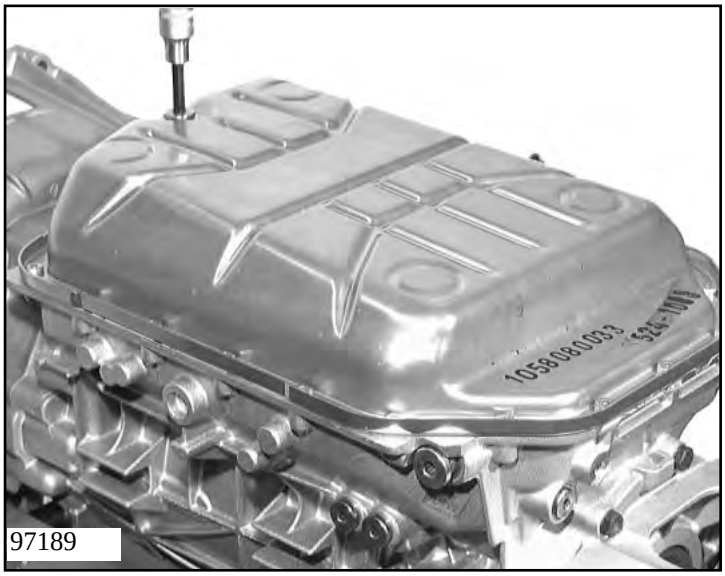


Screw plug 01.220 into the transmission housing and 03.010/130 into the oil pan.

(See Chapter 1.5 for tightening torque)

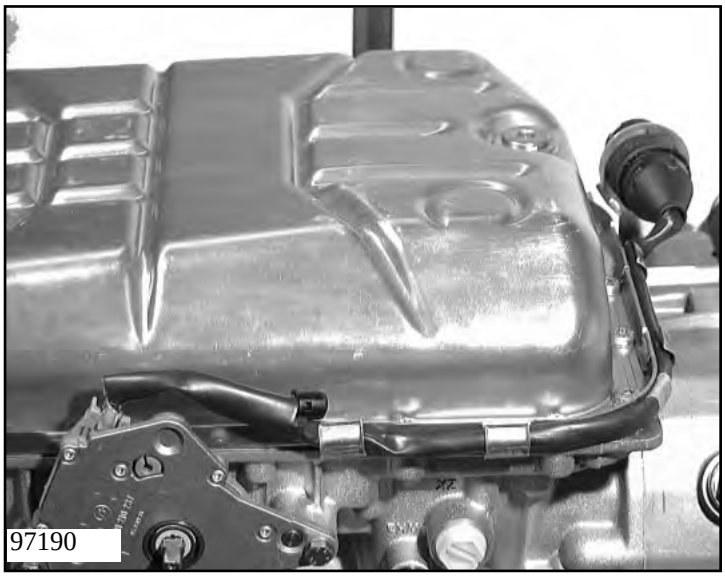


Attach cable terminals 01.490 to the oil pan.
Screw bracket 01.560 with hexagonal screw 01.580 on to the transmission housing.
Pass the cable plug through and secure it.
(See Chapter 1.5 for tightening torque)

**Important!**
Arrow on cable plug must point to oilpan.

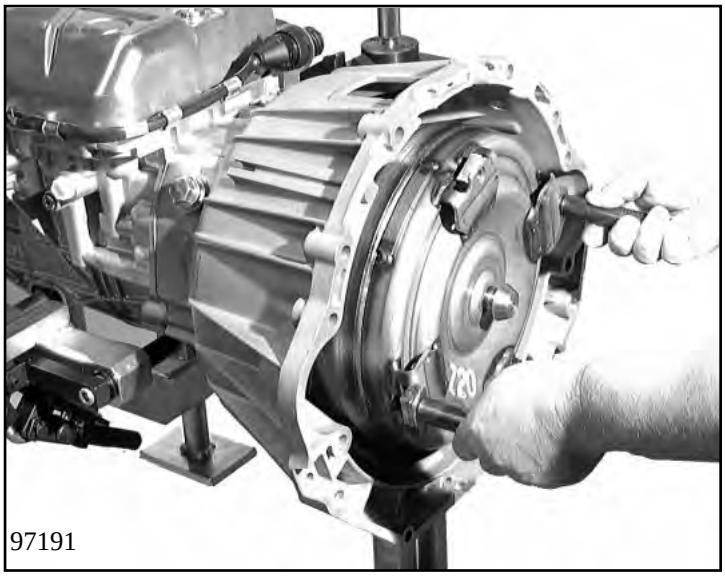


Screw in converter handles 5x56 000 090 and carefully insert converter 22.020.

ProCarManuals.com

Turn the transmission 90° and move the converter backwards and forwards until the pump drive journals engage.

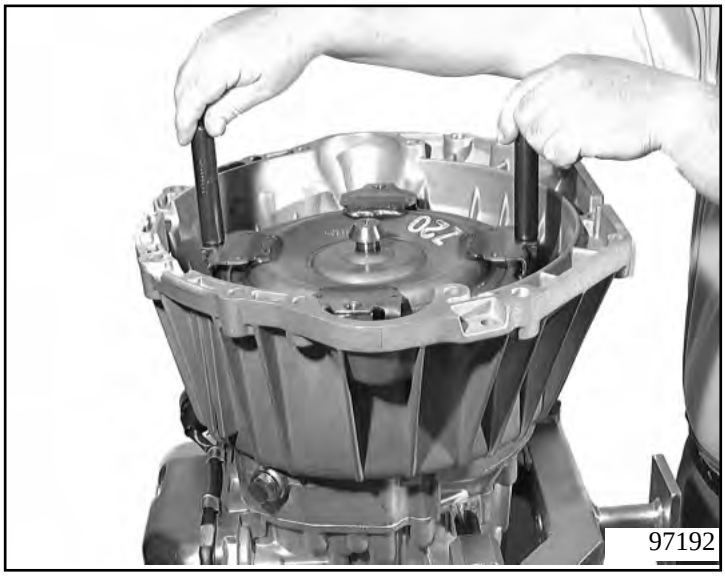


**Important!**
When inserting it, ensure that the drive journals do not become damaged.

Remove the converter handles.
Screw on the converter retaining bracket with 3 screws (2x 22.410 and 1x 22.430).

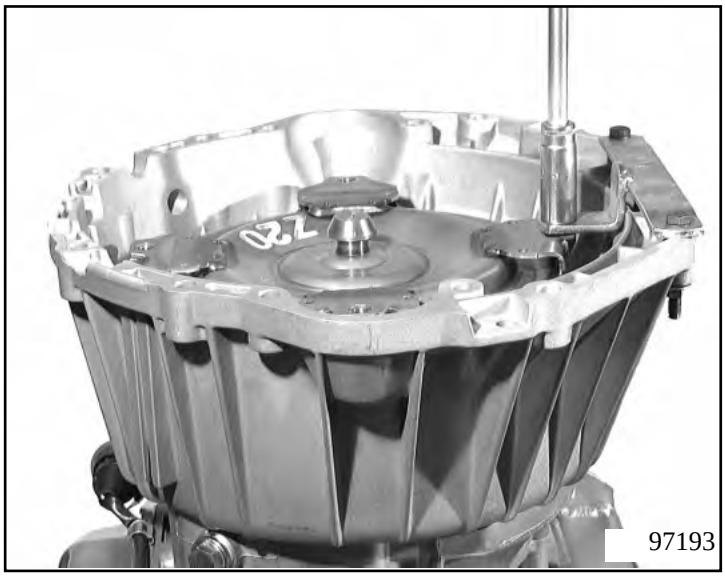


(See Chapter 1.5 for tightening torque)

**Important!**
Make sure that the fastening screw 22.430 for the converter is not too long - 16 mm is the recommended length - otherwise the converter will be damaged.

Use a multimeter to make a resistance test of the position switch according to the function table.

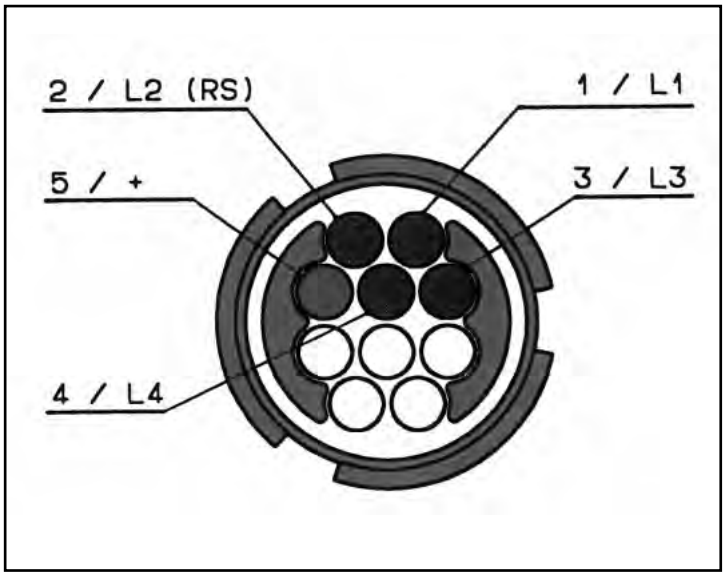


(See Chapter 1.8 for function tests)

ProCarManuals.com

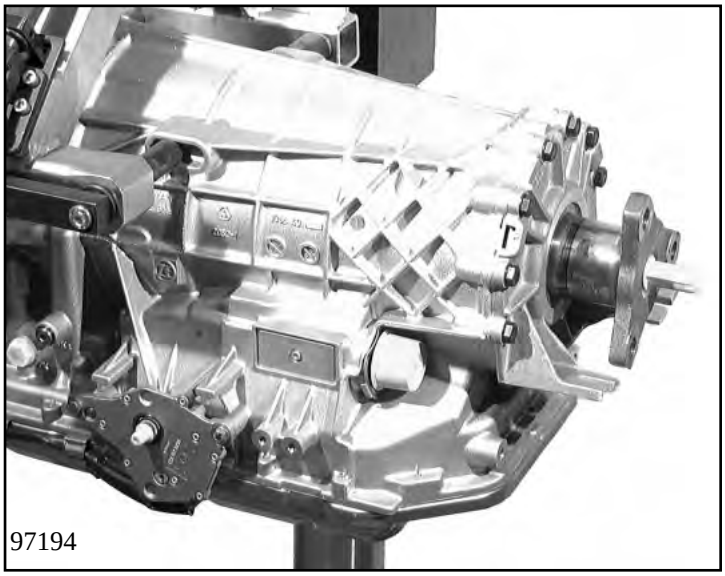


Put on all transport plugs/ caps:

-1 protective cap on the output flange
 - 14.040
-1 plug on the EGS wiring harness
 - 27.260/118
-1 plug on the position switch's wiring harness
-1 stopper on the selector shaft 06.050

**Note!**
On vehicles with right hand drive, put two stoppers on the selector shaft.

ProCarManuals.com

ProCarManuals.com