2004 JEEP LIBERTY/CHEROKEE (KJ)

PARTS CATALOG

ILLUSTRATION AND TEXT
(CHASSIS - BODY - TRIM)

October 2003

SUPERSEDES
September 2003
ENGLISH

Mopar PARTS

Jeep

CHRYSLER • PLYMOUTH • DODGE • JEEP

THE MOPAR DIFFERENCE

INDEX TO INFORMATION PAGES

The use of this Parts Catalog and the arrangement of information herein is explained in the General Information Section as indexed below.

Abbreviations INF-15
Alphabetic Index INF-12
Body Code Plate Interpretation INF-14
Catalog Groups - Titles & Contents INF-2
How to Use This Catalog and Locate Parts INF-10
Illustration Index INF-12
Illustration Numbering Index INF-11
Index INF-1
Logical Illustration Index INF-4
Logical Illustrations INF-11
Numerical Index INF-12
Page Numbering INF-11
Part Packages INF-12
Standard Parts INF-12
Symbols Used in this Catalog INF-11
VIN Plate Decoding Information INF-13

CATALOG GROUPS - TITLES & CONTENT

Group	Content
001	Component Parts for Mopar Accessories
002	Front Suspension & Drive
003	Rear Axle
004	Parking Brake
005	Service Brakes
006	Clutch
007	Cooling
008	Electrical
009	Engine Mounting
011	Exhaust
013	Frames and Bumpers
014	Fuel
016	Propeller Shafts and U-Joints
017	Rear Suspension
019	Steering
022	Wheels, Covers and Jacks
024	Air Conditioning & Heater
025	Emission Systems
08A	Instrument Panel and Radios and Consoles
2.4L	Engine 2.4L Four Cylinder
2.5LD	Engine 2.5L Four Cylinder (Turbo Diesel)
2.8L	Engine 2.8L Four Cylinder (Turbo Diesel)
231	Transfer Case Model 231
23D	Wiper/Lock Cylinder and Keys
242	Transfer Case Model 242
3.7L	Engine 3.7L Six Cylinder
3550	Manual Transmission 5 Speed
42RLE	Automatic Transaxle 4 Speed
5-45RFE	Automatic Transmission Multi-Speed
DKJ	Doors and Related Parts
EKJ	Exterior Ornamentation
IKJ	Interior Trim
LBLS	Labels All Vehicle Locations
NV1500	Manual Transmission 5 Speed
SKJ	Body Sheet Metal Except Doors

LOGICAL ILLUSTRATION INDEX

Group	Logical Illustration	Logical Illustration Name
001	100	Audio & Electronics
001	200	Carriers & Cargo Hauling
001	400	Exterior Appearance
001	500	Exterior Protection
001	600	Fog Lights & Electrical
001	800	Interior Storage
001	900	Security
002	100	Front Suspension
002	200	Front Axle Drive Shafts
002	300	Front Axle Housing
002	400	Front Axle Assembly
002	600	Front Axle Differential
002	800	Front Axle Skid Plate
003	100	Rear Axle
003	200	Differential and Housing
003	300	Rear Axle Vent
004	100	Parking Brake Lever and Cables
005	100	Front Brakes
005	200	Rear Brakes
005	300	Power Brake Booster
005	400	Brake Master Cylinder
005	500	Brake Lines and Hoses
005	600	Brake Pedals
006	100	Clutch
006	200	Clutch Housing
006	300	Clutch Controls
006	400	Clutch Pedals
007	100	Radiator and Related Parts
007	200	Water Pump and Related Parts
007	300	Tank, Coolant Engine
007	400	Pulleys and Related Parts
007	500	Drive Belts
007	600	Lines, Transmission Oil Cooler
007	700	Grilles
008	100	Starters
008	1000	Battery Tray and Cables
008	1100	Lamps - Front, Rear and Courtesy
008	1200	Wiring-Engine & Related Parts
008	1300	Wiring-Headlamp to Dash
008	1400	Wiring-Instrument Panel
008	1500	Wiring-Body & Accessories
008	1600	Wiring Repair
008	1700	Air Bag Systems
008	1900	Spark Plugs-Cables-Coils
008	200	Alternators
008	400	Modules
008	500	Relays
008	600	Sensors
008	700	Single Board Engine Controllers
008	800	Switches
008	900	Horns
009	100	Engine Mounting
011	100	Exhaust System
011	200	Heat Shields
013	100	Frames
013	200	Front Bumper and Fascia
013	300	Rear Bumper and Fascia
013	600	Trailer Tow
014	100	Tank, Fuel
014	1000	Speed Control
014	1100	Accelerator Pedal
014	200	Fuel Tank Filler Tube
014	300	Fuel Lines
014	400	Fuel Rail
014	500	Fuel Pump and Sending Unit
014	600	Throttle Body
014	700	Throttle Controls
014	800	Air Cleaner
016	100	Propeller Shaft

017	100	Rear Suspension
017	200	Rear Stabilizer
019	100	Steering Wheel
019	200	Steering Column
019	300	Steering Gear
019	500	Power Steering Pump
019	700	Power Steering Hoses
022	100	Wheels and Hardware
022	200	Wheel Covers and Center Caps
022	300	Jack Stowage
022	400	Spare Tire Stowage
024	100	Air Conditioner and Heater Units
024	200	Air Conditioner and Heater Plumbing
024	300	Air Conditioner and Heater Controls
024	400	Air Conditioning Compressor
024	500	Air Conditioning Compressor Mounting
024	600	Air Ducts and Outlets
025	200	EGR System
025	300	Vacuum Canister
025	400	Emission Harness
08A	100	Instrument Panel
08A	200	Instrument Panel Cluster
08A	300	Radio, Antenna, and Speakers
08A	400	Consoles
2.4L	200	Cylinder Head
2.4L	300	Cylinder Block
2.4L	400	Crankshaft, Piston, and Drive Plate
2.4L	500	Camshafts and Valves
2.4L	600	Timing Belt and Cover
2.4L	700	Engine Oiling
2.4L	800	Manifolds
2.4L	900	Crankcase Ventilation
2.5LD	200	Cylinder Head
2.5LD	300	Cylinder Block
2.5LD	400	Crankshaft, Piston and Drive Plate
2.5LD	500	Camshafts & Valves
2.5LD	600	Timing Belt and Cover
2.5LD	700	Engine Oiling
2.5LD	800	Manifolds
2.5LD	900	Crankcase Ventilation
2.8L	200	Cylinder Head
2.8L	300	Cylinder Block
2.8L	400	Crankshaft, Piston and Drive Plate
2.8L	500	Camshafts & Valves
2.8L	600	Timing Belt and Cover
2.8L	700	Engine Oiling
2.8L	800	Manifolds
2.8L	900	Crankcase Ventilation
231	100	Transfer Case Assembly
231	1200	Gearshift Controls
231	200	Case and Related Parts
231	400	Gear Train
231	900	Fork and Rails
23D	100	Lock Cylinders and Keys
23D	200	Windshield Wiper and Washer Systems
23D	300	Rear Wiper and Washer System
242	100	Transfer Case Assembly
242	1200	Gearshift Controls
242	200	Case and Related Parts
242	400	Gear Train
242	900	Fork and Rails
3.7L	200	Cylinder Head
3.7L	300	Cylinder Block
3.7L	400	Crankshaft, Piston and Torque Converter
3.7L	500	Camshafts & Valves
3.7L	600	Timing Belt and Cover
3.7L	700	Engine Oiling
3.7L	800	Manifolds
3.7L	900	Crankcase Ventilation
3550	100	Transmission Assembly
3550	1200	Gearshift Controls
3550	200	Case and Extension

3550	400	Gear Train
3550	900	Fork and Rails
42RLE	100	Transaxle Assembly
42RLE	1200	Gearshift Controls
42RLE	200	Case and Extension
42RLE	300	Oil Pump
42RLE	400	Gear Train
42RLE	700	Valve Body
5-45RFE	100	Transmission Assembly
5-45RFE	1200	Gearshift Controls
5-45RFE	1300	Seal and Shim Packages
5-45RFE	200	Case and Extension
5-45RFE	300	Oil Pump
5-45RFE	400	Gear Train
5-45RFE	700	Valve Body
DKJ	100	Front Door
DKJ	200	Rear Door
DKJ	500	Exterior Mirror
DKJ	600	Weatherstrips and Seals
EKJ	100	Nameplates
EKJ	200	Moldings and Ornamentation
EKJ	300	Decals and Tapestripes
IKJ	100	Headliner and Visor
IKJ	1000	Lift Gate Trim
IKJ	200	Moldings, Scuff Plates
IKJ	300	Carpet
IKJ	400	Door Trim Panels
IKJ	500	Front Seats and Attaching Parts
IKJ	600	Rear Seats and Attaching Parts
IKJ	700	Seat Belts-Front and Rear
IKJ	800	Adjusters, Covers, Shields, and Risers
LBLS	100	Interior
LBLS	200	Under Hood
LBLS	300	Doors
LBLS	400	Exterior
LBLS	500	Rear Cargo & Storage

NV1500	100	Transmission Assembly
NV1500	1200	Gearshift Controls
NV1500	200	Case and Extension
NV1500	400	Gear Train
NV1500	900	Fork and Rails
SKJ	1100	Roof Panels
SKJ	1200	Sunroof
SKJ	1300	Liftgate Panel
SKJ	1600	Luggage Rack
SKJ	200	Floor Pans
SKJ	300	Plugs
SKJ	400	Front Fenders
SKJ	500	Hood & Hood Release
SKJ	600	Cowl and Dash Panel
SKJ	700	Glass and Rear View Mirror
SKJ	800	Aperture Panel
SKJ	900	Quarter Panel and Pillar

HOW TO USE THIS CATALOG AND LOCATE PARTS

This Catalog is divided into Part Groups in which illustrations for parts of a similar function and/or location are published. The Group contents listing on the next page shows the type of parts contained in each group. Tabs are provided or available to separate each group.

Several methods may be used to locate a specific part:

Option 1: From the Group Contents listing. Select the group which would most logically contain the part to be found. Open the catalog to the beginning of that group. The first page of the group will contain the part. Turn to the selected illustration and locate the part by reviewing the illustration item numbers and associated text information following the illustration.

Option 2: If the "noun" name of the part you seek is known, an alphabetical index of Nouns and illustration titles is provided to assist in finding the part. Several keys may be found in this index.

RESERVOIR, Power Steering Oil Pump	Group 19	Group Reference
ALTERNATOR All Engines	8-210	Illustration Reference
BELT, Front Seat	Imdl/710/3	Illustration/Item Reference

Group by Model
Illustration Number
Item

Option 3: If the part number is known but the applications need to be determined, refer to the numerical index. This index shows the group, illustration number and each part listed in the catalog. Multiple references mean the part is listed more than once.

Option 4: Other options such as group identifiers exist in these catalogs. For Example, Group 23 Body has been broken in sections, i.e. 23A Sheet Metal now is S(model code). Example: SGS for model GS. Group 23C Doors now is D(model code) ex. DGS. Group 23 Exterior Ornamentation now is E(model code). This same logic applies to the Interior Trim Section (ex. IGS).

The Group 9 Engine sections in prior parts catalogs had been numbered 9A, 9B, 9C, etc. There was no real meaning to this numbering scheme. In this new MACS produced catalog the group numbering scheme is as follows: 2.5LD means 2.5 Liter Diesel Engine; 2.0L means 2.0 Liter Four Cylinder Gas Engine; 3.3L6T means 3.3 Liter Six Cylinder Transverse Mounted Engine; and 3.8L means 3.8 Liter Six Cylinder Engine. Also note that Engine Mounting parts are located in Group 9.

PAGE NUMBERING

Two-part page numbers are used throughout this catalog. The first part of the page designation indicates one major group or section. The second part indicates the actual page number in the group. For example:

2-1 indicates Group 2, Front Suspension, Page 1
3-4 indicates Group 3, Axle Rear, Page 4

In the maintenance of the Loose Leaf Parts Catalog Revision Service, it may become necessary to add information beyond the capacity of the page. In this event, an "A" page will be used. For example, if it becomes necessary, because of change, to add several part numbers to page 2-1 and space does not permit the addition, you will be given Page 2-1A. Page 2-1A should be filed immediately following Page 2-1.

Figure and Item Numbers are also commonly used to identify locations in the Catalog, ie., 14-910/8 refers to Group 14, illustration 910, Item Number 8. Illustration Numbers are always ascending sequential within the Groups.

SYMBOLS USED IN THIS CATALOG

The Following symbols are commonly used with Part Number and Quantity information in this Catalog:

AR - Indicates the quantity required may vary or is to be determined by the user.

PAR - Indicates "Paint As Required"

BLANK - Indicates "All Condition

- = "Not Illustrated"

LOGICAL ILLUSTRATIONS

Refer to Illustration in front of each group. This will give assistance to as how each group is broken down and what Specific Illustration should be referenced.

ILLUSTRATION NUMBERING INDEX

Illustration numbers in this Catalog are Group standards. This indicates group and consistent content. EXAMPLE: 8-100 is a Logical Illustration for Starters. 8-101 to 8-199 are Specific Illustrations used for Starters for all Catalogs. 8-200 will contain Alternators for all Catalogs and so on.
Always refer to group index in front of each group.

ILLUSTRATION INDEX

This index is a compilation of catalog parts description data with reference to illustrations, figures and key numbers as shown:

Fender ie; Model.....Group: S(Model) .....Illustration 410
(Fender is located in Sheet Metal Section (S) in Illustration 410)

The first page of each group contains a listing of all illustrations and group breakdown within that group. Also refer to illustrations alphabetically listed in information section.

ALPHABETIC INDEX

This index is a compilation of catalog parts description data with a reference to the location of the item by Group, Figure, and Key Number as shown in the following example:

Housing, w/Pump.....Group 7 Illustration 210 Item 10
(Housing, w/Pump.....7-210/10)

The index will be expanded progressively as data is added to computer files. To locate a part by name refer to the Alphabetical Index. This index indicates the group and illustration and item number where the part is located. Alphabetical Index can be found in INF section of this Catalog.

NUMERICAL INDEX

A listing of Part Numbers contained in the catalog. The numbers are in numerical sequence with reference to the group and Illustration and item number where the part is located.

PARTS PACKAGES

Service Parts Packages, containing all parts needed for specific service operation, are listed in their respective groups with related parts. The listing will show adapability and model application.

STANDARD PARTS

Important attaching standard parts such as bolts, nuts, etc, are generally listed in the text of the respective major parts groups.

VIN PLATE DECODING INFORMATION

1	2	3	4	5	6	7	8	9	10	11	12 thru 17
Country	Make	Vehicle Type	Other	Line	Series	Body Style	Engine	Check Digit	Model Year	Assy. Plant	Sequence No.

The following table interprets the VIN Plate positions shown above.

Position	Interpretation	Codes = Description
1	Country of Origin	1 = Built in U.S. by DaimlerChrysler Corporation.
2	Make	J = Jeep
3	Vehicle type	4 = Multipurpose Passenger Vehicle Less Side Air Bags
4	GVWR & Pass. Safety	E=1361-1814 kg (3001-4000 lbs) F=1815-2267 kg (5001-6000 lbs G 2268-2721 kg (5001-6000 lbs) H=2722-3175 kg (6001-7000 lbs) J=3176-3628 kg (8001-9000 lbs) K = 3629-4082 kg (8001-9000 lbs) L=4083-4535 kg (9001-10000 lbs) M=4536-6350 kg (10001-14000 lbs
5	Vehicle Line	K = Liberty 4x2 Left Hand Drive L = Liberty/Cherokee 4x4 Left Hand Drive M = Liberty/Cherokee 4x4 Right Hand Drive
6	Series	3 = M Series - Liberty Renegade 4 = H Series - Liberty/Cherokee Sport 5 = P Series - Liberty/Cherokee Limited
7	Body Style	8 = KJ - 74
8	Engine	1 = 2.4L I4 Cyl Gasoline DOHC (ED1) 7 = 2.5L I4 Cyl 16V Turbo Diesel (ENJ) 5 = 2.8L I4 Cyl 16V Turbo Diesel (ENR) K = 3.7L V6 Cyl Gasoline (EKG)
9	Check Digit	
10	Model Year	4 = 2004
11	Assembly Plant	L = Toledo North Assembly
12 thru 17	Vehicle Build Sequence	Model Year Assembly Sequence

BODY CODE PLATE INTERPRETATION

The Body Code Plate is located on the Left Front Side Shield or Wheel Housing or the Upper Radiator Support. The Plate contains 7 rows of data. The bottom 3 rows are reserved for the specific information as depicted below. Starting at the fourth row (following the reserved portion), other Sales Codes used to build a specific vehicle are listed in the ascending order by ALPHA sequence.

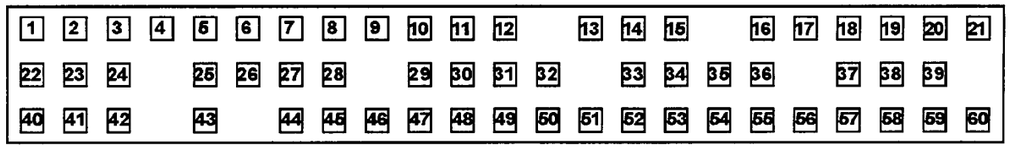

1-12	VEHICLE ORDER NUMBER
13-15	VINYL ROOF CODE/DOOR COMBO CODES
16-18	VEHICLE SHELL CAR LINE
19	PRICE CLASS
20-21	BODY TYPE
22-24	PAINT PROCEDURE
25-28	PRIMARY PAINT
29-32	SECONDARY PAINT
33-36	INTERIOR TRIM CODE
37-39	ENGINE CODES
40-42	TRANSMISSION CODES
43	MARKET CODES
44-46	VEHICLE IDENTIFICATION NUMBER (VIN) For definition of the Elements and the individual position see Vin Plate Defined.

ABBREVIATIONS

A/C	Air Conditioner
ABS	Anti-Lock Brakes System
AR	As Required
ATC	Automatic Temperature Control
AWD	All Wheel Drive
BUX	Built Up Export
CV	Constant Velocity
DOHC	Dual (or Double) OverHead Cam
EFI	Electronic Fuel Injection
EGR	Exhaust Gas Recirculation
ECU	Electronic Control Unit
FWD	Front Wheel Drive
HEX	HEXagon
HCU	Hydraulic Control Unit
I/D	Inside Diameter
L	Liter
LED	Light Emitting Diode
MAP	Manifold Absolute Pressure
MPH	Miles Per Hour
O/D	Outside Diameter
P/S	Power Steering
PSI	Pounds per Square Inch
PSF	Pounds per Square Foot
PRNODL	Park, Reverse, Neutral, Overdrive, Drive, Low
PRNDL	Park, Reverse, Neutral, Drive, Low
PTO	Power Take Off
RFI	Radio Frequency Interference
RPM	Revolutions Per Minute
RTV	Room Temperature Vulcanizer (sealant)
T/BODY	Throttle BODY
U/BODY	Under BODY
SOHC	Single OverHead Cam
PAR	Paint As Required

Group – 001

Component Parts for Mopar Accessories

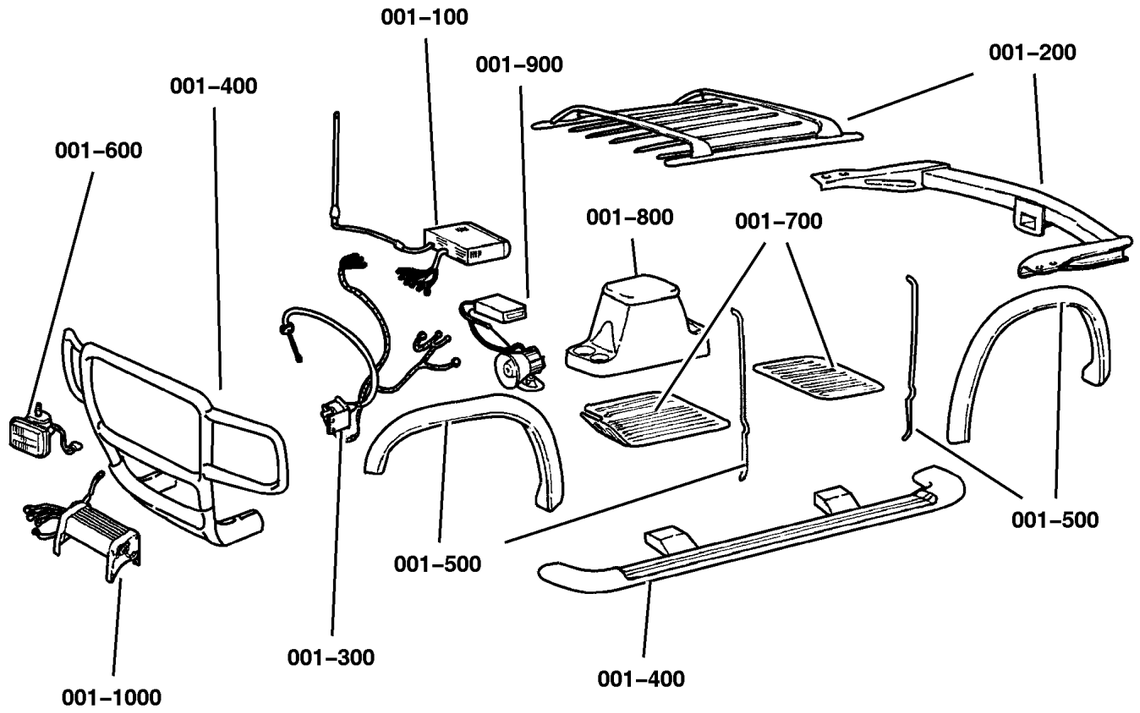

001–100 Audio & Electronics	**001–200** Carriers & Cargo Hauling	**001–400** Exterior Appearance	**001–500** Exterior Protection
001–600 Fog Lights & Electrical	**001–800** Interior Storage	**001–900** Security	

GROUP 1 - Component Parts for Mopar Accessories

Illustration Title	Group-Fig. No.
Audio & Electronics	
Player Kit - CD Changer 6 Disc	Fig. 001-110
Satellite Receiver Kit	Fig. 001-120
Install Kit - Sattelite Receiver Without CD Changer	Fig. 001-130
Install Kit - Satellite Receiver With CD	Fig. 001-135
Carriers & Cargo Hauling	
Bike Carrier - Roof - Fork Mount	Fig. 001-210
Bike Carrier - Roof - Upright Mount	Fig. 001-215
Bike Carrier - Spare Tire Mount	Fig. 001-220
Carrier Kit - Canoe	Fig. 001-225
Carrier Kit - Water Sports	Fig. 001-230
Ski Carrier - Spare Tire Mount	Fig. 001-235
Ski Carrier - Roof Mount	Fig. 001-240
Luggage Carrier - Roof - Hard Style	Fig. 001-245
Luggage Carrier - Roof - Vinyl	Fig. 001-250
Rack Kit - Sport Utility	Fig. 001-255
Wiring Kit - Trailer Tow - 4 Way	Fig. 001-260
Wiring Kit - Trailer Tow - 7 Way	Fig. 001-265
Fan Kit - Engine Heavy Duty Cooling	Fig. 001-270
Exterior Appearance	
Running Board Kit	Fig. 001-410
Wheel Kit Cast Aluminum	Fig. 001-415
Decor Kit Bodyside	Fig. 001-420
Exterior Protection	
Skid Plate - Transfer Case	Fig. 001-510
Skid Plate - Fuel Tank	Fig. 001-515
Deflector Kit - Air Front	Fig. 001-520
Fog Lights & Electrical	
Light Kit - Fog	Fig. 001-610
Heater Kit	Fig. 001-615
Hands Free Kit - Cellular Phone - Blue Tooth	Fig. 001-625
Interior Storage	
Guard Kit - Dog	Fig. 001-810
Security	
Alarm - EVS II Base System Used without Keyless Entry	Fig. 001-910
Alarm - EVS II Plus System Used with Keyless Entry	Fig. 001-915

Player Kit - CD Changer 6 Disc
Figure 001-110

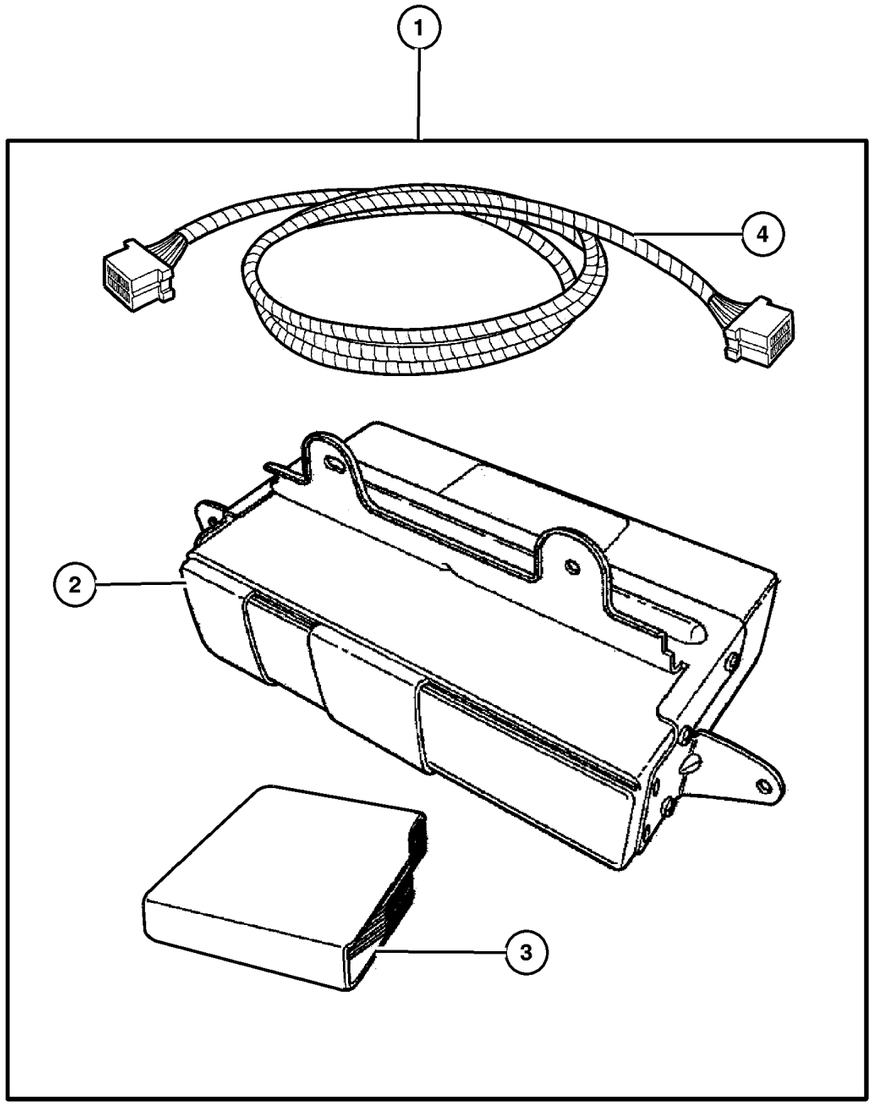

ITEM	PART NUMBER	QTY	LINE	SERIES	BODY	ENGINE	TRANS	TRIM	DESCRIPTION
Note; For Warranty Repair On Item 2, Order Through [GPOP] Function 11, Using Z Prefix									
1	8220 8269	1			74				PLAYER KIT, CD Changer - 6 Disc
2									CHANGER, CD, (NOT SERVICED) (Not Serviced)
3	4797 433	1							MAGAZINE, CD Changer
4	5073 243AB	1			74				CABLE, CD Changer

JEEP LIBERTY (KJ)

SERIES	LINE	BODY	ENGINE	TRANSMISSION
P = Limited	J = LHD (4WD)	74 = 4 Dr (104.3 WB)	ED1,ED0 = 2.4L Power Tech	DDK = 5 Speed HDManual
H = Sport	U = RHD (4WD)		EKG,EK0 = 3.7L Power Tech	DDD = 5 Speed HD Manual
M = Renegade	T = LHD (2WD)		ENJ = 2.5L 4Cyl Turbo Diesel	DG4,DGQ = Multi-Speed Auto
			ENR = 2.8L 4Cyl Turbo Diesel	DG6 = 4 Speed Auto Transm
			EN0 = 4Cyl Turbo Diesel	DG0 = All Automatic Transm
				DBB = All Manual Transm

Satellite Receiver Kit
Figure 001-120

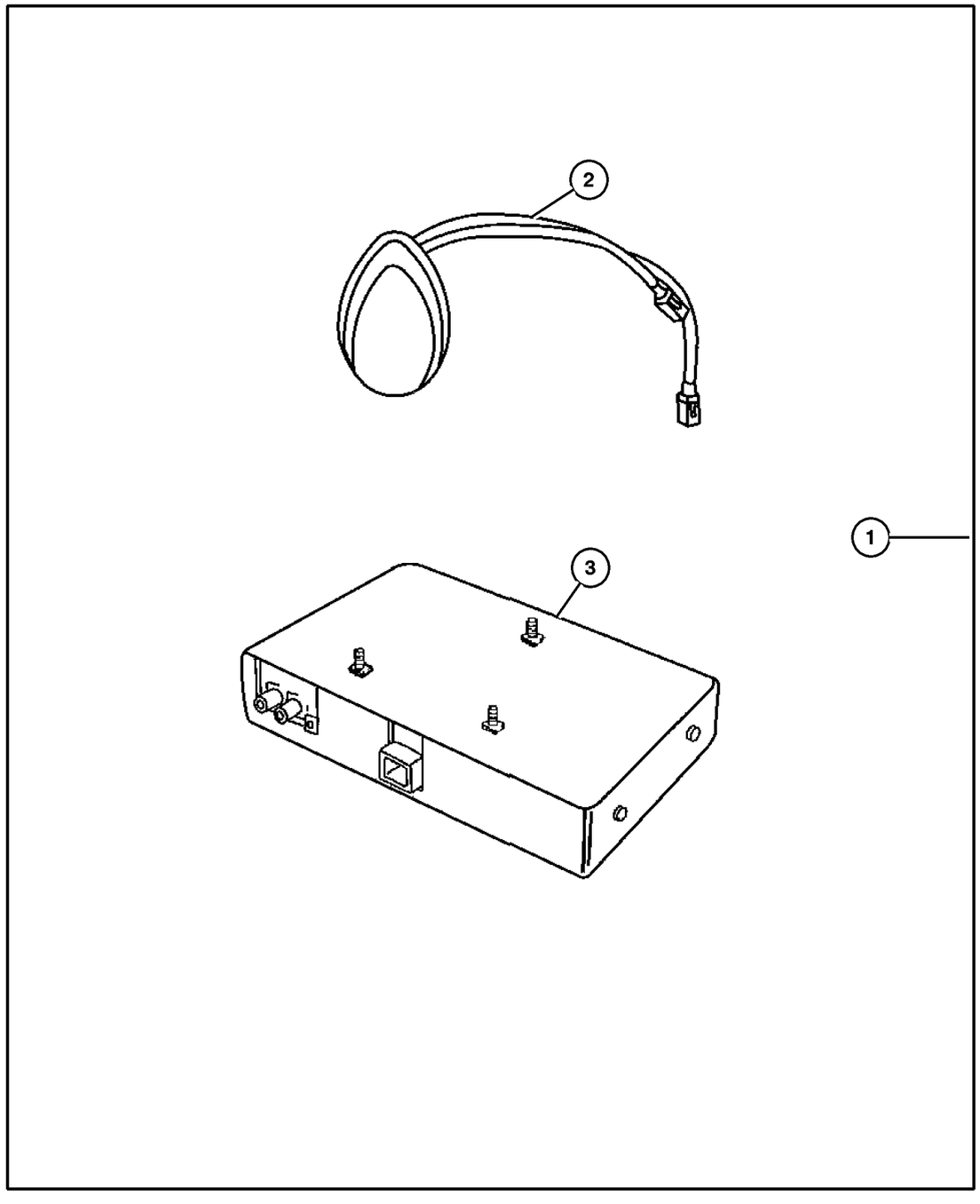

ITEM	PART NUMBER	QTY	LINE	SERIES	BODY	ENGINE	TRANS	TRIM	DESCRIPTION
Note: For Warranty Repair on Item 3, Order Through [GPOP] Function 11, Using Z Prefix									
1	82206 488AA	1							RECEIVER, Satelite
2	5066 205AC	1							ANTENNA, Satellite
3	5064 020AG	1							RECEIVER, Satellite

JEEP LIBERTY (KJ)

SERIES	LINE	BODY	ENGINE	TRANSMISSION
P = Limited	J = LHD (4WD)	74 = 4 Dr (104.3 WB)	ED1,ED0 = 2.4L Power Tech	DDK = 5 Speed HDManual
H = Sport	U = RHD (4WD)		EKG,EK0 = 3.7L Power Tech	DDD = 5 Speed HD Manual
M = Renegade	T = LHD (2WD)		ENJ = 2.5L 4Cyl Turbo Diesel	DG4,DGQ = Multi-Speed Auto
			ENR = 2.8L 4Cyl Turbo Diesel	DG6 = 4 Speed Auto Transm
			EN0 = 4Cyl Turbo Diesel	DG0 = All Automatic Transm
				DBB = All Manual Transm

AR = Use as required - = Non illustrated part # = New this model year

September 30, 2003

« RETURN TO GROUP INDEX

Install Kit - Sattelite Receiver Without CD Changer
Figure 001-130

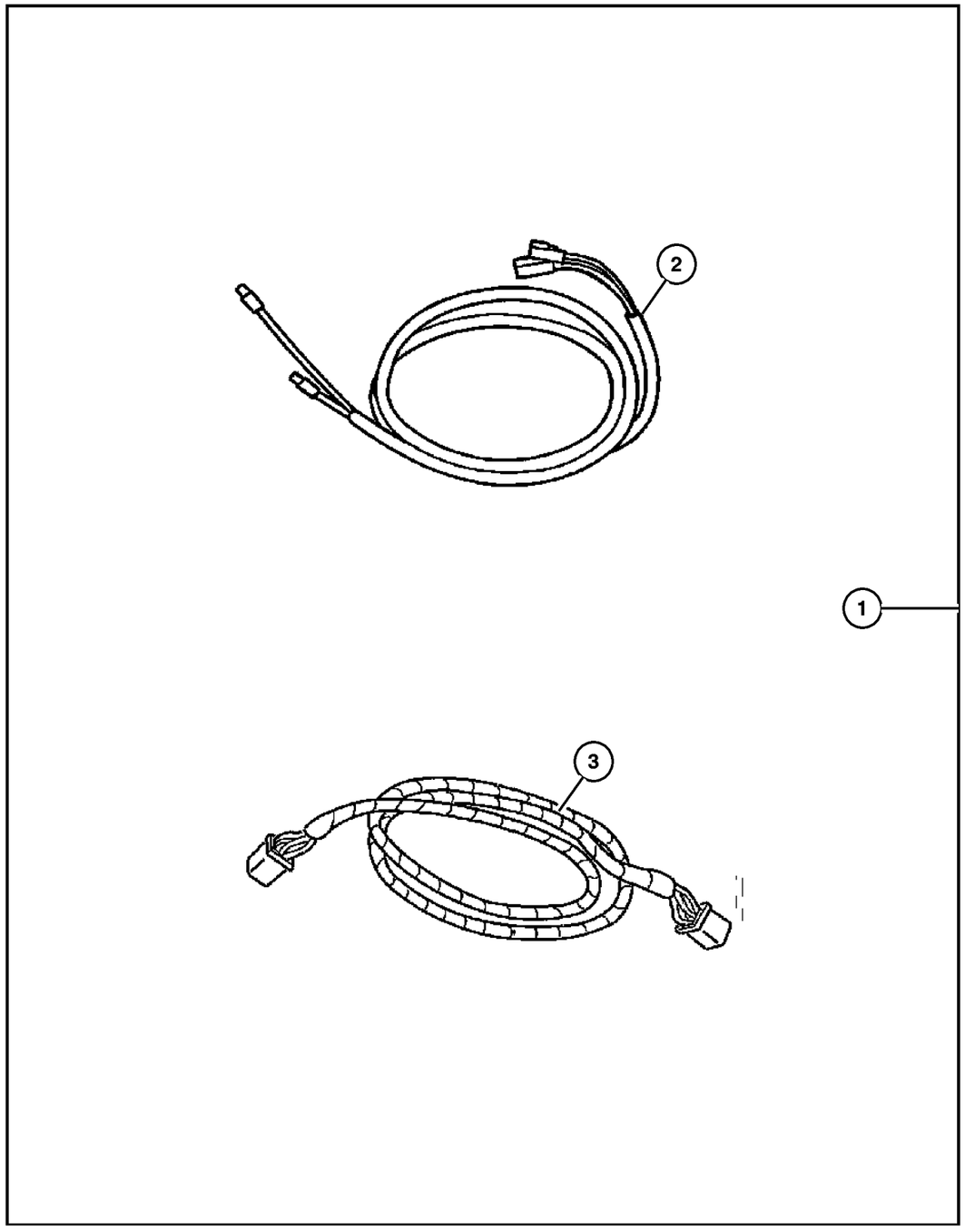

ITEM	PART NUMBER	QTY	LINE	SERIES	BODY	ENGINE	TRANS	TRIM	DESCRIPTION
1	8220 6489	1							INSTALL KIT, Satelite Receiver
2	5066 207AB	1							CABLE, Antenna
3	5066 203AA	1							WIRING, Rcvr to Radio

JEEP LIBERTY (KJ)

SERIES	LINE	BODY	ENGINE	TRANSMISSION
P = Limited	J = LHD (4WD)	74 = 4 Dr (104.3 WB)	ED1,ED0 = 2.4L Power Tech	DDK = 5 Speed HDManual
H = Sport	U = RHD (4WD)		EKG,EK0 = 3.7L Power Tech	DDD = 5 Speed HD Manual
M = Renegade	T = LHD (2WD)		ENJ = 2.5L 4Cyl Turbo Diesel	DG4,DGQ = Multi-Speed Auto
			ENR = 2.8L 4Cyl Turbo Diesel	DG6 = 4 Speed Auto Transm
			EN0 = 4Cyl Turbo Diesel	DG0 = All Automatic Transm
				DBB = All Manual Transm

Install Kit - Satellite Receiver With CD
Figure 001-135

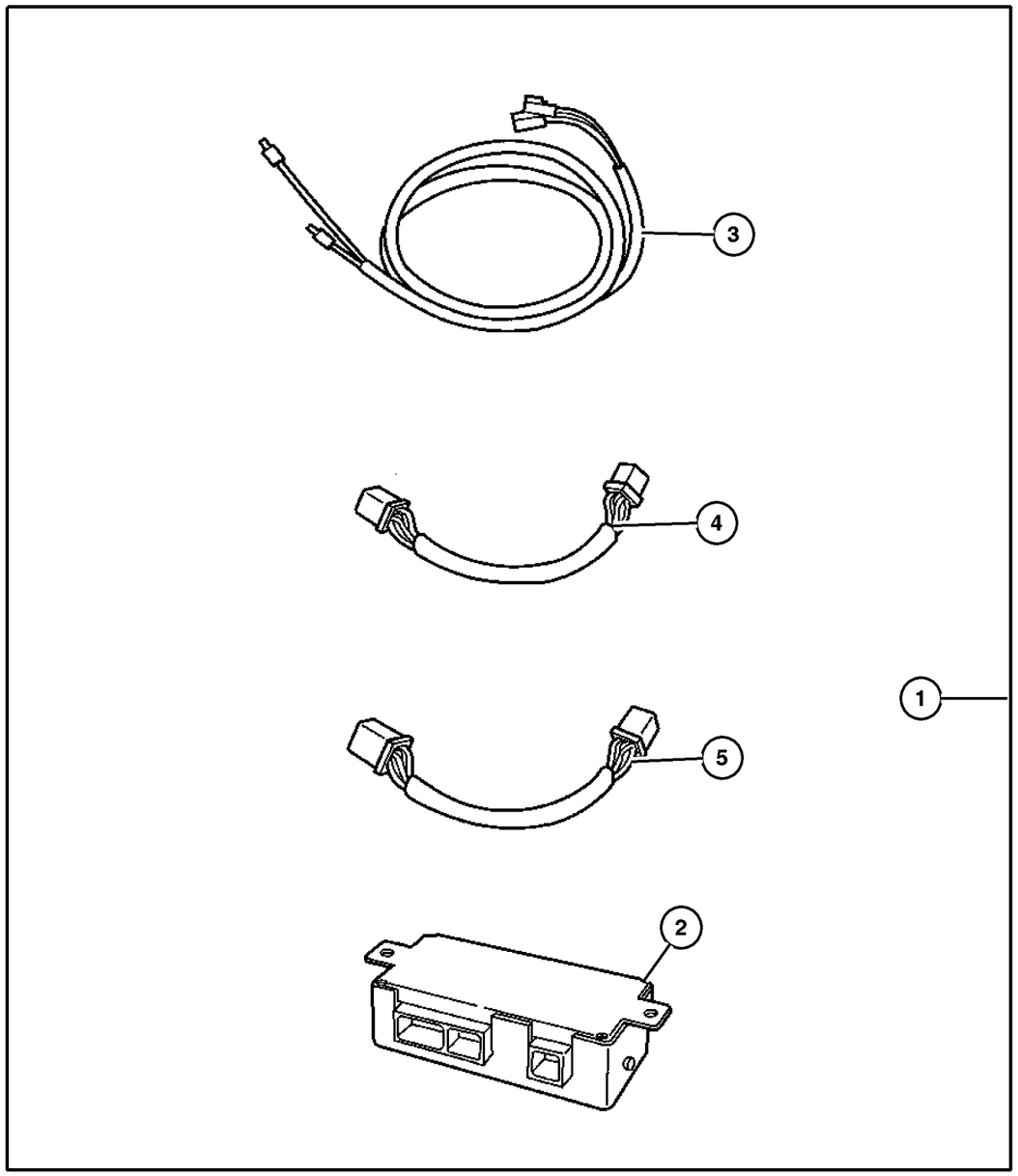

ITEM	PART NUMBER	QTY	LINE	SERIES	BODY	ENGINE	TRANS	TRIM	DESCRIPTION
1	8220 7565	1							INSTALL KIT, Satelite Receiver
2	5066 202AC	1							MODULE, RR Multiplex
3	5066 207AB	1							CABLE, Antenna
4	5066 206AA	1							WIRING, RCVR TO MUX
5	5083 163AA	1							WIRING, CD to MUX
-6	5066 210AA	1							WIRING, Adaptor

JEEP LIBERTY (KJ)

SERIES	LINE	BODY	ENGINE	TRANSMISSION
P = Limited	J = LHD (4WD)	74 = 4 Dr (104.3 WB)	ED1,ED0 = 2.4L Power Tech	DDK = 5 Speed HDManual
H = Sport	U = RHD (4WD)		EKG,EK0 = 3.7L Power Tech	DDD = 5 Speed HD Manual
M = Renegade	T = LHD (2WD)		ENJ = 2.5L 4Cyl Turbo Diesel	DG4,DGQ = Multi-Speed Auto
			ENR = 2.8L 4Cyl Turbo Diesel	DG6 = 4 Speed Auto Transm
			EN0 = 4Cyl Turbo Diesel	DG0 = All Automatic Transm
				DBB = All Manual Transm

Bike Carrier - Roof - Fork Mount
Figure 001-210

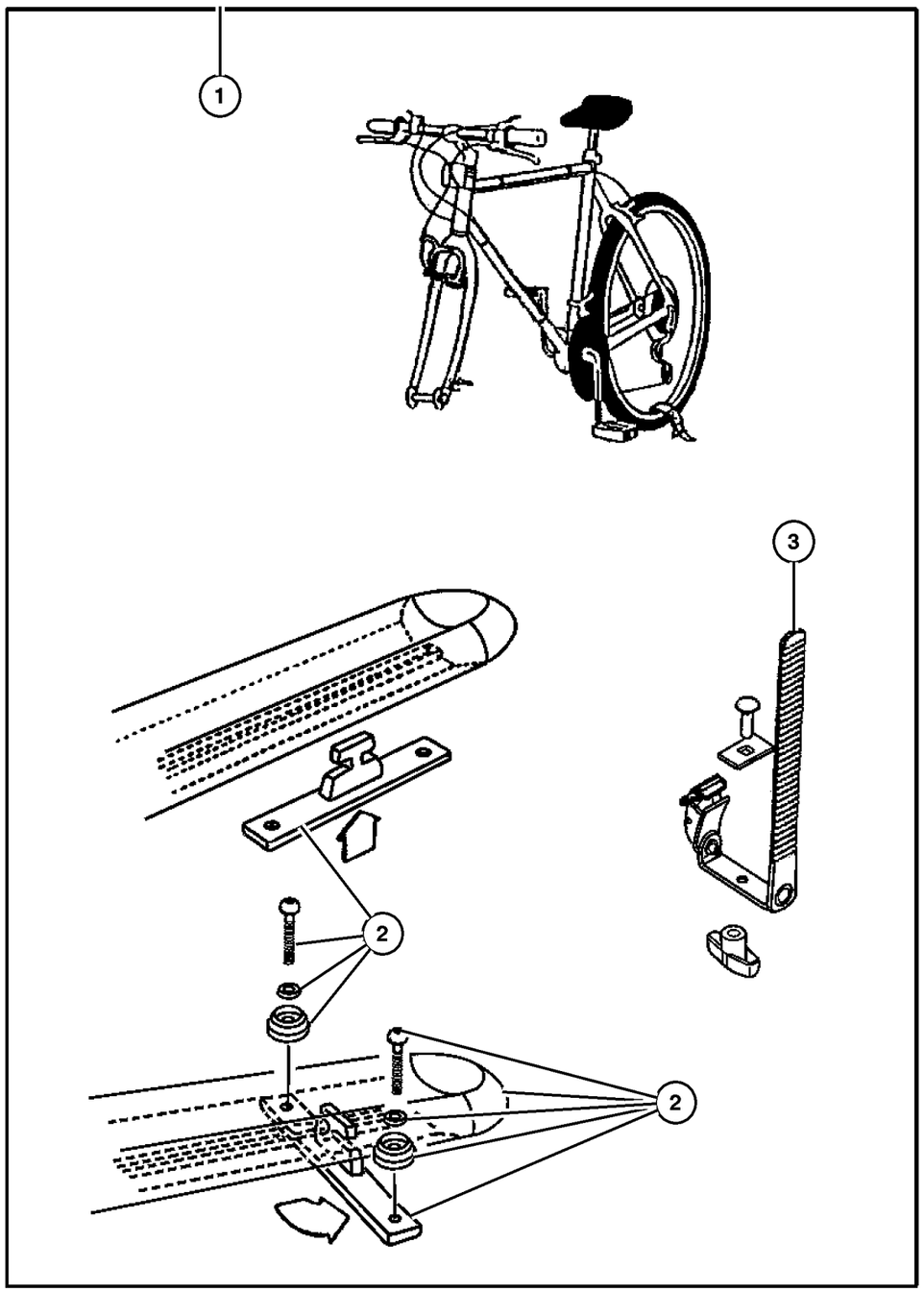

ITEM	PART NUMBER	QTY	LINE	SERIES	BODY	ENGINE	TRANS	TRIM	DESCRIPTION
Note; Requires Sport Utility Rack									
1	8220 7943	1			74				CARRIER KIT, Bike, Fork - Mount
2	5093 779AA	1			74				HARDWARE KIT, Accessory
3	5114 532AA	1			74				STRAP, Cargo Tie Down

JEEP LIBERTY (KJ)

SERIES	LINE	BODY	ENGINE	TRANSMISSION
P = Limited	J = LHD (4WD)	74 = 4 Dr (104.3 WB)	ED1,ED0 = 2.4L Power Tech	DDK = 5 Speed HDManual
H = Sport	U = RHD (4WD)		EKG,EK0 = 3.7L Power Tech	DDD = 5 Speed HD Manual
M = Renegade	T = LHD (2WD)		ENJ = 2.5L 4Cyl Turbo Diesel	DG4,DGQ = Multi-Speed Auto
			ENR = 2.8L 4Cyl Turbo Diesel	DG6 = 4 Speed Auto Transm
			EN0 = 4Cyl Turbo Diesel	DG0 = All Automatic Transm
				DBB = All Manual Transm

Bike Carrier - Roof - Upright Mount
Figure 001-215

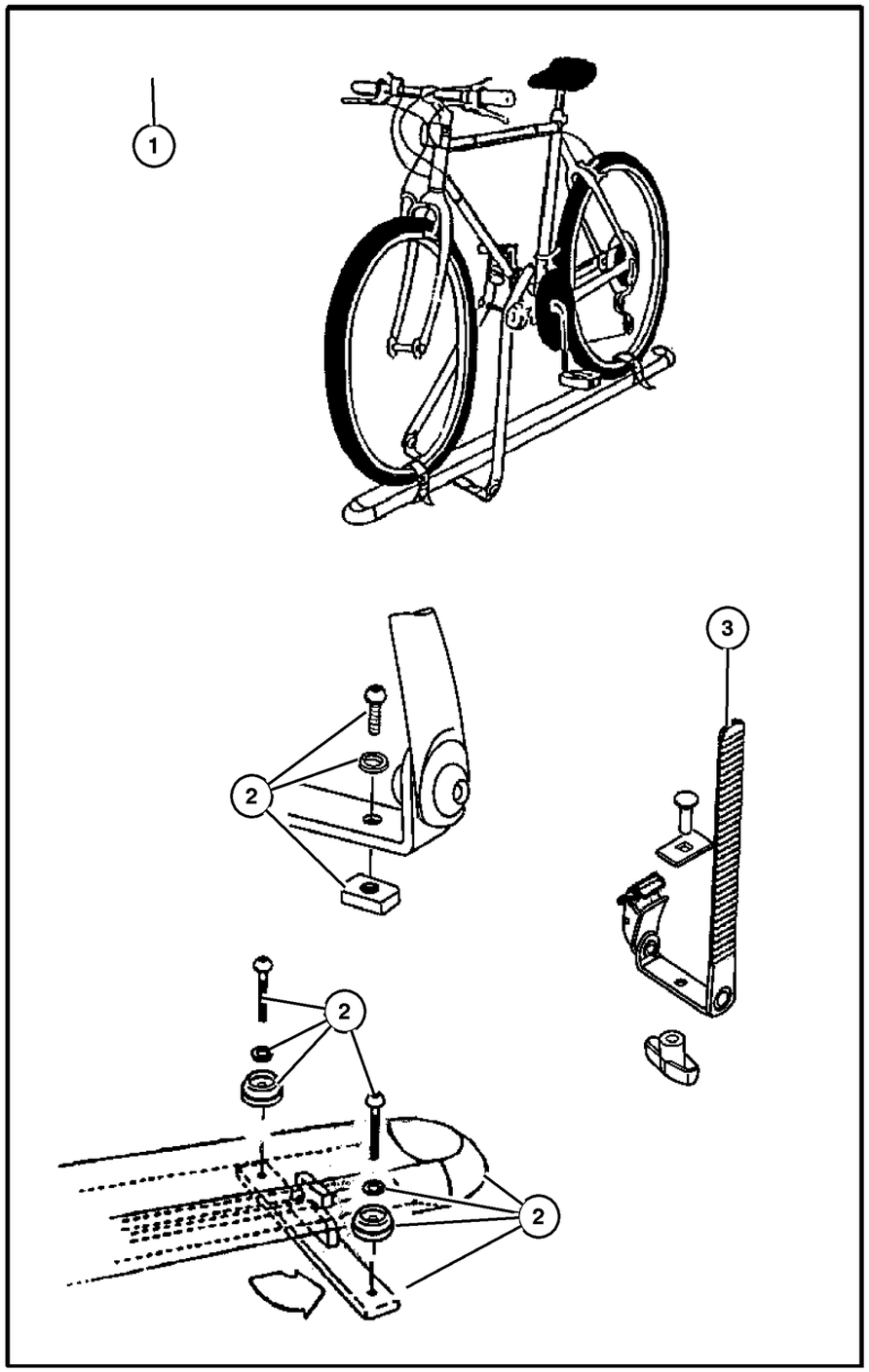

ITEM	PART NUMBER	QTY	LINE	SERIES	BODY	ENGINE	TRANS	TRIM	DESCRIPTION
Note; Requires Sport Utility Rack									
1	8220 7942	1			74				CARRIER KIT, Bike, Upright - Mount
2	5093 779AA	1			74				HARDWARE KIT, Accessory
3	5114 532AA	1			74				STRAP, Cargo Tie Down

JEEP LIBERTY (KJ)

SERIES	LINE	BODY	ENGINE	TRANSMISSION
P = Limited	J = LHD (4WD)	74 = 4 Dr (104.3 WB)	ED1,ED0 = 2.4L Power Tech	DDK = 5 Speed HDManual
H = Sport	U = RHD (4WD)		EKG,EK0 = 3.7L Power Tech	DDD = 5 Speed HD Manual
M = Renegade	T = LHD (2WD)		ENJ = 2.5L 4Cyl Turbo Diesel	DG4,DGQ = Multi-Speed Auto
			ENR = 2.8L 4Cyl Turbo Diesel	DG6 = 4 Speed Auto Transm
			EN0 = 4Cyl Turbo Diesel	DG0 = All Automatic Transm
				DBB = All Manual Transm

Bike Carrier - Spare Tire Mount
Figure 001-220

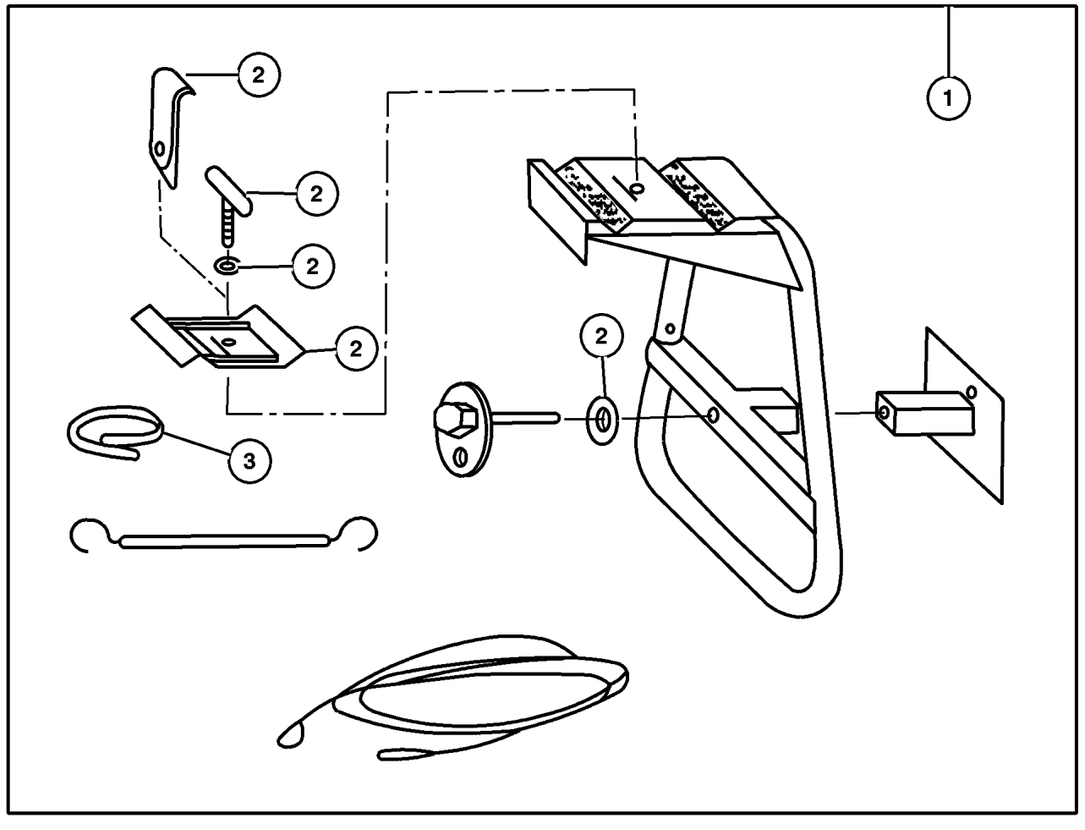

ITEM	PART NUMBER	QTY	LINE	SERIES	BODY	ENGINE	TRANS	TRIM	DESCRIPTION
NOTE: Mounts to Spare Tire - Holds two Bikes with Crossbars									
1	8220 7520	1							CARRIER KIT, Bike
2	5018 825AA	1							HARDWARE KIT, Bike Carrier, Contains: T-Handle, Lock Strap, Top Clamp Assembly, Nylon Washers
3	4762 880	1							STRAP KIT, Velcro

JEEP LIBERTY (KJ)

SERIES	LINE	BODY	ENGINE	TRANSMISSION
P = Limited	J = LHD (4WD)	74 = 4 Dr (104.3 WB)	ED1,ED0 = 2.4L Power Tech	DDK = 5 Speed HDManual
H = Sport	U = RHD (4WD)		EKG,EK0 = 3.7L Power Tech	DDD = 5 Speed HD Manual
M = Renegade	T = LHD (2WD)		ENJ = 2.5L 4Cyl Turbo Diesel	DG4,DGQ = Multi-Speed Auto
			ENR = 2.8L 4Cyl Turbo Diesel	DG6 = 4 Speed Auto Transm
			EN0 = 4Cyl Turbo Diesel	DG0 = All Automatic Transm
				DBB = All Manual Transm

Carrier Kit - Canoe
Figure 001-225

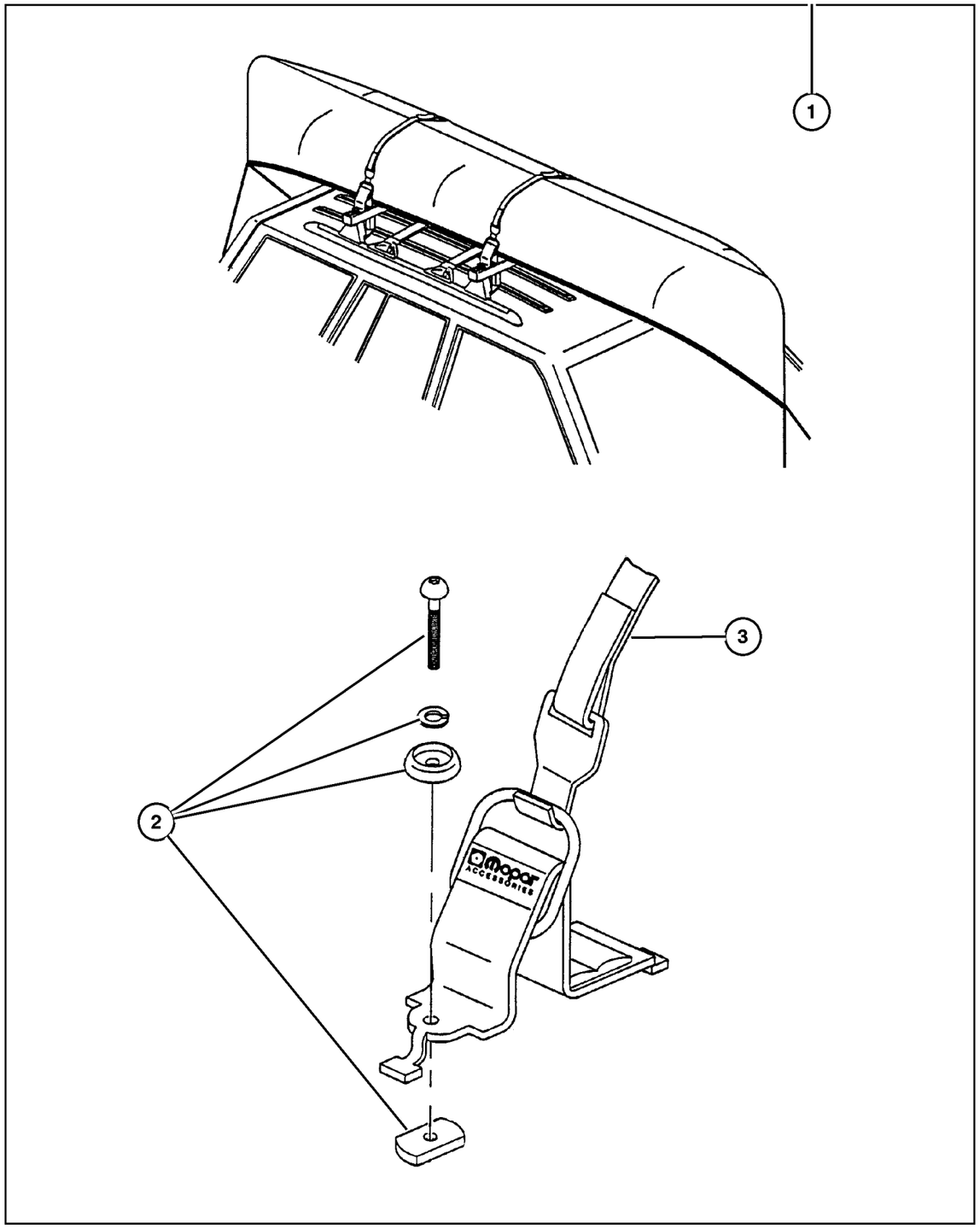

ITEM	PART NUMBER	QTY	LINE	SERIES	BODY	ENGINE	TRANS	TRIM	DESCRIPTION
Note; Requires Sport Utlity Rack									
1	8220 4700	1							CARRIER KIT, Canoe
2	5016 389AA	1							HARDWARE KIT, Accessory, Contains 4 25MM Button Head Screws, 4 30MM Button Head Screws, 4 Dome Washers, 4 Lock Washers, 4 Rubber Washers, 4 T-Nuts
3	5016 511AA	1							STRAP, Cargo Tie Down

JEEP LIBERTY (KJ)

SERIES	LINE	BODY	ENGINE	TRANSMISSION
P = Limited	J = LHD (4WD)	74 = 4 Dr (104.3 WB)	ED1,ED0 = 2.4L Power Tech	DDK = 5 Speed HDManual
H = Sport	U = RHD (4WD)		EKG,EK0 = 3.7L Power Tech	DDD = 5 Speed HD Manual
M = Renegade	T = LHD (2WD)		ENJ = 2.5L 4Cyl Turbo Diesel	DG4,DGQ = Multi-Speed Auto
			ENR = 2.8L 4Cyl Turbo Diesel	DG6 = 4 Speed Auto Transm
			EN0 = 4Cyl Turbo Diesel	DG0 = All Automatic Transm
				DBB = All Manual Transm

Carrier Kit - Water Sports
Figure 001-230

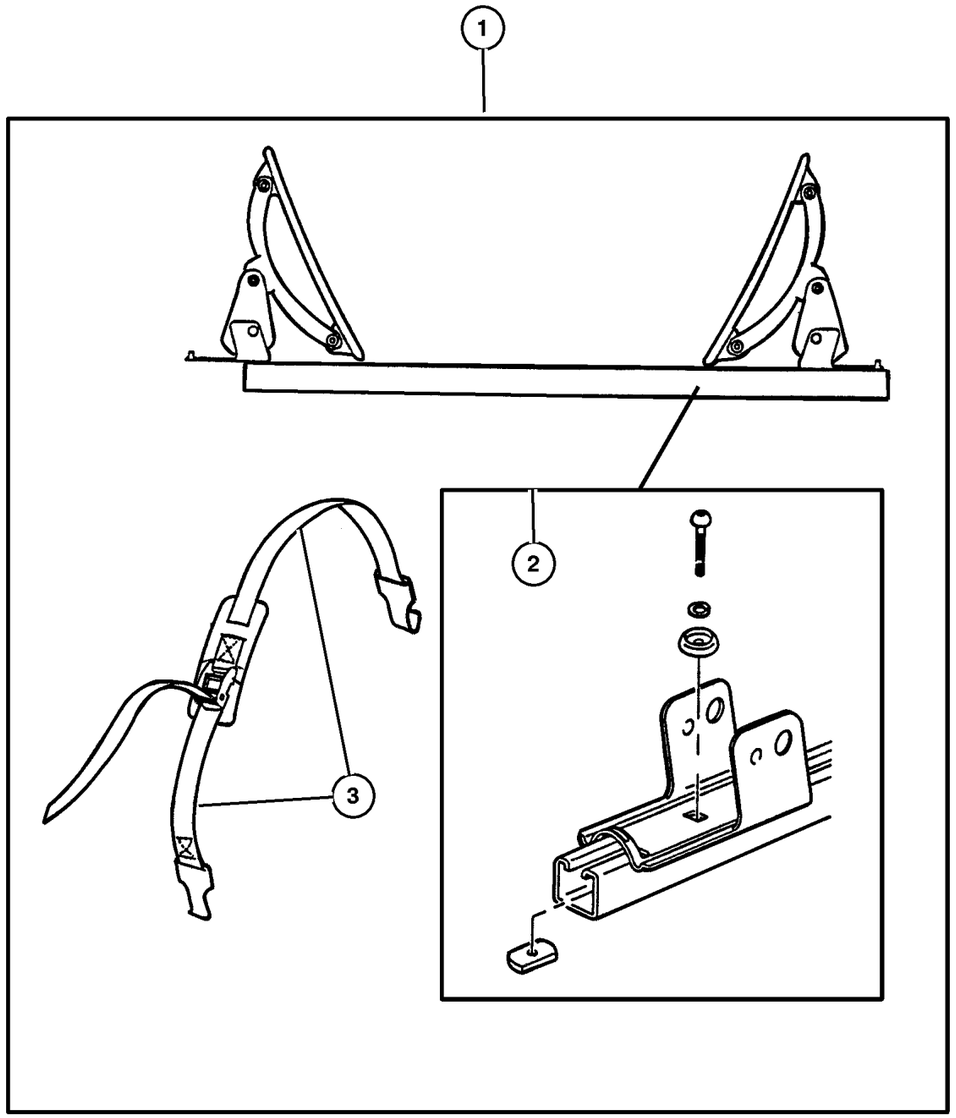

ITEM	PART NUMBER	QTY	LINE	SERIES	BODY	ENGINE	TRANS	TRIM	DESCRIPTION
Note; Requires Sport Utility Rack									
1	8220 5416	1			74				CARRIER KIT, Water Sports
2	5016 389AA	1							HARDWARE KIT, Accessory, Contains 4 25MM Button Head Screws, 4 30MM Button Head Screws, 4 Dome Washers, 4 Lock Washers, 4 Rubber Washers, 4 T-Nuts
3	5016 511AA	1							STRAP, Cargo Tie Down

JEEP LIBERTY (KJ)

SERIES	LINE	BODY	ENGINE	TRANSMISSION
P = Limited	J = LHD (4WD)	74 = 4 Dr (104.3 WB)	ED1,ED0 = 2.4L Power Tech	DDK = 5 Speed HDManual
H = Sport	U = RHD (4WD)		EKG,EK0 = 3.7L Power Tech	DDD = 5 Speed HD Manual
M = Renegade	T = LHD (2WD)		ENJ = 2.5L 4Cyl Turbo Diesel	DG4,DGQ = Multi-Speed Auto
			ENR = 2.8L 4Cyl Turbo Diesel	DG6 = 4 Speed Auto Transm
			EN0 = 4Cyl Turbo Diesel	DG0 = All Automatic Transm
				DBB = All Manual Transm

AR = Use as required - = Non illustrated part # = New this model year **September 30, 2003**

« RETURN TO GROUP INDEX

Ski Carrier - Spare Tire Mount
Figure 001-235

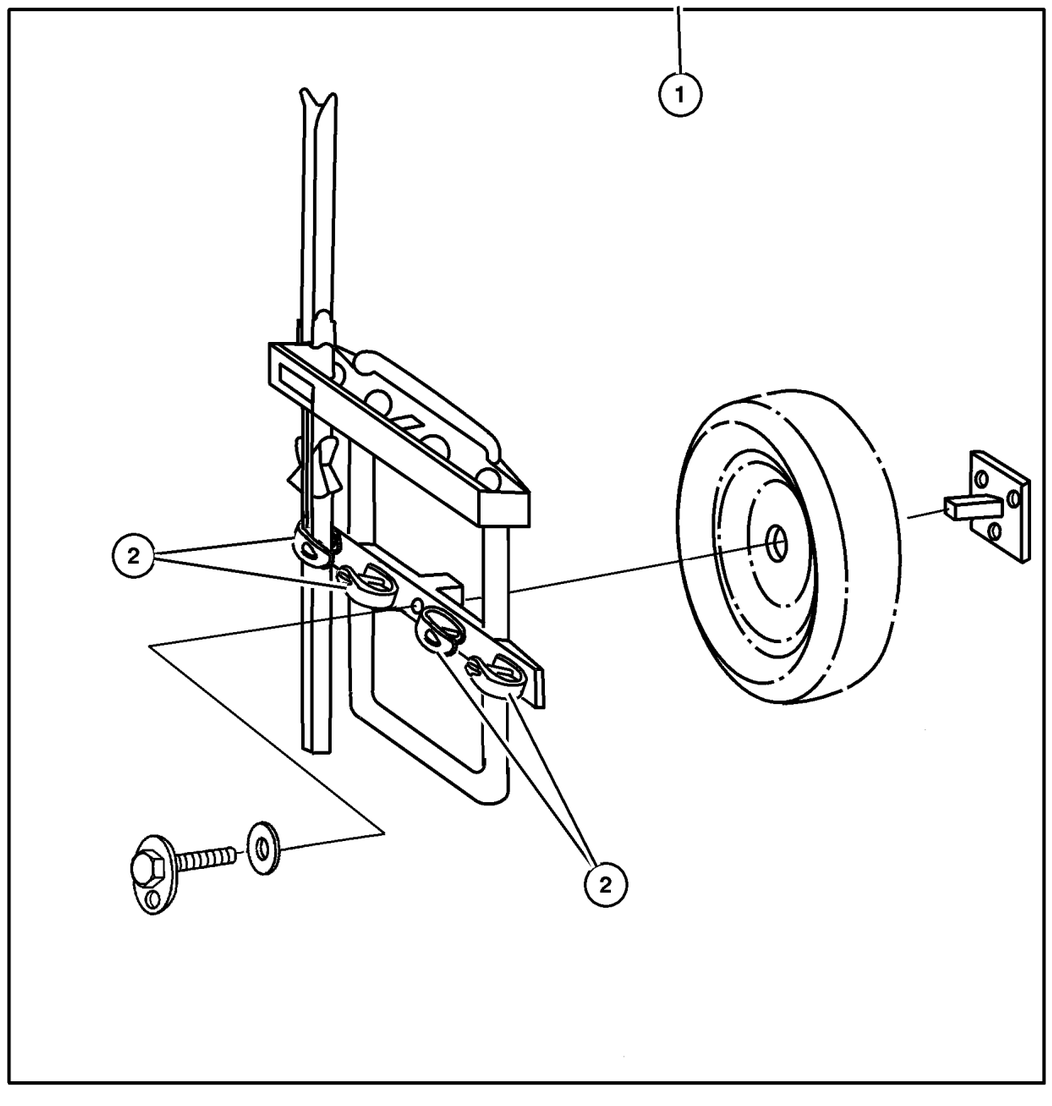

ITEM	PART NUMBER	QTY	LINE	SERIES	BODY	ENGINE	TRANS	TRIM	DESCRIPTION
NOTE: Requires full size, outside mounted spare tire.									
1	8220 7643	1			74				CARRIER KIT, Ski
2	5016 775AA	1			74				STRAP KIT, Bike Carrier Latch

JEEP LIBERTY (KJ)

SERIES	LINE	BODY	ENGINE	TRANSMISSION
P = Limited	J = LHD (4WD)	74 = 4 Dr (104.3 WB)	ED1,ED0 = 2.4L Power Tech	DDK = 5 Speed HDManual
H = Sport	U = RHD (4WD)		EKG,EK0 = 3.7L Power Tech	DDD = 5 Speed HD Manual
M = Renegade	T = LHD (2WD)		ENJ = 2.5L 4Cyl Turbo Diesel	DG4,DGQ = Multi-Speed Auto
			ENR = 2.8L 4Cyl Turbo Diesel	DG6 = 4 Speed Auto Transm
			EN0 = 4Cyl Turbo Diesel	DG0 = All Automatic Transm
				DBB = All Manual Transm

Ski Carrier - Roof Mount
Figure 001-240

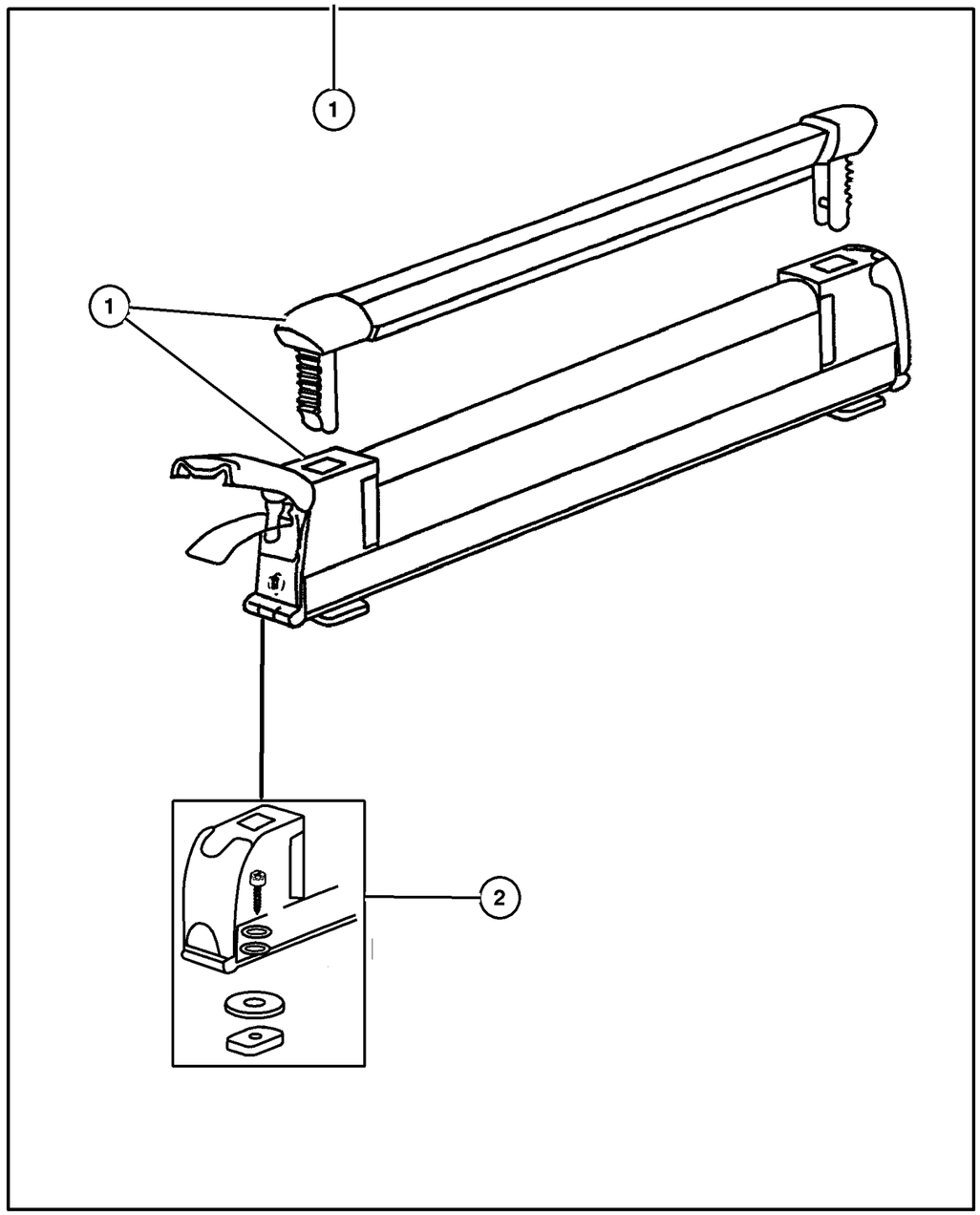

ITEM	PART NUMBER	QTY	LINE	SERIES	BODY	ENGINE	TRANS	TRIM	DESCRIPTION
Note; Requires Sport Utility Rack									
1									CARRIER KIT, Ski
	8220 7312	1							3 Pair or 2 Snowboards
	8220 7308	1							6 Pair or 4 Snowboards
2	5086 158AA	1							HARDWARE KIT, Accessory,
									Contains: 4 - 25MM Screws, 4 - 20M Screws, 4 - 16MM Screws, 4 - Lock Washers, 4 - Flat Washers, 4 - T Plates, 4 - Rubber Washers
-3	5066 632AA	1							TOOL, Screw Driver

JEEP LIBERTY (KJ)

SERIES	LINE	BODY	ENGINE	TRANSMISSION
P = Limited	J = LHD (4WD)	74 = 4 Dr (104.3 WB)	ED1,ED0 = 2.4L Power Tech	DDK = 5 Speed HDManual
H = Sport	U = RHD (4WD)		EKG,EK0 = 3.7L Power Tech	DDD = 5 Speed HD Manual
M = Renegade	T = LHD (2WD)		ENJ = 2.5L 4Cyl Turbo Diesel	DG4,DGQ = Multi-Speed Auto
			ENR = 2.8L 4Cyl Turbo Diesel	DG6 = 4 Speed Auto Transm
			EN0 = 4Cyl Turbo Diesel	DG0 = All Automatic Transm
				DBB = All Manual Transm

Luggage Carrier - Roof - Hard Style
Figure 001-245

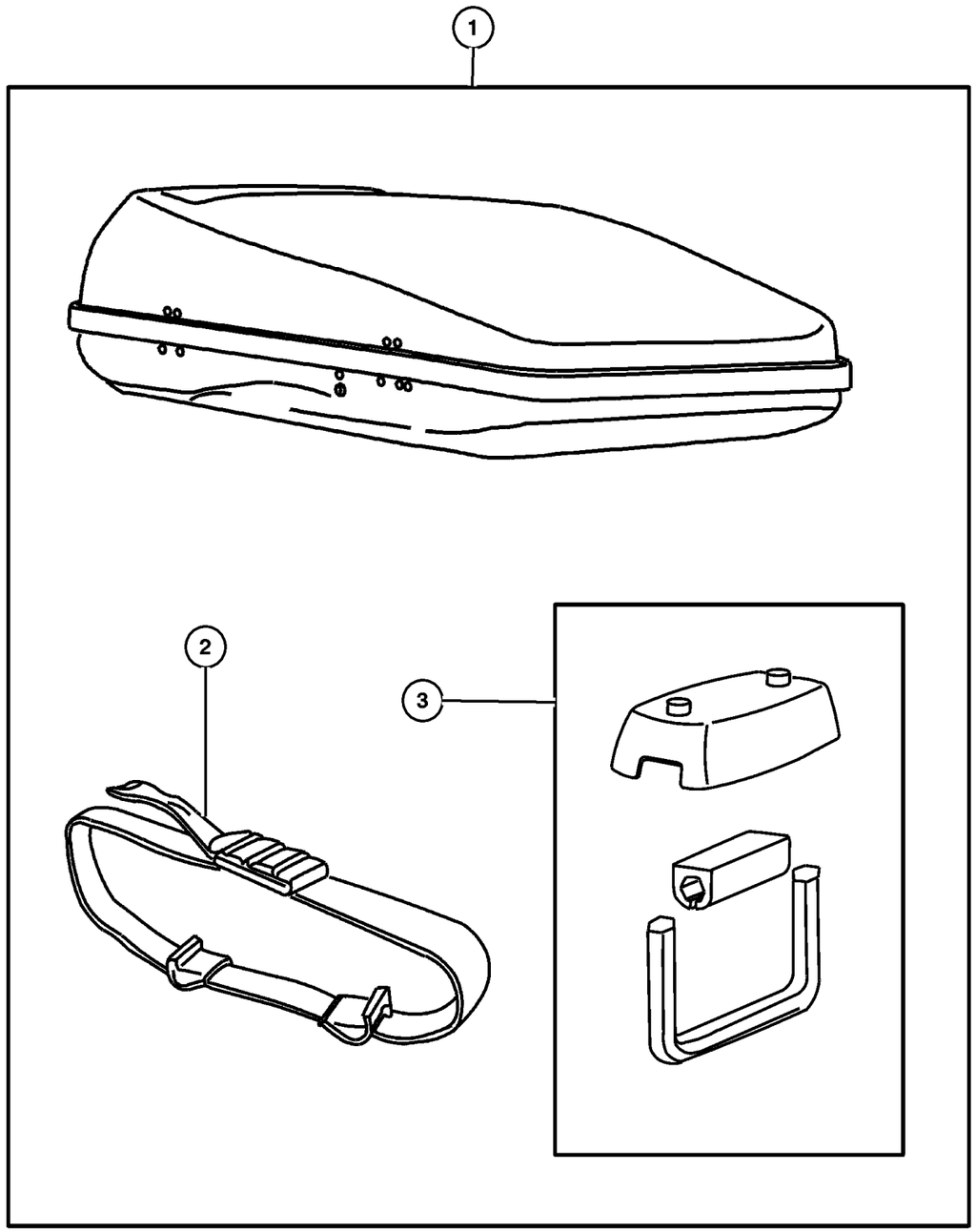

ITEM	PART NUMBER	QTY	LINE	SERIES	BODY	ENGINE	TRANS	TRIM	DESCRIPTION
Note; Requires Sport Utility Rack									
1									CARRIER KIT, Luggage
	8220 7353	1							31 inch x 71 inch
	8220 7341	1							28 inch x 90 inch
2	5086 160AA	1							STRAP, Cargo Tie Down
3	5086 159AA	1							HARDWARE KIT

JEEP LIBERTY (KJ)

SERIES	LINE	BODY	ENGINE	TRANSMISSION
P = Limited	J = LHD (4WD)	74 = 4 Dr (104.3 WB)	ED1,ED0 = 2.4L Power Tech	DDK = 5 Speed HDManual
H = Sport	U = RHD (4WD)		EKG,EK0 = 3.7L Power Tech	DDD = 5 Speed HD Manual
M = Renegade	T = LHD (2WD)		ENJ = 2.5L 4Cyl Turbo Diesel	DG4,DGQ = Multi-Speed Auto
			ENR = 2.8L 4Cyl Turbo Diesel	DG6 = 4 Speed Auto Transm
			EN0 = 4Cyl Turbo Diesel	DG0 = All Automatic Transm
				DBB = All Manual Transm

Luggage Carrier - Roof - Vinyl
Figure 001-250

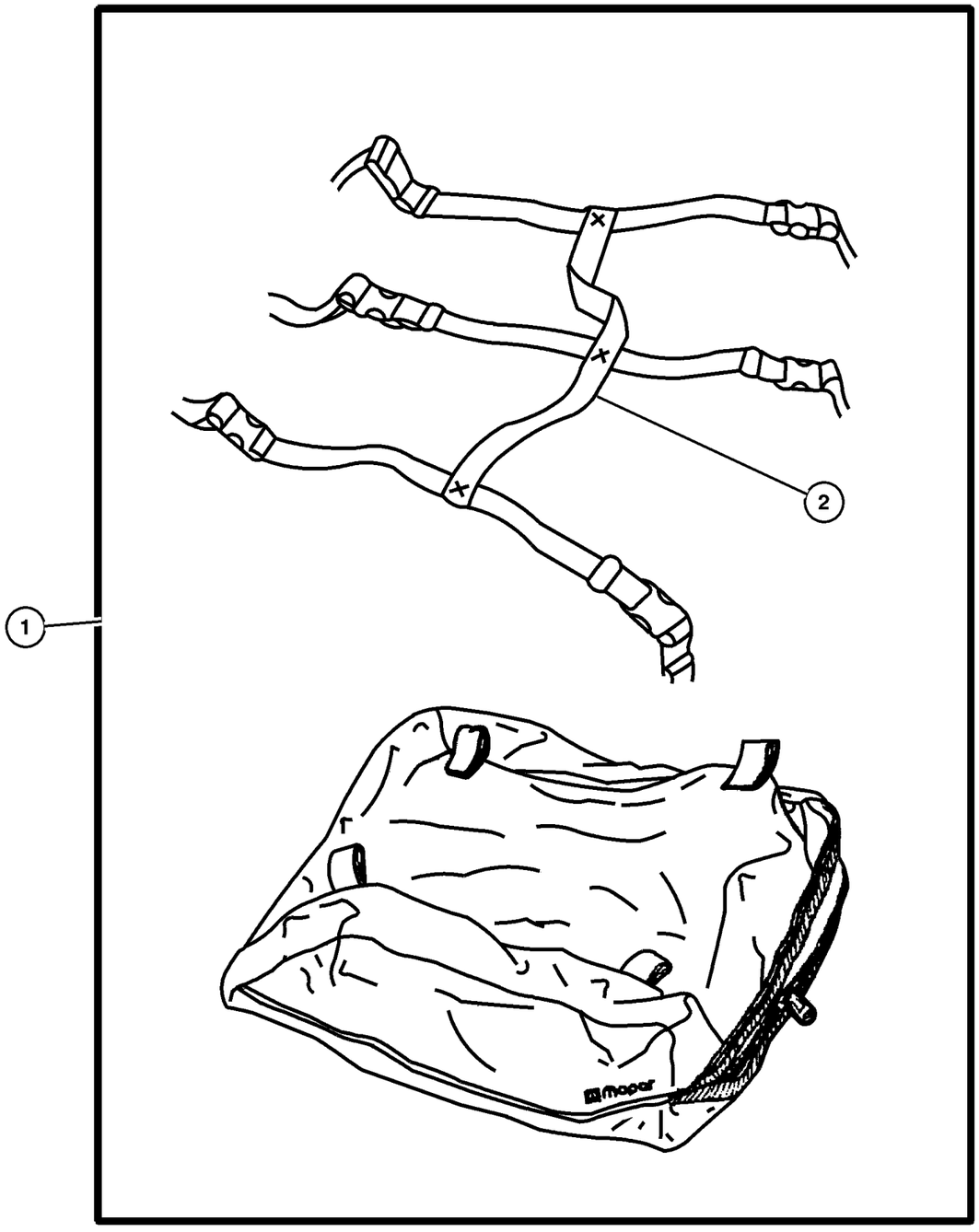

ITEM	PART NUMBER	QTY	LINE	SERIES	BODY	ENGINE	TRANS	TRIM	DESCRIPTION
Note; Requires Sport Utility Rack									
1	8220 7198	1							CARRIER KIT, Luggage, 39 inch x 37 inch x 12 inch
2	5066 332AA	1							STRAP KIT, Luggage Carrier

JEEP LIBERTY (KJ)

SERIES	LINE	BODY	ENGINE	TRANSMISSION
P = Limited	J = LHD (4WD)	74 = 4 Dr (104.3 WB)	ED1,ED0 = 2.4L Power Tech	DDK = 5 Speed HDManual
H = Sport	U = RHD (4WD)		EKG,EK0 = 3.7L Power Tech	DDD = 5 Speed HD Manual
M = Renegade	T = LHD (2WD)		ENJ = 2.5L 4Cyl Turbo Diesel	DG4,DGQ = Multi-Speed Auto
			ENR = 2.8L 4Cyl Turbo Diesel	DG6 = 4 Speed Auto Transm
			EN0 = 4Cyl Turbo Diesel	DG0 = All Automatic Transm
				DBB = All Manual Transm

Rack Kit - Sport Utility
Figure 001-255

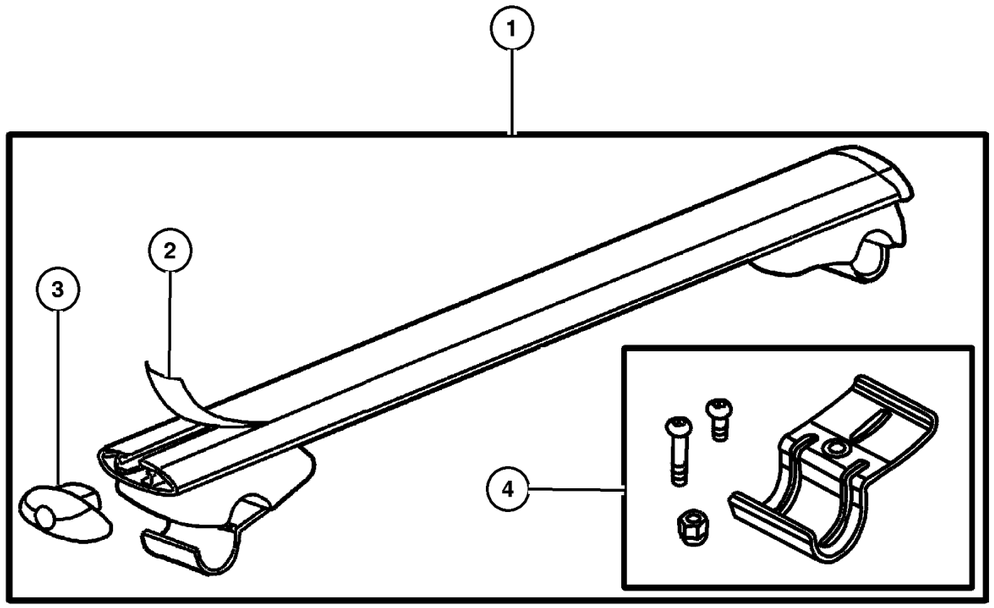

ITEM	PART NUMBER	QTY	LINE	SERIES	BODY	ENGINE	TRANS	TRIM	DESCRIPTION
1	8220 5174	1	J, T		74				RACK KIT, Sport - Rail Mount
2	5086 161AA	1	J, T		74				RUB STRIP, Lugg Rack Cross
3	5086 162AA	1	J, T		74				END CAP, Luggage Rack
4	5086 293AA	1	J, T		74				HARDWARE KIT
-5	5066 632AA	1	J, T		74				TOOL, Screw Driver

JEEP LIBERTY (KJ)

SERIES	LINE	BODY	ENGINE	TRANSMISSION
P = Limited	J = LHD (4WD)	74 = 4 Dr (104.3 WB)	ED1,ED0 = 2.4L Power Tech	DDK = 5 Speed HDManual
H = Sport	U = RHD (4WD)		EKG,EK0 = 3.7L Power Tech	DDD = 5 Speed HD Manual
M = Renegade	T = LHD (2WD)		ENJ = 2.5L 4Cyl Turbo Diesel	DG4,DGQ = Multi-Speed Auto
			ENR = 2.8L 4Cyl Turbo Diesel	DG6 = 4 Speed Auto Transm
			EN0 = 4Cyl Turbo Diesel	DG0 = All Automatic Transm
				DBB = All Manual Transm

AR = Use as required - = Non illustrated part # = New this model year

September 30, 2003

« RETURN TO GROUP INDEX

Wiring Kit - Trailer Tow - 4 Way
Figure 001-260

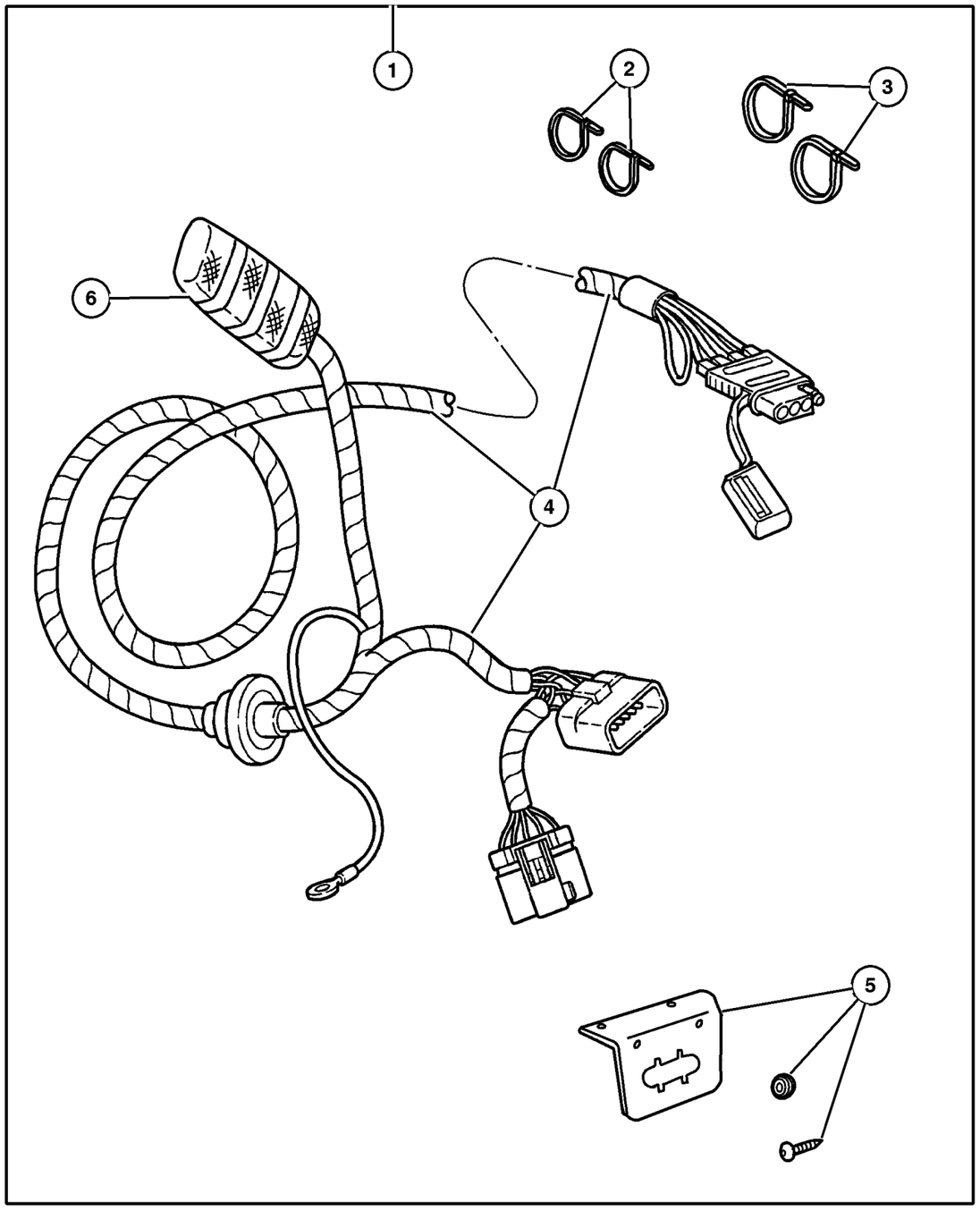

ITEM	PART NUMBER	QTY	LINE	SERIES	BODY	ENGINE	TRANS	TRIM	DESCRIPTION
1	8220 7290	1							WIRING PACKAGE, Trailer Tow
2	5073 039AA	1							STRAP, Tie
3	6016 155	1							STRAP, Tie
4									WIRING, Trailer Tow - 4 Way, Serviced in Package, (NOT SERVICED) (Not Serviced)
5	8220 4602	1							BRACKET KIT, Trailer Tow
6	4671 168	1							RELAY, Mini

JEEP LIBERTY (KJ)

SERIES	LINE	BODY	ENGINE	TRANSMISSION
P = Limited	J = LHD (4WD)	74 = 4 Dr (104.3 WB)	ED1,ED0 = 2.4L Power Tech	DDK = 5 Speed HDManual
H = Sport	U = RHD (4WD)		EKG,EK0 = 3.7L Power Tech	DDD = 5 Speed HD Manual
M = Renegade	T = LHD (2WD)		ENJ = 2.5L 4Cyl Turbo Diesel	DG4,DGQ = Multi-Speed Auto
			ENR = 2.8L 4Cyl Turbo Diesel	DG6 = 4 Speed Auto Transm
			EN0 = 4Cyl Turbo Diesel	DG0 = All Automatic Transm
				DBB = All Manual Transm

Wiring Kit - Trailer Tow - 7 Way
Figure 001-265

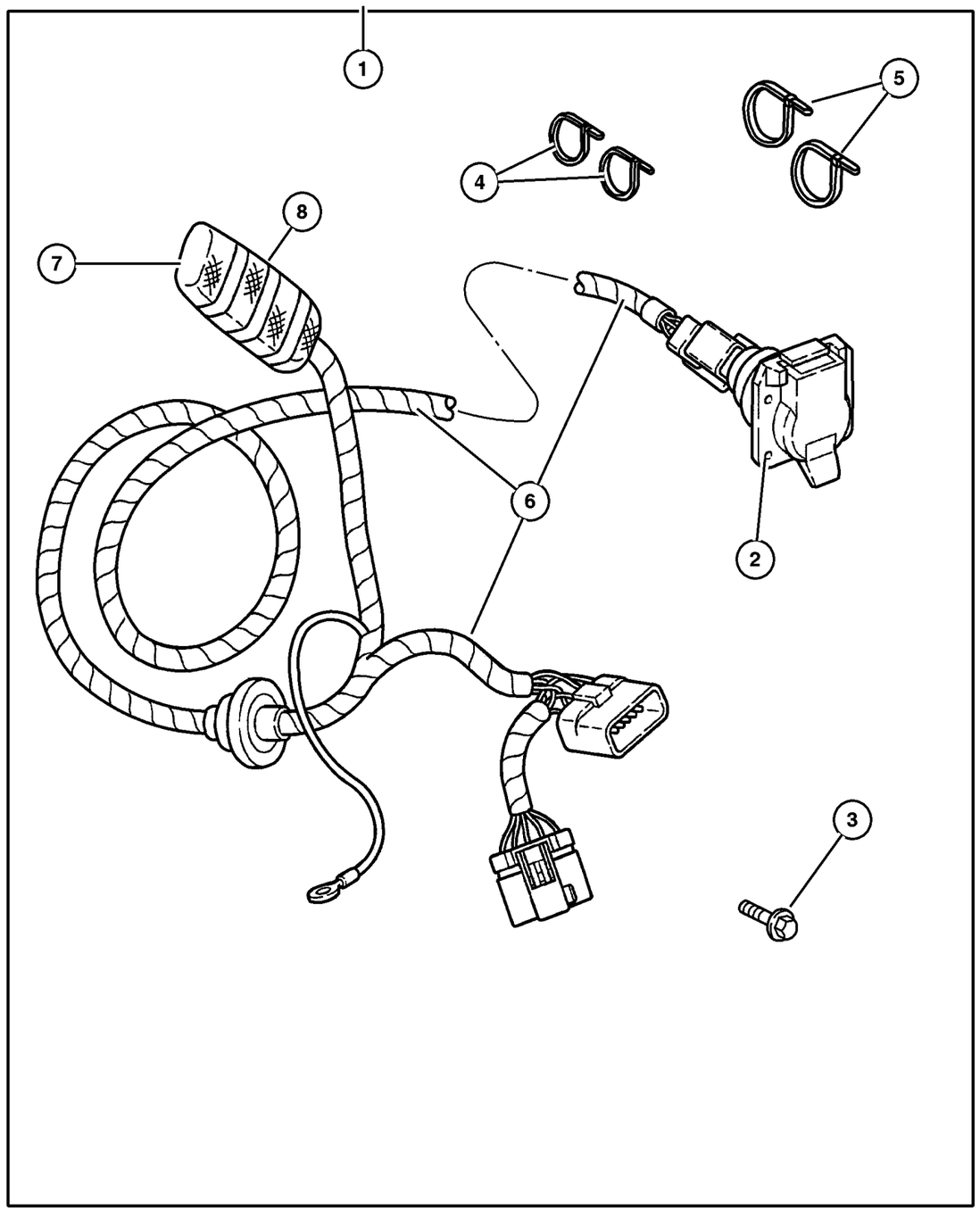

ITEM	PART NUMBER	QTY	LINE	SERIES	BODY	ENGINE	TRANS	TRIM	DESCRIPTION
1	8220 7248	1							WIRING PACKAGE, Trailer Tow
2	56038 366AB	1							CONNECTOR, 7 Way
3	0154 633	1							SCREW, .164-18x.625
4	5073 039AA	1							STRAP, Tie, Package of 50
5	6016 155	1							STRAP, Tie
6									WIRING, Trailer Tow, (NOT SERVICED) (Not Serviced)
7	5600 7290	1							BREAKER, Circuit
8	4671 168	1							RELAY, Mini

JEEP LIBERTY (KJ)

SERIES	LINE	BODY	ENGINE	TRANSMISSION
P = Limited	J = LHD (4WD)	74 = 4 Dr (104.3 WB)	ED1,ED0 = 2.4L Power Tech	DDK = 5 Speed HDManual
H = Sport	U = RHD (4WD)		EKG,EK0 = 3.7L Power Tech	DDD = 5 Speed HD Manual
M = Renegade	T = LHD (2WD)		ENJ = 2.5L 4Cyl Turbo Diesel	DG4,DGQ = Multi-Speed Auto
			ENR = 2.8L 4Cyl Turbo Diesel	DG6 = 4 Speed Auto Transm
			EN0 = 4Cyl Turbo Diesel	DG0 = All Automatic Transm
				DBB = All Manual Transm

Fan Kit - Engine Heavy Duty Cooling
Figure 001-270

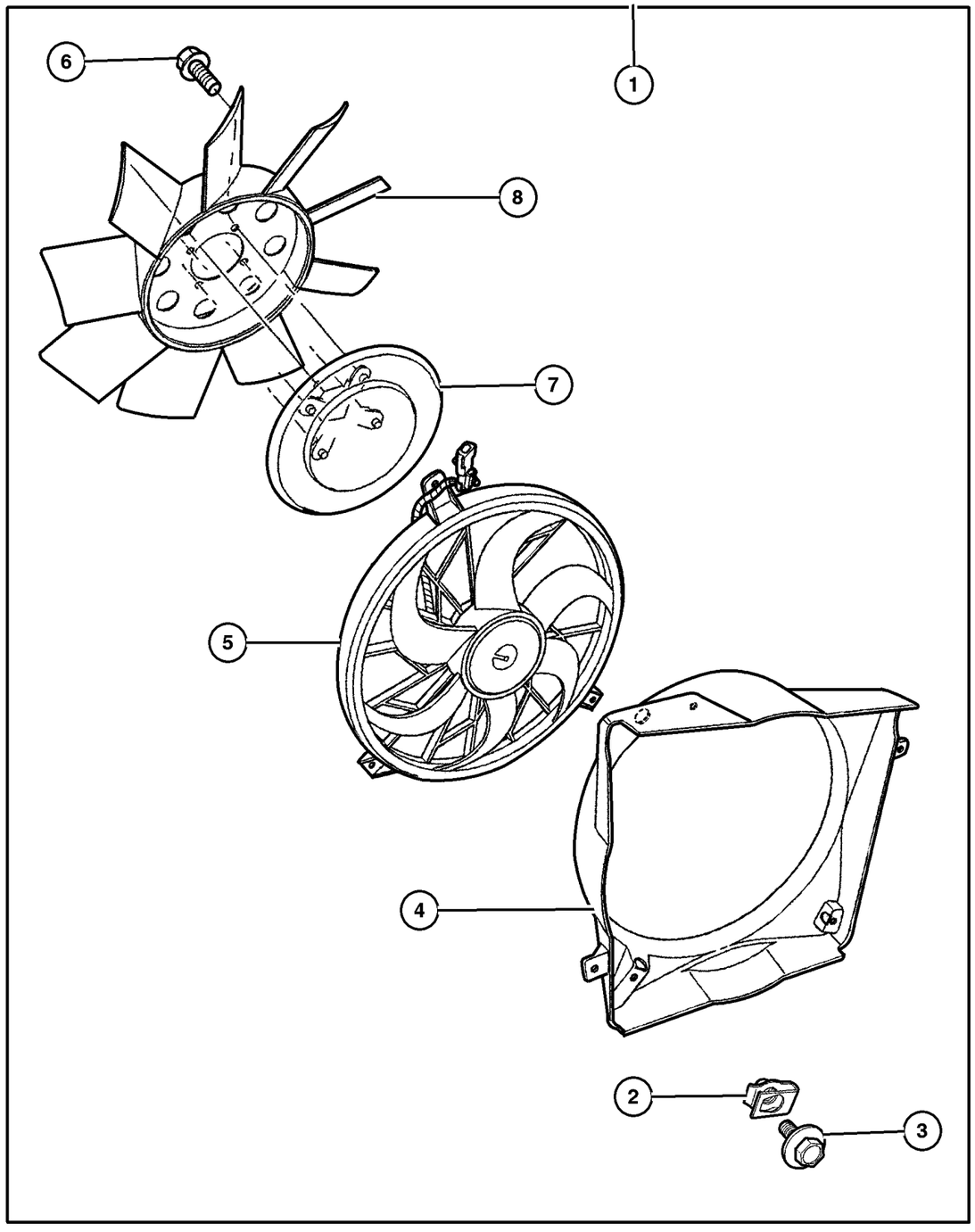

ITEM	PART NUMBER	QTY	LINE	SERIES	BODY	ENGINE	TRANS	TRIM	DESCRIPTION
1	8220 6937	1			74				FAN KIT, Cooling Heavy Duty
2	6505 172AA	1			74				U-NUT, M6x1.00
3	6102 117AA	1			74				SCREW AND WASHER, Hex Head, M6x1x20
4	52080 127AA	1			74				SHROUD, Fan
5	52079 528AB	1			74				FAN, Cooling
6	6034 860	1			74				BOLT AND WASHER, Implement Attaching
7	52079 718AD	1			74				DRIVE, Fan
8	52079 528AB	1			74				FAN, Cooling

JEEP LIBERTY (KJ)

SERIES	LINE	BODY	ENGINE	TRANSMISSION
P = Limited	J = LHD (4WD)	74 = 4 Dr (104.3 WB)	ED1,ED0 = 2.4L Power Tech	DDK = 5 Speed HDManual
H = Sport	U = RHD (4WD)		EKG,EK0 = 3.7L Power Tech	DDD = 5 Speed HD Manual
M = Renegade	T = LHD (2WD)		ENJ = 2.5L 4Cyl Turbo Diesel	DG4,DGQ = Multi-Speed Auto
			ENR = 2.8L 4Cyl Turbo Diesel	DG6 = 4 Speed Auto Transm
			EN0 = 4Cyl Turbo Diesel	DG0 = All Automatic Transm
				DBB = All Manual Transm

Running Board Kit
Figure 001-410

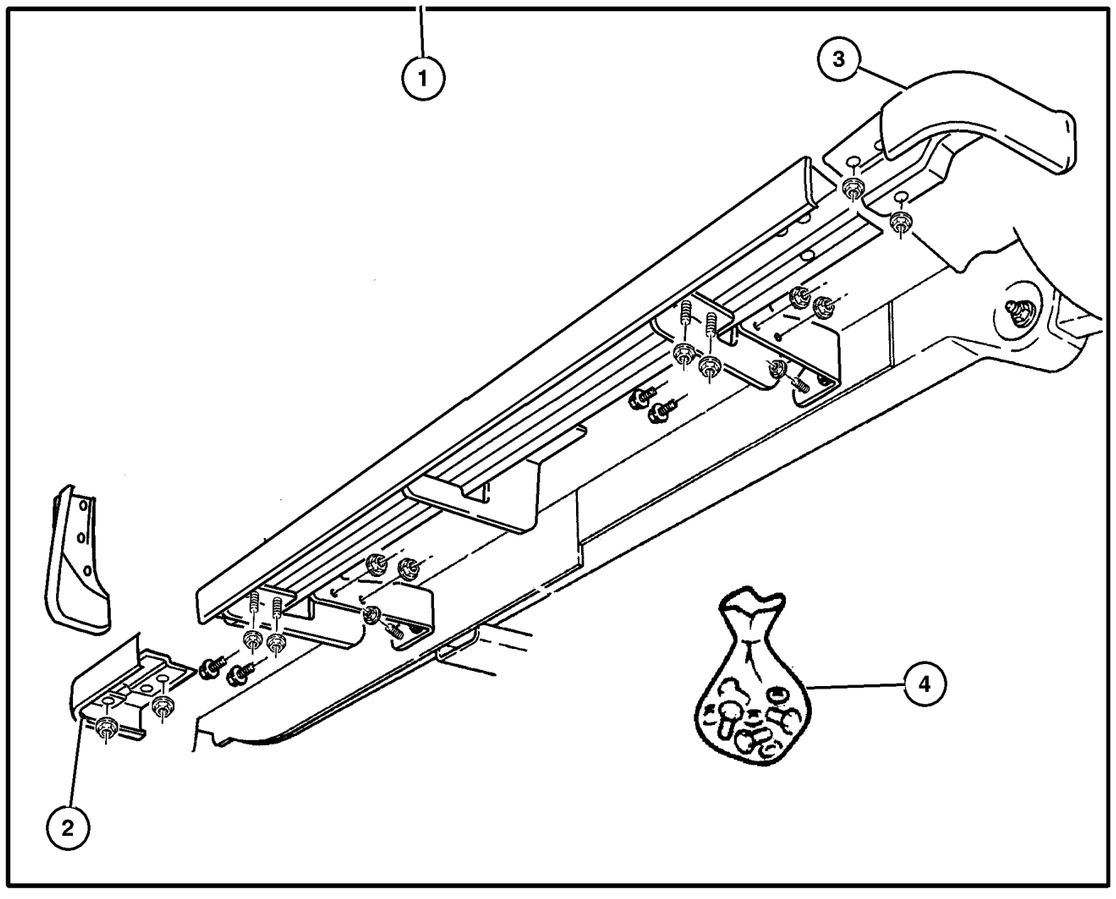

ITEM	PART NUMBER	QTY	LINE	SERIES	BODY	ENGINE	TRANS	TRIM	DESCRIPTION
1									RUNNING BOARD KIT, Full
	8220 7680	1							Black [DX8]
	8220 7681	1			74				Flame Red [PR4]
	8220 7682	1							Stone White [SW1]
	8220 7683	1							Patriot Blue [WB7]
	8220 7685	1							Bright Silver [WS2]
	8220 7687	1			74				Shale Green [XGR]
	8220 7688	1							Dark Garnet Red [XRV]
	8220 7690	1							Gray, Matches Cladding
	8220 7679	1							Primed
2									END CAP, Running Board, Unpainted
	5086 043AA	1							Front Left
	5086 045AA	1							Front Right
3									END CAP, Running Board, Unpainted
	5086 044AA	1							Left Rear
	5086 046AA	1							Right Rear
4	5083 937AA	1							SCREW PACKAGE, Screw

JEEP LIBERTY (KJ)

SERIES	LINE	BODY	ENGINE	TRANSMISSION
P = Limited	J = LHD (4WD)	74 = 4 Dr (104.3 WB)	ED1,ED0 = 2.4L Power Tech	DDK = 5 Speed HDManual
H = Sport	U = RHD (4WD)		EKG,EK0 = 3.7L Power Tech	DDD = 5 Speed HD Manual
M = Renegade	T = LHD (2WD)		ENJ = 2.5L 4Cyl Turbo Diesel	DG4,DGQ = Multi-Speed Auto
			ENR = 2.8L 4Cyl Turbo Diesel	DG6 = 4 Speed Auto Transm
			EN0 = 4Cyl Turbo Diesel	DG0 = All Automatic Transm
				DBB = All Manual Transm

Wheel Kit Cast Aluminum
Figure 001-415

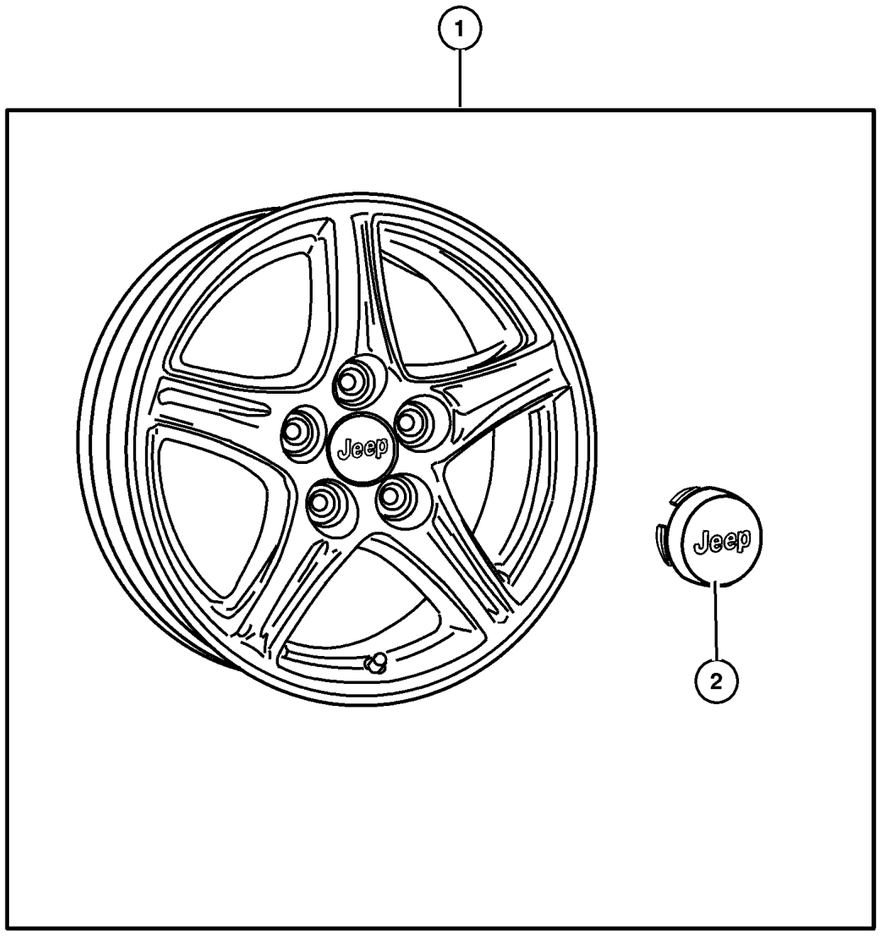

ITEM	PART NUMBER	QTY	LINE	SERIES	BODY	ENGINE	TRANS	TRIM	DESCRIPTION
Note; Item#1, Contains 1 Wheel and 1 Center Cap									
1									WHEEL KIT, Cast Aluminum
	8220 5580	1							Polished
	8220 5899	1			74				Chromed
2	5083 064AA	1			74				CAP, Wheel Center

JEEP LIBERTY (KJ)

SERIES	LINE	BODY	ENGINE	TRANSMISSION
P = Limited	J = LHD (4WD)	74 = 4 Dr (104.3 WB)	ED1,ED0 = 2.4L Power Tech	DDK = 5 Speed HDManual
H = Sport	U = RHD (4WD)		EKG,EK0 = 3.7L Power Tech	DDD = 5 Speed HD Manual
M = Renegade	T = LHD (2WD)		ENJ = 2.5L 4Cyl Turbo Diesel	DG4,DGQ = Multi-Speed Auto
			ENR = 2.8L 4Cyl Turbo Diesel	DG6 = 4 Speed Auto Transm
			EN0 = 4Cyl Turbo Diesel	DG0 = All Automatic Transm
				DBB = All Manual Transm

Decor Kit Bodyside
Figure 001-420

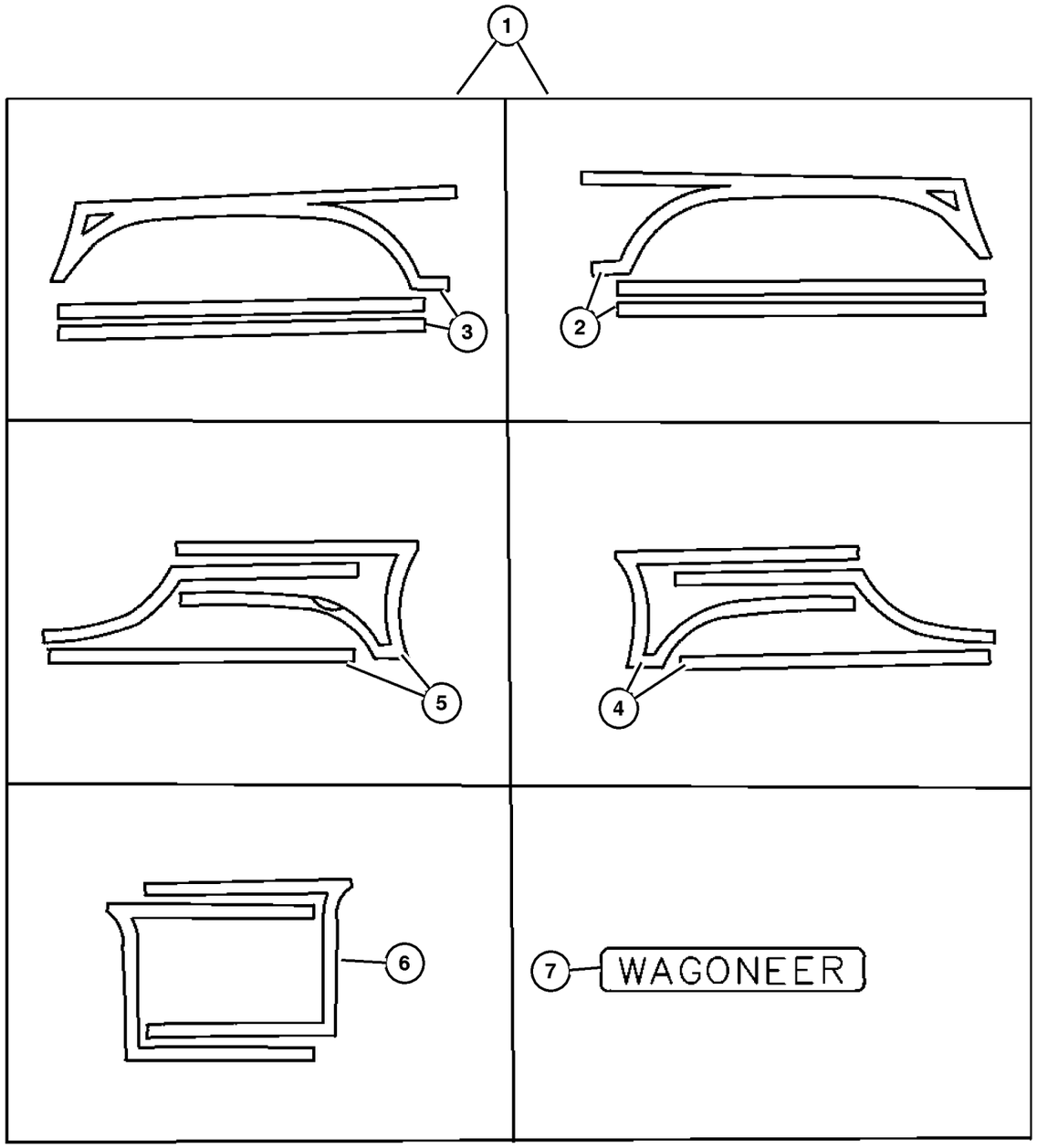

ITEM	PART NUMBER	QTY	LINE	SERIES	BODY	ENGINE	TRANS	TRIM	DESCRIPTION
1	8220 8020	1			74				DECOR KIT, Bodyside
2	5103 126AA	1			74				MOLDING, Body Side, Door and Fender, Right Front
3	5103 127AA	1			74				MOLDING, Body Side, Door and Fender, Left Front
4	5103 128AA	1			74				MOLDING, Body Side, Door and Quarter Panel, Right Rear
5	5103 129AA	1			74				MOLDING, Body Side, Door and Quarter Panel, Left Rear
6	5103 125AA	1			74				MOLDING, Tailgate
7	5103 130AA	1			74				NAMEPLATE, WAGONEER
-8	8350 3186	1			74				OVERLAY, Woodgrain, 17 inch x 50 inch Cut to Fit

JEEP LIBERTY (KJ)

SERIES	LINE	BODY	ENGINE	TRANSMISSION
P = Limited	J = LHD (4WD)	74 = 4 Dr (104.3 WB)	ED1,ED0 = 2.4L Power Tech	DDK = 5 Speed HDManual
H = Sport	U = RHD (4WD)		EKG,EK0 = 3.7L Power Tech	DDD = 5 Speed HD Manual
M = Renegade	T = LHD (2WD)		ENJ = 2.5L 4Cyl Turbo Diesel	DG4,DGQ = Multi-Speed Auto
			ENR = 2.8L 4Cyl Turbo Diesel	DG6 = 4 Speed Auto Transm
			EN0 = 4Cyl Turbo Diesel	DG0 = All Automatic Transm
				DBB = All Manual Transm

Skid Plate - Transfer Case
Figure 001-510

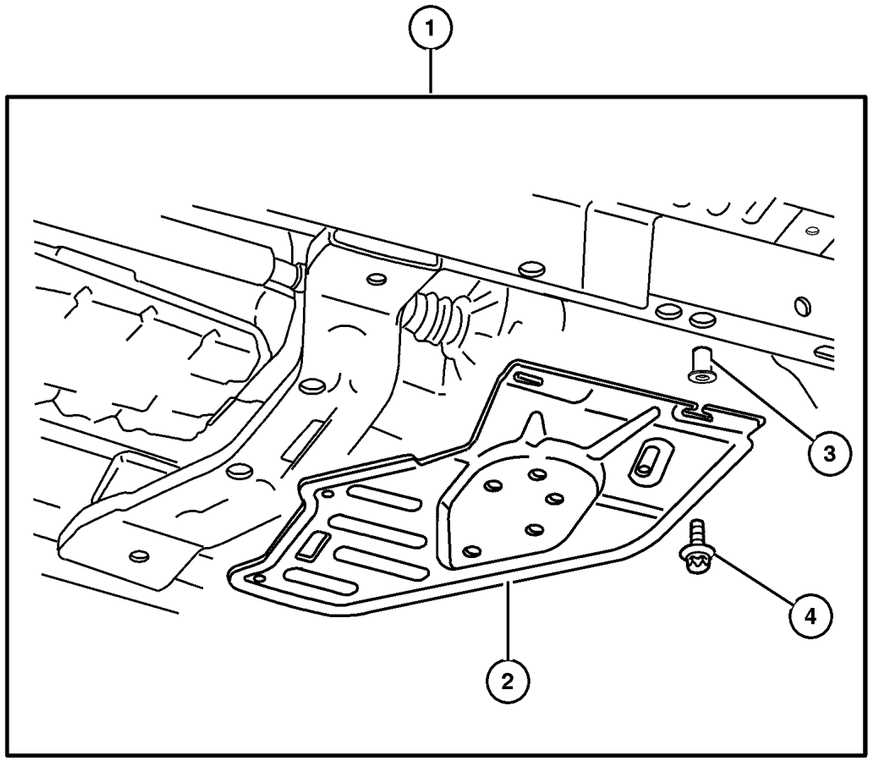

ITEM	PART NUMBER	QTY	LINE	SERIES	BODY	ENGINE	TRANS	TRIM	DESCRIPTION
1	8220 8421	1			74				PLATE PACKAGE, Skid - Transfer Case
2	52128 649AA	1			74				PLATE, Transfer Case Skid
3	6505 294AA	1							RIVET
4	6503 571	1							SCREW AND WASHER, M10x1. 50x35
-5	5013 886AA	1							TOOL, Rivnut

JEEP LIBERTY (KJ)

SERIES	LINE	BODY	ENGINE	TRANSMISSION
P = Limited	J = LHD (4WD)	74 = 4 Dr (104.3 WB)	ED1,ED0 = 2.4L Power Tech	DDK = 5 Speed HDManual
H = Sport	U = RHD (4WD)		EKG,EK0 = 3.7L Power Tech	DDD = 5 Speed HD Manual
M = Renegade	T = LHD (2WD)		ENJ = 2.5L 4Cyl Turbo Diesel	DG4,DGQ = Multi-Speed Auto
			ENR = 2.8L 4Cyl Turbo Diesel	DG6 = 4 Speed Auto Transm
			EN0 = 4Cyl Turbo Diesel	DG0 = All Automatic Transm
				DBB = All Manual Transm

Skid Plate - Fuel Tank
Figure 001-515

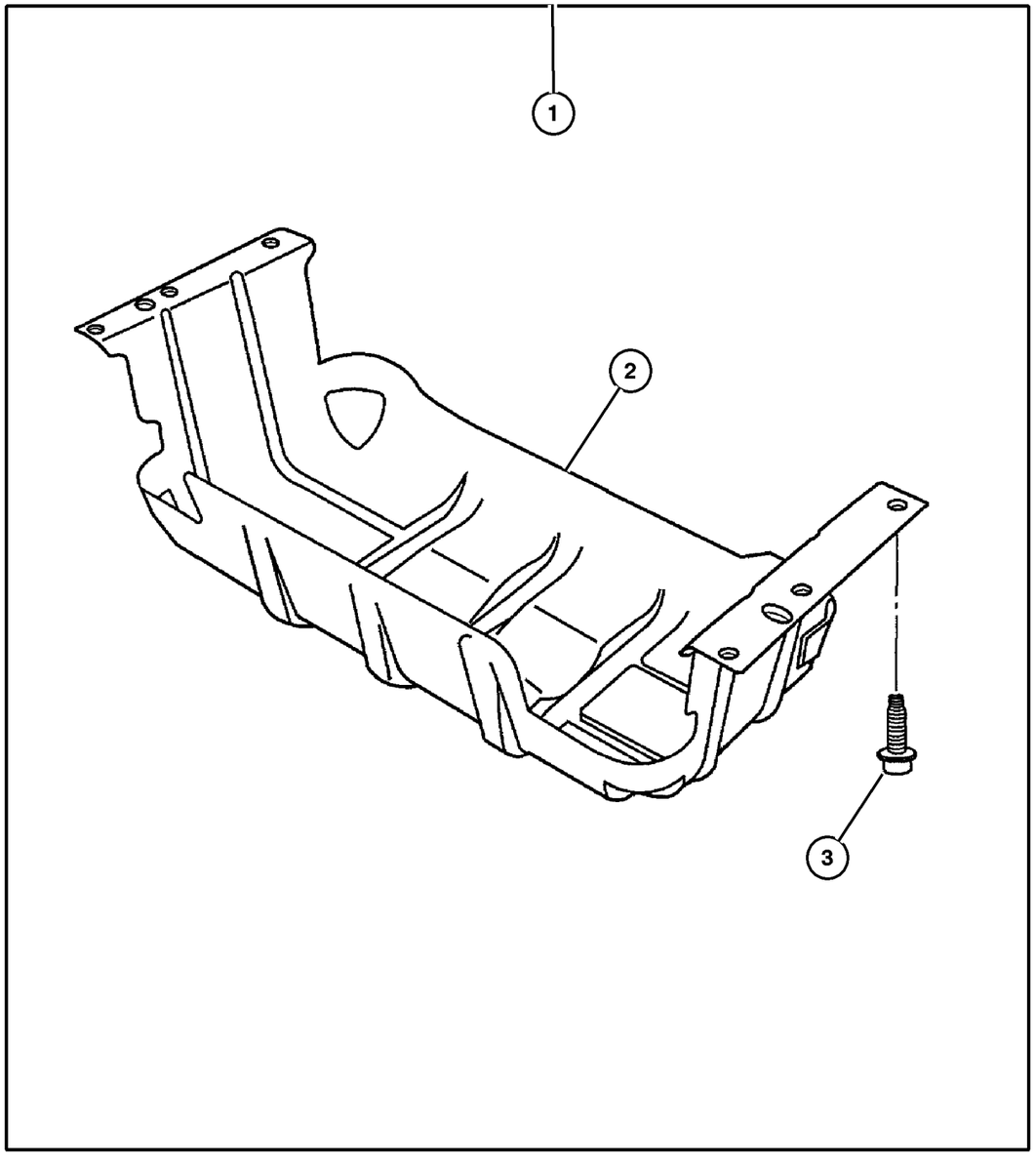

ITEM	PART NUMBER	QTY	LINE	SERIES	BODY	ENGINE	TRANS	TRIM	DESCRIPTION
1	8220 6122	1			74				SKID PLATE PACKAGE, Fuel Tank
2	52100 332AF	1							PLATE, Skid
3	6502 557	6							BOLT, Hex Flange Head, M12x1. 75x40

JEEP LIBERTY (KJ)

SERIES	LINE	BODY	ENGINE	TRANSMISSION
P = Limited	J = LHD (4WD)	74 = 4 Dr (104.3 WB)	ED1,ED0 = 2.4L Power Tech	DDK = 5 Speed HDManual
H = Sport	U = RHD (4WD)		EKG,EK0 = 3.7L Power Tech	DDD = 5 Speed HD Manual
M = Renegade	T = LHD (2WD)		ENJ = 2.5L 4Cyl Turbo Diesel	DG4,DGQ = Multi-Speed Auto
			ENR = 2.8L 4Cyl Turbo Diesel	DG6 = 4 Speed Auto Transm
			EN0 = 4Cyl Turbo Diesel	DG0 = All Automatic Transm
				DBB = All Manual Transm

Deflector Kit - Air Front
Figure 001-520

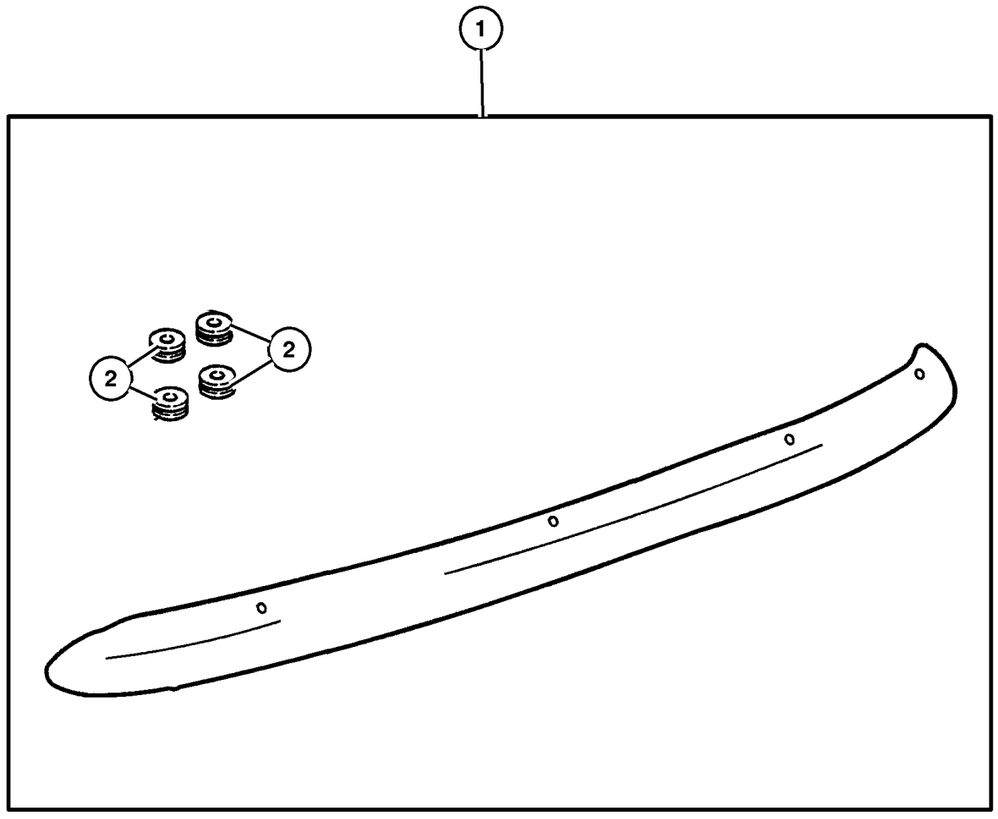

ITEM	PART NUMBER	QTY	LINE	SERIES	BODY	ENGINE	TRANS	TRIM	DESCRIPTION
Note; Use for Vehicles Without Grille Guards									
1	8220 7938	1			74				SHIELD KIT, Air - Front
2	5014 754AA	1			74				SPACER, Air Deflector

JEEP LIBERTY (KJ)

SERIES	LINE	BODY	ENGINE	TRANSMISSION
P = Limited	J = LHD (4WD)	74 = 4 Dr (104.3 WB)	ED1,ED0 = 2.4L Power Tech	DDK = 5 Speed HDManual
H = Sport	U = RHD (4WD)		EKG,EK0 = 3.7L Power Tech	DDD = 5 Speed HD Manual
M = Renegade	T = LHD (2WD)		ENJ = 2.5L 4Cyl Turbo Diesel	DG4,DGQ = Multi-Speed Auto
			ENR = 2.8L 4Cyl Turbo Diesel	DG6 = 4 Speed Auto Transm
			EN0 = 4Cyl Turbo Diesel	DG0 = All Automatic Transm
				DBB = All Manual Transm

Light Kit - Fog
Figure 001-610

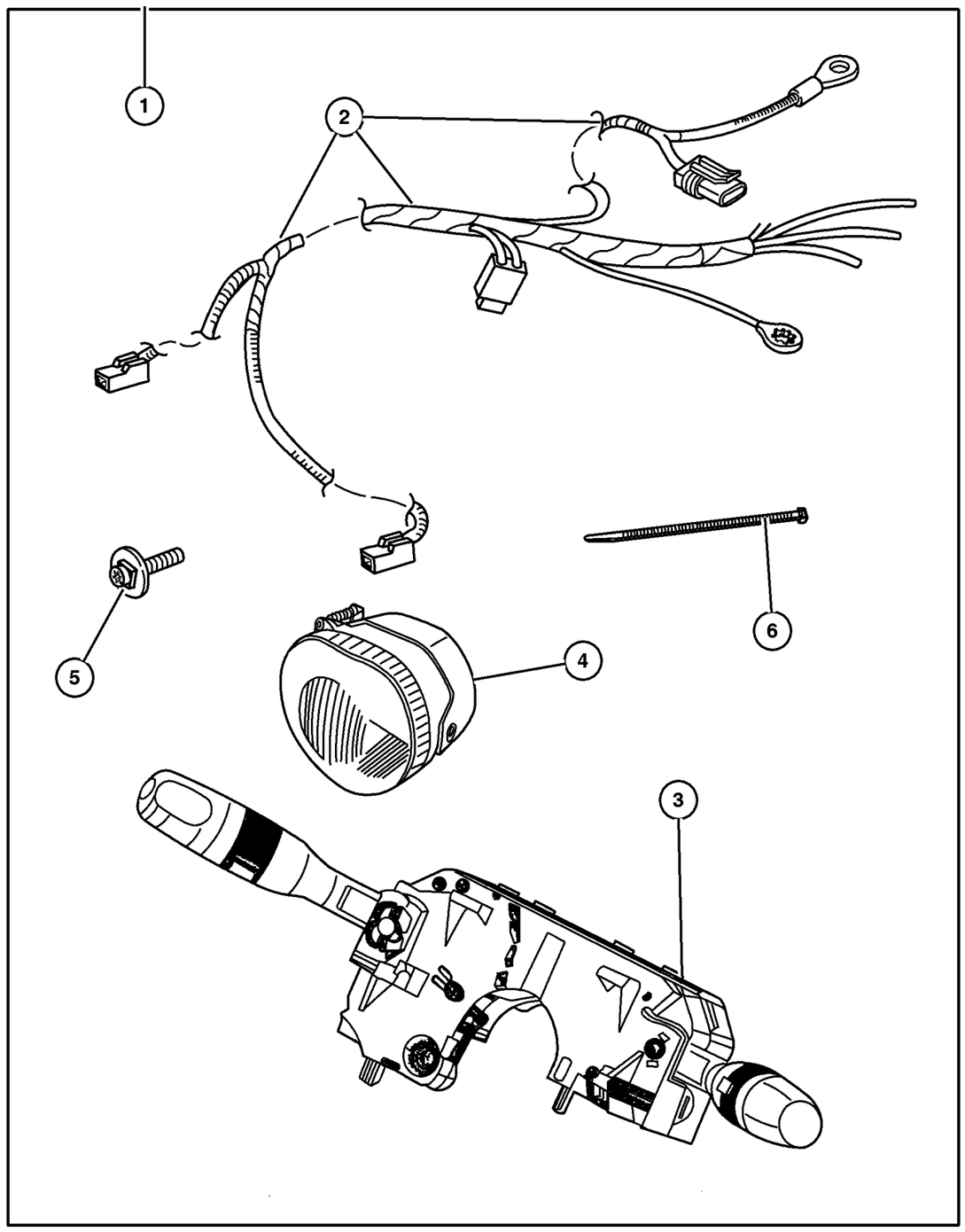

ITEM	PART NUMBER	QTY	LINE	SERIES	BODY	ENGINE	TRANS	TRIM	DESCRIPTION
1	8220 7998	1							LIGHT PACKAGE, Fog
2									WIRING, Fog Lamp, Serviced in Package, (NOT SERVICED) (Not Serviced)
3	56010 126AF	1							SWITCH, Multifunction
4									LAMP, Fog, Serviced in Package, (NOT SERVICED) (Not Serviced)
5	6506 579AA	1							SCREW, Fog Lamp
6	5073 039AA	1							STRAP, Tie, Package of 50

JEEP LIBERTY (KJ)

SERIES	LINE	BODY	ENGINE	TRANSMISSION
P = Limited	J = LHD (4WD)	74 = 4 Dr (104.3 WB)	ED1,ED0 = 2.4L Power Tech	DDK = 5 Speed HDManual
H = Sport	U = RHD (4WD)		EKG,EK0 = 3.7L Power Tech	DDD = 5 Speed HD Manual
M = Renegade	T = LHD (2WD)		ENJ = 2.5L 4Cyl Turbo Diesel	DG4,DGQ = Multi-Speed Auto
			ENR = 2.8L 4Cyl Turbo Diesel	DG6 = 4 Speed Auto Transm
			EN0 = 4Cyl Turbo Diesel	DG0 = All Automatic Transm
				DBB = All Manual Transm

Heater Kit
Figure 001-615

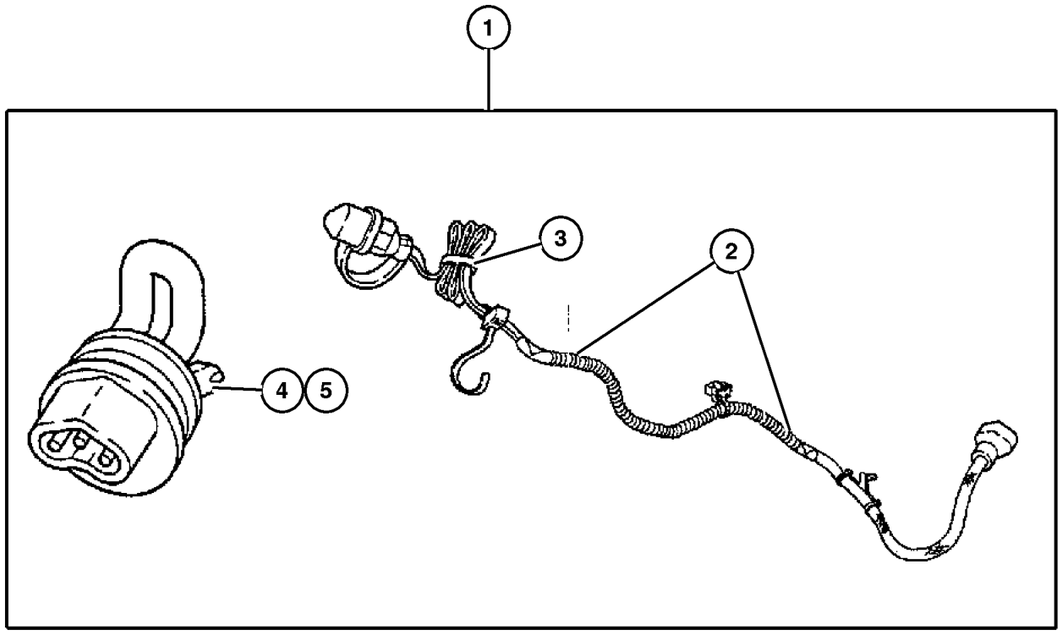

ITEM	PART NUMBER	QTY	LINE	SERIES	BODY	ENGINE	TRANS	TRIM	DESCRIPTION
1									HEATER KIT, Engine Block
	8220 7243	1							2.4L Engine
	8220 7244	1							3.7L Engine
2									CORD, Engine Block Heater
	56044 160AA	1							2.4L Engine
	56041 974AA	1							3.7L Engine
3	5073 039AA	1							STRAP, Tie, Package of 50
4	4557 686AB	1							HEATER, Engine Block, 2.4L Engine
5									HEATER, Engine Block, 3.7L Engine
									Serviced in Item 1 Only, (NOT SERVICED) (Not Serviced)

JEEP LIBERTY (KJ)

SERIES	LINE	BODY	ENGINE	TRANSMISSION
P = Limited	J = LHD (4WD)	74 = 4 Dr (104.3 WB)	ED1,ED0 = 2.4L Power Tech	DDK = 5 Speed HDManual
H = Sport	U = RHD (4WD)		EKG,EK0 = 3.7L Power Tech	DDD = 5 Speed HD Manual
M = Renegade	T = LHD (2WD)		ENJ = 2.5L 4Cyl Turbo Diesel	DG4,DGQ = Multi-Speed Auto
			ENR = 2.8L 4Cyl Turbo Diesel	DG6 = 4 Speed Auto Transm
			EN0 = 4Cyl Turbo Diesel	DG0 = All Automatic Transm
				DBB = All Manual Transm

Hands Free Kit - Cellular Phone - Blue Tooth
Figure 001-625

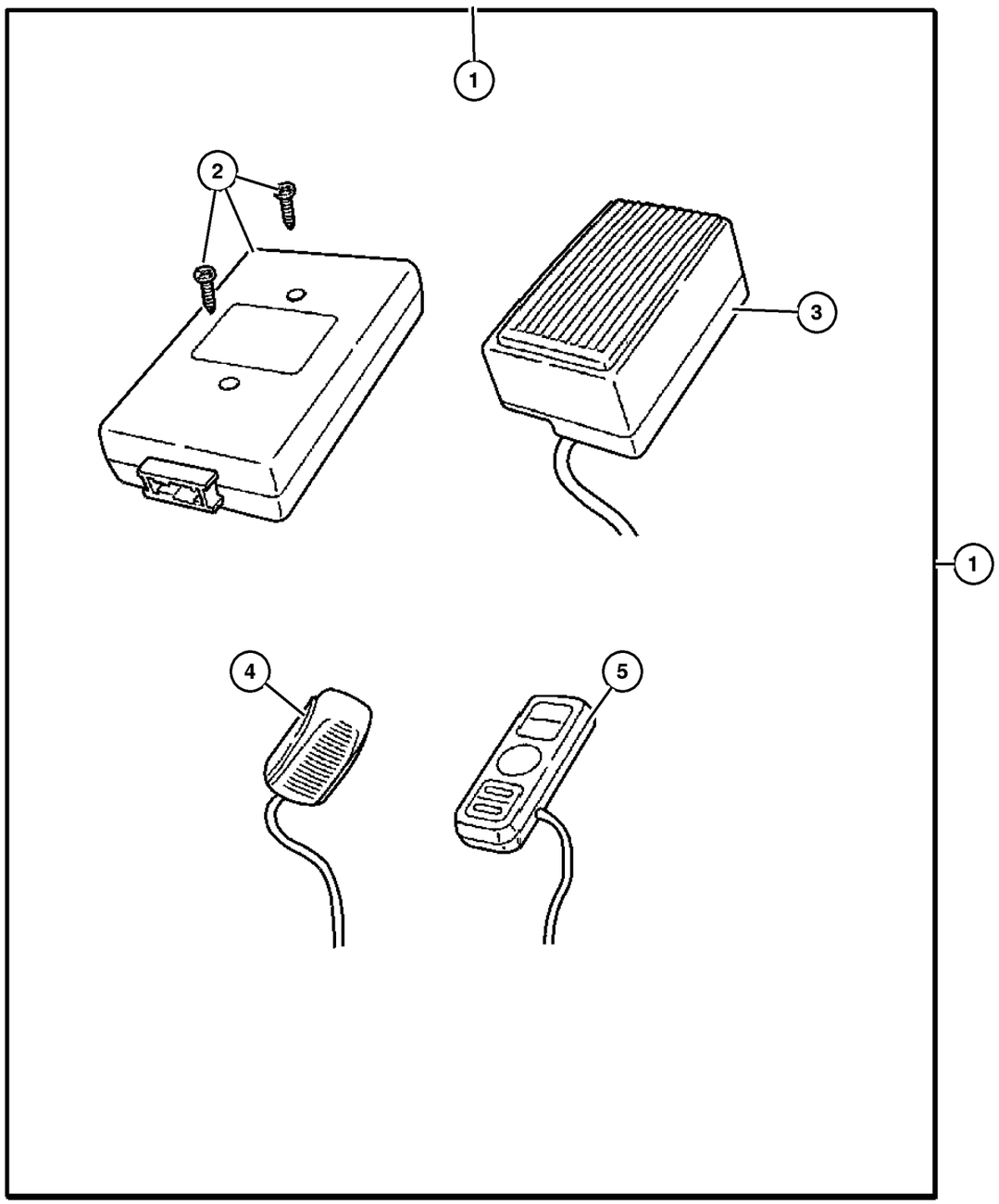

ITEM	PART NUMBER	QTY	LINE	SERIES	BODY	ENGINE	TRANS	TRIM	DESCRIPTION
Note: For Warranty Repair On Item 2, Order Through [GPOP] Function 11, Using Z Prefix									
1	82207 853AC	1							HANDS FREE KIT, Cellular Phone
2	5114 359AC	1							MODULE, U Connect
3	5102 026AA	1							SPEAKER, Front
4	5102 025AA	1							MICROPHONE, Audio
5	5102 027AA	1							CONTROLLER, Audio

JEEP LIBERTY (KJ)

SERIES	LINE	BODY	ENGINE	TRANSMISSION
P = Limited	J = LHD (4WD)	74 = 4 Dr (104.3 WB)	ED1,ED0 = 2.4L Power Tech	DDK = 5 Speed HDManual
H = Sport	U = RHD (4WD)		EKG,EK0 = 3.7L Power Tech	DDD = 5 Speed HD Manual
M = Renegade	T = LHD (2WD)		ENJ = 2.5L 4Cyl Turbo Diesel	DG4,DGQ = Multi-Speed Auto
			ENR = 2.8L 4Cyl Turbo Diesel	DG6 = 4 Speed Auto Transm
			EN0 = 4Cyl Turbo Diesel	DG0 = All Automatic Transm
				DBB = All Manual Transm

Guard Kit - Dog
Figure 001-810

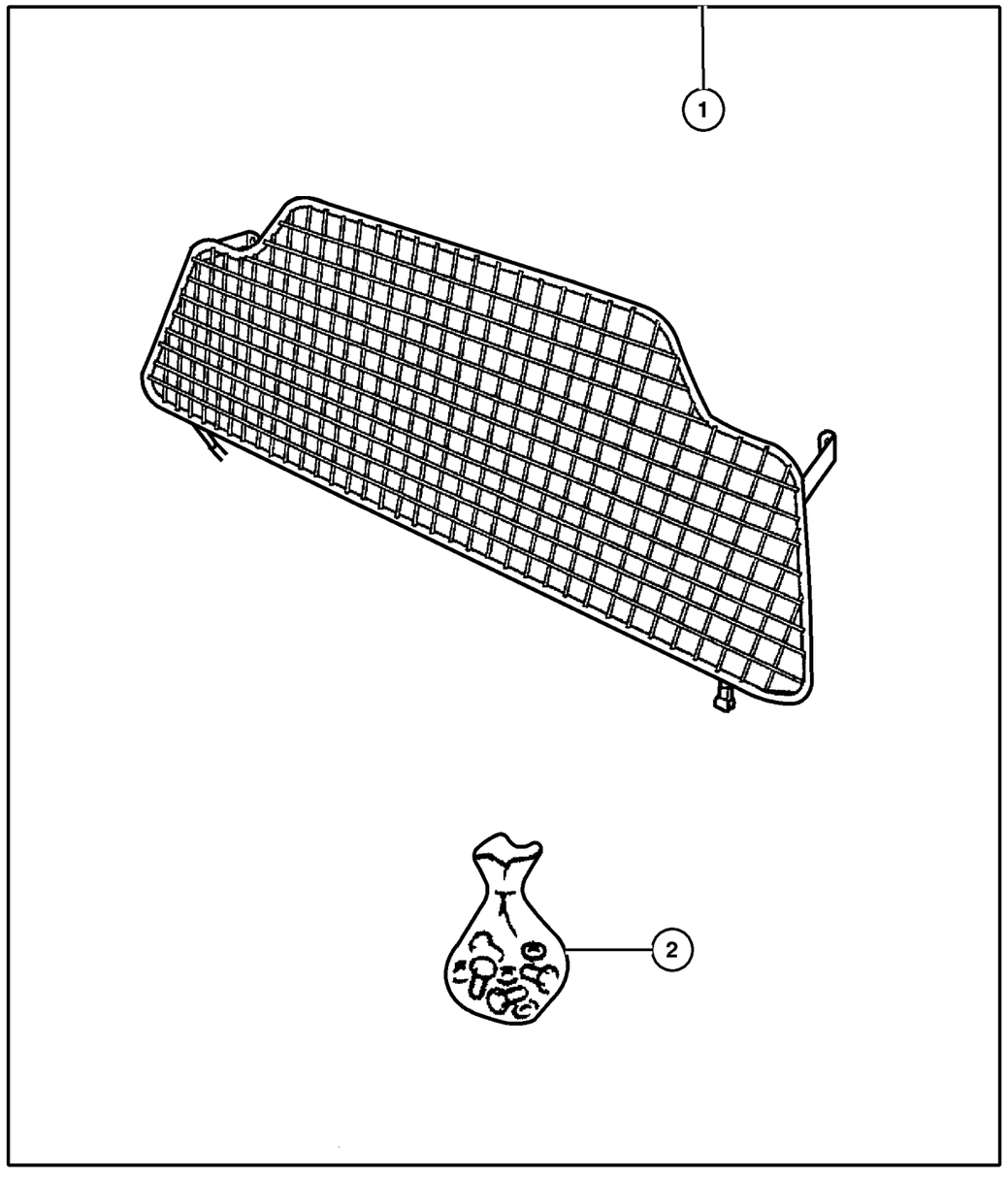

ITEM	PART NUMBER	QTY	LINE	SERIES	BODY	ENGINE	TRANS	TRIM	DESCRIPTION
1	8220 6855	1			74				GUARD KIT, Dog Guard
2	5086 022AA	1			74				HARDWARE KIT, Load Partition

JEEP LIBERTY (KJ)

SERIES	LINE	BODY	ENGINE	TRANSMISSION
P = Limited	J = LHD (4WD)	74 = 4 Dr (104.3 WB)	ED1,ED0 = 2.4L Power Tech	DDK = 5 Speed HDManual
H = Sport	U = RHD (4WD)		EKG,EK0 = 3.7L Power Tech	DDD = 5 Speed HD Manual
M = Renegade	T = LHD (2WD)		ENJ = 2.5L 4Cyl Turbo Diesel	DG4,DGQ = Multi-Speed Auto
			ENR = 2.8L 4Cyl Turbo Diesel	DG6 = 4 Speed Auto Transm
			EN0 = 4Cyl Turbo Diesel	DG0 = All Automatic Transm
				DBB = All Manual Transm

Alarm - EVS II Base System Used without Keyless Entry
Figure 001-910

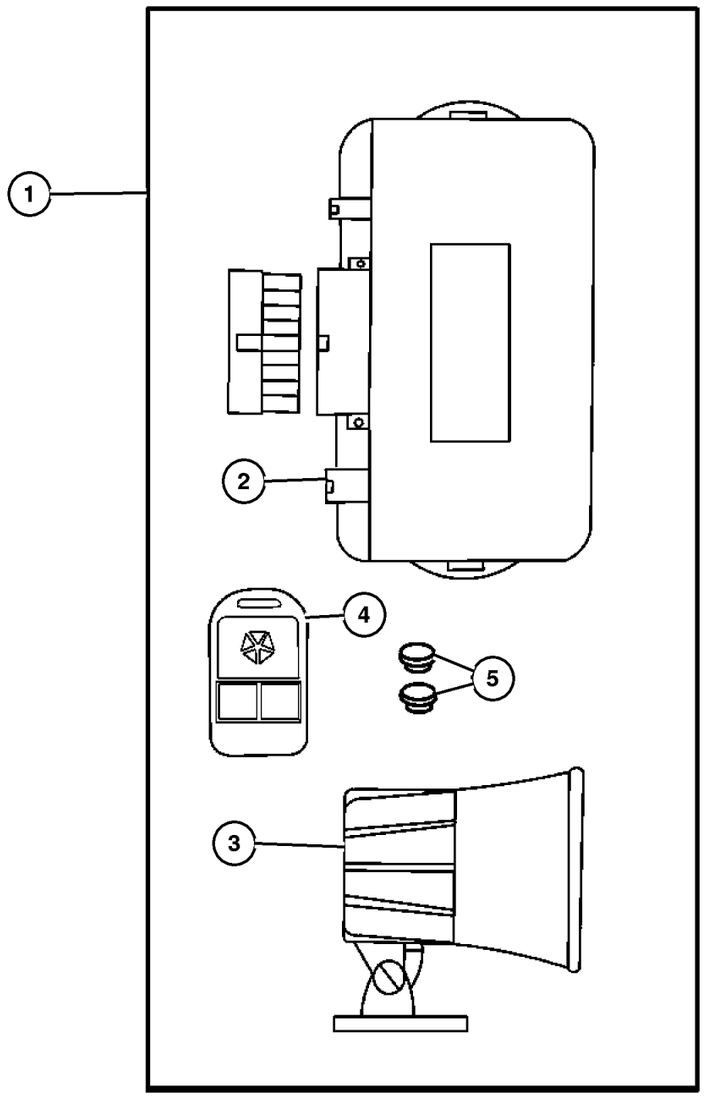

ITEM	PART NUMBER	QTY	LINE	SERIES	BODY	ENGINE	TRANS	TRIM	DESCRIPTION
1	8220 3763	1			74				MODULE KIT, Alarm without Keyless
2	5012 164AA	1			74				MODULE, Security Alarm
3	8220 3198	1			74				SIREN, Alarm
4	4886 374AA	1			74				TRANSMITTER, Alarm or Keyless
5	4636 141	1			74				BATTERY, Transmitter
-6	4886 259AA	1			74				INDICATOR, Valet Status
-7	4886 258AA	1			74				SWITCH, Programing Bypass

JEEP LIBERTY (KJ)

SERIES	LINE	BODY	ENGINE	TRANSMISSION
P = Limited	J = LHD (4WD)	74 = 4 Dr (104.3 WB)	ED1,ED0 = 2.4L Power Tech	DDK = 5 Speed HDManual
H = Sport	U = RHD (4WD)		EKG,EK0 = 3.7L Power Tech	DDD = 5 Speed HD Manual
M = Renegade	T = LHD (2WD)		ENJ = 2.5L 4Cyl Turbo Diesel	DG4,DGQ = Multi-Speed Auto
			ENR = 2.8L 4Cyl Turbo Diesel	DG6 = 4 Speed Auto Transm
			EN0 = 4Cyl Turbo Diesel	DG0 = All Automatic Transm
				DBB = All Manual Transm

Alarm - EVS II Plus System Used with Keyless Entry
Figure 001-915

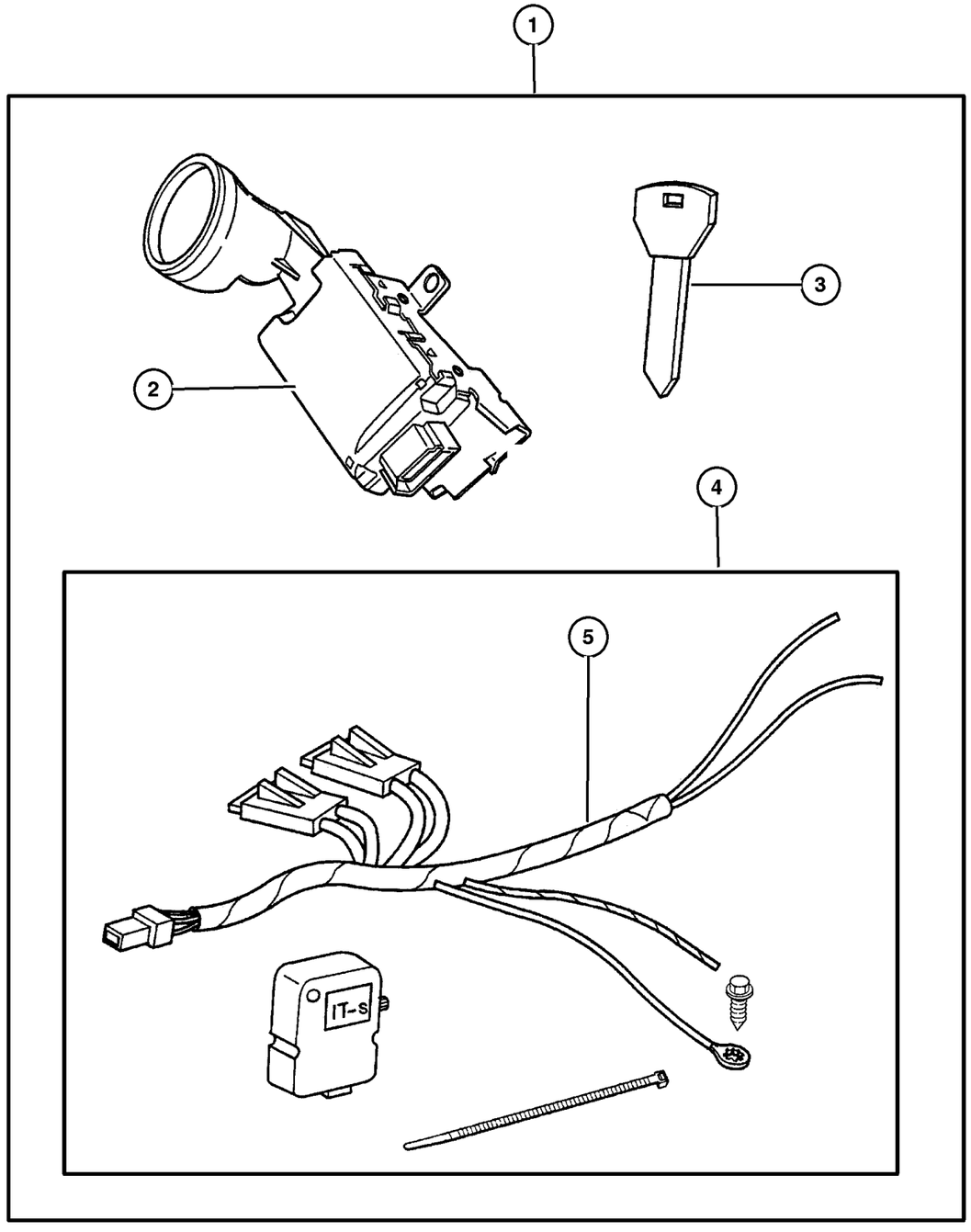

ITEM	PART NUMBER	QTY	LINE	SERIES	BODY	ENGINE	TRANS	TRIM	DESCRIPTION
NOTE: Upgrade for Power Convenience Group									
1	8220 7139	1							ALARM PACKAGE, Security With Sentry Key
2	56010 209AC	1							MODULE, Immobilizer
3	5018 699AA	1							KEY, Master
4	8220 7070	1							SENSOR KIT, Shock
5									WIRING KIT, Alarm Security Plus, Shock Sensor, (NOT SERVICED) (Not Serviced)

JEEP LIBERTY (KJ)

SERIES	LINE	BODY	ENGINE	TRANSMISSION
P = Limited	J = LHD (4WD)	74 = 4 Dr (104.3 WB)	ED1,ED0 = 2.4L Power Tech	DDK = 5 Speed HDManual
H = Sport	U = RHD (4WD)		EKG,EK0 = 3.7L Power Tech	DDD = 5 Speed HD Manual
M = Renegade	T = LHD (2WD)		ENJ = 2.5L 4Cyl Turbo Diesel	DG4,DGQ = Multi-Speed Auto
			ENR = 2.8L 4Cyl Turbo Diesel	DG6 = 4 Speed Auto Transm
			EN0 = 4Cyl Turbo Diesel	DG0 = All Automatic Transm
				DBB = All Manual Transm

Group – 002
Front Suspension & Drive

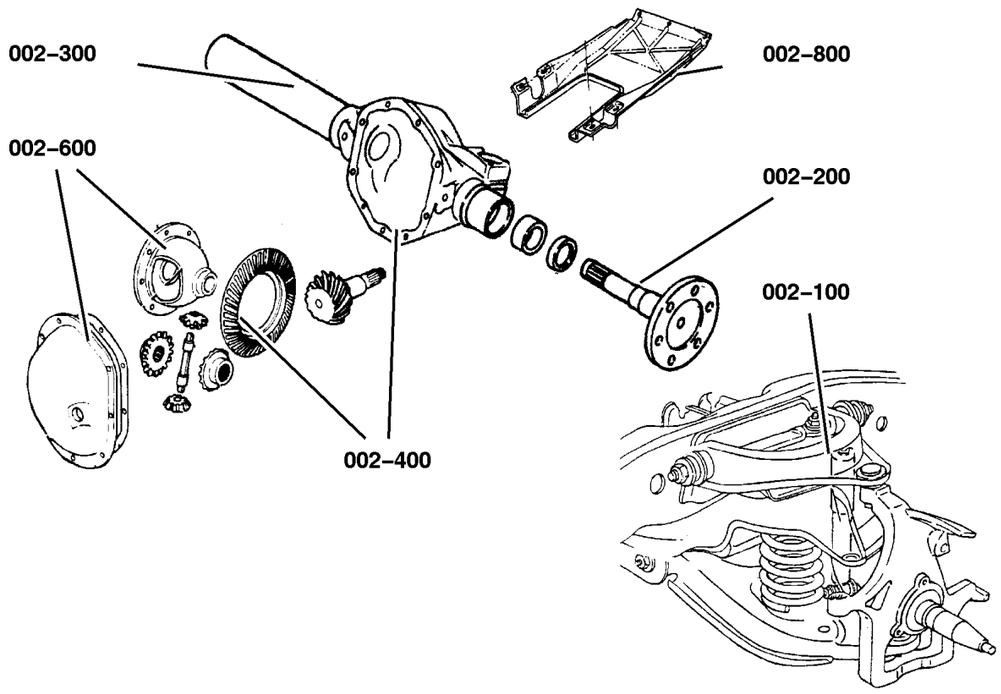

002–100 **Front Suspension** 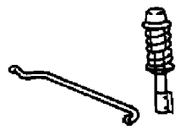	**002–200** **Front Axle Drive Shafts** 	**002–300** **Front Axle Housing** 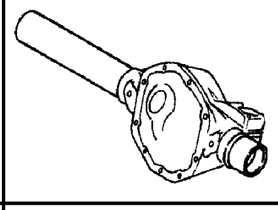	**002–400** **Front Axle Assembly** 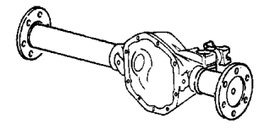
002–600 **Front Axle Differential** 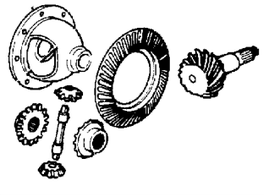	**002–800** **Front Axle Skid Plate** 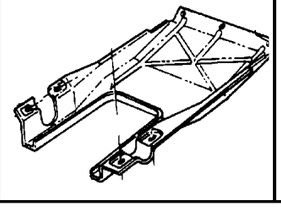		

GROUP 2 - Front Suspension & Drive

Illustration Title	Group-Fig. No.
Front Suspension	
Suspension,Front and Strut	Fig. 002-110
Bar,Front Sway	Fig. 002-120
Front Axle Drive Shafts	
Axle Shafts,Front	Fig. 002-210
Front Axle Housing	
Housing,Axle,Front	Fig. 002-310
Front Axle Assembly	
Axle Assembly,Front	Fig. 002-410
Front Axle Differential	
Differential,Front Axle	Fig. 002-610
Front Axle Skid Plate	
Skid Plate,Front Axle	Fig. 002-810

Suspension,Front and Strut
Figure 002-110

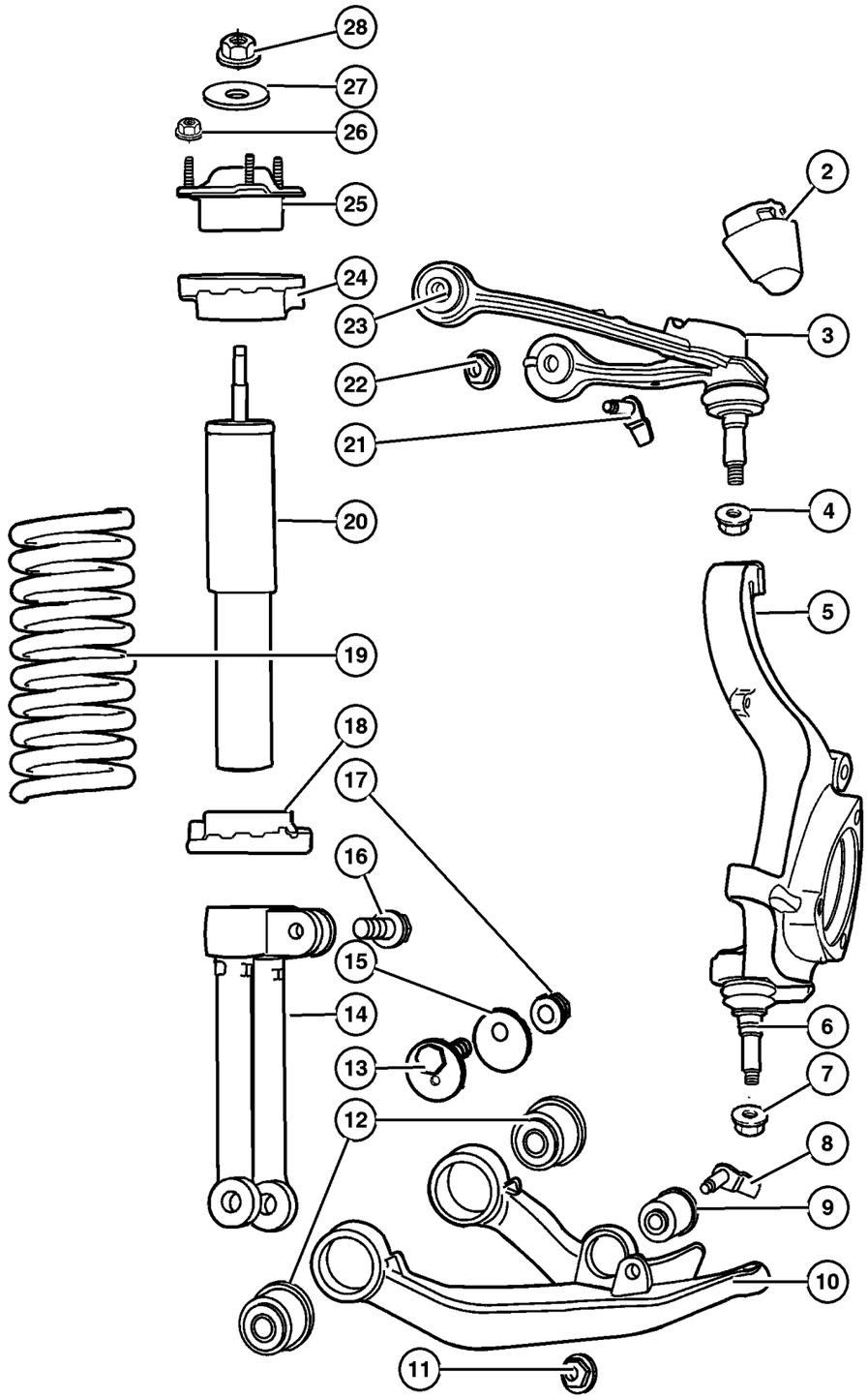

ITEM	PART NUMBER	QTY	LINE	SERIES	BODY	ENGINE	TRANS	TRIM	DESCRIPTION
Note:Sales Codes;									
[ZCC] Through [ZRK] = Spring Sales Codes will Be Found On Vehicle Identification Number [VIN] Sales Code Lisiing									
-1	55360 201AC	1							CUP, Jounce Bumper
2	52088 684AC	2							BUMPER, Jounce, Right or Left
3	52088 632AB	2							ARM, Control, With Bushings, Right or Left
4	6505 623AA	2							NUT AND WASHER, Ball Joint, Mounting
5									KNUCKLE, Front
	52088 652AD	1							Without Lower Balljoint, Right
	52088 653AD	1							Without Lower Balljoint, Left
6	5114 037AA	1							BALL JOINT PACKAGE, Lower Control Arm, Right or Left
7	6505 623AA	1							NUT AND WASHER, Ball Joint to LCA, Mounting
8	6507 275AA	2							BOLT AND RETAINER, Hex Head, Clevis to LCA, Mounting
9									BUSHING, Pivot
	52088 649AC	2	J						Clevis
		2	T						Clevis
		2	U						Clevis
10									ARM, Lower Control, Front
	52088 636AD	1	J						With 3 Bushings, Right
	52088 637AD	1	J						With 3 Bushings, Left
	52088 636AD	1	T						With 3 Bushings, Right
	52088 637AD	1	T						With 3 Bushings, Left
	52088 636AD	1	U						With 3 Bushings, Right
	52088 637AD	1	U						With 3 Bushings, Left
11	6102 251AA	2							NUT, M14X2, Clevis to LCA, Mounting
12									BUSHING, Pivot
	52088 649AC	2	J						LCA
		2	T						LCA
		2	U						LCA
13									SCREW AND WASHER, Hex Head
	6507 912AA	4	J						Cam Bolt
		4	T						Cam Bolt
		4	U						Cam Bolt
14	52088 748AC	1							CLEVIS, Front
15									WASHER, Control Arm
	6507 080AA	4	J						

JEEP LIBERTY (KJ)

SERIES	LINE	BODY	ENGINE	TRANSMISSION
P = Limited	J = LHD (4WD)	74 = 4 Dr (104.3 WB)	ED1,ED0 = 2.4L Power Tech	DDK = 5 Speed HDManual
H = Sport	U = RHD (4WD)		EKG,EK0 = 3.7L Power Tech	DDD = 5 Speed HD Manual
M = Renegade	T = LHD (2WD)		ENJ = 2.5L 4Cyl Turbo Diesel	DG4,DGQ = Multi-Speed Auto
			ENR = 2.8L 4Cyl Turbo Diesel	DG6 = 4 Speed Auto Transm
			EN0 = 4Cyl Turbo Diesel	DG0 = All Automatic Transm
				DBB = All Manual Transm

AR = Use as required - = Non illustrated part # = New this model year

September 30, 2003

« RETURN TO GROUP INDEX »

Suspension,Front and Strut
Figure 002-110

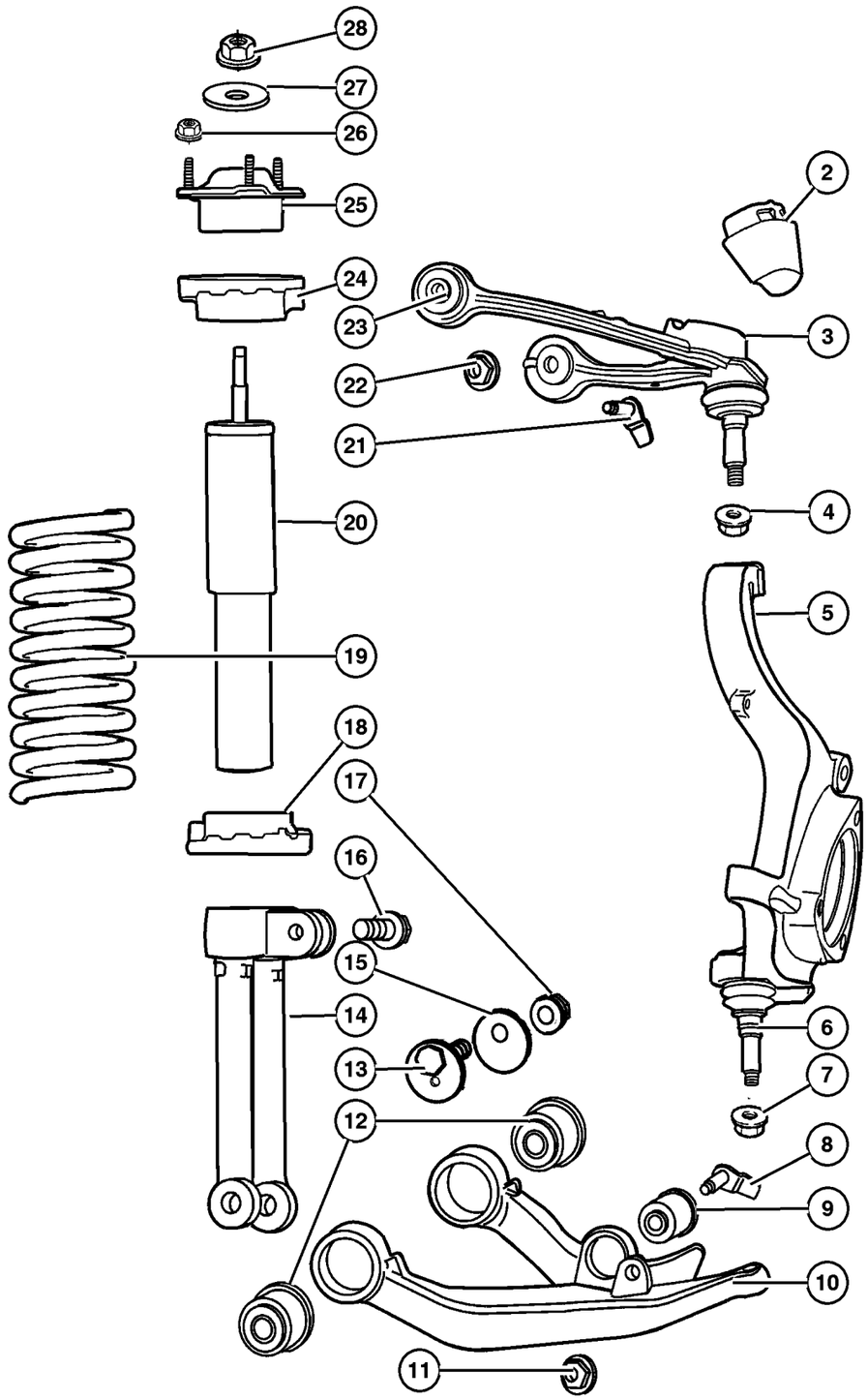

ITEM	PART NUMBER	QTY	LINE	SERIES	BODY	ENGINE	TRANS	TRIM	DESCRIPTION
		4	T						
		4	U						
16	6507 325AA	1							SCREW, Hex Flange Head, Clevis Pinch
17									NUT, Hex Flange Lock
	6102 252AA	4	J						LCA to Cradle, Mounting
		4	T						LCA to Cradle, Mounting
		4	U						LCA to Cradle, Mounting
18	52088 686AA	2							ISOLATOR, Spring
19									SPRING, Front Coil
	52128 873AA	1							[ZCC,ZRC]
	52128 874AA	1							[ZCD,ZRD]
	52128 875AA	1							[ZCE,ZRE]
	52128 876AA	1							[ZCF,ZRF]
	52128 877AA	1							[ZCG,ZRG]
	52128 878AA	1							[ZCH,ZRH]
	52128 879AA	1							[ZCJ,ZRJ]
	52128 880AA	1							[ZCK,ZRK]
20	52088 650AE	1							SHOCK ABSORBER, Suspension, Front
21	6507 965AA	4							BOLT AND RETAINER, Hex Head, UCA, Mounting
22	6502 697	4							NUT, Hex Flange Lock, M12x1.75, UCA, Mounting
23	52088 634AB	4							BUSHING, Control Arm, Upper
24	52088 686AA	2							ISOLATOR, Spring, Upper
25									MOUNT, Shock Upper
	52128 532AA	1							Right
	52128 533AA	1							
26	6502 697	8							NUT, Hex Flange Lock, M12x1.75, Shock, Mounting
27	52089 069AA	1							RETAINER, Shock Absorber, Shock, Mounting
28	6506 443AA	1							NUT, Nylock Hex, M10x1.5, Shock, Mounting
-29	52128 983AA	2							SHIELD, Heat, Lower Ball Joint, Right or Left

JEEP LIBERTY (KJ)

SERIES	LINE	BODY	ENGINE	TRANSMISSION
P = Limited	J = LHD (4WD)	74 = 4 Dr (104.3 WB)	ED1,ED0 = 2.4L Power Tech	DDK = 5 Speed HDManual
H = Sport	U = RHD (4WD)		EKG,EK0 = 3.7L Power Tech	DDD = 5 Speed HD Manual
M = Renegade	T = LHD (2WD)		ENJ = 2.5L 4Cyl Turbo Diesel	DG4,DGQ = Multi-Speed Auto
			ENR = 2.8L 4Cyl Turbo Diesel	DG6 = 4 Speed Auto Transm
			EN0 = 4Cyl Turbo Diesel	DG0 = All Automatic Transm
				DBB = All Manual Transm

AR = Use as required - = Non illustrated part # = New this model year

September 30, 2003

« RETURN TO GROUP INDEX

Bar,Front Sway
Figure 002-120

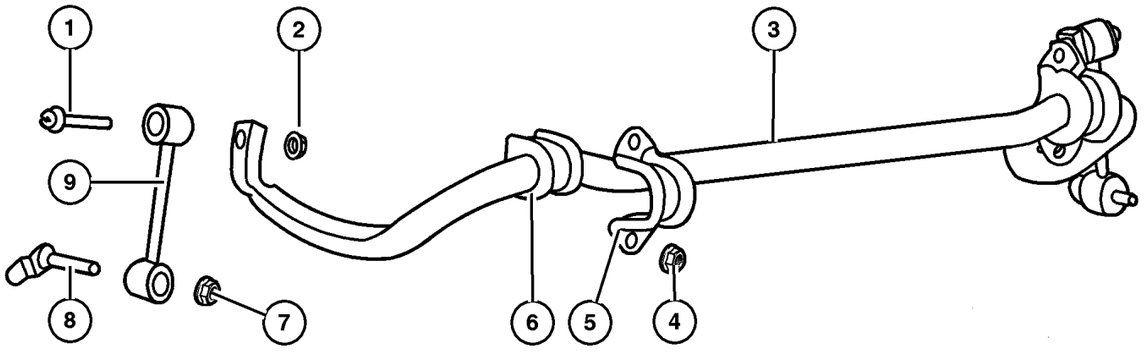

ITEM	PART NUMBER	QTY	LINE	SERIES	BODY	ENGINE	TRANS	TRIM	DESCRIPTION
1	6503 712	2							SCREW, Sway Bar Link to Sway Bar, Mounting
2	6502 697	2							NUT, Hex Flange Lock, M12x1.75, Sway Bar Link to Sway Bar
3	52088 660AA	1							BAR, Front Sway
4	6502 697	4							NUT, Hex Flange Lock, M12x1.75, Sway Bar Clamp to Sill, Mounting
5	52088 631AA	2							RETAINER, Sway Bar
6	52088 778AB	2							CUSHION, Sway Eliminator
7	6502 697	2							NUT, Hex Flange Lock, M12x1.75, Sway Bar Link to LCA, Mounting
8	6506 984AA	2							BOLT AND RETAINER, Hex Head, Sway Bar Link to LCA, Mounting
9	52088 662AB	2							LINK, Sway Eliminator
-10									WASHER, Flat, ID=13.07 x OD=40.00 x THK=3.50 Sway Bar Link to Lower Control Arm, (NOT SERVICED) (Not Serviced)
-11									WASHER, Flat, ID=13.07 x OD=40.00 x THK=3.50 Sway Bar Link to Sway Bar, (NOT SERVICED) (Not Serviced)

JEEP LIBERTY (KJ)

SERIES	LINE	BODY	ENGINE	TRANSMISSION
P = Limited	J = LHD (4WD)	74 = 4 Dr (104.3 WB)	ED1,ED0 = 2.4L Power Tech	DDK = 5 Speed HDManual
H = Sport	U = RHD (4WD)		EKG,EK0 = 3.7L Power Tech	DDD = 5 Speed HD Manual
M = Renegade	T = LHD (2WD)		ENJ = 2.5L 4Cyl Turbo Diesel	DG4,DGQ = Multi-Speed Auto
			ENR = 2.8L 4Cyl Turbo Diesel	DG6 = 4 Speed Auto Transm
			EN0 = 4Cyl Turbo Diesel	DG0 = All Automatic Transm
				DBB = All Manual Transm

Axle Shafts,Front
Figure 002-210

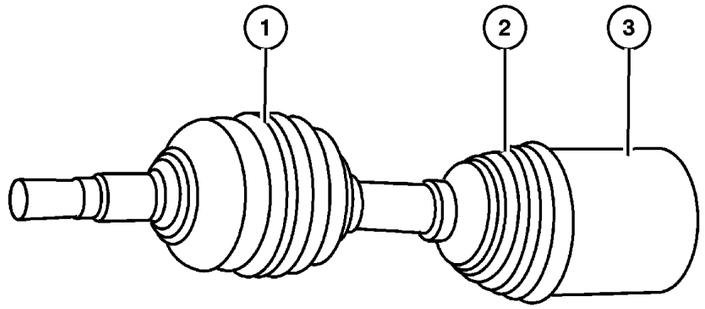

ITEM	PART NUMBER	QTY	LINE	SERIES	BODY	ENGINE	TRANS	TRIM	DESCRIPTION
Note:Sales Codes;									
[ED0]=Engines - All 2.2, 2.5, 2.4L 4 Cylinder Gas									
[EK0]=Engines - All 3.7L 6 Cylinder Gas									
[EN0]=Engines - All 4/5 Cylinder Turbo Diesel									
1									BOOT KIT, Half Shaft, Outer
	5066 025AB	1	J						Right or Left
		1	U						Right or Left
2									BOOT KIT, Half Shaft, Inner
	5066 024AA	1	J						Right or Left
		1	U						Right or Left
3									SHAFT, Axle Half
	5066 020AA	1	J						[EK0], Right
	5066 021AA	1	J						[EK0], Left
	5066 020AA	1	U						[EK0], Right
	5066 021AA	1	U						[EK0], Left
	5066 022AA	1	J						[ED0,EN0], Right
	5066 023AA	1	J						[ED0,EN0], Left
	5066 022AA	1	U						[ED0,EN0], Right
	5066 023AA	1	U						[ED0,EN0], Left

JEEP LIBERTY (KJ)

SERIES	LINE	BODY	ENGINE	TRANSMISSION
P = Limited	J = LHD (4WD)	74 = 4 Dr (104.3 WB)	ED1,ED0 = 2.4L Power Tech	DDK = 5 Speed HDManual
H = Sport	U = RHD (4WD)		EKG,EK0 = 3.7L Power Tech	DDD = 5 Speed HD Manual
M = Renegade	T = LHD (2WD)		ENJ = 2.5L 4Cyl Turbo Diesel	DG4,DGQ = Multi-Speed Auto
			ENR = 2.8L 4Cyl Turbo Diesel	DG6 = 4 Speed Auto Transm
			EN0 = 4Cyl Turbo Diesel	DG0 = All Automatic Transm
				DBB = All Manual Transm

Housing,Axle,Front
Figure 002-310

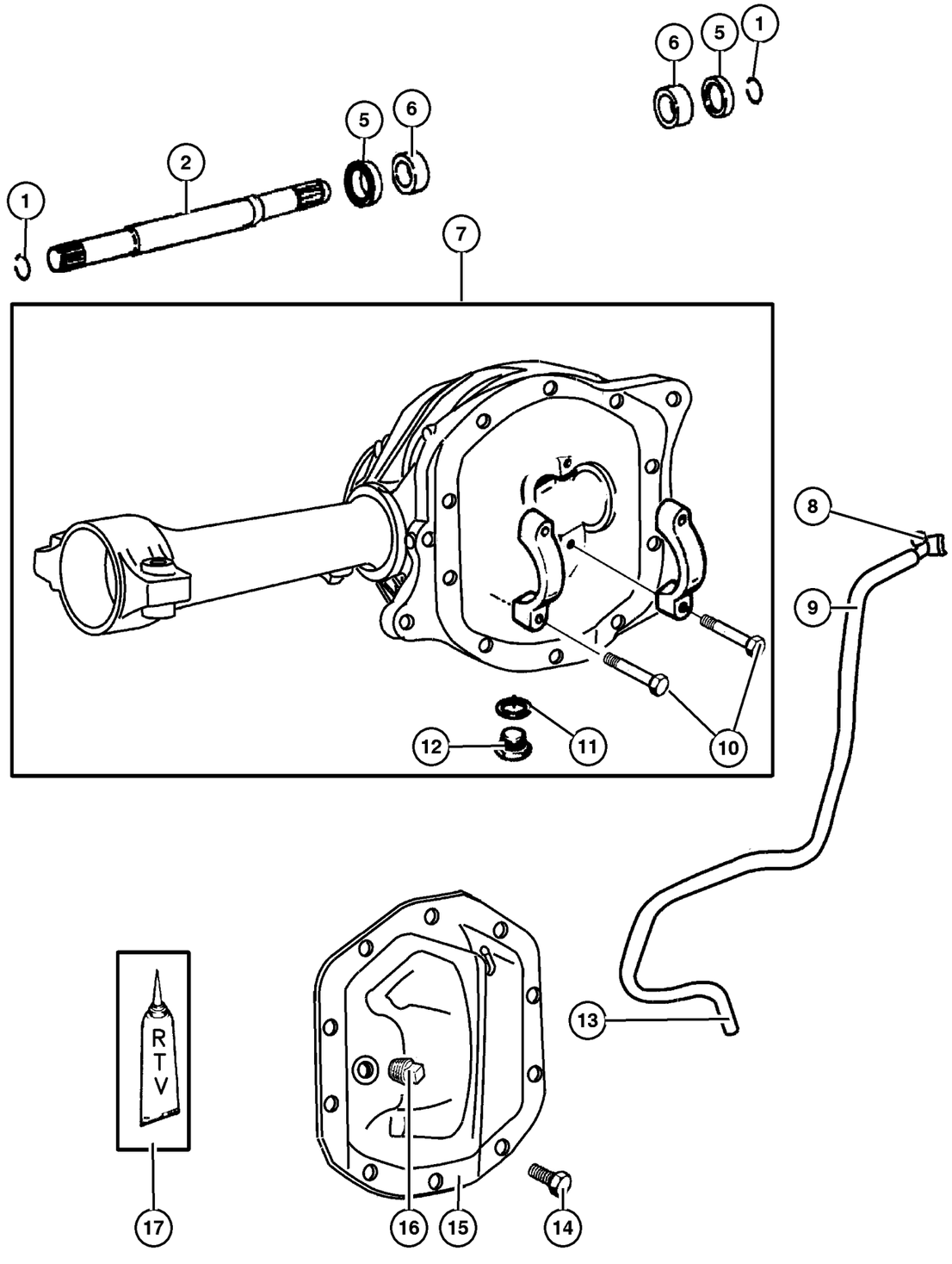

ITEM	PART NUMBER	QTY	LINE	SERIES	BODY	ENGINE	TRANS	TRIM	DESCRIPTION
1									SNAP RING, Axle Shaft
	5066 064AA	1	J						Inboard
		1	U						Inboard
2									SHAFT, Axle
	5066 057AB	1	J						
		1	U						
-3									RING, Axle Shaft
	5069 009AA	1	J						Outboard
		1	U						Outboard
-4									O RING
	5066 067AA	1	J						Axle Shaft
		1	U						Axle Shaft
5									SEAL, Axle Drive Shaft
	5066 066AA	2	J						
		2	U						
6									BEARING, Axle Shaft
	5066 056AA	2	J						
		2	U						
7									HOUSING, Front Axle
	5066 049AB	1	J						
		1	U						
8									VENT, Axle
	52104 552AB	1	J						
		1	U						
9									HOSE, Fuel And Vapor, 25 Foot Roll 5/16"
	HFV00 516AB	4	J						
		4	U						
10									BOLT, Differential
	6035 985AA	4	J						
		4	U						
11									O RING
	5066 055AA	1	J						
		1	U						
12									PLUG, Drain
	5066 054AA	1	J						
		1	U						
13									CLIP
	6503 573	1	J						
		1	U						
14									BOLT KIT

JEEP LIBERTY (KJ)

SERIES	LINE	BODY	ENGINE	TRANSMISSION
P = Limited	J = LHD (4WD)	74 = 4 Dr (104.3 WB)	ED1,ED0 = 2.4L Power Tech	DDK = 5 Speed HDManual
H = Sport	U = RHD (4WD)		EKG,EK0 = 3.7L Power Tech	DDD = 5 Speed HD Manual
M = Renegade	T = LHD (2WD)		ENJ = 2.5L 4Cyl Turbo Diesel	DG4,DGQ = Multi-Speed Auto
			ENR = 2.8L 4Cyl Turbo Diesel	DG6 = 4 Speed Auto Transm
			EN0 = 4Cyl Turbo Diesel	DG0 = All Automatic Transm
				DBB = All Manual Transm

AR = Use as required - = Non illustrated part # = New this model year

September 30, 2003

« RETURN TO GROUP INDEX »

Housing,Axle,Front
Figure 002-310

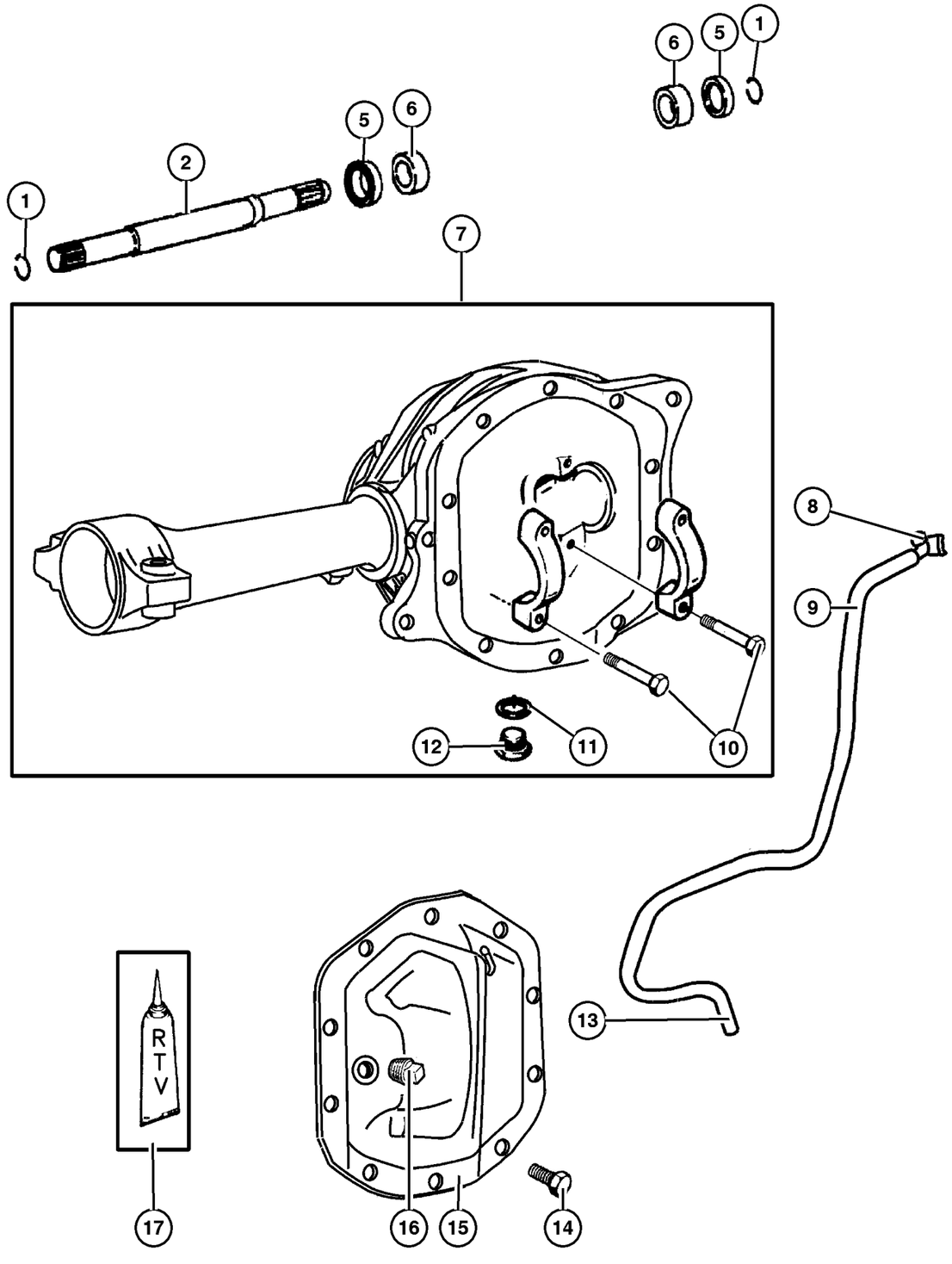

ITEM	PART NUMBER	QTY	LINE	SERIES	BODY	ENGINE	TRANS	TRIM	DESCRIPTION
	5069 008AA	1	J						
		1	U						
15									COVER, Differential
	5066 538AA	1	J						
		1	U						
16									PLUG, Differential Cover
	J400 4751	1	J						
		1	U						
17									SEALANT, RTV
	5010 884AA	1	J						
		1	U						

JEEP LIBERTY (KJ)

SERIES	LINE	BODY	ENGINE	TRANSMISSION
P = Limited	J = LHD (4WD)	74 = 4 Dr (104.3 WB)	ED1,ED0 = 2.4L Power Tech	DDK = 5 Speed HDManual
H = Sport	U = RHD (4WD)		EKG,EK0 = 3.7L Power Tech	DDD = 5 Speed HD Manual
M = Renegade	T = LHD (2WD)		ENJ = 2.5L 4Cyl Turbo Diesel	DG4,DGQ = Multi-Speed Auto
			ENR = 2.8L 4Cyl Turbo Diesel	DG6 = 4 Speed Auto Transm
			EN0 = 4Cyl Turbo Diesel	DG0 = All Automatic Transm
				DBB = All Manual Transm

Axle Assembly,Front
Figure 002-410

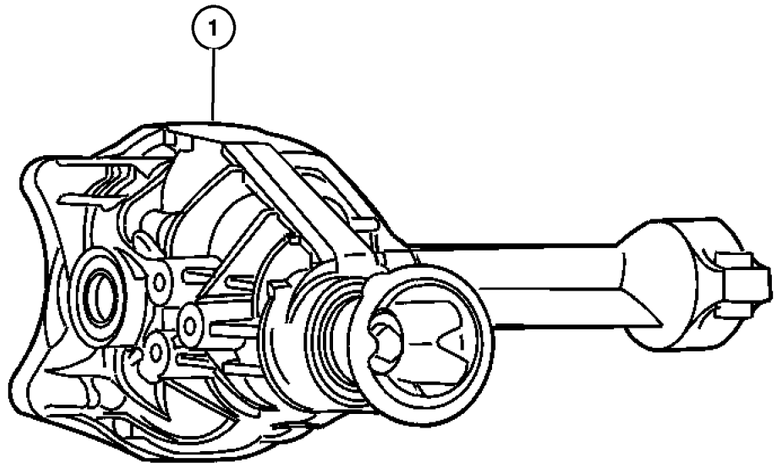

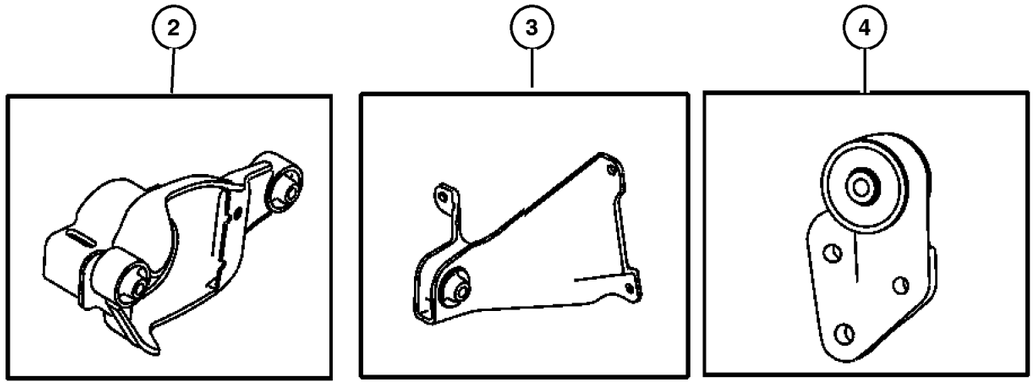

ITEM	PART NUMBER	QTY	LINE	SERIES	BODY	ENGINE	TRANS	TRIM	DESCRIPTION
Note:Sales Codes;									
[DME] = Axle Ratio - 3.73									
[DMF] = Axle Ratio - 4.10									
[ED0]=Engines - All 2.2,2.5,2.4L 4 Cylinder Gas									
[EK0]=Engines - All 3.7L 6 Cylinder Gas									
[EN0]=Engines - All 4/5 Cylinder Turbo Diesel									
1									AXLE, Service Front
	5066 068AC	1	J						[DME,EK0] Tag 52088810AF
	5066 084AC	1	J						[DMF,ED0] Tag 52089034AF
		1	J						[DMF,EN0,DBB] Tag 52089042AF
	5103 064AA	1	J						[DMF,EN0,DG0] Tag 52128950AB
	5066 068AC	1	U						[DME,EK0] Tag 52088811AF
	5066 084AC	1	U						[DMF,ED0] Tag 52089035AF
		1	U						[DMF,EN0,DBB] Tag 52089043AF
	5103 064AA	1	U						[DMF,EN0,DG0] Tag 52128951AB
2									BRACKET, Mounting
	52059 464AB	1	J						[EK0], Right
	52059 472AB	1	J						[ED0,EN0], Right
	52059 464AB	1	U						[EK0], Right
	52059 472AB	1	U						[ED0,EN0], Right
3									BRACKET, Mounting
	52059 465AC	1	J						[EK0], Left
	52059 473AC	1	J						[ED0,EN0], Left
	52059 465AC	1	U						[EK0], Left
	52059 473AC	1	U						[ED0,EN0], Left
4									BRACKET, Mounting
	52059 467AC	1	J						[EK0], Left Rear
	52059 475AC	1	J						[ED0,EN0], Left Rear
	52059 467AC	1	U						[EK0], Left Rear
	52059 475AC	1	U						[ED0,EN0], Left Rear
-5									BOLT
	6506 067AA	4	J						Axle Assembly to Cradle, Mounting
		4	U						Axle Assembly to Cradle, Mounting
-6									NUT, Hex Flange Lock, M12x1.75
	6502 697	4	J						Axle Assembly to Cradle & Right Bracket, Mounting
		4	U						Axle Assembly to Cradle & Right Bracket, Mounting
-7									SCREW AND WASHER, M10x1. 50x45.00
	6101 985	3	J						Left Front & Left Rear Bracket to Axle, Mounting

JEEP LIBERTY (KJ)

SERIES	LINE	BODY	ENGINE	TRANSMISSION
P = Limited	J = LHD (4WD)	74 = 4 Dr (104.3 WB)	ED1,ED0 = 2.4L Power Tech	DDK = 5 Speed HDManual
H = Sport	U = RHD (4WD)		EKG,EK0 = 3.7L Power Tech	DDD = 5 Speed HD Manual
M = Renegade	T = LHD (2WD)		ENJ = 2.5L 4Cyl Turbo Diesel	DG4,DGQ = Multi-Speed Auto
			ENR = 2.8L 4Cyl Turbo Diesel	DG6 = 4 Speed Auto Transm
			EN0 = 4Cyl Turbo Diesel	DG0 = All Automatic Transm
				DBB = All Manual Transm

Axle Assembly,Front
Figure 002-410

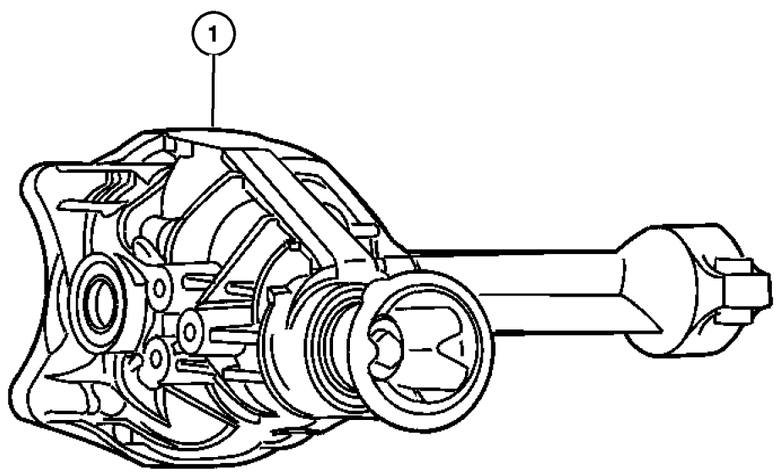

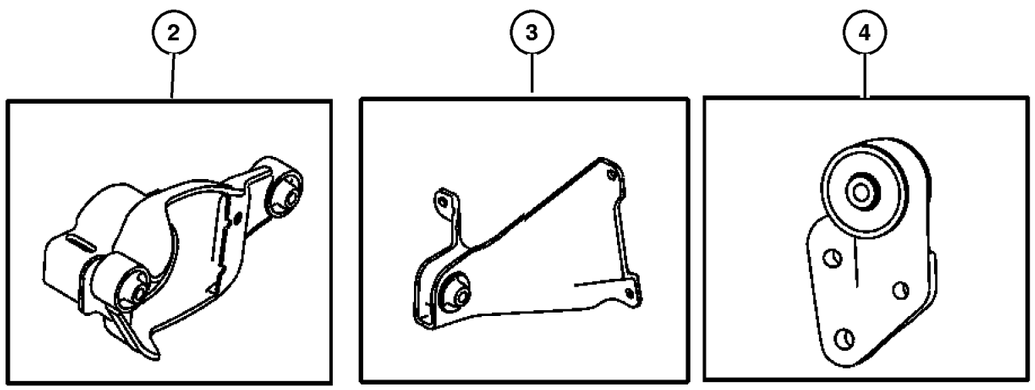

ITEM	PART NUMBER	QTY	LINE	SERIES	BODY	ENGINE	TRANS	TRIM	DESCRIPTION
		3	U						Left Front & Left Rear Bracket to Axle, Mounting
-8									SCREW AND WASHER, Hex
	6505 488AA	3	J						Left Rear Bracket to Axle, Mounting
		3	U						Left Rear Bracket to Axle, Mounting
-9									NUT, Hex Flange Lock, M10x1.5
	6502 696	3	J						Left Front Bracket to Axle, Mounting
		3	U						Left Front Bracket to Axle, Mounting
-10									BOLT
	6506 067AA	2	J						Right Front Bracket to Axle, Mounting
		2	U						Right Front Bracket to Axle, Mounting

JEEP LIBERTY (KJ)

SERIES	LINE	BODY	ENGINE	TRANSMISSION
P = Limited	J = LHD (4WD)	74 = 4 Dr (104.3 WB)	ED1,ED0 = 2.4L Power Tech	DDK = 5 Speed HDManual
H = Sport	U = RHD (4WD)		EKG,EK0 = 3.7L Power Tech	DDD = 5 Speed HD Manual
M = Renegade	T = LHD (2WD)		ENJ = 2.5L 4Cyl Turbo Diesel	DG4,DGQ = Multi-Speed Auto
			ENR = 2.8L 4Cyl Turbo Diesel	DG6 = 4 Speed Auto Transm
			EN0 = 4Cyl Turbo Diesel	DG0 = All Automatic Transm
				DBB = All Manual Transm

AR = Use as required - = Non illustrated part # = New this model year

Differential,Front Axle
Figure 002-610

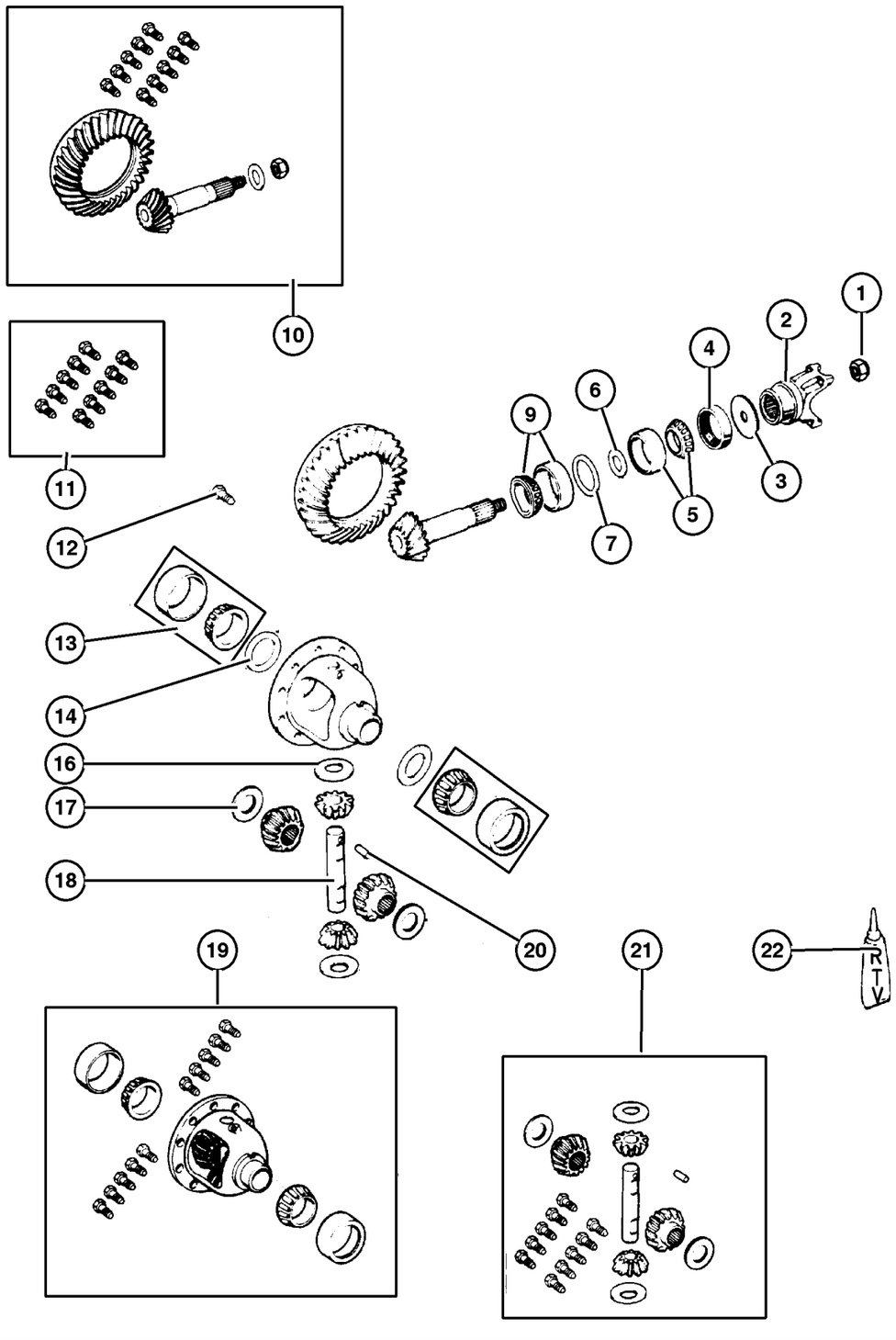

ITEM	PART NUMBER	QTY	LINE	SERIES	BODY	ENGINE	TRANS	TRIM	DESCRIPTION
Note:Sales Codes;									
[DME] = Axle Ratio - 3.73									
[DMF] = Axle Ratio - 4.10									
1									NUT, Pinion Yoke
	4720 895	1	J						
		1	U						
2									YOKE, Axle
	5066 050AB	1	J						
		1	U						
3									SLINGER, Drive Pinion
	5066 052AA	1	J						
		1	U						
4									SEAL, Drive Pinion
	5066 053AA	1	J						
		1	U						
5									BEARING, Drive Pinion
	J812 6499	1	J						Bearing and Cup, Front
		1	U						Bearing and Cup, Front
6									SPACER
	5066 047AA	1	J						Crush
		1	U						Crush
7									SHIM, Drive Pinion Bearing
	5066 584AA	1	J						[.034"]
	5066 588AA	1	U						[.038"]
	5066 589AA	1	J						[.039"]
		1	U						[.039"]
	5066 590AA	1	J						[.040"]
		1	U						[.040"]
	5066 591AA	1	J						[.041"]
		1	U						[.041"]
	5066 592AA	1	J						[.042"]
		1	U						[.042"]
	5066 593AA	1	J						[.043"]
	5066 584AA	1	U						[.034"]
	5066 593AA	1	U						[.043"]
	5066 594AA	1	J						[.044"]
		1	U						[.044"]
	5066 572AA	1	J						[.045"]
		1	U						[.045"]
	5066 573AA	1	J						[.046"]
		1	U						[.046"]

JEEP LIBERTY (KJ)

SERIES	LINE	BODY	ENGINE	TRANSMISSION
P = Limited	J = LHD (4WD)	74 = 4 Dr (104.3 WB)	ED1,ED0 = 2.4L Power Tech	DDK = 5 Speed HDManual
H = Sport	U = RHD (4WD)		EKG,EK0 = 3.7L Power Tech	DDD = 5 Speed HD Manual
M = Renegade	T = LHD (2WD)		ENJ = 2.5L 4Cyl Turbo Diesel	DG4,DGQ = Multi-Speed Auto
			ENR = 2.8L 4Cyl Turbo Diesel	DG6 = 4 Speed Auto Transm
			EN0 = 4Cyl Turbo Diesel	DG0 = All Automatic Transm
				DBB = All Manual Transm

Differential,Front Axle
Figure 002-610

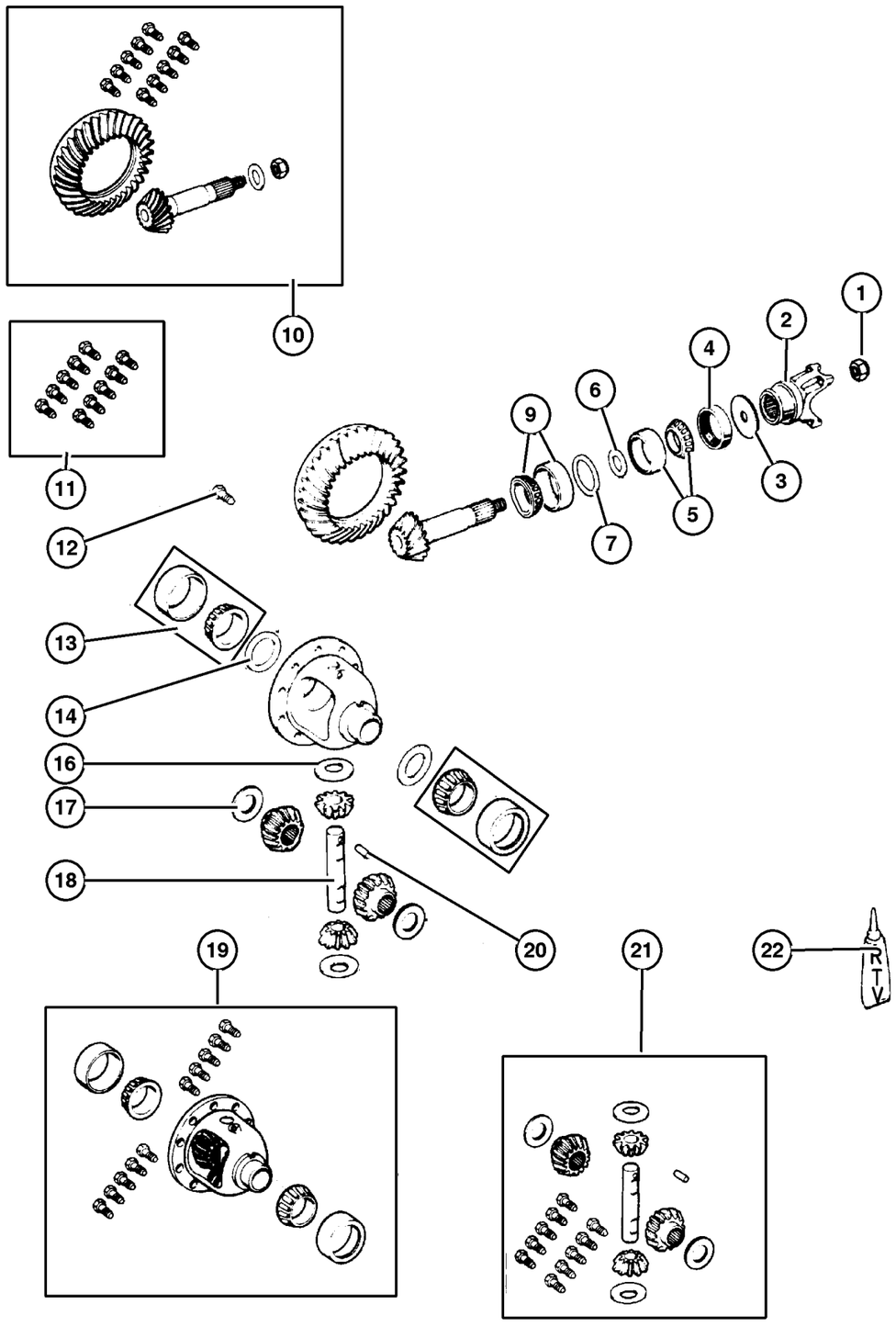

ITEM	PART NUMBER	QTY	LINE	SERIES	BODY	ENGINE	TRANS	TRIM	DESCRIPTION
	5066 574AA	1	J						[.047"]
		1	U						[.047"]
	5066 575AA	1	J						[.048"]
	5066 585AA	1	J						[.035"]
	5066 575AA	1	U						[.048"]
	5066 576AA	1	J						[.049"]
		1	U						[.049"]
	5066 577AA	1	J						[.050"]
		1	U						[.050"]
	5066 578AA	1	J						[.051"]
		1	U						[.051"]
	5066 579AA	1	J						[.052"]
		1	U						[.052"]
	5066 580AA	1	J						[.053"]
	5066 585AA	1	U						[.035"]
	5066 580AA	1	U						[.053"]
	5066 595AA	1	J						[.054"]
		1	U						[.054"]
	5066 581AA	1	J						[.055"]
		1	U						[.055"]
	5066 582AA	1	J						[.056"]
		1	U						[.056"]
	5066 583AA	1	J						[.057"]
		1	U						[.057"]
	5066 596AA	1	J						[.058"]
	5066 586AA	1	J						[.036"]
	5066 596AA	1	U						[.058"]
	5066 586AA	1	U						[.036"]
	5066 587AA	1	J						[.037"]
		1	U						[.037"]
	5066 588AA	1	J						[.038"]
-8									SHIM KIT, Pinion Shaft
	5066 533AA	1	J						Consists of 25 Shims
		1	U						Consists of 25 Shims
9									BEARING, Drive Pinion
	J812 6499	1	J						Bearing and Cup, Rear
	4746 979	1	U						Bearing and Cup, Rear
10									GEAR KIT, Ring And Pinion
	5066 051AA	1	J						[DME]
		1	U						[DME]
	5066 085AA	1	J						[DMF]

JEEP LIBERTY (KJ)

SERIES	LINE	BODY	ENGINE	TRANSMISSION
P = Limited	J = LHD (4WD)	74 = 4 Dr (104.3 WB)	ED1,ED0 = 2.4L Power Tech	DDK = 5 Speed HDManual
H = Sport	U = RHD (4WD)		EKG,EK0 = 3.7L Power Tech	DDD = 5 Speed HD Manual
M = Renegade	T = LHD (2WD)		ENJ = 2.5L 4Cyl Turbo Diesel	DG4,DGQ = Multi-Speed Auto
			ENR = 2.8L 4Cyl Turbo Diesel	DG6 = 4 Speed Auto Transm
			EN0 = 4Cyl Turbo Diesel	DG0 = All Automatic Transm
				DBB = All Manual Transm

AR = Use as required - = Non illustrated part # = New this model year

September 30, 2003

« RETURN TO GROUP INDEX

« »

Differential,Front Axle
Figure 002-610

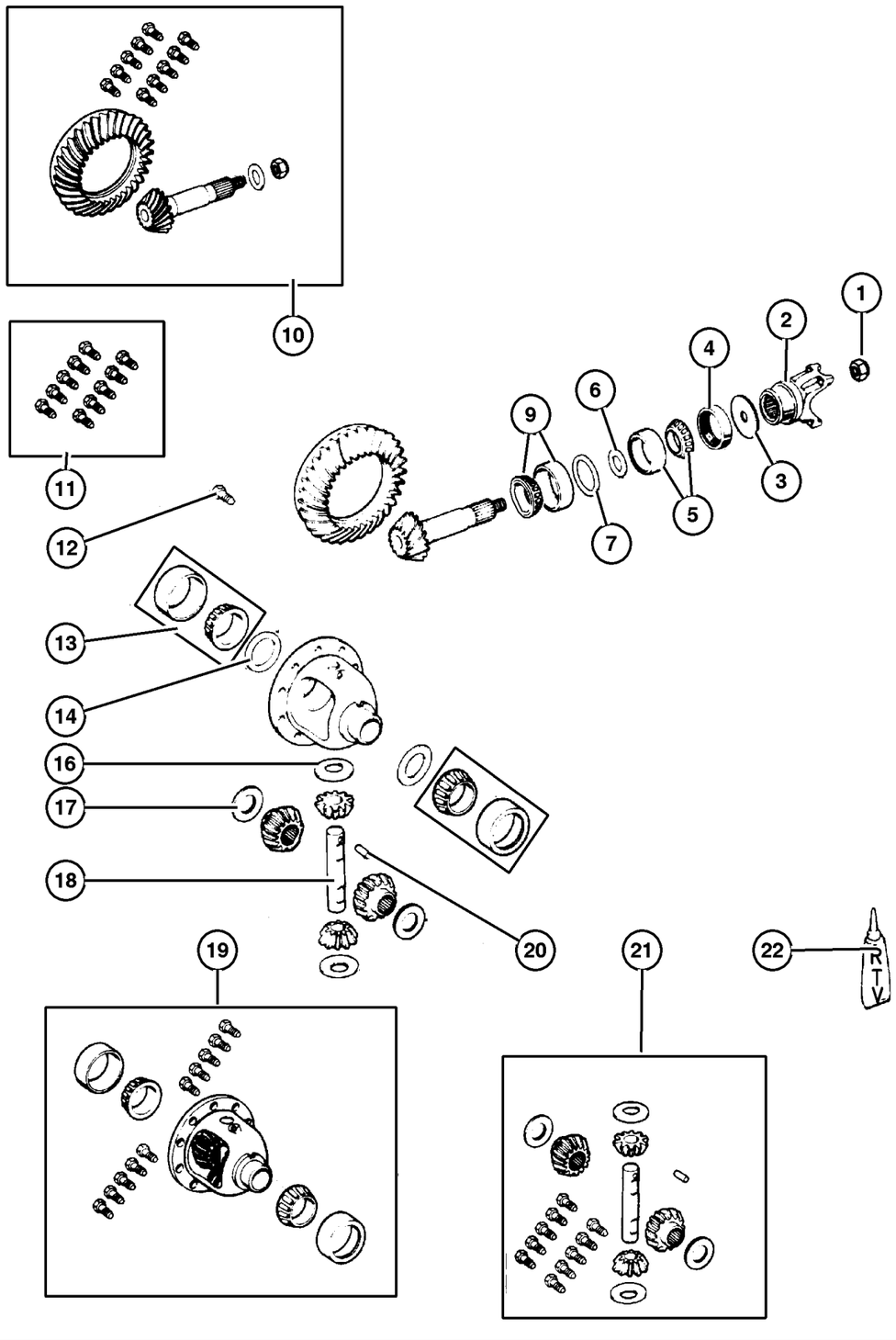

ITEM	PART NUMBER	QTY	LINE	SERIES	BODY	ENGINE	TRANS	TRIM	DESCRIPTION
		1	U						[DMF]
11									BOLT KIT
	5069 008AA	1	J						Contains 10-5252503 Screws
		1	U						Contains 10-5252503 Screws
12									SCREW, Drive Gear
	5252 503	10	J						
		10	U						
13									BEARING, Differential
	J812 6500	1	J						
		1	U						
14									SHIM, Differential Bearing
	5017 218AA	1	J						[.109"]
	5017 222AA	1	U						[.113"]
	5017 223AA	1	J						[.114"]
		1	U						[.114"]
	5017 224AA	1	J						[.115"]
		1	U						[.115"]
	5017 225AA	1	J						[.116"]
		1	U						[.116"]
	5017 226AA	1	J						[.117"]
		1	U						[.117"]
	5017 227AA	1	J						[.118"]
	5017 218AA	1	U						[.109"]
	5017 227AA	1	U						[.118"]
	5017 228AA	1	J						[.119"]
		1	U						[.119"]
	5017 229AA	1	J						[.120"]
		1	U						[.120"]
	5017 230AA	1	J						[.121"]
		1	U						[.121"]
	5017 231AA	1	J						[.122"]
		1	U						[.122"]
	5017 232AA	1	J						[.123"]
	5017 219AA	1	J						[.110"]
	5017 232AA	1	U						[.123"]
	5017 233AA	1	J						[.124"]
		1	U						[.124"]
	5017 234AA	1	J						[.125"]
		1	U						[.125"]
	5017 235AA	1	U						[.126"]
		1	J						[.126"]

JEEP LIBERTY (KJ)

SERIES	LINE	BODY	ENGINE	TRANSMISSION
P = Limited	J = LHD (4WD)	74 = 4 Dr (104.3 WB)	ED1,ED0 = 2.4L Power Tech	DDK = 5 Speed HDManual
H = Sport	U = RHD (4WD)		EKG,EK0 = 3.7L Power Tech	DDD = 5 Speed HD Manual
M = Renegade	T = LHD (2WD)		ENJ = 2.5L 4Cyl Turbo Diesel	DG4,DGQ = Multi-Speed Auto
			ENR = 2.8L 4Cyl Turbo Diesel	DG6 = 4 Speed Auto Transm
			EN0 = 4Cyl Turbo Diesel	DG0 = All Automatic Transm
				DBB = All Manual Transm

AR = Use as required - = Non illustrated part # = New this model year

September 30, 2003

« RETURN TO GROUP INDEX

Differential,Front Axle
Figure 002-610

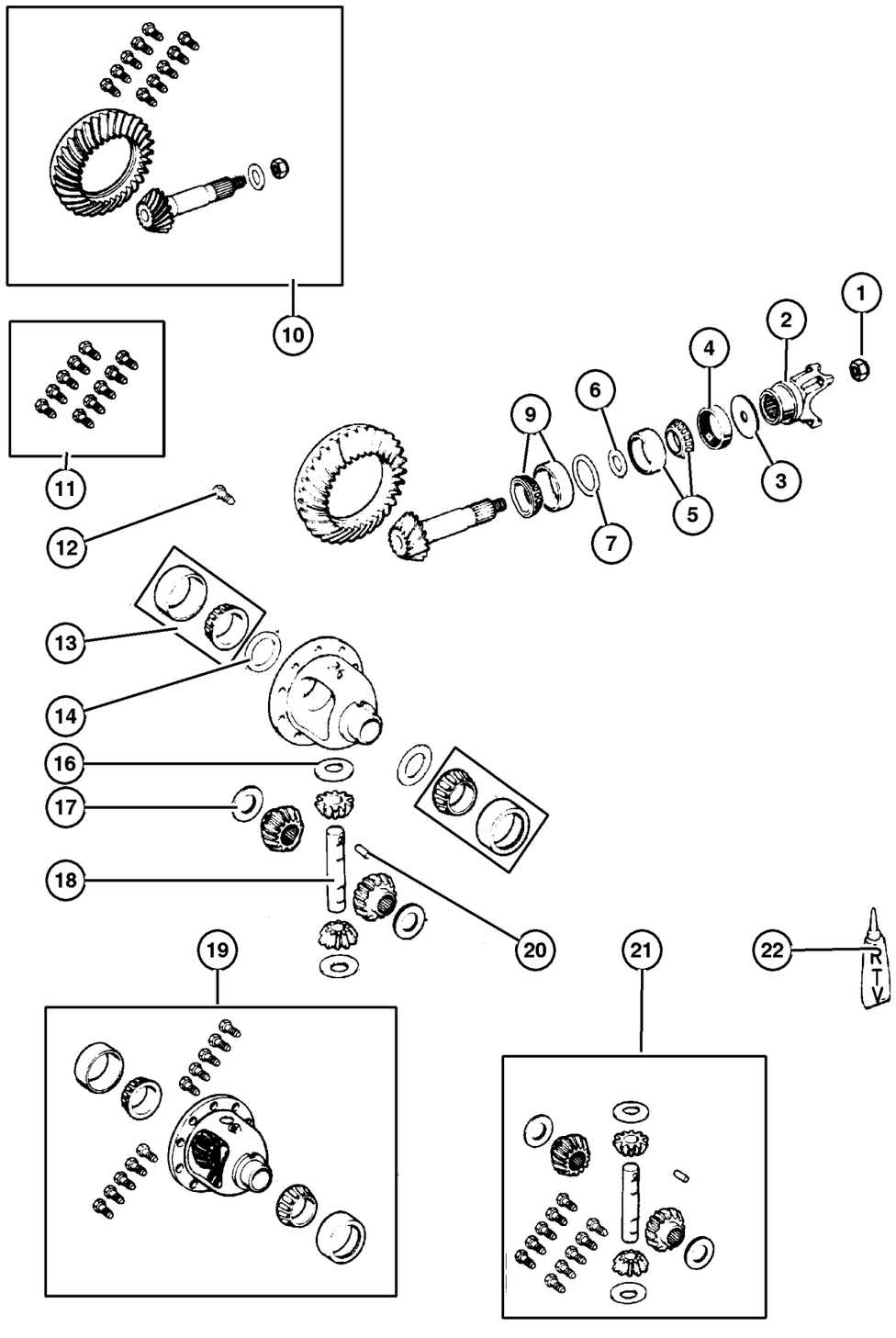

ITEM	PART NUMBER	QTY	LINE	SERIES	BODY	ENGINE	TRANS	TRIM	DESCRIPTION
	5017 236AA	1	J						[.127"]
		1	U						[.127"]
	5017 237AA	1	J						[.128"]
	5017 219AA	1	U						[.110"]
	5017 237AA	1	U						[.128"]
	5017 238AA	1	J						[.129"]
		1	U						[.129"]
	5017 239AA	1	J						[.130"]
		1	U						[.130"]
	5017 240AA	1	J						[.131"]
		1	U						[.131"]
	5017 241AA	1	J						[.132"]
		1	U						[.132"]
	5017 242AA	1	J						[.133"]
	5017 220AA	1	J						[.111"]
	5017 242AA	1	U						[.133"]
	5017 243AA	1	J						[.134"]
		1	U						[.134"]
	5017 244AA	1	J						[.135"]
		1	U						[.135"]
	5017 245AA	1	J						[.136"]
		1	U						[.136"]
	5017 246AA	1	J						[.137"]
		1	U						[.137"]
	5017 247AA	1	J						[.138"]
	5017 220AA	1	U						[.111"]
	5017 247AA	1	U						[.138"]
	5017 248AA	1	J						[.139"]
		1	U						[.139"]
	5017 249AA	1	J						[.140"]
		1	U						[.140"]
	5017 250AA	1	J						[.141"]
		1	U						[.141"]
	5017 251AA	1	J						[.142"]
		1	U						[.142"]
	5017 252AA	1	J						[.143"]
	5017 221AA	1	J						[.112"]
	5017 252AA	1	U						[.143"]
	5017 253AA	1	U						[.144"]
		1	J						[.144"]
	5017 254AA	1	J						[.145"]

JEEP LIBERTY (KJ)

SERIES	LINE	BODY	ENGINE	TRANSMISSION
P = Limited	J = LHD (4WD)	74 = 4 Dr (104.3 WB)	ED1,ED0 = 2.4L Power Tech	DDK = 5 Speed HDManual
H = Sport	U = RHD (4WD)		EKG,EK0 = 3.7L Power Tech	DDD = 5 Speed HD Manual
M = Renegade	T = LHD (2WD)		ENJ = 2.5L 4Cyl Turbo Diesel	DG4,DGQ = Multi-Speed Auto
			ENR = 2.8L 4Cyl Turbo Diesel	DG6 = 4 Speed Auto Transm
			EN0 = 4Cyl Turbo Diesel	DG0 = All Automatic Transm
				DBB = All Manual Transm

AR = Use as required - = Non illustrated part # = New this model year

September 30, 2003

« RETURN TO GROUP INDEX

Differential,Front Axle
Figure 002-610

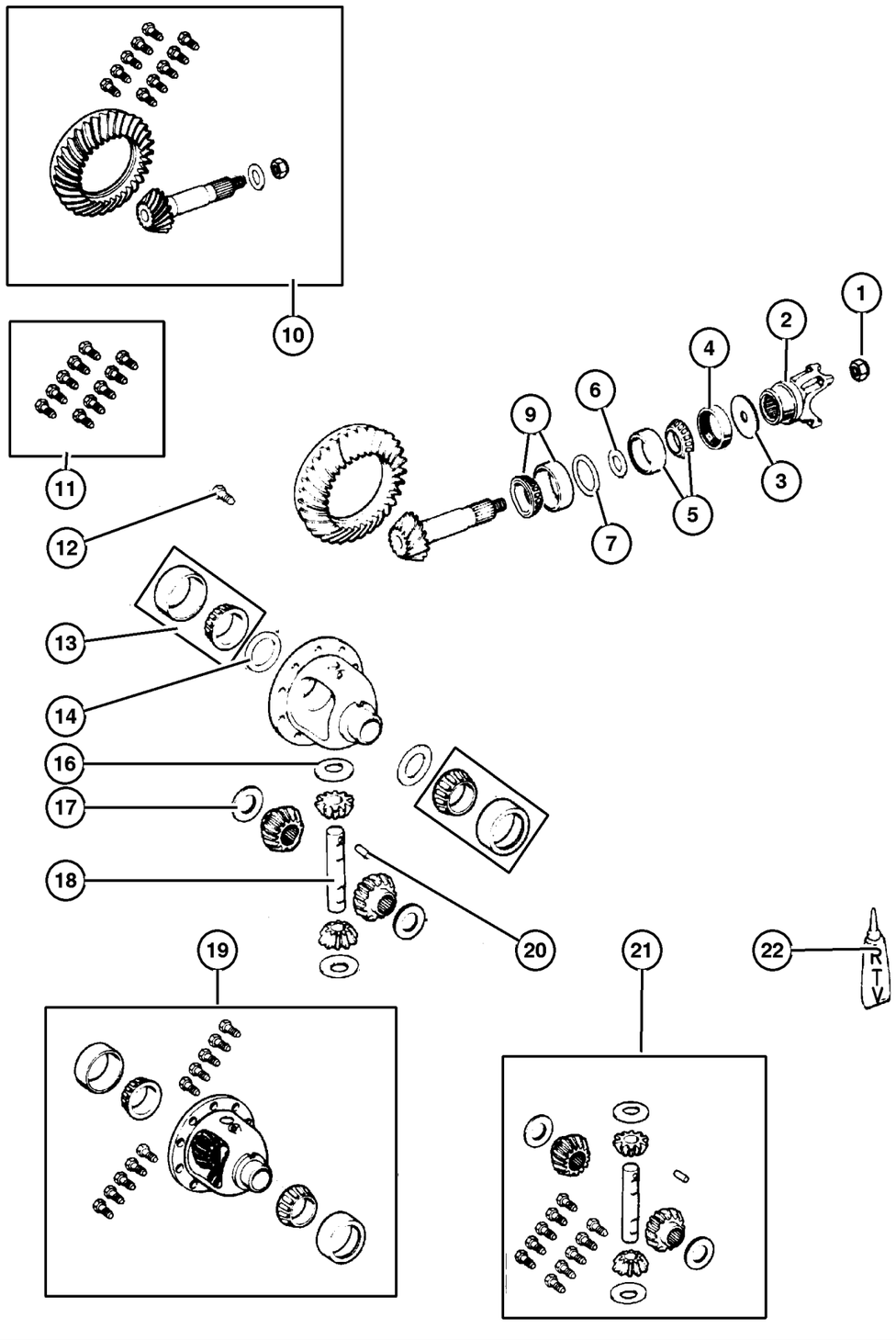

ITEM	PART NUMBER	QTY	LINE	SERIES	BODY	ENGINE	TRANS	TRIM	DESCRIPTION
		1	U						[.145"]
	5017 255AA	1	J						[.146"]
		1	U						[.146"]
	5017 256AA	1	J						[.147"]
		1	U						[.147"]
	5017 257AA	1	J						[.148"]
	5017 221AA	1	U						[.112"]
	5017 257AA	1	U						[.148"]
	5017 222AA	1	J						[.113"]
-15									SHIM KIT, Differential
	5066 539AA	1	J						Contains 40 Shims
		1	U						Contains 40 Shims
16									WASHER, Pinion Gear
	J812 0831	2	J						Thrust
		2	U						Thrust
17									WASHER, Side Gear
	J812 0832	2	J						Thrust
		2	U						Thrust
18									SHAFT, Differential
	5003 840AA	1	J						
		1	U						
19									CASE, Differential
	5066 529AA	1	J						With Internal Parts
		1	U						With Internal Parts
20									PIN, Differential Shaft
	1791 563	1	J						
		1	U						
21									GEAR KIT, Center Differential
	5066 530AA	1	J						
		1	U						
22									SEALANT, RTV
	5010 884AA	1	J						
		1	U						

JEEP LIBERTY (KJ)

SERIES	LINE	BODY	ENGINE	TRANSMISSION
P = Limited	J = LHD (4WD)	74 = 4 Dr (104.3 WB)	ED1,ED0 = 2.4L Power Tech	DDK = 5 Speed HDManual
H = Sport	U = RHD (4WD)		EKG,EK0 = 3.7L Power Tech	DDD = 5 Speed HD Manual
M = Renegade	T = LHD (2WD)		ENJ = 2.5L 4Cyl Turbo Diesel	DG4,DGQ = Multi-Speed Auto
			ENR = 2.8L 4Cyl Turbo Diesel	DG6 = 4 Speed Auto Transm
			EN0 = 4Cyl Turbo Diesel	DG0 = All Automatic Transm
				DBB = All Manual Transm

Skid Plate,Front Axle
Figure 002-810

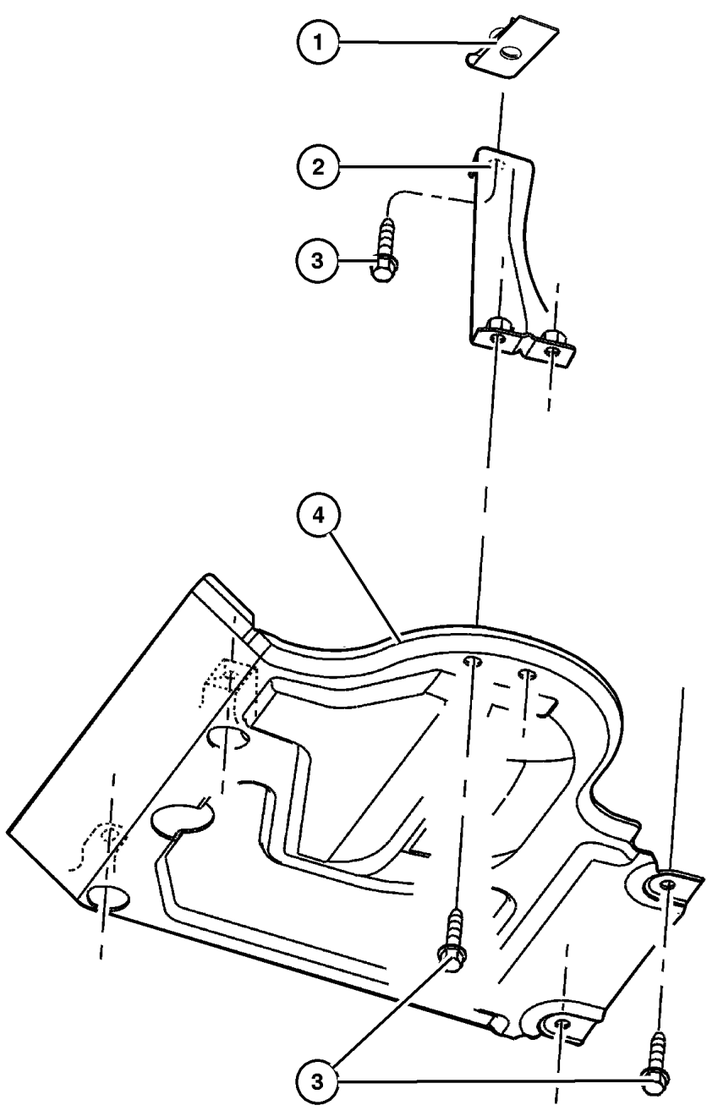

ITEM	PART NUMBER	QTY	LINE	SERIES	BODY	ENGINE	TRANS	TRIM	DESCRIPTION
1									NUT, U Type, M10 x 1.50, (NOT SERVICED) (Not Serviced)
2									BRACKET, Skid Plate
	52128 545AA	1	J, U						Right
	52128 544AA	1	J, U						Left
3									SCREW AND WASHER, Hex Head, M10-1.50x30, (NOT SERVICED) (Not Serviced)
4	52128 539AC	1	J, U						SKID PLATE, Front

JEEP LIBERTY (KJ)

SERIES	LINE	BODY	ENGINE	TRANSMISSION
P = Limited	J = LHD (4WD)	74 = 4 Dr (104.3 WB)	ED1,ED0 = 2.4L Power Tech	DDK = 5 Speed HDManual
H = Sport	U = RHD (4WD)		EKG,EK0 = 3.7L Power Tech	DDD = 5 Speed HD Manual
M = Renegade	T = LHD (2WD)		ENJ = 2.5L 4Cyl Turbo Diesel	DG4,DGQ = Multi-Speed Auto
			ENR = 2.8L 4Cyl Turbo Diesel	DG6 = 4 Speed Auto Transm
			EN0 = 4Cyl Turbo Diesel	DG0 = All Automatic Transm
				DBB = All Manual Transm

Group – 003
Rear Axle

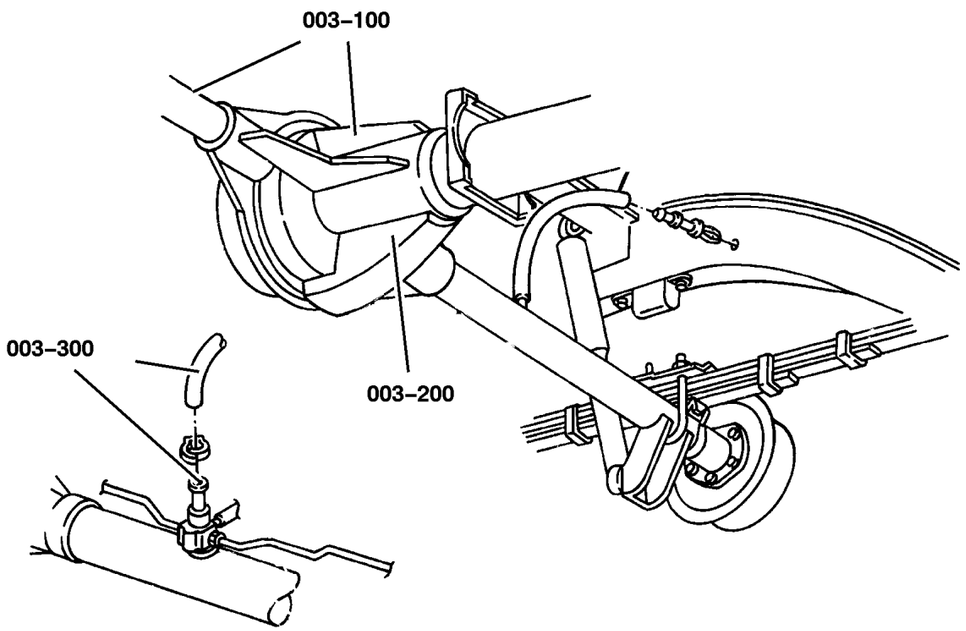

GROUP 3 - Rear Axle

Illustration Title	Group-Fig. No.
Rear Axle	
Axle Assembly,Rear,Corporate 8.25 [DRA]	Fig. 003-110
Differential and Housing	
Axle,Rear,with Differential and Housing,Corporate 8.25 [DRA]	Fig. 003-210
Rear Axle Vent	
Vent,Rear Axle	Fig. 003-310

003–100 Rear Axle	003–200 Differential and Housing	003–300 Rear Axle Vent	
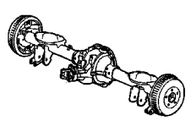	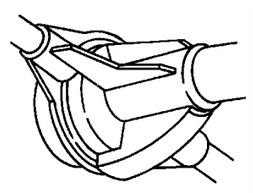	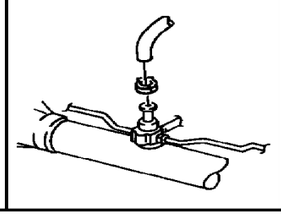	

Axle Assembly,Rear,Corporate 8.25 [DRA]
Figure 003-110

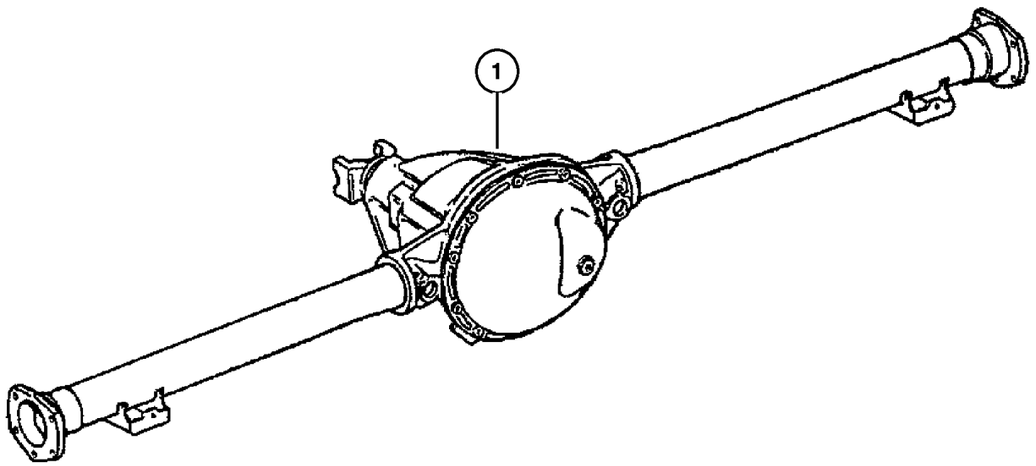

ITEM	PART NUMBER	QTY	LINE	SERIES	BODY	ENGINE	TRANS	TRIM	DESCRIPTION
Note: Sales Codes									
[BRE]=Brakes - 4-Wheel Disc									
[BRY]=Brakes - Anti-Lock 4-Wheel Disc									
[DME]=Axle Ratio - 3.73									
[DMF]=Axle Ratio - 4.10									
[DRA]=Axle - Rear, Corporate 8.25									
[DSA]=Axle-Trac-Lok Differential									
1									AXLE, Service Rear
	5102 971AA	1							[DME,BRE,BRY] With Tag
									52114030AD
	5102 970AA	1							[DME,BRE,BRY,DSA] With Tag
									52114028AD
	5102 974AA	1							[DMF,BRE,BRY] With Tag
									52114034AD
	5102 973AA	1							[DMF,BRE,BRY,DSA] With Tag
									52114032AD
	5104 895AA	1							[DMF,BRE,BRY] With Tag
									52114170AC
	5104 896AA	1							[DMF,BRE,BRY,DSA] With Tag
									52114169AC

JEEP LIBERTY (KJ)

SERIES	LINE	BODY	ENGINE	TRANSMISSION
P = Limited	J = LHD (4WD)	74 = 4 Dr (104.3 WB)	ED1,ED0 = 2.4L Power Tech	DDK = 5 Speed HDManual
H = Sport	U = RHD (4WD)		EKG,EK0 = 3.7L Power Tech	DDD = 5 Speed HD Manual
M = Renegade	T = LHD (2WD)		ENJ = 2.5L 4Cyl Turbo Diesel	DG4,DGQ = Multi-Speed Auto
			ENR = 2.8L 4Cyl Turbo Diesel	DG6 = 4 Speed Auto Transm
			EN0 = 4Cyl Turbo Diesel	DG0 = All Automatic Transm
				DBB = All Manual Transm

Axle,Rear,with Differential and Housing,Corporate 8.25 [DRA]
Figure 003-210

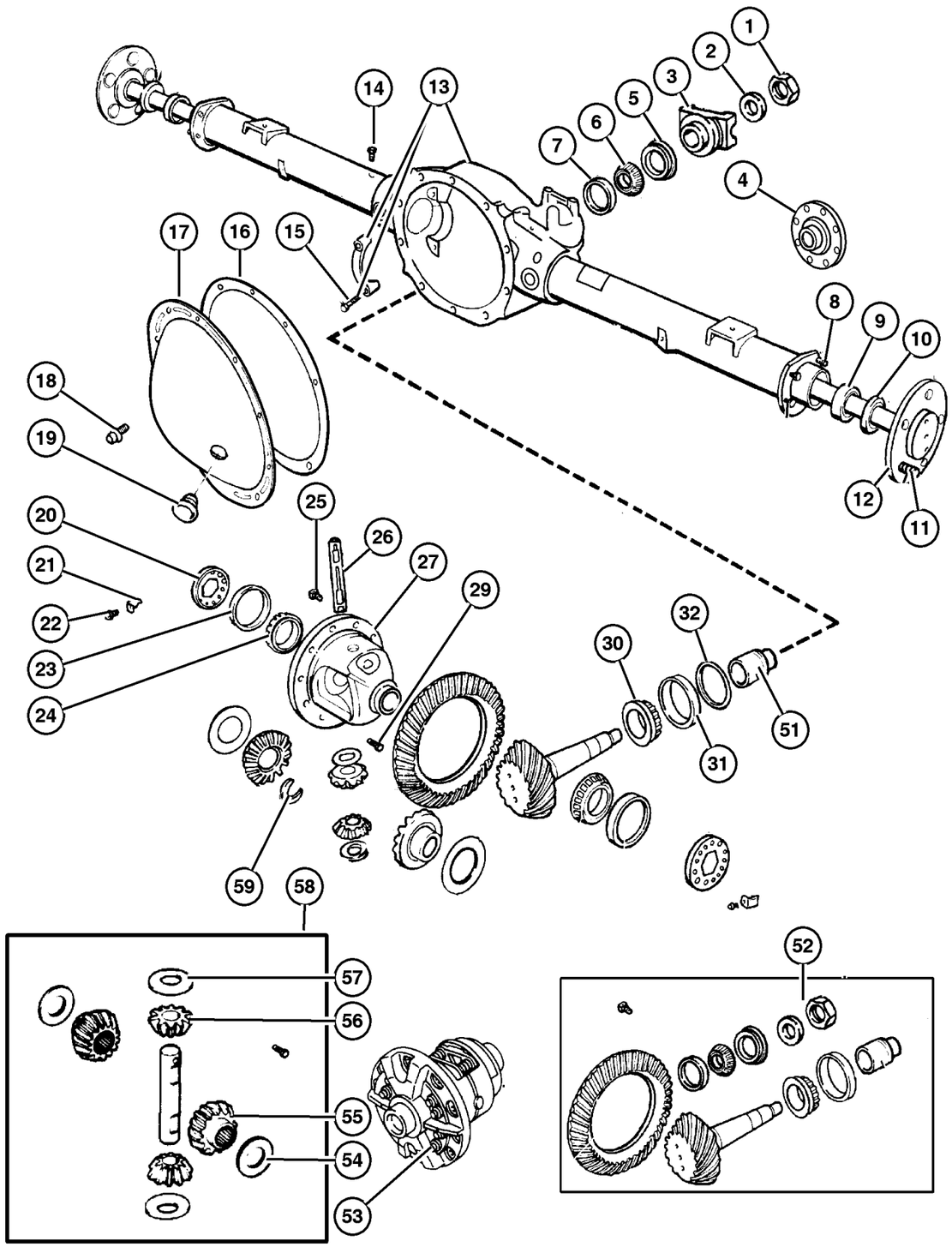

ITEM	PART NUMBER	QTY	LINE	SERIES	BODY	ENGINE	TRANS	TRIM	DESCRIPTION
Note: Sales Codes;									
[DME] = Axle Ratio - 3.73									
[DMF]= Axle Ratio - 4.10									
[DRA] =Axle - Rear, Corporate 8.25									
[DSA]=Axle-Trac-Lok Differential									
1	6028 041	1							NUT, Pinion Yoke
2	2070 117	1							WASHER, Pinion Yoke
3	52070 345AA	1							YOKE, Axle
4	5210 5065	1							FLANGE, Driveshaft Yoke
5	52070 339AA	1							SEAL, Drive Pinion
6	2070 316	1							BEARING, Drive Pinion, Front
7	2070 317	1							CUP, Drive Pinion Bearing, Front
8	6036 533AA	8							STUD
9	3507 898AB	2							BEARING, Wheel
10	52070 427AB	2							SEAL, Axle Drive Shaft
11	6036 123AA	10							STUD, Wheel
12	52070 350AA	2							SHAFT, Axle
13	5086 370AB	1							HOUSING, Axle
14	4137 696AB	1							BOLT, Axle Vent
15	3432 695	4							SCREW, Hex Head, .50-13x2.38
16	5010 884AA	1							SEALANT, RTV
17	3723 681AC	1							COVER, Differential
18	6033 043	10							SCREW AND WASHER, Hex Flange Head, .312-18x.562
19	52070 428AA	1							PLUG, Differential Cover
20	3507 876	2							ADJUSTER, Differential Bearing
21	3723 859	2							LOCK, Differential Bearing
22	6023 092	2							SCREW AND WASHER, Hex Head, .25-20x.50
23	3723 569	2							CUP, Differential Side Bearing
24	1790 541	2							BEARING, Differential
25	4443 158	1							SCREW PACKAGE, Axle Drive Gear, Ring Gear, Mounting
26	5206 9657	1							SHAFT, Differential Pinion, Also Serviced In Differential Gear Package
27									CASE, Differential
	5206 9428	1							Without [DSA],Without Internal Parts
	5206 9427	1							Without [DSA],With Internal Parts
-28	4384 226	1							TONE RING, Sensor

JEEP LIBERTY (KJ)

SERIES	LINE	BODY	ENGINE	TRANSMISSION
P = Limited	J = LHD (4WD)	74 = 4 Dr (104.3 WB)	ED1,ED0 = 2.4L Power Tech	DDK = 5 Speed HDManual
H = Sport	U = RHD (4WD)		EKG,EK0 = 3.7L Power Tech	DDD = 5 Speed HD Manual
M = Renegade	T = LHD (2WD)		ENJ = 2.5L 4Cyl Turbo Diesel	DG4,DGQ = Multi-Speed Auto
			ENR = 2.8L 4Cyl Turbo Diesel	DG6 = 4 Speed Auto Transm
			EN0 = 4Cyl Turbo Diesel	DG0 = All Automatic Transm
				DBB = All Manual Transm

AR = Use as required - = Non illustrated part # = New this model year

September 30, 2003

« RETURN TO GROUP INDEX

»

Axle,Rear,with Differential and Housing,Corporate 8.25 [DRA]
Figure 003-210

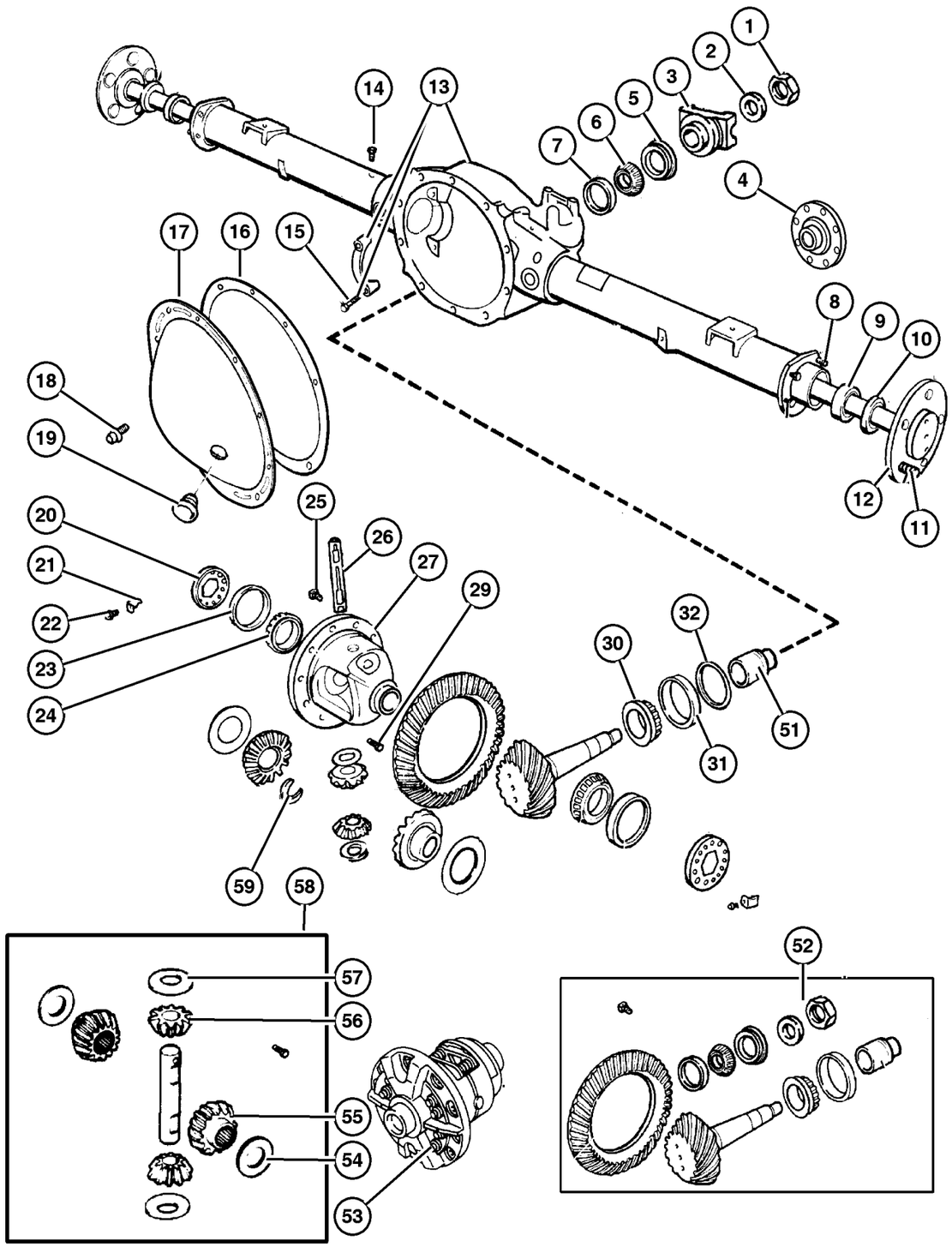

ITEM	PART NUMBER	QTY	LINE	SERIES	BODY	ENGINE	TRANS	TRIM	DESCRIPTION
29	3507 724	1							SCREW, Hex Head, .312-18x1.80, Also Serviced in Differential Gear Package
30	2800 484	1							BEARING, Drive Pinion, Rear
31	2800 485	1							CUP, Drive Pinion Bearing, Rear
32	3723 520	AR							SHIM, Drive Pinion Bearing, .020
-33	3723 521	AR							SHIM, Drive Pinion Bearing, .021
-34	3723 522	AR							SHIM, Drive Pinion Bearing, .022
-35	3723 523	AR							SHIM, Drive Pinion Bearing, .023
-36	3723 524	AR							SHIM, Drive Pinion Bearing, .024
-37	3723 525	AR							SHIM, Drive Pinion Bearing, .025
-38	3723 526	AR							SHIM, Drive Pinion Bearing, .026
-39	3723 527	AR							SHIM, Drive Pinion Bearing, .027
-40	3723 528	AR							SHIM, Drive Pinion Bearing, .028
-41	3723 529	AR							SHIM, Drive Pinion Bearing, .029
-42	3723 530	AR							SHIM, Drive Pinion Bearing, .030
-43	3723 531	AR							SHIM, Drive Pinion Bearing, .031
-44	3723 532	AR							SHIM, Drive Pinion Bearing, .032
-45	3723 533	AR							SHIM, Drive Pinion Bearing, .033
-46	3723 534	AR							SHIM, Drive Pinion Bearing, .034
-47	3723 535	AR							SHIM, Drive Pinion Bearing, .035
-48	3723 536	AR							SHIM, Drive Pinion Bearing, .036
-49	3723 537	AR							SHIM, Drive Pinion Bearing, .037
-50	3723 538	AR							SHIM, Drive Pinion Bearing, .038
51	3507 575	1							SPACER, Drive Pinion Bearing, Crush
52									GEAR KIT, Ring And Pinion
	5018 719AA	1							[DME]
	4720 973AB	1							[DMF]
53	52098 778AC	1							CASE, Differential, With [DSA],With Internal Parts
54	4883 085	1							WASHER PACKAGE, Side Gear Thrust, Also Serviced In Differential Gear Package, Without [DSA]
55	5206 9429	1							GEAR, Differential, Also Serviced In Differential Gear Package, Without [DSA]
56	5206 9655	1							PINION, Differential, Also Serviced In Differential Gear Package, Without [DSA]

JEEP LIBERTY (KJ)

SERIES	LINE	BODY	ENGINE	TRANSMISSION
P = Limited	J = LHD (4WD)	74 = 4 Dr (104.3 WB)	ED1,ED0 = 2.4L Power Tech	DDK = 5 Speed HDManual
H = Sport	U = RHD (4WD)		EKG,EK0 = 3.7L Power Tech	DDD = 5 Speed HD Manual
M = Renegade	T = LHD (2WD)		ENJ = 2.5L 4Cyl Turbo Diesel	DG4,DGQ = Multi-Speed Auto
			ENR = 2.8L 4Cyl Turbo Diesel	DG6 = 4 Speed Auto Transm
			EN0 = 4Cyl Turbo Diesel	DG0 = All Automatic Transm
				DBB = All Manual Transm

AR = Use as required - = Non illustrated part # = New this model year

September 30, 2003

« RETURN TO GROUP INDEX

« »

Axle,Rear,with Differential and Housing,Corporate 8.25 [DRA]
Figure 003-210

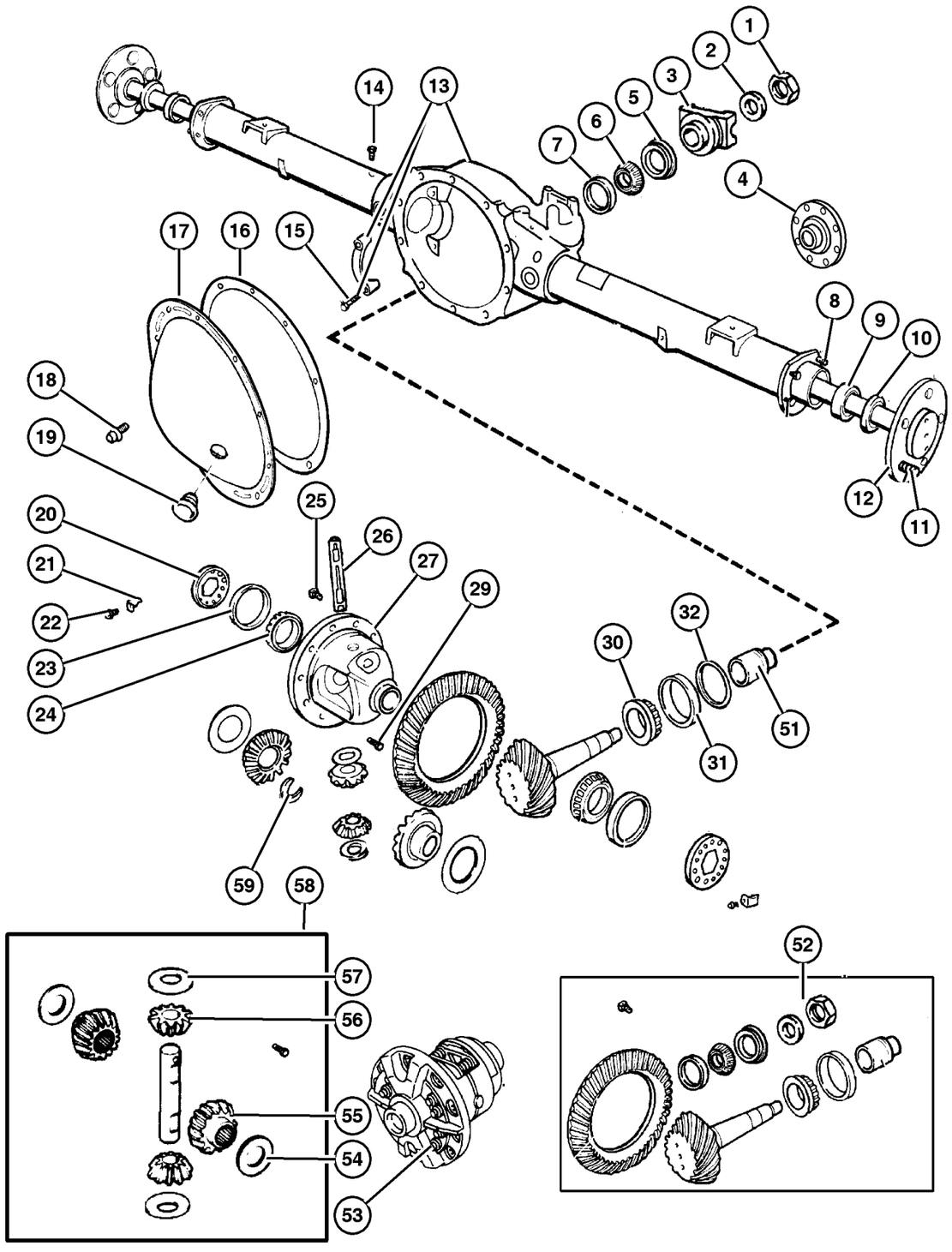

ITEM	PART NUMBER	QTY	LINE	SERIES	BODY	ENGINE	TRANS	TRIM	DESCRIPTION
57	2852 912	2							WASHER, Pinion Gear, Also Serviced In Differential Gear Package, Without [DSA], Thrust
58	4883 087AB	1							GEAR PACKAGE, Differential, Without [DSA]
59	5206 9426	2							RETAINER, Axle Shaft

JEEP LIBERTY (KJ)

SERIES	LINE	BODY	ENGINE	TRANSMISSION
P = Limited	J = LHD (4WD)	74 = 4 Dr (104.3 WB)	ED1,ED0 = 2.4L Power Tech	DDK = 5 Speed HDManual
H = Sport	U = RHD (4WD)		EKG,EK0 = 3.7L Power Tech	DDD = 5 Speed HD Manual
M = Renegade	T = LHD (2WD)		ENJ = 2.5L 4Cyl Turbo Diesel	DG4,DGQ = Multi-Speed Auto
			ENR = 2.8L 4Cyl Turbo Diesel	DG6 = 4 Speed Auto Transm
			EN0 = 4Cyl Turbo Diesel	DG0 = All Automatic Transm
				DBB = All Manual Transm

Vent,Rear Axle
Figure 003-310

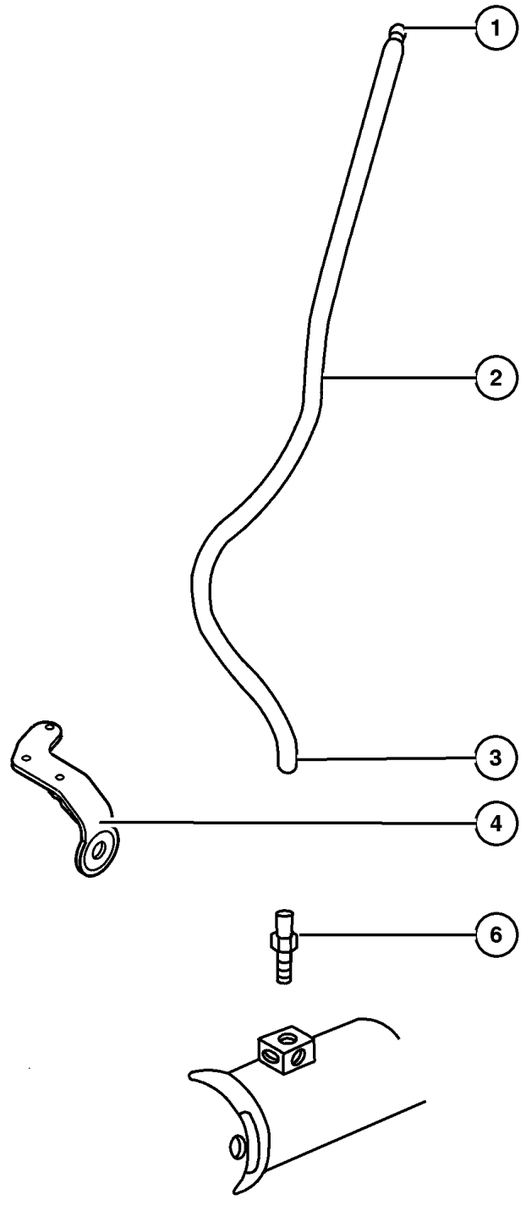

ITEM	PART NUMBER	QTY	LINE	SERIES	BODY	ENGINE	TRANS	TRIM	DESCRIPTION
1	J535 2955	1							VENT, Axle
2	HFV00 516AB	1							HOSE, Fuel And Vapor, 25 Foot Roll 5/16"
3	6032 633	1							CLIP, Vent Tube, Axle Vent Hose, Mounting
4	52111 360AE	1							DAMPER, Axle Vent Hose
-5	6507 369AA	3							BOLT, Axle Vent Hose Damper, Mounting
6	4137 696AB	1							BOLT, Axle Vent

JEEP LIBERTY (KJ)

SERIES	LINE	BODY	ENGINE	TRANSMISSION
P = Limited	J = LHD (4WD)	74 = 4 Dr (104.3 WB)	ED1,ED0 = 2.4L Power Tech	DDK = 5 Speed HDManual
H = Sport	U = RHD (4WD)		EKG,EK0 = 3.7L Power Tech	DDD = 5 Speed HD Manual
M = Renegade	T = LHD (2WD)		ENJ = 2.5L 4Cyl Turbo Diesel	DG4,DGQ = Multi-Speed Auto
			ENR = 2.8L 4Cyl Turbo Diesel	DG6 = 4 Speed Auto Transm
			EN0 = 4Cyl Turbo Diesel	DG0 = All Automatic Transm
				DBB = All Manual Transm

Group – 004
Parking Brake

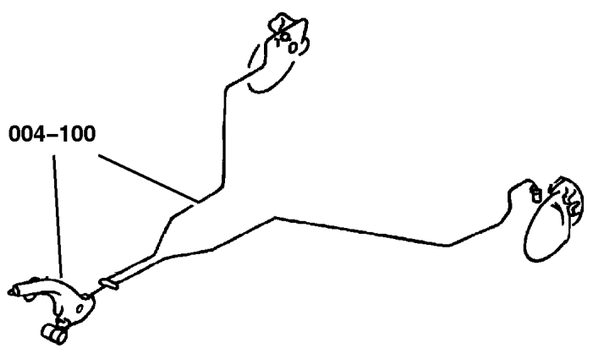

004–100 Parking Brake Lever and Cables			

GROUP 4 - Parking Brake

Illustration Title — Group-Fig. No.

Parking Brake Lever and Cables

Parking Brake Lever and Cables . . . . . Fig. 004-110
Parking Brake Assembly,Rear,Disc . . . . . Fig. 004-120

Parking Brake Lever and Cables
Figure 004-110

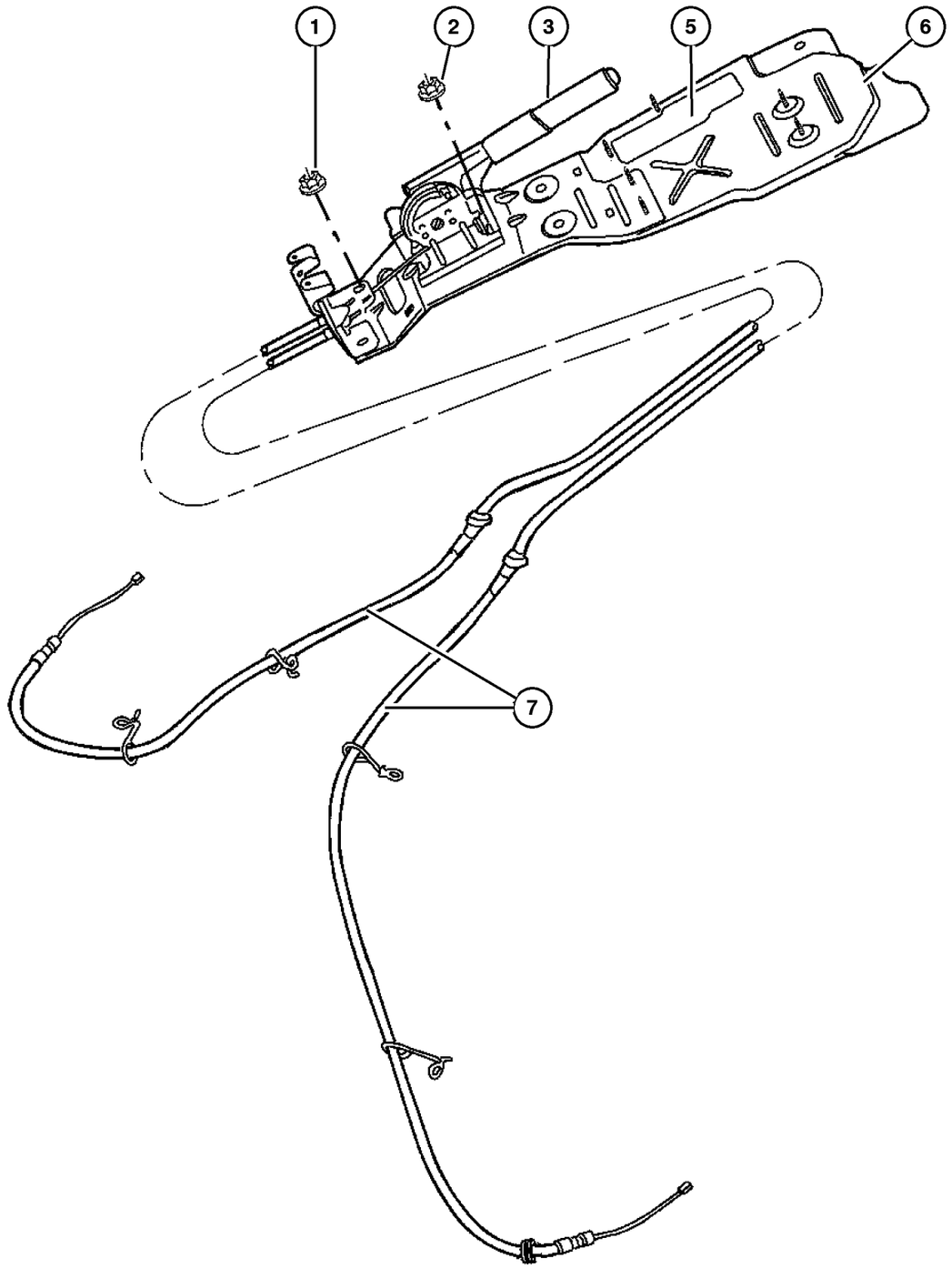

ITEM	PART NUMBER	QTY	LINE	SERIES	BODY	ENGINE	TRANS	TRIM	DESCRIPTION
Note:Sales Codes;									
[DD0]=Transmissions - All 5-Speed Manual									
[DG0]=Transmissions - All Automatic									
1	6501 483	4							NUT, Hex Flange, M8x1.25
2	6100 517	4							NUT, Hex Flange Lock
3	#52128 860AA	1							LEVER, Park Brake
-4	5212 7960	1							SWITCH, Parking Brake, Indicator Light
5									SEAL, Parking Brake Housing
	52128 504AA	1							[DD0]
	52128 503AA	1							[DG0]
6									BRACKET, Parking Brake
	#52128 712AB	1							[DD0]
	#52128 714AB	1							[DG0]
7									CABLE, Parking Brake
	52128 510AD	1							Right
	52128 511AC	1							Left
-8	5602 1252	1							CLIP, Parking Brake Cable, Anti-Rotation [DD0]
-9									SCREW, Hex Flange Head, M8x1.25x25.00, (NOT SERVICED) (Not Serviced)
-10									CLIP, Cable Routing
	52128 612AB	1							Holds Cable to Control Arm, Right
	52128 613AB	1							Holds Cable to Control Arm, Left

JEEP LIBERTY (KJ)

SERIES	LINE	BODY	ENGINE	TRANSMISSION
P = Limited	J = LHD (4WD)	74 = 4 Dr (104.3 WB)	ED1,ED0 = 2.4L Power Tech	DDK = 5 Speed HDManual
H = Sport	U = RHD (4WD)		EKG,EK0 = 3.7L Power Tech	DDD = 5 Speed HD Manual
M = Renegade	T = LHD (2WD)		ENJ = 2.5L 4Cyl Turbo Diesel	DG4,DGQ = Multi-Speed Auto
			ENR = 2.8L 4Cyl Turbo Diesel	DG6 = 4 Speed Auto Transm
			EN0 = 4Cyl Turbo Diesel	DG0 = All Automatic Transm
				DBB = All Manual Transm

AR = Use as required - = Non illustrated part # = New this model year **September 30, 2003**

« RETURN TO GROUP INDEX

Parking Brake Assembly,Rear,Disc
Figure 004-120

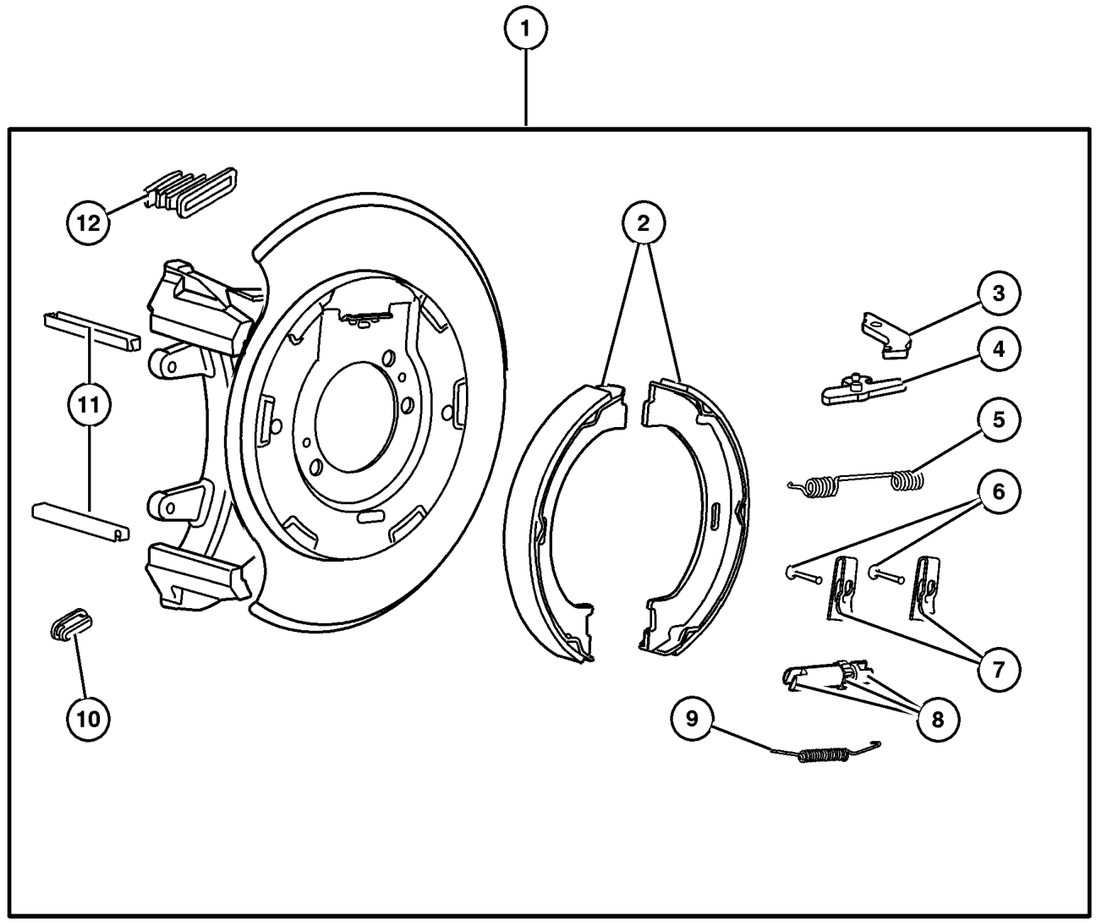

ITEM	PART NUMBER	QTY	LINE	SERIES	BODY	ENGINE	TRANS	TRIM	DESCRIPTION
1									ADAPTER, Parking Brake
	52128 414AB	1							Right
	52128 415AB	1							Left
2	5093 390AA	1							SHOE AND LINING KIT, Parking Brake
3	5093 392AA	1							LEVER, Park Brake Adjusting
4									LEVER, Park Brake
	5093 334AA	1							Right
	5093 338AA	1							Left
5	5093 393AA	1							SPRING, Park Brake Shoe Return
6	4762 126	2							PIN, Brake Shoe Hold Down
7	4762 125	2							CLIP, Parking Brake Hold Down
8	5093 391AA	1							ADJUSTER, Parking Brake
9	4762 116	1							SPRING, Park Brake Shoe Return
10	4762 121	1							PLUG, Brake Adjusting Hole
11	5093 394AB	2							SLIPPER, Caliper
12	5093 395AA	1							BOOT, Parking Brake Lever

JEEP LIBERTY (KJ)

SERIES	LINE	BODY	ENGINE	TRANSMISSION
P = Limited	J = LHD (4WD)	74 = 4 Dr (104.3 WB)	ED1,ED0 = 2.4L Power Tech	DDK = 5 Speed HDManual
H = Sport	U = RHD (4WD)		EKG,EK0 = 3.7L Power Tech	DDD = 5 Speed HD Manual
M = Renegade	T = LHD (2WD)		ENJ = 2.5L 4Cyl Turbo Diesel	DG4,DGQ = Multi-Speed Auto
			ENR = 2.8L 4Cyl Turbo Diesel	DG6 = 4 Speed Auto Transm
			EN0 = 4Cyl Turbo Diesel	DG0 = All Automatic Transm
				DBB = All Manual Transm

Group – 005
Service Brakes

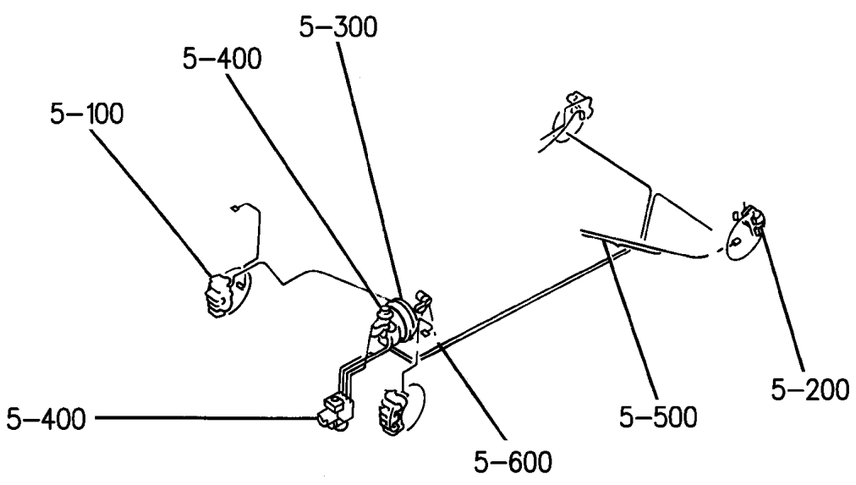

005–100 Front Brakes 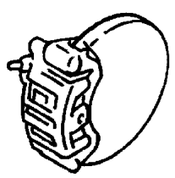	**005–200** Rear Brakes 	**005–300** Power Brake Booster 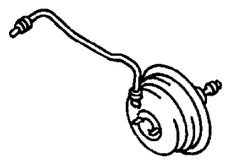	**005–400** Brake Master Cylinder 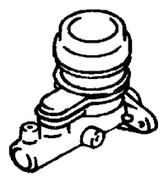
005–500 Brake Lines and Hoses 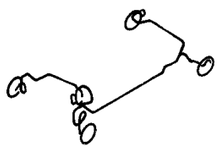	**005–600** Brake Pedals 		

GROUP 5 - Service Brakes

Illustration Title	Group-Fig. No.
Front Brakes	
Brakes,Front	Fig. 005-110
Rear Brakes	
Brakes,Rear,Disc	Fig. 005-210
Power Brake Booster	
Booster,Power Brake	Fig. 005-310
Brake Master Cylinder	
Master Cylinder,Brake	Fig. 005-410
Brake Lines and Hoses	
Brake Lines,Front,LHD	Fig. 005-510
Brake Lines,Front,RHD	Fig. 005-520
Brake Lines,Rear	Fig. 005-530
Brake Pedals	
Pedals,Brake and Clutch	Fig. 005-610

Brakes,Front
Figure 005-110

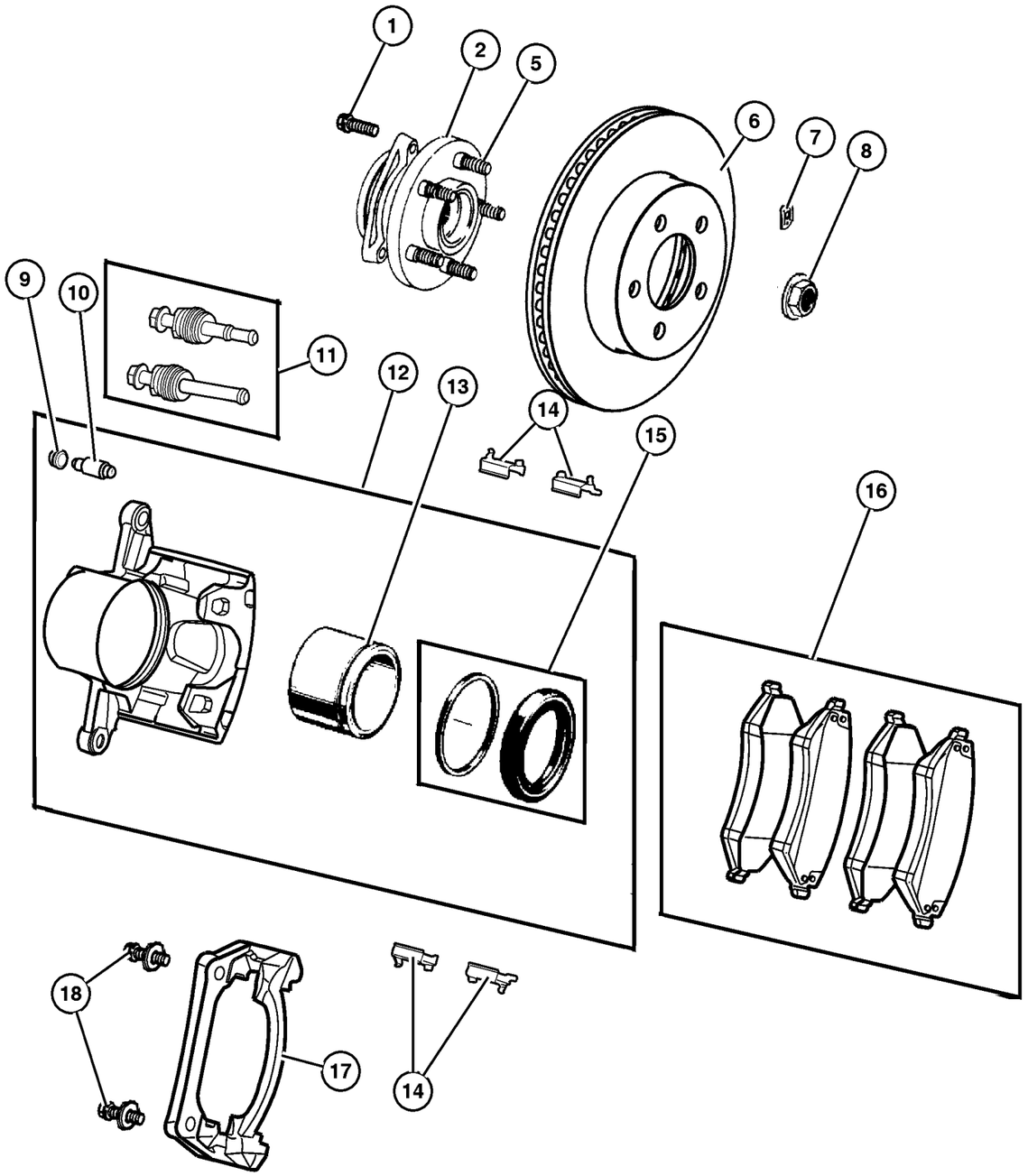

ITEM	PART NUMBER	QTY	LINE	SERIES	BODY	ENGINE	TRANS	TRIM	DESCRIPTION
Note:Sales Codes;									
[BRE]=Brakes - 4 Wheel Disc									
[BRY]=Brakes - Anti-Lock 4 Wheel Disc									
1	6503 088	3							BOLT, Knuckle to Bearing Attaching, M12 x 1.75 x 43.00
2									HUB AND BEARING, Brake
	52128 352AB	1							[BRE], Right or Left
	52128 692AB	1							[BRY], Right
	52128 693AB	1							[BRY], Left
-3	52128 694AB	1							SENSOR, Anti-Lock Brakes
-4	52128 584AA	1							CLIP, Wiring, [BRY] Sensor Wire to Knuckle, Mounting
5	6036 388AA	5							BOLT, Hub and Rotor
6	52128 247AA	1							ROTOR, Brake
7	6031 635	1							NUT, Push
8									NUT, Hex
	6506 454AA	2	J, U						Halfshaft Retention
	6506 633AA	2	T						
9	4238 717	1							CAP, Bleeder
10	3780 788	1							BLEEDER SCREW, Brake
11	5019 987AA	1							PIN KIT, Disc Brake
12									CALIPER, Disc Brake
	5066 422AA	1							Right
	5066 423AA	1							Left
13	5066 425AA	1							PISTON, Brake
14	5019 985AB	4							CLIP, Brake Caliper
15	5066 426AA	1							BOOT AND SEAL, Disc Brake
16									PAD KIT, Front Disc Brake
	5066 427AA	1							[BRE,BRY] Without [ABB]
	5096 349AA	1							[BRE,BRY] With [ABB]
17	5066 428AA	1							ADAPTER, Disc Brake Caliper, Right or Left
18	6102 149AA	2							BOLT, Caliper, Mounting

JEEP LIBERTY (KJ)

SERIES	LINE	BODY	ENGINE	TRANSMISSION
P = Limited	J = LHD (4WD)	74 = 4 Dr (104.3 WB)	ED1,ED0 = 2.4L Power Tech	DDK = 5 Speed HDManual
H = Sport	U = RHD (4WD)		EKG,EK0 = 3.7L Power Tech	DDD = 5 Speed HD Manual
M = Renegade	T = LHD (2WD)		ENJ = 2.5L 4Cyl Turbo Diesel	DG4,DGQ = Multi-Speed Auto
			ENR = 2.8L 4Cyl Turbo Diesel	DG6 = 4 Speed Auto Transm
			EN0 = 4Cyl Turbo Diesel	DG0 = All Automatic Transm
				DBB = All Manual Transm

Brakes,Rear,Disc
Figure 005-210

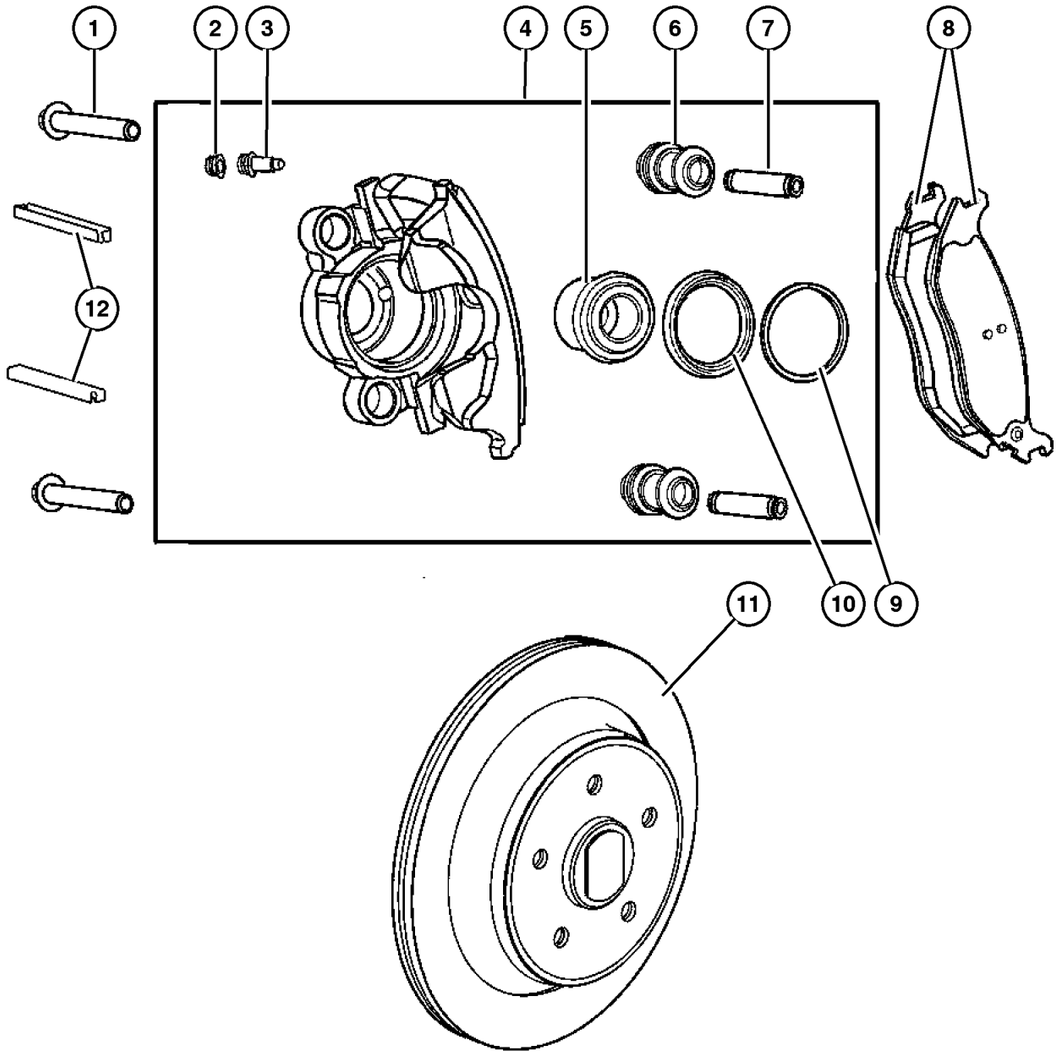

ITEM	PART NUMBER	QTY	LINE	SERIES	BODY	ENGINE	TRANS	TRIM	DESCRIPTION
1	6507 603AA	4							PIN, Caliper
2	5093 278AA	1							CAP, Bleeder
3	J092 0463	1							BLEEDER SCREW, Brake
4									CALIPER, Disc Brake
	5093 274AA	1							Right
	5093 279AA	1							Left
5	5093 275AA	1							PISTON, Brake
6	4762 106	2							BUSHING, Caliper
7	4762 105	2							SLEEVE, Brake Caliper
8	5083 882AC	1							PAD KIT, Disc Brake
9	5093 276AA	1							SEAL, Caliper Piston
10	5093 277AA	1							BOOT, Brake Piston
11	52128 411AA	2							ROTOR, Brake
12	5093 394AB	4							SLIPPER, Caliper
-13	6036 159AA	8							NUT, Hex, .375-24, Rear Brake Assembly, Mounting

JEEP LIBERTY (KJ)

SERIES	LINE	BODY	ENGINE	TRANSMISSION
P = Limited	J = LHD (4WD)	74 = 4 Dr (104.3 WB)	ED1,ED0 = 2.4L Power Tech	DDK = 5 Speed HDManual
H = Sport	U = RHD (4WD)		EKG,EK0 = 3.7L Power Tech	DDD = 5 Speed HD Manual
M = Renegade	T = LHD (2WD)		ENJ = 2.5L 4Cyl Turbo Diesel	DG4,DGQ = Multi-Speed Auto
			ENR = 2.8L 4Cyl Turbo Diesel	DG6 = 4 Speed Auto Transm
			EN0 = 4Cyl Turbo Diesel	DG0 = All Automatic Transm
				DBB = All Manual Transm

AR = Use as required - = Non illustrated part # = New this model year **September 30, 2003**

« RETURN TO GROUP INDEX

Booster,Power Brake
Figure 005-310

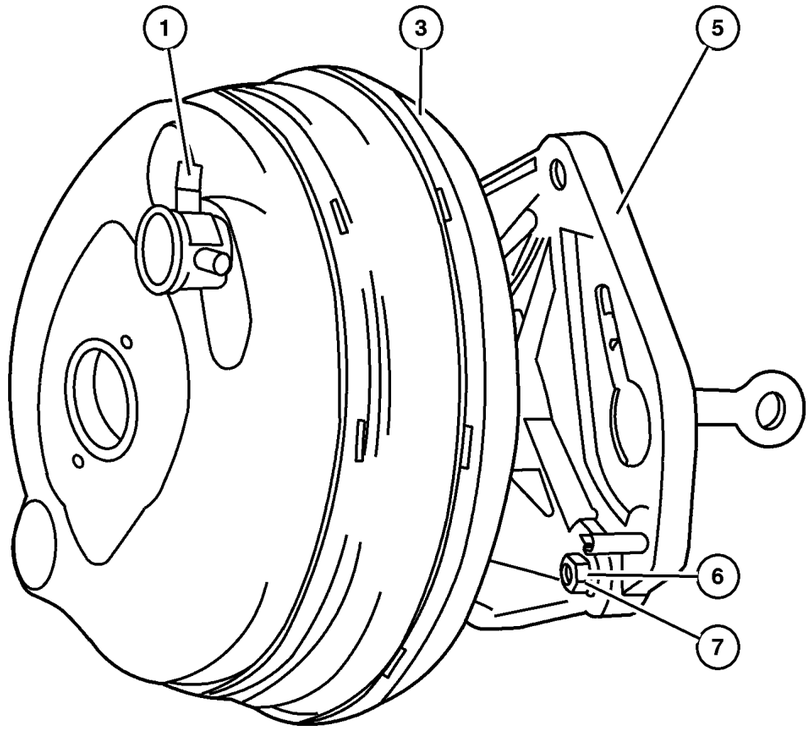

ITEM	PART NUMBER	QTY	LINE	SERIES	BODY	ENGINE	TRANS	TRIM	DESCRIPTION
Note: Sales Codes;									
[ED0]=Engines - All 2.2, 2.5, 2.4L 4 Cylinder Gas									
[EK0]=Engines - All 3.7L 6 Cylinder Gas									
[EN0]=Engines - All 4/5 Cylinder Turbo Diesel									
1									VALVE, Vacuum Check
	5072 522AA	1	J, T						
		1	U						
-2	5103 338AA	1	U						CAP, Vacuum Port
3									BOOSTER, Power Brake
	#5134 120AA	1	J, T						
		1	U						
-4	6506 386AA	2							NUT, Hex Flange With Serration, Brake Booster to Actuator Mounting Bracket, Mounting
5									BRACKET, Brake Booster
	52128 353AB	1	J, T						[DBB], Mounting
	52128 730AA	1	J, T						[DG0], Mounting
	52128 356AB	1	U						[DBB], Mounting
	52128 731AA	1	U						[DG0], Mounting
6									NUT AND WASHER, Hex, M8x1.25
	6504 175	3	J, T						Actuator Mounting Bracket to Dash Panel, Mounting
		2	U						Actuator Mounting Bracket to Dash Panel, Mounting
7	6506 386AA	1	U						NUT, Hex Flange With Serration, Actuator Mounting Bracket to Dash Panel, Mounting
-8									HOSE, Vacuum Supply
	52128 317AA	1	J, T						[ED0]-Engine To Booster
	52128 318AC	1	J, T						[EK0]-Engine To Booster
	52128 370AA	1	J, T						[EN0]-Engine To Booster
	52128 313AB	1	U						[ED0]-Engine To Booster
	52128 314AD	1	U						[EK0]-Engine To Booster
	52128 316AE	1	U						[EN0]-Engine To Booster

JEEP LIBERTY (KJ)

SERIES	LINE	BODY	ENGINE	TRANSMISSION
P = Limited	J = LHD (4WD)	74 = 4 Dr (104.3 WB)	ED1,ED0 = 2.4L Power Tech	DDK = 5 Speed HDManual
H = Sport	U = RHD (4WD)		EKG,EK0 = 3.7L Power Tech	DDD = 5 Speed HD Manual
M = Renegade	T = LHD (2WD)		ENJ = 2.5L 4Cyl Turbo Diesel	DG4,DGQ = Multi-Speed Auto
			ENR = 2.8L 4Cyl Turbo Diesel	DG6 = 4 Speed Auto Transm
			EN0 = 4Cyl Turbo Diesel	DG0 = All Automatic Transm
				DBB = All Manual Transm

Master Cylinder,Brake
Figure 005-410

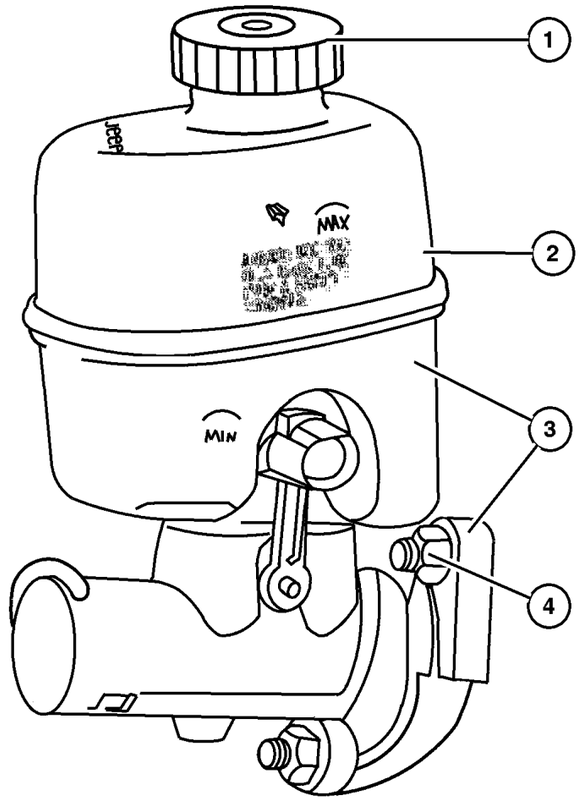

ITEM	PART NUMBER	QTY	LINE	SERIES	BODY	ENGINE	TRANS	TRIM	DESCRIPTION
1									CAP, Master Cylinder Reservoir
	5072 525AA	1	J, T						
		1	U						
2									RESERVOIR, Brake Master Cylinder, Order Item 3, (NOT SERVICED)
									(Not Serviced)
3									MASTER CYLINDER, Brake
	5072 526AB	1	J, T						With Reservoir and Cap
	5072 524AB	1	U						With Reservoir and Cap
4									NUT
	5072 523AA	1	J, T						Master Cylinder to Booster, Mounting
		2	U						Master Cylinder to Booster, Mounting

JEEP LIBERTY (KJ)

SERIES	LINE	BODY	ENGINE	TRANSMISSION
P = Limited	J = LHD (4WD)	74 = 4 Dr (104.3 WB)	ED1,ED0 = 2.4L Power Tech	DDK = 5 Speed HDManual
H = Sport	U = RHD (4WD)		EKG,EK0 = 3.7L Power Tech	DDD = 5 Speed HD Manual
M = Renegade	T = LHD (2WD)		ENJ = 2.5L 4Cyl Turbo Diesel	DG4,DGQ = Multi-Speed Auto
			ENR = 2.8L 4Cyl Turbo Diesel	DG6 = 4 Speed Auto Transm
			EN0 = 4Cyl Turbo Diesel	DG0 = All Automatic Transm
				DBB = All Manual Transm

Brake Lines,Front,LHD
Figure 005-510

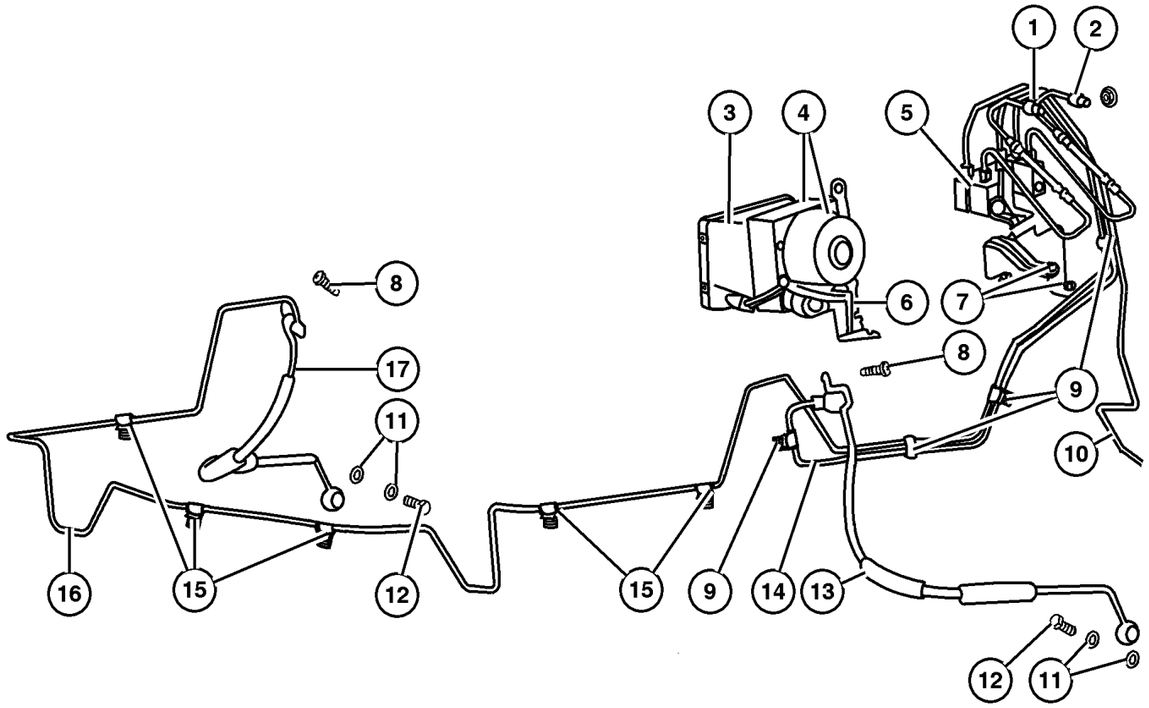

ITEM	PART NUMBER	QTY	LINE	SERIES	BODY	ENGINE	TRANS	TRIM	DESCRIPTION
1	52128 293AD	1	J, T						TUBE, Brake, Master Cylinder to Union Block/HCU, Secondary
2	52128 292AC	1	J, T						TUBE, Brake, Master Cylinder to Union Block/HCU, Primary
3	5083 084AA	1							MODULE, Anti-lock Brakes, [BRY]
4	5083 083AA	1							CONTROL UNIT, Anti-Lock Brake, [BRY]
5	52128 676AA	1							BLOCK, Brake Line Union, [BRE]
6	5066 569AA	1							BRACKET, Hydraulic Control Unit, [BRY], Mounting
7	6100 048	2							NUT, Hex, M6x1.00
8									SCREW, Pan Head, M6x1x16, (NOT SERVICED) (Not Serviced)
9	5200 8940	3							CLIP, Brake Line, 2 Way, Mounting
10	#52128 636AC	1							TUBE, Brake, Union Block/HCU to Rear Brake Hose
11	J323 7672	4							GASKET, Brake Hose To Caliper, Mounting
12	6035 832	2							BOLT, Banjo, To Caliper, Mounting
13	52128 311AA	1							HOSE, Brake, Left
14	52128 304AB	1							TUBE, Brake, Union Block/HCU to Left Brake Hose
15	52128 409AA	5							CLIP, Brake Line, 1 Way, Mounting
16	52128 286AB	1							TUBE, Brake, Union Block/HCU to Right Brake Hose
17	52128 312AA	1							HOSE, Brake, Right
-18	6505 446AA	2							SCREW, Brake Hose to Wheel House, Mounting
-19	52128 408AA	1							CLIP, Brake Line, 3 Way-Attaches Brake Tubes To Rail, Mounting

JEEP LIBERTY (KJ)

SERIES	LINE	BODY	ENGINE	TRANSMISSION
P = Limited	J = LHD (4WD)	74 = 4 Dr (104.3 WB)	ED1,ED0 = 2.4L Power Tech	DDK = 5 Speed HDManual
H = Sport	U = RHD (4WD)		EKG,EK0 = 3.7L Power Tech	DDD = 5 Speed HD Manual
M = Renegade	T = LHD (2WD)		ENJ = 2.5L 4Cyl Turbo Diesel	DG4,DGQ = Multi-Speed Auto
			ENR = 2.8L 4Cyl Turbo Diesel	DG6 = 4 Speed Auto Transm
			EN0 = 4Cyl Turbo Diesel	DG0 = All Automatic Transm
				DBB = All Manual Transm

Brake Lines,Front,RHD
Figure 005-520

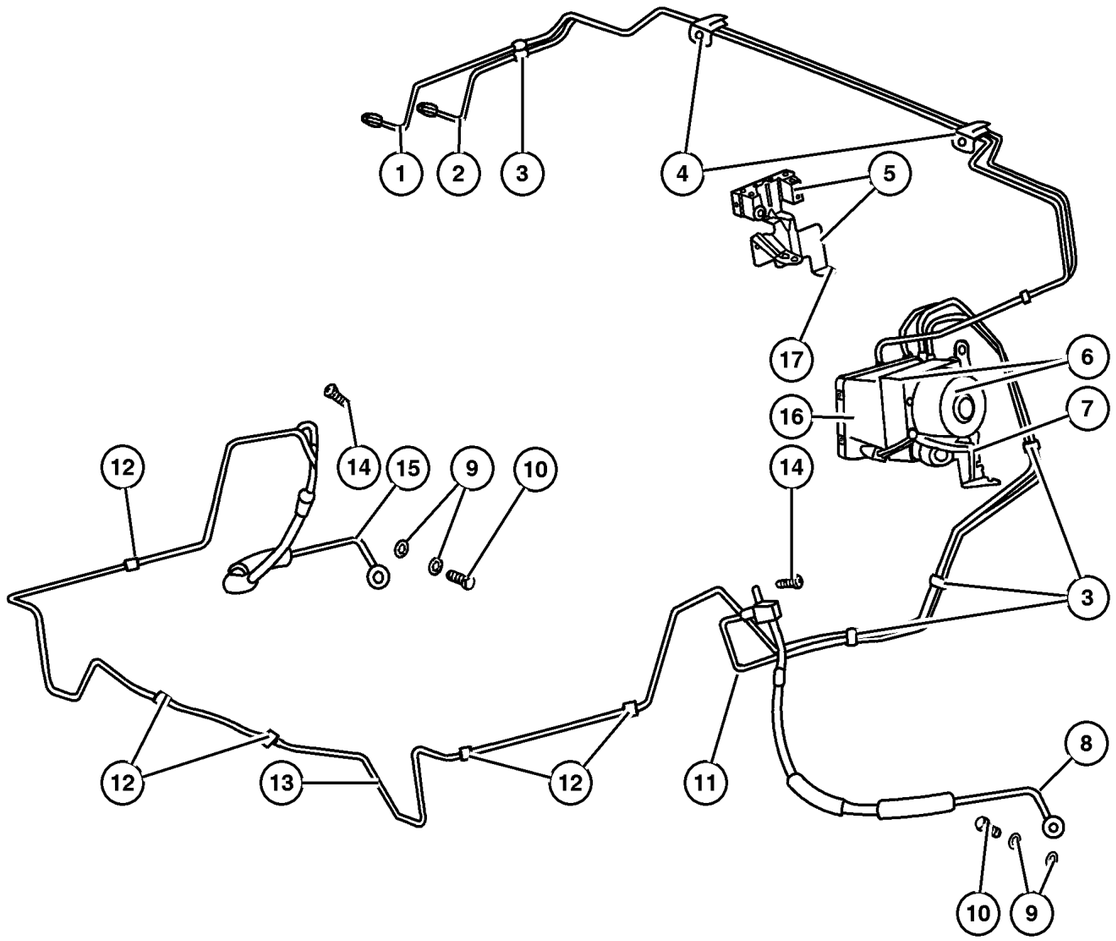

ITEM	PART NUMBER	QTY	LINE	SERIES	BODY	ENGINE	TRANS	TRIM	DESCRIPTION
1	52128 300AB	1	U						TUBE, Brake, Master Cylinder to Union Block/HCU, Secondary
2	52128 297AC	1	U						TUBE, Brake, Master Cylinder to Union Block/HCU, Primary
3	5200 8940	2	U						CLIP, Brake Line, 2 Way
4	52128 405AB	2	U						CLIP, Brake Line, 4 Way
5	52128 676AA	1							BLOCK, Brake Line Union, [BRE]
6	5083 083AA	1							CONTROL UNIT, Anti-Lock Brake, [BRY]
7	5066 569AA	1							BRACKET, Hydraulic Control Unit, [BRY], Mounting
8	52128 311AA	1							HOSE, Brake, Left
9	6035 886	4							GASKET, Brake Hose To Caliper, Mounting
10	6035 832	2							BOLT, Banjo, To Caliper, Mounting
11	52128 304AB	1							TUBE, Brake, Union Block/HCU to Brake Hose, Left
12	5200 8940	3							CLIP, Brake Line, 2 Way, Mounting
13	52128 286AB	1							TUBE, Brake, Union Block/HCU to Brake Hose, Right
14									SCREW, Pan Head, M6x1x16, (NOT SERVICED) (Not Serviced)
15	52128 312AA	1							HOSE, Brake, Right
16	5083 084AA	1							MODULE, Anti-lock Brakes, [BRY]
17	6100 048	2							NUT, Hex, M6x1.00
-18	#52128 636AC	1							TUBE, Brake, Union Block/HCU to Brake Hose, Rear

JEEP LIBERTY (KJ)

SERIES	LINE	BODY	ENGINE	TRANSMISSION
P = Limited	J = LHD (4WD)	74 = 4 Dr (104.3 WB)	ED1,ED0 = 2.4L Power Tech	DDK = 5 Speed HDManual
H = Sport	U = RHD (4WD)		EKG,EK0 = 3.7L Power Tech	DDD = 5 Speed HD Manual
M = Renegade	T = LHD (2WD)		ENJ = 2.5L 4Cyl Turbo Diesel	DG4,DGQ = Multi-Speed Auto
			ENR = 2.8L 4Cyl Turbo Diesel	DG6 = 4 Speed Auto Transm
			EN0 = 4Cyl Turbo Diesel	DG0 = All Automatic Transm
				DBB = All Manual Transm

AR = Use as required - = Non illustrated part # = New this model year

September 30, 2003

« RETURN TO GROUP INDEX

Brake Lines,Rear
Figure 005-530

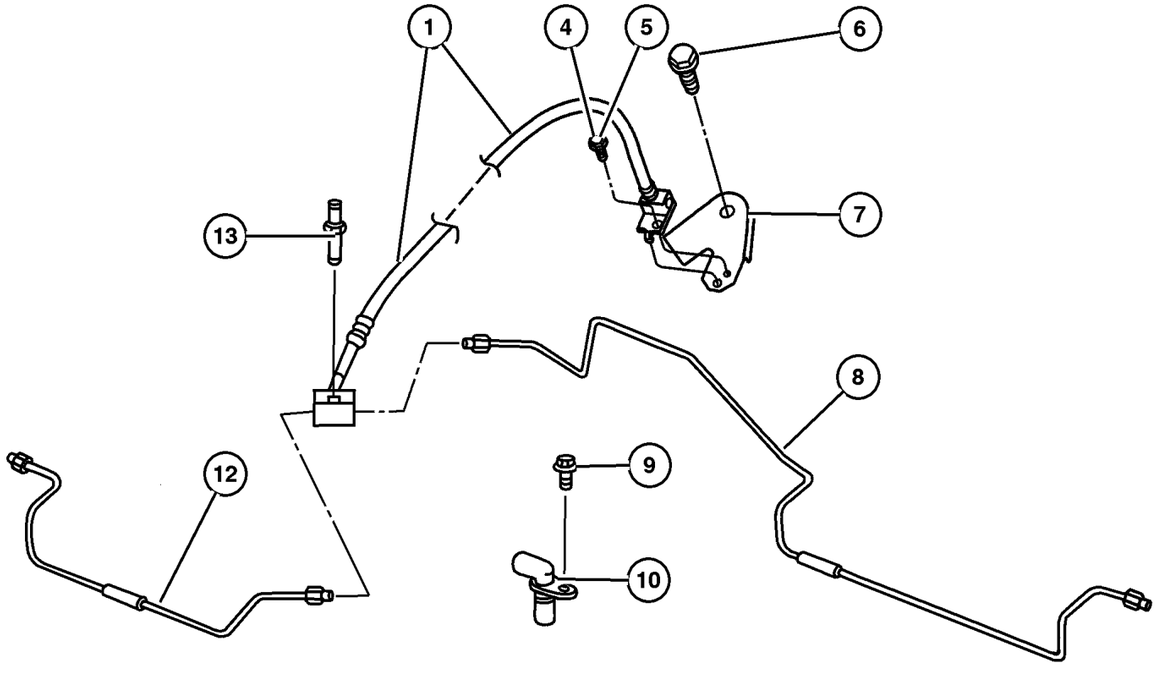

ITEM	PART NUMBER	QTY	LINE	SERIES	BODY	ENGINE	TRANS	TRIM	DESCRIPTION
Note: Sales Codes;									
[EN0]=Engines - All 4/5 Cylinder Turbo Diesel									
1	52128 310AA	1							HOSE, Brake, With Union and Tee
-2	6035 832	2							BOLT, Banjo, To Caliper, Mounting
-3	J323 7672	4							GASKET, Brake Hose To Caliper
4	6503 900	1							SCREW AND WASHER, Hex Head, M12x1.75x40, [EN0] Brake Hose Bracker to Left Rail, Mounting
5	6503 343	1							SCREW, Brake Hose Bracker to Left Rail, Mounting
6									SCREW, Hex Flange Head, M6x1.00x15.00, Hose to Frame Mounting, (NOT SERVICED) (Not Serviced)
7	52128 480AC	1							BRACKET, Brake Hose, [EN0]
8	52128 514AC	1							HOSE, Brake, Right
9	6501 979	1							SCREW AND WASHER, Hex Head, M6x1x17, Wheel Speed Sensor, Mounting
10	56041 393AA	1							SENSOR, Wheel Speed
-11	5086 373AA	1							O RING, Sensor, Mounting
12	52128 515AB	1							HOSE, Brake, Left
13	4137 696AB	1							BOLT, Axle Vent

JEEP LIBERTY (KJ)

SERIES	LINE	BODY	ENGINE	TRANSMISSION
P = Limited	J = LHD (4WD)	74 = 4 Dr (104.3 WB)	ED1,ED0 = 2.4L Power Tech	DDK = 5 Speed HDManual
H = Sport	U = RHD (4WD)		EKG,EK0 = 3.7L Power Tech	DDD = 5 Speed HD Manual
M = Renegade	T = LHD (2WD)		ENJ = 2.5L 4Cyl Turbo Diesel	DG4,DGQ = Multi-Speed Auto
			ENR = 2.8L 4Cyl Turbo Diesel	DG6 = 4 Speed Auto Transm
			EN0 = 4Cyl Turbo Diesel	DG0 = All Automatic Transm
				DBB = All Manual Transm

Pedals,Brake and Clutch
Figure 005-610

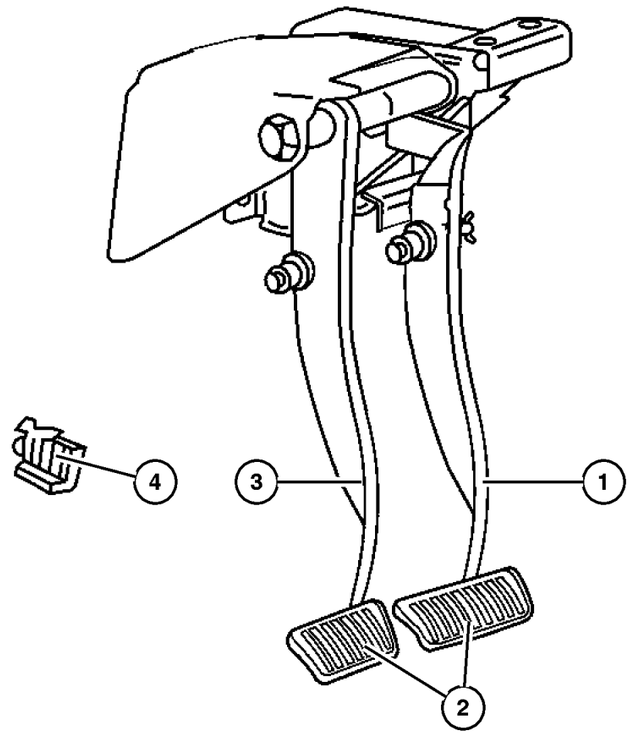

ITEM	PART NUMBER	QTY	LINE	SERIES	BODY	ENGINE	TRANS	TRIM	DESCRIPTION
Note:Sales Codes;									
DBB=Transmissions - All Manual									
DG0=Transmissions - All Automatic									
1									PEDAL, Brake
	52128 347AD	1	J, T						[DBB]
	52128 346AD	1	J, T						[DG0]
	52128 348AC	1	U						[DBB]
	52128 345AC	1	U						[DG0]
2									PAD, Pedal
	5200 9562	1	J, T						[DBB]
	4779 027	1	J, T						[DG0]
	5200 9562	1	U						[DBB]
	4779 027	1	U						[DG0]
3									PEDAL, Clutch
	52128 396AC	1	J, T						[DBB]
	52128 397AC	1	U						[DBB]
4	6035 334	1							CLIP, Brake Push Rod
-5									TAPE, Anti-Squeak
	5019 054AA	1	J, T						
		1	U						

JEEP LIBERTY (KJ)

SERIES	LINE	BODY	ENGINE	TRANSMISSION
P = Limited	J = LHD (4WD)	74 = 4 Dr (104.3 WB)	ED1,ED0 = 2.4L Power Tech	DDK = 5 Speed HDManual
H = Sport	U = RHD (4WD)		EKG,EK0 = 3.7L Power Tech	DDD = 5 Speed HD Manual
M = Renegade	T = LHD (2WD)		ENJ = 2.5L 4Cyl Turbo Diesel	DG4,DGQ = Multi-Speed Auto
			ENR = 2.8L 4Cyl Turbo Diesel	DG6 = 4 Speed Auto Transm
			EN0 = 4Cyl Turbo Diesel	DG0 = All Automatic Transm
				DBB = All Manual Transm

Group – 006
Clutch

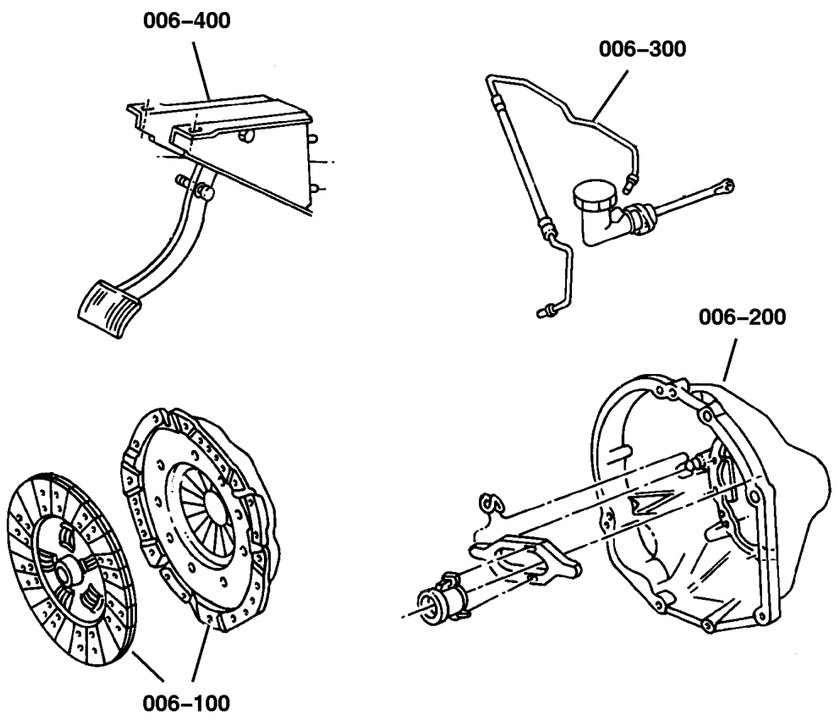

006–100 Clutch	006–200 Clutch Housing	006–300 Clutch Controls	006–400 Clutch Pedals
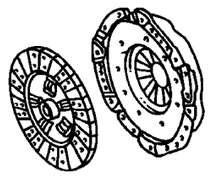	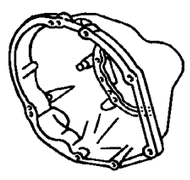	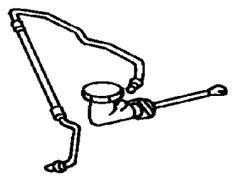	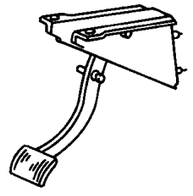

GROUP 6 - Clutch

Illustration Title	Group-Fig. No.
Clutch	
Clutch	Fig. 006-110
Clutch Housing	
Clutch Housing	Fig. 006-210
Clutch Controls	
Clutch Control	Fig. 006-320
Clutch Pedals	
Pedal Clutch	Fig. 006-420

Clutch
Figure 006-110

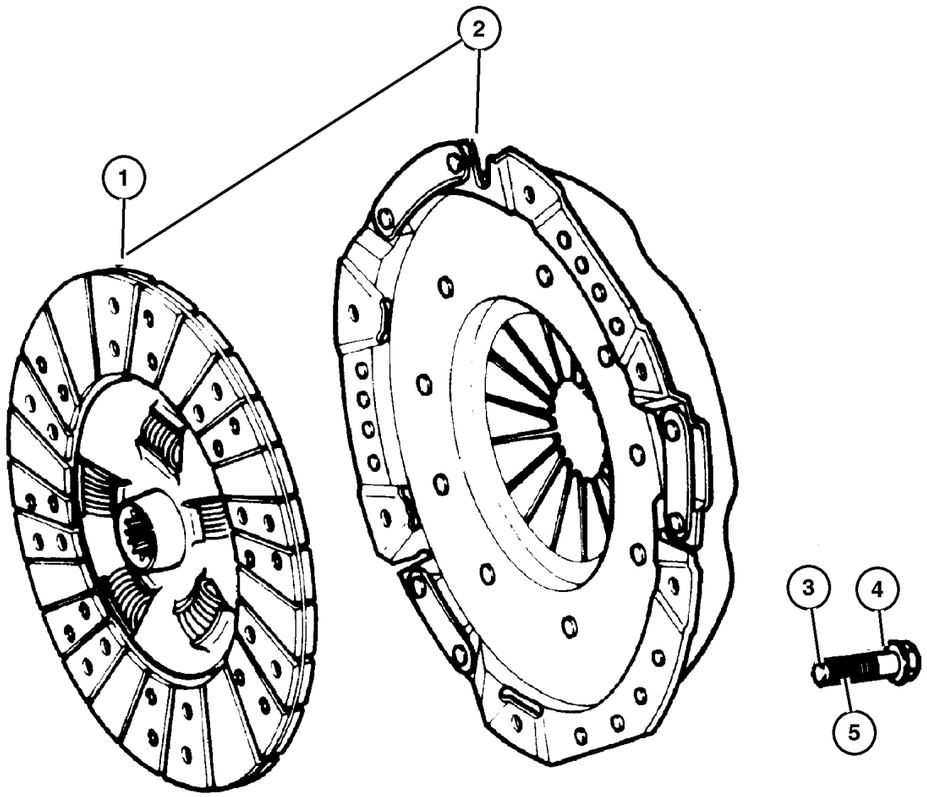

ITEM	PART NUMBER	QTY	LINE	SERIES	BODY	ENGINE	TRANS	TRIM	DESCRIPTION
NOTE; Sales Codes									
[DBB]= All Manual Transmissions									
[EKG]= Magnum 3.7L V6									
[ED0] = All 2.2,2.5,2.4L 4 Cylinder Gas Engines									
[EN0]= All 2.5L 4 Cylinder Turbo Diesel Engines									
1									DISC, Clutch
	52104 303AB	1				EN0	DBB		
	52104 315AC	1				EKG	DBB		
	52104 581AC	1				ED0	DBB		
2									CLUTCH PACKAGE
	5066 191AA	1				EN0	DBB		
	5066 375AC	1				EKG	DBB		
	5072 990AD	1				ED0	DBB		
3	6501 474	6				ED0	DBB		BOLT, Hex Head, M8x1.25x16
4	6035 626	6				EKG	DBB		BOLT, Hex Head, .375-16x.84
5	5072 664AA	8				EN0	DBB		BOLT

JEEP LIBERTY (KJ)

SERIES	LINE	BODY	ENGINE	TRANSMISSION
P = Limited	J = LHD (4WD)	74 = 4 Dr (104.3 WB)	ED1,ED0 = 2.4L Power Tech	DDK = 5 Speed HDManual
H = Sport	U = RHD (4WD)		EKG,EK0 = 3.7L Power Tech	DDD = 5 Speed HD Manual
M = Renegade	T = LHD (2WD)		ENJ = 2.5L 4Cyl Turbo Diesel	DG4,DGQ = Multi-Speed Auto
			ENR = 2.8L 4Cyl Turbo Diesel	DG6 = 4 Speed Auto Transm
			EN0 = 4Cyl Turbo Diesel	DG0 = All Automatic Transm
				DBB = All Manual Transm

Clutch Housing
Figure 006-210

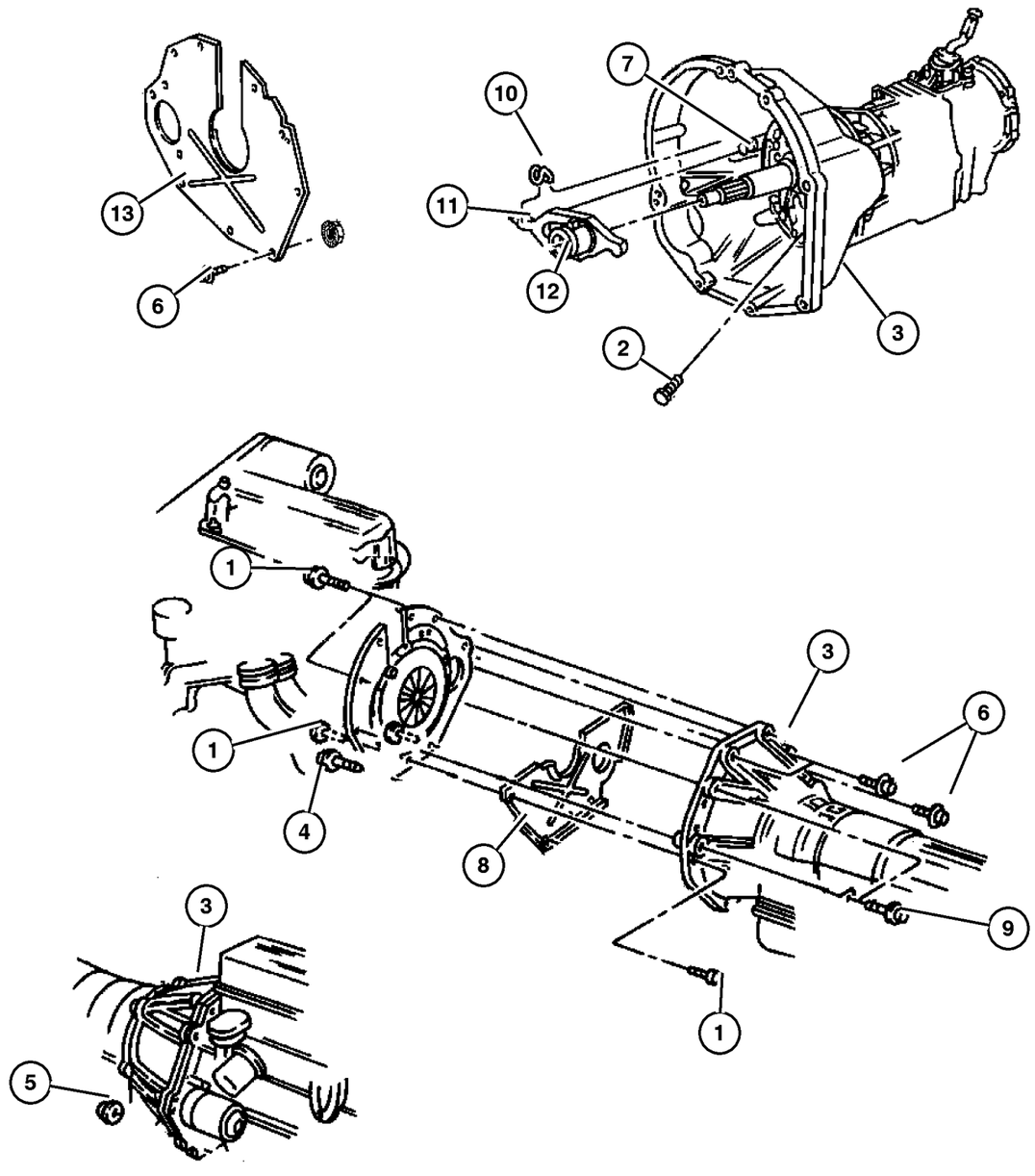

ITEM	PART NUMBER	QTY	LINE	SERIES	BODY	ENGINE	TRANS	TRIM	DESCRIPTION
NOTE; Sales Codes									
[DBB] = All Manual Transmissions									
[ED0]= All 2.2,2.5,2.4L 4 Cylinder Gas Engines									
[EKG] = Magnum 3.7L V6									
[EK0]= All 3.7L 6 Cylinder Gas Egines									
[EN0]= All 2.5L 4 Cylinder Turbo Diesel Engines									
1									SCREW, Hex Head, .375-16x1.5
	6022 266	4				EK0	DBB		
		5				EN0	DBB		
2	6503 299	9					DBB		BOLT, Hex Head
3									HOUSING, Clutch
	52104 292AA	1				ED0	DBB		
	52104 294AB	1				EKG, EN0	DBB		
4	0154 877AA	1				EN0	DBB		SCREW AND WASHER, Hex Head
5	6036 385AA	2				EK0	DBB		SCREW AND WASHER, Hex Head, .437-14x2.00
6	6501 742	4				ED0	DBB		SCREW, Hex Head, M12x1.75x50
7									PIVOT, Clutch Release
	5208 7542	1				ED0	DBB		
		1				EKG, EN0	DBB		
8									COVER, Engine
	53021 282AA	1				EK0			
	52104 339AC	1				ED0	DBB		
9									SCREW, Hex Head, .375-16x1.5
	6022 266	4				EK0	DBB		
		5				EN0	DBB		
10	4338 855	1					DBB		SPRING, Clutch Release
11	5210 7555	1					DBB		FORK, Clutch Release
12	53008 342AB	1					DBB		BEARING, Clutch Release
13									SPACER
	52104 336AA	1				EKG	DBB		
	52104 293AB	1				ED0	DBB		

JEEP LIBERTY (KJ)

SERIES	LINE	BODY	ENGINE	TRANSMISSION
P = Limited	J = LHD (4WD)	74 = 4 Dr (104.3 WB)	ED1,ED0 = 2.4L Power Tech	DDK = 5 Speed HDManual
H = Sport	U = RHD (4WD)		EKG,EK0 = 3.7L Power Tech	DDD = 5 Speed HD Manual
M = Renegade	T = LHD (2WD)		ENJ = 2.5L 4Cyl Turbo Diesel	DG4,DGQ = Multi-Speed Auto
			ENR = 2.8L 4Cyl Turbo Diesel	DG6 = 4 Speed Auto Transm
			EN0 = 4Cyl Turbo Diesel	DG0 = All Automatic Transm
				DBB = All Manual Transm

AR = Use as required - = Non illustrated part # = New this model year

September 30, 2003

« RETURN TO GROUP INDEX

Clutch Control
Figure 006-320

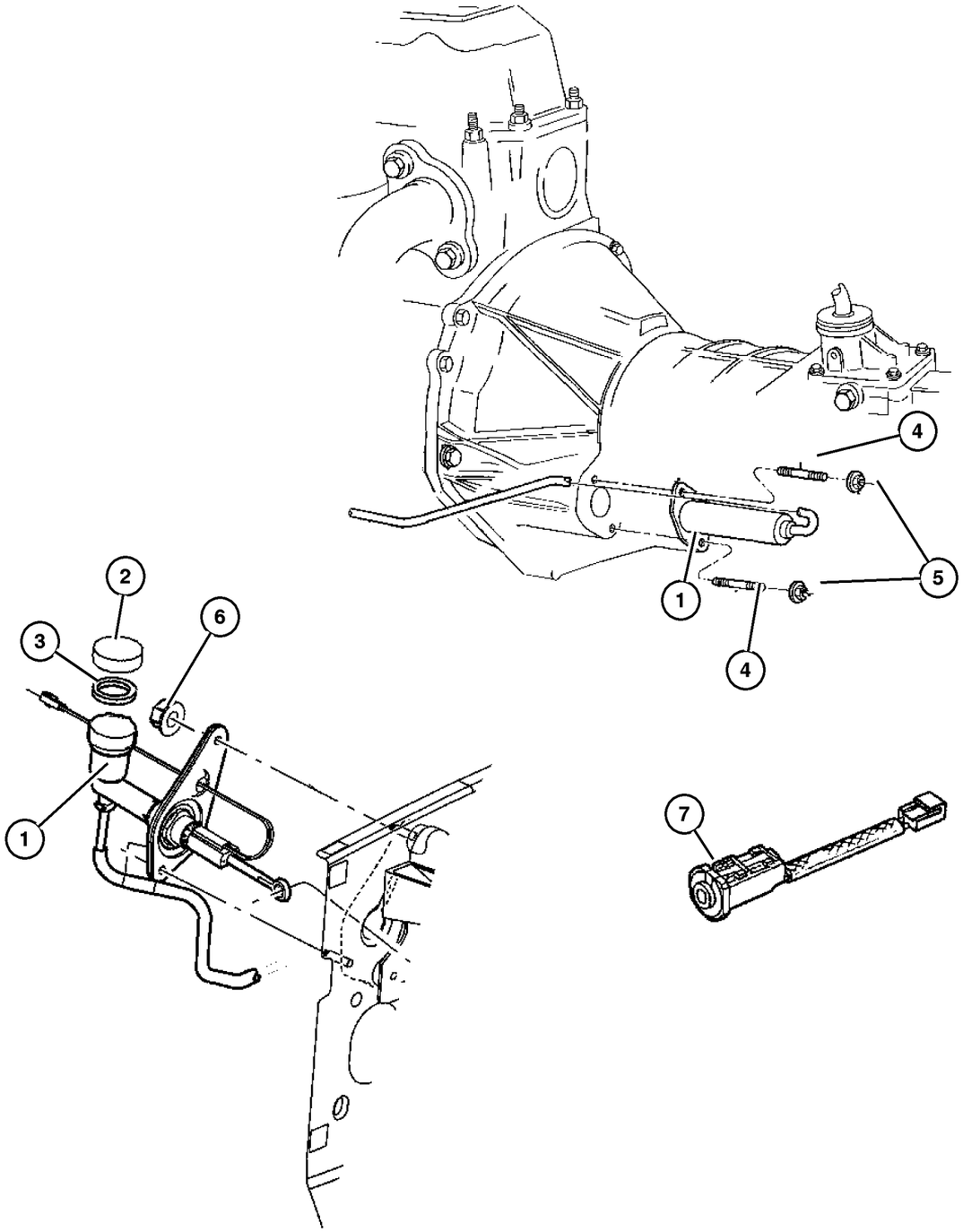

ITEM	PART NUMBER	QTY	LINE	SERIES	BODY	ENGINE	TRANS	TRIM	DESCRIPTION
NOTE; Sales Codes									
[DBB] = All Manual Transmissions									
[DG0] = All Automatic Transmissions									
[ED0] = All 2.2,2.5,2.4,L 4 Cylinder Gas Engines									
[EKG] = Magnum 3.7L V6 Engine									
[EN0] = All 4/5 Turbo Diesel Engines									
1									HYDRAULIC CONTROL, Clutch Actuator
	52104 298AB	1	U			ED0, EKG	DBB		
	52104 299AD	1	U			EN0	DBB		
	52109 746AA	1	J, T			ED0, EK0	DBB		
		1	J, T			EN0	DBB		
2									CAP, Clutch Reservoir
	4883 544AA	1	U			ED0, EKG	DBB		
		1	U			EN0	DBB		
		1	J, T			ED0, EK0	DBB		
		1	J, T			EN0	DBB		
3									DIAPHRAGM, Clutch Reservoir
	5015 607AA	1	U			ED0, EKG	DBB		
		1	U			EN0	DBB		
		1	J, T			ED0, EK0	DBB		
		1	J, T			EN0	DBB		
4	6036 379AA	2					DBB		STUD, .312-18x2.00
5	0152 472	2	J, U				DBB		NUT, Hex Flange Lock, .312-18
6	6504 175	2					DBB		NUT AND WASHER, Hex, M8x1.25
7									SWITCH, Clutch Starter Interlock
	56010 330AA	1	U			ED0, EKG	DBB		
		1	J, T			ED0, EK0	DBB		
		1	J, T			EN0	DBB		
		1	U			EN0	DBB		

JEEP LIBERTY (KJ)

SERIES	LINE	BODY	ENGINE	TRANSMISSION
P = Limited	J = LHD (4WD)	74 = 4 Dr (104.3 WB)	ED1,ED0 = 2.4L Power Tech	DDK = 5 Speed HDManual
H = Sport	U = RHD (4WD)		EKG,EK0 = 3.7L Power Tech	DDD = 5 Speed HD Manual
M = Renegade	T = LHD (2WD)		ENJ = 2.5L 4Cyl Turbo Diesel	DG4,DGQ = Multi-Speed Auto
			ENR = 2.8L 4Cyl Turbo Diesel	DG6 = 4 Speed Auto Transm
			EN0 = 4Cyl Turbo Diesel	DG0 = All Automatic Transm
				DBB = All Manual Transm

AR = Use as required - = Non illustrated part # = New this model year

September 30, 2003

« RETURN TO GROUP INDEX

Pedal Clutch
Figure 006-420

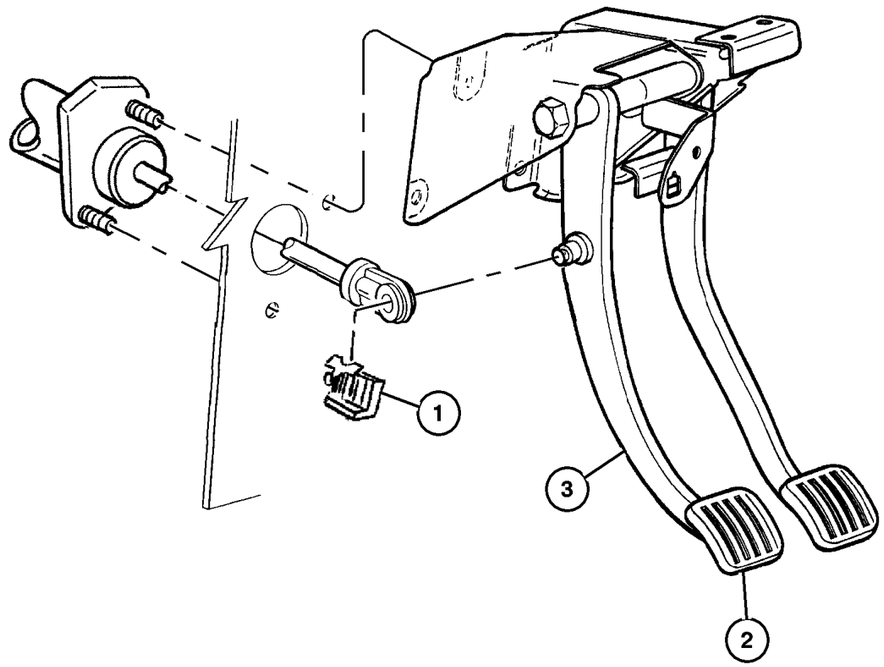

ITEM	PART NUMBER	QTY	LINE	SERIES	BODY	ENGINE	TRANS	TRIM	DESCRIPTION
Notes; Sales Codes									
[DBB] = All Manual Transmissions									
1	4643 448	1	J, T			ED0, EK0	DBB		BUSHING, Hydraulic Clutch Actuator
2	5200 9562	1	J, T				DBB		PAD, Pedal
3									PEDAL, Clutch
	52128 396AC	1	J, T				DBB		
	52128 397AC	1	U				DBB		

JEEP LIBERTY (KJ)

SERIES	LINE	BODY	ENGINE	TRANSMISSION
P = Limited	J = LHD (4WD)	74 = 4 Dr (104.3 WB)	ED1,ED0 = 2.4L Power Tech	DDK = 5 Speed HDManual
H = Sport	U = RHD (4WD)		EKG,EK0 = 3.7L Power Tech	DDD = 5 Speed HD Manual
M = Renegade	T = LHD (2WD)		ENJ = 2.5L 4Cyl Turbo Diesel	DG4,DGQ = Multi-Speed Auto
			ENR = 2.8L 4Cyl Turbo Diesel	DG6 = 4 Speed Auto Transm
			EN0 = 4Cyl Turbo Diesel	DG0 = All Automatic Transm
				DBB = All Manual Transm

Group – 007
Cooling

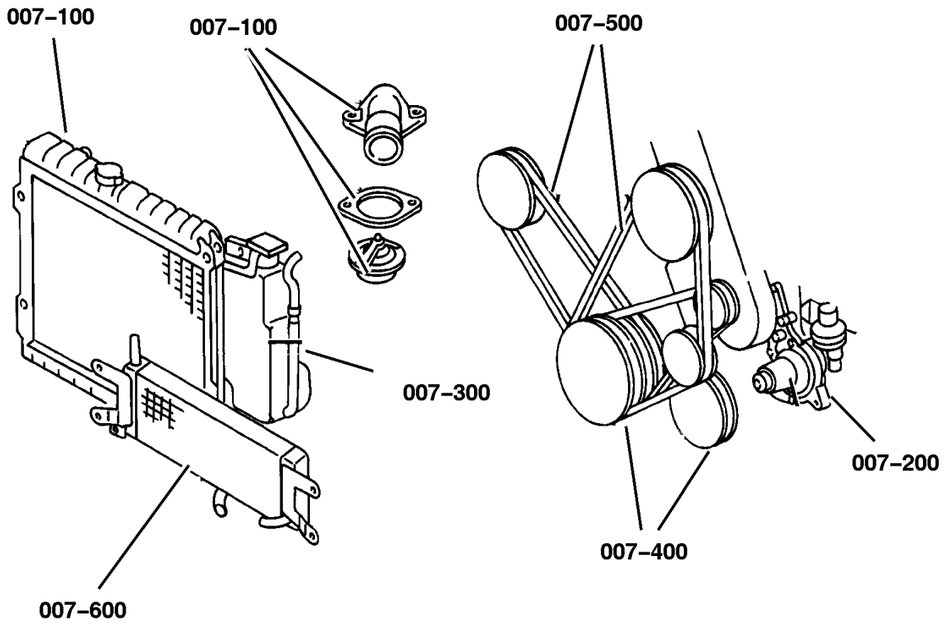

007–100 Radiator and Related Parts	**007–200** Water Pump and Related Parts	**007–300** Tank, Coolant Engine	**007–400** Pulleys and Related Parts
007–500 Drive Belts	**007–600** Lines, Transmission Oil Cooler	**007–700** Grilles	

GROUP 7 - Cooling

Illustration Title — Group-Fig. No.

Radiator and Related Parts
- Radiator and Related Parts, 2.4L Engine . . . . . Fig. 007-110
- Radiator and Related Parts, 3.7L Engine . . . . . Fig. 007-120
- Radiator and Related Parts, 2.5,2.8L Diesel Engine . . . . . Fig. 007-130

Water Pump and Related Parts
- Water Pump and Related Parts, 2.4L Engine . . . . . Fig. 007-210
- Water Pump and Related Parts, 3.7L Engine . . . . . Fig. 007-220
- Water Pump and Related Parts, 2.5,2.8L Diesel Engine . . . . . Fig. 007-230

Tank, Coolant Engine
- Coolant Tank, 2.4L Engine . . . . . Fig. 007-305
- Coolant Tank, 3.7L Engine . . . . . Fig. 007-310
- Coolant Degasser Tank, 2.5,2.8L Diesel Engine . . . . . Fig. 007-320

Pulleys and Related Parts
- Drive Pulleys, 2.4L Engine . . . . . Fig. 007-410
- Drive Pulleys, 3.7L Engine . . . . . Fig. 007-420
- Drive Pulleys, 2.5,2.8L Diesel Engine . . . . . Fig. 007-430

Drive Belts
- Drive Belts, 2.4L Engine . . . . . Fig. 007-510
- Drive Belts, 3.7L Engine . . . . . Fig. 007-520
- Drive Belts, 2.5,2.8L Diesel Engine . . . . . Fig. 007-530

Lines, Transmission Oil Cooler
- Oil Cooler Lines . . . . . Fig. 007-610

Grilles
- Grille and Related Parts . . . . . Fig. 007-710

Radiator and Related Parts, 2.4L Engine
Figure 007-110

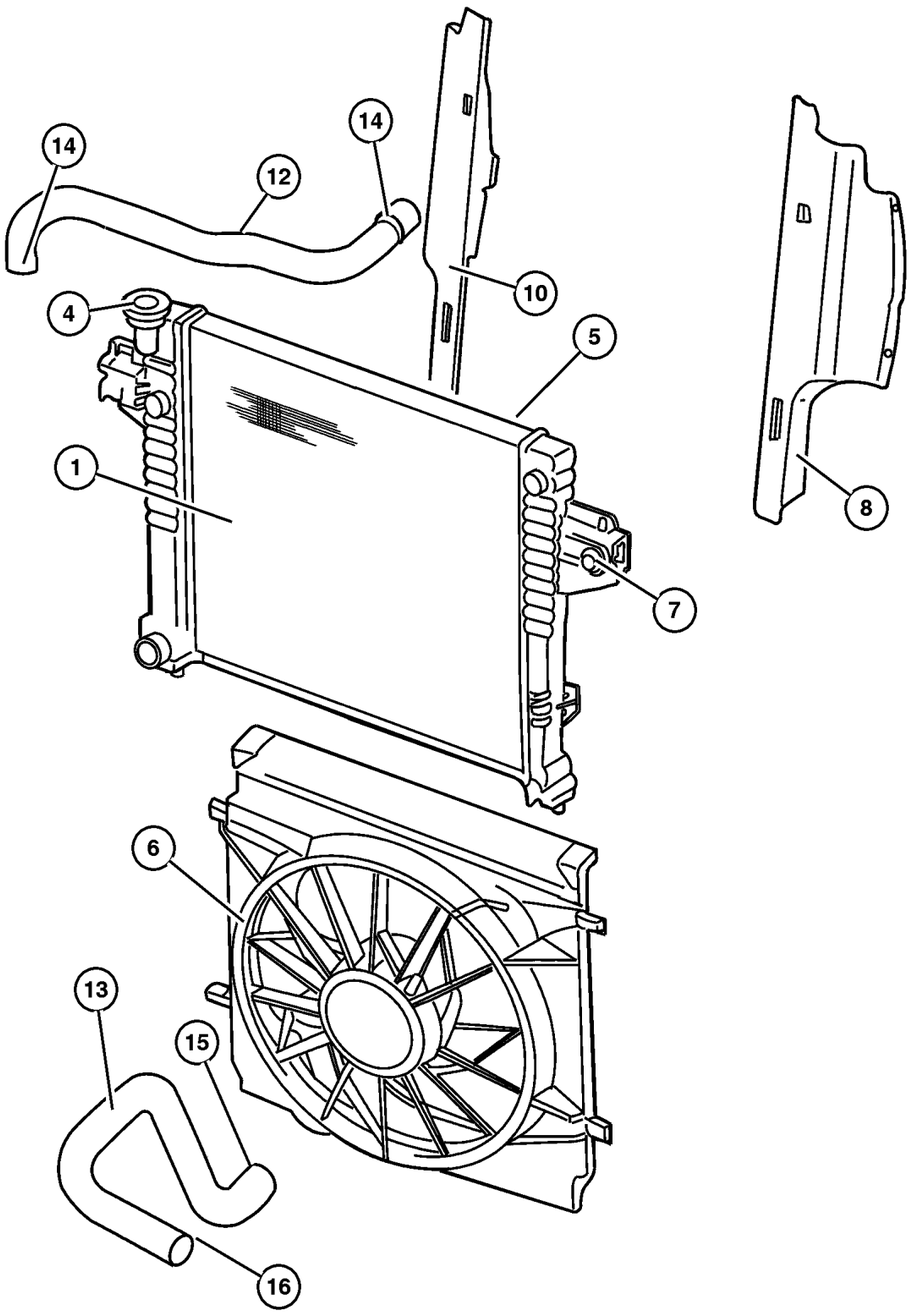

ITEM	PART NUMBER	QTY	LINE	SERIES	BODY	ENGINE	TRANS	TRIM	DESCRIPTION
Note; Sales Codes									
[ED0]= All 2.2L, 2.5L, 2.4L, 4 Cylinder Gas Engines									
[DBB]= Manual Trans.									
1									RADIATOR, Engine Cooling
	52079 731AC	1				ED0	DBB		Without Air Conditioing
	52080 123AC	1				ED0	DBB		With Air Conditioing
-2	55176 756AD	1							SUPPORT, Radiator
-3	55176 763AE	1							CROSSMEMBER, Radiator
4									CAP, Radiator
	52079 799AA	1				ED0	DBB		Without Air Conditioing
	55116 901AA	1				ED0	DBB		With Air Conditioing
5									ISOLATOR, Radiator
	52079 651AA	2				ED0	DBB		Upper
	52079 666AA	2				ED0	DBB		Lower
6	55037 659AA	1				ED0	DBB		FAN MODULE, Radiator Cooling
7									BOLT AND CONED WASHER, Hex Head, M6x14x12.5, (NOT SERVICED) (Not Serviced)
8	52079 766AD	1				ED0	DBB		SEAL, Radiator Side Air
-9	6036 155AA	3				ED0	DBB		PIN, Push
10	52079 767AE	1				ED0	DBB		SEAL, Radiator Side Air
-11	J400 4262	4				ED0	DBB		PIN, Push, .15x.41
12	52079 713AB	1				ED0			HOSE, Radiator Outlet
13	52079 706AA	1				ED0			HOSE, Radiator Inlet
14	6033 135	1				ED0			CLAMP
15	3200 2983	1				ED0			CLAMP, Hose, 32mm Black
16	6033 135	1				ED0			CLAMP
-17	53010 552AA	1				ED0			THERMOSTAT
-18	6503 334	1				ED0			BOLT, Hex Flange Head, M8x1. 25x28, Thermostat Housing attaching
-19	53010 554AA	1				ED0			GASKET, Thermostat
-20	53010 553AB	1				ED0			HOUSING, Thermostat
-21	4644 269	1				ED0	DBB		DRAINCOCK, Radiator
-22	4781 489AA	1				ED0			CONNECTOR, Water Outlet

JEEP LIBERTY (KJ)

SERIES	LINE	BODY	ENGINE	TRANSMISSION
P = Limited	J = LHD (4WD)	74 = 4 Dr (104.3 WB)	ED1,ED0 = 2.4L Power Tech	DDK = 5 Speed HDManual
H = Sport	U = RHD (4WD)		EKG,EK0 = 3.7L Power Tech	DDD = 5 Speed HD Manual
M = Renegade	T = LHD (2WD)		ENJ = 2.5L 4Cyl Turbo Diesel	DG4,DGQ = Multi-Speed Auto
			ENR = 2.8L 4Cyl Turbo Diesel	DG6 = 4 Speed Auto Transm
			EN0 = 4Cyl Turbo Diesel	DG0 = All Automatic Transm
				DBB = All Manual Transm

Radiator and Related Parts, 3.7L Engine
Figure 007-120

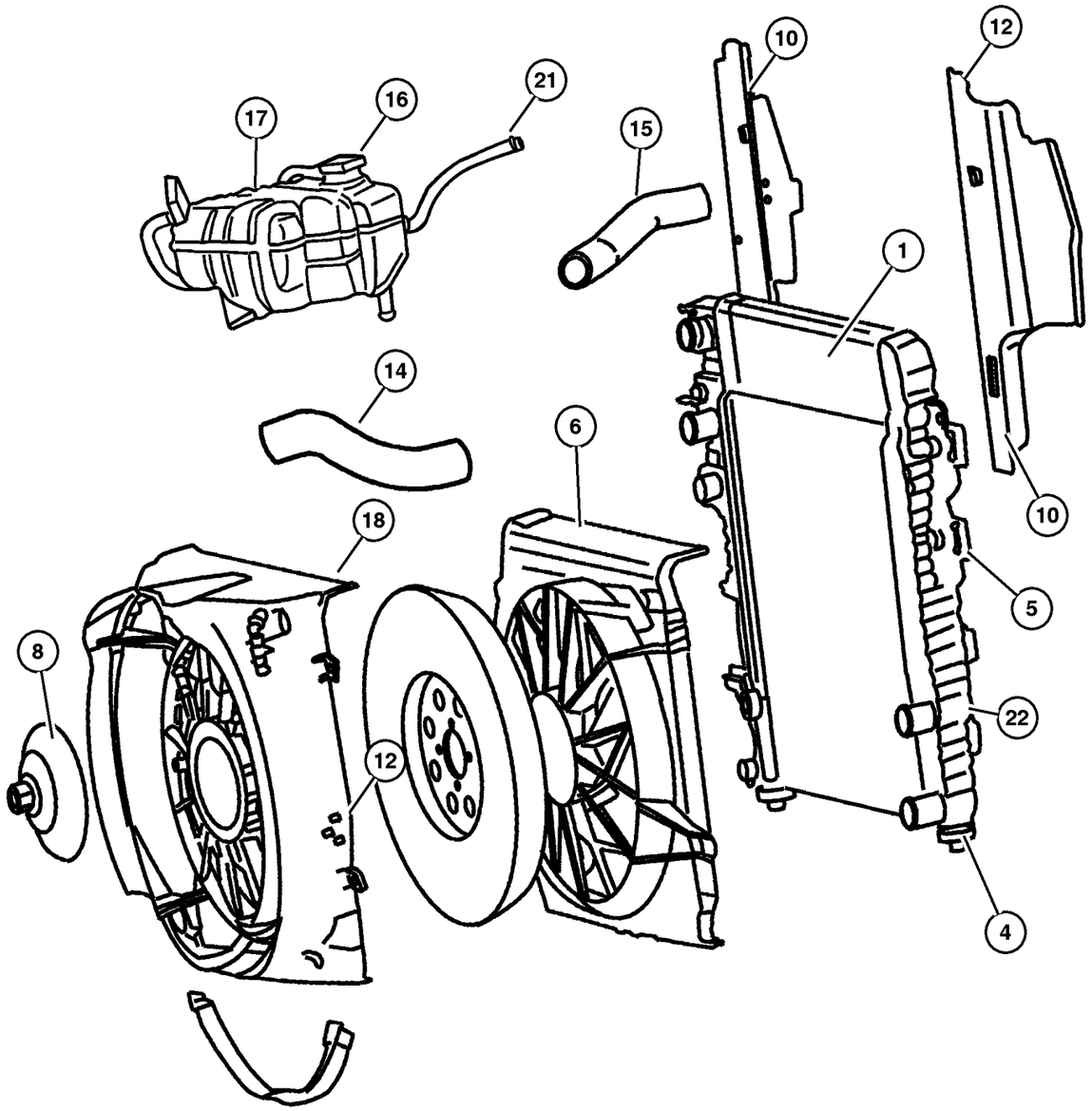

ITEM	PART NUMBER	QTY	LINE	SERIES	BODY	ENGINE	TRANS	TRIM	DESCRIPTION
Note; Sales Codes									
[EK0]= All 3.7L, 6 Cylinder Gas Engines									
[DBB]= Manual Trans									
[DG0]= Auto Trans									
1									RADIATOR, Engine Cooling
	52080 120AC	1				EK0	DG0		[HAA]
		1				EK0	DBB		[HAA]
	52079 729AC	1				EK0	DG0		[HC0]
		1				EK0	DBB		[HC0]
-2	55176 756AD	1							SUPPORT, Radiator, Lower
-3	55176 763AE	1							CROSSMEMBER, Radiator
4									ISOLATOR, Radiator
	52079 651AA	2				EK0	DG0		
		2				EK0	DBB		
5									CONDENSER, Air Conditioning
	55037 465AB	1				EK0	DG0		
		1				EK0	DBB		
6									FAN MODULE, Radiator Cooling
	55037 659AA	1				EK0	DG0		
		1				EK0	DBB		
-7									FAN, Cooling, Electric
	#55037 691AA	1				EK0	DBB		With Max Cooling [NMC]
		1				EK0	DG0		With Max Cooling [NMC]
8	52079 718AD	1				EK0			DRIVE, Fan, Viscous
-9	52079 654AD	1				EK0			FAN, Cooling, Mechanical
10									SEAL, Radiator Side Air
	52079 766AD	1				EK0	DG0		
		1				EK0	DBB		
-11	6036 155AA	6							PIN, Push
12									SEAL, Radiator Side Air
	52079 767AE	1				EK0	DG0		
		1				EK0	DBB		
-13									PIN, Push, .15x.41
	J400 4262	4				EK0	DBB		
		4				EK0	DG0		
14	52079 703AA	1				EK0			HOSE, Radiator Inlet
15	52079 712AB	1				EK0			HOSE, Radiator Outlet
16	5207 9331	1				ED0			CAP, Coolant Reserve Tank
17	52079 848AA	1				EK0			BOTTLE, Coolant Recovery
18									SHROUD, Fan
	52080 127AA	1				EK0	DG0		

JEEP LIBERTY (KJ)

SERIES	LINE	BODY	ENGINE	TRANSMISSION
P = Limited	J = LHD (4WD)	74 = 4 Dr (104.3 WB)	ED1,ED0 = 2.4L Power Tech	DDK = 5 Speed HDManual
H = Sport	U = RHD (4WD)		EKG,EK0 = 3.7L Power Tech	DDD = 5 Speed HD Manual
M = Renegade	T = LHD (2WD)		ENJ = 2.5L 4Cyl Turbo Diesel	DG4,DGQ = Multi-Speed Auto
			ENR = 2.8L 4Cyl Turbo Diesel	DG6 = 4 Speed Auto Transm
			EN0 = 4Cyl Turbo Diesel	DG0 = All Automatic Transm
				DBB = All Manual Transm

Radiator and Related Parts, 3.7L Engine
Figure 007-120

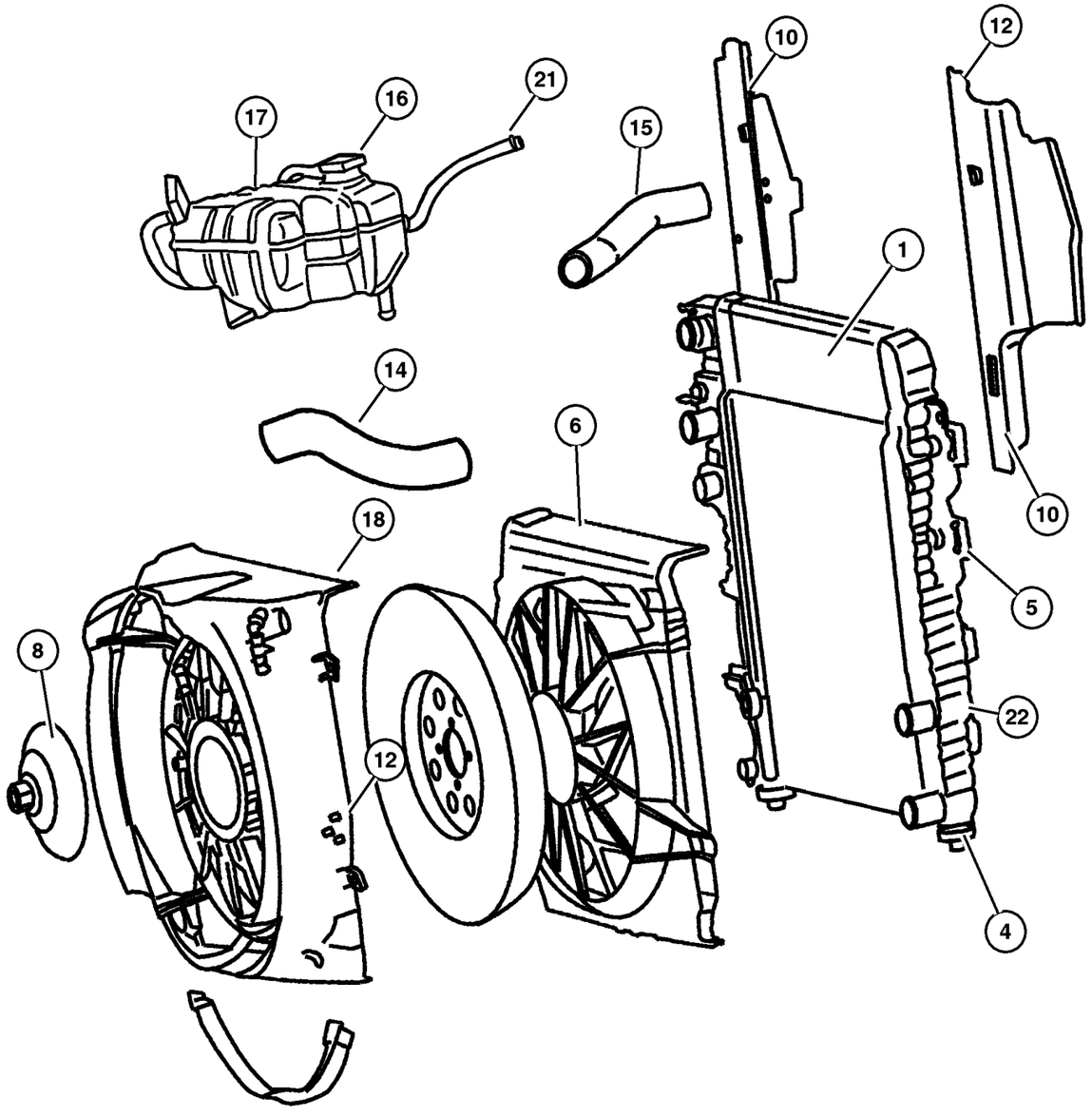

ITEM	PART NUMBER	QTY	LINE	SERIES	BODY	ENGINE	TRANS	TRIM	DESCRIPTION
		1				EK0	DBB		
-19	4644 269	1				EK0	DG0		DRAINCOCK, Radiator
-20	53020 887AB	1				EK0			HOUSING, Thermostat
21	55037 642AB	1				EK0			CLIP, Hose
22	52079 697AB	1				EK0	DG0		COOLER, Auxiliary Trans. Oil

JEEP LIBERTY (KJ)

SERIES	LINE	BODY	ENGINE	TRANSMISSION
P = Limited	J = LHD (4WD)	74 = 4 Dr (104.3 WB)	ED1,ED0 = 2.4L Power Tech	DDK = 5 Speed HDManual
H = Sport	U = RHD (4WD)		EKG,EK0 = 3.7L Power Tech	DDD = 5 Speed HD Manual
M = Renegade	T = LHD (2WD)		ENJ = 2.5L 4Cyl Turbo Diesel	DG4,DGQ = Multi-Speed Auto
			ENR = 2.8L 4Cyl Turbo Diesel	DG6 = 4 Speed Auto Transm
			EN0 = 4Cyl Turbo Diesel	DG0 = All Automatic Transm
				DBB = All Manual Transm

AR = Use as required - = Non illustrated part # = New this model year

September 30, 2003

« RETURN TO GROUP INDEX

Radiator and Related Parts, 2.5,2.8L Diesel Engine
Figure 007-130

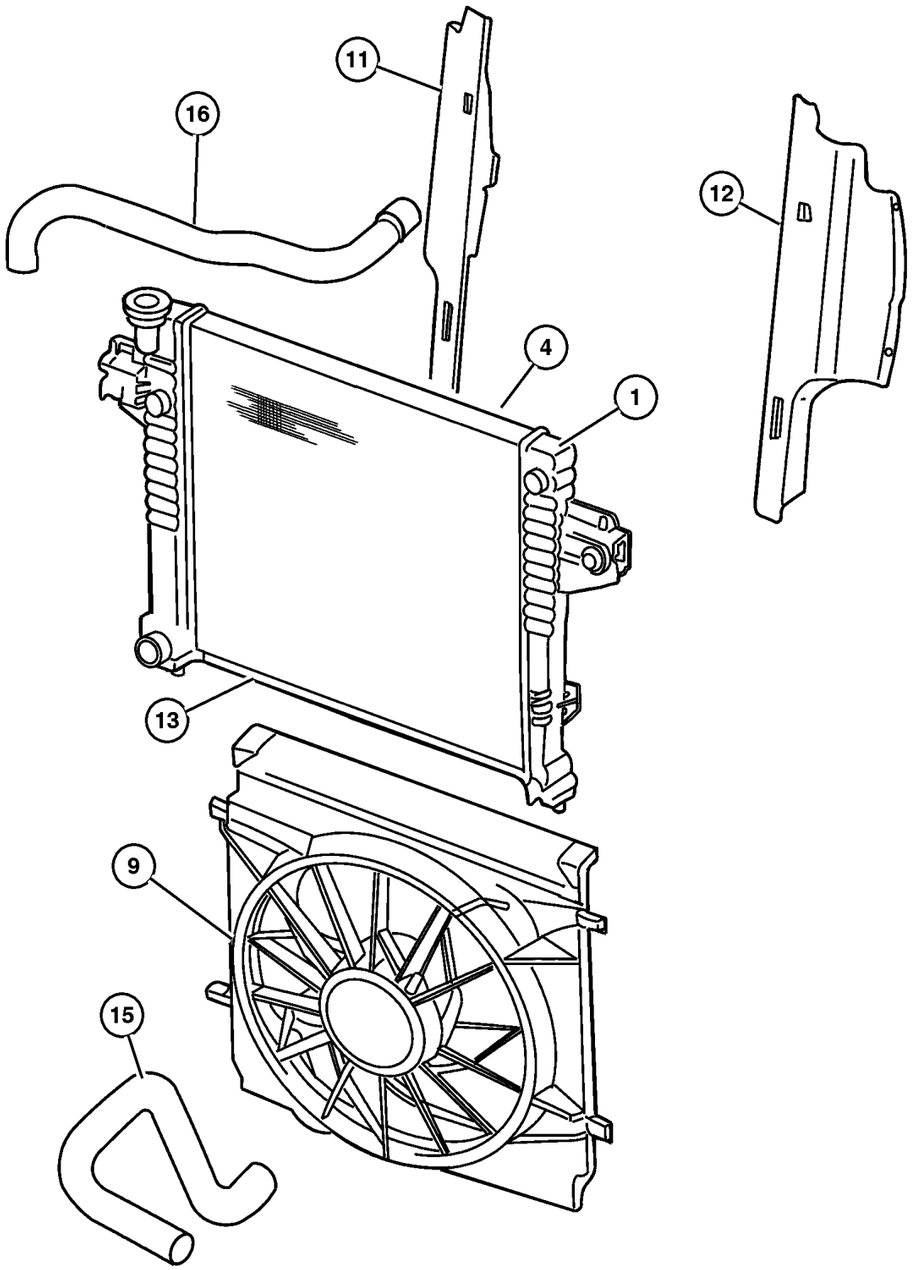

ITEM	PART NUMBER	QTY	LINE	SERIES	BODY	ENGINE	TRANS	TRIM	DESCRIPTION
Note; Sales Codes									
[EN0]= All 4 Cylinder Diesel Engine									
[DBB]= Manual Trans									
1									RADIATOR, Engine Cooling
	52079 747AB	1				EN0	DBB		
		1				EN0	DG0		
-2	55176 756AD	1							SUPPORT, Radiator
-3	55176 763AE	1							CROSSMEMBER, Radiator
4									CONDENSER, Air Conditioning
	55037 465AB	1				EN0	DBB		
		1				EN0	DG0		
-5									COOLER, Charge Air
	52079 700AB	1				EN0	DBB		
		1				EN0	DG0		
-6	6034 399	1				EN0			CLAMP, Charge Cooler Inlet
-7									HOSE, Charge Air Cooler
	52079 800AC	1				EN0			Inlet
	52079 801AD	1				EN0			Outlet
-8	55037 700AA	1				EN0	DG0		COOLER, Auxiliary Trans. Oil
9									SHROUD, Fan
	52079 674AB	1				EN0	DBB		
		1				EN0	DG0		
-10	52079 879AB	1				EN0			SHROUD, Fan, Door
11									SEAL, Radiator Side Air
	52079 766AD	1				EN0	DBB		
		1				EN0	DG0		
12									SEAL, Radiator
	52079 760AA	1				EN0	DBB		
		1				EN0	DG0		
13									SEAL, Radiator
	52079 760AA	1				EN0	DBB		
		1				EN0	DG0		
-14									PIN, Push, .15x.41
	J400 4262	4				EN0	DBB		
		4				EN0	DG0		
15	52079 716AB	1				EN0			HOSE, Radiator Outlet
16	52079 708AA	1	J, U			EN0			HOSE, Radiator Inlet
-17	52079 727AA	1				EN0			FAN, Cooling
-18	55037 688AA	1				EN0			DRIVE, Fan, Viscous

JEEP LIBERTY (KJ)

SERIES	LINE	BODY	ENGINE	TRANSMISSION
P = Limited	J = LHD (4WD)	74 = 4 Dr (104.3 WB)	ED1,ED0 = 2.4L Power Tech	DDK = 5 Speed HDManual
H = Sport	U = RHD (4WD)		EKG,EK0 = 3.7L Power Tech	DDD = 5 Speed HD Manual
M = Renegade	T = LHD (2WD)		ENJ = 2.5L 4Cyl Turbo Diesel	DG4,DGQ = Multi-Speed Auto
			ENR = 2.8L 4Cyl Turbo Diesel	DG6 = 4 Speed Auto Transm
			EN0 = 4Cyl Turbo Diesel	DG0 = All Automatic Transm
				DBB = All Manual Transm

Water Pump and Related Parts, 2.4L Engine
Figure 007-210

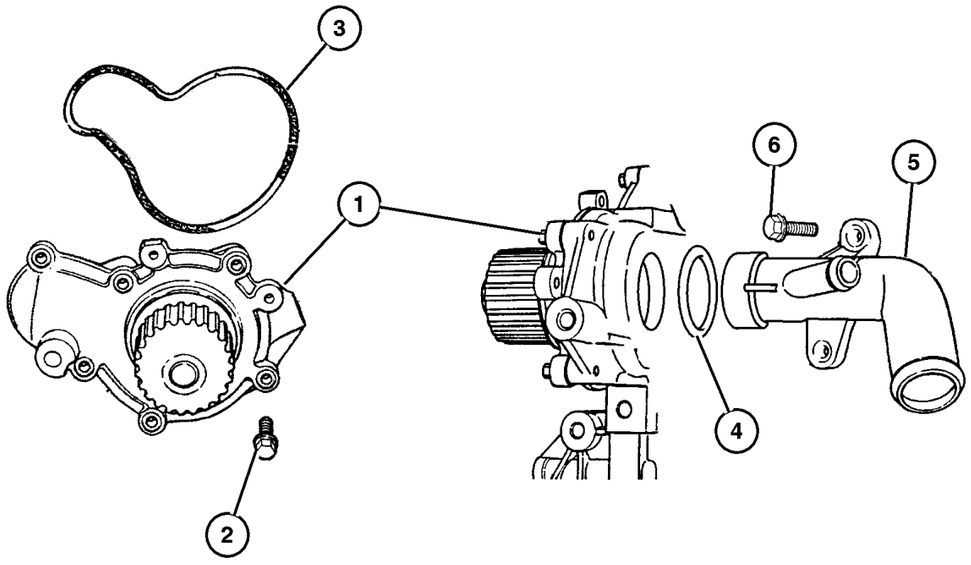

ITEM	PART NUMBER	QTY	LINE	SERIES	BODY	ENGINE	TRANS	TRIM	DESCRIPTION
Note; Sales Codes									
[ED0]= All 2.2L, 2.5L, 2.4L, 4 C									
[EK0]= All 3.7L, 6 Cylinder Gas Engines									
1	4694 307AC	1				ED0			PUMP, Water
2	6503 255	4				ED0			BOLT, Hex Head, M6x1.0x22
3	4621 564	1				ED0			SEAL, Water Pump Body
4	6503 180	1				ED0			O RING, Water Inlet Tube
5	53010 517AC	1				ED0			TUBE, Water Pump Inlet
6	6506 770AA	5				ED0			SCREW

JEEP LIBERTY (KJ)

SERIES	LINE	BODY	ENGINE	TRANSMISSION
P = Limited	J = LHD (4WD)	74 = 4 Dr (104.3 WB)	ED1,ED0 = 2.4L Power Tech	DDK = 5 Speed HDManual
H = Sport	U = RHD (4WD)		EKG,EK0 = 3.7L Power Tech	DDD = 5 Speed HD Manual
M = Renegade	T = LHD (2WD)		ENJ = 2.5L 4Cyl Turbo Diesel	DG4,DGQ = Multi-Speed Auto
			ENR = 2.8L 4Cyl Turbo Diesel	DG6 = 4 Speed Auto Transm
			EN0 = 4Cyl Turbo Diesel	DG0 = All Automatic Transm
				DBB = All Manual Transm

Water Pump and Related Parts, 3.7L Engine
Figure 007-220

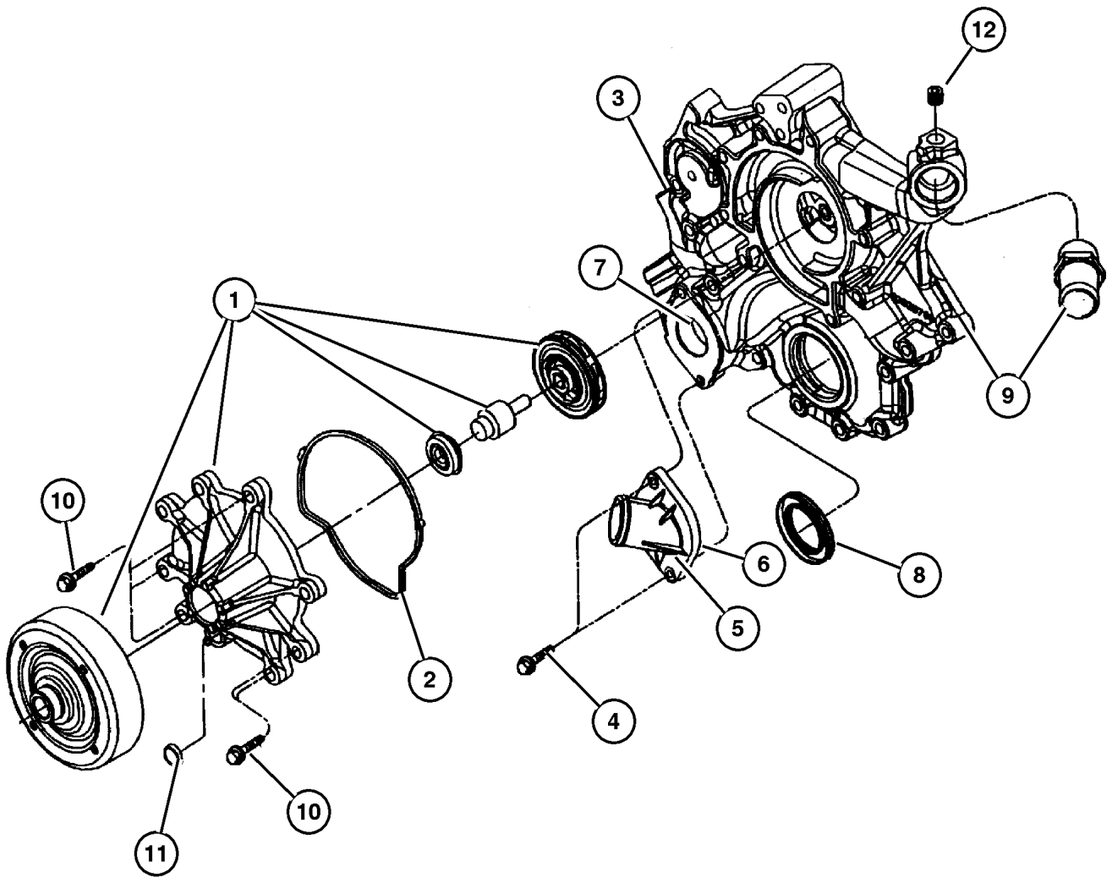

ITEM	PART NUMBER	QTY	LINE	SERIES	BODY	ENGINE	TRANS	TRIM	DESCRIPTION
Note; Sales Codes									
[ED0]= All 2.2L, 2.5L, 2.4L, 4 C									
[EK0]= All 3.7L, 6 Cylinder Gas Engines									
1	53021 187AA	1				EK0			PUMP, Water
2	5302 0865	1				EK0			GASKET, Water Pump
3	6035 854	2				EK0			FITTING, Y-Style
4	6505 502AA	2				EK0			SCREW
5	53020 887AB	1				EK0			HOUSING, Thermostat
6									GASKET, Thermostat, Use RTV Sealer, (NOT SERVICED) (Not Serviced)
7	52079 476AC	1				EK0			THERMOSTAT
8	53021 313AA	1				EK0			SEAL, Crankshaft Oil, Front
9	53021 238AB	1				EK0			COVER, Timing Belt
10	6102 380AA	5				EK0			SCREW, Hex Flange Head
11									PLUG, (NOT SERVICED) (Not Serviced)
12									PLUG, (NOT SERVICED) (Not Serviced)
-13	53013 505AA	1				EK0			CAP, Water Pump Pulley

JEEP LIBERTY (KJ)

SERIES	LINE	BODY	ENGINE	TRANSMISSION
P = Limited	J = LHD (4WD)	74 = 4 Dr (104.3 WB)	ED1,ED0 = 2.4L Power Tech	DDK = 5 Speed HDManual
H = Sport	U = RHD (4WD)		EKG,EK0 = 3.7L Power Tech	DDD = 5 Speed HD Manual
M = Renegade	T = LHD (2WD)		ENJ = 2.5L 4Cyl Turbo Diesel	DG4,DGQ = Multi-Speed Auto
			ENR = 2.8L 4Cyl Turbo Diesel	DG6 = 4 Speed Auto Transm
			EN0 = 4Cyl Turbo Diesel	DG0 = All Automatic Transm
				DBB = All Manual Transm

AR = Use as required - = Non illustrated part # = New this model year **September 30, 2003**

« RETURN TO GROUP INDEX

Water Pump and Related Parts, 2.5,2.8L Diesel Engine
Figure 007-230

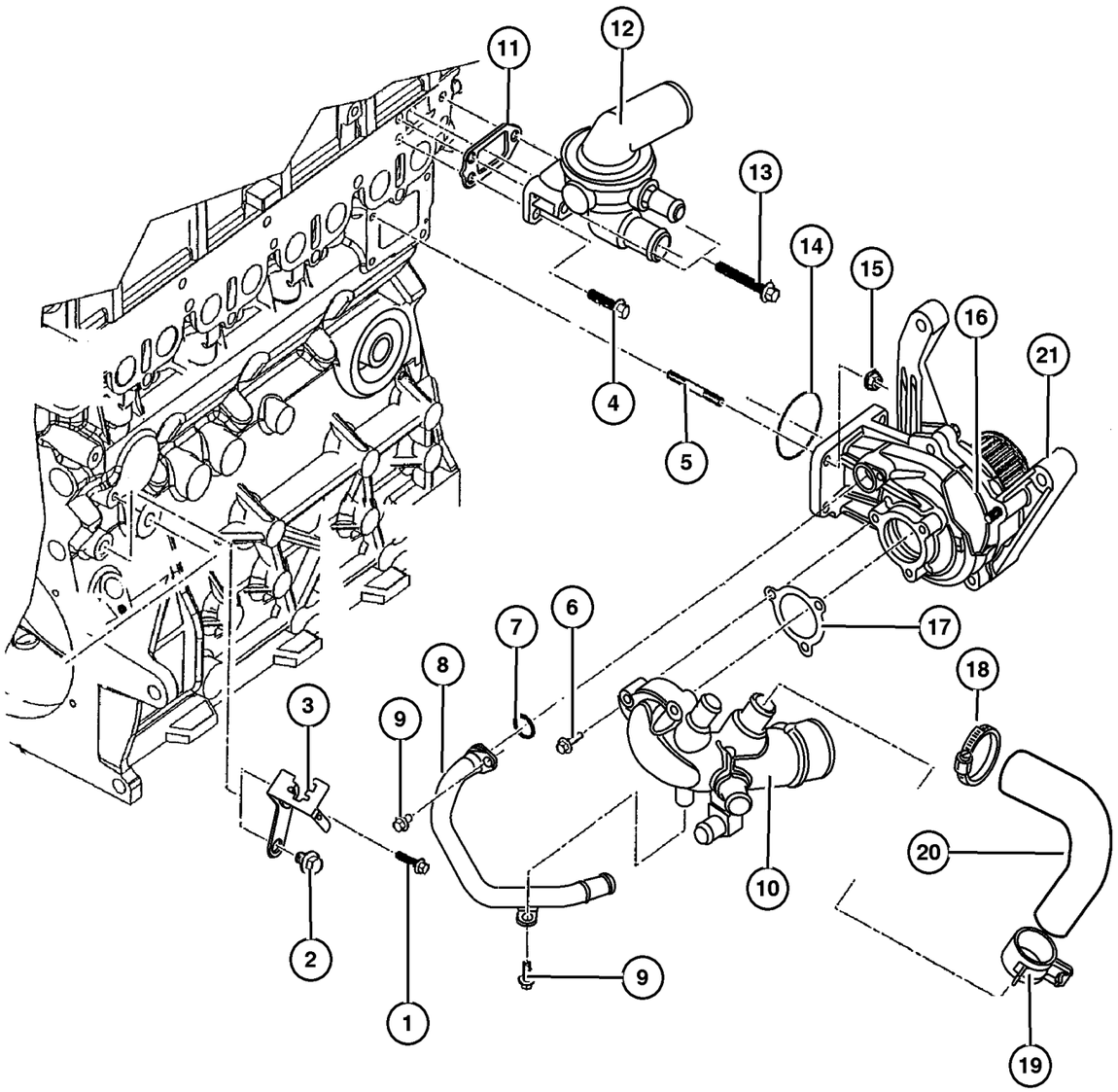

ITEM	PART NUMBER	QTY	LINE	SERIES	BODY	ENGINE	TRANS	TRIM	DESCRIPTION
Note; Sales Codes									
[EN0]= All 4 Cylinder Diesel Engine									
[DBB]= Manual Trans									
1	5003 554AA	1				EN0	DG0		SCREW
2									SCREW
	5003 724AA	1				EN0	DG0		
		1				EN0	DBB		
3									BRACKET, 05072692ac, (NOT REQUIRED)
4	4864 537	1				EN0	DG0		BOLT, 8Mx20
5									STUD, Water Pump To Block
	4720 550	4				EN0	DBB		
		4				EN0	DG0		
6									SCREW
	4864 551	3				EN0	DBB		
		3				EN0	DG0		
7	5072 698AA	1				EN0	DG0		O RING
8	5072 703AB	1				EN0	DG0		PIPE, Water Pump Drain
9									BOLT, M6x10
	5003 551AA	1				EN0	DG0		
		1				EN0	DBB		
10									ADAPTER, Water Pump
	5072 704AA	1				EN0	DG0		
		1				EN0	DBB		
11									GASKET, Thermostat
	5066 806AA	1				EN0	DG0		
		1				EN0	DBB		
12									THERMOSTAT
	5072 705AB	1				EN0	DG0		
		1				EN0	DBB		
13									BOLT
	5015 113AA	1				EN0	DG0		
		2				EN0	DBB		
14									O RING, Water Pump
	5069 141AA	1				EN0	DG0		
		1				EN0	DBB		
15									NUT
	4778 961	4				EN0	DBB		
		4				EN0	DG0		
16									O RING
	5072 707AA	1				EN0	DG0		

JEEP LIBERTY (KJ)

SERIES	LINE	BODY	ENGINE	TRANSMISSION
P = Limited	J = LHD (4WD)	74 = 4 Dr (104.3 WB)	ED1,ED0 = 2.4L Power Tech	DDK = 5 Speed HDManual
H = Sport	U = RHD (4WD)		EKG,EK0 = 3.7L Power Tech	DDD = 5 Speed HD Manual
M = Renegade	T = LHD (2WD)		ENJ = 2.5L 4Cyl Turbo Diesel	DG4,DGQ = Multi-Speed Auto
			ENR = 2.8L 4Cyl Turbo Diesel	DG6 = 4 Speed Auto Transm
			EN0 = 4Cyl Turbo Diesel	DG0 = All Automatic Transm
				DBB = All Manual Transm

Water Pump and Related Parts, 2.5,2.8L Diesel Engine
Figure 007-230

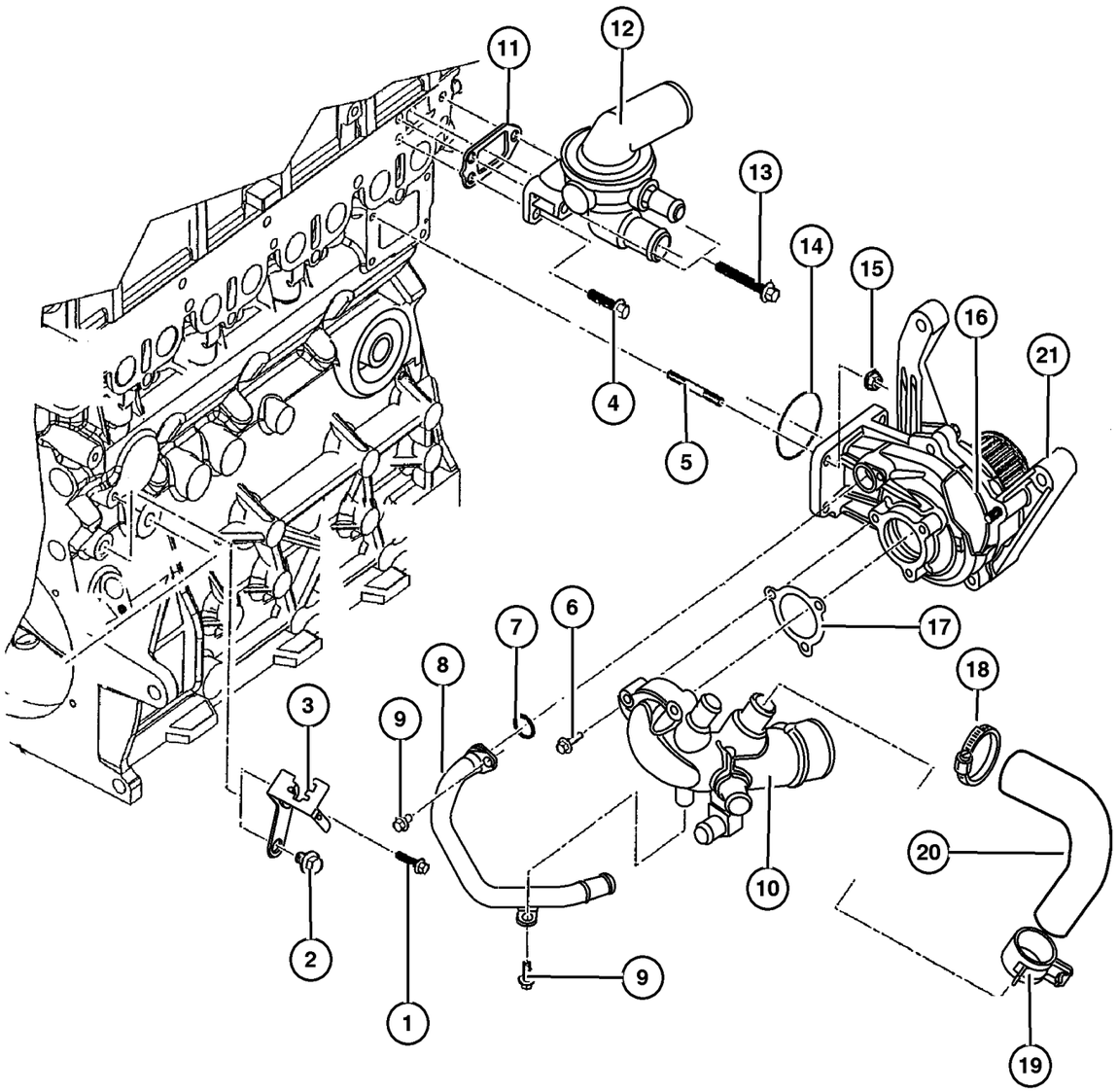

ITEM	PART NUMBER	QTY	LINE	SERIES	BODY	ENGINE	TRANS	TRIM	DESCRIPTION
		1				EN0	DBB		
17									GASKET, Water Pump
	4864 575	1				EN0	DG0		
		1				EN0	DBB		
18									CLAMP, Hose
	4720 453	1				EN0	DG0		
		1				EN0	DBB		
19									CLAMP, Heater Hose
	4886 050AA	1				EN0	DG0		
		1				EN0	DBB		
20									HOSE, Water Pump Bypass
	5093 912AA	1				EN0	DG0		
		1				EN0	DBB		
21									PUMP, Water
	5093 911AA	1				EN0	DG0		
		1				EN0	DBB		

JEEP LIBERTY (KJ)

SERIES	LINE	BODY	ENGINE	TRANSMISSION
P = Limited	J = LHD (4WD)	74 = 4 Dr (104.3 WB)	ED1,ED0 = 2.4L Power Tech	DDK = 5 Speed HDManual
H = Sport	U = RHD (4WD)		EKG,EK0 = 3.7L Power Tech	DDD = 5 Speed HD Manual
M = Renegade	T = LHD (2WD)		ENJ = 2.5L 4Cyl Turbo Diesel	DG4,DGQ = Multi-Speed Auto
			ENR = 2.8L 4Cyl Turbo Diesel	DG6 = 4 Speed Auto Transm
			EN0 = 4Cyl Turbo Diesel	DG0 = All Automatic Transm
				DBB = All Manual Transm

AR = Use as required - = Non illustrated part # = New this model year

September 30, 2003

« RETURN TO GROUP INDEX

Coolant Tank, 2.4L Engine
Figure 007-305

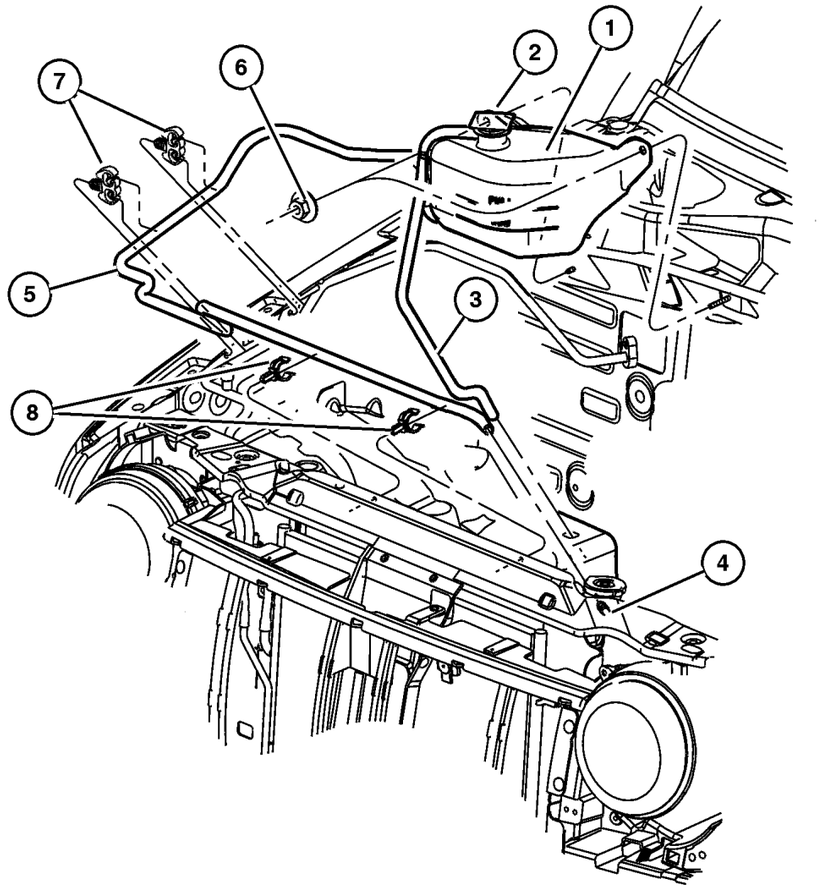

ITEM	PART NUMBER	QTY	LINE	SERIES	BODY	ENGINE	TRANS	TRIM	DESCRIPTION
Note; Sales Codes									
[ED0]= All 2.2L, 2.5L, 2.4L, 4 C									
[EK0]= All 3.7L, 6 Cylinder Gas Engines									
[EN0]= All 2..5L 4 Cylinder Diesel Engine									
1	52079 702AD	1				ED0			BOTTLE, Coolant Recovery
2	5207 9331	1				ED0			CAP, Coolant Reserve Tank
3	4026 148	1				ED0			HOSE, Coolant Reserve Tank
4	J318 0725	1				ED0			CLAMP, Hose
5	4026 148	1				ED0			HOSE, Coolant Reserve Tank
6	6506 603AA	2	J, T						NUT, M6x1.00
7									CLIP, (NOT SERVICED) (Not Serviced)
8	52080 133AB	2				ED0			CLIP, Hose

JEEP LIBERTY (KJ)

SERIES	LINE	BODY	ENGINE	TRANSMISSION
P = Limited	J = LHD (4WD)	74 = 4 Dr (104.3 WB)	ED1,ED0 = 2.4L Power Tech	DDK = 5 Speed HDManual
H = Sport	U = RHD (4WD)		EKG,EK0 = 3.7L Power Tech	DDD = 5 Speed HD Manual
M = Renegade	T = LHD (2WD)		ENJ = 2.5L 4Cyl Turbo Diesel	DG4,DGQ = Multi-Speed Auto
			ENR = 2.8L 4Cyl Turbo Diesel	DG6 = 4 Speed Auto Transm
			EN0 = 4Cyl Turbo Diesel	DG0 = All Automatic Transm
				DBB = All Manual Transm

Coolant Tank, 3.7L Engine
Figure 007-310

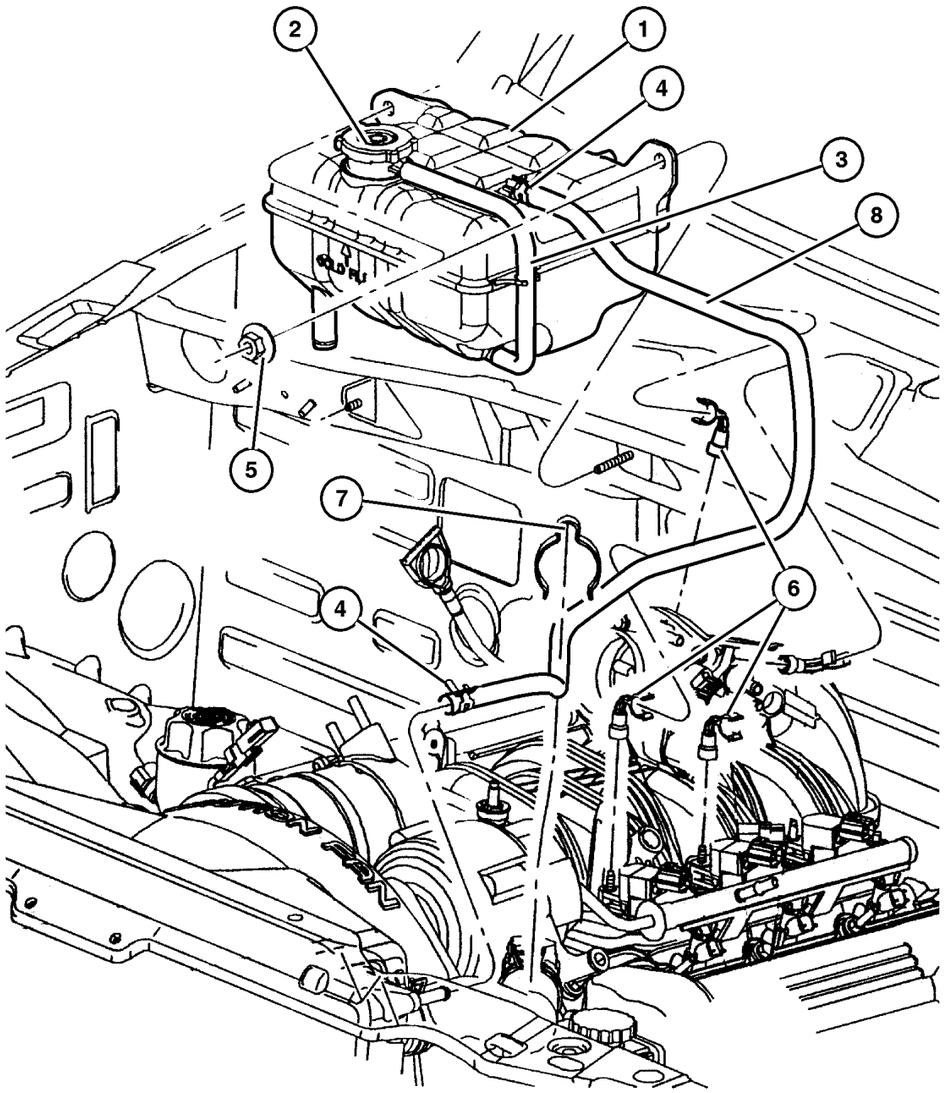

ITEM	PART NUMBER	QTY	LINE	SERIES	BODY	ENGINE	TRANS	TRIM	DESCRIPTION
Note; Sales Codes									
[EK0]= All 3.7L, 6 Cylinder Gas Engines									
1	52079 848AA	1				EK0			BOTTLE, Coolant Recovery
2									CAP, Radiator, 04596198, (NOT SERVICED) (Not Serviced)
3	4026 148	1				ED0			HOSE, Coolant Reserve Tank
4	52079 632AA	2				EK0			CLAMP, Oil Cooler Tube
5	6506 603AA	2				ED0, EK0, EN0			NUT, M6x1.00
6	52128 508AC	3				EK0			CLIP, Hose
7									CLIP, Hose, 52007404, (NOT SERVICED) (Not Serviced)
8	5086 496AA	1				EK0			HOSE, Overflow, Roll Stock

JEEP LIBERTY (KJ)

SERIES	LINE	BODY	ENGINE	TRANSMISSION
P = Limited	J = LHD (4WD)	74 = 4 Dr (104.3 WB)	ED1,ED0 = 2.4L Power Tech	DDK = 5 Speed HDManual
H = Sport	U = RHD (4WD)		EKG,EK0 = 3.7L Power Tech	DDD = 5 Speed HD Manual
M = Renegade	T = LHD (2WD)		ENJ = 2.5L 4Cyl Turbo Diesel	DG4,DGQ = Multi-Speed Auto
			ENR = 2.8L 4Cyl Turbo Diesel	DG6 = 4 Speed Auto Transm
			EN0 = 4Cyl Turbo Diesel	DG0 = All Automatic Transm
				DBB = All Manual Transm

Coolant Degasser Tank, 2.5,2.8L Diesel Engine
Figure 007-320

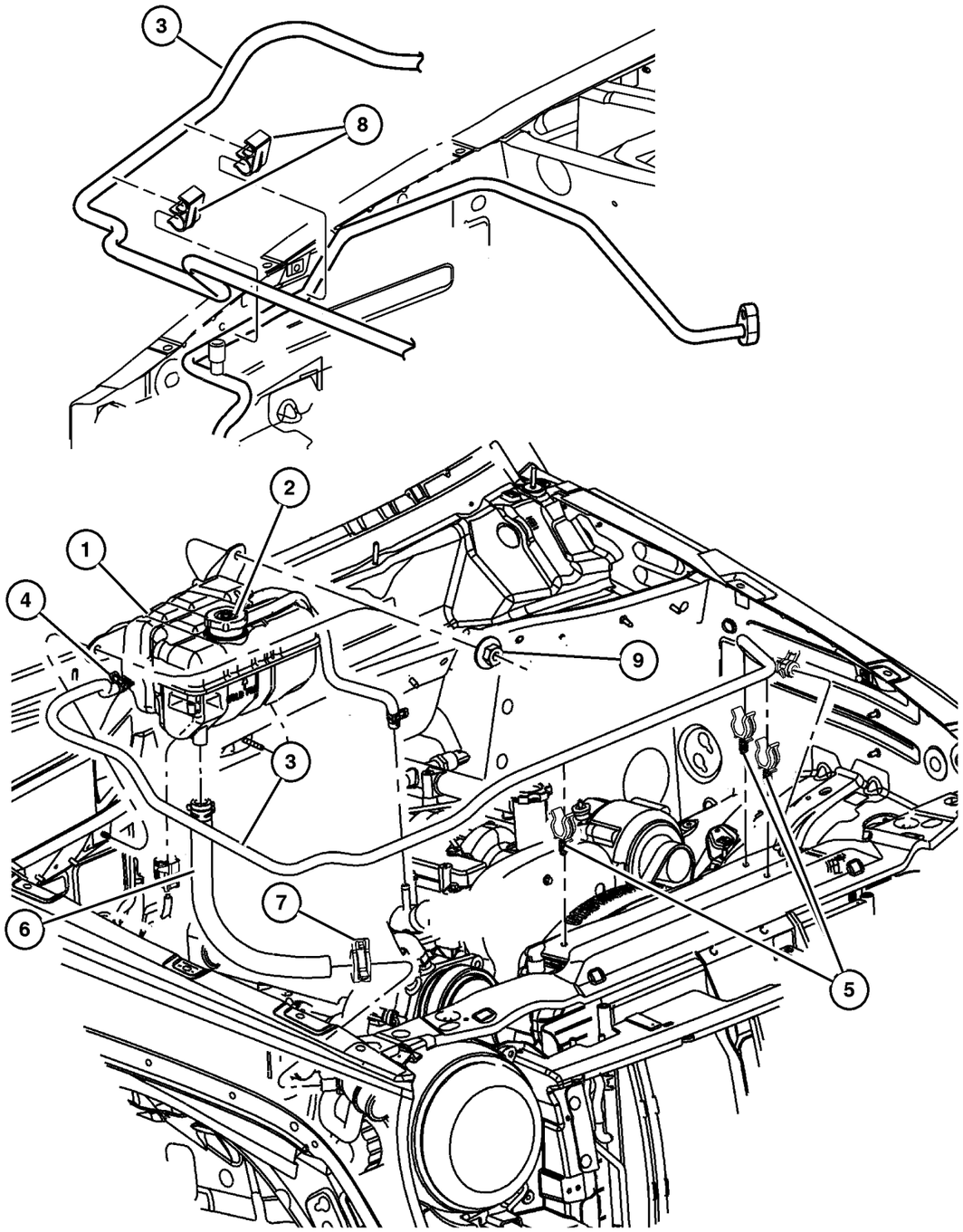

ITEM	PART NUMBER	QTY	LINE	SERIES	BODY	ENGINE	TRANS	TRIM	DESCRIPTION
1	52079 849AA	1				EN0			TANK, Coolant Reserve
2									CAP, Radiator, 04596198, (NOT SERVICED) (Not Serviced)
3	4026 148	1				EN0			HOSE, Coolant Reserve Tank
4	52079 632AA	4				EN0			CLAMP, Oil Cooler Tube
5	52080 133AB	2				EN0			CLIP, Hose
6	52079 856AB	1				EN0			HOSE, Coolant Recovery Bottle
7	6502 018	2				EN0			CLAMP, Hose, M28.9 x 1.60
8									CLIP, (NOT SERVICED) (Not Serviced)
9									NUT, M6X1.00, (NOT SERVICED) (Not Serviced)

JEEP LIBERTY (KJ)

SERIES	LINE	BODY	ENGINE	TRANSMISSION
P = Limited	J = LHD (4WD)	74 = 4 Dr (104.3 WB)	ED1,ED0 = 2.4L Power Tech	DDK = 5 Speed HDManual
H = Sport	U = RHD (4WD)		EKG,EK0 = 3.7L Power Tech	DDD = 5 Speed HD Manual
M = Renegade	T = LHD (2WD)		ENJ = 2.5L 4Cyl Turbo Diesel	DG4,DGQ = Multi-Speed Auto
			ENR = 2.8L 4Cyl Turbo Diesel	DG6 = 4 Speed Auto Transm
			EN0 = 4Cyl Turbo Diesel	DG0 = All Automatic Transm
				DBB = All Manual Transm

Drive Pulleys, 2.4L Engine
Figure 007-410

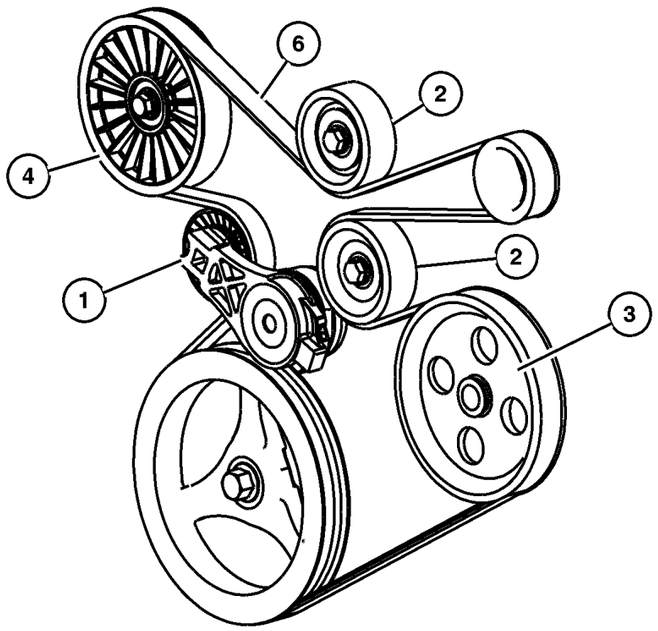

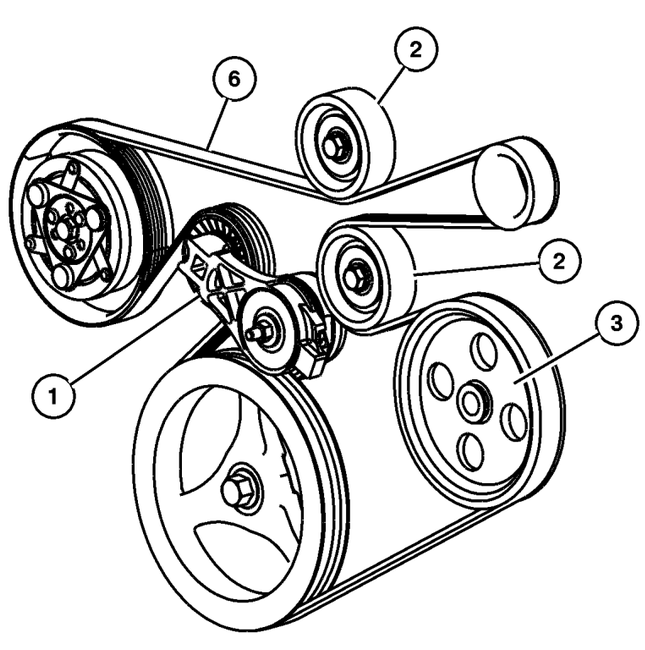

ITEM	PART NUMBER	QTY	LINE	SERIES	BODY	ENGINE	TRANS	TRIM	DESCRIPTION
Note; Sales Codes									
[ED0]= All 2.2L, 2.5L, 2.4L, 4 C									
1	4861 277AB	1				ED0			TENSIONER, Belt
2	53013 324AA	2				ED0			PULLEY, Idler
3	53031 722AA	1				ED0			PULLEY, Power Steering Pump
4	53013 366AA	1				ED0			PULLEY, Idler, without Air Conditioning
-5	3420 2781	1				ED0			SCREW, Idler Pulley
6									BELT, Accessory Drive
	5281 351AC	1				ED0			without Air Conditioning
	53013 352AD	1				ED0			with Air Conditioning

JEEP LIBERTY (KJ)

SERIES	LINE	BODY	ENGINE	TRANSMISSION
P = Limited	J = LHD (4WD)	74 = 4 Dr (104.3 WB)	ED1,ED0 = 2.4L Power Tech	DDK = 5 Speed HDManual
H = Sport	U = RHD (4WD)		EKG,EK0 = 3.7L Power Tech	DDD = 5 Speed HD Manual
M = Renegade	T = LHD (2WD)		ENJ = 2.5L 4Cyl Turbo Diesel	DG4,DGQ = Multi-Speed Auto
			ENR = 2.8L 4Cyl Turbo Diesel	DG6 = 4 Speed Auto Transm
			EN0 = 4Cyl Turbo Diesel	DG0 = All Automatic Transm
				DBB = All Manual Transm

Drive Pulleys, 3.7L Engine
Figure 007-420

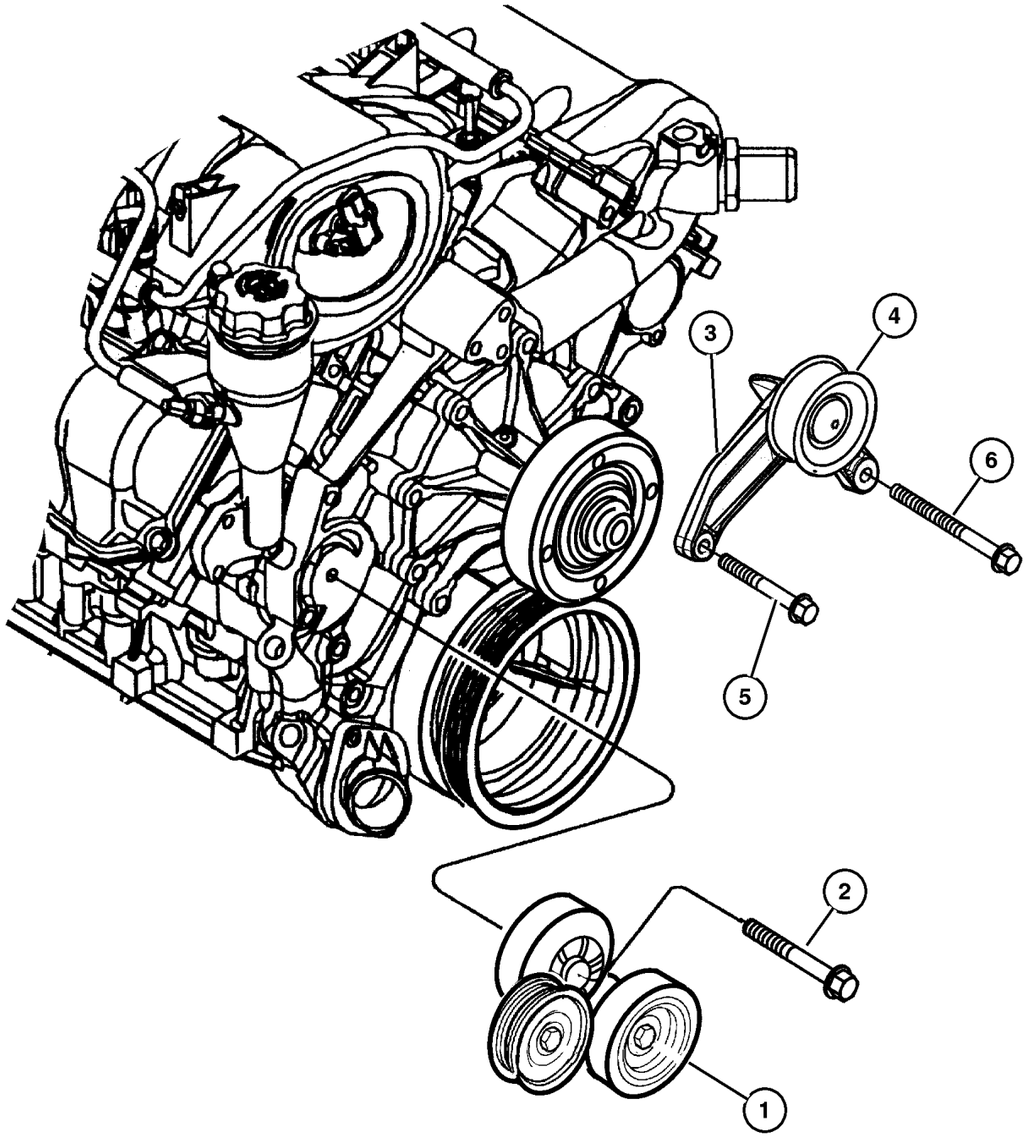

ITEM	PART NUMBER	QTY	LINE	SERIES	BODY	ENGINE	TRANS	TRIM	DESCRIPTION
Note; Sales Codes									
[ED0]= All 2.2L, 2.5L, 2.4L, 4 C									
[EK0]= All 3.7L, 6 Cylinder Gas Engines									
1	#53030 958AD	1				EK0			TENSIONER, Alternator Belt
2	6504 930AA	1				EK0			SCREW AND WASHER, Hex Head, M10x1.5x70
3	5303 0959	1				EK0			BRACKET, Idler Pulley
4	5303 1045	1				EK0			PULLEY, Idler
5	6505 487AA	1				EK0			SCREW AND WASHER, M10x1. 5x45
6	6504 344	1				EK0			SCREW AND WASHER, Hex Head

JEEP LIBERTY (KJ)

SERIES	LINE	BODY	ENGINE	TRANSMISSION
P = Limited	J = LHD (4WD)	74 = 4 Dr (104.3 WB)	ED1,ED0 = 2.4L Power Tech	DDK = 5 Speed HDManual
H = Sport	U = RHD (4WD)		EKG,EK0 = 3.7L Power Tech	DDD = 5 Speed HD Manual
M = Renegade	T = LHD (2WD)		ENJ = 2.5L 4Cyl Turbo Diesel	DG4,DGQ = Multi-Speed Auto
			ENR = 2.8L 4Cyl Turbo Diesel	DG6 = 4 Speed Auto Transm
			EN0 = 4Cyl Turbo Diesel	DG0 = All Automatic Transm
				DBB = All Manual Transm

Drive Pulleys, 2.5,2.8L Diesel Engine
Figure 007-430

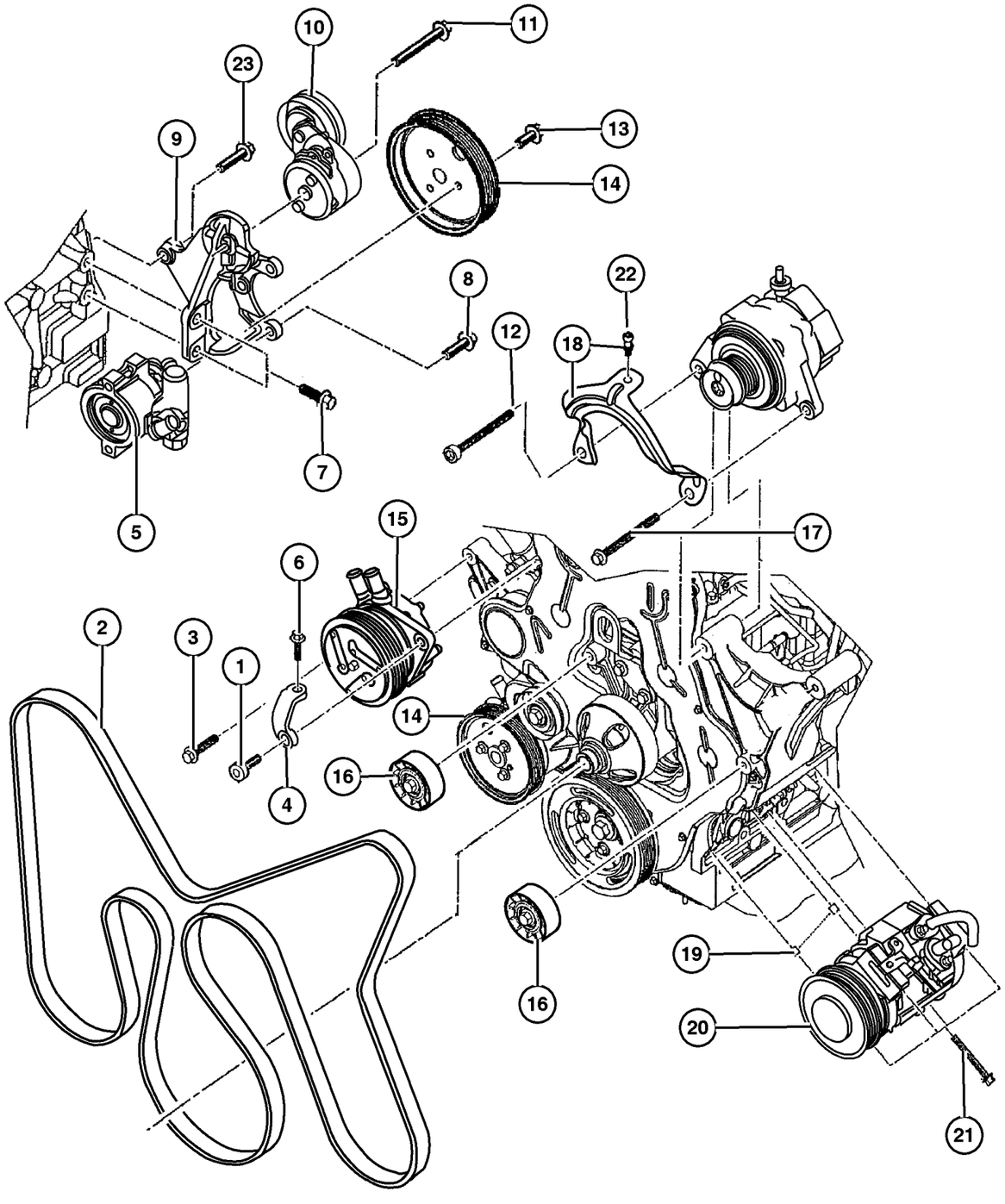

ITEM	PART NUMBER	QTY	LINE	SERIES	BODY	ENGINE	TRANS	TRIM	DESCRIPTION
Ote; Sales Codes									
[EN0]= All 4 Cylinder Diesel Engine									
1									SCREW
	5093 933AA	1				EN0	DG0		
		1				EN0	DBB		
2									BELT, Accessory Drive
	5072 437AB	1				EN0	DG0		
		1				EN0	DBB		
3									BOLT, M10x45
	5003 533AA	2				EN0	DBB		
		2				EN0	DG0		
4									BRACKET
	5072 436AA	1				EN0	DG0		
		1				EN0	DBB		
5									PUMP, Power Steering
	52088 712AC	1				EN0	DG0		
		1				EN0	DBB		
6									SCREW
	5003 557AA	1				EN0	DG0		
		1				EN0	DBB		
7									BOLT, Adaptor Plate
	5003 532AA	4				EN0	DBB		
		4				EN0	DG0		
8									BOLT, 8Mx20
	4864 537	3				EN0	DG0		
		5				EN0	DBB		
9	5093 935AA	1				EN0	DG0		BRACKET, Tensioner
10									TENSIONER, Belt
	5072 440AA	1				EN0	DG0		
		1				EN0	DBB		
11									SCREW
	5015 612AA	1				EN0	DG0		
		1				EN0	DBB		
12									SCREW
	5093 936AA	1				EN0	DG0		
		1				EN0	DBB		
13									SCREW
	5003 554AA	1				EN0	DG0		
		3				EN0	DBB		
14									PULLEY, Power Steering Pump
	5072 441AA	1				EN0	DG0		

JEEP LIBERTY (KJ)

SERIES	LINE	BODY	ENGINE	TRANSMISSION
P = Limited	J = LHD (4WD)	74 = 4 Dr (104.3 WB)	ED1,ED0 = 2.4L Power Tech	DDK = 5 Speed HDManual
H = Sport	U = RHD (4WD)		EKG,EK0 = 3.7L Power Tech	DDD = 5 Speed HD Manual
M = Renegade	T = LHD (2WD)		ENJ = 2.5L 4Cyl Turbo Diesel	DG4,DGQ = Multi-Speed Auto
			ENR = 2.8L 4Cyl Turbo Diesel	DG6 = 4 Speed Auto Transm
			EN0 = 4Cyl Turbo Diesel	DG0 = All Automatic Transm
				DBB = All Manual Transm

Drive Pulleys, 2.5,2.8L Diesel Engine
Figure 007-430

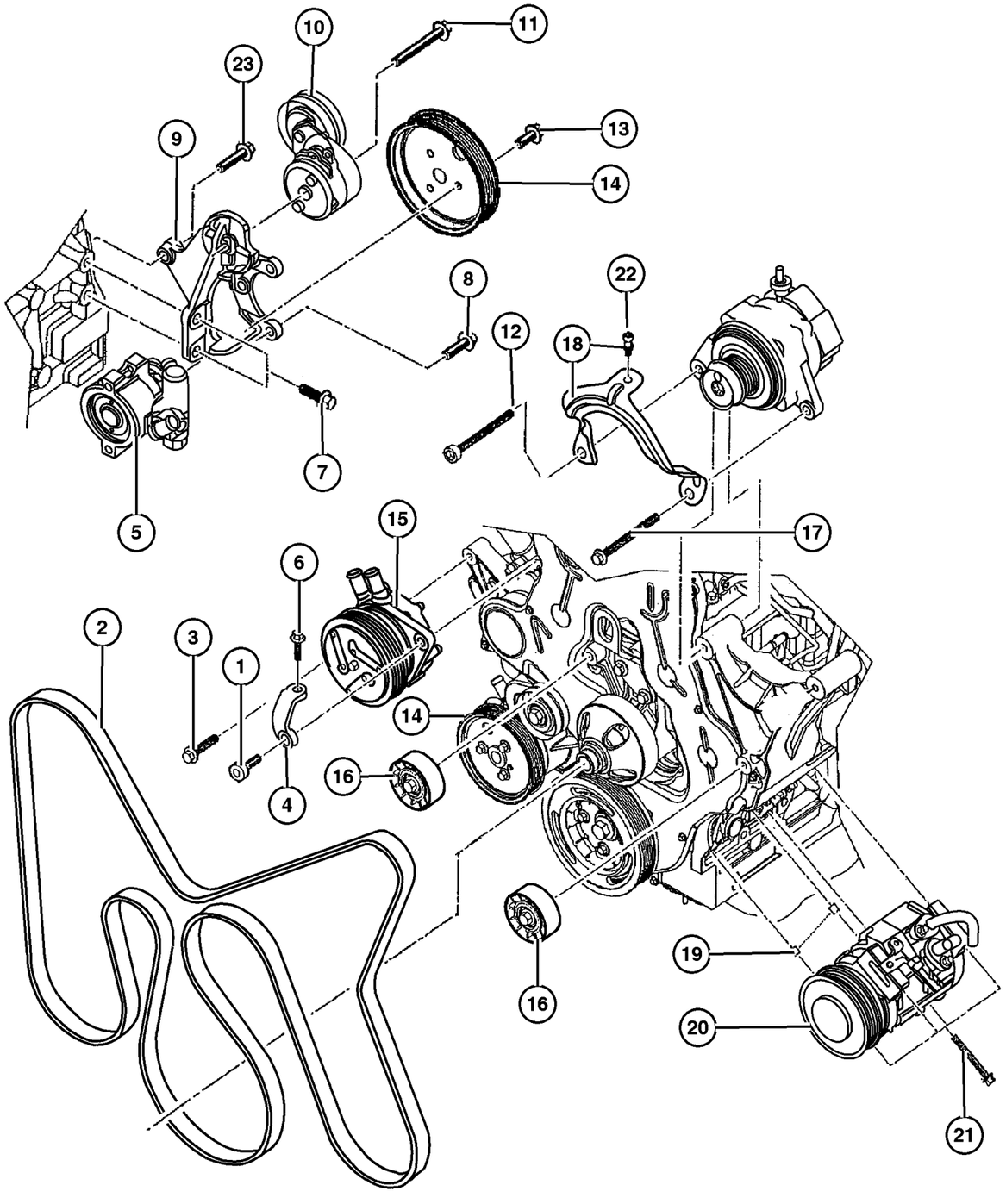

ITEM	PART NUMBER	QTY	LINE	SERIES	BODY	ENGINE	TRANS	TRIM	DESCRIPTION
		1				EN0	DBB		
15	5066 555AA	1	J, T						HEATER
16									PULLEY, Idler
	5066 938AA	2				EN0	DBB		
		2				EN0	DG0		
17									SCREW
	5093 938AA	1				EN0	DG0		
		1				EN0	DBB		
18									BRACKET, Alternator
	5093 939AA	1				EN0	DG0		
		1				EN0	DBB		
19									PIN
	5066 930AA	2				EN0	DBB		
		2				EN0	DG0		
20									COMPRESSOR, Air Conditioning
	55037 467AB	1				EN0	DG0		
		1				EN0	DBB		
21									BOLT
	5015 043AA	4				EN0	DBB		
		4				EN0	DG0		
22									SCREW
	5093 941AA	1				EN0	DG0		
		1				EN0	DBB		
23									BOLT, Hex Flange Head, M10x35
	4897 253AA	1				EN0	DG0		
		1				EN0	DBB		

JEEP LIBERTY (KJ)

SERIES	LINE	BODY	ENGINE	TRANSMISSION
P = Limited	J = LHD (4WD)	74 = 4 Dr (104.3 WB)	ED1,ED0 = 2.4L Power Tech	DDK = 5 Speed HDManual
H = Sport	U = RHD (4WD)		EKG,EK0 = 3.7L Power Tech	DDD = 5 Speed HD Manual
M = Renegade	T = LHD (2WD)		ENJ = 2.5L 4Cyl Turbo Diesel	DG4,DGQ = Multi-Speed Auto
			ENR = 2.8L 4Cyl Turbo Diesel	DG6 = 4 Speed Auto Transm
			EN0 = 4Cyl Turbo Diesel	DG0 = All Automatic Transm
				DBB = All Manual Transm

AR = Use as required - = Non illustrated part # = New this model year

September 30, 2003

« RETURN TO GROUP INDEX

Drive Belts, 2.4L Engine
Figure 007-510

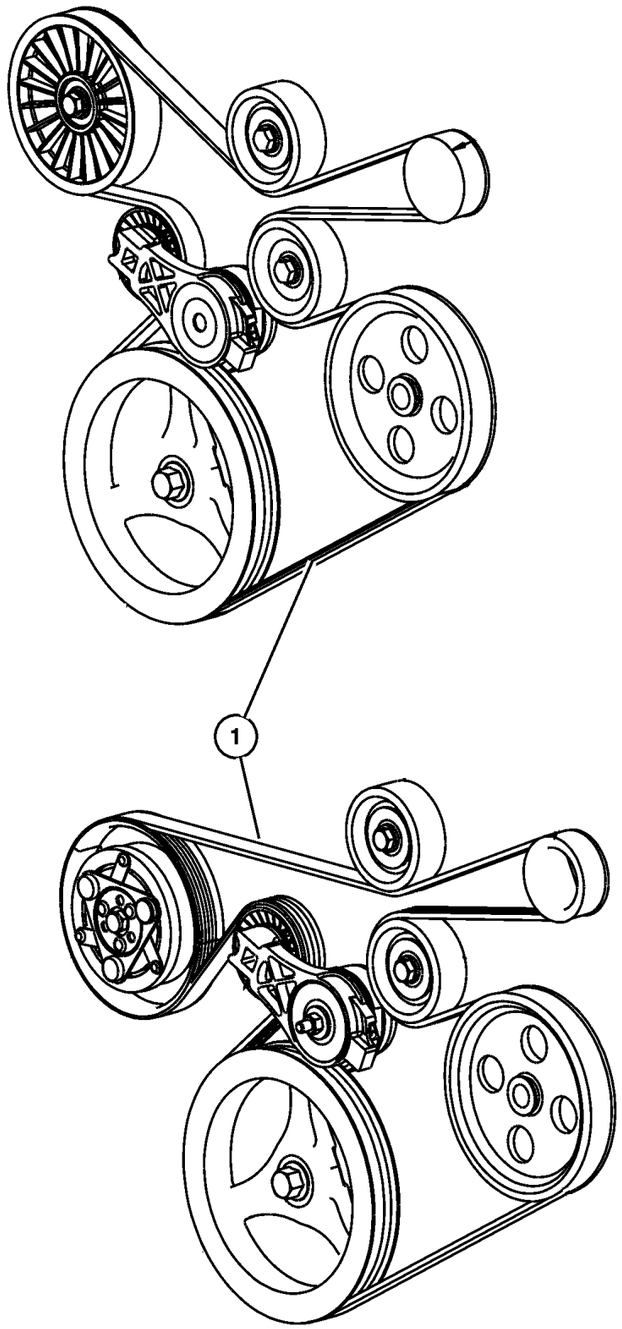

ITEM	PART NUMBER	QTY	LINE	SERIES	BODY	ENGINE	TRANS	TRIM	DESCRIPTION
Note; Sales Codes									
[ED0]= All 2.2L, 2.5L, 2.4L, 4 Cylinder									
1									BELT, Accessory Drive
	5281 351AC	1				ED0			with Air Conditioning
	53013 352AD	1				ED0			without Air Conditioning

JEEP LIBERTY (KJ)

SERIES	LINE	BODY	ENGINE	TRANSMISSION
P = Limited	J = LHD (4WD)	74 = 4 Dr (104.3 WB)	ED1,ED0 = 2.4L Power Tech	DDK = 5 Speed HDManual
H = Sport	U = RHD (4WD)		EKG,EK0 = 3.7L Power Tech	DDD = 5 Speed HD Manual
M = Renegade	T = LHD (2WD)		ENJ = 2.5L 4Cyl Turbo Diesel	DG4,DGQ = Multi-Speed Auto
			ENR = 2.8L 4Cyl Turbo Diesel	DG6 = 4 Speed Auto Transm
			EN0 = 4Cyl Turbo Diesel	DG0 = All Automatic Transm
				DBB = All Manual Transm

Drive Belts, 3.7L Engine
Figure 007-520

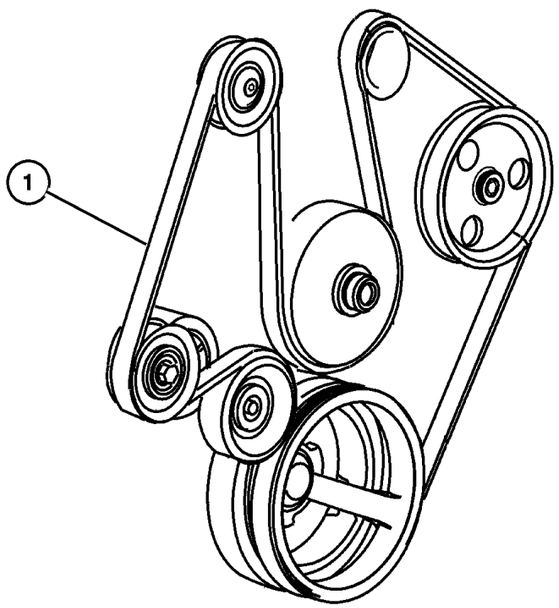

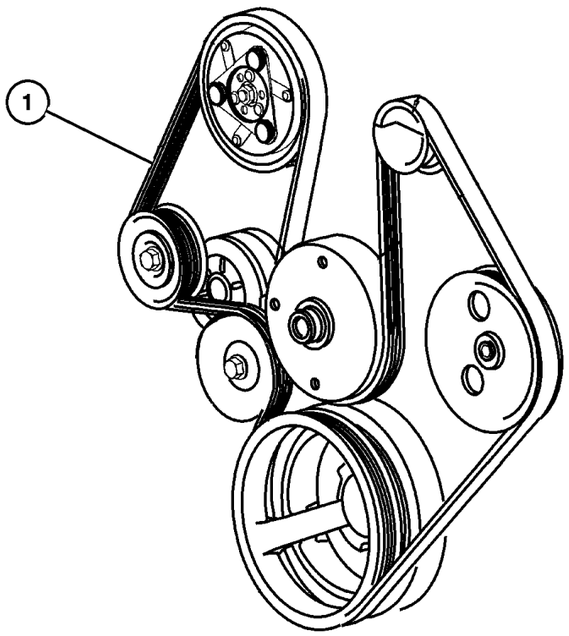

ITEM	PART NUMBER	QTY	LINE	SERIES	BODY	ENGINE	TRANS	TRIM	DESCRIPTION
Note; Sales Codes									
[EK0]= All 3.7L, 6 Cylinder Gas Engines									
1	#53032 037AJ	1				EK0			BELT, Accessory Drive, with or without Air Conditioning

JEEP LIBERTY (KJ)

SERIES	LINE	BODY	ENGINE	TRANSMISSION
P = Limited	J = LHD (4WD)	74 = 4 Dr (104.3 WB)	ED1,ED0 = 2.4L Power Tech	DDK = 5 Speed HDManual
H = Sport	U = RHD (4WD)		EKG,EK0 = 3.7L Power Tech	DDD = 5 Speed HD Manual
M = Renegade	T = LHD (2WD)		ENJ = 2.5L 4Cyl Turbo Diesel	DG4,DGQ = Multi-Speed Auto
			ENR = 2.8L 4Cyl Turbo Diesel	DG6 = 4 Speed Auto Transm
			EN0 = 4Cyl Turbo Diesel	DG0 = All Automatic Transm
				DBB = All Manual Transm

Drive Belts, 2.5,2.8L Diesel Engine
Figure 007-530

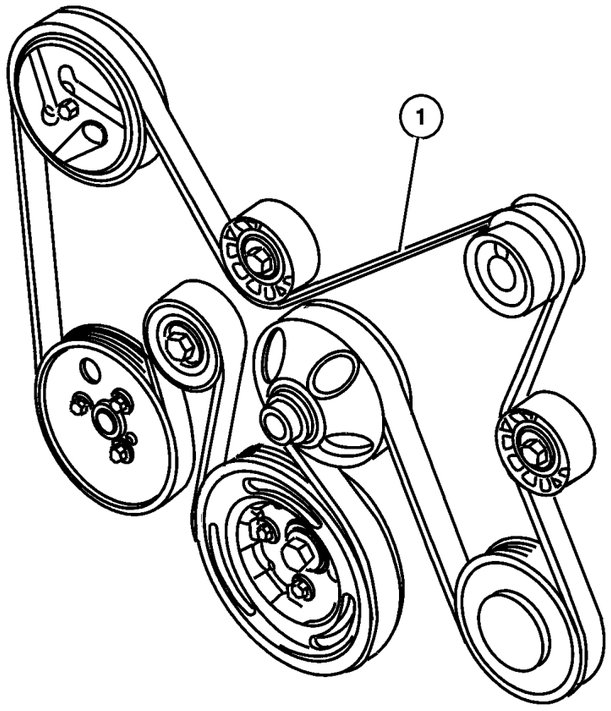

ITEM	PART NUMBER	QTY	LINE	SERIES	BODY	ENGINE	TRANS	TRIM	DESCRIPTION
Note; Sales Codes									
[EN0]= All 2..5L 4 Cylinder Diesel Engine									
1									BELT, Accessory Drive
	5072 437AB	1				EN0	DG0		
		1				EN0	DBB		

JEEP LIBERTY (KJ)

SERIES	LINE	BODY	ENGINE	TRANSMISSION
P = Limited	J = LHD (4WD)	74 = 4 Dr (104.3 WB)	ED1,ED0 = 2.4L Power Tech	DDK = 5 Speed HDManual
H = Sport	U = RHD (4WD)		EKG,EK0 = 3.7L Power Tech	DDD = 5 Speed HD Manual
M = Renegade	T = LHD (2WD)		ENJ = 2.5L 4Cyl Turbo Diesel	DG4,DGQ = Multi-Speed Auto
			ENR = 2.8L 4Cyl Turbo Diesel	DG6 = 4 Speed Auto Transm
			EN0 = 4Cyl Turbo Diesel	DG0 = All Automatic Transm
				DBB = All Manual Transm

Oil Cooler Lines
Figure 007-610

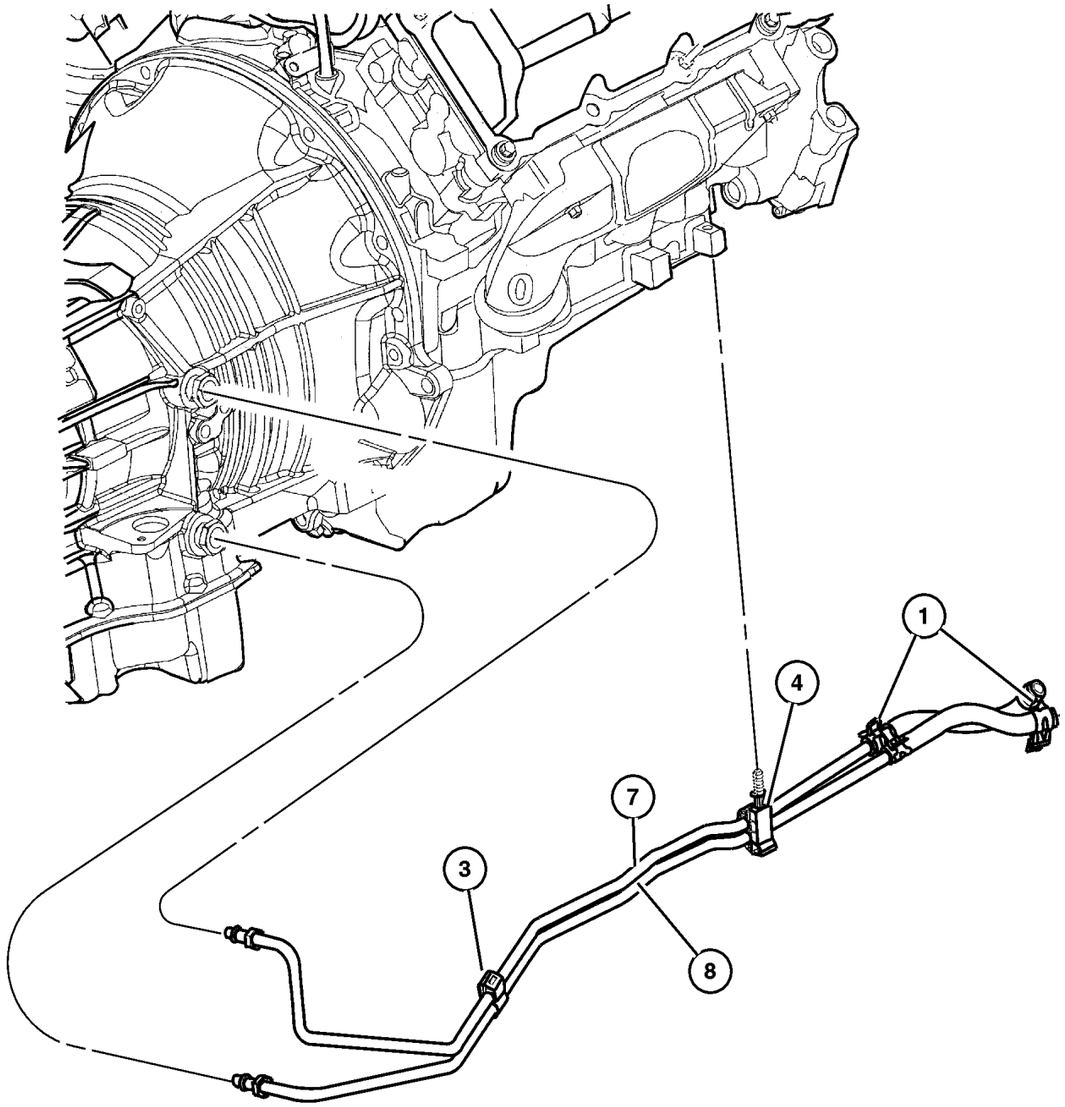

ITEM	PART NUMBER	QTY	LINE	SERIES	BODY	ENGINE	TRANS	TRIM	DESCRIPTION
Note; Sales Codes									
[EK0]= All 3.7L, 6 Cylinder Gas Engines									
[EN0]= All 2..5L 4 Cylinder Diesel Engine									
1	52079 632AA	2				EK0			CLAMP, Oil Cooler Tube
-2	6502 081	1	J, U						CLAMP, Oil Cooler Line
3	4815 987AB	1					DG6		CLIP, Oil Cooler Tube
4	52079 878AB	1					DG6		CLIP, Oil Cooler Tube
-5	6033 878	2					DG6		NUT, Flared Tube
-6	52079 877AA	1				EN0	DG0		CLIP, Oil Cooler Tube
7	5103 255AA	1					DG6		TUBE AND HOSE, Supply
8	5103 256AA	1					DG6		TUBE AND HOSE, Return
-9									CONNECTOR, Oil Cooler Hose
	4531 202	1	J, U				DG6		
		1	T				DG6		

JEEP LIBERTY (KJ)

SERIES	LINE	BODY	ENGINE	TRANSMISSION
P = Limited	J = LHD (4WD)	74 = 4 Dr (104.3 WB)	ED1,ED0 = 2.4L Power Tech	DDK = 5 Speed HDManual
H = Sport	U = RHD (4WD)		EKG,EK0 = 3.7L Power Tech	DDD = 5 Speed HD Manual
M = Renegade	T = LHD (2WD)		ENJ = 2.5L 4Cyl Turbo Diesel	DG4,DGQ = Multi-Speed Auto
			ENR = 2.8L 4Cyl Turbo Diesel	DG6 = 4 Speed Auto Transm
			EN0 = 4Cyl Turbo Diesel	DG0 = All Automatic Transm
				DBB = All Manual Transm

Grille and Related Parts
Figure 007-710

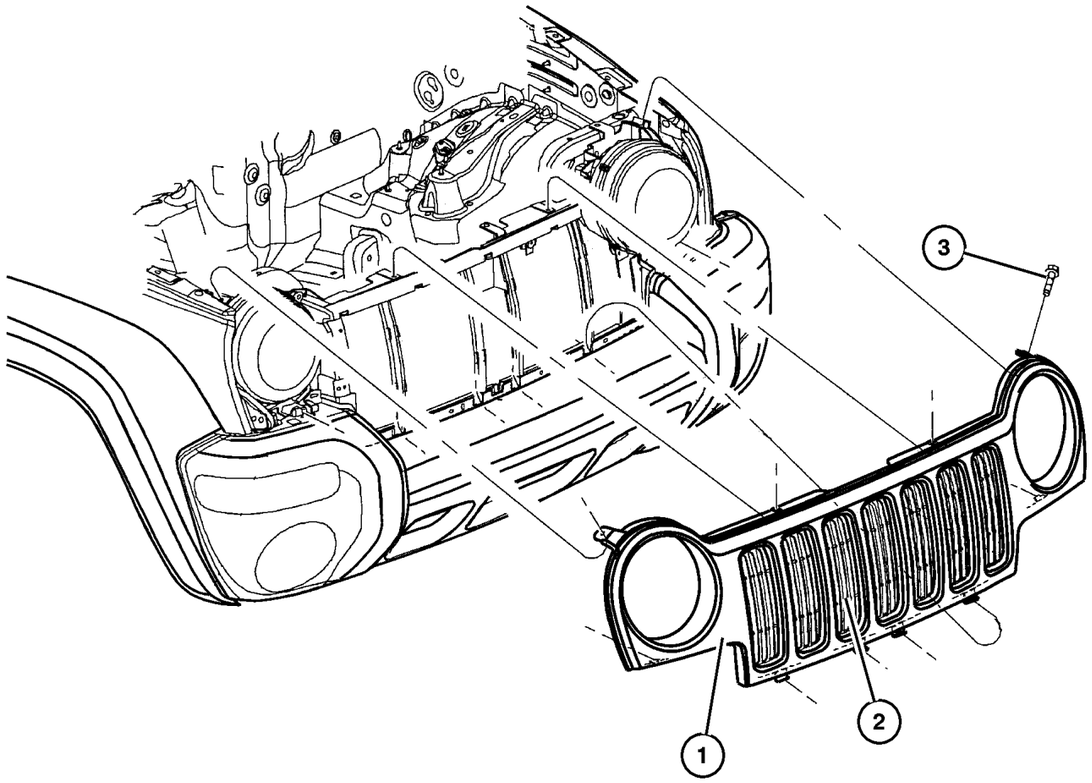

ITEM	PART NUMBER	QTY	LINE	SERIES	BODY	ENGINE	TRANS	TRIM	DESCRIPTION
1	55156 608AB	1							GRILLE, Radiator
2	55156 609AB	1							GRILLE, Texture
3	6036 366AA	4							SCREW, Tapping, .164-18x.75

JEEP LIBERTY (KJ)

SERIES	LINE	BODY	ENGINE	TRANSMISSION
P = Limited	J = LHD (4WD)	74 = 4 Dr (104.3 WB)	ED1,ED0 = 2.4L Power Tech	DDK = 5 Speed HDManual
H = Sport	U = RHD (4WD)		EKG,EK0 = 3.7L Power Tech	DDD = 5 Speed HD Manual
M = Renegade	T = LHD (2WD)		ENJ = 2.5L 4Cyl Turbo Diesel	DG4,DGQ = Multi-Speed Auto
			ENR = 2.8L 4Cyl Turbo Diesel	DG6 = 4 Speed Auto Transm
			EN0 = 4Cyl Turbo Diesel	DG0 = All Automatic Transm
				DBB = All Manual Transm

Group – 008
Electrical

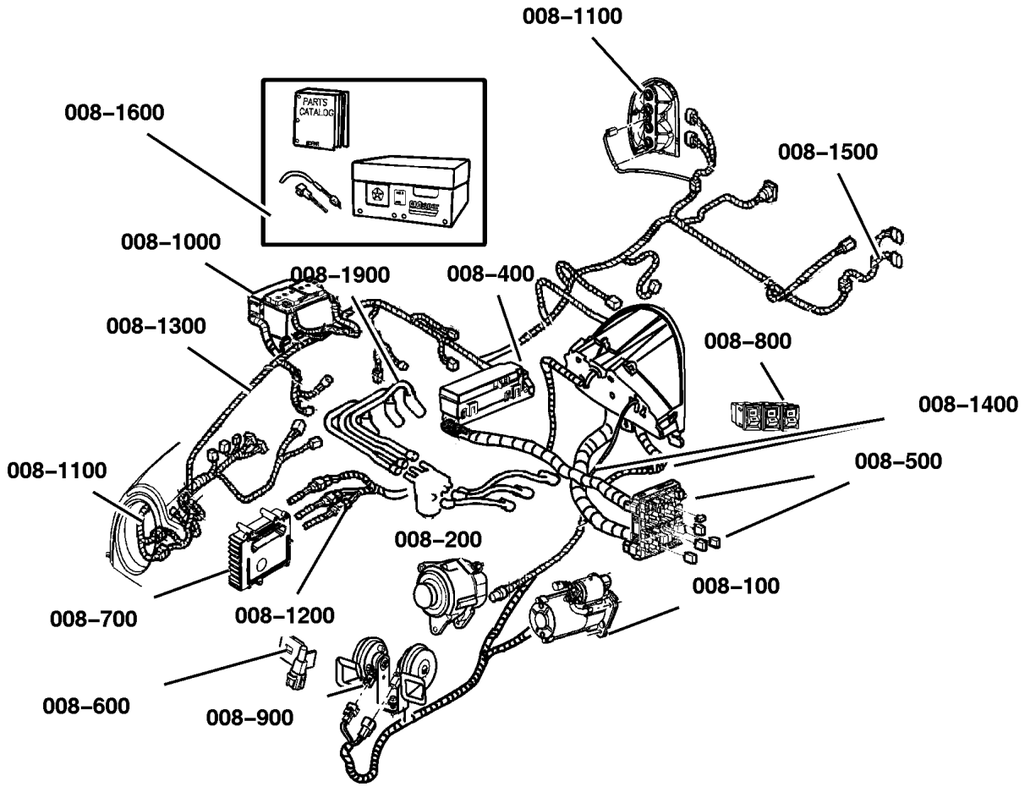

008–100 Starters	**008–200** Alternators	**008–400** Modules	**008–500** Relays
008–600 Sensors	**008–700** Single Board Engine Controllers	**008–800** Switches	**008–900** Horns

Group – 008
Electrical

008–1000 Battery Tray and Cables	**008–1100** Lamps – Front, Rear and Courtesy	**008–1200** Wiring–Engine & Related Parts	**008–1300** Wiring–Headlamp to Dash
008–1400 Wiring–Instrument Panel WIRING INSTR. PANEL	**008–1500** Wiring–Body & Accessories	**008–1600** Wiring Repair WIRING REPAIR PKG.	**008–1700** Air Bag Systems
008–1900 Spark Plugs–Cables–Coils			

Illustration Title — Group-Fig. No.

Starters
- Starter and Mounting (2.4L Engine) [ED0] . . . Fig. 008-105
- Starter and Mounting (3.7L Engine) [EK0] . . . Fig. 008-110
- Starter and Mounting (2.5L Diesel Engine) [EN0] . . . Fig. 008-115

Alternators
- Alternator (2.4L Engine) [ED0] . . . Fig. 008-205
- Alternator (3.7L Engine) [EK0] . . . Fig. 008-210
- Alternator (2.5L Diesel Engine) [EN0] . . . Fig. 008-215

Modules
- Modules . . . Fig. 008-410

Relays
- Junction Block, Relays, Circuit Breaker . . . Fig. 008-510

Sensors
- Sensor, Engine (2.4L Engine) [ED0] . . . Fig. 008-605
- Sensors, Engine (3.7L Engine) [EK0] . . . Fig. 008-610
- Sensors, Engine (2.5L Diesel) [EN0] . . . Fig. 008-615
- Sensor (Drive Train) . . . Fig. 008-620
- Sensor (Body) . . . Fig. 008-630

Single Board Engine Controllers
- JTEC Modules & Solenoids . . . Fig. 008-710

Switches
- Switches (Instrument Panel and Console) . . . Fig. 008-810
- Switches (Drive Train) . . . Fig. 008-820
- Switches (Body) . . . Fig. 008-830

Horns
- Horns . . . Fig. 008-910

Battery Tray and Cables
- Battery Tray & Cables . . . Fig. 008-1010

Lamps - Front, Rear and Courtesy
- Lamp, Front . . . Fig. 008-1110
- Lamps Roof (Renegade) . . . Fig. 008-1115
- Lamp, Rear . . . Fig. 008-1120
- Lamp, Courtesy . . . Fig. 008-1130
- Bulbs & Sockets . . . Fig. 008-1140

Wiring-Engine & Related Parts
- Wiring, Engine & Related Parts . . . Fig. 008-1210

GROUP 8 - Electrical

Illustration Title — Group-Fig. No.

Wiring-Headlamp to Dash
- Wiring, Headlamp / Dash . . . Fig. 008-1310

Wiring-Instrument Panel
- Wiring Instrument Panel . . . Fig. 008-1410

Wiring-Body & Accessories
- Wiring, Body & Accessories . . . Fig. 008-1510

Wiring Repair
- Wiring, Repair Package . . . Fig. 008-1610

Air Bag Systems
- Air Bag Module and Sensors . . . Fig. 008-1705
- Air Bags and Clock Spring . . . Fig. 008-1710

Spark Plugs-Cables-Coils
- Spark Plug - Coil . . . Fig. 008-1910

Starter and Mounting (2.4L Engine) [ED0]
Figure 008-105

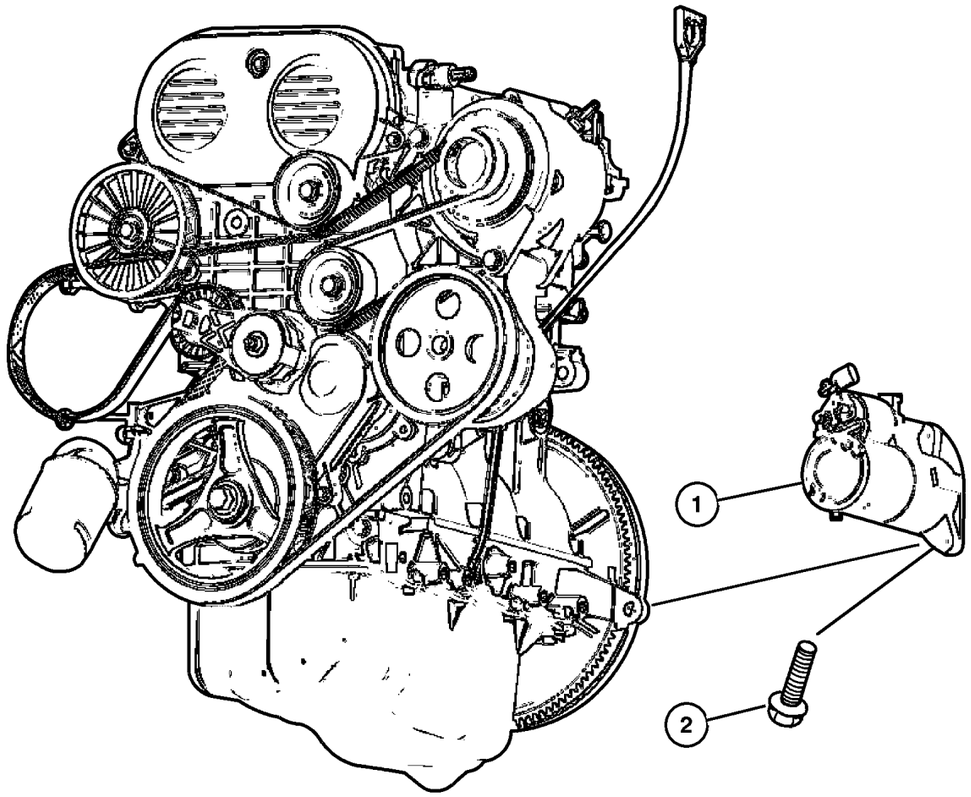

ITEM	PART NUMBER	QTY	LINE	SERIES	BODY	ENGINE	TRANS	TRIM	DESCRIPTION
Notes:									
[ED0] = 2.4L 4 Cylinder Engine									
1	56041 436AC	1				ED0			STARTER
2	6102 120AA	1				ED0			SCREW, Alternator

JEEP LIBERTY (KJ)

SERIES	LINE	BODY	ENGINE	TRANSMISSION
P = Limited	J = LHD (4WD)	74 = 4 Dr (104.3 WB)	ED1,ED0 = 2.4L Power Tech	DDK = 5 Speed HDManual
H = Sport	U = RHD (4WD)		EKG,EK0 = 3.7L Power Tech	DDD = 5 Speed HD Manual
M = Renegade	T = LHD (2WD)		ENJ = 2.5L 4Cyl Turbo Diesel	DG4,DGQ = Multi-Speed Auto
			ENR = 2.8L 4Cyl Turbo Diesel	DG6 = 4 Speed Auto Transm
			EN0 = 4Cyl Turbo Diesel	DG0 = All Automatic Transm
				DBB = All Manual Transm

Starter and Mounting (3.7L Engine) [EK0]
Figure 008-110

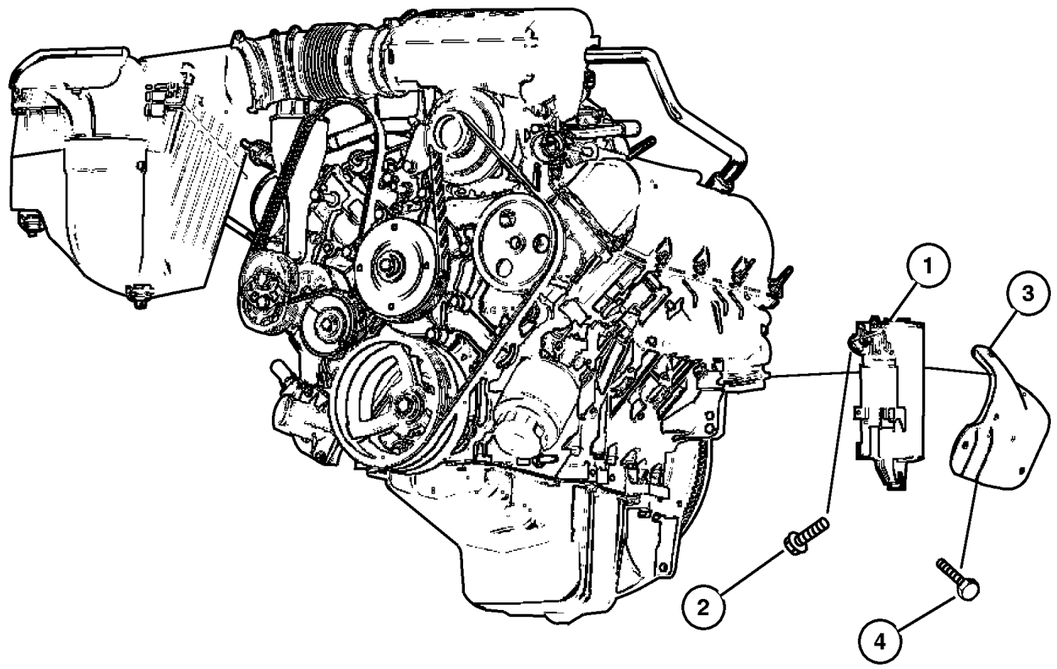

ITEM	PART NUMBER	QTY	LINE	SERIES	BODY	ENGINE	TRANS	TRIM	DESCRIPTION
Notes:									
[EK0]=3.7L V6 Engine									
[ED0] = 2.4L 4 Cylinder Engine									
1	56041 641AF	1				EK0			STARTER
2	6102 120AA	2				ED0, EK0			SCREW, Alternator
3	56044 116AC	1				EK0			SHIELD, Starter
4									SCREW, Hex Flange Head, M12X1.75X110.00, M6x1x12, (NOT SERVICED) (Not Serviced)

JEEP LIBERTY (KJ)

SERIES	LINE	BODY	ENGINE	TRANSMISSION
P = Limited	J = LHD (4WD)	74 = 4 Dr (104.3 WB)	ED1,ED0 = 2.4L Power Tech	DDK = 5 Speed HDManual
H = Sport	U = RHD (4WD)		EKG,EK0 = 3.7L Power Tech	DDD = 5 Speed HD Manual
M = Renegade	T = LHD (2WD)		ENJ = 2.5L 4Cyl Turbo Diesel	DG4,DGQ = Multi-Speed Auto
			ENR = 2.8L 4Cyl Turbo Diesel	DG6 = 4 Speed Auto Transm
			EN0 = 4Cyl Turbo Diesel	DG0 = All Automatic Transm
				DBB = All Manual Transm

Starter and Mounting (2.5L Diesel Engine) [EN0]
Figure 008-115

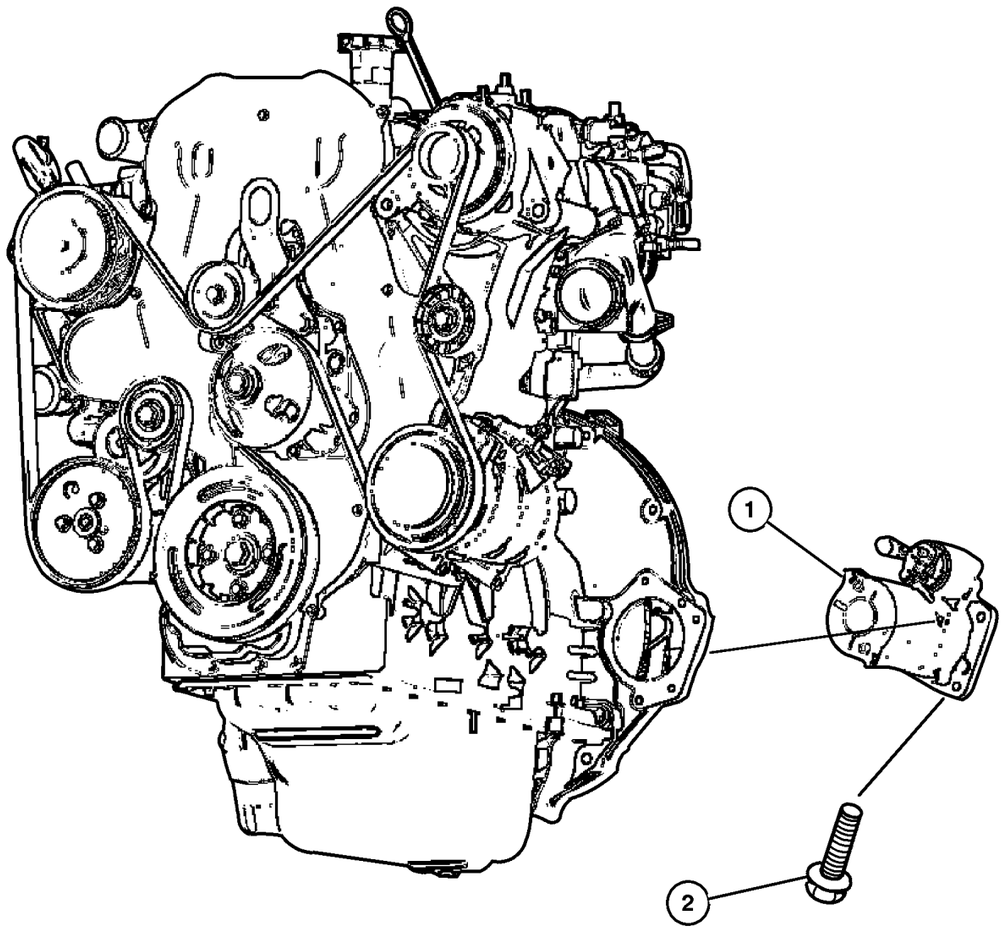

ITEM	PART NUMBER	QTY	LINE	SERIES	BODY	ENGINE	TRANS	TRIM	DESCRIPTION
Notes:									
[EN0] = 2.5L Diesel Engine									
[DG0] = All Automatic Transmissions									
[DBB] = All Manual Transmissions									
1	56041 579AB	1				EN0			STARTER
2	6504 171	3				EN0			SCREW, Hex Flange Head, M8x1.25x32
-3									WASHER, Starter
	4723 279	1				EN0	DG0		
		1				EN0	DBB		

JEEP LIBERTY (KJ)

SERIES	LINE	BODY	ENGINE	TRANSMISSION
P = Limited	J = LHD (4WD)	74 = 4 Dr (104.3 WB)	ED1,ED0 = 2.4L Power Tech	DDK = 5 Speed HDManual
H = Sport	U = RHD (4WD)		EKG,EK0 = 3.7L Power Tech	DDD = 5 Speed HD Manual
M = Renegade	T = LHD (2WD)		ENJ = 2.5L 4Cyl Turbo Diesel	DG4,DGQ = Multi-Speed Auto
			ENR = 2.8L 4Cyl Turbo Diesel	DG6 = 4 Speed Auto Transm
			EN0 = 4Cyl Turbo Diesel	DG0 = All Automatic Transm
				DBB = All Manual Transm

Alternator (2.4L Engine) [ED0]
Figure 008-205

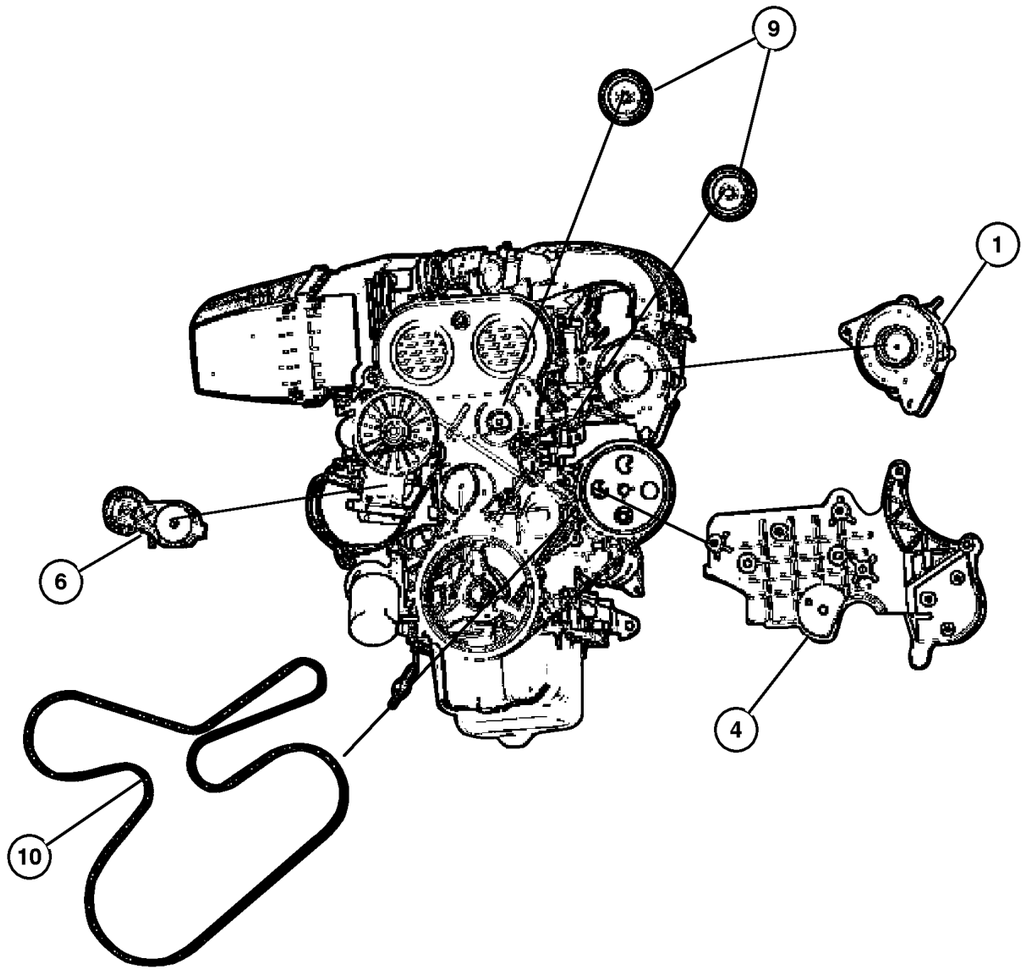

ITEM	PART NUMBER	QTY	LINE	SERIES	BODY	ENGINE	TRANS	TRIM	DESCRIPTION
Notes:									
[ED0] = 2.4L 4 Cylinder Engine									
1	56044 532AC	1				ED0			ALTERNATOR, 136 Amp
-2	6102 120AA	1				ED0			SCREW, Alternator, Alternator Mounting
-3	6506 737AA	2				ED0			SCREW, Alternator Bracket, Bracket to Block
4	4861 371AA	1				ED0			BRACKET, Alternator
-5	6506 990AA	3				ED0			SCREW, Hex Head, M10x1.5x40, Alternator Bracket to Block
6	4861 277AB	1				ED0			TENSIONER, Belt
-7	6506 991AA	1				ED0			STUD, Alternator, Tensioner Mounting
-8	6102 167AA	1				ED0			NUT AND WASHER
9	53013 324AA	2				ED0			PULLEY, Idler
10									BELT, Accessory Drive
	5281 351AC	1				ED0			without Air Conditioning
	53013 352AD	1				ED0			with Air Conditioning
-11									PULLEY, Alternator, Serviced in Alternator Assembly, (NOT SERVICED) (Not Serviced)
-12									CAP, Alternator Pulley, Serviced in Alternator Assembly, (NOT SERVICED) (Not Serviced)
-13	3420 2781	1				ED0			SCREW, Idler Pulley

JEEP LIBERTY (KJ)

SERIES	LINE	BODY	ENGINE	TRANSMISSION
P = Limited	J = LHD (4WD)	74 = 4 Dr (104.3 WB)	ED1,ED0 = 2.4L Power Tech	DDK = 5 Speed HDManual
H = Sport	U = RHD (4WD)		EKG,EK0 = 3.7L Power Tech	DDD = 5 Speed HD Manual
M = Renegade	T = LHD (2WD)		ENJ = 2.5L 4Cyl Turbo Diesel	DG4,DGQ = Multi-Speed Auto
			ENR = 2.8L 4Cyl Turbo Diesel	DG6 = 4 Speed Auto Transm
			EN0 = 4Cyl Turbo Diesel	DG0 = All Automatic Transm
				DBB = All Manual Transm

Alternator (3.7L Engine) [EK0]
Figure 008-210

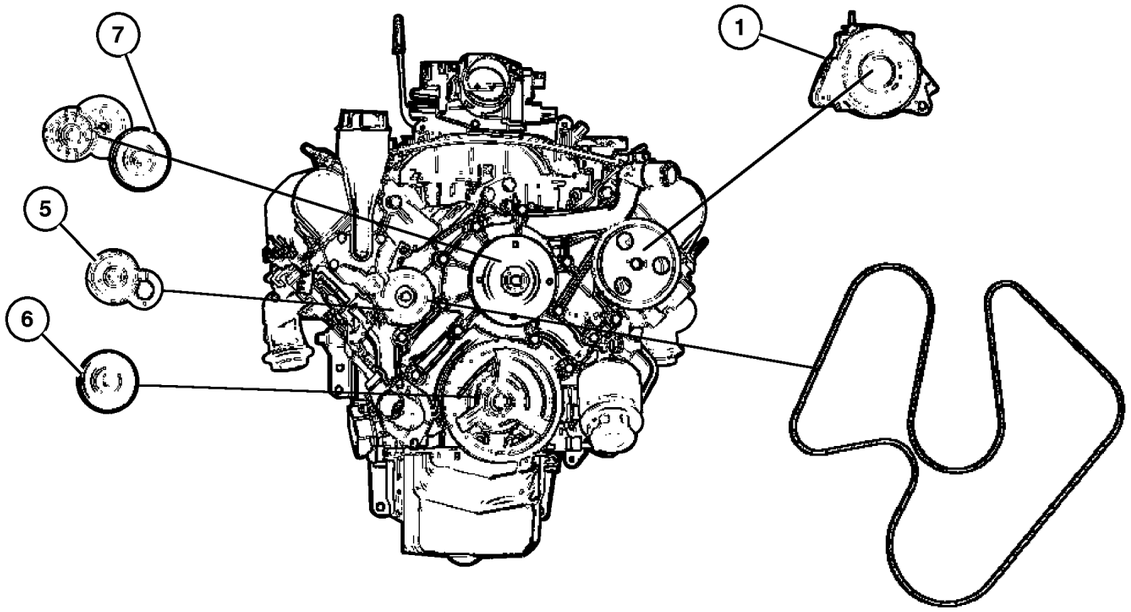

ITEM	PART NUMBER	QTY	LINE	SERIES	BODY	ENGINE	TRANS	TRIM	DESCRIPTION
Notes:									
[ED0]=2.4L 4 Cylinder Engine									
[EK0] = 3.7L V6 Engine									
1									ALTERNATOR
	56029 914AA	1		M		EK0			160 Amp
	56041 693AC	1		H, P		EK0			136 Amp
-2	6102 120AA	2				ED0, EK0			SCREW, Alternator
-3	6504 344	1				EK0			SCREW AND WASHER, Hex Head, Alternator to Front Cover Attaching
-4	6505 482AA	1				EK0			SCREW AND WASHER, Hex Head, M8x1.25x50, Alternator to Cylinder Head
5	5303 0959	1				EK0			BRACKET, Idler Pulley
6	5303 1045	1				EK0			PULLEY, Idler
7	#53030 958AD	1				EK0			TENSIONER, Alternator Belt
-8	6505 488AA	1				EK0			SCREW AND WASHER, Hex, Alternator to Front Cover attaching

JEEP LIBERTY (KJ)

SERIES	LINE	BODY	ENGINE	TRANSMISSION
P = Limited	J = LHD (4WD)	74 = 4 Dr (104.3 WB)	ED1,ED0 = 2.4L Power Tech	DDK = 5 Speed HDManual
H = Sport	U = RHD (4WD)		EKG,EK0 = 3.7L Power Tech	DDD = 5 Speed HD Manual
M = Renegade	T = LHD (2WD)		ENJ = 2.5L 4Cyl Turbo Diesel	DG4,DGQ = Multi-Speed Auto
			ENR = 2.8L 4Cyl Turbo Diesel	DG6 = 4 Speed Auto Transm
			EN0 = 4Cyl Turbo Diesel	DG0 = All Automatic Transm
				DBB = All Manual Transm

Alternator (2.5L Diesel Engine) [EN0]
Figure 008-215

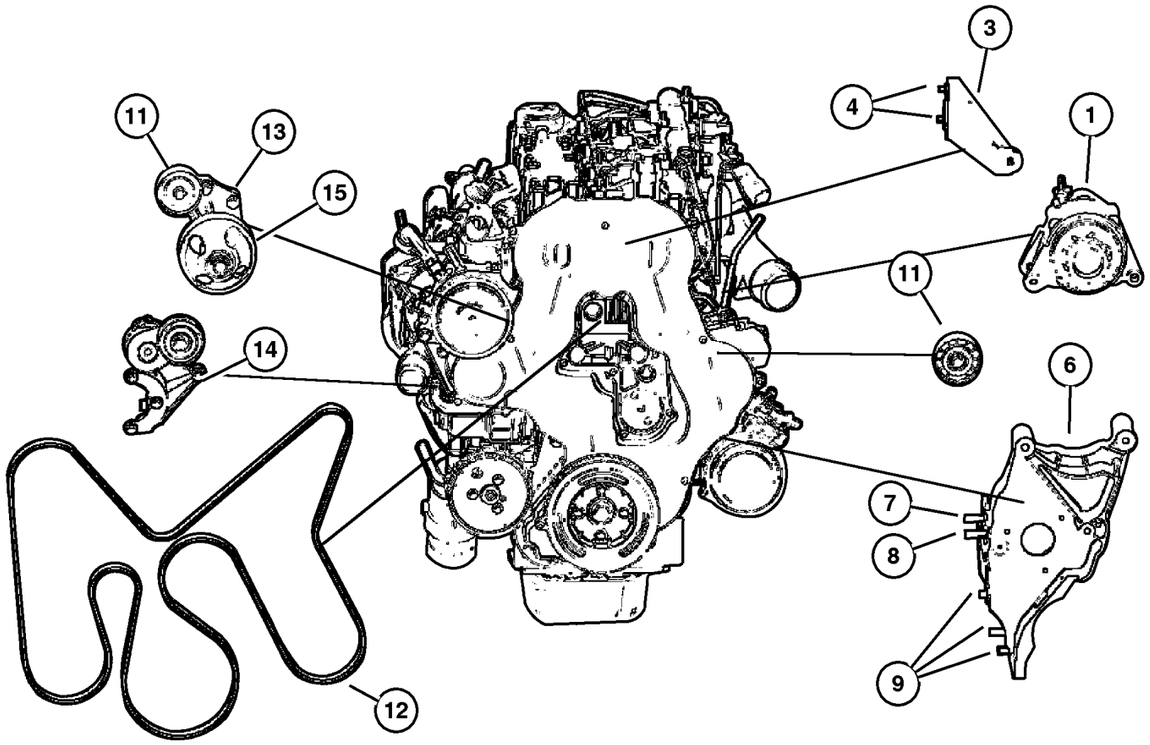

ITEM	PART NUMBER	QTY	LINE	SERIES	BODY	ENGINE	TRANS	TRIM	DESCRIPTION
Notes:									
[EN0]=All 4/5 Cylinder Turbo Diesel Engines									
[DBB]=All Manual Transmissions									
[DG0]=All Automatic Transmissions									
1									ALTERNATOR
	56041 578AE	1				EN0	DG0		
		1				EN0	DBB		
-2									BOLT, Hex Flange Head
	5015 067AA	1				EN0	DG0		
		1				EN0	DBB		
3	53013 495AA	1				EN0			BRACKET, Alternator
4	6501 474	3				EN0			BOLT, Hex Head, M8x1.25x16
-5	6502 696	1				EN0			NUT, Hex Flange Lock, M10x1.5
6									BRACKET
	5072 753AA	1				EN0	DG0		
		1				EN0	DBB		
7									SCREW
	5003 724AA	1				EN0	DG0		
		1				EN0	DBB		
8									BOLT, Adaptor Plate
	5003 532AA	4				EN0	DG0		
		4				EN0	DBB		
9	5066 939AA	3				EN0	DG0		SCREW
-10									PIN
	5066 862AA	2				EN0	DG0		Alignment Pin for Mounting Bracket
		2				EN0	DBB		Alignment Pin for Mounting Bracket
11									PULLEY, Idler
	5066 938AA	2				EN0	DG0		
		2				EN0	DBB		
12									BELT, Accessory Drive
	5072 437AB	1				EN0	DG0		
		1				EN0	DBB		
13									BRACKET, Tensioner
	5093 935AA	1				EN0	DG0		
		1				EN0	DBB		
14									TENSIONER, Belt
	5072 440AA	1				EN0	DBB		
	5072 440AB	1				EN0	DG0		
15									PUMP, Power Steering, see group 19, (NOT SERVICED) (Not Serviced)
-16									PULLEY, Alternator

JEEP LIBERTY (KJ)

SERIES	LINE	BODY	ENGINE	TRANSMISSION
P = Limited	J = LHD (4WD)	74 = 4 Dr (104.3 WB)	ED1,ED0 = 2.4L Power Tech	DDK = 5 Speed HDManual
H = Sport	U = RHD (4WD)		EKG,EK0 = 3.7L Power Tech	DDD = 5 Speed HD Manual
M = Renegade	T = LHD (2WD)		ENJ = 2.5L 4Cyl Turbo Diesel	DG4,DGQ = Multi-Speed Auto
			ENR = 2.8L 4Cyl Turbo Diesel	DG6 = 4 Speed Auto Transm
			EN0 = 4Cyl Turbo Diesel	DG0 = All Automatic Transm
				DBB = All Manual Transm

Alternator (2.5L Diesel Engine) [EN0]
Figure 008-215

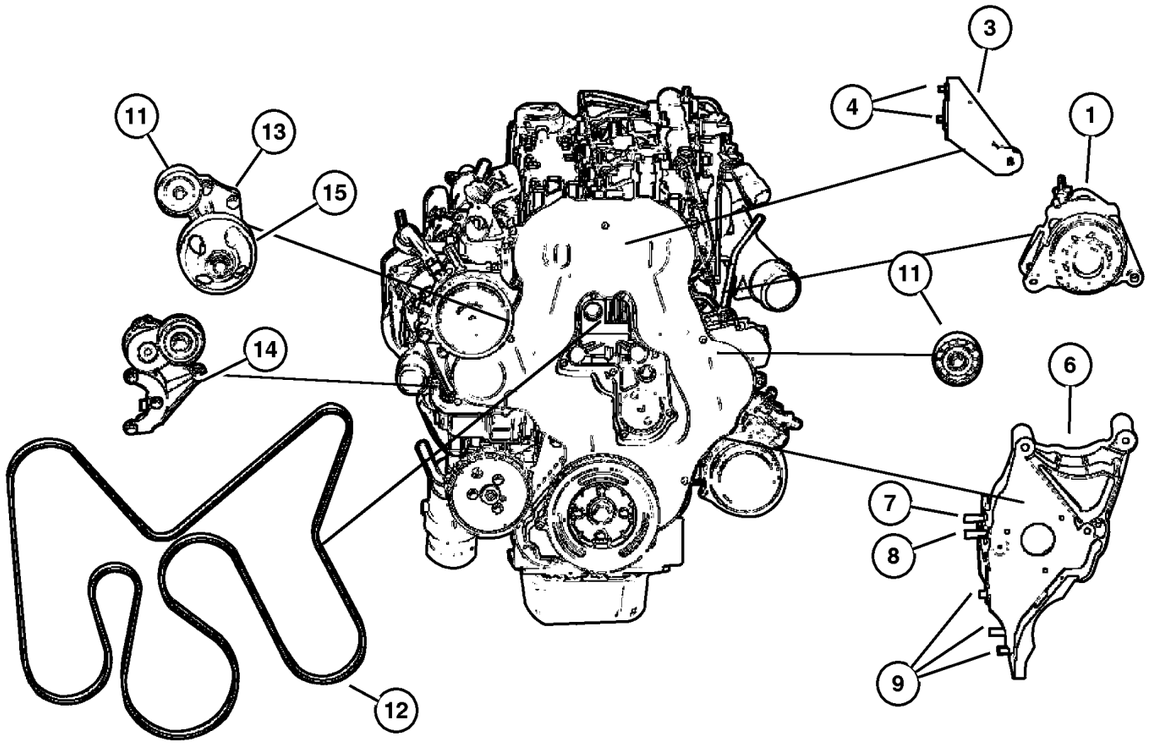

ITEM	PART NUMBER	QTY	LINE	SERIES	BODY	ENGINE	TRANS	TRIM	DESCRIPTION
	53013 554AC	1				EN0	DG0		Decoupler
		1				EN0	DBB		Decoupler
-17									BOLT, Alternator Bracket
	4897 488AA	1				EN0	DG0		
		1				EN0	DBB		
-18									CAP, Alternator Pulley
	53013 559AA	1				EN0	DG0		
		1				EN0	DBB		

JEEP LIBERTY (KJ)

SERIES	LINE	BODY	ENGINE	TRANSMISSION
P = Limited	J = LHD (4WD)	74 = 4 Dr (104.3 WB)	ED1,ED0 = 2.4L Power Tech	DDK = 5 Speed HDManual
H = Sport	U = RHD (4WD)		EKG,EK0 = 3.7L Power Tech	DDD = 5 Speed HD Manual
M = Renegade	T = LHD (2WD)		ENJ = 2.5L 4Cyl Turbo Diesel	DG4,DGQ = Multi-Speed Auto
			ENR = 2.8L 4Cyl Turbo Diesel	DG6 = 4 Speed Auto Transm
			EN0 = 4Cyl Turbo Diesel	DG0 = All Automatic Transm
				DBB = All Manual Transm

AR = Use as required - = Non illustrated part # = New this model year

September 30, 2003

« RETURN TO GROUP INDEX

Modules
Figure 008-410

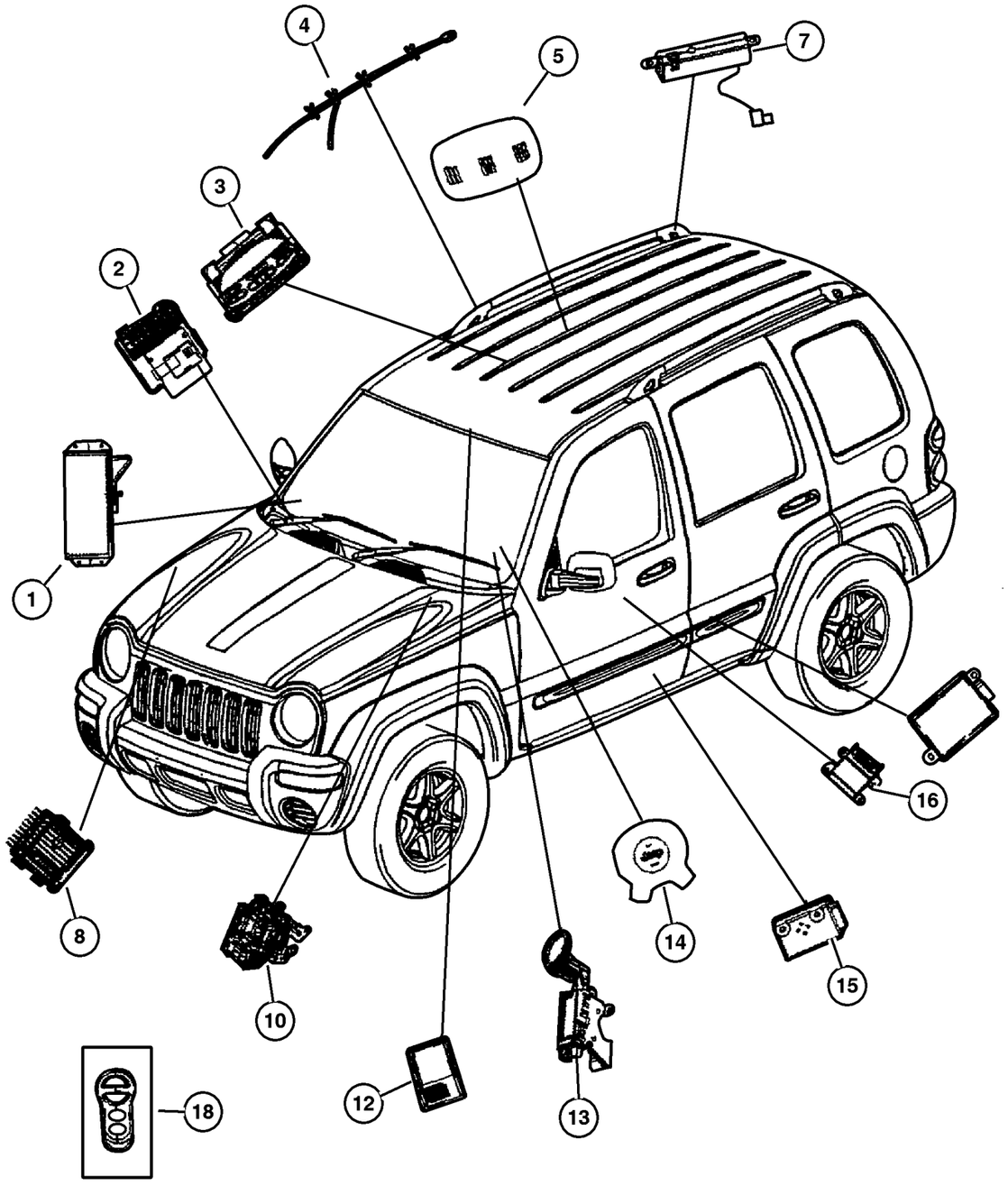

ITEM	PART NUMBER	QTY	LINE	SERIES	BODY	ENGINE	TRANS	TRIM	DESCRIPTION
Notes:									
[EKG]=3.7L 6 Cylinder Engine									
[EN0]= All 4/5 Cylinder Turbo Diesel Engine									
[DG0]=All Automatic Transmissions									
[DG4] =Multi-Speed Automatic Transmissions									
[DG6]=All 4 Speed Automatic Transmissions									
[DGQ]=All 5 Speed Automatic Transmissions									
1	#55315 103AA	1							AIR BAG, Passenger
2									MODULE, Body Controller
	#5104 692AE	1							Without Sunroof, Keyless Entry & without Foglamp
	#5104 693AE	1							With Sunroof, Keyless Entry & with Foglamp
		1							Europe
3									MODULE, Overhead Console
	#56010 437AA	1	J, U						EVIC without Universal Garage Door Opener (With Sunroof)
		1	J, U						EVIC without Universal Garage Door Openerr (Without Sunroof)
	#56010 438AB	1	J, T						EVIC with Universal Garage Door Openerr (Without Sunroof)
		1	J, T						EVIC with Universal Garage Door Openerr (With Sunroof)
4									AIR BAG, Side Curtain
	55315 018AH	1							Up to 07/21/, Right
	55315 019AH	1							Up to 07/21/, Left
	#55315 098AA	1							After 07/21/, Right
	#55315 099AA	1							After 07/21/, Left
5									MODULE, Intrusion
	#5GV82 TL2AG	1							Export
		1	J, U						Export
-6									RETAINER, Electronic Module
	56010 331AB	1	J, U						Export
		1							Export
7									ANTENNA
	56038 527AD	1							Export
	56038 526AE	1							
8									MODULE, Transmission Control
	56044 592AA	1					DG6		[DMF]
	56044 192AD	1					DG6		
	56044 585AC	1				EN0	DGQ		

JEEP LIBERTY (KJ)

SERIES	LINE	BODY	ENGINE	TRANSMISSION
P = Limited	J = LHD (4WD)	74 = 4 Dr (104.3 WB)	ED1,ED0 = 2.4L Power Tech	DDK = 5 Speed HDManual
H = Sport	U = RHD (4WD)		EKG,EK0 = 3.7L Power Tech	DDD = 5 Speed HD Manual
M = Renegade	T = LHD (2WD)		ENJ = 2.5L 4Cyl Turbo Diesel	DG4,DGQ = Multi-Speed Auto
			ENR = 2.8L 4Cyl Turbo Diesel	DG6 = 4 Speed Auto Transm
			EN0 = 4Cyl Turbo Diesel	DG0 = All Automatic Transm
				DBB = All Manual Transm

AR = Use as required - = Non illustrated part # = New this model year

September 30, 2003

« RETURN TO GROUP INDEX »

Modules
Figure 008-410

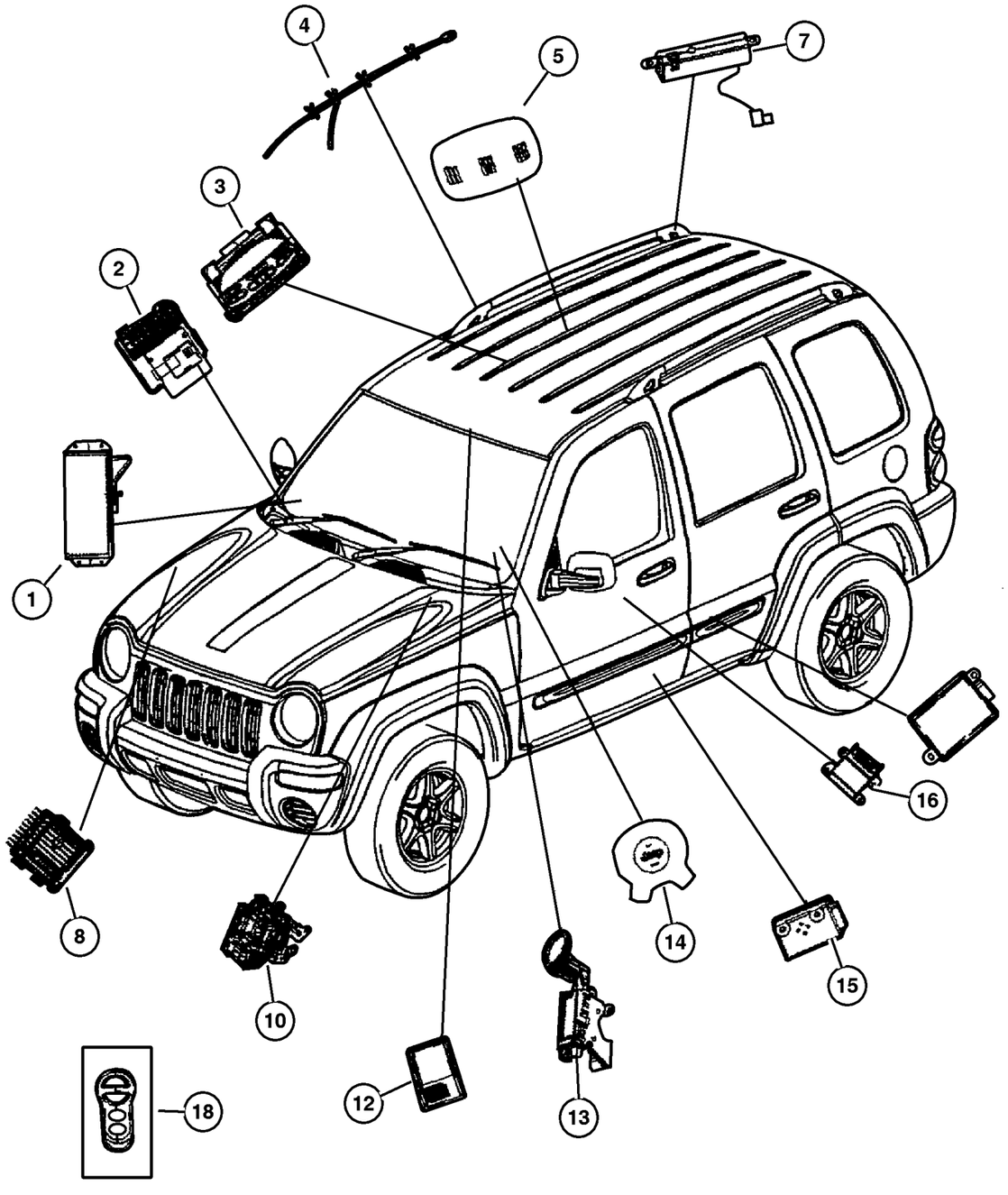

ITEM	PART NUMBER	QTY	LINE	SERIES	BODY	ENGINE	TRANS	TRIM	DESCRIPTION
-9									BRACKET, Transmission Control Unit
	56041 377AB	1	J, T			EN0	DGQ		
	56041 809AA	1	U			EN0	DGQ		
10	5083 084AA	1							MODULE, Anti-lock Brakes
-11	5083 083AA	1							CONTROL UNIT, Anti-Lock Brake
12									RECEIVER, Keyless Entry
	56010 424AA	1							315 MHZ BCM Interconnect (Export)
	56010 394AA	1							315 MHZ BCM Interconnect
	56010 395AA	1							433.92 MHZ BCM Interconnect (Export)
13	56010 209AC	1							MODULE, Immobilizer
14									AIR BAG, Driver
	#5JS05 DX9AA	1		H, M					Instrument Cluster without Tach
	#5JS06 1X9AA	1		M, P					Instrument Cluster with Tach
15									MODULE, Heated Seat Control
	56010 113AA	1	J, T						USA / Canada
		1	J, U						Europe
		1	J, T						Mexico
16									MODULE, Occupant Restraint
	#56038 862AB	1							
	#56038 961AB	1							[CGS]
	#56038 864AC	1							Export
	#56038 865AC	1							[CGS], Export
-17	#56038 787AB	1							COVER, Module
18									TRANSMITTER, Keyless Entry
	4602 260AA	2							
	4602 261AB	2							433.92 MHZ BCM, Export
	56010 562AB	2							315 MHZ BCM, Export
-19									LABEL, Air Bag Warning
	4649 282AA	4							Airbag Warning Seat Side (English)
	4787 437AA	2							Airbag Warning, Sunvisor (English / French (Canada)
-20	#5064 022AF	1							MODULE, Telematics
-21	#56038 763AB	1							BRACKET, Module, [RSP]

JEEP LIBERTY (KJ)

SERIES	LINE	BODY	ENGINE	TRANSMISSION
P = Limited	J = LHD (4WD)	74 = 4 Dr (104.3 WB)	ED1,ED0 = 2.4L Power Tech	DDK = 5 Speed HDManual
H = Sport	U = RHD (4WD)		EKG,EK0 = 3.7L Power Tech	DDD = 5 Speed HD Manual
M = Renegade	T = LHD (2WD)		ENJ = 2.5L 4Cyl Turbo Diesel	DG4,DGQ = Multi-Speed Auto
			ENR = 2.8L 4Cyl Turbo Diesel	DG6 = 4 Speed Auto Transm
			EN0 = 4Cyl Turbo Diesel	DG0 = All Automatic Transm
				DBB = All Manual Transm

AR = Use as required - = Non illustrated part # = New this model year

September 30, 2003

« RETURN TO GROUP INDEX

Junction Block, Relays, Circuit Breaker
Figure 008-510

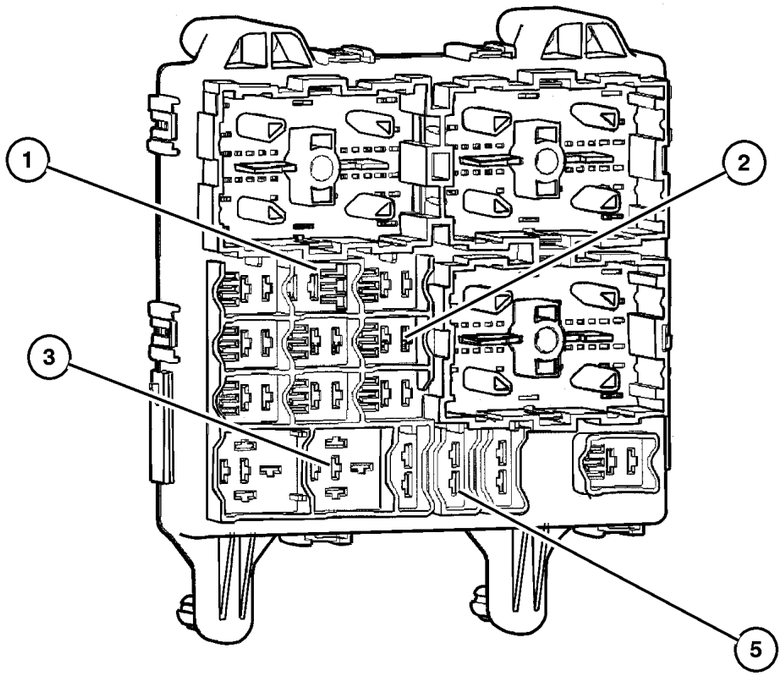

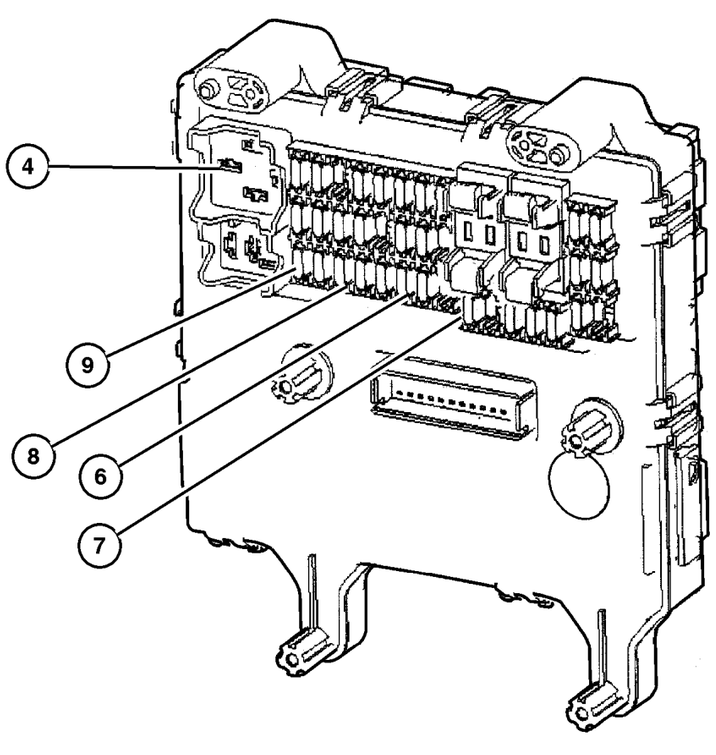

ITEM	PART NUMBER	QTY	LINE	SERIES	BODY	ENGINE	TRANS	TRIM	DESCRIPTION
Notes:									
[EN0]= All 4/5 Cylinder Turbo Diesel Engine									
1									JUNCTION BLOCK, Relay
	#56010 435AC	1	J, T						Without Sunroof (USA / Canada / Mexico)
	#56010 436AC	1	J, T						With Sunroof (USA / Canada / Mexico)
		1	J, U						Europe
2	4671 168	1							RELAY, Mini, High Beam, Door Locks, Foglamp
3									RELAY, Mini
	4727 370AA	1							Heated Backlight in J.B.
		2				EN0			Glow Plug
4	56042 216AB	1							RELAY, Daytime Running Lamp
5	5602 1543	1							BREAKER, Circuit, 25 AMP
6	00AT M10	1	J, T						FUSE, Mini, 10 AMP, Red
7	00AT M15	1	J, T						FUSE, Mini, 15 AMP, Light Blue
8	00AT M20	1	J, T						FUSE, Mini, 20 AMP, Yellow
9	00AT M30	AR							FUSE, Mini, 30 AMP, Green
-10									PULLER, Fuse
	5072 937AA	1	U						
		1	J, T						
-11									BRACKET, Junction Block
	56010 333AD	1	J, T						
	56010 334AD	1	U						

JEEP LIBERTY (KJ)

SERIES	LINE	BODY	ENGINE	TRANSMISSION
P = Limited	J = LHD (4WD)	74 = 4 Dr (104.3 WB)	ED1,ED0 = 2.4L Power Tech	DDK = 5 Speed HDManual
H = Sport	U = RHD (4WD)		EKG,EK0 = 3.7L Power Tech	DDD = 5 Speed HD Manual
M = Renegade	T = LHD (2WD)		ENJ = 2.5L 4Cyl Turbo Diesel	DG4,DGQ = Multi-Speed Auto
			ENR = 2.8L 4Cyl Turbo Diesel	DG6 = 4 Speed Auto Transm
			EN0 = 4Cyl Turbo Diesel	DG0 = All Automatic Transm
				DBB = All Manual Transm

AR = Use as required - = Non illustrated part # = New this model year

September 30, 2003

« RETURN TO GROUP INDEX

Sensor, Engine (2.4L Engine) [ED0]
Figure 008-605

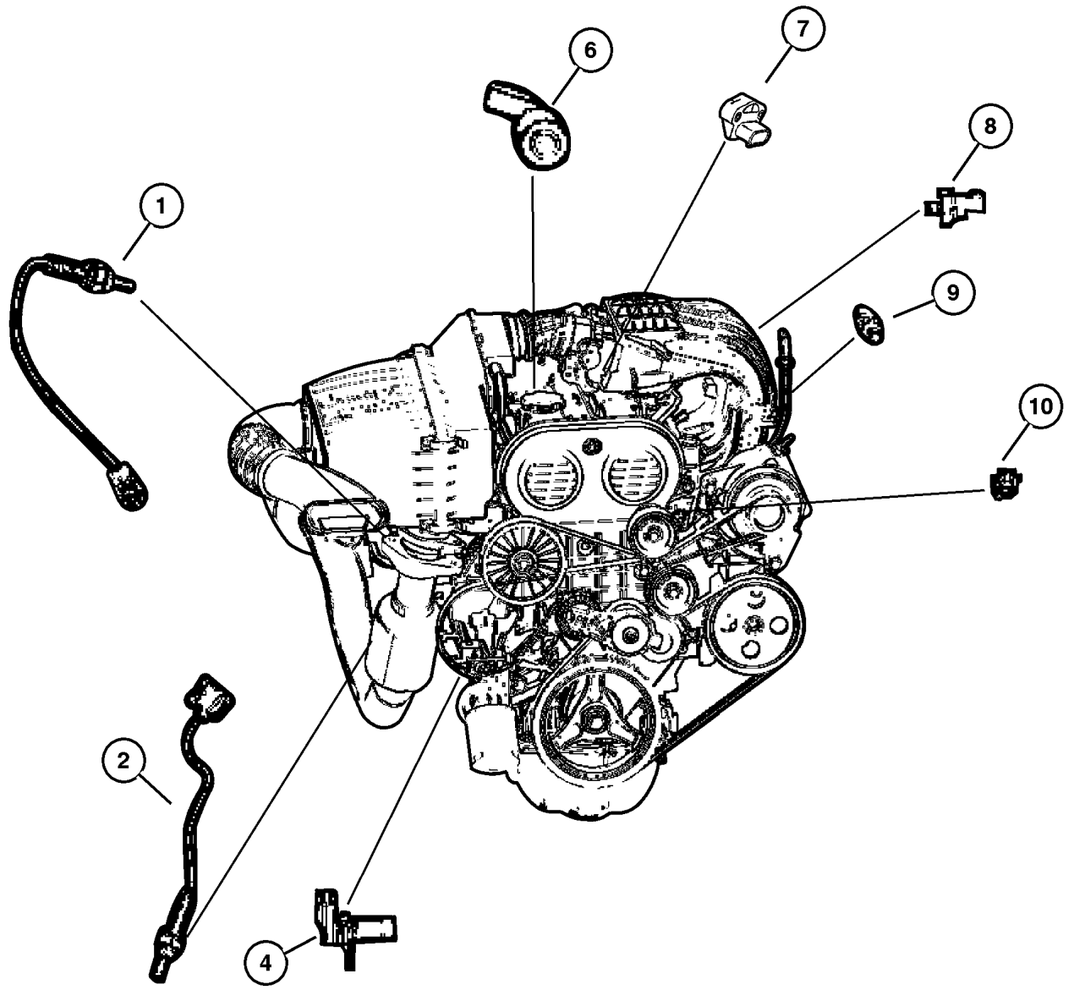

ITEM	PART NUMBER	QTY	LINE	SERIES	BODY	ENGINE	TRANS	TRIM	DESCRIPTION
Notes:									
[ED0]=2.4L 4 Cylinder Engine									
[DDK]=All 5 Speed Heavy Duty Manual Transmissions									
1	#56029 049AA	1				ED0			SENSOR, Oxygen, Before Catalyst
2	#56029 050AA	1				ED0			SENSOR, Oxygen, After Catalst
-3	6503 486	1				ED0			SCREW, Tapping, Oxygen Sensor Wiring Bracket attaching
4	5269 873	1				ED0			SENSOR, Crankshaft Position
-5	6507 220AA	1				ED0			SCREW, M6x1x14
6	5072 759AA	1				ED0			SENSOR, Camshaft
7	4606 487AB	1				ED0			SENSOR, Charge Air Temp
8									SENSOR, Knock, (NOT REQUIRED)
9	5602 7873	1				ED0			SENSOR, Coolant Temperature
10	5019 411AB	1				ED0			SENSOR KIT, Throttle Position
-11	5013 320AA	1	T			ED0	DDK		O RING, Speed Sensor

JEEP LIBERTY (KJ)

SERIES	LINE	BODY	ENGINE	TRANSMISSION
P = Limited	J = LHD (4WD)	74 = 4 Dr (104.3 WB)	ED1,ED0 = 2.4L Power Tech	DDK = 5 Speed HDManual
H = Sport	U = RHD (4WD)		EKG,EK0 = 3.7L Power Tech	DDD = 5 Speed HD Manual
M = Renegade	T = LHD (2WD)		ENJ = 2.5L 4Cyl Turbo Diesel	DG4,DGQ = Multi-Speed Auto
			ENR = 2.8L 4Cyl Turbo Diesel	DG6 = 4 Speed Auto Transm
			EN0 = 4Cyl Turbo Diesel	DG0 = All Automatic Transm
				DBB = All Manual Transm

Sensors, Engine (3.7L Engine) [EK0]
Figure 008-610

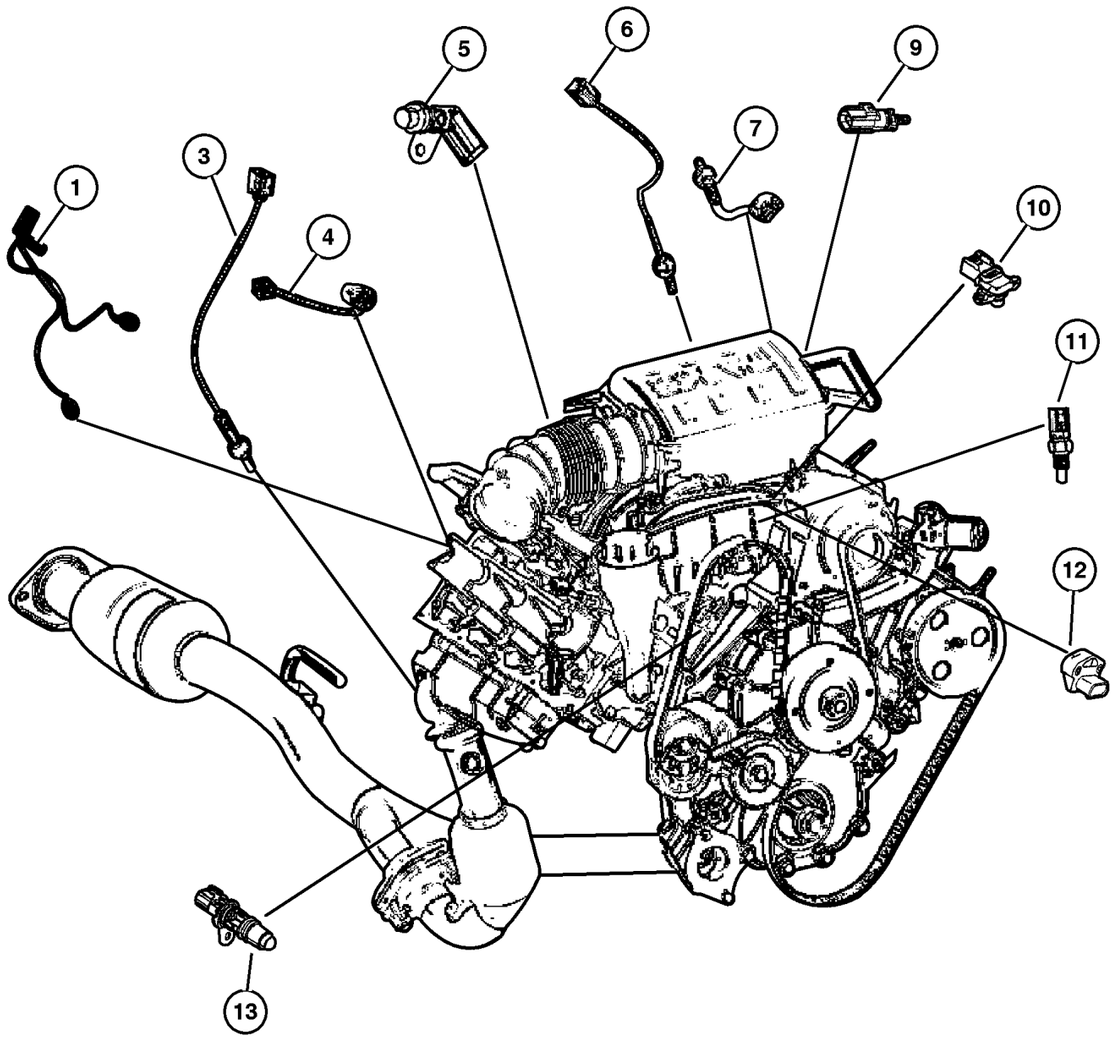

ITEM	PART NUMBER	QTY	LINE	SERIES	BODY	ENGINE	TRANS	TRIM	DESCRIPTION
Notes:									
[EK0]=3.7L V6 Engine									
1	56041 679AC	1				EK0			SENSOR, Knock
-2	56041 849AA	1				EK0			BRACKET, Knock Sensor
3	#56028 994AA	1				EK0			SENSOR, Oxygen, Before Catalyst, Right
4	#56028 996AA	1				EK0			SENSOR, Oxygen, After Catalyst, Right
5	#56044 180AB	1				EK0			SENSOR, Crankshaft Position
6	#56028 994AA	1				EK0			SENSOR, Oxygen, Before Catalyst, Left
7	#56028 996AA	1				EK0			SENSOR, Oxygen, After Catalyst, Left
-8	56041 823AB	2				EK0			BRACKET, Oxygen Sensor
9	56028 364AA	1				EK0			SENSOR, Air Temperature
10	56041 018AC	1				EK0			SENSOR, Map
11	5602 7873	1				EK0			SENSOR, Coolant Temperature
12	5019 411AB	1				EK0			SENSOR KIT, Throttle Position
13	#56041 584AE	1				EK0			SENSOR, Camshaft

JEEP LIBERTY (KJ)

SERIES	LINE	BODY	ENGINE	TRANSMISSION
P = Limited	J = LHD (4WD)	74 = 4 Dr (104.3 WB)	ED1,ED0 = 2.4L Power Tech	DDK = 5 Speed HDManual
H = Sport	U = RHD (4WD)		EKG,EK0 = 3.7L Power Tech	DDD = 5 Speed HD Manual
M = Renegade	T = LHD (2WD)		ENJ = 2.5L 4Cyl Turbo Diesel	DG4,DGQ = Multi-Speed Auto
			ENR = 2.8L 4Cyl Turbo Diesel	DG6 = 4 Speed Auto Transm
			EN0 = 4Cyl Turbo Diesel	DG0 = All Automatic Transm
				DBB = All Manual Transm

Sensors, Engine (2.5L Diesel) [EN0]
Figure 008-615

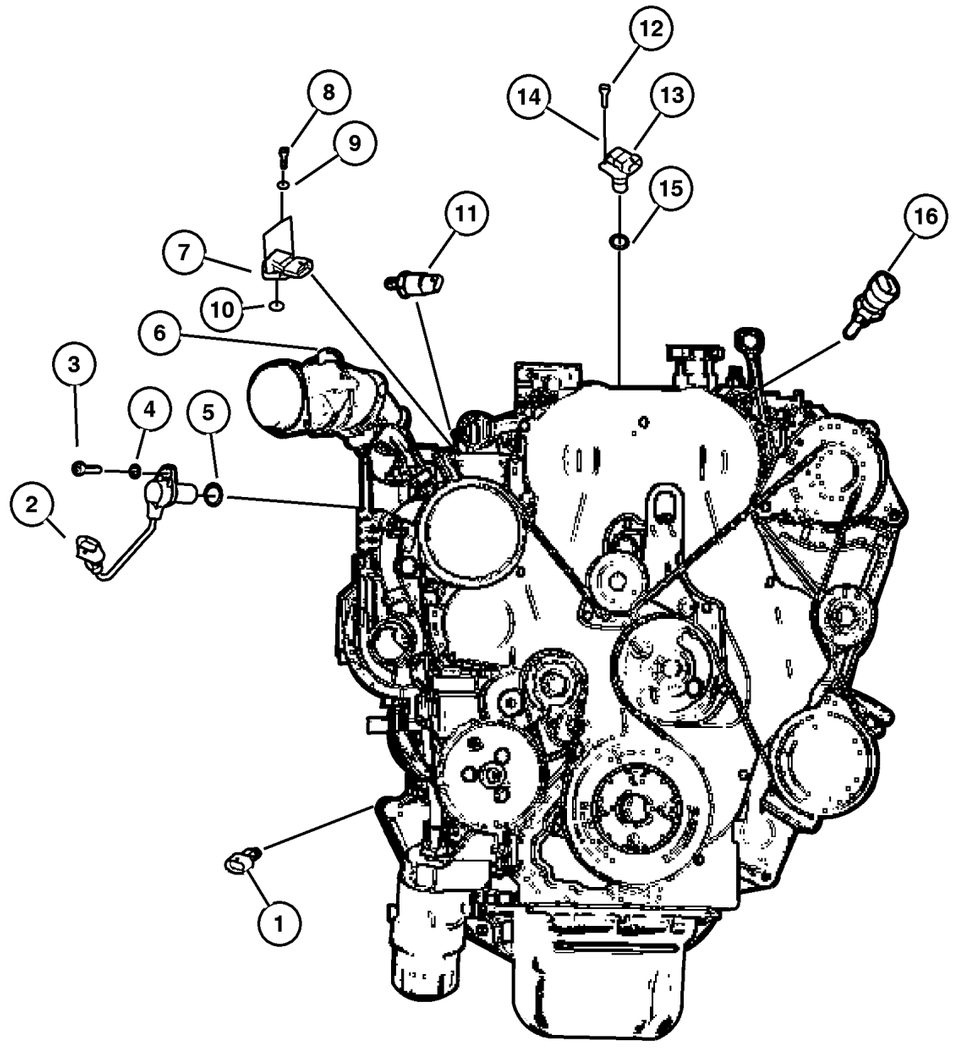

ITEM	PART NUMBER	QTY	LINE	SERIES	BODY	ENGINE	TRANS	TRIM	DESCRIPTION
Notes:									
[EN0]=All 4/5 Cylinder Turbo Diesel Engines									
[DBB]=All Manual Transmissions									
[DG0]=All Automatic Transmissions									
1									SENDING UNIT, Oil Pressure
	56028 807AB	1				EN0	DG0		
		1				EN0	DBB		
2									SENSOR, Crankshaft
	5066 882AA	1				EN0	DG0		
		1				EN0	DBB		
3									BOLT, M6x10
	5003 551AA	1				EN0	DG0		
		1				EN0	DBB		
4									WASHER, Implement Attaching
	4723 204	5				EN0	DG0		
		5				EN0	DBB		
5									O RING
	5066 860AA	1				EN0	DG0		
		1				EN0	DBB		
6									SENSOR PACKAGE, Air Flow Meter, (NOT REQUIRED)
7									SENSOR, Air Temperature
	5093 898AA	1				EN0	DG0		
		1				EN0	DBB		
8									SCREW
	5010 858AA	1				EN0	DG0		
		1				EN0	DBB		
9									WASHER, Implement Attaching
	4723 204	5				EN0	DG0		
		5				EN0	DBB		
10									O RING
	5066 860AA	1				EN0	DG0		
		1				EN0	DBB		
11									SENSOR, Fuel Pressure
	5072 726AA	1				EN0	DG0		
		1				EN0	DBB		
12									SCREW
	5010 858AA	1				EN0	DG0		
		1				EN0	DBB		
13									SENSOR, Camshaft
	5066 856AB	1				EN0	DG0		

JEEP LIBERTY (KJ)

SERIES	LINE	BODY	ENGINE	TRANSMISSION
P = Limited	J = LHD (4WD)	74 = 4 Dr (104.3 WB)	ED1,ED0 = 2.4L Power Tech	DDK = 5 Speed HDManual
H = Sport	U = RHD (4WD)		EKG,EK0 = 3.7L Power Tech	DDD = 5 Speed HD Manual
M = Renegade	T = LHD (2WD)		ENJ = 2.5L 4Cyl Turbo Diesel	DG4,DGQ = Multi-Speed Auto
			ENR = 2.8L 4Cyl Turbo Diesel	DG6 = 4 Speed Auto Transm
			EN0 = 4Cyl Turbo Diesel	DG0 = All Automatic Transm
				DBB = All Manual Transm

Sensors, Engine (2.5L Diesel) [EN0]
Figure 008-615

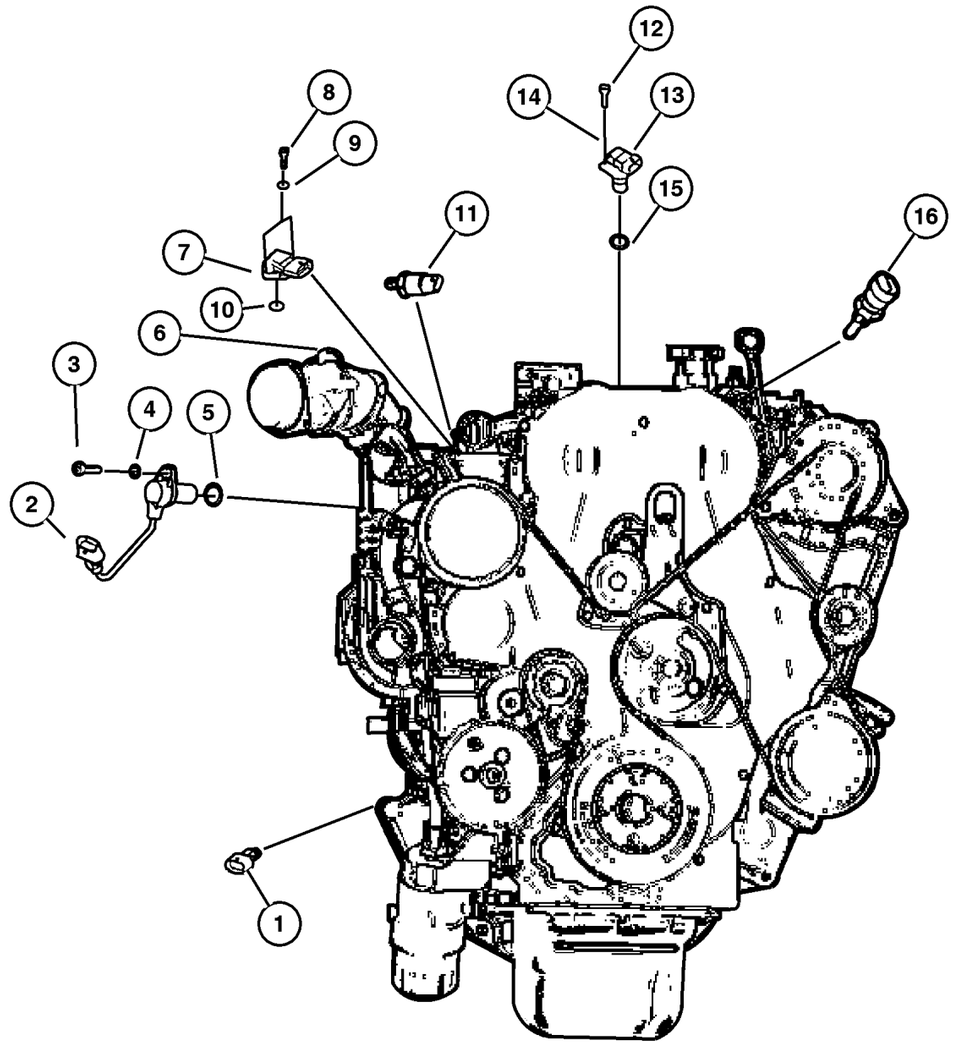

ITEM	PART NUMBER	QTY	LINE	SERIES	BODY	ENGINE	TRANS	TRIM	DESCRIPTION
		1				EN0	DBB		
14									WASHER, Implement Attaching
	4723 204	5				EN0	DG0		
		5				EN0	DBB		
15									O RING
	5066 860AA	1				EN0	DG0		
		1				EN0	DBB		
16									SENSOR, Temperature Sending Unit
	5066 779AA	1				EN0	DG0		
		1				EN0	DBB		
-17									SENDING UNIT, Oil Pressure
	56028 807AB	1				EN0	DG0		
		1				EN0	DBB		
-18	4799 062	2	J, U			EN0	DGQ		O RING, Speed Sensor
-19									BRACKET
	5093 910AA	1				EN0	DG0		Crank Sensor Wiring
		1				EN0	DBB		Crank Sensor Wiring

JEEP LIBERTY (KJ)

SERIES	LINE	BODY	ENGINE	TRANSMISSION
P = Limited	J = LHD (4WD)	74 = 4 Dr (104.3 WB)	ED1,ED0 = 2.4L Power Tech	DDK = 5 Speed HDManual
H = Sport	U = RHD (4WD)		EKG,EK0 = 3.7L Power Tech	DDD = 5 Speed HD Manual
M = Renegade	T = LHD (2WD)		ENJ = 2.5L 4Cyl Turbo Diesel	DG4,DGQ = Multi-Speed Auto
			ENR = 2.8L 4Cyl Turbo Diesel	DG6 = 4 Speed Auto Transm
			EN0 = 4Cyl Turbo Diesel	DG0 = All Automatic Transm
				DBB = All Manual Transm

AR = Use as required - = Non illustrated part # = New this model year

September 30, 2003

« RETURN TO GROUP INDEX

Sensor (Drive Train)
Figure 008-620

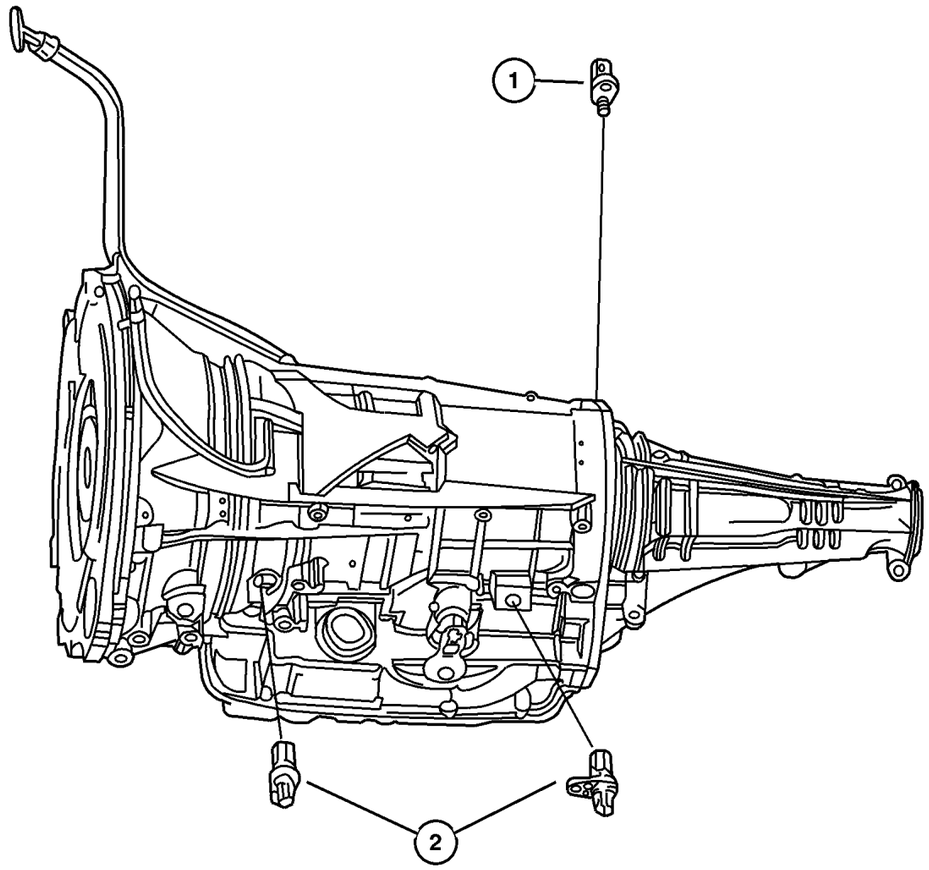

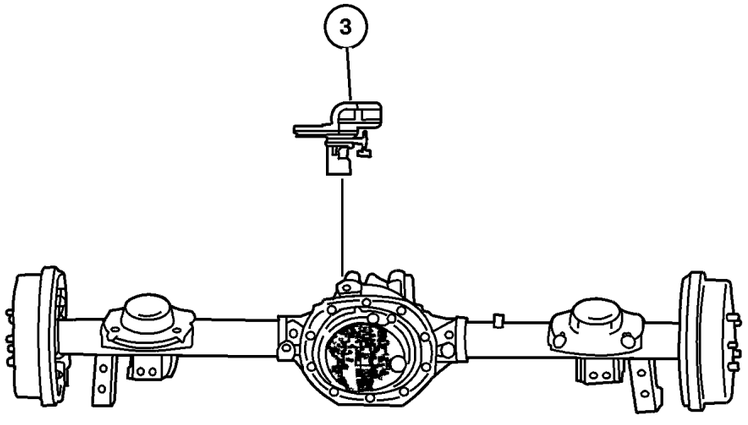

ITEM	PART NUMBER	QTY	LINE	SERIES	BODY	ENGINE	TRANS	TRIM	DESCRIPTION
Notes:									
[DGQ] = 5 Speed Automatic Transmission									
[DG4]= Multi-Speed Automatic Transmission									
[DG6] = 4 Speed Automatic Transmission									
[ED0] = 2.4L Engine									
[EK0] = 3.7L Engine									
[EN0] = 2.5L Turbo Diesel Engine									
1									TRANSDUCER, Pressure Sensor
	4799 758AC	1	J, U			EN0	DGQ		
		1	T				DG4		
		1	J, U				DG4		
2									SENSOR, Transmission Output Speed
	4799 061	2	J, U			EN0	DGQ		Input / Output Speed Sensor
		2	T				DG4		Input / Output Speed Sensor
		2	J, U				DG4		Input / Output Speed Sensor
	52854 001AA	1	T				DG6		Output Speed Sensor
		1	J, U				DG6		Output Speed Sensor
3	56041 393AA	1							SENSOR, Wheel Speed
-4	5086 373AA	1							O RING, Sensor, Wheel Speed Sensor
-5									SWITCH, Transfer Case, 5 Position
	5083 138AA	1	J, U			ED0, EK0, EN0			
		1	J, U						
		1	J, U			EN0			

JEEP LIBERTY (KJ)

SERIES	LINE	BODY	ENGINE	TRANSMISSION
P = Limited	J = LHD (4WD)	74 = 4 Dr (104.3 WB)	ED1,ED0 = 2.4L Power Tech	DDK = 5 Speed HDManual
H = Sport	U = RHD (4WD)		EKG,EK0 = 3.7L Power Tech	DDD = 5 Speed HD Manual
M = Renegade	T = LHD (2WD)		ENJ = 2.5L 4Cyl Turbo Diesel	DG4,DGQ = Multi-Speed Auto
			ENR = 2.8L 4Cyl Turbo Diesel	DG6 = 4 Speed Auto Transm
			EN0 = 4Cyl Turbo Diesel	DG0 = All Automatic Transm
				DBB = All Manual Transm

AR = Use as required - = Non illustrated part # = New this model year **September 30, 2003**

« RETURN TO GROUP INDEX

Sensor (Body)
Figure 008-630

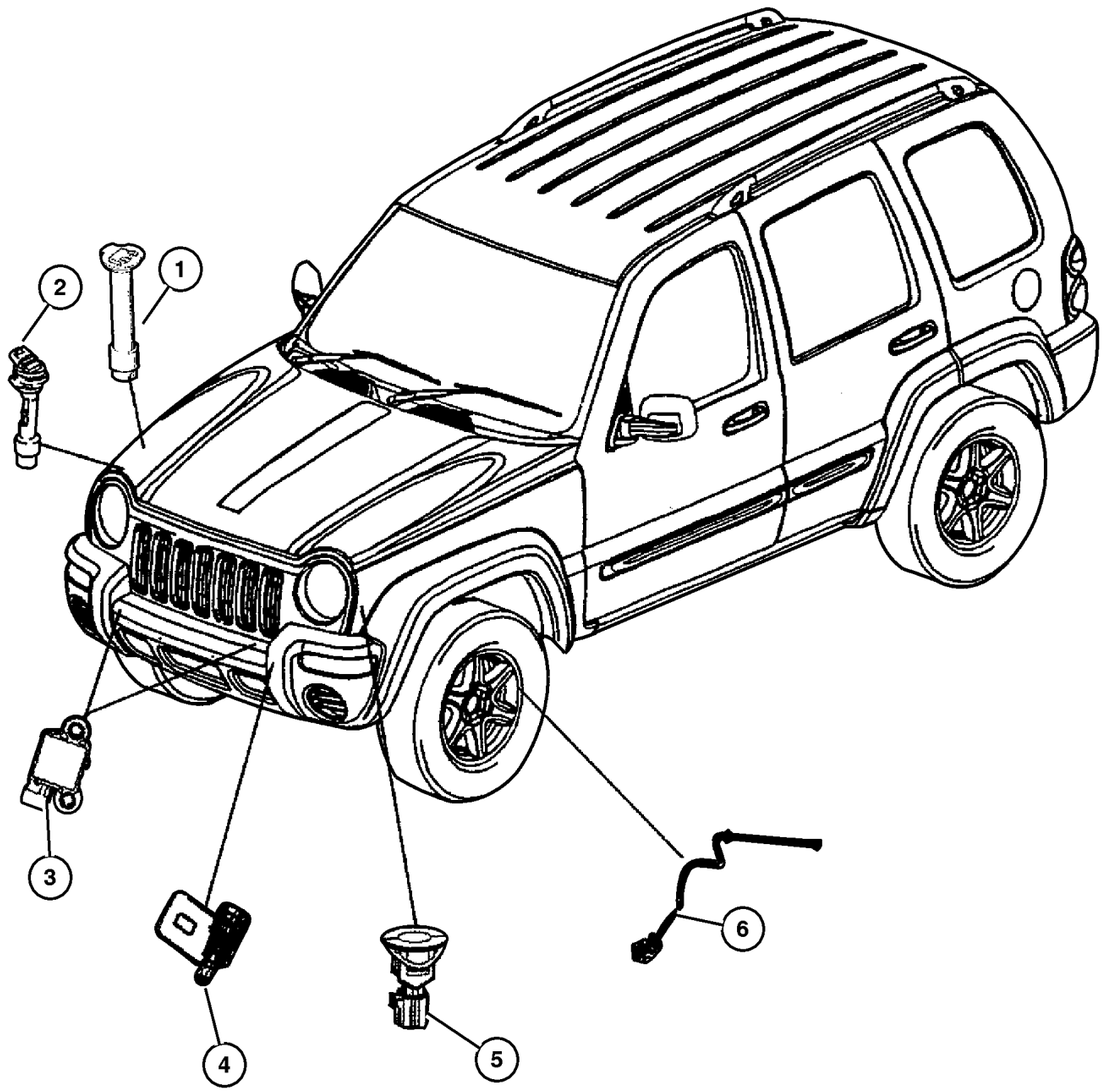

ITEM	PART NUMBER	QTY	LINE	SERIES	BODY	ENGINE	TRANS	TRIM	DESCRIPTION
Notes:									
[ED0] = 2.4L 4 Cylinder Engine									
[EK0] = 3.7L V6 Engine									
[EN0] = 2.5L 4 Cylinder Turbo Diesel									
1	4882 797	1							SENSOR, Washer Fluid Level
2	4682 425	1				EN0			SENSOR, Coolant Level
3	#5084 000AA	2							SENSOR, Air Bag
4									SENSOR, Ambient Temperature
	5604 2395	1	U			ED0, EK0			
		1	U			EN0			
		1	J, T						
5	5604 1053	1							SENSOR, Battery Temperature
6									SENSOR, Anti-Lock Brakes
	52128 694AB	1							USA / Canada / Mexico, Right
		1							Europe, Right
	52128 695AB	1							USA / Canada / Mexico, Left
		1							Europe, Left
-7	52088 990AC	5							SENSOR, Tire Pressure, valve stem
-8	52109 664AA	1							MAGNET, Tire Pressure Sensor
-9	52088 961AA	5							NUT, Tire Pressure Sensor mounting

JEEP LIBERTY (KJ)

SERIES	LINE	BODY	ENGINE	TRANSMISSION
P = Limited	J = LHD (4WD)	74 = 4 Dr (104.3 WB)	ED1,ED0 = 2.4L Power Tech	DDK = 5 Speed HDManual
H = Sport	U = RHD (4WD)		EKG,EK0 = 3.7L Power Tech	DDD = 5 Speed HD Manual
M = Renegade	T = LHD (2WD)		ENJ = 2.5L 4Cyl Turbo Diesel	DG4,DGQ = Multi-Speed Auto
			ENR = 2.8L 4Cyl Turbo Diesel	DG6 = 4 Speed Auto Transm
			EN0 = 4Cyl Turbo Diesel	DG0 = All Automatic Transm
				DBB = All Manual Transm

JTEC Modules & Solenoids
Figure 008-710

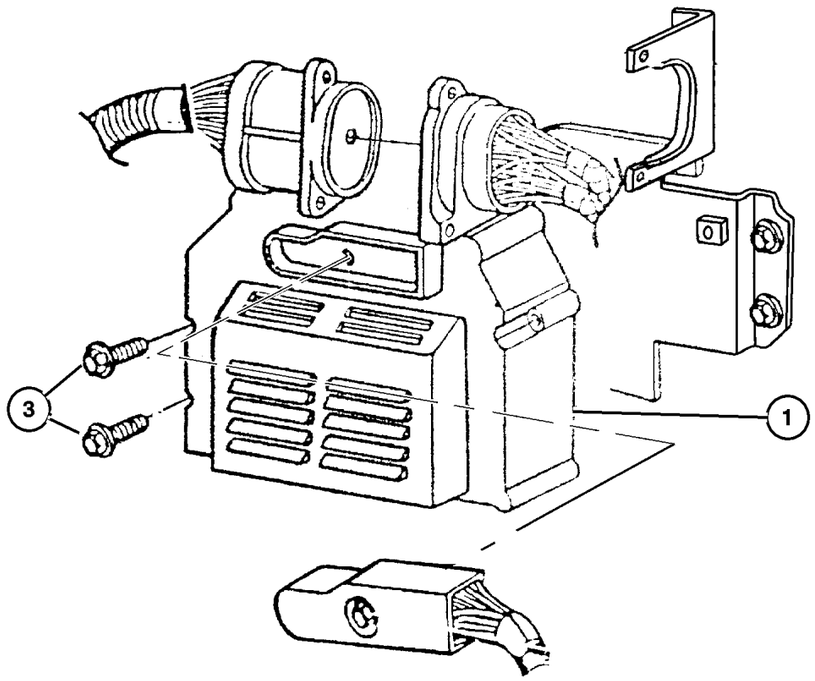

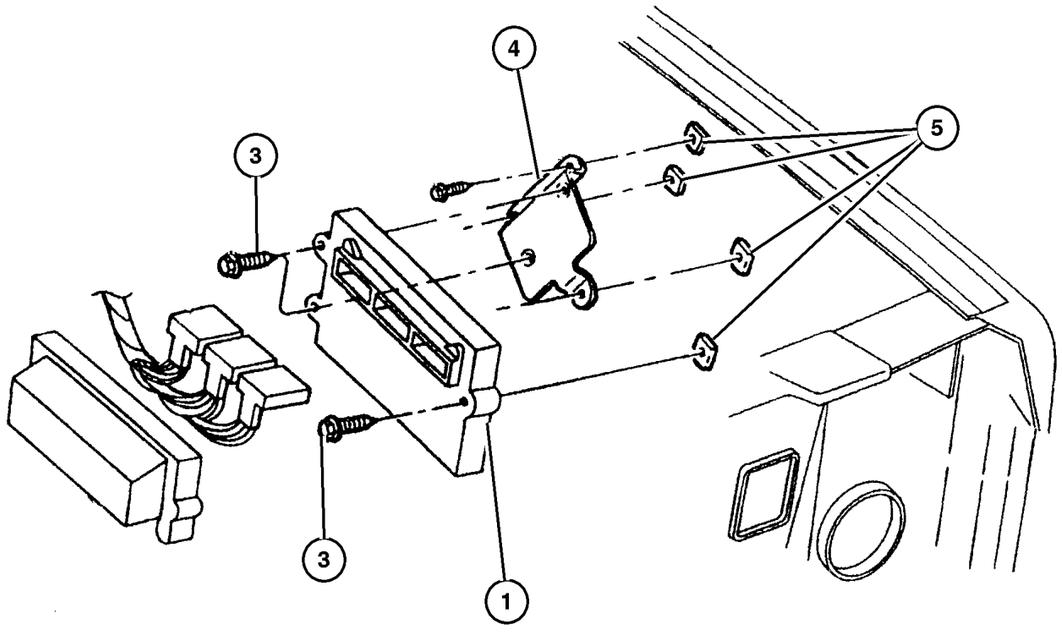

ITEM	PART NUMBER	QTY	LINE	SERIES	BODY	ENGINE	TRANS	TRIM	DESCRIPTION
Notes:									
[ED0] = 2.4L 4 Cylinder Engine									
[EK0] = 3.7L V6 Engine									
[EN0] = All 2.5L Cylinder Turbo Diesel Enigine									
[DBB] = All Manual Transmissions									
[DG0] = All Automatic Transmissions									
[NA1] = Export Emissions									
[NAS] = US 50 States									
[NB2] = Euro Stage II Emissions									
[NB4] = Euro Stage IV Emissions									
[NBJ] = Japan Low Emissions Vehicle									
1									MODULE, Powertrain Control
	#56044 208AC	1				EK0	DG0		[NAS]
	#56044 227AA	1				ED0	DBB		[NA1] With [NB4] (Export)
	#56044 299AB	1				EN0	DG0		
	#56044 352AB	1				EN0	DBB		
	#56044 209AC	1				EK0	DBB		[NAS]
	#56044 217AA	1				EK0	DG0		[NA1] With [NB2]
	#56044 218AA	1				EK0	DBB		[NA1] With [NB2]
	#56044 221AA	1				EK0	DG0		[NA1] With [NB4] (Export)
	#56044 223AA	1				EK0	DBB		[NA1] With [NB4] (Export)
	#56044 224AA	1				EK0	DG0		[NA1] With [NBJ] (Export)
	#56044 225AC	1				ED0	DBB		[NAS]
	#56044 226AA	1				ED0	DBB		[NA1] With [NB2]
-2									MODULE, Engine Controller
	#56044 299AA	1				EN0	DG0		
	#56044 352AA	1				EN0	DBB		
3	6035 884	3				ED0, EK0			SCREW
4									BRACKET, Control Unit
	56041 384AC	1				EN0			Export
	#56044 353AA	1				ED0, EK0			
5									NUT, Hex Flange Lock, M5, M5x0.80, (NOT SERVICED) (Not Serviced)

JEEP LIBERTY (KJ)

SERIES	LINE	BODY	ENGINE	TRANSMISSION
P = Limited	J = LHD (4WD)	74 = 4 Dr (104.3 WB)	ED1,ED0 = 2.4L Power Tech	DDK = 5 Speed HDManual
H = Sport	U = RHD (4WD)		EKG,EK0 = 3.7L Power Tech	DDD = 5 Speed HD Manual
M = Renegade	T = LHD (2WD)		ENJ = 2.5L 4Cyl Turbo Diesel	DG4,DGQ = Multi-Speed Auto
			ENR = 2.8L 4Cyl Turbo Diesel	DG6 = 4 Speed Auto Transm
			EN0 = 4Cyl Turbo Diesel	DG0 = All Automatic Transm
				DBB = All Manual Transm

AR = Use as required - = Non illustrated part # = New this model year

September 30, 2003

« RETURN TO GROUP INDEX

Switches (Instrument Panel and Console)
Figure 008-810

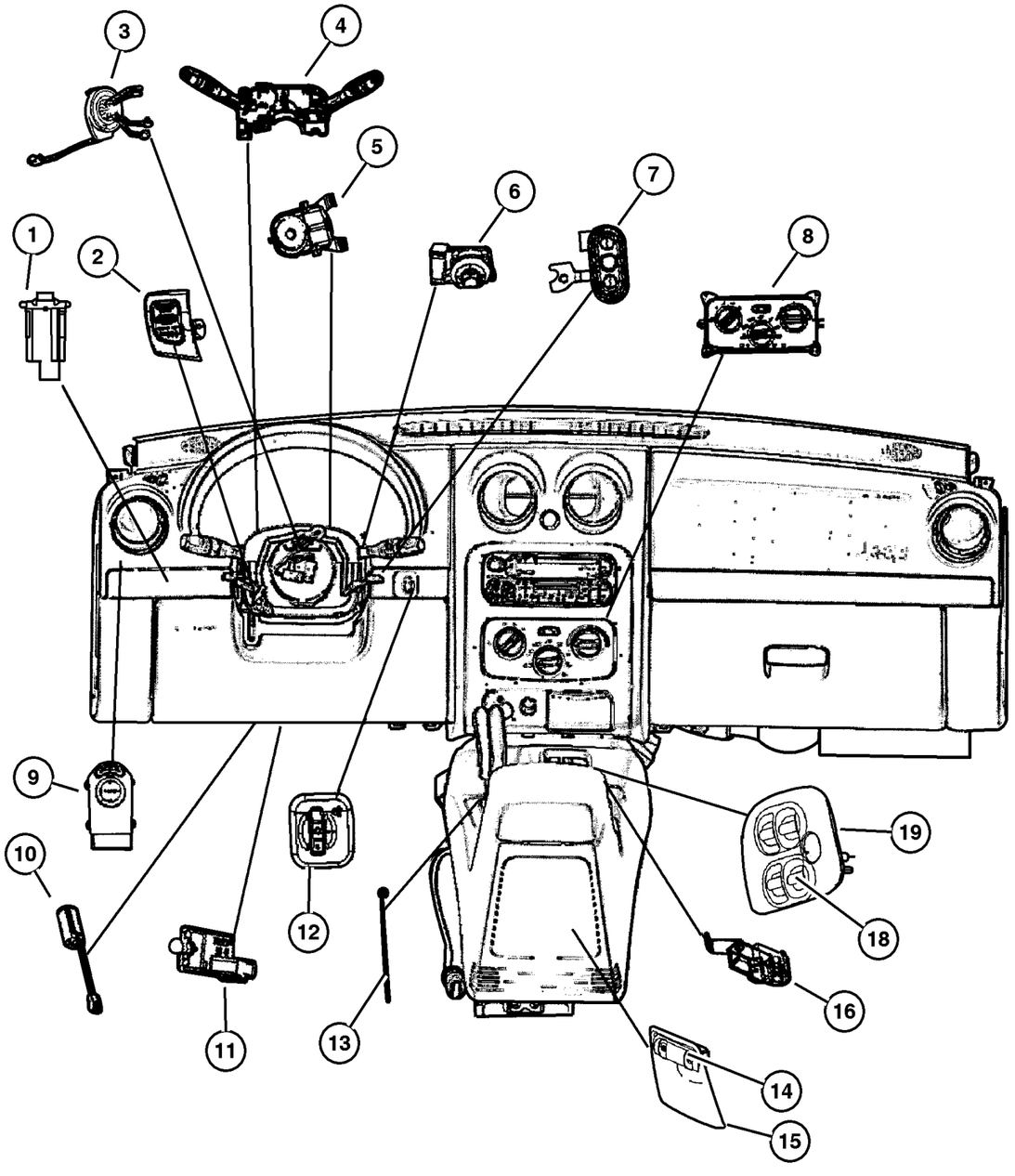

ITEM	PART NUMBER	QTY	LINE	SERIES	BODY	ENGINE	TRANS	TRIM	DESCRIPTION
Notes:									
[ED0] = 2.4L 4 Cylinder Engine									
[EK0]=3.7L V6 Engine									
[EKG] = 3.7L V6 ‘Magnum‘ Engine									
[EN0]=4/5 Cylinder Turbo Diesel Engine									
[DBB]=All Manual Transmissions									
[DG0]=All Automatic Transmissions									
1	56010 417AC	1							SWITCH, Off Road Lamp
2									SWITCH, Speed Control
	56010 088AC	1		H, M					Right
	56010 089AC	1		H, M					Left
	56010 358AB	1		P					Right
		1		M, P					Right
	56010 359AB	1		P					Left
		1		M, P					Left
3									CLOCKSPRING
	56010 146AF	1							Without Audio Control Stering Wheel
	56010 187AG	1							With Audio Control Stering Wheel
4									SWITCH, Multifunction
	56010 125AF	1							Without Foglamp
	56010 126AF	1							With Foglamp
	56010 132AF	1							Without Foglamp (Export)
	56010 133AF	1							With Foglamp (Export)
5	56010 158AC	1							SWITCH, Hazard Warning, and Flasher
6									SWITCH, Ignition
	4793 576AB	1					DG0		
		1					DBB		
7									SWITCH, Remote Radio
	56042 312AB	1		H, M					Right
		1		P					Right
	56042 313AB	1		H, M					Left
		1		P					Left
8	55037 533AD	1							CONTROL, A/C And Heater
9									SWITCH, Mirror
	56010 093AA	1	J, T						
	56010 094AA	1	U						Export
10									SWITCH, Clutch Starter Interlock
	56010 330AA	1	U			ED0, EKG	DBB		

JEEP LIBERTY (KJ)

SERIES	LINE	BODY	ENGINE	TRANSMISSION
P = Limited	J = LHD (4WD)	74 = 4 Dr (104.3 WB)	ED1,ED0 = 2.4L Power Tech	DDK = 5 Speed HDManual
H = Sport	U = RHD (4WD)		EKG,EK0 = 3.7L Power Tech	DDD = 5 Speed HD Manual
M = Renegade	T = LHD (2WD)		ENJ = 2.5L 4Cyl Turbo Diesel	DG4,DGQ = Multi-Speed Auto
			ENR = 2.8L 4Cyl Turbo Diesel	DG6 = 4 Speed Auto Transm
			EN0 = 4Cyl Turbo Diesel	DG0 = All Automatic Transm
				DBB = All Manual Transm

Switches (Instrument Panel and Console)
Figure 008-810

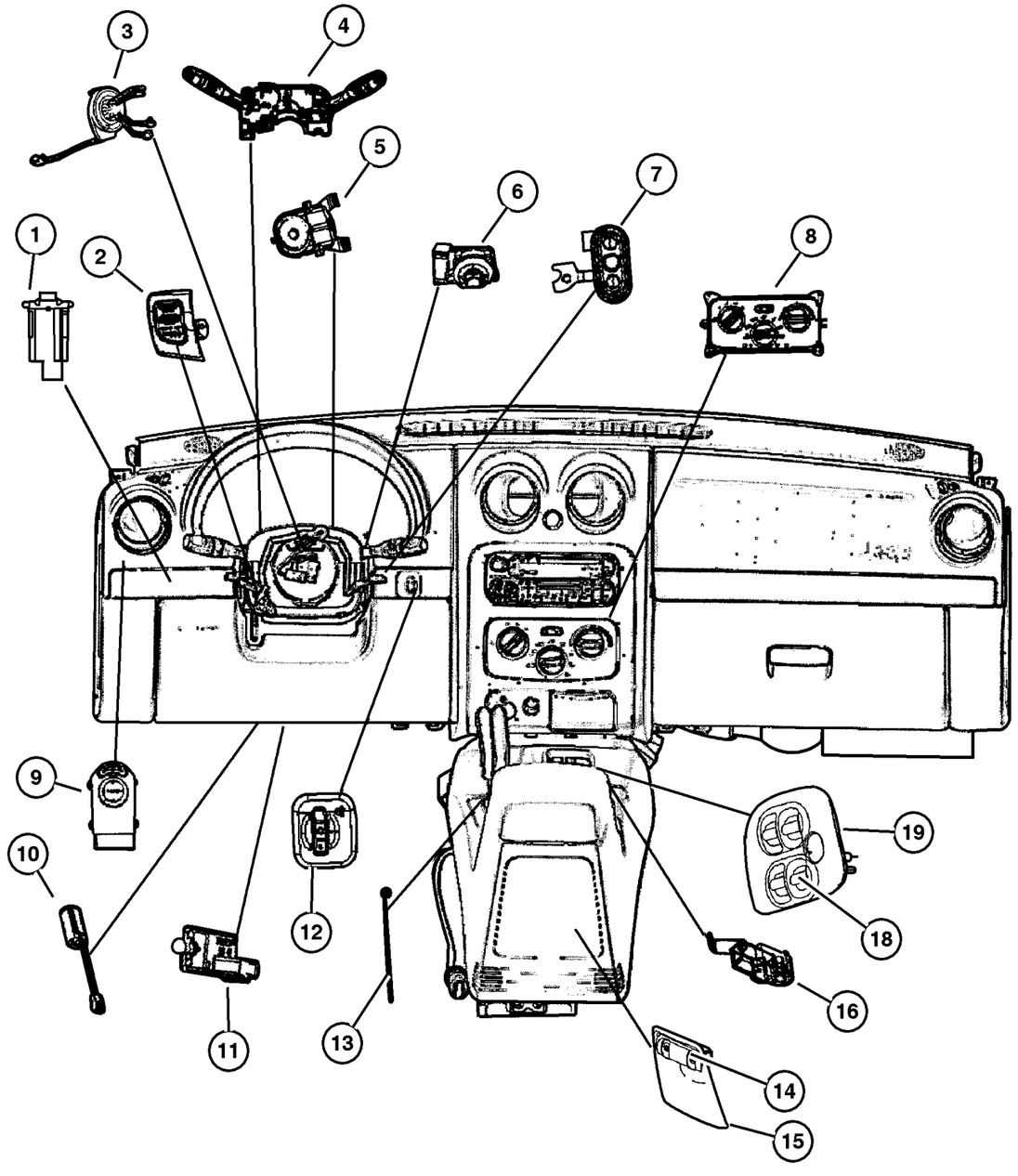

ITEM	PART NUMBER	QTY	LINE	SERIES	BODY	ENGINE	TRANS	TRIM	DESCRIPTION
		1	J, T			ED0,	DBB		
						EK0			
		1	J, T			EN0	DBB		
		1	U			EN0	DBB		
11	5083 344AA	1							SWITCH PACKAGE, Stop Lamp
12	56010 204AE	1							SWITCH, Headlamp Leveling
13									SWITCH, Overdrive Lockout, Serviced in Shifter Assembly, (NOT SERVICED) (Not Serviced)
14	56010 091AB	1							SWITCH, Power Window, Rear
15									BEZEL, Power Window Switch
	WA64 WL8AB	1							[L2]
		1							[L5]
	WA64 XDVAB	1							[D2]
		1							[DV]
16									SWITCH, Parking Brake
	5212 7960	1					DD0		
		1					DG0		
-17	4793 138	1					DD0		INSULATOR, 6 Way Male, Parking Brake
18	#56010 677AA	1							SWITCH, Power Window, Master Switch Front
19									BEZEL, Power Window Switch
	#5JQ92 WL8AA	1							[L2]
		1							[L5]
	#5JQ92 XDVAA	1							[D2]
		1							[DV]
-20									SWITCH, Sunroof
	5GM78 TL2AA	1	J, T						
		1	J, U						Export
		1							Export

JEEP LIBERTY (KJ)

SERIES	LINE	BODY	ENGINE	TRANSMISSION
P = Limited	J = LHD (4WD)	74 = 4 Dr (104.3 WB)	ED1,ED0 = 2.4L Power Tech	DDK = 5 Speed HDManual
H = Sport	U = RHD (4WD)		EKG,EK0 = 3.7L Power Tech	DDD = 5 Speed HD Manual
M = Renegade	T = LHD (2WD)		ENJ = 2.5L 4Cyl Turbo Diesel	DG4,DGQ = Multi-Speed Auto
			ENR = 2.8L 4Cyl Turbo Diesel	DG6 = 4 Speed Auto Transm
			EN0 = 4Cyl Turbo Diesel	DG0 = All Automatic Transm
				DBB = All Manual Transm

Switches (Drive Train)
Figure 008-820

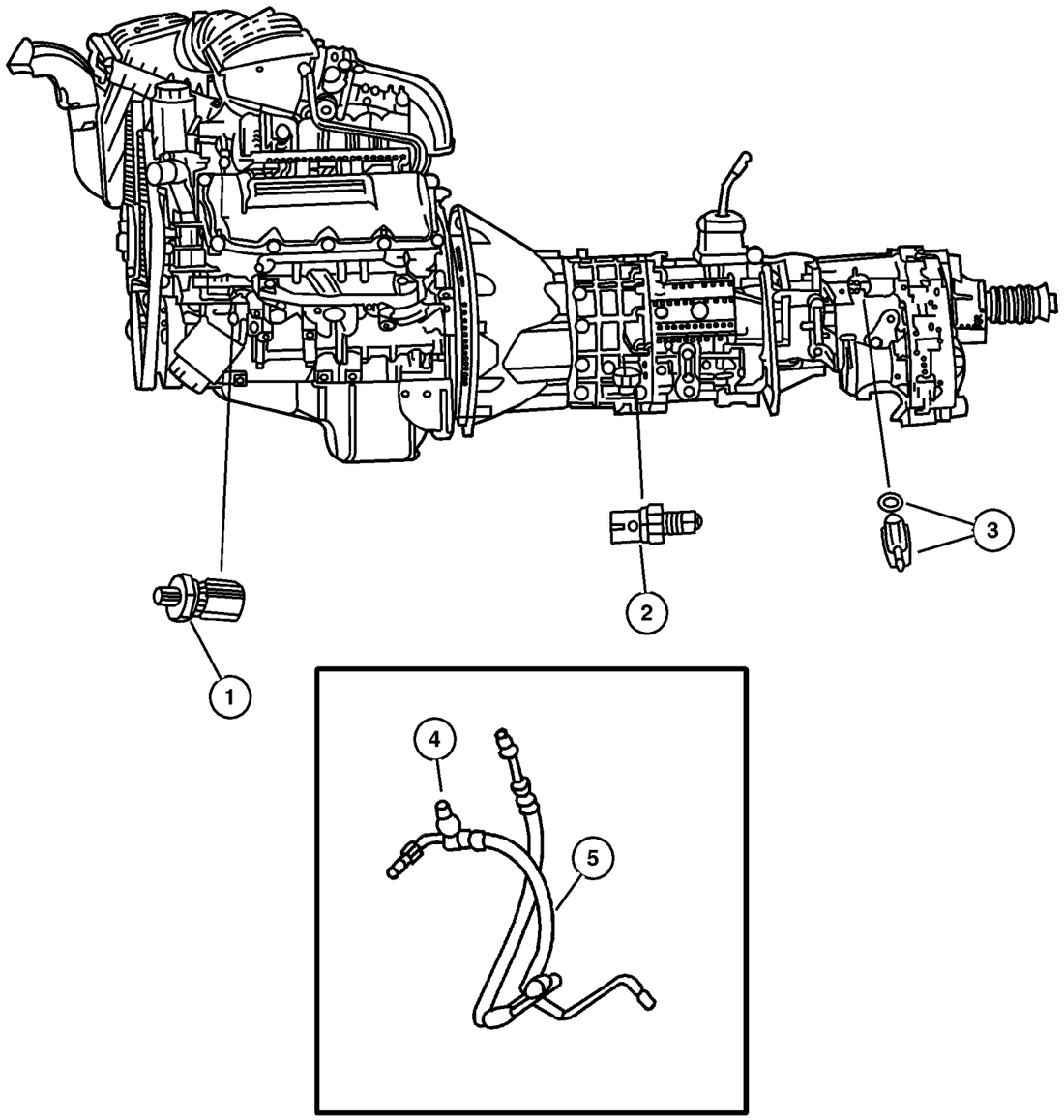

ITEM	PART NUMBER	QTY	LINE	SERIES	BODY	ENGINE	TRANS	TRIM	DESCRIPTION
Notes:									
[ED0] = 2.4L 4 Cylinder Engine									
[EK0] = 3.7L V6 Cylinder Engine									
[EKG] = 3.7L V6 ‘Magnum‘ Engine									
[EN0] = 2.5L Diesel									
[DBB] = All Manual Transmissions									
[DDD] = 5 Speed Manual Transmissions									
[DDk] = 5 Speed Manual Transmissions									
[DG0] = All Automatic Transmissions									
1									SENDING UNIT, Oil Pressure
	56028 807AB	1				EN0	DG0		
		1				EN0	DBB		
2									SWITCH, Back Up Lamp
	5013 336AA	1	J, U			ED0	DDK		
		1	T			ED0	DDK		
	5600 7163	1	J, U			EN0	DDD		
		1	T			EKG	DDD		
		1	J			EKG	DDD		
3									SWITCH, Transfer Case, 5 Position
	5083 138AA	1	J, U			ED0, EK0, EN0			
		1	J, U						
		1	J, U			ED0, EK0			
		1	J, U			EN0			
4									SWITCH, Power Steering
	56044 169AA	1	U			EK0			
		1	U			ED0			
		1	J, T			ED0			
		1	J, T			EK0			
5									HOSE, Power Steering, (NOT SERVICED) (Not Serviced)
-6									SWITCH, Oil Pressure
	4868 672AA	1				EK0			
	4608 303AB	1				ED0			

JEEP LIBERTY (KJ)

SERIES	LINE	BODY	ENGINE	TRANSMISSION
P = Limited	J = LHD (4WD)	74 = 4 Dr (104.3 WB)	ED1,ED0 = 2.4L Power Tech	DDK = 5 Speed HDManual
H = Sport	U = RHD (4WD)		EKG,EK0 = 3.7L Power Tech	DDD = 5 Speed HD Manual
M = Renegade	T = LHD (2WD)		ENJ = 2.5L 4Cyl Turbo Diesel	DG4,DGQ = Multi-Speed Auto
			ENR = 2.8L 4Cyl Turbo Diesel	DG6 = 4 Speed Auto Transm
			EN0 = 4Cyl Turbo Diesel	DG0 = All Automatic Transm
				DBB = All Manual Transm

Switches (Body)
Figure 008-830

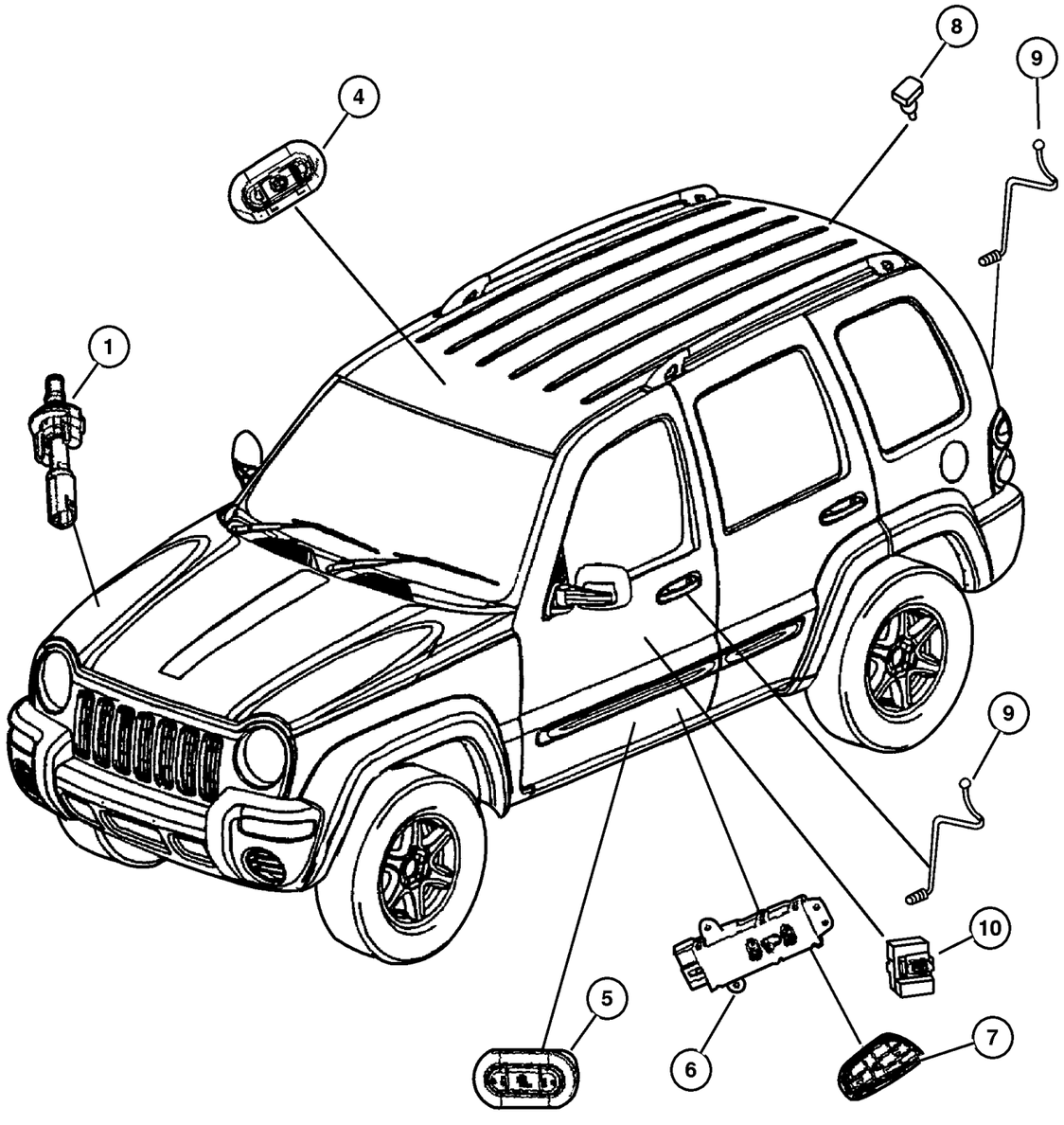

ITEM	PART NUMBER	QTY	LINE	SERIES	BODY	ENGINE	TRANS	TRIM	DESCRIPTION
1	4707 875AB	1							SWITCH, Underhood
-2	56010 290AB	1							BRACKET, Hood Ajar Disarm Switch
-3	56010 147AE	1							PLATE, Striker, Underhood Switch
4									SWITCH, Sunroof
	5GM78 TL2AA	1	J, T						
		1	J, U						
		1							
5									SWITCH, Heated Seat
	5GW44 DX9AB	2	J, T						[D2]
		2	J, T						[L2]
		2	J, U						[DV] Export
		2	J, U						[L2] Export
6									SWITCH, Seat
	55352 782AA	2	J, T						
		1							
		2	J, U						
7									KNOB, Power Seat Switch
	4607 042AB	1							Without Graphics, Right
	4607 042	1	J, T						With Graphics, Right
	4607 042AB	1	J, U						Without Graphics (Export), Right
		1							Without Graphics (Export), Right
	4607 043	1	J, T						With Graphics, Left
		1							With Graphics, Left
		1	J, T						With Graphics (Mexico), Left
	4607 043AB	1							Without Graphics, Left
		1	J, U						Without Graphics (Export), Left
8									SWITCH, Reading Lamp
	4685 445	1	J, U						Rear Cargo Lamp (Export)
		1	J, T						Rear Cargo Lamp (U.S.A. / Mexico / Canada)
9									SWITCH, Security Alarm
	5072 956AA	1	J, T						Without Security Alarm
	55136 557AA	1	J, T						With Security Alarm
10									SWITCH, Door Lock
	56010 092AA	2							
		1	J, T						
		1	U						
-11									SWITCH, Programing Bypass, (NOT SERVICED) (Not Serviced)

JEEP LIBERTY (KJ)

SERIES	LINE	BODY	ENGINE	TRANSMISSION
P = Limited	J = LHD (4WD)	74 = 4 Dr (104.3 WB)	ED1,ED0 = 2.4L Power Tech	DDK = 5 Speed HDManual
H = Sport	U = RHD (4WD)		EKG,EK0 = 3.7L Power Tech	DDD = 5 Speed HD Manual
M = Renegade	T = LHD (2WD)		ENJ = 2.5L 4Cyl Turbo Diesel	DG4,DGQ = Multi-Speed Auto
			ENR = 2.8L 4Cyl Turbo Diesel	DG6 = 4 Speed Auto Transm
			EN0 = 4Cyl Turbo Diesel	DG0 = All Automatic Transm
				DBB = All Manual Transm

Horns
Figure 008-910

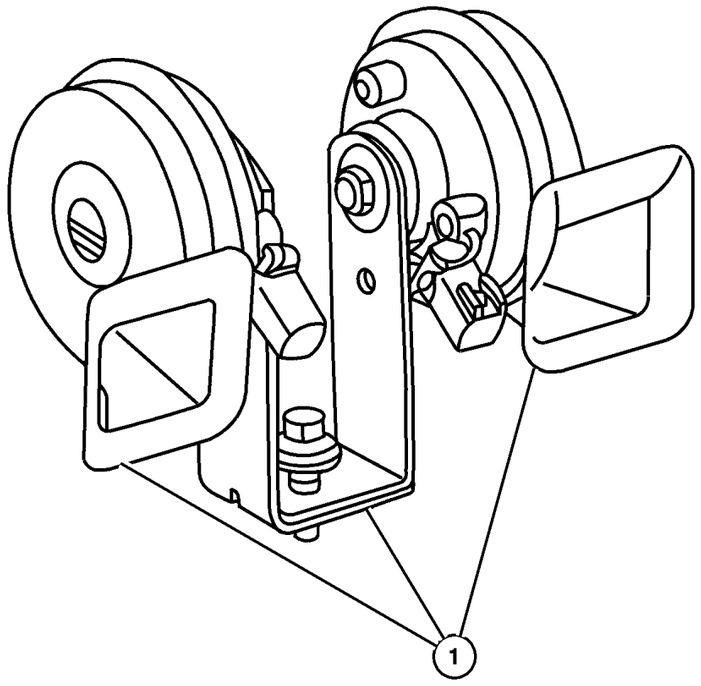

ITEM	PART NUMBER	QTY	LINE	SERIES	BODY	ENGINE	TRANS	TRIM	DESCRIPTION
1	56010 313AC	1							HORN AND BRACKET, Dual

JEEP LIBERTY (KJ)

SERIES	LINE	BODY	ENGINE	TRANSMISSION
P = Limited	J = LHD (4WD)	74 = 4 Dr (104.3 WB)	ED1,ED0 = 2.4L Power Tech	DDK = 5 Speed HDManual
H = Sport	U = RHD (4WD)		EKG,EK0 = 3.7L Power Tech	DDD = 5 Speed HD Manual
M = Renegade	T = LHD (2WD)		ENJ = 2.5L 4Cyl Turbo Diesel	DG4,DGQ = Multi-Speed Auto
			ENR = 2.8L 4Cyl Turbo Diesel	DG6 = 4 Speed Auto Transm
			EN0 = 4Cyl Turbo Diesel	DG0 = All Automatic Transm
				DBB = All Manual Transm

Battery Tray & Cables
Figure 008-1010

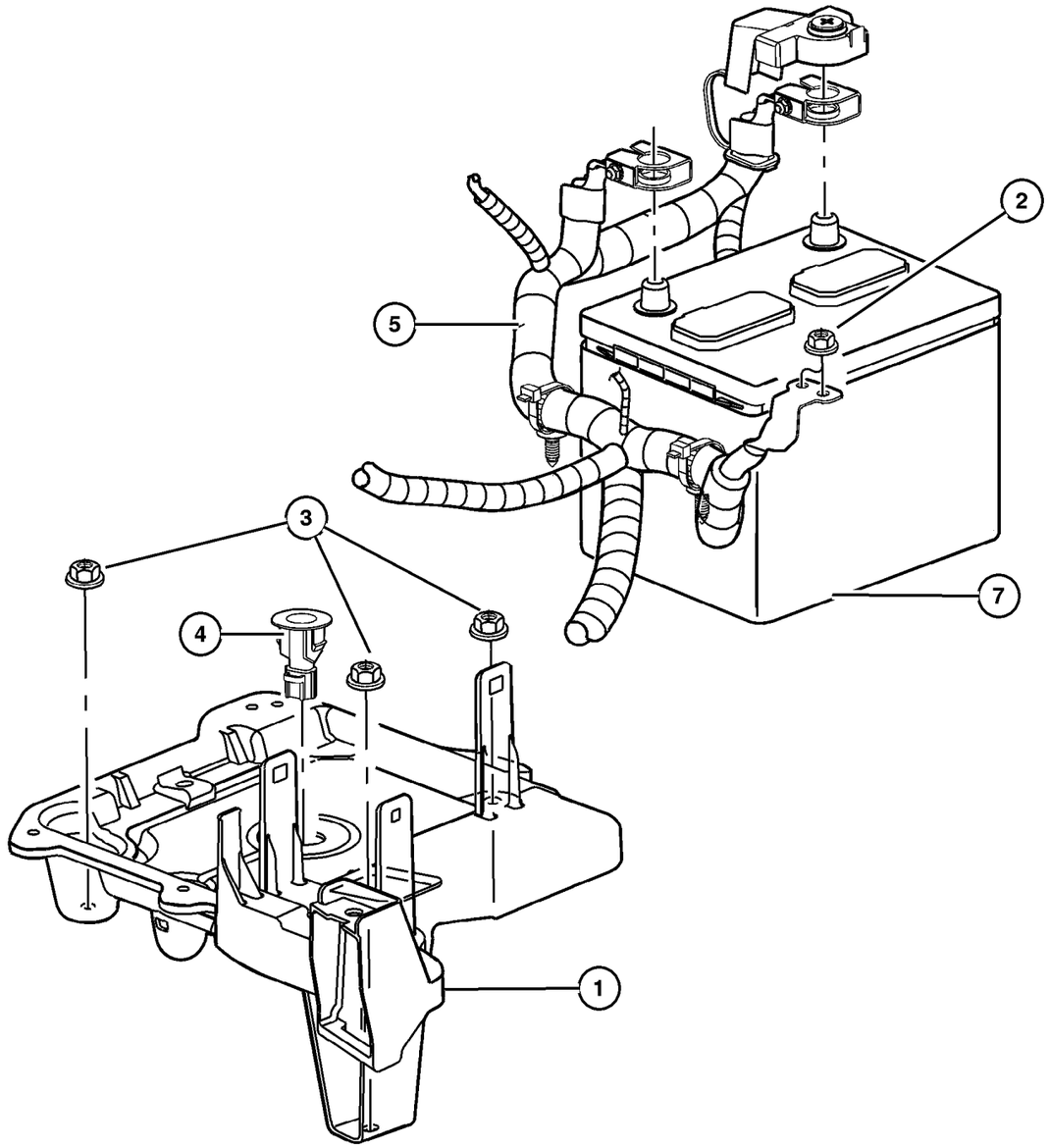

ITEM	PART NUMBER	QTY	LINE	SERIES	BODY	ENGINE	TRANS	TRIM	DESCRIPTION
Notes:									
[ED0] = 2.4L 4 Cylinder Engine									
[EK0] = 3.7L V6 Cylinder Engine									
[EN0] =All 4/5 Cylinder Turbo Diesel Engine									
1									SUPPORT, Battery
	55360 639AA	1				ED0, EK0			
	55360 654AA	1				EN0			
2	6101 808	2							NUT, Hex, M6x1
3	6504 030	2	J, T						NUT AND WASHER, Hex, M6x1
4	5604 1053	1							SENSOR, Battery Temperature
5									WIRING, Alternator and Battery
	56050 402AB	1				EN0			
	#56010 480AD	1		H, P		EK0			
	#56010 481AD	1				ED0			
-6	#56010 479AD	1		M		EK0			WIRING, Alternator
7									BATTERY, See Battery Catalog, (NOT SERVICED) (Not Serviced)
-8									LABEL, Battery
	4793 062	1				ED0, EK0			Europe
	5604 1046	1	J, T						Canada
-9	55136 959AC	1							BRACKET, Battery Hold Down

JEEP LIBERTY (KJ)

SERIES	LINE	BODY	ENGINE	TRANSMISSION
P = Limited	J = LHD (4WD)	74 = 4 Dr (104.3 WB)	ED1,ED0 = 2.4L Power Tech	DDK = 5 Speed HDManual
H = Sport	U = RHD (4WD)		EKG,EK0 = 3.7L Power Tech	DDD = 5 Speed HD Manual
M = Renegade	T = LHD (2WD)		ENJ = 2.5L 4Cyl Turbo Diesel	DG4,DGQ = Multi-Speed Auto
			ENR = 2.8L 4Cyl Turbo Diesel	DG6 = 4 Speed Auto Transm
			EN0 = 4Cyl Turbo Diesel	DG0 = All Automatic Transm
				DBB = All Manual Transm

Lamp, Front
Figure 008-1110

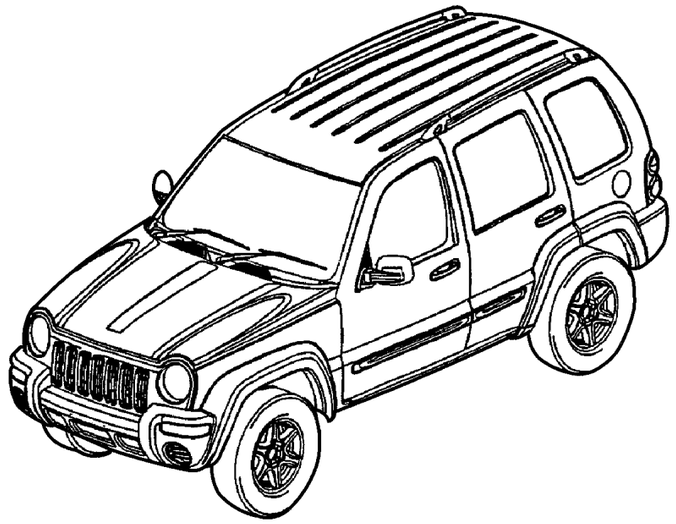

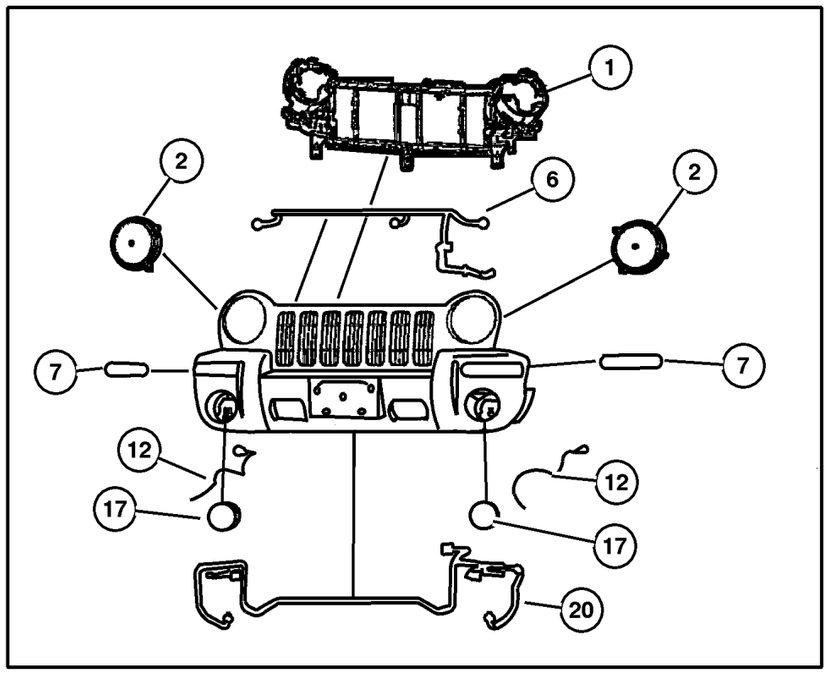

ITEM	PART NUMBER	QTY	LINE	SERIES	BODY	ENGINE	TRANS	TRIM	DESCRIPTION
Notes:									
[ED0] = 2.4L 4 Cylinder Engine									
[EK0] = 3.7L V6 Cylinder Engine									
[EN0] =All 4/5 Cylinder Turbo Diesel Engine									
1									REINFORCEMENT, Grille Opening
	55155 800AF	1	J, T						
		1	J			ED0, EK0			
		1	U			ED0, EK0			
		1	J			EN0			
		1	U			EN0			
2									HEADLAMP
	55155 814AD	1	U			ED0, EK0			Export, Right
	55155 809AB	1	J, T						Left
	55155 812AD	1	J			ED0, EK0			Export, Right
		1	J			EN0			Export, Right
	55155 813AD	1	J			ED0, EK0			Export, Left
		1	J			EN0			Export, Left
	55155 816AD	1	J			ED0, EK0			Export with Headlamp Leveling, Right
		1	J			EN0			Export with Headlamp Leveling, Right
	55155 817AD	1	J			ED0, EK0			Export with Headlamp Leveling, Left
		1	J			EN0			Export with Headlamp Leveling, Left
	55155 814AD	1	U			EN0			Export, Right
	55155 815AD	1	U			ED0, EK0			Export, Left
		1	U			EN0			Export, Left
	55155 818AD	1	U			ED0, EK0			Export with Headlamp Leveling, Right
		1	U			EN0			Export with Headlamp Leveling, Right
	55155 819AD	1	U			ED0, EK0			Export with Headlamp Leveling, Left
		1	U			EN0			Export with Headlamp Leveling, Left

JEEP LIBERTY (KJ)

SERIES	LINE	BODY	ENGINE	TRANSMISSION
P = Limited	J = LHD (4WD)	74 = 4 Dr (104.3 WB)	ED1,ED0 = 2.4L Power Tech	DDK = 5 Speed HDManual
H = Sport	U = RHD (4WD)		EKG,EK0 = 3.7L Power Tech	DDD = 5 Speed HD Manual
M = Renegade	T = LHD (2WD)		ENJ = 2.5L 4Cyl Turbo Diesel	DG4,DGQ = Multi-Speed Auto
			ENR = 2.8L 4Cyl Turbo Diesel	DG6 = 4 Speed Auto Transm
			EN0 = 4Cyl Turbo Diesel	DG0 = All Automatic Transm
				DBB = All Manual Transm

Lamp, Front
Figure 008-1110

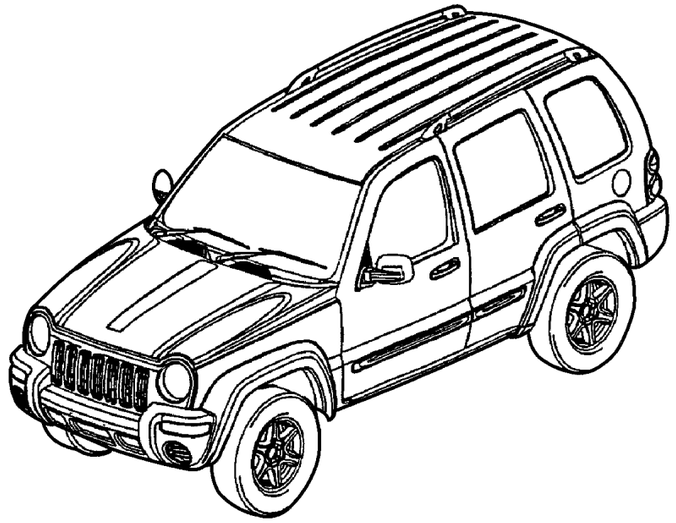

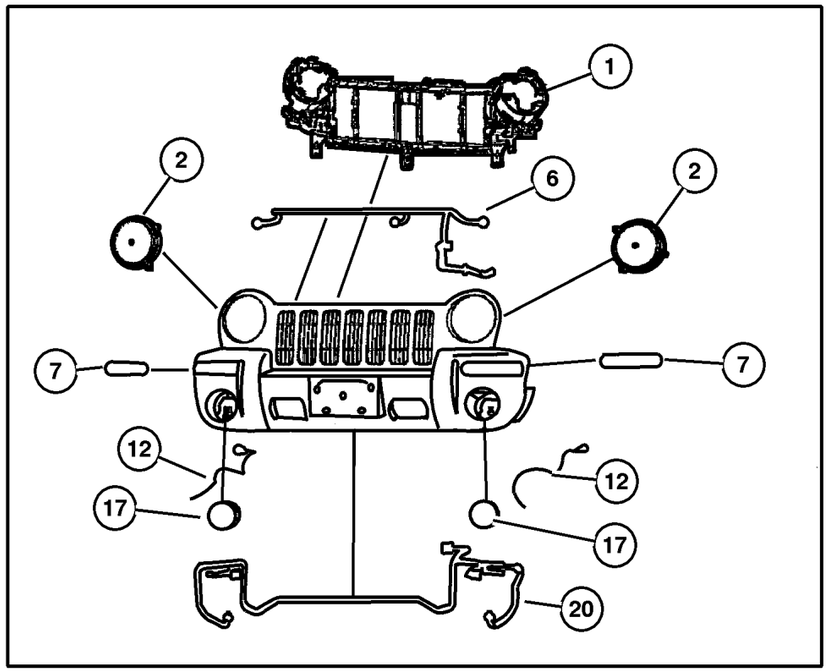

ITEM	PART NUMBER	QTY	LINE	SERIES	BODY	ENGINE	TRANS	TRIM	DESCRIPTION
	55155 808AB	1	J, T						Right
-3	6505 903AA	4							SCREW AND WASHER, Self Tapping, M6x1x22, Headlamp Mounting
-4									BULB, Headlamp
	L0009 007QL	1	J, T						Right & Left
	L000 9006	2							Export
-5	5126 316AA	1	J, T						RETAINER, Headlamp Bulb
6									WIRING, Headlamp
	55155 946AA	1	J, T						
	55155 947AA	1	J			ED0, EK0			Export
		1	U			ED0, EK0			Export
		1	U			EN0			Export
	55155 948AA	1	J			ED0, EK0			Export with Headlamp Leveling
		1	U			ED0, EK0			Export with Headlamp Leveling
		1	U			EN0			Export with Headlamp Leveling
7									LAMP, Front Combination
	55155 910AC	1							Right
	55155 911AC	1							Left
	55155 934AC	1							Export, Right
	55155 935AC	1							Export, Left
-8	L000 3157	1							BULB, 3157
-9	4857 327AB	1							SOCKET
-10	L000 0168	1							BULB, 168
-11	4857 327AB	1							SOCKET
12	5288 895AC	1							LAMP, Side Repeater
-13	0153 625	2							BULB, W10/5
-14	4676 801	1							GASKET, Side Marker Lamp
-15	5288 931AA	1							SOCKET, Side Repeater Lamp
-16	55156 010AA	1							WIRING, Side Repeater Lamp
17									LAMP, Fog
	5083 895AC	1							Left
	5083 896AC	1							Right
-18	L000 9145	1							BULB, Fog Lamp, 50 Watt
-19	6506 579AA	6							SCREW, Fog Lamp, Foglamp Mounting
20	55155 949AA	1							WIRING, Front End Lighting
-21	52112 063AC	4							LAMP, Off Road

JEEP LIBERTY (KJ)

SERIES	LINE	BODY	ENGINE	TRANSMISSION
P = Limited	J = LHD (4WD)	74 = 4 Dr (104.3 WB)	ED1,ED0 = 2.4L Power Tech	DDK = 5 Speed HDManual
H = Sport	U = RHD (4WD)		EKG,EK0 = 3.7L Power Tech	DDD = 5 Speed HD Manual
M = Renegade	T = LHD (2WD)		ENJ = 2.5L 4Cyl Turbo Diesel	DG4,DGQ = Multi-Speed Auto
			ENR = 2.8L 4Cyl Turbo Diesel	DG6 = 4 Speed Auto Transm
			EN0 = 4Cyl Turbo Diesel	DG0 = All Automatic Transm
				DBB = All Manual Transm

Lamp, Front
Figure 008-1110

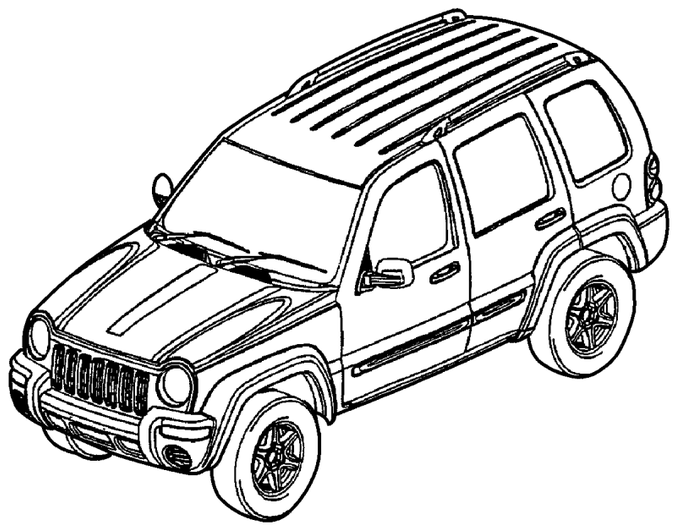

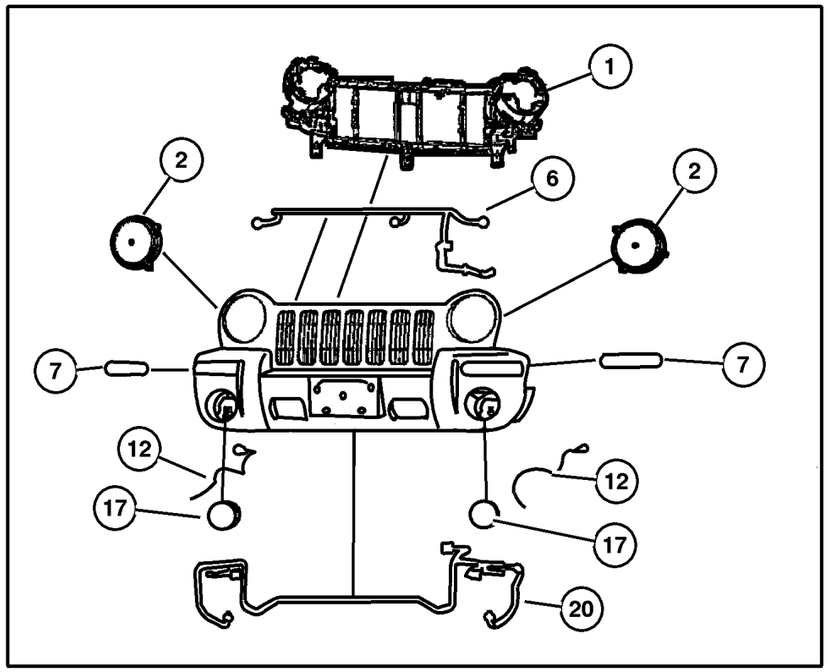

ITEM	PART NUMBER	QTY	LINE	SERIES	BODY	ENGINE	TRANS	TRIM	DESCRIPTION
-22	5HZ08 RXFAF	1							COVER, Light Bar Support, Black
-23	52112 062AA	1							WIRING, Off Road Light
-24	5HZ07 RXFAF	4							COVER, Lamp

JEEP LIBERTY (KJ)

SERIES	LINE	BODY	ENGINE	TRANSMISSION
P = Limited	J = LHD (4WD)	74 = 4 Dr (104.3 WB)	ED1,ED0 = 2.4L Power Tech	DDK = 5 Speed HDManual
H = Sport	U = RHD (4WD)		EKG,EK0 = 3.7L Power Tech	DDD = 5 Speed HD Manual
M = Renegade	T = LHD (2WD)		ENJ = 2.5L 4Cyl Turbo Diesel	DG4,DGQ = Multi-Speed Auto
			ENR = 2.8L 4Cyl Turbo Diesel	DG6 = 4 Speed Auto Transm
			EN0 = 4Cyl Turbo Diesel	DG0 = All Automatic Transm
				DBB = All Manual Transm

Lamps Roof (Renegade)
Figure 008-1115

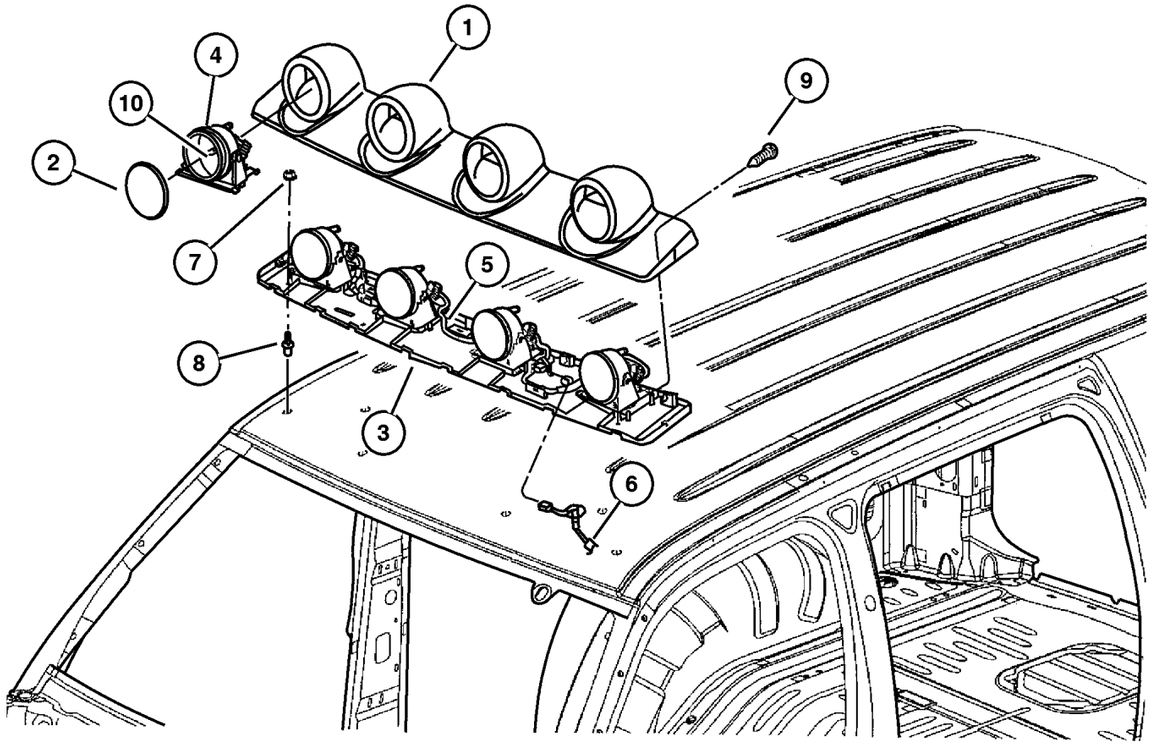

ITEM	PART NUMBER	QTY	LINE	SERIES	BODY	ENGINE	TRANS	TRIM	DESCRIPTION
1									COVER, Light Bar Support
	5HZ01 RXFAF	1							
	5HZ08 RXFAF	1							Export
2	5HZ07 RXFAF	4							COVER, Lamp
3	5083 967AA	1							BAR, Light Support
4	52112 063AC	4							LAMP, Off Road
5									WIRING, Off Road Light
	52112 062AA	1							
	52112 092AA	1							Export
6	56010 419AB	1		M					WIRING, Roof Lamps
7	6507 782AA	6							RIVET STUD
8	6505 953AA	4							NUT AND WASHER, M6x1
9	6507 783AA	4							SCREW, Shoulder
10	L0009 007QL	1	J, T						BULB, Headlamp

JEEP LIBERTY (KJ)

SERIES	LINE	BODY	ENGINE	TRANSMISSION
P = Limited	J = LHD (4WD)	74 = 4 Dr (104.3 WB)	ED1,ED0 = 2.4L Power Tech	DDK = 5 Speed HDManual
H = Sport	U = RHD (4WD)		EKG,EK0 = 3.7L Power Tech	DDD = 5 Speed HD Manual
M = Renegade	T = LHD (2WD)		ENJ = 2.5L 4Cyl Turbo Diesel	DG4,DGQ = Multi-Speed Auto
			ENR = 2.8L 4Cyl Turbo Diesel	DG6 = 4 Speed Auto Transm
			EN0 = 4Cyl Turbo Diesel	DG0 = All Automatic Transm
				DBB = All Manual Transm

Lamp, Rear
Figure 008-1120

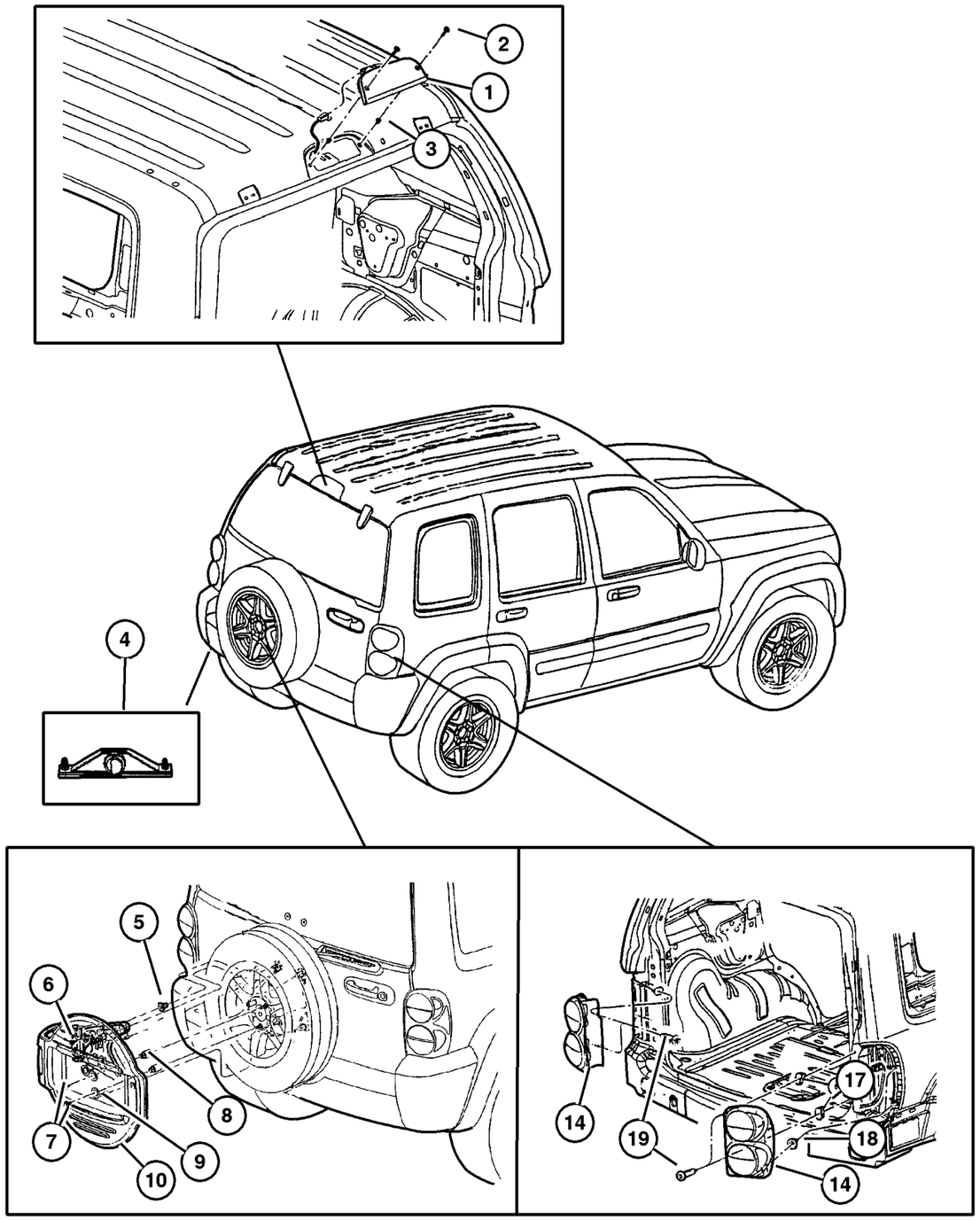

ITEM	PART NUMBER	QTY	LINE	SERIES	BODY	ENGINE	TRANS	TRIM	DESCRIPTION
1	55155 832AB	1							LAMP, High Mounted Stop
2	6036 534AA	2							SCREW, .19-16x1.00
3	6507 330AA	2							NUT, Plastic Snap-in
4	4574 904	1							LAMP, License Plate
5									NUT/RIVET, M6x1.0, (NOT SERVICED) (Not Serviced)
6	6506 429AA	2	J, U						SCREW, M8x1.25x21
7	6506 429AA	2	J, U						SCREW, M8x1.25x21
8	6036 303AA	2	J, U						NUT, .50-20
9	6507 799AA	4							NUT, Wheel
10									BRACKET, License Plate
	5HF06 RXFAI	1	J, U	H, P					Black
		1	J, U	M					Black
-11									LAMP, License
	55156 006AA	2	J, U	H, P					
		2	J, U	M					
-12									WIRING, License Lamp
	56010 329AD	1							
		1		M					
-13	0153 625	2							BULB, W10/5
14									LAMP, Tail Stop Turn
	55155 828AH	1							Right
	55155 829AH	1							Left
	55155 830AH	1							Export, Right
	55155 831AH	1							Export, Left
-15	L000 3157	1							BULB, 3157
-16									SOCKET, Board
	4676 589	3							Tail Lamp Socket
		4							Tail Lamp Socket (Export)
17	6036 508AA	4							NUT, Plastic Snap-in
18	6507 347AA	4							CLIP
19	6036 366AA	4							SCREW, Tapping, .164-18x.75
-20									WIRING, Rear Lamp
	56010 085AI	1	J, U						Export
	56010 086AH	1	J, T						

JEEP LIBERTY (KJ)

SERIES	LINE	BODY	ENGINE	TRANSMISSION
P = Limited	J = LHD (4WD)	74 = 4 Dr (104.3 WB)	ED1,ED0 = 2.4L Power Tech	DDK = 5 Speed HDManual
H = Sport	U = RHD (4WD)		EKG,EK0 = 3.7L Power Tech	DDD = 5 Speed HD Manual
M = Renegade	T = LHD (2WD)		ENJ = 2.5L 4Cyl Turbo Diesel	DG4,DGQ = Multi-Speed Auto
			ENR = 2.8L 4Cyl Turbo Diesel	DG6 = 4 Speed Auto Transm
			EN0 = 4Cyl Turbo Diesel	DG0 = All Automatic Transm
				DBB = All Manual Transm

AR = Use as required - = Non illustrated part # = New this model year **September 30, 2003**

« RETURN TO GROUP INDEX

Lamp, Courtesy
Figure 008-1130

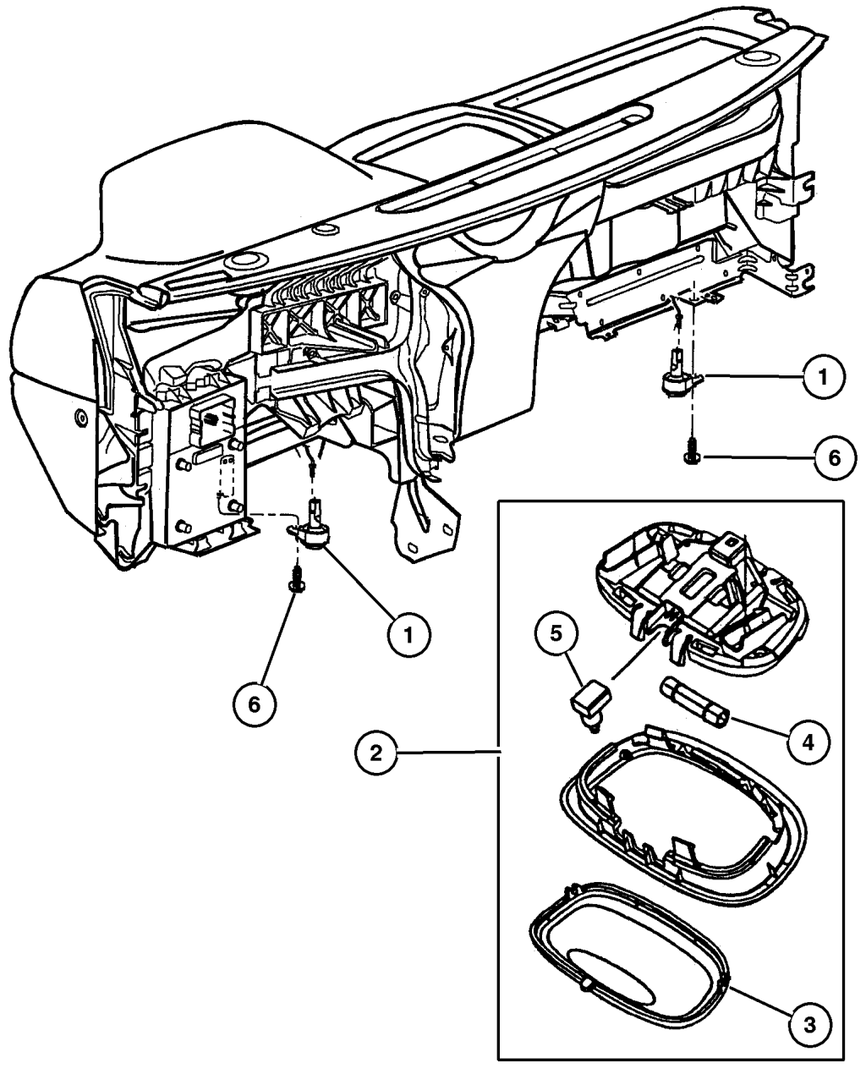

ITEM	PART NUMBER	QTY	LINE	SERIES	BODY	ENGINE	TRANS	TRIM	DESCRIPTION
1	56042 559AA	2		M, P					LAMP, Courtesy
2	5FT1 0TL2	1	J, T						LAMP, Cargo, Beige
3	55196 755AA	1	J, T						LENS, Cargo Lamp
4	L002 1202	1	J, T						BULB, 212-2
5	4685 445	1	J, T						SWITCH, Reading Lamp, Cargo Lamp
6									SCREW, Tap./Hex. Flg. HD M4.2x1.70x15.00, (NOT SERVICED) (Not Serviced)
-7	4437 661	3	J, T						LAMP, Message Center
-8	JV76 TL2	1	J, T						LAMP, Dome, Beige
-9	4762 566	1	J, T						LENS, Dome Lamp
-10	4762 566	1	J, T						LENS, Dome Lamp
-11									COVER, Lamp
	5HZ07 RXFAB	4							Light Bar Roof Mounted (Up to 10/30/02)
	5HZ07 RXFAF	4							Light Bar Roof Mounted (10/30/02 & After)
-12	#56010 552AB	1							LAMP, Warning, Passenger Airbag ON/OFF System

JEEP LIBERTY (KJ)

SERIES	LINE	BODY	ENGINE	TRANSMISSION
P = Limited	J = LHD (4WD)	74 = 4 Dr (104.3 WB)	ED1,ED0 = 2.4L Power Tech	DDK = 5 Speed HDManual
H = Sport	U = RHD (4WD)		EKG,EK0 = 3.7L Power Tech	DDD = 5 Speed HD Manual
M = Renegade	T = LHD (2WD)		ENJ = 2.5L 4Cyl Turbo Diesel	DG4,DGQ = Multi-Speed Auto
			ENR = 2.8L 4Cyl Turbo Diesel	DG6 = 4 Speed Auto Transm
			EN0 = 4Cyl Turbo Diesel	DG0 = All Automatic Transm
				DBB = All Manual Transm

Bulbs & Sockets
Figure 008-1140

ITEM	PART NUMBER	QTY	LINE	SERIES	BODY	ENGINE	TRANS	TRIM	DESCRIPTION
Notes:									
[ED0] = 2.4L 4 Cylinder Engine									
[EK0] = 3.7L V6 Cylinder Engine									
[DG0] = All Automatic Transmissions									
1	L000 3157	1							BULB, 3157
-2	L000 921E	1							BULB, 921
-3									BULB, Headlamp
	L0009 007QL	1	J, T						Right & Left
	L000 9006	2							Export
-4	L000 0906	1		M, P					BULB, 906
-5	L000 0192	2	J, T						BULB, 192
-6	L000 0579	1	J, T						BULB, 579
-7	L002 1402	1	J, T						BULB, 21402
-8	J324 2537	1	J			ED0, EK0			BULB, H4 Clear
-9	55156 754AA	1							SOCKET, Side Marker
-10	55156 027AA	1							SOCKET, High Mounted Stop Lamp
-11	4450 824	1							SOCKET AND WIRING, Side Marker Lamp
-12	4687 922	1							INSULATOR, 2 Way Male
-13	MS82 0083	1	J, T				DG0		BULB, 14V 1.4W, Shift Bezel
-14	L000 0037	1	J, T						BULB, 37, Sun Visor
-15	L000 3893	2							BULB, T8/4, Side Repeater Lamp
-16	55156 754AA	1							SOCKET, Side Marker

JEEP LIBERTY (KJ)

SERIES	LINE	BODY	ENGINE	TRANSMISSION
P = Limited	J = LHD (4WD)	74 = 4 Dr (104.3 WB)	ED1,ED0 = 2.4L Power Tech	DDK = 5 Speed HDManual
H = Sport	U = RHD (4WD)		EKG,EK0 = 3.7L Power Tech	DDD = 5 Speed HD Manual
M = Renegade	T = LHD (2WD)		ENJ = 2.5L 4Cyl Turbo Diesel	DG4,DGQ = Multi-Speed Auto
			ENR = 2.8L 4Cyl Turbo Diesel	DG6 = 4 Speed Auto Transm
			EN0 = 4Cyl Turbo Diesel	DG0 = All Automatic Transm
				DBB = All Manual Transm

Wiring, Engine & Related Parts
Figure 008-1210

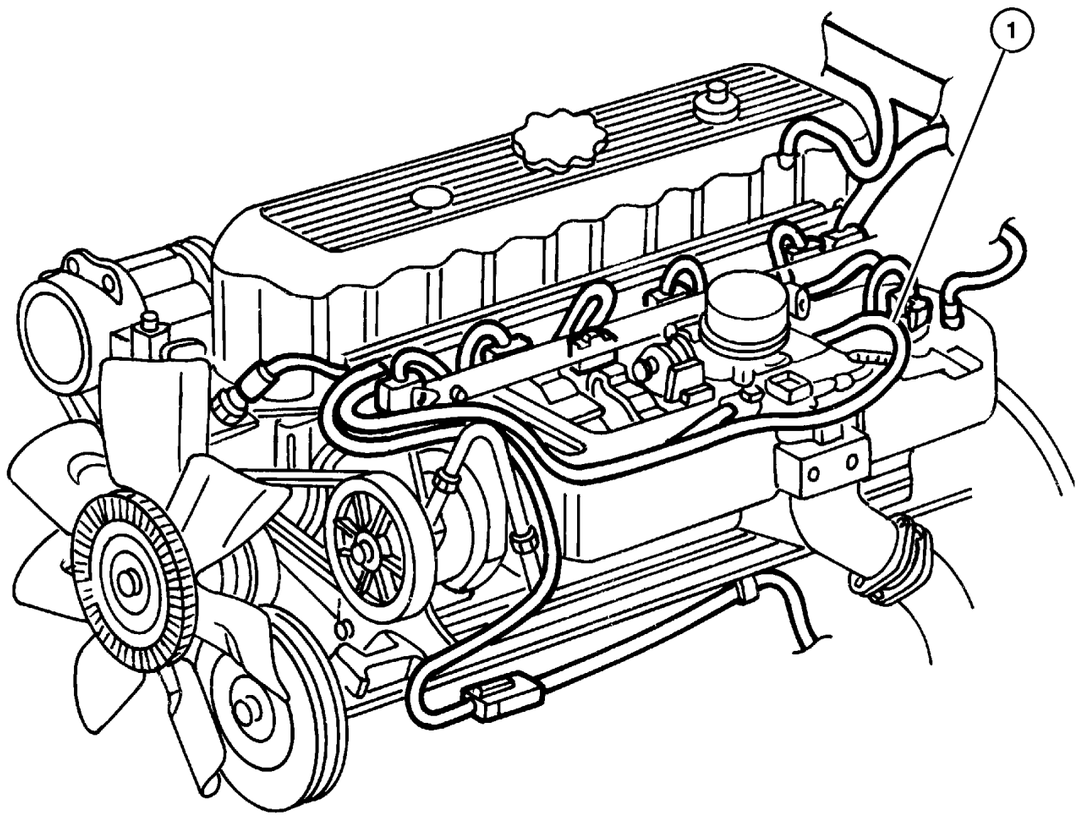

ITEM	PART NUMBER	QTY	LINE	SERIES	BODY	ENGINE	TRANS	TRIM	DESCRIPTION
Notes:									
[ED0] = 2.4L 4 Cylinder Engine									
[EK0] = 3.7L V6 Cylinder Engine									
[EN0] =All 4/5 Cylinder Turbo Diesel Engines									
[DBB]=All Manual Transmissions									
[DG0]=All Automatic Transmissions									
[DG6]=4 Speed Automatic Transmissions									
[DDD]= 5 Speed Heavy Duty Manual Transmission									
[DDK]= 5 Speed Heavy Duty Manual Transmission									
1									WIRING, Engine
	#56044 507AD	1	U			ED0	DBB		
	#56044 303AC	1	U			EK0	DG0		
	#56044 505AC	1	T			EK0	DG0		
	#56044 506AD	1	J, T			ED0	DBB		
	#56044 508AC	1	J, T			EN0	DG0		
	#56044 509AC	1	J, T			EN0	DDD		
	#56044 510AB	1	U			EN0	DG0		
	#56044 511AB	1	U			EN0	DDD		
	#56044 614AC	1	J			EK0	DD0		
	#56044 190AB	1				ED0			
	#56044 216AC	1	T			EK0	DD0		
	#56044 302AC	1	J			EK0	DG0		
-2									CLIP, Housing
	56041 379AA	1				EK0	DG6		
		2				EK0	DBB		
		2				EN0			
-3									BRACKET, Wiring
	56044 125AC	1				EN0			Battery Harness
	56044 156AA	1				ED0			Battery Harness
	56010 275AB	1	U						Headlamp & Dash to Injector Inline
	56010 291AB	1	J, T						Headlamp & Dash to Injector Inline
-4									CLIP, Housing
	56041 379AA	2				EK0	DBB		
		2				EN0			
		1				EK0	DG6		
-5									WIRING, Glow Plug
	5072 674AA	1				EN0	DG0		
		1				EN0	DBB		
-6									WIRING, Alternator and Battery
	56050 402AB	1				EN0			
	#56010 480AC	1		H, P		EK0			

JEEP LIBERTY (KJ)

SERIES	LINE	BODY	ENGINE	TRANSMISSION
P = Limited	J = LHD (4WD)	74 = 4 Dr (104.3 WB)	ED1,ED0 = 2.4L Power Tech	DDK = 5 Speed HDManual
H = Sport	U = RHD (4WD)		EKG,EK0 = 3.7L Power Tech	DDD = 5 Speed HD Manual
M = Renegade	T = LHD (2WD)		ENJ = 2.5L 4Cyl Turbo Diesel	DG4,DGQ = Multi-Speed Auto
			ENR = 2.8L 4Cyl Turbo Diesel	DG6 = 4 Speed Auto Transm
			EN0 = 4Cyl Turbo Diesel	DG0 = All Automatic Transm
				DBB = All Manual Transm

Wiring, Engine & Related Parts
Figure 008-1210

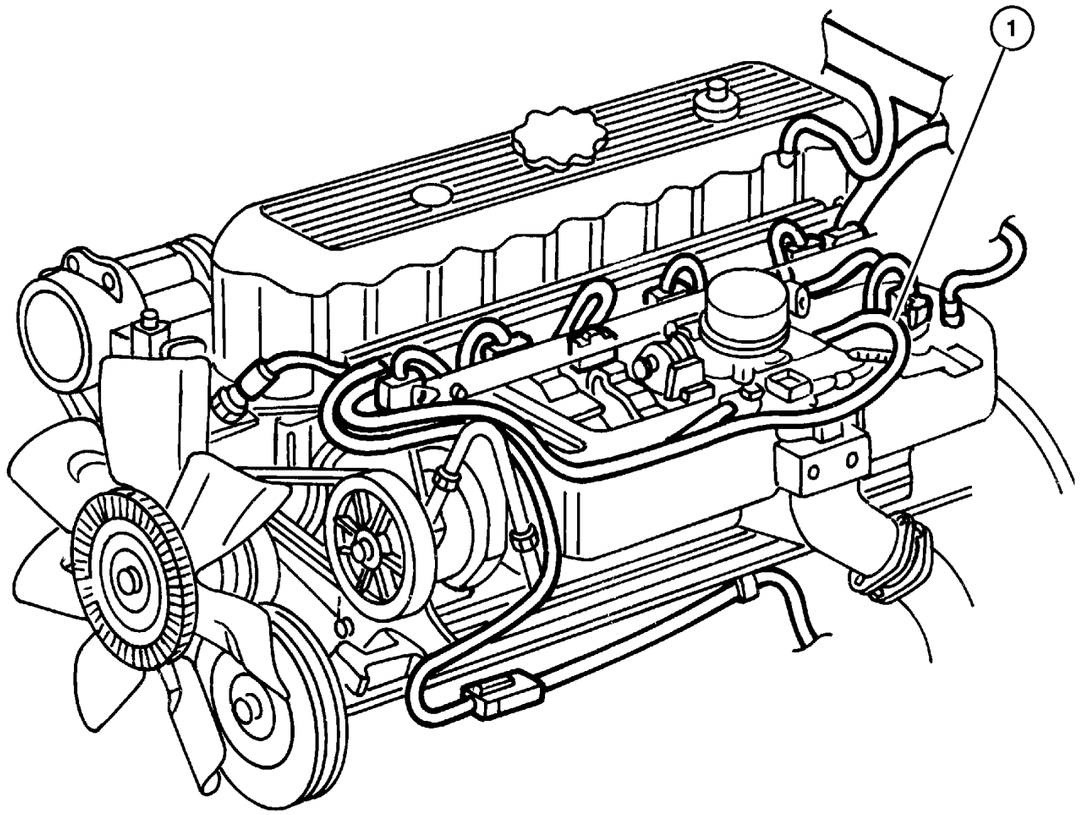

ITEM	PART NUMBER	QTY	LINE	SERIES	BODY	ENGINE	TRANS	TRIM	DESCRIPTION
	#56010 481AC	1				ED0			
-7	#56050 308AA	1				EK0			BRACKET, Wiring Harness
-8									STRAP, Ground
	56038 529AB	1				ED0			Engine/Body/Hood
	56038 554AB	1				EK0			Engine/Body/Hood
	56038 750AA	1							Hood to Fender
-9									CORD, Engine Block Heater
	56041 974AA	1				EK0			
	56044 160AA	1				ED0			
-10									HEATER, Engine
	55037 539AA	1				EN0	DG0		
		1				EN0	DBB		

JEEP LIBERTY (KJ)

SERIES	LINE	BODY	ENGINE	TRANSMISSION
P = Limited	J = LHD (4WD)	74 = 4 Dr (104.3 WB)	ED1,ED0 = 2.4L Power Tech	DDK = 5 Speed HDManual
H = Sport	U = RHD (4WD)		EKG,EK0 = 3.7L Power Tech	DDD = 5 Speed HD Manual
M = Renegade	T = LHD (2WD)		ENJ = 2.5L 4Cyl Turbo Diesel	DG4,DGQ = Multi-Speed Auto
			ENR = 2.8L 4Cyl Turbo Diesel	DG6 = 4 Speed Auto Transm
			EN0 = 4Cyl Turbo Diesel	DG0 = All Automatic Transm
				DBB = All Manual Transm

Wiring, Headlamp / Dash
Figure 008-1310

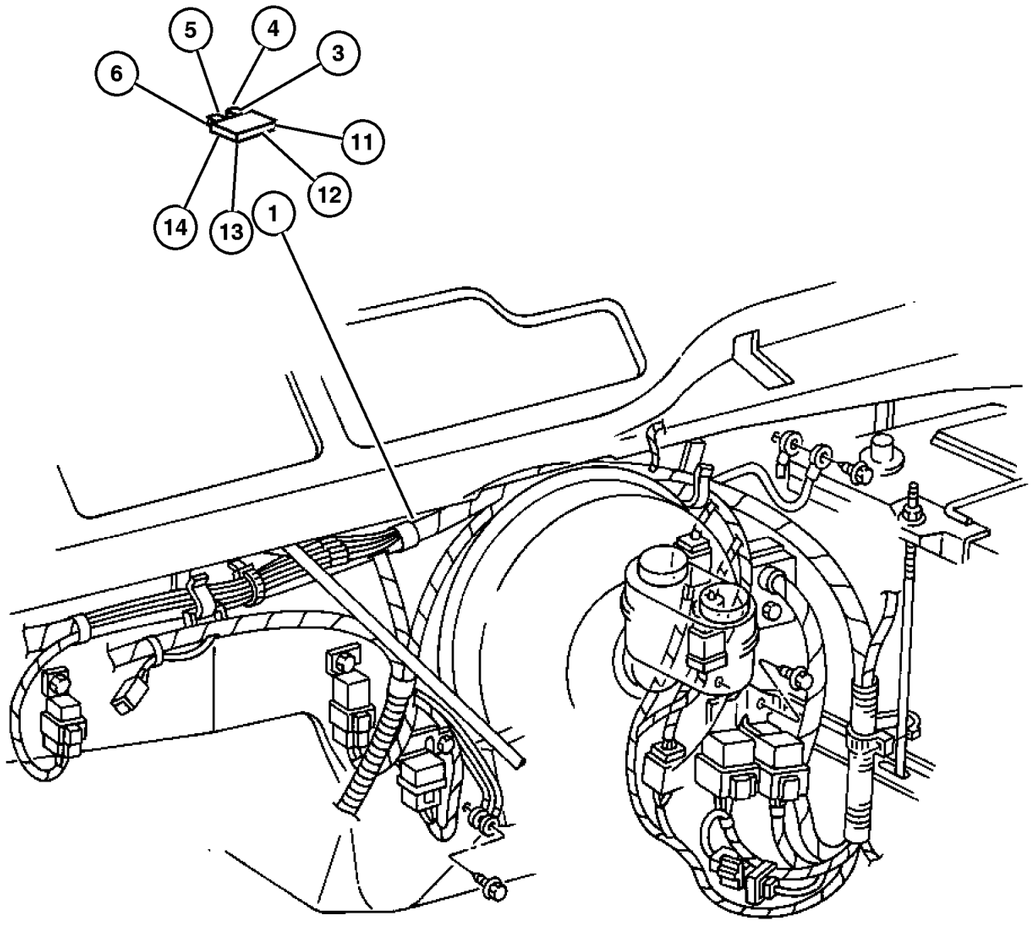

ITEM	PART NUMBER	QTY	LINE	SERIES	BODY	ENGINE	TRANS	TRIM	DESCRIPTION
Notes:									
[BRE] = 4 Wheel Disc									
[BRY] = Anti-Lock 4 Wheel Disc									
[ED0] = 2.4L 4 Cylinder Engine									
[EK0] = 3.7L V6 Cylinder Engine									
[EN0] =All 4/5 Cylinder Turbo Diesel Engine									
[DBB]=All Manual Transmissions									
[DG0]=All Automatic Transmissions									
1									WIRING, Headlamp to Dash
	#56010 450AB	1	U			EN0	DBB		[BRY]
	#56010 440AC	1	J, T			ED0, EK0	DG0		[BRE] - [NHM]
	#56010 441AC	1	J, T			ED0, EK0	DG0		[BRE] + [NHM]
	#56010 442AC	1	J			ED0, EK0	DG0		[BRE]
	#56010 443AC	1	J, T			ED0, EK0	DBB		[BRY]
	#56010 444AC	1	J, T			ED0, EK0	DBB		[BRE]
	#56010 445AC	1	U			ED0, EK0	DBB		[BRY]
	#56010 446AC	1	U			ED0, EK0	DBB		[BRE]
	#56010 447AC	1	U			ED0, EK0	DG0		[BRY]
	#56010 448AC	1	U			ED0, EK0	DG0		[BRE]
	#56010 449AB	1	U			EN0	DBB		[BRE]
	#56010 451AB	1	J, T			EN0	DBB		[BRY]
	#56010 452AB	1	J, T			EN0	DBB		[BRE]
	#56010 453AB	1	J, T			EN0	DG0		[BRY]
	#56010 454AB	1	J, T			EN0	DG0		[BRE]
	#56010 456AB	1	U			EN0	DG0		[BRY]
	#56010 458AB	1	U			EN0	DG0		[BRE]
	#56050 482AA	1	J, T			ED0, EK0	DG0		[BRY]
	#56050 483AA	1	J, T			ED0, EK0	DG0		[BRE]
-2	5602 1543	1							BREAKER, Circuit
3	00AT M10	1	J, T						FUSE, Mini, 10 AMP, Red

JEEP LIBERTY (KJ)

SERIES	LINE	BODY	ENGINE	TRANSMISSION
P = Limited	J = LHD (4WD)	74 = 4 Dr (104.3 WB)	ED1,ED0 = 2.4L Power Tech	DDK = 5 Speed HDManual
H = Sport	U = RHD (4WD)		EKG,EK0 = 3.7L Power Tech	DDD = 5 Speed HD Manual
M = Renegade	T = LHD (2WD)		ENJ = 2.5L 4Cyl Turbo Diesel	DG4,DGQ = Multi-Speed Auto
			ENR = 2.8L 4Cyl Turbo Diesel	DG6 = 4 Speed Auto Transm
			EN0 = 4Cyl Turbo Diesel	DG0 = All Automatic Transm
				DBB = All Manual Transm

Wiring, Headlamp / Dash
Figure 008-1310

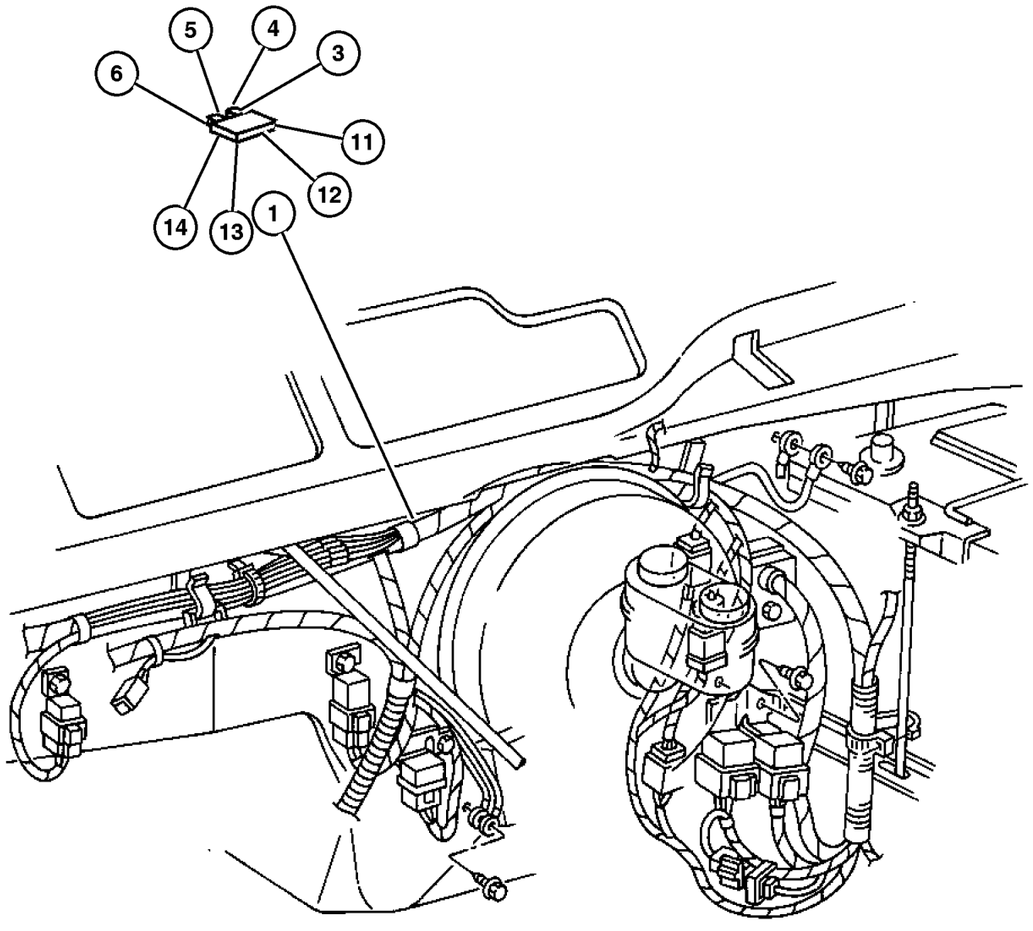

ITEM	PART NUMBER	QTY	LINE	SERIES	BODY	ENGINE	TRANS	TRIM	DESCRIPTION
4	00AT M15	1	J, T						FUSE, Mini, 15 AMP, Light Blue
5	00AT M20	1	J, T						FUSE, Mini, 20 AMP, Yellow
6	00AT M30	AR							FUSE, Mini, 30 AMP, Green
-7									PULLER, Fuse
	5072 937AA	1	U						
		1	J, T						
-8									BRACKET, Wiring
	56010 275AB	1	U						Headlamp & Dash to Injector Inlines
	56010 291AB	1	J, T						Headlamp & Dash to Injector Inlines
	56044 125AC	1				EN0			Battery Harness
	56044 156AA	1				ED0			Battery Harness
-9	56009 948AA	1							COLLAR, Insulator, Headlamp & Dash to I/Panel
-10									COVER, Power Distribution Center
	#5114 515AA	1	J, T			EN0	DBB		
		1	U			EN0	DBB		
	#5114 516AA	1	J, T			ED0, EK0	DBB		
		1	J			ED0, EK0	DG0		
11	6102 078AA	AR							FUSE CARTRIDGE, 50 Amp
12	6102 075AA	AR							FUSE CARTRIDGE, 20 Amp
13	6102 076AA	AR							FUSE CARTRIDGE, 30 Amp
14	6102 077AA	AR							FUSE CARTRIDGE, 40 Amp
-15	6101 757	1							FUSIBLE LINK

JEEP LIBERTY (KJ)

SERIES	LINE	BODY	ENGINE	TRANSMISSION
P = Limited	J = LHD (4WD)	74 = 4 Dr (104.3 WB)	ED1,ED0 = 2.4L Power Tech	DDK = 5 Speed HDManual
H = Sport	U = RHD (4WD)		EKG,EK0 = 3.7L Power Tech	DDD = 5 Speed HD Manual
M = Renegade	T = LHD (2WD)		ENJ = 2.5L 4Cyl Turbo Diesel	DG4,DGQ = Multi-Speed Auto
			ENR = 2.8L 4Cyl Turbo Diesel	DG6 = 4 Speed Auto Transm
			EN0 = 4Cyl Turbo Diesel	DG0 = All Automatic Transm
				DBB = All Manual Transm

AR = Use as required - = Non illustrated part # = New this model year

Wiring Instrument Panel
Figure 008-1410

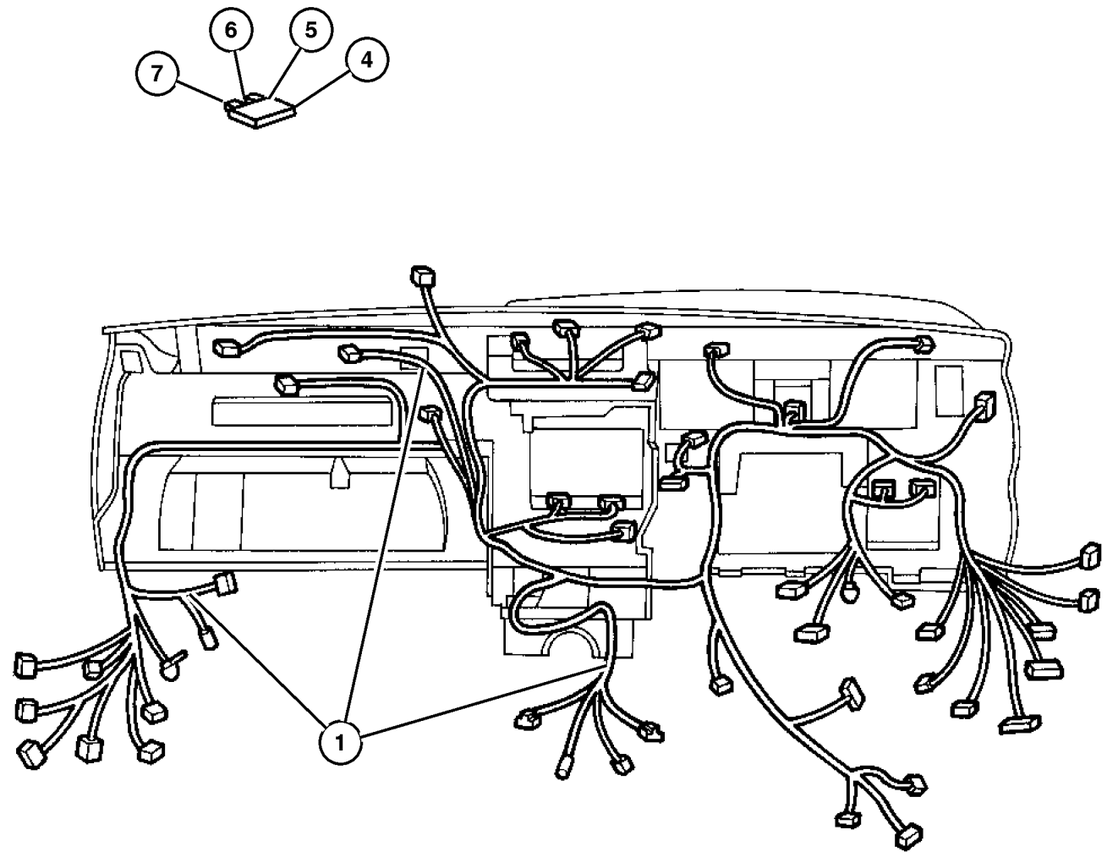

ITEM	PART NUMBER	QTY	LINE	SERIES	BODY	ENGINE	TRANS	TRIM	DESCRIPTION
1									WIRING, Instrument Panel
	#56010 620AC	1	U						Europe
	#56010 622AC	1	J, T						With Power Convenience Group
	#56010 623AC	1	J						Europe
	#56010 624AC	1	J, T						Without Power Convenience Group
									(Base Model)
	#56010 625AC	1							
-2									JUNCTION BLOCK, Relay
	#56010 435AC	1	J, T						Without Sunroof
	#56010 436AC	1	J, T						With Sunroof
		1	J, U						Europe
-3									BRACKET, Junction Block
	56009 986AB	1							Lower Mounting
	56010 333AD	1	J, T						Upper Mounting
	56010 334AD	1	U						Upper Mounting
4	00AT M10	1	J, T						FUSE, Mini, 10 AMP, Red
5	00AT M15	1	J, T						FUSE, Mini, 15 AMP, Light Blue
6	00AT M20	1	J, T						FUSE, Mini, 20 AMP, Yellow
7	00AT M30	AR							FUSE, Mini, 30 AMP, Green
-8	6102 078AA	AR							FUSE CARTRIDGE, 50 Amp
-9									PULLER, Fuse
	5072 937AA	1	U						
		1	J, T						
-10	5602 1543	1							BREAKER, Circuit

JEEP LIBERTY (KJ)

SERIES	LINE	BODY	ENGINE	TRANSMISSION
P = Limited	J = LHD (4WD)	74 = 4 Dr (104.3 WB)	ED1,ED0 = 2.4L Power Tech	DDK = 5 Speed HDManual
H = Sport	U = RHD (4WD)		EKG,EK0 = 3.7L Power Tech	DDD = 5 Speed HD Manual
M = Renegade	T = LHD (2WD)		ENJ = 2.5L 4Cyl Turbo Diesel	DG4,DGQ = Multi-Speed Auto
			ENR = 2.8L 4Cyl Turbo Diesel	DG6 = 4 Speed Auto Transm
			EN0 = 4Cyl Turbo Diesel	DG0 = All Automatic Transm
				DBB = All Manual Transm

AR = Use as required - = Non illustrated part # = New this model year

September 30, 2003

« RETURN TO GROUP INDEX

Wiring, Body & Accessories
Figure 008-1510

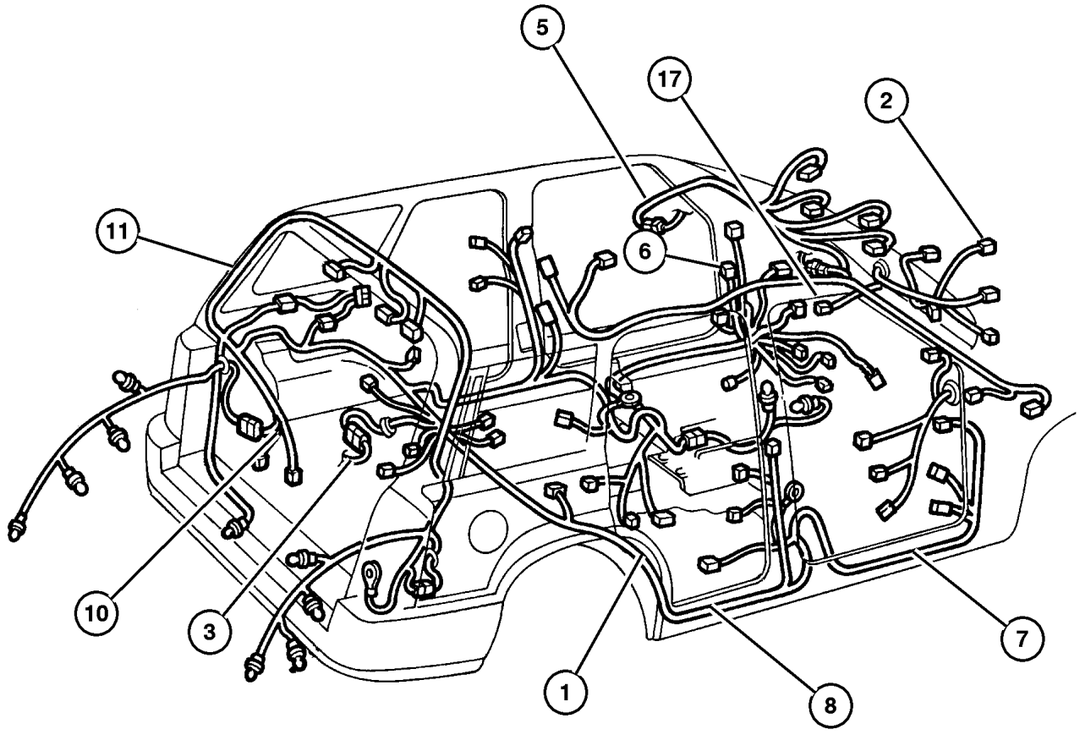

ITEM	PART NUMBER	QTY	LINE	SERIES	BODY	ENGINE	TRANS	TRIM	DESCRIPTION
Notes:									
[ED0] = 2.4L 4 Cylinder Engine									
[EK0] = 3.7L V6 Cylinder Engine									
[EN0] = 2.5L Diesel									
1									WIRING, Body
	#56010 590AC	1	J, T						With Power Sensitive Locks, without Power Windows, Six Premium Speakers, Trailer Tow, Mini Overhead Console, Side Impact Airbags & without Heated Seats
	#56010 618AC	1	U						Without Side Impact Airbags
	#56050 697AA	1	J, T						Without Side Impact Airbags, Power Speed Sensitive Locks & without Trailer Tow
	#56010 591AC	1	J, T						With Power Windows, with or without Six Premium Speakers, Trailer Tow, Mini Overhead Console, Without Side Impact Airbags, Heated Seat & without Power Seats
	#56010 592AC	1	J, T						With Side Impact Airbags, Front Seats & with or without Heated Seats
		1	J, T						With Side Impact Airbags
	#56010 593AC	1	J, T						With Side Impact Airbags, without Power Windows, Six Premium Speakers, Trailer Tow, Mini Overhead Console, Power Front Seats & without Heated Seats
	#56010 594AC	1	U						With Side Impact Airbags
	#56010 595AC	1	J, T						With Side Impact Airbags & Power Windows, with or without Trailer Tow, without Power Front Seats & without Heated Seats
	#56010 597AC	1	J, T						Without Side Impact Airbags, with or without Heated Seats & with Power Front Seats
		1	J, T						Without Side Impact Airbags
2									WIRING, Front End Lighting
	55155 949AA	1							Without Foglamps
	55155 950AC	1							With Foglamps

JEEP LIBERTY (KJ)

SERIES	LINE	BODY	ENGINE	TRANSMISSION
P = Limited	J = LHD (4WD)	74 = 4 Dr (104.3 WB)	ED1,ED0 = 2.4L Power Tech	DDK = 5 Speed HDManual
H = Sport	U = RHD (4WD)		EKG,EK0 = 3.7L Power Tech	DDD = 5 Speed HD Manual
M = Renegade	T = LHD (2WD)		ENJ = 2.5L 4Cyl Turbo Diesel	DG4,DGQ = Multi-Speed Auto
			ENR = 2.8L 4Cyl Turbo Diesel	DG6 = 4 Speed Auto Transm
			EN0 = 4Cyl Turbo Diesel	DG0 = All Automatic Transm
				DBB = All Manual Transm

Wiring, Body & Accessories
Figure 008-1510

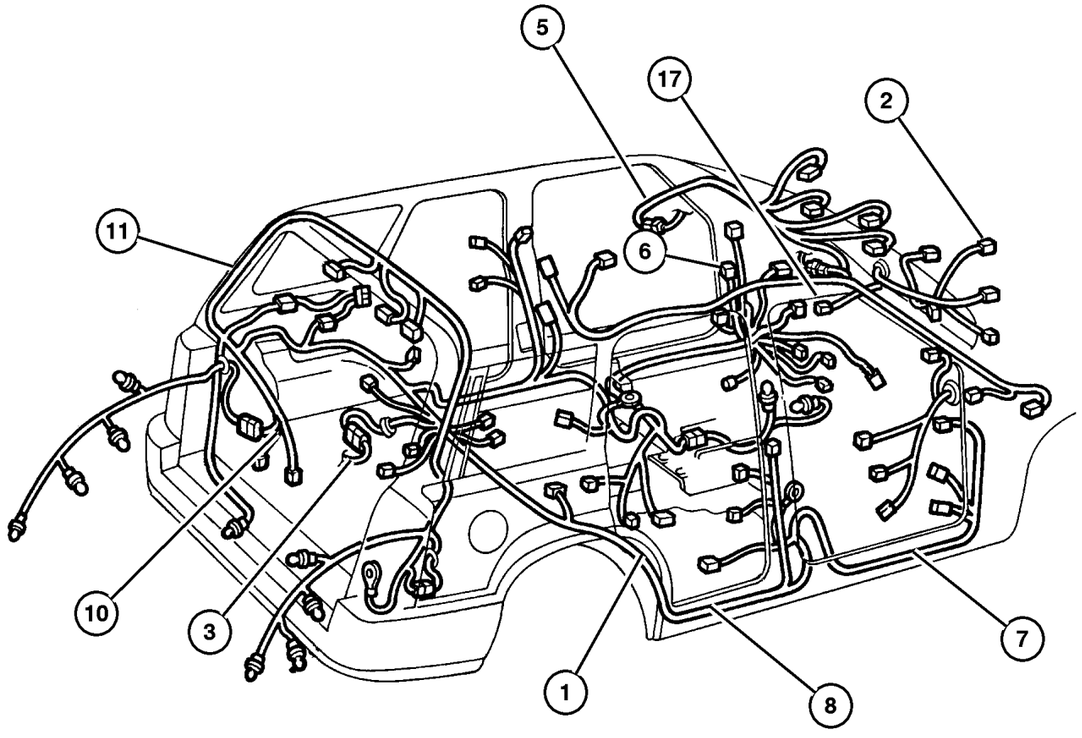

ITEM	PART NUMBER	QTY	LINE	SERIES	BODY	ENGINE	TRANS	TRIM	DESCRIPTION
	55155 951AB	1							Without Foglamps & without Export Equipment Package
	55155 952AC	1							With Foglamps & with Export Equipment Package
3									WIRING, Rear Body
	#56010 467AB	1	U						
	#56010 468AB	1	J, T						With Sunroof
	#56010 469AB	1	J, T						Without Sunroof
	#56010 470AB	1	J, T						With Trailer Tow
-4									COVER, Body Wiring
	56010 044AC	2	J, T						
		1	U						
5	5101 961AA	1							WIRING, Sunroof
6									WIRING, Steering Wheel
	56010 185AB	1							With Luxury Steering Wheel
	56010 170AC	1		H, M					With Luxury Steering Wheel, Speed Control & without Audio Control
	56010 171AC	1		H, M					With Luxury Steering Wheel, Speed Control & with Audio Control
	56010 170AC	1		P					With Luxury Steering Wheel, Speed Control & without Audio Control
	56010 171AC	1		P					With Luxury Steering Wheel, Speed Control & with Audio Control
7									WIRING, Front Door
	56010 555AE	1	J, T						Security Alarm, Power Locks, with or without Speed Senitive Power Locks, Power Mirrors, without Infinity 6 Speaker System & With or without Power Driver & Front Passenger Window, Drivers Side
	56010 561AE	1	U						Without Power Driver & Front Passenger Windows, Power Mirrors, Speed Senitive Power Locks, & without Infinity 6 Speaker System, Drivers Side
	56010 556AD	1	J, T						With Infinity 6 Speaker System, Passenger Side

JEEP LIBERTY (KJ)

SERIES	LINE	BODY	ENGINE	TRANSMISSION
P = Limited	J = LHD (4WD)	74 = 4 Dr (104.3 WB)	ED1,ED0 = 2.4L Power Tech	DDK = 5 Speed HDManual
H = Sport	U = RHD (4WD)		EKG,EK0 = 3.7L Power Tech	DDD = 5 Speed HD Manual
M = Renegade	T = LHD (2WD)		ENJ = 2.5L 4Cyl Turbo Diesel	DG4,DGQ = Multi-Speed Auto
			ENR = 2.8L 4Cyl Turbo Diesel	DG6 = 4 Speed Auto Transm
			EN0 = 4Cyl Turbo Diesel	DG0 = All Automatic Transm
				DBB = All Manual Transm

Wiring, Body & Accessories
Figure 008-1510

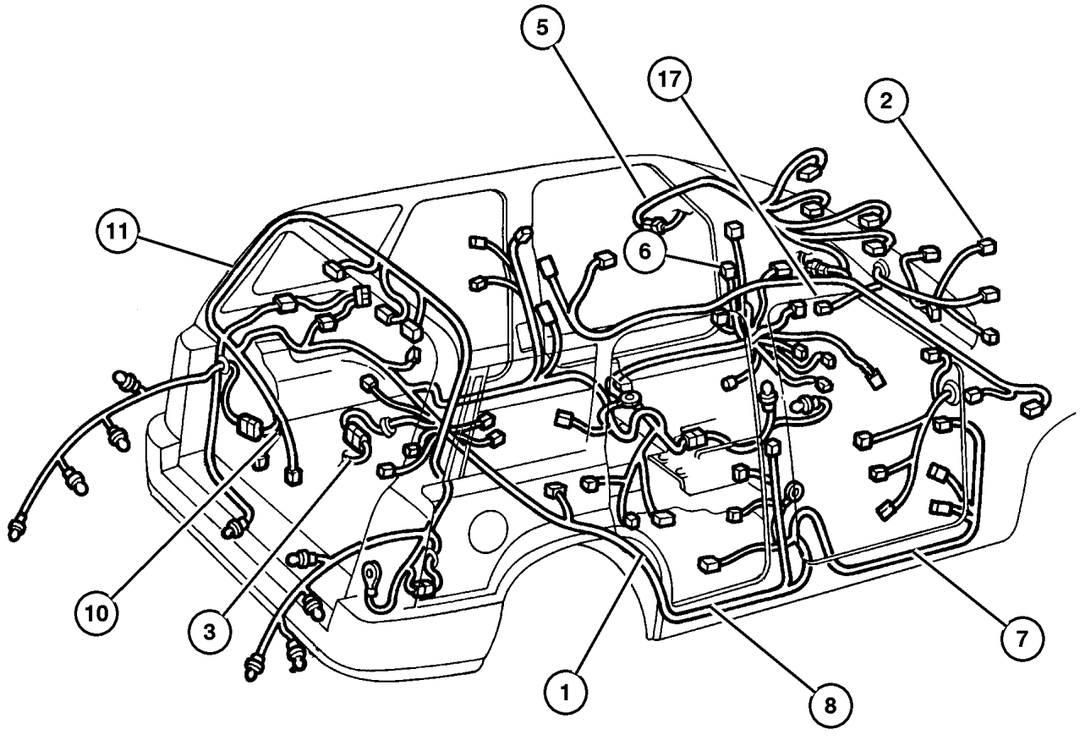

ITEM	PART NUMBER	QTY	LINE	SERIES	BODY	ENGINE	TRANS	TRIM	DESCRIPTION
	56010 558AE	1	J, T						With Power Driver & Front Passenger Windows & Without Infinity 6 Speaker System, Passenger Side
	56010 559AD	1	U						With Infinity 6 Speaker System, Drivers Side
	56010 569AE	1	U						With Power Driver & Front Passenger Windows, with or without Power Locks, Speed Senitive Power Locks, Power Locks & without Infinity 6 Speaker System, Drivers Side
	56010 634AC	1	J, T						Without Power Driver & Front Passenger Windows, Power Mirrors, Speed Senitive Power Locks, & without Infinity 6 Speaker System, Passenger Side
		1	U						Without Power Driver & Front Passenger Windows, Power Mirrors, Speed Senitive Power Locks, & without Infinity 6 Speaker System, Passenger Side
	56010 564AE	1	J, T						With Power Locks, with or without Speed Senitive Power Locks, Power Mirrors, without Infinity 6 Speaker System & With or without, Power Driver & Front Passenger Windows, Passenger Side
	56010 557AE	1	J, T						With Security Alarm, Power Driver & Front Passenger Windows & Without Infinity 6 Speaker System, Drivers Side
	56010 560AD	1	U						With Infinity 6 Speaker System, Passenger Side
	56010 570AE	1	U						With Power Driver & Front Passenger Windows, with or without Power Locks, Speed Senitive Power Locks, Power Locks & without Infinity 6 Speaker System, Passenger Side

JEEP LIBERTY (KJ)

SERIES	LINE	BODY	ENGINE	TRANSMISSION
P = Limited	J = LHD (4WD)	74 = 4 Dr (104.3 WB)	ED1,ED0 = 2.4L Power Tech	DDK = 5 Speed HDManual
H = Sport	U = RHD (4WD)		EKG,EK0 = 3.7L Power Tech	DDD = 5 Speed HD Manual
M = Renegade	T = LHD (2WD)		ENJ = 2.5L 4Cyl Turbo Diesel	DG4,DGQ = Multi-Speed Auto
			ENR = 2.8L 4Cyl Turbo Diesel	DG6 = 4 Speed Auto Transm
			EN0 = 4Cyl Turbo Diesel	DG0 = All Automatic Transm
				DBB = All Manual Transm

Wiring, Body & Accessories
Figure 008-1510

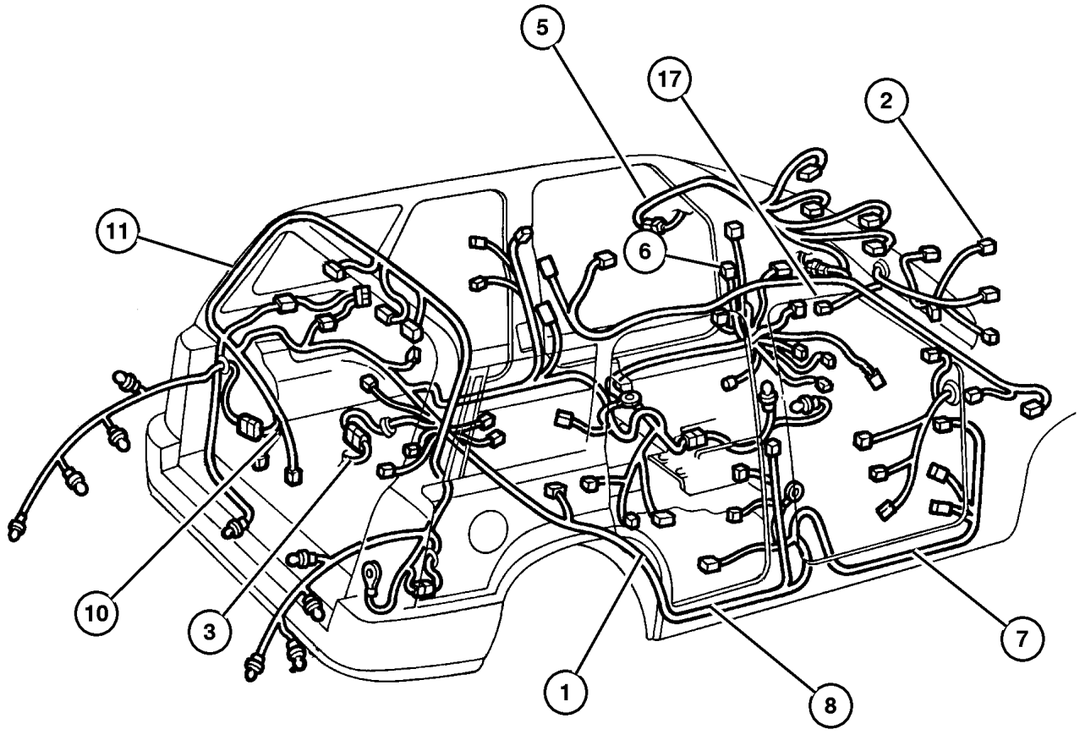

ITEM	PART NUMBER	QTY	LINE	SERIES	BODY	ENGINE	TRANS	TRIM	DESCRIPTION
	56010 571AD	1	J, T						With Infinity 6 Speaker System, Drivers Side
	56050 701AB	1	J, T						With Power Locks, with or without Speed Senitive Power Locks, Power Mirrors, without Infinity 6 Speaker System & With or without, Security Alarm, Power Driver & Front Passenger Windows, Drivers Side
	56050 703AB	1	J, T						With Power Driver & Front Passenger Windows & Without Infinity 6 Speaker System & without Security Alarm, Drivers Side
	56050 705AB	1	J, T						With Infinity 6 Speaker System & without Security Alarm, Drivers Side
	56010 561AE	1	J, T						Without Power Driver & Front Passenger Windows, Power Mirrors, Speed Senitive Power Locks, & without Infinity 6 Speaker System, Drivers Side
8									WIRING, Rear Door
	56010 615AE	2							With Power Driver & Front Passenger Windows, Rear Door
	56010 616AD	2							Without Power Driver & Front Passenger Windows, Rear Door
	56010 614AD	2							Without, Power Sensitive Power Locks, Power Driver & Front Passenger Windows & without Power Locks, Rear Door
-9									GROMMET, Door Wiring
	56010 326AC	2							Front Door
	56010 327AB	2							Rear Door
	56010 328AA	1							Tailgate
10									WIRING, Tailgate
	56050 309AC	1							Without Keyless Entry
	56050 310AC	1							With Keyless Entry
	56050 311AC	1							Export
	56050 310AC	1							With Keyless
11									WIRING, Rear Lamp

JEEP LIBERTY (KJ)

SERIES	LINE	BODY	ENGINE	TRANSMISSION
P = Limited	J = LHD (4WD)	74 = 4 Dr (104.3 WB)	ED1,ED0 = 2.4L Power Tech	DDK = 5 Speed HDManual
H = Sport	U = RHD (4WD)		EKG,EK0 = 3.7L Power Tech	DDD = 5 Speed HD Manual
M = Renegade	T = LHD (2WD)		ENJ = 2.5L 4Cyl Turbo Diesel	DG4,DGQ = Multi-Speed Auto
			ENR = 2.8L 4Cyl Turbo Diesel	DG6 = 4 Speed Auto Transm
			EN0 = 4Cyl Turbo Diesel	DG0 = All Automatic Transm
				DBB = All Manual Transm

AR = Use as required - = Non illustrated part # = New this model year

September 30, 2003

« RETURN TO GROUP INDEX

« »

Wiring, Body & Accessories
Figure 008-1510

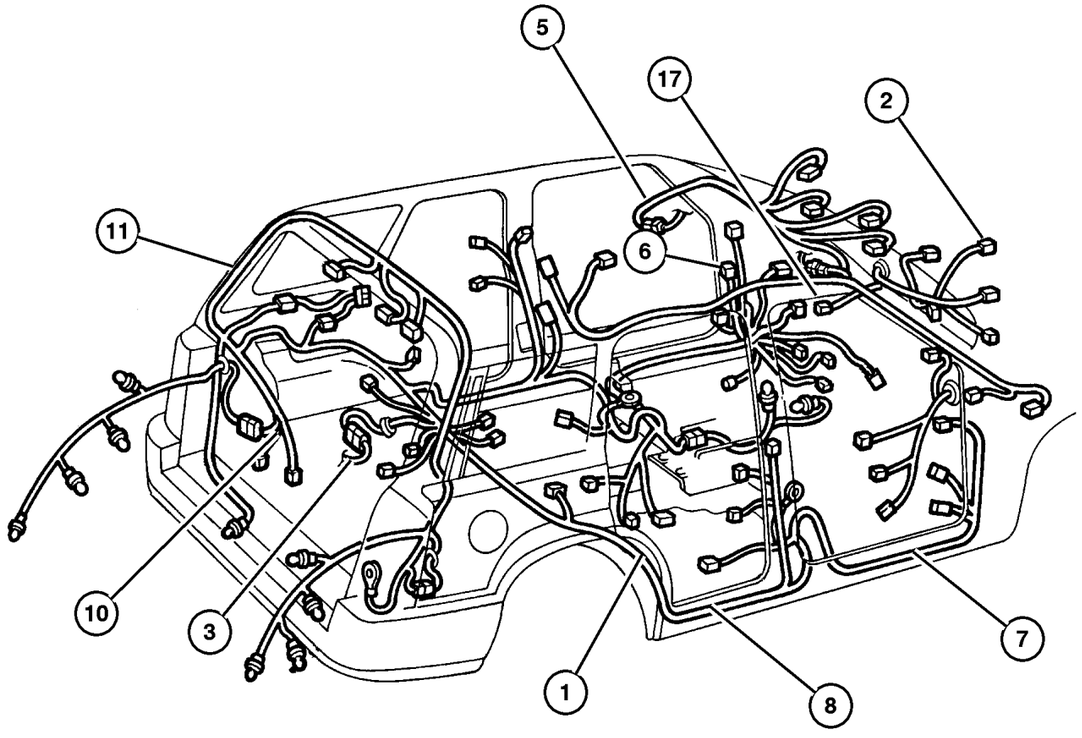

ITEM	PART NUMBER	QTY	LINE	SERIES	BODY	ENGINE	TRANS	TRIM	DESCRIPTION
	56010 085AI	1	J, U						
	56010 086AH	1	J, T						
-12	56038 366AB	1							CONNECTOR, 7 Way
-13	5102 404AA	1							WIRING KIT, 7 Way, Female
-14	5102 405AA	4							WIRING KIT, 10 Way, Female
-15	5601 9823	1							ADAPTER, Trailer Tow
-16	8220 3600	1							COVER KIT, Trailer Tow, with 2.00 Receiver & Jeep Logo
17									WIRING, Overhead Console
	4760 644	1	J, U						
		1	J, T						
-18									COVER, Wiring Protector
	56010 046AC	1							Loacated on Front Floor Foot Area, Passenger Side
	56010 047AC	1							Loacated on Front Floor Foot Area, Driver Side
	5604 2070	1							Export
-19	56010 354AA	4							CLIP, Floor Pan Cover Button
-20	56010 419AB	1		M					WIRING, Roof Lamps
-21									WIRING, Off Road Light
	52112 062AA	1							
	52112 092AA	1							Export
-22	5271 292AA	1	J, T						WIRING, Jumper, Power Window Kit (Mexico)
-23	56010 329AD	1							WIRING, License Lamp
-24									WIRING, Fuel Module
	#56010 598AC	1				ED0, EK0			Rear Speed Sensor Connector Included
	#56010 599AC	1				EN0			Rear Speed Sensor Connector Included
-25	5072 109AA	2	J, T						WIRING, Seat Belt Jumper

JEEP LIBERTY (KJ)

SERIES	LINE	BODY	ENGINE	TRANSMISSION
P = Limited	J = LHD (4WD)	74 = 4 Dr (104.3 WB)	ED1,ED0 = 2.4L Power Tech	DDK = 5 Speed HDManual
H = Sport	U = RHD (4WD)		EKG,EK0 = 3.7L Power Tech	DDD = 5 Speed HD Manual
M = Renegade	T = LHD (2WD)		ENJ = 2.5L 4Cyl Turbo Diesel	DG4,DGQ = Multi-Speed Auto
			ENR = 2.8L 4Cyl Turbo Diesel	DG6 = 4 Speed Auto Transm
			EN0 = 4Cyl Turbo Diesel	DG0 = All Automatic Transm
				DBB = All Manual Transm

AR = Use as required - = Non illustrated part # = New this model year

September 30, 2003

« RETURN TO GROUP INDEX

Wiring, Repair Package
Figure 008-1610

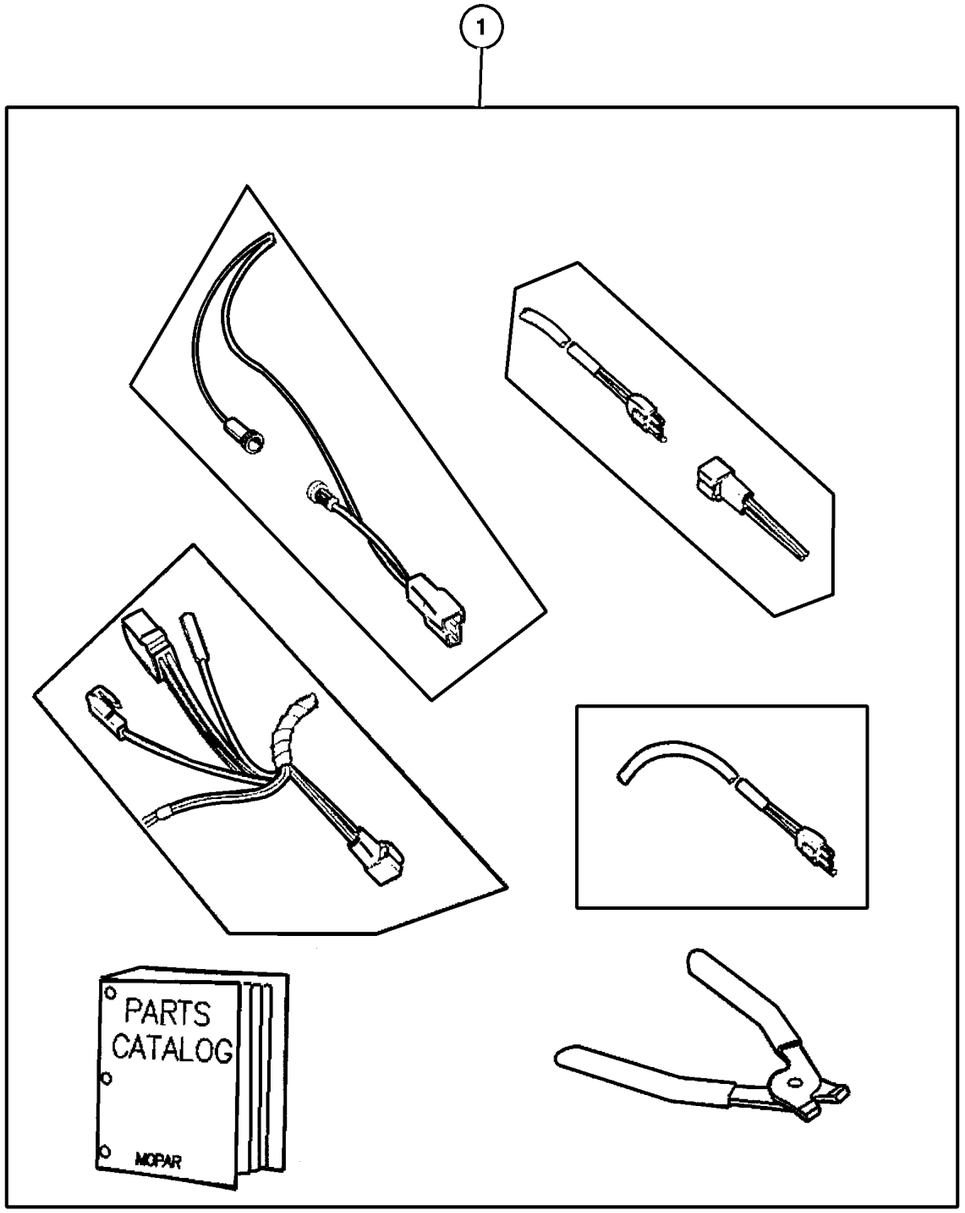

ITEM	PART NUMBER	QTY	LINE	SERIES	BODY	ENGINE	TRANS	TRIM	DESCRIPTION
Notes:									
[DG4] = All Multi Speed Automatic Transmissions									
1	5013 930AD	1							WIRING PACKAGE, Underhood Connector Repair, Underhood Wiring
-2	5013 930AD	1							WIRING PACKAGE, Underhood Connector Repair
-3	5019 912AA	1							TOOL, Crimping
-4	5014 757AD	1							MANUAL, Connector Repair
-5	5073 029AA	1							WIRING KIT, Electric Repair, With Tool
-6	5602 1384	2							CLIP, Wiring
-7	5300 8550	1	T				DG4		CLIP
-8	5083 221AA	1							WIRING KIT, 22 Way, Female

JEEP LIBERTY (KJ)

SERIES	LINE	BODY	ENGINE	TRANSMISSION
P = Limited	J = LHD (4WD)	74 = 4 Dr (104.3 WB)	ED1,ED0 = 2.4L Power Tech	DDK = 5 Speed HDManual
H = Sport	U = RHD (4WD)		EKG,EK0 = 3.7L Power Tech	DDD = 5 Speed HD Manual
M = Renegade	T = LHD (2WD)		ENJ = 2.5L 4Cyl Turbo Diesel	DG4,DGQ = Multi-Speed Auto
			ENR = 2.8L 4Cyl Turbo Diesel	DG6 = 4 Speed Auto Transm
			EN0 = 4Cyl Turbo Diesel	DG0 = All Automatic Transm
				DBB = All Manual Transm

Air Bag Module and Sensors
Figure 008-1705

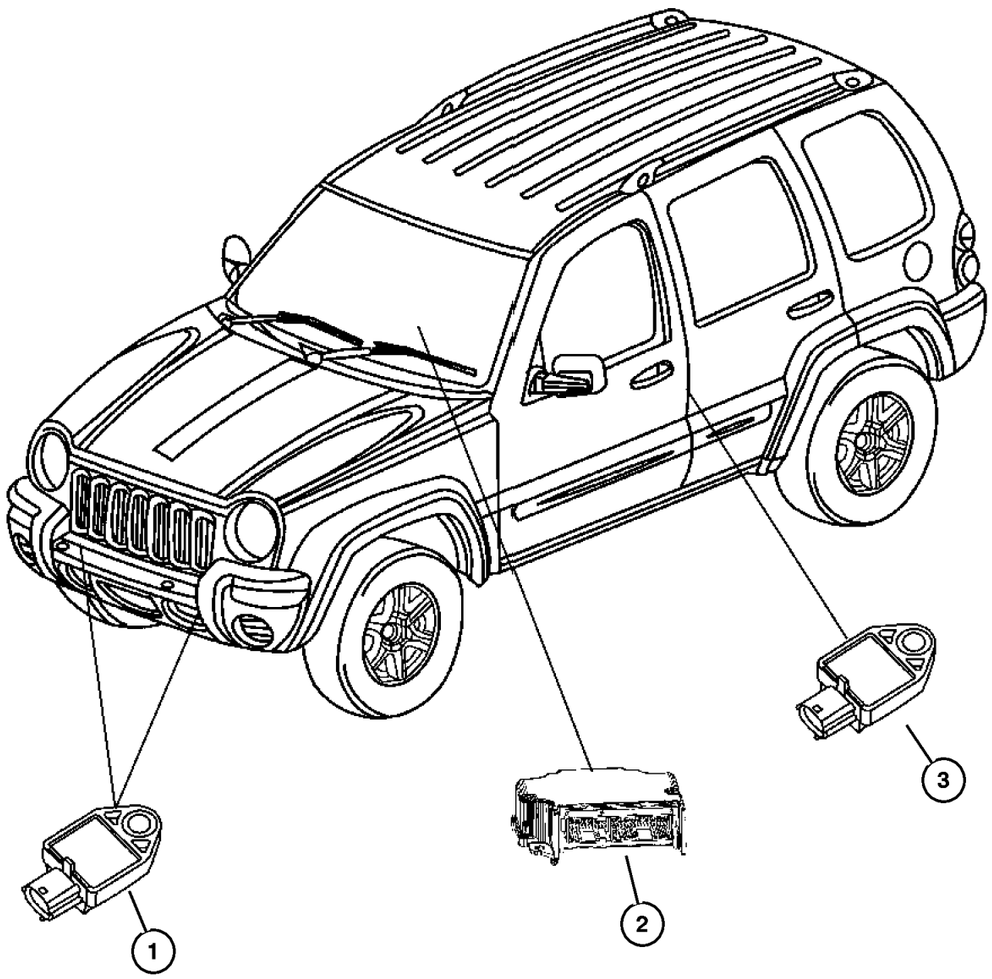

ITEM	PART NUMBER	QTY	LINE	SERIES	BODY	ENGINE	TRANS	TRIM	DESCRIPTION
1	#5084 000AA	2							SENSOR, Air Bag
2									MODULE, Occupant Restraint
	#56038 862AE	1							
	#56038 864AC	1							Export
	#56038 961AE	1							[CGS]
3	#5084 000AA	2							SENSOR, Air Bag

JEEP LIBERTY (KJ)

SERIES	LINE	BODY	ENGINE	TRANSMISSION
P = Limited	J = LHD (4WD)	74 = 4 Dr (104.3 WB)	ED1,ED0 = 2.4L Power Tech	DDK = 5 Speed HDManual
H = Sport	U = RHD (4WD)		EKG,EK0 = 3.7L Power Tech	DDD = 5 Speed HD Manual
M = Renegade	T = LHD (2WD)		ENJ = 2.5L 4Cyl Turbo Diesel	DG4,DGQ = Multi-Speed Auto
			ENR = 2.8L 4Cyl Turbo Diesel	DG6 = 4 Speed Auto Transm
			EN0 = 4Cyl Turbo Diesel	DG0 = All Automatic Transm
				DBB = All Manual Transm

Air Bags and Clock Spring
Figure 008-1710

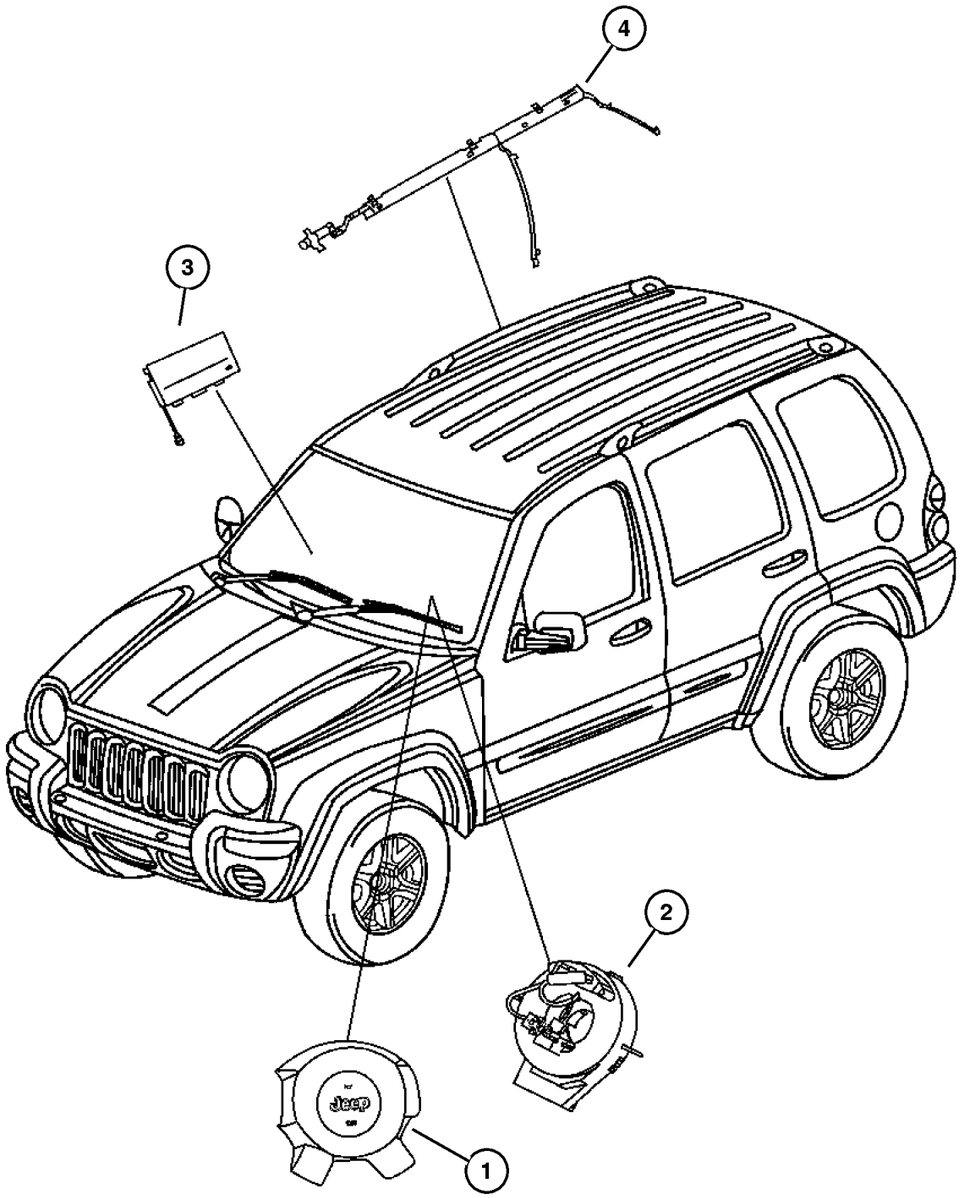

ITEM	PART NUMBER	QTY	LINE	SERIES	BODY	ENGINE	TRANS	TRIM	DESCRIPTION
1									AIR BAG, Driver
	#5JS05 DX9AA	1		H, M					
	#5JS06 1X9AA	1		M, P					[JA2]
	#5JS06 1X9AB	1		H, M, P					[JA2]
2									CLOCKSPRING
	56010 146AF	1							
	56010 187AG	1							[RDZ]
3	#55315 103AA	1							AIR BAG, Passenger
4									AIR BAG, Side Curtain
	#55315 098AA	1							Right
	#55315 099AA	1							Left

JEEP LIBERTY (KJ)

SERIES	LINE	BODY	ENGINE	TRANSMISSION
P = Limited	J = LHD (4WD)	74 = 4 Dr (104.3 WB)	ED1,ED0 = 2.4L Power Tech	DDK = 5 Speed HDManual
H = Sport	U = RHD (4WD)		EKG,EK0 = 3.7L Power Tech	DDD = 5 Speed HD Manual
M = Renegade	T = LHD (2WD)		ENJ = 2.5L 4Cyl Turbo Diesel	DG4,DGQ = Multi-Speed Auto
			ENR = 2.8L 4Cyl Turbo Diesel	DG6 = 4 Speed Auto Transm
			EN0 = 4Cyl Turbo Diesel	DG0 = All Automatic Transm
				DBB = All Manual Transm

Spark Plug - Coil
Figure 008-1910

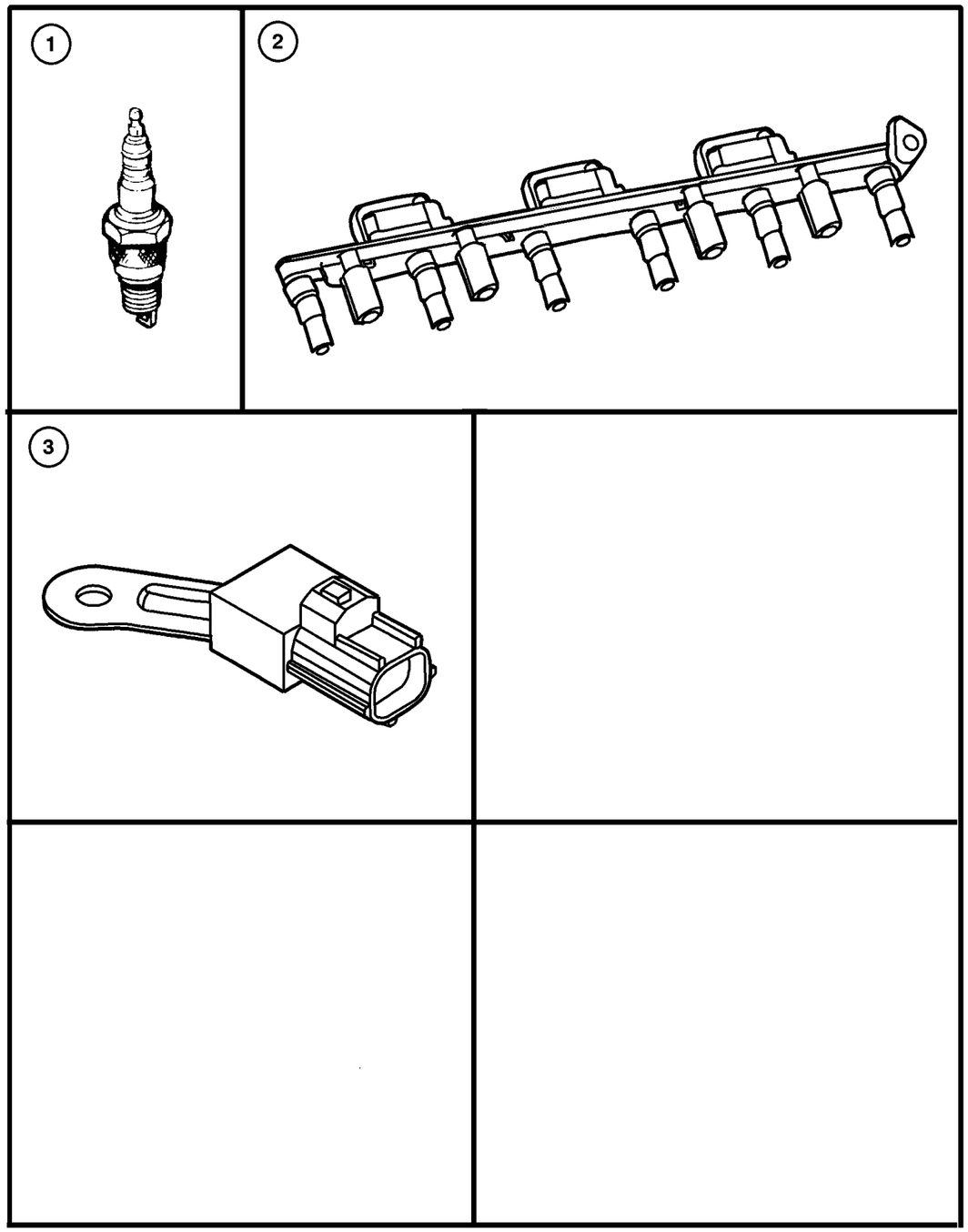

ITEM	PART NUMBER	QTY	LINE	SERIES	BODY	ENGINE	TRANS	TRIM	DESCRIPTION
Notes:									
[ED0]=2.4L 4 Cylinder Engine									
[EK0]=3.7L V6 Cylinder Engine									
1									SPARK PLUG
	SPRE1 4MCC5	4				ED0			
	SPZF R6F11G	6				EK0			
2									COIL, Ignition
	56028 138AE	6				EK0			
	4609 103AB	1				ED0			
3	#56041 915AC	1				ED0, EK0			CAPACITOR, Ignition
-4									CABLE, Ignition
	56041 818AC	2				ED0			#2 & 3
	56044 075AC	2				ED0			#1 & 4
-5	6502 921	4				ED0			SCREW, Ignition Coil Mounting
-6	6101 802	6				EK0			NUT, Ignition Coil Mounting
-7	4693 243AA	4				ED0			ISOLATOR
-8	5102 091AA	1				ED0			CABLE PACKAGE, Ignition
-9	5072 382AA	6				EK0			O RING, Coil

JEEP LIBERTY (KJ)

SERIES	LINE	BODY	ENGINE	TRANSMISSION
P = Limited	J = LHD (4WD)	74 = 4 Dr (104.3 WB)	ED1,ED0 = 2.4L Power Tech	DDK = 5 Speed HDManual
H = Sport	U = RHD (4WD)		EKG,EK0 = 3.7L Power Tech	DDD = 5 Speed HD Manual
M = Renegade	T = LHD (2WD)		ENJ = 2.5L 4Cyl Turbo Diesel	DG4,DGQ = Multi-Speed Auto
			ENR = 2.8L 4Cyl Turbo Diesel	DG6 = 4 Speed Auto Transm
			EN0 = 4Cyl Turbo Diesel	DG0 = All Automatic Transm
				DBB = All Manual Transm

Group – 08A

Instrument Panel and Radios and Consoles

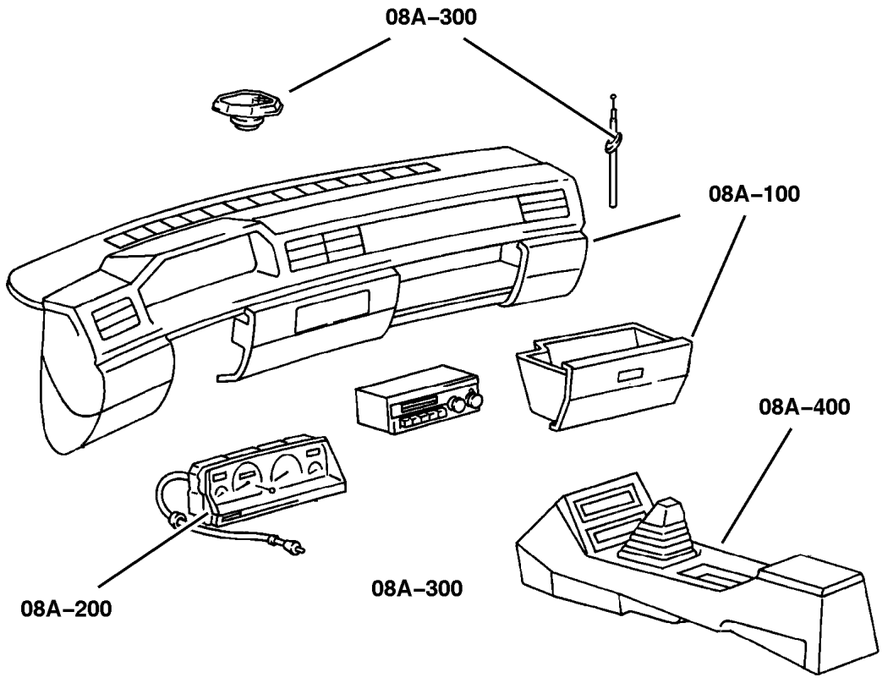

08A–100	08A–200	08A–300	08A–400
Instrument Panel	Instrument Panel Cluster	Radio, Antenna, and Speakers	Consoles
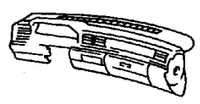	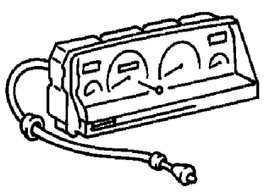	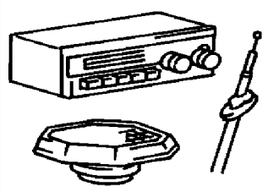	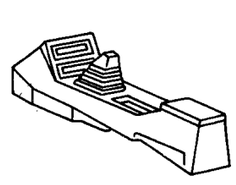

GROUP 8A - Instrument Panel and Radios and Consoles

Illustration Title	Group-Fig. No.
Instrument Panel	
Instrument Panel	Fig. 08A-110
Instrument Panel Cluster	
Instrument Panel Cluster	Fig. 08A-210
Radio, Antenna, and Speakers	
Radios	Fig. 08A-310
Speakers	Fig. 08A-320
Antenna	Fig. 08A-330
Consoles	
Console, Overhead	Fig. 08A-410
Console, Floor	Fig. 08A-420

Instrument Panel
Figure 08A-110

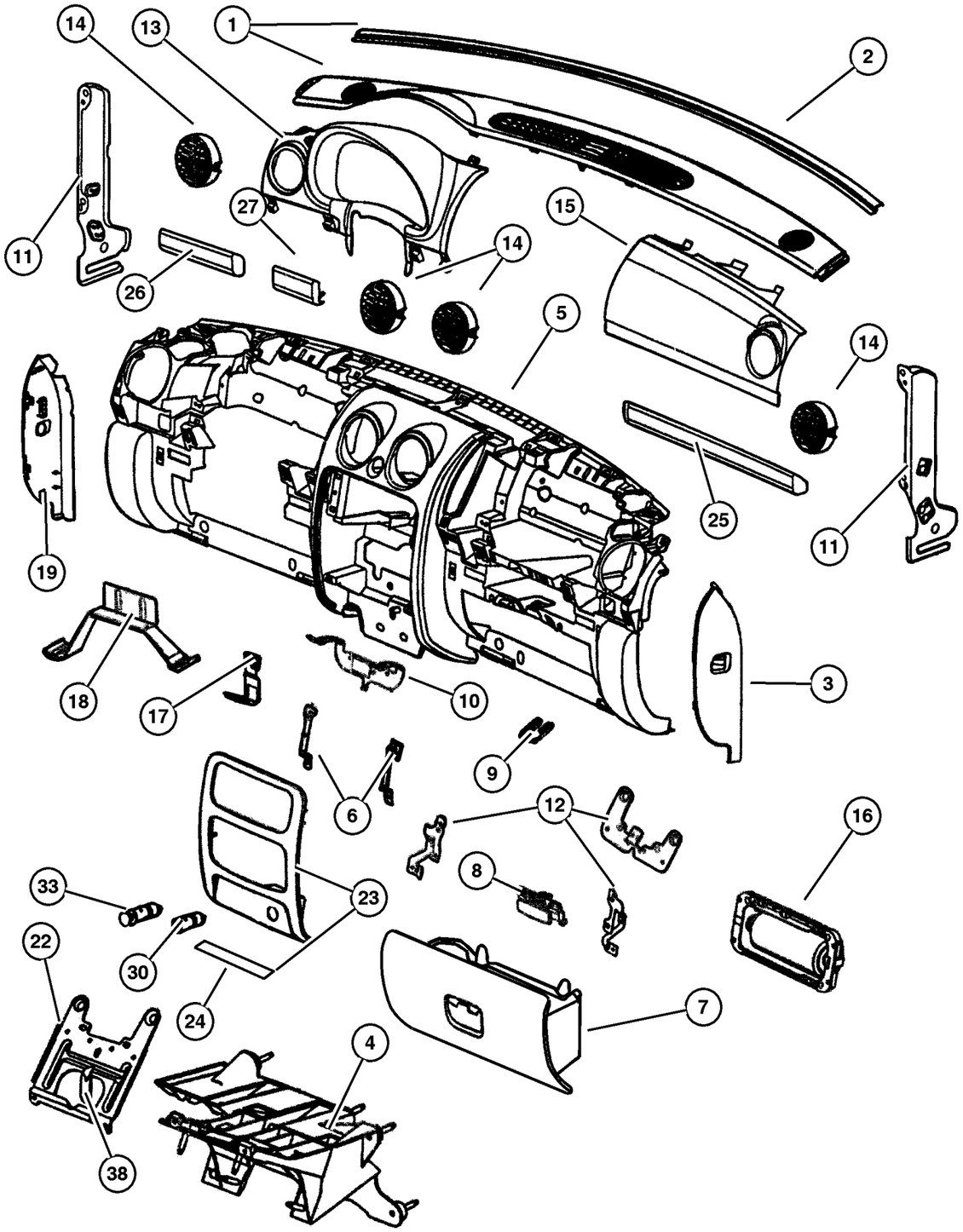

ITEM	PART NUMBER	QTY	LINE	SERIES	BODY	ENGINE	TRANS	TRIM	DESCRIPTION
Notes:									
[XCA] = Used with Grab Handle									
1									COVER, Instrument Panel
	5GD54 WL8AD	1	J, T						[L2] (Seal Serviced with Cover Only)
		1	J, T						[L5] (Seal Serviced with Cover Only)
	5GD54 XDVAD	1	J, T						[D2] (Seal Serviced with Cover Only)
		1	J, T						[DV] (Seal Serviced with Cover Only)
	5GJ79 WL8AD	1	U						[L2] (Seal Serviced with Cover Only)
		1	U						[L5] (Seal Serviced with Cover Only)
	5GJ79 XDVAD	1	U						[DV] (Seal Serviced with Cover Only)
2									SEAL, Instrument Panel, (NOT SERVICED) (Not Serviced)
3									COVER, Instrument Panel Opening
	5GN55 WL8AD	1	J, T						[L2]
		1	J, T						[L5]
	5GN55 XDVAD	1	J, T						[D2]
		1	J, T						[DV]
	5GN56 WL8AD	1	U						[L2]
		1	U						[L5]
	5GN56 XDVAD	1	U						[DV]
4									BRACKET, Steering Column
	55314 987AA	1	J, T						Lower
	55314 988AA	1	U						Lower
5									PANEL, Instrument
	#ZE87 WL8AA	1	U						[L2] (Radio Bracket, Glovebox & Latch Included)
	#5JX85 XDVAA	1	J, T						[D2] Without [XCA] (Radio Bracket, Glovebox & Latch Included)
		1	J, T						[DV] Without [XCA] (Radio Bracket, Glovebox & Latch Included)
	#ZE87 WL8AA	1	U						[L5] (Radio Bracket, Glovebox & Latch Included)
	#ZE87 XDVAA	1	U						[DV] (Radio Bracket, Glovebox & Latch Included)

JEEP LIBERTY (KJ)

SERIES	LINE	BODY	ENGINE	TRANSMISSION
P = Limited	J = LHD (4WD)	74 = 4 Dr (104.3 WB)	ED1,ED0 = 2.4L Power Tech	DDK = 5 Speed HDManual
H = Sport	U = RHD (4WD)		EKG,EK0 = 3.7L Power Tech	DDD = 5 Speed HD Manual
M = Renegade	T = LHD (2WD)		ENJ = 2.5L 4Cyl Turbo Diesel	DG4,DGQ = Multi-Speed Auto
			ENR = 2.8L 4Cyl Turbo Diesel	DG6 = 4 Speed Auto Transm
			EN0 = 4Cyl Turbo Diesel	DG0 = All Automatic Transm
				DBB = All Manual Transm

Instrument Panel
Figure 08A-110

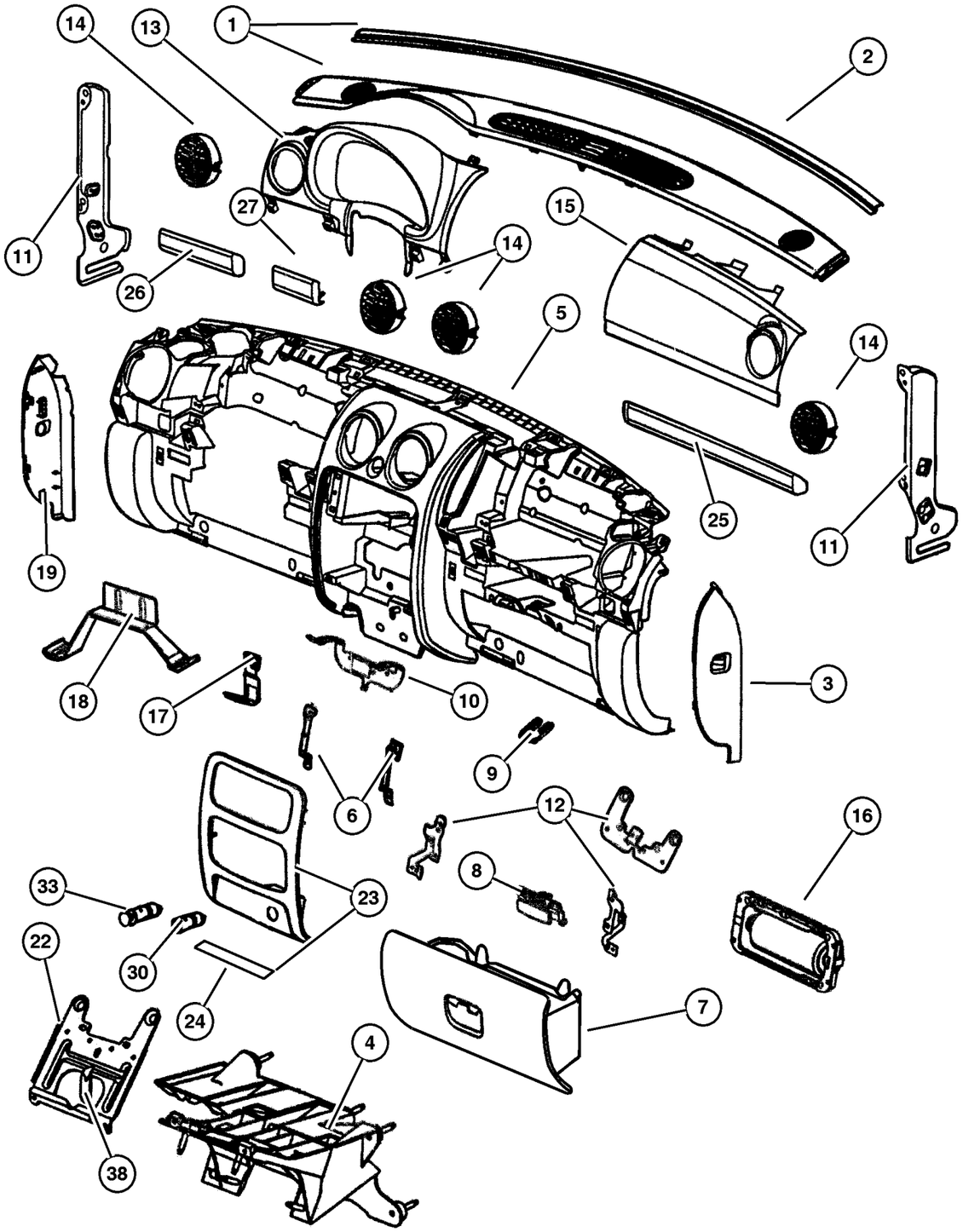

ITEM	PART NUMBER	QTY	LINE	SERIES	BODY	ENGINE	TRANS	TRIM	DESCRIPTION
	#ZE85 WL8AA	1	J, T						[L2] With [XCA] (Radio Bracket, Glovebox & Latch Included)
		1	J, T						[L5] With [XCA] (Radio Bracket, Glovebox & Latch Included)
	#5JX85 WL8AA	1	J, T						[L2] Without [XCA] (Radio Bracket, Glovebox & Latch Included)
	#ZE85 XDVAA	1	J, T						[D2] With [XCA] (Radio Bracket, Glovebox & Latch Included)
		1	J, T						[DV] With [XCA] (Radio Bracket, Glovebox & Latch Included)
	#5JX85 WL8AA	1	J, T						[L5] Without [XCA] (Radio Bracket, Glovebox & Latch Included)
6									BRACKET, Radio
	5072 596AA	1	U						
		1	J, T						
7									GLOVE BOX, Instrument Panel
	#ZE71 WL8AA	1	U						[L2] (Glovebox Latch Included)
		1	U						[L5] (Glovebox Latch Included)
		1	J, T						[L2] (Glovebox Latch Included)
		1	J, T						[L5] (Glovebox Latch Included)
	#ZE71 XDVAA	1	U						[DV] (Glovebox Latch Included)
		1	J, T						[D2] (Glovebox Latch Included)
		1	J, T						[DV] (Glovebox Latch Included)
8									LATCH, Glovebox Door
	WQ54 WL8AA	1	J, T						[L2]
		1	J, T						[L5]
		1	U						[L2]
		1	U						[L5]
	WQ54 XDVAA	1	J, T						[D2]
		1	J, T						[DV]
		1	U						[DV]
9									STRIKER, Glove Box Door Latch
	5072 605AA	1	U						
		1	J, T						
10									BRACKET, Audio Equipment
	5072 606AA	1	U						
		1	J, T						
11									BRACKET, Instrument Panel
	5073 523AA	1	J, T						Instrument Panel Right End
	56052 063AB	1	U						Instrument Panel End
	56052 064AB	1	J, T						Left

JEEP LIBERTY (KJ)

SERIES	LINE	BODY	ENGINE	TRANSMISSION
P = Limited	J = LHD (4WD)	74 = 4 Dr (104.3 WB)	ED1,ED0 = 2.4L Power Tech	DDK = 5 Speed HDManual
H = Sport	U = RHD (4WD)		EKG,EK0 = 3.7L Power Tech	DDD = 5 Speed HD Manual
M = Renegade	T = LHD (2WD)		ENJ = 2.5L 4Cyl Turbo Diesel	DG4,DGQ = Multi-Speed Auto
			ENR = 2.8L 4Cyl Turbo Diesel	DG6 = 4 Speed Auto Transm
			EN0 = 4Cyl Turbo Diesel	DG0 = All Automatic Transm
				DBB = All Manual Transm

AR = Use as required - = Non illustrated part # = New this model year

September 30, 2003

« RETURN TO GROUP INDEX

Instrument Panel
Figure 08A-110

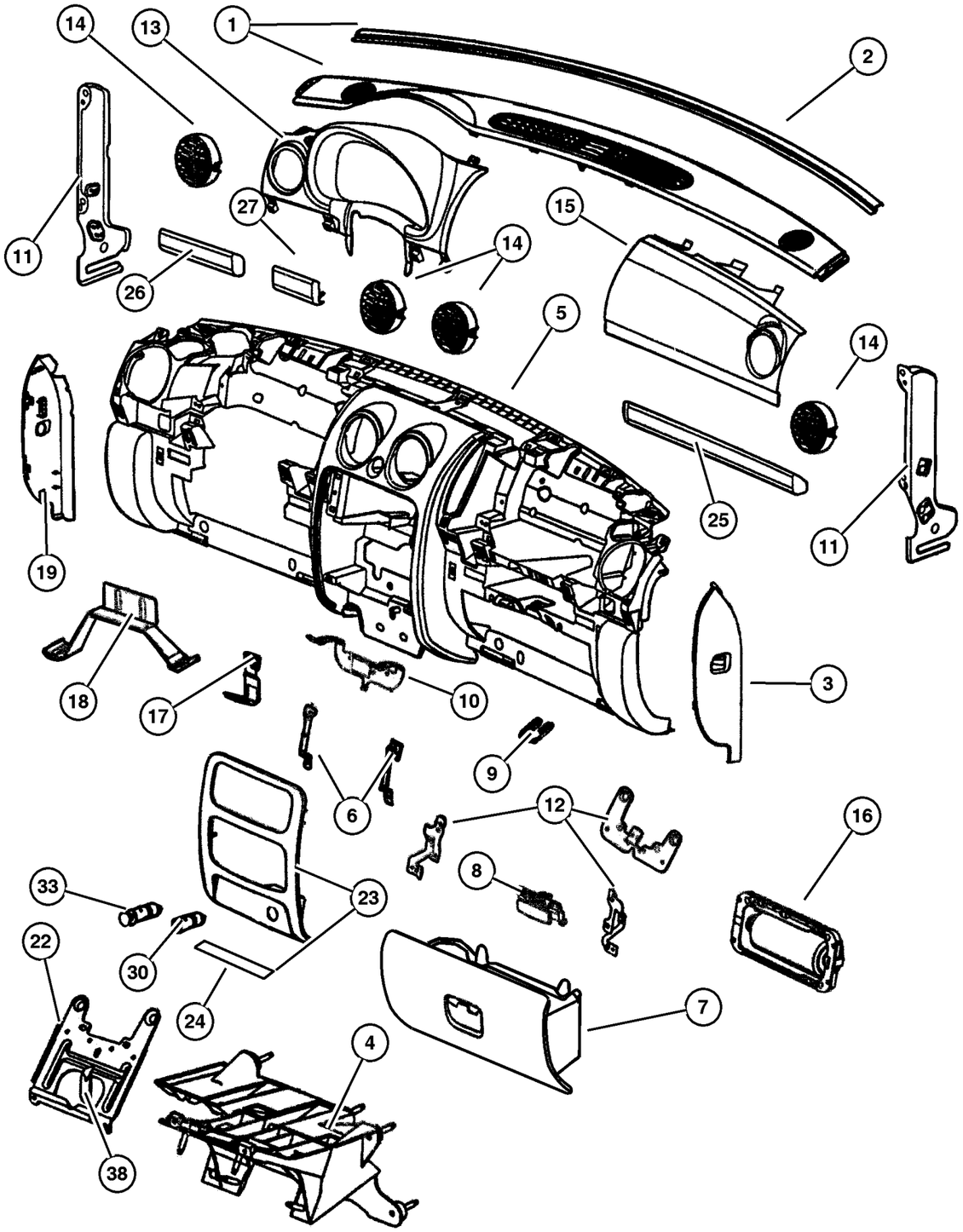

ITEM	PART NUMBER	QTY	LINE	SERIES	BODY	ENGINE	TRANS	TRIM	DESCRIPTION
		1	U						Left
	56052 122AA	1	U						Bracket Guide Alignment, Right
		1	J, T						Bracket Guide Alignment, Right
	56052 123AA	1	U						Bracket Guide Alignment, Left
		1	J, T						Bracket Guide Alignment, Left
12									BRACKET, Air Bag
	56052 057AB	1	J, T						Passenger Door Mounting
	56052 058AB	1	U						Passenger, Center
	56052 059AB	1	J, T						Inboard, Left
	56052 060AB	1	U						Inboard, Right
	56052 061AB	1	J, T						Outboard, Right
	56052 062AB	1	U						Outboard, Left
13									BEZEL, Cluster
	WD13 WL8AA	1	U						[L2]
		1	U						[L5]
	WD13 XDVAA	1	U						[DV]
	5JA36 WL8AB	1	J, T						[L2]
		1	J, T						[L5]
	5JA36 XDVAB	1	J, T						[D2]
		1	J, T						[DV]
14									OUTLET, Air Conditioning & Heater
	56052 065AA	4	U						
		4	J, T						
15									DOOR, Passenger Air Bag, Air Outlet Included (Heat Staked)
	WD14 WL8AB	1	U						[L2]
	5HZ98 XDVAB	1	J, T						[D2] Without [XCA]
		1	J, T						[DV] Without [XCA]
	WD14 WL8AB	1	U						[L5]
	WD14 XDVAB	1	U						[DV]
	#ZE70 WL8AA	1	J, T						[L2] With [XCA]
		1	J, T						[L5] With [XCA]
	#ZE70 XDVAA	1	J, T						[D2] With [XCA]
		1	J, T						[DV] With [XCA]
	5HZ98 WL8AB	1	J, T						[L2] Without [XCA]
		1	J, T						[L5] Without [XCA]
16	#55315 103AA	1							AIR BAG, Passenger
17	55037 453AB	1							BRACKET, Instrument Panel, Hush Panel Bracket
18	55037 453AB	1							BRACKET, Instrument Panel, Instrument Panel to Floor
19									COVER, Fuse Access

JEEP LIBERTY (KJ)

SERIES	LINE	BODY	ENGINE	TRANSMISSION
P = Limited	J = LHD (4WD)	74 = 4 Dr (104.3 WB)	ED1,ED0 = 2.4L Power Tech	DDK = 5 Speed HDManual
H = Sport	U = RHD (4WD)		EKG,EK0 = 3.7L Power Tech	DDD = 5 Speed HD Manual
M = Renegade	T = LHD (2WD)		ENJ = 2.5L 4Cyl Turbo Diesel	DG4,DGQ = Multi-Speed Auto
			ENR = 2.8L 4Cyl Turbo Diesel	DG6 = 4 Speed Auto Transm
			EN0 = 4Cyl Turbo Diesel	DG0 = All Automatic Transm
				DBB = All Manual Transm

AR = Use as required - = Non illustrated part # = New this model year

September 30, 2003

« RETURN TO GROUP INDEX

Instrument Panel
Figure 08A-110

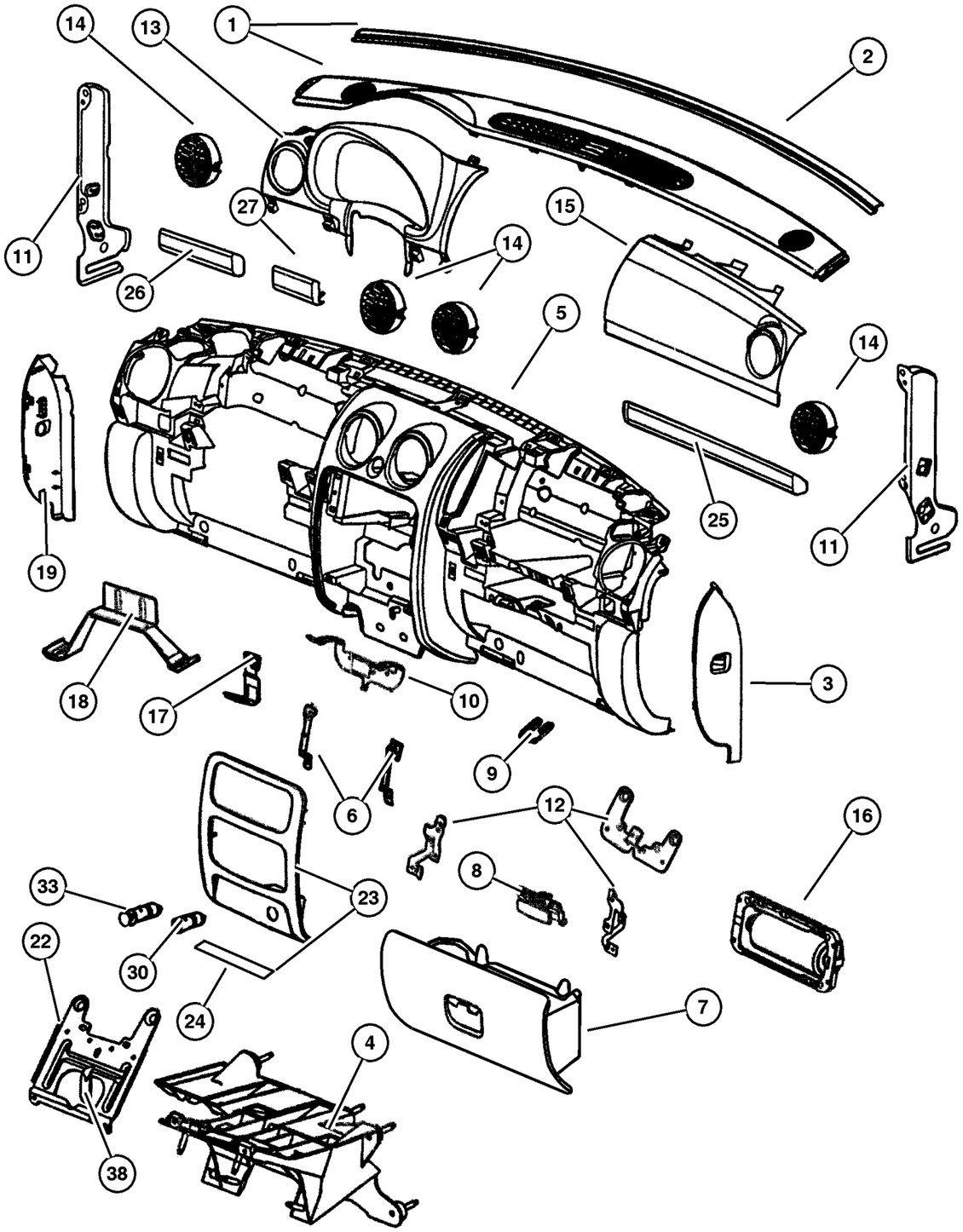

ITEM	PART NUMBER	QTY	LINE	SERIES	BODY	ENGINE	TRANS	TRIM	DESCRIPTION
	5GK18 WL8AD	1	U						[L2] Serviced with Fuse Puller
		1	U						[L5] Serviced with Fuse Puller
	5GK18 XDVAD	1	U						[DV] Serviced with Fuse Puller
	5GK19 WL8AD	1	J, T						[L2] Serviced with Fuse Puller
		1	J, T						[L5] Serviced with Fuse Puller
	5GK19 XDVAD	1	J, T						[D2] Serviced with Fuse Puller
		1	J, T						[DV] Serviced with Fuse Puller
-20									PULLER, Fuse
	5072 937AA	1	U						
		1	J, T						
-21									PANEL, Knee Blocker
	#5JF63 WL8AC	1							[L2]
		1							[L5]
	#5JF63 XDVAC	1							[D2]
		1							[DV]
22									BRACKET, Steering Column
	55314 992AA	1	J, T						Upper
	55315 011AA	1	U						Upper
23									BEZEL, Instrument Panel, Center
	56052 271AA	1	J, T	P					Chrome / Metallic with Black Cubby Bin & Mat (Limited)
		1	J, T						Chrome / Metallic with Black Cubby Bin & Mat (Renegade)
		1	U	P					Chrome / Metallic with Black Cubby Bin & Mat (Limited)
	5JM35 DX9AA	1	J, T	H					[DV] Black with Black Cubby Bin & Mat (Sport)
		1	J, T	H					[L5] Black with Black Cubby Bin & Mat (Sport)
		1	U	H					[DV] Black with Black Cubby Bin & Mat (Sport)
		1	U	H					[L5] Black with Black Cubby Bin & Mat (Sport)
		1	J, T						[L2] Black with Black Cubby Bin & Mat (Renegade)
		1	U						[L2] Black with Black Cubby Bin & Mat (Renegade)
24									PAD, Instrument Panel
	5093 855AA	1	J, T						Cubby Bin (Black Rubber Mat)
		1	U						Cubby Bin (Black Rubber Mat)
25									BEZEL, Instrument Panel

JEEP LIBERTY (KJ)

SERIES	LINE	BODY	ENGINE	TRANSMISSION
P = Limited	J = LHD (4WD)	74 = 4 Dr (104.3 WB)	ED1,ED0 = 2.4L Power Tech	DDK = 5 Speed HDManual
H = Sport	U = RHD (4WD)		EKG,EK0 = 3.7L Power Tech	DDD = 5 Speed HD Manual
M = Renegade	T = LHD (2WD)		ENJ = 2.5L 4Cyl Turbo Diesel	DG4,DGQ = Multi-Speed Auto
			ENR = 2.8L 4Cyl Turbo Diesel	DG6 = 4 Speed Auto Transm
			EN0 = 4Cyl Turbo Diesel	DG0 = All Automatic Transm
				DBB = All Manual Transm

AR = Use as required - = Non illustrated part # = New this model year

September 30, 2003

« RETURN TO GROUP INDEX

Instrument Panel
Figure 08A-110

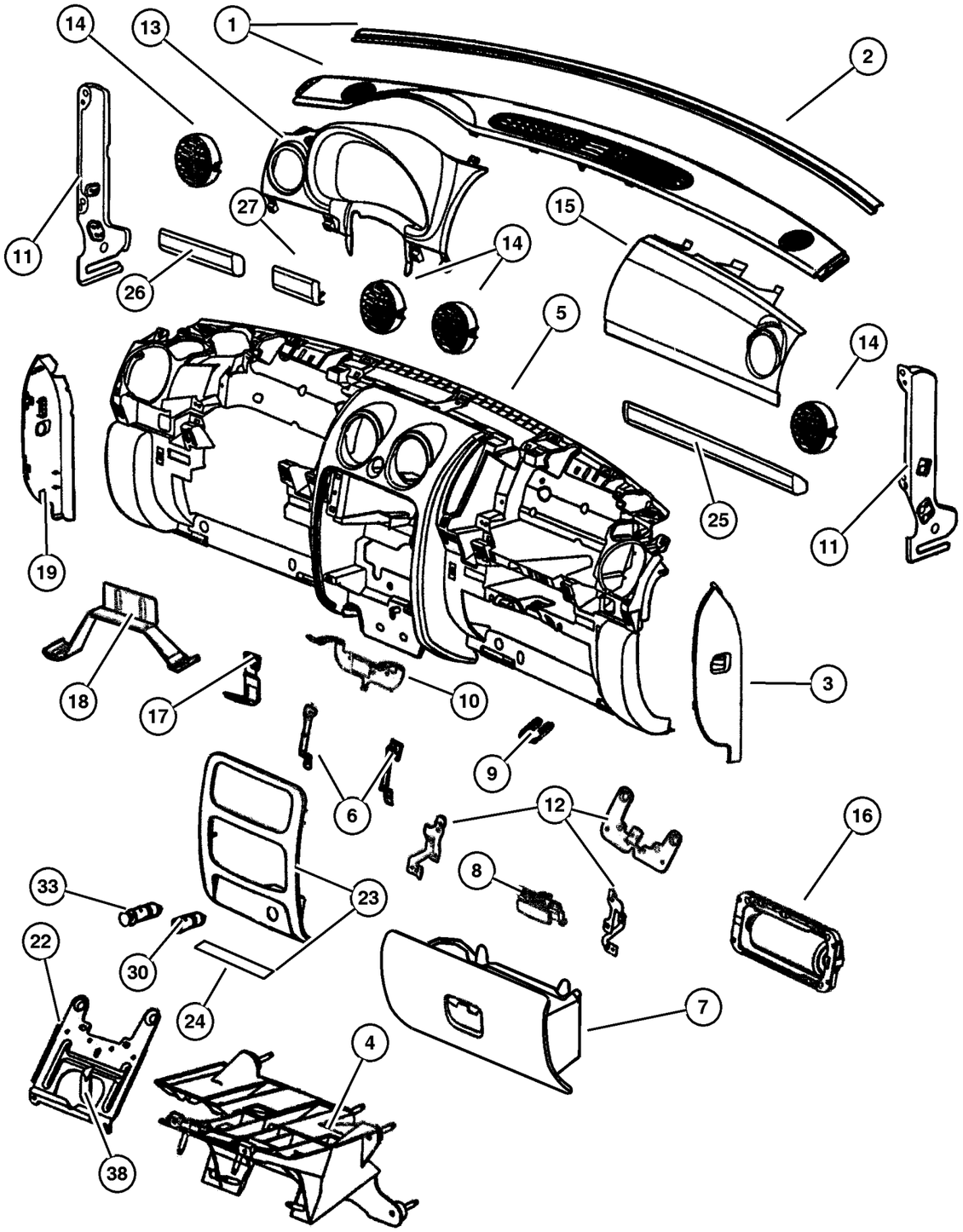

ITEM	PART NUMBER	QTY	LINE	SERIES	BODY	ENGINE	TRANS	TRIM	DESCRIPTION
	WB00 1DVAA	1	U	H					[DV] Passenger Side, Above Glovebox (Sport)
	5JA40 1DVAA	1	J, T	P					[DV] Passenger Side, Above Glovebox (Limited)
		1	J, T						[DV] Passenger Side, Above Glovebox (Renegade)
	5JA40 1L8AA	1	J, T	H					[L5] Passenger Side, Above Glovebox (Sport)
		1	J, T	P					[L2] Passenger Side, Above Glovebox (Limited)
		1	J, T	P					[L5] Passenger Side, Above Glovebox (Limited)
		1	J, T						[L2] Passenger Side, Above Glovebox (Renegade)
		1	J, T						[L5] Passenger Side, Above Glovebox (Renegade)
	WB00 1DVAA	1	U	P					[DV] Passenger Side, Above Glovebox (Limited)
		1	U						[DV] Passenger Side, Above Glovebox (Renegade)
	WB00 1L8AA	1	U	H					[L5] Passenger Side, Above Glovebox (Sport)
		1	U	P					[L2] Passenger Side, Above Glovebox (Limited)
		1	U	P					[L5] Passenger Side, Above Glovebox (Limited)
		1	U						[L2] Passenger Side, Above Glovebox (Renegade)
		1	U						[L5] Passenger Side, Above Glovebox (Renegade)
	5JA40 1DVAA	1	J, T	H					[DV] Passenger Side, Above Glovebox (Sport)
26									BEZEL, Instrument Panel
	WA98 1DVAA	1	U	H					[DV] Outboard Side of Steering Wheel, with or without Headlamp Leveling (Sport)
	#ZE79 1L8AA	1	J, T	P					[L2] Outboard Side of Steering Wheel, without Headlamp Leveling (Limited)
	#ZE80 1DVAA	1	J, T						[DV] Outboard Side of Steering Wheel, without Headlamp Leveling (Renegade)

JEEP LIBERTY (KJ)

SERIES	LINE	BODY	ENGINE	TRANSMISSION
P = Limited	J = LHD (4WD)	74 = 4 Dr (104.3 WB)	ED1,ED0 = 2.4L Power Tech	DDK = 5 Speed HDManual
H = Sport	U = RHD (4WD)		EKG,EK0 = 3.7L Power Tech	DDD = 5 Speed HD Manual
M = Renegade	T = LHD (2WD)		ENJ = 2.5L 4Cyl Turbo Diesel	DG4,DGQ = Multi-Speed Auto
			ENR = 2.8L 4Cyl Turbo Diesel	DG6 = 4 Speed Auto Transm
			EN0 = 4Cyl Turbo Diesel	DG0 = All Automatic Transm
				DBB = All Manual Transm

AR = Use as required - = Non illustrated part # = New this model year

September 30, 2003

« RETURN TO GROUP INDEX

Instrument Panel
Figure 08A-110

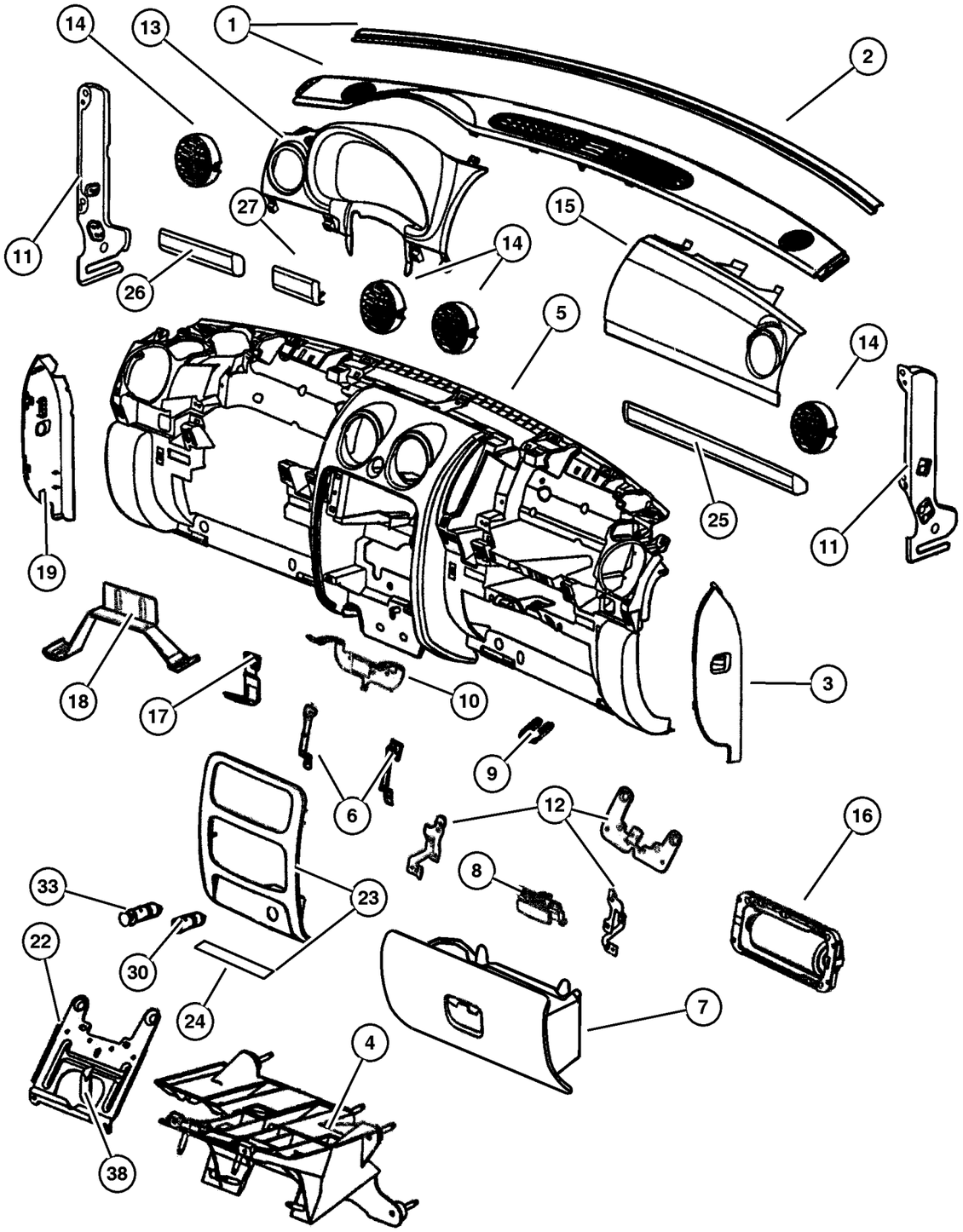

ITEM	PART NUMBER	QTY	LINE	SERIES	BODY	ENGINE	TRANS	TRIM	DESCRIPTION
		1	J, T						[D2] Outboard Side of Steering Wheel, without Headlamp Leveling (Renegade)
	#ZE80 1L8AA	1	J, T						[L5] Outboard Side of Steering Wheel, without Headlamp Leveling (Renegade)
		1	J, T						[L2] Outboard Side of Steering Wheel, without Headlamp Leveling (Renegade)
	#ZE83 1DVAA	1	U						[DV] Outboard Side of Steering Wheel, with Headlamp Leveling
	#ZE83 1L8AA	1	U						[L2] Outboard Side of Steering Wheel, with Headlamp Leveling
		1	U						[L5] Outboard Side of Steering Wheel, with Headlamp Leveling
	XW30 1DVAA	1	J, T						[DV] Outboard Side of Steering Wheel, with Headlamp Leveling
	XW30 1L8AA	1	J, T						[L2] Outboard Side of Steering Wheel, with Headlamp Leveling
	WA98 1DVAA	1	U	P					[DV] Outboard Side of Steering Wheel, with or without Headlamp Leveling (Limited)
	XW30 1L8AA	1	J, T						[L5] Outboard Side of Steering Wheel, with Headlamp Leveling
	WA98 1L8AA	1	U	H					[l5] Outboard Side of Steering Wheel, with or without Headlamp Leveling (Sport)
		1	U	P					[L2] Outboard Side of Steering Wheel, with or without Headlamp Leveling (Limited)
	#ZE79 1DVAA	1	J, T	H					[DV] Outboard Side of Steering Wheel, without Headlamp Leveling (Sport)
		1	J, T	P					[D2] Outboard Side of Steering Wheel, without Headlamp Leveling (Limited)
		1	J, T	P					[DV] Outboard Side of Steering Wheel, without Headlamp Leveling (Limited)
	#ZE79 1L8AA	1	J, T	H					[L5] Outboard Side of Steering Wheel, without Headlamp Leveling (Sport)

JEEP LIBERTY (KJ)

SERIES	LINE	BODY	ENGINE	TRANSMISSION
P = Limited	J = LHD (4WD)	74 = 4 Dr (104.3 WB)	ED1,ED0 = 2.4L Power Tech	DDK = 5 Speed HDManual
H = Sport	U = RHD (4WD)		EKG,EK0 = 3.7L Power Tech	DDD = 5 Speed HD Manual
M = Renegade	T = LHD (2WD)		ENJ = 2.5L 4Cyl Turbo Diesel	DG4,DGQ = Multi-Speed Auto
			ENR = 2.8L 4Cyl Turbo Diesel	DG6 = 4 Speed Auto Transm
			EN0 = 4Cyl Turbo Diesel	DG0 = All Automatic Transm
				DBB = All Manual Transm

AR = Use as required - = Non illustrated part # = New this model year

September 30, 2003

« RETURN TO GROUP INDEX

Instrument Panel
Figure 08A-110

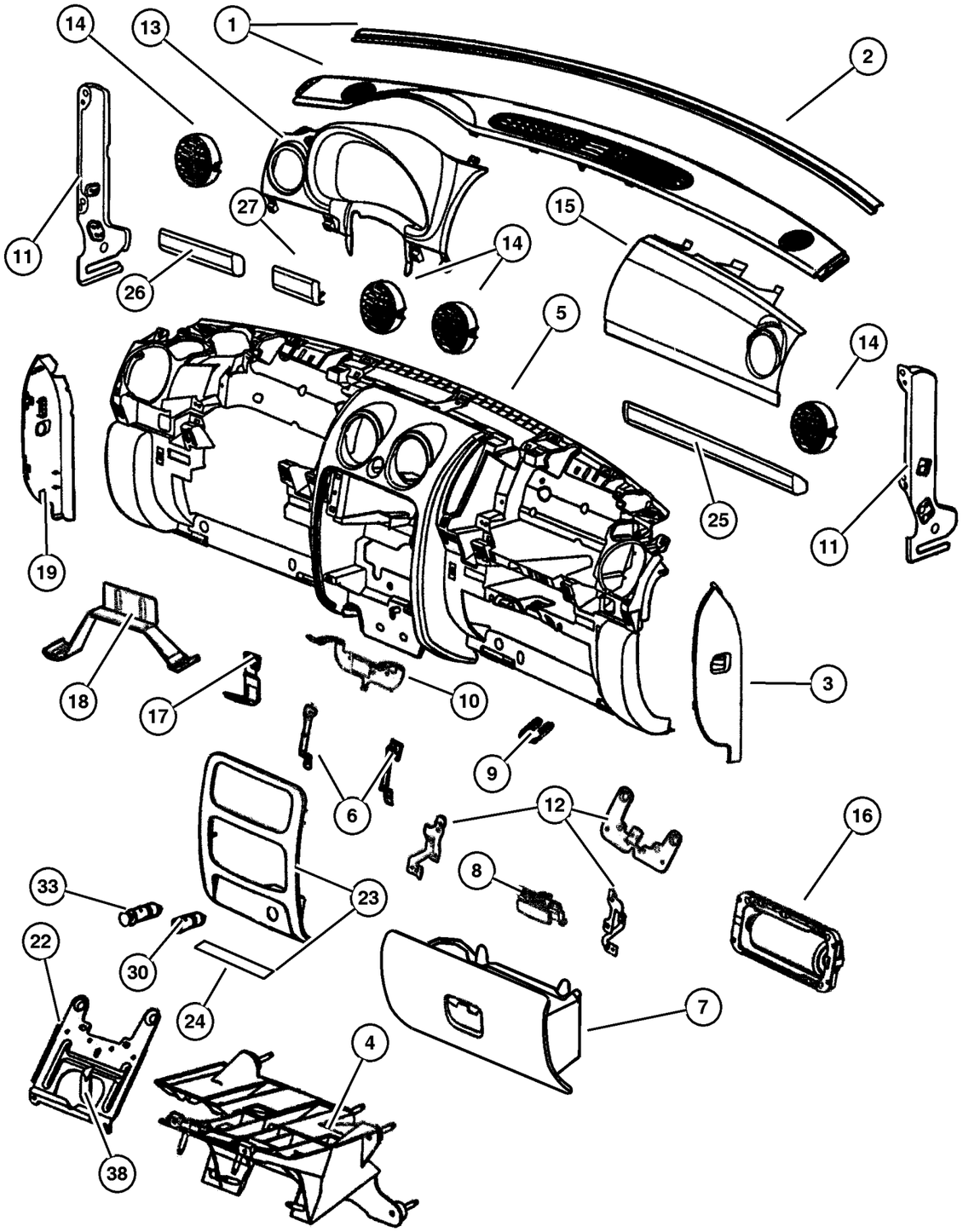

ITEM	PART NUMBER	QTY	LINE	SERIES	BODY	ENGINE	TRANS	TRIM	DESCRIPTION
		1	J, T	P					[L2] Outboard Side of Steering
									Wheel, without Headlamp Leveling
27									BEZEL, Instrument Panel
	WA99 1DVAA	1	U	H					[DV] Inboard Side of Steering
									Wheel (Sport)
	#ZE78 1DVAA	1	J, T	P					[D2] Inboard Side of Steering
									Wheel (Limited)
		1	J, T	P					[DV] Inboard Side of Steering
									Wheel (Limited)
		1	J, T						[DV] Inboard Side of Steering
									Wheel (Renegade)
		1	J, T						[D2] Inboard Side of Steering
									Wheel (Renegade)
	#ZE78 1L8AA	1	J, T	H					[L5] Inboard Side of Steering
									Wheel (Sport)
		1	J, T	P					[L2] Inboard Side of Steering
									Wheel (Limited)
		1	J, T	P					[L5] Inboard Side of Steering
									Wheel (Limited)
		1	J, T						[L5] Inboard Side of Steering
									Wheel (Renegade)
		1	J, T						[L2] Inboard Side of Steering
									Wheel (Renegade)
	WB01 1DVAA	1	U	H					[DV] Outboard Side of Steering
									Wheel, with Headlamp Leveling
	WA99 1DVAA	1	U	P					[DV] Inboard Side of Steering
									Wheel (Limited)
	WB01 1DVAA	1	U	P					[DV] Outboard Side of Steering
									Wheel, with Headlamp Leveling
		1	U						[DV] Outboard Side of Steering
									Wheel, with Headlamp Leveling
	WB01 1L8AA	1	U	H					[L5] Outboard Side of Steering
									Wheel, with Headlamp Leveling
		1	U	P					[L2] Outboard Side of Steering
									Wheel, with Headlamp Leveling
		1	U	P					[L5] Outboard Side of Steering
									Wheel, with Headlamp Leveling
		1	U						[L2] Outboard Side of Steering
									Wheel, with Headlamp Leveling
		1	U						[L5] Outboard Side of Steering
									Wheel, with Headlamp Leveling

JEEP LIBERTY (KJ)

SERIES	LINE	BODY	ENGINE	TRANSMISSION
P = Limited	J = LHD (4WD)	74 = 4 Dr (104.3 WB)	ED1,ED0 = 2.4L Power Tech	DDK = 5 Speed HDManual
H = Sport	U = RHD (4WD)		EKG,EK0 = 3.7L Power Tech	DDD = 5 Speed HD Manual
M = Renegade	T = LHD (2WD)		ENJ = 2.5L 4Cyl Turbo Diesel	DG4,DGQ = Multi-Speed Auto
			ENR = 2.8L 4Cyl Turbo Diesel	DG6 = 4 Speed Auto Transm
			EN0 = 4Cyl Turbo Diesel	DG0 = All Automatic Transm
				DBB = All Manual Transm

AR = Use as required - = Non illustrated part # = New this model year

September 30, 2003

« RETURN TO GROUP INDEX

Instrument Panel
Figure 08A-110

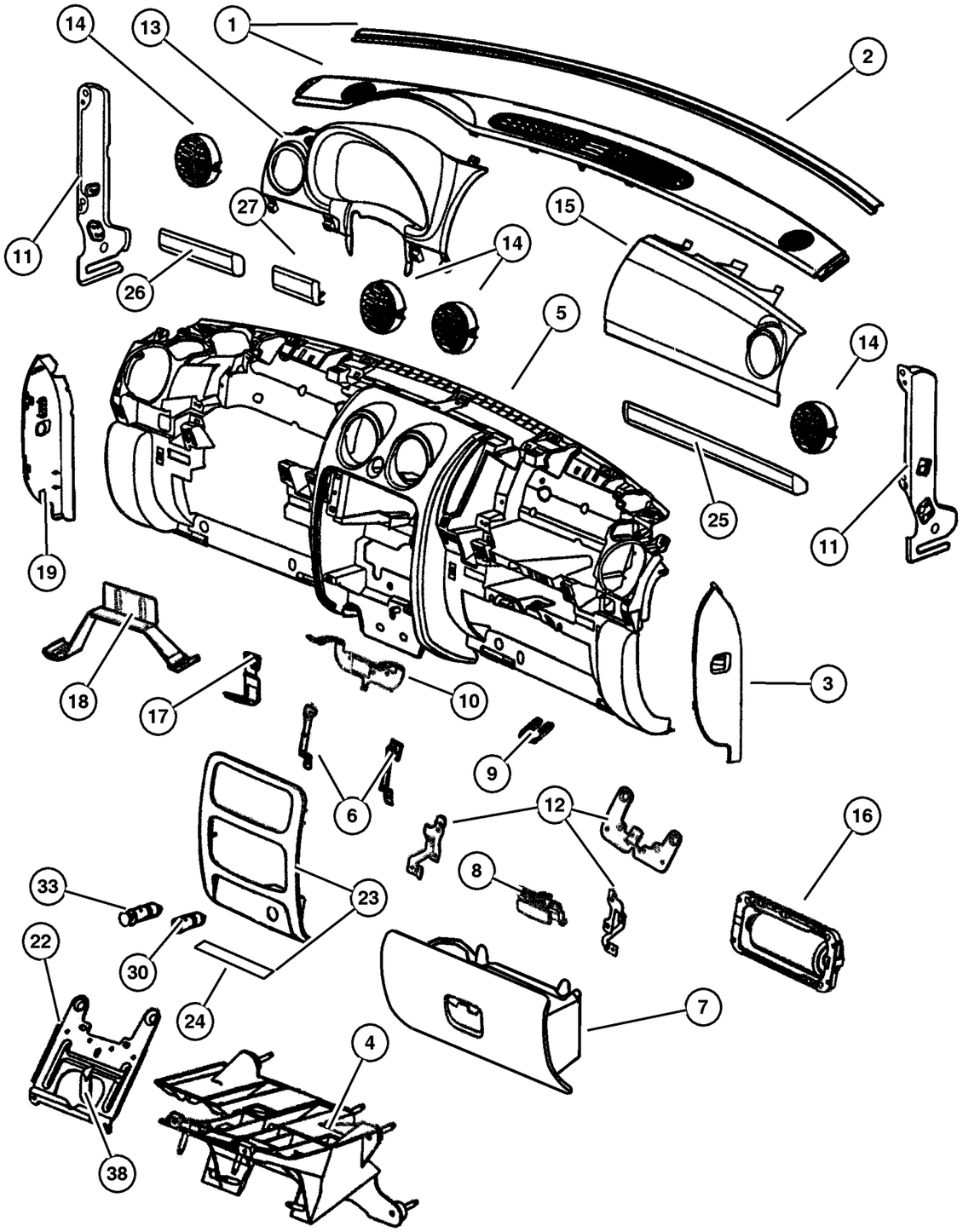

ITEM	PART NUMBER	QTY	LINE	SERIES	BODY	ENGINE	TRANS	TRIM	DESCRIPTION
	WB05 1DVAA	1	J, T	H					[DV] Outboard Side of Steering Wheel, with Headlamp Leveling
		1	J, T	P					[DV] Outboard Side of Steering Wheel, with Headlamp Leveling
		1	J, T						[DV] Outboard Side of Steering Wheel, with Headlamp Leveling
	WA99 1DVAA	1	U						[DV] Inboard Side of Steering Wheel (Renegade)
	WB05 1L8AA	1	J, T	H					[L5] Outboard Side of Steering Wheel, with Headlamp Leveling
		1	J, T	P					[L2] Outboard Side of Steering Wheel, with Headlamp Leveling
		1	J, T	P					[L5] Outboard Side of Steering Wheel, with Headlamp Leveling
		1	J, T						[L2] Outboard Side of Steering Wheel, with Headlamp Leveling
		1	J, T						[L5] Outboard Side of Steering Wheel, with Headlamp Leveling
	WA99 1L8AA	1	U	H					[L5] Inboard Side of Steering Wheel (Sport)
		1	U	P					[L2] Inboard Side of Steering Wheel (Limited)
		1	U	P					[L5] Inboard Side of Steering Wheel (Limited)
		1	U						[L2] Inboard Side of Steering Wheel (Renegade)
		1	U						[L5] Inboard Side of Steering Wheel (Renegade)
	#ZE78 1DVAA	1	J, T	H					[DV] Inboard Side of Steering Wheel (Sport)
-28									HANDLE, Grab
	#ZE75 1DVAA	1	J, T	H					[DV] Instrument Panel Grab Handle Kit (Bolt Cover Caps Included) Sport
	#ZE75 1L8AA	1	J, T						[L2] Instrument Panel Grab Handle Kit (Bolt Cover Caps Included) Renegade
	#ZE75 1DVAA	1	J, T	P					[D2] Instrument Panel Grab Handle Kit (Bolt Cover Caps Included) Limited

JEEP LIBERTY (KJ)

SERIES	LINE	BODY	ENGINE	TRANSMISSION
P = Limited	J = LHD (4WD)	74 = 4 Dr (104.3 WB)	ED1,ED0 = 2.4L Power Tech	DDK = 5 Speed HDManual
H = Sport	U = RHD (4WD)		EKG,EK0 = 3.7L Power Tech	DDD = 5 Speed HD Manual
M = Renegade	T = LHD (2WD)		ENJ = 2.5L 4Cyl Turbo Diesel	DG4,DGQ = Multi-Speed Auto
			ENR = 2.8L 4Cyl Turbo Diesel	DG6 = 4 Speed Auto Transm
			EN0 = 4Cyl Turbo Diesel	DG0 = All Automatic Transm
				DBB = All Manual Transm

AR = Use as required - = Non illustrated part # = New this model year

September 30, 2003

« RETURN TO GROUP INDEX

Instrument Panel
Figure 08A-110

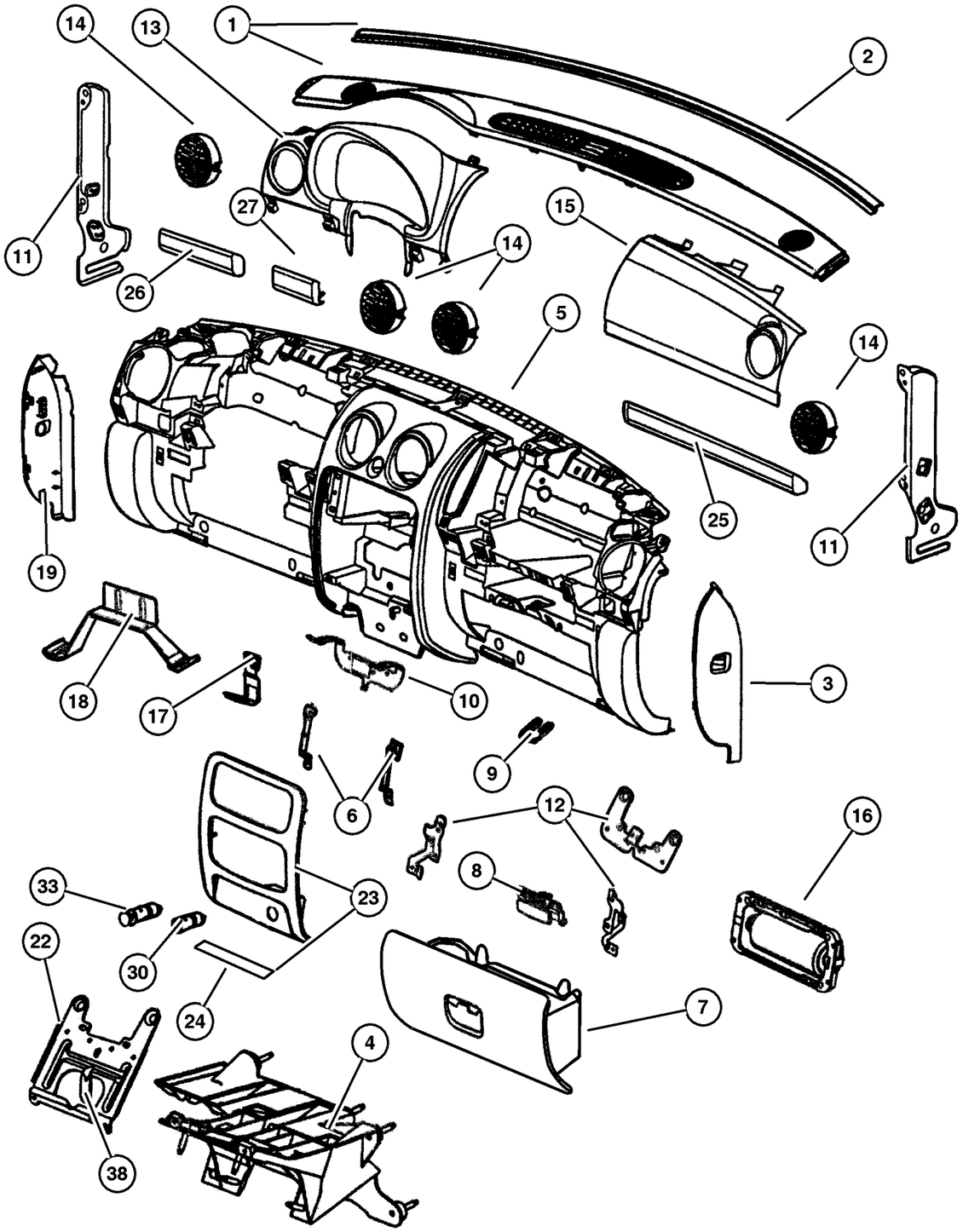

ITEM	PART NUMBER	QTY	LINE	SERIES	BODY	ENGINE	TRANS	TRIM	DESCRIPTION
		1	J, T	P					[DV] Instrument Panel Grab Handle
									Kit (Bolt Cover Caps Included)
									Limited
		1	J, T						[DV] Instrument Panel Grab Handle
									Kit (Bolt Cover Caps Included)
									Renegade
		1	J, T						[D2] Instrument Panel Grab Handle
									Kit (Bolt Cover Caps Included)
									Renegade
	#ZE75 1L8AA	1	J, T	H					[L5] Instrument Panel Grab Handle
									Kit (Bolt Cover Caps Included)
									Sport
		1	J, T	P					[L2] Instrument Panel Grab Handle
									Kit (Bolt Cover Caps Included)
									Limited
		1	J, T	P					[L5] Instrument Panel Grab Handle
									Kit (Bolt Cover Caps Included)
									Limited
		1	J, T						[L5] Instrument Panel Grab Handle
									Kit (Bolt Cover Caps Included)
									Renegade
-29									CAP, Bolt Cover
	#ZE76 1DVAA	1	J, T						[DV], Left
		1	J, T						[D2], Left
	#ZE76 1L8AA	1	J, T						[L5], Left
		1	J, T						[L2], Left
	#ZE77 1DVAA	1	J, T						[DV], Right
		1	J, T						[D2], Right
	#ZE77 1L8AA	1	J, T						[L5], Right
		1	J, T						[L2], Right
30	4793 554AB	1							POWER OUTLET
-31									MOUNT, Power Outlet
	4685 668AA	1							Rear
	56010 621AA	1							
-32	4685 590	1							BASE, Cigar Lighter
33	4685 536	1							KNOB AND ELEMENT, Cigar Lighter
-34	4793 555	1							RING, Cigar Lighter Mounting
-35									PANEL, CLOSEOUT
	55352 786AD	1	J, T						Right
	55352 787AE	1	J, T						Left
	55352 788AE	1	U						Right

JEEP LIBERTY (KJ)

SERIES	LINE	BODY	ENGINE	TRANSMISSION
P = Limited	J = LHD (4WD)	74 = 4 Dr (104.3 WB)	ED1,ED0 = 2.4L Power Tech	DDK = 5 Speed HDManual
H = Sport	U = RHD (4WD)		EKG,EK0 = 3.7L Power Tech	DDD = 5 Speed HD Manual
M = Renegade	T = LHD (2WD)		ENJ = 2.5L 4Cyl Turbo Diesel	DG4,DGQ = Multi-Speed Auto
			ENR = 2.8L 4Cyl Turbo Diesel	DG6 = 4 Speed Auto Transm
			EN0 = 4Cyl Turbo Diesel	DG0 = All Automatic Transm
				DBB = All Manual Transm

AR = Use as required - = Non illustrated part # = New this model year

September 30, 2003

« RETURN TO GROUP INDEX

Instrument Panel
Figure 08A-110

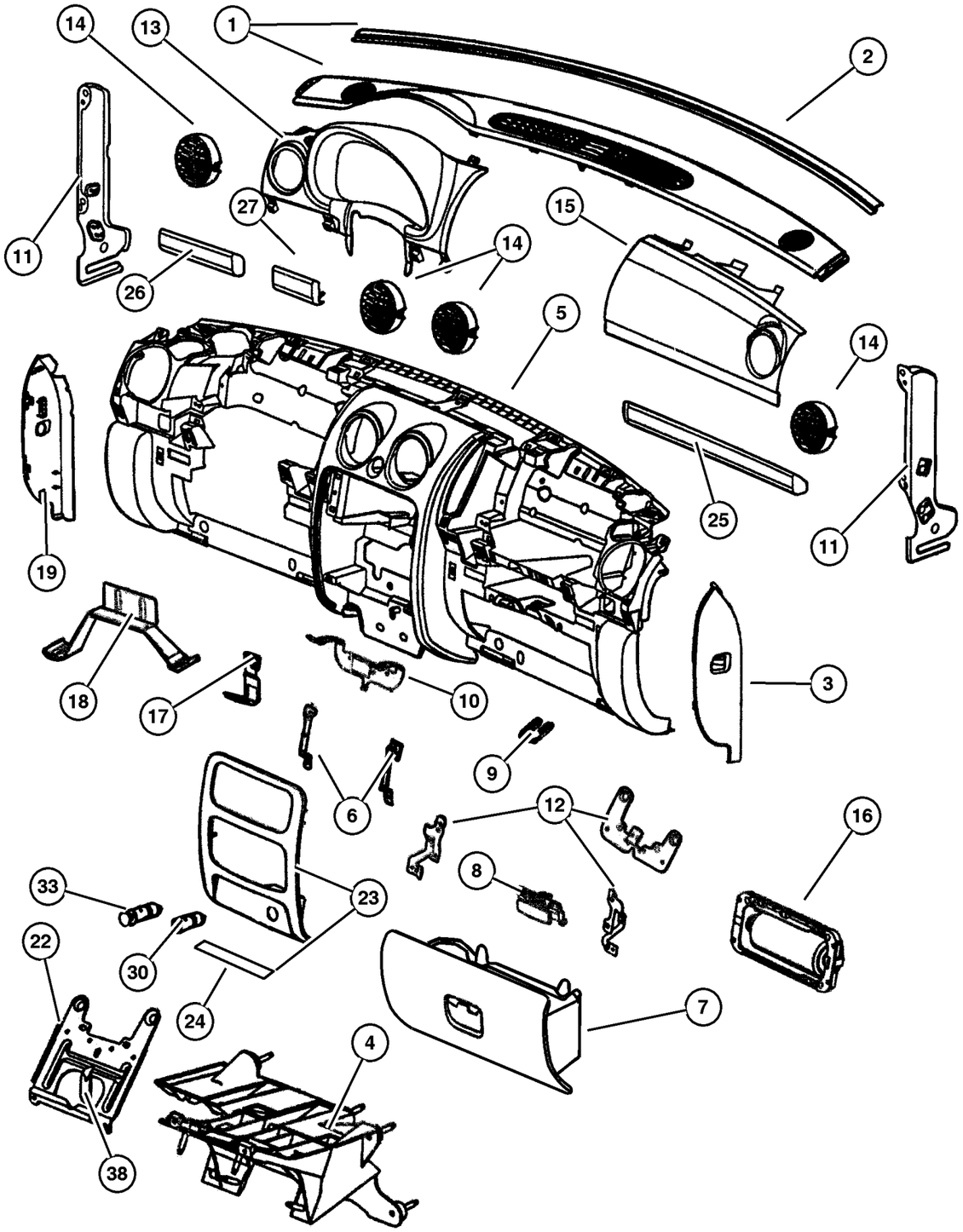

ITEM	PART NUMBER	QTY	LINE	SERIES	BODY	ENGINE	TRANS	TRIM	DESCRIPTION
	55352 789AF	1	U						Left
-36	6101 945	4							SCREW, Closeout Panel Attaching
-37	4595 823AB	1							SMOKERS KIT, Ash Receiver With Lighter
38	4595 665AB	1							ASH RECEIVER, Floor Console

JEEP LIBERTY (KJ)

SERIES	LINE	BODY	ENGINE	TRANSMISSION
P = Limited	J = LHD (4WD)	74 = 4 Dr (104.3 WB)	ED1,ED0 = 2.4L Power Tech	DDK = 5 Speed HDManual
H = Sport	U = RHD (4WD)		EKG,EK0 = 3.7L Power Tech	DDD = 5 Speed HD Manual
M = Renegade	T = LHD (2WD)		ENJ = 2.5L 4Cyl Turbo Diesel	DG4,DGQ = Multi-Speed Auto
			ENR = 2.8L 4Cyl Turbo Diesel	DG6 = 4 Speed Auto Transm
			EN0 = 4Cyl Turbo Diesel	DG0 = All Automatic Transm
				DBB = All Manual Transm

AR = Use as required - = Non illustrated part # = New this model year

September 30, 2003

« RETURN TO GROUP INDEX

Instrument Panel Cluster
Figure 08A-210

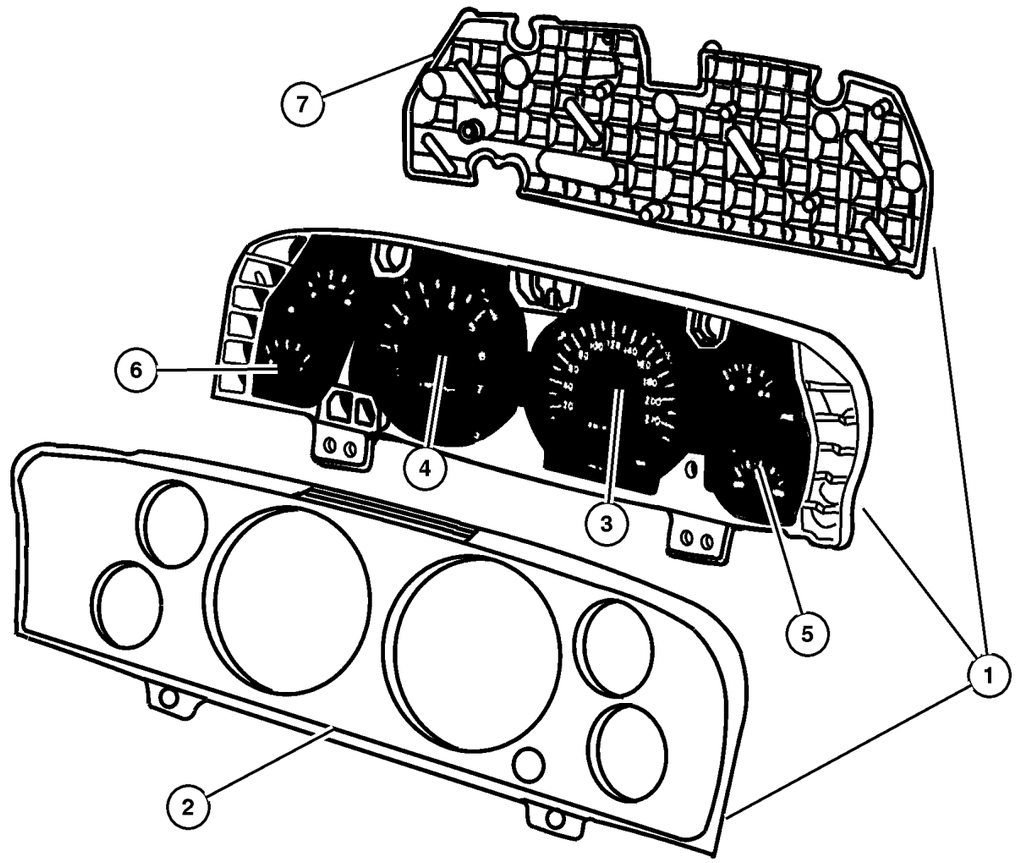

ITEM	PART NUMBER	QTY	LINE	SERIES	BODY	ENGINE	TRANS	TRIM	DESCRIPTION
Notes:									
[ED0] = 2.4L 4 Cylinder Engine									
[EK0] = 3.7L V6 Cylinder Engine									
[EN0] =All 4/5 Cylinder Turbo Diesel Engines									
[JA2]=Instrument Cluster with Tach									
[JAY]=Instrument Cluster with Tach									
[JCB]= 120 MPH with Primary									
[JDJ]= 240 KPH with Primary									
[JDR]= 240 KPH without Primary									
[ABU]=United Kingdom Equipment Package									
1									CLUSTER, Complete Cluster Assembly w/Lens, Circuit Board, Odometer Knob, Bulbs & Gauges
	#56010 572AB	1				ED0, EK0			[JCB] + [JAY] - [ABU]
	#56010 584AB	1				ED0, EK0			[JDJ] + [JA2]
	#56010 585AB	1				ED0, EK0			[JDR] + [JA2]
	#56010 586AB	1				EN0			[JCB] + [JA2]
	#56010 587AB	1				EN0			[JDJ] + [JA2]
	#56010 588AB	1				EN0			[JDR] + [JA2]
	#56010 573AB	1				ED0, EK0			[JCB] + [JAY] + [ABU]
	#56010 574AB	1				ED0, EK0			[JDJ] + [JAY]
	#56010 575AB	1				ED0, EK0			[JDR] + [JAY]
	#56010 576AB	1				EN0			[JCB] + [JAY]
	#56010 577AB	1				EN0			[JDJ] + [JAY]
	#56010 578AB	1				EN0			[JDR] + [JAY]
	#56010 582AB	1				ED0, EK0			[JCB] + [JA2] - [ABU]
	#56010 583AB	1				ED0, EK0			[JCB] + [JA2] + [ABU]
2									MASK AND LENS, Instrument Cluster
	4828 962AB	1				ED0, EK0			Sport & Renegade
		1				EN0			Sport & Renegade

JEEP LIBERTY (KJ)

SERIES	LINE	BODY	ENGINE	TRANSMISSION
P = Limited	J = LHD (4WD)	74 = 4 Dr (104.3 WB)	ED1,ED0 = 2.4L Power Tech	DDK = 5 Speed HDManual
H = Sport	U = RHD (4WD)		EKG,EK0 = 3.7L Power Tech	DDD = 5 Speed HD Manual
M = Renegade	T = LHD (2WD)		ENJ = 2.5L 4Cyl Turbo Diesel	DG4,DGQ = Multi-Speed Auto
			ENR = 2.8L 4Cyl Turbo Diesel	DG6 = 4 Speed Auto Transm
			EN0 = 4Cyl Turbo Diesel	DG0 = All Automatic Transm
				DBB = All Manual Transm

Instrument Panel Cluster
Figure 08A-210

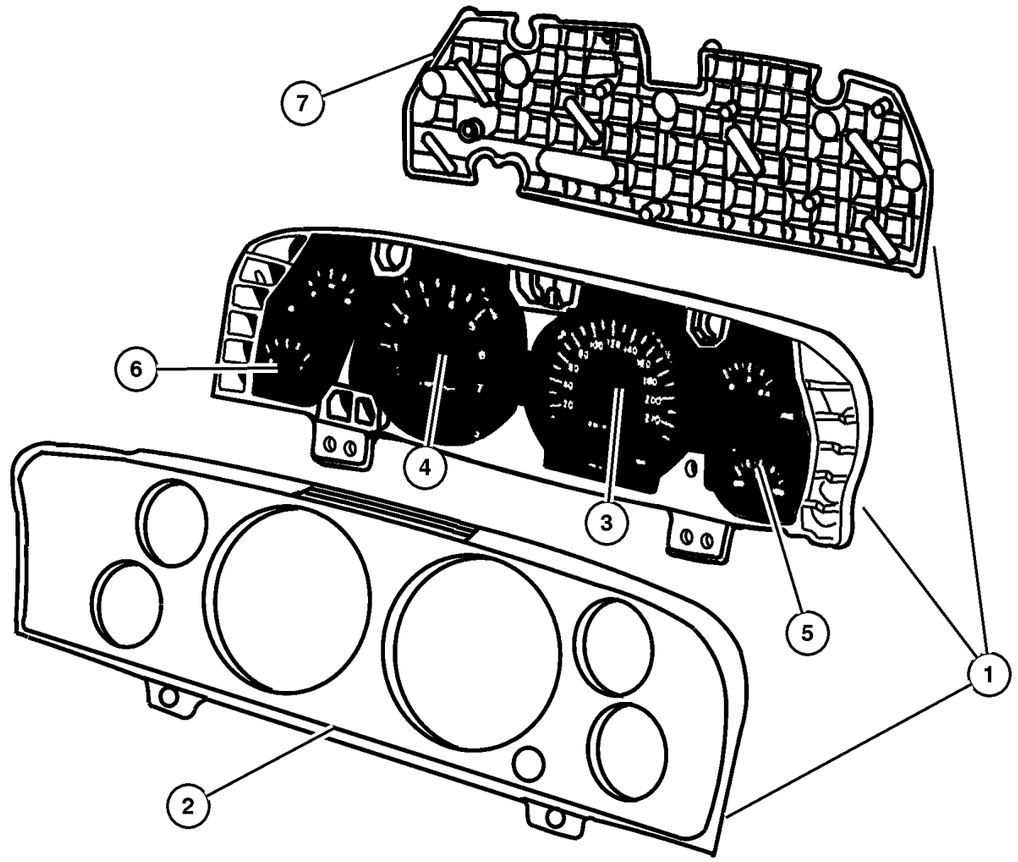

ITEM	PART NUMBER	QTY	LINE	SERIES	BODY	ENGINE	TRANS	TRIM	DESCRIPTION
	4832 731AB	1				ED0, EK0			Limited
		1				EN0			Limited
3									GAUGE, Speedometer, Serviced with Cluster Assembly , (NOT SERVICED) (Not Serviced)
4									GAUGE, Tachometer, Serviced with Cluster Assembly , (NOT SERVICED) (Not Serviced)
5									GAUGE, Temperature And Oil, Serviced with Cluster Assembly , (NOT SERVICED) (Not Serviced)
6									GAUGE, Fuel And Volt, Serviced with Cluster Assembly , (NOT SERVICED) (Not Serviced)
7									BOARD, Circuit, Serviced with Cluster Assembly , (NOT SERVICED) (Not Serviced)
-8									BULB AND SOCKET
	4827 989AA	9				ED0, EK0			
		9				EN0			
-9									KNOB, Odometer Reset, Serviced with Cluster Assembly, (NOT SERVICED) (Not Serviced)
-10									SCREW, Tapping, M4.2X1.70X15.00, (NOT SERVICED) (Not Serviced)

JEEP LIBERTY (KJ)

SERIES	LINE	BODY	ENGINE	TRANSMISSION
P = Limited	J = LHD (4WD)	74 = 4 Dr (104.3 WB)	ED1,ED0 = 2.4L Power Tech	DDK = 5 Speed HDManual
H = Sport	U = RHD (4WD)		EKG,EK0 = 3.7L Power Tech	DDD = 5 Speed HD Manual
M = Renegade	T = LHD (2WD)		ENJ = 2.5L 4Cyl Turbo Diesel	DG4,DGQ = Multi-Speed Auto
			ENR = 2.8L 4Cyl Turbo Diesel	DG6 = 4 Speed Auto Transm
			EN0 = 4Cyl Turbo Diesel	DG0 = All Automatic Transm
				DBB = All Manual Transm

AR = Use as required - = Non illustrated part # = New this model year

September 30, 2003

« RETURN TO GROUP INDEX

Radios
Figure 08A-310

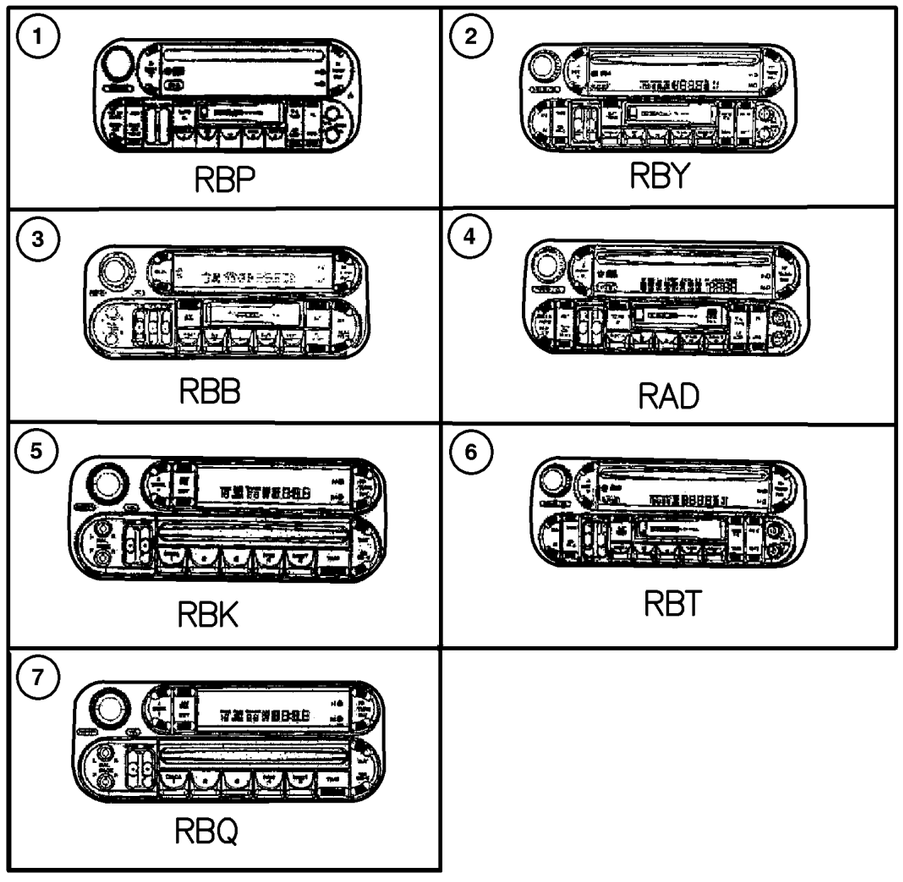

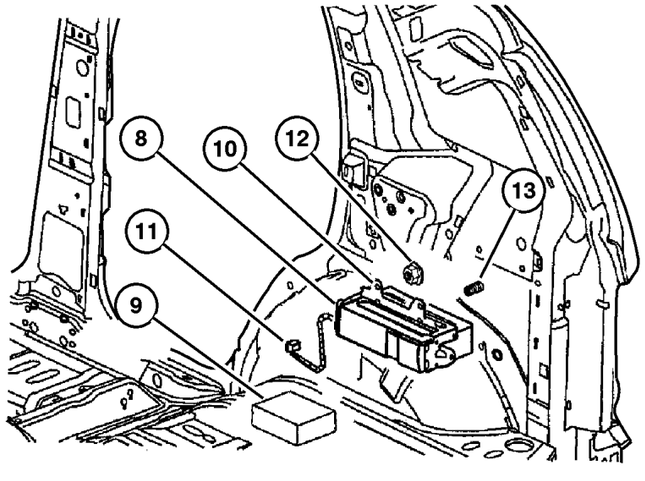

ITEM	PART NUMBER	QTY	LINE	SERIES	BODY	ENGINE	TRANS	TRIM	DESCRIPTION
Notes:									
[RAD]=AM/FM w/Cassette & CD Changer Control (Europe)									
[RBB]=AM/FM w/Cassette & CD Changer									
[RBK]=AM/FM w/CD Changer Control									
[RBP]=AM/FM w/Cassette & CD Changer Control									
[RPQ]=AM/FM w/CD 6-Disc Changer									
[RBT]=AM/FM/MW/RDS Cassette & CD Changer Control (Japan)									
[RBY]=AM/FM w/Cassette & CD Changer Control									
[RCJ]=6 Speaker System (Infinity)									
[REM] CD Changer 6-Disc Remote									
[RSP]= Uconect Hand Free Communication									
1	#5091 606AA	1							RADIO, AM/FM/Cassette With CD, [RBP]
2	#5091 609AA	1							RADIO, AM/FM/Cassette With CD, [RBY]
3	#5091 555AD	1							RADIO, AM/FM/Cassette With CD, [RBB]
4	#5091 601AB	1							RADIO, AM/FM/Cassette With CD, [RAD]
5	#5091 556AD	1							RADIO, AM/FM with CD and Equalizer, [RBK]
6	#5091 608AA	1							RADIO, AM/FM/Cassette With CD, [RBT]
7	#5091 979AA	1							RADIO, AM/FM with CD and Equalizer, [RBQ]
8	Z6038 616AA	1							CHANGER, CD, [REM] 6-Disc
9	4797 433	1							MAGAZINE, CD Changer, [REM]
10	56038 605AA	1							BRACKET, CD Changer, [REM]
11									CABLE, CD Changer
	56038 596AF	1	J, T						[REM]
	56038 598AF	1	U						[REM]
12	6100 047	4							NUT AND WASHER, Hex Nut-Coned Washer, M6 x 1.00, [REM]
13	6503 846	4							STUD, Single Ended, Knurled, Pilot Point, M6x1.00x20.00, [REM]
-14									CHOKE, Speaker
	56038 654AA	1	J, T						[RCJ]
	56038 655AA	1	U						[RCJ]
-15									CABLE, CD Changer
	56038 596AF	1	J, T						[REM]
	56038 598AF	1	U						[REM]

JEEP LIBERTY (KJ)

SERIES	LINE	BODY	ENGINE	TRANSMISSION
P = Limited	J = LHD (4WD)	74 = 4 Dr (104.3 WB)	ED1,ED0 = 2.4L Power Tech	DDK = 5 Speed HDManual
H = Sport	U = RHD (4WD)		EKG,EK0 = 3.7L Power Tech	DDD = 5 Speed HD Manual
M = Renegade	T = LHD (2WD)		ENJ = 2.5L 4Cyl Turbo Diesel	DG4,DGQ = Multi-Speed Auto
			ENR = 2.8L 4Cyl Turbo Diesel	DG6 = 4 Speed Auto Transm
			EN0 = 4Cyl Turbo Diesel	DG0 = All Automatic Transm
				DBB = All Manual Transm

AR = Use as required - = Non illustrated part # = New this model year

September 30, 2003

« RETURN TO GROUP INDEX »

Radios
Figure 08A-310

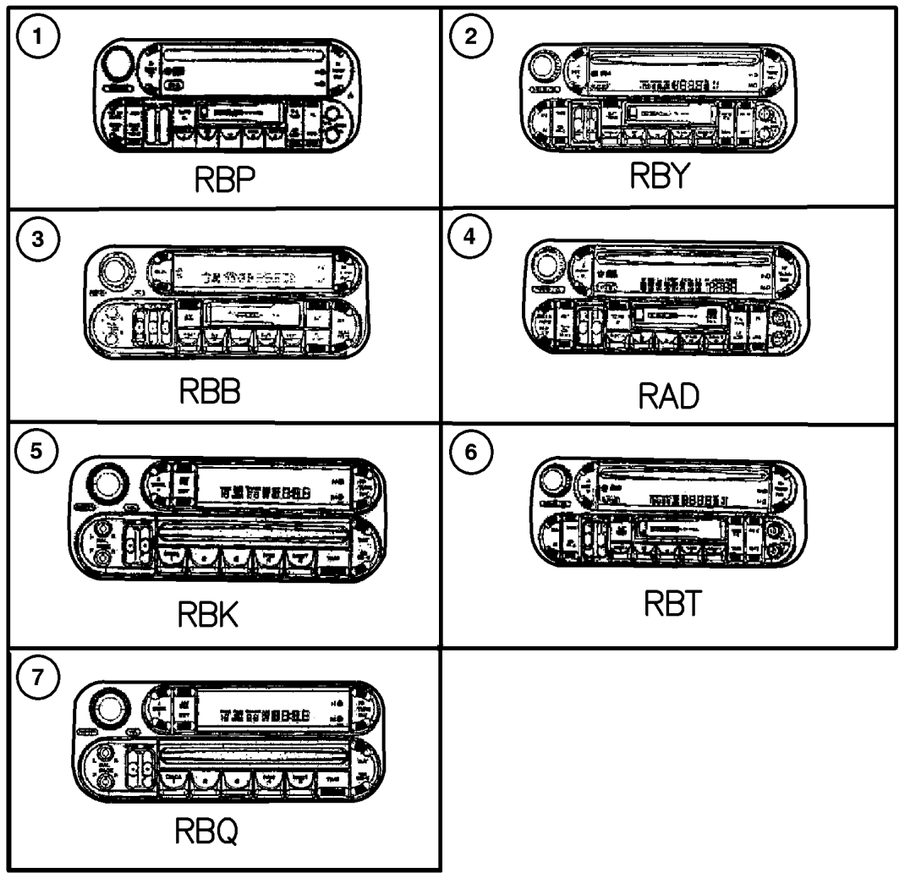

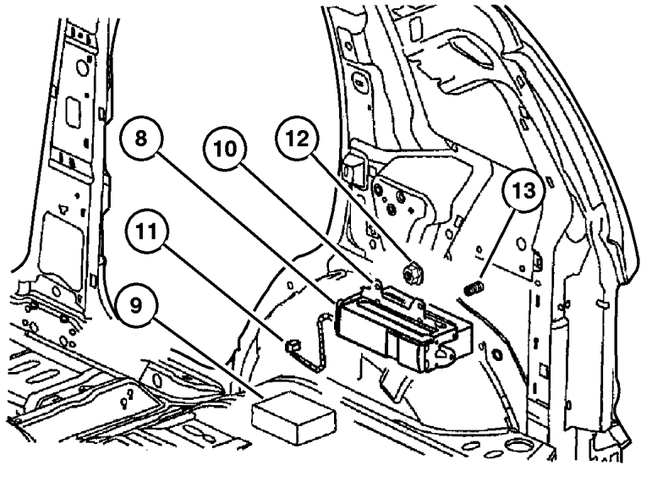

ITEM	PART NUMBER	QTY	LINE	SERIES	BODY	ENGINE	TRANS	TRIM	DESCRIPTION
-16	#56010 551AA	1							CABLE, Telematics Communication, [RSP]
-17	56038 750AA	1							STRAP, Ground

JEEP LIBERTY (KJ)

SERIES	LINE	BODY	ENGINE	TRANSMISSION
P = Limited	J = LHD (4WD)	74 = 4 Dr (104.3 WB)	ED1,ED0 = 2.4L Power Tech	DDK = 5 Speed HDManual
H = Sport	U = RHD (4WD)		EKG,EK0 = 3.7L Power Tech	DDD = 5 Speed HD Manual
M = Renegade	T = LHD (2WD)		ENJ = 2.5L 4Cyl Turbo Diesel	DG4,DGQ = Multi-Speed Auto
			ENR = 2.8L 4Cyl Turbo Diesel	DG6 = 4 Speed Auto Transm
			EN0 = 4Cyl Turbo Diesel	DG0 = All Automatic Transm
				DBB = All Manual Transm

Speakers
Figure 08A-320

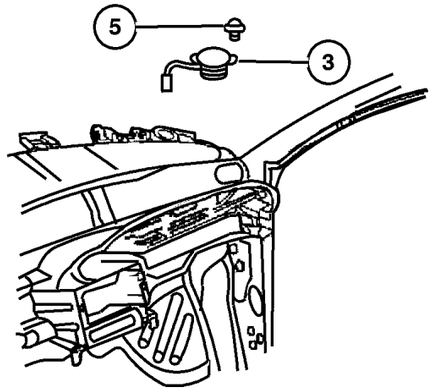

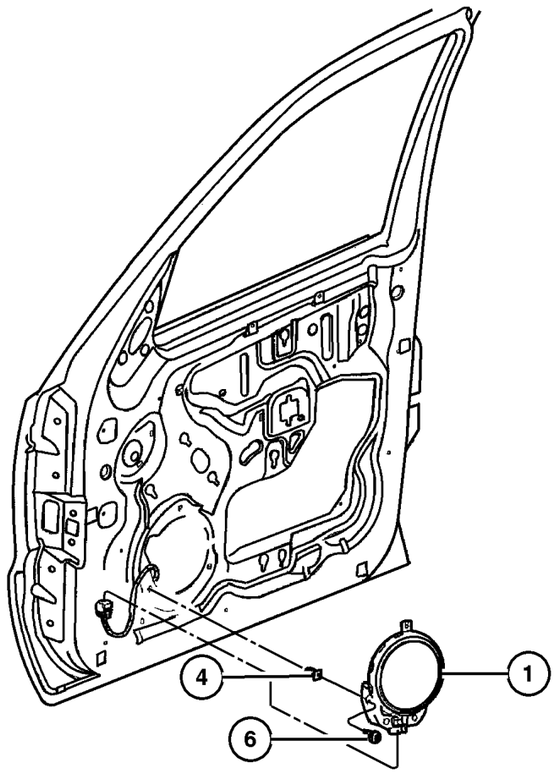

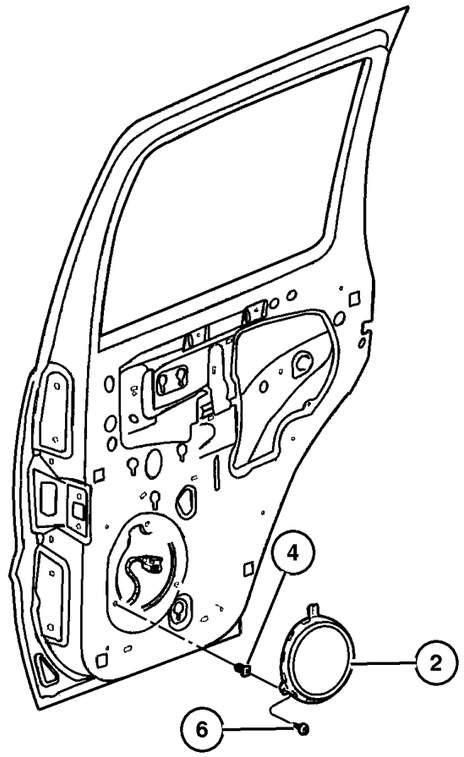

ITEM	PART NUMBER	QTY	LINE	SERIES	BODY	ENGINE	TRANS	TRIM	DESCRIPTION
Notes:									
[RCG]=Standard Sound System									
[RCJ]=Premium Sound System									
1									SPEAKER, 6.5"
	56038 593AG	2							[RCJ] Premium (Amplifier Serviced with Speaker Assembly Only), Front Door
	#5082 451AB	2							[RCG] Standard, Front Door
2									SPEAKER, 6.5"
	56038 800AB	2							RCJ] Premium, Rear Door
	#5082 451AB	2							[RCG] Standard, Rear Door
3									SPEAKER, Tweeter
	56038 815AB	2							[RCJ] Premium, Instrument Panel
	#56010 666AB	2							[RCG] Standard, Instrument Panel
4	6507 009AA	6							NUT, Plastic Snap-in, Door Speaker Mounting
5									SCREW, M4.2X1.70X15.00 (Door Speaker Mounting), (NOT SERVICED) (Not Serviced)
6									SCREW, 0.164-18X.750 (I/Panel Speaker Mounting), (NOT SERVICED) (Not Serviced)

JEEP LIBERTY (KJ)

SERIES	LINE	BODY	ENGINE	TRANSMISSION
P = Limited	J = LHD (4WD)	74 = 4 Dr (104.3 WB)	ED1,ED0 = 2.4L Power Tech	DDK = 5 Speed HDManual
H = Sport	U = RHD (4WD)		EKG,EK0 = 3.7L Power Tech	DDD = 5 Speed HD Manual
M = Renegade	T = LHD (2WD)		ENJ = 2.5L 4Cyl Turbo Diesel	DG4,DGQ = Multi-Speed Auto
			ENR = 2.8L 4Cyl Turbo Diesel	DG6 = 4 Speed Auto Transm
			EN0 = 4Cyl Turbo Diesel	DG0 = All Automatic Transm
				DBB = All Manual Transm

Antenna
Figure 08A-330

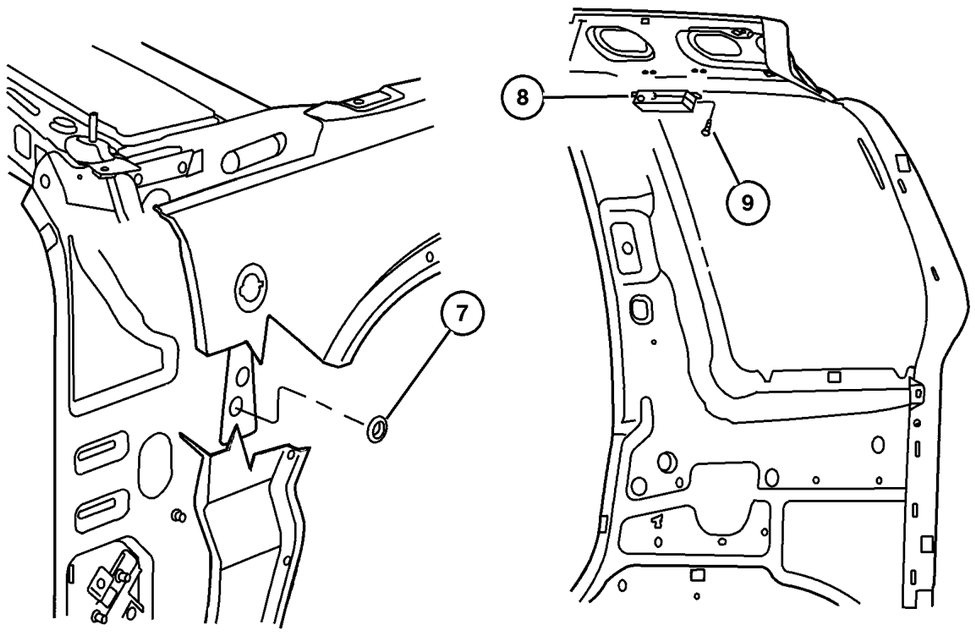

ITEM	PART NUMBER	QTY	LINE	SERIES	BODY	ENGINE	TRANS	TRIM	DESCRIPTION
1	56038 545AE	1							MAST, Antenna, Spiral Ground with 5/16‘ Thread (Bright)
2	56038 523AA	1							COVER, Antenna Opening
3	56038 581AA	1							NUT
4									GROMMET, Serviced with Cable Base Assembly with Lead , (NOT SERVICED) (Not Serviced)
5	56038 526AE	1							ANTENNA, Cable Base Assembly with Lead
6	56038 580AB	1							ADAPTER, Antenna, Bezel
7	4780 615AB	2							PLUG, Body, .75 Diameter
8	56038 527AD	1							ANTENNA, Antenna Module Radio
9									SCREW, (NOT SERVICED) (Not Serviced)
-10									CABLE, Antenna
	56038 559AF	1							Radio to Cowl
	56038 575AG	1							Antenna Module to Cowl
	56038 576AG	1							Radio to Cowl (RHD)
-11	5066 205AC	1							ANTENNA, Satellite

JEEP LIBERTY (KJ)

SERIES	LINE	BODY	ENGINE	TRANSMISSION
P = Limited	J = LHD (4WD)	74 = 4 Dr (104.3 WB)	ED1,ED0 = 2.4L Power Tech	DDK = 5 Speed HDManual
H = Sport	U = RHD (4WD)		EKG,EK0 = 3.7L Power Tech	DDD = 5 Speed HD Manual
M = Renegade	T = LHD (2WD)		ENJ = 2.5L 4Cyl Turbo Diesel	DG4,DGQ = Multi-Speed Auto
			ENR = 2.8L 4Cyl Turbo Diesel	DG6 = 4 Speed Auto Transm
			EN0 = 4Cyl Turbo Diesel	DG0 = All Automatic Transm
				DBB = All Manual Transm

Console, Overhead
Figure 08A-410

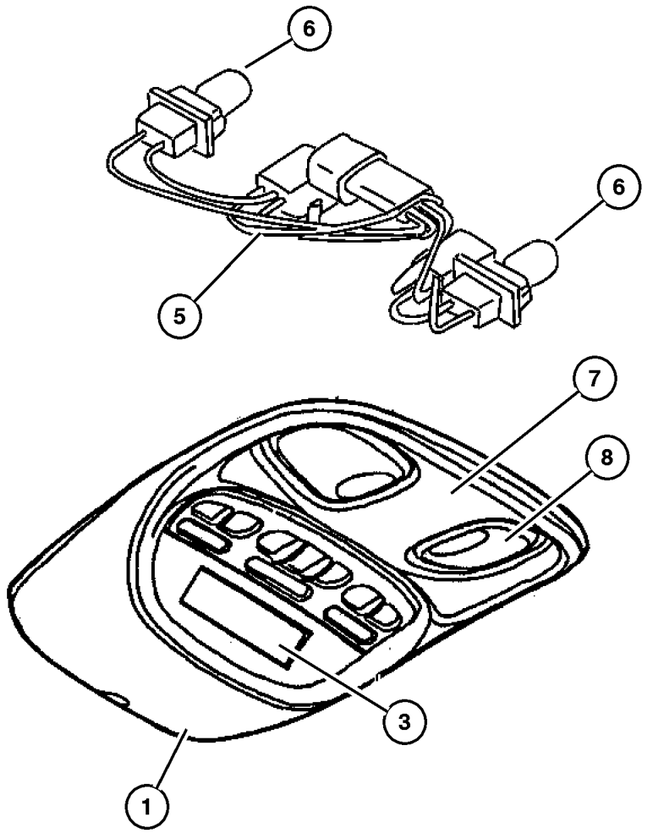

ITEM	PART NUMBER	QTY	LINE	SERIES	BODY	ENGINE	TRANS	TRIM	DESCRIPTION
1									CONSOLE, Overhead Mini, Less Electronics
	5014 271AA	1	J, U						Without Sunroof
		1	J, T						Without Sunroof
	WA95 1L2AA	1	J, U						With Sunroof
-2									RETAINER, Overhead Console
	5072 348AA	1	J, T						
		1	J, U						
3									MODULE, Overhead Console
	#56010 438AA	1	J, T						With Sunroof
	#56010 437AA	1							Without Sunroof
-4									MODULE, Intrusion
	#5GV82 TL2AG	1							
		1	J, U						
5									WIRING, Overhead Console
	4760 644	1	J, U						
		1	J, T						
6									BULB, 192
	L000 0192	2	J, U						
		2	J, T						
7									LAMP, Reading
	PB83 TL2AB	1	J, T						Without Sunroof
		1	J, U						Without Sunroof
	WA90 1L2AA	1	J, U						With Sunroof
		1	J, T						With Sunroof
8									LENS, Cargo Lamp
	55196 755AA	1	J, T						
		1	J, U						
-9									BULB, 212-2
	L002 1202	1	J, T						
		1	J, U						
-10									SWITCH, Reading Lamp
	4685 445	1	J, T						
		1	J, U						
-11									SWITCH, Sunroof
	5GM78 TL2AA	1	J, T						
		1	J, U						
		1							
-12									RETAINER, Electronic Module
	56010 331AB	1	J, U						
		1							
-13									LAMP, Message Center

JEEP LIBERTY (KJ)

SERIES	LINE	BODY	ENGINE	TRANSMISSION
P = Limited	J = LHD (4WD)	74 = 4 Dr (104.3 WB)	ED1,ED0 = 2.4L Power Tech	DDK = 5 Speed HDManual
H = Sport	U = RHD (4WD)		EKG,EK0 = 3.7L Power Tech	DDD = 5 Speed HD Manual
M = Renegade	T = LHD (2WD)		ENJ = 2.5L 4Cyl Turbo Diesel	DG4,DGQ = Multi-Speed Auto
			ENR = 2.8L 4Cyl Turbo Diesel	DG6 = 4 Speed Auto Transm
			EN0 = 4Cyl Turbo Diesel	DG0 = All Automatic Transm
				DBB = All Manual Transm

AR = Use as required - = Non illustrated part # = New this model year

September 30, 2003

« RETURN TO GROUP INDEX »

Console, Overhead
Figure 08A-410

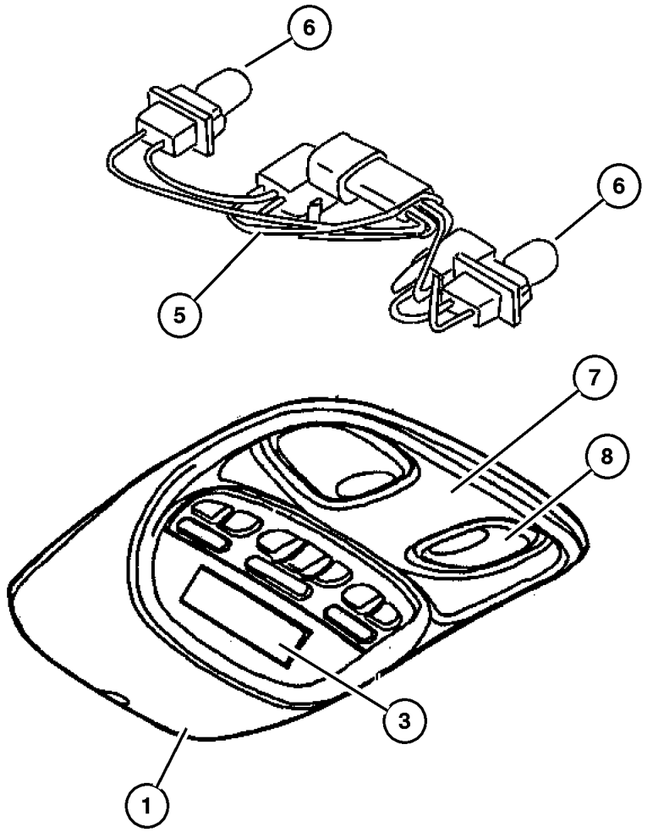

ITEM	PART NUMBER	QTY	LINE	SERIES	BODY	ENGINE	TRANS	TRIM	DESCRIPTION
	4437 661	1	J, U						
		1	J, T						
-14	JV76 TL2	1	J, T						LAMP, Dome, Beige

JEEP LIBERTY (KJ)

SERIES	LINE	BODY	ENGINE	TRANSMISSION
P = Limited	J = LHD (4WD)	74 = 4 Dr (104.3 WB)	ED1,ED0 = 2.4L Power Tech	DDK = 5 Speed HDManual
H = Sport	U = RHD (4WD)		EKG,EK0 = 3.7L Power Tech	DDD = 5 Speed HD Manual
M = Renegade	T = LHD (2WD)		ENJ = 2.5L 4Cyl Turbo Diesel	DG4,DGQ = Multi-Speed Auto
			ENR = 2.8L 4Cyl Turbo Diesel	DG6 = 4 Speed Auto Transm
			EN0 = 4Cyl Turbo Diesel	DG0 = All Automatic Transm
				DBB = All Manual Transm

Console, Floor
Figure 08A-420

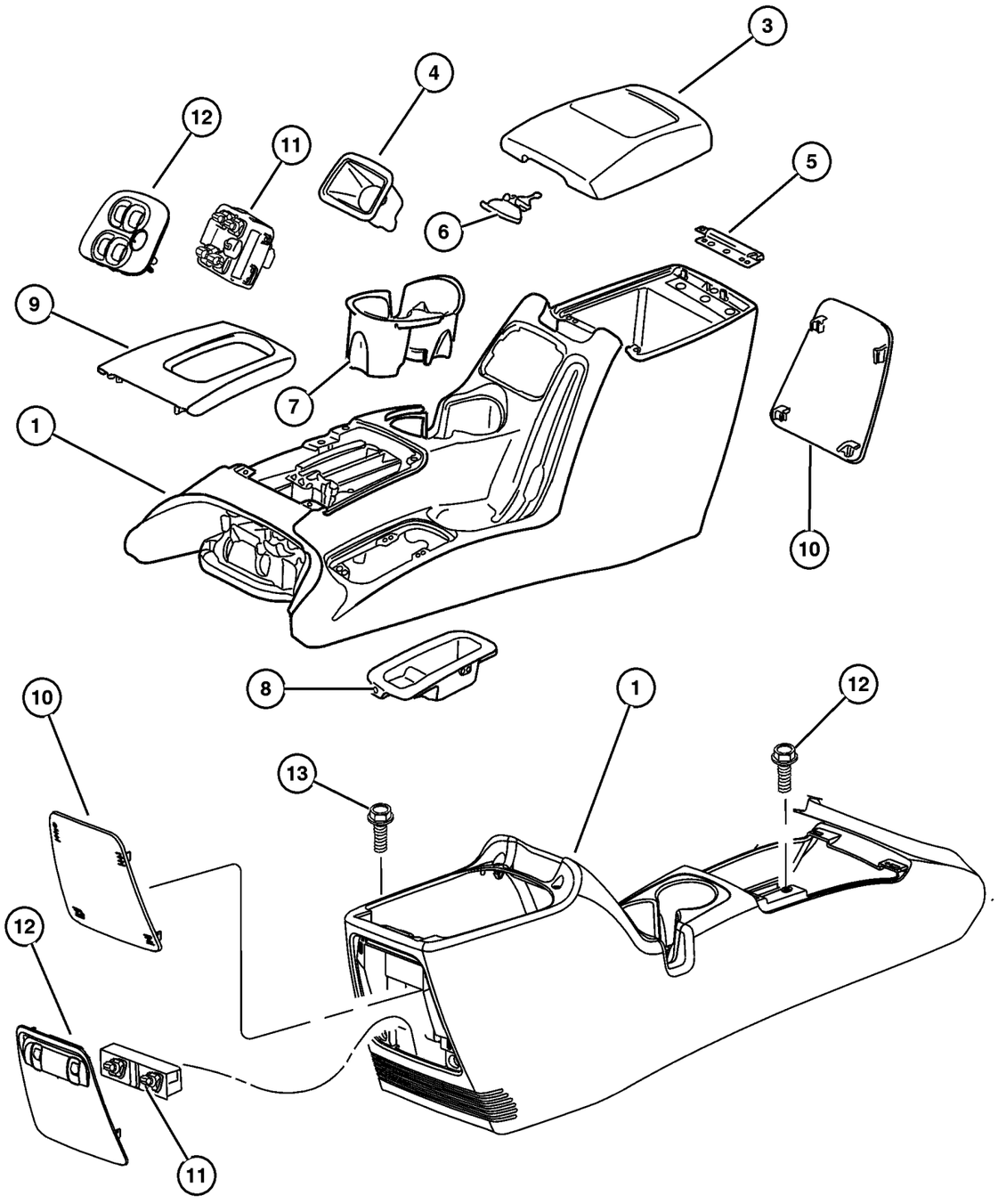

ITEM	PART NUMBER	QTY	LINE	SERIES	BODY	ENGINE	TRANS	TRIM	DESCRIPTION
Notes:									
[DBB]=All Manual Transmissions									
[DG0]=All Automatic Transmissions									
1									CONSOLE, Base
	WD58 1DVAC	1					DG0		[D2] Serviced with 2 Clips & Heat Staked Rubber Brake Handle Shield
		1					DG0		[DV] Serviced with 2 Clips & Heat Staked Rubber Brake Handle Shield
	WD58 1L8AC	1					DG0		[L2] Serviced with 2 Clips & Heat Staked Rubber Brake Handle Shield
		1					DG0		[L5] Serviced with 2 Clips & Heat Staked Rubber Brake Handle Shield
	WD85 1DVAB	1					DBB		[D2] Serviced with 2 Clips & Heat Staked Rubber Brake Handle Shield
		1					DBB		[DV] Serviced with 2 Clips & Heat Staked Rubber Brake Handle Shield
	WD85 1L8AB	1					DBB		[L2] Serviced with 2 Clips & Heat Staked Rubber Brake Handle Shield
		1					DBB		[L5] Serviced with 2 Clips & Heat Staked Rubber Brake Handle Shield
-2	5072 907AB	1					DBB		BRACKET, Floor Console
3									LID, Floor Console Bin
	WD59 1DVAA	1					DG0		[D2] Serviced with Hinge & Latch
		1					DG0		[DV] Serviced with Hinge & Latch
	WD59 1DVAB	1					DBB		[D2] Serviced with Hinge & Latch
		1					DBB		[DV] Serviced with Hinge & Latch
	WD59 1L8AA	1					DG0		[L2] Serviced with Hinge & Latch
		1					DG0		[L5] Serviced with Hinge & Latch
	WD59 1L8AB	1					DBB		[L2] Serviced with Hinge & Latch
		1					DBB		[L5] Serviced with Hinge & Latch
4									BIN, Floor Console
	5GP34 WL8AC	1							[L5] Without Power Window Switch, Front

JEEP LIBERTY (KJ)

SERIES	LINE	BODY	ENGINE	TRANSMISSION
P = Limited	J = LHD (4WD)	74 = 4 Dr (104.3 WB)	ED1,ED0 = 2.4L Power Tech	DDK = 5 Speed HDManual
H = Sport	U = RHD (4WD)		EKG,EK0 = 3.7L Power Tech	DDD = 5 Speed HD Manual
M = Renegade	T = LHD (2WD)		ENJ = 2.5L 4Cyl Turbo Diesel	DG4,DGQ = Multi-Speed Auto
			ENR = 2.8L 4Cyl Turbo Diesel	DG6 = 4 Speed Auto Transm
			EN0 = 4Cyl Turbo Diesel	DG0 = All Automatic Transm
				DBB = All Manual Transm

Console, Floor
Figure 08A-420

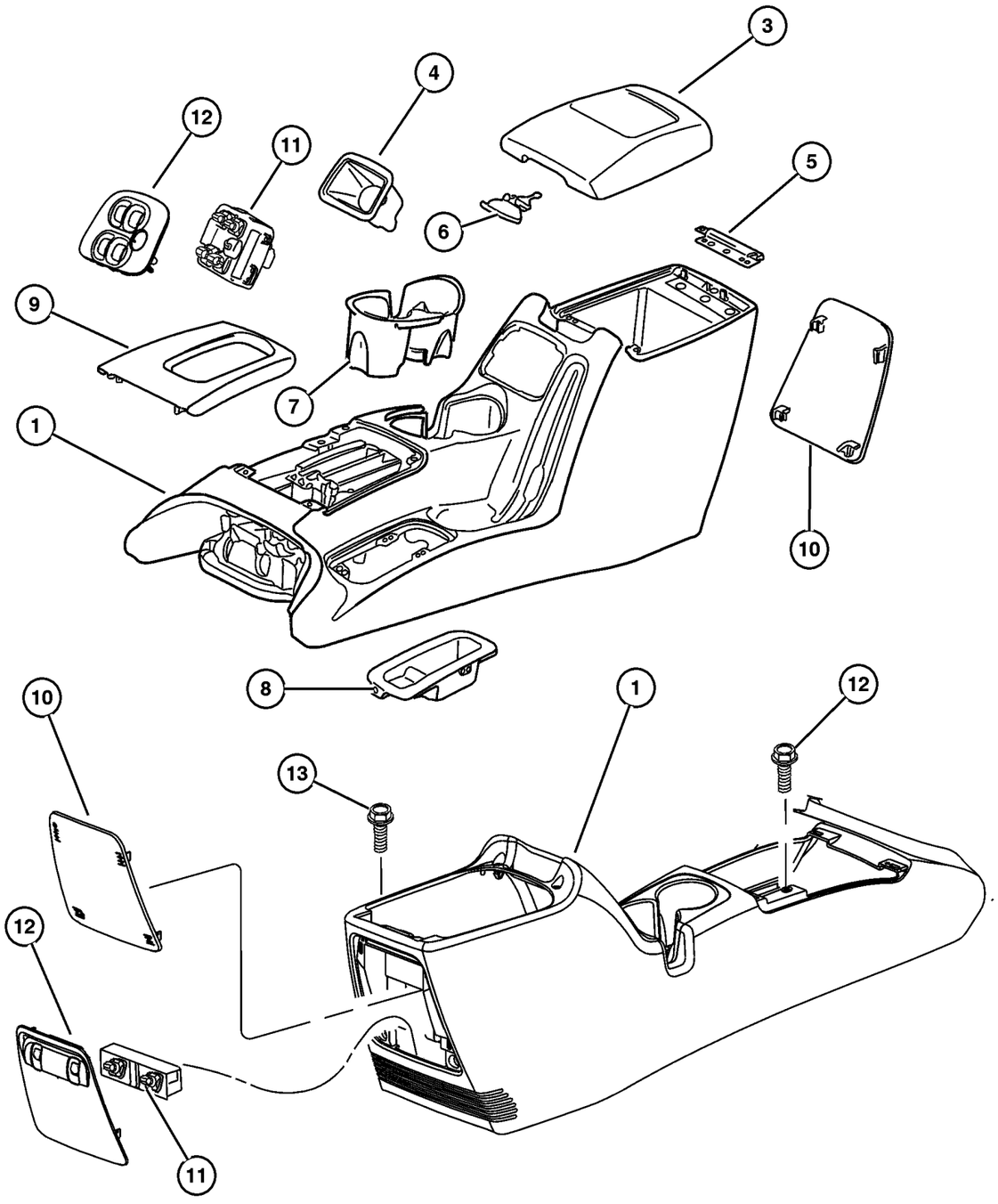

ITEM	PART NUMBER	QTY	LINE	SERIES	BODY	ENGINE	TRANS	TRIM	DESCRIPTION
	5GP34 XDVAC	1							[DV] Without Power Window Switch, Front
	5072 904AB	1					DBB		Serviced with 2 Bumpers & 5 Screws
		1					DG0		Serviced with 2 Bumpers & 5 Screws
5									HINGE, Floor Console Lid
	5072 906AA	1					DBB		
		1					DG0		
6									LATCH, Console Lock
	5072 905AA	1					DBB		
		1					DG0		
7									CUPHOLDER, Floor Console
	5072 903AA	1					DBB		
		1					DG0		
8	5GG16 DX9AC	1	T						COVER, Floor Console, Two Wheel Drive Vehicle Only
9									BEZEL, Gear Selector
	5GP21 DX9AE	1		H, M			DG0		Sport & Renegade (Clips Serviced in Assembly Only)
	5HK42 SZ5AD	1		M, P			DG0		Limited (Clips Serviced in Assembly Only)
10									COVER, Switch Opening
	5GP35 WL8AC	1							[L5] Without Power Window Switch
	5GP35 XDVAC	1							[DV] Without Power Window Switch
11									SWITCH, Power Window
	56010 091AB	1							2 Gang, Rear
	#56010 677AA	1							Front of Console 4 Gang, Front
12									BEZEL, Power Window Switch
	WA64 WL8AB	1							[L2], Rear
		1							[L5], Rear
	WA64 XDVAB	1							[D2], Rear
		1							[DV], Rear
	#5JQ92 WL8AA	1							[L2], Front
		1							[L5], Front
	#5JQ92 XDVAA	1							[D2], Front
		1							[DV], Front
13									SCREW, Hex Flange Head, M4.2x1.70x16.00, (NOT SERVICED) (Not Serviced)
-14	4595 823AB	1							SMOKERS KIT, Ash Receiver With Lighter

JEEP LIBERTY (KJ)

SERIES	LINE	BODY	ENGINE	TRANSMISSION
P = Limited	J = LHD (4WD)	74 = 4 Dr (104.3 WB)	ED1,ED0 = 2.4L Power Tech	DDK = 5 Speed HDManual
H = Sport	U = RHD (4WD)		EKG,EK0 = 3.7L Power Tech	DDD = 5 Speed HD Manual
M = Renegade	T = LHD (2WD)		ENJ = 2.5L 4Cyl Turbo Diesel	DG4,DGQ = Multi-Speed Auto
			ENR = 2.8L 4Cyl Turbo Diesel	DG6 = 4 Speed Auto Transm
			EN0 = 4Cyl Turbo Diesel	DG0 = All Automatic Transm
				DBB = All Manual Transm

AR = Use as required - = Non illustrated part # = New this model year

September 30, 2003

« RETURN TO GROUP INDEX

Group – 009
Engine Mounting

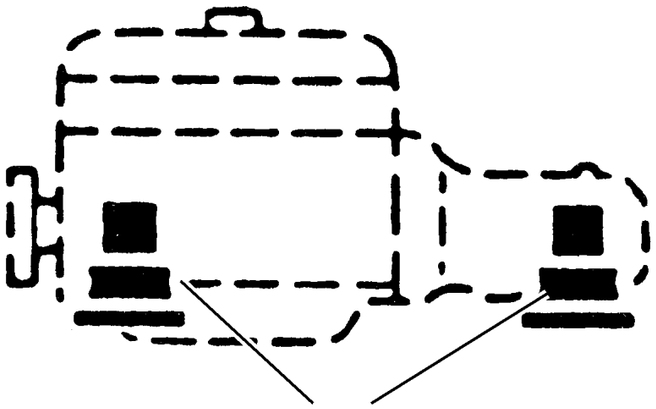

009–100

009–100
Engine Mounting

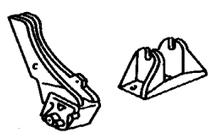

GROUP 9 - Engine Mounting

Illustration Title	Group-Fig. No.
Engine Mounting	
Front, Engine Mounting [ENJ]	Fig. 009-110
Front, Engine Mounting [ENR]	Fig. 009-115
Front, Engine Mounting [ED1]	Fig. 009-120
Front, Engine Mounting [EKG]	Fig. 009-125
Rear, Transmission Mounting [ENJ + DDD]	Fig. 009-130
Rear, Transmission Mounting [ENR + DGQ]	Fig. 009-135
Rear, Transmission Mounting [ED1 + DDK]	Fig. 009-140
Rear, Transmission Mounting [ED1 + DDK]	Fig. 009-145
Rear, Transmission Mounting [EKG + DDD]	Fig. 009-150
Rear, Transmission Mounting [EKG + DDD]	Fig. 009-155
Rear, Transmission Mounting [EKG + DG6]	Fig. 009-160
Rear, Transmission Mounting [EKG + DG6]	Fig. 009-165

Front, Engine Mounting [ENJ]
Figure 009-110

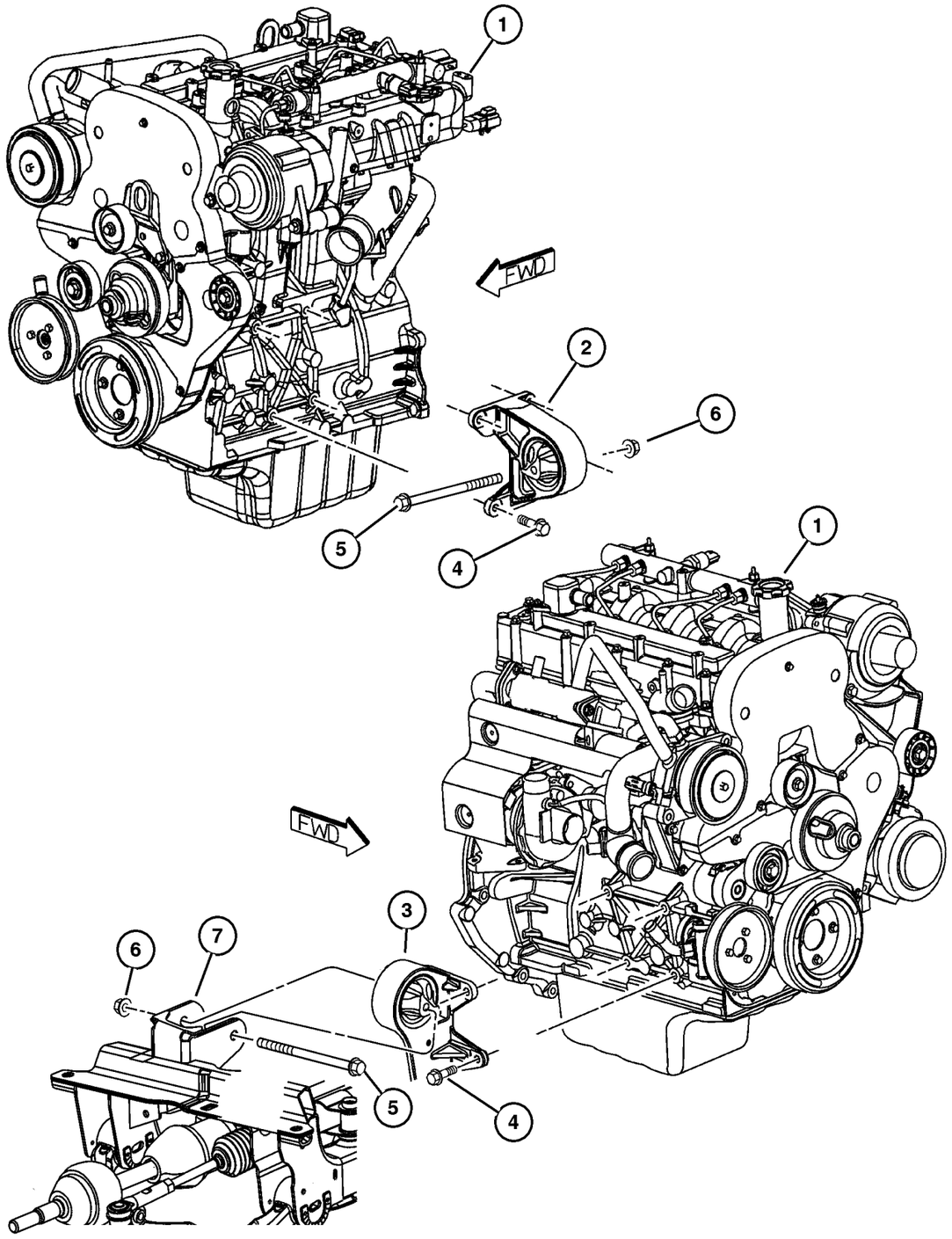

ITEM	PART NUMBER	QTY	LINE	SERIES	BODY	ENGINE	TRANS	TRIM	DESCRIPTION
Note:									
Sales Code									
[EK0]= All 3.7L 6 Cylinder Engines									
[EN0]= All 4/5 Cylinder Turbo Diesel Engines									
1									ENGINE, Complete, Diesel, See Engine Group, (NOT SERVICED) (Not Serviced)
2	52059 201AE	1				EN0			INSULATOR, Engine Mount, Left
3	52059 200AD	1				EN0			INSULATOR, Engine Mount, Right
4	6503 699	8				EK0, EN0			SCREW AND WASHER, Hex Head, M10x1.5x28
5	3420 2606	1							BOLT, Hex Head
6	6502 697	2							NUT, Hex Flange Lock, M12x1.75
7									BRACKET, Serviced With Cradle Assembly, (NOT SERVICED) (Not Serviced)

JEEP LIBERTY (KJ)

SERIES	LINE	BODY	ENGINE	TRANSMISSION
P = Limited	J = LHD (4WD)	74 = 4 Dr (104.3 WB)	ED1,ED0 = 2.4L Power Tech	DDK = 5 Speed HDManual
H = Sport	U = RHD (4WD)		EKG,EK0 = 3.7L Power Tech	DDD = 5 Speed HD Manual
M = Renegade	T = LHD (2WD)		ENJ = 2.5L 4Cyl Turbo Diesel	DG4,DGQ = Multi-Speed Auto
			ENR = 2.8L 4Cyl Turbo Diesel	DG6 = 4 Speed Auto Transm
			EN0 = 4Cyl Turbo Diesel	DG0 = All Automatic Transm
				DBB = All Manual Transm

Front, Engine Mounting [ENR]
Figure 009-115

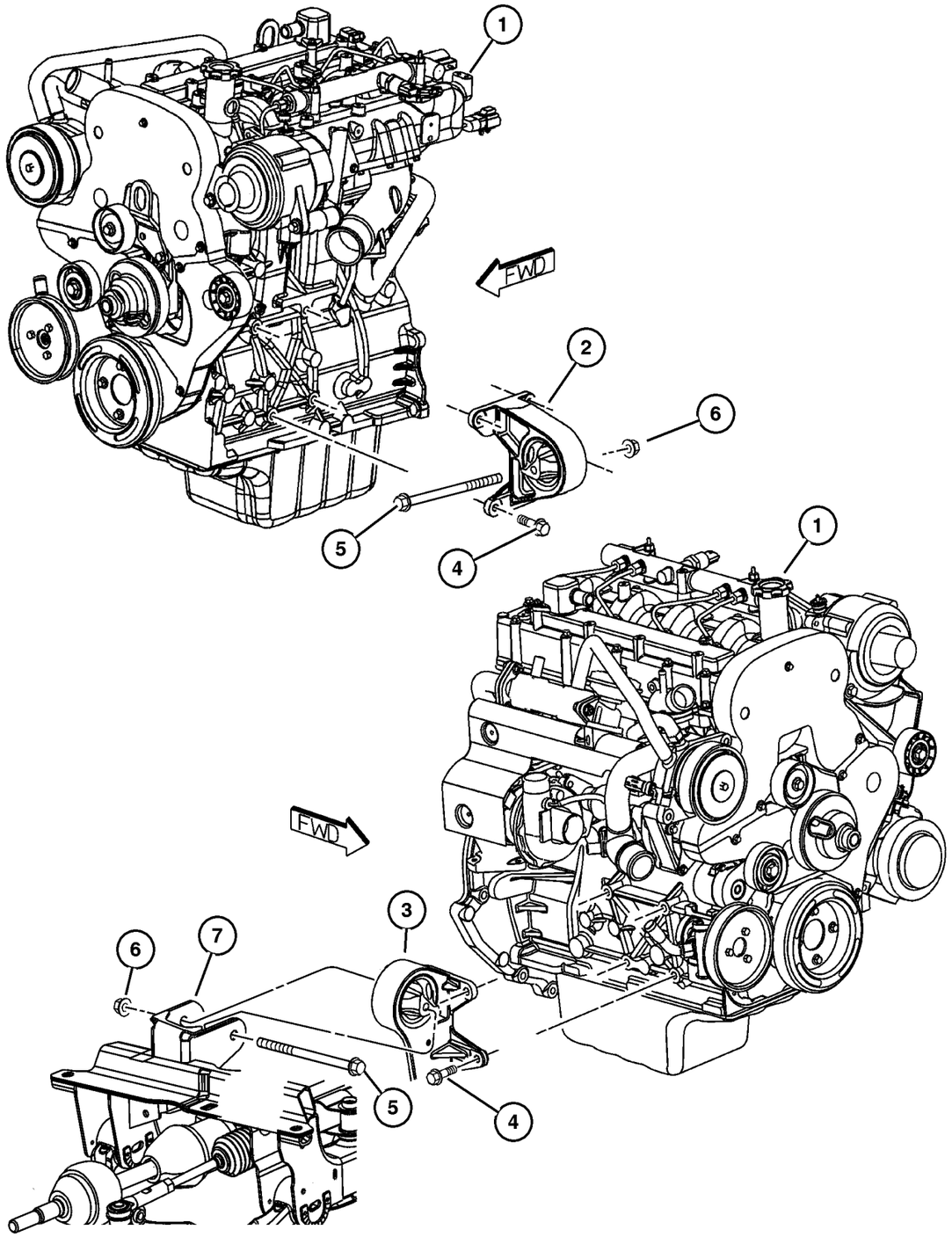

ITEM	PART NUMBER	QTY	LINE	SERIES	BODY	ENGINE	TRANS	TRIM	DESCRIPTION
Note:									
Sales Code									
[EK0]= All 3.7L 6 Cylinder Engines									
[EN0]= All 4/5 Cylinder Turbo Diesel Engines									
1									ENGINE, Complete, Diesel, See Engine Group, (NOT SERVICED) (Not Serviced)
2	52059 201AE	1				EN0			INSULATOR, Engine Mount, Left
3	52059 200AD	1				EN0			INSULATOR, Engine Mount, Right
4	6503 699	8				EK0, EN0			SCREW AND WASHER, Hex Head, M10x1.5x28
5	3420 2606	1							BOLT, Hex Head
6	6502 697	2							NUT, Hex Flange Lock, M12x1.75
7									BRACKET, Serviced With Cradle Assembly, (NOT SERVICED) (Not Serviced)

JEEP LIBERTY (KJ)

SERIES	LINE	BODY	ENGINE	TRANSMISSION
P = Limited	J = LHD (4WD)	74 = 4 Dr (104.3 WB)	ED1,ED0 = 2.4L Power Tech	DDK = 5 Speed HDManual
H = Sport	U = RHD (4WD)		EKG,EK0 = 3.7L Power Tech	DDD = 5 Speed HD Manual
M = Renegade	T = LHD (2WD)		ENJ = 2.5L 4Cyl Turbo Diesel	DG4,DGQ = Multi-Speed Auto
			ENR = 2.8L 4Cyl Turbo Diesel	DG6 = 4 Speed Auto Transm
			EN0 = 4Cyl Turbo Diesel	DG0 = All Automatic Transm
				DBB = All Manual Transm

Front, Engine Mounting [ED1]
Figure 009-120

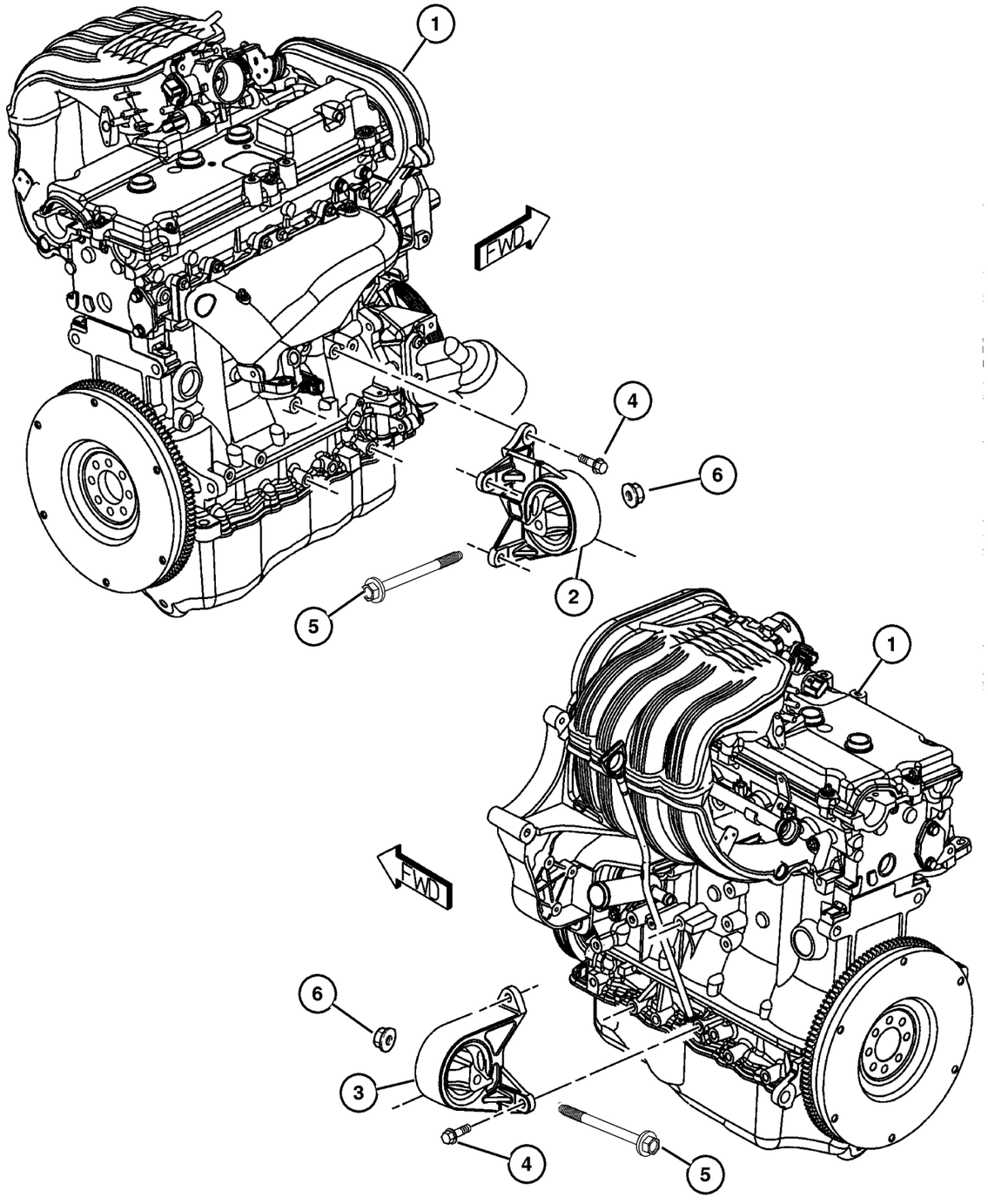

ITEM	PART NUMBER	QTY	LINE	SERIES	BODY	ENGINE	TRANS	TRIM	DESCRIPTION
Note:									
Sales Codes									
[ED0]= All 2.2L,2.5L,2.4L,4 Cylinder Gas Engines									
1									ENGINE, Complete, See Engine Group, (NOT SERVICED) (Not Serviced)
2	52059 252AC	1				ED0			INSULATOR, Engine Mount, Right
3	52059 253AC	1				ED0			INSULATOR, Engine Mount, Left
4	6503 699	1							SCREW AND WASHER, Hex Head, M10x1.5x28
5	6507 388AA	2							BOLT, Hex Head
6	6502 697	2							NUT, Hex Flange Lock, M12x1.75

JEEP LIBERTY (KJ)

SERIES	LINE	BODY	ENGINE	TRANSMISSION
P = Limited	J = LHD (4WD)	74 = 4 Dr (104.3 WB)	ED1,ED0 = 2.4L Power Tech	DDK = 5 Speed HDManual
H = Sport	U = RHD (4WD)		EKG,EK0 = 3.7L Power Tech	DDD = 5 Speed HD Manual
M = Renegade	T = LHD (2WD)		ENJ = 2.5L 4Cyl Turbo Diesel	DG4,DGQ = Multi-Speed Auto
			ENR = 2.8L 4Cyl Turbo Diesel	DG6 = 4 Speed Auto Transm
			EN0 = 4Cyl Turbo Diesel	DG0 = All Automatic Transm
				DBB = All Manual Transm

AR = Use as required - = Non illustrated part # = New this model year **September 30, 2003**

« RETURN TO GROUP INDEX

Front, Engine Mounting [EKG]
Figure 009-125

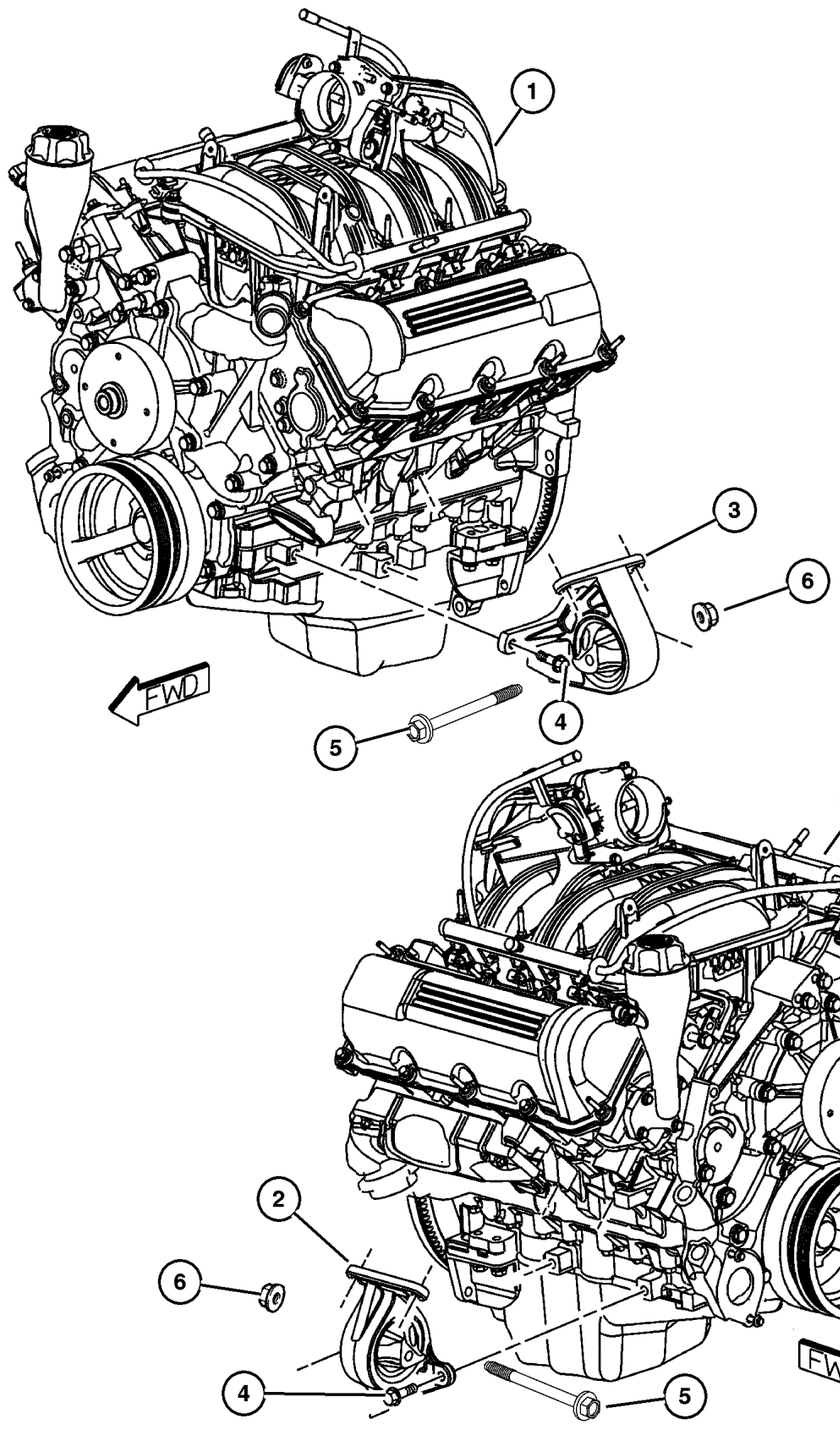

ITEM	PART NUMBER	QTY	LINE	SERIES	BODY	ENGINE	TRANS	TRIM	DESCRIPTION
Note; Sales Codes									
[EK0]= All 3.7L 6 Cylinder Gas Engines									
[EN0]= All 4/5 CylinderTurbo Diesels									
1									ENGINE, Complete, See Engine Group, (NOT SERVICED) (Not Serviced)
2	52059 226AB	1				EK0			INSULATOR, Engine Mount, Right
3	52059 227AC	1				EK0			INSULATOR, Engine Mount, Left
4	6503 699	8				EK0, EN0			SCREW AND WASHER, Hex Head, M10x1.5x28
5	3420 2606	1							BOLT, Hex Head
6	6502 697	2							NUT, Hex Flange Lock, M12x1.75

JEEP LIBERTY (KJ)

SERIES	LINE	BODY	ENGINE	TRANSMISSION
P = Limited	J = LHD (4WD)	74 = 4 Dr (104.3 WB)	ED1,ED0 = 2.4L Power Tech	DDK = 5 Speed HDManual
H = Sport	U = RHD (4WD)		EKG,EK0 = 3.7L Power Tech	DDD = 5 Speed HD Manual
M = Renegade	T = LHD (2WD)		ENJ = 2.5L 4Cyl Turbo Diesel	DG4,DGQ = Multi-Speed Auto
			ENR = 2.8L 4Cyl Turbo Diesel	DG6 = 4 Speed Auto Transm
			EN0 = 4Cyl Turbo Diesel	DG0 = All Automatic Transm
				DBB = All Manual Transm

Rear, Transmission Mounting [ENJ + DDD]
Figure 009-130

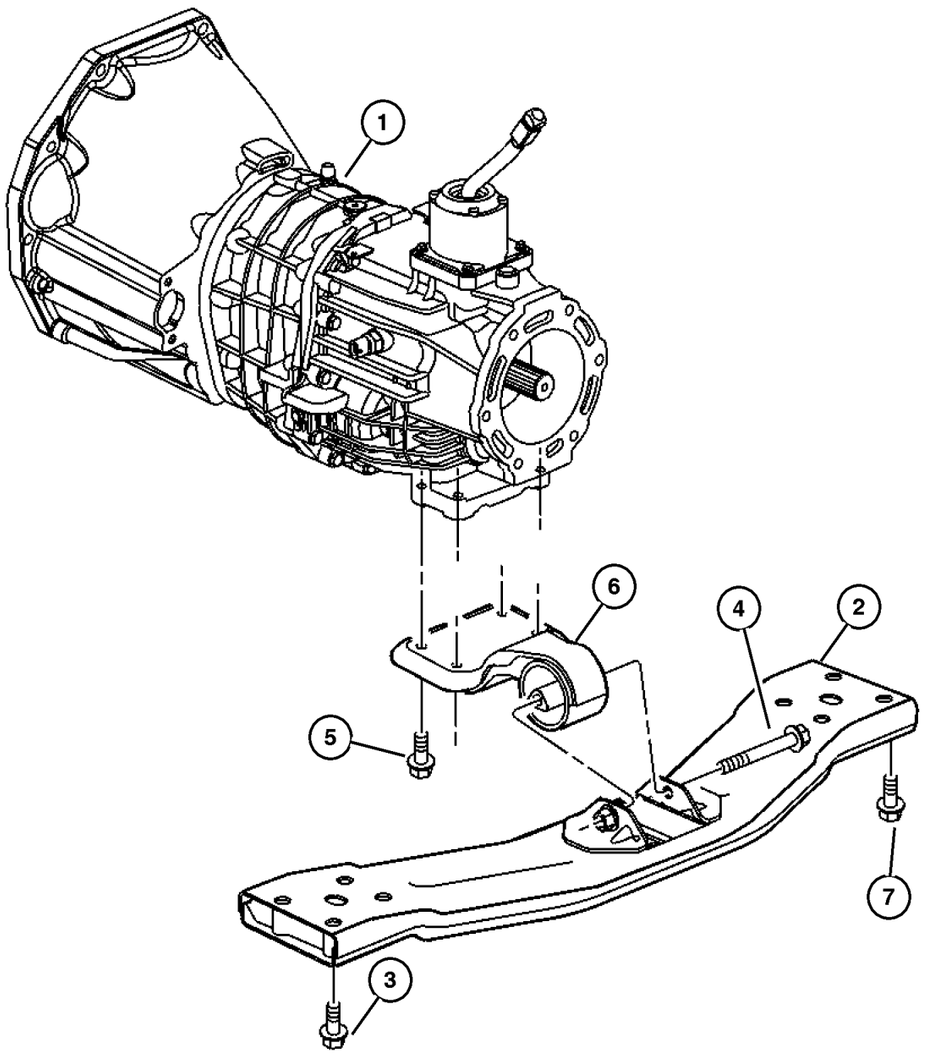

ITEM	PART NUMBER	QTY	LINE	SERIES	BODY	ENGINE	TRANS	TRIM	DESCRIPTION
NOTE:									
Sales Codes:									
[DBB]=All Manual Transmissions									
[EN0]=All 4/5 Cyl. Turbo Diesel Engines									
1									TRANSMISSION, 5 Speed, See Manual Transmission Group, (NOT SERVICED) (Not Serviced)
2	#52128 707AA	1				EN0			CROSSMEMBER, Transmission
3	6506 000AA	4							SCREW AND WASHER, Inboard
4	3420 2606	1							BOLT, Hex Head
5	6033 358	4					DBB		SCREW AND WASHER, Hex Head Locking, .437-14x1.25
6	52058 539AB	1	J, U			EN0	DBB		BRACKET AND INSULATOR, Transmission Support
7	6505 826AA	4							SCREW AND WASHER, Outer

JEEP LIBERTY (KJ)

SERIES	LINE	BODY	ENGINE	TRANSMISSION
P = Limited	J = LHD (4WD)	74 = 4 Dr (104.3 WB)	ED1,ED0 = 2.4L Power Tech	DDK = 5 Speed HDManual
H = Sport	U = RHD (4WD)		EKG,EK0 = 3.7L Power Tech	DDD = 5 Speed HD Manual
M = Renegade	T = LHD (2WD)		ENJ = 2.5L 4Cyl Turbo Diesel	DG4,DGQ = Multi-Speed Auto
			ENR = 2.8L 4Cyl Turbo Diesel	DG6 = 4 Speed Auto Transm
			EN0 = 4Cyl Turbo Diesel	DG0 = All Automatic Transm
				DBB = All Manual Transm

Rear, Transmission Mounting [ENR + DGQ]
Figure 009-135

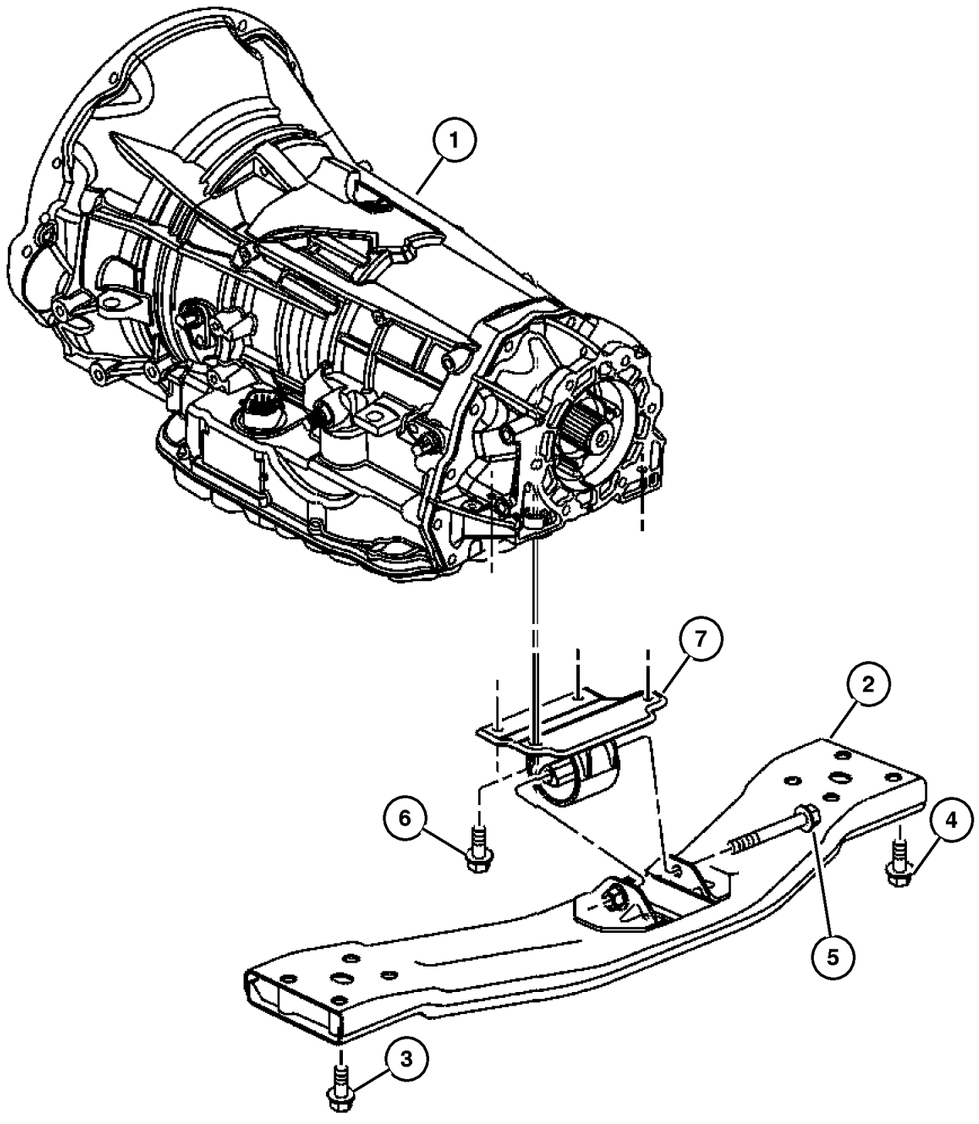

ITEM	PART NUMBER	QTY	LINE	SERIES	BODY	ENGINE	TRANS	TRIM	DESCRIPTION
NOTE:									
Sales Codes:									
[DGQ]=5 Speed Automatic Transmission - [5-45RFE]									
[EN0]=All 4/5 Turbo Diesel Engines									
1									TRANSMISSION, See Automatic Transmission Group, (NOT SERVICED) (Not Serviced)
2	#52128 707AA	1				EN0			CROSSMEMBER, Transmission
3	6506 000AA	4							SCREW AND WASHER, Inner
4	6505 826AA	4							SCREW AND WASHER, Outer
5	3420 2606	1							BOLT, Hex Head
6	6503 699	1							SCREW AND WASHER, Hex Head, M10x1.5x28
7	52059 313AA	1				EN0	DGQ		BRACKET, Support Rear

JEEP LIBERTY (KJ)

SERIES	LINE	BODY	ENGINE	TRANSMISSION
P = Limited	J = LHD (4WD)	74 = 4 Dr (104.3 WB)	ED1,ED0 = 2.4L Power Tech	DDK = 5 Speed HDManual
H = Sport	U = RHD (4WD)		EKG,EK0 = 3.7L Power Tech	DDD = 5 Speed HD Manual
M = Renegade	T = LHD (2WD)		ENJ = 2.5L 4Cyl Turbo Diesel	DG4,DGQ = Multi-Speed Auto
			ENR = 2.8L 4Cyl Turbo Diesel	DG6 = 4 Speed Auto Transm
			EN0 = 4Cyl Turbo Diesel	DG0 = All Automatic Transm
				DBB = All Manual Transm

Rear, Transmission Mounting [ED1 + DDK]
Figure 009-140

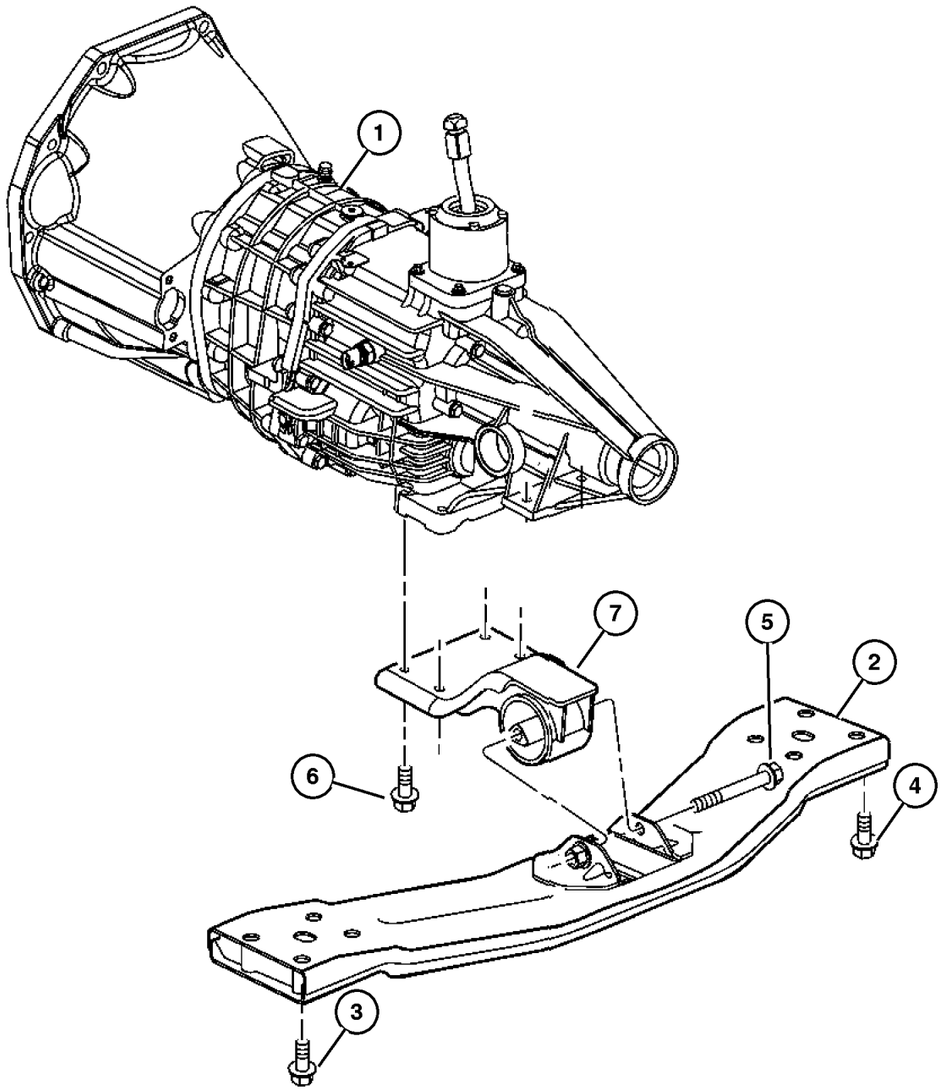

ITEM	PART NUMBER	QTY	LINE	SERIES	BODY	ENGINE	TRANS	TRIM	DESCRIPTION
NOTE:									
Sales Codes:									
[DBB]=All Manual Transmissions									
[DDK]=5 Speed Heavy Duty Manual Transmission									
[EKG]=3.7L V-6 Engine									
[ED0]=All 2.2, 2.5, 2.4L 4 cyl. Engine									
1									TRANSMISSION, 5 Speed, See Manual Transmission Group, (NOT SERVICED) (Not Serviced)
2	#52128 702AA	1				ED0, EKG			CROSSMEMBER, Transmission
3	6506 000AA	4							SCREW AND WASHER, Inner
4	6505 826AA	4							SCREW AND WASHER, Outer
5	3420 2606	1							BOLT, Hex Head
6	6033 358	4					DBB		SCREW AND WASHER, Hex Head Locking, .437-14x1.25
7	52059 299AB	1				ED0	DDK		BRACKET AND INSULATOR, Transmission Support

JEEP LIBERTY (KJ)

SERIES	LINE	BODY	ENGINE	TRANSMISSION
P = Limited	J = LHD (4WD)	74 = 4 Dr (104.3 WB)	ED1,ED0 = 2.4L Power Tech	DDK = 5 Speed HDManual
H = Sport	U = RHD (4WD)		EKG,EK0 = 3.7L Power Tech	DDD = 5 Speed HD Manual
M = Renegade	T = LHD (2WD)		ENJ = 2.5L 4Cyl Turbo Diesel	DG4,DGQ = Multi-Speed Auto
			ENR = 2.8L 4Cyl Turbo Diesel	DG6 = 4 Speed Auto Transm
			EN0 = 4Cyl Turbo Diesel	DG0 = All Automatic Transm
				DBB = All Manual Transm

Rear, Transmission Mounting [ED1 + DDK]
Figure 009-145

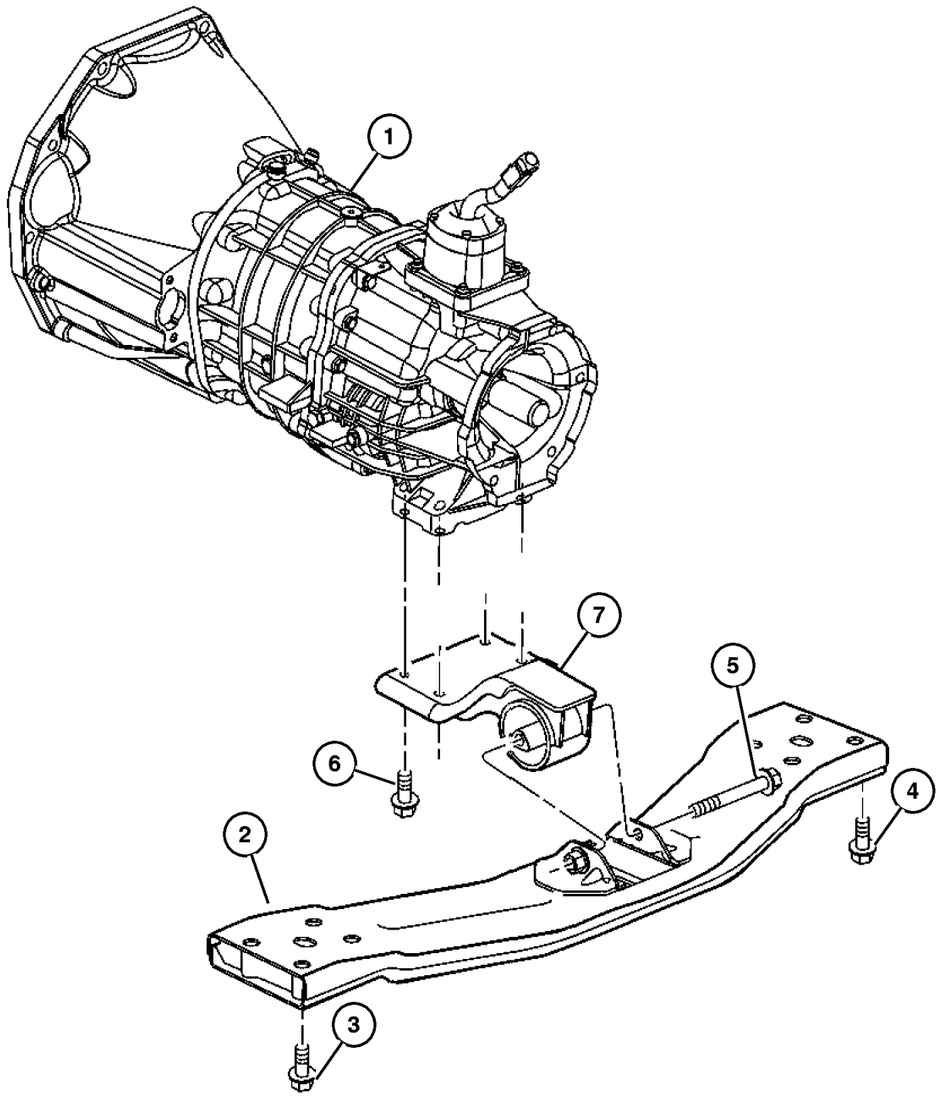

ITEM	PART NUMBER	QTY	LINE	SERIES	BODY	ENGINE	TRANS	TRIM	DESCRIPTION
NOTE:									
Sales Codes:									
[DBB]=All Manual Transmissions									
[DDK]=5 Speed Heavy Duty Manual Transmission									
[EKG]=3.7L V-6 Engine									
[ED0]=All 2.2, 2.5, 2.4L 4 cyl. Engine									
1									TRANSMISSION, 5 Speed, See Manual Transmission Group, (NOT SERVICED) (Not Serviced)
2	#52128 702AA	1				ED0, EKG			CROSSMEMBER, Transmission
3	6506 000AA	4							SCREW AND WASHER, Inner
4	6505 826AA	4							SCREW AND WASHER, Outer
5	3420 2606	1							BOLT, Hex Head
6	6033 358	4					DBB		SCREW AND WASHER, Hex Head Locking, .437-14x1.25
7	52059 299AB	1				ED0	DDK		BRACKET AND INSULATOR, Transmission Support

JEEP LIBERTY (KJ)

SERIES	LINE	BODY	ENGINE	TRANSMISSION
P = Limited	J = LHD (4WD)	74 = 4 Dr (104.3 WB)	ED1,ED0 = 2.4L Power Tech	DDK = 5 Speed HDManual
H = Sport	U = RHD (4WD)		EKG,EK0 = 3.7L Power Tech	DDD = 5 Speed HD Manual
M = Renegade	T = LHD (2WD)		ENJ = 2.5L 4Cyl Turbo Diesel	DG4,DGQ = Multi-Speed Auto
			ENR = 2.8L 4Cyl Turbo Diesel	DG6 = 4 Speed Auto Transm
			EN0 = 4Cyl Turbo Diesel	DG0 = All Automatic Transm
				DBB = All Manual Transm

Rear, Transmission Mounting [EKG + DDD]
Figure 009-150

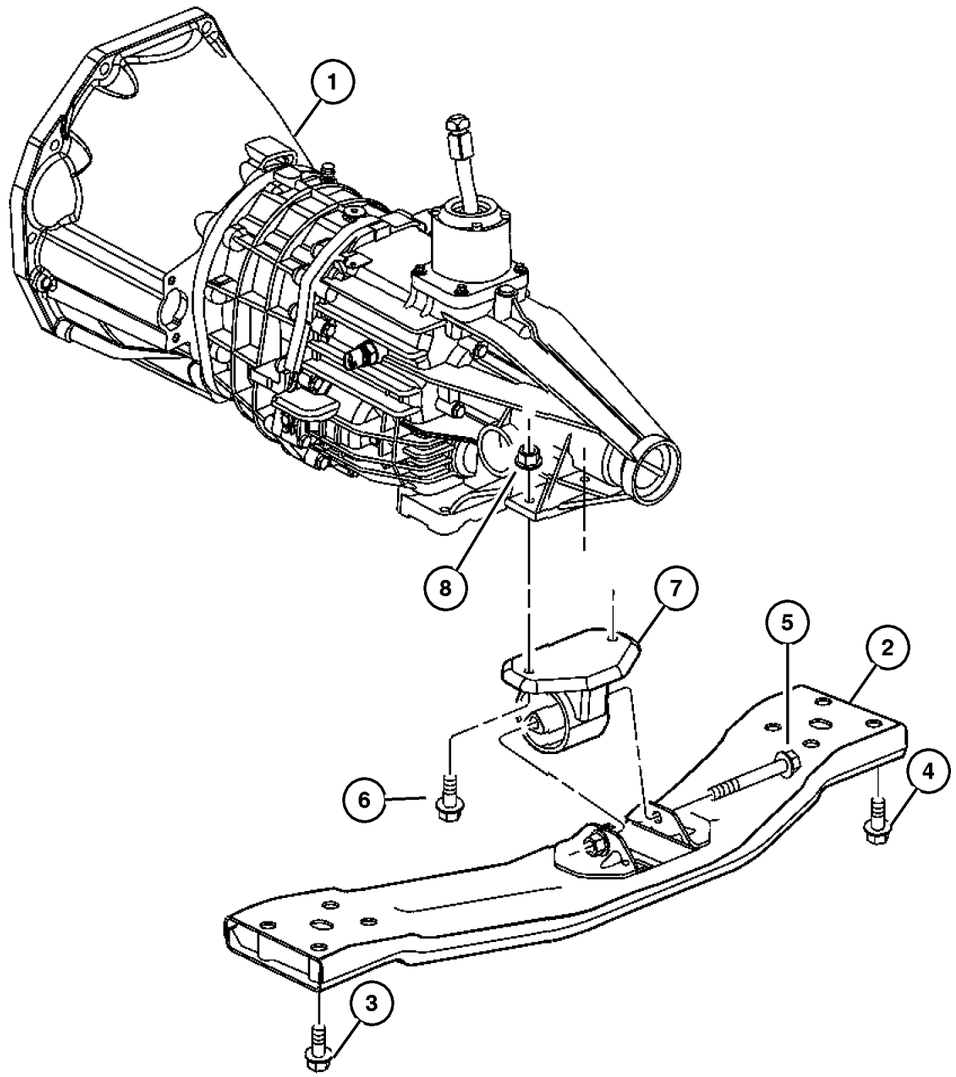

ITEM	PART NUMBER	QTY	LINE	SERIES	BODY	ENGINE	TRANS	TRIM	DESCRIPTION
NOTE:									
Sales Codes:									
[DBB]=All Manual Transmissions									
[DG6]=4 Speed Automatic Transmission - [42RLE]									
[EKG]=3.7L V-6 Engine									
[ED0]=All 2.2, 2.5, 2.4L 4 Cyl. Engines									
[EK0]=All 3.7L V-6 Engines									
1									TRANSMISSION, 5 Speed, See Manual Transmission Group, (NOT SERVICED) (Not Serviced)
2	#52128 702AA	1				ED0, EKG			CROSSMEMBER, Transmission
3	6506 000AA	4							SCREW AND WASHER, Inner
4	6505 826AA	4							SCREW AND WASHER, Outer
5	3420 2606	1							BOLT, Hex Head
6	6502 936	2	T			EK0	DBB, DG6		SCREW AND WASHER, Hex Head Pilot Point, M12x1.75x45
7	52059 309AA	1	T			EK0	DBB		BRACKET AND INSULATOR, Transmission Support
8	6506 633AA	2	T			EK0	DBB		NUT, Hex

JEEP LIBERTY (KJ)

SERIES	LINE	BODY	ENGINE	TRANSMISSION
P = Limited	J = LHD (4WD)	74 = 4 Dr (104.3 WB)	ED1,ED0 = 2.4L Power Tech	DDK = 5 Speed HDManual
H = Sport	U = RHD (4WD)		EKG,EK0 = 3.7L Power Tech	DDD = 5 Speed HD Manual
M = Renegade	T = LHD (2WD)		ENJ = 2.5L 4Cyl Turbo Diesel	DG4,DGQ = Multi-Speed Auto
			ENR = 2.8L 4Cyl Turbo Diesel	DG6 = 4 Speed Auto Transm
			EN0 = 4Cyl Turbo Diesel	DG0 = All Automatic Transm
				DBB = All Manual Transm

Rear, Transmission Mounting [EKG + DDD]
Figure 009-155

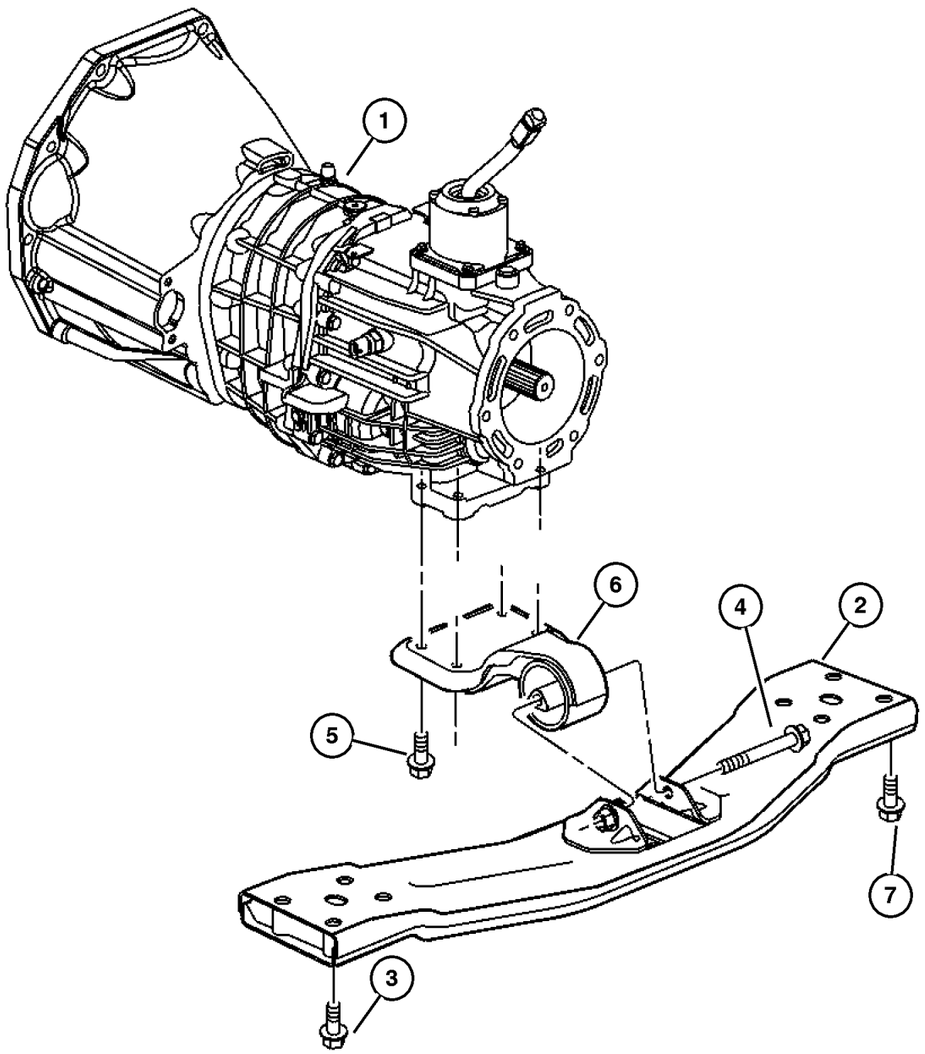

ITEM	PART NUMBER	QTY	LINE	SERIES	BODY	ENGINE	TRANS	TRIM	DESCRIPTION
NOTE:									
Sales Codes:									
[DBB]=All Manual Transmissions									
[EKG]=3.7L V-6 Engine									
[ED0]=All 2.2, 2.5, 2.4L 4 Cyl. Engines									
[EK0]=All 3.7L V-6 Engines									
1									TRANSMISSION, 5 Speed, See Manual Transmission Group, (NOT SERVICED) (Not Serviced)
2	#52128 702AA	1				ED0, EKG			CROSSMEMBER, Transmission
3	6506 000AA	4							SCREW AND WASHER, Inboard
4	3420 2606	1							BOLT, Hex Head
5	6033 358	4					DBB		SCREW AND WASHER, Hex Head Locking, .437-14x1.25
6	52059 324AA	1	J, U			EK0	DBB		BRACKET AND INSULATOR, Transmission Support
7	6505 826AA	4							SCREW AND WASHER, Outer

JEEP LIBERTY (KJ)

SERIES	LINE	BODY	ENGINE	TRANSMISSION
P = Limited	J = LHD (4WD)	74 = 4 Dr (104.3 WB)	ED1,ED0 = 2.4L Power Tech	DDK = 5 Speed HDManual
H = Sport	U = RHD (4WD)		EKG,EK0 = 3.7L Power Tech	DDD = 5 Speed HD Manual
M = Renegade	T = LHD (2WD)		ENJ = 2.5L 4Cyl Turbo Diesel	DG4,DGQ = Multi-Speed Auto
			ENR = 2.8L 4Cyl Turbo Diesel	DG6 = 4 Speed Auto Transm
			EN0 = 4Cyl Turbo Diesel	DG0 = All Automatic Transm
				DBB = All Manual Transm

Rear, Transmission Mounting [EKG + DG6]
Figure 009-160

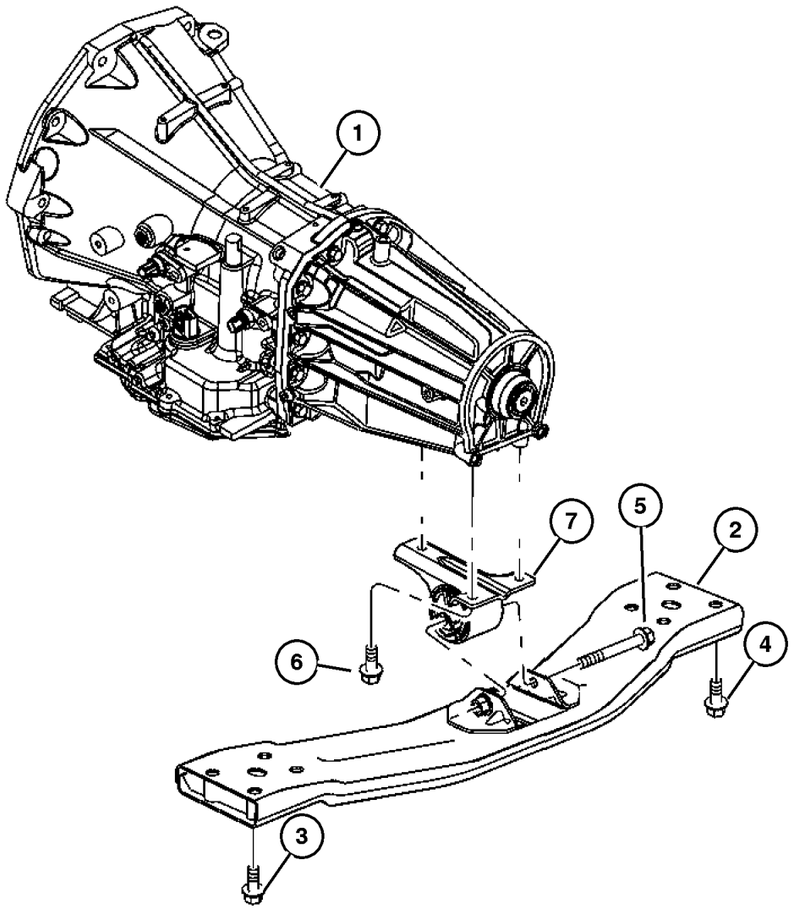

ITEM	PART NUMBER	QTY	LINE	SERIES	BODY	ENGINE	TRANS	TRIM	DESCRIPTION
NOTE:									
Sales Codes:									
[EKG]=3.7L V-6 Engine									
[DG6]=5 Speed Automatic Transmission - [5-45RFE]									
[ED0]=All 2.2, 2.5, 2.4L 4 Cyl. Engines									
[EK0]=All 3.7L V-6 Engines									
1									TRANSMISSION, See Automatic Transmission Group, (NOT SERVICED) (Not Serviced)
2	#52128 702AA	1				ED0, EKG			CROSSMEMBER, Transmission
3	6506 000AA	4							SCREW AND WASHER, Inner
4	6505 826AA	4							SCREW AND WASHER, Outer
5	3420 2606	1							BOLT, Hex Head
6	6503 699	2							SCREW AND WASHER, Hex Head, M10x1.5x28
7	52128 651AA	1	T			EK0	DG6		BRACKET AND INSULATOR, Transmission Support

JEEP LIBERTY (KJ)

SERIES	LINE	BODY	ENGINE	TRANSMISSION
P = Limited	J = LHD (4WD)	74 = 4 Dr (104.3 WB)	ED1,ED0 = 2.4L Power Tech	DDK = 5 Speed HDManual
H = Sport	U = RHD (4WD)		EKG,EK0 = 3.7L Power Tech	DDD = 5 Speed HD Manual
M = Renegade	T = LHD (2WD)		ENJ = 2.5L 4Cyl Turbo Diesel	DG4,DGQ = Multi-Speed Auto
			ENR = 2.8L 4Cyl Turbo Diesel	DG6 = 4 Speed Auto Transm
			EN0 = 4Cyl Turbo Diesel	DG0 = All Automatic Transm
				DBB = All Manual Transm

Rear, Transmission Mounting [EKG + DG6]
Figure 009-165

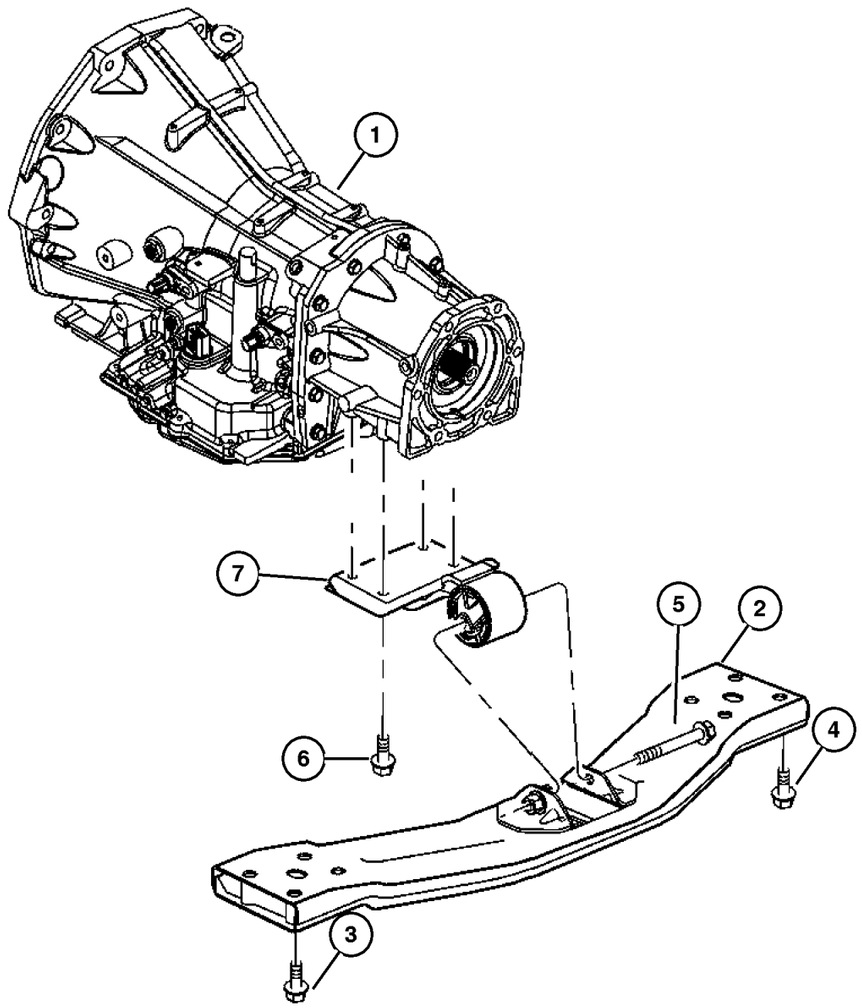

ITEM	PART NUMBER	QTY	LINE	SERIES	BODY	ENGINE	TRANS	TRIM	DESCRIPTION
NOTE:									
Sales Codes:									
[EKG]=3.7L V-6 Engine									
[DG6]=5 Speed Automatic Transmission - [5-45RFE]									
[ED0]=All 2.2, 2.5, 2.4L 4 Cyl. Engines									
[EK0]=All 3.7L V-6 Engines									
1									TRANSMISSION, See Automatic Transmission Group, (NOT SERVICED) (Not Serviced)
2	#52128 702AA	1				ED0, EKG			CROSSMEMBER, Transmission
3	6505 826AA	4							SCREW AND WASHER, Inner
4	6505 826AA	4							SCREW AND WASHER, Outer
5	3420 2606	1							BOLT, Hex Head
6	6503 699	4	J, U				DG6		SCREW AND WASHER, Hex Head, M10x1.5x28
7	52128 654AA	1	J, U			EK0	DG6		BRACKET AND INSULATOR, Transmission Support

JEEP LIBERTY (KJ)

SERIES	LINE	BODY	ENGINE	TRANSMISSION
P = Limited	J = LHD (4WD)	74 = 4 Dr (104.3 WB)	ED1,ED0 = 2.4L Power Tech	DDK = 5 Speed HDManual
H = Sport	U = RHD (4WD)		EKG,EK0 = 3.7L Power Tech	DDD = 5 Speed HD Manual
M = Renegade	T = LHD (2WD)		ENJ = 2.5L 4Cyl Turbo Diesel	DG4,DGQ = Multi-Speed Auto
			ENR = 2.8L 4Cyl Turbo Diesel	DG6 = 4 Speed Auto Transm
			EN0 = 4Cyl Turbo Diesel	DG0 = All Automatic Transm
				DBB = All Manual Transm

Group – 2.4L

Engine 2.4L Four Cylinder

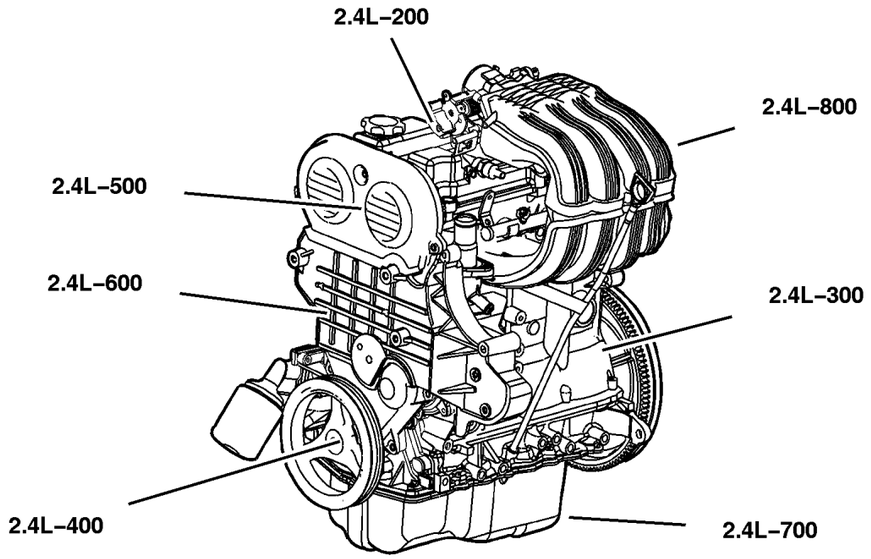

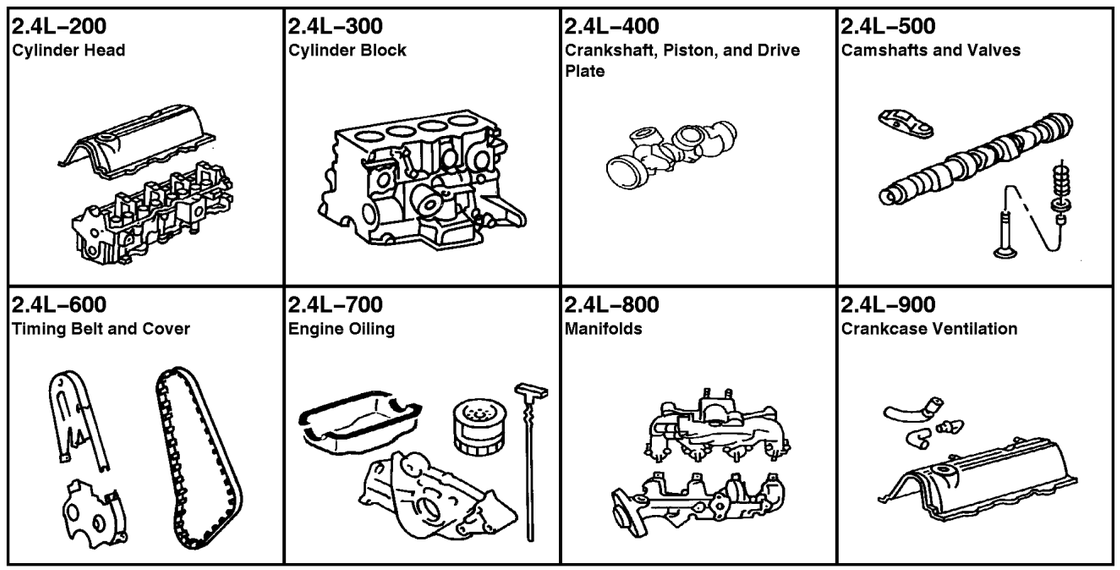

GROUP 2.4L - Engine 2.4L Four Cylinder

Illustration Title	Group-Fig. No.
Cylinder Head	
Cylinder Head, 2.4L [ED1]	Fig. 2.4L-210
Cylinder Block	
Cylinder Block, 2.4L [ED1]	Fig. 2.4L-310
Crankshaft, Piston, and Drive Plate	
Crankshaft, Pistons and Flywheel, 2.4L [ED1]	Fig. 2.4L-410
Camshafts and Valves	
Camshaft and Valves 2.4L [ED1]	Fig. 2.4L-510
Timing Belt and Cover	
Timing Belt and Cover, 2.4L [ED1]	Fig. 2.4L-610
Balance Shafts, 2.4L [ED1]	Fig. 2.4L-620
Engine Oiling	
Engine Oiling, 2.4L [ED1]	Fig. 2.4L-710
Manifolds	
Intake and Exhaust Manifolds, 2.4L [ED1]	Fig. 2.4L-810
Crankcase Ventilation	
Crankcase Ventilation , 2.4L [ED1]	Fig. 2.4L-910

Cylinder Head, 2.4L [ED1]
Figure 2.4L-210

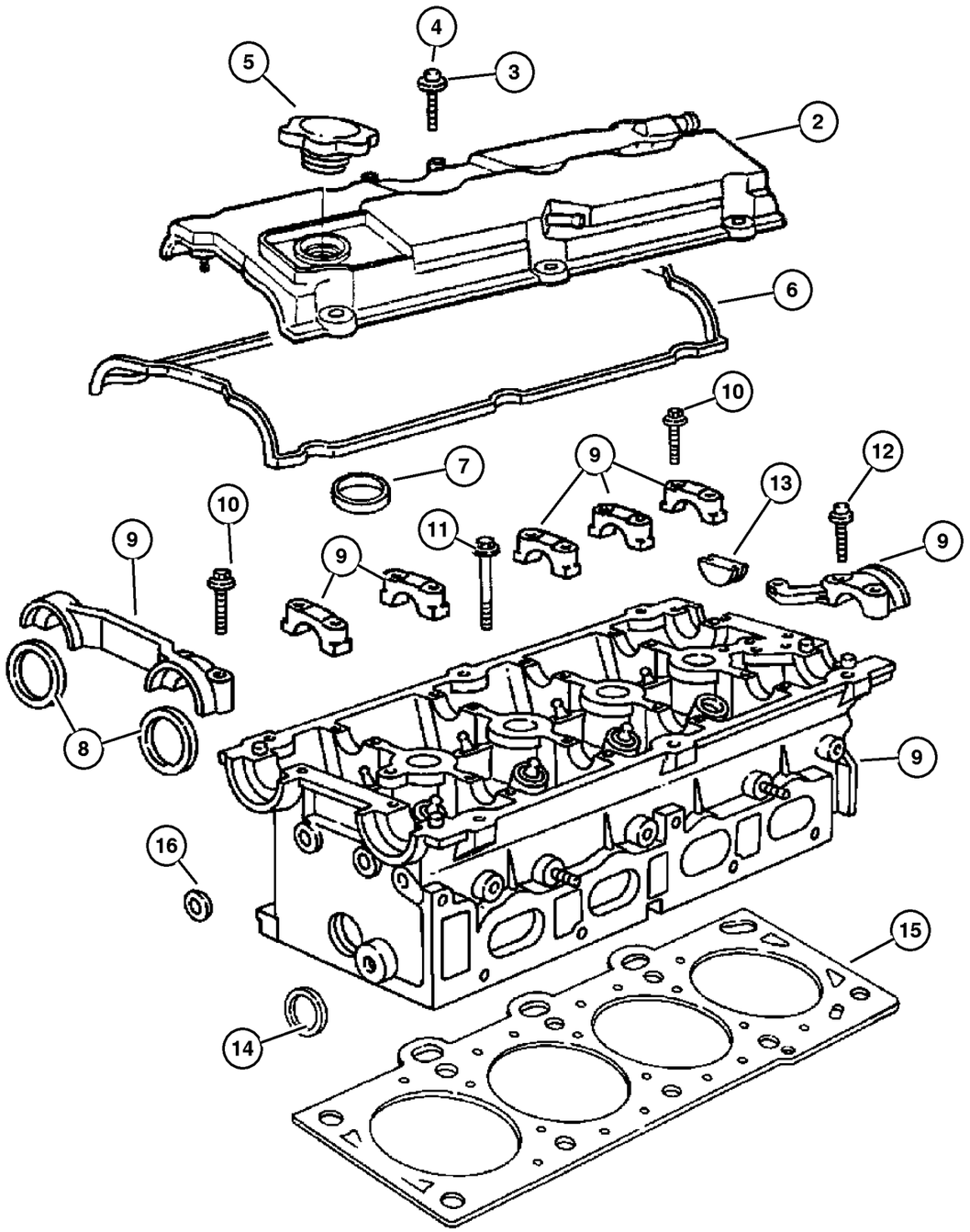

ITEM	PART NUMBER	QTY	LINE	SERIES	BODY	ENGINE	TRANS	TRIM	DESCRIPTION
NOTE: Sales Codes									
[ED0] = All 2.2L,2.5L,2.4L, 4 Cylinder Gas Engines									
-1	5072 474AC	1				ED0			GASKET PACKAGE, Engine Upper
2	53010 493AD	1				ED0			COVER, Cylinder Head
3									SCREW, (NOT SERVICED) (Not Serviced)
4	4777 997AA	3				ED0			ISOLATOR, Cylinder Head Cover, Grommet And Bolt
5	4648 831AA	1				ED0			CAP, Oil Filler
6	4777 478	1				ED0			GASKET, Valve Cover
7	4777 477	4				ED0			GASKET, Spark Plug Well
8	4777 086	2				ED0			SEAL, Camshaft, Front
9	#4667 088AG	1				ED0			HEAD, Cylinder
10	6100 918	18				ED0			BOLT, Hex Flange Head, M6x1.00x35
11	6504 033	10				ED0			BOLT, Cylinder Head
12	6101 527	6				ED0			SCREW, Hex Flange Head, M8x1.25x40
13	4667 731	1				ED0			PLUG, Camshaft
14	4556 020	2				ED0			PLUG, Core, 1.25 Diameter
15	4884 407AA	1				ED0			GASKET, Cylinder Head
16	6036 543AA	6				ED0			PLUG, Pipe

JEEP LIBERTY (KJ)

SERIES	LINE	BODY	ENGINE	TRANSMISSION
P = Limited	J = LHD (4WD)	74 = 4 Dr (104.3 WB)	ED1,ED0 = 2.4L Power Tech	DDK = 5 Speed HDManual
H = Sport	U = RHD (4WD)		EKG,EK0 = 3.7L Power Tech	DDD = 5 Speed HD Manual
M = Renegade	T = LHD (2WD)		ENJ = 2.5L 4Cyl Turbo Diesel	DG4,DGQ = Multi-Speed Auto
			ENR = 2.8L 4Cyl Turbo Diesel	DG6 = 4 Speed Auto Transm
			EN0 = 4Cyl Turbo Diesel	DG0 = All Automatic Transm
				DBB = All Manual Transm

Cylinder Block, 2.4L [ED1]
Figure 2.4L-310

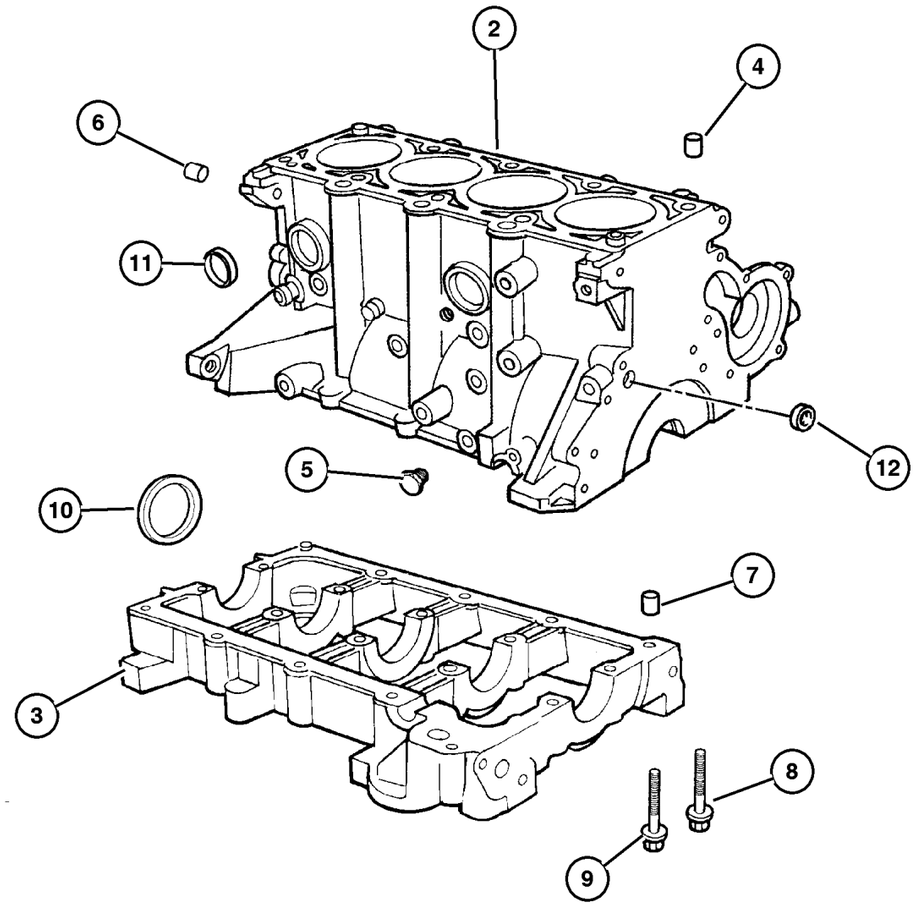

ITEM	PART NUMBER	QTY	LINE	SERIES	BODY	ENGINE	TRANS	TRIM	DESCRIPTION
Note; Sales Codes									
[DBB]= All Manual Transmissons									
[ED0]= ALL 2.2L,2.5L,2.4L, 4 Cylinder Gas Engines									
-1	5072 475AA	1				ED0			GASKET PACKAGE, Engine Lower
2	#5019 344AB	1				ED0			BLOCK, Short
3									BEDPLATE, Serviced With Short Block Only, (NOT SERVICED) (Not Serviced)
4	4448 856	2				ED0			DOWEL, Block To Cylinder Head
5	6036 543AA	6				ED0			PLUG, Pipe
6	5240 849	2				ED0			DOWEL, Block To Clutch Housing
7	4694 106	2				ED0			DOWEL, Engine Block To Bedplate
8	6503 387	10				ED0			BOLT, Main Bearing Cap
9	6504 257	9				ED0			BOLT, Hex Head, M8x1.25x70
10	4621 939AB	1				ED0			SEAL, Rear Main Crankshaft
11	6034 804	4				ED0			PLUG, Core, 1.39 Diameter, Cylinder Block
12	4556 018AB	1				ED0			PLUG, Cylinder Block Oil Hole
-13	53013 486AA	2				ED0			BRACKET, Engine Lift
-14	52104 353AC	1				ED0	DBB		BRACKET, Bedplate to Dust Cover
-15	6034 331	1				ED0			PLUG, Hex Socket, 3/8-18NPTx.475, Water Drain
-16	6507 155AA	1				ED0			STUD, Double Ended

JEEP LIBERTY (KJ)

SERIES	LINE	BODY	ENGINE	TRANSMISSION
P = Limited	J = LHD (4WD)	74 = 4 Dr (104.3 WB)	ED1,ED0 = 2.4L Power Tech	DDK = 5 Speed HDManual
H = Sport	U = RHD (4WD)		EKG,EK0 = 3.7L Power Tech	DDD = 5 Speed HD Manual
M = Renegade	T = LHD (2WD)		ENJ = 2.5L 4Cyl Turbo Diesel	DG4,DGQ = Multi-Speed Auto
			ENR = 2.8L 4Cyl Turbo Diesel	DG6 = 4 Speed Auto Transm
			EN0 = 4Cyl Turbo Diesel	DG0 = All Automatic Transm
				DBB = All Manual Transm

Crankshaft, Pistons and Flywheel, 2.4L [ED1]
Figure 2.4L-410

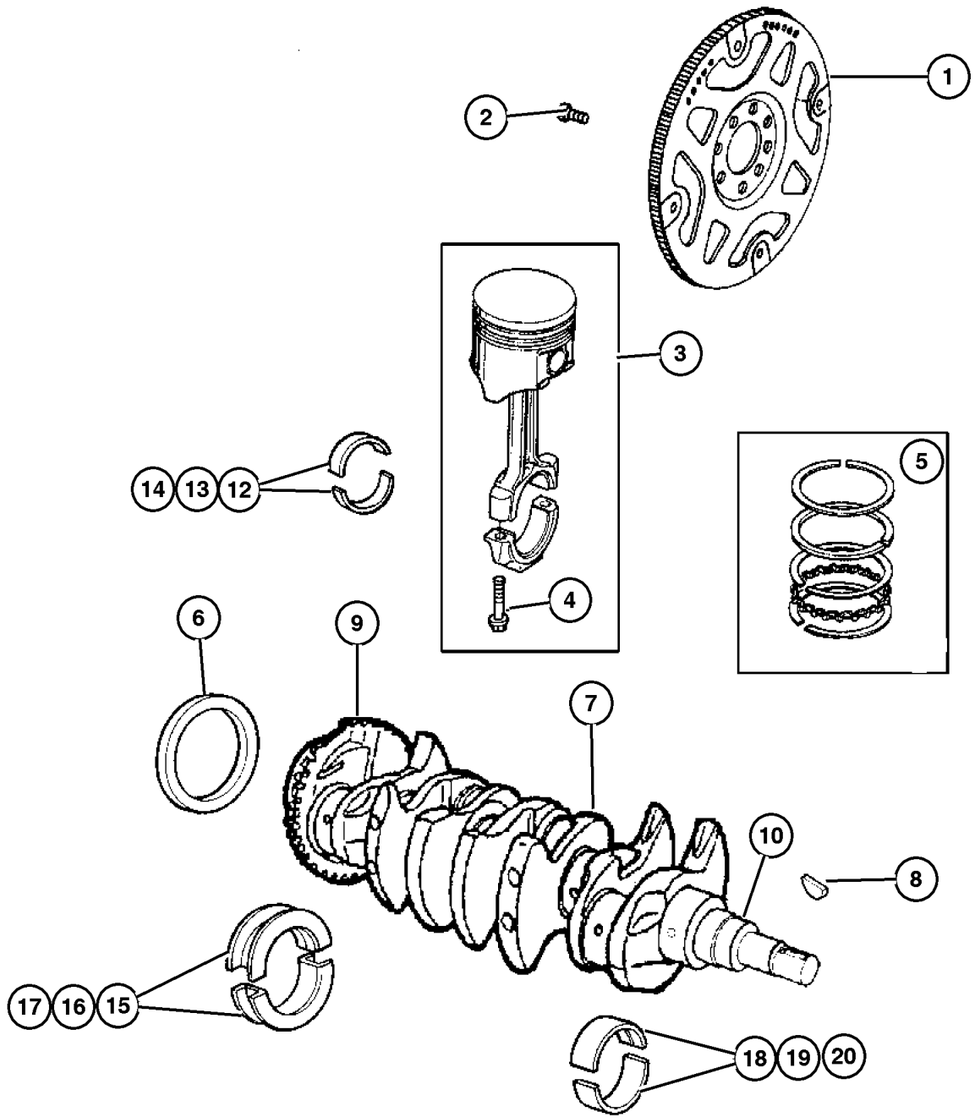

ITEM	PART NUMBER	QTY	LINE	SERIES	BODY	ENGINE	TRANS	TRIM	DESCRIPTION
Note; Sales Codes									
[DBB] = All Manual Transmissions									
[ED0]= All 2.2L,2.5L, 2.4L, 4 Cylinder Gas Engines									
1	52104 578AB	1				ED0	DBB		FLYWHEEL
2	6507 240AA	8				ED0	DBB		SCREW
3	5066 565AB	4				ED0			PISTON PIN AND ROD
4	6503 116	8				ED0			BOLT, Connecting Rod
5	5073 524AA	1				ED0			PISTON RING SET, COMPLETE ENGINE, STD.
6	4621 939AB	1				ED0			SEAL, Rear Main Crankshaft
7	4781 643AA	1				ED0			CRANKSHAFT
8	6035 473	1				ED0			KEY, Crankshaft Sprocket
9	5114 417AA	1				ED0			RING PACKAGE, Crankshaft Target
10	52104 337AA	1				ED0	DBB		BEARING, Pilot
-11	6506 656AA	4				ED0			SCREW
12	5012 588AA	AR				ED0			BEARING KIT, Connecting Rod, Standard
13	5012 589AA	AR				ED0			BEARING KIT, Connecting Rod, .025 mm U/S
14	5012 590AA	AR				ED0			BEARING KIT, Connecting Rod, .25 mm U/S
15	5012 585AB	1				ED0			BEARING KIT, Crankshaft Thrust, Std
16	5012 586AB	2				ED0			BEARING KIT, Crankshaft Thrust, .025mm Undersize
17	5012 587AB	2				ED0			BEARING KIT, Crankshaft Thrust, .25mm Undersize
18	5012 582AA	4				ED0			BEARING KIT, Crankshaft, Standard
19	5012 583AA	4				ED0			BEARING KIT, Crankshaft, .025mm Undersize
20	5012 584AA	4				ED0			BEARING KIT, Crankshaft, .25mm Undersize

JEEP LIBERTY (KJ)

SERIES	LINE	BODY	ENGINE	TRANSMISSION
P = Limited	J = LHD (4WD)	74 = 4 Dr (104.3 WB)	ED1,ED0 = 2.4L Power Tech	DDK = 5 Speed HDManual
H = Sport	U = RHD (4WD)		EKG,EK0 = 3.7L Power Tech	DDD = 5 Speed HD Manual
M = Renegade	T = LHD (2WD)		ENJ = 2.5L 4Cyl Turbo Diesel	DG4,DGQ = Multi-Speed Auto
			ENR = 2.8L 4Cyl Turbo Diesel	DG6 = 4 Speed Auto Transm
			EN0 = 4Cyl Turbo Diesel	DG0 = All Automatic Transm
				DBB = All Manual Transm

AR = Use as required - = Non illustrated part # = New this model year

September 30, 2003

« RETURN TO GROUP INDEX

Camshaft and Valves 2.4L [ED1]
Figure 2.4L-510

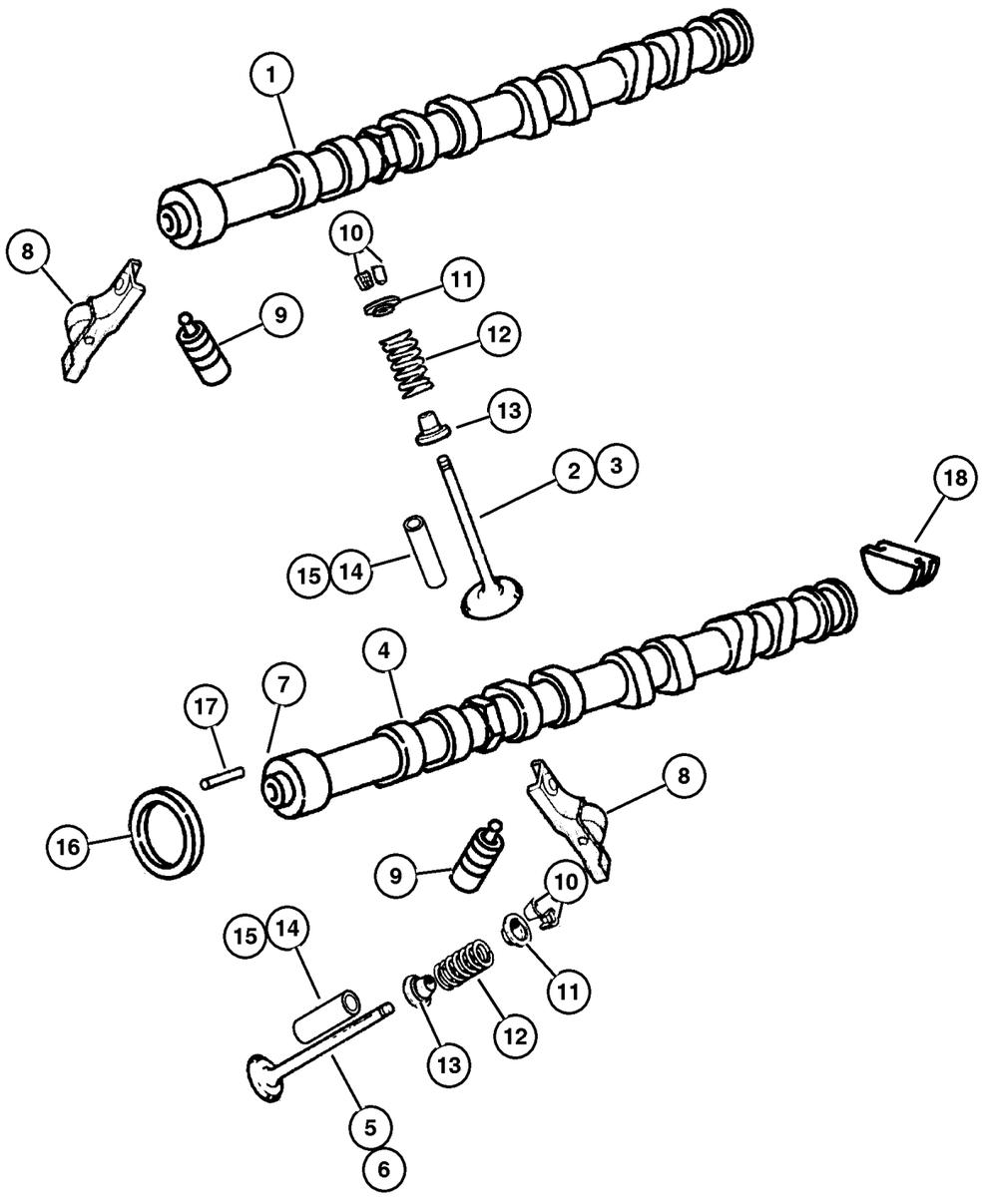

ITEM	PART NUMBER	QTY	LINE	SERIES	BODY	ENGINE	TRANS	TRIM	DESCRIPTION
Note; Sales Codes									
[ED0]= All 2.2L, 2.5L, 2.4L, 4 Cylinder Gas Engines									
1	4781 681AA	1				ED0			CAMSHAFT, Intake
2	4667 969AB	8				ED0			VALVE, Intake, Standard
3	4667 970AB	8				ED0			VALVE, Intake, .015" O/S
4	4781 679AA	1				ED0			CAMSHAFT, Exhaust
5	4777 898AA	8				ED0			VALVE, Exhaust, Standard
6	4777 899AA	8				ED0			VALVE, Exhaust, .015" O/S
7	#53010 549AB	1				ED0			RING, Tone
8	4884 042AA	16				ED0			ROCKER ARM, Valve Roller
9	4777 976AA	16				ED0			ADJUSTER, Valve Lash
10	4777 050AC	32				ED0			LOCK, Valve Spring Retainer
11	4648 682AB	16				ED0			RETAINER, Valve Spring
12	4648 907AA	16				ED0			SPRING, Valve
13	4648 619	16				ED0			SEAL, Valve Guide
14									GUIDE, Intake/Exhaust Valve, Standard Size, (NOT SERVICED)
									(Not Serviced)
15	4667 411	1				ED0			GUIDE, Intake/Exhaust Valve, 7mm Oversize
16	4777 086	2				ED0			SEAL, Camshaft
17	6100 997	1				ED0			PIN, Dowel, Exhaust Cam
18									PLUG, Camshaft
	4667 731	1				ED0			Cylinder Head
	53010 521AA	1				ED0			

JEEP LIBERTY (KJ)

SERIES	LINE	BODY	ENGINE	TRANSMISSION
P = Limited	J = LHD (4WD)	74 = 4 Dr (104.3 WB)	ED1,ED0 = 2.4L Power Tech	DDK = 5 Speed HDManual
H = Sport	U = RHD (4WD)		EKG,EK0 = 3.7L Power Tech	DDD = 5 Speed HD Manual
M = Renegade	T = LHD (2WD)		ENJ = 2.5L 4Cyl Turbo Diesel	DG4,DGQ = Multi-Speed Auto
			ENR = 2.8L 4Cyl Turbo Diesel	DG6 = 4 Speed Auto Transm
			EN0 = 4Cyl Turbo Diesel	DG0 = All Automatic Transm
				DBB = All Manual Transm

AR = Use as required - = Non illustrated part # = New this model year

September 30, 2003

« RETURN TO GROUP INDEX

Timing Belt and Cover, 2.4L [ED1]
Figure 2.4L-610

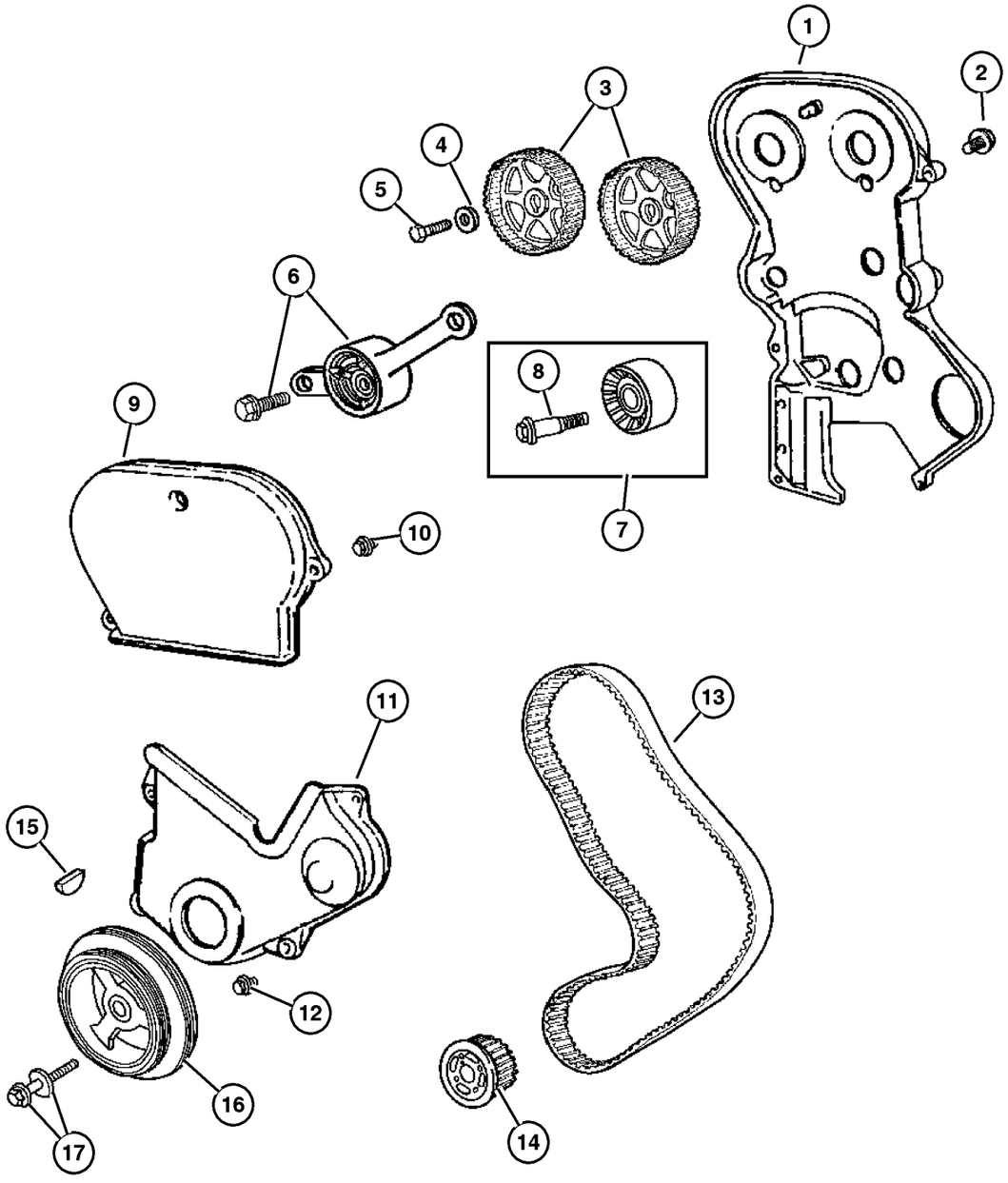

ITEM	PART NUMBER	QTY	LINE	SERIES	BODY	ENGINE	TRANS	TRIM	DESCRIPTION
Note; Sales Codes									
[ED0]= All 2.2L, 2.5L, 2.4L, 4 Cylinder Gas Engines									
1	53010 482AC	1				ED0			COVER, Timing Belt, Inner
2	6502 926	3				ED0			BOLT, Hex Flange Head, M6x1.0x20, Inner Cover Attach
3	4667 609	2				ED0			GEAR, Camshaft
4	6503 438	2				ED0			WASHER, Flared, 13x35.00x4.70
5	6501 405	2				ED0			BOLT, Hex Head, M12x1.50x52
6	4781 570AB	1				ED0			TENSIONER, Belt
7	4781 569AB	1				ED0			PULLEY, Idler
8	6507 550AA	1				ED0			BOLT, Idler Pulley attaching
9	53010 483AB	1				ED0			COVER, Timing Belt, Outer
10	6101 952	5				ED0			SCREW, Hex Flange Head Tapping, M4.8 x 1.59 x 25.00
11	53010 484AB	1				ED0			COVER, Timing Belt, Outer, Lower
12	6101 331	1				ED0			BOLT, M6x1.00x20
13	4621 844	1				ED0			BELT, Timing
14	4648 939AA	1				ED0			GEAR, Crankshaft
15	6035 473	1				ED0			KEY, Crankshaft Sprocket
16	53010 477AA	1				ED0			DAMPER, Crankshaft
17	6503 553	1				ED0			BOLT, Hex Flange Head, M12x1. 75x87.50

JEEP LIBERTY (KJ)

SERIES	LINE	BODY	ENGINE	TRANSMISSION
P = Limited	J = LHD (4WD)	74 = 4 Dr (104.3 WB)	ED1,ED0 = 2.4L Power Tech	DDK = 5 Speed HDManual
H = Sport	U = RHD (4WD)		EKG,EK0 = 3.7L Power Tech	DDD = 5 Speed HD Manual
M = Renegade	T = LHD (2WD)		ENJ = 2.5L 4Cyl Turbo Diesel	DG4,DGQ = Multi-Speed Auto
			ENR = 2.8L 4Cyl Turbo Diesel	DG6 = 4 Speed Auto Transm
			EN0 = 4Cyl Turbo Diesel	DG0 = All Automatic Transm
				DBB = All Manual Transm

Balance Shafts, 2.4L [ED1]
Figure 2.4L-620

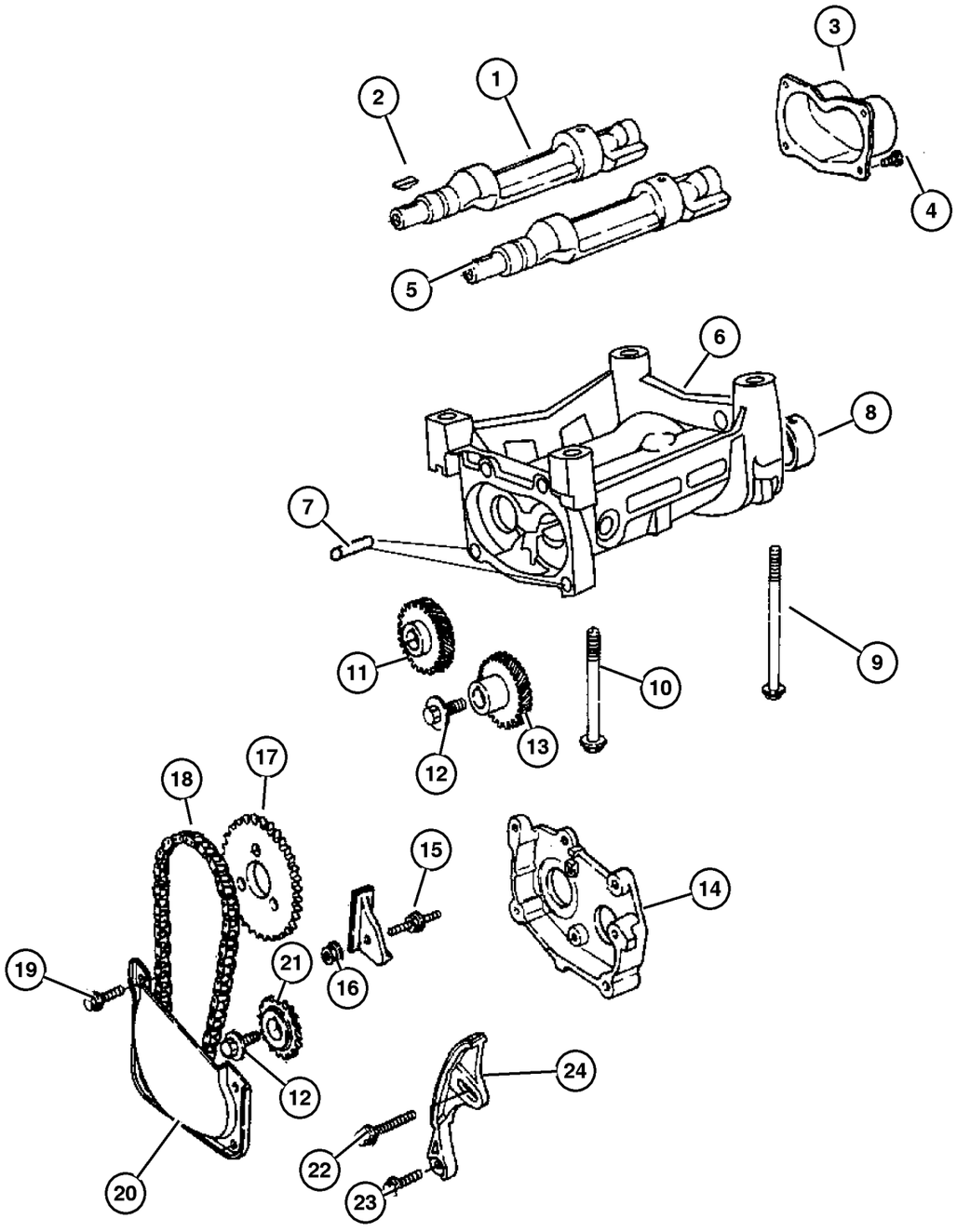

ITEM	PART NUMBER	QTY	LINE	SERIES	BODY	ENGINE	TRANS	TRIM	DESCRIPTION
Note; Sales Codes									
[ED0]= All 2.2L, 2.5L, 2.4L, 4 Cylinder Gas Engines									
1	4621 517	1				ED0			SHAFT, Balance, Driver
2	6500 150	2				ED0			KEY, Crankshaft Sprocket
3	4323 043	1				ED0			COVER, Balance Shaft Carrier
4	6501 714	4				ED0			SCREW AND WASHER, Hex Head, M6x1x18
5	4621 518	1				ED0			SHAFT, Balance, Driven
6	4621 519AC	1				ED0			CARRIER, Balance Shaft
7	5203 466	2				ED0			PIN, Dowel, Carrier Attaching
8									BEARING, Balance Shaft, Seviced With Carrier, Item 6, (NOT SERVICED) (Not Serviced)
9	6504 878AA	2				ED0			BOLT
10	6503 389	2				ED0			BOLT, Hex Flange Head, M10x1.50x108
11	4621 952	1				ED0			GEAR, Balance Shaft Driver
12	6501 404	2				ED0			SCREW AND WASHER, Hex Head, M8x1.25x25
13	4621 951	1				ED0			GEAR, Balance Shaft Driven
14	4323 039	1				ED0			COVER, Balance Shaft Gear
15	6505 188AA	1				ED0			STUD, M6x1.00x40.00
16	6100 047	1				ED0			NUT AND WASHER, Hex Nut-Coned Washer, M6 x 1.00
17	4621 541	1				ED0			GEAR, Crankshaft
18	4621 996	1				ED0			CHAIN, Balance Shaft
19	6100 271	2				ED0			BOLT AND CONED WASHER, Hex Head, M6x45x12.5
20	4323 041AD	1				ED0			TROUGH, Carrier Cover
21	4483 485	1				ED0			GEAR, Balance Shaft
22	6100 279	1				ED0			SCREW AND WASHER, Hex Head, M6x1x35
23	#6508 008AA	1				ED0			SCREW, Hex Flange Head
24	4884 473AA	1				ED0			TENSIONER, Chain

JEEP LIBERTY (KJ)

SERIES	LINE	BODY	ENGINE	TRANSMISSION
P = Limited	J = LHD (4WD)	74 = 4 Dr (104.3 WB)	ED1,ED0 = 2.4L Power Tech	DDK = 5 Speed HDManual
H = Sport	U = RHD (4WD)		EKG,EK0 = 3.7L Power Tech	DDD = 5 Speed HD Manual
M = Renegade	T = LHD (2WD)		ENJ = 2.5L 4Cyl Turbo Diesel	DG4,DGQ = Multi-Speed Auto
			ENR = 2.8L 4Cyl Turbo Diesel	DG6 = 4 Speed Auto Transm
			EN0 = 4Cyl Turbo Diesel	DG0 = All Automatic Transm
				DBB = All Manual Transm

Engine Oiling, 2.4L [ED1]
Figure 2.4L-710

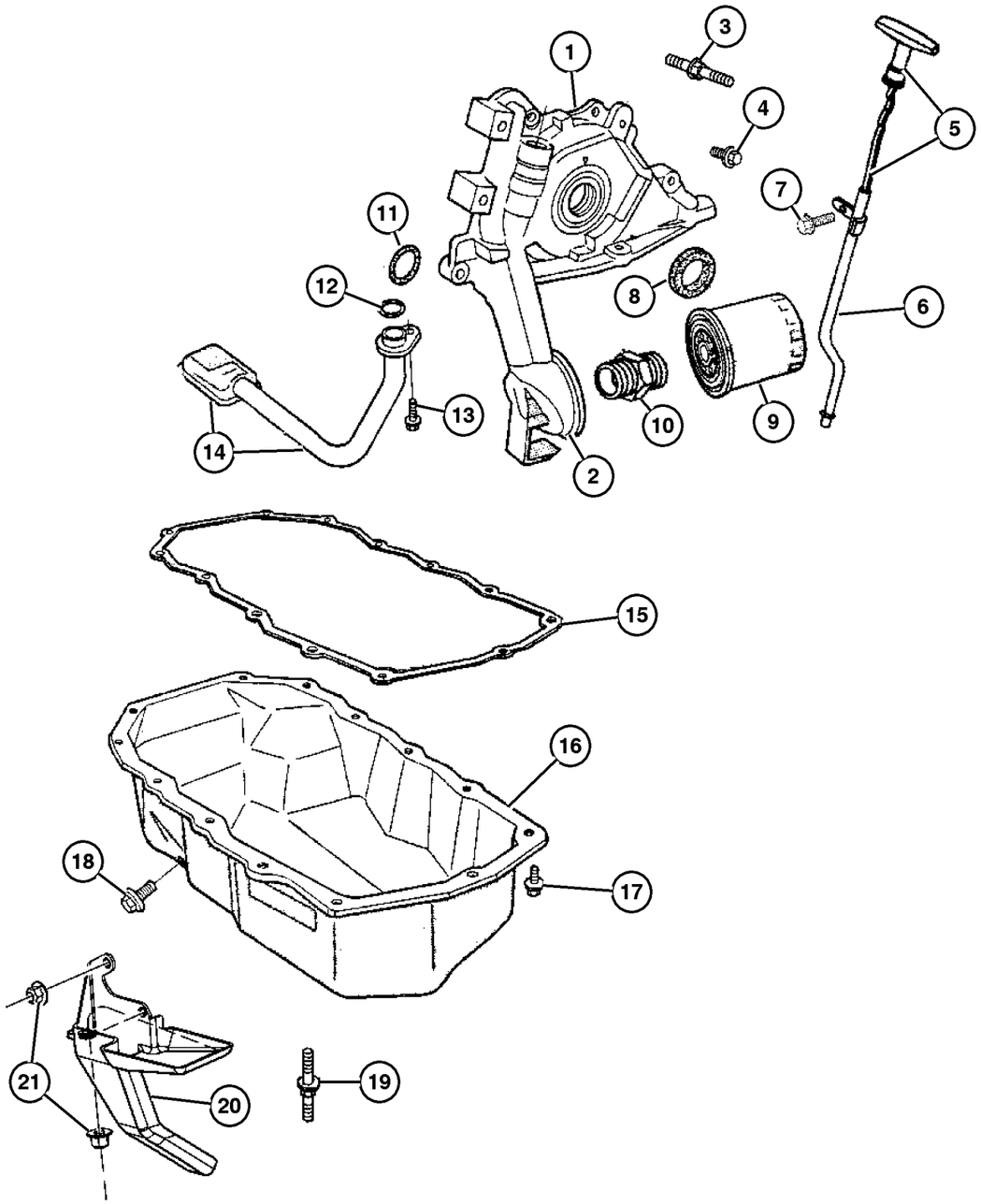

ITEM	PART NUMBER	QTY	LINE	SERIES	BODY	ENGINE	TRANS	TRIM	DESCRIPTION
Note; Sales Codes									
[ED0]= All 2.2L, 2.5L, 2.4L, 4 Cylinder Gas Engines									
1	53010 487AA	1				ED0			PUMP, Engine Oil
2	53010 534AA	1				ED0			ADAPTER, Oil Filter
3	6507 335AA	3				ED0			STUD, Double Ended, Oil Pump to Adapter
4	6100 296	3				ED0			BOLT, Hex Head
5	53010 494AC	1				ED0			INDICATOR, Engine Oil Level
6	53010 476AB	1				ED0			TUBE, Oil Filler
7	6505 788AA	1				ED0			STUD
8	4667 198	1				ED0			SEAL, Front Main Crankshaft
9	4105 409	1				ED0			FILTER, Engine Oil
10	4694 119	1				ED0			CONNECTOR, Oil Filter Adapter
11	4483 444AB	3				ED0			O RING, Front Cover Oil Inlet
12	6032 920	1				ED0			SEAL, Oil Pick Up Tube
13	6500 070	1				ED0			SCREW AND WASHER, Hex Head, M8x1.25x25
14	53010 488AA	1				ED0			TUBE, Oil Pickup
15	4621 579	1				ED0			GASKET, Oil Pan
16	53010 491AA	1				ED0			PAN, Engine Oil
17	6503 969	11				ED0			BOLT, Hex Flange Head, M6x1.00x17
18	6035 417	1				ED0			PLUG, Oil Drain
19	6502 647	2				ED0			STUD, M6x1.00x44, Oil Pan mounting
20	53013 550AA	1	J, T			ED0			GUARD, Splash
21	6505 316AA	3	J, T			ED0			NUT

JEEP LIBERTY (KJ)

SERIES	LINE	BODY	ENGINE	TRANSMISSION
P = Limited	J = LHD (4WD)	74 = 4 Dr (104.3 WB)	ED1,ED0 = 2.4L Power Tech	DDK = 5 Speed HDManual
H = Sport	U = RHD (4WD)		EKG,EK0 = 3.7L Power Tech	DDD = 5 Speed HD Manual
M = Renegade	T = LHD (2WD)		ENJ = 2.5L 4Cyl Turbo Diesel	DG4,DGQ = Multi-Speed Auto
			ENR = 2.8L 4Cyl Turbo Diesel	DG6 = 4 Speed Auto Transm
			EN0 = 4Cyl Turbo Diesel	DG0 = All Automatic Transm
				DBB = All Manual Transm

Intake and Exhaust Manifolds, 2.4L [ED1]
Figure 2.4L-810

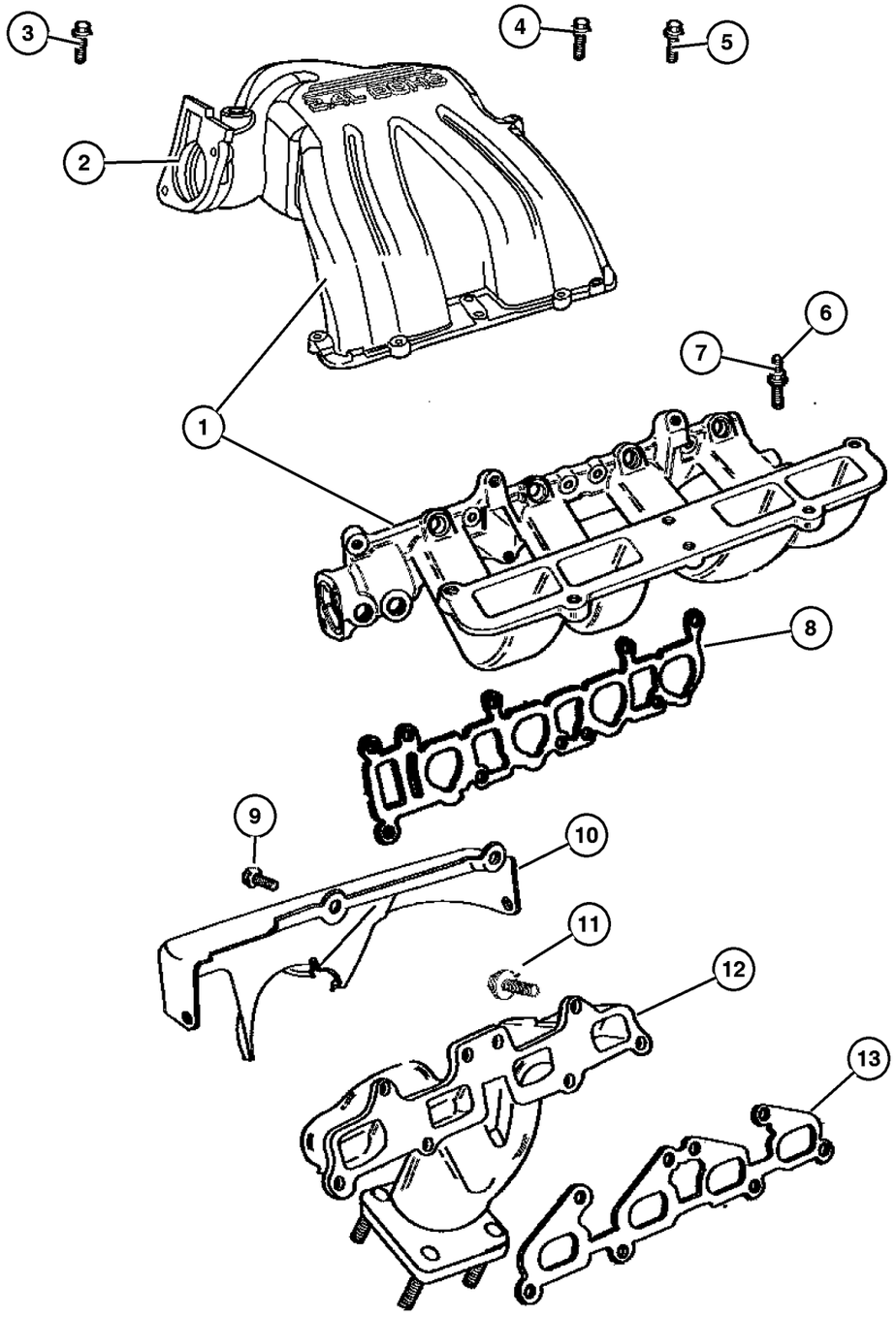

ITEM	PART NUMBER	QTY	LINE	SERIES	BODY	ENGINE	TRANS	TRIM	DESCRIPTION
Note; Sales Codes									
[ED0]= All 2.2L, 2.5L, 2.4L, 4 Cylinder Gas Engines									
1	#4884 485AA	1				ED0			MANIFOLD, Intake
2	#4884 486AA	1				ED0			GASKET, Throttle Body To Intake
3	6101 451	3				ED0			SCREW AND WASHER, Hex Head, M6x1x25
4	6102 192AA	1				ED0			SCREW, Intake Manifold
5	6101 506	2				ED0			BOLT AND CONED WASHER, M8x1.25x18
6	6506 770AA	5				ED0			SCREW
7									NUT, Lock, (NOT REQUIRED)
8	53013 534AA	4				ED0			GASKET, Intake Manifold
9	6506 663AA	3				ED0			SCREW, Hex Flange Head, M8x1.25x11
10	53013 264AA	1				ED0			SHIELD, Exhaust Manifold
11	6503 131	10				ED0			BOLT, Hex Flange Head, M8x1.25x30
12	53013 263AB	1				ED0			MANIFOLD, Exhaust
13	4781 255AA	1				ED0			GASKET, Exhaust Manifold

JEEP LIBERTY (KJ)

SERIES	LINE	BODY	ENGINE	TRANSMISSION
P = Limited	J = LHD (4WD)	74 = 4 Dr (104.3 WB)	ED1,ED0 = 2.4L Power Tech	DDK = 5 Speed HDManual
H = Sport	U = RHD (4WD)		EKG,EK0 = 3.7L Power Tech	DDD = 5 Speed HD Manual
M = Renegade	T = LHD (2WD)		ENJ = 2.5L 4Cyl Turbo Diesel	DG4,DGQ = Multi-Speed Auto
			ENR = 2.8L 4Cyl Turbo Diesel	DG6 = 4 Speed Auto Transm
			EN0 = 4Cyl Turbo Diesel	DG0 = All Automatic Transm
				DBB = All Manual Transm

Crankcase Ventilation , 2.4L [ED1]
Figure 2.4L-910

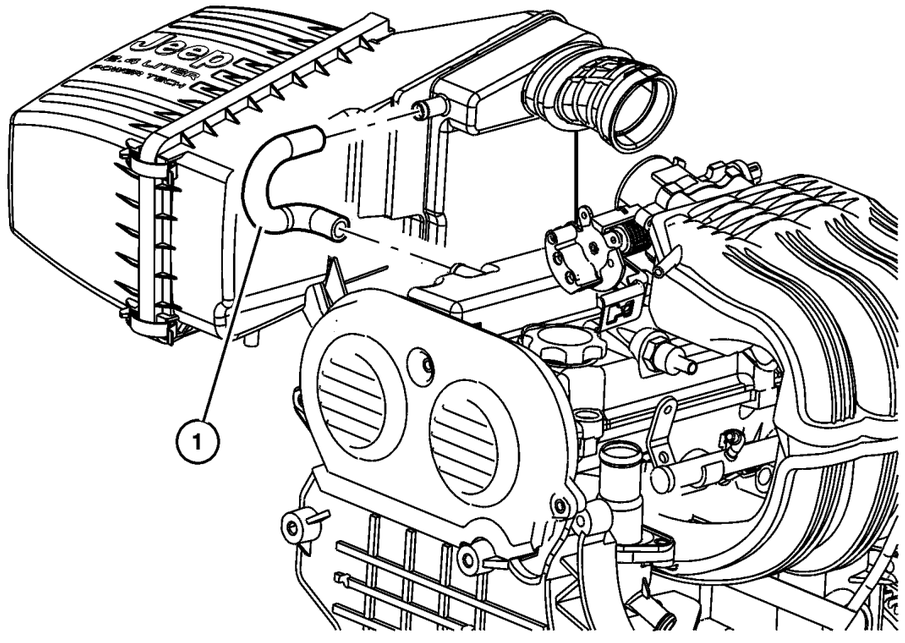

ITEM	PART NUMBER	QTY	LINE	SERIES	BODY	ENGINE	TRANS	TRIM	DESCRIPTION
Note; Sales Codes									
[ED0]= All 2.2L, 2.5L, 2.4L, 4 Cylinder Gas Engines									
1	53013 093AA	1				ED0			TUBE, Crankcase Vent To Air Cleaner
-2	4777 240AD	1				ED0			VALVE, PCV, Threaded Style
-3	53013 231AA	1				ED0			HARNESS, CCV to Intake Manifold

JEEP LIBERTY (KJ)

SERIES	LINE	BODY	ENGINE	TRANSMISSION
P = Limited	J = LHD (4WD)	74 = 4 Dr (104.3 WB)	ED1,ED0 = 2.4L Power Tech	DDK = 5 Speed HDManual
H = Sport	U = RHD (4WD)		EKG,EK0 = 3.7L Power Tech	DDD = 5 Speed HD Manual
M = Renegade	T = LHD (2WD)		ENJ = 2.5L 4Cyl Turbo Diesel	DG4,DGQ = Multi-Speed Auto
			ENR = 2.8L 4Cyl Turbo Diesel	DG6 = 4 Speed Auto Transm
			EN0 = 4Cyl Turbo Diesel	DG0 = All Automatic Transm
				DBB = All Manual Transm

Group – 3.7L

Engine 3.7L Six Cylinder

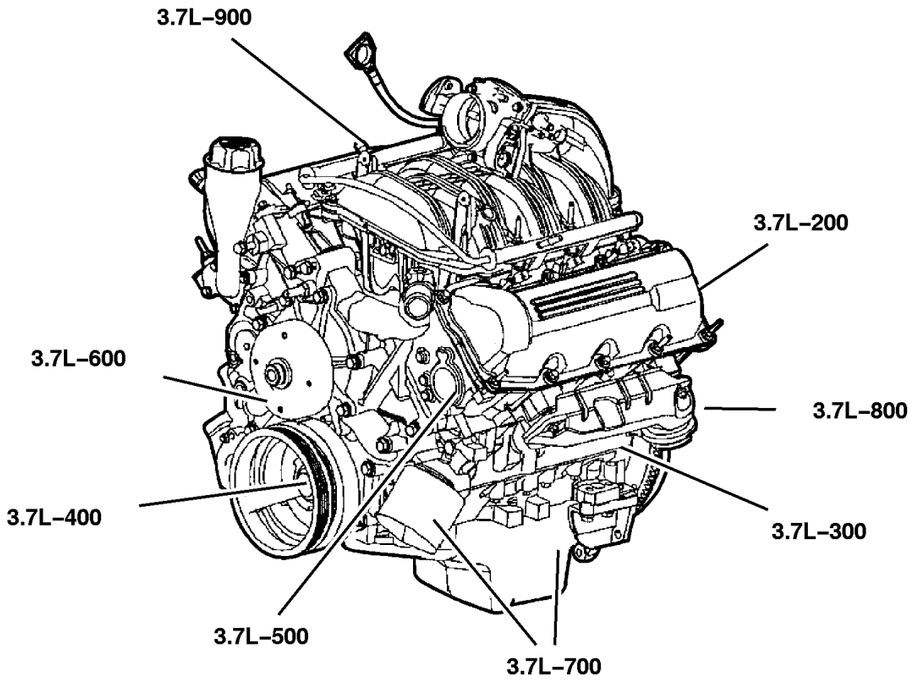

3.7L–200 Cylinder Head 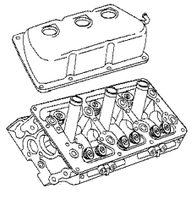	**3.7L–300** Cylinder Block 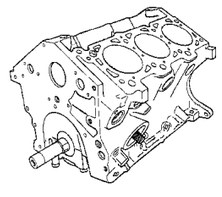	**3.7L–400** Crankshaft, Piston and Torque Converter 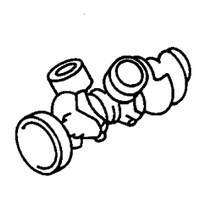	**3.7L–500** Camshafts & Valves 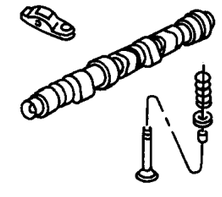
3.7L–600 Timing Belt and Cover 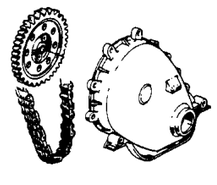	**3.7L–700** Engine Oiling 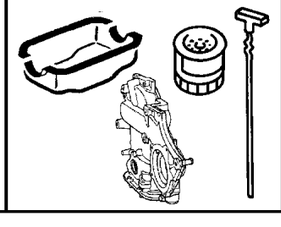	**3.7L–800** Manifolds 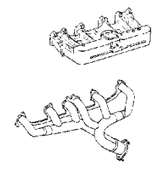	**3.7L–900** Crankcase Ventilation 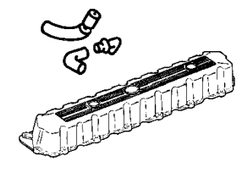

GROUP 3.7L - Engine 3.7L Six Cylinder

Illustration Title	Group-Fig. No.
Cylinder Head	
Cylinder Head 3.7L [EKG]	Fig. 3.7L-210
Cylinder Block	
Cylinder Block, 3.7L [EKG]	Fig. 3.7L-310
Crankshaft, Piston and Torque Converter	
Crankshaft, Pistons and Flywheel, 3.7L [EKG]	Fig. 3.7L-410
Camshafts & Valves	
Camshaft And Valve, 3.7L [EKG]	Fig. 3.7L-510
Timing Belt and Cover	
Timing Cover, 3.7L [EKG]	Fig. 3.7L-610
Timing Chain and Guides, 3.7L [EKG]	Fig. 3.7L-620
Engine Oiling	
Engine Oiling, 3.7L [EKG]	Fig. 3.7L-710
Manifolds	
Manifolds, Intake and Exhaust, 3.7L [EKG]	Fig. 3.7L-810
Crankcase Ventilation	
Crankcase Ventilation, 3.7L [EKG]	Fig. 3.7L-910

Cylinder Head 3.7L [EKG]
Figure 3.7L-210

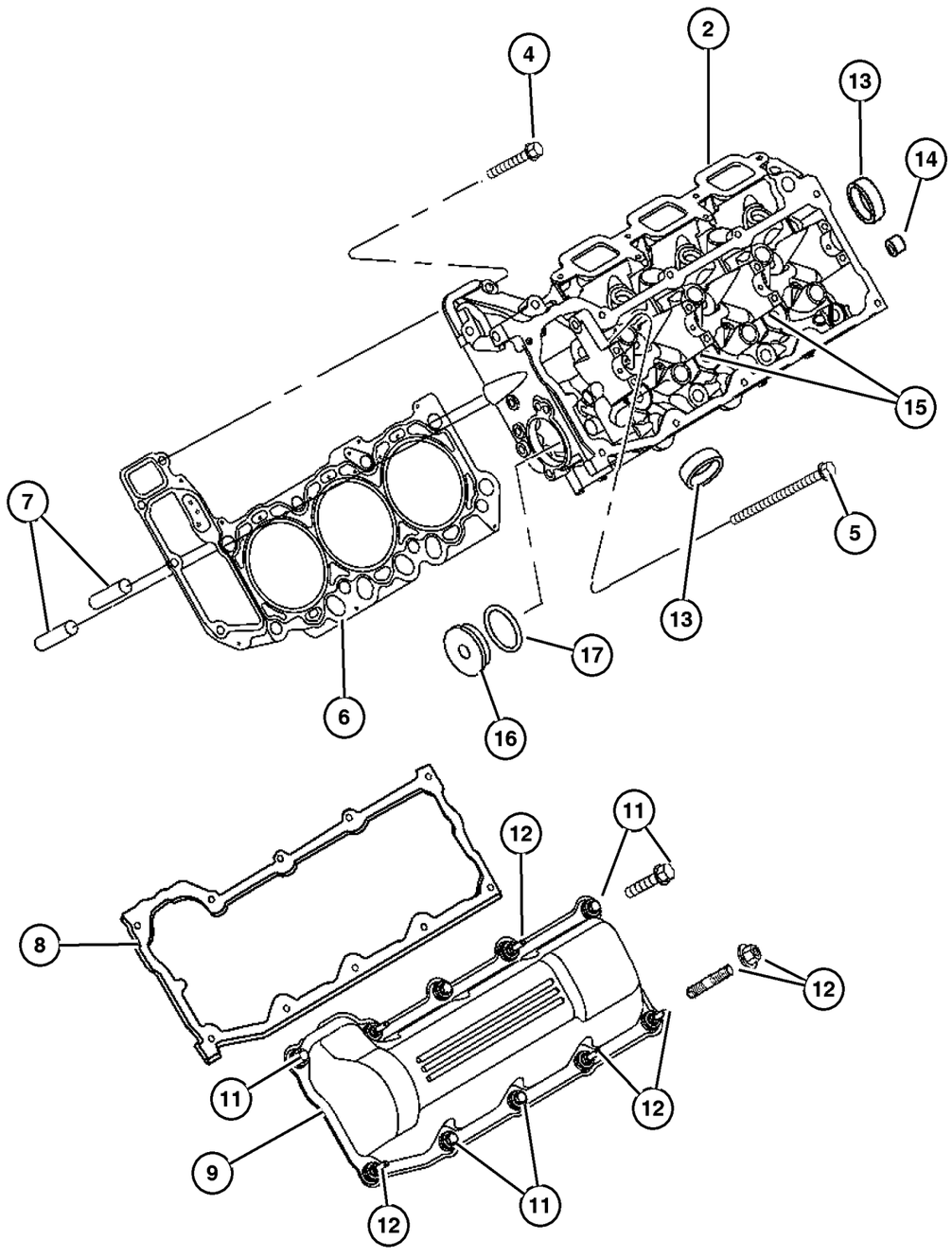

ITEM	PART NUMBER	QTY	LINE	SERIES	BODY	ENGINE	TRANS	TRIM	DESCRIPTION
NOTES: Upper Gasket Package Contains: Cylinder Head and Cylinder Head Cover Gaskets, Intake and Exhaust Manifold Gaskets, Throttle Body Gasket, Valve Guide Seals, Access Hole O-Ring, Oil Fill Housing Gasket and Crankcase Vent Valve O-									
Sales Codes									
[EK0] = All 3.7L 6 Cylinder Gas Engines									
-1									GASKET PACKAGE, Engine Upper, See Notes
	5135 792AA	1				EK0	DBB		
		1				EK0	DG0		
2	53020 987AB	1				EK0			HEAD, Cylinder, Left
-3	53020 988AB	1				EK0			HEAD, Cylinder, Right
4	6506 785AA	8				EK0			SCREW AND WASHER, Hex Head
5	6505 528AA	16				EK0			SCREW AND WASHER, Hex Head
6	5302 0989	2				EK0			GASKET, Cylinder Head, Left and Right
7	5240 849	4				EK0			DOWEL, Block To Clutch Housing
8									GASKET, Valve Cover
	5302 0991	1				EK0			Left
	5302 0992	1				EK0			Right
9	5302 0995	1				EK0			COVER, Cylinder Head, Left
-10	5302 0996	1				EK0			COVER, Cylinder Head, Right
11									SCREW
	53021 309AA	5				EK0			Left
		4				EK0			Right
12									STUD, Serviced With Valve Cover, (NOT SERVICED) (Not Serviced)
13	4556 020	2				EK0			PLUG, Core, 1.25 Diameter, Water Jacket Core
14	6036 307AA	1				EK0			PLUG, Oil Gallery .25-18x.413, Rear of Head
15	6036 308AA	2				EK0			PLUG, [.375-18x.475], Water Jacket Vent
16	5302 1031	1				EK0			PLUG, Access Hole
17	5302 1032	1				EK0			O RING

JEEP LIBERTY (KJ)

SERIES	LINE	BODY	ENGINE	TRANSMISSION
P = Limited	J = LHD (4WD)	74 = 4 Dr (104.3 WB)	ED1,ED0 = 2.4L Power Tech	DDK = 5 Speed HDManual
H = Sport	U = RHD (4WD)		EKG,EK0 = 3.7L Power Tech	DDD = 5 Speed HD Manual
M = Renegade	T = LHD (2WD)		ENJ = 2.5L 4Cyl Turbo Diesel	DG4,DGQ = Multi-Speed Auto
			ENR = 2.8L 4Cyl Turbo Diesel	DG6 = 4 Speed Auto Transm
			EN0 = 4Cyl Turbo Diesel	DG0 = All Automatic Transm
				DBB = All Manual Transm

Cylinder Block, 3.7L [EKG]
Figure 3.7L-310

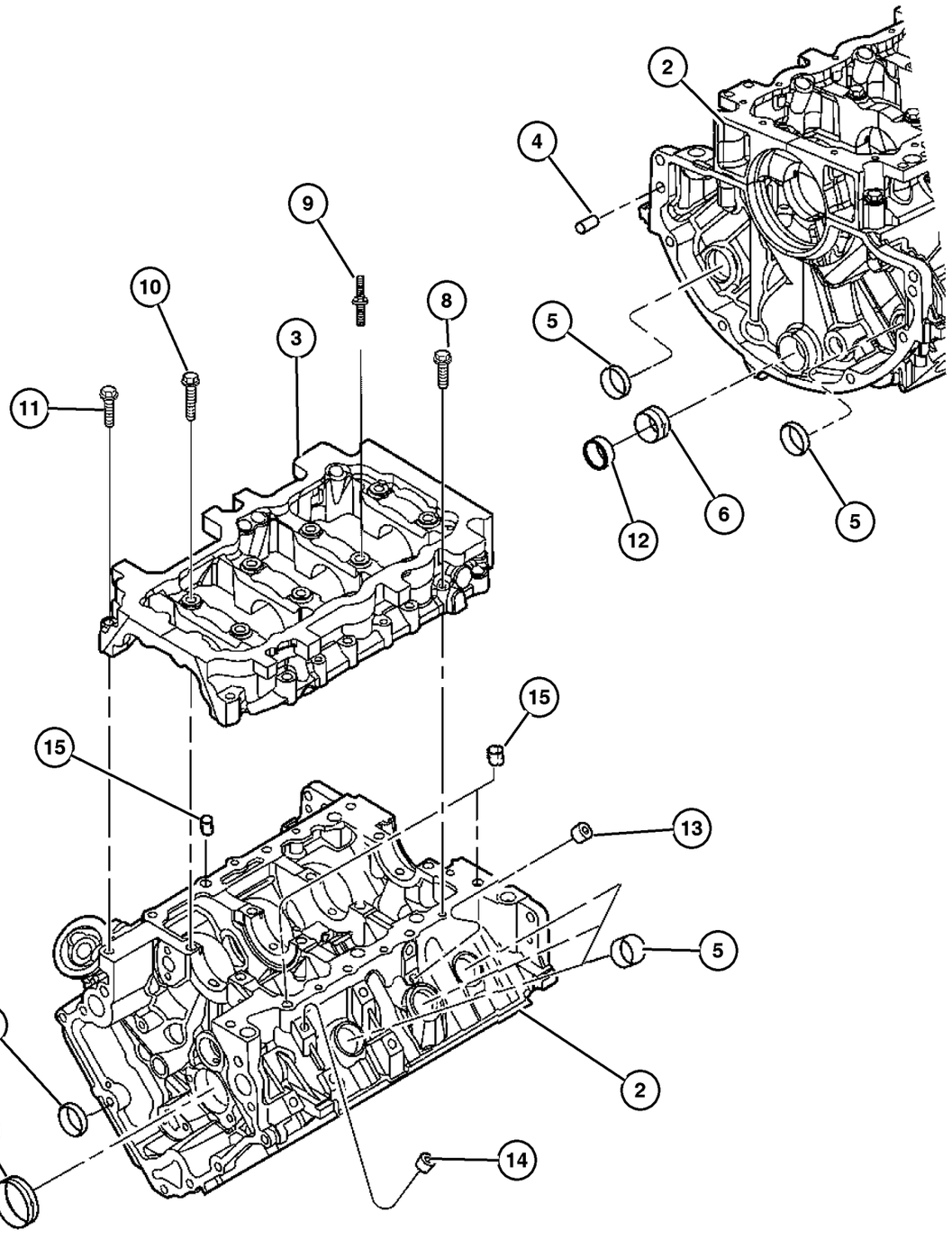

ITEM	PART NUMBER	QTY	LINE	SERIES	BODY	ENGINE	TRANS	TRIM	DESCRIPTION
NOTES: Lower Gasket Package contains: Front and Rear Crankshaft Seals, Oil Pick Up Tube Seal; Oil Pan, Chain Case and Water Pump Gaskets; Chain Case Cover and Oil Tube O-Rings									
Sales Codes									
[EK0] = All 3.7L 6 Cylinder Gas Engines									
-1									GASKET PACKAGE, Engine Lower, See Notes
	5135 793AA	1				EK0	DBB		
		1				EK0	DG0		
2	#5103 475AA	1				EK0			BLOCK, Short
3									BEDPLATE, Serviced With Short Block, (NOT SERVICED) (Not Serviced)
4	1122 532	2				EK0			DOWEL, Block To Clutch Housing
5	6034 804	8				EK0			PLUG, Core, 1.39 Diameter
6									BUSHING, Balance Shaft, Serviced In Short Block Only, (NOT SERVICED) (Not Serviced)
7	6034 804	8				EK0			PLUG, Core, 1.39 Diameter
8	6102 156AA	5				EK0			SCREW, Hex Flange Head, M8x1.25x44
9	6506 187AA	2				EK0			STUD
10	6505 394AA	6				EK0			SCREW AND WASHER
11	6504 410	7				EK0			SCREW, Hex Head
12	4663 942	1				EK0			PLUG, Core, 1.50 Diameter
13	6036 307AA	3				EK0			PLUG, Cylinder Block Coolant Drain, [.250-18x.413]
14	6036 114AA	4				EK0			PLUG, Pipe, Cylinder Block Oil Hole, [.500-14x.560]
15	53010 533AA	5				EK0			DOWEL

JEEP LIBERTY (KJ)

SERIES	LINE	BODY	ENGINE	TRANSMISSION
P = Limited	J = LHD (4WD)	74 = 4 Dr (104.3 WB)	ED1,ED0 = 2.4L Power Tech	DDK = 5 Speed HDManual
H = Sport	U = RHD (4WD)		EKG,EK0 = 3.7L Power Tech	DDD = 5 Speed HD Manual
M = Renegade	T = LHD (2WD)		ENJ = 2.5L 4Cyl Turbo Diesel	DG4,DGQ = Multi-Speed Auto
			ENR = 2.8L 4Cyl Turbo Diesel	DG6 = 4 Speed Auto Transm
			EN0 = 4Cyl Turbo Diesel	DG0 = All Automatic Transm
				DBB = All Manual Transm

AR = Use as required - = Non illustrated part # = New this model year **September 30, 2003**

« RETURN TO GROUP INDEX

Crankshaft, Pistons and Flywheel, 3.7L [EKG]
Figure 3.7L-410

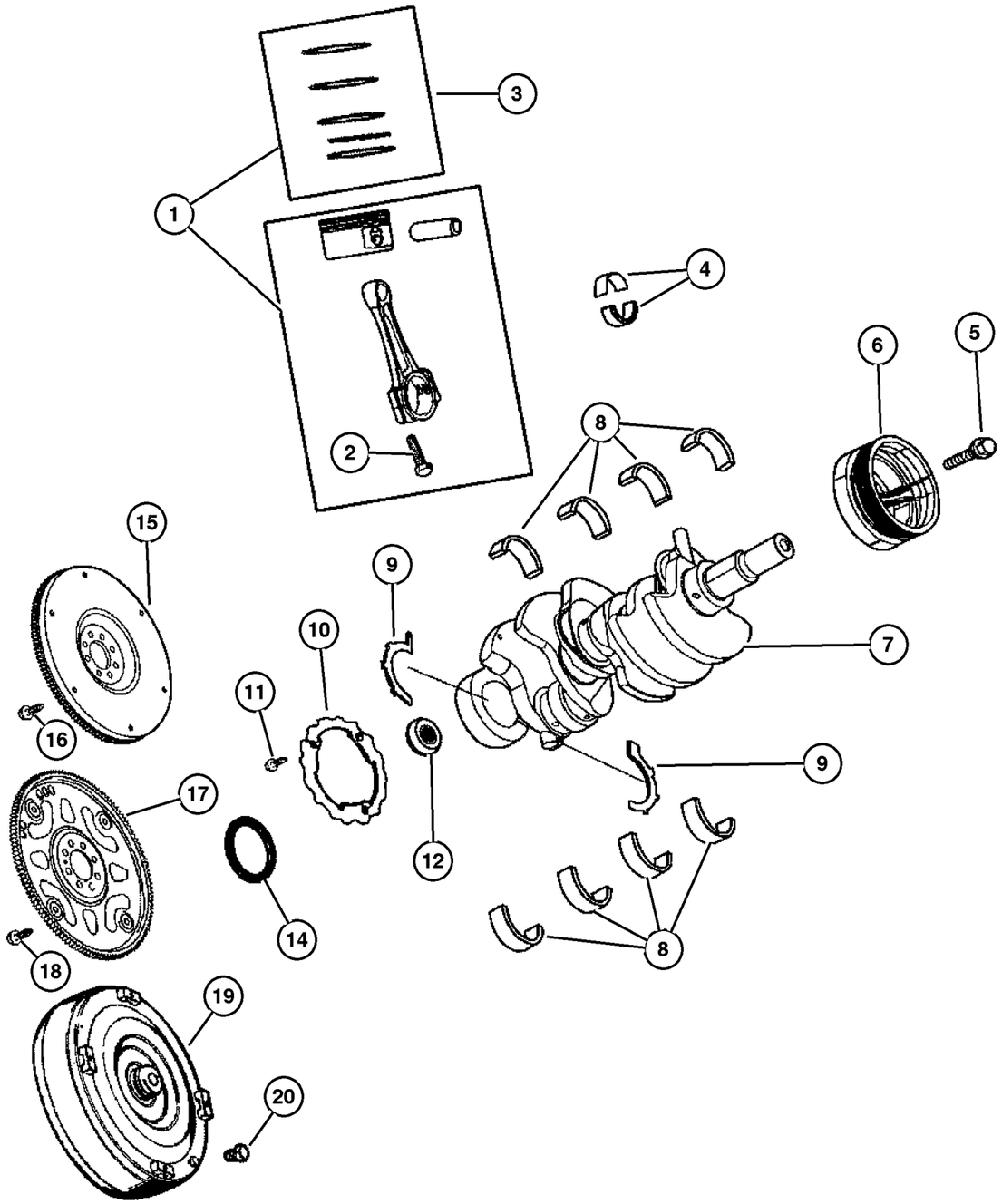

ITEM	PART NUMBER	QTY	LINE	SERIES	BODY	ENGINE	TRANS	TRIM	DESCRIPTION
NOTES: For Crankshaft Indentification, Stamping Location and Bearing Information Refer to the Service Manual									
Sales Codes:									
[DBB] = All Manual Transmissions									
[DG0] = All Automatic Transmissions									
[EK0] = All 3.7L 6 Cylinder Gas Engines									
1	5019 316AA	6				EK0			PISTON PIN AND ROD, STD
2	6504 720	12				EK0			BOLT, Connecting Rod
3	5012 364AC	6				EK0			RING PACKAGE, Piston, Standard Size
4	5019 447AA	12				EK0			BEARING PACKAGE, Connecting Rod, Standard
5	6504 415	1				EK0			SCREW AND WASHER
6	53020 689AB	1				EK0			DAMPER, Crankshaft
7	#53020 959AB	1				EK0			CRANKSHAFT
8									BEARING PACKAGE, Crankshaft, A Grade
	5066 733AA	2				EK0			[R] Crankshaft, Mains 1 and 4
	5066 734AA	2				EK0			[R] Crankshaft, Mains 2 and 3
	5066 735AA	2				EK0			[S] Crankshaft, Mains 1 and 4
	5066 736AA	2				EK0			[S] Crankshaft, Mains 2 and 3
	5066 737AA	2				EK0			[T] Crankshaft, Mains 1 and 4
	5066 738AA	2				EK0			[T] Crankshaft, Mains 2 and 3
	5066 739AA	2				EK0			[U] Crankshaft, Mains 1 and 4
	5066 740AA	2				EK0			[U] Crankshaft, Mains 2 and 3
9	5012 356AB	1				EK0			WASHER PACKAGE, Washer, Thrust
10									RING, Tone, Serviced with Crankshaft , (NOT SERVICED) (Not Serviced)
11	6504 480	3				EK0			SCREW, M6x1x25
12	53009 180AB	1				EK0	DBB		BEARING, Pilot
-13	4736 204AB	1				EK0	DG6		SLEEVE, Crankshaft Pilot
14	5302 0788	1				EK0			SEAL, Crankshaft Bearing Oil
15	53021 280AA	1				EK0	DBB		FLYWHEEL
16	6504 398	8				EK0	DBB		SCREW
17	4736 253AA	1				EK0	DG6		PLATE, Torque Converter Drive
18	6503 465	8				EK0	DG0		BOLT, Drive Plate and Flywheel
19									TORQUE CONVERTER
	4752 496AA	1	T				DG4		
		1	J, U				DG4		
20	1949 765	4					DG4		SCREW, Hex Head Header Point, .312-24x.44, Driveplate to Conv

JEEP LIBERTY (KJ)

SERIES	LINE	BODY	ENGINE	TRANSMISSION
P = Limited	J = LHD (4WD)	74 = 4 Dr (104.3 WB)	ED1,ED0 = 2.4L Power Tech	DDK = 5 Speed HDManual
H = Sport	U = RHD (4WD)		EKG,EK0 = 3.7L Power Tech	DDD = 5 Speed HD Manual
M = Renegade	T = LHD (2WD)		ENJ = 2.5L 4Cyl Turbo Diesel	DG4,DGQ = Multi-Speed Auto
			ENR = 2.8L 4Cyl Turbo Diesel	DG6 = 4 Speed Auto Transm
			EN0 = 4Cyl Turbo Diesel	DG0 = All Automatic Transm
				DBB = All Manual Transm

AR = Use as required - = Non illustrated part # = New this model year **September 30, 2003**

« RETURN TO GROUP INDEX

Camshaft And Valve, 3.7L [EKG]
Figure 3.7L-510

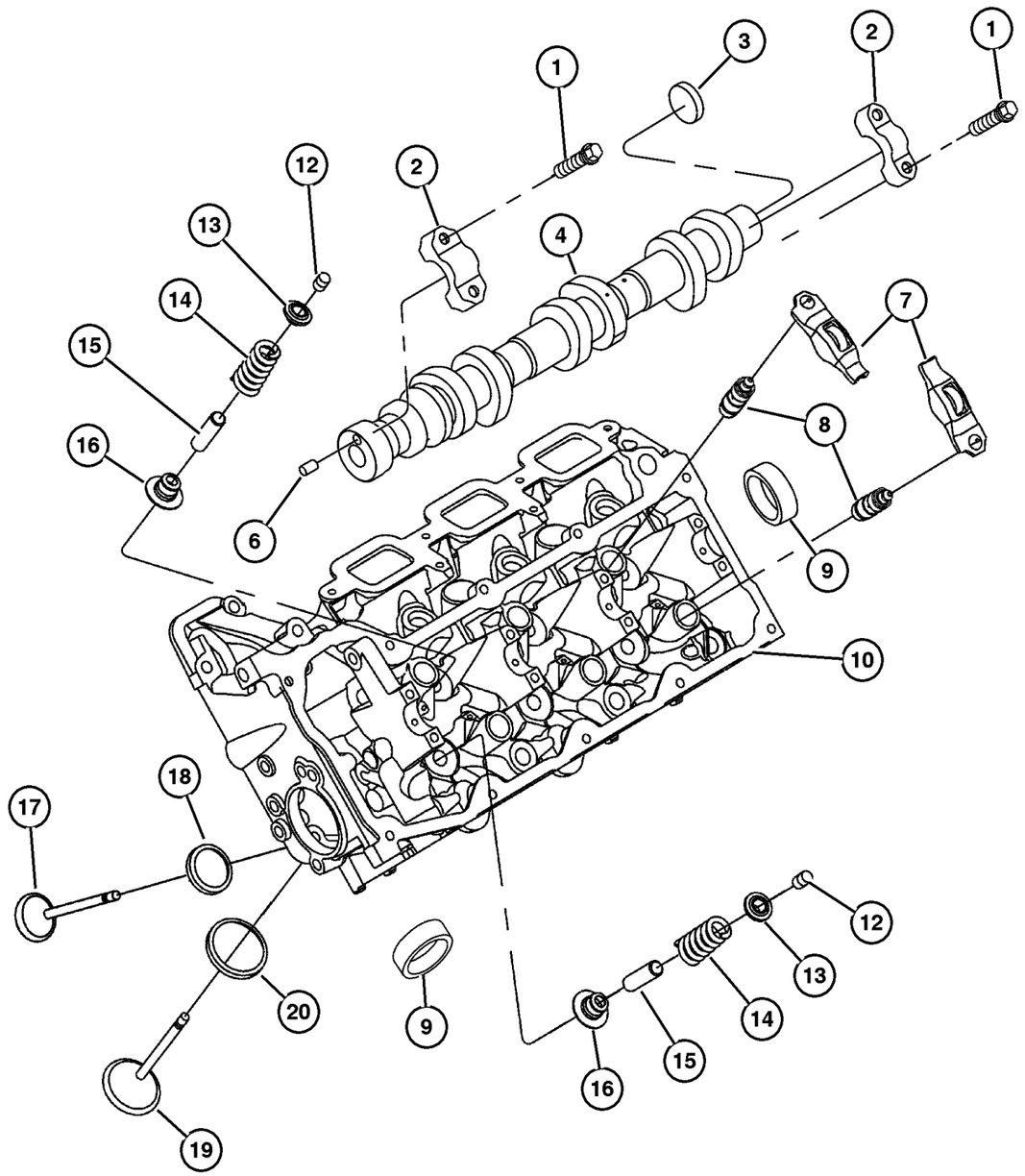

ITEM	PART NUMBER	QTY	LINE	SERIES	BODY	ENGINE	TRANS	TRIM	DESCRIPTION
NOTES:									
Sales Codes									
[EK0] = All 3.7L 6 Cylinder Gas Engines									
1	6505 034AA	8				EK0			SCREW, M6x1x40
2									CAP, Serviced With Head Only, (NOT SERVICED) (Not Serviced)
3	6036 473AA	1				EK0			WASHER
4	53021 203AB	1				EK0			CAMSHAFT, Engine, Left
-5	53021 204AB	1				EK0			CAMSHAFT, Engine, Right
6	6100 902	1				EK0			DOWEL, M6x14
7	53021 913AA	12				EK0			ROCKER ARM, Valve
8	5302 1077	12				EK0			ADJUSTER, Valve Lash
9	4556 020	2				EK0			PLUG, Core, 1.25 Diameter
10	53020 987AB	1				EK0			HEAD, Cylinder, Left
-11	53020 988AB	1				EK0			HEAD, Cylinder, Right
12	4536 513AB	24				EK0			LOCK, Valve Spring Retainer
13	4781 090AA	12				EK0			RETAINER, Valve Spring
14									SPRING, Valve
	53021 775AA	6				EK0			Intake
	53021 873AA	6				EK0			Exhaust
15									INSERT, Valve Guide, Serviced With Head Only, (NOT SERVICED) (Not Serviced)
16	53020 752AD	12				EK0			SEAL, Valve Guide
17	53021 916AA	6				EK0			VALVE, Exhaust, Standard
18									SEAT, Exhaust Valve, Serviced With Head Only, (NOT SERVICED) (Not Serviced)
19	53020 747AB	6				EK0			VALVE, Intake, Standard
20									SEAT, Intake Valve, Serviced With Head Only, (NOT SERVICED) (Not Serviced)

JEEP LIBERTY (KJ)

SERIES	LINE	BODY	ENGINE	TRANSMISSION
P = Limited	J = LHD (4WD)	74 = 4 Dr (104.3 WB)	ED1,ED0 = 2.4L Power Tech	DDK = 5 Speed HDManual
H = Sport	U = RHD (4WD)		EKG,EK0 = 3.7L Power Tech	DDD = 5 Speed HD Manual
M = Renegade	T = LHD (2WD)		ENJ = 2.5L 4Cyl Turbo Diesel	DG4,DGQ = Multi-Speed Auto
			ENR = 2.8L 4Cyl Turbo Diesel	DG6 = 4 Speed Auto Transm
			EN0 = 4Cyl Turbo Diesel	DG0 = All Automatic Transm
				DBB = All Manual Transm

Timing Cover, 3.7L [EKG]
Figure 3.7L-610

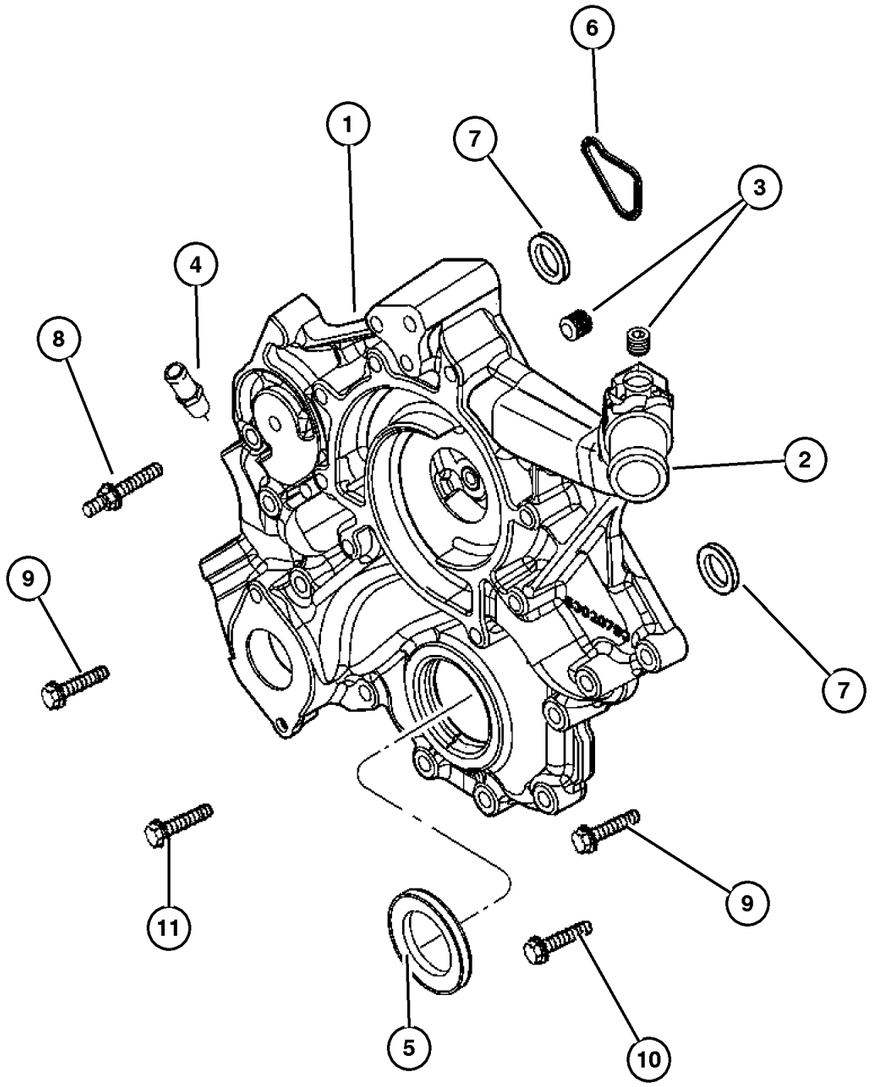

ITEM	PART NUMBER	QTY	LINE	SERIES	BODY	ENGINE	TRANS	TRIM	DESCRIPTION
NOTES:									
Sales Codes									
[EK0] = All 3.7L 6 Cylinder Gas Engines									
1	53021 238AB	1				EK0			COVER, Timing Belt
2									PIPE FITTING, Chain Case Cover, .375-18x2, Serviced with Cover, (NOT SERVICED) (Not Serviced)
3	6036 308AA	3				EK0			PLUG, Also serviced wih Cover
4	6035 854	2				EK0			FITTING, Y-Style, Also serviced wih Cover
5	53021 313AA	1				EK0			SEAL, Crankshaft Oil, Front, Also serviced wih Cover
6	53021 226AA	1				EK0			GASKET, Chain Case Cover, Also serviced wih Cover
7	53021 239AA	2				EK0			O RING, Also serviced wih Cover
8	6505 293AA	1				EK0			STUD
9	6507 776AA	3				EK0			SCREW, Hex Flange Head
10	6102 380AA	5				EK0			SCREW, Hex Flange Head
11	6102 381AA	5				EK0			SCREW, Hex Flange Head

JEEP LIBERTY (KJ)

SERIES	LINE	BODY	ENGINE	TRANSMISSION
P = Limited	J = LHD (4WD)	74 = 4 Dr (104.3 WB)	ED1,ED0 = 2.4L Power Tech	DDK = 5 Speed HDManual
H = Sport	U = RHD (4WD)		EKG,EK0 = 3.7L Power Tech	DDD = 5 Speed HD Manual
M = Renegade	T = LHD (2WD)		ENJ = 2.5L 4Cyl Turbo Diesel	DG4,DGQ = Multi-Speed Auto
			ENR = 2.8L 4Cyl Turbo Diesel	DG6 = 4 Speed Auto Transm
			EN0 = 4Cyl Turbo Diesel	DG0 = All Automatic Transm
				DBB = All Manual Transm

Timing Chain and Guides, 3.7L [EKG]
Figure 3.7L-620

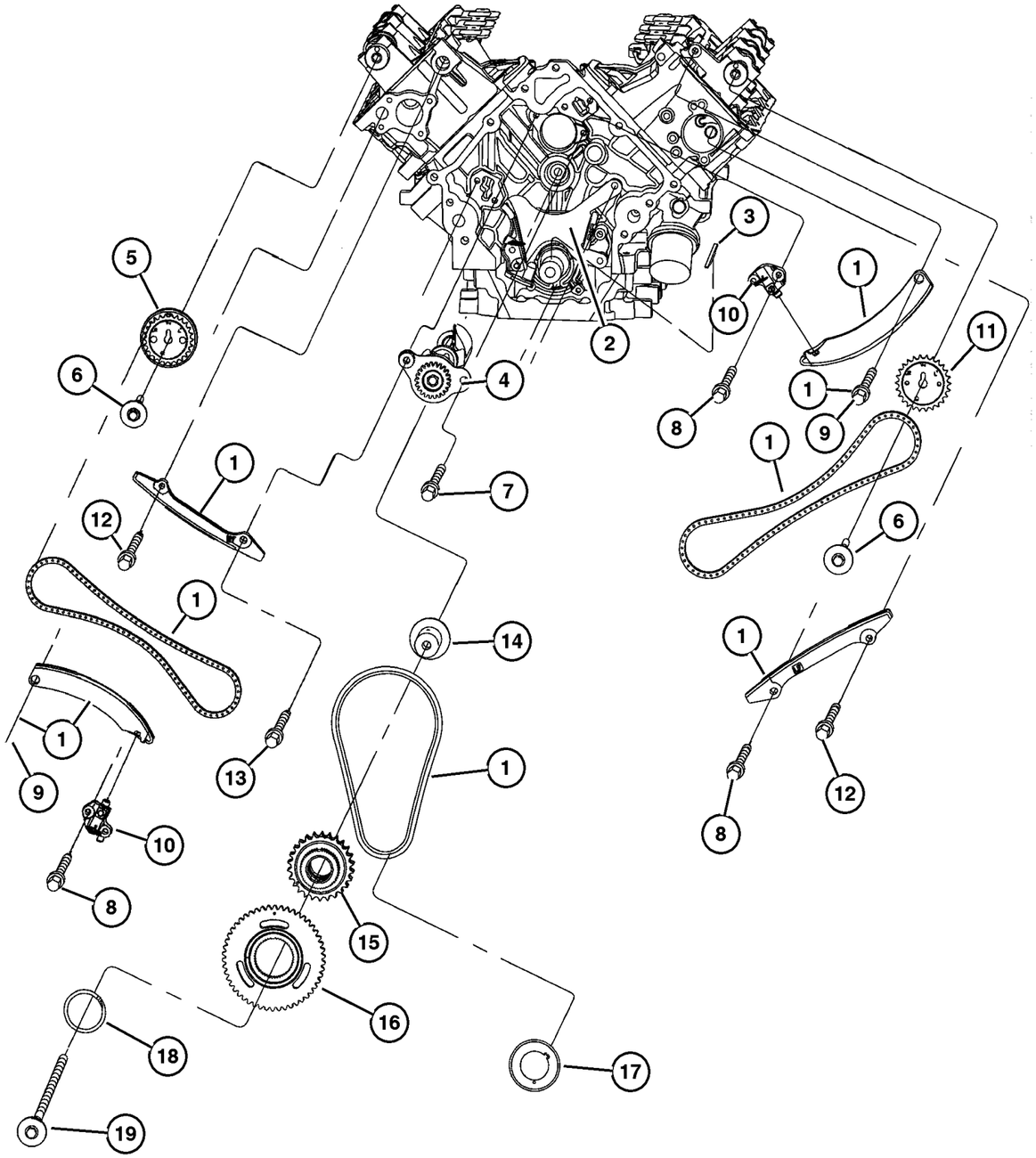

ITEM	PART NUMBER	QTY	LINE	SERIES	BODY	ENGINE	TRANS	TRIM	DESCRIPTION
NOTES:									
Sales Codes									
[EK0] = All 3.7L, 6 Cylinder Gas Engines									
1	5019 423AC	1				EK0			TIMING DRIVE PACKAGE, Engine
2	5302 0681	1				EK0			TENSIONER, Chain, Primary, Also serviced in Timing Drive Package
3	6504 471	1				EK0			KEY, Woodruff
4	5302 0818	1				EK0			SHAFT, Balance
5	#53021 291AD	1				EK0			SPROCKET, Camshaft, Right
6	6504 429	2				EK0			SCREW AND WASHER, Hex
7	6101 452	1				ED0, EK0			SCREW AND WASHER, Hex Head, M8x1.25x20
8	6503 257	5				EK0			BOLT, Hex Head, M8x1.25x37.50
9	6506 028AA	2				EK0			SCREW, Also serviced in Drive Package
10	53021 249AA	1				EK0			TENSIONER, Chain Secondary,Right
	53021 250AA	1				EK0			Secondary,Left
11	53021 290AA	1				EK0			SPROCKET, Camshaft, Left
12	6102 111AA	2				EK0			SCREW AND WASHER
13	6102 190AA	1				EK0			SCREW
14	5302 0835	1				EK0			SHAFT, Idler
15	53021 298AB	1				EK0			SHAFT, Balance, Driver
16	53021 170AA	1				EK0			SPROCKET, Idler
17	5302 0679	1				EK0			SPROCKET, Crankshaft
18	53021 171AA	1				EK0			RETAINING RING, Idler
19	6504 370	1				EK0			SCREW AND WASHER, Hex

JEEP LIBERTY (KJ)

SERIES	LINE	BODY	ENGINE	TRANSMISSION
P = Limited	J = LHD (4WD)	74 = 4 Dr (104.3 WB)	ED1,ED0 = 2.4L Power Tech	DDK = 5 Speed HDManual
H = Sport	U = RHD (4WD)		EKG,EK0 = 3.7L Power Tech	DDD = 5 Speed HD Manual
M = Renegade	T = LHD (2WD)		ENJ = 2.5L 4Cyl Turbo Diesel	DG4,DGQ = Multi-Speed Auto
			ENR = 2.8L 4Cyl Turbo Diesel	DG6 = 4 Speed Auto Transm
			EN0 = 4Cyl Turbo Diesel	DG0 = All Automatic Transm
				DBB = All Manual Transm

AR = Use as required - = Non illustrated part # = New this model year **September 30, 2003**

« RETURN TO GROUP INDEX

Engine Oiling, 3.7L [EKG]
Figure 3.7L-710

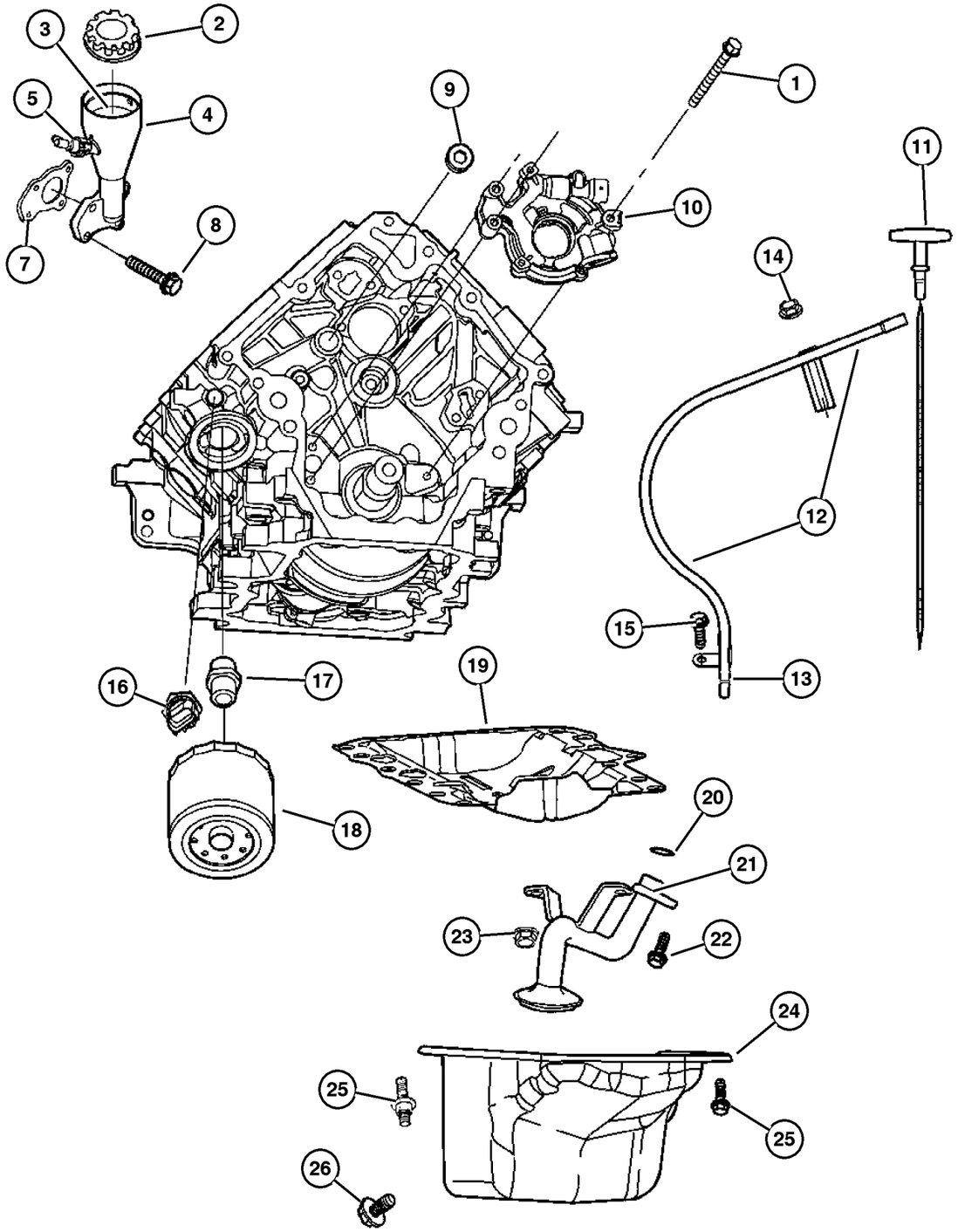

ITEM	PART NUMBER	QTY	LINE	SERIES	BODY	ENGINE	TRANS	TRIM	DESCRIPTION
NOTES:									
Sales Code									
[EK0] = All 3.7L 6 Cylinder Gas Engines									
1	6100 932	1				EK0			BOLT, Hex
2	53032 389AC	1				EK0			CAP, Oil Filler
3	53032 126AA	1				EK0			BAFFLE, Oil Fill, None
4	5302 0890	1				EK0			HOUSING, Oil Fill
5	53032 800AA	1				EK0			VALVE, Crankcase Vent
-6	53031 711AA	1				EK0			O RING
7	53020 889AB	1				EK0			GASKET, Oil Fill Housing
8	6505 504AA	3				EK0			SCREW
9	6036 114AA	4				EK0			PLUG, Pipe
10	5302 0827	1				EK0			PUMP, Engine Oil
11	#53021 026AG	1				EK0			INDICATOR, Engine Oil Level
12	53021 274AE	1				EK0			TUBE, Oil Gauge
13	53021 144AA	1				EK0			O RING, Engine Oil Indicator
14	6102 050AA	1				EK0			SCREW, Hex Flange Head, M6.3 x 1.81 x 15.00
15	6504 810AA	1				EK0			SCREW AND WASHER, Hex
16	4868 672AA	1				EK0			SWITCH, Oil Pressure
17	5300 7563	1				EK0			CONNECTOR, Oil Filter
18	4781 452AA	1				EK0			FILTER, Engine Oil
19	53021 001AB	1				EK0			GASKET, Oil Pan
20	5302 0861	1				EK0			SEAL, Oil Pick Up Tube
21	#53021 776AA	1				EK0			TUBE, Oil Pickup
22	6102 046AA	1				EK0			SCREW AND WASHER
23	6502 756	2				EK0			NUT, Hex Lock, M8x1.25
24	#53021 779AB	1				EK0			PAN, Engine Oil
25	6504 810AA	17				EK0			SCREW AND WASHER, Hex
26	6506 100AA	1				EK0			PLUG, Oil Drain

JEEP LIBERTY (KJ)

SERIES	LINE	BODY	ENGINE	TRANSMISSION
P = Limited	J = LHD (4WD)	74 = 4 Dr (104.3 WB)	ED1,ED0 = 2.4L Power Tech	DDK = 5 Speed HDManual
H = Sport	U = RHD (4WD)		EKG,EK0 = 3.7L Power Tech	DDD = 5 Speed HD Manual
M = Renegade	T = LHD (2WD)		ENJ = 2.5L 4Cyl Turbo Diesel	DG4,DGQ = Multi-Speed Auto
			ENR = 2.8L 4Cyl Turbo Diesel	DG6 = 4 Speed Auto Transm
			EN0 = 4Cyl Turbo Diesel	DG0 = All Automatic Transm
				DBB = All Manual Transm

AR = Use as required - = Non illustrated part # = New this model year **September 30, 2003**

« RETURN TO GROUP INDEX

Manifolds, Intake and Exhaust, 3.7L [EKG]
Figure 3.7L-810

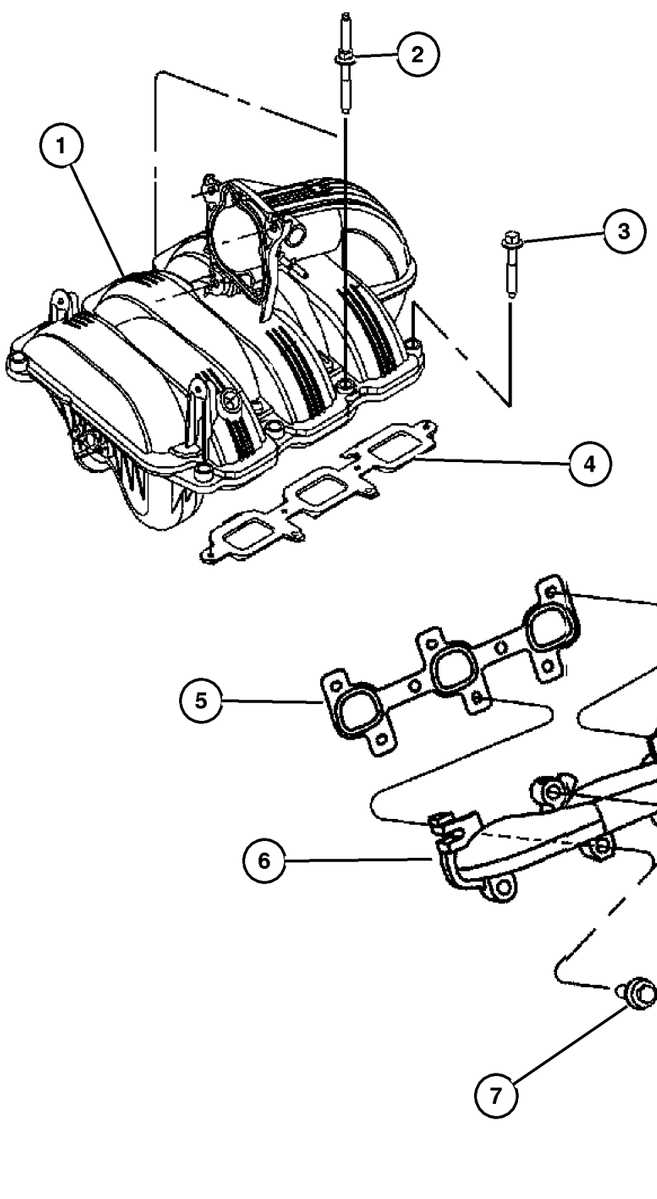

ITEM	PART NUMBER	QTY	LINE	SERIES	BODY	ENGINE	TRANS	TRIM	DESCRIPTION
NOTES:									
Sales Codes									
[EK0] = All 3.7L 6 Cylinder Gas Engines									
1	#53031 080AF	1				EK0			MANIFOLD, Intake
2	6505 500AA	7				EK0			STUD
3	6505 499AA	1				EK0			SCREW
4	53010 310AB	6				EK0			SEAL, Intake Manifold
5									GASKET, Exhaust Manifold
	5303 1090	1				EK0			Right
	5303 1091	1				EK0			Left
6									MANIFOLD, Exhaust
	53031 086AB	1				EK0			Right
	53031 085AB	1				EK0			Left
7	6504 340	4				EK0			SCREW AND WASHER, Hex
8	6504 331	8				EK0			STUD
9	6505 316AA	8				EK0			NUT
10									SHIELD, Exhaust Manifold
	53031 092AB	1				EK0			Right
	53031 093AB	1				EK0			Left

JEEP LIBERTY (KJ)

SERIES	LINE	BODY	ENGINE	TRANSMISSION
P = Limited	J = LHD (4WD)	74 = 4 Dr (104.3 WB)	ED1,ED0 = 2.4L Power Tech	DDK = 5 Speed HDManual
H = Sport	U = RHD (4WD)		EKG,EK0 = 3.7L Power Tech	DDD = 5 Speed HD Manual
M = Renegade	T = LHD (2WD)		ENJ = 2.5L 4Cyl Turbo Diesel	DG4,DGQ = Multi-Speed Auto
			ENR = 2.8L 4Cyl Turbo Diesel	DG6 = 4 Speed Auto Transm
			EN0 = 4Cyl Turbo Diesel	DG0 = All Automatic Transm
				DBB = All Manual Transm

Crankcase Ventilation, 3.7L [EKG]
Figure 3.7L-910

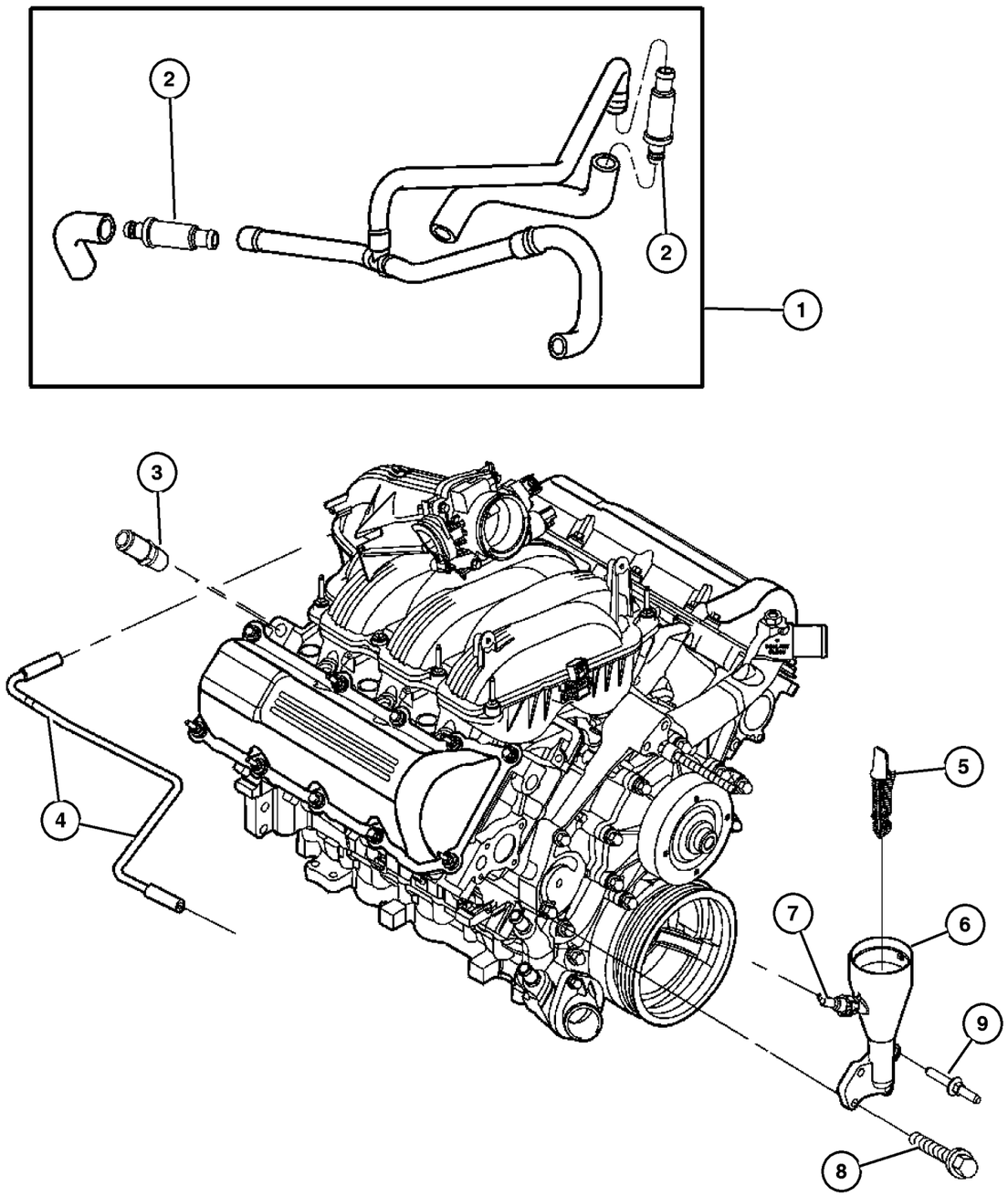

ITEM	PART NUMBER	QTY	LINE	SERIES	BODY	ENGINE	TRANS	TRIM	DESCRIPTION
NOTES:									
Sales Codes									
[EK0] = All 3.7L 6 Cylinder Gas Engines									
1	#53013 723AA	1				EK0			HOSE, Breather
2	53030 850AB	2				EK0			BREATHER, Crankcase
3	6035 854	2				EK0			FITTING, Y-Style
4	53031 133AE	1				EK0			TUBE, Crankcase Vent To Air Cleaner
5	53032 126AA	1				EK0			BAFFLE, Oil Fill, None
6	5302 0890	1				EK0			HOUSING, Oil Fill
7	53032 800AA	1				EK0			VALVE, Crankcase Vent
8	6505 504AA	3				EK0			SCREW
9	6505 566AA	1				EK0			STUD

JEEP LIBERTY (KJ)

SERIES	LINE	BODY	ENGINE	TRANSMISSION
P = Limited	J = LHD (4WD)	74 = 4 Dr (104.3 WB)	ED1,ED0 = 2.4L Power Tech	DDK = 5 Speed HDManual
H = Sport	U = RHD (4WD)		EKG,EK0 = 3.7L Power Tech	DDD = 5 Speed HD Manual
M = Renegade	T = LHD (2WD)		ENJ = 2.5L 4Cyl Turbo Diesel	DG4,DGQ = Multi-Speed Auto
			ENR = 2.8L 4Cyl Turbo Diesel	DG6 = 4 Speed Auto Transm
			EN0 = 4Cyl Turbo Diesel	DG0 = All Automatic Transm
				DBB = All Manual Transm

Group – 2.8L

Engine 2.8L Four Cylinder (Turbo Diesel)

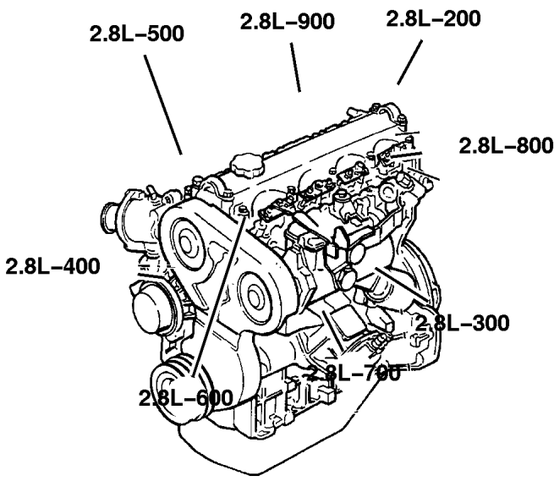

GROUP 2.8L - Engine 2.8L Four Cylinder (Turbo Diesel)

Illustration Title	Group-Fig. No.
Cylinder Head	
Cylinder Head 2.8 DieseL [ENR]	Fig. 2.8L-210
Cylinder Block	
Cylinder Block 2.8 Diesel [ENR]	Fig. 2.8L-310
Crankshaft, Piston and Drive Plate	
Crankshaft,Pistons and Related, 2.8L Diesel [ENR]	Fig. 2.8L-410
Camshafts & Valves	
Camshaft and Valves 2.8 Diesel [ENR]	Fig. 2.8L-510
Timing Belt and Cover	
Timing Cover And Related 2.8 Diesel [ENR]	Fig. 2.8L-610
Engine Oiling	
Engine Oiling 2.8 Diesel [ENR]	Fig. 2.8L-710
Oil Line 2.8 Diesel [ENR]	Fig. 2.8L-720
Filter Adapter 2.8L Diesel [ENR]	Fig. 2.8L-730
Manifolds	
Manifolds, 2.8L Diesel [ENR]	Fig. 2.8L-810
Crankcase Ventilation	
Crankcase Ventilation 2.8 Diesel [ENR]	Fig. 2.8L-910

2.8L–200 Cylinder Head 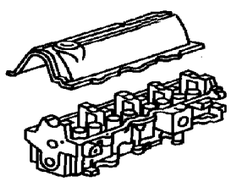	**2.8L–300** Cylinder Block 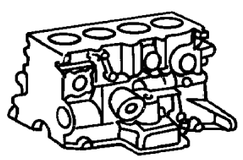	**2.8L–400** Crankshaft, Piston and Drive Plate 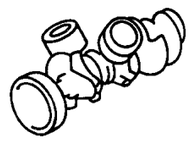	**2.8L–500** Camshafts & Valves 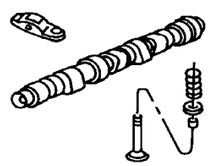
2.8L–600 Timing Belt and Cover 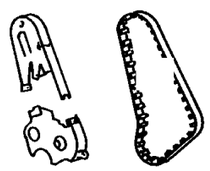	**2.8L–700** Engine Oiling 	**2.8L–800** Manifolds 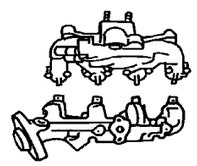	**2.8L–900** Crankcase Ventilation 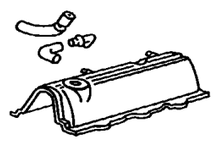

Cylinder Head 2.8 DieseL [ENR]
Figure 2.8L-210

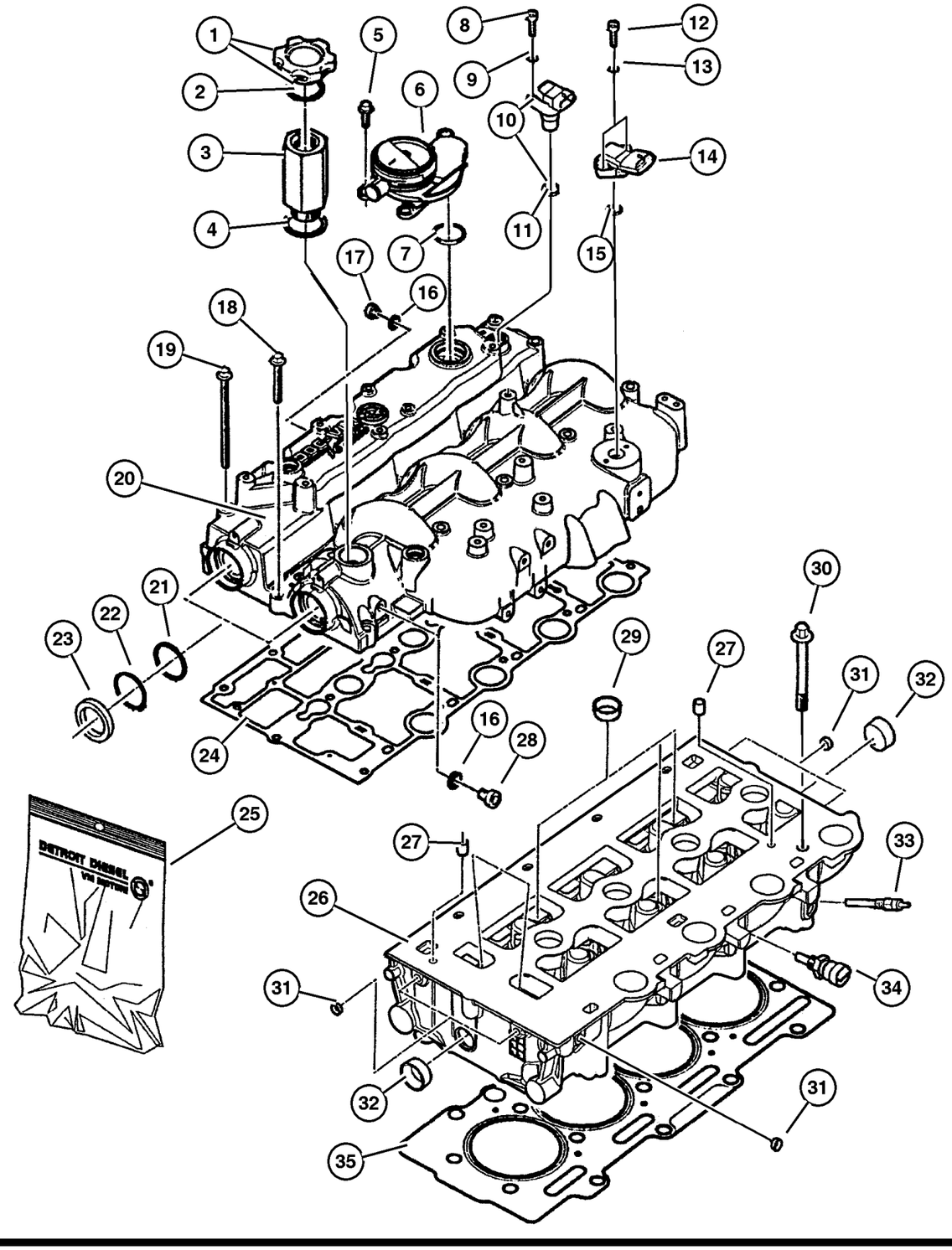

ITEM	PART NUMBER	QTY	LINE	SERIES	BODY	ENGINE	TRANS	TRIM	DESCRIPTION
NOTES:									
Sales Codes									
[DG0] = All Automatic Transmissions									
[EN0] = All 4/5 Cylinder Turbo Diesels									
1	4863 741	1				EN0	DG0		CAP, Oil Filler
2	4720 300	1				EN0	DG0		GASKET, Oil Filler Cap
3	5072 678AA	1				EN0	DG0		SPACER, Oil Filler
4	5066 853AA	1				EN0	DG0		GASKET, Oil Filler Connector
5	5003 553AA	3				EN0	DG0		SCREW
6	#5114 348AA	1				EN0	DG0		VALVE, Pressure Control
7	#5114 347AA	2				EN0	DG0		O RING, Pressure Relief Valve
8	5003 551AA	1				EN0	DG0		BOLT, M6x10
9	4723 204	1				EN0	DG0		WASHER, Implement Attaching
10	5066 856AB	1				EN0	DG0		SENSOR, Camshaft
11	5066 860AA	1				EN0	DG0		O RING
12	5010 858AA	1				EN0	DG0		SCREW
13	4723 168	1				EN0	DG0		WASHER, Fuel Solenoid Wire
14	5093 898AA	1				EN0	DG0		SENSOR, Air Temperature
15									O RING, (NOT REQUIRED)
16	4720 713	1				EN0	DG0		WASHER, Implement Attaching
17	5066 787AA	2				EN0	DG0		PLUG, Cylinder Block
18	5066 960AA	6				EN0	DG0		SCREW
19	5066 959AA	10				EN0	DG0		SCREW
20									COVER, Cylinder Head
	5093 896AA	1				EN0	DG0		Intake Valves
	5093 897AA	1				EN0	DG0		Exhaust Valves
21	5066 844AA	2				EN0	DG0		SPACER
22	5066 841AA	2				EN0	DG0		SNAP RING
23	5066 958AA	2				EN0	DG0		SEAL
24	5066 786AA	1				EN0	DG0		GASKET, Valve Cover
25	5103 146AA	1				EN0	DG0		GASKET KIT, Cylinder Head Overhall
26	5093 894AA	1				EN0	DG0		HEAD, Cylinder
27	4720 165	2				EN0	DG0		DOWEL, Rocker
28	5066 787AA	2				EN0	DG0		PLUG, Cylinder Block
29	4723 228	3				EN0	DG0		PLUG, Cylinder Block Oil Hole
30	5066 957AB	18				EN0	DG0		BOLT, Cylinder Head
31	5066 837AA	5				EN0	DG0		PLUG, Cylinder Block
32	5066 836AA	2				EN0	DG0		PLUG, Cylinder Block
33	5066 840AA	1				EN0	DG0		GLOW PLUG
34	5066 779AA	1				EN0	DG0		SENSOR, Temperature Sending Unit
35									GASKET, Cylinder Head

JEEP LIBERTY (KJ)

SERIES	LINE	BODY	ENGINE	TRANSMISSION
P = Limited	J = LHD (4WD)	74 = 4 Dr (104.3 WB)	ED1,ED0 = 2.4L Power Tech	DDK = 5 Speed HDManual
H = Sport	U = RHD (4WD)		EKG,EK0 = 3.7L Power Tech	DDD = 5 Speed HD Manual
M = Renegade	T = LHD (2WD)		ENJ = 2.5L 4Cyl Turbo Diesel	DG4,DGQ = Multi-Speed Auto
			ENR = 2.8L 4Cyl Turbo Diesel	DG6 = 4 Speed Auto Transm
			EN0 = 4Cyl Turbo Diesel	DG0 = All Automatic Transm
				DBB = All Manual Transm

Cylinder Head 2.8 DieseL [ENR]
Figure 2.8L-210

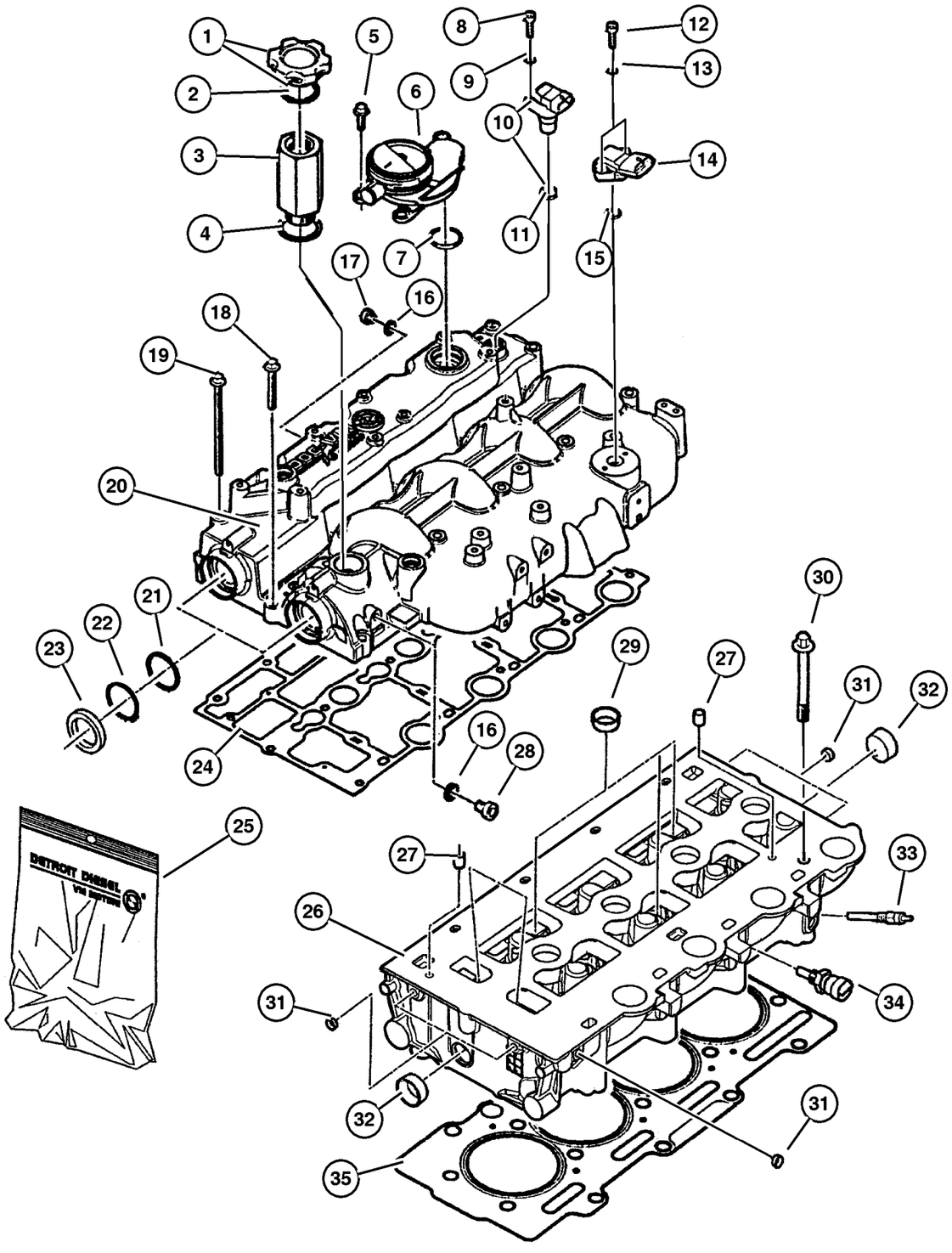

ITEM	PART NUMBER	QTY	LINE	SERIES	BODY	ENGINE	TRANS	TRIM	DESCRIPTION
	5072 675AA	1				EN0	DG0		1.32MM Thickness
	5072 676AA	1				EN0	DG0		1.42MM Thickness
	5072 677AA	1				EN0	DG0		1.52MM Thickness
-36	53014 000AE	1				EN0			COVER, Engine

JEEP LIBERTY (KJ)

SERIES	LINE	BODY	ENGINE	TRANSMISSION
P = Limited	J = LHD (4WD)	74 = 4 Dr (104.3 WB)	ED1,ED0 = 2.4L Power Tech	DDK = 5 Speed HDManual
H = Sport	U = RHD (4WD)		EKG,EK0 = 3.7L Power Tech	DDD = 5 Speed HD Manual
M = Renegade	T = LHD (2WD)		ENJ = 2.5L 4Cyl Turbo Diesel	DG4,DGQ = Multi-Speed Auto
			ENR = 2.8L 4Cyl Turbo Diesel	DG6 = 4 Speed Auto Transm
			EN0 = 4Cyl Turbo Diesel	DG0 = All Automatic Transm
				DBB = All Manual Transm

Cylinder Block 2.8 Diesel [ENR]
Figure 2.8L-310

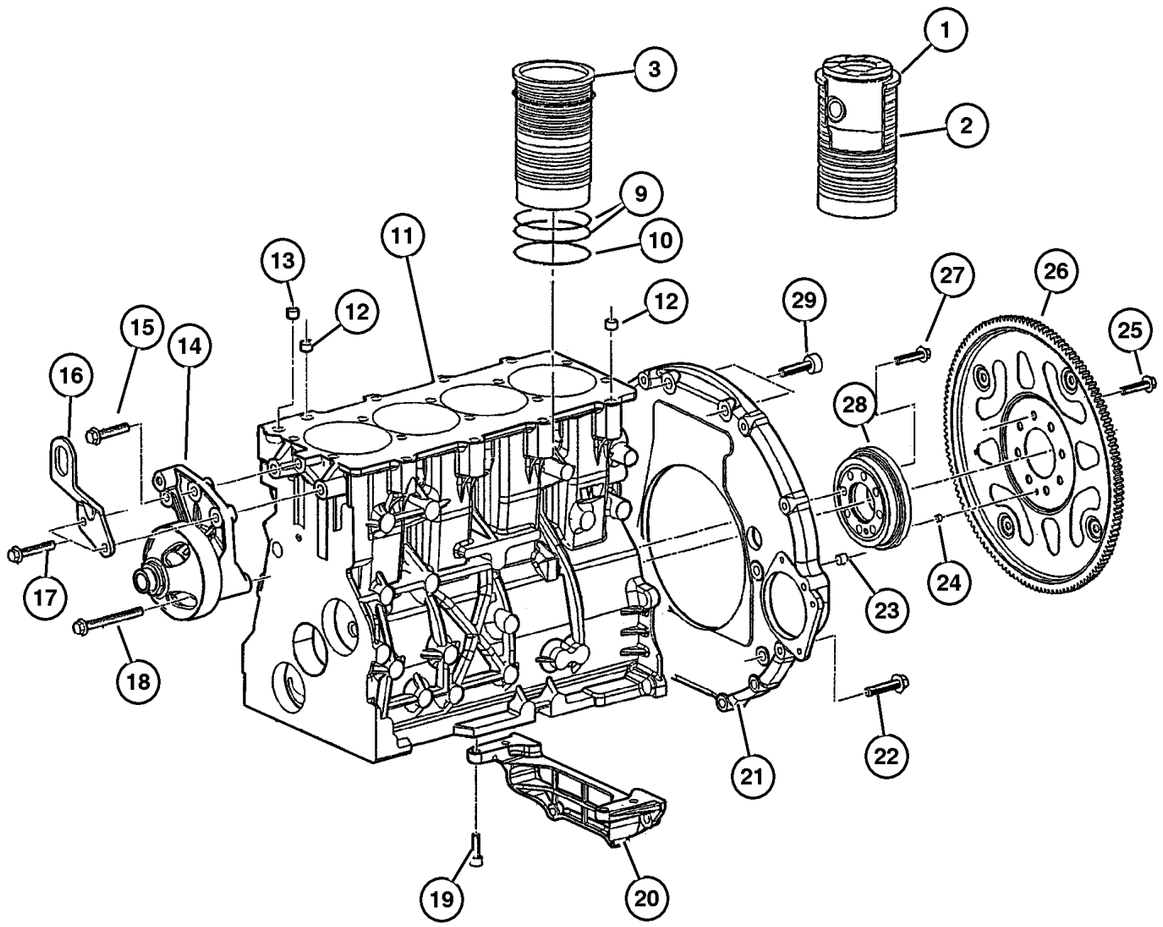

ITEM	PART NUMBER	QTY	LINE	SERIES	BODY	ENGINE	TRANS	TRIM	DESCRIPTION
NOTES:									
Sales Codes									
[DG0] = All Automatic Transmissions									
[EN0] = All 4/5 Cylinder Turbo Diesels									
1	5103 159AA	4				EN0	DG0		LINER AND PISTON, Cylinder
2	5103 155AA	4				EN0	DG0		LINER, Cylinder
3	4720 620	4				EN0	DG0		SHIM, Cylinder Liner, 0.15mm
-4	5103 154AA	4				EN0	DG0		SHIM KIT, Cylinder Liner
-5	4720 624	4				EN0	DG0		SHIM, Cylinder Liner, 0.17mm
-6	4720 621	4				EN0	DG0		SHIM, Cylinder Liner, 0.20mm
-7	4720 623	4				EN0	DG0		SHIM, Cylinder Liner, 0.23mm
-8	4720 622	4				EN0	DG0		SHIM, Cylinder Liner, 0.25mm
9	5093 955AA	8				EN0	DG0		O RING, Cylinder Liner
10	4720 626	4				EN0	DG0		O RING, Cylinder Liner
11	5096 180AA	1				EN0	DG0		ENGINE, 3/4 Tested, Diesel
12	4720 237	2				EN0	DG0		DOWEL, Transmission Adapter
13	4720 165	1				EN0	DG0		DOWEL, Rocker
14	5072 447AA	1				EN0	DG0		BRACKET, Fan
15	5066 939AA	1				EN0	DG0		SCREW
16	5072 754AA	1				EN0	DG0		BRACKET, Engine Lift
17	5003 533AA	2				EN0	DG0		BOLT, M10x45
18	5015 067AA	1				EN0	DG0		BOLT, Hex Flange Head
19	4720 684	4				EN0	DG0		BOLT
20	5072 753AA	1				EN0	DG0		BRACKET
21	5093 957AA	1				EN0	DG0		HOUSING, Flywheel
22	5003 532AA	4				EN0	DG0		BOLT, Adaptor Plate
23	5015 045AA	2				EN0	DG0		DOWEL, Transmission Adapter
24	5093 959AA	1				EN0	DG0		DOWEL, Transmission
25	5014 969AA	8				EN0	DG0		BOLT, Flexplate
26	5093 958AA	1				EN0	DG0		PLATE, Torque Converter Drive
27	5066 753AA	8				EN0	DG0		BOLT, Flywheel
28	5093 956AA	1				EN0	DG0		HUB
29	4864 757	2				EN0	DG0		BOLT
-30	5066 812AB	4				EN0	DG0		JET, Valve Body, Engine Block
-31	52104 369AA	1				EN0	DG0		PLATE, Torque Converter Drive
-32	#4736 394AA	1	J, U			EN0	DGQ		TORQUE CONVERTER
-33	5093 909AA	1				EN0	DG0		PLUG

JEEP LIBERTY (KJ)

SERIES	LINE	BODY	ENGINE	TRANSMISSION
P = Limited	J = LHD (4WD)	74 = 4 Dr (104.3 WB)	ED1,ED0 = 2.4L Power Tech	DDK = 5 Speed HDManual
H = Sport	U = RHD (4WD)		EKG,EK0 = 3.7L Power Tech	DDD = 5 Speed HD Manual
M = Renegade	T = LHD (2WD)		ENJ = 2.5L 4Cyl Turbo Diesel	DG4,DGQ = Multi-Speed Auto
			ENR = 2.8L 4Cyl Turbo Diesel	DG6 = 4 Speed Auto Transm
			EN0 = 4Cyl Turbo Diesel	DG0 = All Automatic Transm
				DBB = All Manual Transm

Crankshaft,Pistons and Related, 2.8L Diesel [ENR]
Figure 2.8L-410

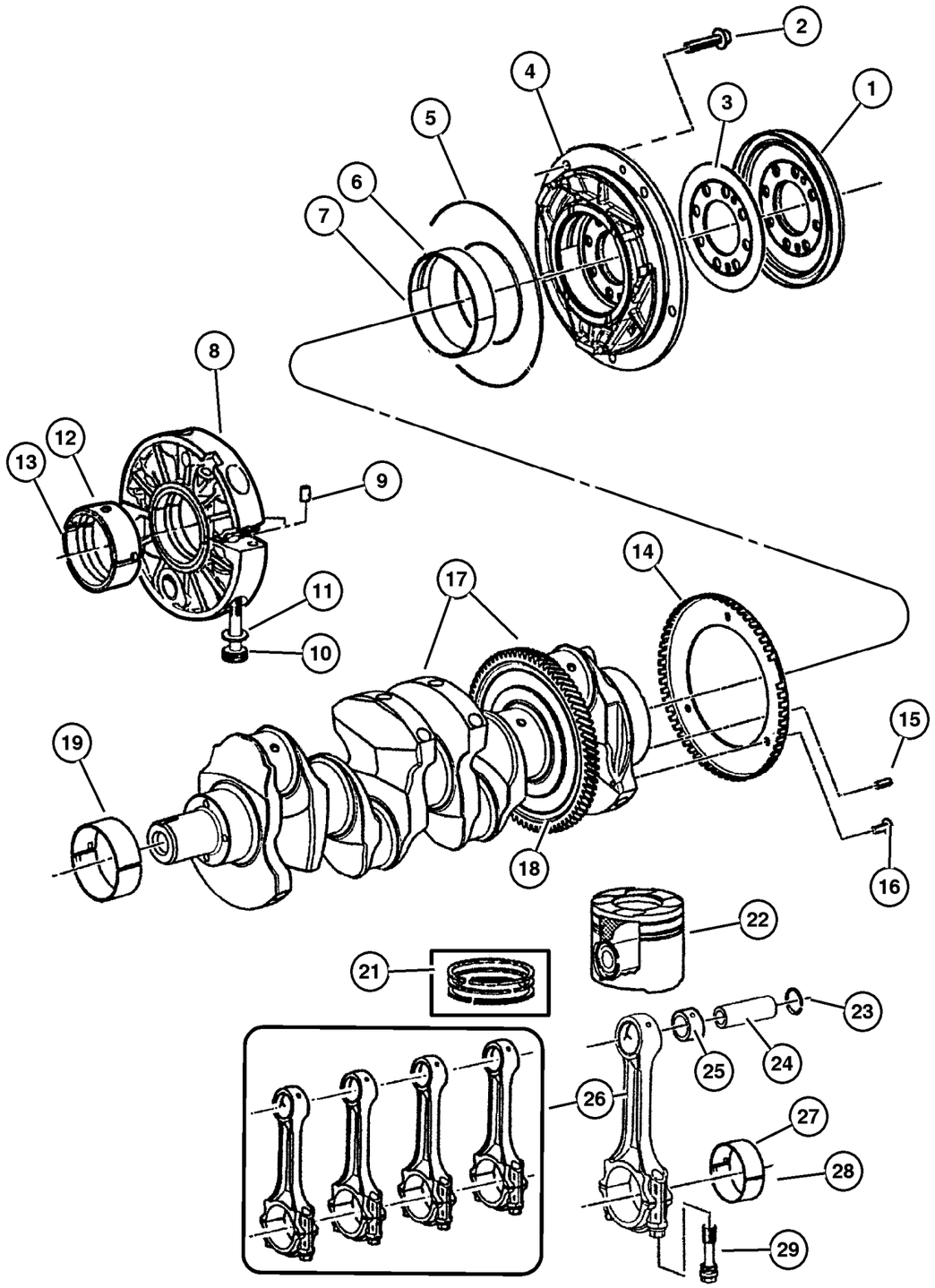

ITEM	PART NUMBER	QTY	LINE	SERIES	BODY	ENGINE	TRANS	TRIM	DESCRIPTION
NOTES:									
Sales Codes									
[DG0] = All Manual Transmissions									
[EN0] = All 4/5 Cylinder Turbo Diesels									
1	5066 756AA	1				EN0	DG0		SEAL, Crankshaft Oil, Rear
2	4864 537	5				EN0	DG0		BOLT, 8Mx20
3	5093 882AA	1				EN0	DG0		WASHER, Thrust
4	5101 924AA	1				EN0	DG0		HOUSING, Rear Bearing
5	4720 277	1				EN0	DG0		O RING, Crankshaft Rear Support
6	5066 761AA	1				EN0	DG0		BEARING, Crankshaft
7	5066 762AA	1				EN0	DG0		BEARING, Crankshaft
8	5066 757AA	3				EN0	DG0		HOUSING, Crankshaft Bearing
9	4720 241	6				EN0	DG0		DOWEL, Center Bearing Housing
10	4720 242	6				EN0	DG0		SCREW
11	4720 243	6				EN0	DG0		WASHER, Lock, M10
12	5069 079AA	3				EN0	DG0		BEARING, Crankshaft, STD.
13	5069 080AA	3				EN0	DG0		BEARING, Crankshaft, .250mm U/S
14	5066 833AB	1				EN0	DG0		SENSOR, Crankshaft
15	5093 885AA	1				EN0	DG0		PIN, Spring
16	5069 137AA	3				EN0	DG0		SCREW
17	5093 881AB	1				EN0	DG0		CRANKSHAFT
18	5066 977AA	1				EN0	DG0		GEAR, Ring
19	5069 077AA	1				EN0	DG0		BEARING, Crankshaft, STD.
-20	5069 078AA	1				EN0	DG0		BEARING, Crankshaft, .250mm U/S
21	5103 144AA	4				EN0	DG0		RING KIT, Piston, Standard
22	5103 145AA	4				EN0	DG0		PISTON
23	5096 230AA	8				EN0	DG0		RING, Piston Pin
24									PIN, Piston, Serviced With Item 22, (NOT SERVICED) (Not Serviced)
25	5093 887AA	4				EN0	DG0		BUSHING, Connecting Rod
26	5093 883AA	1				EN0	DG0		ROD, Connecting
27	4720 877	4				EN0	DG0		BEARING, Connecting Rod, STD.
28	4720 883	4				EN0	DG0		BEARING, Connecting Rod, .25 mm U/S
29	5093 889AA	8				EN0	DG0		BOLT, Connecting Rod
-30	5072 673AA	1				EN0	DG0		PUMP, Vacuum

JEEP LIBERTY (KJ)

SERIES	LINE	BODY	ENGINE	TRANSMISSION
P = Limited	J = LHD (4WD)	74 = 4 Dr (104.3 WB)	ED1,ED0 = 2.4L Power Tech	DDK = 5 Speed HDManual
H = Sport	U = RHD (4WD)		EKG,EK0 = 3.7L Power Tech	DDD = 5 Speed HD Manual
M = Renegade	T = LHD (2WD)		ENJ = 2.5L 4Cyl Turbo Diesel	DG4,DGQ = Multi-Speed Auto
			ENR = 2.8L 4Cyl Turbo Diesel	DG6 = 4 Speed Auto Transm
			EN0 = 4Cyl Turbo Diesel	DG0 = All Automatic Transm
				DBB = All Manual Transm

AR = Use as required - = Non illustrated part # = New this model year

September 30, 2003

« RETURN TO GROUP INDEX

Camshaft and Valves 2.8 Diesel [ENR]
Figure 2.8L-510

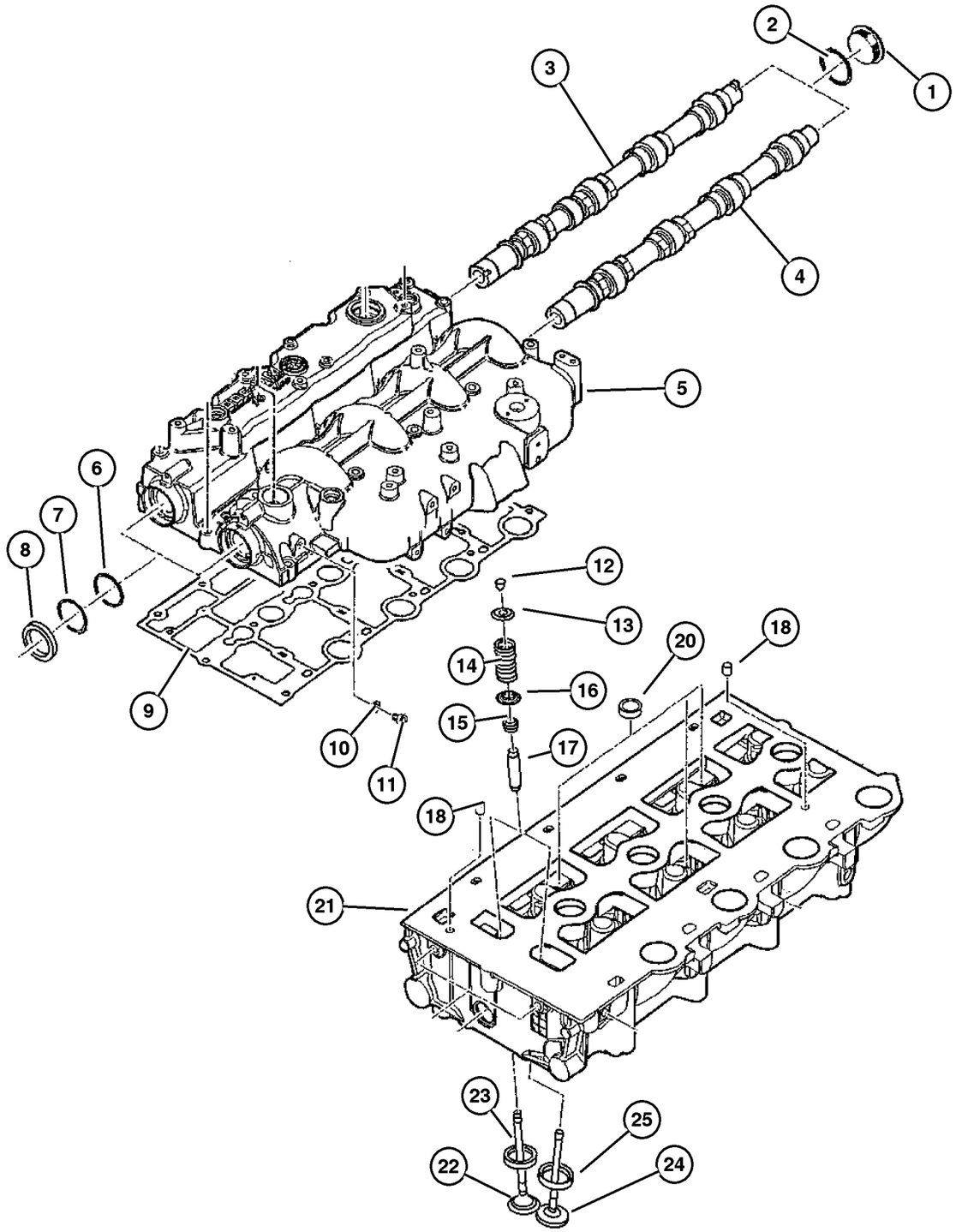

ITEM	PART NUMBER	QTY	LINE	SERIES	BODY	ENGINE	TRANS	TRIM	DESCRIPTION
NOTES:									
Sales Codes									
[DBB] = All Manual Transmissions									
[EN0] = All 4/5 Cylinder Turbo Diesels									
1	5066 855AA	2				EN0	DG0		PLUG, Camshaft
2	5066 811AA	2				EN0	DG0		WASHER, Plain, 16.2x19.9x1.5
3	5066 847AB	1				EN0	DG0		CAMSHAFT, Intake
4	5066 850AB	1				EN0	DG0		CAMSHAFT, Exhaust
5									COVER, Cylinder Head
	5093 896AA	1				EN0	DG0		Intake Valves
	5093 897AA	1				EN0	DG0		Exhaust Valves
6	5066 844AA	2				EN0	DG0		SPACER
7	5066 841AA	2				EN0	DG0		SNAP RING
8	5066 958AA	2				EN0	DG0		SEAL
9	5066 786AA	1				EN0	DG0		GASKET, Valve Cover
10	4720 713	2				EN0	DG0		WASHER, Implement Attaching
11	5066 787AA	2				EN0	DG0		PLUG, Cylinder Block
12	5066 778AA	32				EN0	DG0		LOCK, Valve Spring Retainer
13	5093 892AA	16				EN0	DG0		RETAINER, Valve Spring
14	5066 776AA	16				EN0	DG0		SPRING, Valve
15	5093 891AA	16				EN0	DG0		SEAL, Valve Guide
16	5066 775AA	16				EN0	DG0		SEAL, Valve Guide
17	5066 773AA	16				EN0	DG0		GUIDE, Intake/Exhaust Valve, Standard Size
18	4720 165	2				EN0	DG0		DOWEL, Rocker
-19	5066 780AA	16				EN0	DG0		ROCKER ARM, Inlet and Exhaust Valve
20	4723 228	3				EN0	DG0		PLUG, Cylinder Block Oil Hole
21	5093 894AA	1				EN0	DG0		HEAD, Cylinder
22	5066 769AA	8				EN0	DG0		VALVE, Exhaust, Standard
23	5066 771AA	8				EN0	DG0		SEAT, Exhaust Valve, 0.30mm Oversize
24	5066 770AA	8				EN0	DG0		VALVE, Intake, Standard
25	5066 772AA	8				EN0	DG0		SEAT, Intake Valve

JEEP LIBERTY (KJ)

SERIES	LINE	BODY	ENGINE	TRANSMISSION
P = Limited	J = LHD (4WD)	74 = 4 Dr (104.3 WB)	ED1,ED0 = 2.4L Power Tech	DDK = 5 Speed HDManual
H = Sport	U = RHD (4WD)		EKG,EK0 = 3.7L Power Tech	DDD = 5 Speed HD Manual
M = Renegade	T = LHD (2WD)		ENJ = 2.5L 4Cyl Turbo Diesel	DG4,DGQ = Multi-Speed Auto
			ENR = 2.8L 4Cyl Turbo Diesel	DG6 = 4 Speed Auto Transm
			EN0 = 4Cyl Turbo Diesel	DG0 = All Automatic Transm
				DBB = All Manual Transm

AR = Use as required - = Non illustrated part # = New this model year

September 30, 2003

« RETURN TO GROUP INDEX

Timing Cover And Related 2.8 Diesel [ENR]
Figure 2.8L-610

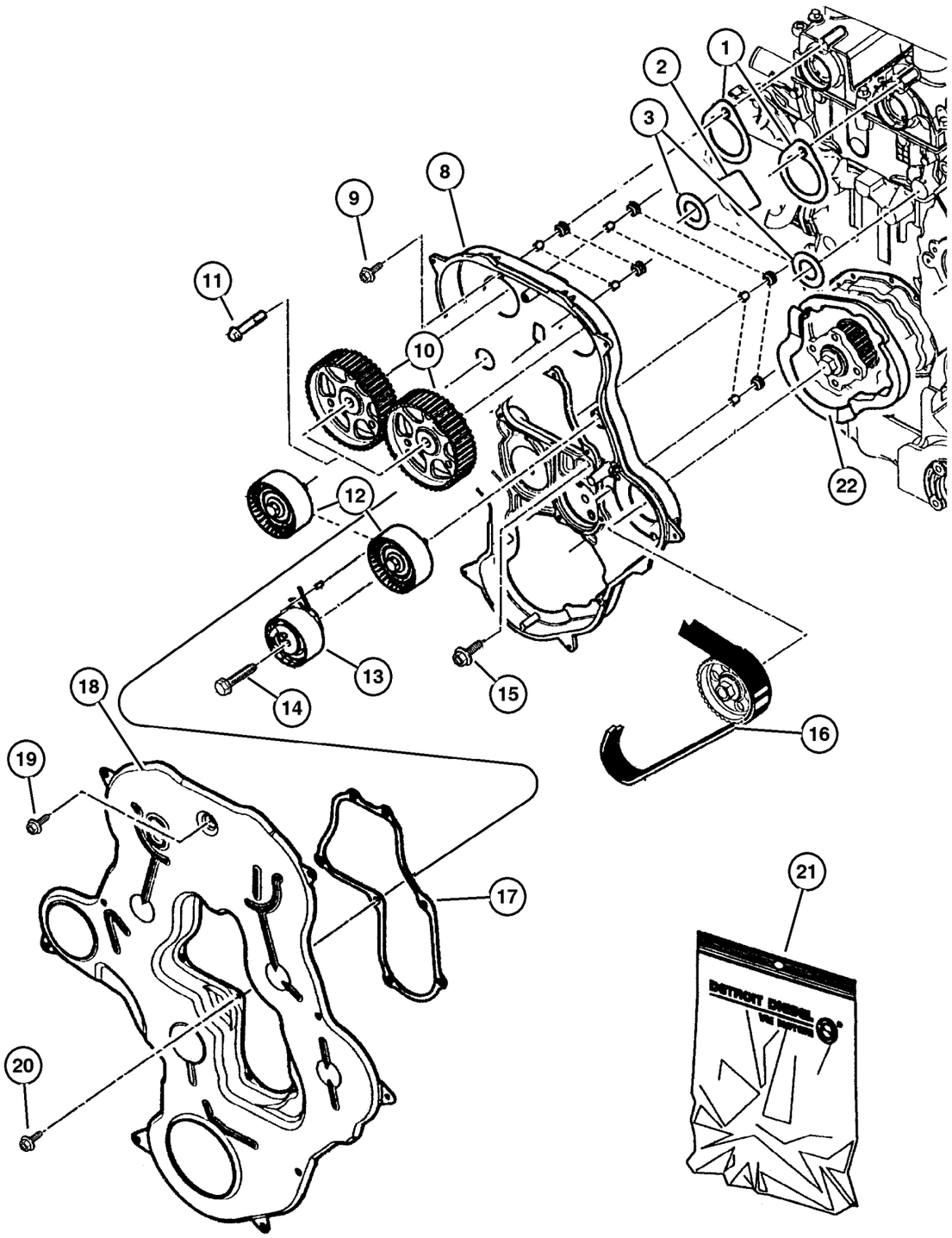

ITEM	PART NUMBER	QTY	LINE	SERIES	BODY	ENGINE	TRANS	TRIM	DESCRIPTION
Note; Sales Codes									
[DBB]= All Manual Transmissions									
[EN0]= All 4/5 Cylinder Turbo Diesels									
1	5066 946AA	1				EN0	DG0		GASKET
2	5066 946AA	1				EN0	DG0		GASKET
3	5066 946AA	1				EN0	DG0		GASKET
-4									DAMPER, Vibration, [Service in Item #21], (NOT SERVICED) (Not Serviced)
-5									BUSHING, Balance Shaft, [Service in Item #21], (NOT SERVICED) (Not Serviced)
-6									DAMPER, Vibration, [Service in Item#21], (NOT SERVICED) (Not Serviced)
-7									BUSHING, Balance Shaft, [Service in Item #21], (NOT SERVICED) (Not Serviced)
8	5073 446AB	1				EN0	DG0		COVER, Timing Case
9	5069 114AA	5				EN0	DG0		SCREW
10	5066 926AA	2				EN0	DG0		GEAR, Balance Shaft
11	4897 825AA	2				EN0	DG0		SCREW
12	5093 931AA	2				EN0	DG0		PULLEY, Idler
13	5066 826AA	1				EN0	DG0		TENSIONER, Belt
14	5015 031AA	1				EN0	DG0		SCREW
15	5003 532AA	3				EN0	DG0		BOLT, Adaptor Plate
16	5066 928AA	1				EN0	DG0		BELT, Timing
17	5066 921AA	1				EN0	DG0		GASKET, Timing Cover
18	5066 919AB	1				EN0	DG0		COVER, Timing Case
19	4864 745	1				EN0	DG0		BOLT
20	5069 112AA	17				EN0	DG0		SCREW
21	5019 861AA	1				EN0	DG0		GASKET KIT, Timing Cover
22	4863 779	1				EN0	DG0		GASKET, Vacuum Pump, .

JEEP LIBERTY (KJ)

SERIES	LINE	BODY	ENGINE	TRANSMISSION
P = Limited	J = LHD (4WD)	74 = 4 Dr (104.3 WB)	ED1,ED0 = 2.4L Power Tech	DDK = 5 Speed HDManual
H = Sport	U = RHD (4WD)		EKG,EK0 = 3.7L Power Tech	DDD = 5 Speed HD Manual
M = Renegade	T = LHD (2WD)		ENJ = 2.5L 4Cyl Turbo Diesel	DG4,DGQ = Multi-Speed Auto
			ENR = 2.8L 4Cyl Turbo Diesel	DG6 = 4 Speed Auto Transm
			EN0 = 4Cyl Turbo Diesel	DG0 = All Automatic Transm
				DBB = All Manual Transm

Engine Oiling 2.8 Diesel [ENR]
Figure 2.8L-710

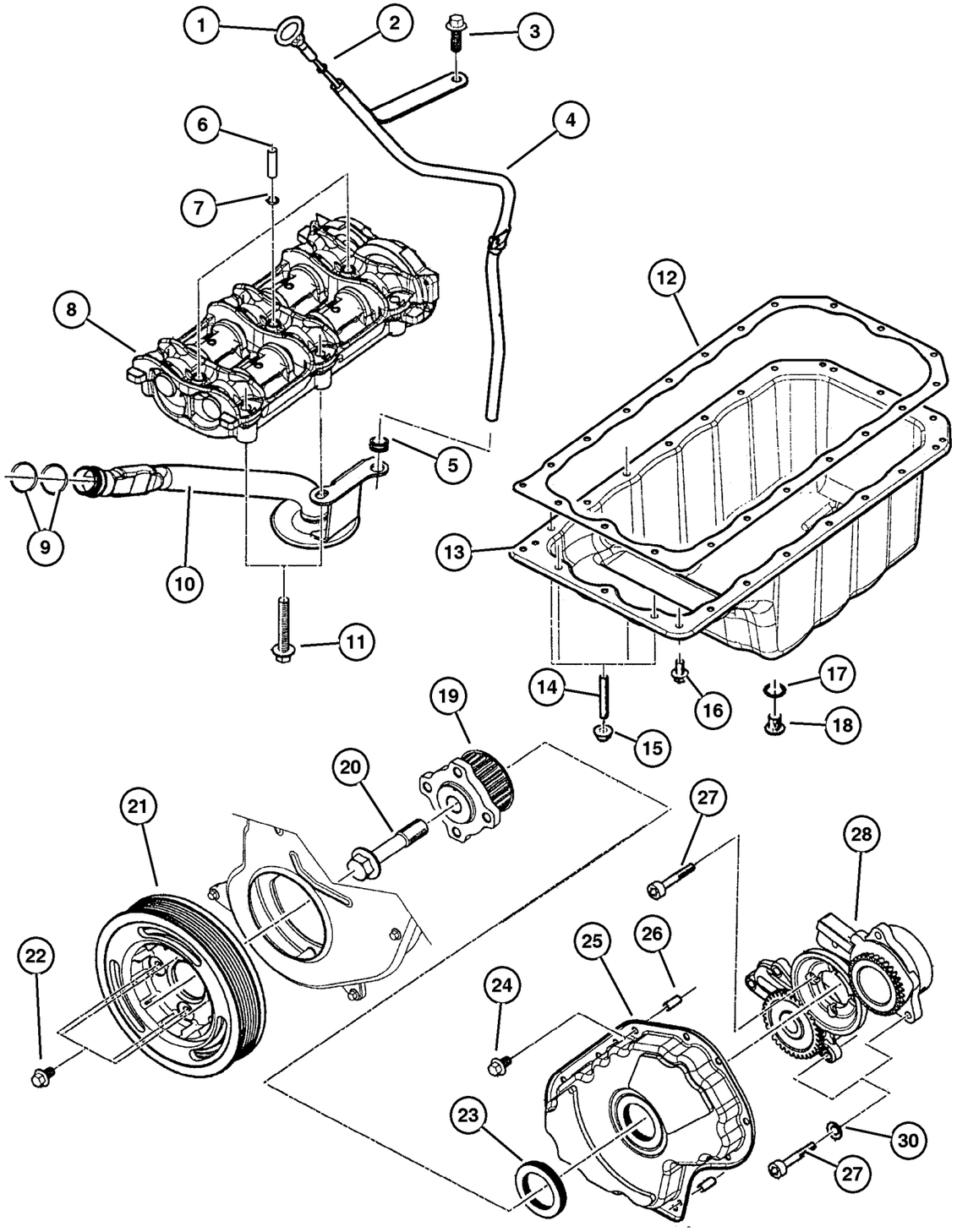

ITEM	PART NUMBER	QTY	LINE	SERIES	BODY	ENGINE	TRANS	TRIM	DESCRIPTION
Note; Sales Codes									
[DBB]= All Manual Transmissions									
[EN0]= All 4/5 Cylinder Turbo Diesels									
1	5072 682AB	1				EN0	DG0		INDICATOR, Engine Oil Level
2	4720 373	1				EN0	DG0		O RING, Engine Oil Indicator
3	5003 554AA	1				EN0	DG0		SCREW
4	5072 681AC	1				EN0	DG0		TUBE, Oil Gauge
5	4720 362	1				EN0	DG0		GASKET, Engine Oil Indicator Pipe
6	5093 899AA	1				EN0	DG0		PIN
7	5066 899AA	3				EN0	DG0		O RING
8	5066 890AA	1				EN0	DG0		SHAFT, Balance
9	5066 789AB	2				EN0	DG0		O RING, Oil Suction Tube
10	5072 680AB	1				EN0	DG0		PICKUP, Engine Oil
11	5066 962AA	6				EN0	DG0		SCREW
12	5066 901AA	1				EN0	DG0		GASKET, Oil Pan
13	5072 683AA	1				EN0	DG0		PAN, Engine Oil
14	4864 745	1				EN0	DG0		BOLT
15	4778 936	1				EN0	DG0		NUT, Suction Pipe Attaching
16	4864 748	12				EN0	DG0		BOLT
17	4720 353	1				EN0	DG0		WASHER, Plain
18	4720 352	1				EN0	DG0		PLUG, Oil Drain
19	5066 978AA	1				EN0	DG0		PULLEY, Crankshaft
20	5066 832AA	1				EN0	DG0		SCREW
21	5072 669AA	1				EN0	DG0		PULLEY, Crankshaft
22	5069 138AA	4				EN0	DG0		SCREW, Damper Mounting
23	5072 670AA	1				EN0	DG0		SEAL, Front Main Crankshaft
24	4864 748	12				EN0	DG0		BOLT
25	5066 955AA	1				EN0	DG0		COVER, Timing Belt
26	5066 834AA	2				EN0	DG0		PIN
27	4720 658	10				EN0	DG0		SCREW, Intake Manifold Elbow
28	5093 890AA	1				EN0	DG0		PUMP, Engine Oil
-29	5072 672AA	1				EN0	DG0		GEAR, Ring
30	4723 204	5				EN0	DG0		WASHER, Implement Attaching

JEEP LIBERTY (KJ)

SERIES	LINE	BODY	ENGINE	TRANSMISSION
P = Limited	J = LHD (4WD)	74 = 4 Dr (104.3 WB)	ED1,ED0 = 2.4L Power Tech	DDK = 5 Speed HDManual
H = Sport	U = RHD (4WD)		EKG,EK0 = 3.7L Power Tech	DDD = 5 Speed HD Manual
M = Renegade	T = LHD (2WD)		ENJ = 2.5L 4Cyl Turbo Diesel	DG4,DGQ = Multi-Speed Auto
			ENR = 2.8L 4Cyl Turbo Diesel	DG6 = 4 Speed Auto Transm
			EN0 = 4Cyl Turbo Diesel	DG0 = All Automatic Transm
				DBB = All Manual Transm

Oil Line 2.8 Diesel [ENR]
Figure 2.8L-720

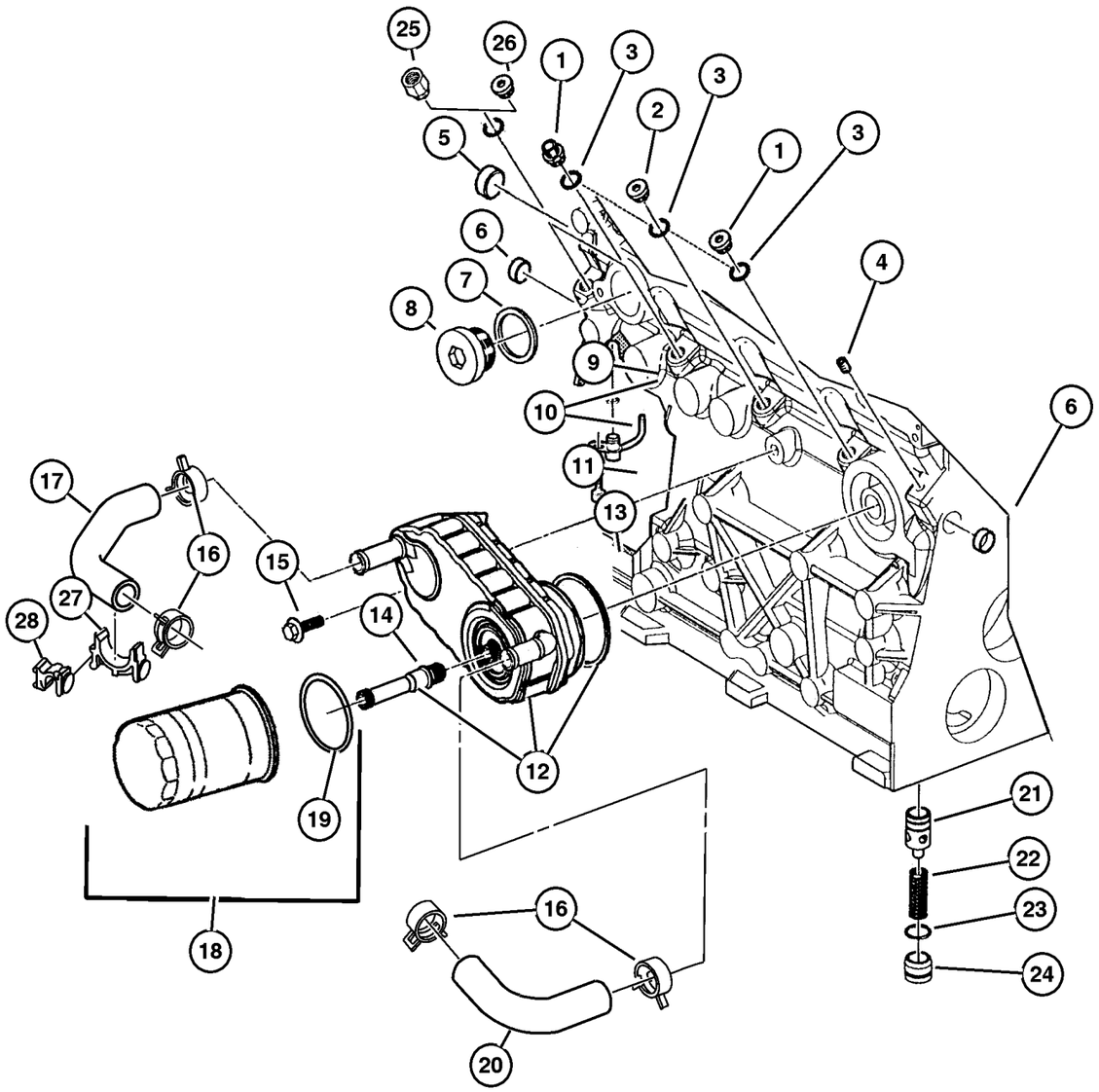

ITEM	PART NUMBER	QTY	LINE	SERIES	BODY	ENGINE	TRANS	TRIM	DESCRIPTION
NOTE:									
Sales Codes:									
[DBB]=All Manual Transmissions									
[DG0]=All Automatic Transmissions									
[EN0]=All 4 Cylinder Turbo Diesel Engines									
1	5066 889AA	2				EN0	DG0		BOLT, Oil Feed To Turbo Adapter
2	5066 814AA	1				EN0	DG0		BOLT, Turbo Oil Feed Adapter
3	4720 704	4				EN0	DG0		WASHER, Oil Pressure Transduser
4	4883 424AA	1				EN0	DG0		PLUG, Cylinder Block
5	4778 887	1				EN0	DG0		PLUG, Cylinder Block Oil Hole
6	4723 211	2				EN0	DG0		PLUG, Cylinder Block Oil Hole
7	5066 811AA	2				EN0	DG0		WASHER, Plain, 16.2x19.9x1.5
8	5066 855AA	2				EN0	DG0		PLUG, Camshaft
9	4864 689	4				EN0	DG0		O RING
10	5066 812AB	4				EN0	DG0		JET, Valve Body
11	4882 620	4				EN0	DG0		SCREW
12	5093 913AA	1				EN0	DG0		COOLER, Engine Oil
13	4723 217	1				EN0	DG0		O RING, Oil Cooler
14	5015 178AA	1				EN0	DG0		FITTING, Engine Oil Cooler
15	5003 724AA	1				EN0	DG0		SCREW
16	4883 924AA	4				EN0	DG0		CLAMP, Heater Hose
17	5072 710AA	1				EN0	DG0		HOSE, Engine Oil Cooler
18	5003 558AA	1				EN0	DG0		FILTER, Engine Oil
19	5066 946AA	1				EN0	DG0		GASKET
20	5072 709AA	1				EN0	DG0		HOSE, Engine Oil Cooler
21	5066 816AA	1				EN0	DG0		VALVE, Oil Pressure Relief
22	5093 915AA	1				EN0	DG0		SPRING, Oil Pressure Relief Valve
23	5066 887AA	1				EN0	DG0		O RING
24	5066 886AA	1				EN0	DG0		PLUG
25	5093 916AA	1				EN0	DG0		ADAPTER
26	5066 889AA	2				EN0	DG0		BOLT, Oil Feed To Turbo Adapter
27	5093 906AA	1				EN0	DG0		CLAMP
28	5093 914AA	1				EN0	DG0		CLAMP

JEEP LIBERTY (KJ)

SERIES	LINE	BODY	ENGINE	TRANSMISSION
P = Limited	J = LHD (4WD)	74 = 4 Dr (104.3 WB)	ED1,ED0 = 2.4L Power Tech	DDK = 5 Speed HDManual
H = Sport	U = RHD (4WD)		EKG,EK0 = 3.7L Power Tech	DDD = 5 Speed HD Manual
M = Renegade	T = LHD (2WD)		ENJ = 2.5L 4Cyl Turbo Diesel	DG4,DGQ = Multi-Speed Auto
			ENR = 2.8L 4Cyl Turbo Diesel	DG6 = 4 Speed Auto Transm
			EN0 = 4Cyl Turbo Diesel	DG0 = All Automatic Transm
				DBB = All Manual Transm

Filter Adapter 2.8L Diesel [ENR]
Figure 2.8L-730

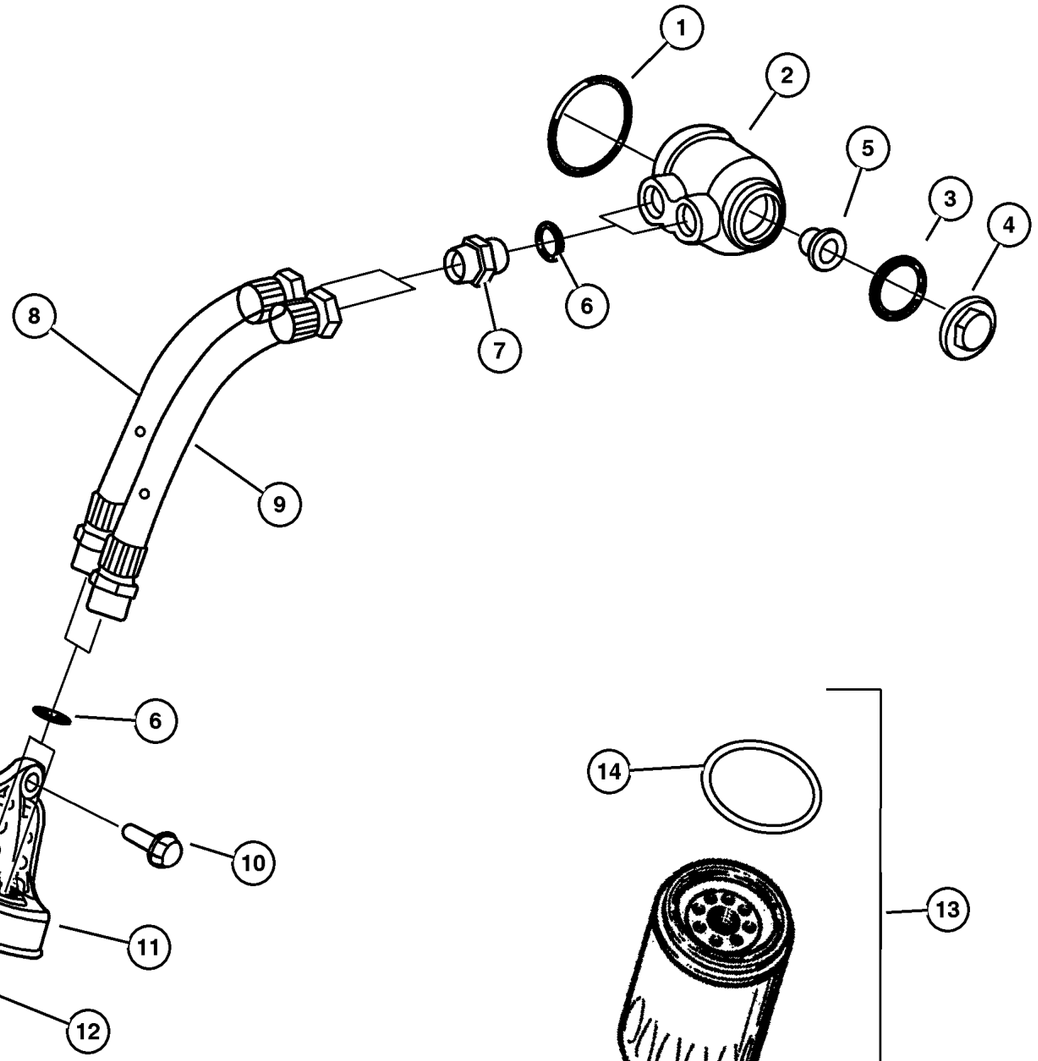

ITEM	PART NUMBER	QTY	LINE	SERIES	BODY	ENGINE	TRANS	TRIM	DESCRIPTION
NOTE:									
Sales Codes:									
[DBB]=All Manual Transmissions									
[DG0]=All Automatic Transmissions									
[EN0]=All 4 Cylinder Turbo Diesel Engines									
1	4720 375	1				EN0	DG0		O RING, Oil Filter Base
2	5072 716AA	1				EN0	DG0		ADAPTER, Oil Filter
3	4886 305AA	1				EN0	DG0		O RING, Oil Filter Adapter
4	5072 718AB	1				EN0	DG0		NUT
5	4723 334	1				EN0	DG0		GASKET, Valve
6	5066 946AA	1				EN0	DG0		GASKET
7	5093 920AA	2				EN0	DG0		UNION
8	5093 921AB	1				EN0	DG0		PIPE
9	5093 919AB	1				EN0	DG0		PIPE
10	5003 532AA	1				EN0	DG0		BOLT, Adaptor Plate
11	5072 711AB	1				EN0	DG0		BRACKET, Oil Filter Housing
12	4897 252AA	1				EN0	DG0		UNION, Oil Filter Base
13	5003 558AA	1				EN0	DG0		FILTER, Engine Oil
14	5066 946AA	1				EN0	DG0		GASKET

JEEP LIBERTY (KJ)

SERIES	LINE	BODY	ENGINE	TRANSMISSION
P = Limited	J = LHD (4WD)	74 = 4 Dr (104.3 WB)	ED1,ED0 = 2.4L Power Tech	DDK = 5 Speed HDManual
H = Sport	U = RHD (4WD)		EKG,EK0 = 3.7L Power Tech	DDD = 5 Speed HD Manual
M = Renegade	T = LHD (2WD)		ENJ = 2.5L 4Cyl Turbo Diesel	DG4,DGQ = Multi-Speed Auto
			ENR = 2.8L 4Cyl Turbo Diesel	DG6 = 4 Speed Auto Transm
			EN0 = 4Cyl Turbo Diesel	DG0 = All Automatic Transm
				DBB = All Manual Transm

Manifolds, 2.8L Diesel [ENR]
Figure 2.8L-810

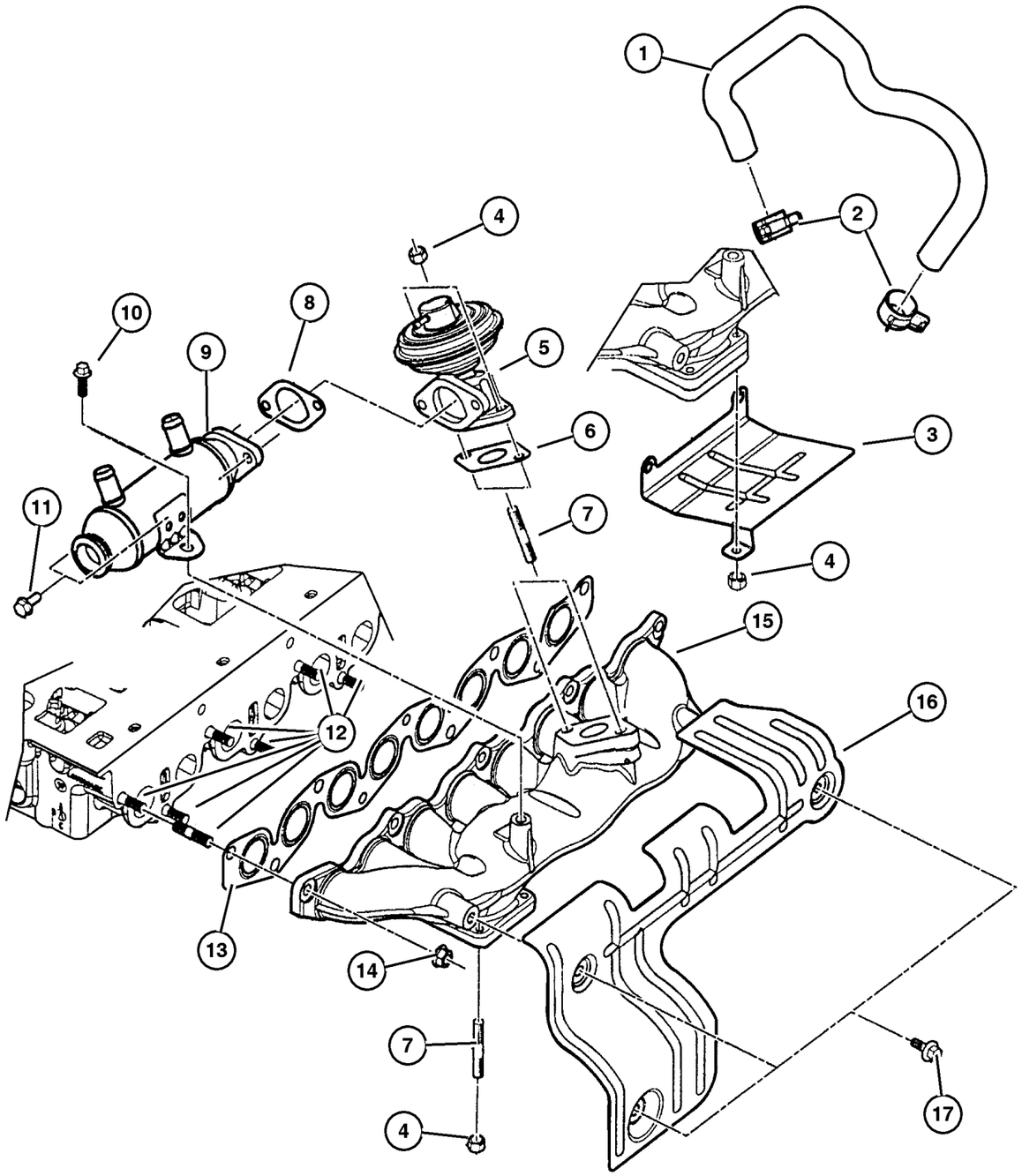

ITEM	PART NUMBER	QTY	LINE	SERIES	BODY	ENGINE	TRANS	TRIM	DESCRIPTION
Note:									
Sales Codes									
[DG0] = All Automatic Transmissions									
[EN0] = All 4/5 Cylinder Turbo Diesels									
1	5072 689AA	1				EN0	DG0		PIPE, EGR to Manifold
2	4883 924AA	2				EN0	DG0		CLAMP, Heater Hose
3									SHIELD, Exhaust Manifold, (NOT SERVICED) (Not Serviced)
4	4882 610	6				EN0	DG0		NUT, Lock
5	5066 800AB	1				EN0	DG0		VALVE, EGR
6	5083 261AA	1				EN0	DG0		GASKET, EGR Tube Flange
7	4882 606	6				EN0	DG0		STUD, Turbo Elbow
8	5083 261AA	1				EN0	DG0		GASKET, EGR Tube Flange
9	5072 687AB	1				EN0	DG0		COOLER, EGR
10	5072 688AA	4				EN0	DG0		SCREW
11	5066 986AA	2				EN0	DG0		SCREW
12	5066 796AA	9				EN0	DG0		STUD, Turbo Elbow
13	5093 904AA	1				EN0	DG0		GASKET, Intake/Exhaust Manifold
14	5093 903AA	9				EN0	DG0		NUT, Lock
15	5072 686AA	1				EN0	DG0		MANIFOLD, Exhaust
16	5072 691AA	1				EN0	DG0		SHIELD, Exhaust Manifold
17	5072 688AA	4				EN0	DG0		SCREW

JEEP LIBERTY (KJ)

SERIES	LINE	BODY	ENGINE	TRANSMISSION
P = Limited	J = LHD (4WD)	74 = 4 Dr (104.3 WB)	ED1,ED0 = 2.4L Power Tech	DDK = 5 Speed HDManual
H = Sport	U = RHD (4WD)		EKG,EK0 = 3.7L Power Tech	DDD = 5 Speed HD Manual
M = Renegade	T = LHD (2WD)		ENJ = 2.5L 4Cyl Turbo Diesel	DG4,DGQ = Multi-Speed Auto
			ENR = 2.8L 4Cyl Turbo Diesel	DG6 = 4 Speed Auto Transm
			EN0 = 4Cyl Turbo Diesel	DG0 = All Automatic Transm
				DBB = All Manual Transm

AR = Use as required - = Non illustrated part # = New this model year

September 30, 2003

« RETURN TO GROUP INDEX

Crankcase Ventilation 2.8 Diesel [ENR]
Figure 2.8L-910

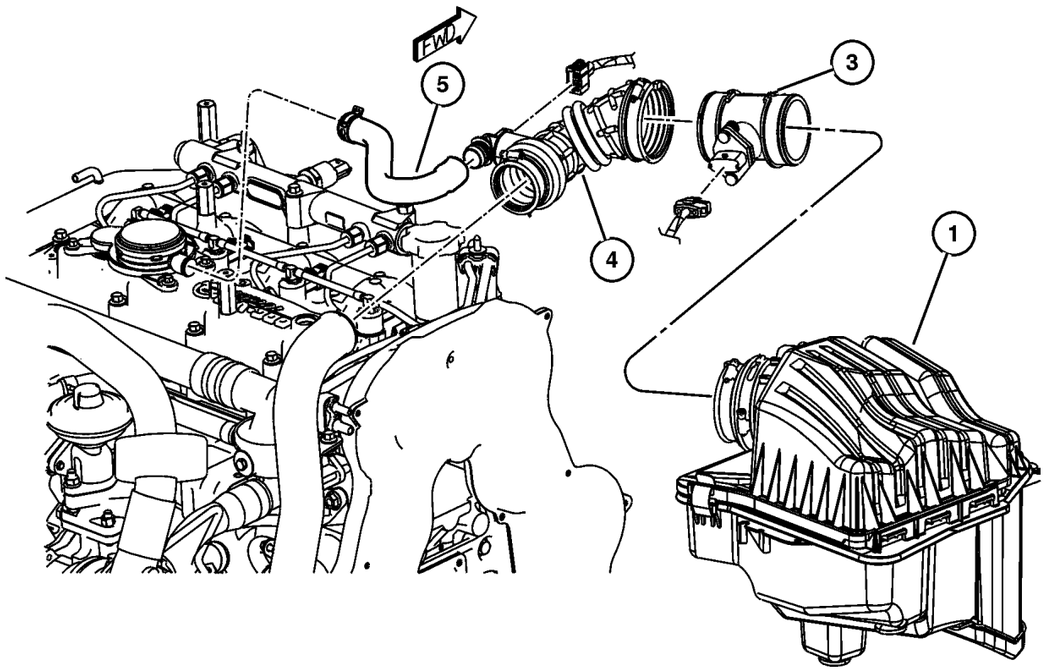

ITEM	PART NUMBER	QTY	LINE	SERIES	BODY	ENGINE	TRANS	TRIM	DESCRIPTION
NOTES:									
Sales Codes									
[EN0]= All 4/5 Cylinder Turbo Diesels									
1	53013 107AB	1				EN0			AIR CLEANER
-2	5018 777AA	1				EN0			FILTER, Air
3									SENSOR PACKAGE, Air Flow Meter, (NOT SERVICED) (Not Serviced)
4	53013 104AB	1				EN0			HOSE, Clean Air
5	53013 094AC	1				EN0			HOSE, Oil Separator

JEEP LIBERTY (KJ)

SERIES	LINE	BODY	ENGINE	TRANSMISSION
P = Limited	J = LHD (4WD)	74 = 4 Dr (104.3 WB)	ED1,ED0 = 2.4L Power Tech	DDK = 5 Speed HDManual
H = Sport	U = RHD (4WD)		EKG,EK0 = 3.7L Power Tech	DDD = 5 Speed HD Manual
M = Renegade	T = LHD (2WD)		ENJ = 2.5L 4Cyl Turbo Diesel	DG4,DGQ = Multi-Speed Auto
			ENR = 2.8L 4Cyl Turbo Diesel	DG6 = 4 Speed Auto Transm
			EN0 = 4Cyl Turbo Diesel	DG0 = All Automatic Transm
				DBB = All Manual Transm

Group – 2.5LD

Engine 2.5L Four Cylinder (Turbo Diesel)

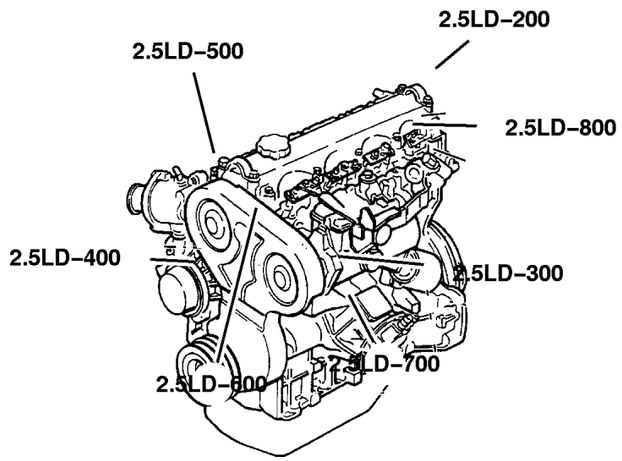

GROUP 2.5LD - Engine 2.5L Four Cylinder (Turbo Diesel)

Illustration Title	Group-Fig. No.
Cylinder Head	
Cylinder Head 2.5L [ENJ]	Fig. 2.5LD-210
Cylinder Block	
Cylinder Block 2.5L [ENJ]	Fig. 2.5LD-310
Crankshaft, Piston and Drive Plate	
Crankshaft,Pistons and Related Parts 2.5L [ENJ]	Fig. 2.5LD-410
Camshafts & Valves	
Camshaft and Valves 2.5L [ENJ]	Fig. 2.5LD-510
Timing Belt and Cover	
Timing Cover and Related Parts 2.5L [ENJ]	Fig. 2.5LD-610
Engine Oiling	
Engine Oiling and Balance Shafts 2.5L [ENJ]	Fig. 2.5LD-710
Oil Cooler 2.5L [ENJ]	Fig. 2.5LD-720
Oil Lines 2.5L [ENJ]	Fig. 2.5LD-730
Manifolds	
Manifolds 2.5L [ENJ]	Fig. 2.5LD-810
Crankcase Ventilation	
Crankcase Ventilation 2.5L [ENJ]	Fig. 2.5LD-910

2.5LD–200 Cylinder Head 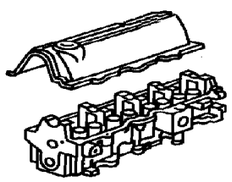	**2.5LD–300** Cylinder Block 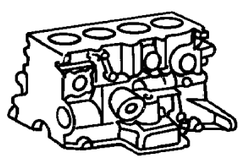	**2.5LD–400** Crankshaft, Piston and Drive Plate 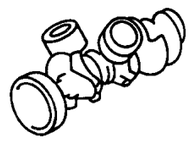	**2.5LD–500** Camshafts & Valves 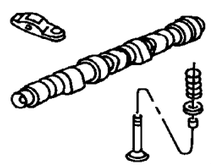
2.5LD–600 Timing Belt and Cover 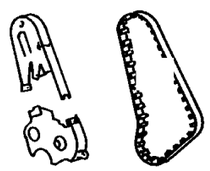	**2.5LD–700** Engine Oiling 	**2.5LD–800** Manifolds 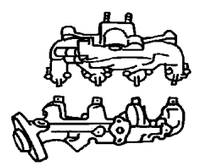	**2.5LD–900** Crankcase Ventilation 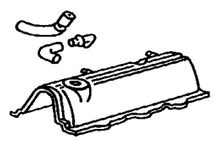

Cylinder Head 2.5L [ENJ]
Figure 2.5LD-210

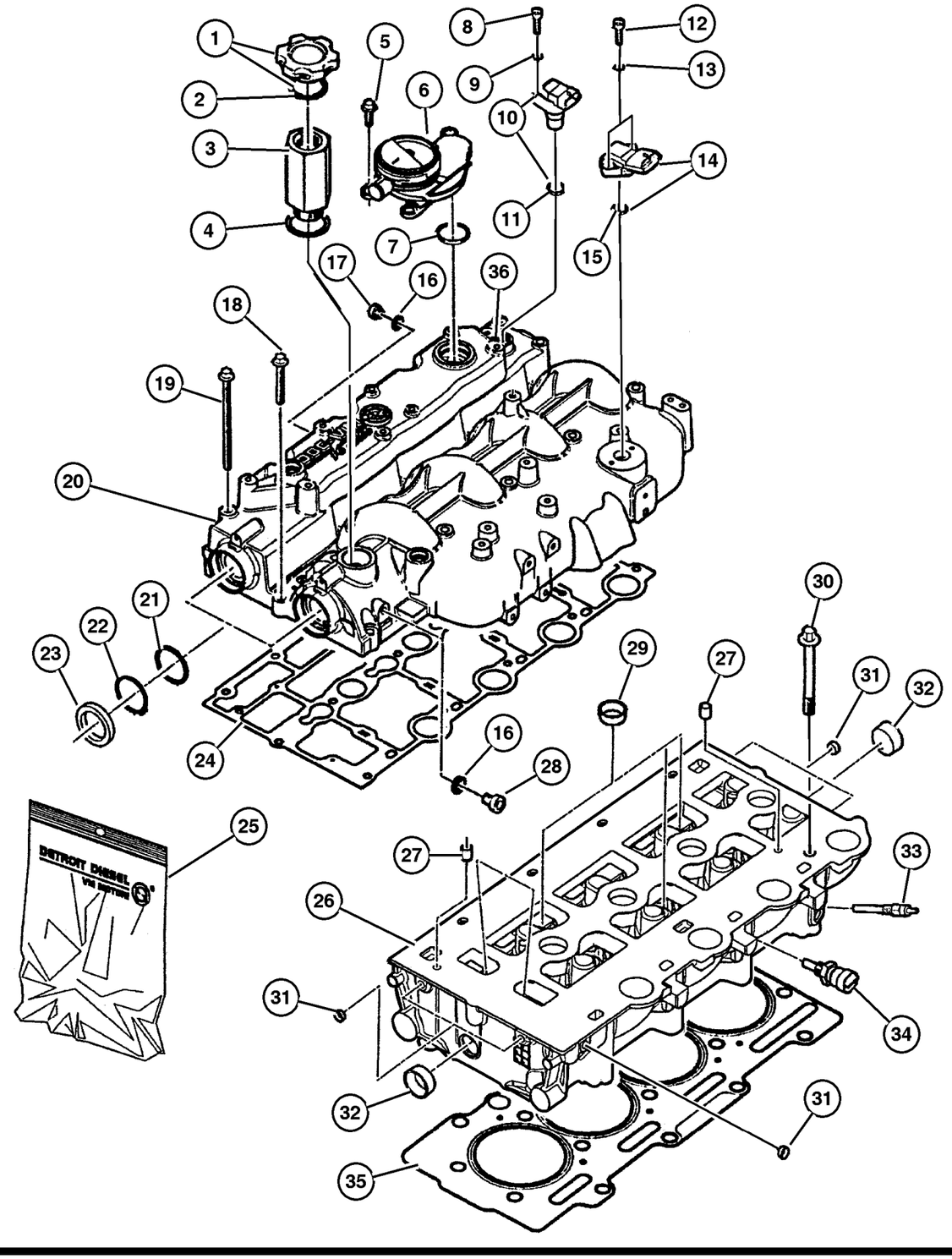

ITEM	PART NUMBER	QTY	LINE	SERIES	BODY	ENGINE	TRANS	TRIM	DESCRIPTION
NOTE:									
Sales Codes:									
[DBB] = All Manual Transmissions									
[EN0] = All 4 Cylinder Turbo Diesel Engines									
1	4863 741	1				EN0	DBB		CAP, Oil Filler
2	4720 300	1				EN0	DBB		GASKET, Oil Filler Cap
3	5072 678AA	1				EN0	DBB		SPACER, Oil Filler
4	5066 853AA	1				EN0	DBB		GASKET, Oil Filler Connector
5	5003 553AA	3				EN0	DBB		SCREW
6	#5114 348AA	1				EN0	DBB		VALVE, Pressure Control
7	#5114 347AA	2				EN0	DBB		O RING, Pressure Relief Valve
8	5003 551AA	1				EN0	DBB		BOLT, M6x10
9	4723 204	5				EN0	DBB		WASHER, Implement Attaching
10	5066 856AB	1				EN0	DBB		SENSOR, Camshaft
11	5066 860AA	1				EN0	DBB		O RING
12	5010 858AA	1				EN0	DBB		SCREW
13	4723 168	1				EN0	DBB		WASHER, Fuel Solenoid Wire
14	5093 898AA	1				EN0	DBB		SENSOR, Air Temperature
15	4864 689	4				EN0	DBB		O RING
16	4720 713	2				EN0	DBB		WASHER, Implement Attaching
17	5066 787AA	2				EN0	DBB		PLUG, Cylinder Block
18	5066 960AA	6				EN0	DBB		SCREW
19	5066 960AA	6				EN0	DBB		SCREW
20	53010 493AD	1				ED0			COVER, Cylinder Head
21	5066 844AA	2				EN0	DBB		SPACER
22	5066 841AA	2				EN0	DBB		SNAP RING
23	5066 958AA	2				EN0	DBB		SEAL
24	5066 786AA	1				EN0	DBB		GASKET, Valve Cover
25	5096 231AA	1				EN0	DBB		GASKET KIT, Cylinder Head Overhall
26	5093 893AA	1				EN0	DBB		HEAD, Cylinder
27	4720 165	1				EN0	DBB		DOWEL, Rocker
28	5066 913AA	3				EN0	DBB		STUD
29	4723 228	3				EN0	DBB		PLUG, Cylinder Block Oil Hole
30	5066 957AB	18				EN0	DBB		BOLT, Cylinder Head
31	5066 836AA	2				EN0	DBB		PLUG, Cylinder Block
32	5066 836AA	2				EN0	DBB		PLUG, Cylinder Block
33	5066 840AA	4				EN0	DBB		GLOW PLUG
34	5066 779AA	1				EN0	DBB		SENSOR, Temperature Sending Unit
35	5072 675AA	1				EN0	DBB		GASKET, Cylinder Head [1.32MM]

JEEP LIBERTY (KJ)

SERIES	LINE	BODY	ENGINE	TRANSMISSION
P = Limited	J = LHD (4WD)	74 = 4 Dr (104.3 WB)	ED1,ED0 = 2.4L Power Tech	DDK = 5 Speed HDManual
H = Sport	U = RHD (4WD)		EKG,EK0 = 3.7L Power Tech	DDD = 5 Speed HD Manual
M = Renegade	T = LHD (2WD)		ENJ = 2.5L 4Cyl Turbo Diesel	DG4,DGQ = Multi-Speed Auto
			ENR = 2.8L 4Cyl Turbo Diesel	DG6 = 4 Speed Auto Transm
			EN0 = 4Cyl Turbo Diesel	DG0 = All Automatic Transm
				DBB = All Manual Transm

Cylinder Head 2.5L [ENJ]
Figure 2.5LD-210

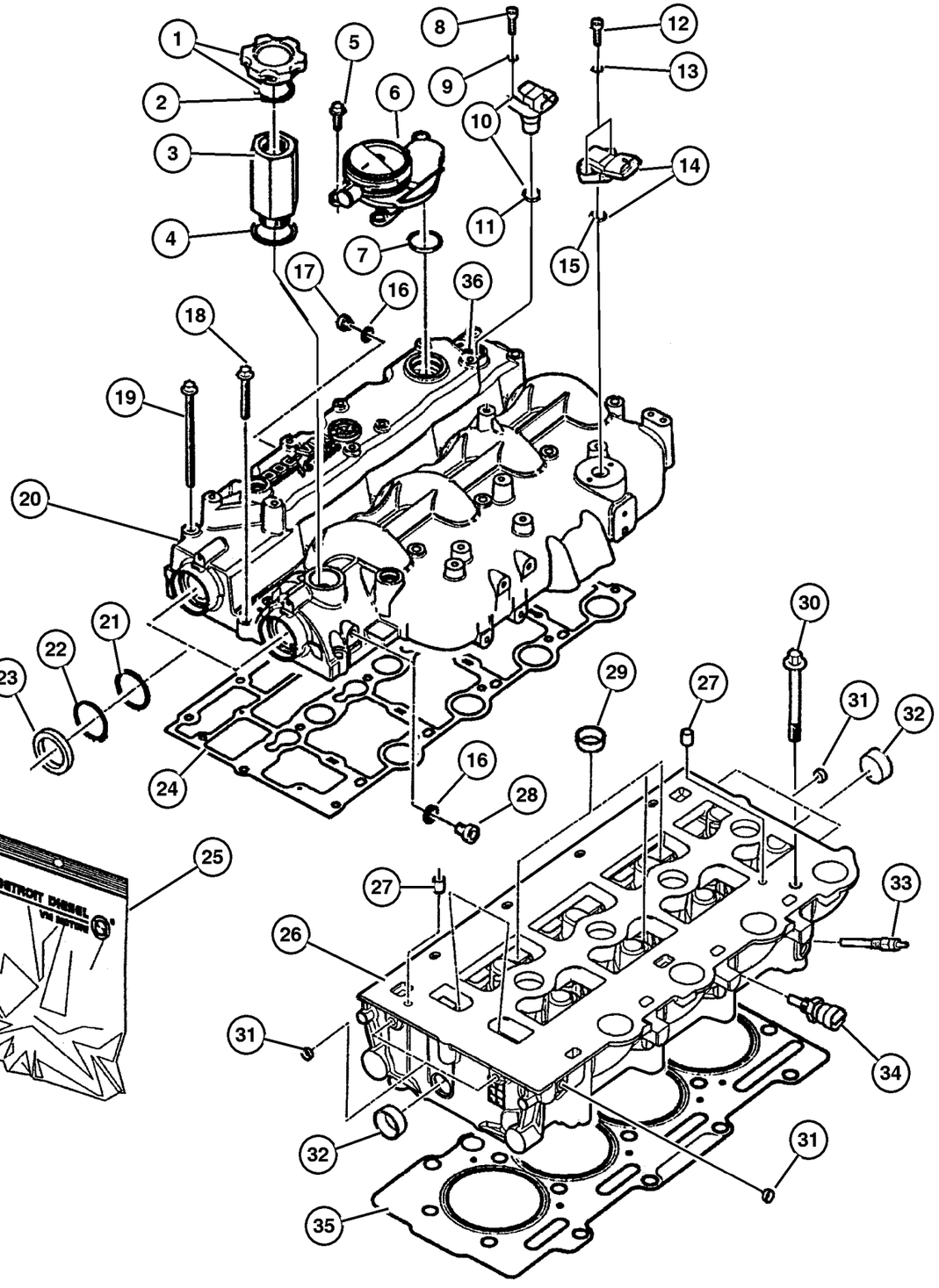

ITEM	PART NUMBER	QTY	LINE	SERIES	BODY	ENGINE	TRANS	TRIM	DESCRIPTION
	5072 676AA	1				EN0	DBB		[1.42MM]
	5072 677AA	1				EN0	DBB		[1.52MM]
36	5093 895AA	1				EN0	DBB		STUD
-37	4882 405	4				EN0	DBB		STUD

JEEP LIBERTY (KJ)

SERIES	LINE	BODY	ENGINE	TRANSMISSION
P = Limited	J = LHD (4WD)	74 = 4 Dr (104.3 WB)	ED1,ED0 = 2.4L Power Tech	DDK = 5 Speed HDManual
H = Sport	U = RHD (4WD)		EKG,EK0 = 3.7L Power Tech	DDD = 5 Speed HD Manual
M = Renegade	T = LHD (2WD)		ENJ = 2.5L 4Cyl Turbo Diesel	DG4,DGQ = Multi-Speed Auto
			ENR = 2.8L 4Cyl Turbo Diesel	DG6 = 4 Speed Auto Transm
			EN0 = 4Cyl Turbo Diesel	DG0 = All Automatic Transm
				DBB = All Manual Transm

AR = Use as required - = Non illustrated part # = New this model year

September 30, 2003

« RETURN TO GROUP INDEX

Cylinder Block 2.5L [ENJ]
Figure 2.5LD-310

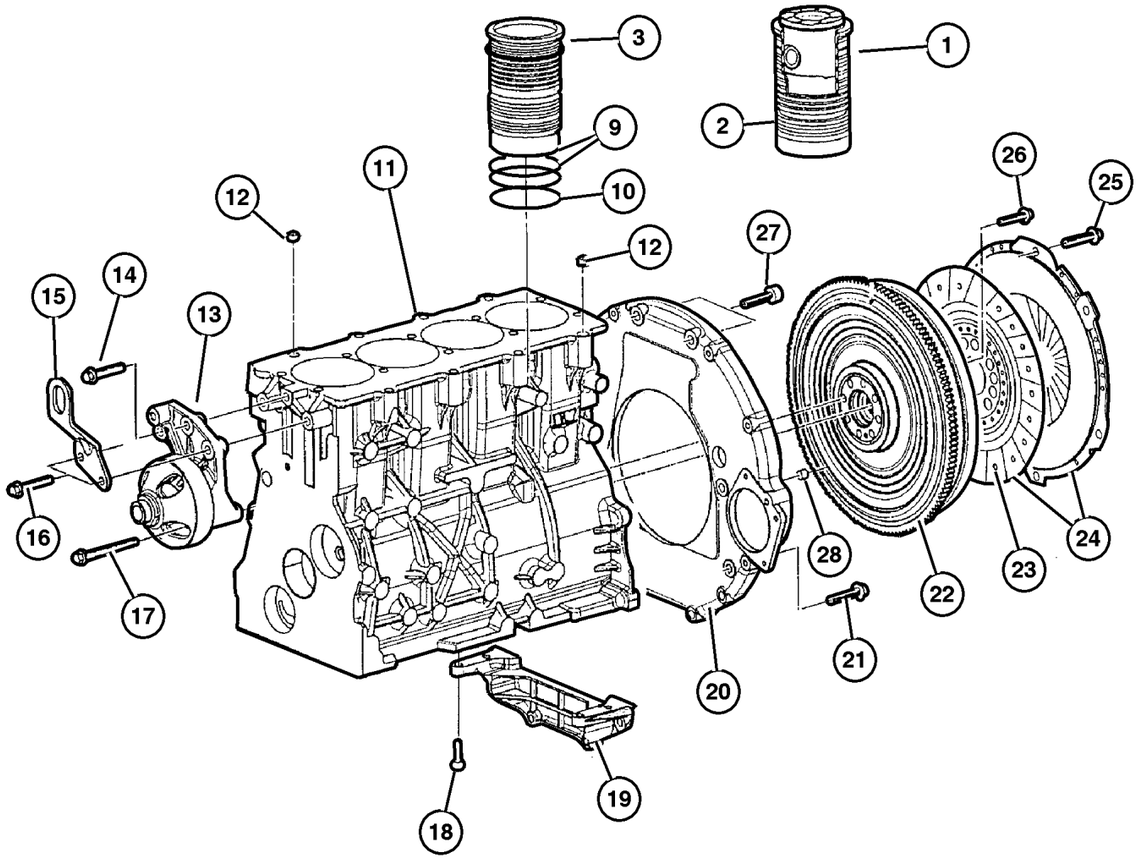

ITEM	PART NUMBER	QTY	LINE	SERIES	BODY	ENGINE	TRANS	TRIM	DESCRIPTION
NOTE:									
Sales Codes:									
[DBB] = All Manual Transmissions									
[EN0] = All 4 Cylinder Turbo Diesel Engines									
1	5093 877AA	4				EN0	DBB		LINER AND PISTON, Cylinder, Complete Assembly
2	5093 878AA	4				EN0	DBB		LINER, Cylinder
3	4720 620	4				EN0	DBB		SHIM, Cylinder Liner, 0.15mm
-4	5066 747AA	4				EN0	DBB		SHIM KIT, Cylinder Liner, Standard
-5	4720 624	4				EN0	DBB		SHIM, Cylinder Liner, 0.17mm
-6	4720 621	4				EN0	DBB		SHIM, Cylinder Liner, 0.20mm
-7	4720 623	4				EN0	DBB		SHIM, Cylinder Liner, 0.23mm
-8	4720 622	4				EN0	DBB		SHIM, Cylinder Liner, 0.25mm
9	4720 627	8				EN0	DBB		O RING, Cylinder Liner
10	4720 625	4				EN0	DBB		O RING, Cylinder Liner
11	5096 179AA	1				EN0	DBB		ENGINE, 3/4 Tested, Diesel
12	4720 237	2				EN0	DBB		DOWEL, Transmission Adapter
13	5072 447AA	1				EN0	DBB		BRACKET, Fan
14	5066 939AA	3				EN0	DBB		SCREW
15	5072 754AA	1				EN0	DBB		BRACKET, Engine Lift
16	5003 533AA	2				EN0	DBB		BOLT, M10x45
17	5015 067AA	1				EN0	DBB		BOLT, Hex Flange Head
18	4720 684	4				EN0	DBB		BOLT
19	5072 753AA	1				EN0	DBB		BRACKET
20	5093 879AA	1				EN0	DBB		HOUSING, Flywheel
21	5003 532AA	4				EN0	DBB		BOLT, Adaptor Plate
22	52104 420AB	1				EN0	DBB		FLYWHEEL
23	52104 303AB	1				EN0	DBB		DISC, Clutch
24	5066 191AA	1				EN0	DBB		CLUTCH PACKAGE
25	5072 396AA	6				EN0	DBB		BOLT
26	5072 664AA	8				EN0	DBB		BOLT
27	4864 757	2				EN0	DBB		BOLT
28	5015 045AA	2				EN0	DBB		DOWEL, Transmission Adapter
-29	4720 304	1				EN0	DBB		DOWEL, Front Cover
-30	5093 909AA	1				EN0	DBB		PLUG, Cylinder Block

JEEP LIBERTY (KJ)

SERIES	LINE	BODY	ENGINE	TRANSMISSION
P = Limited	J = LHD (4WD)	74 = 4 Dr (104.3 WB)	ED1,ED0 = 2.4L Power Tech	DDK = 5 Speed HDManual
H = Sport	U = RHD (4WD)		EKG,EK0 = 3.7L Power Tech	DDD = 5 Speed HD Manual
M = Renegade	T = LHD (2WD)		ENJ = 2.5L 4Cyl Turbo Diesel	DG4,DGQ = Multi-Speed Auto
			ENR = 2.8L 4Cyl Turbo Diesel	DG6 = 4 Speed Auto Transm
			EN0 = 4Cyl Turbo Diesel	DG0 = All Automatic Transm
				DBB = All Manual Transm

Crankshaft,Pistons and Related Parts 2.5L [ENJ]
Figure 2.5LD-410

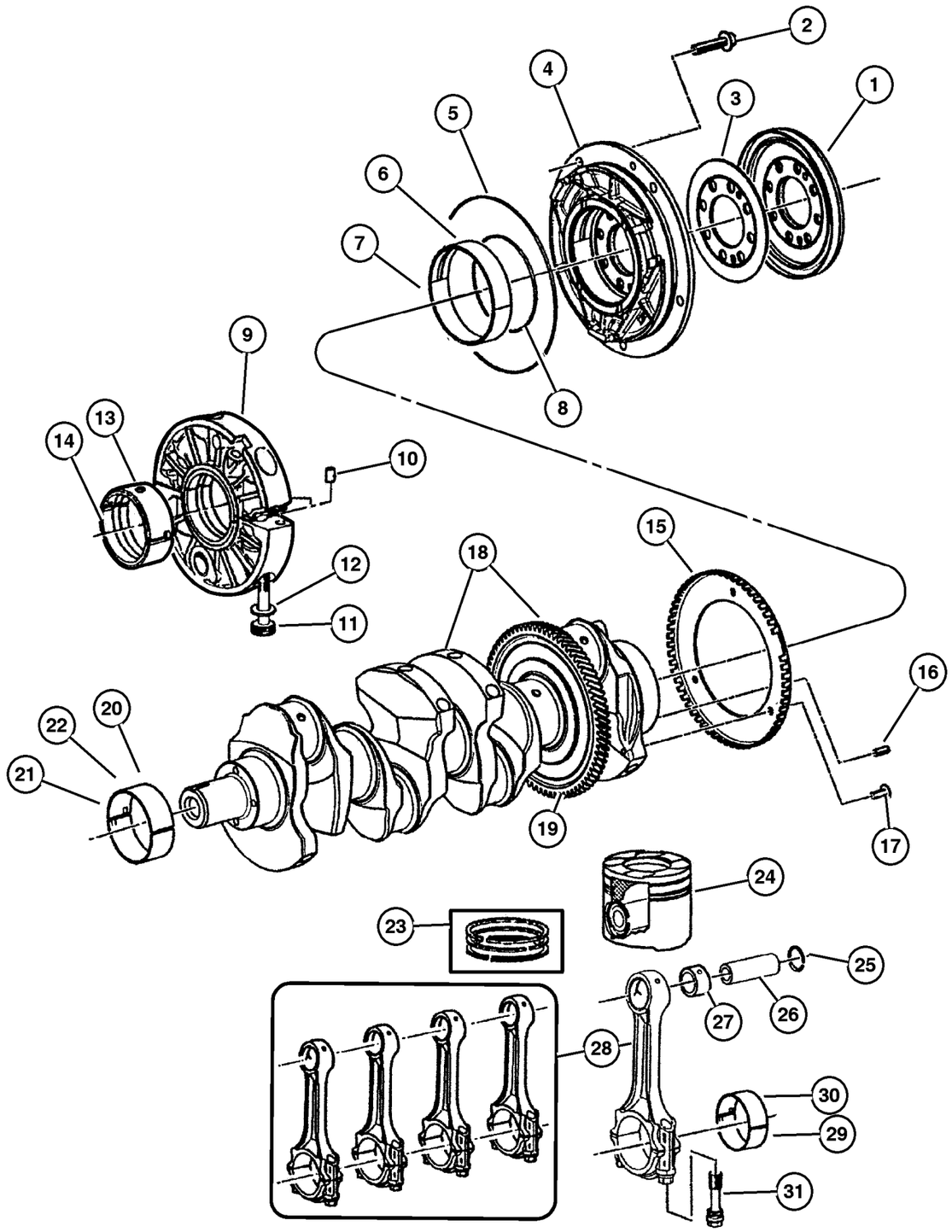

ITEM	PART NUMBER	QTY	LINE	SERIES	BODY	ENGINE	TRANS	TRIM	DESCRIPTION
NOTE:									
Sales Codes:									
[DBB] = All Manual Transmissions									
[EN0] = All 4 Cylinder Turbo Diesel Engines									
1	5066 756AA	1				EN0	DBB		SEAL, Crankshaft Oil, Rear
2	4864 537	5				EN0	DBB		BOLT, 8Mx20
3	5093 882AA	1				EN0	DBB		WASHER, Thrust
4	5101 924AA	1				EN0	DBB		HOUSING, Rear Bearing
5	4720 277	1				EN0	DBB		O RING, Crankshaft Rear Support
6	5066 761AA	1				EN0	DBB		BEARING, Crankshaft
7	5066 762AA	1				EN0	DBB		BEARING, Crankshaft
8	5066 763AA	1				EN0	DBB		O RING, Crankshaft Rear Support
9	5066 757AA	3				EN0	DBB		HOUSING, Crankshaft Bearing
10	4720 241	6				EN0	DBB		DOWEL, Center Bearing Housing
11	4720 242	6				EN0	DBB		SCREW
12	4720 243	6				EN0	DBB		WASHER, Lock, M10
13	5069 079AA	3				EN0	DBB		BEARING, Crankshaft, STD.
14	5069 080AA	3				EN0	DBB		BEARING, Crankshaft, .250mm U/S
15	5066 833AB	1				EN0	DBB		SENSOR, Crankshaft
16	5093 885AA	1				EN0	DBB		PIN, Spring
17	5069 137AA	3				EN0	DBB		SCREW
18	5093 880AB	1				EN0	DBB		CRANKSHAFT
19	5066 977AA	1				EN0	DBB		GEAR, Ring
20	5069 077AA	1				EN0	DBB		BEARING, Crankshaft, STD.
21	5018 726AA	8				EN0	DBB		BEARING, Crankshaft
22	5069 078AA	1				EN0	DBB		BEARING, Crankshaft, .250mm U/S
23	5066 759AA	4				EN0	DBB		RING KIT, Piston, Standard
24	5093 884AA	4				EN0	DBB		PISTON
25	5096 230AA	8				EN0	DBB		RING, Piston Pin
26									PIN, Piston, Serviced with Piston, (NOT SERVICED) (Not Serviced)
27	5093 887AA	4				EN0	DBB		BUSHING, Connecting Rod
28	5093 883AA	1				EN0	DBB		ROD, Connecting
29	4720 877	4				EN0	DBB		BEARING, Connecting Rod, STD.
30	4720 883	4				EN0	DBB		BEARING, Connecting Rod, .25 mm U/S
31	5093 889AA	8				EN0	DBB		BOLT, Connecting Rod

JEEP LIBERTY (KJ)

SERIES	LINE	BODY	ENGINE	TRANSMISSION
P = Limited	J = LHD (4WD)	74 = 4 Dr (104.3 WB)	ED1,ED0 = 2.4L Power Tech	DDK = 5 Speed HDManual
H = Sport	U = RHD (4WD)		EKG,EK0 = 3.7L Power Tech	DDD = 5 Speed HD Manual
M = Renegade	T = LHD (2WD)		ENJ = 2.5L 4Cyl Turbo Diesel	DG4,DGQ = Multi-Speed Auto
			ENR = 2.8L 4Cyl Turbo Diesel	DG6 = 4 Speed Auto Transm
			EN0 = 4Cyl Turbo Diesel	DG0 = All Automatic Transm
				DBB = All Manual Transm

Camshaft and Valves 2.5L [ENJ]
Figure 2.5LD-510

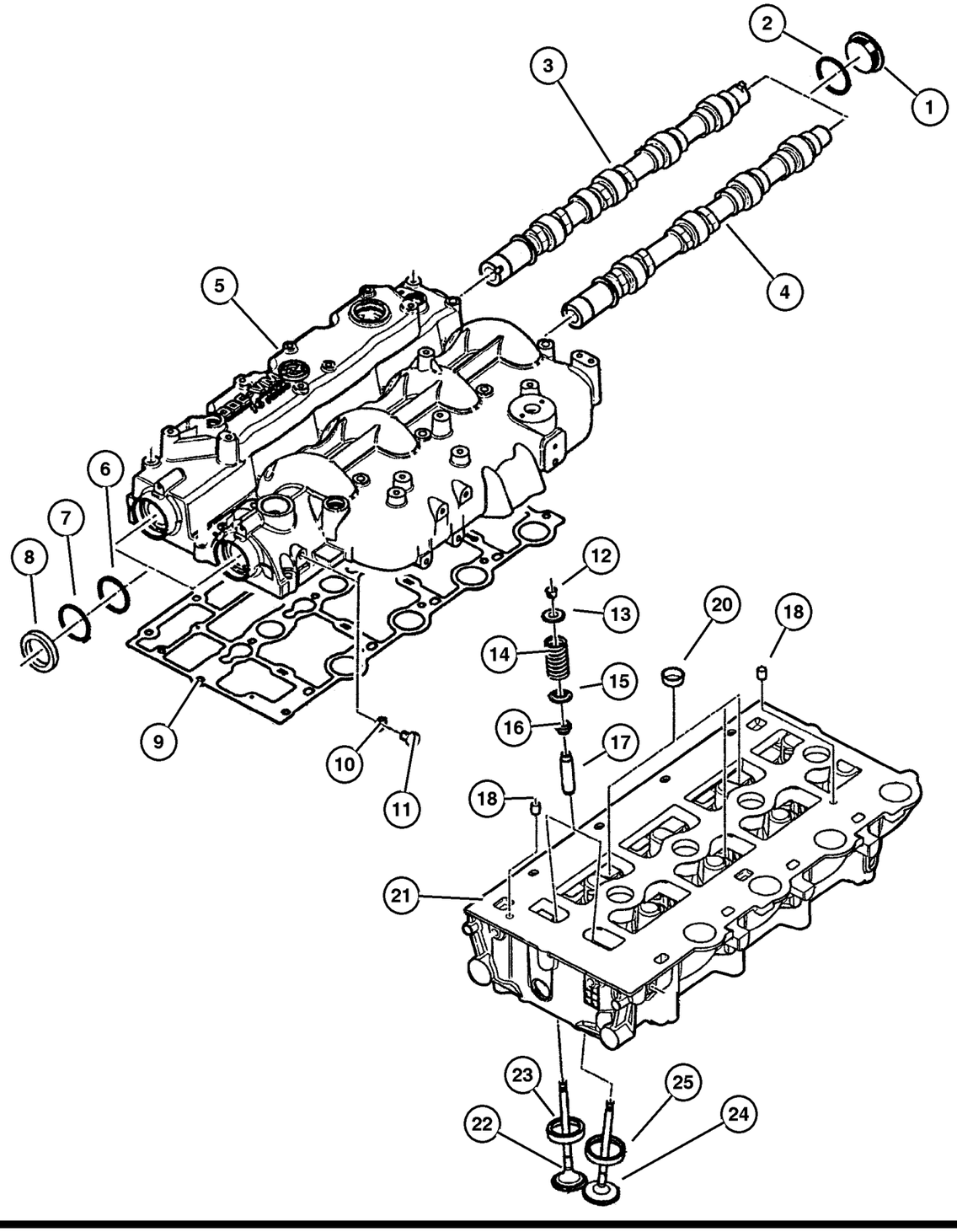

ITEM	PART NUMBER	QTY	LINE	SERIES	BODY	ENGINE	TRANS	TRIM	DESCRIPTION
NOTE:									
Sales Codes:									
[DBB] = All Manual Transmissions									
[EN0] = All 4 Cylinder Turbo Diesel Engines									
1	5066 855AA	2				EN0	DBB		PLUG, Camshaft
2	5066 811AA	2				EN0	DBB		WASHER, Plain, 16.2x19.9x1.5
3	5066 847AB	1				EN0	DBB		CAMSHAFT, Intake
4	5066 850AB	1				EN0	DBB		CAMSHAFT, Exhaust
5									COVER, Cylinder Head
	5093 896AA	1				EN0	DG0		Intake Valves
	5093 897AA	1				EN0	DG0		Exhaust Valves
6	5066 844AA	2				EN0	DBB		SPACER
7	5066 841AA	2				EN0	DBB		SNAP RING
8	5066 958AA	2				EN0	DBB		SEAL
9	5066 786AA	1				EN0	DBB		GASKET, Valve Cover
10	4720 713	2				EN0	DBB		WASHER, Implement Attaching
11	5066 787AA	2				EN0	DBB		PLUG, Cylinder Block
12	5066 778AA	32				EN0	DBB		LOCK, Valve Spring Retainer
13	5093 892AA	16				EN0	DBB		RETAINER, Valve Spring
14	5066 776AA	16				EN0	DBB		SPRING, Valve
15	5066 775AA	16				EN0	DBB		SEAL, Valve Guide
16	5093 891AA	16				EN0	DBB		SEAL, Valve Guide
17	5066 773AA	16				EN0	DBB		GUIDE, Intake/Exhaust Valve, Standard Size
18	4720 165	1				EN0	DBB		DOWEL, Rocker
-19	5066 780AA	16				EN0	DBB		ROCKER ARM, Inlet and Exhaust Valve
20	4723 211	2				EN0	DBB		PLUG, Cylinder Block Oil Hole
21	5093 893AA	1				EN0	DBB		HEAD, Cylinder
22	5066 769AA	8				EN0	DBB		VALVE, Exhaust, Standard
23	5066 771AA	8				EN0	DBB		SEAT, Exhaust Valve, 0.30mm Oversize
24	5066 770AA	8				EN0	DBB		VALVE, Intake, Standard
25	5066 772AA	8				EN0	DBB		SEAT, Intake Valve

JEEP LIBERTY (KJ)

SERIES	LINE	BODY	ENGINE	TRANSMISSION
P = Limited	J = LHD (4WD)	74 = 4 Dr (104.3 WB)	ED1,ED0 = 2.4L Power Tech	DDK = 5 Speed HDManual
H = Sport	U = RHD (4WD)		EKG,EK0 = 3.7L Power Tech	DDD = 5 Speed HD Manual
M = Renegade	T = LHD (2WD)		ENJ = 2.5L 4Cyl Turbo Diesel	DG4,DGQ = Multi-Speed Auto
			ENR = 2.8L 4Cyl Turbo Diesel	DG6 = 4 Speed Auto Transm
			EN0 = 4Cyl Turbo Diesel	DG0 = All Automatic Transm
				DBB = All Manual Transm

AR = Use as required - = Non illustrated part # = New this model year

September 30, 2003

« RETURN TO GROUP INDEX

Timing Cover and Related Parts 2.5L [ENJ]
Figure 2.5LD-610

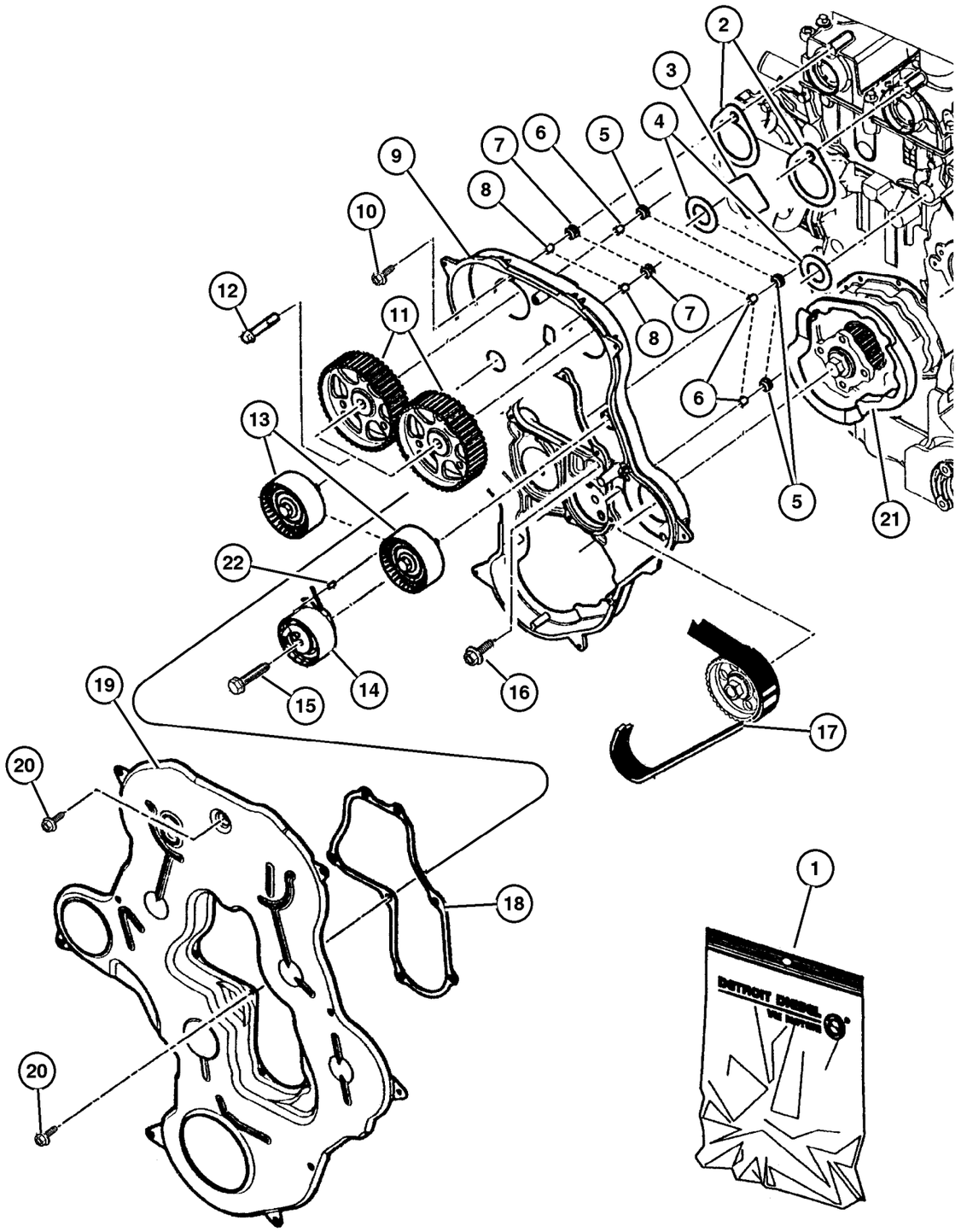

ITEM	PART NUMBER	QTY	LINE	SERIES	BODY	ENGINE	TRANS	TRIM	DESCRIPTION
NOTE:									
Sales Codes:									
[DBB] = All Manual Transmissions									
[EN0] = All 4 Cylinder Turbo Diesel Engines									
1	5019 861AA	1				EN0	DBB		GASKET KIT, Timing Cover
2									GASKET, Serviced In # 1, (NOT SERVICED) (Not Serviced)
3									GASKET, Serviced In # 1, (NOT SERVICED) (Not Serviced)
4									GASKET, Serviced In # 1, (NOT SERVICED) (Not Serviced)
5									DAMPER, Vibration, Serviced In # 1, (NOT SERVICED) (Not Serviced)
6									BUSHING, Balance Shaft, Serviced In # 1, (NOT SERVICED) (Not Serviced)
7									DAMPER, Vibration, Serviced In # 1, (NOT SERVICED) (Not Serviced)
8									BUSHING, Balance Shaft, Serviced In # 1, (NOT SERVICED) (Not Serviced)
9	5073 446AB	1				EN0	DBB		COVER, Timing Case
10	5069 114AA	5				EN0	DBB		SCREW
11	5066 926AA	2				EN0	DBB		GEAR, Balance Shaft
12	4897 825AA	2				EN0	DBB		SCREW
13	5093 931AA	2				EN0	DBB		PULLEY, Idler
14	5066 826AA	1				EN0	DG0		TENSIONER, Belt
15	5015 031AA	1				EN0	DBB		SCREW
16	5003 532AA	4				EN0	DBB		BOLT, Adaptor Plate
17	5066 928AA	1				EN0	DBB		BELT, Timing
18	5066 921AA	1				EN0	DBB		GASKET, Timing Cover
19	5066 919AB	1				EN0	DBB		COVER, Timing Case
20	5069 112AA	17				EN0	DBB		SCREW
21	4863 779	1				EN0	DBB		GASKET, Vacuum Pump, .
22	4720 304	1				EN0	DBB		DOWEL, Front Cover

JEEP LIBERTY (KJ)

SERIES	LINE	BODY	ENGINE	TRANSMISSION
P = Limited	J = LHD (4WD)	74 = 4 Dr (104.3 WB)	ED1,ED0 = 2.4L Power Tech	DDK = 5 Speed HDManual
H = Sport	U = RHD (4WD)		EKG,EK0 = 3.7L Power Tech	DDD = 5 Speed HD Manual
M = Renegade	T = LHD (2WD)		ENJ = 2.5L 4Cyl Turbo Diesel	DG4,DGQ = Multi-Speed Auto
			ENR = 2.8L 4Cyl Turbo Diesel	DG6 = 4 Speed Auto Transm
			EN0 = 4Cyl Turbo Diesel	DG0 = All Automatic Transm
				DBB = All Manual Transm

Engine Oiling and Balance Shafts 2.5L [ENJ]
Figure 2.5LD-710

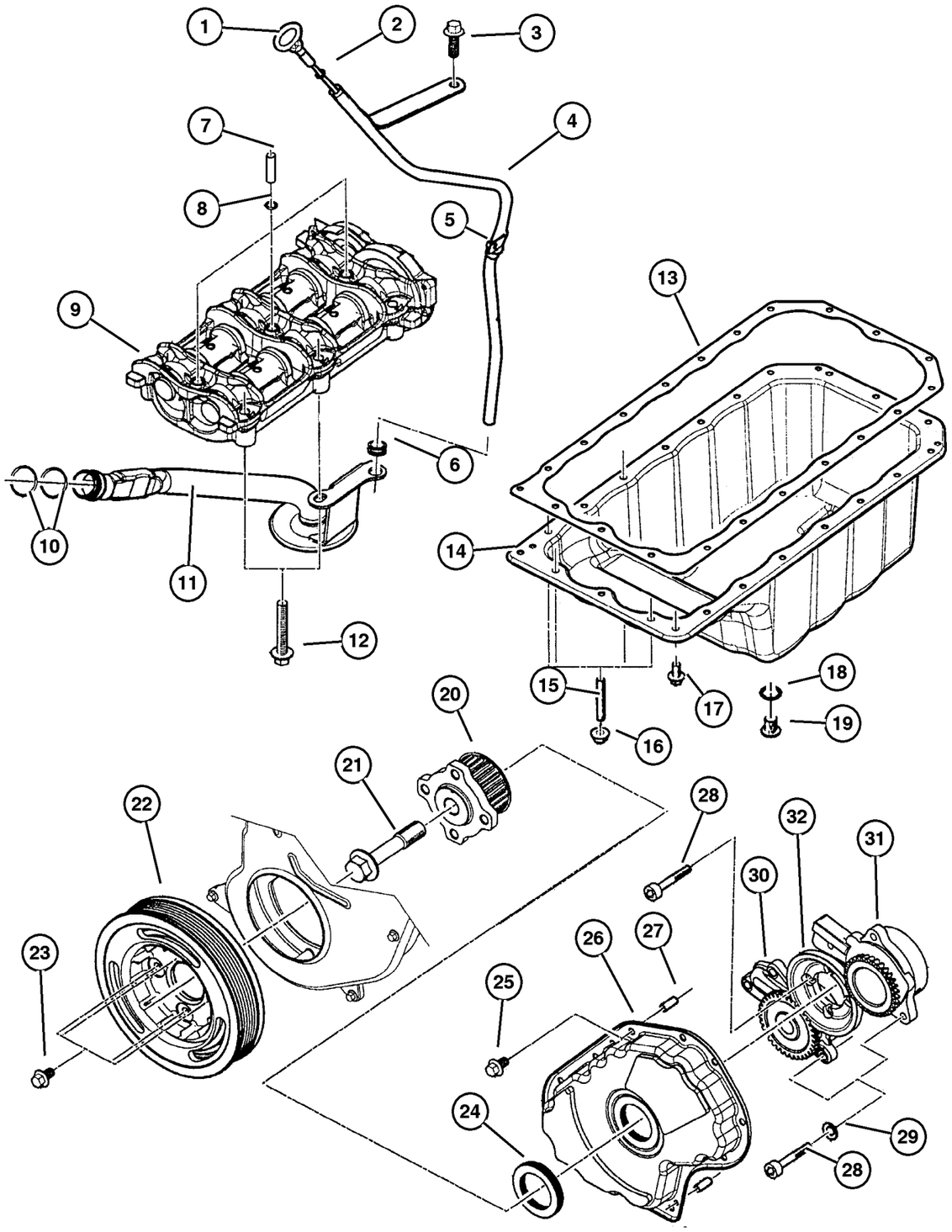

ITEM	PART NUMBER	QTY	LINE	SERIES	BODY	ENGINE	TRANS	TRIM	DESCRIPTION
NOTE:									
Sales Codes:									
[DBB] = All Manual Transmissions									
[EN0] = All 4 Cylinder Turbo Diesel Engines									
1	5072 682AB	1				EN0	DBB		INDICATOR, Engine Oil Level
2	4720 373	1				EN0	DBB		O RING, Engine Oil Indicator
3	5003 554AA	3				EN0	DBB		SCREW
4	5072 681AC	1				EN0	DBB		TUBE, Oil Gauge
5	5083 157AA	1				EN0	DBB		O RING
6	4720 362	2				EN0	DBB		GASKET, Engine Oil Indicator Pipe
7	5093 899AA	3				EN0	DBB		PIN
8	5066 899AA	3				EN0	DBB		O RING
9	5066 890AA	1				EN0	DBB		SHAFT, Balance
10	5066 789AB	2				EN0	DBB		O RING, Oil Suction Tube
11	5072 680AB	1				EN0	DBB		PICKUP, Engine Oil
12	5066 962AA	6				EN0	DBB		SCREW
13	5066 901AA	1				EN0	DBB		GASKET, Oil Pan
14	5072 683AA	1				EN0	DBB		PAN, Engine Oil
15	4864 745	1				EN0	DBB		BOLT
16	4778 936	1				EN0	DBB		NUT, Suction Pipe Attaching
17	4864 748	20				EN0	DBB		BOLT
18	4720 353	1				EN0	DBB		WASHER, Plain
19	4720 352	1				EN0	DBB		PLUG, Oil Drain
20	5066 978AA	1				EN0	DBB		PULLEY, Crankshaft
21	5066 832AA	1				EN0	DBB		SCREW
22	5072 669AA	1				EN0	DBB		PULLEY, Crankshaft
23	5069 138AA	4				EN0	DBB		SCREW, Damper Mounting
24	5072 670AA	1				EN0	DBB		SEAL, Front Main Crankshaft
25	4864 748	12				EN0	DBB		BOLT
26	5066 955AA	1				EN0	DBB		COVER, Timing Belt
27	5066 834AA	2				EN0	DBB		PIN
28	4720 658	10				EN0	DBB		SCREW, Intake Manifold Elbow
29	4723 204	5				EN0	DBB		WASHER, Implement Attaching
30	5093 890AA	1				EN0	DBB		PUMP, Engine Oil
31	5072 673AA	1				EN0	DBB		PUMP, Vacuum
32	5066 835AA	1				EN0	DBB		GEAR, Ring

JEEP LIBERTY (KJ)

SERIES	LINE	BODY	ENGINE	TRANSMISSION
P = Limited	J = LHD (4WD)	74 = 4 Dr (104.3 WB)	ED1,ED0 = 2.4L Power Tech	DDK = 5 Speed HDManual
H = Sport	U = RHD (4WD)		EKG,EK0 = 3.7L Power Tech	DDD = 5 Speed HD Manual
M = Renegade	T = LHD (2WD)		ENJ = 2.5L 4Cyl Turbo Diesel	DG4,DGQ = Multi-Speed Auto
			ENR = 2.8L 4Cyl Turbo Diesel	DG6 = 4 Speed Auto Transm
			EN0 = 4Cyl Turbo Diesel	DG0 = All Automatic Transm
				DBB = All Manual Transm

Oil Cooler 2.5L [ENJ]
Figure 2.5LD-720

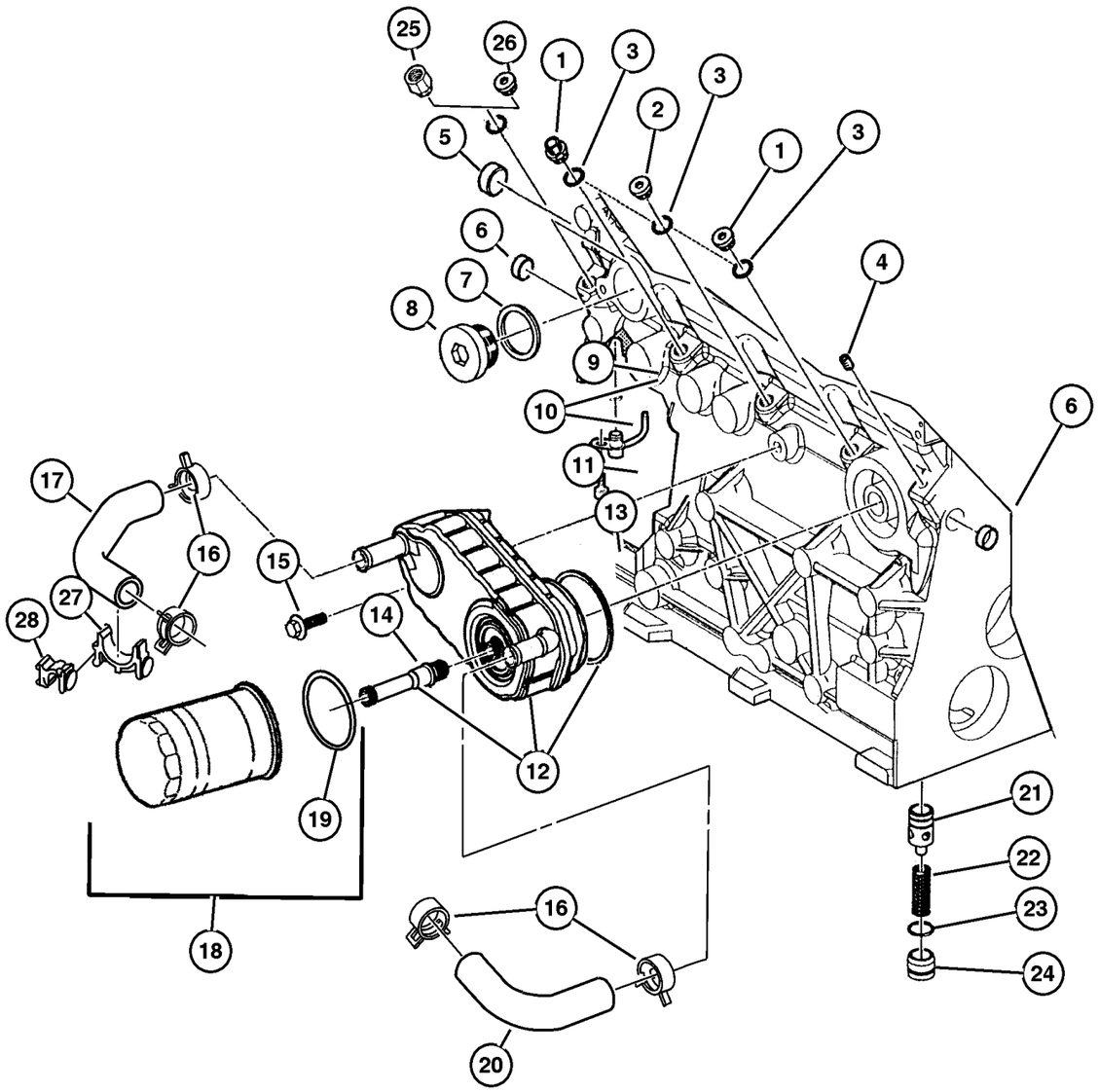

ITEM	PART NUMBER	QTY	LINE	SERIES	BODY	ENGINE	TRANS	TRIM	DESCRIPTION
NOTE:									
Sales Codes:									
[DBB]=All Manual Transmissions									
[DG0]=All Automatic Transmissions									
[EN0]=All 4 Cylinder Turbo Diesel Engines									
1	5066 889AA	2				EN0	DBB		BOLT, Oil Feed To Turbo Adapter
2	5066 814AA	1				EN0	DBB		BOLT, Turbo Oil Feed Adapter
3	4720 704	4				EN0	DBB		WASHER, Oil Pressure Transduser
4	4883 424AA	1				EN0	DBB		PLUG, Cylinder Block
5	4778 887	1				EN0	DBB		PLUG, Cylinder Block Oil Hole
6	4723 211	2				EN0	DBB		PLUG, Cylinder Block Oil Hole
7	5066 811AA	1				EN0	DBB		WASHER, Plain, 16.2x19.9x1.5
8	5066 855AA	1				EN0	DBB		PLUG, Camshaft
9	4864 689	4				EN0	DBB		O RING
10	5066 812AB	4				EN0	DBB		JET, Valve Body
11	4882 620	1				EN0	DBB		SCREW
12	5093 913AA	1				EN0	DBB		COOLER, Engine Oil
13	4723 217	1				EN0	DBB		O RING, Oil Cooler
14	5015 178AA	1				EN0	DBB		FITTING, Engine Oil Cooler
15	5003 724AA	1				EN0	DBB		SCREW
16	4883 924AA	4				EN0	DBB		CLAMP, Heater Hose
17	5072 710AA	1				EN0	DBB		HOSE, Engine Oil Cooler
18	5003 558AA	1				EN0	DBB		FILTER, Engine Oil
19	5066 946AA	1				EN0	DBB		GASKET
20	5072 709AA	1				EN0	DBB		HOSE, Engine Oil Cooler
21	5066 816AA	1				EN0	DBB		VALVE, Oil Pressure Relief
22	5093 915AA	1				EN0	DBB		SPRING, Oil Pressure Relief Valve
23	5066 887AA	1				EN0	DBB		O RING
24	5066 886AA	1				EN0	DBB		PLUG
25	5093 916AA	1				EN0	DBB		ADAPTER
26	5066 889AA	2				EN0	DBB		BOLT, Oil Feed To Turbo Adapter
27	5093 906AA	1				EN0	DBB		CLAMP
28	5093 914AA	1				EN0	DBB		CLAMP

JEEP LIBERTY (KJ)

SERIES	LINE	BODY	ENGINE	TRANSMISSION
P = Limited	J = LHD (4WD)	74 = 4 Dr (104.3 WB)	ED1,ED0 = 2.4L Power Tech	DDK = 5 Speed HDManual
H = Sport	U = RHD (4WD)		EKG,EK0 = 3.7L Power Tech	DDD = 5 Speed HD Manual
M = Renegade	T = LHD (2WD)		ENJ = 2.5L 4Cyl Turbo Diesel	DG4,DGQ = Multi-Speed Auto
			ENR = 2.8L 4Cyl Turbo Diesel	DG6 = 4 Speed Auto Transm
			EN0 = 4Cyl Turbo Diesel	DG0 = All Automatic Transm
				DBB = All Manual Transm

Oil Lines 2.5L [ENJ]
Figure 2.5LD-730

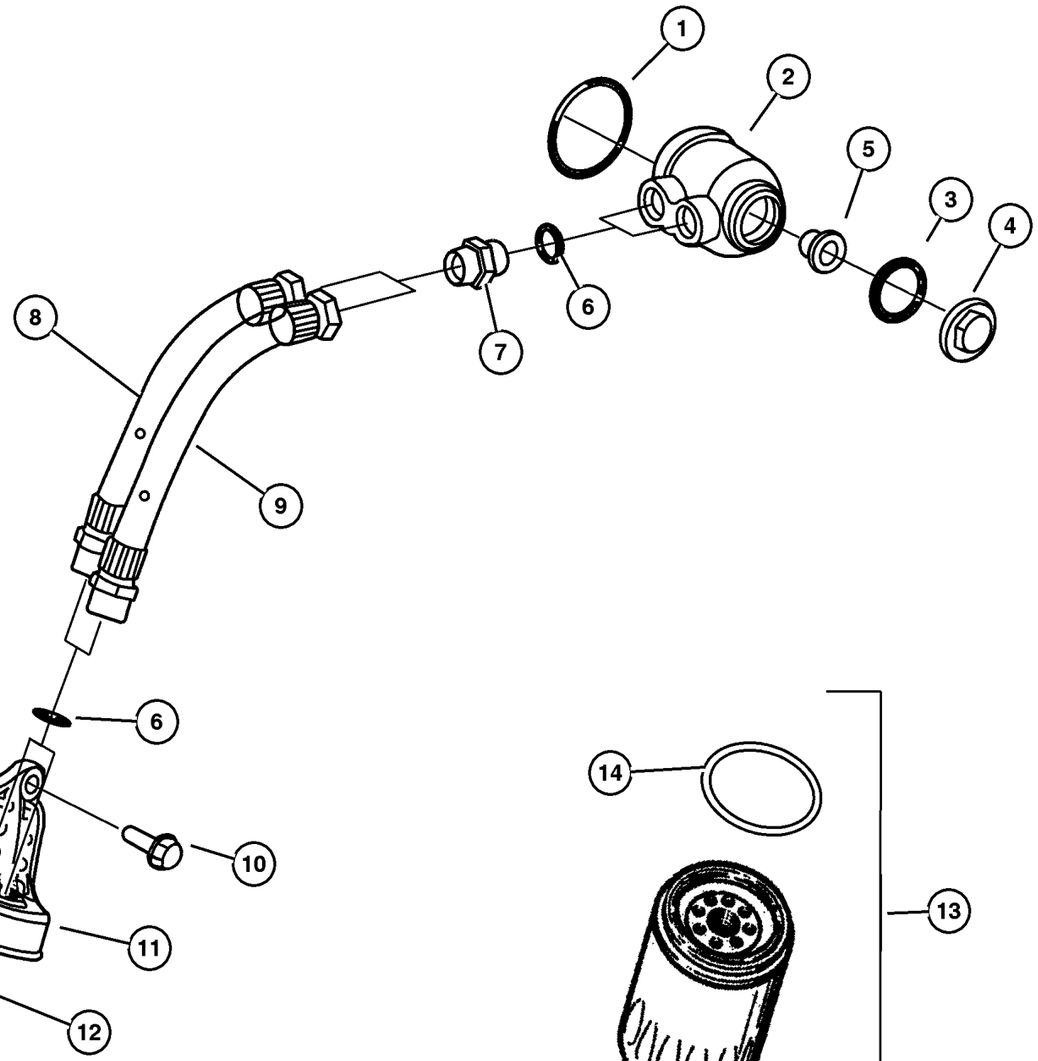

ITEM	PART NUMBER	QTY	LINE	SERIES	BODY	ENGINE	TRANS	TRIM	DESCRIPTION
NOTE:									
Sales Codes:									
[DBB]=All Manual Transmissions									
[DG0]=All Automatic Transmissions									
[EN0]=All 4 Cylinder Turbo Diesel Engines									
1	4720 375	1				EN0	DBB		O RING, Oil Filter Base
2	5072 716AA	1				EN0	DBB		ADAPTER, Oil Filter
3	4886 305AA	1				EN0	DBB		O RING, Oil Filter Adapter
4	5072 718AB	1				EN0	DBB		NUT
5	4723 334	1				EN0	DBB		GASKET, Valve
6	5066 946AA	1				EN0	DBB		GASKET
7	5093 920AA	2				EN0	DBB		UNION
8	5093 921AB	1				EN0	DBB		PIPE
9	5093 919AB	1				EN0	DBB		PIPE
10	5003 532AA	1				EN0	DBB		BOLT, Adaptor Plate
11	5072 711AB	1				EN0	DBB		BRACKET, Oil Filter Housing
12	4897 252AA	1				EN0	DBB		UNION, Oil Filter Base
13	5003 558AA	1				EN0	DBB		FILTER, Engine Oil
14	5066 946AA	1				EN0	DBB		GASKET

JEEP LIBERTY (KJ)

SERIES	LINE	BODY	ENGINE	TRANSMISSION
P = Limited	J = LHD (4WD)	74 = 4 Dr (104.3 WB)	ED1,ED0 = 2.4L Power Tech	DDK = 5 Speed HDManual
H = Sport	U = RHD (4WD)		EKG,EK0 = 3.7L Power Tech	DDD = 5 Speed HD Manual
M = Renegade	T = LHD (2WD)		ENJ = 2.5L 4Cyl Turbo Diesel	DG4,DGQ = Multi-Speed Auto
			ENR = 2.8L 4Cyl Turbo Diesel	DG6 = 4 Speed Auto Transm
			EN0 = 4Cyl Turbo Diesel	DG0 = All Automatic Transm
				DBB = All Manual Transm

Manifolds 2.5L [ENJ]
Figure 2.5LD-810

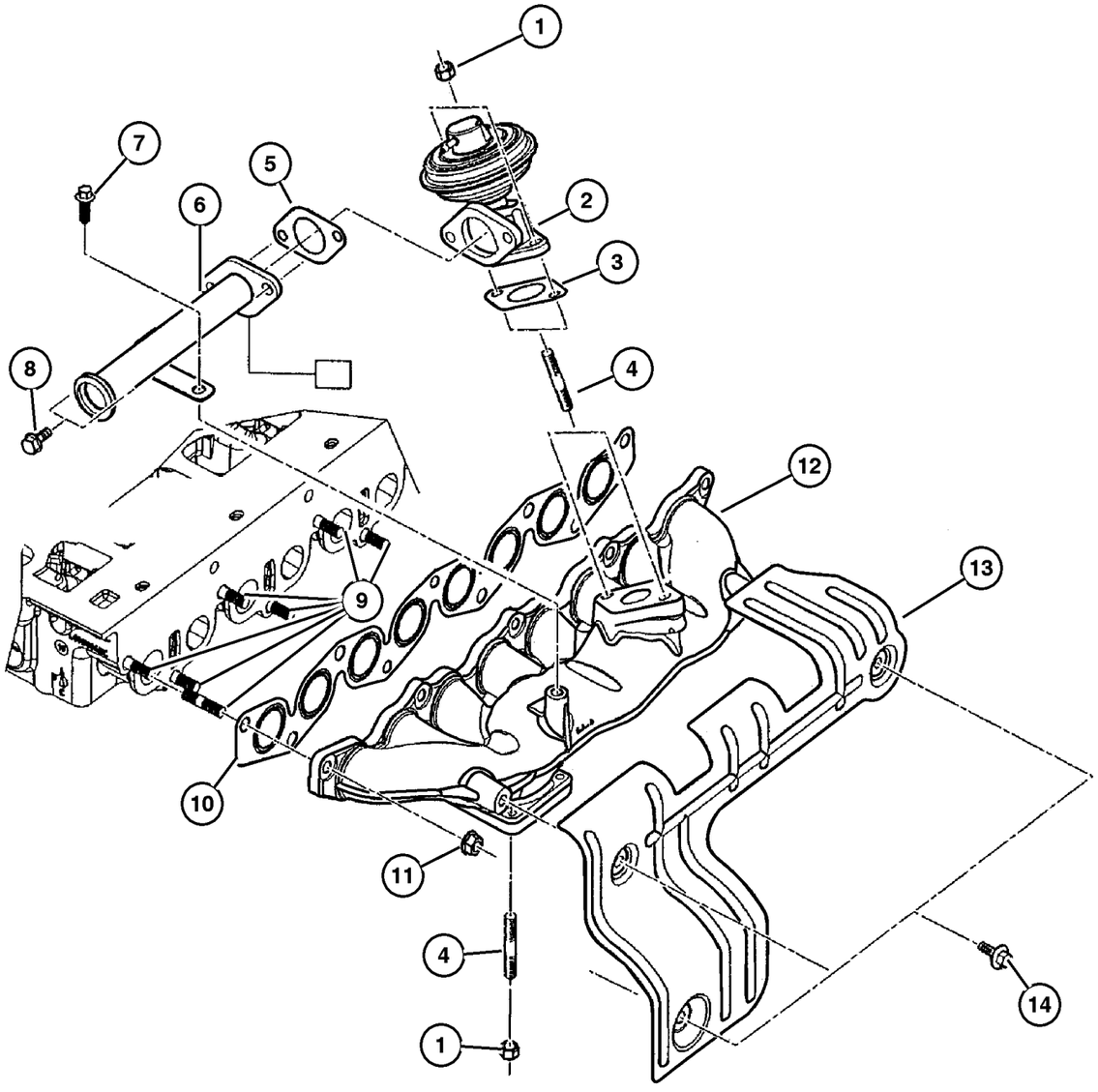

ITEM	PART NUMBER	QTY	LINE	SERIES	BODY	ENGINE	TRANS	TRIM	DESCRIPTION
NOTE:									
Sales Codes:									
[DBB]=All Manual Transmissions									
[EN0]=All 4 Cylinder Turbo Diesel Engines									
1	4882 610	6				EN0	DBB		NUT, Lock
2	5066 800AB	1				EN0	DBB		VALVE, EGR
3	5083 261AA	1				EN0	DBB		GASKET, EGR Tube Flange
4	4882 606	6				EN0	DBB		STUD, Turbo Elbow
5	5083 261AA	1				EN0	DBB		GASKET, EGR Tube Flange
6	5103 249AA	1				EN0	DBB		TUBE
7	5072 688AA	4				EN0	DBB		SCREW
8	5066 986AA	2				EN0	DBB		SCREW
9	5066 796AA	9				EN0	DBB		STUD, Turbo Elbow
10	5093 904AA	1				EN0	DBB		GASKET, Intake/Exhaust Manifold
11	5093 903AA	9				EN0	DBB		NUT, Lock
12	5072 686AA	1				EN0	DBB		MANIFOLD, Exhaust
13	5072 691AA	1				EN0	DBB		SHIELD, Exhaust Manifold
14	5072 688AA	4				EN0	DBB		SCREW

JEEP LIBERTY (KJ)

SERIES	LINE	BODY	ENGINE	TRANSMISSION
P = Limited	J = LHD (4WD)	74 = 4 Dr (104.3 WB)	ED1,ED0 = 2.4L Power Tech	DDK = 5 Speed HDManual
H = Sport	U = RHD (4WD)		EKG,EK0 = 3.7L Power Tech	DDD = 5 Speed HD Manual
M = Renegade	T = LHD (2WD)		ENJ = 2.5L 4Cyl Turbo Diesel	DG4,DGQ = Multi-Speed Auto
			ENR = 2.8L 4Cyl Turbo Diesel	DG6 = 4 Speed Auto Transm
			EN0 = 4Cyl Turbo Diesel	DG0 = All Automatic Transm
				DBB = All Manual Transm

Crankcase Ventilation 2.5L [ENJ]
Figure 2.5LD-910

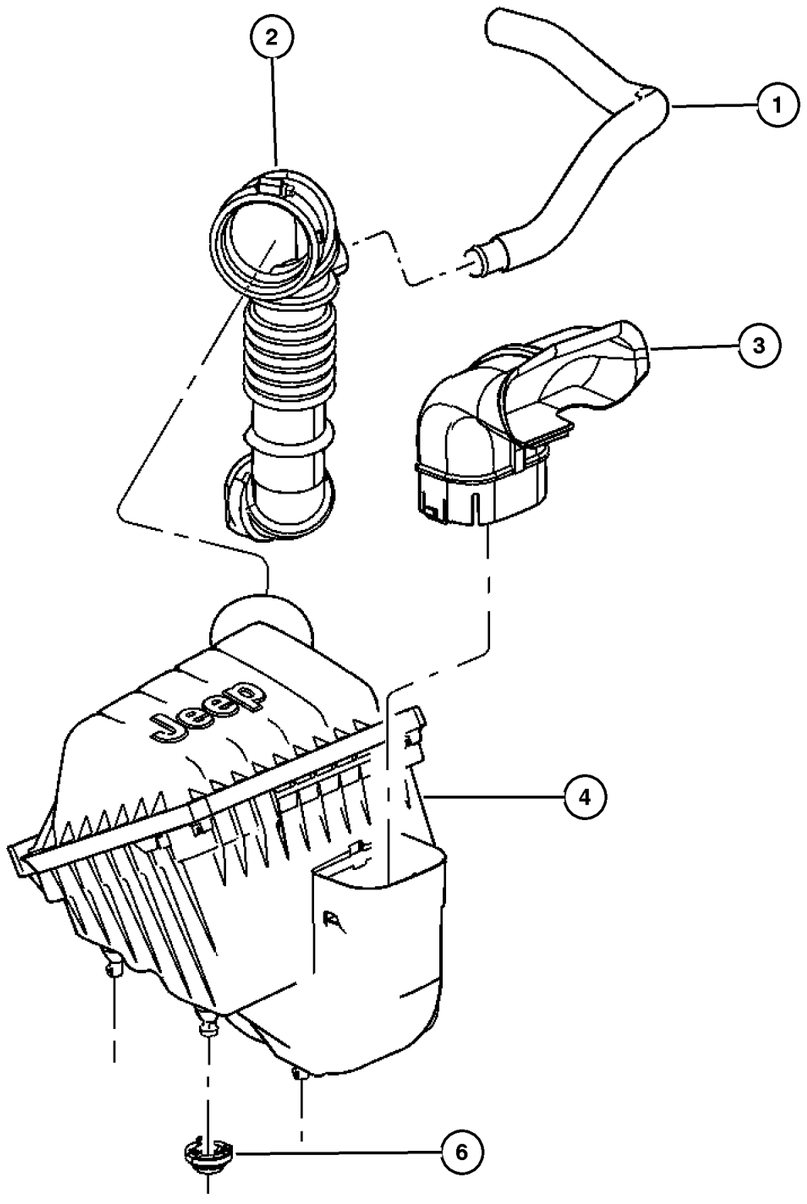

ITEM	PART NUMBER	QTY	LINE	SERIES	BODY	ENGINE	TRANS	TRIM	DESCRIPTION
NOTE:									
Sales Codes:									
[DBB] = All Manual Transmissions									
[EN0] = All 4 Cylinder Turbo Diesel Engines									
1	53013 094AC	1				EN0			HOSE, Oil Separator
2	53013 104AB	1				EN0			HOSE, Clean Air
3	53013 103AA	1				EK0, EN0			INLET, Fresh Air
4	53013 107AB	1				EN0			AIR CLEANER
-5	5018 777AA	1				EN0			FILTER, Air
6	53013 357AA	3				EK0, EN0			GROMMET, Air Cleaner

JEEP LIBERTY (KJ)

SERIES	LINE	BODY	ENGINE	TRANSMISSION
P = Limited	J = LHD (4WD)	74 = 4 Dr (104.3 WB)	ED1,ED0 = 2.4L Power Tech	DDK = 5 Speed HDManual
H = Sport	U = RHD (4WD)		EKG,EK0 = 3.7L Power Tech	DDD = 5 Speed HD Manual
M = Renegade	T = LHD (2WD)		ENJ = 2.5L 4Cyl Turbo Diesel	DG4,DGQ = Multi-Speed Auto
			ENR = 2.8L 4Cyl Turbo Diesel	DG6 = 4 Speed Auto Transm
			EN0 = 4Cyl Turbo Diesel	DG0 = All Automatic Transm
				DBB = All Manual Transm

Group – 011
Exhaust

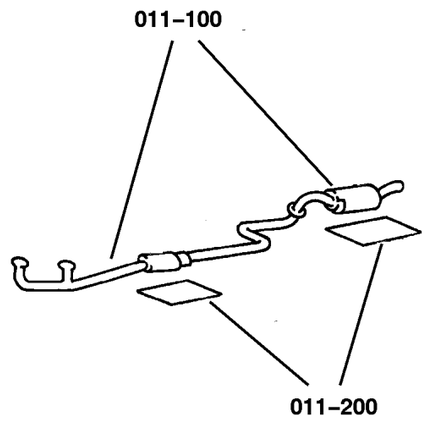

011–100 Exhaust System	011–200 Heat Shields		
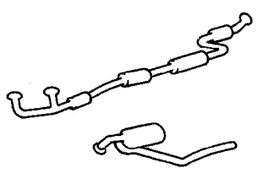	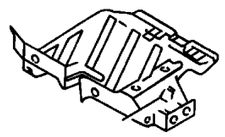		

GROUP 11 - Exhaust

Illustration Title	Group-Fig. No.
Exhaust System	
Exhaust System, 2.5L/2.8 Turbo Diesel [EN0]	Fig. 011-110
Exhaust System 2.4L [ED1]	Fig. 011-120
Exhaust System 3.7L [EKG]	Fig. 011-130
Heat Shields	
Heat Shields	Fig. 011-210

Exhaust System, 2.5L/2.8 Turbo Diesel [EN0]
Figure 011-110

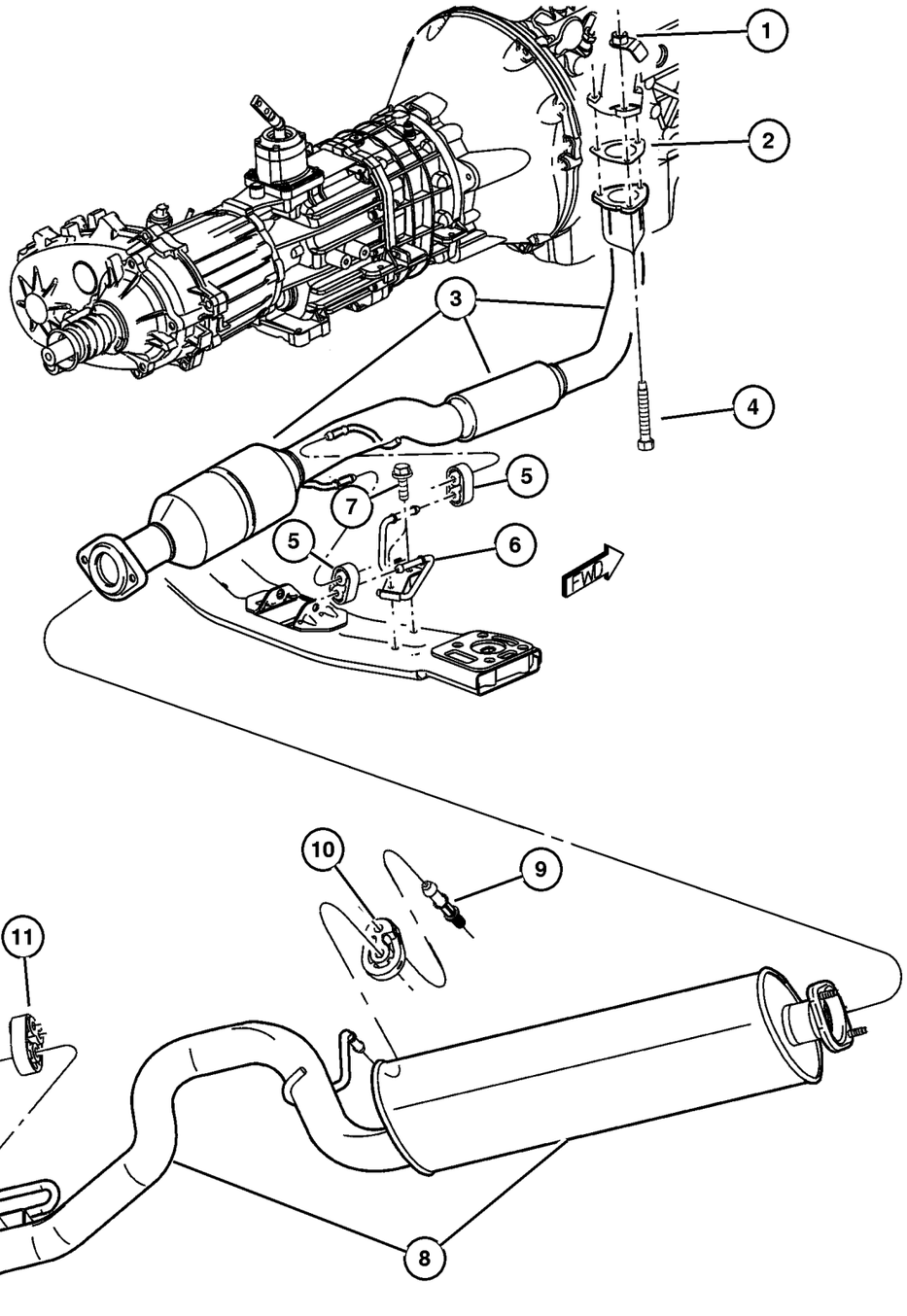

ITEM	PART NUMBER	QTY	LINE	SERIES	BODY	ENGINE	TRANS	TRIM	DESCRIPTION
Note; Sales Codes									
[EN0]= All 4/5 Cylinder Turbo Diesels									
1	4682 810AB	4				ED0			NUT, Hex Flange, M8x1.25
2	52101 165AA	1				EN0			GASKET, Manifold To Pipe
3	#52128 687AB	1				EN0			PIPE AND CONVERTER, Exhaust, To Manifold
4									BOLT AND WASHER, Self Taping Flange Head, M8x1.25x40.00, (NOT SERVICED) (Not Serviced)
5	5210 1035	2				EN0			INSULATOR, Exhaust
6	#52128 686AB	1				EN0			HANGER, Exhaust
7	6101 611	2				EN0			SCREW AND WASHER, Hex Head, M8x1.25x25
8	52101 120AD	1							MUFFLER AND TAILPIPE, Exhaust
9	52128 502AB	1							HANGER, Exhaust
10	52128 501AA	1							ISOLATOR, Exhaust
11	52101 126AA	1							ISOLATOR, Exhaust

JEEP LIBERTY (KJ)

SERIES	LINE	BODY	ENGINE	TRANSMISSION
P = Limited	J = LHD (4WD)	74 = 4 Dr (104.3 WB)	ED1,ED0 = 2.4L Power Tech	DDK = 5 Speed HDManual
H = Sport	U = RHD (4WD)		EKG,EK0 = 3.7L Power Tech	DDD = 5 Speed HD Manual
M = Renegade	T = LHD (2WD)		ENJ = 2.5L 4Cyl Turbo Diesel	DG4,DGQ = Multi-Speed Auto
			ENR = 2.8L 4Cyl Turbo Diesel	DG6 = 4 Speed Auto Transm
			EN0 = 4Cyl Turbo Diesel	DG0 = All Automatic Transm
				DBB = All Manual Transm

AR = Use as required - = Non illustrated part # = New this model year **September 30, 2003**

« RETURN TO GROUP INDEX

Exhaust System 2.4L [ED1]
Figure 011-120

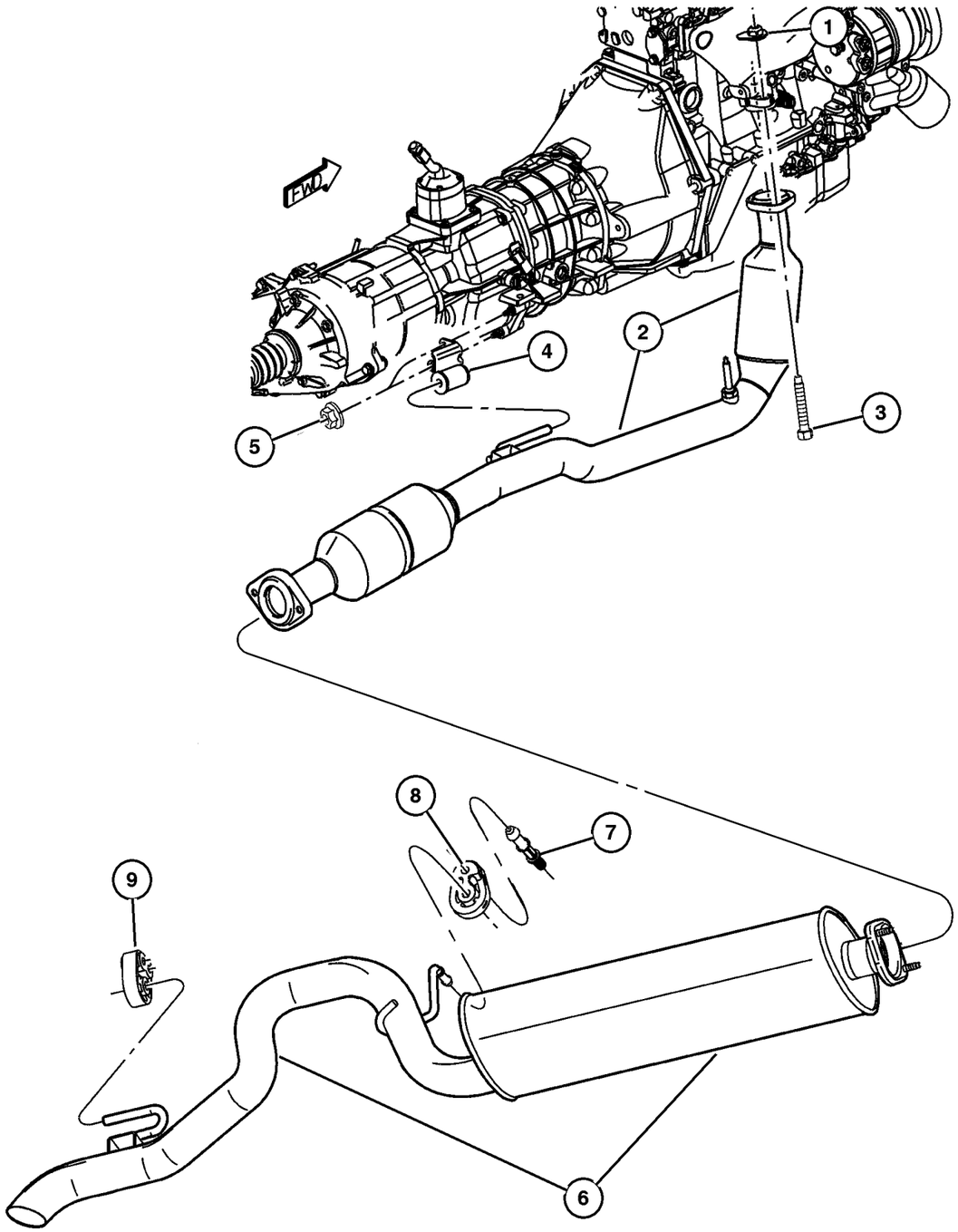

ITEM	PART NUMBER	QTY	LINE	SERIES	BODY	ENGINE	TRANS	TRIM	DESCRIPTION
Note; Sales Codes									
[DD0]= All 5 Speed Manual Transmissions									
[ED0]= All 2.2L,2.5L,2.4L, 4 Cylinder Gas Engines									
1	4682 810AB	4				ED0			NUT, Hex Flange, M8x1.25
2	#52128 684AC	1				ED0			PIPE AND CONVERTER, Exhaust, To Manifold
3	6505 954AA	2				ED0			SCREW, Hex Head Pilot Point, M8x1.25x65.00
4	52101 150AB	1				ED0	DD0		HANGER, Exhaust
5	6101 695	2				ED0			NUT, Hex Flange Lock
6	52101 120AD	1							MUFFLER AND TAILPIPE, Exhaust
7	52128 502AB	1							HANGER, Exhaust
8	52128 501AA	1							ISOLATOR, Exhaust
9	52101 126AA	1							ISOLATOR, Exhaust

JEEP LIBERTY (KJ)

SERIES	LINE	BODY	ENGINE	TRANSMISSION
P = Limited	J = LHD (4WD)	74 = 4 Dr (104.3 WB)	ED1,ED0 = 2.4L Power Tech	DDK = 5 Speed HDManual
H = Sport	U = RHD (4WD)		EKG,EK0 = 3.7L Power Tech	DDD = 5 Speed HD Manual
M = Renegade	T = LHD (2WD)		ENJ = 2.5L 4Cyl Turbo Diesel	DG4,DGQ = Multi-Speed Auto
			ENR = 2.8L 4Cyl Turbo Diesel	DG6 = 4 Speed Auto Transm
			EN0 = 4Cyl Turbo Diesel	DG0 = All Automatic Transm
				DBB = All Manual Transm

Exhaust System 3.7L [EKG]
Figure 011-130

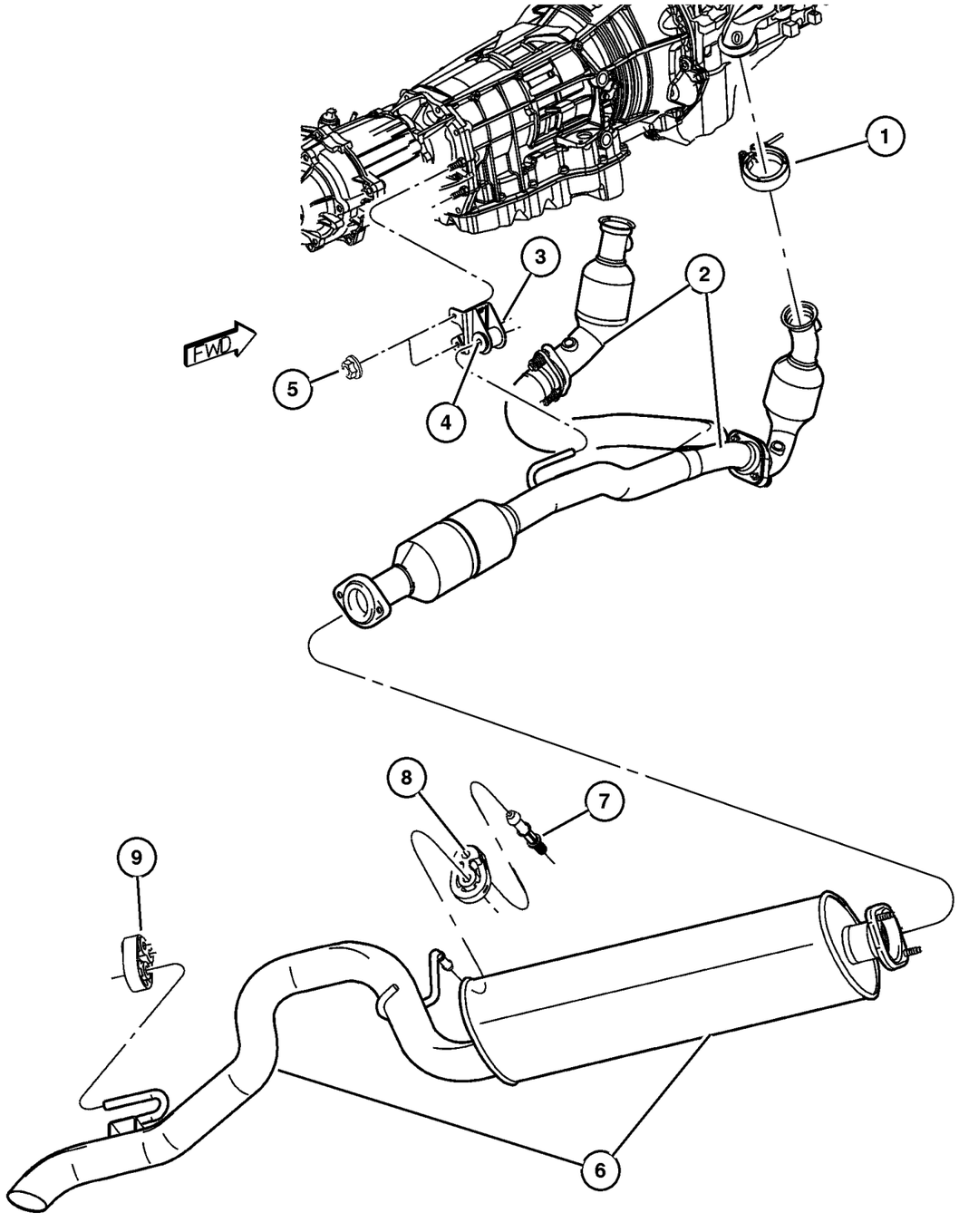

ITEM	PART NUMBER	QTY	LINE	SERIES	BODY	ENGINE	TRANS	TRIM	DESCRIPTION
Note; Sales Codes									
[DD0]=All 5 Speed Manual Transmissions									
[DG0]= All Automatic Transmissions									
[EK0]= All 3.7L 6 Cylinder Gas Engines									
1	4581 014AB	2				EK0			CLAMP, Exhaust Manifold
2	#52128 599AB	1				EK0			PIPE AND CONVERTER, Exhaust, To Manifold
3									HANGER, Exhaust
	#52128 668AA	1				EK0	DDQ		Right
	#52128 669AA	1				EK0	DDQ		Left
	#52128 720AA	1				EK0	DBB		Right
	#52128 721AA	1				EK0	DBB		Left
4									BUSHING, Exhaust Hanger
	5208 5085	1				EK0	DG6		
		1				EK0	DD0		
5									NUT, Hex Flange Lock, M8x1.25, (NOT SERVICED) (Not Serviced)
6	52101 120AD	1							MUFFLER AND TAILPIPE, Exhaust
7	52128 502AB	1							HANGER, Exhaust
8	52128 501AA	1							ISOLATOR, Exhaust
9	52101 126AA	1							ISOLATOR, Exhaust
-10	6502 058	2				EK0	DD0		SCREW AND WASHER, Hex Head Special Point, M8x1.25x17, Front Hanger to Trans

JEEP LIBERTY (KJ)

SERIES	LINE	BODY	ENGINE	TRANSMISSION
P = Limited	J = LHD (4WD)	74 = 4 Dr (104.3 WB)	ED1,ED0 = 2.4L Power Tech	DDK = 5 Speed HDManual
H = Sport	U = RHD (4WD)		EKG,EK0 = 3.7L Power Tech	DDD = 5 Speed HD Manual
M = Renegade	T = LHD (2WD)		ENJ = 2.5L 4Cyl Turbo Diesel	DG4,DGQ = Multi-Speed Auto
			ENR = 2.8L 4Cyl Turbo Diesel	DG6 = 4 Speed Auto Transm
			EN0 = 4Cyl Turbo Diesel	DG0 = All Automatic Transm
				DBB = All Manual Transm

AR = Use as required - = Non illustrated part # = New this model year

September 30, 2003

« RETURN TO GROUP INDEX

Heat Shields
Figure 011-210

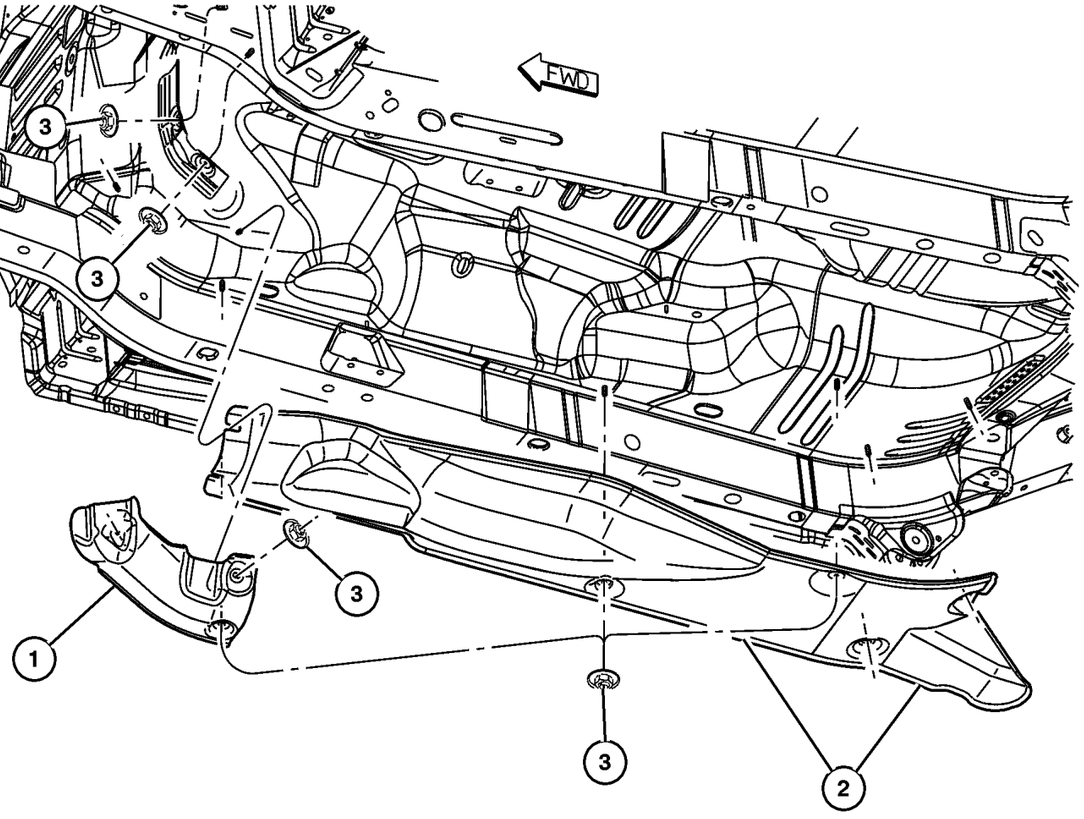

ITEM	PART NUMBER	QTY	LINE	SERIES	BODY	ENGINE	TRANS	TRIM	DESCRIPTION
1	55176 791AA	1							SHIELD, Floor Pan
2	55176 792AC	1							SHIELD, Floor Pan
3									NUT, Heat Shield Attach, M5x1.60, (NOT SERVICED) (Not Serviced)

JEEP LIBERTY (KJ)

SERIES	LINE	BODY	ENGINE	TRANSMISSION
P = Limited	J = LHD (4WD)	74 = 4 Dr (104.3 WB)	ED1,ED0 = 2.4L Power Tech	DDK = 5 Speed HDManual
H = Sport	U = RHD (4WD)		EKG,EK0 = 3.7L Power Tech	DDD = 5 Speed HD Manual
M = Renegade	T = LHD (2WD)		ENJ = 2.5L 4Cyl Turbo Diesel	DG4,DGQ = Multi-Speed Auto
			ENR = 2.8L 4Cyl Turbo Diesel	DG6 = 4 Speed Auto Transm
			EN0 = 4Cyl Turbo Diesel	DG0 = All Automatic Transm
				DBB = All Manual Transm

Group – 013
Frames and Bumpers

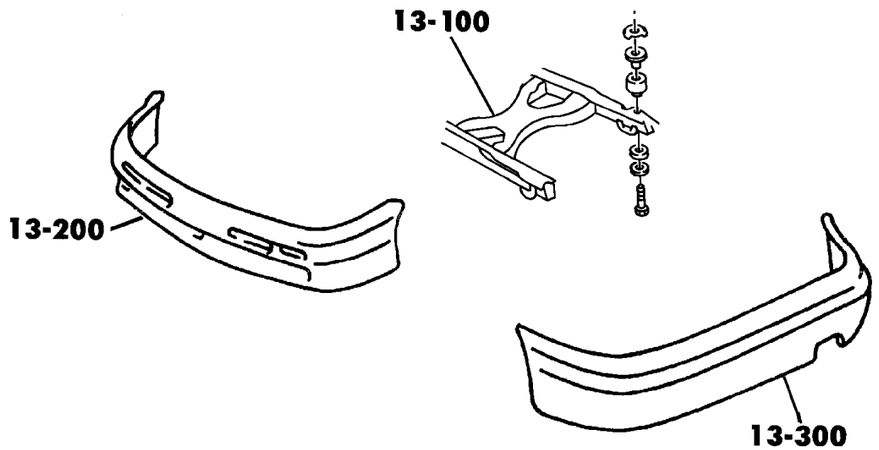

013–100	013–200	013–300	013–600
Frames	Front Bumper and Fascia	Rear Bumper and Fascia	Trailer Tow
	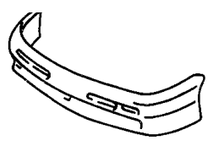		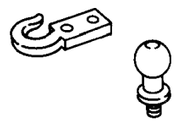

GROUP 13 - Frames and Bumpers

Illustration Title	Group-Fig. No.
Frames	
Frame Cradle	Fig. 013-110
Front Bumper and Fascia	
Bumper, Front	Fig. 013-210
Rear Bumper and Fascia	
Bumper, Rear	Fig. 013-310
Trailer Tow	
Tow Hooks - Front	Fig. 013-610
Tow Hooks - Rear	Fig. 013-620

Frame Cradle
Figure 013-110

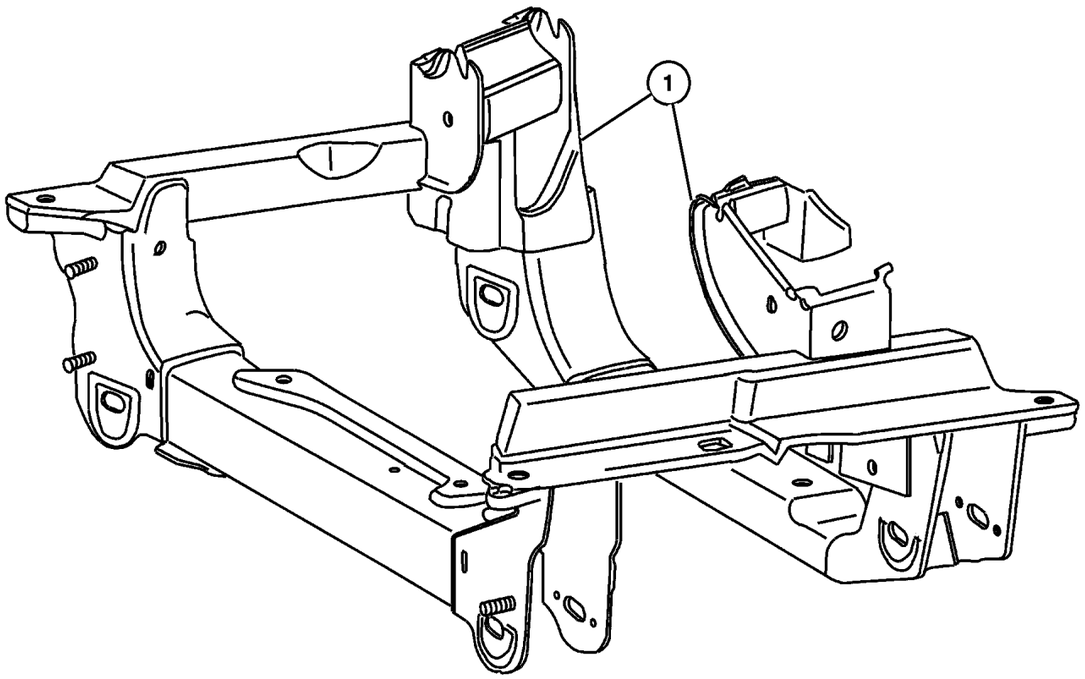

ITEM	PART NUMBER	QTY	LINE	SERIES	BODY	ENGINE	TRANS	TRIM	DESCRIPTION
Note: When replacing Crossmember Cradle it is recommended to relace mounting screws.									
1									CROSSMEMBER, Front Suspension
	52059 463AG	1	J						[ED0]
		1	U						[ED0]
		1	T						[ED0]
	52059 462AG	1	J						[EK0]
		1	U						[EK0]
		1	T						[EK0]
	52059 463AG	1	J						[EN0]
		1	U						[EN0]
-2	6506 672AA	2							SCREW AND WASHER, Hex, M14X2.0X135.0, Cradle Bolt
-3	6507 135AA	2							SCREW, M12X1.75X135, Cradle Bolt
-4	52128 539AC	1	J, U						SKID PLATE, Front
-5	6507 371AA	AR							SCREW AND WASHER, Hex Head, M7 x 1.25 x 20.00, Front Structure to Crossmember

JEEP LIBERTY (KJ)

SERIES	LINE	BODY	ENGINE	TRANSMISSION
P = Limited	J = LHD (4WD)	74 = 4 Dr (104.3 WB)	ED1,ED0 = 2.4L Power Tech	DDK = 5 Speed HDManual
H = Sport	U = RHD (4WD)		EKG,EK0 = 3.7L Power Tech	DDD = 5 Speed HD Manual
M = Renegade	T = LHD (2WD)		ENJ = 2.5L 4Cyl Turbo Diesel	DG4,DGQ = Multi-Speed Auto
			ENR = 2.8L 4Cyl Turbo Diesel	DG6 = 4 Speed Auto Transm
			EN0 = 4Cyl Turbo Diesel	DG0 = All Automatic Transm
				DBB = All Manual Transm

Bumper, Front
Figure 013-210

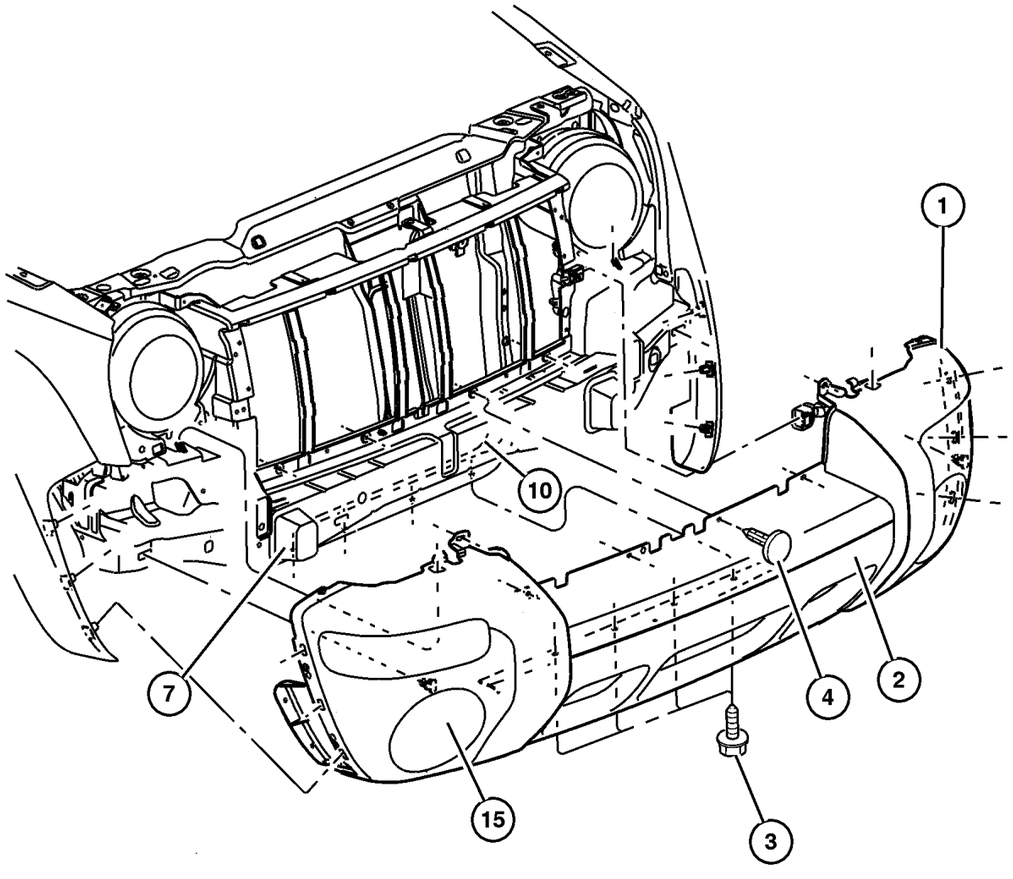

ITEM	PART NUMBER	QTY	LINE	SERIES	BODY	ENGINE	TRANS	TRIM	DESCRIPTION
NOTE: Sales Codes									
[LNJ]=Fog Lamps									
[MLA]=Fascia - Body Color									
[MLC]=Fascia - Gray									
1									FASCIA, Front, Primed
	5066 606AC	1							[MLA]
	5073 488AC	1							[ML3] With Renegade Package
	5GJ63 HS5AC	1							[MLC]
2	5HX12 WS2AB	1							BUMPER, Center Bezel
3									SCREW AND WASHER, Self Tapping, M6x1x22, (NOT SERVICED) (Not Serviced)
4	6506 008AA	6							RETAINER, Fascia
-5	55156 042AD	1							ABSORBER, Front Energy
-6	55155 963AC	1							AIR DAM
7	55360 410AA	2							BUMPER, Suspension Jounce
-8									SCREW AND WASHER, Self Tapping, M6x1x22, (NOT SERVICED) (Not Serviced)
-9	55255 994AC	1	J, T						BRACKET, License Plate, Package
10	55360 190AE	1							CROSSMEMBER, Front Support
-11	6035 201	3							RIVET
-12	6036 148AA	4							RIVET, Blind, Three Leg
-13									NUT, M5, (NOT SERVICED) (Not Serviced)
-14									BRACKET, License Plate
	55155 966AB	1	J, U						Export
	55255 992AC	1	J, T						
15									COVER, Lamp Opening
	55156 018AB	1							With [LNJ]
	55156 019AB	1							Without [LNJ]

JEEP LIBERTY (KJ)

SERIES	LINE	BODY	ENGINE	TRANSMISSION
P = Limited	J = LHD (4WD)	74 = 4 Dr (104.3 WB)	ED1,ED0 = 2.4L Power Tech	DDK = 5 Speed HDManual
H = Sport	U = RHD (4WD)		EKG,EK0 = 3.7L Power Tech	DDD = 5 Speed HD Manual
M = Renegade	T = LHD (2WD)		ENJ = 2.5L 4Cyl Turbo Diesel	DG4,DGQ = Multi-Speed Auto
			ENR = 2.8L 4Cyl Turbo Diesel	DG6 = 4 Speed Auto Transm
			EN0 = 4Cyl Turbo Diesel	DG0 = All Automatic Transm
				DBB = All Manual Transm

Bumper, Rear
Figure 013-310

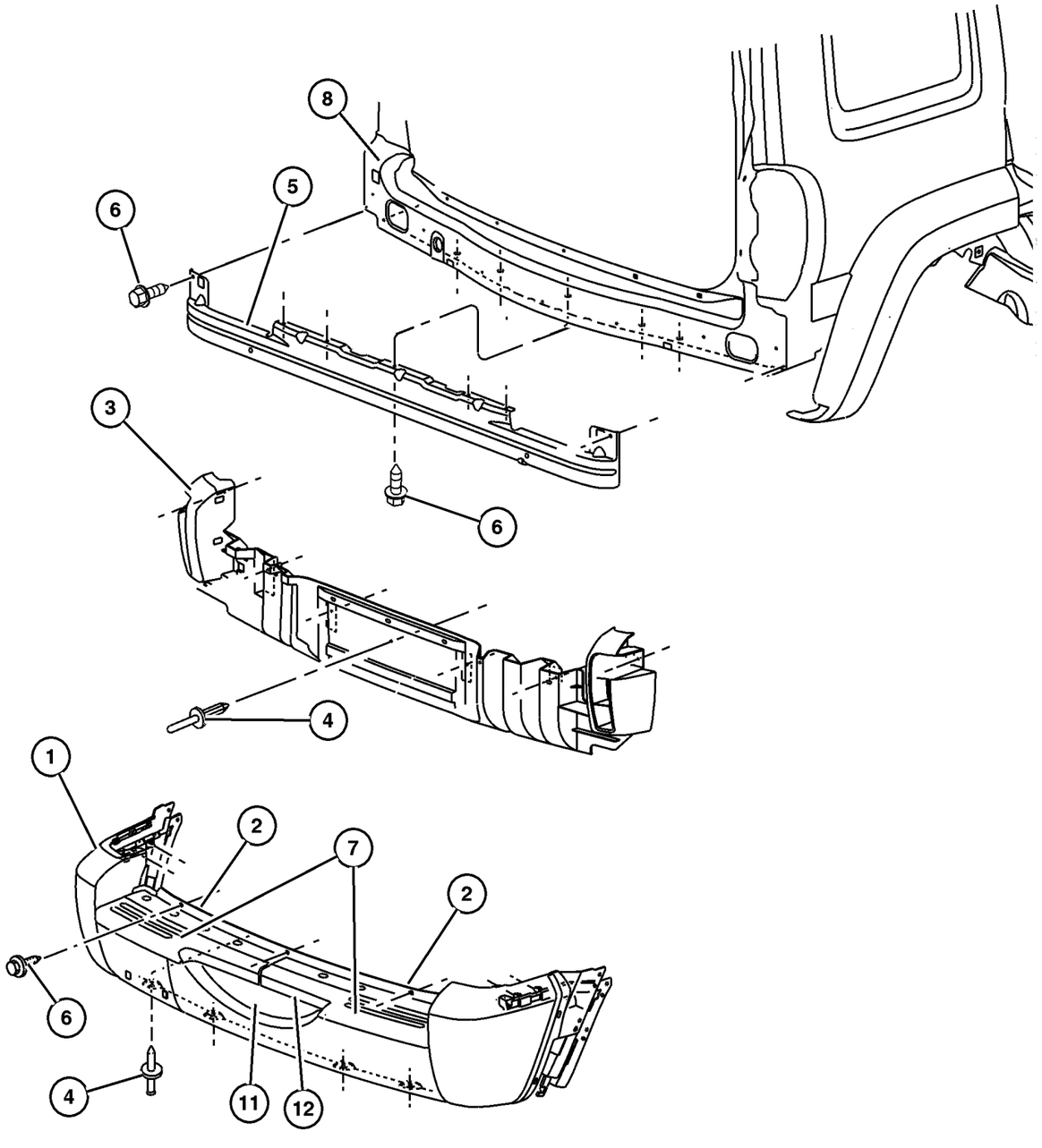

ITEM	PART NUMBER	QTY	LINE	SERIES	BODY	ENGINE	TRANS	TRIM	DESCRIPTION
NOTE : Sales Codes									
[ABE] = Export Equipment Group									
[MLA] = Fascias - Body Color									
[MLC] = Fascias - Silverstone									
1									FASCIA, Rear
	5066 317AE	1							[MLA], Without [ABE]
	5066 328AD	1							[MLA], With [ABE]
	5GE72 HS5AD	1							[MLC], With [ABE]
	5GJ58 HS5AE	1							[MLC], Without [ABE]
2	6506 008AA	6							RETAINER, Fascia
3									SUPPORT, Rear Fascia, Attaches directly to 55360227AB for Domestic vehicles
	55360 678AA	1							Right
	55360 679AA	1							Left
4									RIVET, (NOT SERVICED) (Not Serviced)
5	55155 820AA	1	J, U						CROSSMEMBER, Bumper, Rear, Export only
6	6505 900AA	7	J, U						SCREW, Tapping Hex Flange Head, M6.3 x 1.81 x 19.00, Export only
7									STEP PAD, Rear Bumper
	55155 996AC	1							Right
	55155 997AC	1							Left
8	55360 227AD	1							PANEL, Liftgate Opening
-9	4399 791	2							REFLECTOR, Fascia
-10	55255 994AC	1	J, T						BRACKET, License Plate
11	55156 801AA	1							TROUGH, Drip, Diverter
12	3420 1631	3							RIVET, M6.25x28 Black

JEEP LIBERTY (KJ)

SERIES	LINE	BODY	ENGINE	TRANSMISSION
P = Limited	J = LHD (4WD)	74 = 4 Dr (104.3 WB)	ED1,ED0 = 2.4L Power Tech	DDK = 5 Speed HDManual
H = Sport	U = RHD (4WD)		EKG,EK0 = 3.7L Power Tech	DDD = 5 Speed HD Manual
M = Renegade	T = LHD (2WD)		ENJ = 2.5L 4Cyl Turbo Diesel	DG4,DGQ = Multi-Speed Auto
			ENR = 2.8L 4Cyl Turbo Diesel	DG6 = 4 Speed Auto Transm
			EN0 = 4Cyl Turbo Diesel	DG0 = All Automatic Transm
				DBB = All Manual Transm

AR = Use as required - = Non illustrated part # = New this model year

September 30, 2003

« RETURN TO GROUP INDEX

Tow Hooks - Front
Figure 013-610

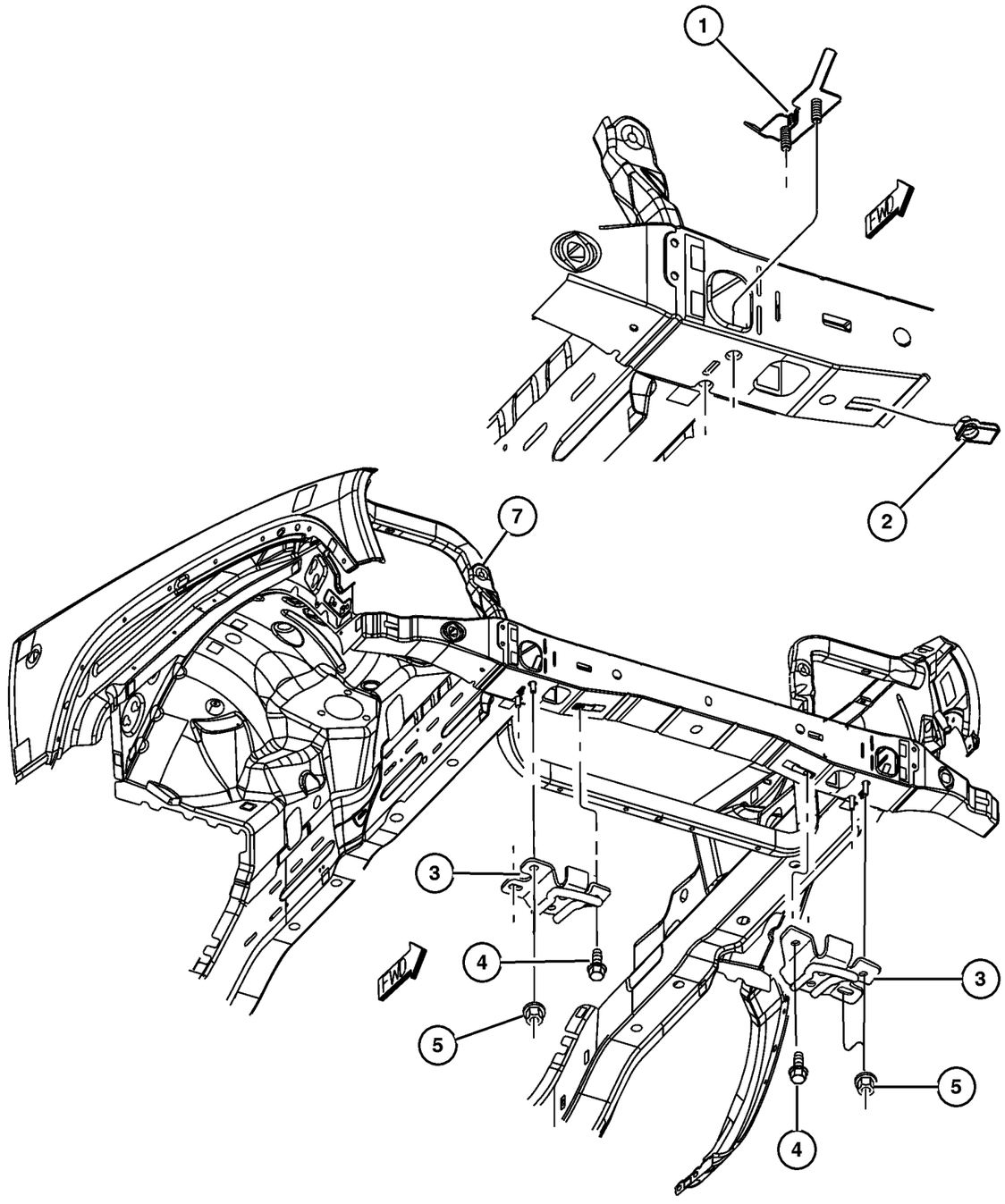

ITEM	PART NUMBER	QTY	LINE	SERIES	BODY	ENGINE	TRANS	TRIM	DESCRIPTION
1	52059 352AA	1							STUD PLATE
2	6504 818AA	1							NUT, M10x1.50
3	52059 353AA	1							EYE, Tow
4	6503 699	8							SCREW AND WASHER, Hex Head, M10x1.5x28
5	6504 818AA	1							NUT, M10x1.50
-6									HOOK, Tow
	52059 236AB	1							Right
	52059 237AB	1							Left
7	55176 756AD	1							SUPPORT, Radiator

JEEP LIBERTY (KJ)

SERIES	LINE	BODY	ENGINE	TRANSMISSION
P = Limited	J = LHD (4WD)	74 = 4 Dr (104.3 WB)	ED1,ED0 = 2.4L Power Tech	DDK = 5 Speed HDManual
H = Sport	U = RHD (4WD)		EKG,EK0 = 3.7L Power Tech	DDD = 5 Speed HD Manual
M = Renegade	T = LHD (2WD)		ENJ = 2.5L 4Cyl Turbo Diesel	DG4,DGQ = Multi-Speed Auto
			ENR = 2.8L 4Cyl Turbo Diesel	DG6 = 4 Speed Auto Transm
			EN0 = 4Cyl Turbo Diesel	DG0 = All Automatic Transm
				DBB = All Manual Transm

Tow Hooks - Rear
Figure 013-620

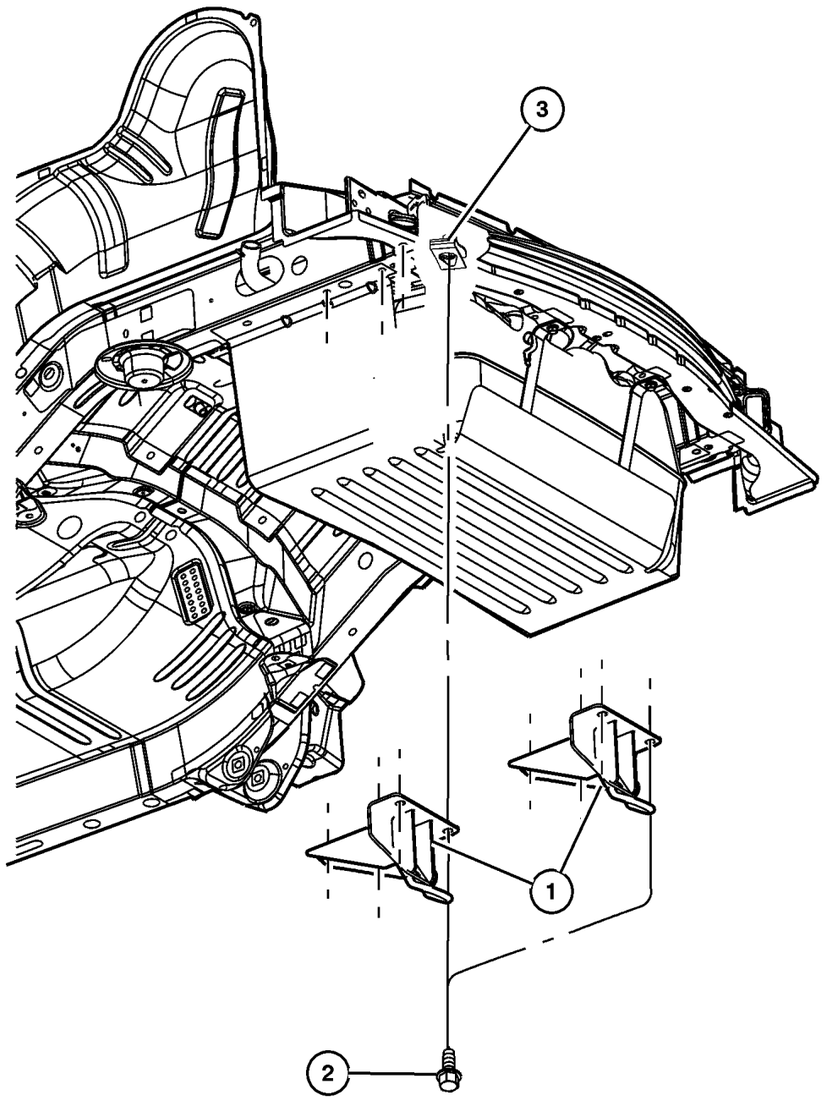

ITEM	PART NUMBER	QTY	LINE	SERIES	BODY	ENGINE	TRANS	TRIM	DESCRIPTION
1									HOOK, Tow
	52059 233AB	1							Hook
	52059 360AA	1							Eye
2	6502 557	6							BOLT, Hex Flange Head, M12x1.75x40
3	6504 565	1							NUT, U Multi Thread
-4	52059 224AC	1							HITCH, Trailer

JEEP LIBERTY (KJ)

SERIES	LINE	BODY	ENGINE	TRANSMISSION
P = Limited	J = LHD (4WD)	74 = 4 Dr (104.3 WB)	ED1,ED0 = 2.4L Power Tech	DDK = 5 Speed HDManual
H = Sport	U = RHD (4WD)		EKG,EK0 = 3.7L Power Tech	DDD = 5 Speed HD Manual
M = Renegade	T = LHD (2WD)		ENJ = 2.5L 4Cyl Turbo Diesel	DG4,DGQ = Multi-Speed Auto
			ENR = 2.8L 4Cyl Turbo Diesel	DG6 = 4 Speed Auto Transm
			EN0 = 4Cyl Turbo Diesel	DG0 = All Automatic Transm
				DBB = All Manual Transm

Group – 014
Fuel

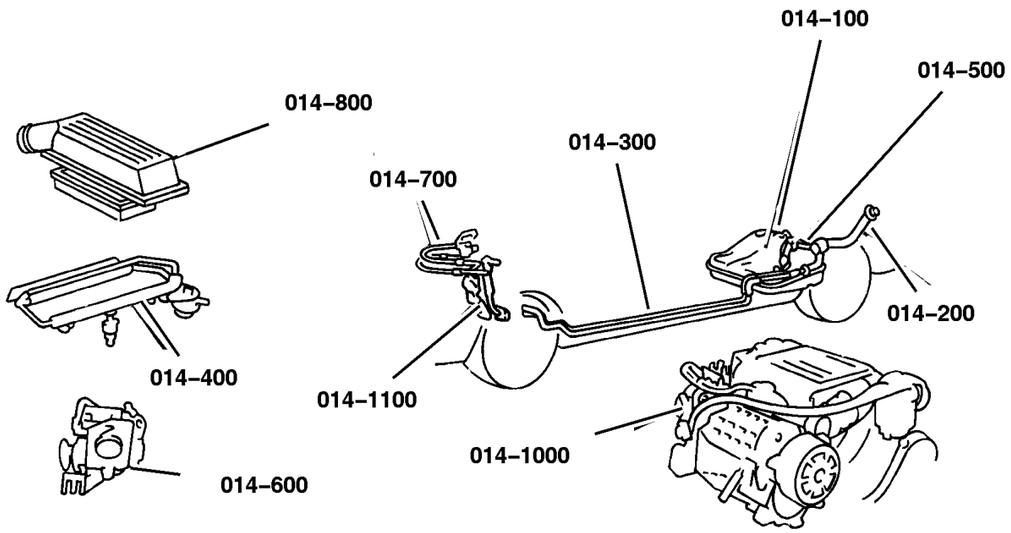

014–100 Tank, Fuel	**014–200** Fuel Tank Filler Tube	**014–300** Fuel Lines	**014–400** Fuel Rail
014–500 Fuel Pump and Sending Unit	**014–600** Throttle Body	**014–700** Throttle Controls	**014–800** Air Cleaner

Group – 014
Fuel

014–1000 Speed Control	**014–1100** Accelerator Pedal		

GROUP 14 - Fuel

Illustration Title	Group-Fig. No.
Tank, Fuel	
Tank, Fuel, All Engines	Fig. 014-110
Fuel Tank Filler Tube	
Fuel Tank Filler Tube, All Engines	Fig. 014-210
Fuel Lines	
Fuel Lines Front, 2.4L [ED1]	Fig. 014-310
Fuel Lines Rear, 2.4L [ED1]	Fig. 014-315
Fuel Lines Front, 3.7L [EKG]	Fig. 014-320
Fuel Lines Rear, 3.7L [EKG]	Fig. 014-325
Fuel Lines Front 2.5L/2.8 Diesel [EN0]	Fig. 014-330
Fuel Lines Rear, 2.5L/2.8 Diesel [EN0]	Fig. 014-335
Fuel Filter And Water Separator, 2.5/2.8 [EN0]	Fig. 014-340
Fuel Rail	
Fuel Rail, 2.4L [ED1]	Fig. 014-410
Fuel Rail, 3.7L [EKG]	Fig. 014-415
Fuel Injection System 2.5L/2.8 Diesel [EN0]	Fig. 014-420
Fuel Injection Pump 2.5/2.8 Diesel [EN0]	Fig. 014-430
Fuel Injection Pump Mounting	Fig. 014-435
Fuel Pump and Sending Unit	
Fuel Pump and Sending Unit, 2.4L [ED1], 3.7L [EKG], 2.5L Diesel [ENJ]	Fig. 014-510
Throttle Body	
Throttle Body, 2.4L [ED1], 3.7, [EKG]	Fig. 014-610
Turbocharger 2.5 Diesel [ENJ] [ENR]	Fig. 014-620
Throttle Controls	
Throttle Controls, 2.4L [ED1]	Fig. 014-710
Throttle Controls, 3.7L [EKG]	Fig. 014-720
Throttle Controls, 2.5L/2.8 Diesel [EN0]	Fig. 014-730
Air Cleaner	
Air Cleaner, 2.4L [ED1]	Fig. 014-810
Air Cleaner, 3.7L [EKG]	Fig. 014-820
Air Cleaner, 2.5L/2.8 Diesel [EN0]	Fig. 014-830
Speed Control	
Speed Control	Fig. 014-1010
Accelerator Pedal	
Accelerator Pedal	Fig. 014-1110

Tank, Fuel, All Engines
Figure 014-110

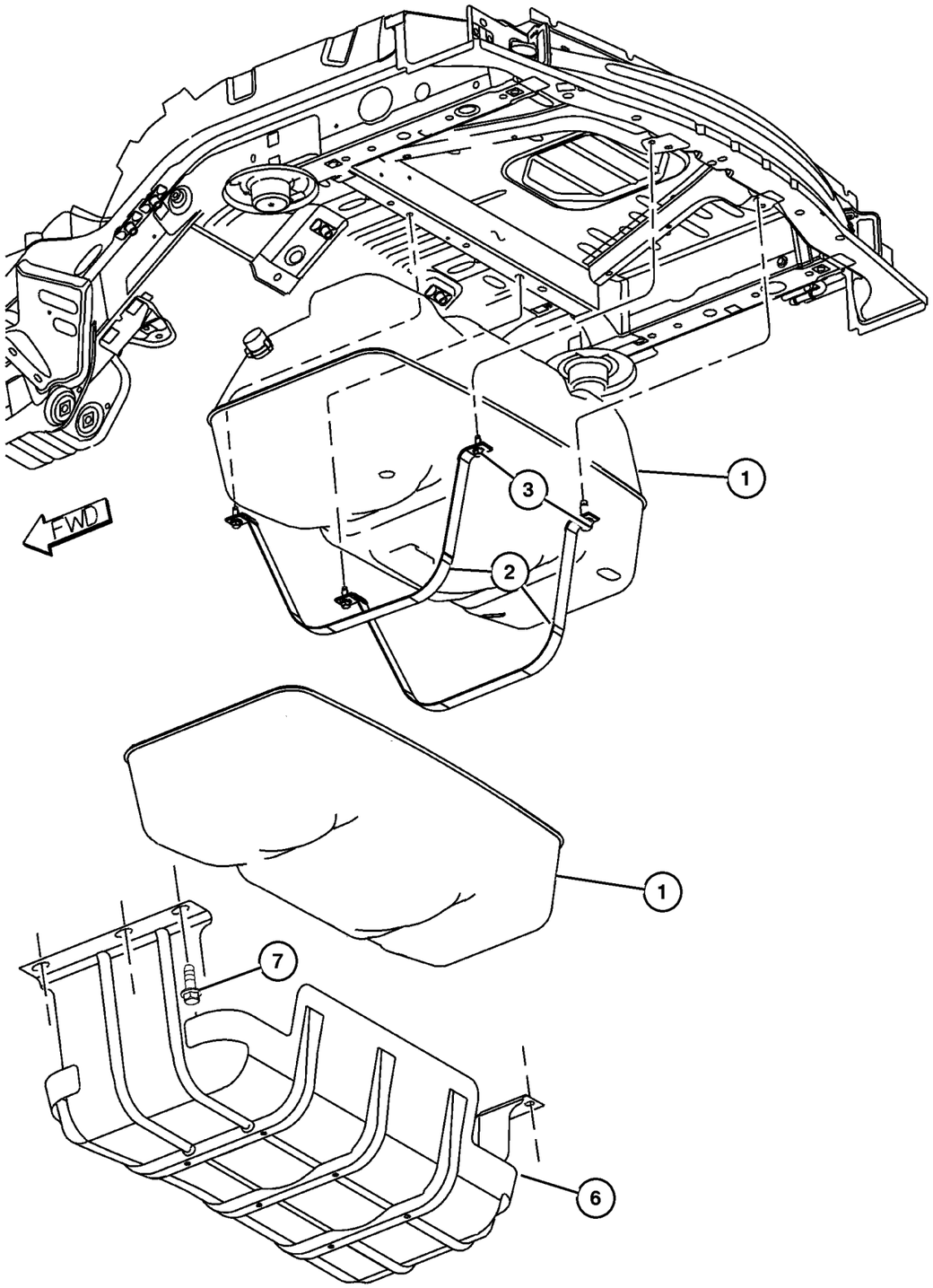

ITEM	PART NUMBER	QTY	LINE	SERIES	BODY	ENGINE	TRANS	TRIM	DESCRIPTION
Note; Sales Codes									
[ED0]= All 2.2L,2.5L,2.4L, 4 Cylinder Gas Engines									
[EK0]= All 3.7L 6 Cylinder Gas Engines									
[EN0]= All 4/5 Cylinder Turbo Diesels									
[XEE]=Skid Plate Shield, Fuel Tank									
1									TANK, Fuel
	#52128 620AC	1				ED0, EK0			
	#52128 621AC	1				EN0			
2	52100 334AE	2							STRAP, Fuel Tank
3	6503 183	4							SCREW, Hex Head, M10x1.5x30
-4	5072 731AA	1				EN0	DG0		SHIELD, Heat
-5	52100 525AA	4				ED0, EK0			NUT, Heat Shield Attach
6	52100 332AF	1							PLATE, Skid, [XEE]
7	6502 557	6							BOLT, Hex Flange Head, M12x1.75x40
-8	52128 698AA	1				EN0			FILTER, Fuel
-9	6505 775AA	2				EN0			CLAMP, Hose
-10	52100 469AD	1				EN0			HOSE, Fuel Vapor

JEEP LIBERTY (KJ)

SERIES	LINE	BODY	ENGINE	TRANSMISSION
P = Limited	J = LHD (4WD)	74 = 4 Dr (104.3 WB)	ED1,ED0 = 2.4L Power Tech	DDK = 5 Speed HDManual
H = Sport	U = RHD (4WD)		EKG,EK0 = 3.7L Power Tech	DDD = 5 Speed HD Manual
M = Renegade	T = LHD (2WD)		ENJ = 2.5L 4Cyl Turbo Diesel	DG4,DGQ = Multi-Speed Auto
			ENR = 2.8L 4Cyl Turbo Diesel	DG6 = 4 Speed Auto Transm
			EN0 = 4Cyl Turbo Diesel	DG0 = All Automatic Transm
				DBB = All Manual Transm

AR = Use as required - = Non illustrated part # = New this model year

September 30, 2003

« RETURN TO GROUP INDEX

Fuel Tank Filler Tube, All Engines
Figure 014-210

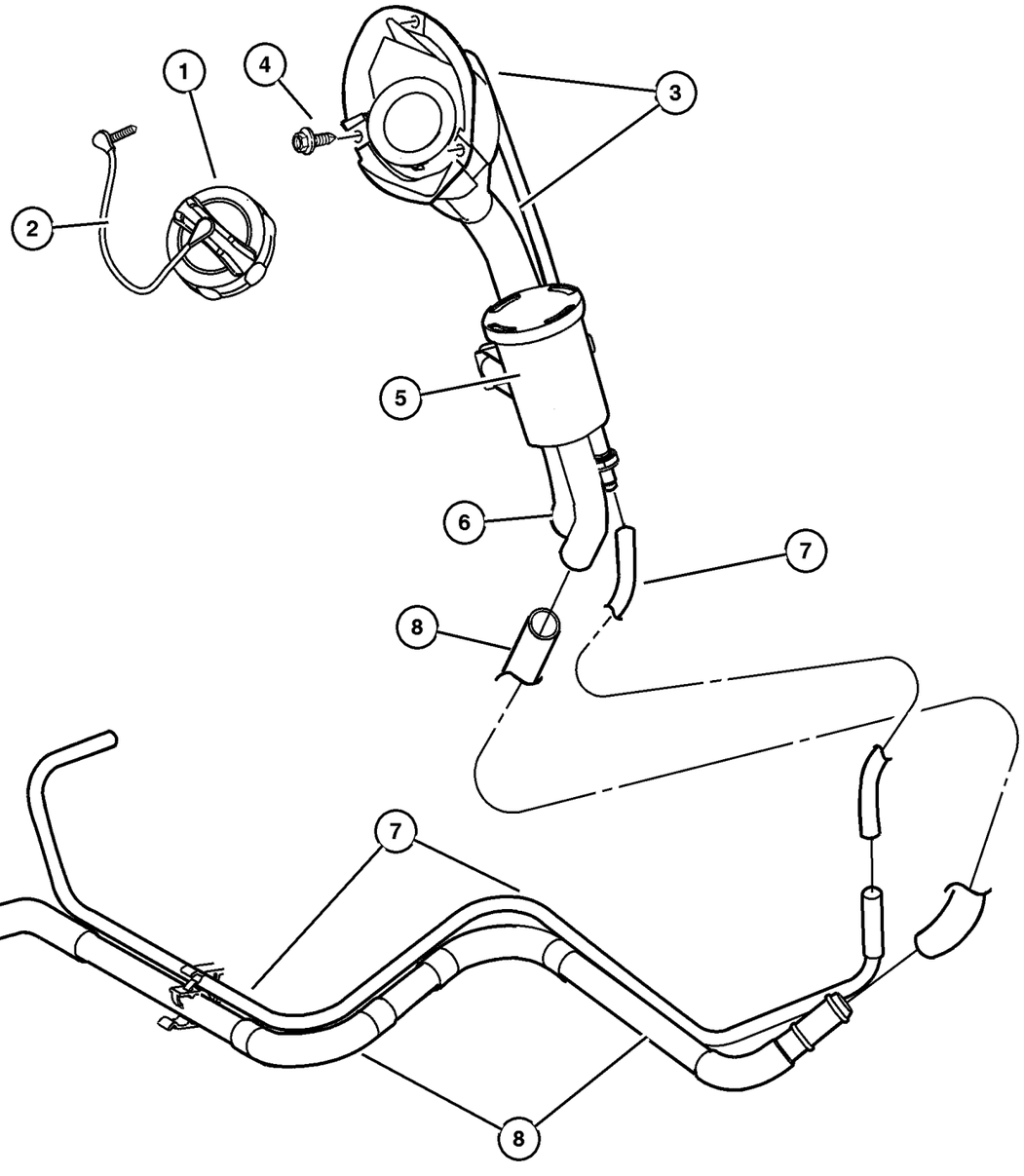

ITEM	PART NUMBER	QTY	LINE	SERIES	BODY	ENGINE	TRANS	TRIM	DESCRIPTION
Note; Sales Codes									
[ED0]= All 2.4L, 4 Cylinder Gas Engines									
[EK0]= All 3.7L 6 Cylinder Gas Engines									
[EN0]= All 2.5L Turbo Diesels									
1	52102 464AB	1							CAP, Fuel Filler
2	4682 676	1							TETHER, Fuel Filler Cap
3									TUBE, Fuel Filler
	#52128 640AB	1				ED0, EK0			
	#52128 641AB	1				EN0			
4	6035 204	3							SCREW, Tapping, .19-16x.75
5	4612 901	1				ED0, EK0			FILTER, Fuel Vapor Vent
6									HOSE, Fuel Filler
	#52128 753AA	1				ED0, EK0			
		1				EN0			
7									TUBE, Fuel, Serviced With Fuel Flow Valve , (NOT SERVICED) (Not Serviced)
8	#52128 631AC	1				ED0, EK0			TUBE, Vapor

JEEP LIBERTY (KJ)

SERIES	LINE	BODY	ENGINE	TRANSMISSION
P = Limited	J = LHD (4WD)	74 = 4 Dr (104.3 WB)	ED1,ED0 = 2.4L Power Tech	DDK = 5 Speed HDManual
H = Sport	U = RHD (4WD)		EKG,EK0 = 3.7L Power Tech	DDD = 5 Speed HD Manual
M = Renegade	T = LHD (2WD)		ENJ = 2.5L 4Cyl Turbo Diesel	DG4,DGQ = Multi-Speed Auto
			ENR = 2.8L 4Cyl Turbo Diesel	DG6 = 4 Speed Auto Transm
			EN0 = 4Cyl Turbo Diesel	DG0 = All Automatic Transm
				DBB = All Manual Transm

Fuel Lines Front, 2.4L [ED1]
Figure 014-310

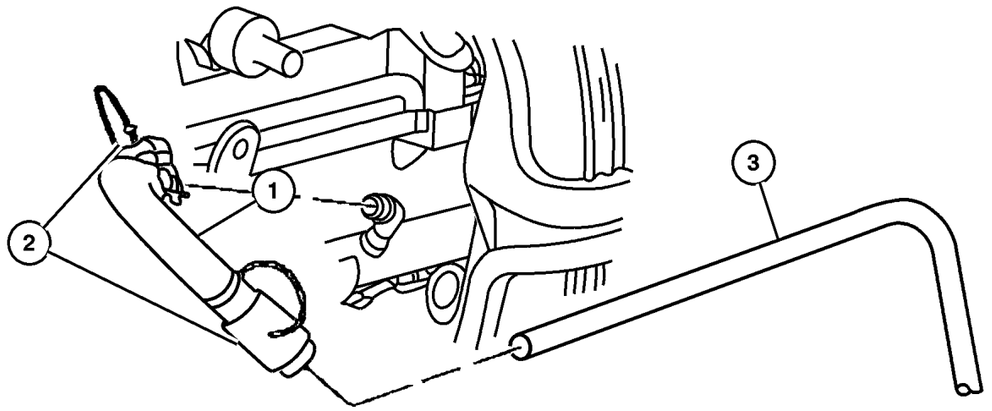

ITEM	PART NUMBER	QTY	LINE	SERIES	BODY	ENGINE	TRANS	TRIM	DESCRIPTION
Note; Sales Codes									
[ED0]= All 2.2L,2.5L,2.4L, 4 Cylinder Gas Engines									
1	52100 352AB	1				ED0			BUNDLE, Fuel Line
2	5212 7788	2				ED0			CLIP, Fuel Line
3									TUBE, Fuel, Serviced In Chassis Bundle, (NOT SERVICED) (Not Serviced)

JEEP LIBERTY (KJ)

SERIES	LINE	BODY	ENGINE	TRANSMISSION
P = Limited	J = LHD (4WD)	74 = 4 Dr (104.3 WB)	ED1,ED0 = 2.4L Power Tech	DDK = 5 Speed HDManual
H = Sport	U = RHD (4WD)		EKG,EK0 = 3.7L Power Tech	DDD = 5 Speed HD Manual
M = Renegade	T = LHD (2WD)		ENJ = 2.5L 4Cyl Turbo Diesel	DG4,DGQ = Multi-Speed Auto
			ENR = 2.8L 4Cyl Turbo Diesel	DG6 = 4 Speed Auto Transm
			EN0 = 4Cyl Turbo Diesel	DG0 = All Automatic Transm
				DBB = All Manual Transm

Fuel Lines Rear, 2.4L [ED1]
Figure 014-315

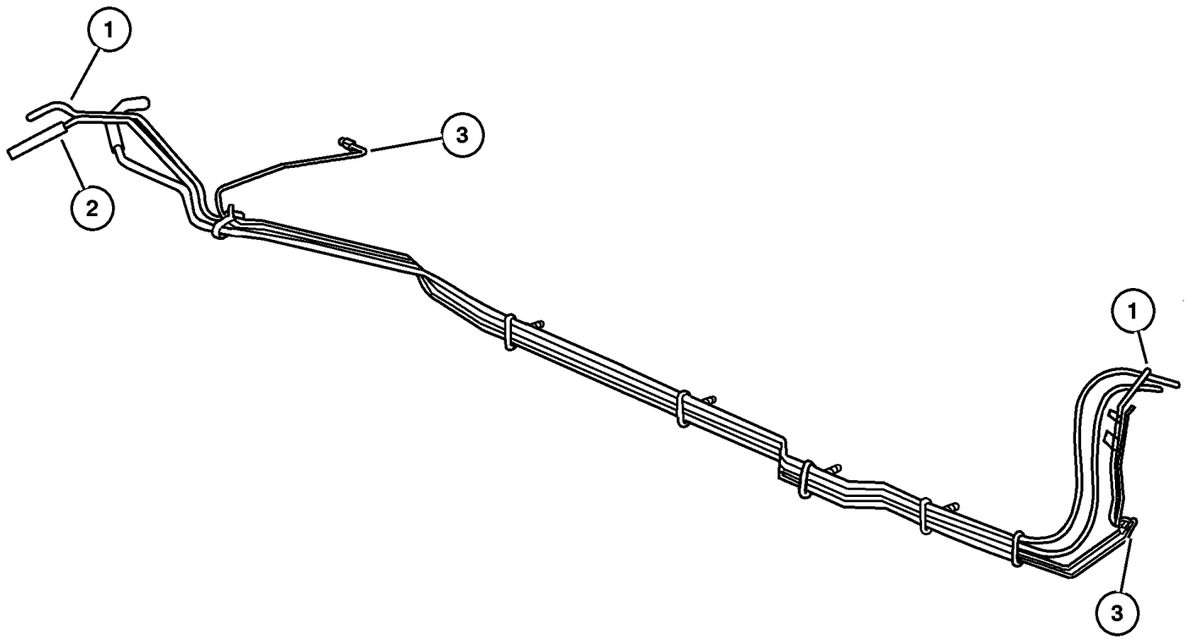

ITEM	PART NUMBER	QTY	LINE	SERIES	BODY	ENGINE	TRANS	TRIM	DESCRIPTION
Note; Sales Codes									
[ED0]= All 2.2 l,2.5L, 2.4L, 4 Cylinde Gas Engines									
[EK0]= All 3.7L 6 Cylinder Gas Engines									
1	#5103 500AA	1				ED0, EK0			TUBE, Fuel Supply
2	#52128 637AB	1				ED0, EK0			TUBE, Fuel Vapor
3									TUBE, Brake, See Brake Group, (NOT SERVICED) (Not Serviced)
-4									CLIP, 4 Way, Fuel Bundle
	#5103 501AA	3				ED0, EK0			
	#5103 502AA	2				ED0, EK0			
	#5103 503AA	1				ED0, EK0			
-5	#5103 504AA	1				ED0, EK0			CLIP, 2 Way, Fuel Bundle

JEEP LIBERTY (KJ)

SERIES	LINE	BODY	ENGINE	TRANSMISSION
P = Limited	J = LHD (4WD)	74 = 4 Dr (104.3 WB)	ED1,ED0 = 2.4L Power Tech	DDK = 5 Speed HDManual
H = Sport	U = RHD (4WD)		EKG,EK0 = 3.7L Power Tech	DDD = 5 Speed HD Manual
M = Renegade	T = LHD (2WD)		ENJ = 2.5L 4Cyl Turbo Diesel	DG4,DGQ = Multi-Speed Auto
			ENR = 2.8L 4Cyl Turbo Diesel	DG6 = 4 Speed Auto Transm
			EN0 = 4Cyl Turbo Diesel	DG0 = All Automatic Transm
				DBB = All Manual Transm

Fuel Lines Front, 3.7L [EKG]
Figure 014-320

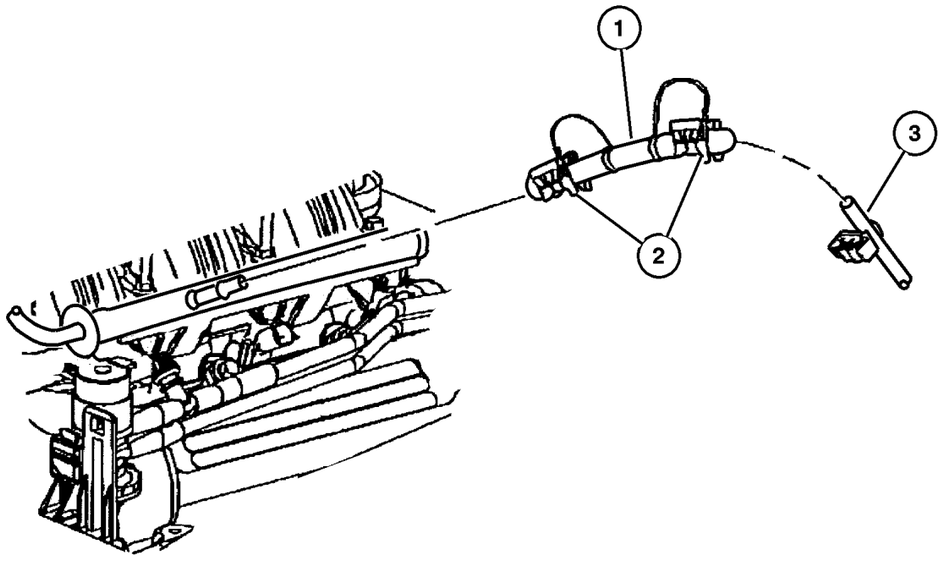

ITEM	PART NUMBER	QTY	LINE	SERIES	BODY	ENGINE	TRANS	TRIM	DESCRIPTION
Note; Sales Codes									
[EK0]= All 3.7L 6 Cylinder Gas Engines									
1	52100 320AB	1				EK0			BUNDLE, Fuel Line
2	5212 7788	2				EK0			CLIP, Fuel Line
3									BUNDLE, Fuel Line, Reference, See Rear Fuel Lines, (NOT SERVICED) (Not Serviced)

JEEP LIBERTY (KJ)

SERIES	LINE	BODY	ENGINE	TRANSMISSION
P = Limited	J = LHD (4WD)	74 = 4 Dr (104.3 WB)	ED1,ED0 = 2.4L Power Tech	DDK = 5 Speed HDManual
H = Sport	U = RHD (4WD)		EKG,EK0 = 3.7L Power Tech	DDD = 5 Speed HD Manual
M = Renegade	T = LHD (2WD)		ENJ = 2.5L 4Cyl Turbo Diesel	DG4,DGQ = Multi-Speed Auto
			ENR = 2.8L 4Cyl Turbo Diesel	DG6 = 4 Speed Auto Transm
			EN0 = 4Cyl Turbo Diesel	DG0 = All Automatic Transm
				DBB = All Manual Transm

Fuel Lines Rear, 3.7L [EKG]
Figure 014-325

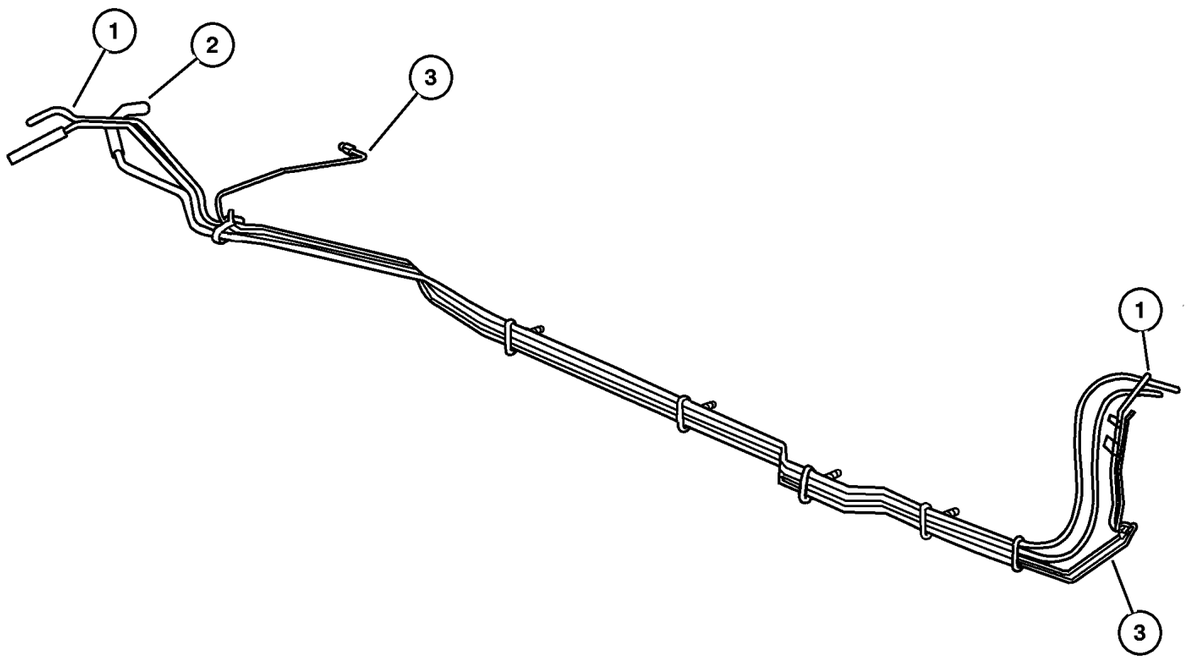

ITEM	PART NUMBER	QTY	LINE	SERIES	BODY	ENGINE	TRANS	TRIM	DESCRIPTION
Note; Sales Codes									
[ED0]= All 2.2L, 2.5L, 2.4L, 4 Cylinder Gas Engines									
[EK0]= All 3.7L 6 Cylinder Gas Engines									
1	#5103 500AA	1				ED0, EK0			TUBE, Fuel Supply
2	#52128 637AB	1				ED0, EK0			TUBE, Fuel Vapor
3									TUBE, Brake, See Brake Group, (NOT SERVICED) (Not Serviced)
-4									CLIP, 4 Way, Fuel Bundle
	#5103 501AA	3				ED0, EK0			
	#5103 502AA	2				ED0, EK0			
	#5103 503AA	1				ED0, EK0			
-5	#5103 504AA	1				ED0, EK0			CLIP, 2 Way, Fuel Bundle

JEEP LIBERTY (KJ)

SERIES	LINE	BODY	ENGINE	TRANSMISSION
P = Limited	J = LHD (4WD)	74 = 4 Dr (104.3 WB)	ED1,ED0 = 2.4L Power Tech	DDK = 5 Speed HDManual
H = Sport	U = RHD (4WD)		EKG,EK0 = 3.7L Power Tech	DDD = 5 Speed HD Manual
M = Renegade	T = LHD (2WD)		ENJ = 2.5L 4Cyl Turbo Diesel	DG4,DGQ = Multi-Speed Auto
			ENR = 2.8L 4Cyl Turbo Diesel	DG6 = 4 Speed Auto Transm
			EN0 = 4Cyl Turbo Diesel	DG0 = All Automatic Transm
				DBB = All Manual Transm

Fuel Lines Front 2.5L/2.8 Diesel [EN0]
Figure 014-330

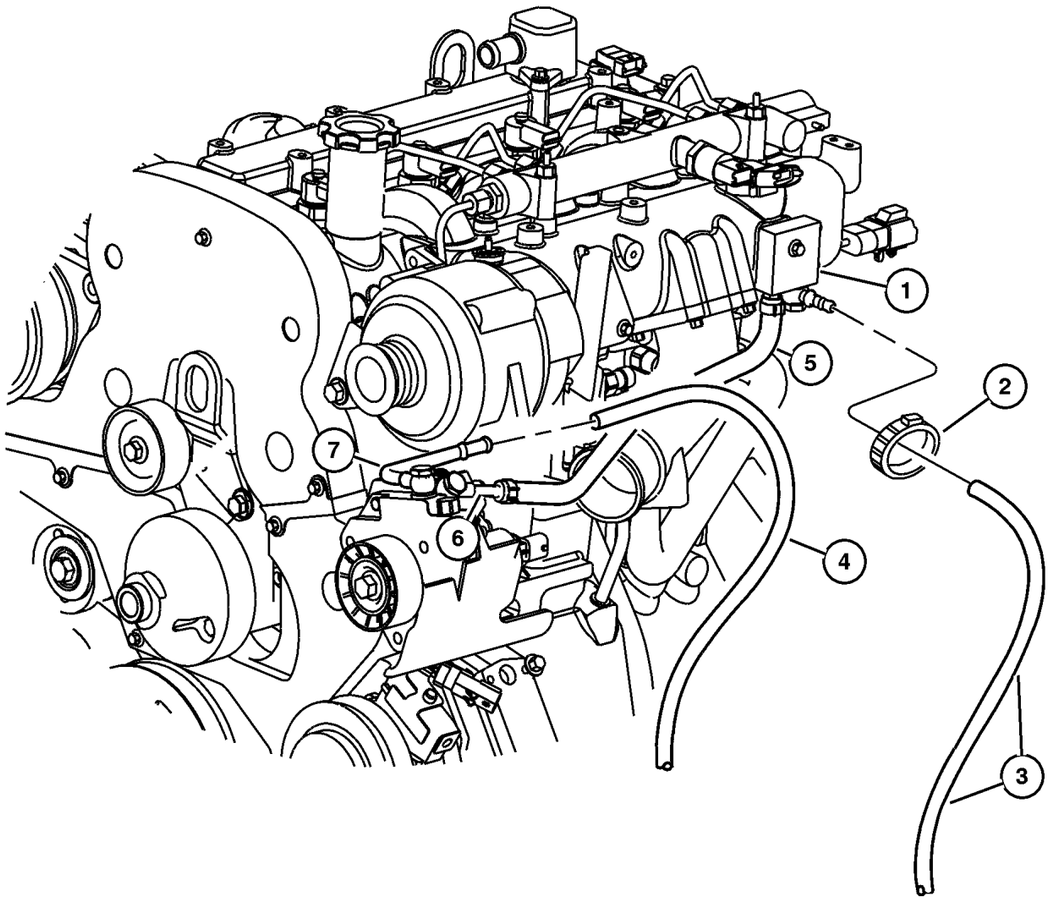

ITEM	PART NUMBER	QTY	LINE	SERIES	BODY	ENGINE	TRANS	TRIM	DESCRIPTION
Note; Sales Codes									
[DBB]= All Manual Transmissions									
[EN0]= All 4/5 Cylinder Turbo Diesels									
1									BLOCK, Fuel Return
	5072 743AA	1				EN0	DG0		
		1				EN0	DBB		
2	6505 775AA	1				EN0			CLAMP, Hose
3	#52128 639AB	1				EN0			BUNDLE, Fuel Line
4	52100 325AC	1				EN0			HOSE, Fuel
5									HOSE, Fuel
	5072 725AB	1				EN0	DG0		
		1				EN0	DBB		
6									BANJO, Fuel
	5072 723AB	1				EN0	DG0		
		1				EN0	DBB		
7									BANJO, Fuel
	5072 721AA	1				EN0	DG0		
		1				EN0	DBB		

JEEP LIBERTY (KJ)

SERIES	LINE	BODY	ENGINE	TRANSMISSION
P = Limited	J = LHD (4WD)	74 = 4 Dr (104.3 WB)	ED1,ED0 = 2.4L Power Tech	DDK = 5 Speed HDManual
H = Sport	U = RHD (4WD)		EKG,EK0 = 3.7L Power Tech	DDD = 5 Speed HD Manual
M = Renegade	T = LHD (2WD)		ENJ = 2.5L 4Cyl Turbo Diesel	DG4,DGQ = Multi-Speed Auto
			ENR = 2.8L 4Cyl Turbo Diesel	DG6 = 4 Speed Auto Transm
			EN0 = 4Cyl Turbo Diesel	DG0 = All Automatic Transm
				DBB = All Manual Transm

Fuel Lines Rear, 2.5L/2.8 Diesel [EN0]
Figure 014-335

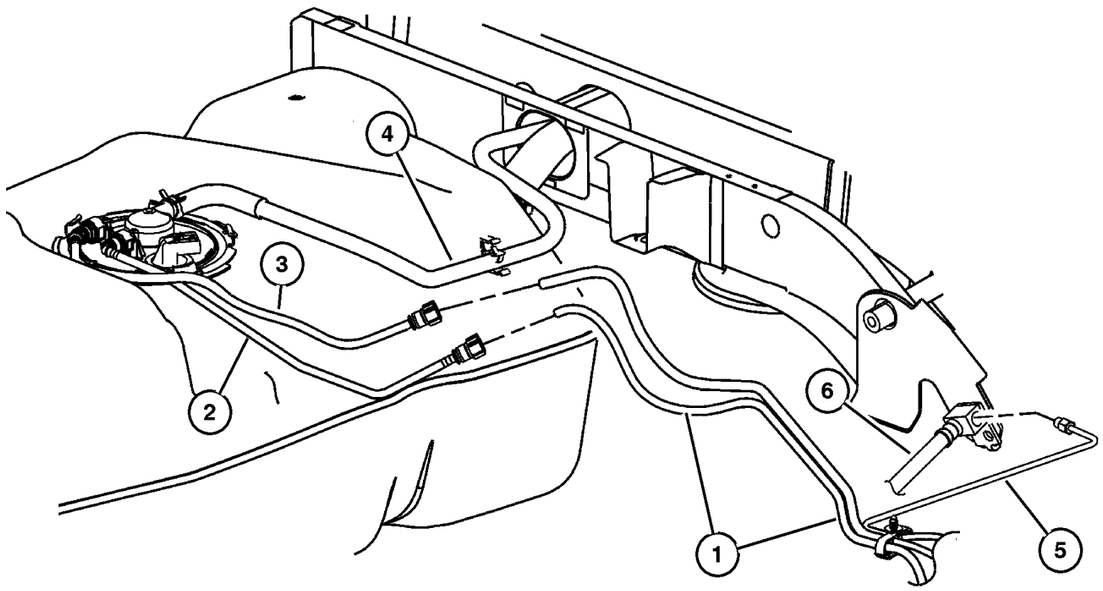

ITEM	PART NUMBER	QTY	LINE	SERIES	BODY	ENGINE	TRANS	TRIM	DESCRIPTION
Note; Sales Codes									
[EN0]= All 4/5 Cylinder Turbo Diesels									
1	#52128 639AB	1				EN0			BUNDLE, Fuel Line
2	52100 323AC	1				EN0			TUBE, Fuel Supply
3	52100 324AC	1				EN0			TUBE, Fuel Supply
4	52100 469AD	1				EN0			HOSE, Fuel Vapor
5									TUBE, Brake, Serviced In Item 1, (NOT SERVICED) (Not Serviced)
6									HOSE, Brake, See Catalog Group 5, (NOT SERVICED) (Not Serviced)

JEEP LIBERTY (KJ)

SERIES	LINE	BODY	ENGINE	TRANSMISSION
P = Limited	J = LHD (4WD)	74 = 4 Dr (104.3 WB)	ED1,ED0 = 2.4L Power Tech	DDK = 5 Speed HDManual
H = Sport	U = RHD (4WD)		EKG,EK0 = 3.7L Power Tech	DDD = 5 Speed HD Manual
M = Renegade	T = LHD (2WD)		ENJ = 2.5L 4Cyl Turbo Diesel	DG4,DGQ = Multi-Speed Auto
			ENR = 2.8L 4Cyl Turbo Diesel	DG6 = 4 Speed Auto Transm
			EN0 = 4Cyl Turbo Diesel	DG0 = All Automatic Transm
				DBB = All Manual Transm

Fuel Filter And Water Separator, 2.5/2.8 [EN0]
Figure 014-340

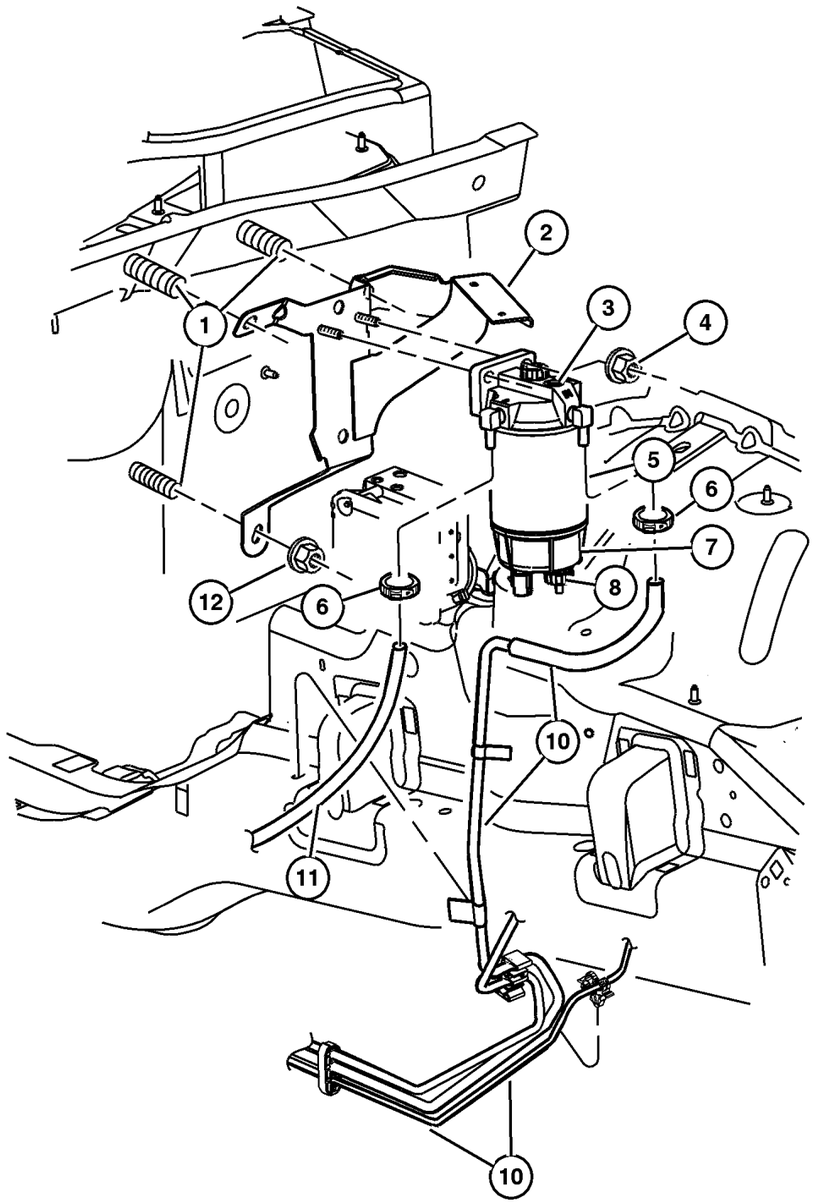

ITEM	PART NUMBER	QTY	LINE	SERIES	BODY	ENGINE	TRANS	TRIM	DESCRIPTION
Note; Sales Codes									
[EN0]= All 4/5 Cylinder Turbo Diesels									
1									STUD, (NOT SERVICED) (Not Serviced)
2	53013 304AC	1				EN0			BRACKET, Fuel Filter
3	5069 072AA	1				EN0			HEAD, Fuel Filter
4	6502 756	2				EN0			NUT, Hex Lock, M8x1.25
5	52128 698AA	1				EN0			FILTER, Fuel
6	6505 775AA	2				EN0			CLAMP, Hose
7	5014 018AA	1				EN0			BOWL, Fuel Filter
8	4723 907	1				EN0			DRAIN, Fuel Filter Bowl
-9	4723 901	1				EN0			VALVE KIT, Fuel Filter Check
10	#52128 639AB	1				EN0			BUNDLE, Fuel Line
11	52100 325AC	1				EN0			HOSE, Fuel
12									NUT, (NOT SERVICED) (Not Serviced)
-13									HEATER
	5066 555AA	1	J, T						
		1	U						

JEEP LIBERTY (KJ)

SERIES	LINE	BODY	ENGINE	TRANSMISSION
P = Limited	J = LHD (4WD)	74 = 4 Dr (104.3 WB)	ED1,ED0 = 2.4L Power Tech	DDK = 5 Speed HDManual
H = Sport	U = RHD (4WD)		EKG,EK0 = 3.7L Power Tech	DDD = 5 Speed HD Manual
M = Renegade	T = LHD (2WD)		ENJ = 2.5L 4Cyl Turbo Diesel	DG4,DGQ = Multi-Speed Auto
			ENR = 2.8L 4Cyl Turbo Diesel	DG6 = 4 Speed Auto Transm
			EN0 = 4Cyl Turbo Diesel	DG0 = All Automatic Transm
				DBB = All Manual Transm

AR = Use as required - = Non illustrated part # = New this model year **September 30, 2003**

« RETURN TO GROUP INDEX

Fuel Rail, 2.4L [ED1]
Figure 014-410

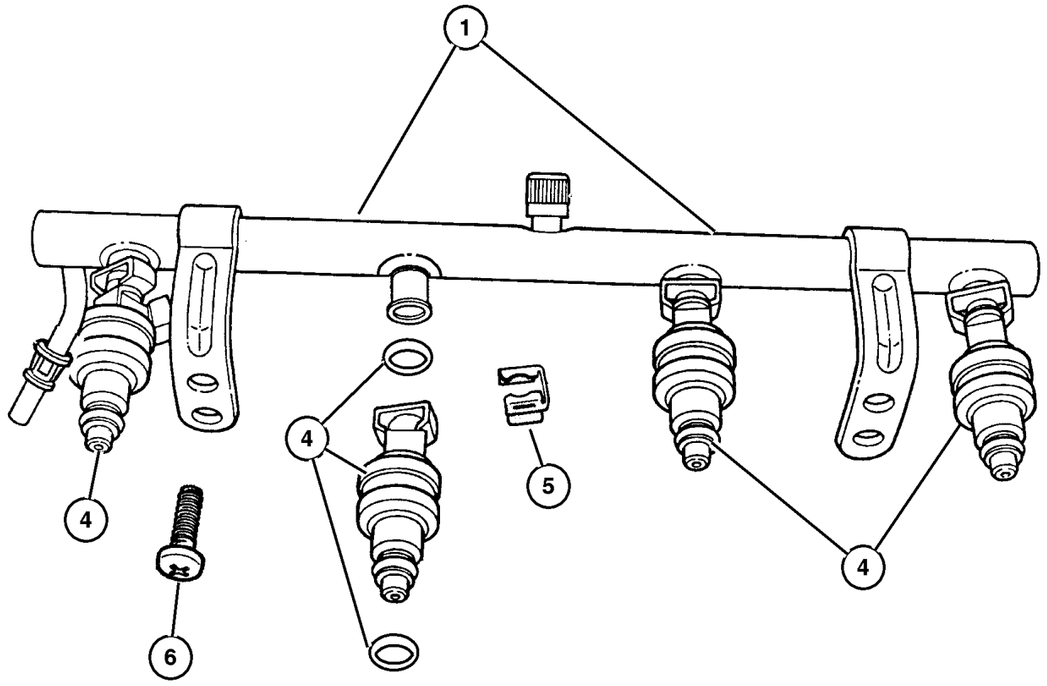

ITEM	PART NUMBER	QTY	LINE	SERIES	BODY	ENGINE	TRANS	TRIM	DESCRIPTION
Note; Sales Codes									
[ED0]= All 2.2L, 2.5L, 2.4L, 4 Cylinder Gas Engines									
1	#5135 582AA	1				ED0			RAIL, Fuel
-2									REGULATOR, Fuel Pressure, Serviced With Fuel Rail, (NOT SERVICED) (Not Serviced)
-3									FASTENER, Serviced With Fuel Rail, (NOT SERVICED) (Not Serviced)
4	#53013 656AA	4				ED0			INJECTOR, Fuel
5	53013 504AB	4				ED0			CLIP, Fuel Injector
6	6101 506	2				ED0			BOLT AND CONED WASHER, M8x1.25x18

JEEP LIBERTY (KJ)

SERIES	LINE	BODY	ENGINE	TRANSMISSION
P = Limited	J = LHD (4WD)	74 = 4 Dr (104.3 WB)	ED1,ED0 = 2.4L Power Tech	DDK = 5 Speed HDManual
H = Sport	U = RHD (4WD)		EKG,EK0 = 3.7L Power Tech	DDD = 5 Speed HD Manual
M = Renegade	T = LHD (2WD)		ENJ = 2.5L 4Cyl Turbo Diesel	DG4,DGQ = Multi-Speed Auto
			ENR = 2.8L 4Cyl Turbo Diesel	DG6 = 4 Speed Auto Transm
			EN0 = 4Cyl Turbo Diesel	DG0 = All Automatic Transm
				DBB = All Manual Transm

Fuel Rail, 3.7L [EKG]
Figure 014-415

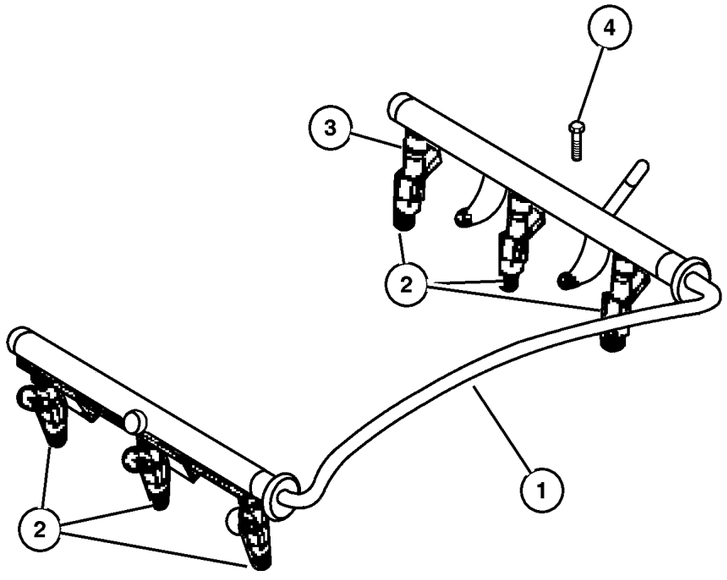

ITEM	PART NUMBER	QTY	LINE	SERIES	BODY	ENGINE	TRANS	TRIM	DESCRIPTION
Note; Sales Codes									
[EK0]= All 3.7L 6 Cylinder Gas Engines									
1	5303 1102	1				EK0			RAIL, Fuel
2	#53032 701AA	6				EK0			INJECTOR, Fuel
3	4418 257AB	6				EK0			CLIP, Fuel Injector
4	6505 504AA	4				EK0			SCREW

JEEP LIBERTY (KJ)

SERIES	LINE	BODY	ENGINE	TRANSMISSION
P = Limited	J = LHD (4WD)	74 = 4 Dr (104.3 WB)	ED1,ED0 = 2.4L Power Tech	DDK = 5 Speed HDManual
H = Sport	U = RHD (4WD)		EKG,EK0 = 3.7L Power Tech	DDD = 5 Speed HD Manual
M = Renegade	T = LHD (2WD)		ENJ = 2.5L 4Cyl Turbo Diesel	DG4,DGQ = Multi-Speed Auto
			ENR = 2.8L 4Cyl Turbo Diesel	DG6 = 4 Speed Auto Transm
			EN0 = 4Cyl Turbo Diesel	DG0 = All Automatic Transm
				DBB = All Manual Transm

Fuel Injection System 2.5L/2.8 Diesel [EN0]
Figure 014-420

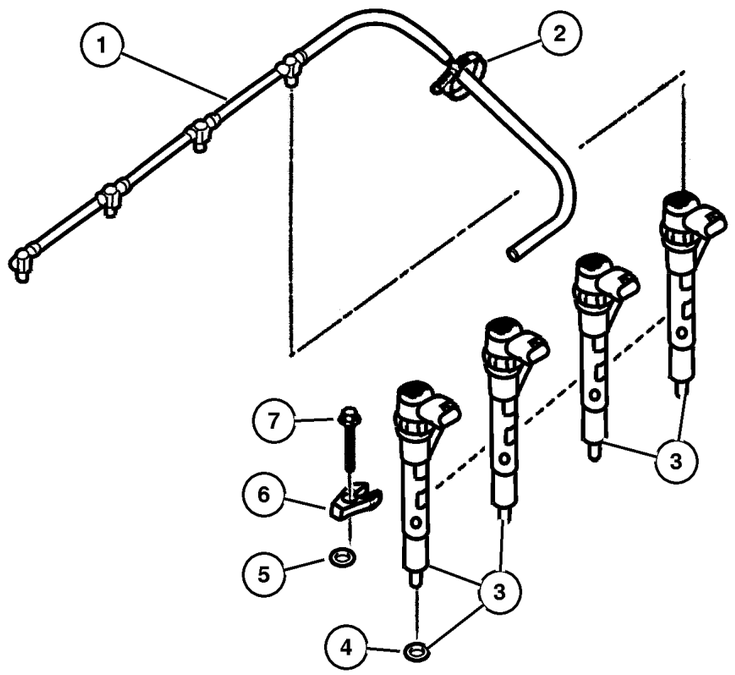

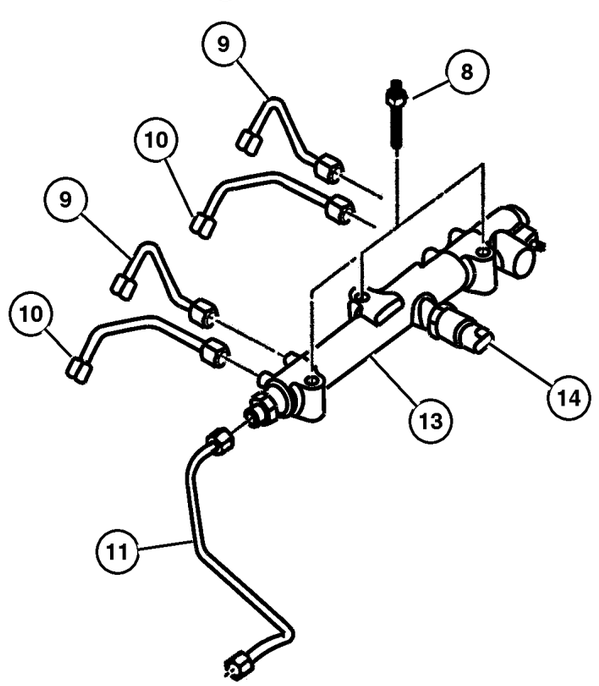

ITEM	PART NUMBER	QTY	LINE	SERIES	BODY	ENGINE	TRANS	TRIM	DESCRIPTION
Note; Sales Codes									
[DBB]= All Manual Transmissions									
[EN0]= All 4/5 Cylinder Turbo Diesels									
1	5093 923AA	1				EN0	DG0		PIPE, Fuel Spill Return
2	4728 184	1				EN0	DG0		CLIP, Spill Return Pipe
3	5066 820AA	1				EN0	DG0		INJECTOR, Fuel
4	5072 722AA	1				EN0	DG0		O RING, Fuel Injector
5	5093 922AA	1				EN0	DG0		PLATE
6	5066 904AA	1				EN0	DG0		CONNECTOR, Injector
7	5066 962AA	4				EN0	DG0		SCREW
8	5066 913AA	1				EN0	DG0		STUD
9	5066 909AB	1				EN0	DG0		TUBE, Fuel Injector Supply
10	5066 910AB	1				EN0	DG0		TUBE, Fuel Injector Supply
11	5066 911AA	1				EN0	DG0		TUBE, Fuel Supply from Pump
-12	5093 925AA	1				EN0	DG0		CLAMP, Item 11 Attach
13	5093 924AA	1				EN0	DG0		RAIL, Fuel
14	5072 726AA	1				EN0	DG0		SENSOR, Fuel Pressure
-15	5083 671AA	1				EN0	DG0		VALVE, Flow Control

JEEP LIBERTY (KJ)

SERIES	LINE	BODY	ENGINE	TRANSMISSION
P = Limited	J = LHD (4WD)	74 = 4 Dr (104.3 WB)	ED1,ED0 = 2.4L Power Tech	DDK = 5 Speed HDManual
H = Sport	U = RHD (4WD)		EKG,EK0 = 3.7L Power Tech	DDD = 5 Speed HD Manual
M = Renegade	T = LHD (2WD)		ENJ = 2.5L 4Cyl Turbo Diesel	DG4,DGQ = Multi-Speed Auto
			ENR = 2.8L 4Cyl Turbo Diesel	DG6 = 4 Speed Auto Transm
			EN0 = 4Cyl Turbo Diesel	DG0 = All Automatic Transm
				DBB = All Manual Transm

AR = Use as required - = Non illustrated part # = New this model year **September 30, 2003**

« RETURN TO GROUP INDEX

Fuel Injection Pump 2.5/2.8 Diesel [EN0]
Figure 014-430

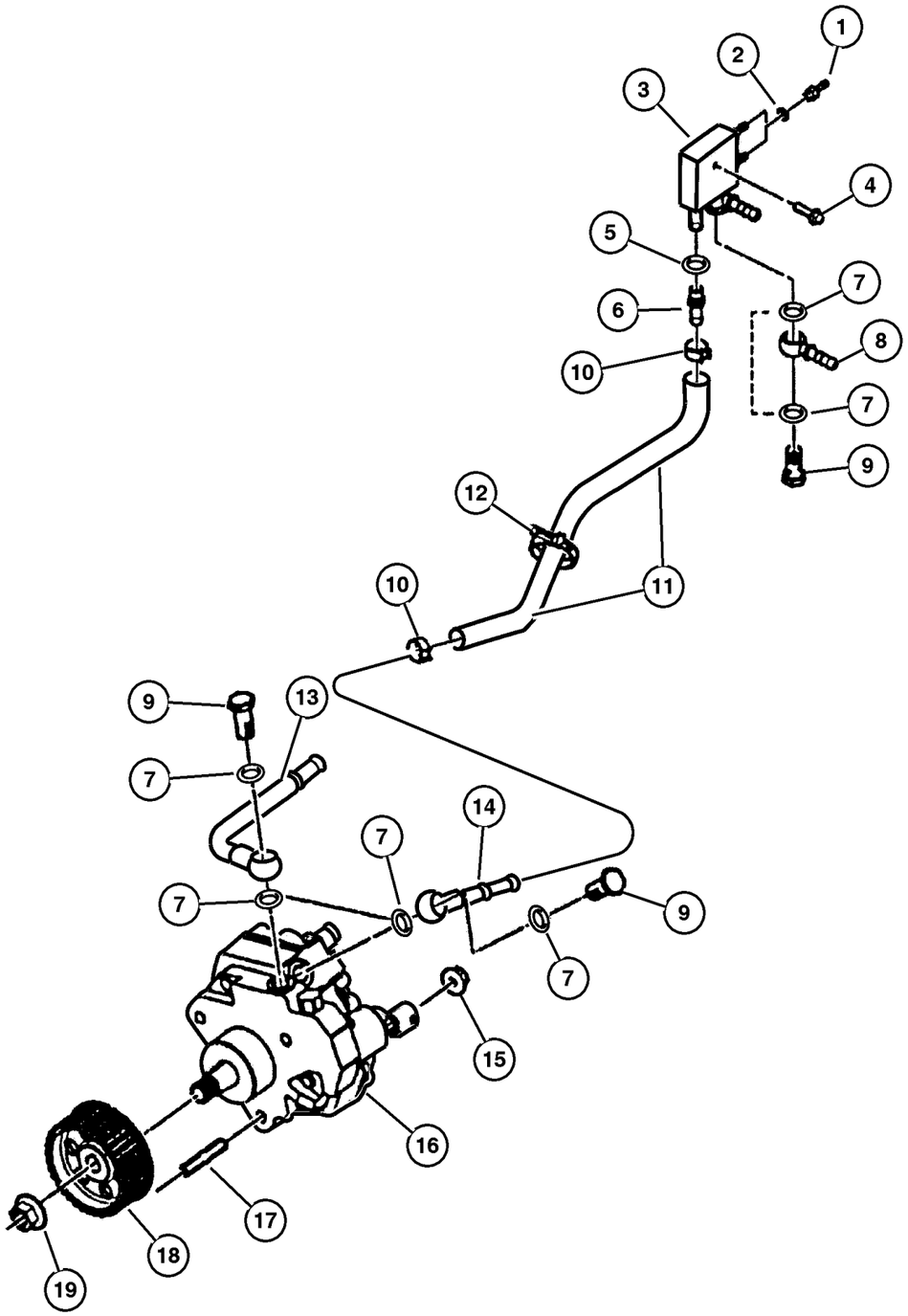

ITEM	PART NUMBER	QTY	LINE	SERIES	BODY	ENGINE	TRANS	TRIM	DESCRIPTION
Note; Sales Codes									
[DBB] = All Manual Transmissions									
[EN0]= All 4/5 Cylinder Turbo Diesels									
1									UNION
	5072 727AA	1				EN0	DG0		
		2				EN0	DBB		
2									O RING
	5072 728AA	2				EN0	DBB		
		2				EN0	DG0		
3	5072 743AA	1				EN0	DG0		BLOCK, Fuel Return
4	5072 729AA	1				EN0	DG0		SCREW
5	4720 713	1				EN0	DG0		WASHER, Implement Attaching
6	5072 724AA	1				EN0	DG0		UNION
7									WASHER, Plain
	4720 703	6				EN0	DBB		
		6				EN0	DG0		
8	4728 185	1				EN0	DG0		CONNECTOR
9	4720 367	1				EN0	DG0		BOLT, Banjo
10									CLAMP, Heater Hose
	4886 051AA	2				EN0	DBB		
		2				EN0	DG0		
11	5072 725AB	1				EN0	DG0		HOSE, Fuel
12	4728 184	1				EN0	DG0		CLIP, Spill Return Pipe
13	5072 721AA	1				EN0	DG0		BANJO, Fuel
14	5072 723AB	1				EN0	DG0		BANJO, Fuel
15	4778 961	3				EN0	DG0		NUT
16									PUMP, Fuel Injection
	5066 819AB	1				EN0	DG0		
		1				EN0	DBB		
17	5066 908AA	1				EN0	DG0		STUD, Injection Pump
18	5066 903AA	1				EN0	DG0		GEAR, Injection Pump
19	5066 817AA	1				EN0	DG0		NUT
-20	5015 037AA	1				EN0	DG0		VALVE, Vacuum Pump
-21									CLIP, Fuel Injector
	5083 712AA	1				EN0	DG0		
		4				EN0	DBB		

JEEP LIBERTY (KJ)

SERIES	LINE	BODY	ENGINE	TRANSMISSION
P = Limited	J = LHD (4WD)	74 = 4 Dr (104.3 WB)	ED1,ED0 = 2.4L Power Tech	DDK = 5 Speed HDManual
H = Sport	U = RHD (4WD)		EKG,EK0 = 3.7L Power Tech	DDD = 5 Speed HD Manual
M = Renegade	T = LHD (2WD)		ENJ = 2.5L 4Cyl Turbo Diesel	DG4,DGQ = Multi-Speed Auto
			ENR = 2.8L 4Cyl Turbo Diesel	DG6 = 4 Speed Auto Transm
			EN0 = 4Cyl Turbo Diesel	DG0 = All Automatic Transm
				DBB = All Manual Transm

AR = Use as required - = Non illustrated part # = New this model year **September 30, 2003**

« RETURN TO GROUP INDEX

Fuel Injection Pump Mounting
Figure 014-435

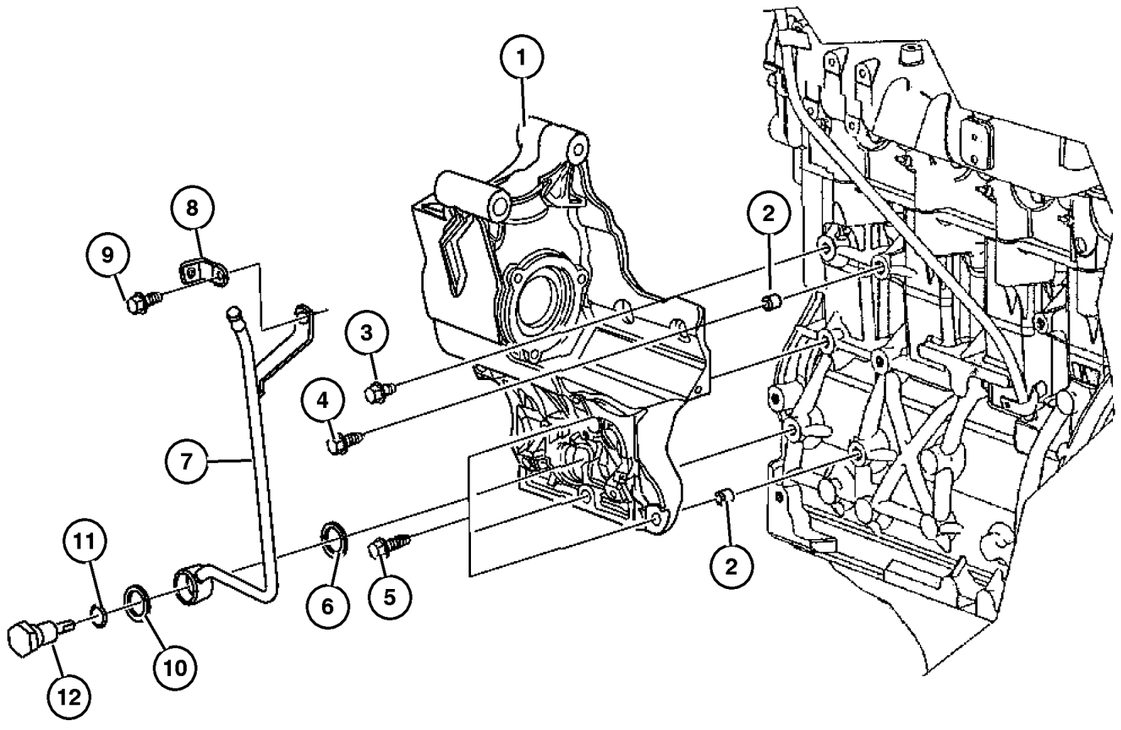

ITEM	PART NUMBER	QTY	LINE	SERIES	BODY	ENGINE	TRANS	TRIM	DESCRIPTION
Note; Sales Codes;									
[DBB] = All Manual Transmissions									
[DG0] = All Automatic Transmissions									
[EN0] = All 4/5 Cylinder Turbo Diesel Engines									
1	5093 901AA	1				EN0	DG0		BRACKET
2	5066 862AA	1				EN0	DG0		PIN
3	5093 900AA	1				EN0	DG0		SCREW
4	5003 532AA	1				EN0	DG0		BOLT, Adaptor Plate
5	5066 939AA	1				EN0	DG0		SCREW
6	4863 779	1				EN0	DG0		GASKET, Vacuum Pump, .
7	5072 684AB	1				EN0	DG0		TUBE, Vacuum
8	5093 902AA	1				EN0	DG0		BRACKET
9	5003 557AA	1				EN0	DG0		SCREW
10	5015 040AA	1				EN0	DG0		WASHER, Plain
11	5066 860AA	1				EN0	DG0		O RING
12	5015 037AA	1				EN0	DG0		VALVE, Vacuum Pump

JEEP LIBERTY (KJ)

SERIES	LINE	BODY	ENGINE	TRANSMISSION
P = Limited	J = LHD (4WD)	74 = 4 Dr (104.3 WB)	ED1,ED0 = 2.4L Power Tech	DDK = 5 Speed HDManual
H = Sport	U = RHD (4WD)		EKG,EK0 = 3.7L Power Tech	DDD = 5 Speed HD Manual
M = Renegade	T = LHD (2WD)		ENJ = 2.5L 4Cyl Turbo Diesel	DG4,DGQ = Multi-Speed Auto
			ENR = 2.8L 4Cyl Turbo Diesel	DG6 = 4 Speed Auto Transm
			EN0 = 4Cyl Turbo Diesel	DG0 = All Automatic Transm
				DBB = All Manual Transm

Fuel Pump and Sending Unit, 2.4L [ED1], 3.7L [EKG], 2.5L Diesel [ENJ]
Figure 014-510

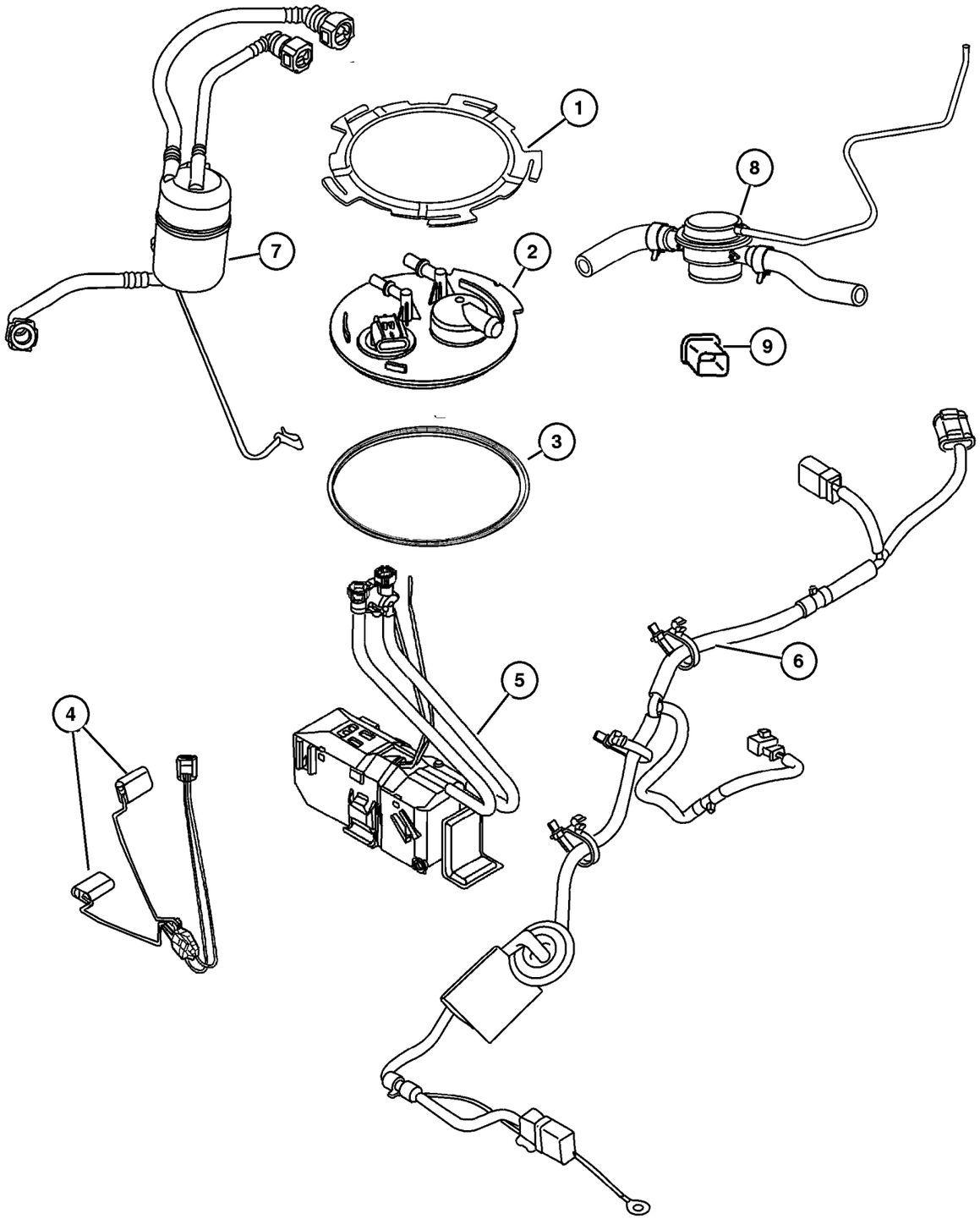

ITEM	PART NUMBER	QTY	LINE	SERIES	BODY	ENGINE	TRANS	TRIM	DESCRIPTION
Note; Sales Codes									
[ED0]= All 2.2L, 2.5L, 2.4L, 4 Cylinder Gas Engines									
[EK0]= All 3.7L, 6 Cylinder Gas Engines									
[EN0]= All 4/5 Cylinder Turb Diesels									
1									NUT, Fuel Pump Module
	52100 409AA	1				ED0, EK0			
		1				EN0			
2									FLANGE PACKAGE, Fuel
	5072 755AA	1				EN0			
	#5103 115AB	1				ED0, EK0			
3									SEAL, Fuel Pump and Level Unit
	52100 410AA	1				ED0, EK0			
		1				EN0			
4									LEVEL UNIT PACKAGE, Fuel, Includes Pump Wires
	#5103 113AB	1				ED0, EK0			
	#5103 116AA	1				EN0			
5	5066 999AB	1				EN0			RESERVOIR PACKAGE, Fuel, Fuel Pump Included with Package
6	#56010 599AA	1				EN0			WIRING, Fuel Module
7	52128 698AA	1				EN0			FILTER, Fuel
8									VALVE, Flow, Components to Flow Valve are Not to be Service, (NOT REQUIRED)
9	52100 556AA	1				ED0, EK0			SLEEVE, Insert

JEEP LIBERTY (KJ)

SERIES	LINE	BODY	ENGINE	TRANSMISSION
P = Limited	J = LHD (4WD)	74 = 4 Dr (104.3 WB)	ED1,ED0 = 2.4L Power Tech	DDK = 5 Speed HDManual
H = Sport	U = RHD (4WD)		EKG,EK0 = 3.7L Power Tech	DDD = 5 Speed HD Manual
M = Renegade	T = LHD (2WD)		ENJ = 2.5L 4Cyl Turbo Diesel	DG4,DGQ = Multi-Speed Auto
			ENR = 2.8L 4Cyl Turbo Diesel	DG6 = 4 Speed Auto Transm
			EN0 = 4Cyl Turbo Diesel	DG0 = All Automatic Transm
				DBB = All Manual Transm

AR = Use as required - = Non illustrated part # = New this model year **September 30, 2003**

« RETURN TO GROUP INDEX

Throttle Body, 2.4L [ED1], 3.7, [EKG]
Figure 014-610

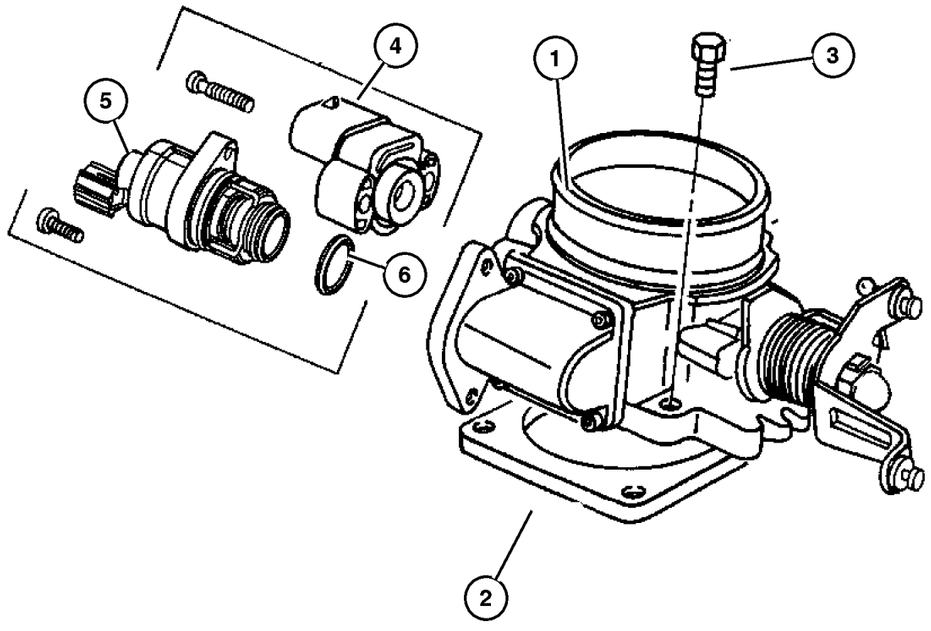

ITEM	PART NUMBER	QTY	LINE	SERIES	BODY	ENGINE	TRANS	TRIM	DESCRIPTION
Note; Sales Codes									
[ED0]= All 2.2L, 2.5L, 2.4L, 4 Cylinder Gas Engines									
[EK0]= All 3.7L, 6 Cylinder Gas Engines									
1									THROTTLE BODY
	#5114 401AA	1				EK0			
	#53013 547AA	1				ED0			
2									GASKET, Throttle Body To Intake
	#4884 486AA	1				ED0			
	53013 292AB	1				EK0			
3									SCREW, Hex Head, M6 x 1.00 x 40.00, (NOT SERVICED) (Not Serviced)
4									SENSOR, Throttle Position
	5019 411AB	1				ED0			
		1				EK0			
5									SOLENOID, Linear IACV
	4861 325AC	1				ED0			
	4861 552AB	1				EK0			
6	5114 356AA	1				EK0			O RING KIT, Linear Solenoid

JEEP LIBERTY (KJ)

SERIES	LINE	BODY	ENGINE	TRANSMISSION
P = Limited	J = LHD (4WD)	74 = 4 Dr (104.3 WB)	ED1,ED0 = 2.4L Power Tech	DDK = 5 Speed HDManual
H = Sport	U = RHD (4WD)		EKG,EK0 = 3.7L Power Tech	DDD = 5 Speed HD Manual
M = Renegade	T = LHD (2WD)		ENJ = 2.5L 4Cyl Turbo Diesel	DG4,DGQ = Multi-Speed Auto
			ENR = 2.8L 4Cyl Turbo Diesel	DG6 = 4 Speed Auto Transm
			EN0 = 4Cyl Turbo Diesel	DG0 = All Automatic Transm
				DBB = All Manual Transm

Turbocharger 2.5 Diesel [ENJ] [ENR]
Figure 014-620

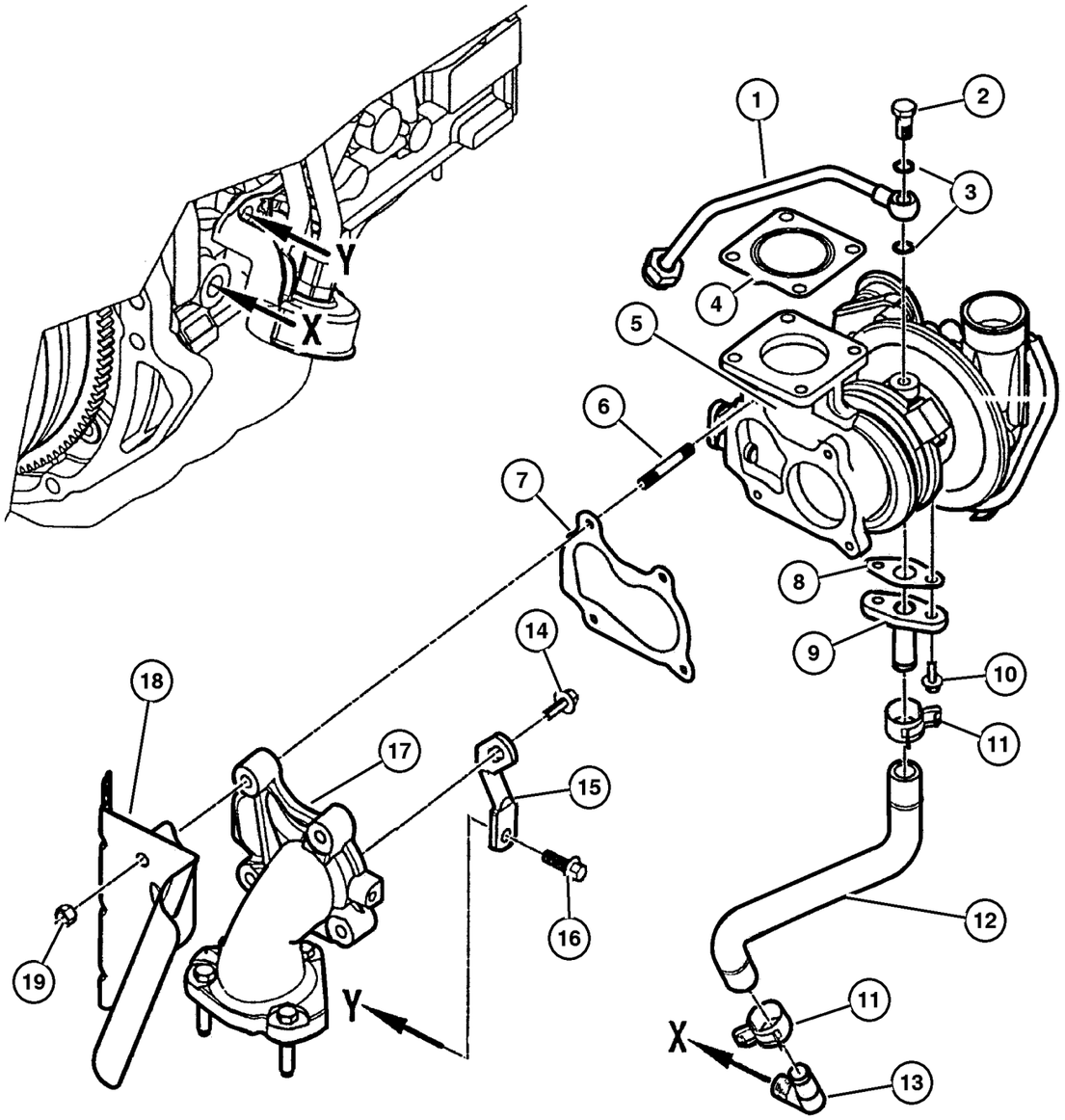

ITEM	PART NUMBER	QTY	LINE	SERIES	BODY	ENGINE	TRANS	TRIM	DESCRIPTION
Note; Sales Codes									
[DBB]= All Manual Transmissions									
[EN0]= All 4/5 Cylinder Turbo Diesels									
1	5093 927AA	1				EN0	DG0		PIPE, Oil Supply
2	5066 824AA	1				EN0	DG0		BOLT, Banjo
3	4720 713	2				EN0	DG0		WASHER, Implement Attaching
4	5066 822AA	1				EN0	DG0		GASKET, Turbocharger To Manifold
5									TURBOCHARGER
	5093 928AA	1				EN0	DBB		
	5134 235AA	1				EN0	DG0		
6	5066 796AA	1				EN0	DG0		STUD, Turbo Elbow
7	5066 915AA	1				EN0	DG0		GASKET, Turbocharger To Manifold
8	4796 007AB	1				EN0	DG0		GASKET, Turbo Oil Return Pipe
9	5093 929AA	1				EN0	DG0		TUBE, Oil Drain
10									SCREW
	5003 553AA	3				EN0	DBB		
		3				EN0	DG0		
11	5019 342AB	1				EN0	DG0		CLAMP, Heater Hose
12	5093 930AA	1				EN0	DG0		PIPE, Oil Drain
13	4773 709	1				EN0	DG0		ADAPTER, Oil Drain Pipe
14	5003 554AA	1				EN0	DG0		SCREW
15	5072 733AA	1				EN0	DG0		BRACKET, Turbo Charger
16	5003 532AA	1				EN0	DG0		BOLT, Adaptor Plate
17	5072 732AB	1				EN0	DG0		ELBOW, Turbo Exhaust Outlet
18	5072 731AA	1				EN0	DG0		SHIELD, Heat
19	4882 610	4				EN0	DG0		NUT, Lock
-20	5083 711AA	1				EN0	DG0		VALVE
-21	5093 932AA	1				EN0	DG0		HOSE, Manifold Vacuum
-22	5072 739AA	1				EN0	DG0		ELBOW, Intake Manifold Vacuum
-23	5066 944AA	1				EN0	DG0		SCREW, Elbow Mounting

JEEP LIBERTY (KJ)

SERIES	LINE	BODY	ENGINE	TRANSMISSION
P = Limited	J = LHD (4WD)	74 = 4 Dr (104.3 WB)	ED1,ED0 = 2.4L Power Tech	DDK = 5 Speed HDManual
H = Sport	U = RHD (4WD)		EKG,EK0 = 3.7L Power Tech	DDD = 5 Speed HD Manual
M = Renegade	T = LHD (2WD)		ENJ = 2.5L 4Cyl Turbo Diesel	DG4,DGQ = Multi-Speed Auto
			ENR = 2.8L 4Cyl Turbo Diesel	DG6 = 4 Speed Auto Transm
			EN0 = 4Cyl Turbo Diesel	DG0 = All Automatic Transm
				DBB = All Manual Transm

AR = Use as required - = Non illustrated part # = New this model year

September 30, 2003

« RETURN TO GROUP INDEX

Throttle Controls, 2.4L [ED1]
Figure 014-710

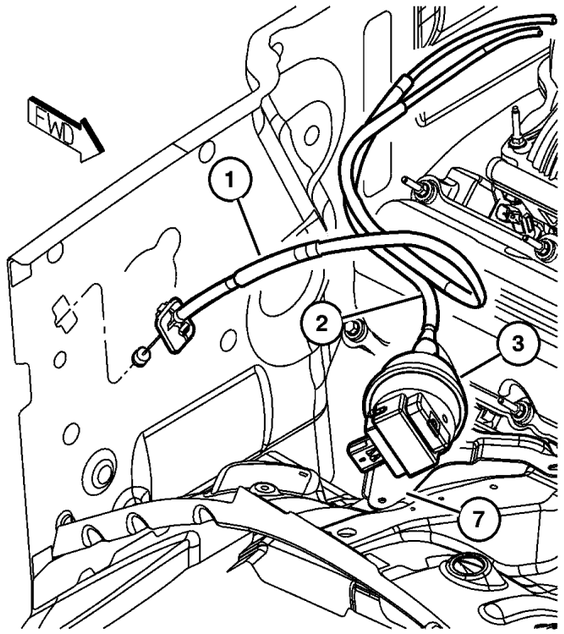

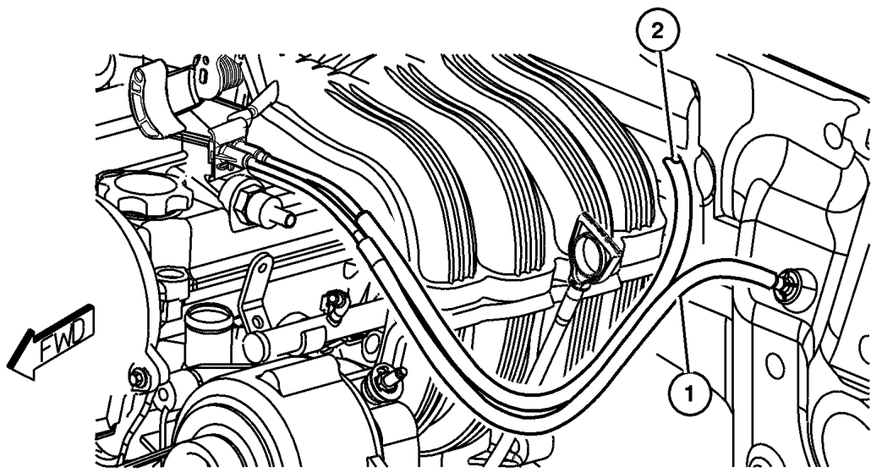

ITEM	PART NUMBER	QTY	LINE	SERIES	BODY	ENGINE	TRANS	TRIM	DESCRIPTION
Note; Sales Codes									
[ED0]= All 2.2L, 2.5L, 2.4L, 4 Cylinder Gas Engines									
1									CABLE, Accelerator
	53013 137AB	1	J, T			ED0			
	53013 239AB	1	U			ED0			
2	53013 346AB	1				ED0			CABLE, Speed Control
3	4669 979	1				ED0			SERVO, Speed Control
-4	6025 867	1				ED0			CLIP, Cable to Servo Attach
-5	6502 493	2				ED0			NUT, Hex Flange Serration, M6x1
-6	6025 867	1				ED0			CLIP, Cable to Servo Attach
7	53013 348AA	1				ED0			BRACKET, Speed Control Servo

JEEP LIBERTY (KJ)

SERIES	LINE	BODY	ENGINE	TRANSMISSION
P = Limited	J = LHD (4WD)	74 = 4 Dr (104.3 WB)	ED1,ED0 = 2.4L Power Tech	DDK = 5 Speed HDManual
H = Sport	U = RHD (4WD)		EKG,EK0 = 3.7L Power Tech	DDD = 5 Speed HD Manual
M = Renegade	T = LHD (2WD)		ENJ = 2.5L 4Cyl Turbo Diesel	DG4,DGQ = Multi-Speed Auto
			ENR = 2.8L 4Cyl Turbo Diesel	DG6 = 4 Speed Auto Transm
			EN0 = 4Cyl Turbo Diesel	DG0 = All Automatic Transm
				DBB = All Manual Transm

Throttle Controls, 3.7L [EKG]
Figure 014-720

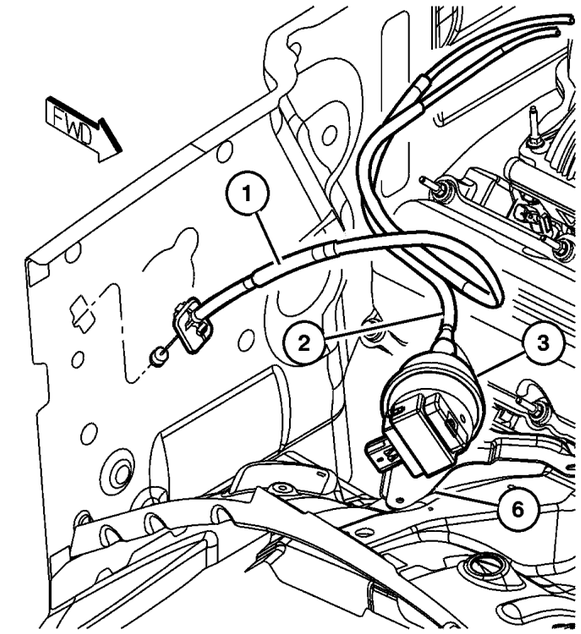

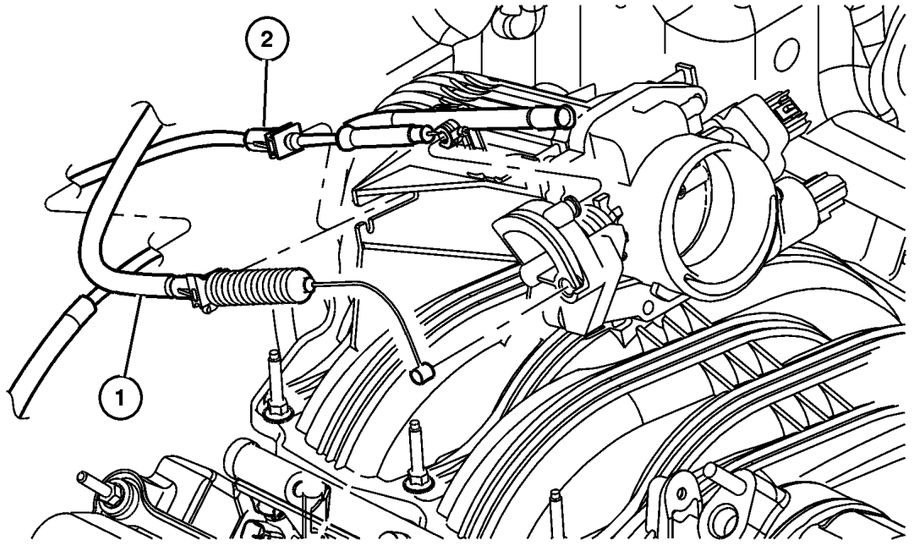

ITEM	PART NUMBER	QTY	LINE	SERIES	BODY	ENGINE	TRANS	TRIM	DESCRIPTION
Note; Sales Codes									
[EKG]= 3.7L Magnum V-6									
[EK0]= All 3.7L V-6 Gas Engines									
1									CABLE, Accelerator
	53013 136AD	1	J, T			EKG			
	53013 138AC	1	U			EKG			
2	53013 367AD	1				EK0			CABLE, Speed Control
3	4669 979	1				EK0			SERVO, Speed Control
-4	6502 493	2				ED0			NUT, Hex Flange Serration, M6x1
-5	6025 867	1				EK0			CLIP, Cable to Servo Attach
6	53013 348AA	1				EK0			BRACKET, Speed Control Servo
-7	5214 613	1	J, T						CLIP, Cable, Accelerator Cable to Pedal

JEEP LIBERTY (KJ)

SERIES	LINE	BODY	ENGINE	TRANSMISSION
P = Limited	J = LHD (4WD)	74 = 4 Dr (104.3 WB)	ED1,ED0 = 2.4L Power Tech	DDK = 5 Speed HDManual
H = Sport	U = RHD (4WD)		EKG,EK0 = 3.7L Power Tech	DDD = 5 Speed HD Manual
M = Renegade	T = LHD (2WD)		ENJ = 2.5L 4Cyl Turbo Diesel	DG4,DGQ = Multi-Speed Auto
			ENR = 2.8L 4Cyl Turbo Diesel	DG6 = 4 Speed Auto Transm
			EN0 = 4Cyl Turbo Diesel	DG0 = All Automatic Transm
				DBB = All Manual Transm

Throttle Controls, 2.5L/2.8 Diesel [EN0]
Figure 014-730

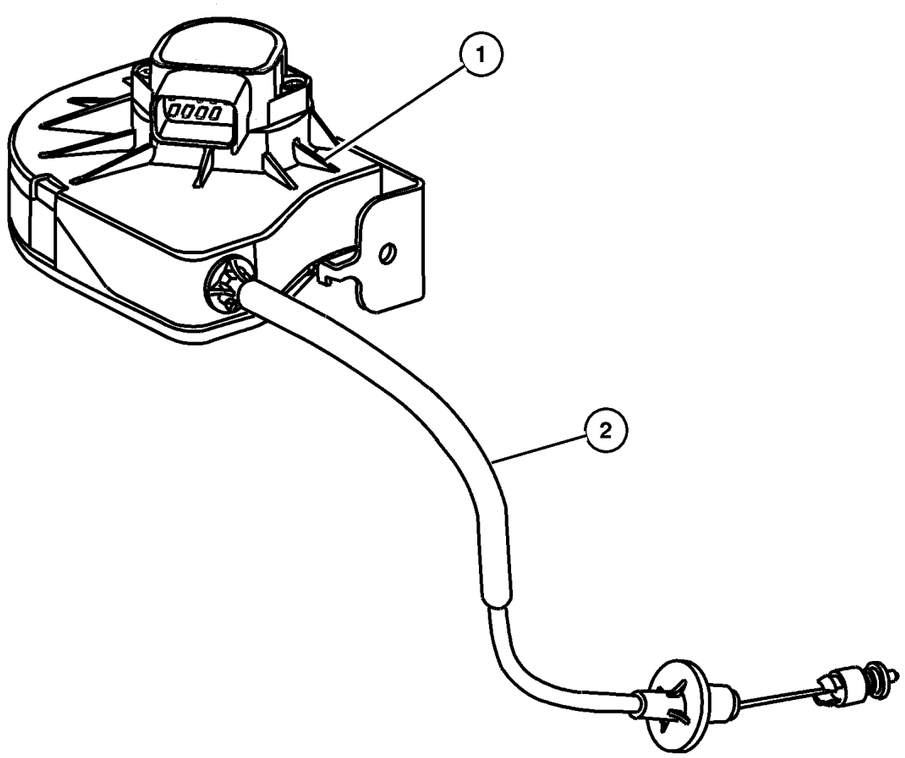

ITEM	PART NUMBER	QTY	LINE	SERIES	BODY	ENGINE	TRANS	TRIM	DESCRIPTION
Note; Sales Codes									
[EN0]= All 4/5 Cylinder Turbo Diesels									
1	52850 616AE	1				EN0			BELLCRANK, Accelerator and Cruise
2									CABLE, Accelerator
	52851 243AC	1	J, T			EN0			
	52851 244AC	1	U			EN0			
-3	6501 957	2				EN0			SCREW, Bell Crank to Bracket attaching

JEEP LIBERTY (KJ)

SERIES	LINE	BODY	ENGINE	TRANSMISSION
P = Limited	J = LHD (4WD)	74 = 4 Dr (104.3 WB)	ED1,ED0 = 2.4L Power Tech	DDK = 5 Speed HDManual
H = Sport	U = RHD (4WD)		EKG,EK0 = 3.7L Power Tech	DDD = 5 Speed HD Manual
M = Renegade	T = LHD (2WD)		ENJ = 2.5L 4Cyl Turbo Diesel	DG4,DGQ = Multi-Speed Auto
			ENR = 2.8L 4Cyl Turbo Diesel	DG6 = 4 Speed Auto Transm
			EN0 = 4Cyl Turbo Diesel	DG0 = All Automatic Transm
				DBB = All Manual Transm

Air Cleaner, 2.4L [ED1]
Figure 014-810

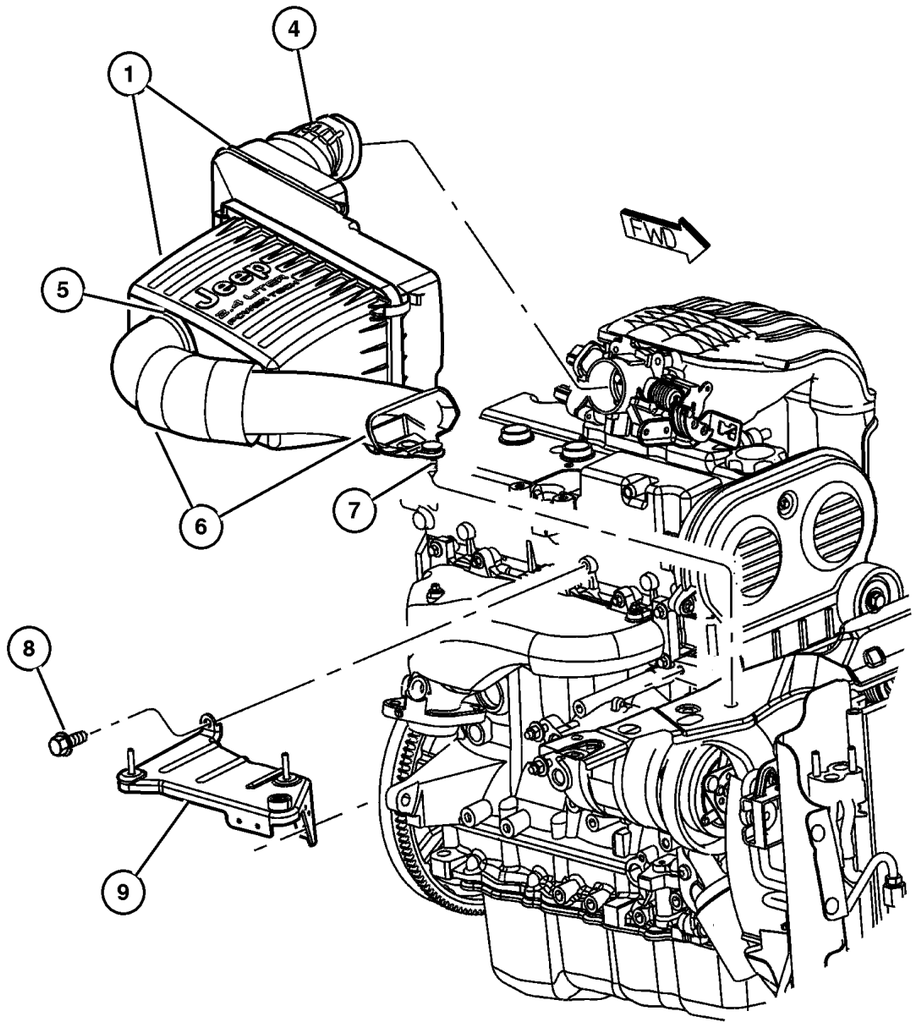

ITEM	PART NUMBER	QTY	LINE	SERIES	BODY	ENGINE	TRANS	TRIM	DESCRIPTION
Note; Sales Codes									
[ED0]= All 2.2L, 2.5L, 2.4L, 4 Cylinder Gas Engines									
1	#53013 671AA	1				ED0			BODY, Air Cleaner
-2	5019 443AA	1				ED0			FILTER, Air
-3	53013 093AA	1				ED0			TUBE, Crankcase Vent To Air Cleaner
4	53013 475AA	1				ED0			CLAMP, Hose to Throttle Body
5	53013 476AA	1				ED0			CLAMP, Hose to Air Cleaner
6	53013 101AB	1				ED0			INLET, Fresh Air
7	6036 456AA	1				ED0			RIVET
8	6503 692	2				ED0			SCREW, M8-1.25
9	53013 473AA	1				ED0			BRACKET, Air Cleaner
-10	53013 357AA	1				ED0			GROMMET, Air Cleaner
-11	4669 177	2				ED0, EK0			GROMMET, Air Cleaner Bracket

JEEP LIBERTY (KJ)

SERIES	LINE	BODY	ENGINE	TRANSMISSION
P = Limited	J = LHD (4WD)	74 = 4 Dr (104.3 WB)	ED1,ED0 = 2.4L Power Tech	DDK = 5 Speed HDManual
H = Sport	U = RHD (4WD)		EKG,EK0 = 3.7L Power Tech	DDD = 5 Speed HD Manual
M = Renegade	T = LHD (2WD)		ENJ = 2.5L 4Cyl Turbo Diesel	DG4,DGQ = Multi-Speed Auto
			ENR = 2.8L 4Cyl Turbo Diesel	DG6 = 4 Speed Auto Transm
			EN0 = 4Cyl Turbo Diesel	DG0 = All Automatic Transm
				DBB = All Manual Transm

Air Cleaner, 3.7L [EKG]
Figure 014-820

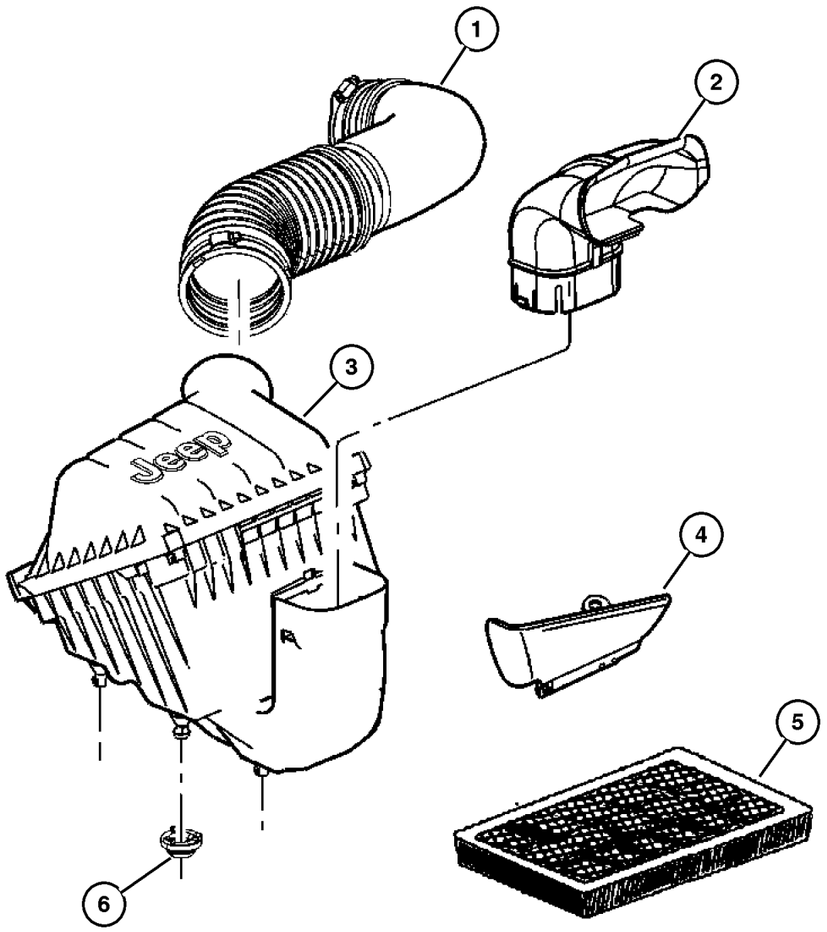

3.7L

ITEM	PART NUMBER	QTY	LINE	SERIES	BODY	ENGINE	TRANS	TRIM	DESCRIPTION
Note; Sales Codes									
[EK0]= All 3.7L, 6 Cylinder Gas Engines									
[EN0]= All 4/5 Cylinder Turbo Diesels									
1	#53013 724AA	1				EK0			HOSE, Air Cleaner
2	53013 101AB	1				ED0			INLET, Fresh Air
3	#53013 727AA	1				EK0			AIR CLEANER
4	53013 509AA	1				EK0, EN0			BAFFLE, Air Inlet
5	5018 777AA	1				EK0			FILTER, Air
6	53013 357AA	3				EK0, EN0			GROMMET, Air Cleaner
-7	6036 456AA	1				EK0, EN0			RIVET

JEEP LIBERTY (KJ)

SERIES	LINE	BODY	ENGINE	TRANSMISSION
P = Limited	J = LHD (4WD)	74 = 4 Dr (104.3 WB)	ED1,ED0 = 2.4L Power Tech	DDK = 5 Speed HDManual
H = Sport	U = RHD (4WD)		EKG,EK0 = 3.7L Power Tech	DDD = 5 Speed HD Manual
M = Renegade	T = LHD (2WD)		ENJ = 2.5L 4Cyl Turbo Diesel	DG4,DGQ = Multi-Speed Auto
			ENR = 2.8L 4Cyl Turbo Diesel	DG6 = 4 Speed Auto Transm
			EN0 = 4Cyl Turbo Diesel	DG0 = All Automatic Transm
				DBB = All Manual Transm

Air Cleaner, 2.5L/2.8 Diesel [EN0]
Figure 014-830

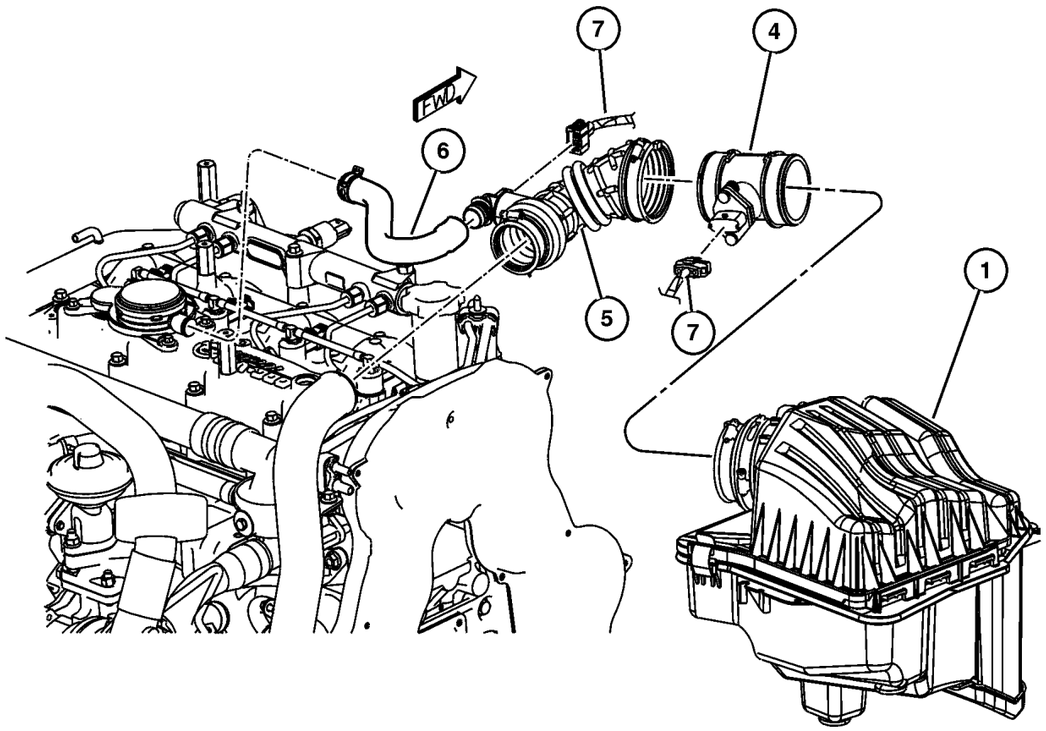

ITEM	PART NUMBER	QTY	LINE	SERIES	BODY	ENGINE	TRANS	TRIM	DESCRIPTION
Note; Sales Codes									
[EK0]= All 3.7L, 6 Cylinder Gas Engines									
[EN0]= All 4/5 Cylinder Turbo Diesels									
1	53013 107AB	1				EN0			AIR CLEANER
-2	5018 777AA	1				EN0			FILTER, Air
-3	53013 103AA	1				EK0, EN0			INLET, Fresh Air
4									SENSOR PACKAGE, Air Flow Meter, (NOT SERVICED) (Not Serviced)
5	53013 104AB	1				EN0			HOSE, Clean Air
6	53013 094AC	1				EN0			HOSE, Oil Separator
7									WIRING, Engine, See Group 8, (NOT SERVICED) (Not Serviced)

JEEP LIBERTY (KJ)

SERIES	LINE	BODY	ENGINE	TRANSMISSION
P = Limited	J = LHD (4WD)	74 = 4 Dr (104.3 WB)	ED1,ED0 = 2.4L Power Tech	DDK = 5 Speed HDManual
H = Sport	U = RHD (4WD)		EKG,EK0 = 3.7L Power Tech	DDD = 5 Speed HD Manual
M = Renegade	T = LHD (2WD)		ENJ = 2.5L 4Cyl Turbo Diesel	DG4,DGQ = Multi-Speed Auto
			ENR = 2.8L 4Cyl Turbo Diesel	DG6 = 4 Speed Auto Transm
			EN0 = 4Cyl Turbo Diesel	DG0 = All Automatic Transm
				DBB = All Manual Transm

Speed Control
Figure 014-1010

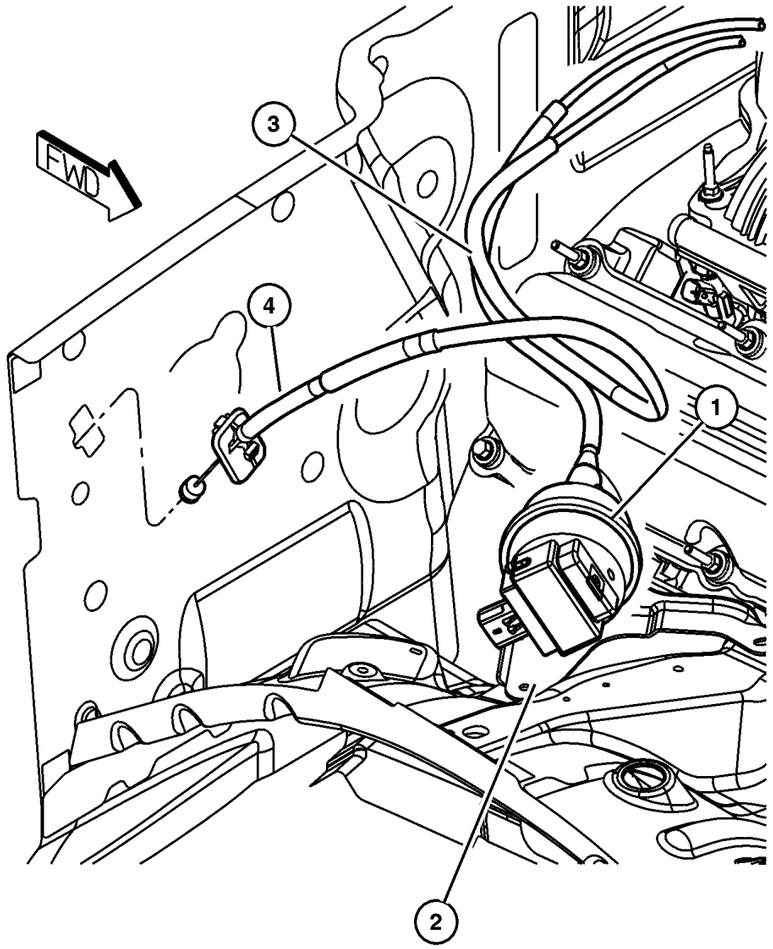

ITEM	PART NUMBER	QTY	LINE	SERIES	BODY	ENGINE	TRANS	TRIM	DESCRIPTION
Note; Sales Codes									
[ED0]= All 2.2L, 2.5L, 2.4L, 4 Cylinder Gas Engines									
[EKG]= 3.7L Power Tech V-6									
[EK0]= All 3.7L 6 Cylinder Gas Engines									
1	4669 979	1				ED0			SERVO, Speed Control
2	53013 348AA	1				ED0			BRACKET, Speed Control Servo
3	53013 346AB	1				ED0			CABLE, Speed Control
4									CABLE, Accelerator
	53013 137AB	1	J, T			ED0			
	53013 136AD	1	J, T			EKG			
	53013 138AC	1	U			EKG			
-5	53013 347AB	1				ED0			HARNESS, Speed Control Vacuum
-6	6502 493	2				ED0			NUT, Hex Flange Serration, M6x1
-7	6025 867	1				ED0			CLIP, Cable to Servo Attach
-8	55037 536AB	1							RESERVOIR, Speed Control Vacuum

JEEP LIBERTY (KJ)

SERIES	LINE	BODY	ENGINE	TRANSMISSION
P = Limited	J = LHD (4WD)	74 = 4 Dr (104.3 WB)	ED1,ED0 = 2.4L Power Tech	DDK = 5 Speed HDManual
H = Sport	U = RHD (4WD)		EKG,EK0 = 3.7L Power Tech	DDD = 5 Speed HD Manual
M = Renegade	T = LHD (2WD)		ENJ = 2.5L 4Cyl Turbo Diesel	DG4,DGQ = Multi-Speed Auto
			ENR = 2.8L 4Cyl Turbo Diesel	DG6 = 4 Speed Auto Transm
			EN0 = 4Cyl Turbo Diesel	DG0 = All Automatic Transm
				DBB = All Manual Transm

AR = Use as required - = Non illustrated part # = New this model year

September 30, 2003

« RETURN TO GROUP INDEX

Accelerator Pedal
Figure 014-1110

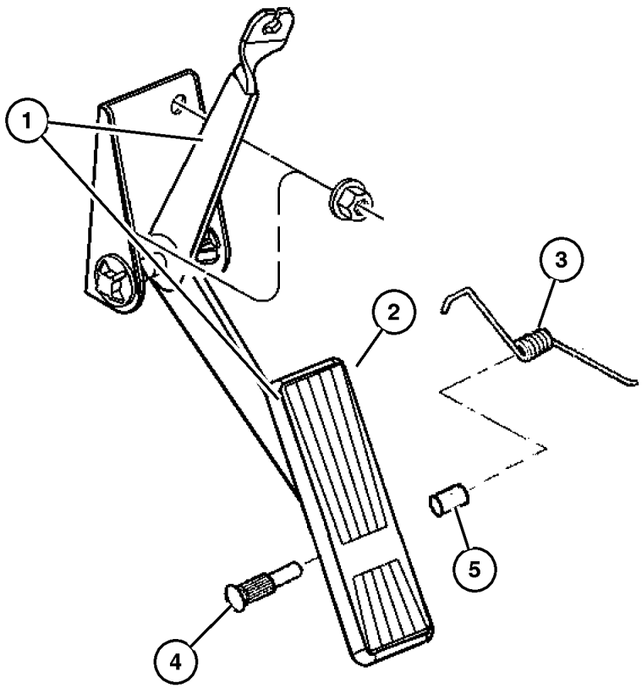

ITEM	PART NUMBER	QTY	LINE	SERIES	BODY	ENGINE	TRANS	TRIM	DESCRIPTION
Note; Sales Codes									
[ED0]= All 2.2L, 2.5L, 2.4L, 4 Cylinder Gas Engines									
[EK0]= All 3.7L 6 Cylinder Gas Engines									
[EN0]= All 4/5 Cylinder Turbo Diesels									
1									PEDAL, Accelerator
	53013 527AA	1	J, T			ED0, EK0, EN0			
	53013 528AA	1	U			ED0, EK0, EN0			
2									PAD, Accelerator Pedal, Also Serviced In Item 1
	53003 932AB	1	J, T			ED0, EK0, EN0			
		1	U			ED0, EK0, EN0			
3									SPRING, Accelerator Pedal Return, Also Serviced In Item 1
	5207 8168	1	J, T			ED0, EK0, EN0			
		1	U			ED0, EK0, EN0			
4									PIN, Accelerator Pedal Mtg., Also Serviced In Item 1
	J322 0231	1	J, T			ED0, EK0, EN0			
		1	U			ED0, EK0, EN0			
5									BUSHING, Accelerator Pedal, Also Serviced In Item 1
	5207 8653	2	J, T			ED0, EK0, EN0			

JEEP LIBERTY (KJ)

SERIES	LINE	BODY	ENGINE	TRANSMISSION
P = Limited	J = LHD (4WD)	74 = 4 Dr (104.3 WB)	ED1,ED0 = 2.4L Power Tech	DDK = 5 Speed HDManual
H = Sport	U = RHD (4WD)		EKG,EK0 = 3.7L Power Tech	DDD = 5 Speed HD Manual
M = Renegade	T = LHD (2WD)		ENJ = 2.5L 4Cyl Turbo Diesel	DG4,DGQ = Multi-Speed Auto
			ENR = 2.8L 4Cyl Turbo Diesel	DG6 = 4 Speed Auto Transm
			EN0 = 4Cyl Turbo Diesel	DG0 = All Automatic Transm
				DBB = All Manual Transm

Accelerator Pedal
Figure 014-1110

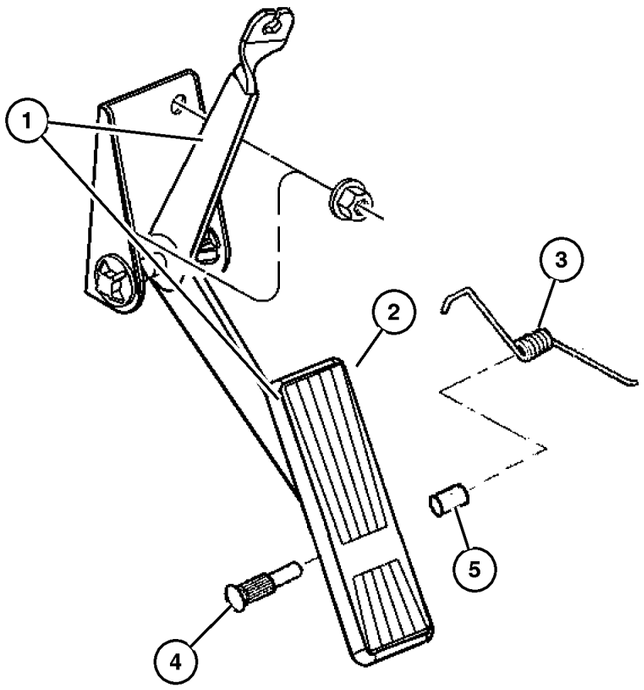

ITEM	PART NUMBER	QTY	LINE	SERIES	BODY	ENGINE	TRANS	TRIM	DESCRIPTION
		2	U			ED0, EK0, EN0			
-6									NUT, (NOT SERVICED) (Not Serviced)

JEEP LIBERTY (KJ)

SERIES	LINE	BODY	ENGINE	TRANSMISSION
P = Limited	J = LHD (4WD)	74 = 4 Dr (104.3 WB)	ED1,ED0 = 2.4L Power Tech	DDK = 5 Speed HDManual
H = Sport	U = RHD (4WD)		EKG,EK0 = 3.7L Power Tech	DDD = 5 Speed HD Manual
M = Renegade	T = LHD (2WD)		ENJ = 2.5L 4Cyl Turbo Diesel	DG4,DGQ = Multi-Speed Auto
			ENR = 2.8L 4Cyl Turbo Diesel	DG6 = 4 Speed Auto Transm
			EN0 = 4Cyl Turbo Diesel	DG0 = All Automatic Transm
				DBB = All Manual Transm

Group – 016
Propeller Shafts and U–Joints

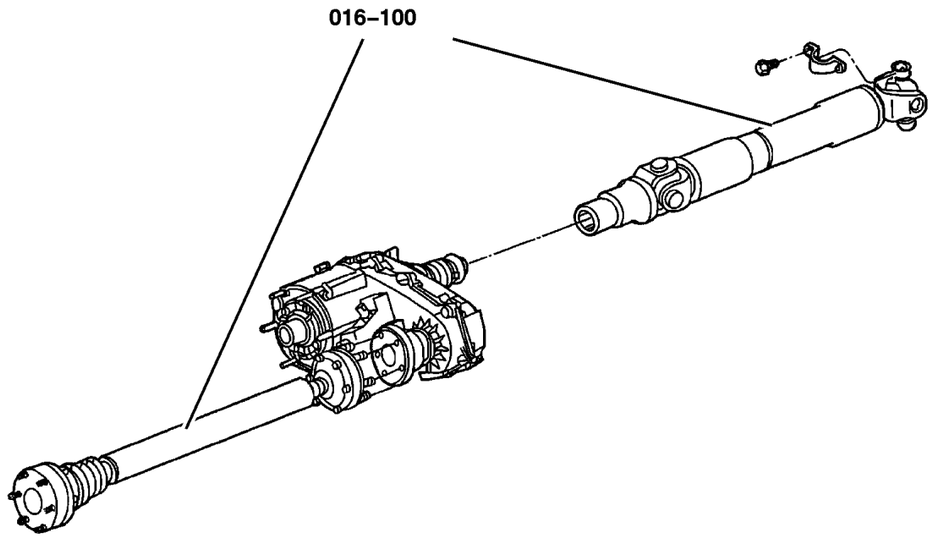

016–100 Propeller Shaft			
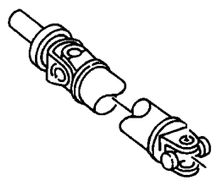			

GROUP 16 - Propeller Shafts and U-Joints

Illustration Title	Group-Fig. No.
Propeller Shaft	
Propeller Shaft,2 Wheel Drive	Fig. 016-110
Propeller Shaft,4 Wheel Drive	Fig. 016-120

Propeller Shaft,2 Wheel Drive
Figure 016-110

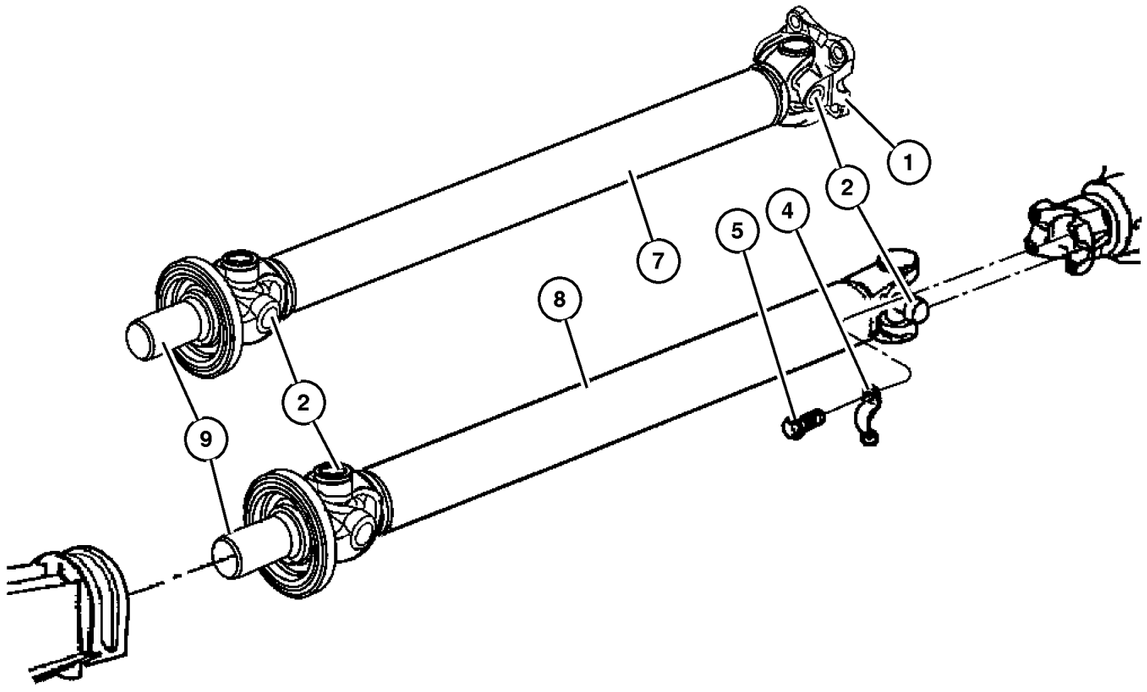

ITEM	PART NUMBER	QTY	LINE	SERIES	BODY	ENGINE	TRANS	TRIM	DESCRIPTION
Note:Sales Codes									
[DBB]=Transmissions - All Manual									
[DG0]=Transmissions - All Automatic									
[DG6]=Transmission - 4-Speed Automatic, 42RL									
[ED0]=Engines - All 2.2, 2.5, 2.4L 4 Cylinder Gas									
[EK0]=Engines - All 3.7L 6 Cylinder Gas									
1									FLANGE, Drive Shaft
	5103 372AA	1	T			ED0	DBB		Rear
		1	T			EK0	DBB		Rear
2									U JOINT
	5015 694AA	2	T			ED0	DBB		Front or Rear
		2	T			EK0	DBB		Front or Rear
		2	T			EK0	DG6		Front or Rear
-3									RING, U Joint
	J320 7886	4	T			ED0	DBB		Front or Rear
		4	T			EK0	DBB		Front or Rear
		4	T			EK0	DG6		Front or Rear
4	J324 0553	2					DD0, DGQ		STRAP, Prop Shaft, Mounting
5	J400 6928	4					DD0, DGQ		BOLT, Prop Shaft, Mounting
-6	6506 497AA	4					DG6		BOLT, Hex Head, M12, Prop Shaft, Mounting
7									SHAFT, Drive, Rear 1-Piece
	52853 126AA	1	T			ED0	DBB		
	52853 127AA	1	T			EK0	DBB		
8	52853 118AB	1	T			EK0	DG6		SHAFT, Drive, Rear 1-Piece
9									YOKE, Drive Shaft
	5073 280AA	1	T			ED0	DBB		
	5103 210AA	1	T			EK0	DG6		
	5093 963AA	1	T			EK0	DBB		

JEEP LIBERTY (KJ)

SERIES	LINE	BODY	ENGINE	TRANSMISSION
P = Limited	J = LHD (4WD)	74 = 4 Dr (104.3 WB)	ED1,ED0 = 2.4L Power Tech	DDK = 5 Speed HDManual
H = Sport	U = RHD (4WD)		EKG,EK0 = 3.7L Power Tech	DDD = 5 Speed HD Manual
M = Renegade	T = LHD (2WD)		ENJ = 2.5L 4Cyl Turbo Diesel	DG4,DGQ = Multi-Speed Auto
			ENR = 2.8L 4Cyl Turbo Diesel	DG6 = 4 Speed Auto Transm
			EN0 = 4Cyl Turbo Diesel	DG0 = All Automatic Transm
				DBB = All Manual Transm

Propeller Shaft,4 Wheel Drive
Figure 016-120

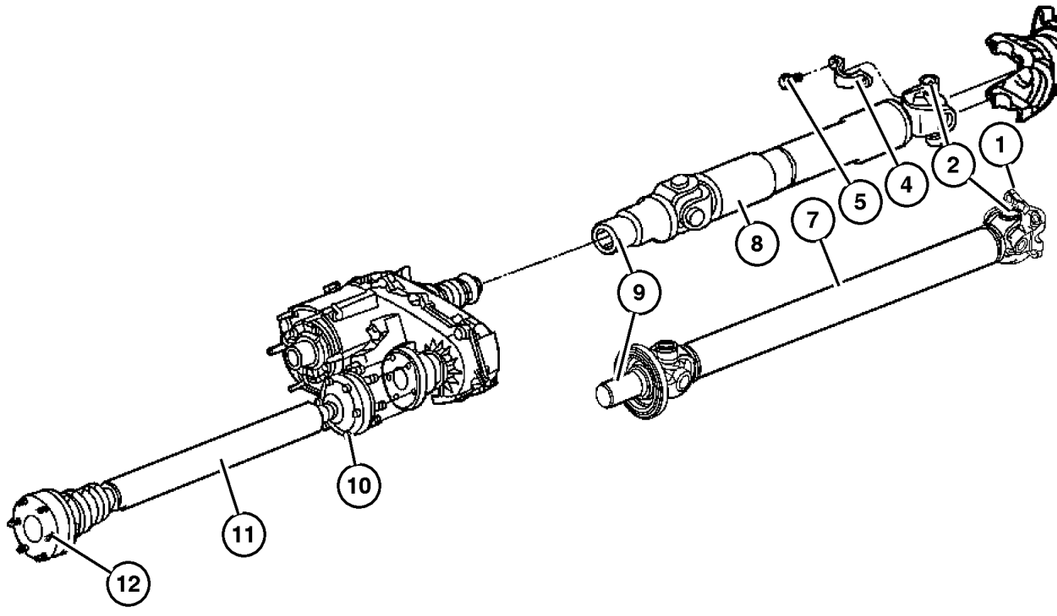

ITEM	PART NUMBER	QTY	LINE	SERIES	BODY	ENGINE	TRANS	TRIM	DESCRIPTION
Note:Sales Codes									
Note:Items 10,12 that one part number consists of 2 bolts and 1 strap									
[DBB]=Transmissions - All Manual									
[DG0]= Transmissions - All Automatic									
[DG6]=Transmission - 4-Speed Automatic, 42RL									
[ED0]=Engines - All 2.2L,2.5L,2.4L 4 CYL GA									
[EK0]=Engines - All 3.7L 6 Cylinder Gas									
[EN0]=Engines - All 4/5 Cylinder Turbo Diesel									
1									FLANGE, Drive Shaft
	5103 372AA	1	J, U			ED0	DBB		Rear
		1	J, U			EK0	DBB		Rear
		1	J, U			EN0	DBB		Rear
		1	J, U			EN0	DG0		Rear
2									U JOINT
	5015 694AA	2	J, U			EK0	DG6		Front or Rear
		2	J, U			ED0	DBB		Front or Rear
		2	J, U			EK0	DBB		Front or Rear
		2	J, U			EN0	DBB		Front or Rear
		1	J, U			EN0	DG0		Front or Rear
-3									RING, U Joint
	J320 7886	8	J, U			EK0	DG6		
		4	J, U			ED0	DBB		
		4	J, U			EK0	DBB		
		4	J, U			EN0	DBB		
		4	J, U			EN0	DG0		
4	J324 0553	2					DD0, DGQ		STRAP, Prop Shaft
5	J400 6928	4					DD0, DGQ		BOLT, Prop Shaft, Mounting
-6	6506 497AA	4					DG6		BOLT, Hex Head, M12, Prop Shaft Rear, Mounting
7									SHAFT, Drive, Rear 1-Piece
	52853 125AA	1	J, U			ED0	DBB		
	52853 128AA	1	J, U			EK0	DBB		
	52853 129AA	1	J, U			EN0	DBB		
	52853 130AA	1	J, U			EN0	DG0		
8	52853 119AA	1	J, U			EK0	DG6		SHAFT, Drive, Rear 1-Piece
9									YOKE, Drive Shaft
	5093 961AB	1	J, U			EK0	DG6		
	5073 275AA	1	J, U			ED0	DBB		
	5093 960AA	1	J, U			EK0	DBB		

JEEP LIBERTY (KJ)

SERIES	LINE	BODY	ENGINE	TRANSMISSION
P = Limited	J = LHD (4WD)	74 = 4 Dr (104.3 WB)	ED1,ED0 = 2.4L Power Tech	DDK = 5 Speed HDManual
H = Sport	U = RHD (4WD)		EKG,EK0 = 3.7L Power Tech	DDD = 5 Speed HD Manual
M = Renegade	T = LHD (2WD)		ENJ = 2.5L 4Cyl Turbo Diesel	DG4,DGQ = Multi-Speed Auto
			ENR = 2.8L 4Cyl Turbo Diesel	DG6 = 4 Speed Auto Transm
			EN0 = 4Cyl Turbo Diesel	DG0 = All Automatic Transm
				DBB = All Manual Transm

AR = Use as required - = Non illustrated part # = New this model year

September 30, 2003

« RETURN TO GROUP INDEX »

Propeller Shaft,4 Wheel Drive
Figure 016-120

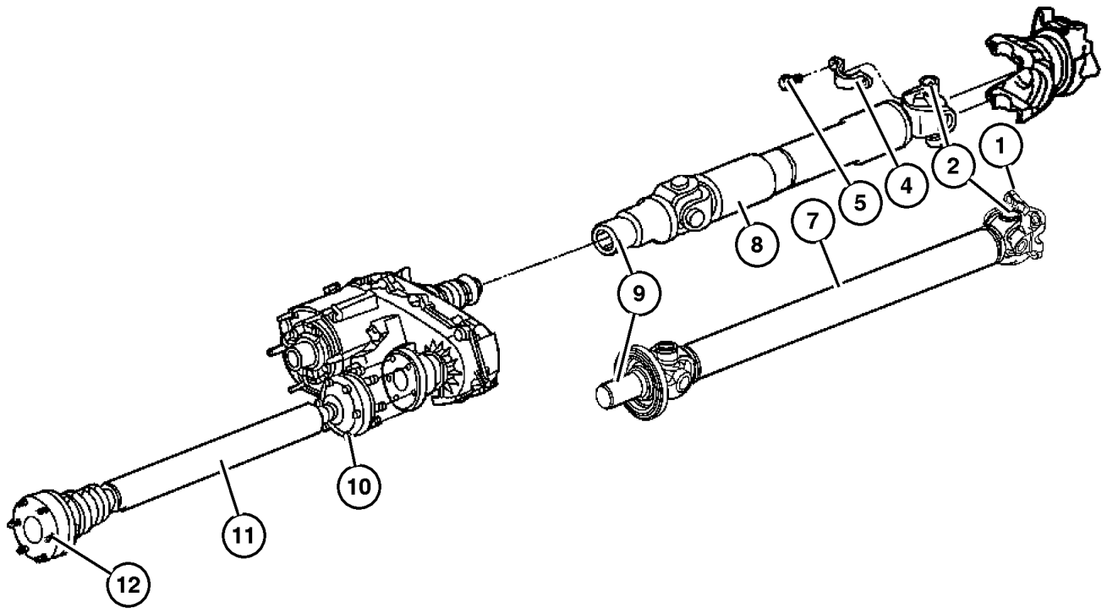

ITEM	PART NUMBER	QTY	LINE	SERIES	BODY	ENGINE	TRANS	TRIM	DESCRIPTION
	5073 275AA	1	J, U			EN0	DBB		
	5103 373AA	1	J, U			EN0	DG0		
10									BOLT AND WASHER, Part Number Has 1 strap and 2 Bolts
	5015 109AA	3	J, U			EN0	DBB		To Transfer Case, Rear
		3	J, U			EN0	DG0		To Transfer Case, Rear
		3	J, U			ED0	DBB		To Transfer Case, Rear
		3	J, U			EK0	DBB, DG6		To Transfer Case, Rear
11									SHAFT, Drive, Front
	52111 591AA	1	J, U			EN0	DBB		
	52111 593AA	1	J, U			EN0	DG0		
	52111 594AA	1	J, U			ED0	DBB		
	52111 596AA	1	J, U			EK0	DBB, DG6		
12									BOLT AND WASHER, Part Number Has 1 strap and 2 Bolts
	5015 996AA	3	J, U			EN0	DBB		To Front Axle, Front
		3	J, U			EN0	DG0		To Front Axle, Front
		3	J, U			ED0	DBB		To Front Axle, Front
		3	J, U			EK0	DBB, DG6		To Front Axle, Front

JEEP LIBERTY (KJ)

SERIES	LINE	BODY	ENGINE	TRANSMISSION
P = Limited	J = LHD (4WD)	74 = 4 Dr (104.3 WB)	ED1,ED0 = 2.4L Power Tech	DDK = 5 Speed HDManual
H = Sport	U = RHD (4WD)		EKG,EK0 = 3.7L Power Tech	DDD = 5 Speed HD Manual
M = Renegade	T = LHD (2WD)		ENJ = 2.5L 4Cyl Turbo Diesel	DG4,DGQ = Multi-Speed Auto
			ENR = 2.8L 4Cyl Turbo Diesel	DG6 = 4 Speed Auto Transm
			EN0 = 4Cyl Turbo Diesel	DG0 = All Automatic Transm
				DBB = All Manual Transm

Group – 017
Rear Suspension

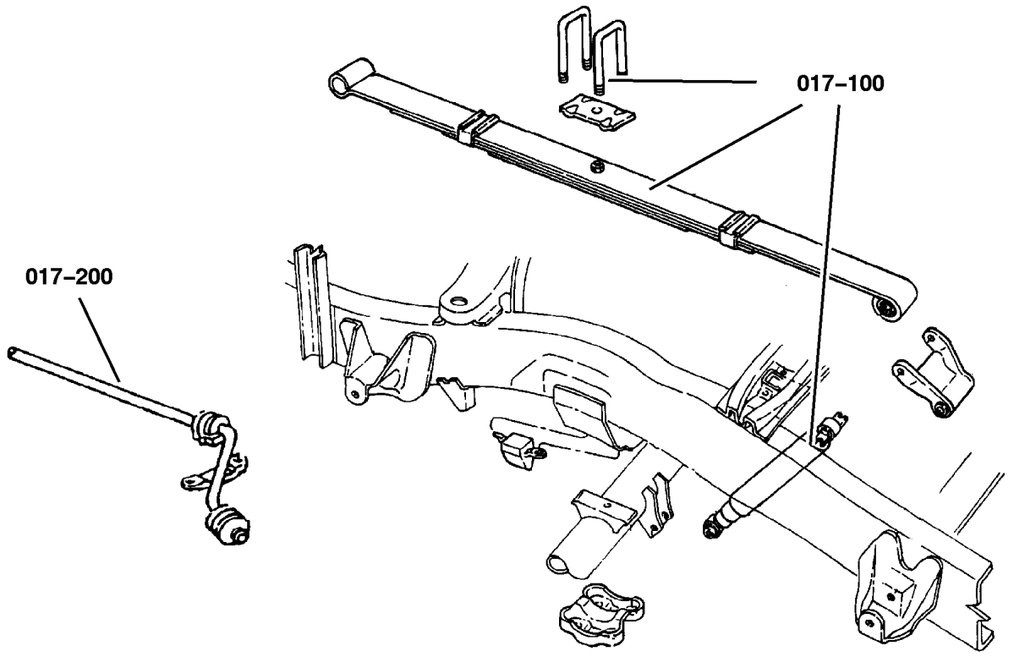

017–100 Rear Suspension	017–200 Rear Stabilizer		
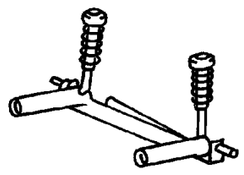	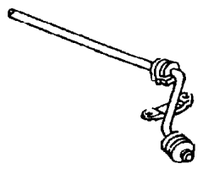		

GROUP 17 - Rear Suspension

Illustration Title — Group-Fig. No.

Rear Suspension
Suspension,Rear and Shock . . . . . Fig. 017-110

Rear Stabilizer
Stabilizer Bar,Rear . . . . . Fig. 017-210

Suspension,Rear and Shock
Figure 017-110

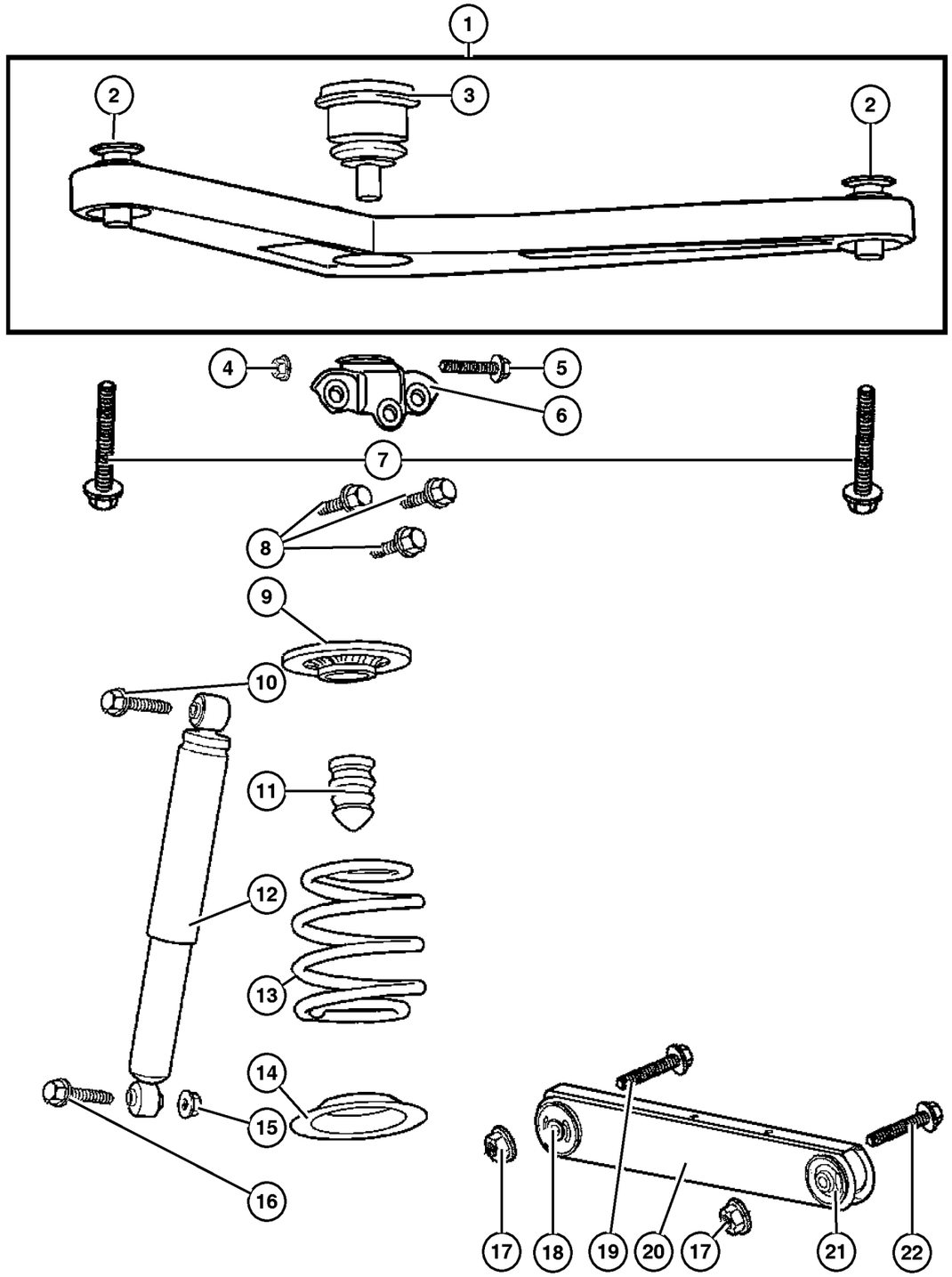

ITEM	PART NUMBER	QTY	LINE	SERIES	BODY	ENGINE	TRANS	TRIM	DESCRIPTION
Note:Sales Codes;									
[ZCT] Through [ZRV] = Spring Sales Codes will be found on Vehicle Identification Number [VIN] Sales Code Listing									
1	52088 901AD	1							ARM, Upper Control, Rear, Includes Item 2
2	5208 8425	2							BUSHING, Control Arm
3	52088 647AB	1							BALL JOINT, Upper Control Arm
4	6503 711	1							NUT, Hex Flange Lock, M12x1.75, Ball Joint Bracket, Mounting
5	6503 610	1							BOLT, Hex Flange Head, M12-1. 75x62.0, UCA to Axle Bracket, Mounting
6	52128 586AA	1							BRACKET, Ballstud
7	6504 748	2							SCREW, Hex Flange Head, M12x1. 75x117, UCA to Body, Mounting
8	6505 445AA	3							BOLT
9	52088 707AA	2							ISOLATOR, Spring, Upper
10	6506 147AA	2							SCREW, Hex Flange Head, M12x1. 75x80, Shock Mounting, Upper
11	52088 705AC	2							BUMPER, Jounce, Upper
12	52088 673AD	2							SHOCK ABSORBER, Suspension, Rear
13									SPRING, Suspension, Rear
	52128 869AA	1							[ZCT,ZRT]
	52128 870AA	1							[ZCU,ZRU]
	52128 871AA	1							[ZCV,ZRV]
14	52128 524AA	2							ISOLATOR, Spring, Lower
15	6502 697	2							NUT, Hex Flange Lock, M12x1.75, Shock Mounting, Lower
16	6505 935AA	2							SCREW, Shock Mounting, Lower
17									NUT, M14X2
	6102 251AA	2							LCA to Axle
		2							LCA to Body
18	#52129 094AA	2							BUSHING, Control Arm
19	6504 408	2							BOLT, LCA to Axle, Mounting
20	#52128 866AA	2							ARM, Lower Control, Rear, Includes Items 18,21
21	#52128 864AA	2							BUSHING, Control Arm, LCA to Body, Mounting
22	6506 033AA	2							BOLT, Hex Flange Head, M14x2. 0x105, LCA to Body, Mounting

JEEP LIBERTY (KJ)

SERIES	LINE	BODY	ENGINE	TRANSMISSION
P = Limited	J = LHD (4WD)	74 = 4 Dr (104.3 WB)	ED1,ED0 = 2.4L Power Tech	DDK = 5 Speed HDManual
H = Sport	U = RHD (4WD)		EKG,EK0 = 3.7L Power Tech	DDD = 5 Speed HD Manual
M = Renegade	T = LHD (2WD)		ENJ = 2.5L 4Cyl Turbo Diesel	DG4,DGQ = Multi-Speed Auto
			ENR = 2.8L 4Cyl Turbo Diesel	DG6 = 4 Speed Auto Transm
			EN0 = 4Cyl Turbo Diesel	DG0 = All Automatic Transm
				DBB = All Manual Transm

AR = Use as required - = Non illustrated part # = New this model year **September 30, 2003**

« RETURN TO GROUP INDEX

Stabilizer Bar,Rear
Figure 017-210

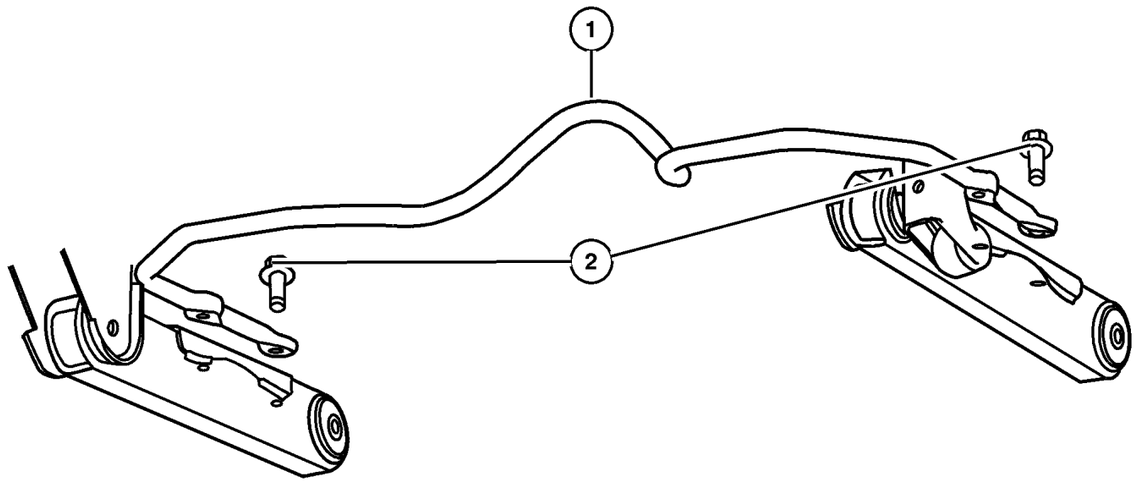

ITEM	PART NUMBER	QTY	LINE	SERIES	BODY	ENGINE	TRANS	TRIM	DESCRIPTION
1	52088 677AA	1							STABILIZER BAR, Rear Suspension
2	6101 844	4							SCREW AND WASHER, Hex Head, M12x1.75x50, Stabilizer Bar to LCA, Mounting

JEEP LIBERTY (KJ)

SERIES	LINE	BODY	ENGINE	TRANSMISSION
P = Limited	J = LHD (4WD)	74 = 4 Dr (104.3 WB)	ED1,ED0 = 2.4L Power Tech	DDK = 5 Speed HDManual
H = Sport	U = RHD (4WD)		EKG,EK0 = 3.7L Power Tech	DDD = 5 Speed HD Manual
M = Renegade	T = LHD (2WD)		ENJ = 2.5L 4Cyl Turbo Diesel	DG4,DGQ = Multi-Speed Auto
			ENR = 2.8L 4Cyl Turbo Diesel	DG6 = 4 Speed Auto Transm
			EN0 = 4Cyl Turbo Diesel	DG0 = All Automatic Transm
				DBB = All Manual Transm

Group – 019
Steering

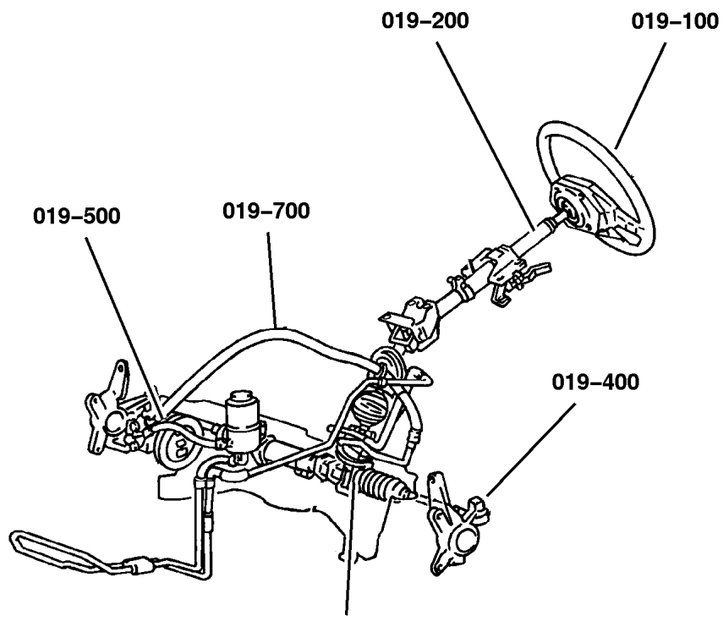

019–100 Steering Wheel 	**019–200** Steering Column 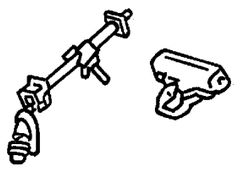	**019–300** Steering Gear 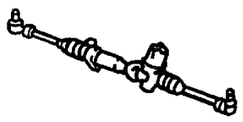	**019–500** Power Steering Pump 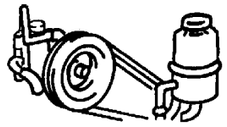
019–700 Power Steering Hoses 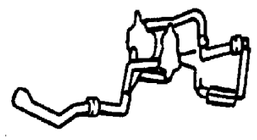			

GROUP 19 - Steering

Illustration Title — Group-Fig. No.

Steering Wheel
Steering Wheel . . . . . Fig. 019-110

Steering Column
Column,Steering . . . . . Fig. 019-210

Steering Gear
Gear Assembly,Steering,Rack and Pinion . . . . . Fig. 019-310

Power Steering Pump
Pump,Power Steering,2.4L [ED0] Gas Engine . . . . . Fig. 019-510
Pump,Power Steering,2.5L [EN0] Diesel Engine . . . . . Fig. 019-520
Pump,Power Steering,3.7L [EK0] Gas Engine . . . . . Fig. 019-530

Power Steering Hoses
Hoses and Reservoir,LHD,2.4L [ED0] 2.8L [EN0] Diesel . . . . . Fig. 019-710
Hoses and Reservior,RHD,2.4L [ED0] Gas,2.5L [EN0] Diesel Engines . . . . . Fig. 019-720
Hoses and Reservior,LHD,3.7L [EK0] Gas Engine . . . . . Fig. 019-730
Hoses and Reservior,RHD,3.7L [EK0] Gas Engine . . . . . Fig. 019-740

Steering Wheel
Figure 019-110

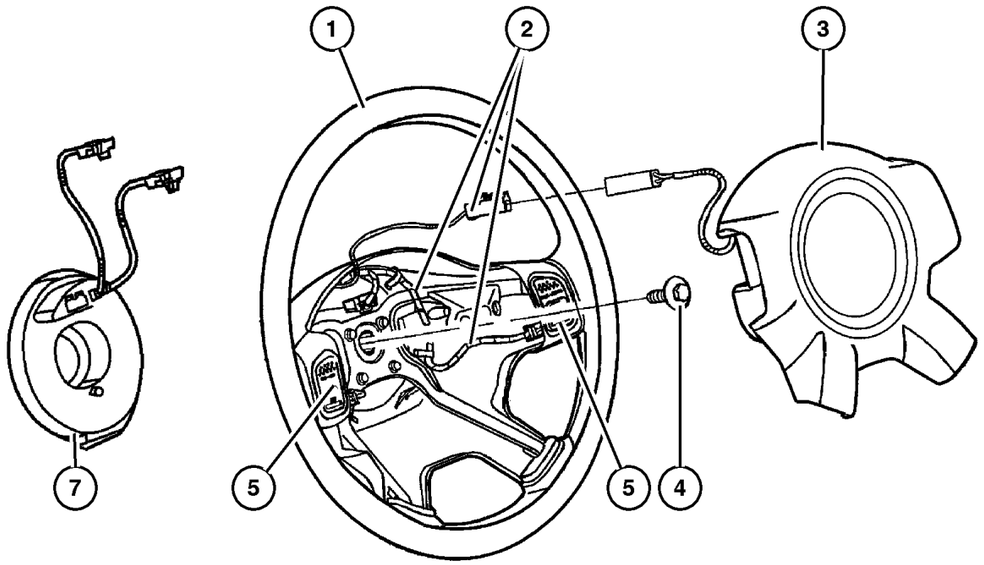

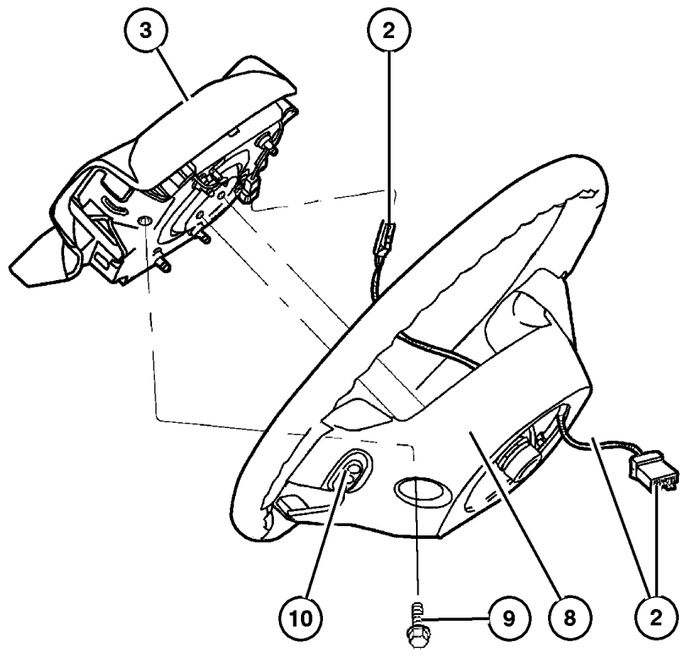

ITEM	PART NUMBER	QTY	LINE	SERIES	BODY	ENGINE	TRANS	TRIM	DESCRIPTION
Note:Sales Codes									
[NHM]=Speed Control									
[RDZ]= Audio Controls - Steering Wheel Mounted									
[SCD]= Steering Wheel - Luxury									
[SCG]=Steering Wheel - Leather Wrapped									
1									WHEEL, Steering
	UR71 DX9AB	1							[SCD]
	UR67 1X9AD	1		H, M, P					
2									WIRING, Steering Wheel
	56010 170AC	1		H, M					[SCG NHM-RDZ]
		1		M, P					[[SCG+NHM+JA2-RDZ]
	56010 171AC	1		H, M					[SCG+NHM+RDZ-JA2]
		1		M, P					[SCG+NHM+RDZ+JA2]
3									AIR BAG, Driver
	#5JL03 DX9AA	1		H, M					[CG1-JA2]
	#5JL04 1X9AA	1		M, P					[CG1+JA2]
4	6505 656AA	1							SCREW, Hex Flange Head, M10x1. 5x35., Steering Wheel to Column, Mounting
5									SWITCH, Speed Control
	56010 088AC	1		H, M					Right
	56010 089AC	1		H, M					Left
	56010 358AB	1		M, P					Right
-6	5GN02 DX9AA	1							BEZEL, Steering Wheel, [SCD] Without [NHM], Right
7									CLOCKSPRING
	56010 146AF	1							Without [RDZ]
	56010 187AG	1							With [RDZ]
8									COVER, Steering Wheel Back
	5083 981AA	1		H, M					[SCG+ NHM]
		1		P					
	5086 215AA	1		H, M					
		1		P					[SCG+ NHM +RDZ]
9	6506 091AA	2							SCREW, M6x1x25, Air Bag Module, Mounting
10									SWITCH, Remote Radio
	56042 312AB	1		H, M					Radio Control Volume
		1		P					Radio Control Seek
		1		H, M					
		1		P					

JEEP LIBERTY (KJ)

SERIES	LINE	BODY	ENGINE	TRANSMISSION
P = Limited	J = LHD (4WD)	74 = 4 Dr (104.3 WB)	ED1,ED0 = 2.4L Power Tech	DDK = 5 Speed HDManual
H = Sport	U = RHD (4WD)		EKG,EK0 = 3.7L Power Tech	DDD = 5 Speed HD Manual
M = Renegade	T = LHD (2WD)		ENJ = 2.5L 4Cyl Turbo Diesel	DG4,DGQ = Multi-Speed Auto
			ENR = 2.8L 4Cyl Turbo Diesel	DG6 = 4 Speed Auto Transm
			EN0 = 4Cyl Turbo Diesel	DG0 = All Automatic Transm
				DBB = All Manual Transm

Column,Steering
Figure 019-210

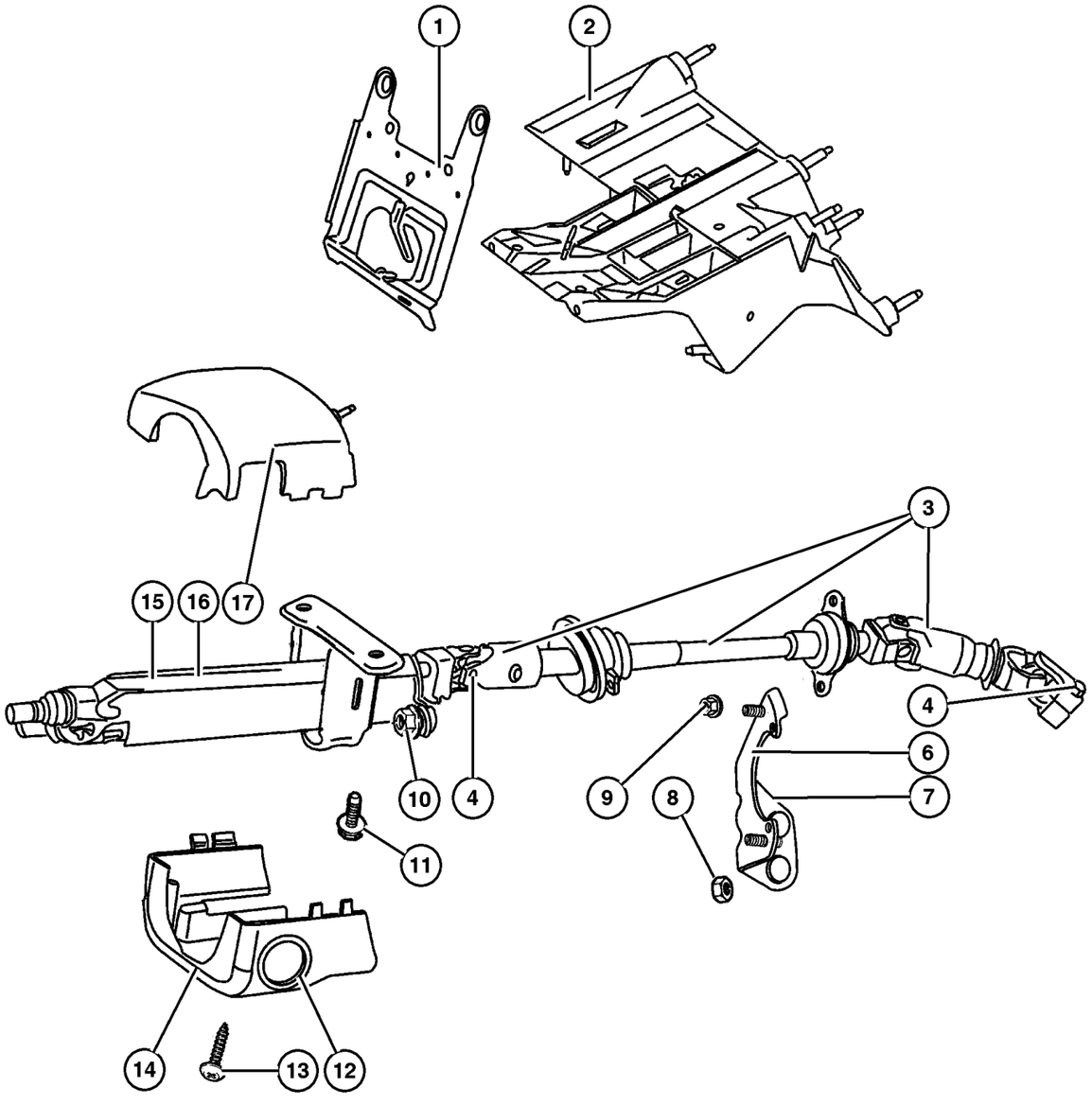

ITEM	PART NUMBER	QTY	LINE	SERIES	BODY	ENGINE	TRANS	TRIM	DESCRIPTION
Note:Sales Codes;									
[ABB]=European Equipment Group									
[DBB]=Transmissions - All Manual									
[DG0]=Transmissions - All Automatic									
[ED0]=Engines - All 2.2,2.5,2.4L 4 Cylinder Gas									
[EK0]= Engines - All 3.7L 6 Cylinder Gas									
[SUA]=Steering Column - Tilt									
1									BRACKET, Steering Column
	55314 992AA	1	J, T						
	55315 011AA	1	U						
2									BRACKET, Steering Column
	55314 987AA	1	J, T						
	55314 988AA	1	U						
3									SHAFT, Intermediate
	55315 022AD	1	J, T						
	55315 058AA	1	U			EN0			Lower
4	6504 926AA	2							SCREW, Hex Flange Head, M10x1. 5x40
-5	6502 808	2	U						SCREW, M6x1x25, Intermediate Shaft Bracket
6	55315 003AB	1	J, T						BRACKET, Intermediate Shaft
7	55315 009AA	1	U						BRACKET, Steering Column
8	6100 048	2							NUT, Hex, M6x1.00
9	6100 516	2							NUT, Hex Flange Lock, M6 Phosphate, Bearing to Bracket
10	6503 182	2							NUT AND WASHER, Hex Lock Nut-Coned Teeth Washer, M8 x 1.25, Steering Column Lower, Mounting
11	6506 128AA	2							SCREW AND WASHER, Hex Head, Steering Column Upper, Mounting
12									TRIM RING, Ignition Key Cylinder, (NOT REQUIRED)
13									SCREW AND WASHER, Pan Head
	6036 381AA	2	J, T						Upper to Lower Shroud
		2	U						Upper to Lower Shroud
14									SHROUD, Steering Column
	5GE00 DX9AB	1					DBB		Without [SUA] & [DBB]
	5GE04 DX9AB	1					DBB		With [SUA] & [DBB]
	5GE06 DX9AB	1					DG0		Without [SUA] & [DGO]
	5GE08 DX9AB	1					DG0		With [SUA] & [DGO]
15									COLUMN, steering, non tilt

JEEP LIBERTY (KJ)

SERIES	LINE	BODY	ENGINE	TRANSMISSION
P = Limited	J = LHD (4WD)	74 = 4 Dr (104.3 WB)	ED1,ED0 = 2.4L Power Tech	DDK = 5 Speed HDManual
H = Sport	U = RHD (4WD)		EKG,EK0 = 3.7L Power Tech	DDD = 5 Speed HD Manual
M = Renegade	T = LHD (2WD)		ENJ = 2.5L 4Cyl Turbo Diesel	DG4,DGQ = Multi-Speed Auto
			ENR = 2.8L 4Cyl Turbo Diesel	DG6 = 4 Speed Auto Transm
			EN0 = 4Cyl Turbo Diesel	DG0 = All Automatic Transm
				DBB = All Manual Transm

Column,Steering
Figure 019-210

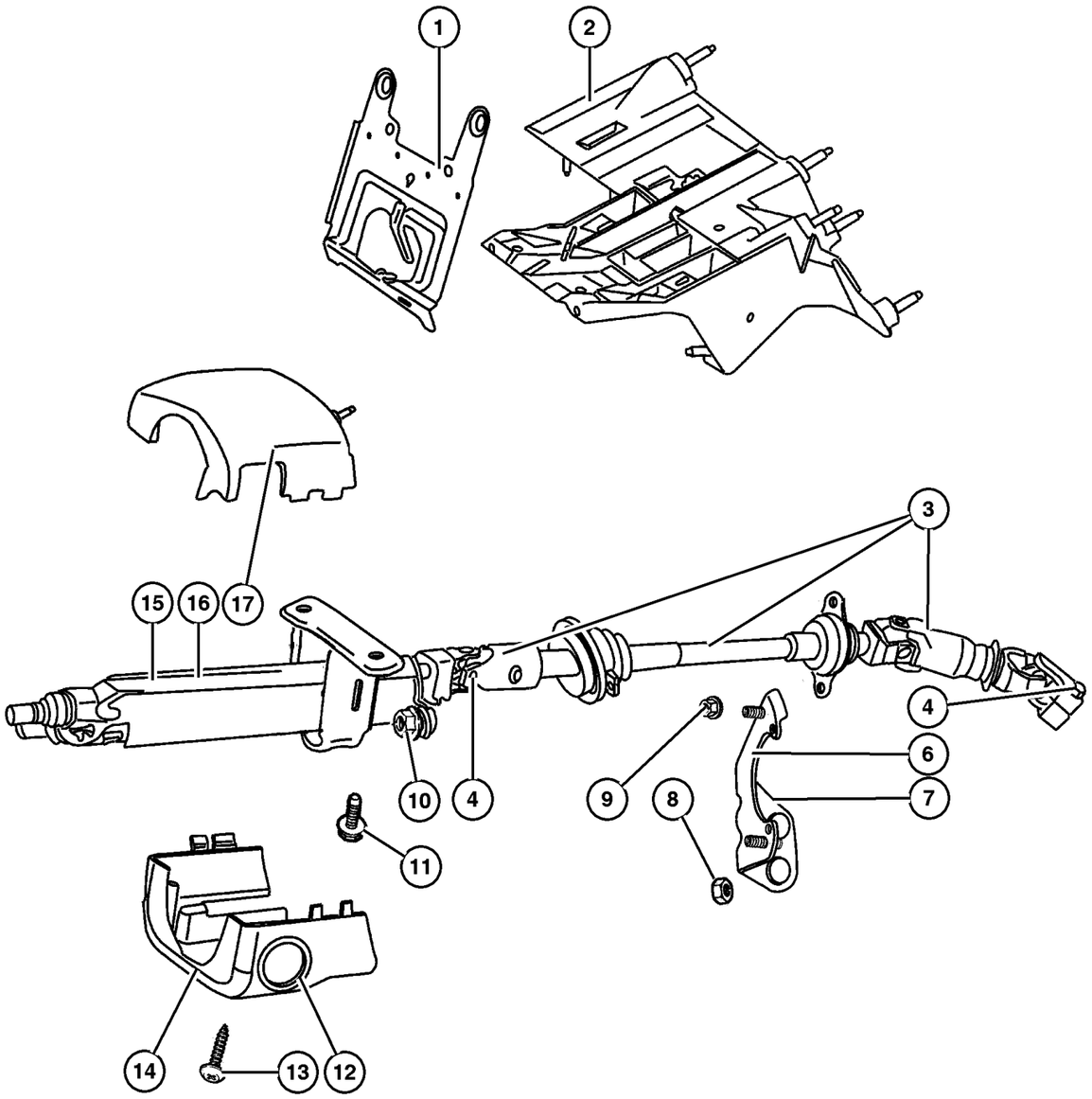

ITEM	PART NUMBER	QTY	LINE	SERIES	BODY	ENGINE	TRANS	TRIM	DESCRIPTION
	5057 077AA	1					DBB		[DBB]
	5057 078AA	1					DG0		[DG0]
16									COLUMN, Steering, Tilt
	5057 082AA	1					DBB		With [ABB] & [DBB]
	5057 080AA	1					DBB		Without [ABB] & [DBB]
	5057 081AA	1					DG0		With [ABB] & [DG0]
	5057 079AA	1					DG0		Without [ABB] & [DG0]
17									SHROUD, Steering Column
	5GK59 DX9AD	1					DBB		[DBB]
		1					DG0		[DGO]

JEEP LIBERTY (KJ)

SERIES	LINE	BODY	ENGINE	TRANSMISSION
P = Limited	J = LHD (4WD)	74 = 4 Dr (104.3 WB)	ED1,ED0 = 2.4L Power Tech	DDK = 5 Speed HDManual
H = Sport	U = RHD (4WD)		EKG,EK0 = 3.7L Power Tech	DDD = 5 Speed HD Manual
M = Renegade	T = LHD (2WD)		ENJ = 2.5L 4Cyl Turbo Diesel	DG4,DGQ = Multi-Speed Auto
			ENR = 2.8L 4Cyl Turbo Diesel	DG6 = 4 Speed Auto Transm
			EN0 = 4Cyl Turbo Diesel	DG0 = All Automatic Transm
				DBB = All Manual Transm

Gear Assembly,Steering,Rack and Pinion
Figure 019-310

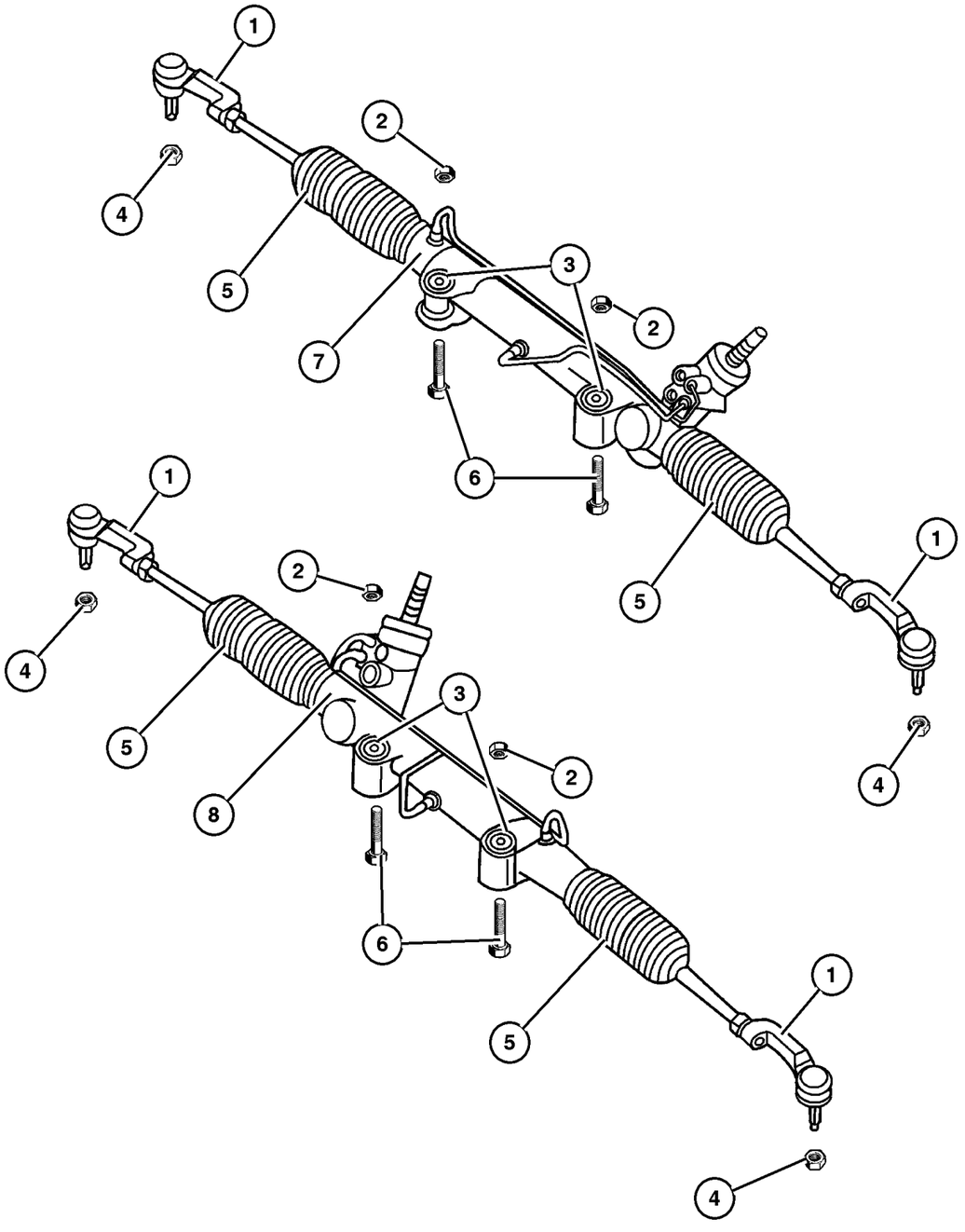

ITEM	PART NUMBER	QTY	LINE	SERIES	BODY	ENGINE	TRANS	TRIM	DESCRIPTION
Note:Sales Codes									
[ED0]=Engines - All 2.2, 2.5, 2.4L 4 Cylinder Gas									
[EK0]=Engines - All 3.7L 6 Cylinder Gas									
[EN0]=Engines - All 4/5 Cylinder Turbo Diesel									
1									SOCKET PACKAGE, Tie Rod End, Outer
	5072 444AA	1	J			ED0			Right
	5072 445AA	1	T			EK0			Left
	5072 444AA	1	U			ED0			Right
	5072 445AA	1	U			ED0			Left
	5072 444AA	1	U			EK0			Right
	5072 445AA	1	U			EK0			Left
	5072 444AA	1	U			EN0			Right
	5072 445AA	1	U			EN0			Left
		1	J			ED0			Left
	5072 444AA	1	J			EK0			Right
	5072 445AA	1	J			EK0			Left
	5072 444AA	1	J			EN0			Right
	5072 445AA	1	J			EN0			Left
	5072 444AA	1	T			ED0			Right
	5072 445AA	1	T			ED0			Left
	5072 444AA	1	T			EK0			Right
2									NUT
	6504 707	2	J			EK0			Gear to Cradle, Mounting
		2	J			EN0			Gear to Cradle, Mounting
		2	J			ED0			Gear to Cradle, Mounting
		2	T			ED0			Gear to Cradle, Mounting
		2	T			EK0			Gear to Cradle, Mounting
		2	U			ED0			Gear to Cradle, Mounting
		2	U			EK0			Gear to Cradle, Mounting
		2	U			EN0			Gear to Cradle, Mounting
3									BUSHING, Steering Gear
	52038 783AB	2	J			ED0			Gear to Cradle, Mounting
		2	J			EK0			Gear to Cradle, Mounting
		2	J			EN0			Gear to Cradle, Mounting
		2	T			ED0			Gear to Cradle, Mounting
		2	T			EK0			Gear to Cradle, Mounting
		2	U			ED0			Gear to Cradle, Mounting
		2	U			EK0			Gear to Cradle, Mounting
		2	U			EN0			Gear to Cradle, Mounting
4	6505 623AA	2							NUT AND WASHER, Tie Rod, Mounting

JEEP LIBERTY (KJ)

SERIES	LINE	BODY	ENGINE	TRANSMISSION
P = Limited	J = LHD (4WD)	74 = 4 Dr (104.3 WB)	ED1,ED0 = 2.4L Power Tech	DDK = 5 Speed HDManual
H = Sport	U = RHD (4WD)		EKG,EK0 = 3.7L Power Tech	DDD = 5 Speed HD Manual
M = Renegade	T = LHD (2WD)		ENJ = 2.5L 4Cyl Turbo Diesel	DG4,DGQ = Multi-Speed Auto
			ENR = 2.8L 4Cyl Turbo Diesel	DG6 = 4 Speed Auto Transm
			EN0 = 4Cyl Turbo Diesel	DG0 = All Automatic Transm
				DBB = All Manual Transm

Gear Assembly,Steering,Rack and Pinion
Figure 019-310

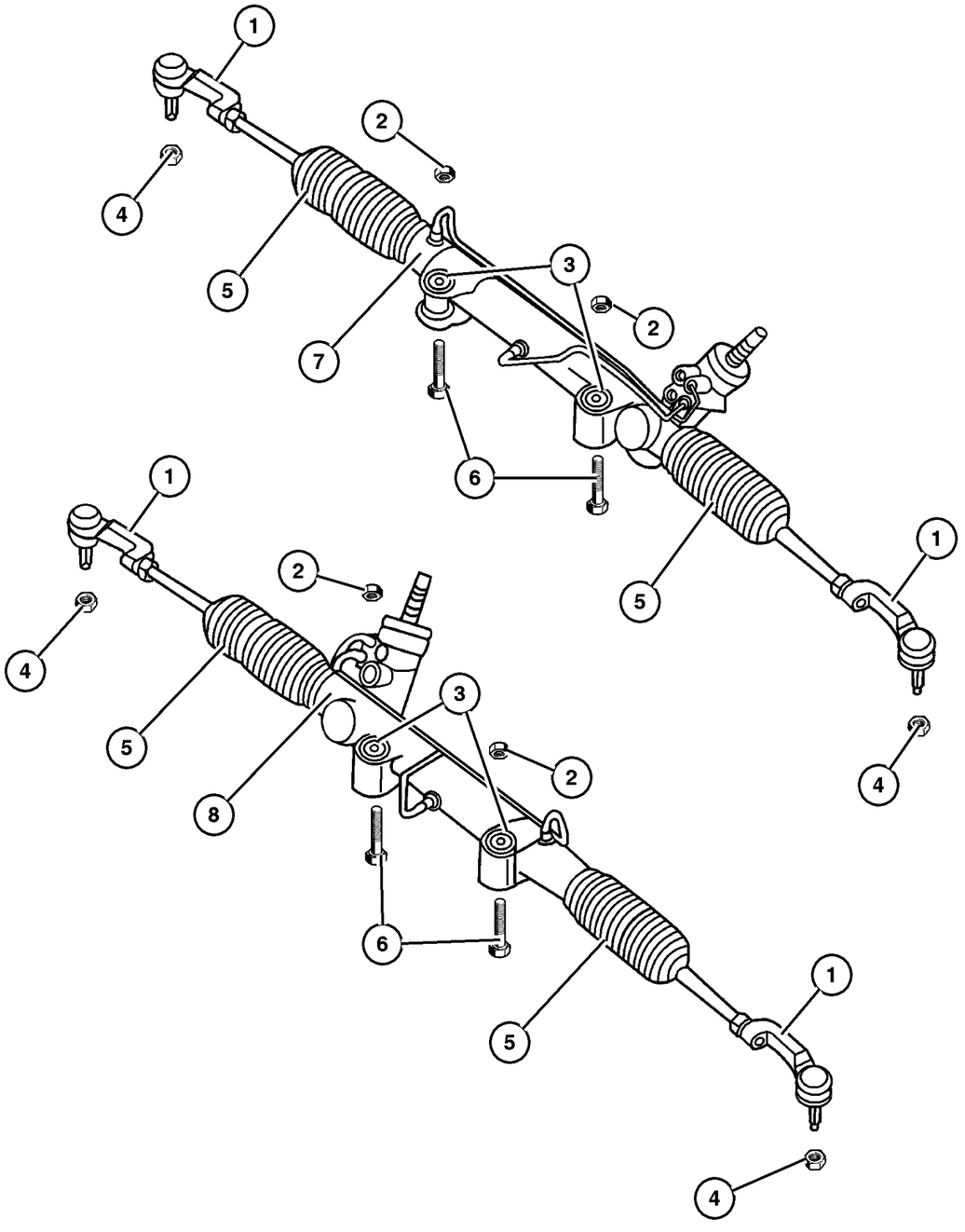

ITEM	PART NUMBER	QTY	LINE	SERIES	BODY	ENGINE	TRANS	TRIM	DESCRIPTION
5									BOOT KIT, Repair, (NOT SERVICED) (Not Serviced)
6									BOLT AND WASHER
	6506 517AA	2	J			ED0			Gear to Cradle, Mounting
		2	J			EK0			Gear to Cradle, Mounting
		2	J			EN0			Gear to Cradle, Mounting
		2	T			ED0			Gear to Cradle, Mounting
		2	T			EK0			Gear to Cradle, Mounting
		2	U			ED0			Gear to Cradle, Mounting
		2	U			EK0			Gear to Cradle, Mounting
		2	U			EN0			Gear to Cradle, Mounting
7									RACK, Steering Gear
	52128 517AB	1	J			ED0			
		1	J			EK0			
		1	J			EN0			
		1	T			ED0			
		1	T			EK0			
8									RACK, Steering Gear
	52128 588AB	1	U			ED0			
	52128 518AB	1	U			EK0			
	52128 588AB	1	U			EN0			

JEEP LIBERTY (KJ)

SERIES	LINE	BODY	ENGINE	TRANSMISSION
P = Limited	J = LHD (4WD)	74 = 4 Dr (104.3 WB)	ED1,ED0 = 2.4L Power Tech	DDK = 5 Speed HDManual
H = Sport	U = RHD (4WD)		EKG,EK0 = 3.7L Power Tech	DDD = 5 Speed HD Manual
M = Renegade	T = LHD (2WD)		ENJ = 2.5L 4Cyl Turbo Diesel	DG4,DGQ = Multi-Speed Auto
			ENR = 2.8L 4Cyl Turbo Diesel	DG6 = 4 Speed Auto Transm
			EN0 = 4Cyl Turbo Diesel	DG0 = All Automatic Transm
				DBB = All Manual Transm

AR = Use as required - = Non illustrated part # = New this model year

September 30, 2003

« RETURN TO GROUP INDEX

Pump,Power Steering,2.4L [ED0] Gas Engine
Figure 019-510

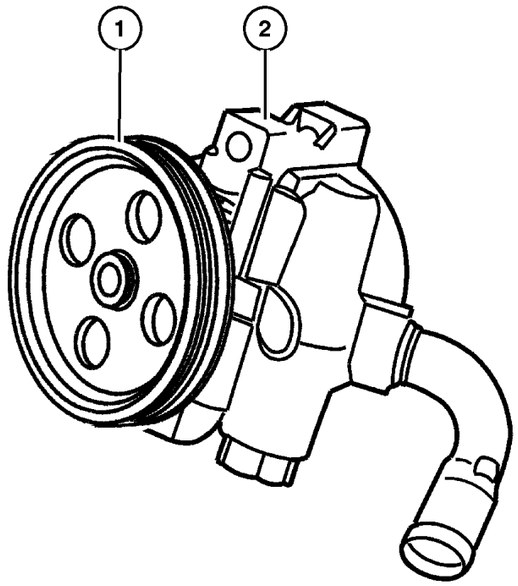

ITEM	PART NUMBER	QTY	LINE	SERIES	BODY	ENGINE	TRANS	TRIM	DESCRIPTION
Note: Sales Codes;									
[ED0]=Engines - All 2.2, 2.5, 2.4L 4 Cylinder Gas									
1	53031 722AA	1				ED0			PULLEY, Power Steering Pump
2	52088 711AC	1				ED0			PUMP, Power Steering
-3	6102 097AA	3				ED0			BOLT
-4									BRACKET, Power Steering
	52089 289AA	1	J			ED0			
		1	T			ED0			
-5									BRACKET, Power Steering
	52128 516AB	2	J			ED0			
		2	T			ED0			

JEEP LIBERTY (KJ)

SERIES	LINE	BODY	ENGINE	TRANSMISSION
P = Limited	J = LHD (4WD)	74 = 4 Dr (104.3 WB)	ED1,ED0 = 2.4L Power Tech	DDK = 5 Speed HDManual
H = Sport	U = RHD (4WD)		EKG,EK0 = 3.7L Power Tech	DDD = 5 Speed HD Manual
M = Renegade	T = LHD (2WD)		ENJ = 2.5L 4Cyl Turbo Diesel	DG4,DGQ = Multi-Speed Auto
			ENR = 2.8L 4Cyl Turbo Diesel	DG6 = 4 Speed Auto Transm
			EN0 = 4Cyl Turbo Diesel	DG0 = All Automatic Transm
				DBB = All Manual Transm

Pump,Power Steering,2.5L [EN0] Diesel Engine
Figure 019-520

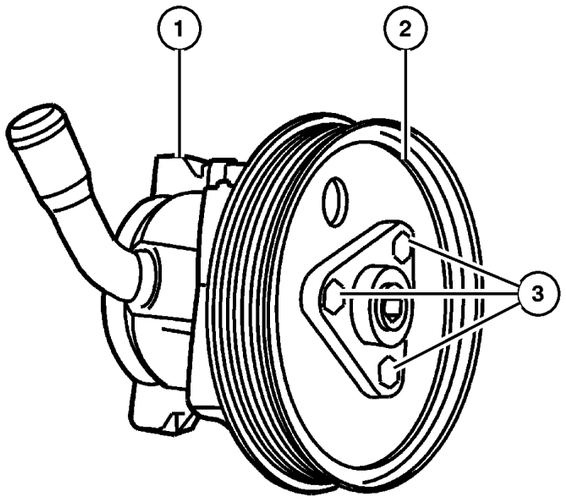

ITEM	PART NUMBER	QTY	LINE	SERIES	BODY	ENGINE	TRANS	TRIM	DESCRIPTION
Note:Sales Codes;									
[DBB]=Transmissions - All Manual									
[EN0]=Engines - All 4/5 Cylinder Turbo Diesel									
1	52088 712AC	1				EN0	DG0		PUMP, Power Steering, High Temperature
2	5072 441AA	1				EN0	DG0		PULLEY, Power Steering Pump
3	5003 554AA	1				EN0	DG0		SCREW, Pump to pulley
-4	5093 935AA	1				EN0	DG0		BRACKET, Tensioner
-5	4864 537	3				EN0	DG0		BOLT, 8Mx20, Pump to Bracket
-6									BRACKET, Power Steering
	52089 289AA	2	J			EN0			
		1	U			EN0			

JEEP LIBERTY (KJ)

SERIES	LINE	BODY	ENGINE	TRANSMISSION
P = Limited	J = LHD (4WD)	74 = 4 Dr (104.3 WB)	ED1,ED0 = 2.4L Power Tech	DDK = 5 Speed HDManual
H = Sport	U = RHD (4WD)		EKG,EK0 = 3.7L Power Tech	DDD = 5 Speed HD Manual
M = Renegade	T = LHD (2WD)		ENJ = 2.5L 4Cyl Turbo Diesel	DG4,DGQ = Multi-Speed Auto
			ENR = 2.8L 4Cyl Turbo Diesel	DG6 = 4 Speed Auto Transm
			EN0 = 4Cyl Turbo Diesel	DG0 = All Automatic Transm
				DBB = All Manual Transm

Pump,Power Steering,3.7L [EK0] Gas Engine
Figure 019-530

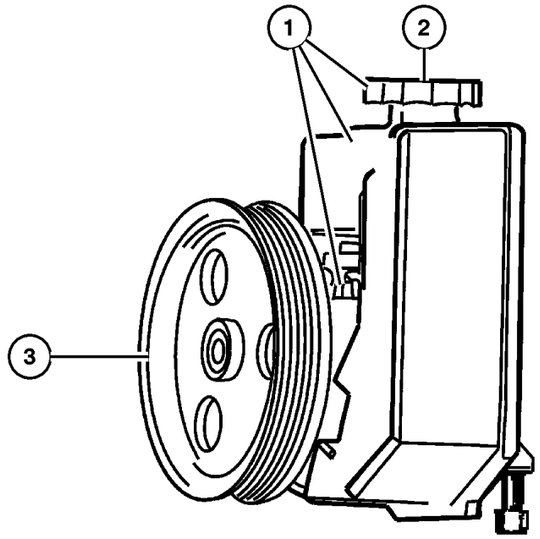

ITEM	PART NUMBER	QTY	LINE	SERIES	BODY	ENGINE	TRANS	TRIM	DESCRIPTION
Note:Sales Codes:									
[EK0]=Engines - All 3.7L 6 Cylinder Gas									
1	52088 710AC	1				EK0			PUMP, Power Steering
2	52128 513AA	1				EK0			CAP, Power Steering Reservoir
3	53010 258AC	1				EK0			PULLEY, Power Steering Pump
-4	6102 045AA	3				EK0			SCREW AND WASHER, Hex Head, Power Steering Pump Mounting

JEEP LIBERTY (KJ)

SERIES	LINE	BODY	ENGINE	TRANSMISSION
P = Limited	J = LHD (4WD)	74 = 4 Dr (104.3 WB)	ED1,ED0 = 2.4L Power Tech	DDK = 5 Speed HDManual
H = Sport	U = RHD (4WD)		EKG,EK0 = 3.7L Power Tech	DDD = 5 Speed HD Manual
M = Renegade	T = LHD (2WD)		ENJ = 2.5L 4Cyl Turbo Diesel	DG4,DGQ = Multi-Speed Auto
			ENR = 2.8L 4Cyl Turbo Diesel	DG6 = 4 Speed Auto Transm
			EN0 = 4Cyl Turbo Diesel	DG0 = All Automatic Transm
				DBB = All Manual Transm

Hoses and Reservoir,LHD,2.4L [ED0] 2.8L [EN0] Diesel
Figure 019-710

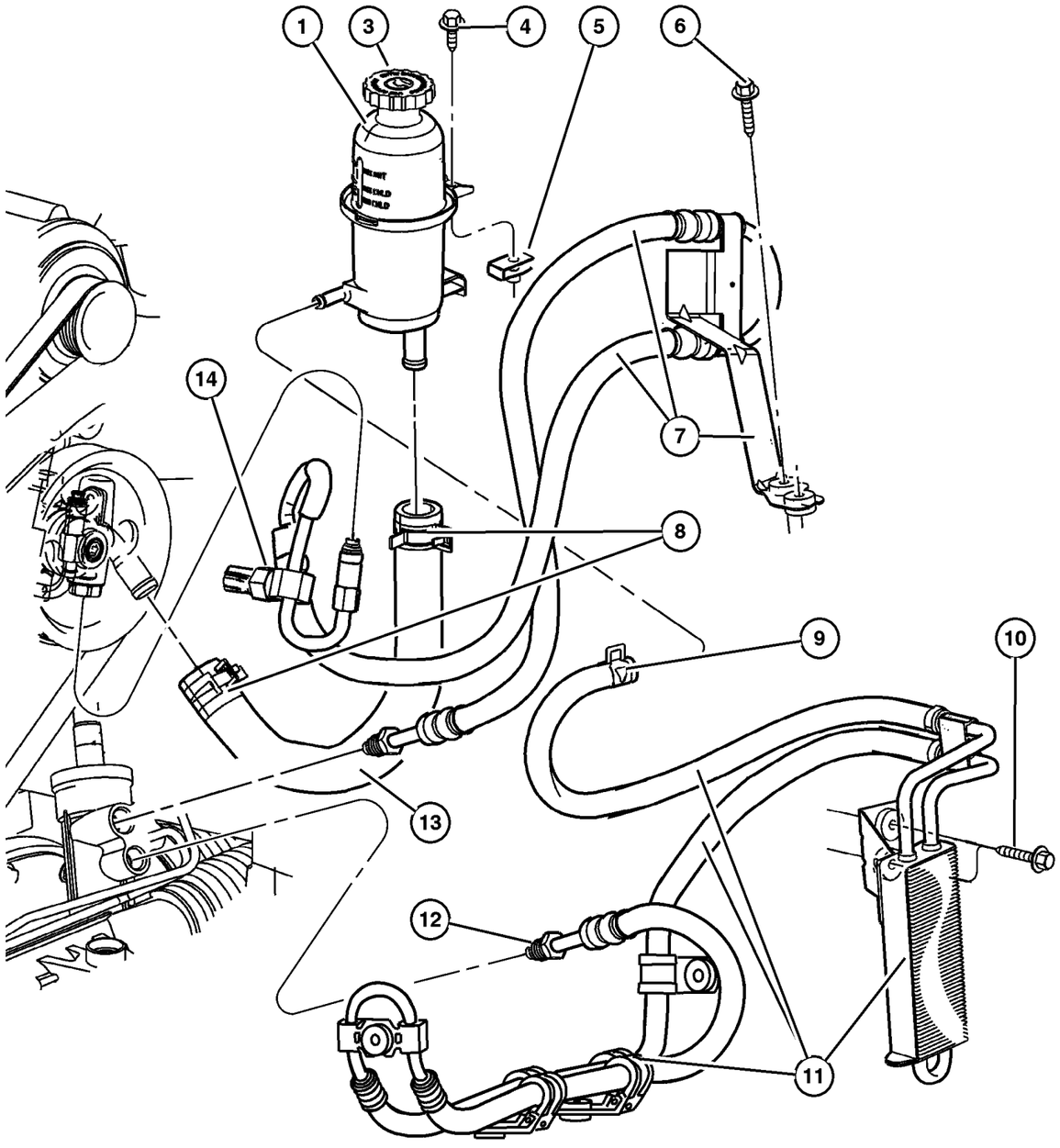

ITEM	PART NUMBER	QTY	LINE	SERIES	BODY	ENGINE	TRANS	TRIM	DESCRIPTION
Note: Sales Codes;									
[ED0]=Engines - All 2.2, 2.5, 2.4L 4 Cylinder Gas									
[EN0]=Engines - All 4/5 Cylinder Turbo Diesel									
1									RESERVOIR, Power Steering Pump
	52088 713AA	1				ED0			Includes Item 3
		1				EN0			Includes Item 3
-2	52088 874AD	1				EN0			BRACKET, Power Steering Reservoir
3									CAP, Power Steering Reservoir
	52128 513AA	1				ED0			
		1				EN0			
4	6102 132AA	1				ED0, EN0			SCREW, Hex Head, M6x1x20, Reservoir To Bracket
5	6101 712	2							NUT, U, M6x1
6									SCREW, Hex Head, M6x1x35, Pressure Hose Mounting (Qty 2), (NOT SERVICED) (Not Serviced)
7	52088 726AE	1	J			EN0			HOSE, Power Steering Pressure, Includes Item 12
8									CLAMP, Hose, M28.9 x 1.60
	6502 018	2				ED0			
		2				EN0			
9	6504 217	1	J			EN0			CLAMP, Hose, M18.5
10									SCREW, Hex Head, M6x1x35, Cooler Mounting (Qty 2), (NOT SERVICED) (Not Serviced)
11									COOLER, Power Steering With Hose
	52088 931AE	1	J			EN0			Includes Items 9,12
	52128 561AB	1	J			ED0			Includes Items 9,12
		1	T			ED0			Includes Items 9,12
12									O RING, Power Steering Hose
	5205 254	1	J			EK0			As Required
		1	T			EK0			As Required
		1	U			EN0			As Required
13									HOSE, Power Steering Reservoir
	52088 718AD	1				ED0			Includes Item 8, Reservoir To Pump
	52088 719AE	1				EN0			Includes Item 8, Reservoir To Pump
14	56044 169AA	1	J, T			ED0			SWITCH, Power Steering

JEEP LIBERTY (KJ)

SERIES	LINE	BODY	ENGINE	TRANSMISSION
P = Limited	J = LHD (4WD)	74 = 4 Dr (104.3 WB)	ED1,ED0 = 2.4L Power Tech	DDK = 5 Speed HDManual
H = Sport	U = RHD (4WD)		EKG,EK0 = 3.7L Power Tech	DDD = 5 Speed HD Manual
M = Renegade	T = LHD (2WD)		ENJ = 2.5L 4Cyl Turbo Diesel	DG4,DGQ = Multi-Speed Auto
			ENR = 2.8L 4Cyl Turbo Diesel	DG6 = 4 Speed Auto Transm
			EN0 = 4Cyl Turbo Diesel	DG0 = All Automatic Transm
				DBB = All Manual Transm

Hoses and Reservior,RHD,2.4L [ED0] Gas,2.5L [EN0] Diesel Engines
Figure 019-720

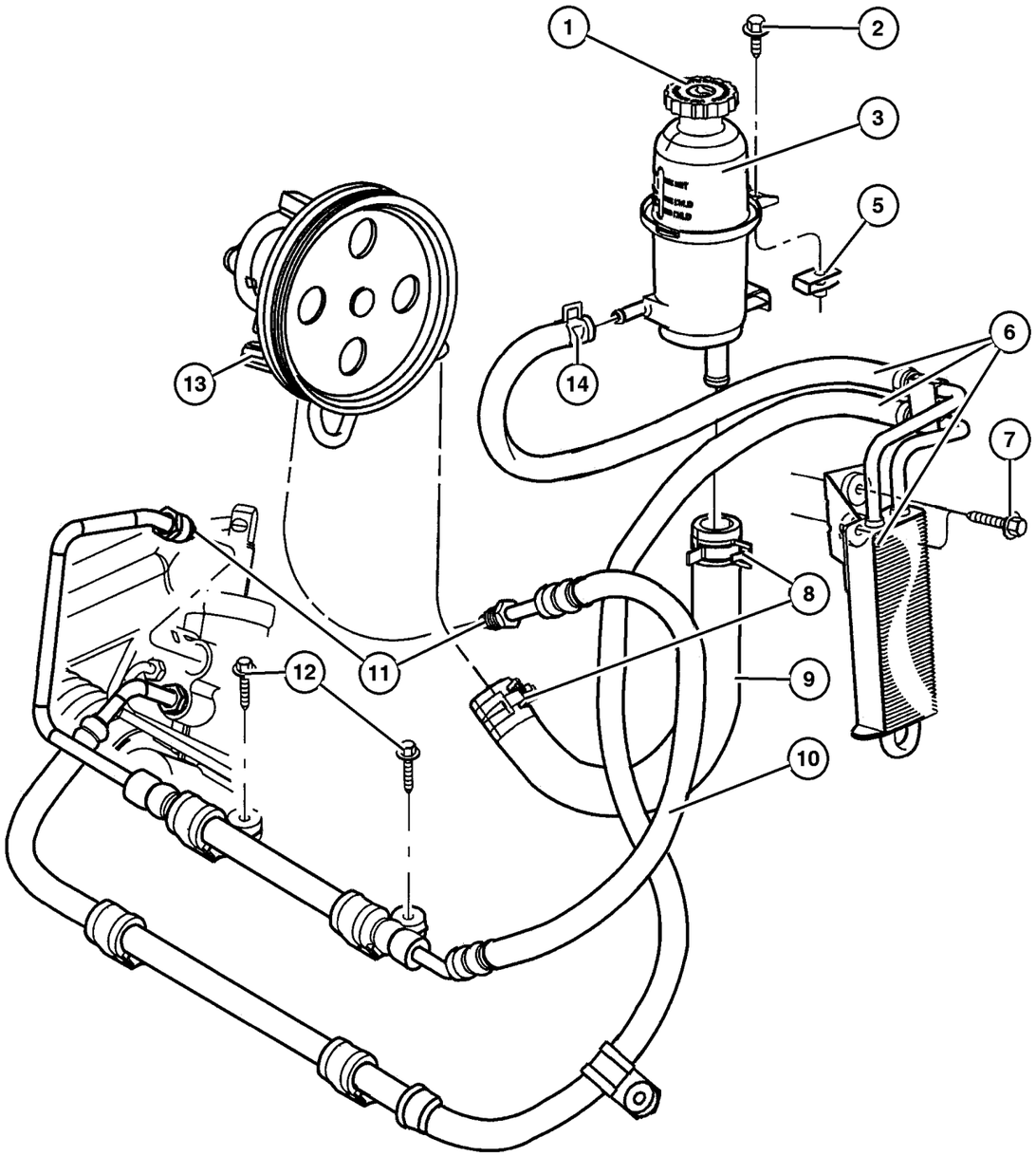

ITEM	PART NUMBER	QTY	LINE	SERIES	BODY	ENGINE	TRANS	TRIM	DESCRIPTION
Note: Sales Codes;									
[ED0]=Engines - All 2.2, 2.5, 2.4L 4 Cylinder Gas									
[EK0]=Engines - All 3.7L 6 Cylinder Gas									
[EN0]=Engines - All 4/5 Cylinder Turbo Diesel									
1									CAP, Power Steering Reservoir
	52128 513AA	1				ED0			
		1				EN0			
2	6102 132AA	1				ED0, EN0			SCREW, Hex Head, M6x1x20
3									RESERVOIR, Power Steering Pump
	52088 713AA	1				ED0			Includes Item 4
		1				EN0			Includes Item 4
-4	52088 874AD	1				EN0			BRACKET, Power Steering Reservoir
5	6101 712	2							NUT, U, M6x1
6	52088 928AE	1	U			EN0			COOLER, Power Steering With Hose, Includes Items 1,12
7									SCREW, Hex Flange Head, M6x1. 00x35.00, (NOT SERVICED) (Not Serviced)
8									CLAMP, Hose, M28.9 x 1.60
	6502 018	2				ED0			
		2				EN0			
9									HOSE, Power Steering Reservoir
	52088 718AD	1				ED0			Includes Item 9
	52088 719AE	1				EN0			Includes Item 9
10	52088 716AE	1	U			EN0			HOSE, Power Steering Pressure, Includes Items 12,14
11									O RING, Power Steering Hose
	5205 254	1	U			EN0			
		1	U			ED0			
12									SCREW, Hex Flange Head, M6x1. 00x35.00, (NOT SERVICED) (Not Serviced)
13	56044 169AA	1	U			ED0			SWITCH, Power Steering
14									CLAMP, Hose, M18.5
	6504 217	2	U			ED0			
		1	U			EN0			

JEEP LIBERTY (KJ)

SERIES	LINE	BODY	ENGINE	TRANSMISSION
P = Limited	J = LHD (4WD)	74 = 4 Dr (104.3 WB)	ED1,ED0 = 2.4L Power Tech	DDK = 5 Speed HDManual
H = Sport	U = RHD (4WD)		EKG,EK0 = 3.7L Power Tech	DDD = 5 Speed HD Manual
M = Renegade	T = LHD (2WD)		ENJ = 2.5L 4Cyl Turbo Diesel	DG4,DGQ = Multi-Speed Auto
			ENR = 2.8L 4Cyl Turbo Diesel	DG6 = 4 Speed Auto Transm
			EN0 = 4Cyl Turbo Diesel	DG0 = All Automatic Transm
				DBB = All Manual Transm

Hoses and Reservior,LHD,3.7L [EK0] Gas Engine
Figure 019-730

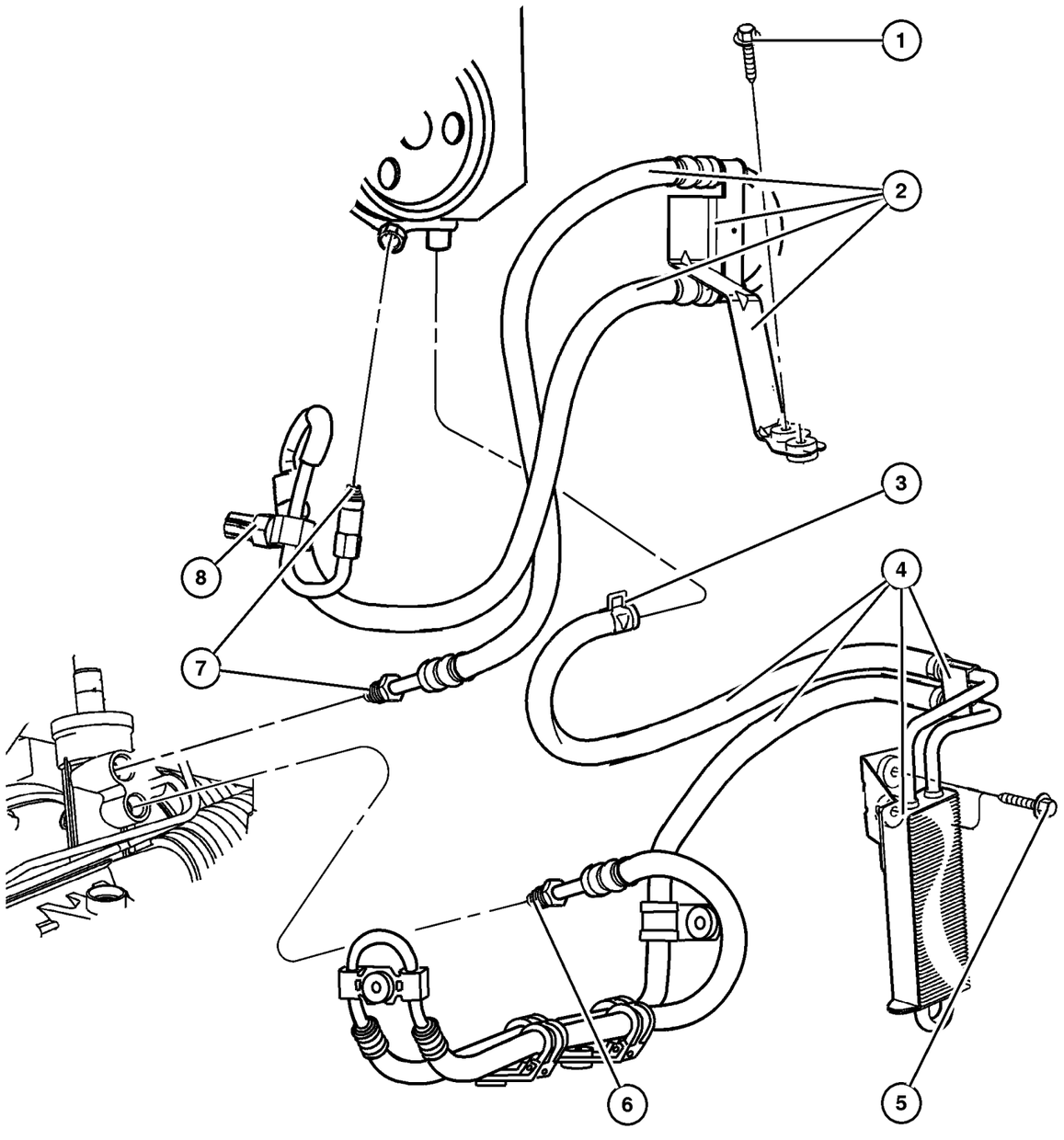

ITEM	PART NUMBER	QTY	LINE	SERIES	BODY	ENGINE	TRANS	TRIM	DESCRIPTION
Note:Sales Codes;									
[EK0]=Engines - All 3.7L 6 Cylinder Gas									
1									SCREW, Hex Flange Head, M6x1. 00x35.00, (NOT SERVICED) (Not Serviced)
2	#52128 940AA	1	J, T			EK0			HOSE, Power Steering Pressure
3									CLAMP, Hose, M18.5
	6504 217	1	J			ED0			
		1	T			EK0			
4									COOLER, Power Steering With Hose
	52128 561AB	1	J			EK0			
		1	T			EK0			
5									SCREW, Hex Flange Head, M6x1. 00x35.00, (NOT SERVICED) (Not Serviced)
6									O RING, Power Steering Hose
	5205 254	1	T			EK0			
		1	J			EK0			
7									O RING, Power Steering Hose
	5205 254	1	J			EK0			
		1	T			EK0			
8	56044 169AA	1	J, T			EK0			SWITCH, Power Steering
-9	53013 506AA	1	J			EK0			GUARD, Splash, Oil
-10	6100 267	1	J			EK0			BOLT AND CONED WASHER, Hex Head, M6x25x12.5, Splash guard to left front axle
-11									NUT AND WASHER, Hex, M8x1.25
	6100 050	1	J			EK0			Oil Splash Guard to Axle
		1	U			EK0			Oil Splash Guard to Axle
-12									HOSE, Power Steering Return
	#52129 073AA	1	J			EK0			
		1	T			EK0			

JEEP LIBERTY (KJ)

SERIES	LINE	BODY	ENGINE	TRANSMISSION
P = Limited	J = LHD (4WD)	74 = 4 Dr (104.3 WB)	ED1,ED0 = 2.4L Power Tech	DDK = 5 Speed HDManual
H = Sport	U = RHD (4WD)		EKG,EK0 = 3.7L Power Tech	DDD = 5 Speed HD Manual
M = Renegade	T = LHD (2WD)		ENJ = 2.5L 4Cyl Turbo Diesel	DG4,DGQ = Multi-Speed Auto
			ENR = 2.8L 4Cyl Turbo Diesel	DG6 = 4 Speed Auto Transm
			EN0 = 4Cyl Turbo Diesel	DG0 = All Automatic Transm
				DBB = All Manual Transm

AR = Use as required - = Non illustrated part # = New this model year **September 30, 2003**

« RETURN TO GROUP INDEX

Hoses and Reservior,RHD,3.7L [EK0] Gas Engine
Figure 019-740

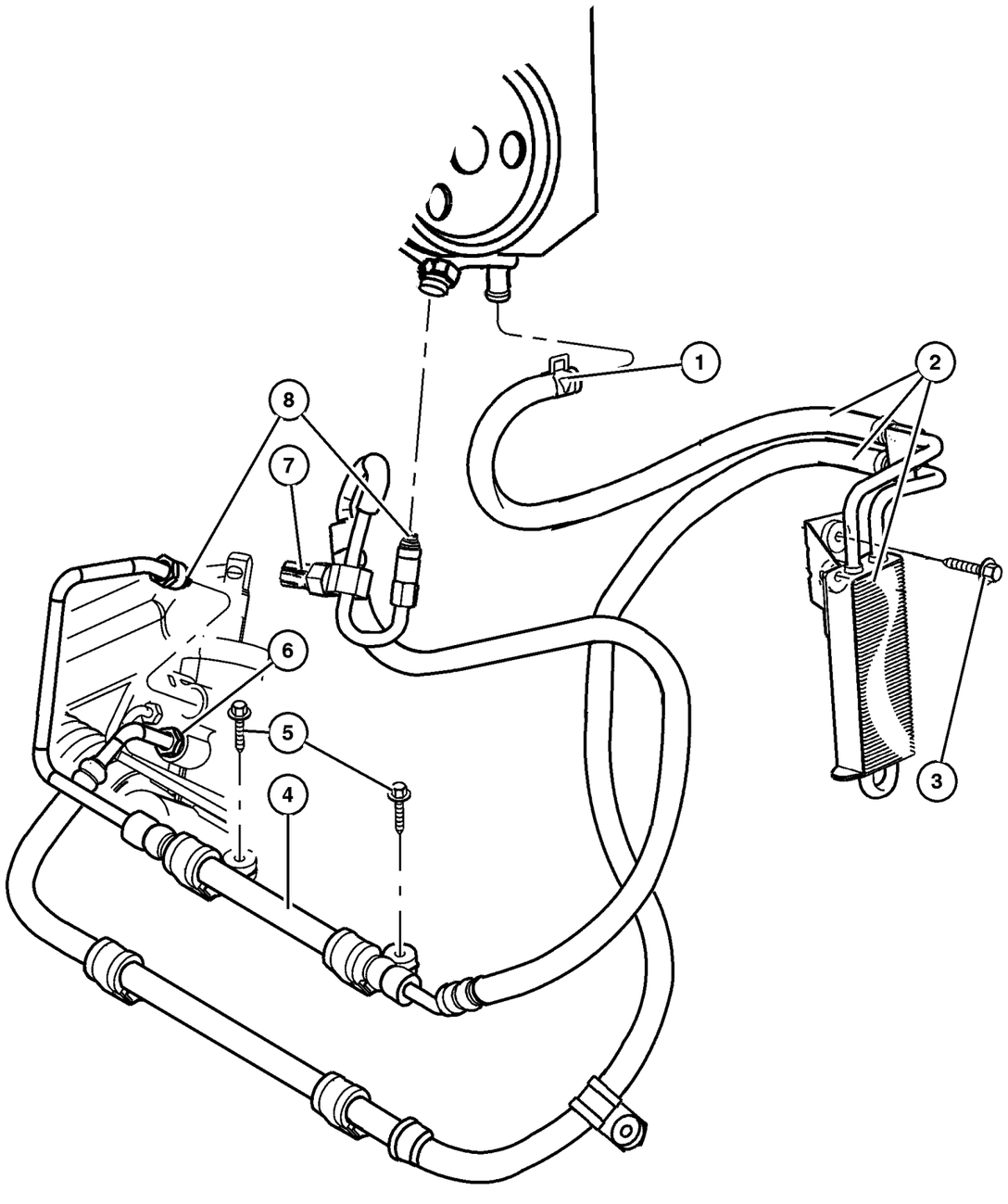

ITEM	PART NUMBER	QTY	LINE	SERIES	BODY	ENGINE	TRANS	TRIM	DESCRIPTION
Note:Sales Codes;									
[EKG]=Engine -3.7L Power Tech V6									
[EK0]=Engines - All 3.7L 6 Cylinder Gas									
1	6504 217	2	U			EK0			CLAMP, Hose, M18.5, Includes Items 1-6
2	52088 927AE	2	U			EK0			COOLER, Power Steering With Hose
3									SCREW, Hex Flange Head, M6x1.00x35.00, (NOT SERVICED) (Not Serviced)
4	52128 789AA	1	U			EK0			HOSE, Power Steering Pressure
5									SCREW, Hex Flange Head, M6x1.00x35.00, (NOT SERVICED) (Not Serviced)
6	5205 254	4	U			EK0			O RING, Power Steering Hose
7	56044 169AA	1	U			EK0			SWITCH, Power Steering
8	5205 254	4	U			EK0			O RING, Power Steering Hose
-9	53013 506AA	1	U			EK0			GUARD, Splash, Splash Guard to Left Front Axle, Oil
-10	6100 267	1	U			EK0			BOLT AND CONED WASHER, Hex Head, M6x25x12.5
-11									NUT AND WASHER, Hex, M8x1.25
	6100 050	1	J			EK0			Oil Splash Guard to Axle
		1	U			EK0			Oil Splash Guard to Axle

JEEP LIBERTY (KJ)

SERIES	LINE	BODY	ENGINE	TRANSMISSION
P = Limited	J = LHD (4WD)	74 = 4 Dr (104.3 WB)	ED1,ED0 = 2.4L Power Tech	DDK = 5 Speed HDManual
H = Sport	U = RHD (4WD)		EKG,EK0 = 3.7L Power Tech	DDD = 5 Speed HD Manual
M = Renegade	T = LHD (2WD)		ENJ = 2.5L 4Cyl Turbo Diesel	DG4,DGQ = Multi-Speed Auto
			ENR = 2.8L 4Cyl Turbo Diesel	DG6 = 4 Speed Auto Transm
			EN0 = 4Cyl Turbo Diesel	DG0 = All Automatic Transm
				DBB = All Manual Transm

Group – 42RLE

Automatic Transaxle 4 Speed

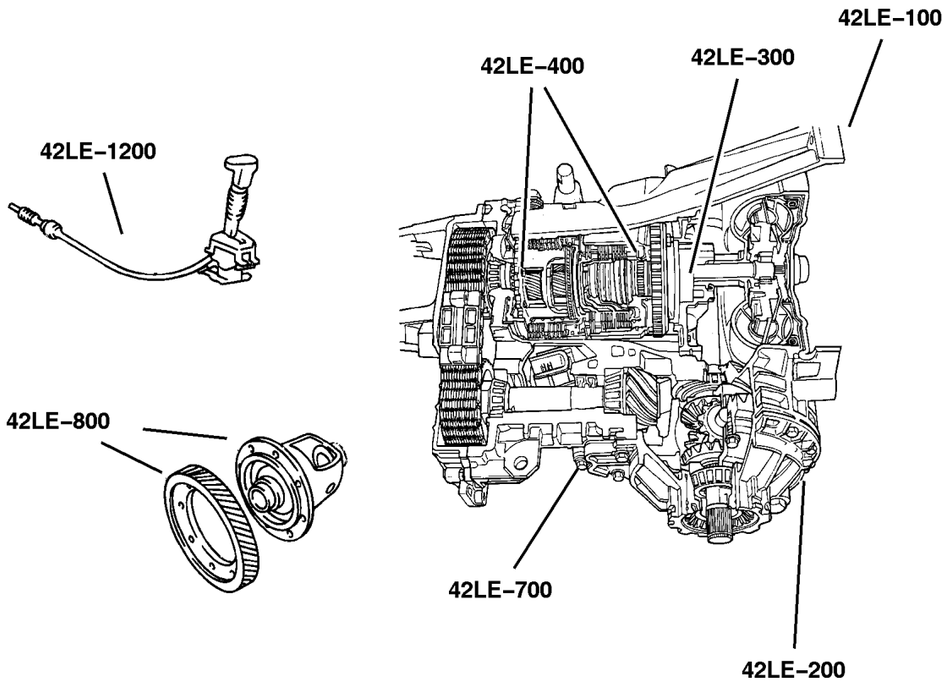

42RLE–100 Transaxle Assembly	42RLE–200 Case and Extension	42RLE–300 Oil Pump	42RLE–400 Gear Train
	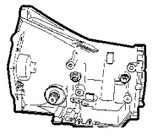		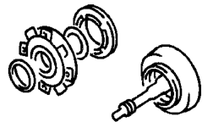
42RLE–700 Valve Body	**42RLE–1200** Gearshift Controls		

GROUP 42RLE - Automatic Transaxle 4 Speed

Illustration Title — Group-Fig. No.

Transaxle Assembly
Tranmission Asembly [DG6] . . . . . Fig. 42RLE-110

Case and Extension
Case, Transmission [DG6] . . . . . Fig. 42RLE-210
Adapter & Extension [DG6] . . . . . Fig. 42RLE-220
Mounting, Transmission [DG6] . . . . . Fig. 42RLE-230
Collar, Structural [DG6] . . . . . Fig. 42RLE-240

Oil Pump
Oil Pump & Reaction Shaft [DG6] . . . . . Fig. 42RLE-310

Gear Train
Clutch, Input Shaft [DG6] . . . . . Fig. 42RLE-410
Gear Train [DG6] . . . . . Fig. 42RLE-420

Valve Body
Valve Body [DG6] . . . . . Fig. 42RLE-710
Accumulator Pistons & Springs [DG6] . . . . . Fig. 42RLE-720
Parking Sprag [DG6] . . . . . Fig. 42RLE-730

Gearshift Controls
Gearshift Control [DG6] . . . . . Fig. 42RLE-1210

Tranmission Asembly [DG6]
Figure 42RLE-110

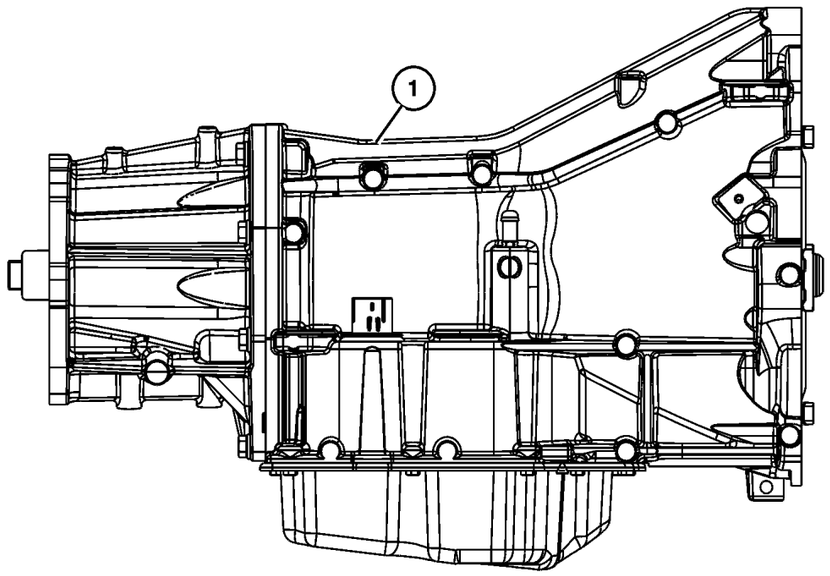

ITEM	PART NUMBER	QTY	LINE	SERIES	BODY	ENGINE	TRANS	TRIM	DESCRIPTION
NOTE:									
Sales Codes:									
[DG6]=4 Speed Automatic Transmission - [42RLE]									
1									TRANSMISSION KIT, Automatic
	5101 883AB	1	T				DG6		
	5101 884AB	1	J, U				DG6		
-2									CONVERTER PACKAGE, Torque
	5093 944AA	1	J, U				DG6		
		1	T				DG6		
-3									OVERHAUL PACKAGE, Transmission
	5103 073AA	1	J, U				DG6		
		1	T				DG6		

JEEP LIBERTY (KJ)

SERIES	LINE	BODY	ENGINE	TRANSMISSION
P = Limited	J = LHD (4WD)	74 = 4 Dr (104.3 WB)	ED1,ED0 = 2.4L Power Tech	DDK = 5 Speed HDManual
H = Sport	U = RHD (4WD)		EKG,EK0 = 3.7L Power Tech	DDD = 5 Speed HD Manual
M = Renegade	T = LHD (2WD)		ENJ = 2.5L 4Cyl Turbo Diesel	DG4,DGQ = Multi-Speed Auto
			ENR = 2.8L 4Cyl Turbo Diesel	DG6 = 4 Speed Auto Transm
			EN0 = 4Cyl Turbo Diesel	DG0 = All Automatic Transm
				DBB = All Manual Transm

Case, Transmission [DG6]
Figure 42RLE-210

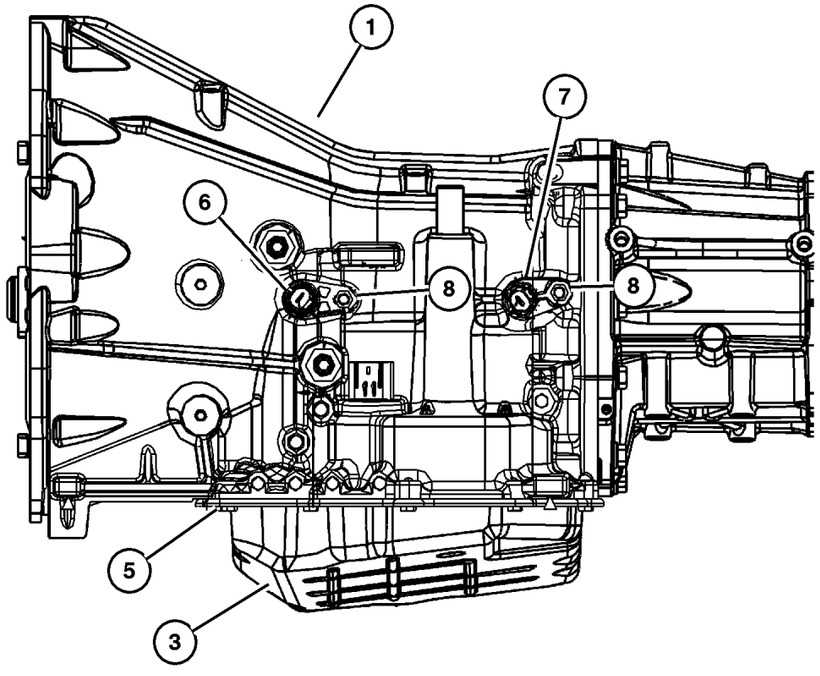

ITEM	PART NUMBER	QTY	LINE	SERIES	BODY	ENGINE	TRANS	TRIM	DESCRIPTION
NOTE:									
Sales Codes:									
[DG6]=4 Speed Automatic Transmission - [42RLE]									
1	5101 881AA	1	J, U				DG6		CASE, Transmission
-2	4567 312	1	J, U				DG6		PLUG, Transaxle Case
3									PAN, Transmission Oil
	52852 912AB	5	T				DG6		
		5	J, U				DG6		
-4									MAGNET, Transmission
	3681 601	1	T				DG6		
		1	J, U				DG6		
5									BOLT, Hex Head, M8x1.25x16
	6501 474	15	T				DG6		
		15	J, U				DG6		
6									SENSOR, Transmission Input Speed
	4799 061AB	1	J, U				DG6		
		1	T				DG6		
7	52854 001AA	1	J, U				DG6		SENSOR, Transmission Output Speed
8									BOLT, M6x1.00x20
	6101 331	2	J, U				DG6		
		2	T				DG6		
-9									VALVE, Cooler Bypass
	4659 946AB	1	J, U				DG6		
		1	T				DG6		
-10									BUSHING, Dowel
	4531 412	1	J, U				DG6		
		1	T				DG6		

JEEP LIBERTY (KJ)

SERIES	LINE	BODY	ENGINE	TRANSMISSION
P = Limited	J = LHD (4WD)	74 = 4 Dr (104.3 WB)	ED1,ED0 = 2.4L Power Tech	DDK = 5 Speed HDManual
H = Sport	U = RHD (4WD)		EKG,EK0 = 3.7L Power Tech	DDD = 5 Speed HD Manual
M = Renegade	T = LHD (2WD)		ENJ = 2.5L 4Cyl Turbo Diesel	DG4,DGQ = Multi-Speed Auto
			ENR = 2.8L 4Cyl Turbo Diesel	DG6 = 4 Speed Auto Transm
			EN0 = 4Cyl Turbo Diesel	DG0 = All Automatic Transm
				DBB = All Manual Transm

Adapter & Extension [DG6]
Figure 42RLE-220

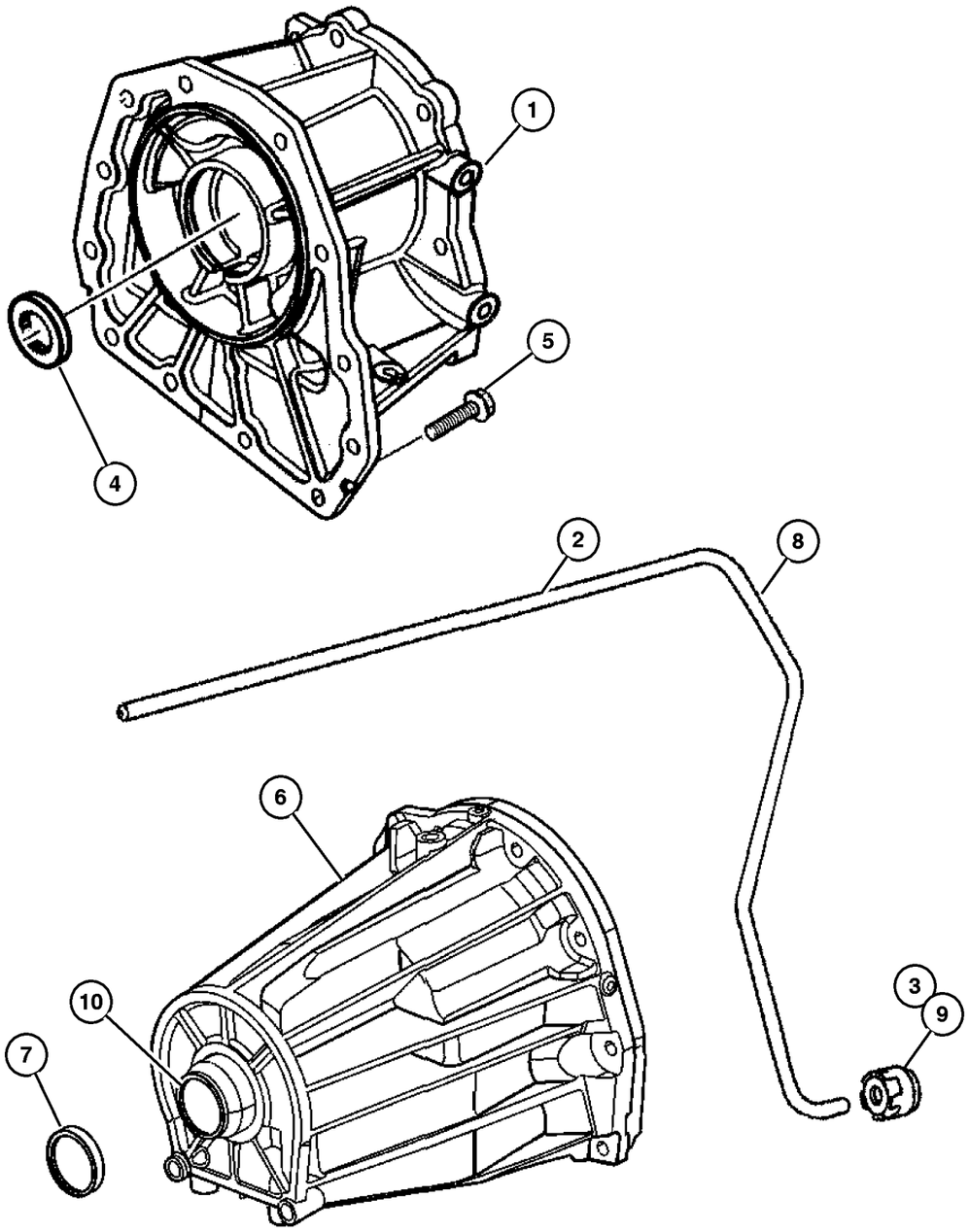

ITEM	PART NUMBER	QTY	LINE	SERIES	BODY	ENGINE	TRANS	TRIM	DESCRIPTION
NOTE:									
Sales Codes:									
[DG6]=4 Speed Automatic Transmission - [42RLE]									
1	52852 986AB	1	J, U				DG6		ADAPTER, Transfer Case
2	52854 177AA	1	J, U				DG6		TUBE
3	52852 998AA	1	J, U				DG6		SEAL, Transmission, Lube Tube Grommet
4	4269 956AB	1	J, U				DG6		SEAL, Adapter
5	6504 774	7	J, U				DG6		SCREW AND WASHER, Hex Head, M10x1.5x37
6	52852 987AA	1	T				DG6		HOUSING, Transmission Rear Extension
7	4531 216AB	1	T				DG6		SEAL, Output Shaft
8	52854 166AA	1	T				DG6		TUBE
9	52852 998AA	1	T				DG6		SEAL, Transmission, Lube Tube Grommet
10									BUSHING, (NOT SERVICED) (Not Serviced)

JEEP LIBERTY (KJ)

SERIES	LINE	BODY	ENGINE	TRANSMISSION
P = Limited	J = LHD (4WD)	74 = 4 Dr (104.3 WB)	ED1,ED0 = 2.4L Power Tech	DDK = 5 Speed HDManual
H = Sport	U = RHD (4WD)		EKG,EK0 = 3.7L Power Tech	DDD = 5 Speed HD Manual
M = Renegade	T = LHD (2WD)		ENJ = 2.5L 4Cyl Turbo Diesel	DG4,DGQ = Multi-Speed Auto
			ENR = 2.8L 4Cyl Turbo Diesel	DG6 = 4 Speed Auto Transm
			EN0 = 4Cyl Turbo Diesel	DG0 = All Automatic Transm
				DBB = All Manual Transm

Mounting, Transmission [DG6]
Figure 42RLE-230

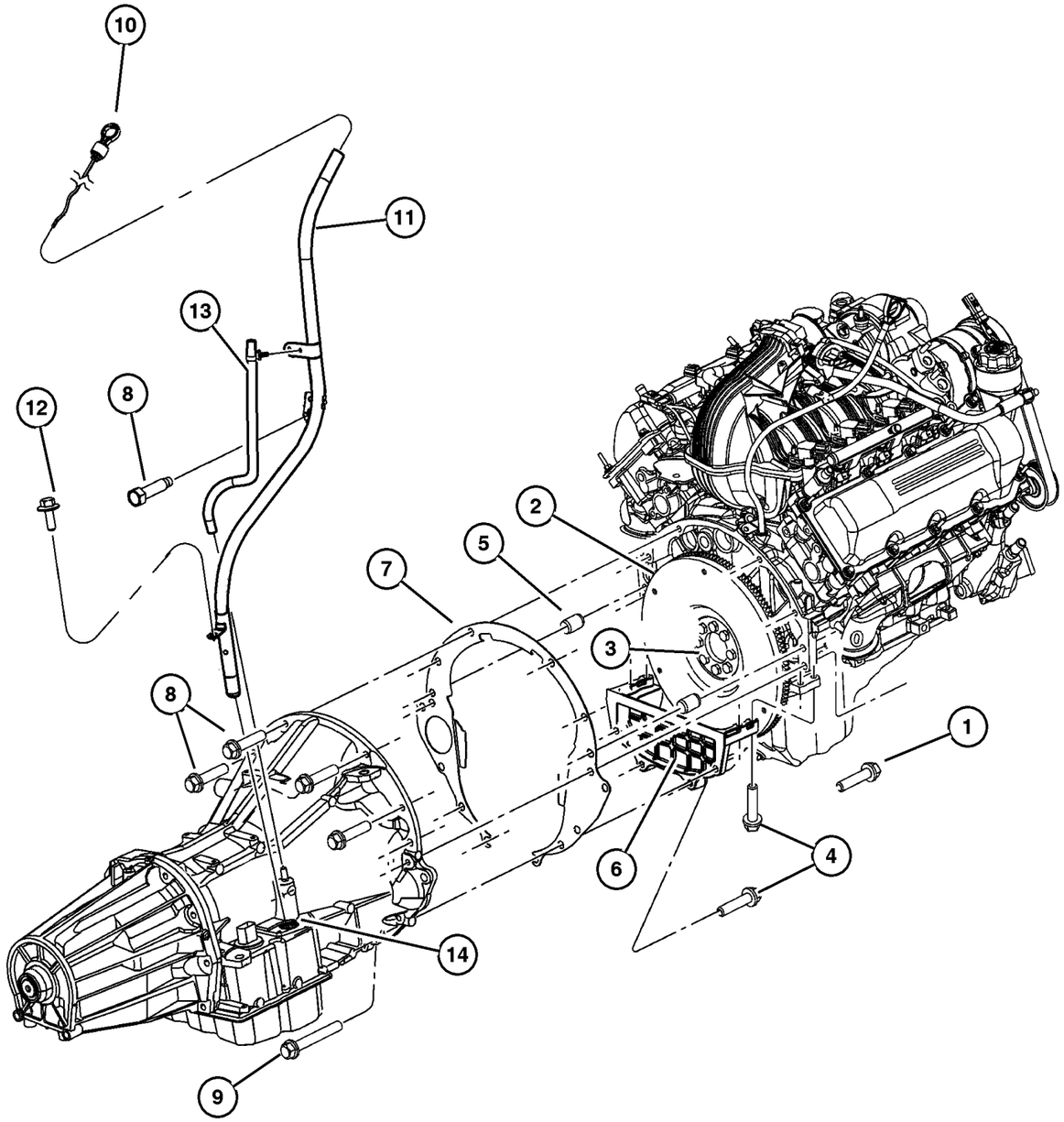

ITEM	PART NUMBER	QTY	LINE	SERIES	BODY	ENGINE	TRANS	TRIM	DESCRIPTION
NOTE:									
Sales Codes:									
[DG6]=4 Speed Automatic Transmission - 42RLE									
[DG0]=All Automatic Transmissions									
[EK0]=All 3.7L V-6 Engines									
1	6036 385AA	2				EK0	DG0		SCREW AND WASHER, Hex Head, .437-14x2.00
2	4736 253AA	1				EK0	DG6		PLATE, Torque Converter Drive
3	6503 465	8				EK0	DG0		BOLT, Drive Plate and Flywheel
4	6101 985	8				EK0			SCREW AND WASHER, M10x1.50x45.00
5	1122 532	2				EK0			DOWEL, Block To Clutch Housing
6	53021 282AA	1				EK0			COVER, Engine
7	52104 344AA	1				EK0	DG0		COVER, Transmission Dust
8	6022 266	4				EK0	DG0		SCREW, Hex Head, .375-16x1.5
9	6101 985	8				EK0			SCREW AND WASHER, M10x1.50x45.00
10	53013 592AB	1					DG6		INDICATOR, Transmission Fluid Level
11	53013 591AB	1				EK0	DG6		TUBE, Transmission Oil Filler
12	6501 979	1							SCREW AND WASHER, Hex Head, M6x1x17
13	53013 593AA	1					DG6		TUBE, Vent
14									GROMMET
	4810 021	1	J, U				DG6		
		1	T				DG6		
-15									SEAL, Torque Converter Hub
	5222 629	1	J, U				DG6		
		1	T				DG6		

JEEP LIBERTY (KJ)

SERIES	LINE	BODY	ENGINE	TRANSMISSION
P = Limited	J = LHD (4WD)	74 = 4 Dr (104.3 WB)	ED1,ED0 = 2.4L Power Tech	DDK = 5 Speed HDManual
H = Sport	U = RHD (4WD)		EKG,EK0 = 3.7L Power Tech	DDD = 5 Speed HD Manual
M = Renegade	T = LHD (2WD)		ENJ = 2.5L 4Cyl Turbo Diesel	DG4,DGQ = Multi-Speed Auto
			ENR = 2.8L 4Cyl Turbo Diesel	DG6 = 4 Speed Auto Transm
			EN0 = 4Cyl Turbo Diesel	DG0 = All Automatic Transm
				DBB = All Manual Transm

Collar, Structural [DG6]
Figure 42RLE-240

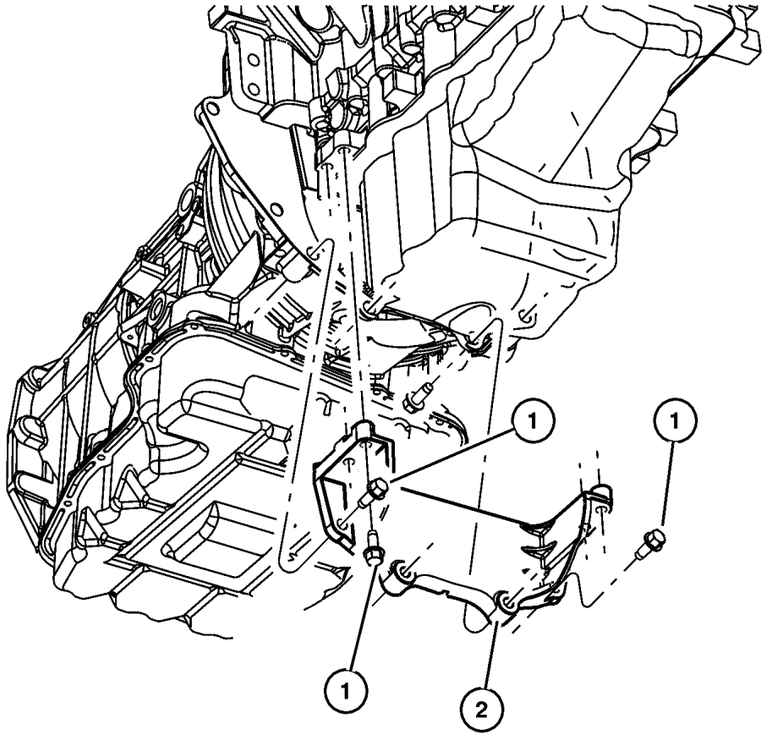

ITEM	PART NUMBER	QTY	LINE	SERIES	BODY	ENGINE	TRANS	TRIM	DESCRIPTION
NOTE:									
Sales Codes:									
[EK0]=All 3.7L V-6 Engines									
1	6101 985	8				EK0			SCREW AND WASHER, M10x1.50x45.00
2	53021 282AA	1				EK0			COVER, Engine

JEEP LIBERTY (KJ)

SERIES	LINE	BODY	ENGINE	TRANSMISSION
P = Limited	J = LHD (4WD)	74 = 4 Dr (104.3 WB)	ED1,ED0 = 2.4L Power Tech	DDK = 5 Speed HDManual
H = Sport	U = RHD (4WD)		EKG,EK0 = 3.7L Power Tech	DDD = 5 Speed HD Manual
M = Renegade	T = LHD (2WD)		ENJ = 2.5L 4Cyl Turbo Diesel	DG4,DGQ = Multi-Speed Auto
			ENR = 2.8L 4Cyl Turbo Diesel	DG6 = 4 Speed Auto Transm
			EN0 = 4Cyl Turbo Diesel	DG0 = All Automatic Transm
				DBB = All Manual Transm

Oil Pump & Reaction Shaft [DG6]
Figure 42RLE-310

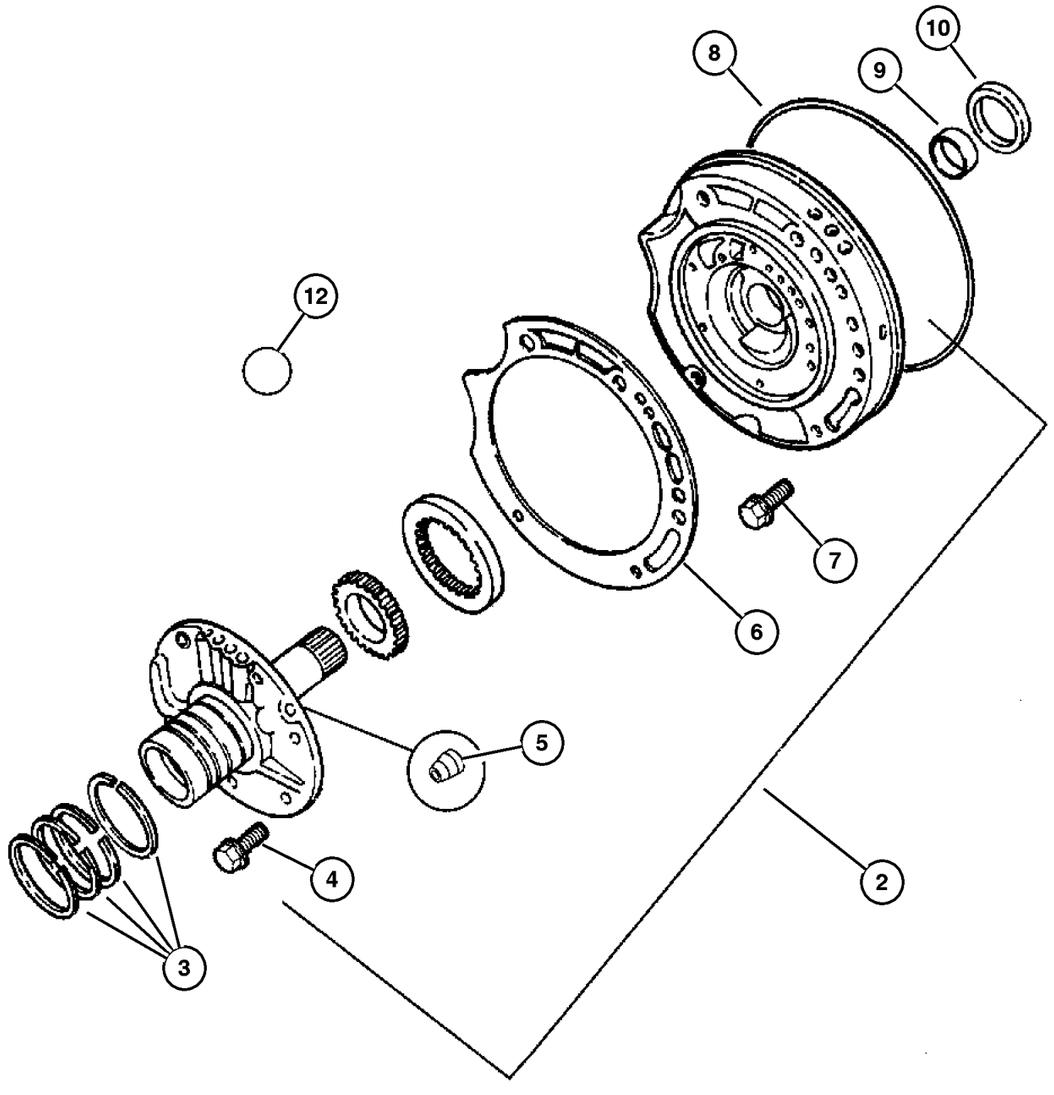

ITEM	PART NUMBER	QTY	LINE	SERIES	BODY	ENGINE	TRANS	TRIM	DESCRIPTION
NOTE:									
Sales Codes:									
[DG6]=4 Speed Automatic Transmission - [42RLE]									
-1									SEAL AND GASKET PACKAGE, Transmission Oil Pump
	4883 260	1	J, U				DG6		
		1	T				DG6		
2									PUMP, Transmission Oil
	5101 872AA	1	J, U				DG6		
		1	T				DG6		
3									SEAL, Ring Reaction Support, 2 1/16 O.D.
	4471 874	4	J, U				DG6		
		4	T				DG6		
4									BOLT, Hex Head, M8x1.25x19
	6500 211	6	J, U				DG6		
		6	T				DG6		
5									BALL, Transmission Oil Pump
	0152 127	6	J, U				DG6		
		6	T				DG6		
6									GASKET, Transmission Oil Pump
	4412 844	1	J, U				DG6		
		1	T				DG6		
7									SCREW AND WASHER, Hex Flange Head, M8x1.25x25
	6506 408AA	5	J, U				DG6		
		5	T				DG6		
8									SEAL, Oil Pump
	4659 945	1	J, U				DG6		
		1	T				DG6		
9									BUSHING, Front Pump
	4659 515	1	J, U				DG6		
		1	T				DG6		
10									SEAL, Impeller Hub, 57.25mm OD
	4412 475	1	J, U				DG6		
		1	T				DG6		
-11									GASKET, Transmission Oil Pump
	4412 844	1	T				DG6		
		1	J, U				DG6		
12									BALL, Check
	0147 482	2	J, U				DG6		Transmission Reaction Shaft

JEEP LIBERTY (KJ)

SERIES	LINE	BODY	ENGINE	TRANSMISSION
P = Limited	J = LHD (4WD)	74 = 4 Dr (104.3 WB)	ED1,ED0 = 2.4L Power Tech	DDK = 5 Speed HDManual
H = Sport	U = RHD (4WD)		EKG,EK0 = 3.7L Power Tech	DDD = 5 Speed HD Manual
M = Renegade	T = LHD (2WD)		ENJ = 2.5L 4Cyl Turbo Diesel	DG4,DGQ = Multi-Speed Auto
			ENR = 2.8L 4Cyl Turbo Diesel	DG6 = 4 Speed Auto Transm
			EN0 = 4Cyl Turbo Diesel	DG0 = All Automatic Transm
				DBB = All Manual Transm

Oil Pump & Reaction Shaft [DG6]
Figure 42RLE-310

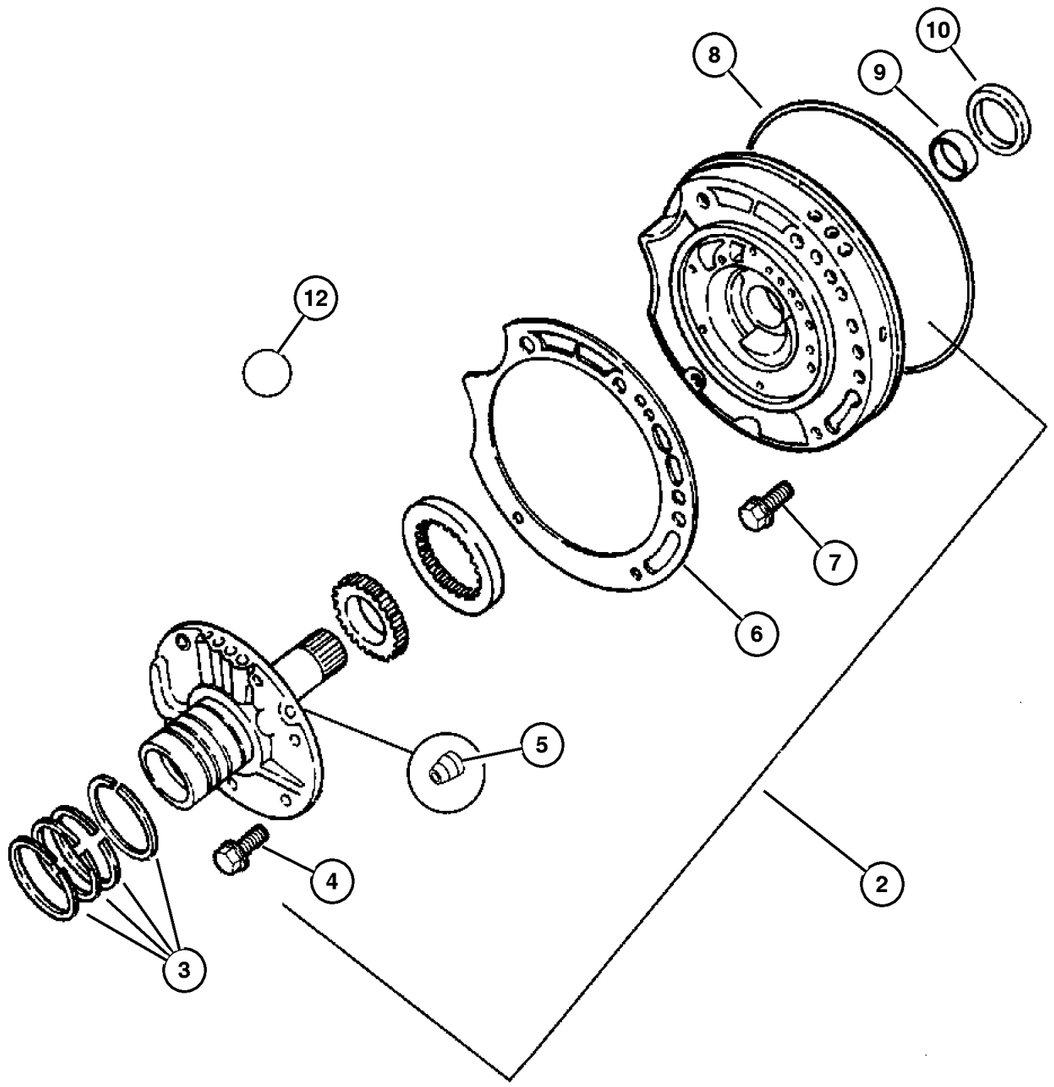

ITEM	PART NUMBER	QTY	LINE	SERIES	BODY	ENGINE	TRANS	TRIM	DESCRIPTION
	4446 616	2	J, U				DG6		Support
	0147 482	2	T				DG6		Transmission Reaction Shaft
	4446 616	2	T				DG6		Support

JEEP LIBERTY (KJ)

SERIES	LINE	BODY	ENGINE	TRANSMISSION
P = Limited	J = LHD (4WD)	74 = 4 Dr (104.3 WB)	ED1,ED0 = 2.4L Power Tech	DDK = 5 Speed HDManual
H = Sport	U = RHD (4WD)		EKG,EK0 = 3.7L Power Tech	DDD = 5 Speed HD Manual
M = Renegade	T = LHD (2WD)		ENJ = 2.5L 4Cyl Turbo Diesel	DG4,DGQ = Multi-Speed Auto
			ENR = 2.8L 4Cyl Turbo Diesel	DG6 = 4 Speed Auto Transm
			EN0 = 4Cyl Turbo Diesel	DG0 = All Automatic Transm
				DBB = All Manual Transm

Clutch, Input Shaft [DG6]
Figure 42RLE-410

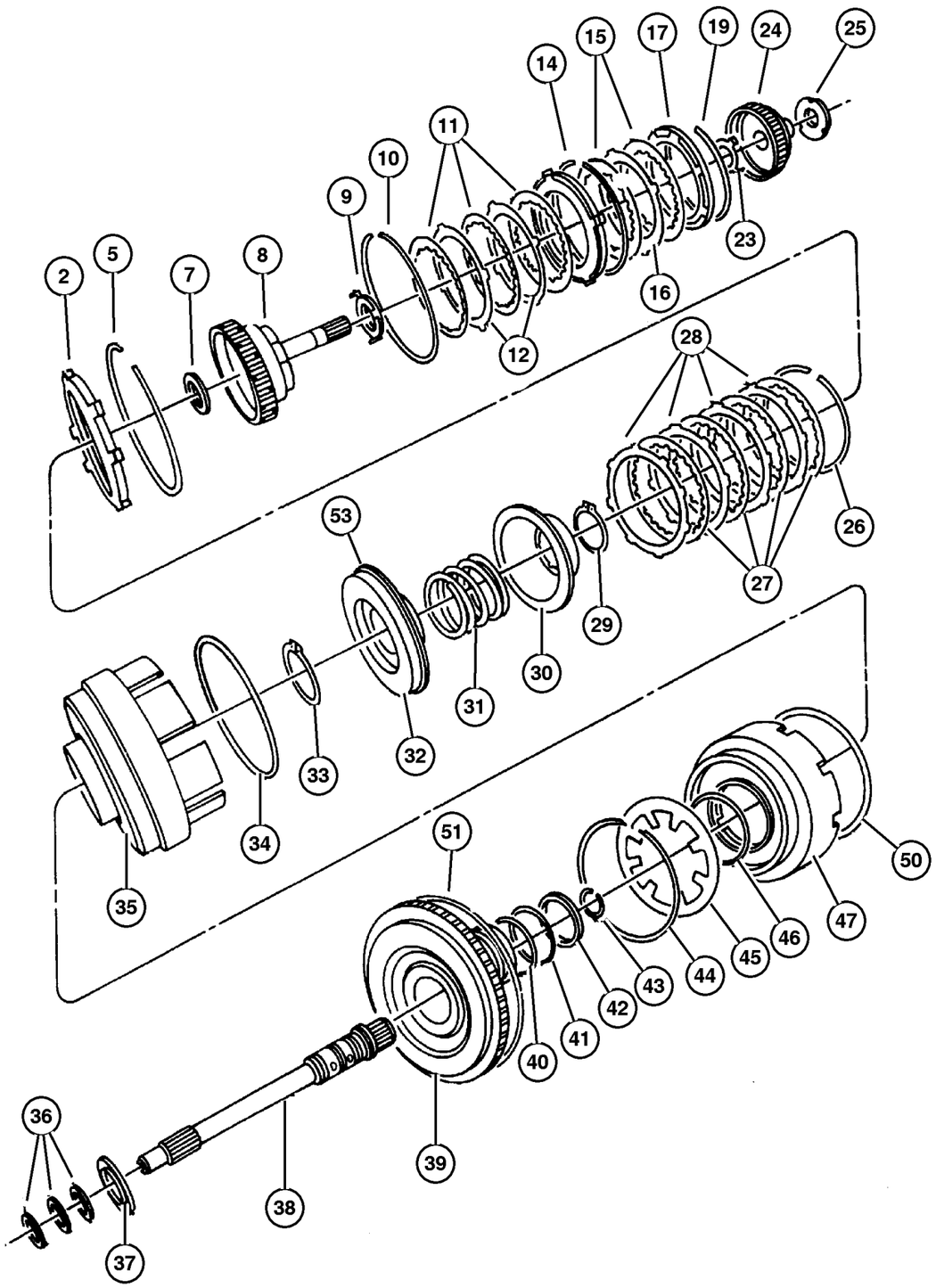

ITEM	PART NUMBER	QTY	LINE	SERIES	BODY	ENGINE	TRANS	TRIM	DESCRIPTION
NOTE:									
Sales Codes:									
[DG6]=4 Speed Automatic Transmission - 42RLE									
-1									SEAL AND GASKET PACKAGE, Transmission Front Clutch
	4883 240AB	1	J, U				DG6		
		1	T				DG6		
2									PLATE PACKAGE, Underdrive Reaction, 5.72/5.82
	4883 013AB	1	T				DG6		
		1	J, U				DG6		
-3									PLATE PACKAGE, Underdrive Reaction, 6.21/6.31
	4883 014AB	1	T				DG6		
		1	J, U				DG6		
-4									PLATE PACKAGE, Underdrive Reaction, 6.70/6.80
	4883 015AB	1	T				DG6		
		1	J, U				DG6		
5									SNAP RING, Underdrive Clutch, Tapered
	4659 934	1	J, U				DG6		
		1	T				DG6		
-6									SNAP RING, Underdrive Clutch, Flat
	4659 980	1	J, U				DG6		
		1	T				DG6		
7									THRUST BEARING
	4567 262	1	J, U				DG6		
		1	T				DG6		
8									HUB AND SHAFT PACKAGE, Underdrive Clutch
	4864 936AC	1	T				DG6		
		1	J, U				DG6		
9									PLATE AND WASHER PACKAGE, Thrust
	5018 923AA	1	T				DG6		
		1	J, U				DG6		
10									SNAP RING
	4505 621	1	J, U				DG6		
		1	T				DG6		
11									DISC, Clutch

JEEP LIBERTY (KJ)

SERIES	LINE	BODY	ENGINE	TRANSMISSION
P = Limited	J = LHD (4WD)	74 = 4 Dr (104.3 WB)	ED1,ED0 = 2.4L Power Tech	DDK = 5 Speed HDManual
H = Sport	U = RHD (4WD)		EKG,EK0 = 3.7L Power Tech	DDD = 5 Speed HD Manual
M = Renegade	T = LHD (2WD)		ENJ = 2.5L 4Cyl Turbo Diesel	DG4,DGQ = Multi-Speed Auto
			ENR = 2.8L 4Cyl Turbo Diesel	DG6 = 4 Speed Auto Transm
			EN0 = 4Cyl Turbo Diesel	DG0 = All Automatic Transm
				DBB = All Manual Transm

Clutch, Input Shaft [DG6]
Figure 42RLE-410

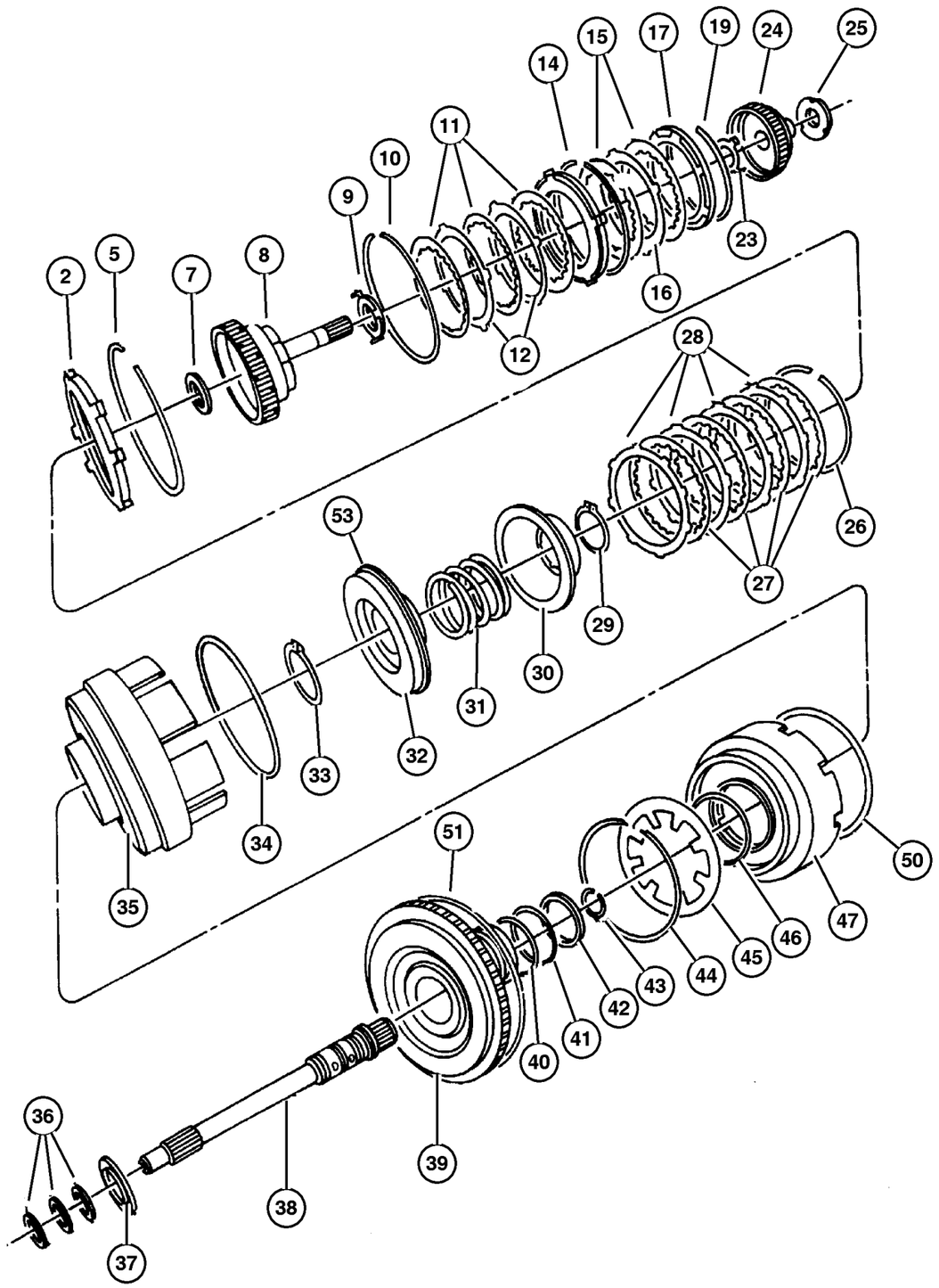

ITEM	PART NUMBER	QTY	LINE	SERIES	BODY	ENGINE	TRANS	TRIM	DESCRIPTION
	4531 678	4	T				DG6		
		4	J, U				DG6		
12									PLATE, Transmission O/Drive Clutch
	4659 053	3	J, U				DG6		
		3	T				DG6		
-13									HUB PACKAGE, Input Clutch
	5017 518AB	1	T				DG6		
		1	J, U				DG6		
14									SNAP RING
	4505 622	1	J, U				DG6		
		1	T				DG6		
15									DISC, Clutch
	4531 678	4	T				DG6		
		4	J, U				DG6		
16									PLATE, Transmission O/Drive Clutch
	4659 053	3	J, U				DG6		
		3	T				DG6		
17									PLATE, Transmission Clutch Reaction
	4377 194	1	J, U				DG6		
		1	T				DG6		
-18									PLATE, Transmission O/Drive Clutch
	4531 556AD	1	J, U				DG6		
		1	T				DG6		
19									SNAP RING
	4377 195	1	J, U				DG6		
		1	T				DG6		
-20									SNAP RING, Reverse Clutch, 1.77-1.83mm
	4412 871	1	J, U				DG6		
		1	T				DG6		
-21									SNAP RING, Reverse Clutch, 2.02-2.07mm
	4412 872	1	J, U				DG6		
		1	T				DG6		
-22									SNAP RING, Reverse Clutch, 2.27-2.32mm
	4412 873	1	J, U				DG6		
		1	T				DG6		
23									PLATE AND WASHER PACKAGE, Thrust

JEEP LIBERTY (KJ)

SERIES	LINE	BODY	ENGINE	TRANSMISSION
P = Limited	J = LHD (4WD)	74 = 4 Dr (104.3 WB)	ED1,ED0 = 2.4L Power Tech	DDK = 5 Speed HDManual
H = Sport	U = RHD (4WD)		EKG,EK0 = 3.7L Power Tech	DDD = 5 Speed HD Manual
M = Renegade	T = LHD (2WD)		ENJ = 2.5L 4Cyl Turbo Diesel	DG4,DGQ = Multi-Speed Auto
			ENR = 2.8L 4Cyl Turbo Diesel	DG6 = 4 Speed Auto Transm
			EN0 = 4Cyl Turbo Diesel	DG0 = All Automatic Transm
				DBB = All Manual Transm

AR = Use as required - = Non illustrated part # = New this model year

September 30, 2003

« RETURN TO GROUP INDEX

« »

Clutch, Input Shaft [DG6]
Figure 42RLE-410

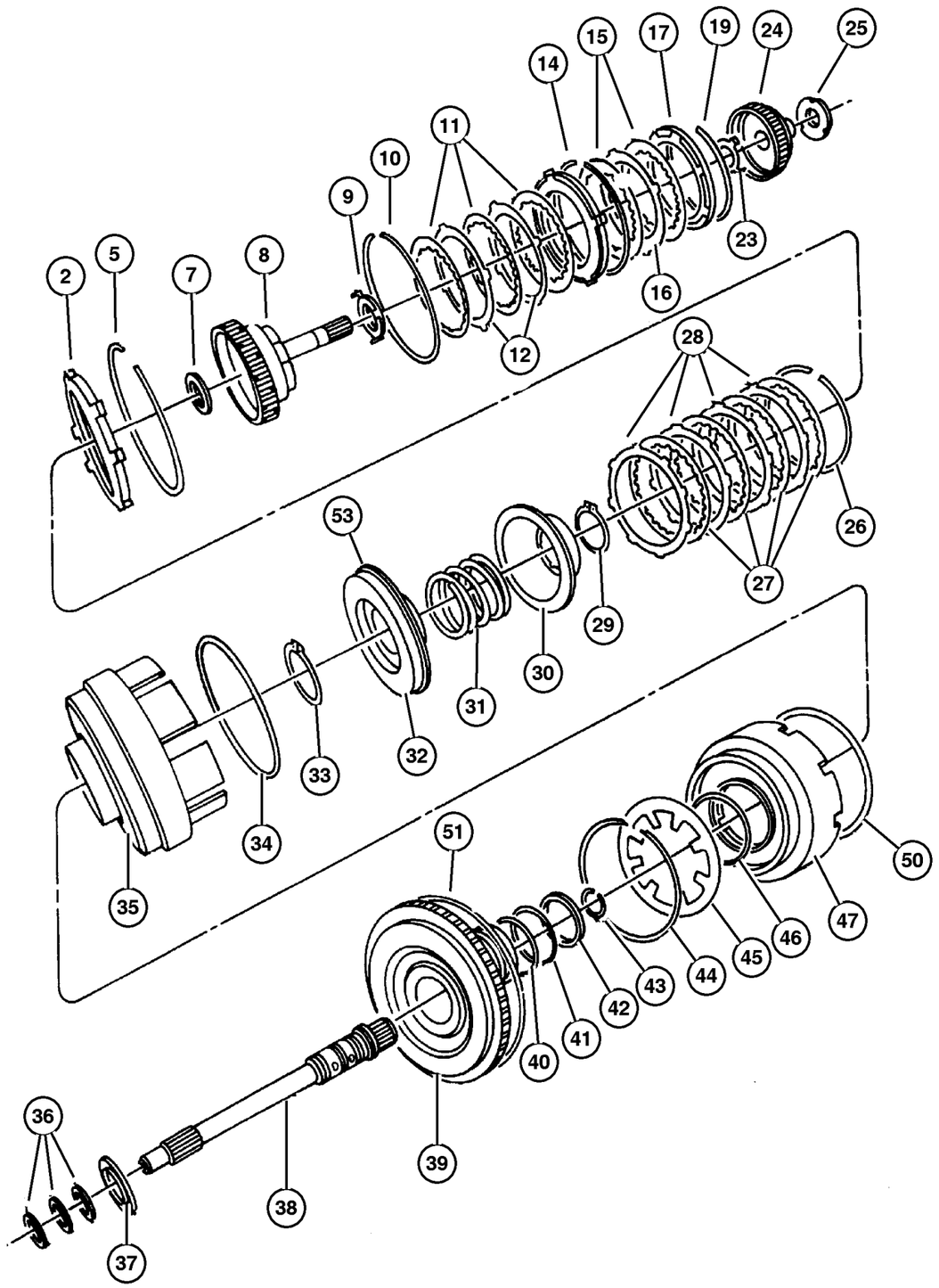

ITEM	PART NUMBER	QTY	LINE	SERIES	BODY	ENGINE	TRANS	TRIM	DESCRIPTION
	5018 923AA	1	T				DG6		
		1	J, U				DG6		
24									HUB AND SHAFT, Overdrive Clutch
	4659 993	1	J, U				DG6		
		1	T				DG6		
25									PLATE, Transmission O/Drive Clutch
	3836 237AB	AR	J, U				DG6		[1.70 - 1.77MM]
	4431 669AB	AR	J, U				DG6		[2.47 - 2.54MM]
	4446 670AB	AR	J, U				DG6		[2.69 - 2.76MM]
	4446 671AB	AR	J, U				DG6		[2.91 - 2.98MM]
	3836 237AB	AR	T				DG6		[1.70 - 1.77MM]
	3836 238AB	AR	T				DG6		[1.92 - 1.99MM]
	3836 239AB	AR	T				DG6		[2.14 - 2.21MM]
	3836 240AB	AR	T				DG6		[2.36 - 2.43MM]
	3836 241AB	AR	T				DG6		[2.58 - 2.65MM]
	4431 665AB	AR	T				DG6		[1.55 - 1.66MM]
	4431 666AB	AR	T				DG6		[1.81 - 1.88MM]
	3836 238AB	AR	J, U				DG6		[1.92 - 1.99MM]
	4431 667AB	AR	T				DG6		[2.03 - 2.10MM]
	4431 668AB	AR	T				DG6		[2.25 - 2.32MM]
	4431 669AB	AR	T				DG6		[2.47 - 2.54MM]
	4446 670AB	AR	T				DG6		[2.69 - 2.76MM]
	4446 671AB	AR	T				DG6		[2.91 - 2.98MM]
	3836 239AB	AR	J, U				DG6		[2.14 - 2.21MM]
	3836 240AB	AR	J, U				DG6		[2.36 - 2.43MM]
	3836 241AB	AR	J, U				DG6		[2.58 - 2.65MM]
	4431 665AB	AR	J, U				DG6		[1.55 - 1.66MM]
	4431 666AB	AR	J, U				DG6		[1.81 - 1.88MM]
	4431 667AB	AR	J, U				DG6		[2.03 - 2.10MM]
	4431 668AB	AR	J, U				DG6		[2.25 - 2.32MM]
26									SNAP RING, Underdrive Clutch, Flat
	4659 980	1	J, U				DG6		[1.53 - 1.58MM]
		1	T				DG6		[1.53 - 1.58MM]
27									DISC, Clutch
	4531 678	4	T				DG6		
		4	J, U				DG6		
28									PLATE, Transmission O/Drive Clutch
	4659 053	4	J, U				DG6		
		4	T				DG6		
29									SNAP RING
	6501 715	1	J, U				DG6		

JEEP LIBERTY (KJ)

SERIES	LINE	BODY	ENGINE	TRANSMISSION
P = Limited	J = LHD (4WD)	74 = 4 Dr (104.3 WB)	ED1,ED0 = 2.4L Power Tech	DDK = 5 Speed HDManual
H = Sport	U = RHD (4WD)		EKG,EK0 = 3.7L Power Tech	DDD = 5 Speed HD Manual
M = Renegade	T = LHD (2WD)		ENJ = 2.5L 4Cyl Turbo Diesel	DG4,DGQ = Multi-Speed Auto
			ENR = 2.8L 4Cyl Turbo Diesel	DG6 = 4 Speed Auto Transm
			EN0 = 4Cyl Turbo Diesel	DG0 = All Automatic Transm
				DBB = All Manual Transm

Clutch, Input Shaft [DG6]
Figure 42RLE-410

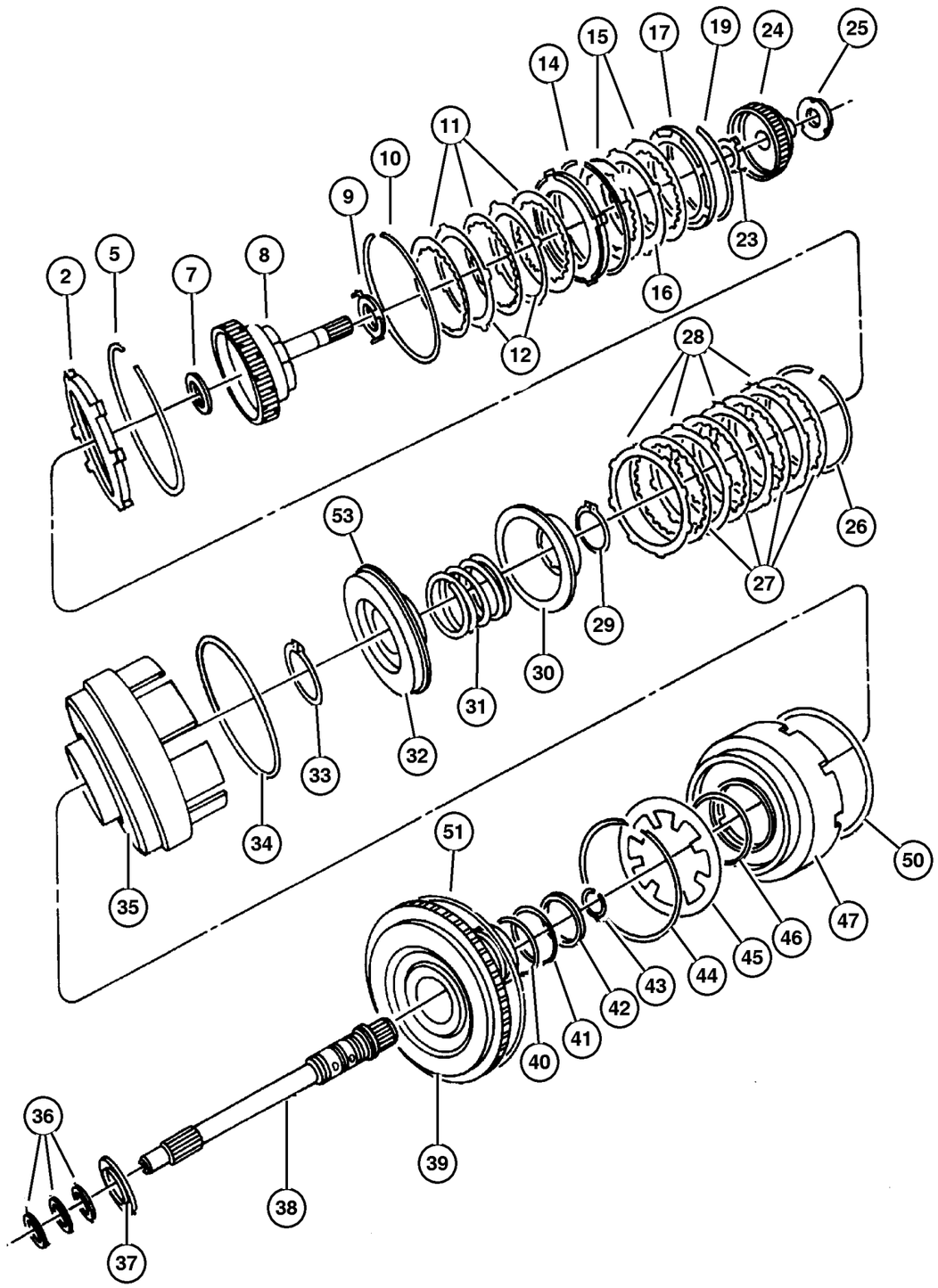

ITEM	PART NUMBER	QTY	LINE	SERIES	BODY	ENGINE	TRANS	TRIM	DESCRIPTION
		1	T				DG6		
30									RETAINER AND SEAL, Transmission U/Drive Spring
	4431 612	1	J, U				DG6		
		1	T				DG6		
31									SPRING, Drive Lower Case
	4377 177	1	J, U				DG6		
		1	T				DG6		
32									OVERHAUL PACKAGE, Transmission
	5103 073AA	1	T				DG6		
		1	J, U				DG6		
33									SNAP RING
	6507 226AA	1	J, U				DG6		
		1	T				DG6		
34									SEAL, Piston Outer, 140mm OD
	4659 871	1	J, U				DG6		
		1	T				DG6		
35									RETAINER, Transmission Input Clutch
	4659 935	1	J, U				DG6		
		1	T				DG6		
36									SEAL, Input Shaft
	4446 543	3	J, U				DG6		
		3	T				DG6		
37									THRUST BEARING
	4412 209	1	J, U				DG6		
		1	T				DG6		
38									INPUT SHAFT PACKAGE, Transaxle
	4626 452AB	1	T				DG6		
		1	J, U				DG6		
39									HUB, Input Clutch, Serviced in Assembly, (NOT SERVICED) (Not Serviced)
40									O RING, Transmission Clutch
	6502 271	1	J, U				DG6		
		1	T				DG6		
41									O RING, Transmission Clutch
	6502 269	1	J, U				DG6		
		1	T				DG6		
42									SEAL, Under Drive

JEEP LIBERTY (KJ)

SERIES	LINE	BODY	ENGINE	TRANSMISSION
P = Limited	J = LHD (4WD)	74 = 4 Dr (104.3 WB)	ED1,ED0 = 2.4L Power Tech	DDK = 5 Speed HDManual
H = Sport	U = RHD (4WD)		EKG,EK0 = 3.7L Power Tech	DDD = 5 Speed HD Manual
M = Renegade	T = LHD (2WD)		ENJ = 2.5L 4Cyl Turbo Diesel	DG4,DGQ = Multi-Speed Auto
			ENR = 2.8L 4Cyl Turbo Diesel	DG6 = 4 Speed Auto Transm
			EN0 = 4Cyl Turbo Diesel	DG0 = All Automatic Transm
				DBB = All Manual Transm

Clutch, Input Shaft [DG6]
Figure 42RLE-410

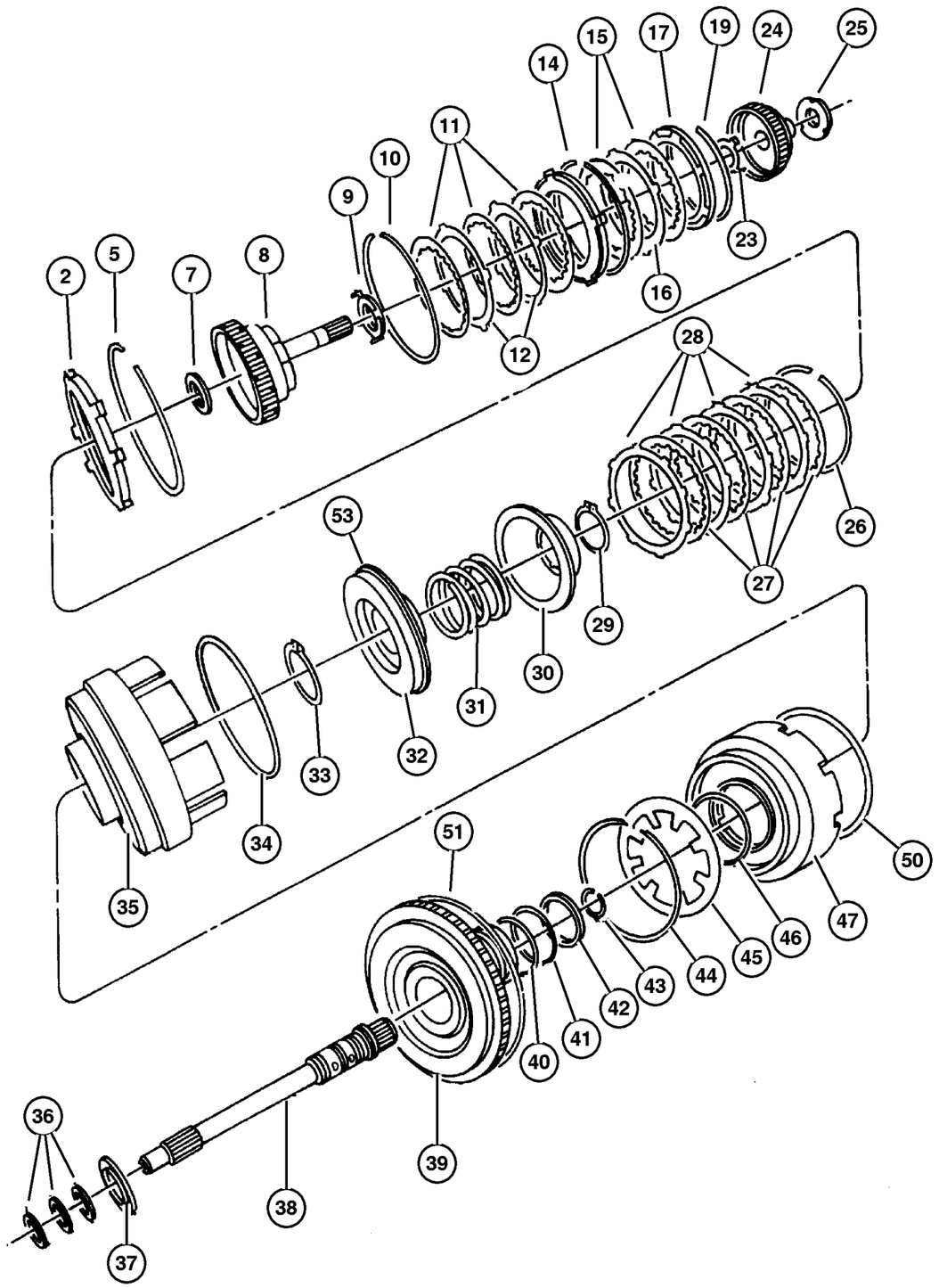

ITEM	PART NUMBER	QTY	LINE	SERIES	BODY	ENGINE	TRANS	TRIM	DESCRIPTION
	4659 391AB	1	J, U				DG6		
		1	T				DG6		
43									SNAP RING
	6501 702	1	J, U				DG6		
		1	T				DG6		
44									SNAP RING
	4412 203	1	J, U				DG6		
		1	T				DG6		
45									SPRING, Overdrive Piston
	4412 202	1	J, U				DG6		
		1	T				DG6		
46									O RING, Reverse & O/Drive Clutch Piston, Transmission
	6033 158	1	J, U				DG6		
		1	T				DG6		
47									HUB PACKAGE, Input Clutch
	5017 518AB	1	T				DG6		
		1	J, U				DG6		
-48									PISTON, Reverse and Overdrive, Serviced in Assembly, (NOT SERVICED) (Not Serviced)
-49									FILTER, Reverse And O/D Clutch
	4531 903	1	J, U				DG6		
		1	T				DG6		
50									SEAL, Reverse Servo Piston
	4659 056	1	J, U				DG6		
		1	T				DG6		
51									SEAL, Reverse Servo Piston
	4659 056	1	J, U				DG6		
		1	T				DG6		
-52									PISTON, 2nd and 4th Clutch
	4431 647	1	J, U				DG6		
		1	T				DG6		
53									PISTON, Underdrive
	4431 610	1	J, U				DG6		Also Avalable In Overhaul Package
		1	T				DG6		Also Avalable In Overhaul Package

JEEP LIBERTY (KJ)

SERIES	LINE	BODY	ENGINE	TRANSMISSION
P = Limited	J = LHD (4WD)	74 = 4 Dr (104.3 WB)	ED1,ED0 = 2.4L Power Tech	DDK = 5 Speed HDManual
H = Sport	U = RHD (4WD)		EKG,EK0 = 3.7L Power Tech	DDD = 5 Speed HD Manual
M = Renegade	T = LHD (2WD)		ENJ = 2.5L 4Cyl Turbo Diesel	DG4,DGQ = Multi-Speed Auto
			ENR = 2.8L 4Cyl Turbo Diesel	DG6 = 4 Speed Auto Transm
			EN0 = 4Cyl Turbo Diesel	DG0 = All Automatic Transm
				DBB = All Manual Transm

AR = Use as required - = Non illustrated part # = New this model year

September 30, 2003

« RETURN TO GROUP INDEX

Gear Train [DG6]
Figure 42RLE-420

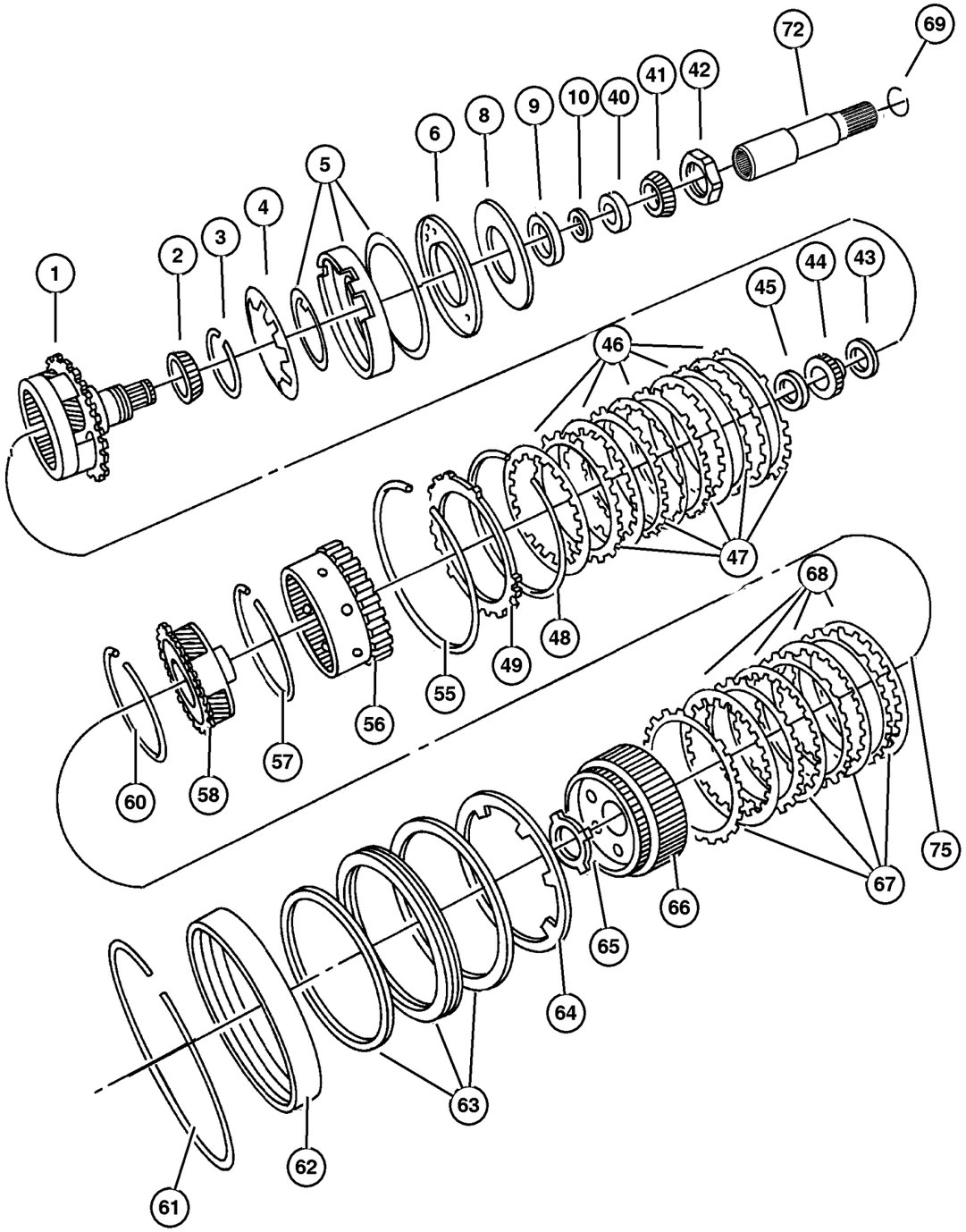

ITEM	PART NUMBER	QTY	LINE	SERIES	BODY	ENGINE	TRANS	TRIM	DESCRIPTION
NOTE:									
Sales Codes:									
[DG6]=4 Speed Automatic Transmission - 42RLE									
1									CARRIER AND BEARING, Planet Pinion
	5101 874AA	1	J, U				DG6		
		1	T				DG6		
2									BEARING CONE, Output Shaft
	4412 235	1	J, U				DG6		
		1	T				DG6		
3									SNAP RING
	6501 853	1	J, U				DG6		
		1	T				DG6		
4									SPRING, Low/Reverse Clutch Piston
	#4800 236AA	1	T				DG6		
		1	J, U				DG6		
5									PISTON, Low and Reverse Clutch
	#4800 261AA	1	T				DG6		
		1	J, U				DG6		
6									RETAINER, Transmission Low and Reverse Clutch Pistion
	4800 255AA	1	J, U				DG6		
		1	T				DG6		
-7									SCREW AND WASHER, Pan Head, M5x0.8x11.00
	6501 819	3	J, U				DG6		
		3	T				DG6		
8									GASKET, Clutch Retainer
	4800 253AA	1	J, U				DG6		
		1	T				DG6		
9									BEARING CUP, Output Shaft
	4412 234	1	J, U				DG6		
		1	T				DG6		
10									SHIM, Carrier Bearing, 5.17 - 5.19mm
	5280 020	AR	J, U				DG6		
		AR	T				DG6		
-11									SHIM, Carrier Bearing, 5.20 - 5.22mm
	5280 021	AR	J, U				DG6		
		AR	T				DG6		

JEEP LIBERTY (KJ)

SERIES	LINE	BODY	ENGINE	TRANSMISSION
P = Limited	J = LHD (4WD)	74 = 4 Dr (104.3 WB)	ED1,ED0 = 2.4L Power Tech	DDK = 5 Speed HDManual
H = Sport	U = RHD (4WD)		EKG,EK0 = 3.7L Power Tech	DDD = 5 Speed HD Manual
M = Renegade	T = LHD (2WD)		ENJ = 2.5L 4Cyl Turbo Diesel	DG4,DGQ = Multi-Speed Auto
			ENR = 2.8L 4Cyl Turbo Diesel	DG6 = 4 Speed Auto Transm
			EN0 = 4Cyl Turbo Diesel	DG0 = All Automatic Transm
				DBB = All Manual Transm

AR = Use as required - = Non illustrated part # = New this model year

September 30, 2003

« RETURN TO GROUP INDEX »

Gear Train [DG6]
Figure 42RLE-420

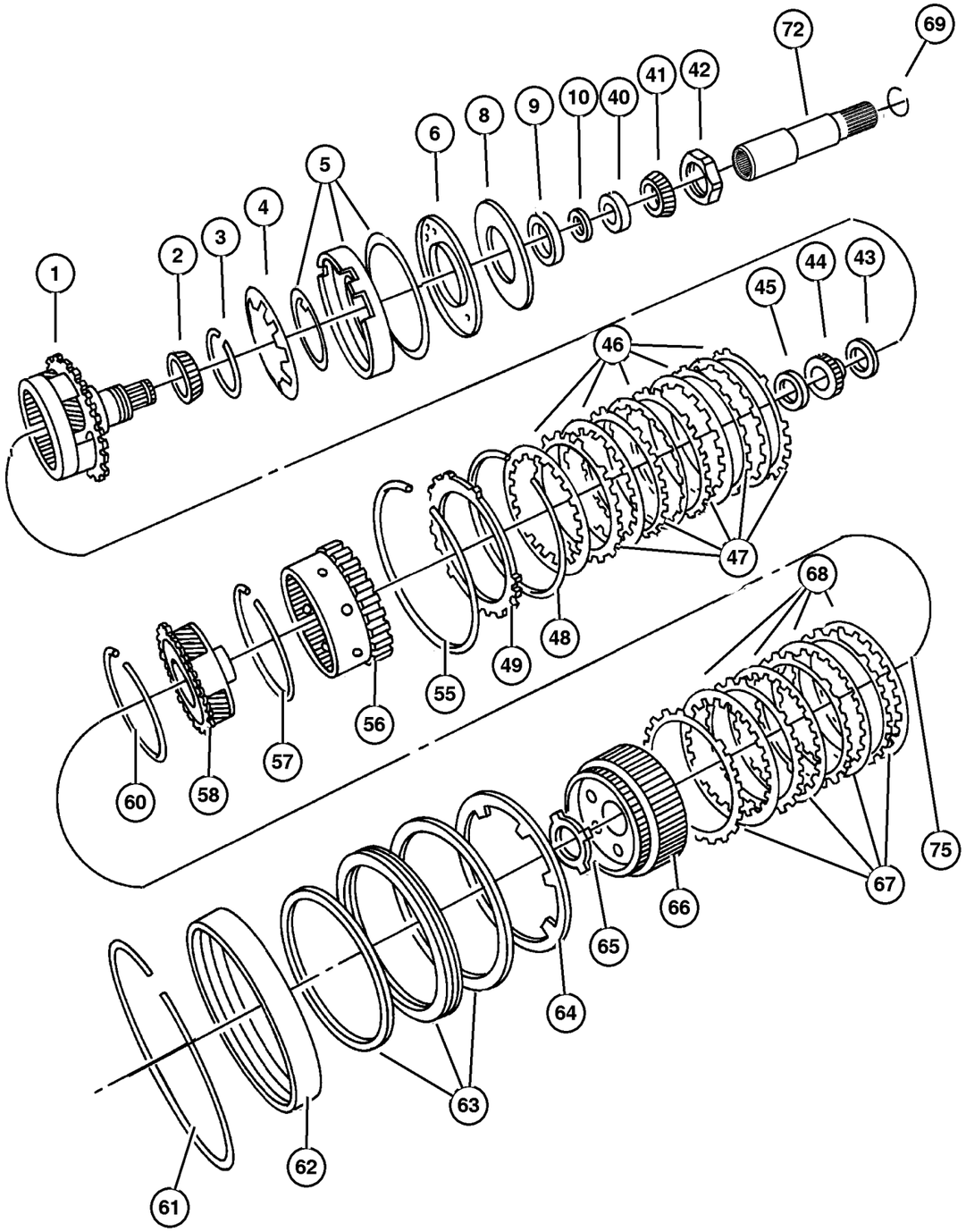

ITEM	PART NUMBER	QTY	LINE	SERIES	BODY	ENGINE	TRANS	TRIM	DESCRIPTION
-12									SHIM, Carrier Bearing, 5.23 - 5.
									25mm
	5280 022	AR	J, U				DG6		
		AR	T				DG6		
-13									SHIM, Carrier Bearing, 5.26 - 5.
									28mm
	5280 023	AR	J, U				DG6		
		AR	T				DG6		
-14									SHIM, Carrier Bearing, 5.29 - 5.
									31mm
	5280 024	AR	J, U				DG6		
		AR	T				DG6		
-15									SHIM, Carrier Bearing, 5.32 - 5.
									34mm
	5280 025	AR	J, U				DG6		
		AR	T				DG6		
-16									SHIM, Carrier Bearing, 5.35 - 5.
									37mm
	5280 026	AR	J, U				DG6		
		AR	T				DG6		
-17									SHIM, Carrier Bearing, 5.38 - 5.
									40mm
	5280 027	AR	J, U				DG6		
		AR	T				DG6		
-18									SHIM, Carrier Bearing, 5.41 - 5.
									43mm
	5280 028	AR	J, U				DG6		
		AR	T				DG6		
-19									SHIM, Carrier Bearing, 5.44 - 5.
									46mm
	5280 029	AR	J, U				DG6		
		AR	T				DG6		
-20									SHIM, Carrier Bearing, 5.47 - 5.
									49mm
	5280 030	AR	J, U				DG6		
		AR	T				DG6		
-21									SHIM, Carrier Bearing, 5.50 - 5.
									52mm
	5280 031	AR	J, U				DG6		
		AR	T				DG6		
-22									SHIM, Carrier Bearing, 5.53 - 5.
									55mm

JEEP LIBERTY (KJ)

SERIES	LINE	BODY	ENGINE	TRANSMISSION
P = Limited	J = LHD (4WD)	74 = 4 Dr (104.3 WB)	ED1,ED0 = 2.4L Power Tech	DDK = 5 Speed HDManual
H = Sport	U = RHD (4WD)		EKG,EK0 = 3.7L Power Tech	DDD = 5 Speed HD Manual
M = Renegade	T = LHD (2WD)		ENJ = 2.5L 4Cyl Turbo Diesel	DG4,DGQ = Multi-Speed Auto
			ENR = 2.8L 4Cyl Turbo Diesel	DG6 = 4 Speed Auto Transm
			EN0 = 4Cyl Turbo Diesel	DG0 = All Automatic Transm
				DBB = All Manual Transm

AR = Use as required - = Non illustrated part # = New this model year

September 30, 2003

« RETURN TO GROUP INDEX

Gear Train [DG6]
Figure 42RLE-420

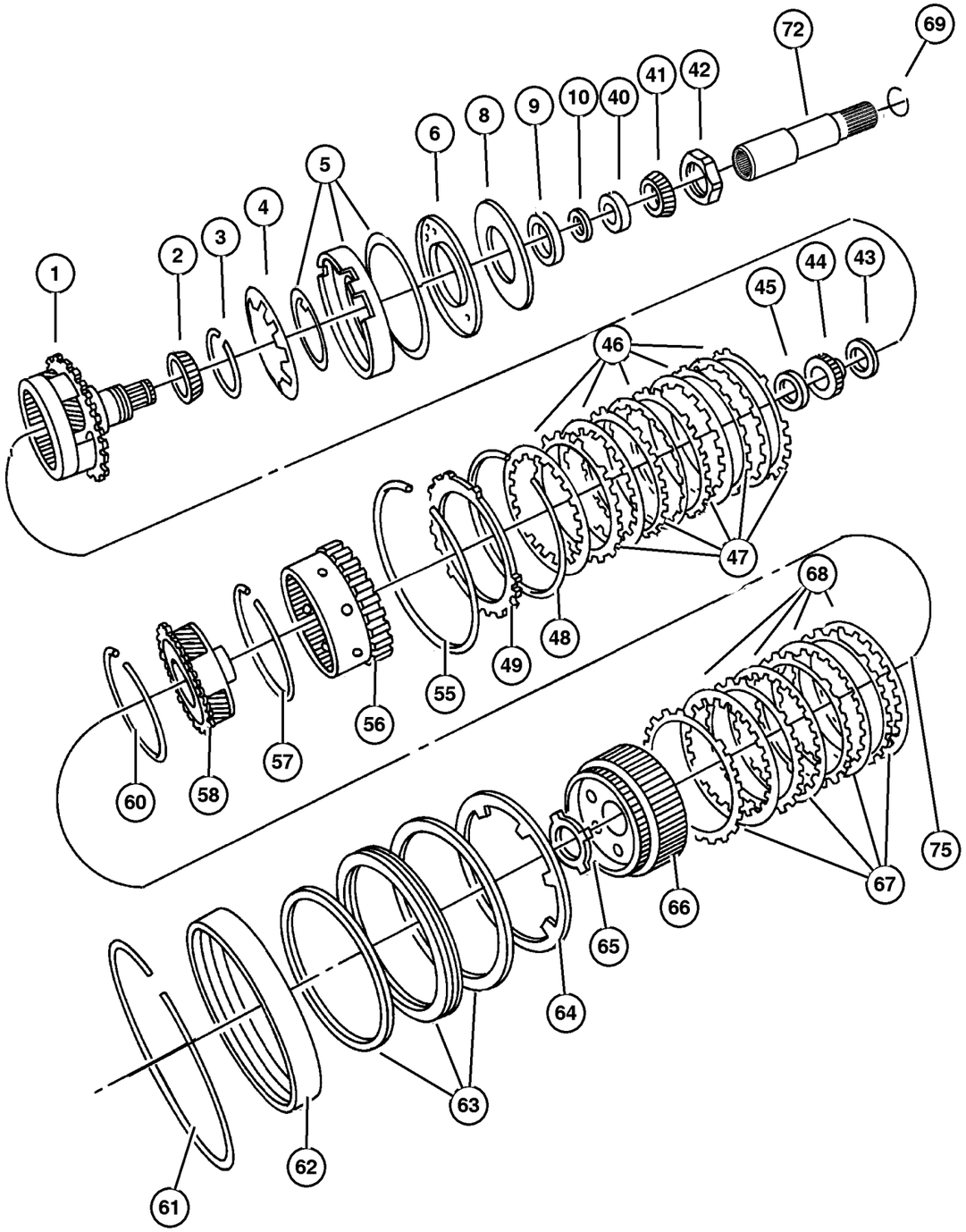

ITEM	PART NUMBER	QTY	LINE	SERIES	BODY	ENGINE	TRANS	TRIM	DESCRIPTION
	5280 032	AR	J, U				DG6		
		AR	T				DG6		
-23									SHIM, Carrier Bearing, 5.56 - 5.58mm
	5280 033	AR	J, U				DG6		
		AR	T				DG6		
-24									SHIM, Carrier Bearing, 5.59 - 5.61mm
	5280 034	AR	J, U				DG6		
		AR	T				DG6		
-25									SHIM, Carrier Bearing, 5.62 - 5.64mm
	5280 035	AR	J, U				DG6		
		AR	T				DG6		
-26									SHIM, Carrier Bearing, 5.65 - 5.67mm
	5280 036	AR	J, U				DG6		
		AR	T				DG6		
-27									SHIM, Carrier Bearing, 5.68 - 5.70mm
	5280 037	AR	J, U				DG6		
		AR	T				DG6		
-28									SHIM, Carrier Bearing, 5.71 - 5.73mm
	5280 038	AR	J, U				DG6		
		AR	T				DG6		
-29									SHIM, Carrier Bearing, 5.74 - 5.76mm
	5280 039	AR	J, U				DG6		
		AR	T				DG6		
-30									SHIM, Carrier Bearing, 5.77 - 5.79mm
	5280 040	AR	J, U				DG6		
		AR	T				DG6		
-31									SHIM, Carrier Bearing, 5.80 - 5.82mm
	5280 041	AR	J, U				DG6		
		AR	T				DG6		
-32									SHIM, Carrier Bearing, 5.83 - 5.85mm
	5280 042	AR	J, U				DG6		

JEEP LIBERTY (KJ)

SERIES	LINE	BODY	ENGINE	TRANSMISSION
P = Limited	J = LHD (4WD)	74 = 4 Dr (104.3 WB)	ED1,ED0 = 2.4L Power Tech	DDK = 5 Speed HDManual
H = Sport	U = RHD (4WD)		EKG,EK0 = 3.7L Power Tech	DDD = 5 Speed HD Manual
M = Renegade	T = LHD (2WD)		ENJ = 2.5L 4Cyl Turbo Diesel	DG4,DGQ = Multi-Speed Auto
			ENR = 2.8L 4Cyl Turbo Diesel	DG6 = 4 Speed Auto Transm
			EN0 = 4Cyl Turbo Diesel	DG0 = All Automatic Transm
				DBB = All Manual Transm

AR = Use as required - = Non illustrated part # = New this model year

September 30, 2003

« RETURN TO GROUP INDEX

Gear Train [DG6]
Figure 42RLE-420

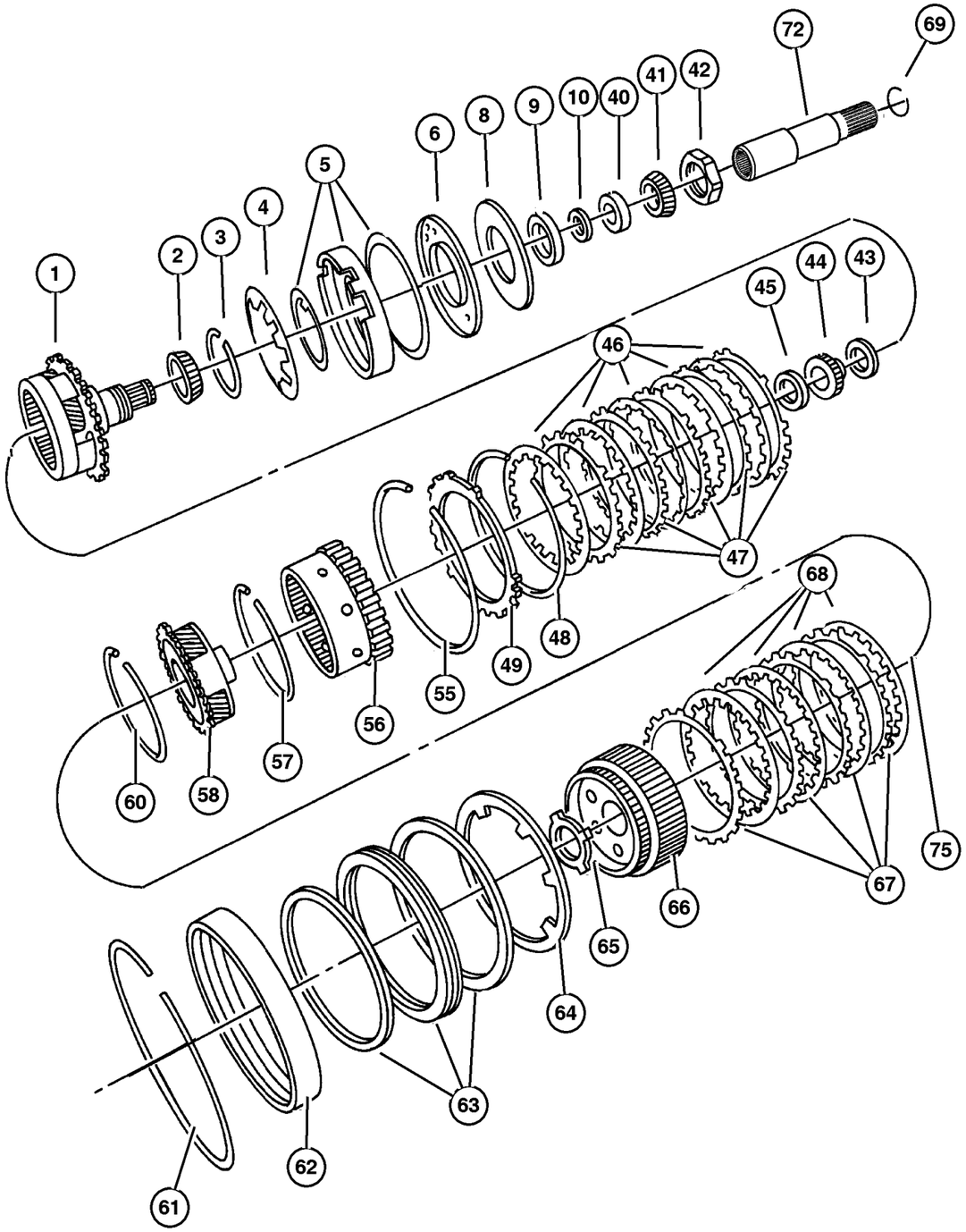

ITEM	PART NUMBER	QTY	LINE	SERIES	BODY	ENGINE	TRANS	TRIM	DESCRIPTION
		AR	T				DG6		
-33									SHIM, Carrier Bearing, 5.86 - 5. 88mm
	5280 043	AR	J, U				DG6		
		AR	T				DG6		
-34									SHIM, Carrier Bearing, 5.89 - 5. 91mm
	5280 044	AR	J, U				DG6		
		AR	T				DG6		
-35									SHIM, Carrier Bearing, 5.92 - 5. 94mm
	5280 045	AR	J, U				DG6		
		AR	T				DG6		
-36									SHIM, Carrier Bearing, 5.95 - 5. 97mm
	5280 046	AR	J, U				DG6		
		AR	T				DG6		
-37									SHIM, Carrier Bearing, 5.98 - 6. 00mm
	5280 047	AR	J, U				DG6		
		AR	T				DG6		
-38									SHIM, Carrier Bearing, 6.01 - 6. 03mm
	5280 048	AR	J, U				DG6		
		AR	T				DG6		
-39									SHIM, Carrier Bearing, 6.04 - 6. 06mm
	5280 049	AR	J, U				DG6		
		AR	T				DG6		
40									BEARING CUP, Differential
	4567 022	1	J, U				DG6		
		1	T				DG6		
41									BEARING
	4567 025AB	1	J, U				DG6		
		1	T				DG6		
42									NUT, Rear Carrier, M36 x 1.50
	6502 476	1	J, U				DG6		
		1	T				DG6		
43									THRUST BEARING
	4412 209	1	J, U				DG6		
		1	T				DG6		
44									GEAR, Sun

JEEP LIBERTY (KJ)

SERIES	LINE	BODY	ENGINE	TRANSMISSION
P = Limited	J = LHD (4WD)	74 = 4 Dr (104.3 WB)	ED1,ED0 = 2.4L Power Tech	DDK = 5 Speed HDManual
H = Sport	U = RHD (4WD)		EKG,EK0 = 3.7L Power Tech	DDD = 5 Speed HD Manual
M = Renegade	T = LHD (2WD)		ENJ = 2.5L 4Cyl Turbo Diesel	DG4,DGQ = Multi-Speed Auto
			ENR = 2.8L 4Cyl Turbo Diesel	DG6 = 4 Speed Auto Transm
			EN0 = 4Cyl Turbo Diesel	DG0 = All Automatic Transm
				DBB = All Manual Transm

AR = Use as required - = Non illustrated part # = New this model year

September 30, 2003

« RETURN TO GROUP INDEX

Gear Train [DG6]
Figure 42RLE-420

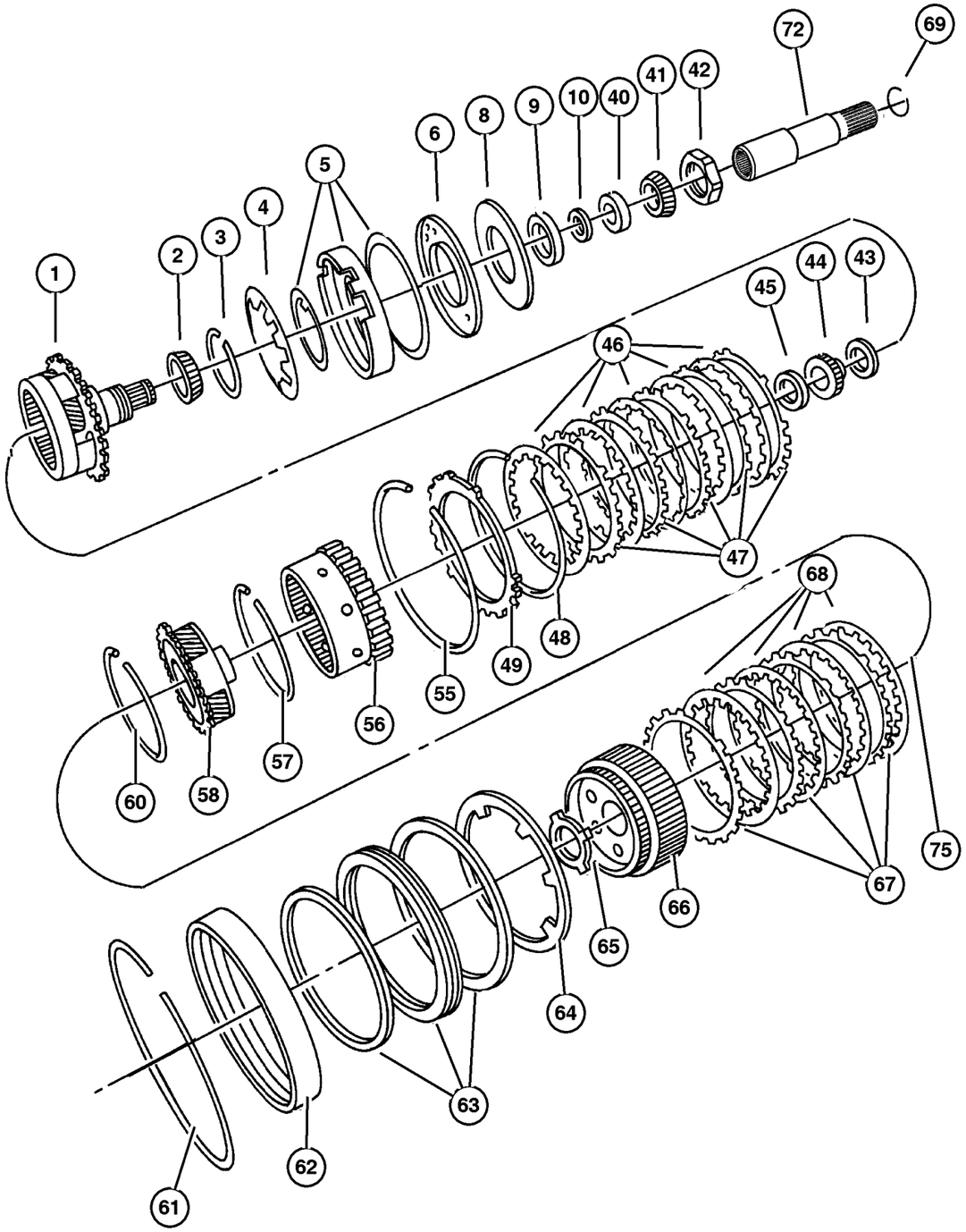

ITEM	PART NUMBER	QTY	LINE	SERIES	BODY	ENGINE	TRANS	TRIM	DESCRIPTION
	4377 080	1	J, U				DG6		
		1	T				DG6		
45									THRUST BEARING, Rear Sun Gear, Front
	4412 229AB	1	J, U				DG6		
		1	T				DG6		
46									DISC, Clutch
	4567 573AB	5	J, U				DG6		
	4531 678	4	T				DG6		
47									PLATE, Transmission Clutch Reaction
	4659 055	5	J, U				DG6		
		5	T				DG6		
48									SNAP RING
	4412 395	1	J, U				DG6		
		1	T				DG6		
49									PLATE, Transmission Clutch Reaction
	4377 194	1	J, U				DG6		
		1	T				DG6		
-50									PLATE PACKAGE, Low/Reverse Clutch, 5.753/6.012
	4897 452AA	1	T				DG6		
		1	J, U				DG6		
-51									PLATE PACKAGE, Low/Reverse Clutch, 6.013/6.272
	4897 453AA	1	T				DG6		
		1	J, U				DG6		
-52									PLATE PACKAGE, Low/Reverse Clutch, 6.273/6.532
	4897 454AA	1	T				DG6		
		1	J, U				DG6		
-53									PLATE PACKAGE, Low/Reverse Clutch, 6.533/6.792
	4897 455AA	1	T				DG6		
		1	J, U				DG6		
-54									PLATE PACKAGE, Low/Reverse Clutch, 6.793/7.052
	4897 456AA	1	T				DG6		
		1	J, U				DG6		
55									SNAP RING

JEEP LIBERTY (KJ)

SERIES	LINE	BODY	ENGINE	TRANSMISSION
P = Limited	J = LHD (4WD)	74 = 4 Dr (104.3 WB)	ED1,ED0 = 2.4L Power Tech	DDK = 5 Speed HDManual
H = Sport	U = RHD (4WD)		EKG,EK0 = 3.7L Power Tech	DDD = 5 Speed HD Manual
M = Renegade	T = LHD (2WD)		ENJ = 2.5L 4Cyl Turbo Diesel	DG4,DGQ = Multi-Speed Auto
			ENR = 2.8L 4Cyl Turbo Diesel	DG6 = 4 Speed Auto Transm
			EN0 = 4Cyl Turbo Diesel	DG0 = All Automatic Transm
				DBB = All Manual Transm

AR = Use as required - = Non illustrated part # = New this model year

September 30, 2003

« RETURN TO GROUP INDEX

Gear Train [DG6]
Figure 42RLE-420

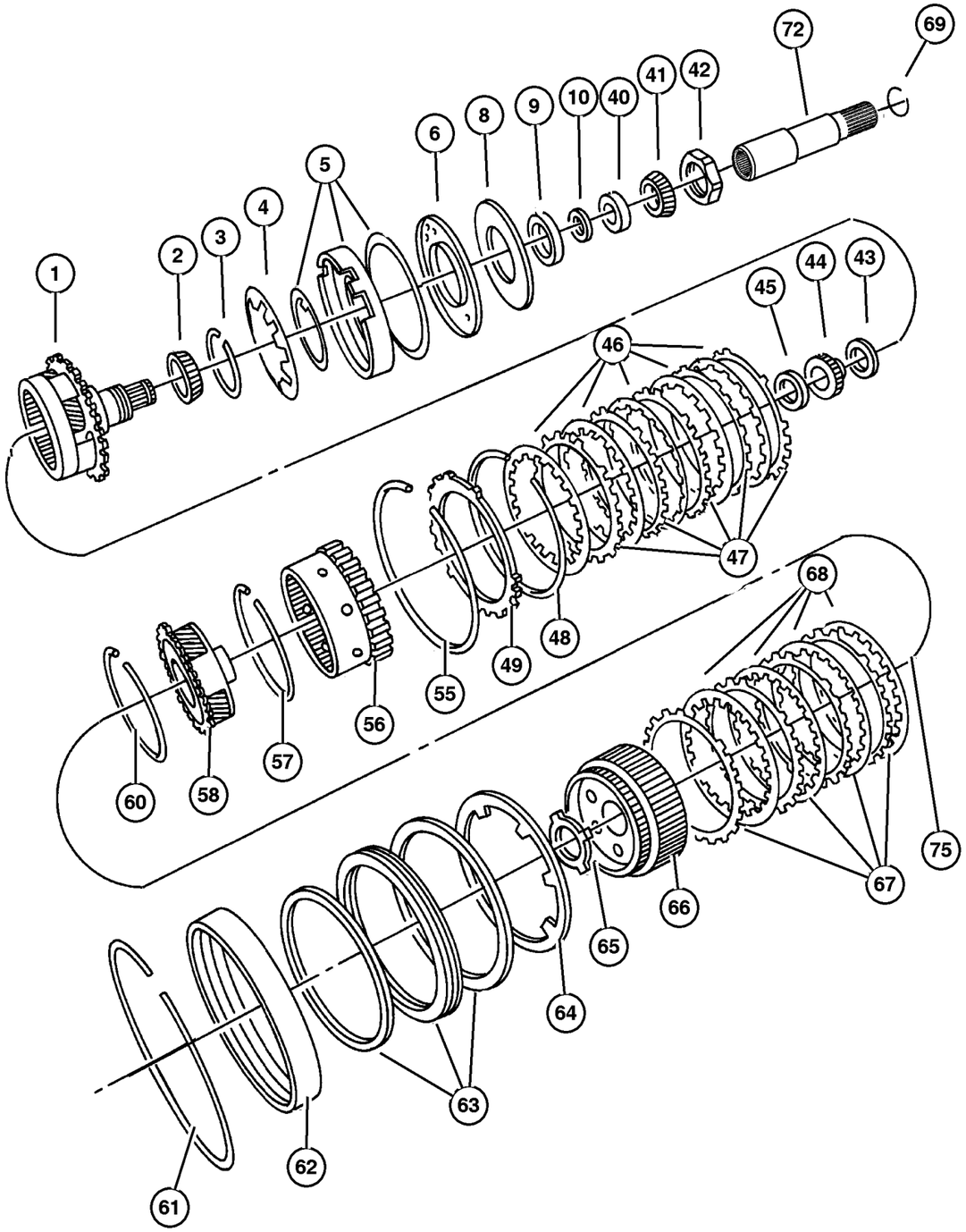

ITEM	PART NUMBER	QTY	LINE	SERIES	BODY	ENGINE	TRANS	TRIM	DESCRIPTION
	4799 858AA	1	J, U				DG6		
		1	T				DG6		
56									GEAR, Annulus
	4799 794	1	J, U				DG6		
		1	T				DG6		
57									SNAP RING
	6035 238	2	J, U				DG6		
		2	T				DG6		
58									CARRIER, Planetary Pinion
	4567 539AB	1	J, U				DG6		
		1	T				DG6		
-59									THRUST BEARING
	4412 209	1	J, U				DG6		
		1	T				DG6		
60									SNAP RING
	6035 238	2	J, U				DG6		
		2	T				DG6		
61									SNAP RING
	4505 591	1	J, U				DG6		
		1	T				DG6		
62									RETAINER PACKAGE, 2nd & 4th Clutch Piston
	#5102 880AA	1	T				DG6		
		1	J, U				DG6		
63									RETAINER PACKAGE, 2nd & 4th Clutch Piston
	#5102 880AA	1	T				DG6		
		1	J, U				DG6		
64									SPRING, 2nd And 4th Clutch Piston
	4412 248	1	J, U				DG6		
		1	T				DG6		
65									THRUST WASHER, Second and Fourth Clutch
	4412 216AB	1	J, U				DG6		
		1	T				DG6		
66									HUB AND GEAR, Second And Fourth Clutch
	4659 618AB	1	J, U				DG6		
		1	T				DG6		
67									PLATE, Transmission Clutch Reaction

JEEP LIBERTY (KJ)

SERIES	LINE	BODY	ENGINE	TRANSMISSION
P = Limited	J = LHD (4WD)	74 = 4 Dr (104.3 WB)	ED1,ED0 = 2.4L Power Tech	DDK = 5 Speed HDManual
H = Sport	U = RHD (4WD)		EKG,EK0 = 3.7L Power Tech	DDD = 5 Speed HD Manual
M = Renegade	T = LHD (2WD)		ENJ = 2.5L 4Cyl Turbo Diesel	DG4,DGQ = Multi-Speed Auto
			ENR = 2.8L 4Cyl Turbo Diesel	DG6 = 4 Speed Auto Transm
			EN0 = 4Cyl Turbo Diesel	DG0 = All Automatic Transm
				DBB = All Manual Transm

AR = Use as required - = Non illustrated part # = New this model year

September 30, 2003

« RETURN TO GROUP INDEX

Gear Train [DG6]
Figure 42RLE-420

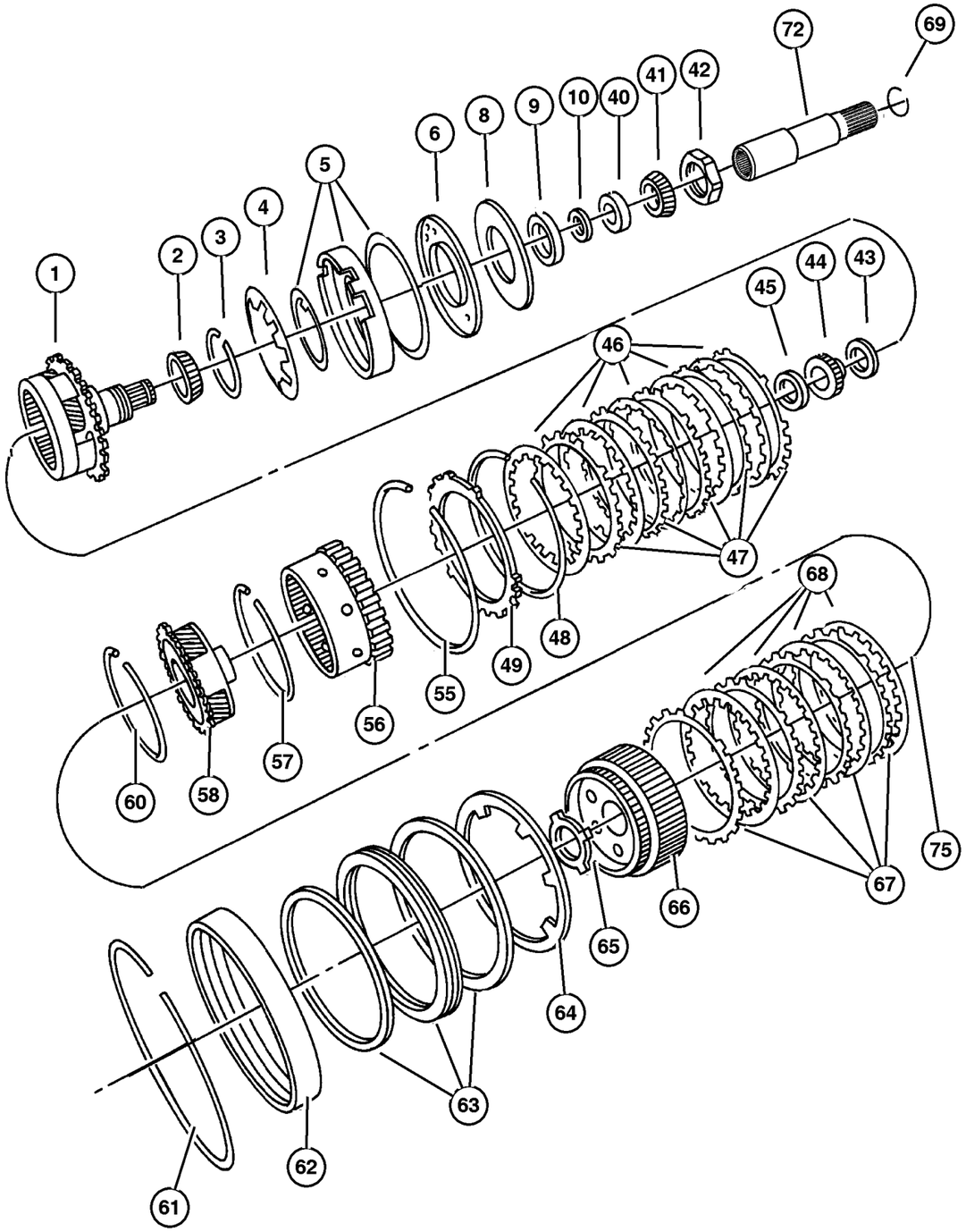

ITEM	PART NUMBER	QTY	LINE	SERIES	BODY	ENGINE	TRANS	TRIM	DESCRIPTION
	4659 054	4	J, U				DG6		
		4	T				DG6		
68									DISC, Clutch
	4799 860AB	4	J, U				DG6		
		4	T				DG6		
69									SNAP RING
	4377 195	1	J, U				DG6		
		1	T				DG6		
-70									THRUST WASHER, Planet Pinion
	3681 949	10	T				DG6		
		10	J, U				DG6		
-71									ROLLER, Front and Rear Pinion
	3743 664	95	J, U				DG6		
		95	T				DG6		
72	52852 915AA	1	J, U				DG6		SHAFT, Intermediate
-73	52852 916AA	1	J, U				DG6		CLIP, Secure Intermediate Shaft
-74	52854 168AA	1	T				DG6		SHAFT, Output
75	2466 224	1	T				DG6		BEARING, Output Shaft

JEEP LIBERTY (KJ)

SERIES	LINE	BODY	ENGINE	TRANSMISSION
P = Limited	J = LHD (4WD)	74 = 4 Dr (104.3 WB)	ED1,ED0 = 2.4L Power Tech	DDK = 5 Speed HDManual
H = Sport	U = RHD (4WD)		EKG,EK0 = 3.7L Power Tech	DDD = 5 Speed HD Manual
M = Renegade	T = LHD (2WD)		ENJ = 2.5L 4Cyl Turbo Diesel	DG4,DGQ = Multi-Speed Auto
			ENR = 2.8L 4Cyl Turbo Diesel	DG6 = 4 Speed Auto Transm
			EN0 = 4Cyl Turbo Diesel	DG0 = All Automatic Transm
				DBB = All Manual Transm

AR = Use as required - = Non illustrated part # = New this model year

September 30, 2003

« RETURN TO GROUP INDEX

Valve Body [DG6]
Figure 42RLE-710

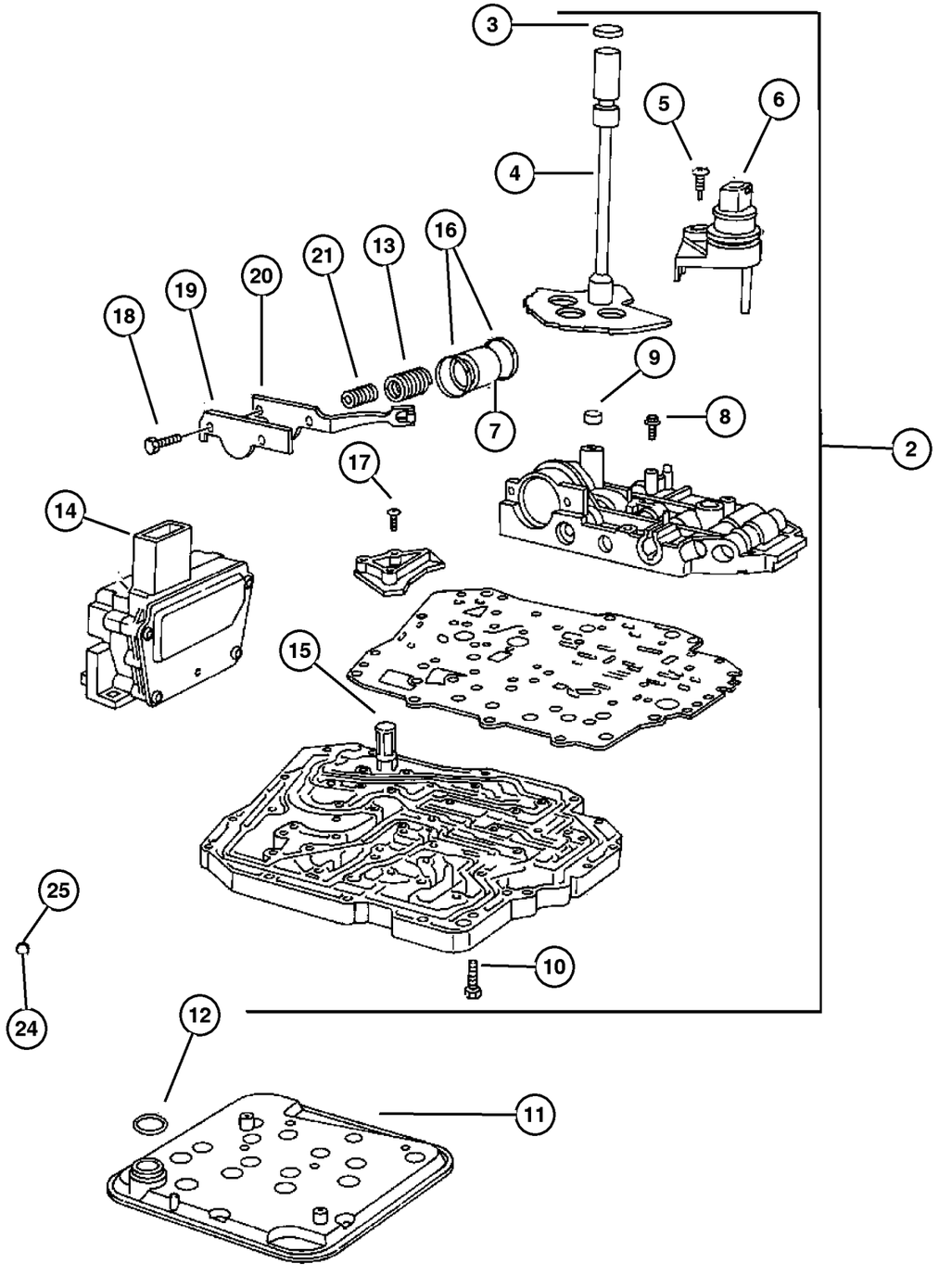

ITEM	PART NUMBER	QTY	LINE	SERIES	BODY	ENGINE	TRANS	TRIM	DESCRIPTION
NOTE:									
Gasket and Seal Package includes all Valve Body Seals and Transmission Filter									
Sales Codes:									
[DG6]=4 Speed Automatic Transmission - [42RLE]									
-1									GASKET AND SEAL PACKAGE, Valve Body
	5101 917AB	1	J, U				DG6		
		1	T				DG6		
2									VALVE BODY
	52854 169AA	1	J, U				DG6		
		1	T				DG6		
3									SEAL, Manual Valve Lever
	4412 836	1	J, U				DG6		
		1	T				DG6		
4									LEVER, Manual Valve
	4539 665	1	J, U				DG6		
		1	T				DG6		
5									SCREW
	6506 245AA	1	J, U				DG6		
		1	T				DG6		
6									SENSOR, Manual Valve Lever
	4659 677AC	1	J, U				DG6		
		1	T				DG6		
7									PISTON, 2nd and 4th Accumulator
	4446 620AC	1	J, U				DG6		
		1	T				DG6		
8									SCREW AND WASHER, Pan Head, M5x.8x25
	6500 215	2	J, U				DG6		
		2	T				DG6		
9									SEAL, Clutch Feed
	4412 291	1	J, U				DG6		
		1	T				DG6		
10									SCREW AND WASHER, Pan Head, M5x.8x25
	6500 215	2	J, U				DG6		
		2	T				DG6		
11									FILTER, Transmission Oil
	52852 913AB	1	J, U				DG6		
		1	T				DG6		
12									O RING, Trans Oil Filter

JEEP LIBERTY (KJ)

SERIES	LINE	BODY	ENGINE	TRANSMISSION
P = Limited	J = LHD (4WD)	74 = 4 Dr (104.3 WB)	ED1,ED0 = 2.4L Power Tech	DDK = 5 Speed HDManual
H = Sport	U = RHD (4WD)		EKG,EK0 = 3.7L Power Tech	DDD = 5 Speed HD Manual
M = Renegade	T = LHD (2WD)		ENJ = 2.5L 4Cyl Turbo Diesel	DG4,DGQ = Multi-Speed Auto
			ENR = 2.8L 4Cyl Turbo Diesel	DG6 = 4 Speed Auto Transm
			EN0 = 4Cyl Turbo Diesel	DG0 = All Automatic Transm
				DBB = All Manual Transm

Valve Body [DG6]
Figure 42RLE-710

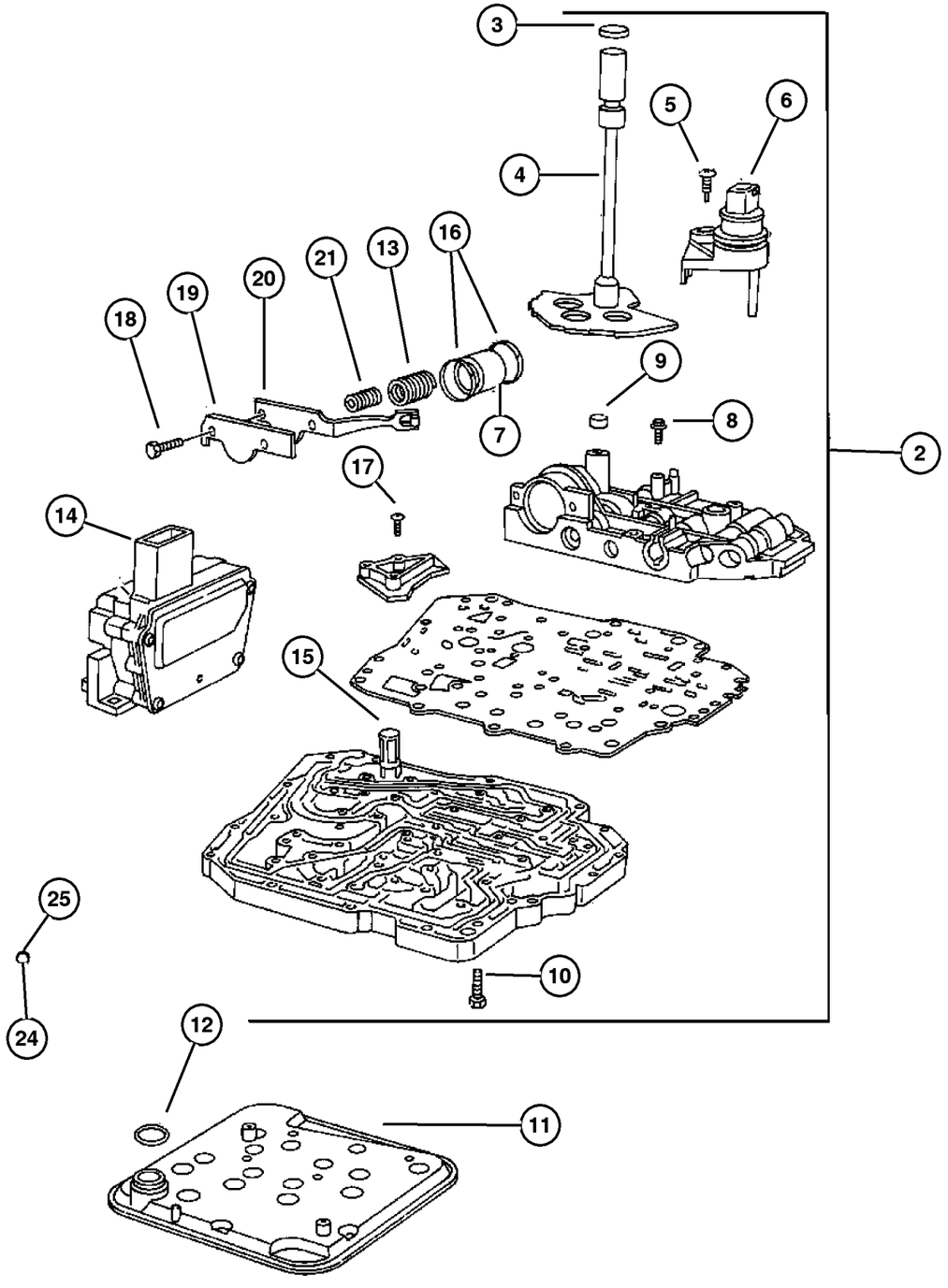

ITEM	PART NUMBER	QTY	LINE	SERIES	BODY	ENGINE	TRANS	TRIM	DESCRIPTION
	6032 780	1	J, U				DG6		
		1	T				DG6		
13									SPRING, Accumulator
	4471 880	1	J, U				DG6		
		1	T				DG6		
14									SOLENOID, Transmission
	4800 171AA	1	J, U				DG6		
		1	T				DG6		
15									SCREEN, Transmission Regulator Valve
	3878 313	1	T				DG6		
		1	J, U				DG6		
16									SEAL, Accumulator, Serviced with piston, Seal Is Bonded, (NOT SERVICED) (Not Serviced)
17									SCREW AND WASHER, Pan Head, M5x.8x25
	6500 215	2	J, U				DG6		
		2	T				DG6		
18									SCREW, Pan Head, M5 x 0.8 x 12.60
	6503 232	7	J, U				DG6		
		7	T				DG6		
19									RETAINER, Transmission 2nd and 4th Accumulator Piston
	4431 711	1	J, U				DG6		
		1	T				DG6		
20									DETENT, Valve Body
	4431 710	1	J, U				DG6		
		1	T				DG6		
21									SPRING, Accumulator
	4471 880	1	J, U				DG6		
		1	T				DG6		
-22									DOWEL, M6x16
	6100 994	1	J, U				DG6		
		1	T				DG6		
-23									VALVE, Transmission Regulator
	4659 081	1	J, U				DG6		
		1	T				DG6		
24									BALL, Check
	5211 8261	4	J, U				DG6		

JEEP LIBERTY (KJ)

SERIES	LINE	BODY	ENGINE	TRANSMISSION
P = Limited	J = LHD (4WD)	74 = 4 Dr (104.3 WB)	ED1,ED0 = 2.4L Power Tech	DDK = 5 Speed HDManual
H = Sport	U = RHD (4WD)		EKG,EK0 = 3.7L Power Tech	DDD = 5 Speed HD Manual
M = Renegade	T = LHD (2WD)		ENJ = 2.5L 4Cyl Turbo Diesel	DG4,DGQ = Multi-Speed Auto
			ENR = 2.8L 4Cyl Turbo Diesel	DG6 = 4 Speed Auto Transm
			EN0 = 4Cyl Turbo Diesel	DG0 = All Automatic Transm
				DBB = All Manual Transm

Valve Body [DG6]
Figure 42RLE-710

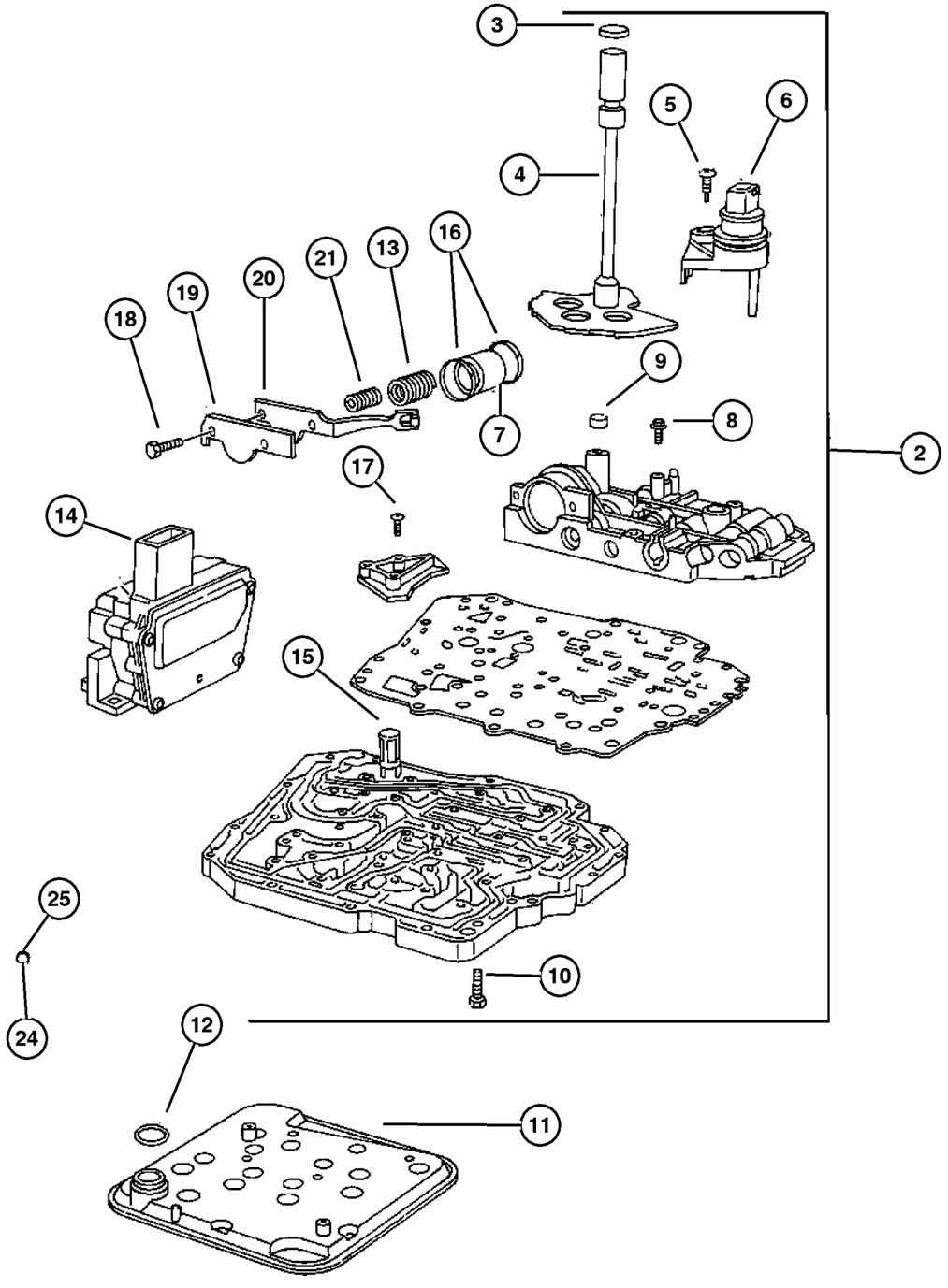

ITEM	PART NUMBER	QTY	LINE	SERIES	BODY	ENGINE	TRANS	TRIM	DESCRIPTION
		4	T				DG6		
25									BALL, Valve Body Check
	0104 918	1	T				DG6		
		1	J, U				DG6		

JEEP LIBERTY (KJ)

SERIES	LINE	BODY	ENGINE	TRANSMISSION
P = Limited	J = LHD (4WD)	74 = 4 Dr (104.3 WB)	ED1,ED0 = 2.4L Power Tech	DDK = 5 Speed HDManual
H = Sport	U = RHD (4WD)		EKG,EK0 = 3.7L Power Tech	DDD = 5 Speed HD Manual
M = Renegade	T = LHD (2WD)		ENJ = 2.5L 4Cyl Turbo Diesel	DG4,DGQ = Multi-Speed Auto
			ENR = 2.8L 4Cyl Turbo Diesel	DG6 = 4 Speed Auto Transm
			EN0 = 4Cyl Turbo Diesel	DG0 = All Automatic Transm
				DBB = All Manual Transm

AR = Use as required - = Non illustrated part # = New this model year

September 30, 2003

« RETURN TO GROUP INDEX

Accumulator Pistons & Springs [DG6]
Figure 42RLE-720

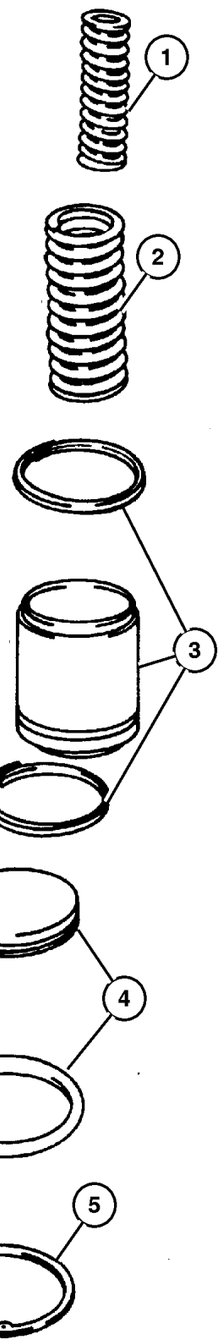

ITEM	PART NUMBER	QTY	LINE	SERIES	BODY	ENGINE	TRANS	TRIM	DESCRIPTION
NOTE:									
Sales Codes:									
[DG6]=4 Speed Automatic Transmission - [42RLE]									
1									SPRING, Accumulator
	4567 575	1	J, U				DG6		
		1	T				DG6		
2									SPRING, Accumulator
	4471 880	1	J, U				DG6		
		1	T				DG6		
3									PISTON, 2nd and 4th Accumulator
	4446 620AC	1	J, U				DG6		
		1	T				DG6		
4									COVER, Accumulator
	4431 617AB	1	T				DG6		
		1	J, U				DG6		
5									SNAP RING
	6501 695	1	J, U				DG6		
		1	T				DG6		
-6									COVER, Accumulator
	4431 617AB	1	J, U				DG6		
		1	T				DG6		

JEEP LIBERTY (KJ)

SERIES	LINE	BODY	ENGINE	TRANSMISSION
P = Limited	J = LHD (4WD)	74 = 4 Dr (104.3 WB)	ED1,ED0 = 2.4L Power Tech	DDK = 5 Speed HDManual
H = Sport	U = RHD (4WD)		EKG,EK0 = 3.7L Power Tech	DDD = 5 Speed HD Manual
M = Renegade	T = LHD (2WD)		ENJ = 2.5L 4Cyl Turbo Diesel	DG4,DGQ = Multi-Speed Auto
			ENR = 2.8L 4Cyl Turbo Diesel	DG6 = 4 Speed Auto Transm
			EN0 = 4Cyl Turbo Diesel	DG0 = All Automatic Transm
				DBB = All Manual Transm

Parking Sprag [DG6]
Figure 42RLE-730

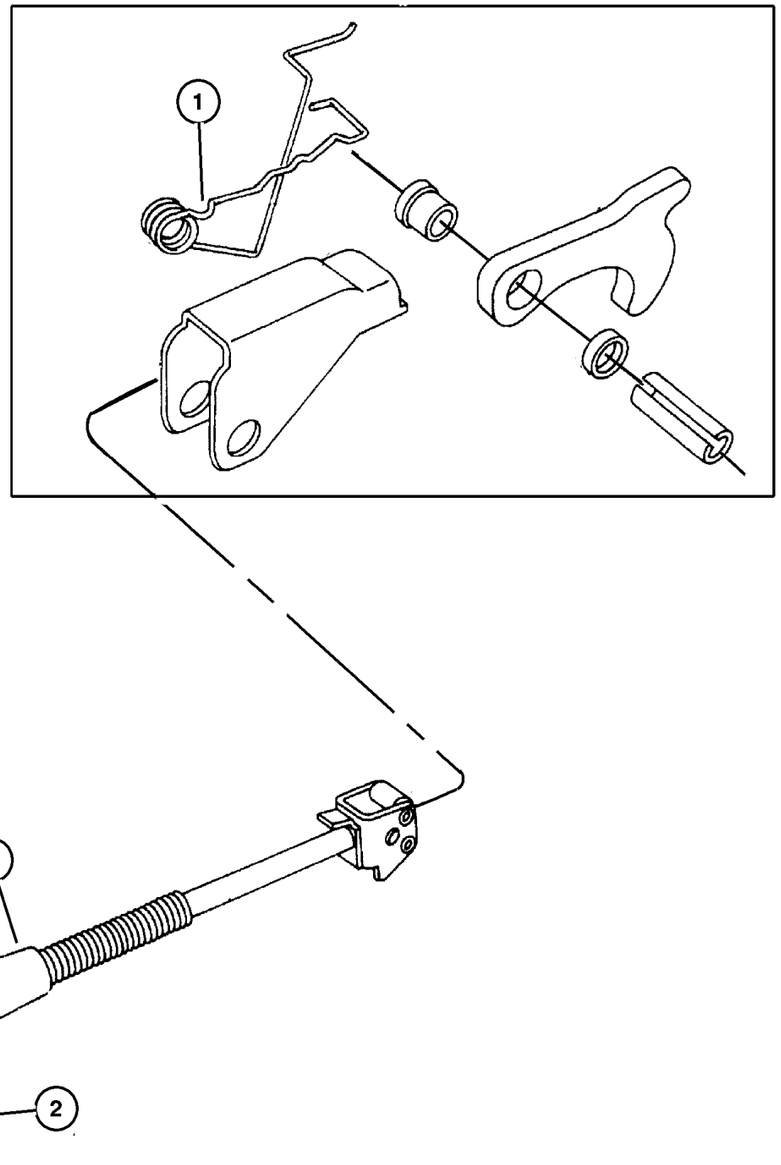

ITEM	PART NUMBER	QTY	LINE	SERIES	BODY	ENGINE	TRANS	TRIM	DESCRIPTION
NOTES:									
Sales Codes									
[DG6]= 4 Speed Automatic Transmission - [42RLE]									
1									SPRING, Parking Sprag Return
	52852 949AA	1	J, U				DG6		
		1	T				DG6		
2									SNAP RING, Rod
	6035 256	1	J, U				DG6		
		1	T				DG6		
-3									SCREW AND WASHER, Park Sprag Shaft, M5X0.8X12
	6503 384	1	J, U				DG6		
		1	T				DG6		
4									SHAFT, Parking Sprag
	4431 999	1	J, U				DG6		
		1	T				DG6		
-5									ROD, Parking Sprag
	52852 956AA	1	J, U				DG6		
		1	T				DG6		
-6									BRACKET, Parking Sprag
	52852 948AA	1	J, U				DG6		
		1	T				DG6		

JEEP LIBERTY (KJ)

SERIES	LINE	BODY	ENGINE	TRANSMISSION
P = Limited	J = LHD (4WD)	74 = 4 Dr (104.3 WB)	ED1,ED0 = 2.4L Power Tech	DDK = 5 Speed HDManual
H = Sport	U = RHD (4WD)		EKG,EK0 = 3.7L Power Tech	DDD = 5 Speed HD Manual
M = Renegade	T = LHD (2WD)		ENJ = 2.5L 4Cyl Turbo Diesel	DG4,DGQ = Multi-Speed Auto
			ENR = 2.8L 4Cyl Turbo Diesel	DG6 = 4 Speed Auto Transm
			EN0 = 4Cyl Turbo Diesel	DG0 = All Automatic Transm
				DBB = All Manual Transm

Gearshift Control [DG6]
Figure 42RLE-1210

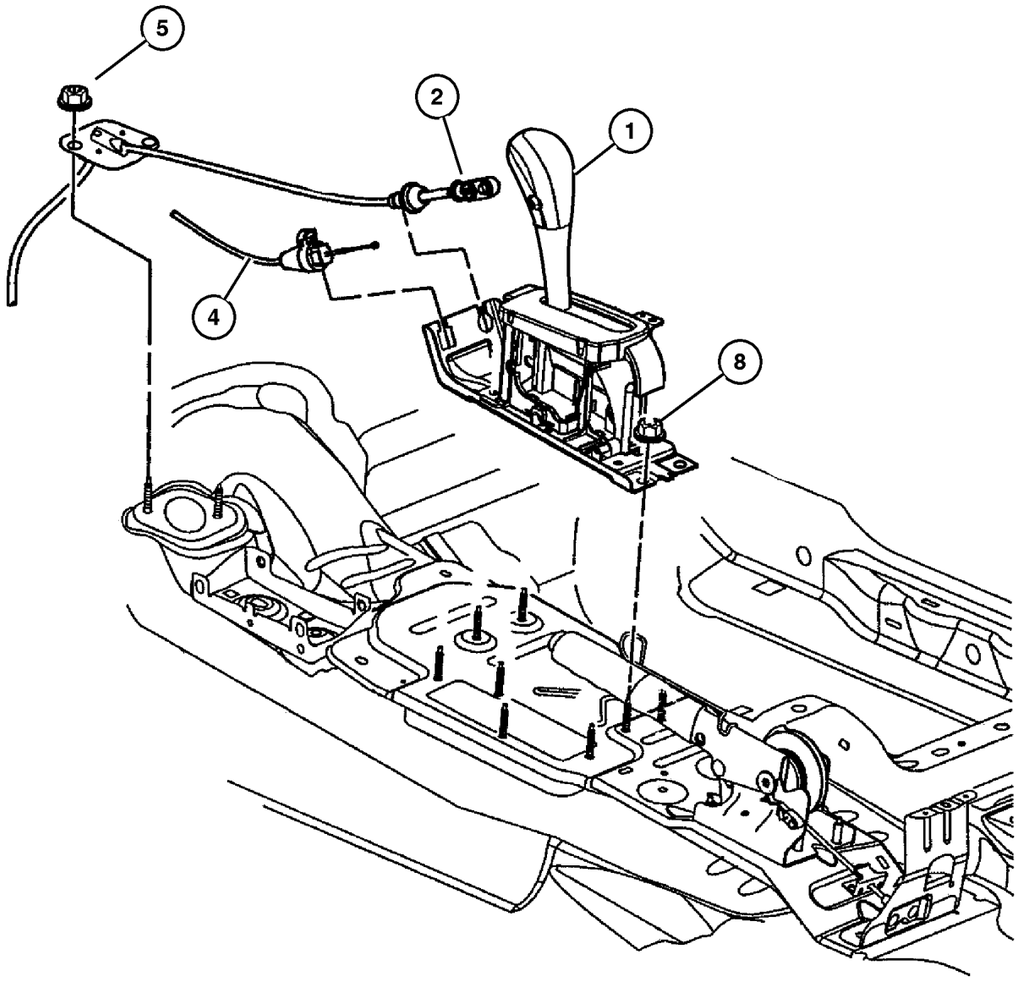

ITEM	PART NUMBER	QTY	LINE	SERIES	BODY	ENGINE	TRANS	TRIM	DESCRIPTION
NOTES:									
Sales Codes									
[DG0] = All Automatic Transmjssions									
1									HOUSING AND LEVER, Shifter
	52104 312AF	1	J, T				DG0		
	52104 313AF	1	U				DG0		
2	52109 748AA	1					DG6		CABLE, Gearshift Control
-3	52128 867AA	1					DG6		BRACKET, Shift Cable
4	52104 319AC	1					DG0		CABLE, Gearshift Lock
5	6100 047	2							NUT AND WASHER, Hex Nut-Coned Washer, M6 x 1.00
-6	6101 767	2					DG6		SCREW AND WASHER, M8x1.25x25
-7	52109 749AA	1				EK0	DG6		LEVER, Manual Control
8	3420 1358	4					DG0		NUT AND WASHER, Hex Nut-Sealing Washer, M6 x 1.00

JEEP LIBERTY (KJ)

SERIES	LINE	BODY	ENGINE	TRANSMISSION
P = Limited	J = LHD (4WD)	74 = 4 Dr (104.3 WB)	ED1,ED0 = 2.4L Power Tech	DDK = 5 Speed HDManual
H = Sport	U = RHD (4WD)		EKG,EK0 = 3.7L Power Tech	DDD = 5 Speed HD Manual
M = Renegade	T = LHD (2WD)		ENJ = 2.5L 4Cyl Turbo Diesel	DG4,DGQ = Multi-Speed Auto
			ENR = 2.8L 4Cyl Turbo Diesel	DG6 = 4 Speed Auto Transm
			EN0 = 4Cyl Turbo Diesel	DG0 = All Automatic Transm
				DBB = All Manual Transm

AR = Use as required - = Non illustrated part # = New this model year

September 30, 2003

« RETURN TO GROUP INDEX

Group – 5–45RFE

Automatic Transmission Multi–Speed

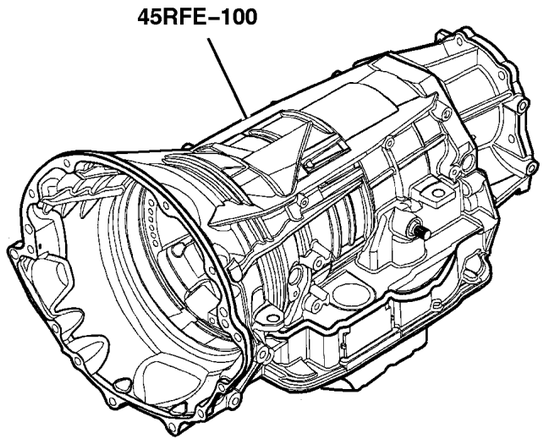

5–45RFE–100 **Transmission Assembly** 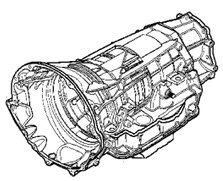	**5–45RFE–200** **Case and Extension** 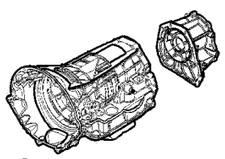	**5–45RFE–300** **Oil Pump** 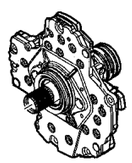	**5–45RFE–400** **Gear Train** 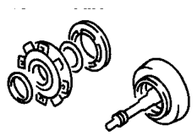
5–45RFE–700 **Valve Body** 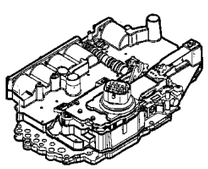	**5–45RFE–1200** **Gearshift Controls** 	**5–45RFE–1300** **Seal and Shim Packages** 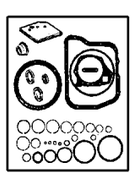	

GROUP 5-45RFE - Automatic Transmission Multi-Speed

Illustration Title — Group-Fig. No.

Transmission Assembly
Transmission Assembly [DGQ] . . . Fig. 5-45RFE-110

Case and Extension
Transmission Mounting [DGQ] . . . Fig. 5-45RFE-210
Adapter [DGQ] . . . Fig. 5-45RFE-220
Case & Related Parts [DGQ] . . . Fig. 5-45RFE-230

Oil Pump
Oil Pump [DGQ] . . . Fig. 5-45RFE-310

Gear Train
Input Shaft [DGQ] . . . Fig. 5-45RFE-410
Underdrive [DGQ] . . . Fig. 5-45RFE-420
Overdrive [DGQ] . . . Fig. 5-45RFE-430
2 / 4 Clutch Retainer [DGQ] . . . Fig. 5-45RFE-440
Input / Reverse Planetary [DGQ] . . . Fig. 5-45RFE-450
Reaction Annulus / Sun Gear [DGQ] . . . Fig. 5-45RFE-460
Low / Reverse Clutch [DGQ] . . . Fig. 5-45RFE-470

Valve Body
Valve Body [DGQ] . . . Fig. 5-45RFE-710
Parking Sprag [DGQ] . . . Fig. 5-45RFE-730

Gearshift Controls
Gearshift Controls [DGQ] . . . Fig. 5-45RFE-1210

Seal and Shim Packages
L / R Clutch . . . Fig. 5-45RFE-1310
Input Clutch Plate [DGQ] . . . Fig. 5-45RFE-1320
O / H [DGQ] . . . Fig. 5-45RFE-1330
Input Clutch [DGQ] . . . Fig. 5-45RFE-1340
Planetary Plate [DGQ] . . . Fig. 5-45RFE-1350
2 & 4 Clutch [DGQ] . . . Fig. 5-45RFE-1360

Transmission Assembly [DGQ]
Figure 5-45RFE-110

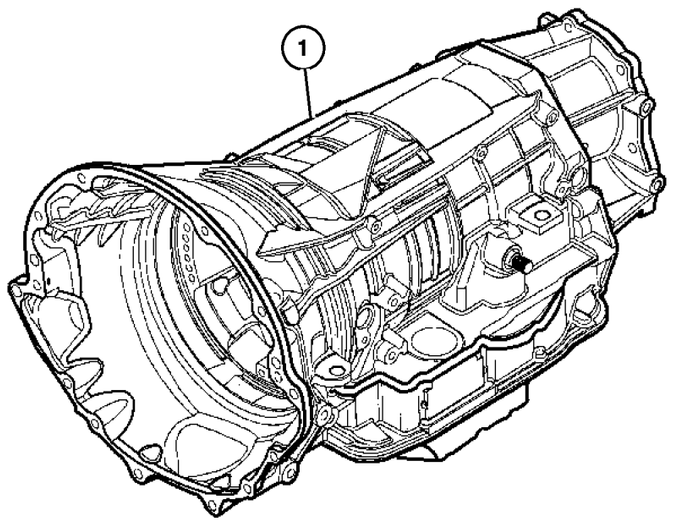

ITEM	PART NUMBER	QTY	LINE	SERIES	BODY	ENGINE	TRANS	TRIM	DESCRIPTION
NOTE:									
Sales Codes:									
[DGQ]=5 Speed Automatic Transmission - [5-45RFE]									
[EN0]=All 4/5 Cyl. Turbo Diesel Engines									
1	5093 121AA	1	J, U			EN0	DGQ		TRANSMISSION KIT, Automatic
-2	4736 582	1	J, U			EN0	DGQ		TORQUE CONVERTER

JEEP LIBERTY (KJ)

SERIES	LINE	BODY	ENGINE	TRANSMISSION
P = Limited	J = LHD (4WD)	74 = 4 Dr (104.3 WB)	ED1,ED0 = 2.4L Power Tech	DDK = 5 Speed HDManual
H = Sport	U = RHD (4WD)		EKG,EK0 = 3.7L Power Tech	DDD = 5 Speed HD Manual
M = Renegade	T = LHD (2WD)		ENJ = 2.5L 4Cyl Turbo Diesel	DG4,DGQ = Multi-Speed Auto
			ENR = 2.8L 4Cyl Turbo Diesel	DG6 = 4 Speed Auto Transm
			EN0 = 4Cyl Turbo Diesel	DG0 = All Automatic Transm
				DBB = All Manual Transm

Transmission Mounting [DGQ]
Figure 5-45RFE-210

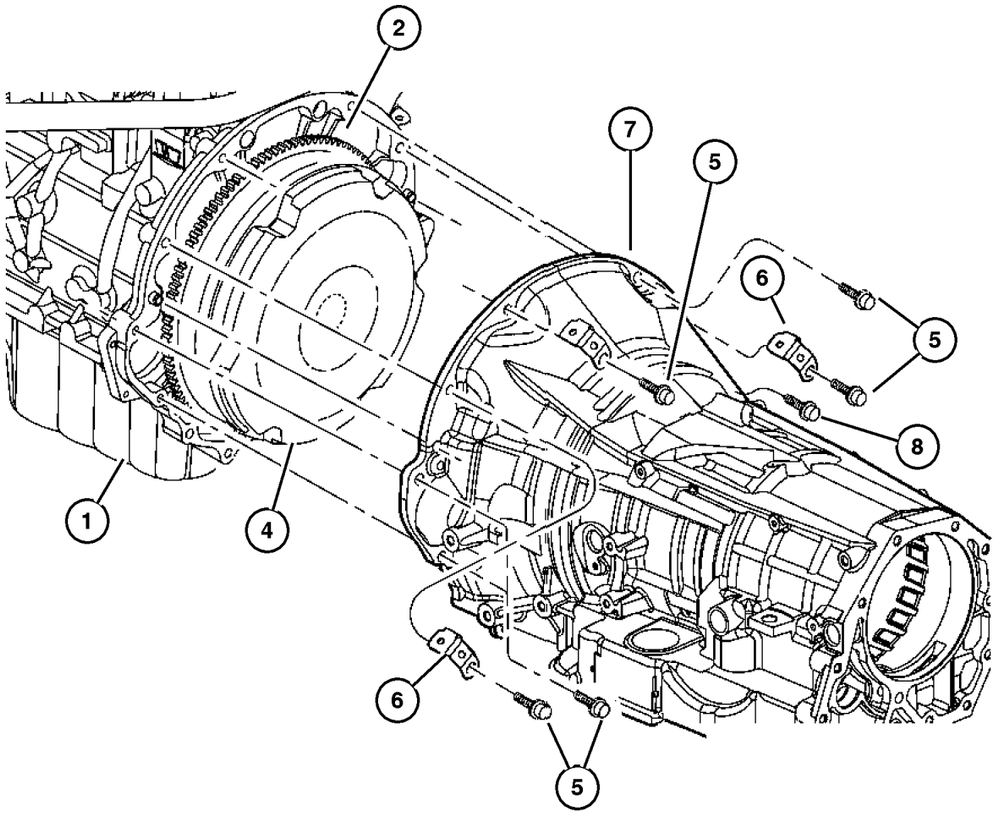

ITEM	PART NUMBER	QTY	LINE	SERIES	BODY	ENGINE	TRANS	TRIM	DESCRIPTION
NOTE:									
Sales Codes:									
[DGQ]=5 Speed Automatic Transmission - [5-45RFE]									
[EN0]=All 4/5 Cyl. Turbo Diesel Engines									
1									ENGINE, (NOT SERVICED) (Not Serviced)
2	5093 958AA	1				EN0	DG0		PLATE, Torque Converter Drive
-3	5014 969AA	1				EN0	DG0		BOLT, Flexplate
4	4736 582	1	J, U			EN0	DGQ		TORQUE CONVERTER
5	6022 266	6				EN0	DGQ		SCREW, Hex Head, .375-16x1.5
6	56041 379AA	1				EK0	DG6		CLIP, Housing
7	5093 121AA	1	J, U			EN0	DGQ		TRANSMISSION KIT, Automatic, Includes Torque Converter
8	6036 385AA	1				EN0	DGQ		SCREW AND WASHER, Hex Head, .437-14x2.00

JEEP LIBERTY (KJ)

SERIES	LINE	BODY	ENGINE	TRANSMISSION
P = Limited	J = LHD (4WD)	74 = 4 Dr (104.3 WB)	ED1,ED0 = 2.4L Power Tech	DDK = 5 Speed HDManual
H = Sport	U = RHD (4WD)		EKG,EK0 = 3.7L Power Tech	DDD = 5 Speed HD Manual
M = Renegade	T = LHD (2WD)		ENJ = 2.5L 4Cyl Turbo Diesel	DG4,DGQ = Multi-Speed Auto
			ENR = 2.8L 4Cyl Turbo Diesel	DG6 = 4 Speed Auto Transm
			EN0 = 4Cyl Turbo Diesel	DG0 = All Automatic Transm
				DBB = All Manual Transm

Adapter [DGQ]
Figure 5-45RFE-220

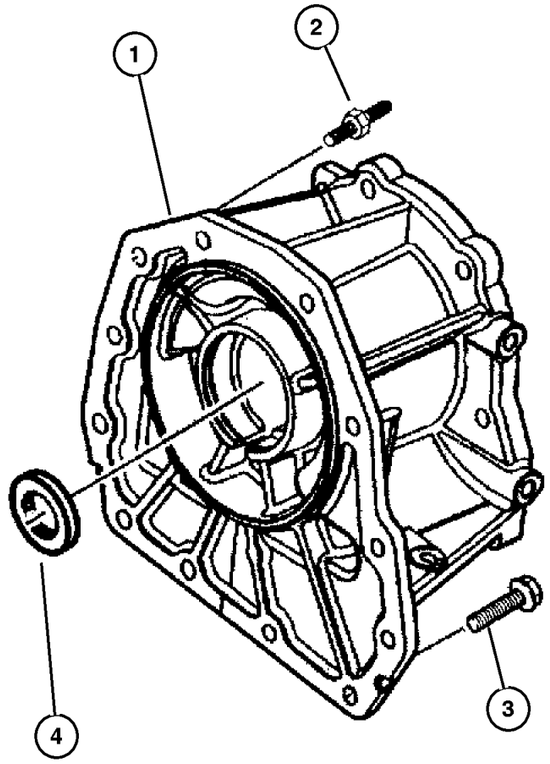

ITEM	PART NUMBER	QTY	LINE	SERIES	BODY	ENGINE	TRANS	TRIM	DESCRIPTION
NOTE:									
Sales Codes:									
[DGQ]=5 Speed Automatic Transmission - [5-45RFE]									
[EN0]=All 4/5 Cyl. Turbo Diesel Engines									
1	52104 357AA	1	J, U			EN0	DGQ		ADAPTER, Transfer Case
2	6505 064AA	2	J, U			EN0	DGQ		STUD, M10x1.5x62
3	6504 774	10	J, U			EN0	DGQ		SCREW AND WASHER, Hex Head, M10x1.5x37
4	4799 090	1	J, U			EN0	DGQ		SEAL, Input

JEEP LIBERTY (KJ)

SERIES	LINE	BODY	ENGINE	TRANSMISSION
P = Limited	J = LHD (4WD)	74 = 4 Dr (104.3 WB)	ED1,ED0 = 2.4L Power Tech	DDK = 5 Speed HDManual
H = Sport	U = RHD (4WD)		EKG,EK0 = 3.7L Power Tech	DDD = 5 Speed HD Manual
M = Renegade	T = LHD (2WD)		ENJ = 2.5L 4Cyl Turbo Diesel	DG4,DGQ = Multi-Speed Auto
			ENR = 2.8L 4Cyl Turbo Diesel	DG6 = 4 Speed Auto Transm
			EN0 = 4Cyl Turbo Diesel	DG0 = All Automatic Transm
				DBB = All Manual Transm

Case & Related Parts [DGQ]
Figure 5-45RFE-230

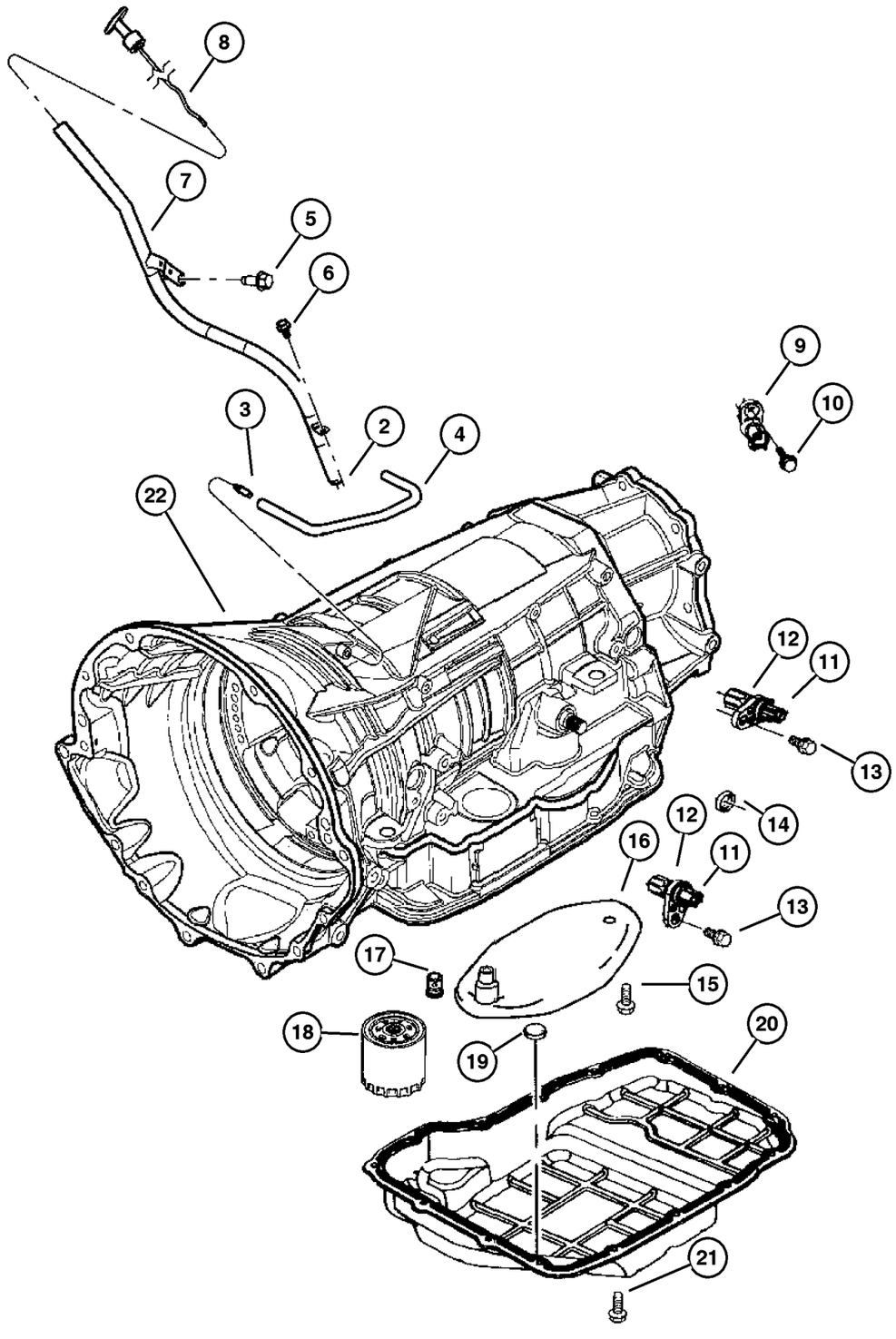

ITEM	PART NUMBER	QTY	LINE	SERIES	BODY	ENGINE	TRANS	TRIM	DESCRIPTION
NOTE:									
Sales Codes:									
[DGQ]=5 Speed Automatic Transmission - [5-45RFE]									
[EN0]=All 4/5 Cyl. Turbo Diesel Engines									
-1	5014 221AJ	1	J, U			EN0	DGQ		OVERHAUL PACKAGE, Transmission
2	4810 021	1	J, U			EN0	DGQ		GROMMET
3	4799 861AB	1	J, U			EN0	DGQ		VENT, Transmission
4	53032 457AA	1					DG4		TUBE, Vent
5	6022 266	1	J, U			EN0	DGQ		SCREW, Hex Head, .375-16x1.5
6	6501 979	1							SCREW AND WASHER, Hex Head, M6x1x17
7	53013 497AC	1				EN0	DG0		TUBE, Transmission Oil Filler
8	53013 719AA	1					DGQ		INDICATOR, Transmission Fluid Level
9	4799 758AC	1	J, U			EN0	DGQ		TRANSDUCER, Pressure Sensor, Line Pressure
10	6101 221	1	J, U			EN0	DGQ		SCREW, Line Pressure Sensor
11	4799 061	2	J, U			EN0	DGQ		SENSOR, Transmission Output Speed, Input & Output Sensor
12	4799 062	2	J, U			EN0	DGQ		O RING
13	6101 331	2	J, U			EN0	DGQ		BOLT, M6x1.00x20
14	4799 346	1	J, U			EN0	DGQ		SEAL, Manual Lever Shaft
15	6503 232	1	J, U			EN0	DGQ		SCREW, Pan Head, M5 x 0.8 x 12.60, Oil Filter To Transfer Plate
16	5013 470AC	1	J, U			EN0	DGQ		FILTER PACKAGE, Transmission Oil
17	4799 681	1	J, U			EN0	DGQ		VALVE, Flow Control
18	4799 662	1	J, U			EN0	DGQ		FILTER, Transmission Oil
19	4446 728	1	J, U			EN0	DGQ		MAGNET, Transmission
20	5013 681AA	1	J, U			EN0	DGQ		PAN, Transmission Oil
21	6101 221	15	J, U			EN0	DGQ		SCREW
22									CASE, Transmission, Serviced In Assembly, (NOT SERVICED) (Not Serviced)
-23	4799 433AB	2	J, U			EN0	DGQ		NUT, Transmission Case, Cooler Line To Case
-24	6505 262AA	6	J, U			EN0	DGQ		SCREW, Pan Head Locking, M5x0.8x30.00, Solenoid To Cover Plate

JEEP LIBERTY (KJ)

SERIES	LINE	BODY	ENGINE	TRANSMISSION
P = Limited	J = LHD (4WD)	74 = 4 Dr (104.3 WB)	ED1,ED0 = 2.4L Power Tech	DDK = 5 Speed HDManual
H = Sport	U = RHD (4WD)		EKG,EK0 = 3.7L Power Tech	DDD = 5 Speed HD Manual
M = Renegade	T = LHD (2WD)		ENJ = 2.5L 4Cyl Turbo Diesel	DG4,DGQ = Multi-Speed Auto
			ENR = 2.8L 4Cyl Turbo Diesel	DG6 = 4 Speed Auto Transm
			EN0 = 4Cyl Turbo Diesel	DG0 = All Automatic Transm
				DBB = All Manual Transm

Oil Pump [DGQ]
Figure 5-45RFE-310

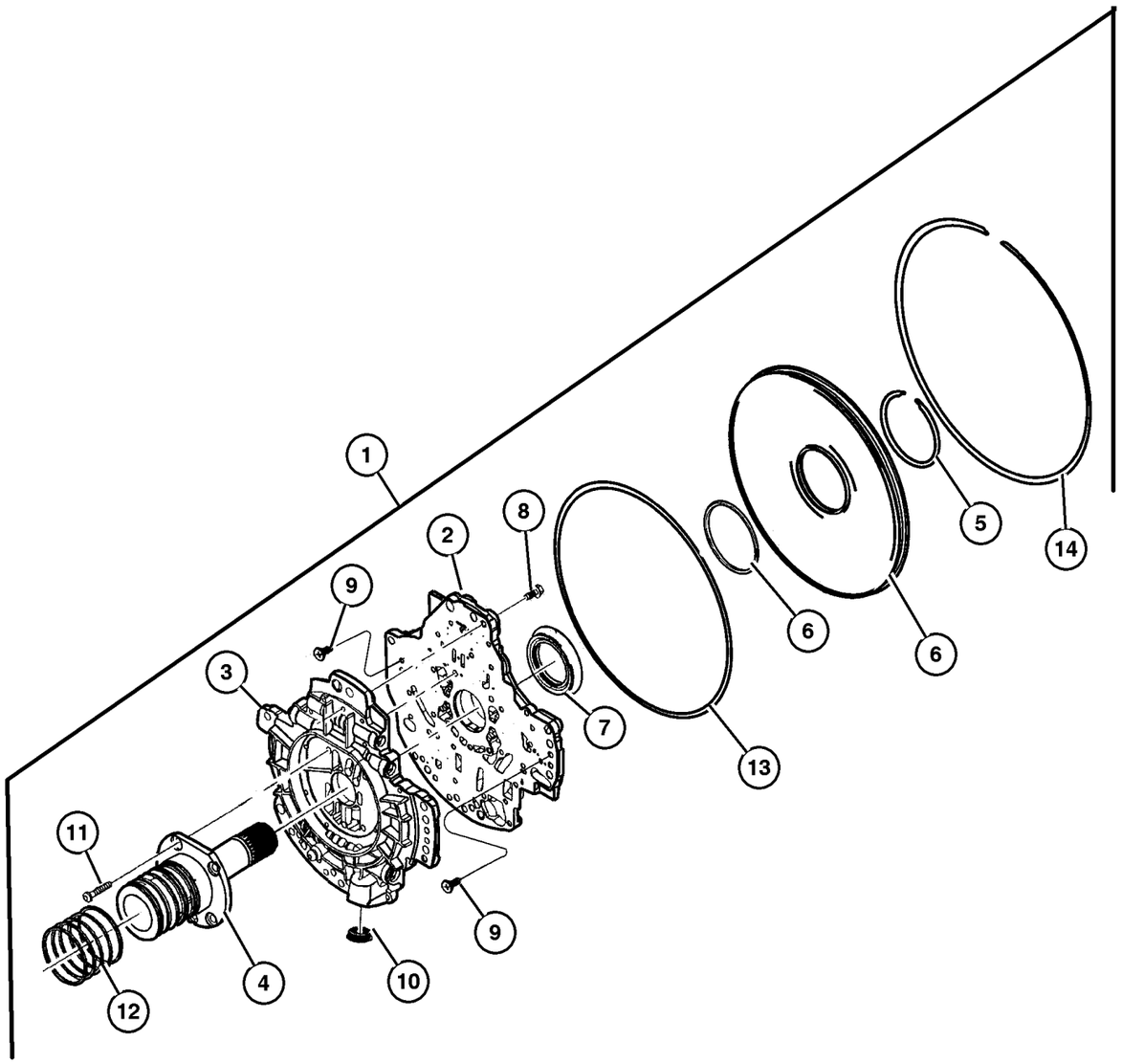

ITEM	PART NUMBER	QTY	LINE	SERIES	BODY	ENGINE	TRANS	TRIM	DESCRIPTION
NOTE:									
Sales Codes:									
[DGQ]=5 Speed Automatic Transmission - [5-45RFE]									
[EN0]=All 4 Cylinder Turbo Diesel Engines									
1	5073 004AB	1	J, U			EN0	DGQ		PUMP PACKAGE, Transmission
2									HOUSING, Pump, (NOT SERVICED) (Not Serviced)
3									BODY, Oil Pump Valve, (NOT SERVICED) (Not Serviced)
4									SUPPORT, Reaction Shaft, (NOT SERVICED) (Not Serviced)
5	4799 082	1	J, U			EN0	DGQ		SNAP RING, Transmission
6	4799 609	1	J, U			EN0	DGQ		COVER, Oil Pump
7	4617 919	1	J, U			EN0	DGQ		SEAL, Transmission Oil Pump
8	6500 215	24	J, U			EN0	DGQ		SCREW AND WASHER, Pan Head, M5x.8x25
9	6503 232	2	J, U			EN0	DGQ		SCREW, Pan Head, M5 x 0.8 x 12.60
10	4799 964AB	1	J, U			EN0	DGQ		SEAL, Oil Pump
11	6504 661	5	J, U			EN0	DGQ		SCREW, Button Head
12	4799 056	5	J, U			EN0	DGQ		RING, Transmission
13	4799 003	1	J, U			EN0	DGQ		O RING, Oil Pump, .
14	4799 005	1	J, U			EN0	DGQ		SNAP RING, Transmission
-15	4736 547	1	J, U			EN0	DGQ		SEAL, Torque Converter Hub

JEEP LIBERTY (KJ)

SERIES	LINE	BODY	ENGINE	TRANSMISSION
P = Limited	J = LHD (4WD)	74 = 4 Dr (104.3 WB)	ED1,ED0 = 2.4L Power Tech	DDK = 5 Speed HDManual
H = Sport	U = RHD (4WD)		EKG,EK0 = 3.7L Power Tech	DDD = 5 Speed HD Manual
M = Renegade	T = LHD (2WD)		ENJ = 2.5L 4Cyl Turbo Diesel	DG4,DGQ = Multi-Speed Auto
			ENR = 2.8L 4Cyl Turbo Diesel	DG6 = 4 Speed Auto Transm
			EN0 = 4Cyl Turbo Diesel	DG0 = All Automatic Transm
				DBB = All Manual Transm

Input Shaft [DGQ]
Figure 5-45RFE-410

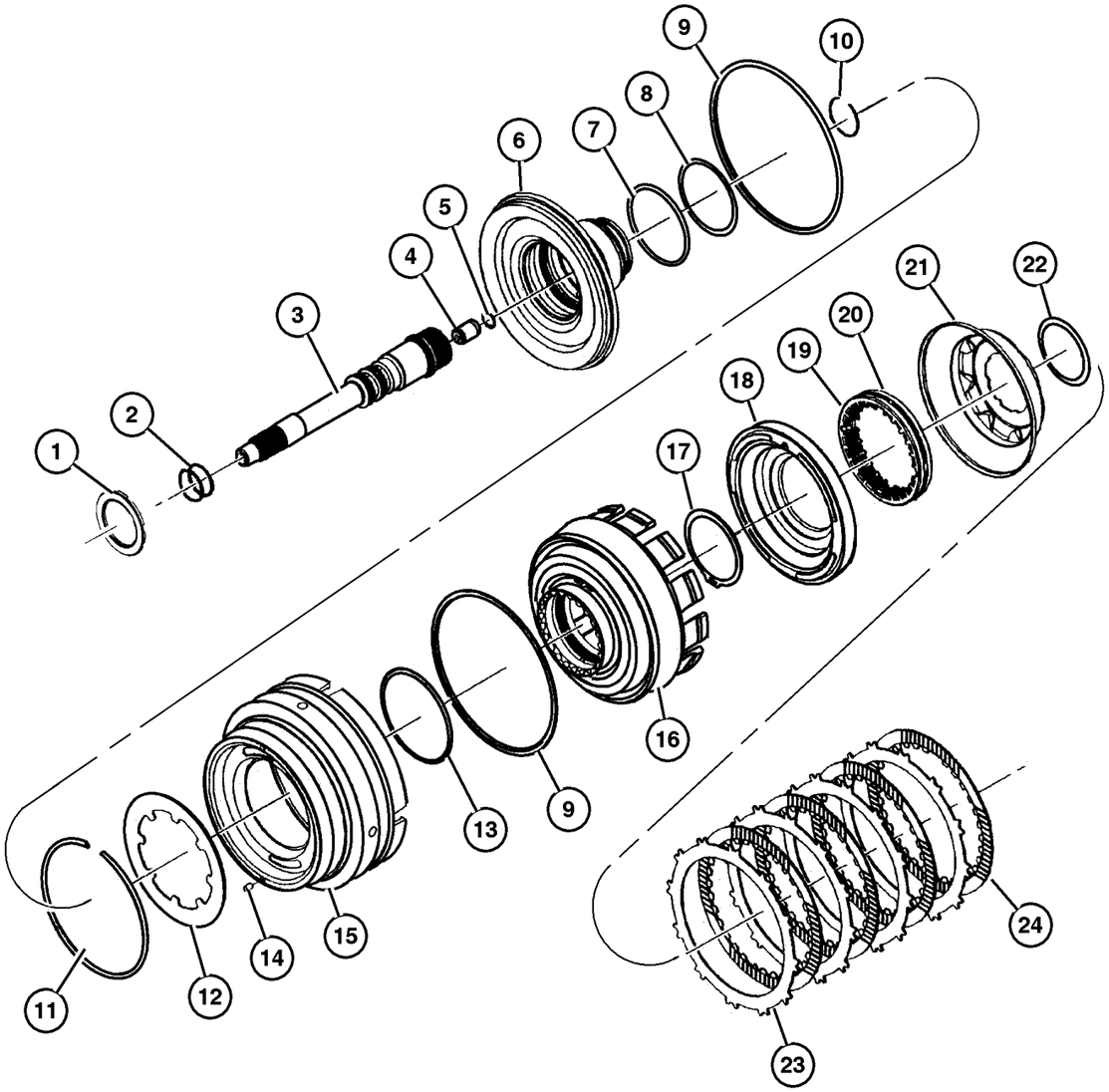

ITEM	PART NUMBER	QTY	LINE	SERIES	BODY	ENGINE	TRANS	TRIM	DESCRIPTION
NOTE:									
Sales Codes:									
[DGQ]=5 Speed Automatic Transmission - [5-45RFE]									
[EN0]=All 4/5 Cylinder Turbo Diesel Engines									
1	4799 469	1	J, U			EN0	DGQ		THRUST BEARING, Needle Roller
2	4799 539	2	J, U			EN0	DGQ		SEAL, Input Shaft, PKG 05013090AA
3	4799 537	1	J, U			EN0	DGQ		SHAFT, Input
4	4799 974AA	1	J, U			EN0	DGQ		CHECK VALVE, Transmission
5	4799 978AA	1	J, U			EN0	DGQ		SNAP RING
6	4799 536AC	1	J, U			EN0	DGQ		HUB, Input Clutch
7	4799 073	1	J, U			EN0	DGQ		O RING, Transmission Clutch, PKG 05013090AA
8									O RING, Transmission Clutch, PKG 05013090AA
	4799 073	1	J, U			EN0	DGQ		Input Clutch Hub [LARGE]
	4799 755	1	J, U			EN0	DGQ		Input Hub To Retainer [SMALL]
9	4799 090	1	J, U			EN0	DGQ		SEAL, Input, PKG 05013090AA
10	4799 538	1	J, U			EN0	DGQ		SNAP RING, Input Shaft
11	4799 088	1	J, U			EN0	DGQ		SNAP RING, Transmission
12	4799 087	1	J, U			EN0	DGQ		SPRING, Piston Return
13	4799 089	1	J, U			EN0	DGQ		O RING, Reverse & O/Drive Clutch Piston, Transmission, PKG 05013090AA
14	4531 903	1	J, U			EN0	DGQ		FILTER, Reverse And O/D Clutch
15	5073 525AA	AR	J, U			EN0	DGQ		PISTON, Reverse and Overdrive
16	4799 648	1	J, U			EN0	DGQ		RETAINER, Transmission Input Clutch
17	4799 247	1	J, U			EN0	DGQ		SNAP RING
18	4799 650	1	J, U			EN0	DGQ		PISTON, Underdrive
19	4746 155	1	J, U			EN0			BEARING, Input Gear
20	4799 101	1	J, U			EN0	DGQ		SPRING, Undredrive Piston, PKG 05013090AA
21	4799 652	1	J, U			EN0	DGQ		PISTON, Underdrive
22	4799 103	1	J, U			EN0	DGQ		SNAP RING, Transmission, PKG 05013090AA
23									PLATE, PKG 05013090AA, (NOT SERVICED) (Not Serviced)
24									DISC, Clutch, PKG 05013090AA, (NOT SERVICED) (Not Serviced)
-25									SNAP RING

JEEP LIBERTY (KJ)

SERIES	LINE	BODY	ENGINE	TRANSMISSION
P = Limited	J = LHD (4WD)	74 = 4 Dr (104.3 WB)	ED1,ED0 = 2.4L Power Tech	DDK = 5 Speed HDManual
H = Sport	U = RHD (4WD)		EKG,EK0 = 3.7L Power Tech	DDD = 5 Speed HD Manual
M = Renegade	T = LHD (2WD)		ENJ = 2.5L 4Cyl Turbo Diesel	DG4,DGQ = Multi-Speed Auto
			ENR = 2.8L 4Cyl Turbo Diesel	DG6 = 4 Speed Auto Transm
			EN0 = 4Cyl Turbo Diesel	DG0 = All Automatic Transm
				DBB = All Manual Transm

AR = Use as required - = Non illustrated part # = New this model year

September 30, 2003

« RETURN TO GROUP INDEX »

Input Shaft [DGQ]
Figure 5-45RFE-410

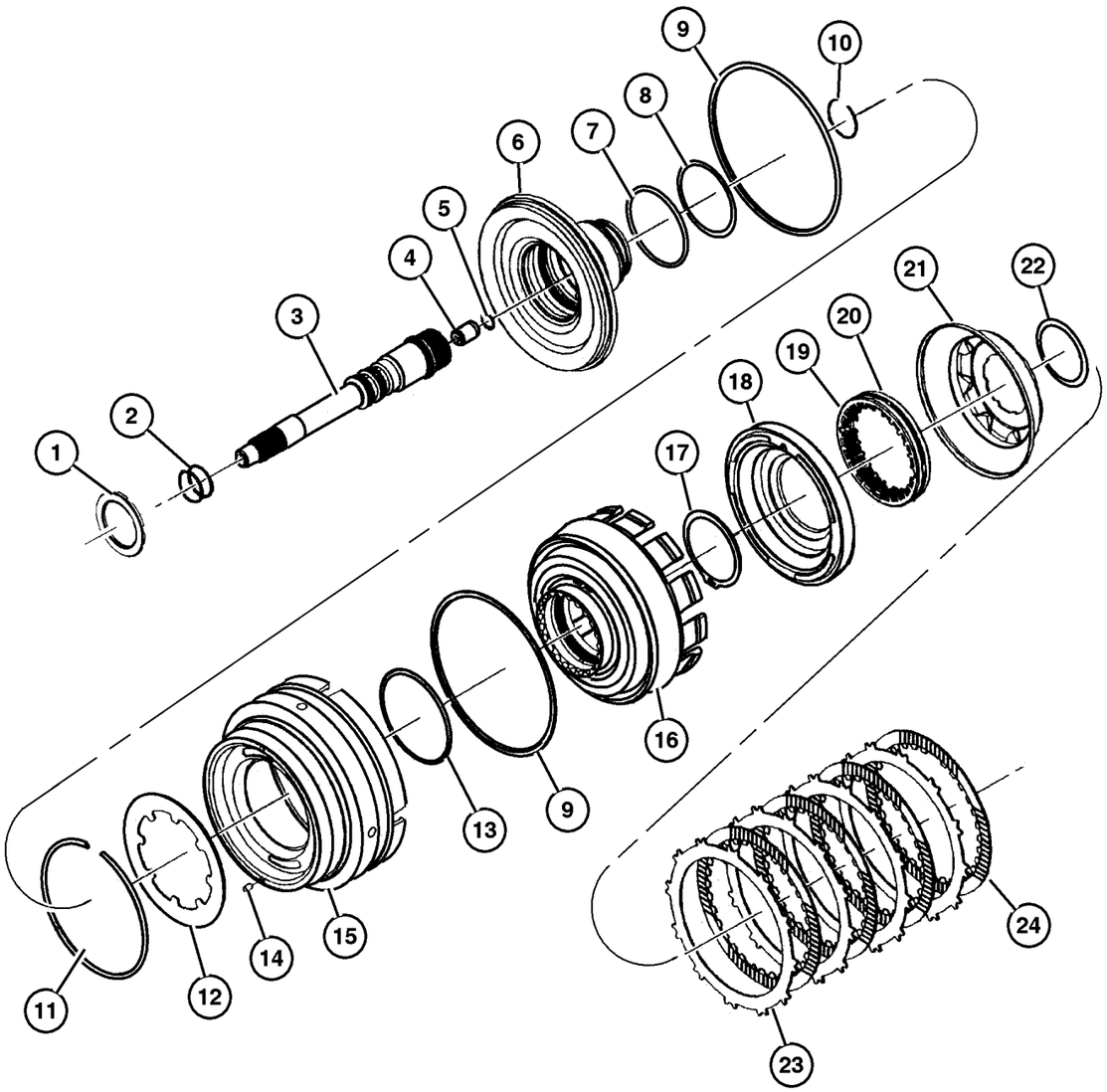

ITEM	PART NUMBER	QTY	LINE	SERIES	BODY	ENGINE	TRANS	TRIM	DESCRIPTION
	5072 304AA	1	J, U						
	4799 097	1	J, U			EN0	DGQ		Input Retainer To Hub

JEEP LIBERTY (KJ)

SERIES	LINE	BODY	ENGINE	TRANSMISSION
P = Limited	J = LHD (4WD)	74 = 4 Dr (104.3 WB)	ED1,ED0 = 2.4L Power Tech	DDK = 5 Speed HDManual
H = Sport	U = RHD (4WD)		EKG,EK0 = 3.7L Power Tech	DDD = 5 Speed HD Manual
M = Renegade	T = LHD (2WD)		ENJ = 2.5L 4Cyl Turbo Diesel	DG4,DGQ = Multi-Speed Auto
			ENR = 2.8L 4Cyl Turbo Diesel	DG6 = 4 Speed Auto Transm
			EN0 = 4Cyl Turbo Diesel	DG0 = All Automatic Transm
				DBB = All Manual Transm

Underdrive [DGQ]
Figure 5-45RFE-420

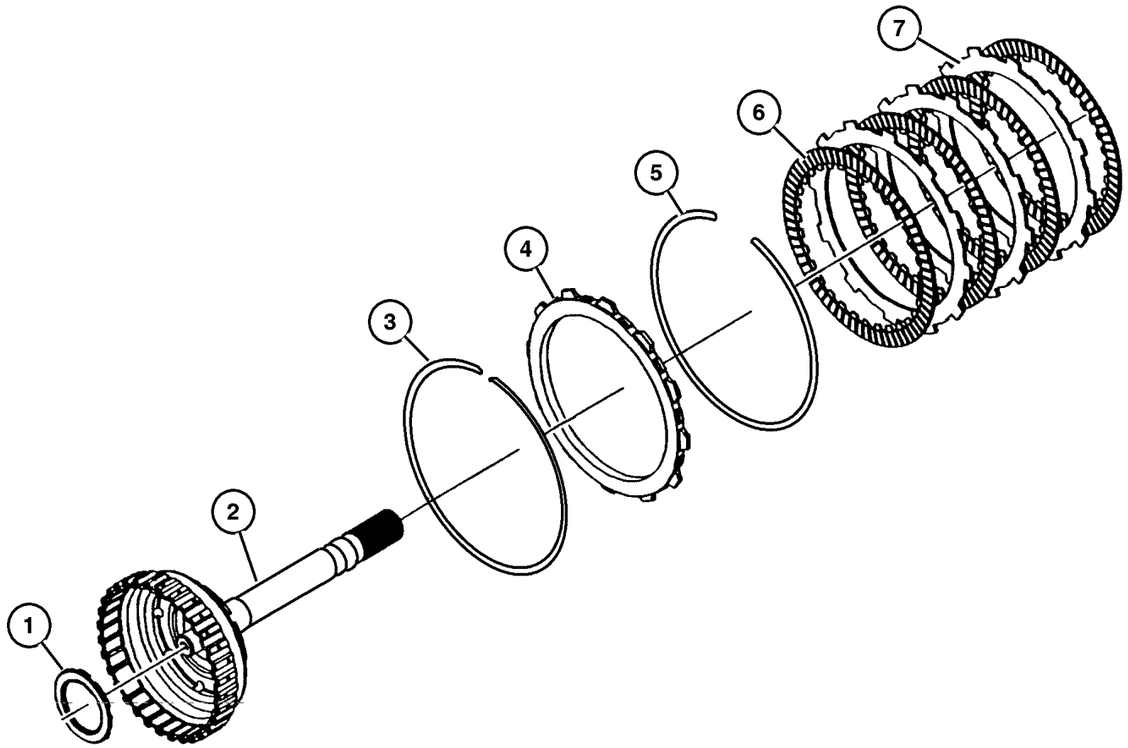

ITEM	PART NUMBER	QTY	LINE	SERIES	BODY	ENGINE	TRANS	TRIM	DESCRIPTION
NOTE:									
Sales Codes:									
[DGQ]=5 Speed Automatic Transmission - [5-45RFE]									
[EN0]=All 4/5 Cylinder Turbo Diesel Engines									
1	4799 459	1	J, U			EN0	DGQ		THRUST BEARING, Needle Roller
2	4799 546	1	J, U			EN0	DGQ		HUB AND SHAFT, Underdrive Clutch
3	4799 760	1	J, U			EN0	DGQ		SNAP RING, Transmission
4	4799 108AD	AR	J, U			EN0	DGQ		PLATE, Transmission Clutch Reaction
5									SNAP RING, Serviced In Pkg. (05013090AA), (NOT SERVICED) (Not Serviced)
6									DISC, Clutch, Serviced In Pkg. (05013090AA), (NOT SERVICED) (Not Serviced)
7									PLATE, Serviced In Pkg. (05013090AA), (NOT SERVICED) (Not Serviced)
-8	4799 667	1	J, U			EN0	DGQ		PLATE, Transmission Clutch Reaction, Low / Reverse Clutch
-9	4799 687AB	1	J, U			EN0	DGQ		PLATE, Transmission Clutch Reaction, 2nd Clutch

JEEP LIBERTY (KJ)

SERIES	LINE	BODY	ENGINE	TRANSMISSION
P = Limited	J = LHD (4WD)	74 = 4 Dr (104.3 WB)	ED1,ED0 = 2.4L Power Tech	DDK = 5 Speed HDManual
H = Sport	U = RHD (4WD)		EKG,EK0 = 3.7L Power Tech	DDD = 5 Speed HD Manual
M = Renegade	T = LHD (2WD)		ENJ = 2.5L 4Cyl Turbo Diesel	DG4,DGQ = Multi-Speed Auto
			ENR = 2.8L 4Cyl Turbo Diesel	DG6 = 4 Speed Auto Transm
			EN0 = 4Cyl Turbo Diesel	DG0 = All Automatic Transm
				DBB = All Manual Transm

Overdrive [DGQ]
Figure 5-45RFE-430

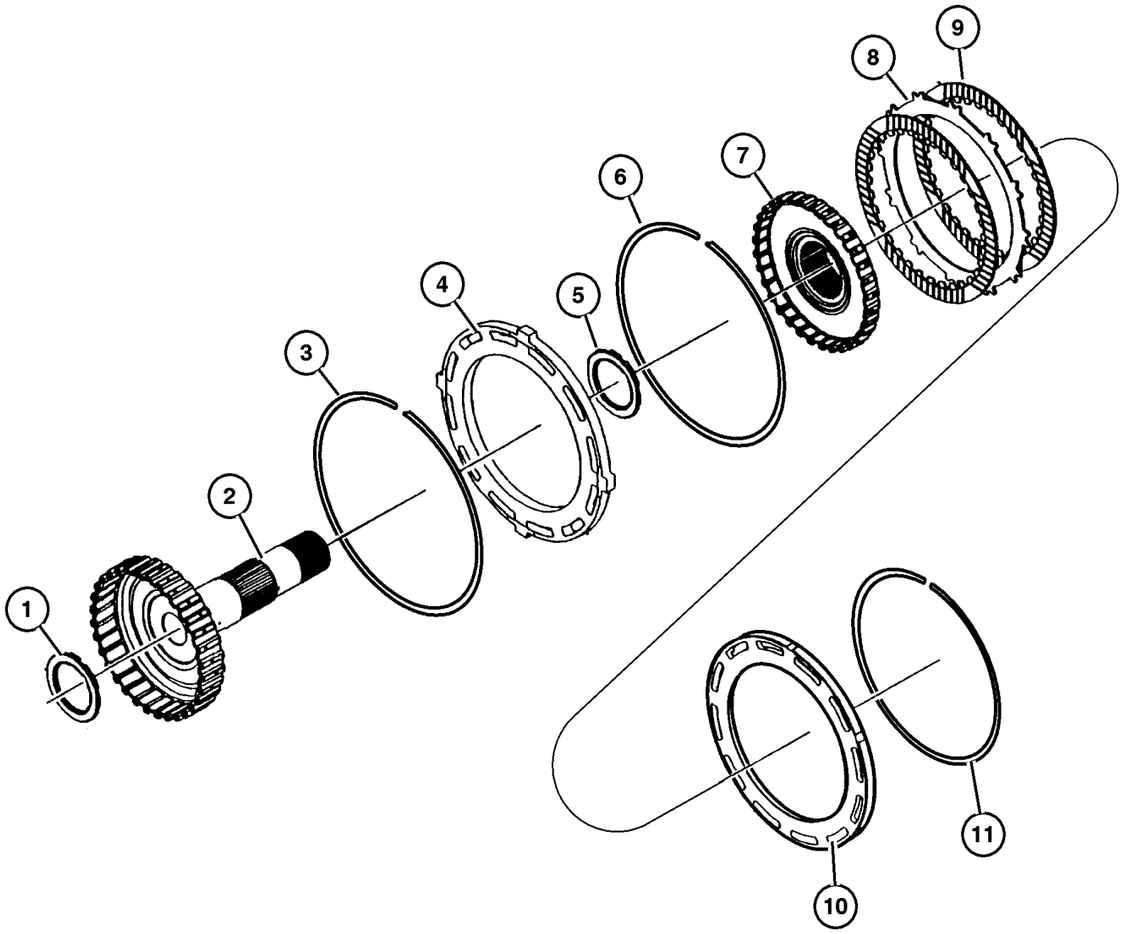

ITEM	PART NUMBER	QTY	LINE	SERIES	BODY	ENGINE	TRANS	TRIM	DESCRIPTION
NOTE:									
Sales Codes:									
[DGQ]=5 Speed Automatic Transmission - [5-45RFE]									
[EN0]=All 4/5 Cylinder Turbo Diesel Engines									
1	4799 459	1	J, U			EN0	DGQ		THRUST BEARING, Needle Roller
2	4799 550	1	J, U			EN0	DGQ		HUB AND SHAFT, Overdrive Clutch
3	4799 118	1	J, U			EN0	DGQ		SNAP RING, Overdrive Clutch
4	4799 116AB	1	J, U			EN0	DGQ		PLATE, Clutch Pressure
5	4799 469	1	J, U			EN0	DGQ		THRUST BEARING, Needle Roller
6	4799 117	1	J, U			EN0	DGQ		SNAP RING, Transmission
7	4799 556	1	J, U			EN0	DGQ		HUB AND SHAFT, Reverse Clutch
8									PLATE, PKG 05013090AA, (NOT SERVICED) (Not Serviced)
9									DISC, Clutch, PKG 05013090AA, (NOT SERVICED) (Not Serviced)
10	4799 121	1	J, U			EN0	DGQ		PLATE, Transmission Clutch Reaction
11									SNAP RING, PKG 05013090AA, (NOT SERVICED) (Not Serviced)

JEEP LIBERTY (KJ)

SERIES	LINE	BODY	ENGINE	TRANSMISSION
P = Limited	J = LHD (4WD)	74 = 4 Dr (104.3 WB)	ED1,ED0 = 2.4L Power Tech	DDK = 5 Speed HDManual
H = Sport	U = RHD (4WD)		EKG,EK0 = 3.7L Power Tech	DDD = 5 Speed HD Manual
M = Renegade	T = LHD (2WD)		ENJ = 2.5L 4Cyl Turbo Diesel	DG4,DGQ = Multi-Speed Auto
			ENR = 2.8L 4Cyl Turbo Diesel	DG6 = 4 Speed Auto Transm
			EN0 = 4Cyl Turbo Diesel	DG0 = All Automatic Transm
				DBB = All Manual Transm

2 / 4 Clutch Retainer [DGQ]
Figure 5-45RFE-440

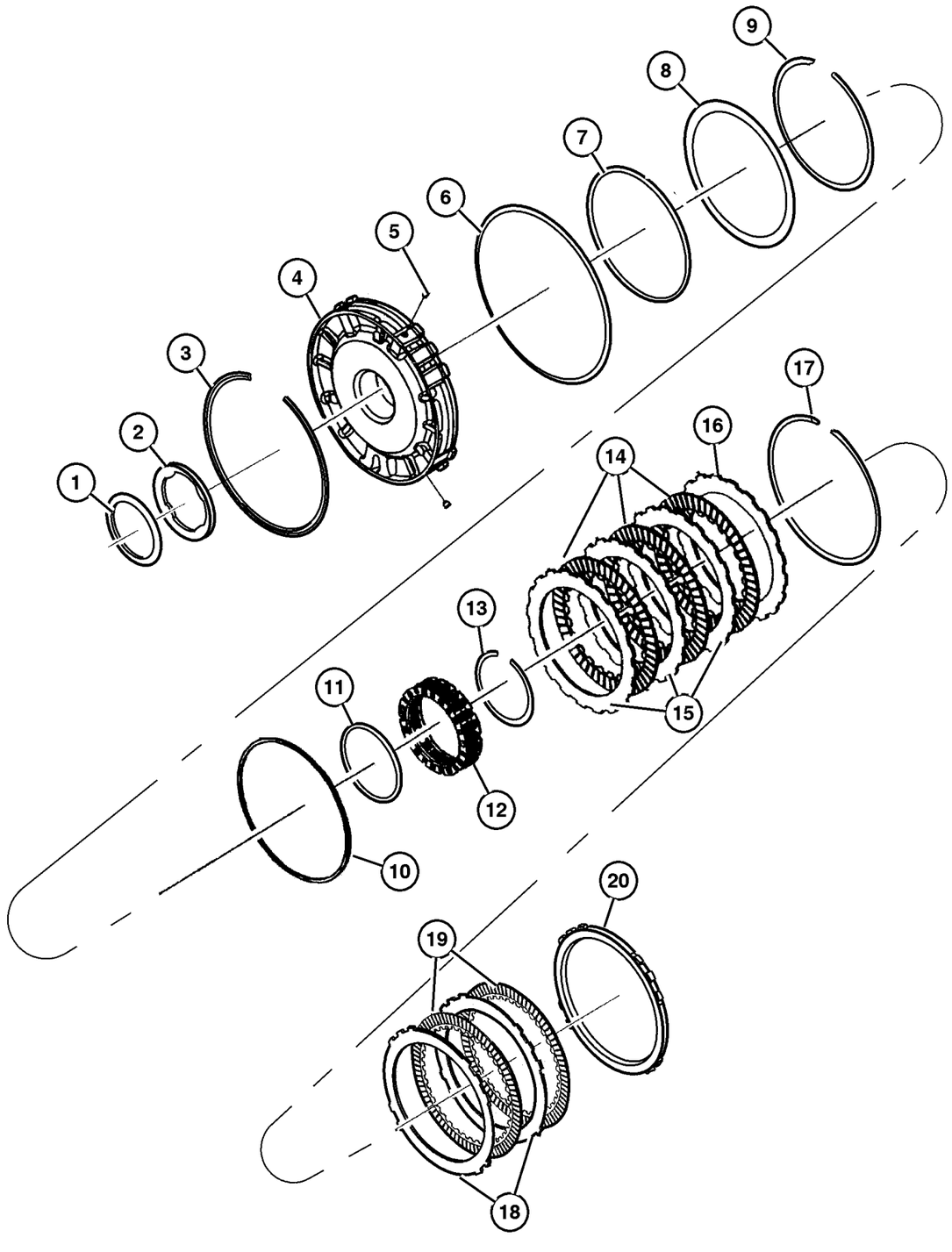

ITEM	PART NUMBER	QTY	LINE	SERIES	BODY	ENGINE	TRANS	TRIM	DESCRIPTION
NOTE:									
Sales Codes:									
[DGQ]=5 Speed Automatic Transmission - [5-45RFE]									
[EN0]=All 4/5 Cylinder Turbo Diesel Engines									
1	4799 936AB	1	J, U			EN0	DGQ		THRUST BEARING, Needle Roller
2									PLATE, Clutch Hub Thrust, PKG 05013093AB, (NOT SERVICED) (Not Serviced)
3	4799 680AB	1	J, U			EN0	DGQ		SNAP RING, Transmission
4	4799 498AB	1	J, U			EN0	DGQ		RETAINER, Transmission 2nd and 4th Clutch Piston
5	4799 086	1	J, U			EN0	DGQ		BLEED ORIFICE, Transmission
6	4799 174	1	J, U			EN0	DGQ		SNAP RING, Transmission
7									RING, PKG 05013093AB, (NOT SERVICED) (Not Serviced)
8	4799 521	1	J, U			EN0	DGQ		SPRING, 2nd And 4th Clutch Piston
9	4799 522AB	1	J, U			EN0	DGQ		SNAP RING, Transmission
10									RING, PKG 05013093AB, (NOT SERVICED) (Not Serviced)
11									RING, PKG 05013093AB, (NOT SERVICED) (Not Serviced)
12	4799 527AB	1	J, U			EN0	DGQ		SPRING, 2nd And 4th Clutch Piston
13	4799 680AB	1	J, U			EN0	DGQ		SNAP RING, Transmission
14									DISC, Clutch, PKG 05013087AA, (NOT SERVICED) (Not Serviced)
15									PLATE, Clutch Separator, PKG 05013087AA, (NOT SERVICED) (Not Serviced)
16	4799 533	1	J, U			EN0	DGQ		PLATE, Transmission Clutch Reaction
17									SNAP RING, Transmission, PKG 05013087AA, (NOT SERVICED) (Not Serviced)
18									PLATE, PKG 05013087AA, (NOT SERVICED) (Not Serviced)
19									DISC, Clutch, PKG 05013087AA, (NOT SERVICED) (Not Serviced)
20									PLATE, PKG 05013087AA, (NOT SERVICED) (Not Serviced)
-21	4799 465	1	J, U			EN0	DGQ		CLUTCH, Overrunning
-22	4799 457AB	1	J, U			EN0	DGQ		CLUTCH, L/R Clutch

JEEP LIBERTY (KJ)

SERIES	LINE	BODY	ENGINE	TRANSMISSION
P = Limited	J = LHD (4WD)	74 = 4 Dr (104.3 WB)	ED1,ED0 = 2.4L Power Tech	DDK = 5 Speed HDManual
H = Sport	U = RHD (4WD)		EKG,EK0 = 3.7L Power Tech	DDD = 5 Speed HD Manual
M = Renegade	T = LHD (2WD)		ENJ = 2.5L 4Cyl Turbo Diesel	DG4,DGQ = Multi-Speed Auto
			ENR = 2.8L 4Cyl Turbo Diesel	DG6 = 4 Speed Auto Transm
			EN0 = 4Cyl Turbo Diesel	DG0 = All Automatic Transm
				DBB = All Manual Transm

AR = Use as required - = Non illustrated part # = New this model year

September 30, 2003

« RETURN TO GROUP INDEX »

2 / 4 Clutch Retainer [DGQ]
Figure 5-45RFE-440

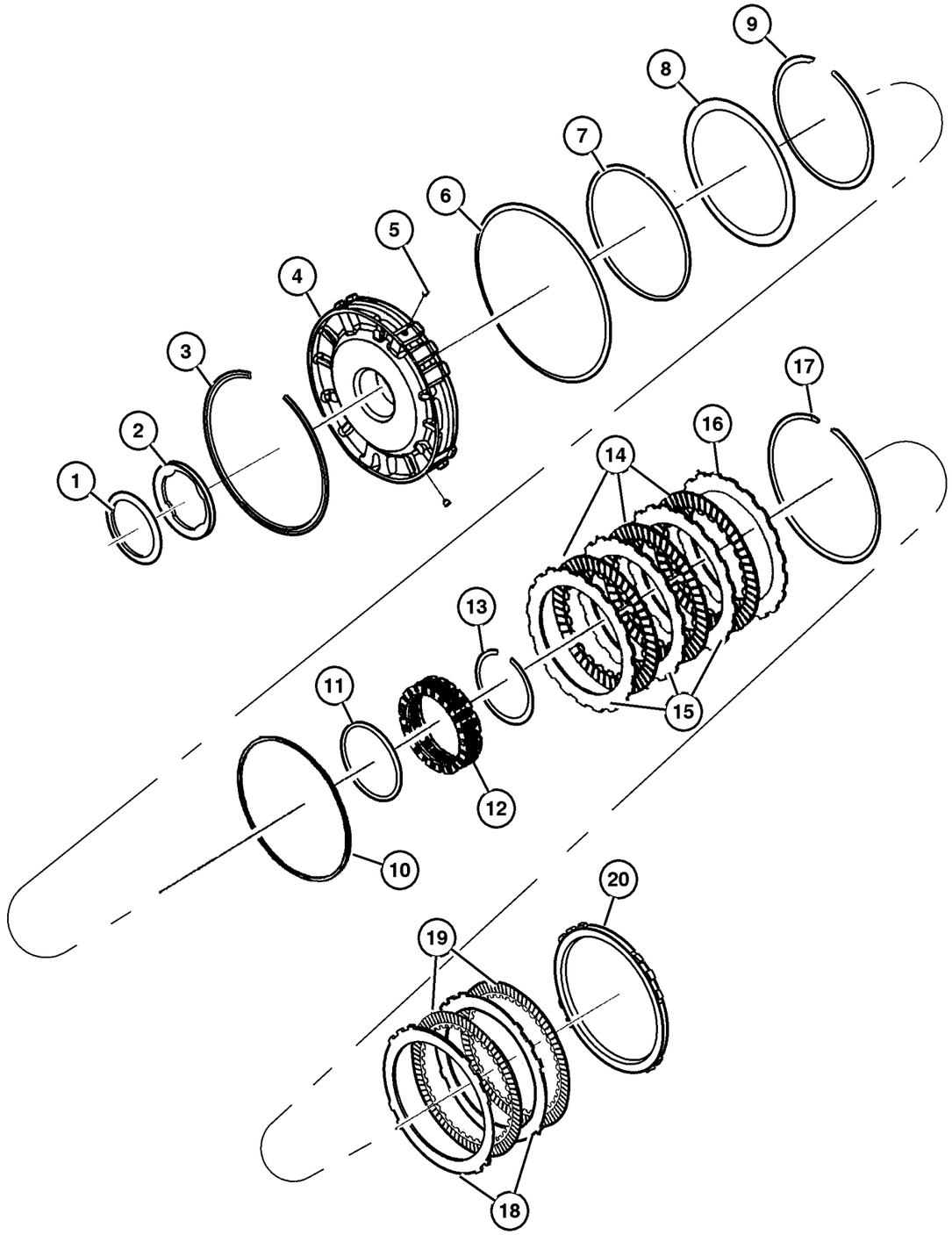

ITEM	PART NUMBER	QTY	LINE	SERIES	BODY	ENGINE	TRANS	TRIM	DESCRIPTION
-23	5013 087AC	1	J, U			EN0	DGQ		CLUTCH PACKAGE, Automatic Transmission, 2/4
-24	4799 863AA	1	J, U			EN0	DGQ		SNAP RING
-25	4799 528AB	1	J, U			EN0	DGQ		SNAP RING, Transmission
-26	5013 027AA	1	J, U			EN0	DGQ		RETAINER, Clutch
-27	4799 640	1	J, U			EN0	DGQ		SPRING, Low/Reverse Clutch Piston

JEEP LIBERTY (KJ)

SERIES	LINE	BODY	ENGINE	TRANSMISSION
P = Limited	J = LHD (4WD)	74 = 4 Dr (104.3 WB)	ED1,ED0 = 2.4L Power Tech	DDK = 5 Speed HDManual
H = Sport	U = RHD (4WD)		EKG,EK0 = 3.7L Power Tech	DDD = 5 Speed HD Manual
M = Renegade	T = LHD (2WD)		ENJ = 2.5L 4Cyl Turbo Diesel	DG4,DGQ = Multi-Speed Auto
			ENR = 2.8L 4Cyl Turbo Diesel	DG6 = 4 Speed Auto Transm
			EN0 = 4Cyl Turbo Diesel	DG0 = All Automatic Transm
				DBB = All Manual Transm

Input / Reverse Planetary [DGQ]
Figure 5-45RFE-450

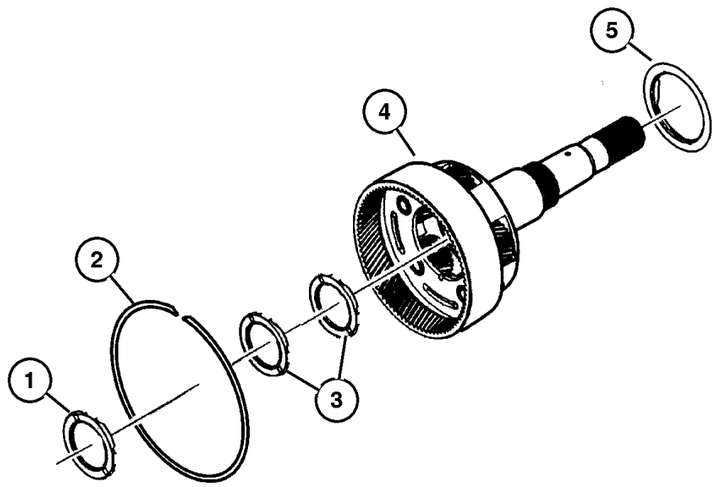

ITEM	PART NUMBER	QTY	LINE	SERIES	BODY	ENGINE	TRANS	TRIM	DESCRIPTION
NOTE:									
Sales Codes:									
[DGQ]=5 Speed Automatic Transmission - [5-45RFE]									
[EN0]=All 4/5 Cylinder Turbo Diesel Engines									
1	4799 459	1	J, U			EN0	DGQ		THRUST BEARING, Needle Roller
2	4799 247	1	J, U			EN0	DGQ		SNAP RING
3	4799 469	AR	J, U			EN0	DGQ		THRUST BEARING, Needle Roller
4	4799 500AE	1	J, U			EN0	DGQ		CARRIER, Input Complete
5	4799 459	1	J, U			EN0	DGQ		THRUST BEARING, Needle Roller
-6	4799 503AD	1	J, U			EN0	DGQ		CARRIER, Reverse Complete

JEEP LIBERTY (KJ)

SERIES	LINE	BODY	ENGINE	TRANSMISSION
P = Limited	J = LHD (4WD)	74 = 4 Dr (104.3 WB)	ED1,ED0 = 2.4L Power Tech	DDK = 5 Speed HDManual
H = Sport	U = RHD (4WD)		EKG,EK0 = 3.7L Power Tech	DDD = 5 Speed HD Manual
M = Renegade	T = LHD (2WD)		ENJ = 2.5L 4Cyl Turbo Diesel	DG4,DGQ = Multi-Speed Auto
			ENR = 2.8L 4Cyl Turbo Diesel	DG6 = 4 Speed Auto Transm
			EN0 = 4Cyl Turbo Diesel	DG0 = All Automatic Transm
				DBB = All Manual Transm

Reaction Annulus / Sun Gear [DGQ]
Figure 5-45RFE-460

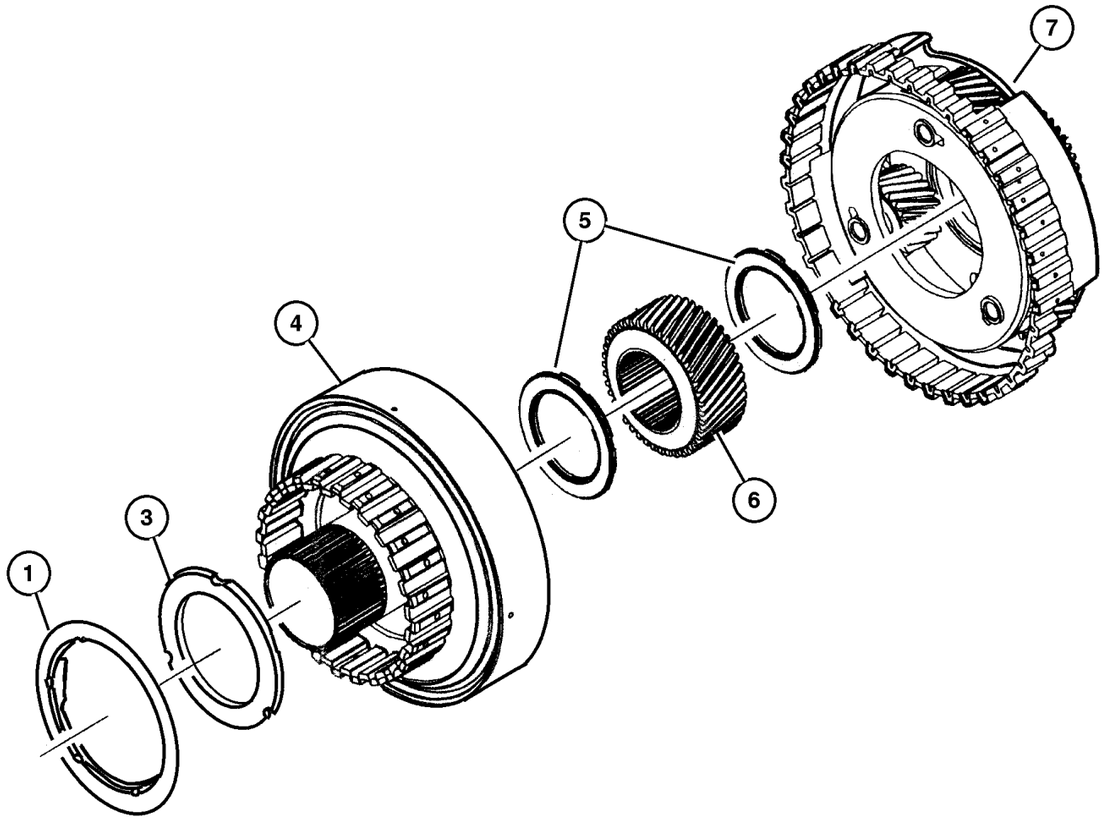

ITEM	PART NUMBER	QTY	LINE	SERIES	BODY	ENGINE	TRANS	TRIM	DESCRIPTION
NOTE:									
Sales Codes:									
[DGQ]=5 Speed Automatic Transmission - [5-45RFE]									
[EN0]=All 4/5 Cylinder Turbo Diesel Engines									
1	4799 459	1	J, U			EN0	DGQ		THRUST BEARING, Needle Roller, Retainer To I-Carrier, Right & Left
-2	52119 464AA	1	J, U			EN0	DGQ		THRUST BEARING, Needle Roller, Input Sun Bearing
3									THRUST WASHER, Planetary Carrier, PKG 05013092AA, (NOT SERVICED) (Not Serviced)
4	4799 501	1	J, U			EN0	DGQ		GEAR, Annulus
5	4799 469	1	J, U			EN0	DGQ		THRUST BEARING, Needle Roller
6	4799 602	1	J, U			EN0	DGQ		GEAR, Reaction Sun
7	4799 619AB	1	J, U			EN0	DGQ		CARRIER, Reaction Complete
-8	4799 586AB	1	J, U			EN0	DGQ		GEAR, Input Sun

JEEP LIBERTY (KJ)

SERIES	LINE	BODY	ENGINE	TRANSMISSION
P = Limited	J = LHD (4WD)	74 = 4 Dr (104.3 WB)	ED1,ED0 = 2.4L Power Tech	DDK = 5 Speed HDManual
H = Sport	U = RHD (4WD)		EKG,EK0 = 3.7L Power Tech	DDD = 5 Speed HD Manual
M = Renegade	T = LHD (2WD)		ENJ = 2.5L 4Cyl Turbo Diesel	DG4,DGQ = Multi-Speed Auto
			ENR = 2.8L 4Cyl Turbo Diesel	DG6 = 4 Speed Auto Transm
			EN0 = 4Cyl Turbo Diesel	DG0 = All Automatic Transm
				DBB = All Manual Transm

Low / Reverse Clutch [DGQ]
Figure 5-45RFE-470

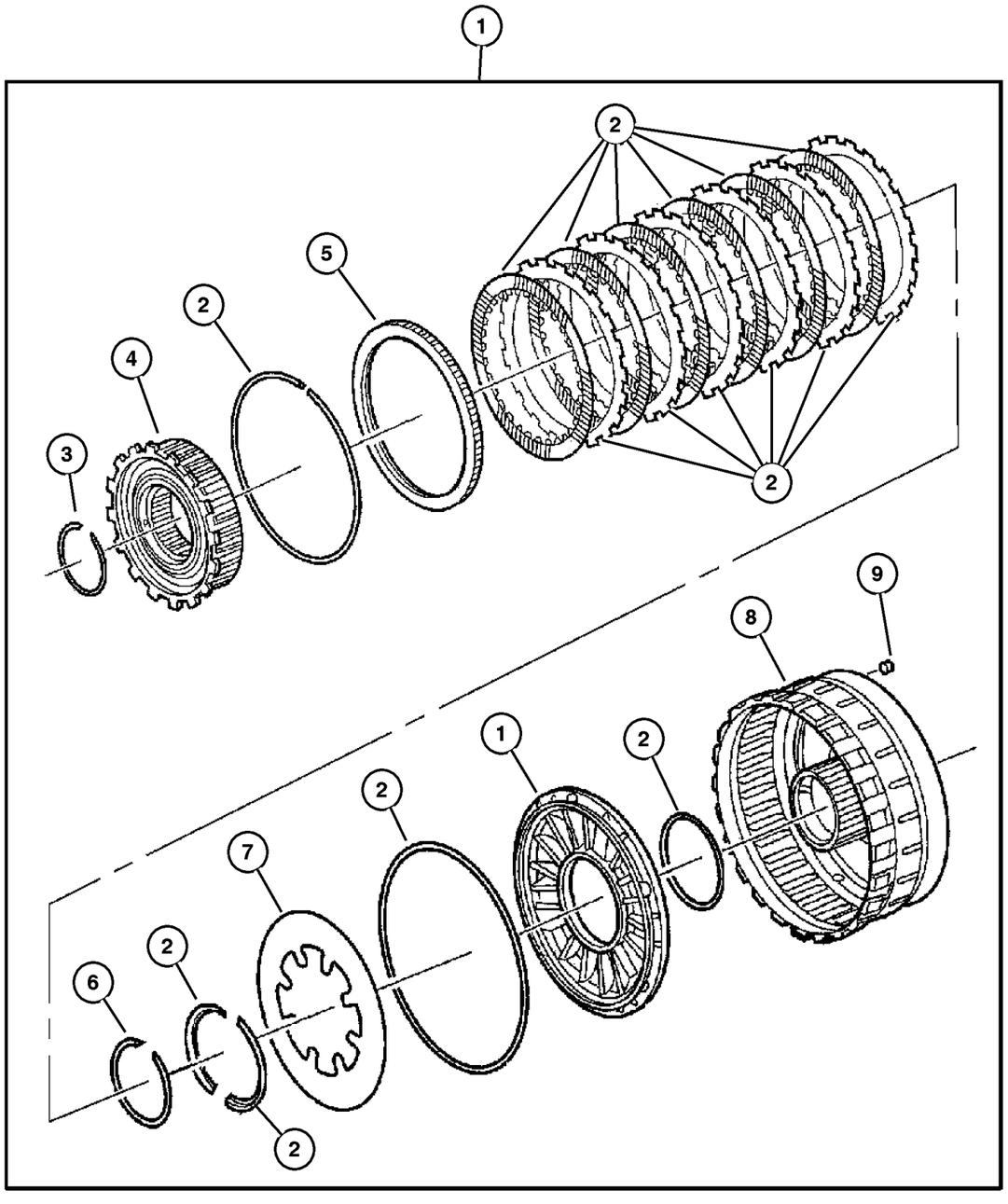

ITEM	PART NUMBER	QTY	LINE	SERIES	BODY	ENGINE	TRANS	TRIM	DESCRIPTION
NOTE:									
Sales Codes:									
[DGQ]=5 Speed Automatic Transmission - [5-45RFE]									
[EN0]=All 4/5 Cylinder Turbo Diesel Engines									
1	4799 457AB	1	J, U			EN0	DGQ		CLUTCH, L/R Clutch
2	5073 003AA	1	J, U			EN0	DGQ		CLUTCH PACKAGE, Automatic Transmission, Low/Reverse
3	4799 863AA	1	J, U			EN0	DGQ		SNAP RING
4	4799 465	1	J, U			EN0	DGQ		CLUTCH, Overrunning
5	4799 667	1	J, U			EN0	DGQ		PLATE, Transmission Clutch Reaction
6	4799 863AA	1	J, U			EN0	DGQ		SNAP RING
7	4799 640	1	J, U			EN0	DGQ		SPRING, Low/Reverse Clutch Piston
8	5013 027AA	1	J, U			EN0	DGQ		RETAINER, Clutch
9	4799 086	1	J, U			EN0	DGQ		BLEED ORIFICE, Transmission
-10	4799 466	1	J, U			EN0	DGQ		SNAP RING, Transmission, L / R Retainer To Case

JEEP LIBERTY (KJ)

SERIES	LINE	BODY	ENGINE	TRANSMISSION
P = Limited	J = LHD (4WD)	74 = 4 Dr (104.3 WB)	ED1,ED0 = 2.4L Power Tech	DDK = 5 Speed HDManual
H = Sport	U = RHD (4WD)		EKG,EK0 = 3.7L Power Tech	DDD = 5 Speed HD Manual
M = Renegade	T = LHD (2WD)		ENJ = 2.5L 4Cyl Turbo Diesel	DG4,DGQ = Multi-Speed Auto
			ENR = 2.8L 4Cyl Turbo Diesel	DG6 = 4 Speed Auto Transm
			EN0 = 4Cyl Turbo Diesel	DG0 = All Automatic Transm
				DBB = All Manual Transm

Valve Body [DGQ]
Figure 5-45RFE-710

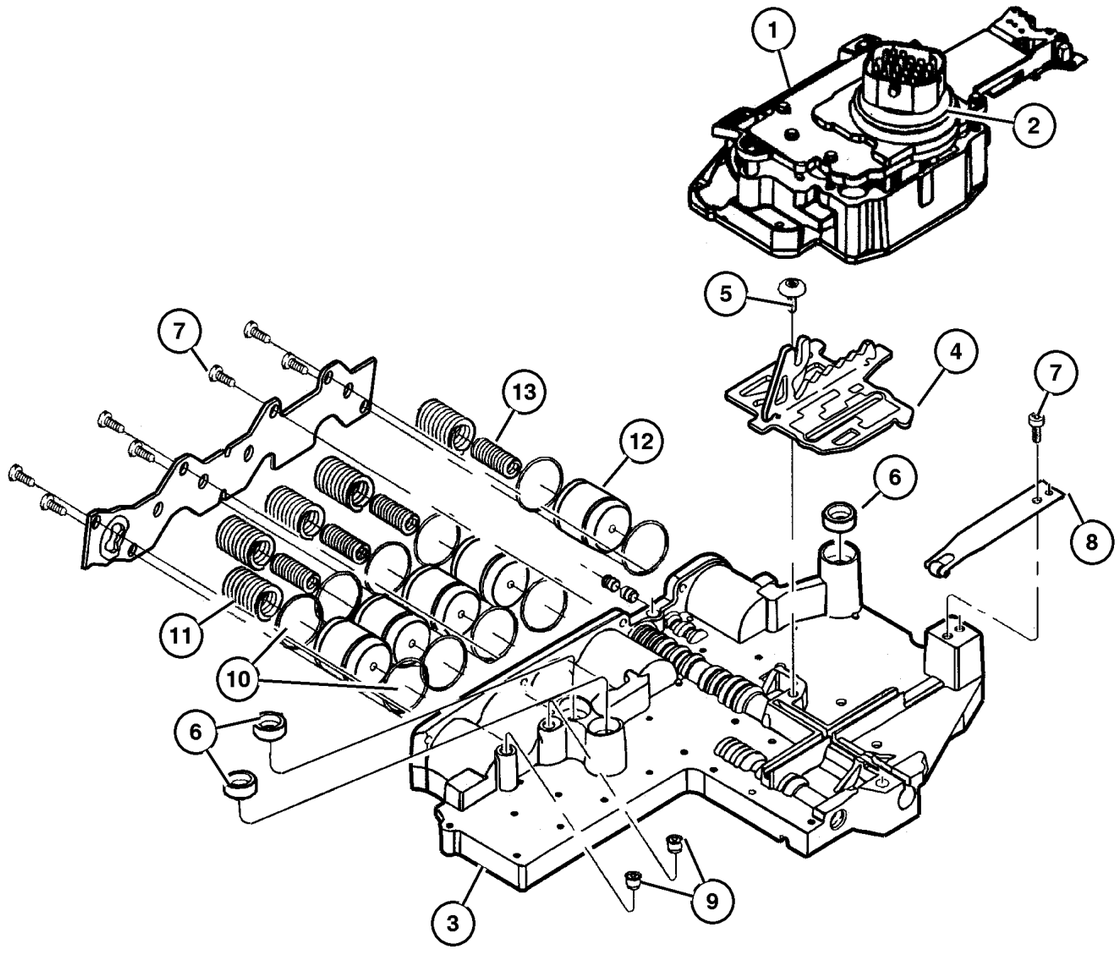

ITEM	PART NUMBER	QTY	LINE	SERIES	BODY	ENGINE	TRANS	TRIM	DESCRIPTION
NOTE:									
Sales Codes:									
[DGQ]=5 Speed Automatic Transmission - [5-45RFE]									
[EN0]=All 4/5 Cylinder Turbo Diesel Engines									
1	4799 934AD	1	J, U			EN0	DGQ		SOLENOID, Transmission
2									SEAL, Manual Valve Position Sensor, Serviced With # 1, (NOT SERVICED) (Not Serviced)
3	5080 732AA	1	J, U			EN0	DGQ		VALVE BODY, Transfer Plate and Valve
4	4799 654	1	J, U			EN0	DGQ		PLATE, Manual Valve Cam
5	6501 710	1	J, U			EN0	DGQ		SCREW, Shoulder/Truss, M5x. 8x12.5
6	4799 778	3	J, U			EN0	DGQ		SEAL, Clutch Feed
7	6503 232	2	J, U			EN0	DGQ		SCREW, Pan Head, M5 x 0.8 x 12. 60
8	52119 501AA	1	J, U			EN0	DGQ		DETENT, Valve Body
9	4799 086	1	J, U			EN0	DGQ		BLEED ORIFICE, Transmission
10	4446 544	10	J, U			EN0	DGQ		SEAL, Accumulator
11	4471 880	5	J, U			EN0	DGQ		SPRING, Accumulator
12	4446 620AC	5	J, U			EN0	DGQ		PISTON, 2nd and 4th Accumulator
13	4567 575	4	J, U			EN0	DGQ		SPRING, Accumulator
-14	4446 602	7	J, U			EN0	DGQ		BALL, Check
-15	6505 335AA	1	J, U			EN0	DGQ		O RING, Control Valve
-16	4799 986AA	1	J, U			EN0	DGQ		SEAL, Insulator

JEEP LIBERTY (KJ)

SERIES	LINE	BODY	ENGINE	TRANSMISSION
P = Limited	J = LHD (4WD)	74 = 4 Dr (104.3 WB)	ED1,ED0 = 2.4L Power Tech	DDK = 5 Speed HDManual
H = Sport	U = RHD (4WD)		EKG,EK0 = 3.7L Power Tech	DDD = 5 Speed HD Manual
M = Renegade	T = LHD (2WD)		ENJ = 2.5L 4Cyl Turbo Diesel	DG4,DGQ = Multi-Speed Auto
			ENR = 2.8L 4Cyl Turbo Diesel	DG6 = 4 Speed Auto Transm
			EN0 = 4Cyl Turbo Diesel	DG0 = All Automatic Transm
				DBB = All Manual Transm

AR = Use as required - = Non illustrated part # = New this model year

September 30, 2003

« RETURN TO GROUP INDEX

Parking Sprag [DGQ]
Figure 5-45RFE-730

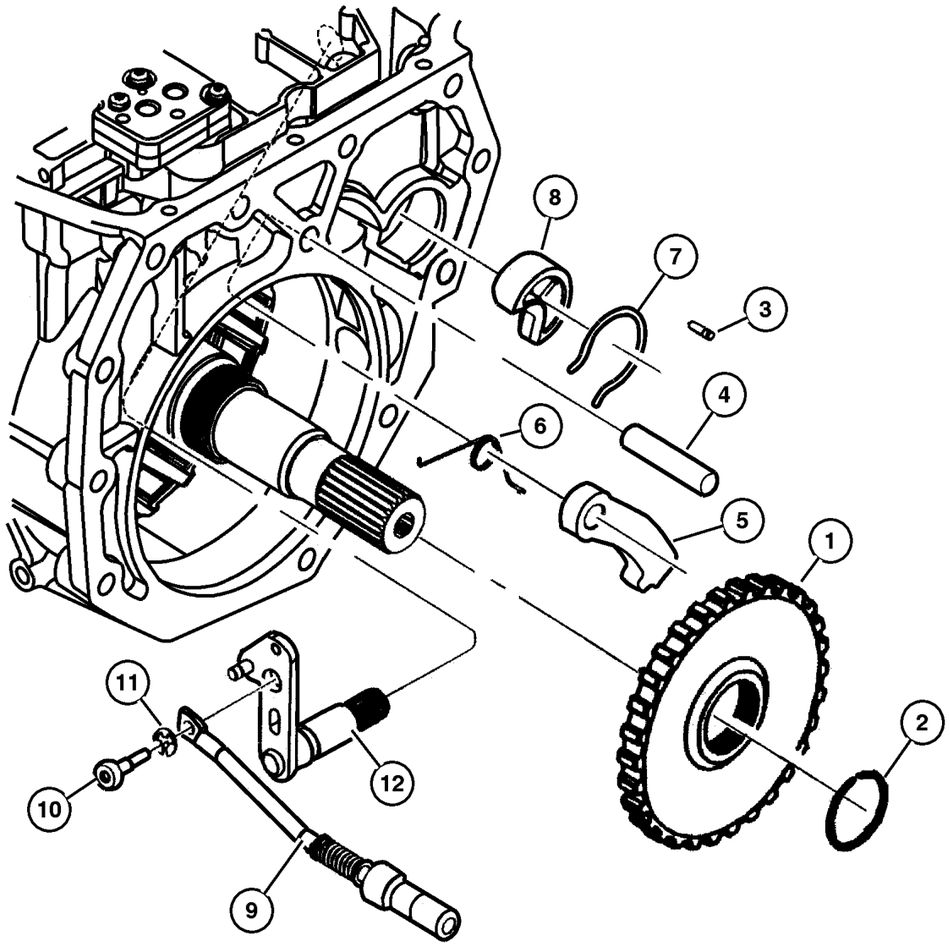

ITEM	PART NUMBER	QTY	LINE	SERIES	BODY	ENGINE	TRANS	TRIM	DESCRIPTION
NOTE:									
Sales Codes:									
[DGQ]=5 Speed Automatic Transmission - [5-45RFE]									
[EN0]=All 4/5 Cylinder Turbo Diesel Engines									
1	4799 493AB	1	J, U			EN0	DGQ		SPRAG, Transmission Parking
2	4799 704	1	J, U			EN0	DGQ		SNAP RING, Transmission
3	0456 636	1	J, U			EN0	DGQ		PIN
4	4799 450	1	J, U			EN0	DGQ		SHAFT, Parking Pawl
5	4799 744AD	1	J, U			EN0	DGQ		PAWL, Parking Sprag
6	4799 451	1	J, U			EN0	DGQ		SPRING, Torsion
7	4799 313	1	J, U			EN0	DGQ		SNAP RING
8	4799 774	1	J, U			EN0	DGQ		GUIDE, Parking Sprag Pawl
9	4799 611AB	1	J, U			EN0	DGQ		ROD, Parking Sprag
10	6504 548	1	J, U			EN0	DGQ		SCREW, M6x1x30
11	6035 256	1	J, U			EN0	DGQ		SNAP RING, Rod
12	4799 453	1	J, U			EN0	DGQ		LEVER, Shift Shaft

JEEP LIBERTY (KJ)

SERIES	LINE	BODY	ENGINE	TRANSMISSION
P = Limited	J = LHD (4WD)	74 = 4 Dr (104.3 WB)	ED1,ED0 = 2.4L Power Tech	DDK = 5 Speed HDManual
H = Sport	U = RHD (4WD)		EKG,EK0 = 3.7L Power Tech	DDD = 5 Speed HD Manual
M = Renegade	T = LHD (2WD)		ENJ = 2.5L 4Cyl Turbo Diesel	DG4,DGQ = Multi-Speed Auto
			ENR = 2.8L 4Cyl Turbo Diesel	DG6 = 4 Speed Auto Transm
			EN0 = 4Cyl Turbo Diesel	DG0 = All Automatic Transm
				DBB = All Manual Transm

Gearshift Controls [DGQ]
Figure 5-45RFE-1210

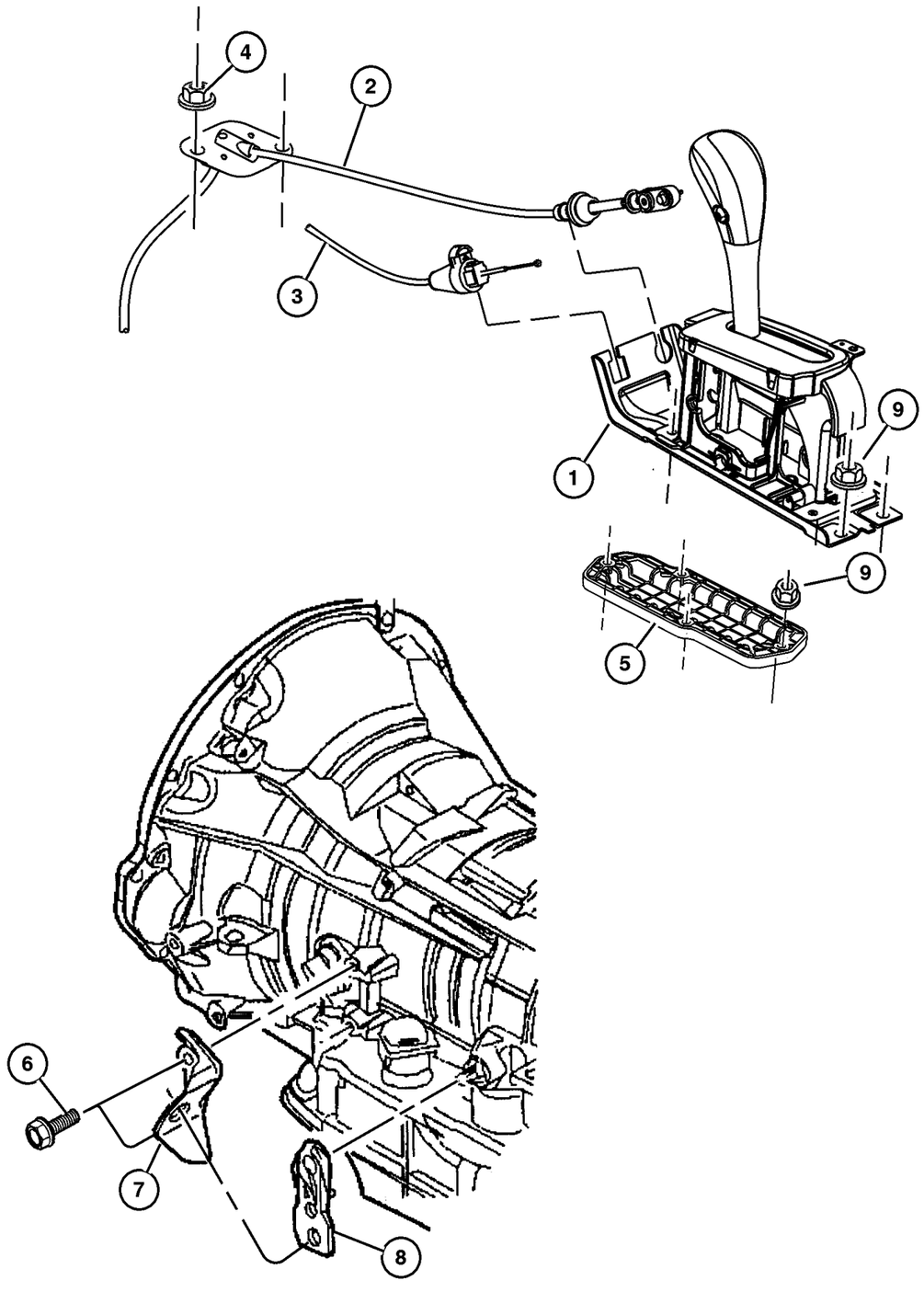

ITEM	PART NUMBER	QTY	LINE	SERIES	BODY	ENGINE	TRANS	TRIM	DESCRIPTION
NOTE; Sales Codes									
[DG0] = All Automatic Transmissions									
[DG4]= Multi Speed Automatic Transmission 45RFE									
[DGQ]=5 Speed Automatic Transmission 45RFE									
[EK0] = All 3.7L 6 Cylinder Gas Engines									
1	52104 312AG	1	J, T				DG0		HOUSING AND LEVER, Shifter
2	52104 320AA	1					DGQ		CABLE, Gearshift Control
3	52104 319AC	1					DG0		CABLE, Gearshift Lock
4	6100 047	2							NUT AND WASHER, Hex Nut-Coned Washer, M6 x 1.00
5	52104 321AA	1	T						COVER, Transfer Case Lever Hole
6	6101 758	2					DGQ		SCREW, Hex Head, M8x1.25x20
7	52104 371AC	1					DGQ		BRACKET, Shift Cable
8	52104 177AB	1					DGQ		LEVER, Manual Control
9	3420 1358	4							NUT AND WASHER, Hex Nut-Sealing Washer, M6 x 1.00

JEEP LIBERTY (KJ)

SERIES	LINE	BODY	ENGINE	TRANSMISSION
P = Limited	J = LHD (4WD)	74 = 4 Dr (104.3 WB)	ED1,ED0 = 2.4L Power Tech	DDK = 5 Speed HDManual
H = Sport	U = RHD (4WD)		EKG,EK0 = 3.7L Power Tech	DDD = 5 Speed HD Manual
M = Renegade	T = LHD (2WD)		ENJ = 2.5L 4Cyl Turbo Diesel	DG4,DGQ = Multi-Speed Auto
			ENR = 2.8L 4Cyl Turbo Diesel	DG6 = 4 Speed Auto Transm
			EN0 = 4Cyl Turbo Diesel	DG0 = All Automatic Transm
				DBB = All Manual Transm

L / R Clutch
Figure 5-45RFE-1310

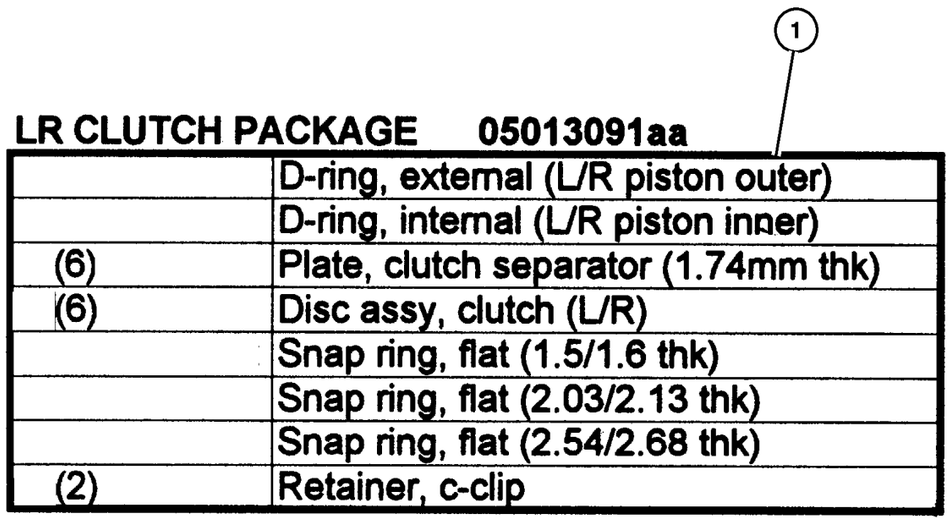

ITEM	PART NUMBER	QTY	LINE	SERIES	BODY	ENGINE	TRANS	TRIM	DESCRIPTION
NOTE:									
Sales Codes:									
[DGQ]=5 Speed Automatic Transmission - [5-45RFE]									
[EN0]=All 4/5 Cylinder Turbo Diesel Engines									
1	5073 003AA	1	J, U			EN0	DGQ		CLUTCH PACKAGE, Automatic Transmission, Low/Reverse

JEEP LIBERTY (KJ)

SERIES	LINE	BODY	ENGINE	TRANSMISSION
P = Limited	J = LHD (4WD)	74 = 4 Dr (104.3 WB)	ED1,ED0 = 2.4L Power Tech	DDK = 5 Speed HDManual
H = Sport	U = RHD (4WD)		EKG,EK0 = 3.7L Power Tech	DDD = 5 Speed HD Manual
M = Renegade	T = LHD (2WD)		ENJ = 2.5L 4Cyl Turbo Diesel	DG4,DGQ = Multi-Speed Auto
			ENR = 2.8L 4Cyl Turbo Diesel	DG6 = 4 Speed Auto Transm
			EN0 = 4Cyl Turbo Diesel	DG0 = All Automatic Transm
				DBB = All Manual Transm

Input Clutch Plate [DGQ]
Figure 5-45RFE-1320

SELECTIVE THRUST PLATES **05013093aa**

INPUT CLUTCH THRUST PLATE PKG

	Thrust plate, input clutc 1.52 / 1.61
	Thrust plate, input clutc 1.66 / 1.75
	Thrust plate, input clutc 1.80 / 1.89
	Thrust plate, input clutc 1.94 / 2.03
	Thrust plate, input clutc 2.08 / 2.17
	Thrust plate, input clutc 2.22 / 2.31
	Thrust plate, input clutc 2.36 / 2.45
	Thrust plate, input clutc 2.50 / 2.59
	Thrust plate, input clutc 2.64 / 2.73
	Thrust plate, input clutc 2.78 / 2.87
	Thrust plate, input clutc 2.92 / 3.01
	Thrust plate, input clutc 3.06 / 3.15
	Thrust plate, input clutc 3.20 / 3.29
	Thrust plate, input clutc 3.34 / 3.43
	Thrust plate, input clutc 3.62 / 3.71

ITEM	PART NUMBER	QTY	LINE	SERIES	BODY	ENGINE	TRANS	TRIM	DESCRIPTION
NOTE:									
Sales Codes:									
[DGQ]=5 Speed Automatic Transmission - [5-45RFE]									
[EN0]=All 4/5 Cylinder Turbo Diesel Engines									
1	5013 093AA	1	J, U			EN0	DGQ		PLATE PACKAGE, Input Clutch Thrust

JEEP LIBERTY (KJ)

SERIES	LINE	BODY	ENGINE	TRANSMISSION
P = Limited	J = LHD (4WD)	74 = 4 Dr (104.3 WB)	ED1,ED0 = 2.4L Power Tech	DDK = 5 Speed HDManual
H = Sport	U = RHD (4WD)		EKG,EK0 = 3.7L Power Tech	DDD = 5 Speed HD Manual
M = Renegade	T = LHD (2WD)		ENJ = 2.5L 4Cyl Turbo Diesel	DG4,DGQ = Multi-Speed Auto
			ENR = 2.8L 4Cyl Turbo Diesel	DG6 = 4 Speed Auto Transm
			EN0 = 4Cyl Turbo Diesel	DG0 = All Automatic Transm
				DBB = All Manual Transm

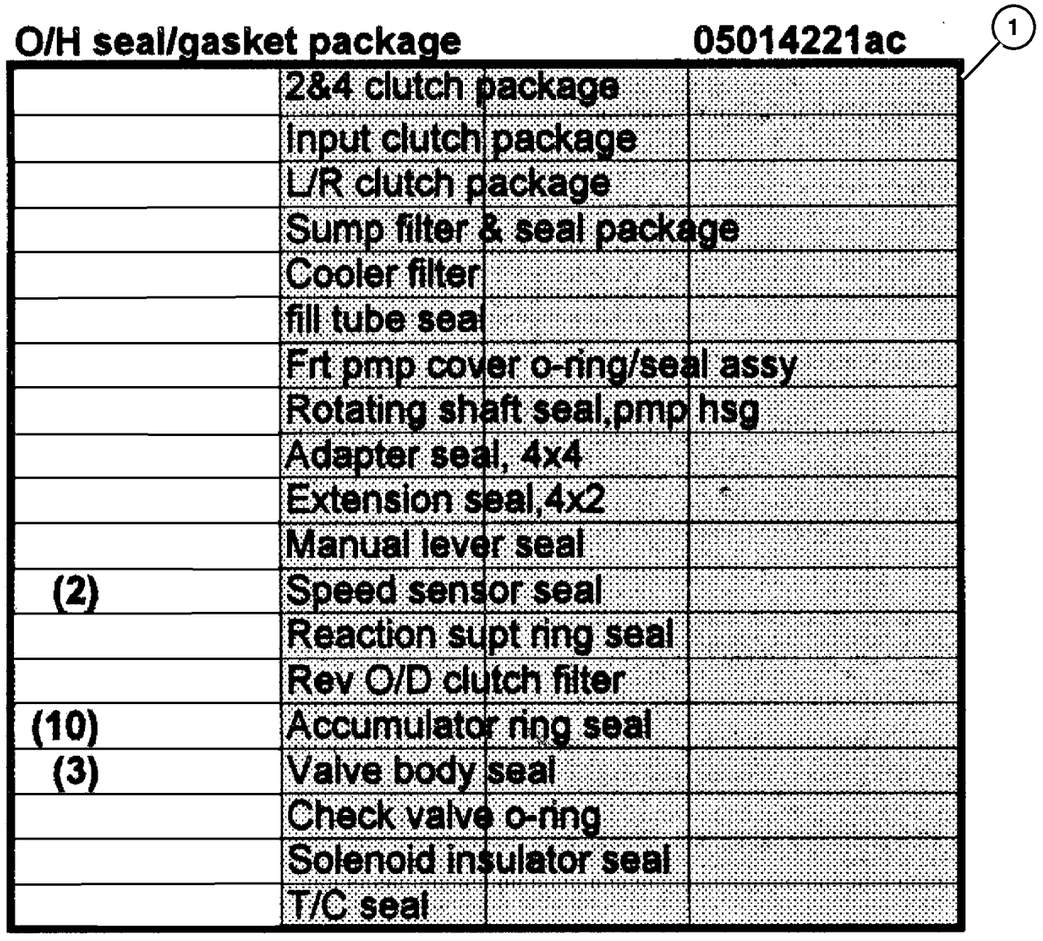

ITEM	PART NUMBER	QTY	LINE	SERIES	BODY	ENGINE	TRANS	TRIM	DESCRIPTION
NOTE:									
Sales Codes:									
[DGQ]=5 Speed Automatic Transmission - [5-45RFE]									
[EN0]=All 4/5 Cylinder Turbo Diesel Engines									
1	5014 221AJ	1	J, U			EN0	DGQ		OVERHAUL PACKAGE, Transmission

JEEP LIBERTY (KJ)

SERIES	LINE	BODY	ENGINE	TRANSMISSION
P = Limited	J = LHD (4WD)	74 = 4 Dr (104.3 WB)	ED1,ED0 = 2.4L Power Tech	DDK = 5 Speed HDManual
H = Sport	U = RHD (4WD)		EKG,EK0 = 3.7L Power Tech	DDD = 5 Speed HD Manual
M = Renegade	T = LHD (2WD)		ENJ = 2.5L 4Cyl Turbo Diesel	DG4,DGQ = Multi-Speed Auto
			ENR = 2.8L 4Cyl Turbo Diesel	DG6 = 4 Speed Auto Transm
			EN0 = 4Cyl Turbo Diesel	DG0 = All Automatic Transm
				DBB = All Manual Transm

Input Clutch [DGQ]
Figure 5-45RFE-1340

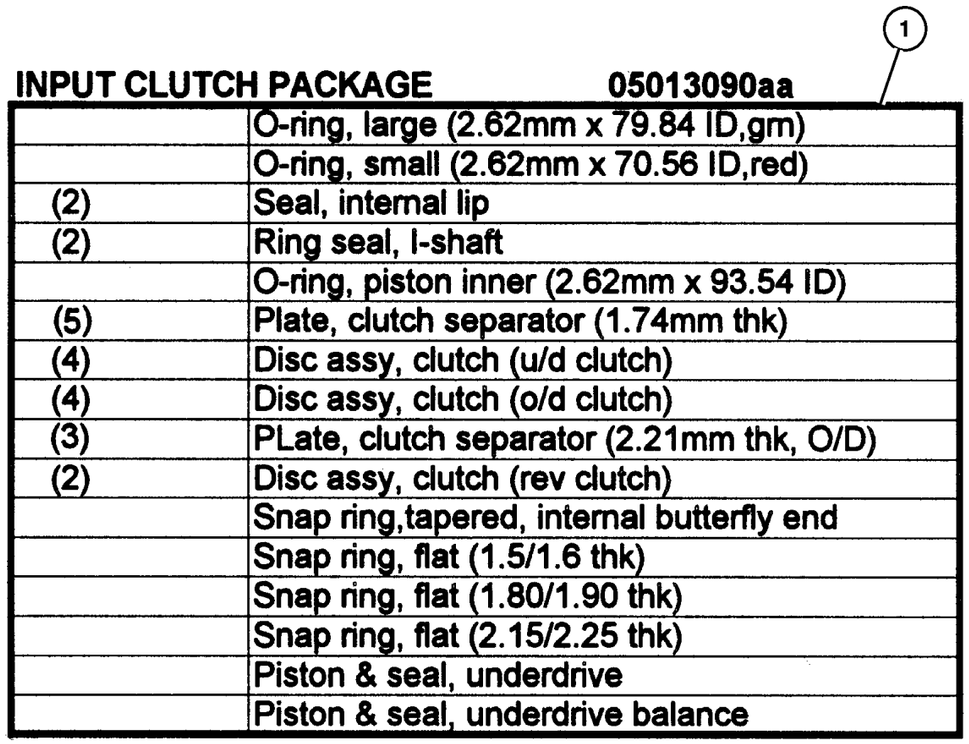

ITEM	PART NUMBER	QTY	LINE	SERIES	BODY	ENGINE	TRANS	TRIM	DESCRIPTION
NOTE:									
Sales Codes:									
[DGQ]=5 Speed Automatic Transmission - [5-45RFE]									
[EN0]=All 4/5 Cylinder Turbo Diesel Engines									
1	5013 090AC	1	J, U			EN0	DGQ		CLUTCH PACKAGE, Automatic Transmission, Input

JEEP LIBERTY (KJ)

SERIES	LINE	BODY	ENGINE	TRANSMISSION
P = Limited	J = LHD (4WD)	74 = 4 Dr (104.3 WB)	ED1,ED0 = 2.4L Power Tech	DDK = 5 Speed HDManual
H = Sport	U = RHD (4WD)		EKG,EK0 = 3.7L Power Tech	DDD = 5 Speed HD Manual
M = Renegade	T = LHD (2WD)		ENJ = 2.5L 4Cyl Turbo Diesel	DG4,DGQ = Multi-Speed Auto
			ENR = 2.8L 4Cyl Turbo Diesel	DG6 = 4 Speed Auto Transm
			EN0 = 4Cyl Turbo Diesel	DG0 = All Automatic Transm
				DBB = All Manual Transm

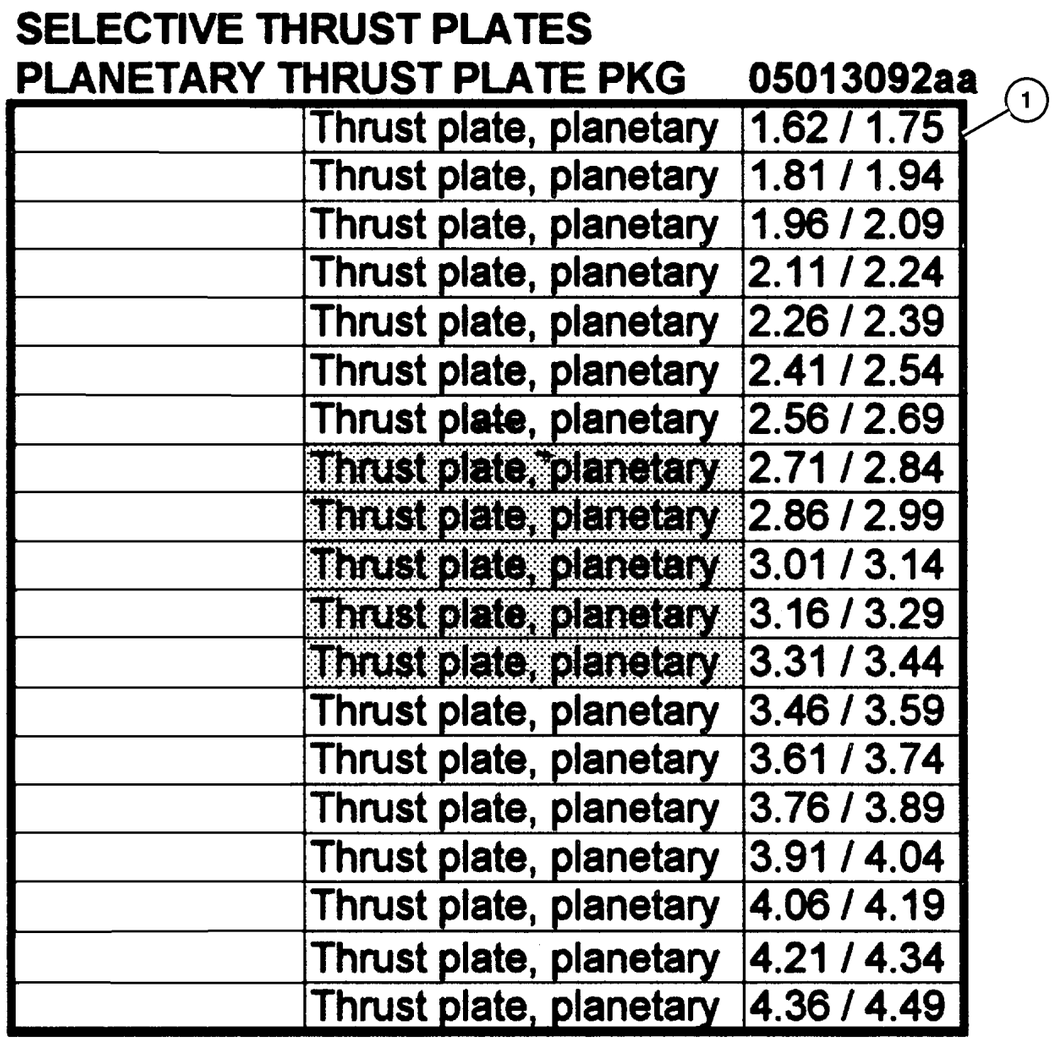

ITEM	PART NUMBER	QTY	LINE	SERIES	BODY	ENGINE	TRANS	TRIM	DESCRIPTION
NOTE:									
Sales Codes:									
[DGQ]=5 Speed Automatic Transmission - [5-45RFE]									
[EN0]=All 4/5 Cylinder Turbo Diesel Engines									
1	5013 092AA	1	J, U			EN0	DGQ		PLATE PACKAGE, Planetary Thrust
-2									PLATE, Clutch Hub Thrust, Input Clutch Plate
	4799 830AB	AR	J, U			EN0	DGQ		[1.94/2.03]
	4799 831AB	AR	J, U			EN0	DGQ		[2.08/2.17]
	4799 832AB	AR	J, U			EN0	DGQ		[2.22/2.31]
	4799 833AB	AR	J, U			EN0	DGQ		[2.36/2.45]
	4799 834AB	AR	J, U			EN0	DGQ		[2.50/2.59]
	4799 835AB	AR	J, U			EN0	DGQ		[2.64/2.73]
	4799 836AB	AR	J, U			EN0	DGQ		[2.78/2.87]
	4799 837AB	AR	J, U			EN0	DGQ		[2.92/3.01]
-3									PLATE, Planetary, Thrust Plate
	4799 810AC	AR	J, U			EN0	DGQ		[2.26/2.39]
	4799 843AC	AR	J, U			EN0	DGQ		[3.01/3.14]
	4799 811AC	AR	J, U			EN0	DGQ		[2.41/2.54]
	4799 812AC	AR	J, U			EN0	DGQ		[2.56/2.69]
	4799 813AC	AR	J, U			EN0	DGQ		[2.71/2.84]
	4799 814AC	AR	J, U			EN0	DGQ		[2.86/2.99]
	4799 816AC	AR	J, U			EN0	DGQ		[3.16/3.29]
	4799 817AC	AR	J, U			EN0	DGQ		[3.31/3.44]
	4799 818AC	AR	J, U			EN0	DGQ		[3.46/3.59]
	4799 819AC	AR	J, U			EN0	DGQ		[3.61/3.74]

JEEP LIBERTY (KJ)

SERIES	LINE	BODY	ENGINE	TRANSMISSION
P = Limited	J = LHD (4WD)	74 = 4 Dr (104.3 WB)	ED1,ED0 = 2.4L Power Tech	DDK = 5 Speed HDManual
H = Sport	U = RHD (4WD)		EKG,EK0 = 3.7L Power Tech	DDD = 5 Speed HD Manual
M = Renegade	T = LHD (2WD)		ENJ = 2.5L 4Cyl Turbo Diesel	DG4,DGQ = Multi-Speed Auto
			ENR = 2.8L 4Cyl Turbo Diesel	DG6 = 4 Speed Auto Transm
			EN0 = 4Cyl Turbo Diesel	DG0 = All Automatic Transm
				DBB = All Manual Transm

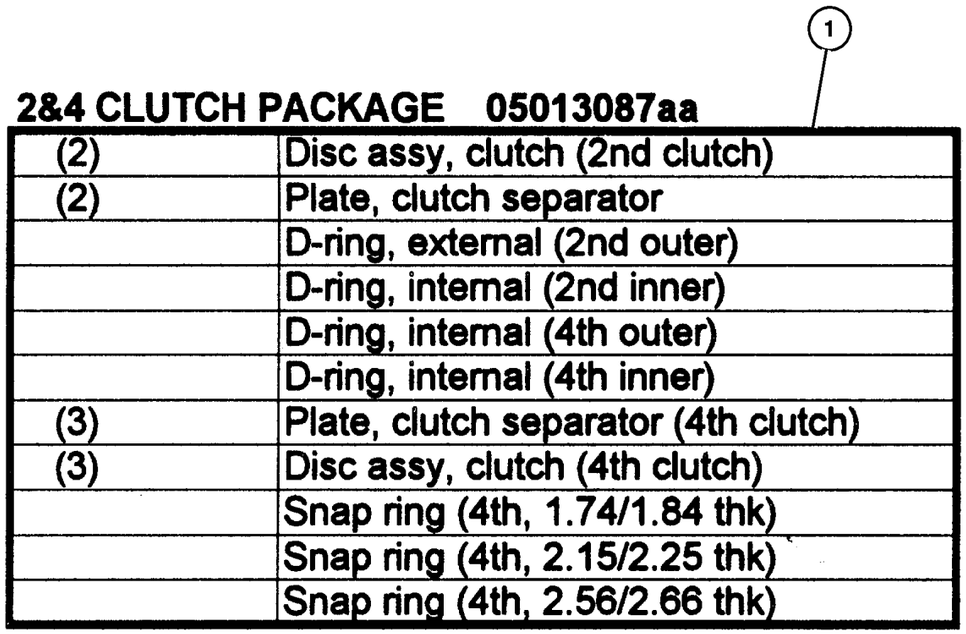

ITEM	PART NUMBER	QTY	LINE	SERIES	BODY	ENGINE	TRANS	TRIM	DESCRIPTION
NOTE:									
Sales Codes:									
[DGQ]=5 Speed Automatic Transmission - [5-45RFE]									
[EN0]=All 4/5 Cylinder Turbo Diesel Engines									
1	5013 087AC	1	J, U			EN0	DGQ		CLUTCH PACKAGE, Automatic Transmission, 2/4

JEEP LIBERTY (KJ)

SERIES	LINE	BODY	ENGINE	TRANSMISSION
P = Limited	J = LHD (4WD)	74 = 4 Dr (104.3 WB)	ED1,ED0 = 2.4L Power Tech	DDK = 5 Speed HDManual
H = Sport	U = RHD (4WD)		EKG,EK0 = 3.7L Power Tech	DDD = 5 Speed HD Manual
M = Renegade	T = LHD (2WD)		ENJ = 2.5L 4Cyl Turbo Diesel	DG4,DGQ = Multi-Speed Auto
			ENR = 2.8L 4Cyl Turbo Diesel	DG6 = 4 Speed Auto Transm
			EN0 = 4Cyl Turbo Diesel	DG0 = All Automatic Transm
				DBB = All Manual Transm

Group – 3550

Manual Transmission 5 Speed

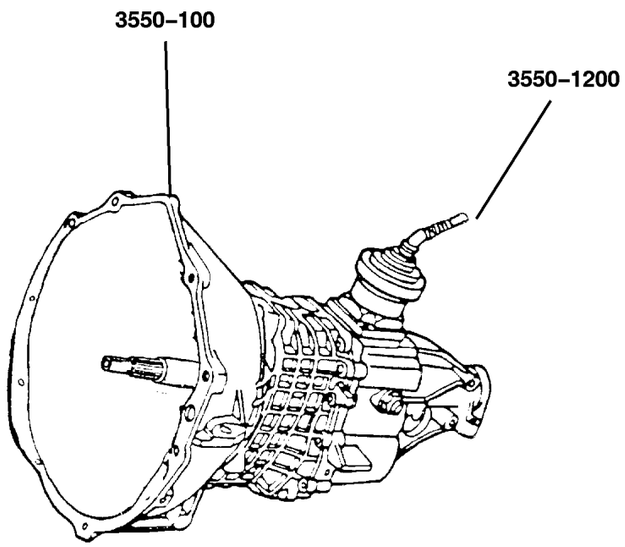

3550–100 Transmission Assembly	3550–200 Case and Extension	3550–400 Gear Train	3550–900 Fork and Rails
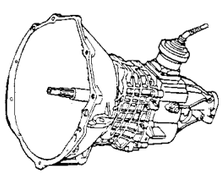	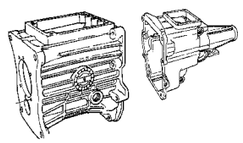	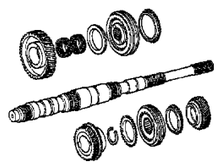	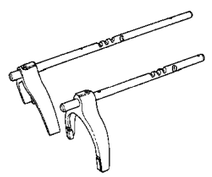
3550–1200 **Gearshift Controls** 			

GROUP 3550 - Manual Transmission 5 Speed

Illustration Title	Group-Fig. No.
Transmission Assembly	
Transmission Assembly [DDD]	Fig. 3550-110
Case and Extension	
Case and Extension [DDD]	Fig. 3550-210
Gear Train	
Gear Train [DDD]	Fig. 3550-410
Fork and Rails	
Fork and Rails [DDD]	Fig. 3550-910
Gearshift Controls	
Gearshift Controls [DDD]	Fig. 3550-1210

Transmission Assembly [DDD]
Figure 3550-110

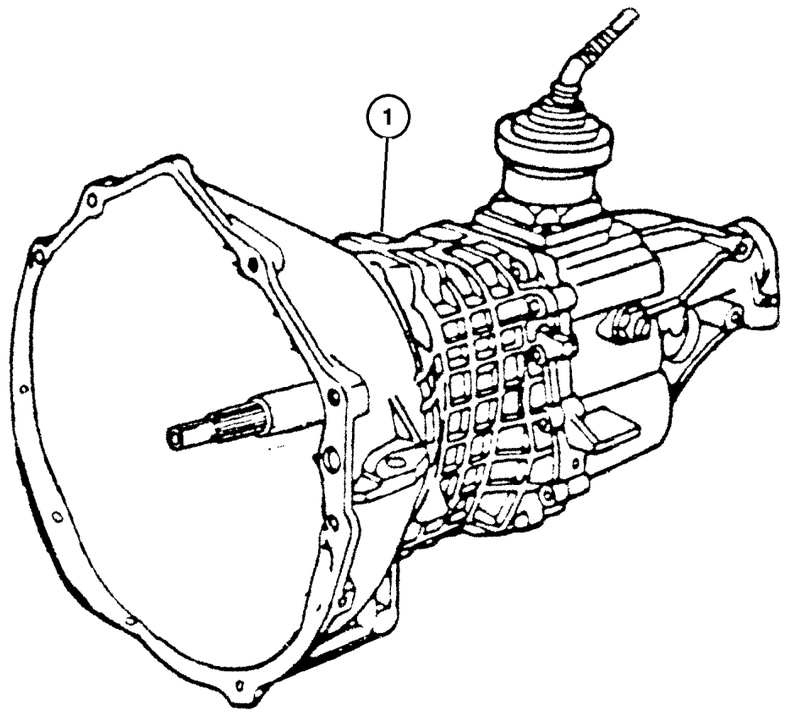

ITEM	PART NUMBER	QTY	LINE	SERIES	BODY	ENGINE	TRANS	TRIM	DESCRIPTION
NOTE; Sales Codes									
[DDD] = 5 Speed Heavy Duty Manual Transmissions									
[EKG] = Magnum 3.7L V6 Engine									
[EN0] = All 4/5 Cylinder Turbo Diesel Engines									
1									TRANSMISSION, 5 Speed
	52104 820AE	1	J, U			EN0	DDD		
	#52104 817AE	1	J			EKG	DDD		
	#52104 818AE	1	T			EKG	DDD		

JEEP LIBERTY (KJ)

SERIES	LINE	BODY	ENGINE	TRANSMISSION
P = Limited	J = LHD (4WD)	74 = 4 Dr (104.3 WB)	ED1,ED0 = 2.4L Power Tech	DDK = 5 Speed HDManual
H = Sport	U = RHD (4WD)		EKG,EK0 = 3.7L Power Tech	DDD = 5 Speed HD Manual
M = Renegade	T = LHD (2WD)		ENJ = 2.5L 4Cyl Turbo Diesel	DG4,DGQ = Multi-Speed Auto
			ENR = 2.8L 4Cyl Turbo Diesel	DG6 = 4 Speed Auto Transm
			EN0 = 4Cyl Turbo Diesel	DG0 = All Automatic Transm
				DBB = All Manual Transm

Case and Extension [DDD]
Figure 3550-210

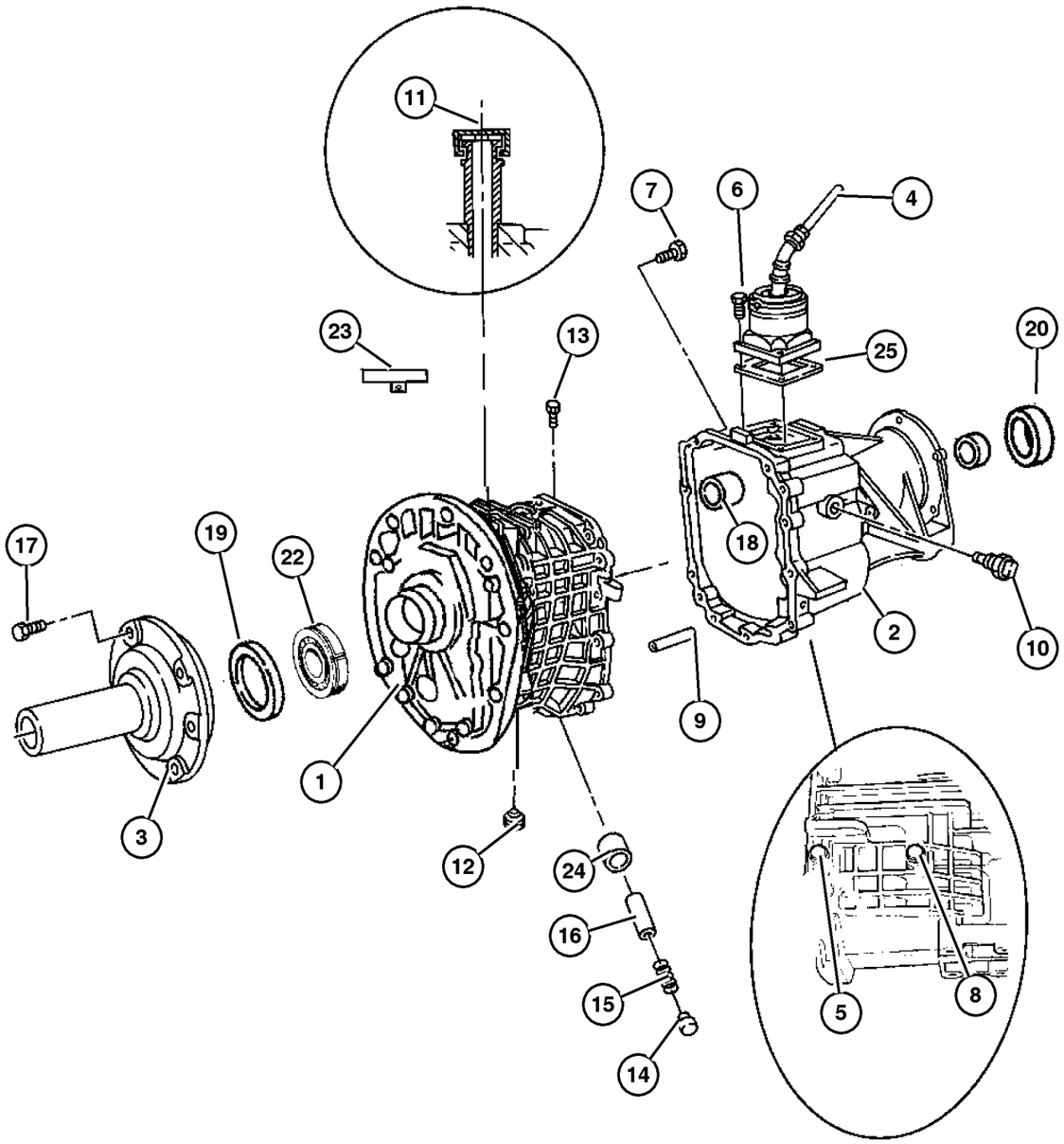

ITEM	PART NUMBER	QTY	LINE	SERIES	BODY	ENGINE	TRANS	TRIM	DESCRIPTION
NOTE; Sales Codes									
[DDD] = 5 Speed Heavy Duty Manual Transmissions									
[EKG] = Magnum 3.7L V6 Engine									
1	5096 101AA	1	J, U			EN0	DDD		CASE, Transmission
2	5069 042AC	1	J, U			EN0	DDD		CASE, Transmission Rear
3	5013 306AA	1	J, U			EN0	DDD		RETAINER, Shaft
4	5101 818AA	1	J, U			EN0	DDD		LEVER, Gearshift
5	4741 313	1	J, U			EN0	DDD		BOLT, M8-1.25x70
6									BOLT, Hex Head
	4741 144	4	T			EKG	DDD		
		4	J, U			EN0	DDD		
		4	J			EKG	DDD		
7									BOLT, Hex Head, M8x1.25x50
	4741 123	9	T			EKG	DDD		
		11	J, U			EN0	DDD		
		9	J			EKG	DDD		
8	4741 115	1	J, U			EN0	DDD		BOLT, Hex
9									PIN, Locating
	4741 122	2	T			EKG	DDD		
		2	J, U			EN0	DDD		
		2	J			EKG	DDD		
10	5600 7163	1	J, U			EN0	DDD		SWITCH, Back Up Lamp
11	5015 945AA	1	J, U			EN0	DDD		VENT, Transmission
12	4882 280	1	J, U			EN0	DDD		PLUG, Oil Fill
13									PIN, Detent
	4740 904	1	J, U			EN0	DDD		
		1	T			EKG	DDD		
		1	J			EKG	DDD		
14	4741 128	1	J, U			EN0	DDD		CAP, Detent
15	4773 182	1	J, U			EN0	DDD		SPRING, Shift Detent
16	5015 949AA	1	J, U			EN0	DDD		PLUNGER
17									BOLT, Hex Head, M6x1.00x25
	4741 300	6	T			EKG	DDD		
		6	J, U			EN0	DDD		
		6	J			EKG	DDD		
18									BUSHING, Shift Rail
	4740 899	1	J, U			EN0	DDD		
		1	T			EKG	DDD		
		1	J			EKG	DDD		
19	4741 296	1	J, U			EN0	DDD		SEAL, Input Shaft
20	4741 118	1	J, U			EN0	DDD		SEAL, Output Shaft

JEEP LIBERTY (KJ)

SERIES	LINE	BODY	ENGINE	TRANSMISSION
P = Limited	J = LHD (4WD)	74 = 4 Dr (104.3 WB)	ED1,ED0 = 2.4L Power Tech	DDK = 5 Speed HDManual
H = Sport	U = RHD (4WD)		EKG,EK0 = 3.7L Power Tech	DDD = 5 Speed HD Manual
M = Renegade	T = LHD (2WD)		ENJ = 2.5L 4Cyl Turbo Diesel	DG4,DGQ = Multi-Speed Auto
			ENR = 2.8L 4Cyl Turbo Diesel	DG6 = 4 Speed Auto Transm
			EN0 = 4Cyl Turbo Diesel	DG0 = All Automatic Transm
				DBB = All Manual Transm

AR = Use as required - = Non illustrated part # = New this model year

Case and Extension [DDD]
Figure 3550-210

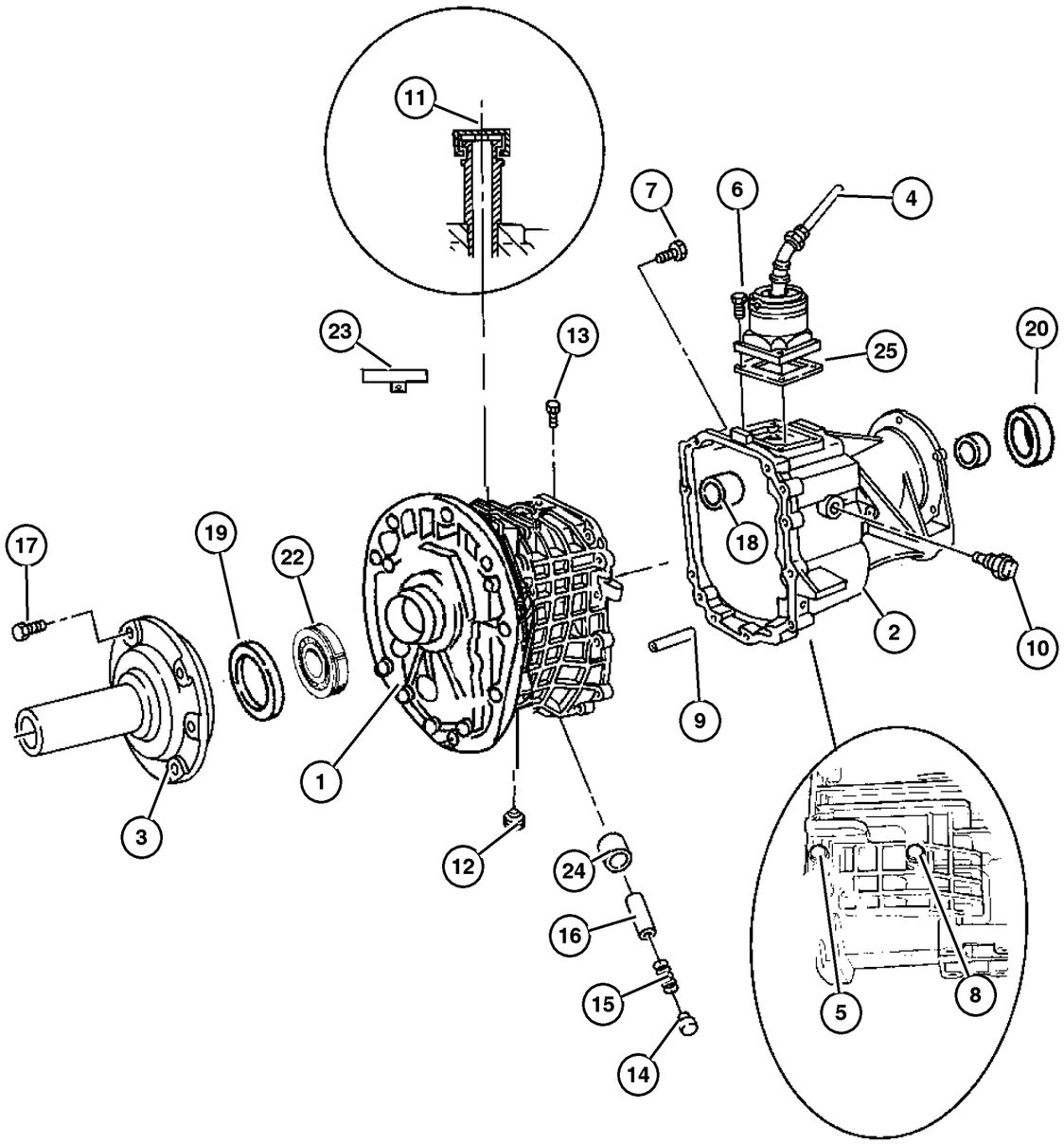

ITEM	PART NUMBER	QTY	LINE	SERIES	BODY	ENGINE	TRANS	TRIM	DESCRIPTION
-21	4864 409	1	T			EKG	DDD		SEAL, Extension
22	4874 174AB	1	J, U			EN0	DDD		BEARING, Input Shaft
23	5015 945AA	1	J, U			EN0	DDD		VENT, Transmission
24	5012 337AA	1	J, U			EN0	DDD		BUSHING, Transmission
25	4886 153AA	1	J, U			EN0	DDD		SEAL, Shift Lever
-26	5019 023AA	1	T			EKG	DDD		BUSHING, Transmission
-27									CLIP
	5019 683AA	2	T			EKG	DDD		
		2	J, U			EN0	DDD		
		2	J			EKG	DDD		
-28	4740 903	1	J, U			EN0	DDD		PLUG, Oil Drain

JEEP LIBERTY (KJ)

SERIES	LINE	BODY	ENGINE	TRANSMISSION
P = Limited	J = LHD (4WD)	74 = 4 Dr (104.3 WB)	ED1,ED0 = 2.4L Power Tech	DDK = 5 Speed HDManual
H = Sport	U = RHD (4WD)		EKG,EK0 = 3.7L Power Tech	DDD = 5 Speed HD Manual
M = Renegade	T = LHD (2WD)		ENJ = 2.5L 4Cyl Turbo Diesel	DG4,DGQ = Multi-Speed Auto
			ENR = 2.8L 4Cyl Turbo Diesel	DG6 = 4 Speed Auto Transm
			EN0 = 4Cyl Turbo Diesel	DG0 = All Automatic Transm
				DBB = All Manual Transm

Gear Train [DDD]
Figure 3550-410

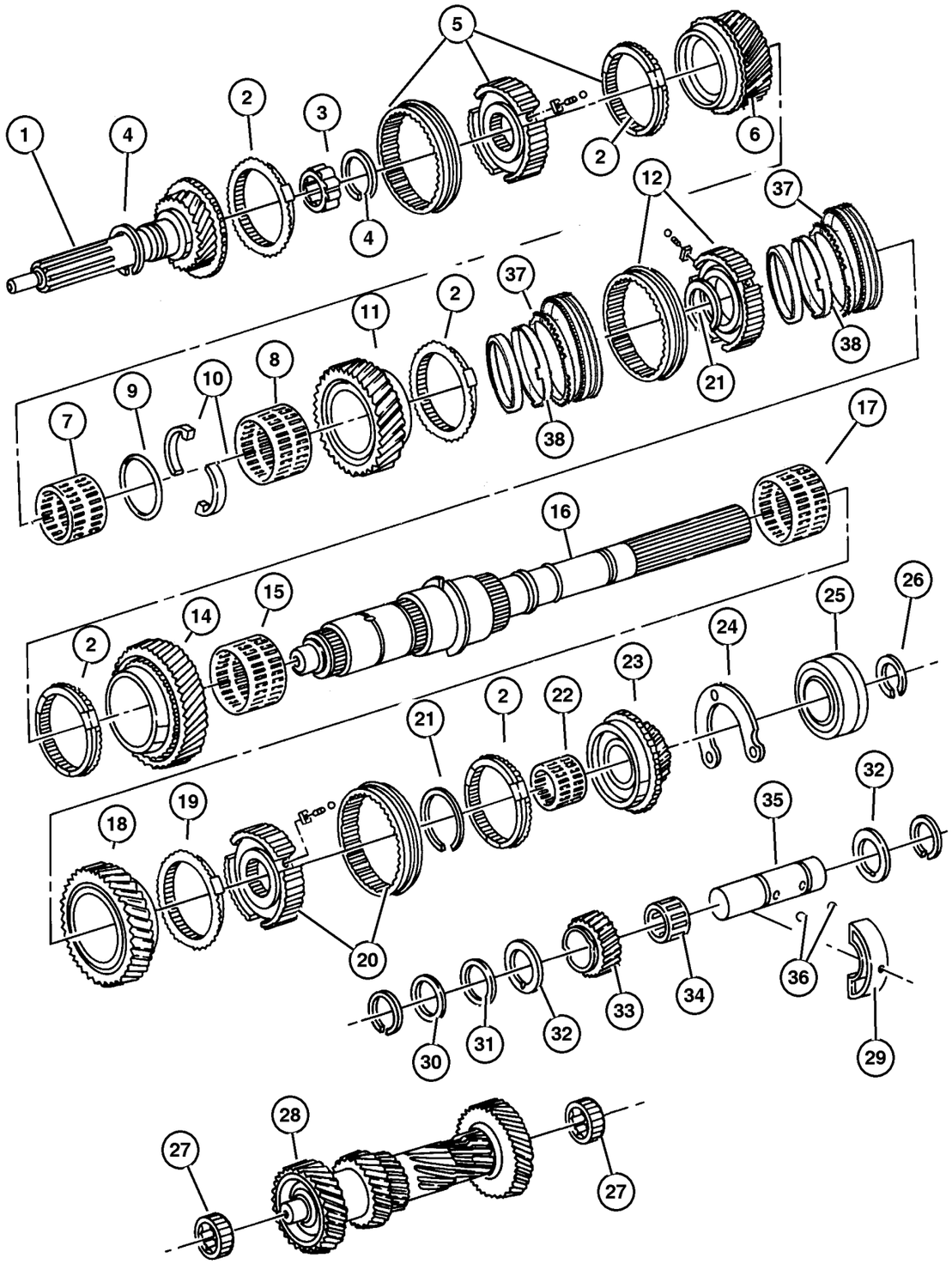

ITEM	PART NUMBER	QTY	LINE	SERIES	BODY	ENGINE	TRANS	TRIM	DESCRIPTION
NOTE; Sales Codes									
[DDD] = 5 Speed Heavy Duty Manual Transmissions									
[EKG] = Magnum 3.7L V6 Engine									
[EN0] = All 4/5 Cylinder Turbo Diesel Engines									
1									SHAFT, Input
	5019 723AA	1	J, U			EN0	DDD		
		1	T			EKG	DDD		
		1	J			EKG	DDD		
2									STOP RING, Synchronizer
	4741 277	2	T			EKG	DDD		
		2	J, U			EN0	DDD		
		2	J			EKG	DDD		
3									NEEDLE BEARING, Input Shaft
	4741 878	1	J, U			EN0	DDD		
		1	T			EKG	DDD		
		1	J			EKG	DDD		
4									SNAP RING, Output Shaft Bearing
	4741 266	1	J, U			EN0	DDD		
		1	T			EKG	DDD		
		1	J			EKG	DDD		
5									SYNCHRONIZER, Third and Fourth
	4741 293AB	1	J, U			EN0	DDD		
		1	T			EKG	DDD		
		1	J			EKG	DDD		
6									GEAR, Third
	4883 718AB	1	J, U			EN0	DDD		
		1	T			EKG	DDD		
		1	J			EKG	DDD		
7									NEEDLE BEARING, Third Gear
	4741 874	1	J, U			EN0	DDD		
		1	T			EKG	DDD		
		1	J			EKG	DDD		
8	5003 039AA	1	J, U			EN0	DDD		NEEDLE BEARING, Second Gear
9									SNAP RING
	4897 922AA	1	J, U			EN0	DDD		
		1	T			EKG	DDD		
		1	J			EKG	DDD		
10									WASHER, Output Shaft
	5019 721AA	2	T			EKG	DDD		
		2	J, U			EN0	DDD		
		2	J			EKG	DDD		
11									GEAR, Second

JEEP LIBERTY (KJ)

SERIES	LINE	BODY	ENGINE	TRANSMISSION
P = Limited	J = LHD (4WD)	74 = 4 Dr (104.3 WB)	ED1,ED0 = 2.4L Power Tech	DDK = 5 Speed HDManual
H = Sport	U = RHD (4WD)		EKG,EK0 = 3.7L Power Tech	DDD = 5 Speed HD Manual
M = Renegade	T = LHD (2WD)		ENJ = 2.5L 4Cyl Turbo Diesel	DG4,DGQ = Multi-Speed Auto
			ENR = 2.8L 4Cyl Turbo Diesel	DG6 = 4 Speed Auto Transm
			EN0 = 4Cyl Turbo Diesel	DG0 = All Automatic Transm
				DBB = All Manual Transm

AR = Use as required - = Non illustrated part # = New this model year

September 30, 2003

« RETURN TO GROUP INDEX »

Gear Train [DDD]
Figure 3550-410

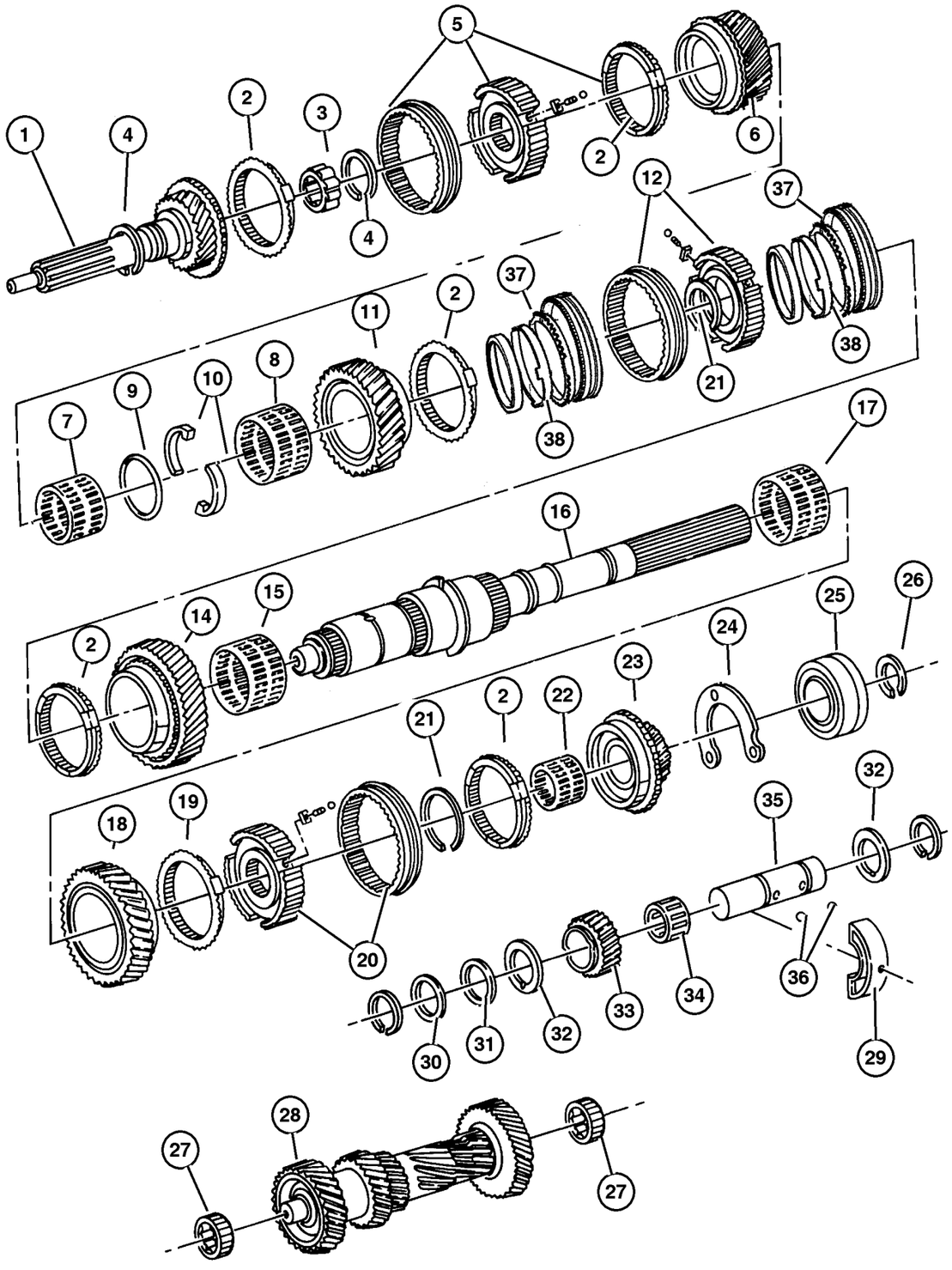

ITEM	PART NUMBER	QTY	LINE	SERIES	BODY	ENGINE	TRANS	TRIM	DESCRIPTION
	4874 358AB	1	J, U			EN0	DDD		
		1	T			EKG	DDD		
		1	J			EKG	DDD		
12									SYNCHRONIZER, First and Second
	4874 356AB	1	J, U			EN0	DDD		
		1	T			EKG	DDD		
		1	J			EKG	DDD		
-13									STOP RING, Synchronizer
	4741 277	2	T			EKG	DDD		
		2	J, U			EN0	DDD		
		2	J			EKG	DDD		
14									GEAR, First
	4874 355AB	1	J, U			EN0	DDD		
		1	T			EKG	DDD		
		1	J			EKG	DDD		
15									NEEDLE BEARING, Transmission
	4741 871	1	J, U			EN0	DDD		
		1	T			EKG	DDD		
		1	J			EKG	DDD		
16									SHAFT, Output
	4874 309	1	J, U			EN0	DDD		
		1	J			EKG	DDD		
	5003 288AA	1	T			EKG	DDD		
17									NEEDLE BEARING, Transmission
	4741 871	1	J, U			EN0	DDD		
		1	T			EKG	DDD		
		1	J			EKG	DDD		
18									GEAR, Reverse
	5019 029AA	1	J, U			EN0	DDD		
		1	T			EKG	DDD		
		1	J			EKG	DDD		
19									STOP RING, Synchronizer
	4741 285	1	J, U			EN0	DDD		
	4741 277	1	T			EKG	DDD		
		1	J			EKG	DDD		
20									SYNCHRONIZER, Fifth And Reverse
	4741 278AB	1	J, U			EN0	DDD		
		1	T			EKG	DDD		
		1	J			EKG	DDD		
21									STOP RING, Synchronizer
	4741 277	2	T			EKG	DDD		

JEEP LIBERTY (KJ)

SERIES	LINE	BODY	ENGINE	TRANSMISSION
P = Limited	J = LHD (4WD)	74 = 4 Dr (104.3 WB)	ED1,ED0 = 2.4L Power Tech	DDK = 5 Speed HDManual
H = Sport	U = RHD (4WD)		EKG,EK0 = 3.7L Power Tech	DDD = 5 Speed HD Manual
M = Renegade	T = LHD (2WD)		ENJ = 2.5L 4Cyl Turbo Diesel	DG4,DGQ = Multi-Speed Auto
			ENR = 2.8L 4Cyl Turbo Diesel	DG6 = 4 Speed Auto Transm
			EN0 = 4Cyl Turbo Diesel	DG0 = All Automatic Transm
				DBB = All Manual Transm

AR = Use as required - = Non illustrated part # = New this model year

September 30, 2003

« RETURN TO GROUP INDEX

« »

Gear Train [DDD]
Figure 3550-410

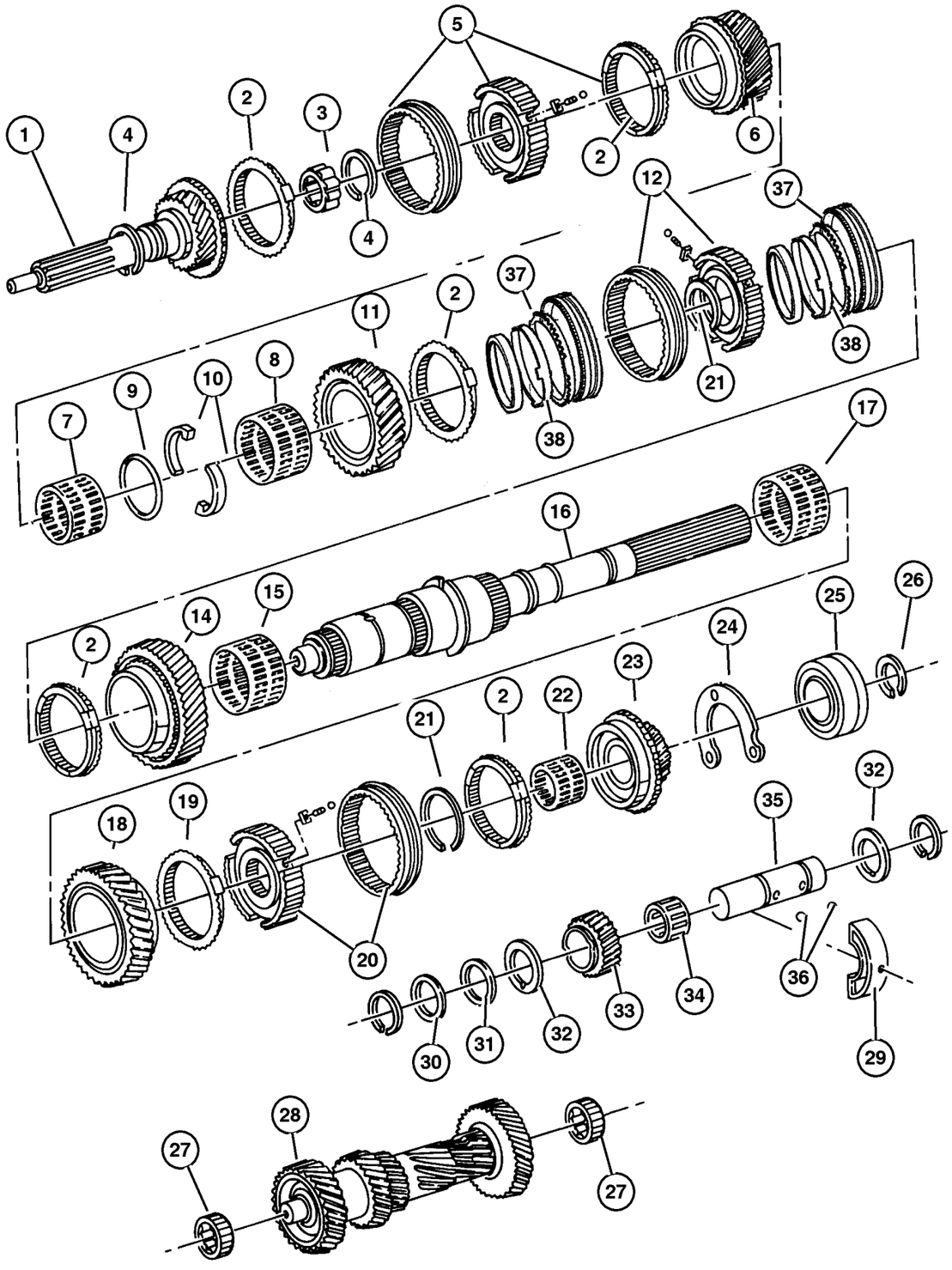

ITEM	PART NUMBER	QTY	LINE	SERIES	BODY	ENGINE	TRANS	TRIM	DESCRIPTION
		2	J, U			EN0	DDD		
		2	J			EKG	DDD		
22									BEARING, Needle
	4741 273	1	J, U			EN0	DDD		
		1	T			EKG	DDD		
		1	J			EKG	DDD		
23									GEAR, Fifth
	5069 040AA	1	J, U			EN0	DDD		
		1	T			EKG	DDD		
		1	J			EKG	DDD		
24									RETAINER, Transmission Output Shaft Bearing
	4741 114	1	J, U			EN0	DDD		
		1	J			EKG	DDD		
	4741 116	1	T			EKG	DDD		
25									BEARING, Output Shaft
	4741 866AB	1	J, U			EN0	DDD		
		1	T			EKG	DDD		
		1	J			EKG	DDD		
26									SNAP RING, Output Shaft Bearing
	4741 266	1	J, U			EN0	DDD		
		1	T			EKG	DDD		
		1	J			EKG	DDD		
27									BEARING, Countershaft
	5066 646AA	1	J, U			EN0	DDD		
		1	T			EKG	DDD		
		1	J			EKG	DDD		
28	5066 650AA	1	J, U			EN0	DDD		SHAFT, Counter
29									SUPPORT, Segment Idler Shaft
	4741 312	1	J, U			EN0	DDD		
		1	T			EKG	DDD		
		1	J			EKG	DDD		
30									WASHER, Flat
	4741 310	1	J, U			EN0	DDD		
		1	T			EKG	DDD		
		1	J			EKG	DDD		
31									WASHER, Idler Gear
	4741 309	1	J, U			EN0	DDD		
		1	T			EKG	DDD		
		1	J			EKG	DDD		
32									THRUST WASHER, Reverse Idler

JEEP LIBERTY (KJ)

SERIES	LINE	BODY	ENGINE	TRANSMISSION
P = Limited	J = LHD (4WD)	74 = 4 Dr (104.3 WB)	ED1,ED0 = 2.4L Power Tech	DDK = 5 Speed HDManual
H = Sport	U = RHD (4WD)		EKG,EK0 = 3.7L Power Tech	DDD = 5 Speed HD Manual
M = Renegade	T = LHD (2WD)		ENJ = 2.5L 4Cyl Turbo Diesel	DG4,DGQ = Multi-Speed Auto
			ENR = 2.8L 4Cyl Turbo Diesel	DG6 = 4 Speed Auto Transm
			EN0 = 4Cyl Turbo Diesel	DG0 = All Automatic Transm
				DBB = All Manual Transm

Gear Train [DDD]
Figure 3550-410

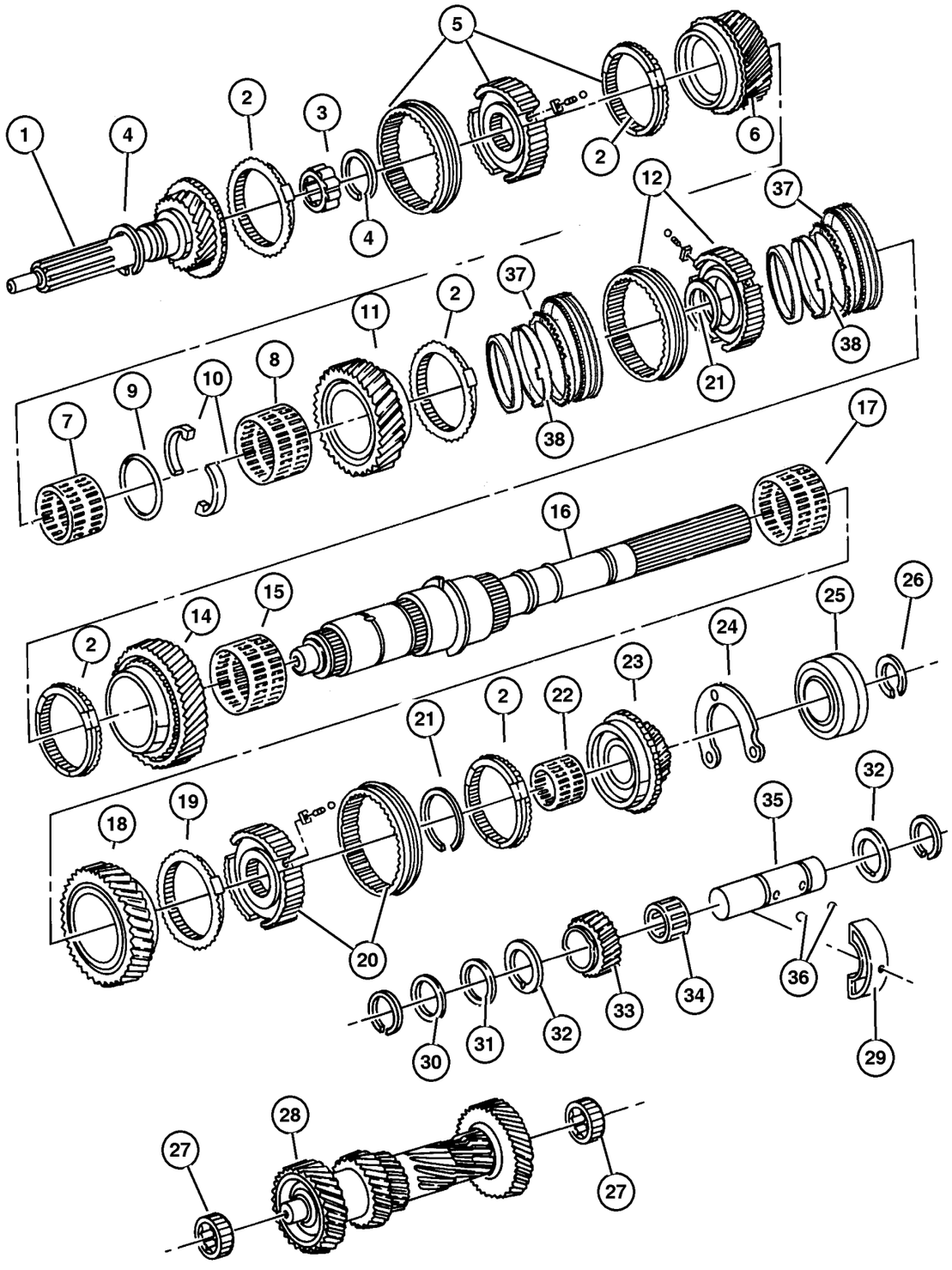

ITEM	PART NUMBER	QTY	LINE	SERIES	BODY	ENGINE	TRANS	TRIM	DESCRIPTION
	4741 307	2	T			EKG	DDD		
		2	J, U			EN0	DDD		
		2	J			EKG	DDD		
33									GEAR, Reverse Idler
	5066 651AA	1	J, U			EN0	DDD		
		1	T			EKG	DDD		
		1	J			EKG	DDD		
34									BEARING, Idler
	4874 359	1	J, U			EN0	DDD		
		1	T			EKG	DDD		
		1	J			EKG	DDD		
35									IDLER SHAFT, Transmission
	4741 303	1	J, U			EN0	DDD		
		1	T			EKG	DDD		
		1	J			EKG	DDD		
36									BALL, Check, 4 mm
	4741 891	2	T			EKG	DDD		
		2	J, U			EN0	DDD		
		2	J			EKG	DDD		
37									RING, Synchronizer Blocker
	4874 363	2	T			EKG	DDD		
		2	J, U			EN0	DDD		
		2	J			EKG	DDD		
38									CONE, Synchronizer
	4874 405	2	T			EKG	DDD		
		2	J, U			EN0	DDD		
		2	J			EKG	DDD		
-39									BEARING, First Gear
	4874 353	1	J, U			EN0	DDD		
		1	T			EKG	DDD		
		1	J			EKG	DDD		
-40									RING
	4874 403	2	T			EKG	DDD		Synch Interim Ring
		2	J, U			EN0	DDD		Synch Interim Ring
		2	J			EKG	DDD		Synch Interim Ring
	4874 404	2	T			EKG	DDD		Synch Reaction Cone Ring
		2	J, U			EN0	DDD		Synch Reaction Cone Ring
		2	J			EKG	DDD		Synch Reaction Cone Ring
-41									RING, Transmission
	4741 805	1	J, U			EN0	DDD		
		1	T			EKG	DDD		

JEEP LIBERTY (KJ)

SERIES	LINE	BODY	ENGINE	TRANSMISSION
P = Limited	J = LHD (4WD)	74 = 4 Dr (104.3 WB)	ED1,ED0 = 2.4L Power Tech	DDK = 5 Speed HDManual
H = Sport	U = RHD (4WD)		EKG,EK0 = 3.7L Power Tech	DDD = 5 Speed HD Manual
M = Renegade	T = LHD (2WD)		ENJ = 2.5L 4Cyl Turbo Diesel	DG4,DGQ = Multi-Speed Auto
			ENR = 2.8L 4Cyl Turbo Diesel	DG6 = 4 Speed Auto Transm
			EN0 = 4Cyl Turbo Diesel	DG0 = All Automatic Transm
				DBB = All Manual Transm

AR = Use as required - = Non illustrated part # = New this model year

September 30, 2003

« RETURN TO GROUP INDEX

Gear Train [DDD]
Figure 3550-410

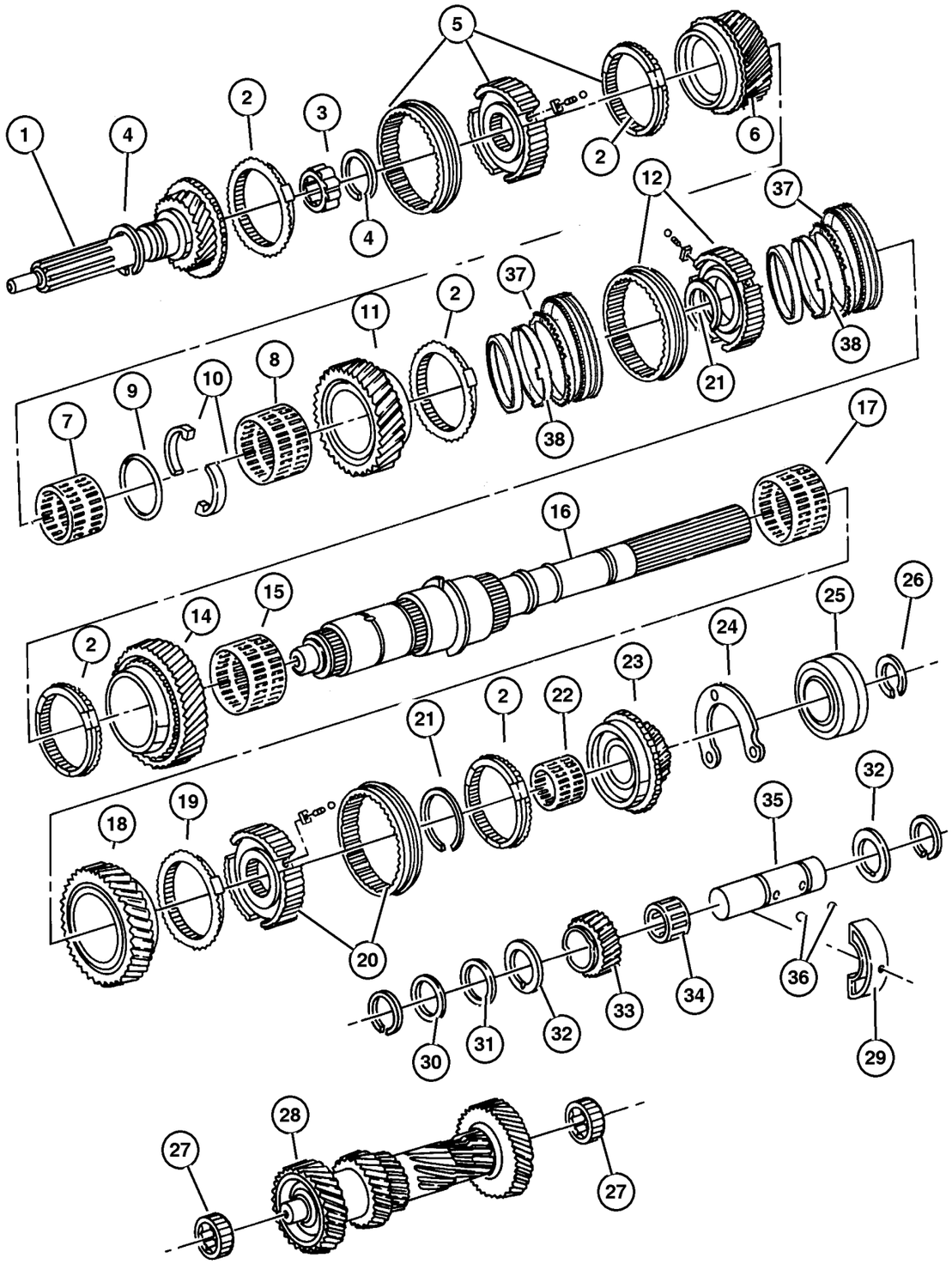

ITEM	PART NUMBER	QTY	LINE	SERIES	BODY	ENGINE	TRANS	TRIM	DESCRIPTION
		1	J			EKG	DDD		
-42									SNAP RING
	4741 311	2	T			EKG	DDD		
		2	J, U			EN0	DDD		
		2	J			EKG	DDD		
-43									SNAP RING PACKAGE, Transmission
	4741 807	1	J, U			EN0	DDD		
		1	T			EKG	DDD		
		1	J			EKG	DDD		
-44	5015 943AA	1	J, U			EN0	DDD		PLATE, Retaining
-45	5015 942AA	1	J, U			EN0	DDD		CAM, Reverse Block

JEEP LIBERTY (KJ)

SERIES	LINE	BODY	ENGINE	TRANSMISSION
P = Limited	J = LHD (4WD)	74 = 4 Dr (104.3 WB)	ED1,ED0 = 2.4L Power Tech	DDK = 5 Speed HDManual
H = Sport	U = RHD (4WD)		EKG,EK0 = 3.7L Power Tech	DDD = 5 Speed HD Manual
M = Renegade	T = LHD (2WD)		ENJ = 2.5L 4Cyl Turbo Diesel	DG4,DGQ = Multi-Speed Auto
			ENR = 2.8L 4Cyl Turbo Diesel	DG6 = 4 Speed Auto Transm
			EN0 = 4Cyl Turbo Diesel	DG0 = All Automatic Transm
				DBB = All Manual Transm

Fork and Rails [DDD]
Figure 3550-910

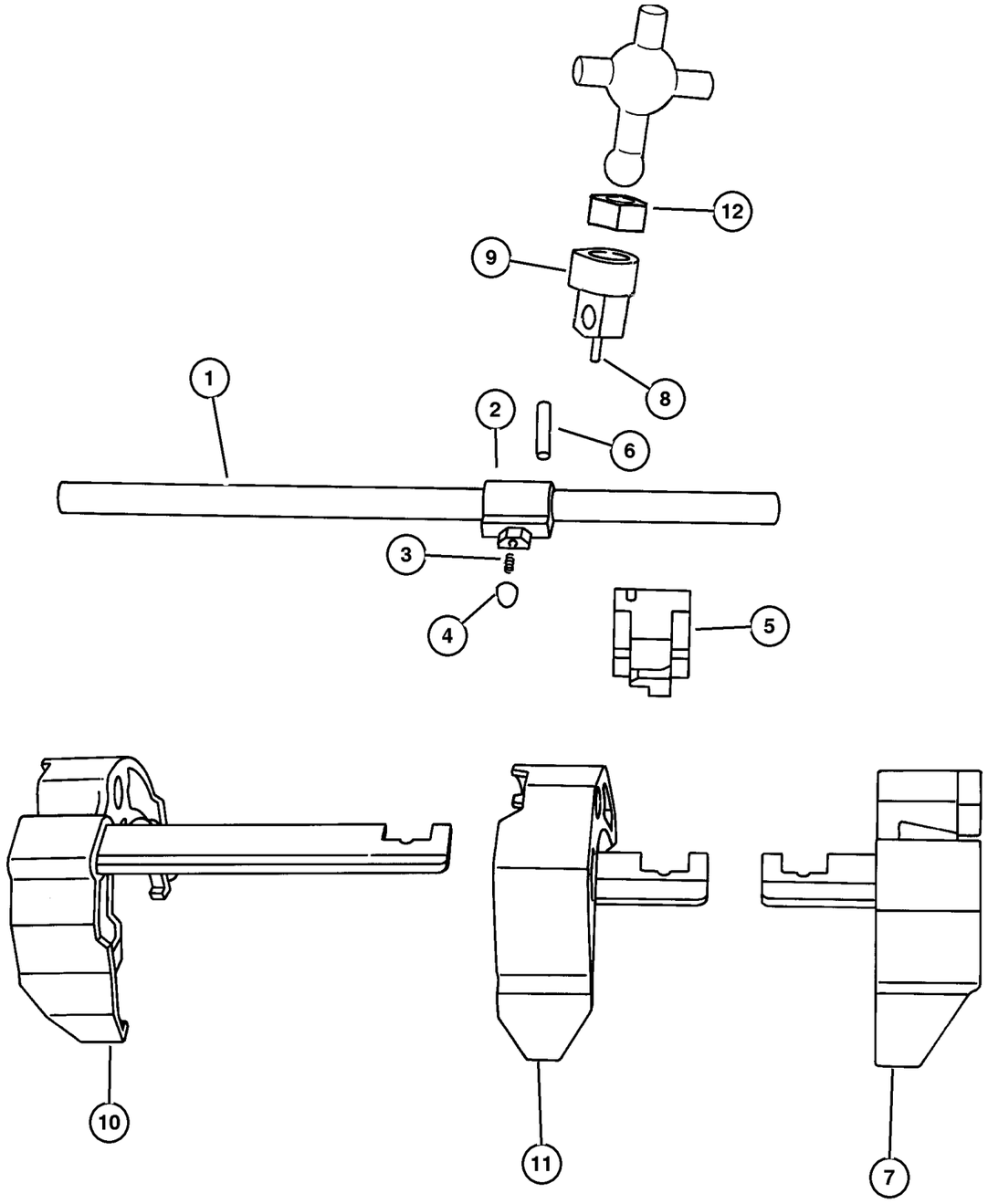

ITEM	PART NUMBER	QTY	LINE	SERIES	BODY	ENGINE	TRANS	TRIM	DESCRIPTION
NOTE; Sales Codes									
[DDD] = 5 Speed Heavy Duty Manual Transmissions									
[EKG] = Magnum 3.7L V6 Engine									
1	5015 951AB	1	J, U			EN0	DDD		SHAFT, Selector
2	5072 248AA	1	J, U			EN0	DDD		LEVER, Shift Shaft
3									SPRING, Lever
	4741 137	1	J, U			EN0	DDD		
		1	T			EKG	DDD		
		1	J			EKG	DDD		
4	5015 949AA	1	J, U			EN0	DDD		PLUNGER
5	5012 337AA	1	J, U			EN0	DDD		BUSHING, Transmission
6	4741 139	1	J, U			EN0	DDD		PIN, Shift Shaft
7	5066 352AB	1	J, U			EN0	DDD		FORK, Third and Fourth
8	4741 139	1	J, U			EN0	DDD		PIN, Shift Shaft
9	4874 352	1	J, U			EN0	DDD		SOCKET, Shift Shaft
10	5083 104AA	1	J, U			EN0	DDD		FORK, Transmission
11	4886 077AB	1	J, U			EN0	DDD		FORK, First and Second
12	5012 020AA	1	J, U			EN0	DDD		ISOLATOR, Shift Lever
-13	5019 023AA	1	T			EKG	DDD		BUSHING, Transmission
-14	5019 024AA	1	J, U			EN0	DDD		PIN, Shift Fork Trac
-15	4740 904	1	J, U			EN0	DDD		PIN, Detent

JEEP LIBERTY (KJ)

SERIES	LINE	BODY	ENGINE	TRANSMISSION
P = Limited	J = LHD (4WD)	74 = 4 Dr (104.3 WB)	ED1,ED0 = 2.4L Power Tech	DDK = 5 Speed HDManual
H = Sport	U = RHD (4WD)		EKG,EK0 = 3.7L Power Tech	DDD = 5 Speed HD Manual
M = Renegade	T = LHD (2WD)		ENJ = 2.5L 4Cyl Turbo Diesel	DG4,DGQ = Multi-Speed Auto
			ENR = 2.8L 4Cyl Turbo Diesel	DG6 = 4 Speed Auto Transm
			EN0 = 4Cyl Turbo Diesel	DG0 = All Automatic Transm
				DBB = All Manual Transm

Gearshift Controls [DDD]
Figure 3550-1210

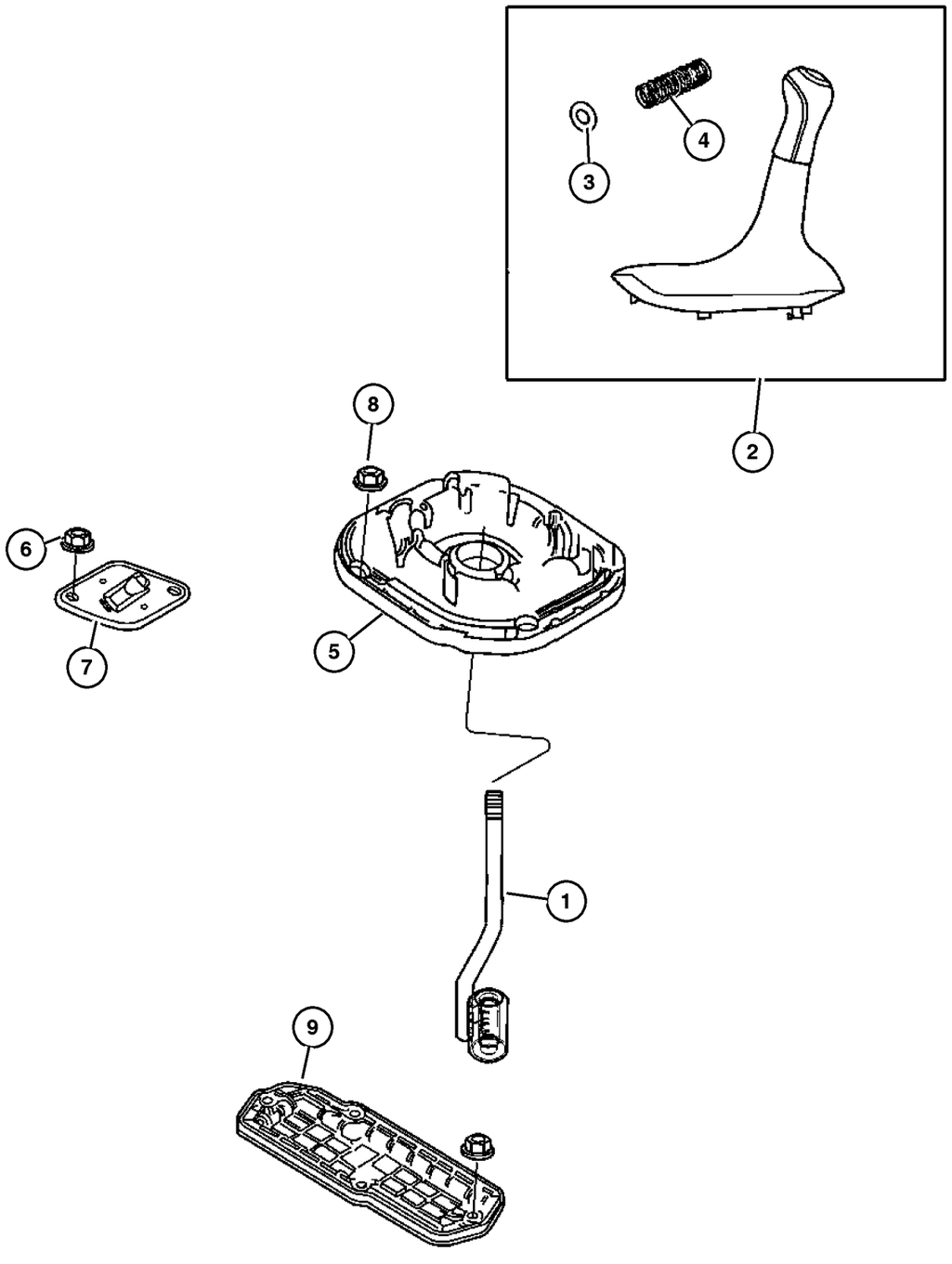

ITEM	PART NUMBER	QTY	LINE	SERIES	BODY	ENGINE	TRANS	TRIM	DESCRIPTION
NOTE; Sales Codes									
[DBB]= All Manual Transmissions									
[ED0]= All 4 Cylinder Gas Engines									
[EK0] = All 3.7L 6 Cylinder Gas Engines									
[EN0]= All 4/5 Cylinder Turbo Diesel									
1	5102 826AA	1					DBB		LEVER, Gearshift
2	5102 830AA	1					DBB		BOOT KIT, Gearshift
3	5102 828AA	1					DBB		SPRING, Gearshift Lever
4	5102 827AA	1					DBB		O RING, Gearshift Boot
5	52104 306AB	1				ED0, EK0, EN0	DBB		BOOT, Gearshift Lever
6	6100 047	2							NUT AND WASHER, Hex Nut-Coned Washer, M6 x 1.00
7	52104 382AA	1					DBB		COVER, Gearshift
8									NUT AND WASHER, Hex Nut-Sealing Washer, M6 x 1.00
	3420 1358	4					DBB		
		4							
9	52104 321AA	1	T						COVER, Transfer Case Lever Hole
-10	5015 943AA	1	J, U			EN0	DDD		PLATE, Retaining
-11	6506 668AA	1					DBB		SCREW, Cap
-12	5015 942AA	1	J, U			EN0	DDD		CAM, Reverse Block

JEEP LIBERTY (KJ)

SERIES	LINE	BODY	ENGINE	TRANSMISSION
P = Limited	J = LHD (4WD)	74 = 4 Dr (104.3 WB)	ED1,ED0 = 2.4L Power Tech	DDK = 5 Speed HDManual
H = Sport	U = RHD (4WD)		EKG,EK0 = 3.7L Power Tech	DDD = 5 Speed HD Manual
M = Renegade	T = LHD (2WD)		ENJ = 2.5L 4Cyl Turbo Diesel	DG4,DGQ = Multi-Speed Auto
			ENR = 2.8L 4Cyl Turbo Diesel	DG6 = 4 Speed Auto Transm
			EN0 = 4Cyl Turbo Diesel	DG0 = All Automatic Transm
				DBB = All Manual Transm

Group – NV1500

Manual Transmission 5 Speed

NV1500–100

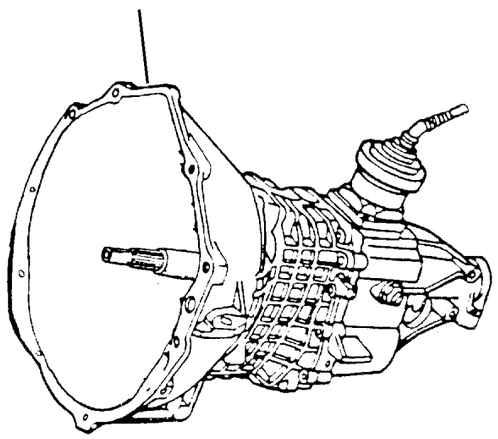

NV1500–100 Transmission Assembly	NV1500–200 Case and Extension	NV1500–400 Gear Train	NV1500–900 Fork and Rails
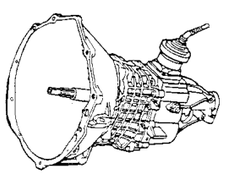	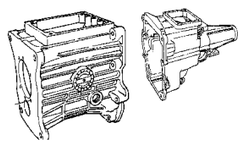	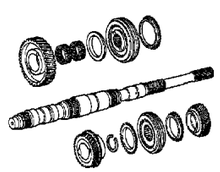	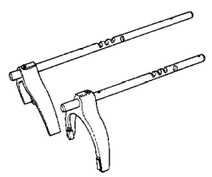
NV1500–1200 **Gearshift Controls**			

GROUP NV1500 - Manual Transmission 5 Speed

Illustration Title	Group-Fig. No.
Transmission Assembly	
Transmission [NV 1500] [DDK]	Fig. NV1500-110
Case and Extension	
Case and Extension [NV 1500] [DDK]	Fig. NV1500-210
Gear Train	
Gear Train [NV 1500] [DDK]	Fig. NV1500-410
Fork and Rails	
Fork and Rail [NV 1500] [DDK]	Fig. NV1500-910
Gearshift Controls	
Gearshift Controls [DDK]	Fig. NV1500-1210

Transmission [NV 1500] [DDK]
Figure NV1500-110

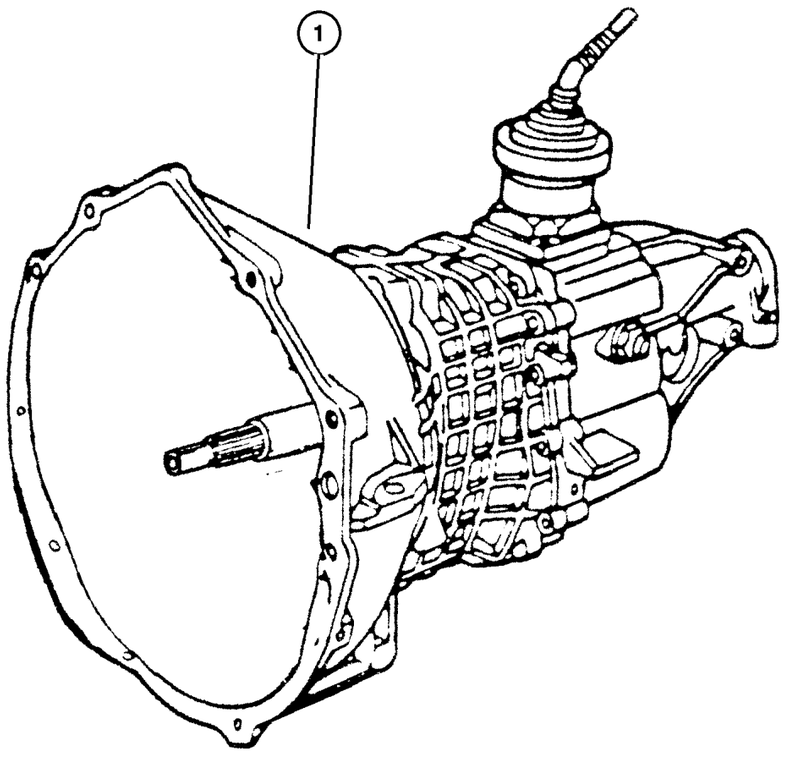

ITEM	PART NUMBER	QTY	LINE	SERIES	BODY	ENGINE	TRANS	TRIM	DESCRIPTION
NOTE; Sales Codes									
[DDK] = 5 Speed Heavy Duty Manual Transmissions									
[ED0] = All 2.2,2.5,2.4 L 4 Cylinder Gas Engines									
1									TRANSMISSION, 5 Speed
	52108 292AC	1	J, U			ED0	DDK		
	52108 293AC	1	T			ED0	DDK		
-2	5013 329AA	3	J, U			ED0	DDK		BOLT

JEEP LIBERTY (KJ)

SERIES	LINE	BODY	ENGINE	TRANSMISSION
P = Limited	J = LHD (4WD)	74 = 4 Dr (104.3 WB)	ED1,ED0 = 2.4L Power Tech	DDK = 5 Speed HDManual
H = Sport	U = RHD (4WD)		EKG,EK0 = 3.7L Power Tech	DDD = 5 Speed HD Manual
M = Renegade	T = LHD (2WD)		ENJ = 2.5L 4Cyl Turbo Diesel	DG4,DGQ = Multi-Speed Auto
			ENR = 2.8L 4Cyl Turbo Diesel	DG6 = 4 Speed Auto Transm
			EN0 = 4Cyl Turbo Diesel	DG0 = All Automatic Transm
				DBB = All Manual Transm

Case and Extension [NV 1500] [DDK]
Figure NV1500-210

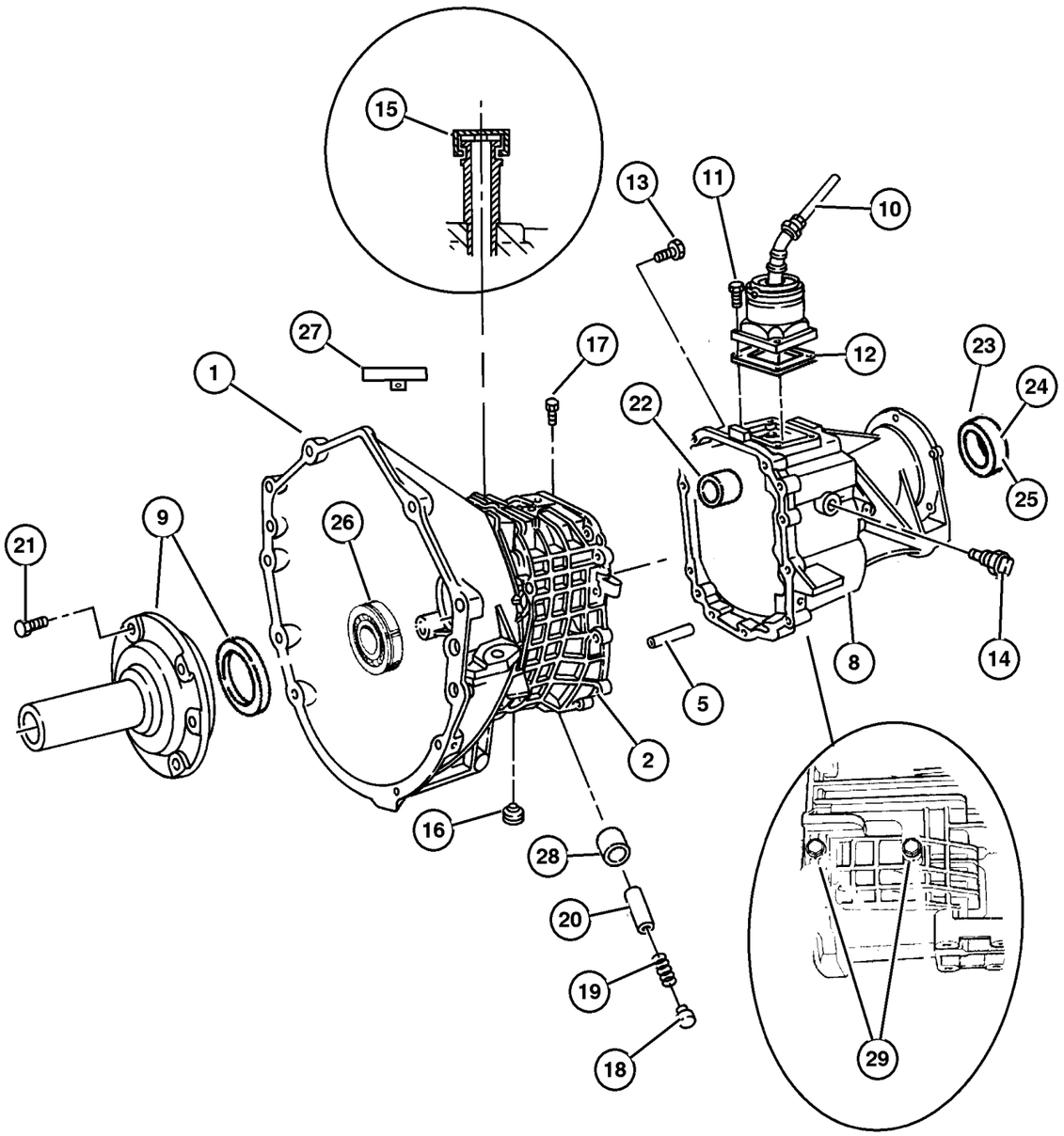

ITEM	PART NUMBER	QTY	LINE	SERIES	BODY	ENGINE	TRANS	TRIM	DESCRIPTION
NOTE; Sales Codes									
[DBB] = All Manual Transmissions									
[DDK] = 5 Speed Heavy Duty Manual Transmissions									
[ED0] = All 2.2,2.5,2.4 L 4 Cylinder Gas Engines									
1	52104 292AA	1				ED0	DBB		HOUSING, Clutch
2									CASE, Transmission
	5018 670AA	1	T			ED0	DDK		
		1	J, U			ED0	DDK		
-3									BUSHING, Shift Rail
	4740 899	1	T			ED0	DDK		
	4338 945	1	J, U						
-4									CUP, Bearing Inner
	5013 313AA	1	T			ED0	DDK		
		1	J, U			ED0	DDK		
5									DOWEL, Transmission Case
	5013 314AA	1	J, U			ED0	DDK		12 X 16 LG
		2	J, U			ED0	DDK		
-6	5013 337AA	1	T			ED0	DDK		DOWEL, Transmission Case
-7									SHIM
	5013 315AA	1	T			ED0	DDK		Size (.050)
		1	J, U			ED0	DDK		Size (.050)
	5013 316AA	1	T			ED0	DDK		Size (.054)
		1	J, U			ED0	DDK		Size (.054)
	5013 317AA	1	T			ED0	DDK		Size (.058)
		1	J, U			ED0	DDK		Size (.058)
8									CASE, Transmission Rear
	5093 073AB	1	J, U			ED0	DDK		
	5093 072AA	1	T			ED0	DDK		
9									RETAINER, Shaft
	5013 413AA	1	T			ED0	DDK		
		1	J, U			ED0	DDK		
10									LEVER, Gearshift
	5101 839AA	1	T			ED0	DDK		
		1	J, U			ED0	DDK		
	5101 818AA	1	J, U			EN0	DDD		
11									BOLT, Hex Head
	4741 144	1	J, U			ED0	DDK		
		1	T			ED0	DDK		
12									SEAL, Shift Lever
	4886 153AA	1	T			ED0	DDK		
		1	J, U			ED0	DDK		

JEEP LIBERTY (KJ)

SERIES	LINE	BODY	ENGINE	TRANSMISSION
P = Limited	J = LHD (4WD)	74 = 4 Dr (104.3 WB)	ED1,ED0 = 2.4L Power Tech	DDK = 5 Speed HDManual
H = Sport	U = RHD (4WD)		EKG,EK0 = 3.7L Power Tech	DDD = 5 Speed HD Manual
M = Renegade	T = LHD (2WD)		ENJ = 2.5L 4Cyl Turbo Diesel	DG4,DGQ = Multi-Speed Auto
			ENR = 2.8L 4Cyl Turbo Diesel	DG6 = 4 Speed Auto Transm
			EN0 = 4Cyl Turbo Diesel	DG0 = All Automatic Transm
				DBB = All Manual Transm

Case and Extension [NV 1500] [DDK]
Figure NV1500-210

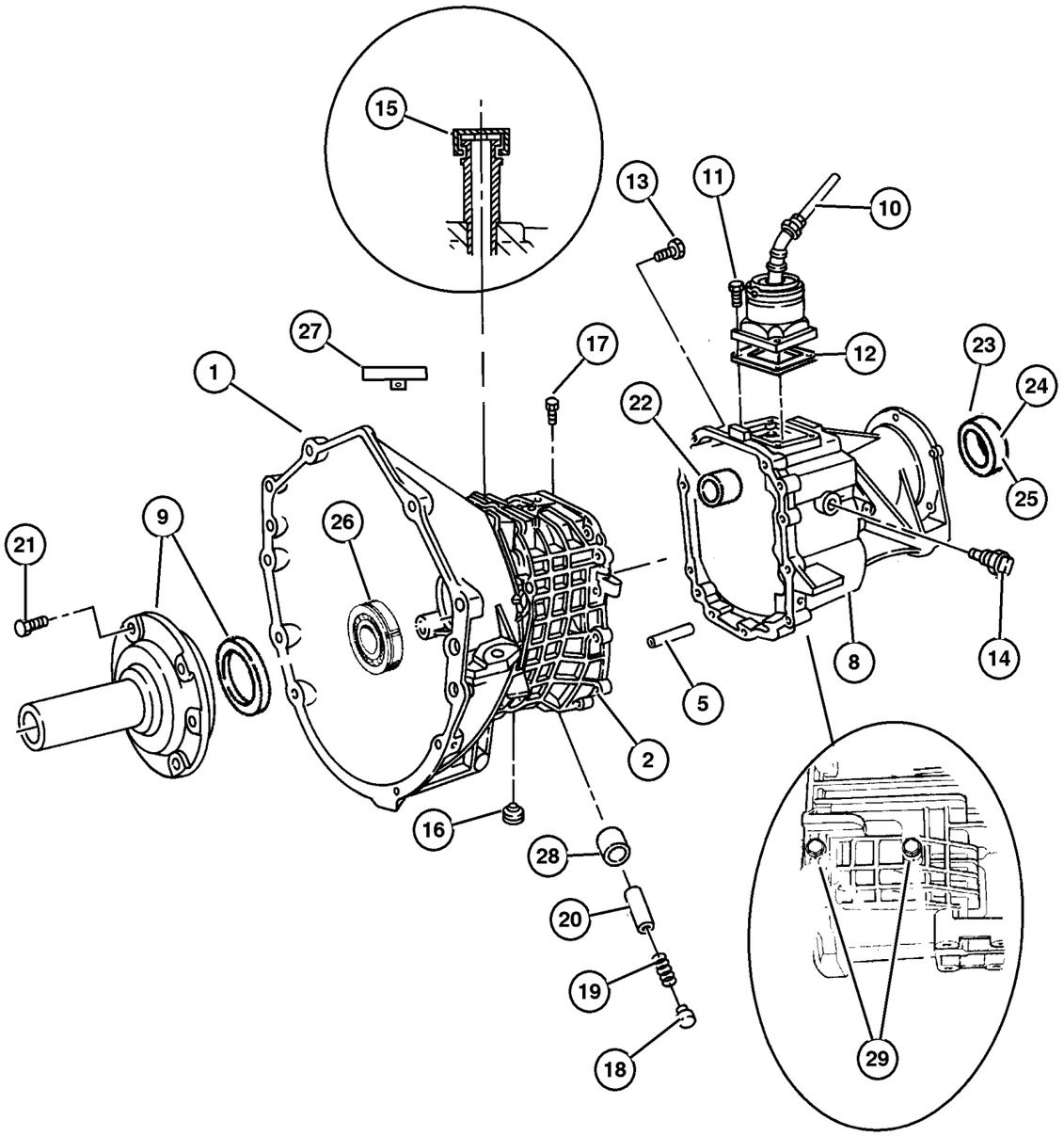

ITEM	PART NUMBER	QTY	LINE	SERIES	BODY	ENGINE	TRANS	TRIM	DESCRIPTION
13									BOLT, Hex Flange Head, M8x1. 25x30
	1150 2628	1	T			ED0	DDK		
		8	J, U			ED0	DDK		
14									SWITCH, Back Up Lamp
	5013 336AA	1	T			ED0	DDK		
		1	J, U			ED0	DDK		
15									VENT, Transmission
	5013 319AA	1	T			ED0	DDK		
		1	J, U			ED0	DDK		
16	4882 280	1	T			ED0	DDK		PLUG, Oil Fill
17									PIN, Detent
	5013 321AA	1	T			ED0	DDK		
		1	J, U			ED0	DDK		
18									PLUG, Shift Rail
	5013 339AA	1	T			ED0	DDK		
		1	J, U			ED0	DDK		
19									SPRING, Shift Detent
	5093 217AA	1	T			ED0	DDK		
		1	J, U			ED0	DDK		
20									PLUNGER
	5015 949AA	1	T			ED0	DDK		
		1	J, U			ED0	DDK		
	5013 348AA	1	J, U			EN0	DDD		
21									BOLT, Hex Head, M8x1.25x50
	4741 123	1	T			ED0	DDK		
		8	J, U			ED0	DDK		
22									BEARING, Ball, (NOT SERVICED) (Not Serviced)
23	5013 334AA	1	T			ED0	DDK		SEAL, Output Shaft
24	5013 332AA	1	T			ED0	DDK		SEAL, Extension Yoke
25	5013 333AA	1	J, U			ED0	DDK		SEAL, Adapter
26	5013 411AA	1	T			ED0	DDK		BEARING, Input Shaft
27									VENT, Transmission
	5013 319AA	1	T			ED0	DDK		
		1	J, U			ED0	DDK		
28									BUSHING, Detent
	4740 892	1	T			ED0	DDK		
		2	J, U			ED0	DDK		
29									BOLT
	5013 329AA	3	J, U			ED0	DDK		

JEEP LIBERTY (KJ)

SERIES	LINE	BODY	ENGINE	TRANSMISSION
P = Limited	J = LHD (4WD)	74 = 4 Dr (104.3 WB)	ED1,ED0 = 2.4L Power Tech	DDK = 5 Speed HDManual
H = Sport	U = RHD (4WD)		EKG,EK0 = 3.7L Power Tech	DDD = 5 Speed HD Manual
M = Renegade	T = LHD (2WD)		ENJ = 2.5L 4Cyl Turbo Diesel	DG4,DGQ = Multi-Speed Auto
			ENR = 2.8L 4Cyl Turbo Diesel	DG6 = 4 Speed Auto Transm
			EN0 = 4Cyl Turbo Diesel	DG0 = All Automatic Transm
				DBB = All Manual Transm

AR = Use as required - = Non illustrated part # = New this model year

September 30, 2003

« RETURN TO GROUP INDEX

Case and Extension [NV 1500] [DDK]
Figure NV1500-210

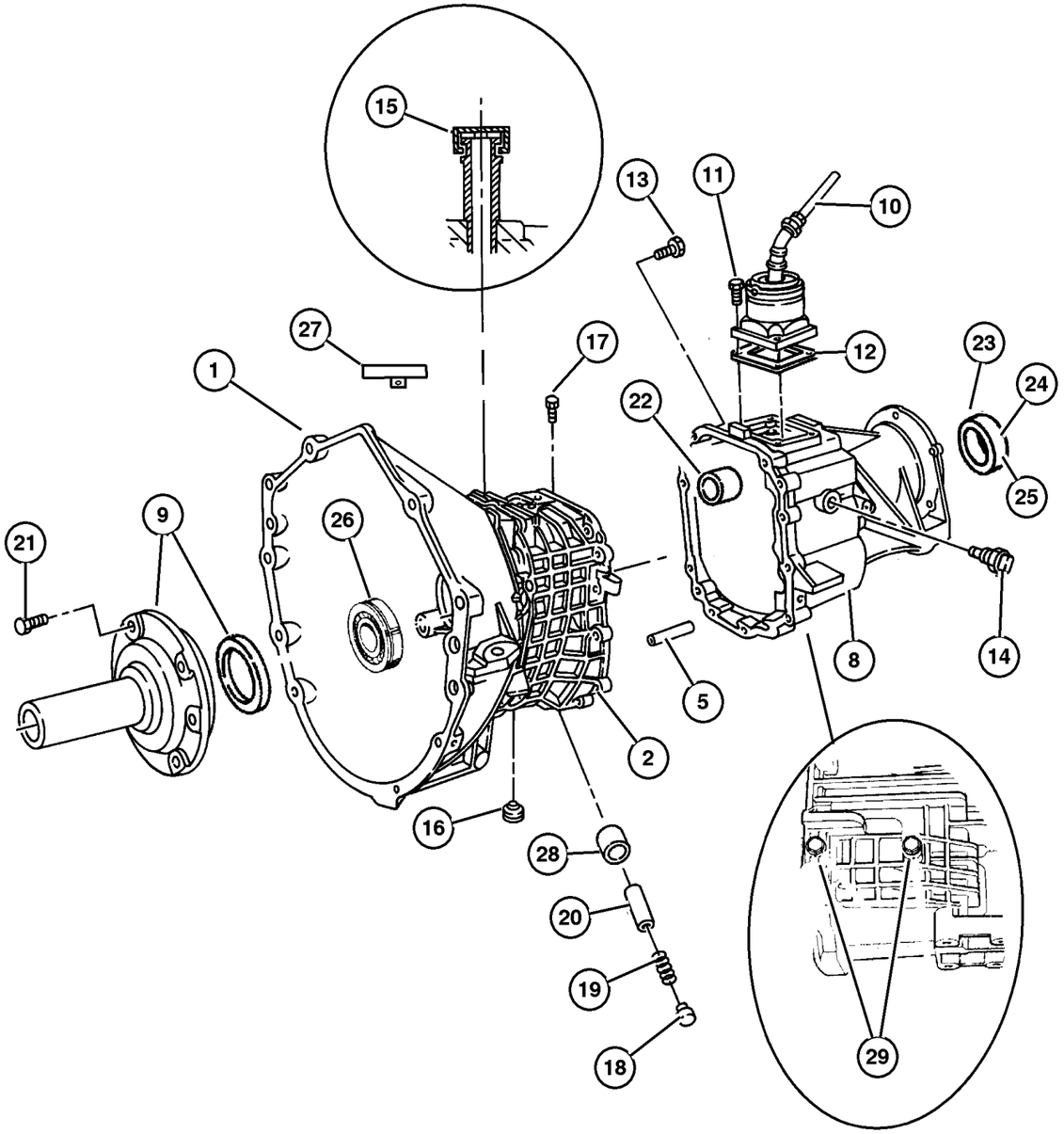

ITEM	PART NUMBER	QTY	LINE	SERIES	BODY	ENGINE	TRANS	TRIM	DESCRIPTION
		1	T			ED0	DDK		
-30									MAGNET, Transmission
	5013 327AA	1	T			ED0	DDK		
		1	J, U			ED0	DDK		
-31	5013 331AA	1	J, U			ED0	DDK		SEAL, O-Ring
-32									RETAINER, Transmission Output Shaft Bearing
	5013 328AA	1	T			ED0	DDK		
		1	J, U			ED0	DDK		
-33									O RING
	5013 320AA	1	J, U			ED0	DDK		
		1	T			ED0	DDK		

JEEP LIBERTY (KJ)

SERIES	LINE	BODY	ENGINE	TRANSMISSION
P = Limited	J = LHD (4WD)	74 = 4 Dr (104.3 WB)	ED1,ED0 = 2.4L Power Tech	DDK = 5 Speed HDManual
H = Sport	U = RHD (4WD)		EKG,EK0 = 3.7L Power Tech	DDD = 5 Speed HD Manual
M = Renegade	T = LHD (2WD)		ENJ = 2.5L 4Cyl Turbo Diesel	DG4,DGQ = Multi-Speed Auto
			ENR = 2.8L 4Cyl Turbo Diesel	DG6 = 4 Speed Auto Transm
			EN0 = 4Cyl Turbo Diesel	DG0 = All Automatic Transm
				DBB = All Manual Transm

Gear Train [NV 1500] [DDK]
Figure NV1500-410

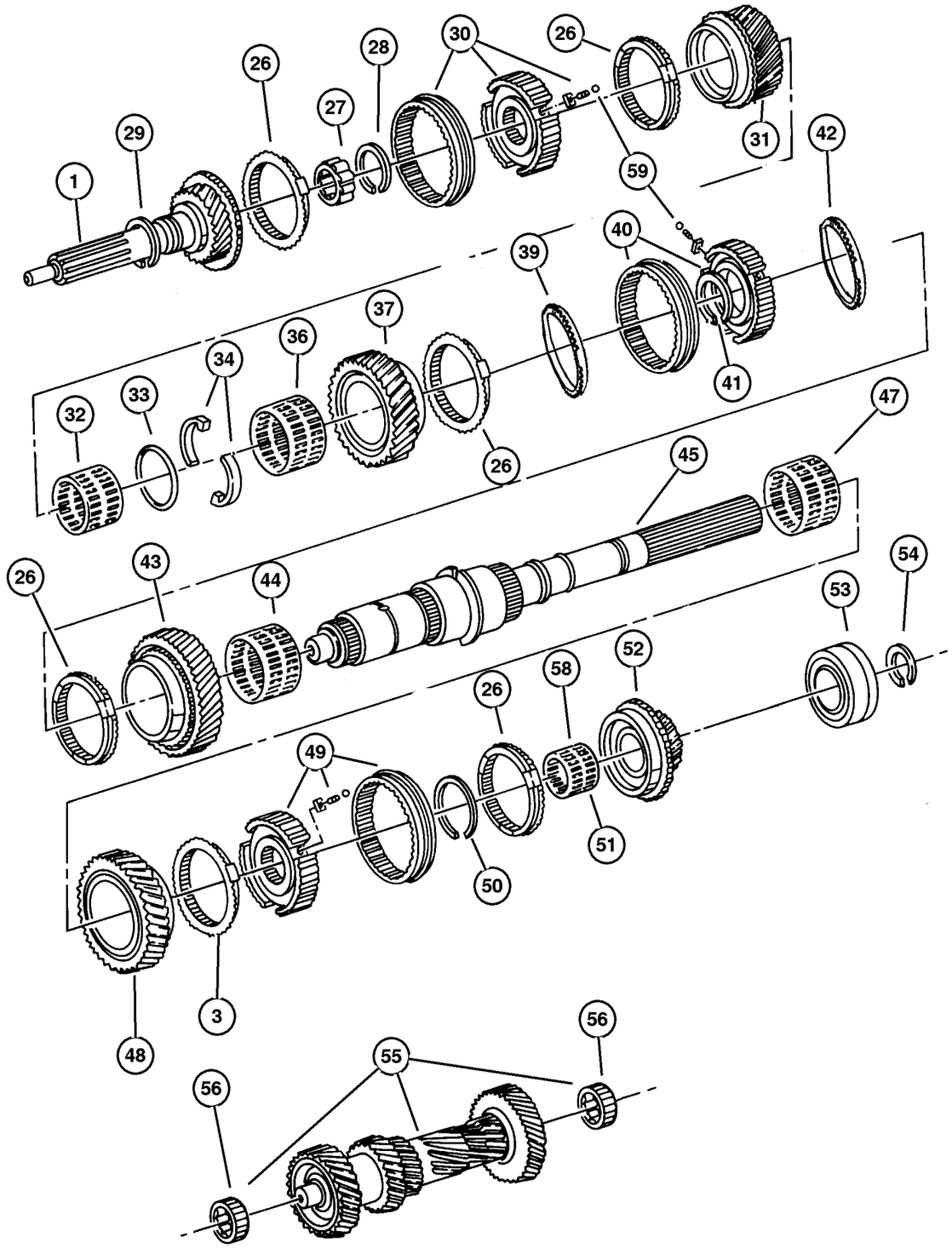

ITEM	PART NUMBER	QTY	LINE	SERIES	BODY	ENGINE	TRANS	TRIM	DESCRIPTION
NOTE; Sales Codes									
[DDK] = 5 Speed Heavy Duty Manual Transmissions									
[ED0] = All 2.2,2.5,2.4 L 4 Cylinder Gas Engines									
1									SHAFT, Input
	5013 409AA	1	T			ED0	DDK		
		1	J, U			ED0	DDK		
-2									NEEDLE BEARING, Input Shaft
	5013 410AA	1	T			ED0	DDK		
		1	J, U			ED0	DDK		
3									BEARING, Input Shaft
	5013 411AA	1	T			ED0	DDK		
		1	J, U			ED0	DDK		
-4									SPACER, Input Shaft, 0.62mm(.024")
	4202 751	1	T			ED0	DDK		
		1	J, U			ED0	DDK		
-5									SPACER, Input Shaft, 0.66mm(.026")
	4202 301	1	T			ED0	DDK		
		1	J, U			ED0	DDK		
-6									SPACER, Input Shaft, 0.70mm(.028")
	4202 302	1	T			ED0	DDK		
		1	J, U			ED0	DDK		
-7									SPACER, Input Shaft, 0.74mm(.029")
	4202 303	1	T			ED0	DDK		
		1	J, U			ED0	DDK		
-8									SPACER, Input Shaft, 0.78mm(.031")
	4202 304	1	T			ED0	DDK		
		1	J, U			ED0	DDK		
-9									SPACER, Input Shaft, 0.90mm(.035")
	4202 307	1	T			ED0	DDK		
		1	J, U			ED0	DDK		
-10									SPACER, Input Shaft, 0.94mm(.037")
	4202 308	1	T			ED0	DDK		
		1	J, U			ED0	DDK		
-11									SPACER, Input Shaft, 0.98mm(.039")
	4202 309	1	T			ED0	DDK		
		1	J, U			ED0	DDK		
-12									SPACER, Input Shaft, 1.02mm(.040")
	4202 310	1	T			ED0	DDK		
		1	J, U			ED0	DDK		
-13									SPACER, Input Shaft, 1.06mm(.042")
	4202 311	1	T			ED0	DDK		

JEEP LIBERTY (KJ)

SERIES	LINE	BODY	ENGINE	TRANSMISSION
P = Limited	J = LHD (4WD)	74 = 4 Dr (104.3 WB)	ED1,ED0 = 2.4L Power Tech	DDK = 5 Speed HDManual
H = Sport	U = RHD (4WD)		EKG,EK0 = 3.7L Power Tech	DDD = 5 Speed HD Manual
M = Renegade	T = LHD (2WD)		ENJ = 2.5L 4Cyl Turbo Diesel	DG4,DGQ = Multi-Speed Auto
			ENR = 2.8L 4Cyl Turbo Diesel	DG6 = 4 Speed Auto Transm
			EN0 = 4Cyl Turbo Diesel	DG0 = All Automatic Transm
				DBB = All Manual Transm

AR = Use as required - = Non illustrated part # = New this model year **September 30, 2003**

« RETURN TO GROUP INDEX »

Gear Train [NV 1500] [DDK]
Figure NV1500-410

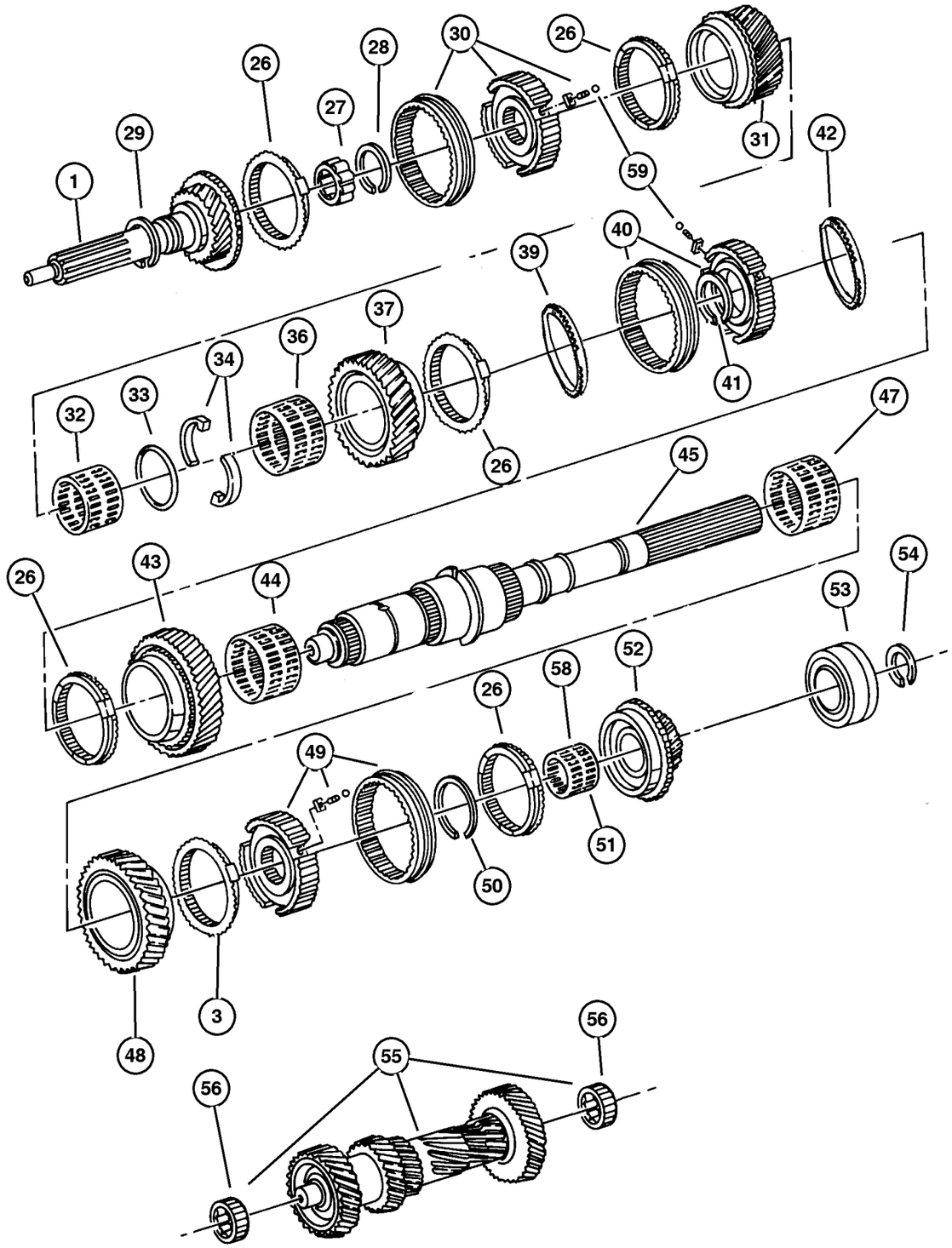

ITEM	PART NUMBER	QTY	LINE	SERIES	BODY	ENGINE	TRANS	TRIM	DESCRIPTION
		1	J, U			ED0	DDK		
-14									SPACER, Input Shaft, 1.10mm(.043")
	4202 312	1	T			ED0	DDK		
		1	J, U			ED0	DDK		
-15									SPACER, Input Shaft, 1.14mm(.045")
	4202 313	1	T			ED0	DDK		
		1	J, U			ED0	DDK		
-16									SPACER, Input Shaft, 1.18mm(.046")
	4202 314	1	T			ED0	DDK		
		1	J, U			ED0	DDK		
-17									SPACER, Input Shaft, 1.22mm(.048")
	4202 315	1	T			ED0	DDK		
		1	J, U			ED0	DDK		
-18									SPACER, Input Shaft, 1.26mm(.050")
	4202 316	1	T			ED0	DDK		
		1	J, U			ED0	DDK		
-19									SPACER, Input Shaft, 1.30mm(.051")
	4202 317	1	T			ED0	DDK		
		1	J, U			ED0	DDK		
-20									SPACER, Input Shaft, 1.34mm(.053")
	4202 318	1	T			ED0	DDK		
		1	J, U			ED0	DDK		
-21									SPACER, Input Shaft, 1,38mm(.054")
	4202 319	1	T			ED0	DDK		
		1	J, U			ED0	DDK		
-22									SPACER, Input Shaft, 1.42mm(,056")
	4202 320	1	T			ED0	DDK		
		1	J, U			ED0	DDK		
-23									SPACER, Input Shaft, 1.46mm(.057")
	4202 321	1	T			ED0	DDK		
		1	J, U			ED0	DDK		
-24									SPACER, Input Shaft, 1.50mm(.059")
	4202 322	1	T			ED0	DDK		
		1	J, U			ED0	DDK		
-25									SPACER, Input Shaft, 1.54mm(.061")
	4202 323	1	T			ED0	DDK		
		1	J, U			ED0	DDK		
26									RING, Synchronizer Blocker
	5013 366AA	1	T			ED0	DDK		
		1	J, U			ED0	DDK		
27									NEEDLE BEARING, Input Shaft

JEEP LIBERTY (KJ)

SERIES	LINE	BODY	ENGINE	TRANSMISSION
P = Limited	J = LHD (4WD)	74 = 4 Dr (104.3 WB)	ED1,ED0 = 2.4L Power Tech	DDK = 5 Speed HDManual
H = Sport	U = RHD (4WD)		EKG,EK0 = 3.7L Power Tech	DDD = 5 Speed HD Manual
M = Renegade	T = LHD (2WD)		ENJ = 2.5L 4Cyl Turbo Diesel	DG4,DGQ = Multi-Speed Auto
			ENR = 2.8L 4Cyl Turbo Diesel	DG6 = 4 Speed Auto Transm
			EN0 = 4Cyl Turbo Diesel	DG0 = All Automatic Transm
				DBB = All Manual Transm

Gear Train [NV 1500] [DDK]
Figure NV1500-410

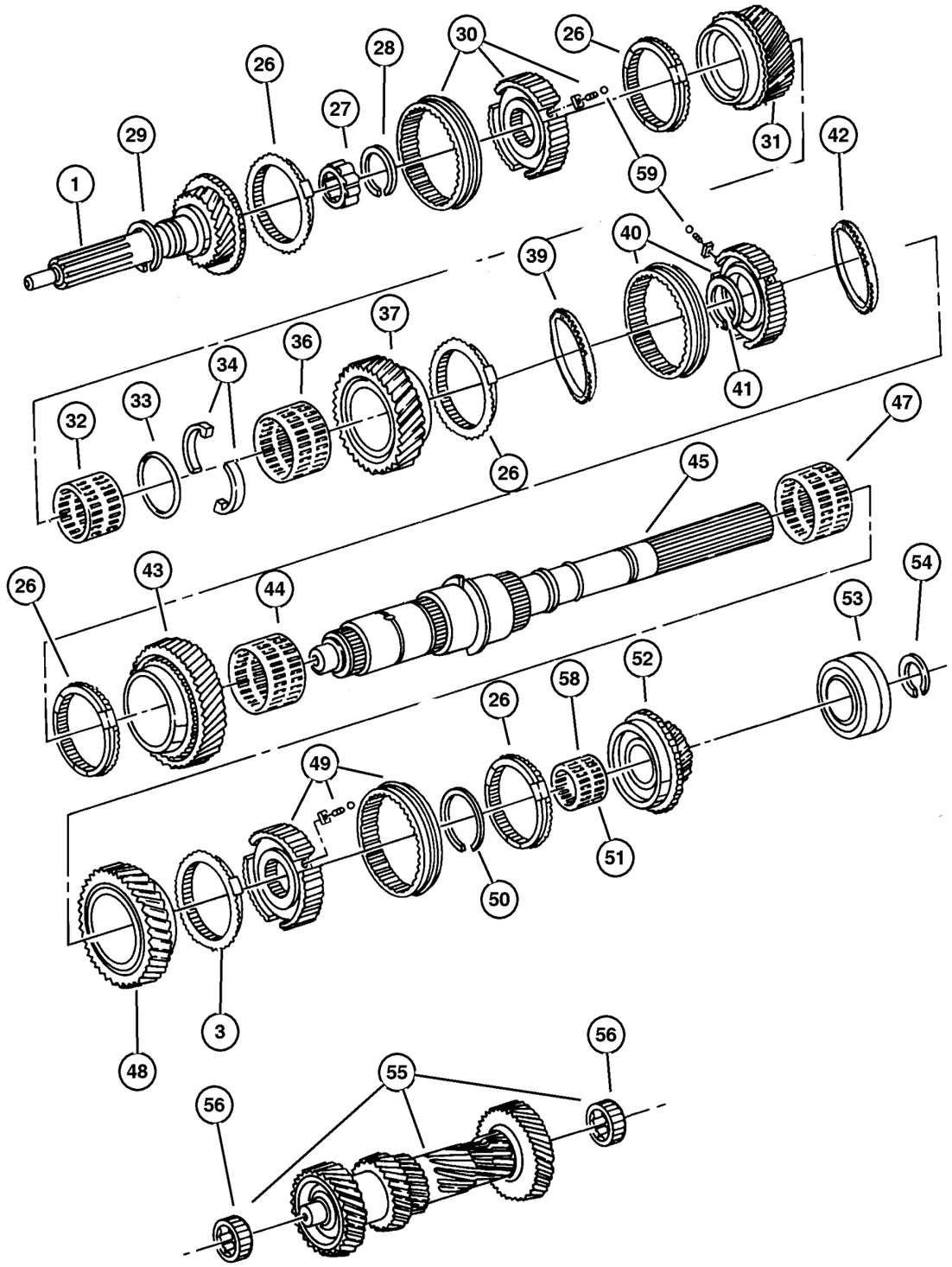

ITEM	PART NUMBER	QTY	LINE	SERIES	BODY	ENGINE	TRANS	TRIM	DESCRIPTION
	5013 410AA	1	T			ED0	DDK		
		1	J, U			ED0	DDK		
28									SNAP RING PACKAGE, Fifth Gear
	5013 318AB	1	J, U			ED0	DDK		
		1	T			ED0	DDK		
29									RING, Snap
	5013 379AA	1	T			ED0	DDK		
		1	J, U			ED0	DDK		
30									SYNCHRONIZER, Fifth And Reverse
	5013 367AA	1	J, U			ED0	DDK		
		1	T			ED0	DDK		
31									GEAR, Third
	5018 679AA	1	T			ED0	DDK		
		1	J, U			ED0	DDK		
32									BEARING, Needle
	5013 365AA	3	J, U			ED0	DDK		
		3	T			ED0	DDK		
33									SNAP RING
	5013 397AA	1	T			ED0	DDK		
		1	J, U			ED0	DDK		
34									WASHER, Output Shaft
	5013 398AA	2	J, U			ED0	DDK		
		2	T			ED0	DDK		
-35									PIN
	5013 378AA	1	T			ED0	DDK		
		1	J, U			ED0	DDK		
36									BEARING, Needle
	5013 365AA	3	J, U			ED0	DDK		
		3	T			ED0	DDK		
37									GEAR, Second
	5013 395AA	1	T			ED0	DDK		
		1	J, U			ED0	DDK		
-38	5013 390AA	1	T			ED0	DDK		SNAP RING PACKAGE, Transmission
39									RING, 1st and 2nd Speed Blocker
	5013 385AB	2	J, U			ED0	DDK		
		2	T			ED0	DDK		
40									SYNCHRONIZER, First and Second
	5013 386AA	1	T			ED0	DDK		
		1	J, U			ED0	DDK		
41	5013 390AA	1	T			ED0	DDK		SNAP RING PACKAGE, Transmission

JEEP LIBERTY (KJ)

SERIES	LINE	BODY	ENGINE	TRANSMISSION
P = Limited	J = LHD (4WD)	74 = 4 Dr (104.3 WB)	ED1,ED0 = 2.4L Power Tech	DDK = 5 Speed HDManual
H = Sport	U = RHD (4WD)		EKG,EK0 = 3.7L Power Tech	DDD = 5 Speed HD Manual
M = Renegade	T = LHD (2WD)		ENJ = 2.5L 4Cyl Turbo Diesel	DG4,DGQ = Multi-Speed Auto
			ENR = 2.8L 4Cyl Turbo Diesel	DG6 = 4 Speed Auto Transm
			EN0 = 4Cyl Turbo Diesel	DG0 = All Automatic Transm
				DBB = All Manual Transm

AR = Use as required - = Non illustrated part # = New this model year

September 30, 2003

« RETURN TO GROUP INDEX

« »

Gear Train [NV 1500] [DDK]
Figure NV1500-410

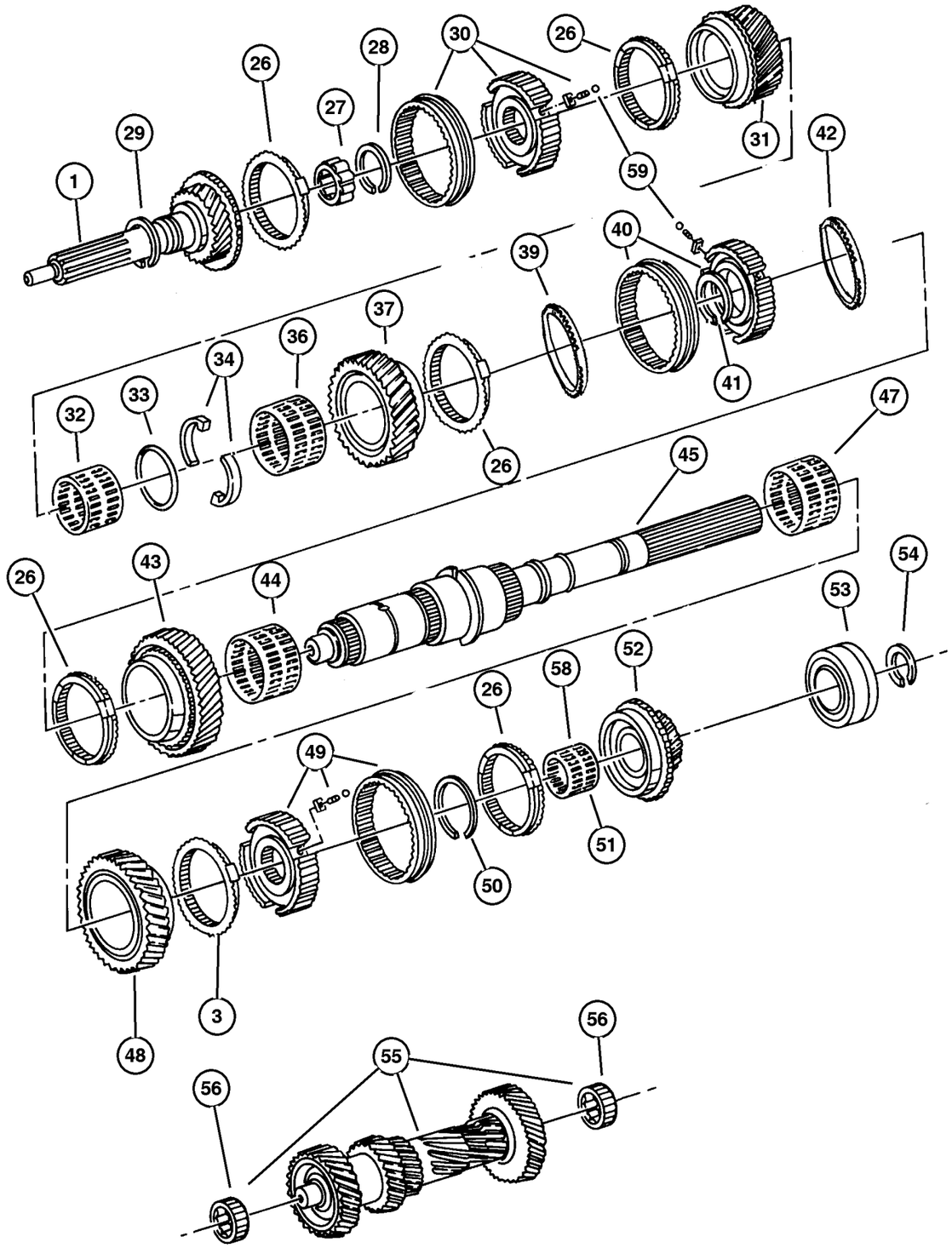

ITEM	PART NUMBER	QTY	LINE	SERIES	BODY	ENGINE	TRANS	TRIM	DESCRIPTION
42									RING, 1st and 2nd Speed Blocker
	5013 385AB	2	J, U			ED0	DDK		
		2	T			ED0	DDK		
43									GEAR, First
	5013 380AA	1	T			ED0	DDK		
		1	J, U			ED0	DDK		
44									BEARING, First Gear
	5013 381AA	1	T			ED0	DDK		
		1	J, U			ED0	DDK		
45									SHAFT, Output
	5013 360AA	1	T			ED0	DDK		
	5018 675AA	1	J, U			ED0	DDK		
-46									RETAINER, Transmission Output Shaft Bearing
	5013 328AA	1	J, U			ED0	DDK		
		1	T			ED0	DDK		
47									BEARING, Needle
	5013 365AA	3	J, U			ED0	DDK		
		3	T			ED0	DDK		
48									GEAR, Reverse
	5013 364AA	1	T			ED0	DDK		
		1	J, U			ED0	DDK		
49									SYNCHRONIZER, Fifth And Reverse
	5013 367AA	2	J, U			ED0	DDK		
		2	T			ED0	DDK		
50									SNAP RING PACKAGE, Fifth Gear
	5013 318AB	1	J, U			ED0	DDK		
		1	T			ED0	DDK		
51									BEARING, Needle
	5013 375AA	1	T			ED0	DDK		
		1	J, U			ED0	DDK		
52									GEAR, Fifth
	5013 373AA	1	T			ED0	DDK		
		1	J, U			ED0	DDK		
53									BEARING, Output Shaft
	5013 376AA	1	T			ED0	DDK		
		1	J, U			ED0	DDK		
54									SNAP RING, Output Shaft Bearing
	5013 377AA	1	T			ED0	DDK		
		1	J, U			ED0	DDK		
55									SHAFT, Counter

JEEP LIBERTY (KJ)

SERIES	LINE	BODY	ENGINE	TRANSMISSION
P = Limited	J = LHD (4WD)	74 = 4 Dr (104.3 WB)	ED1,ED0 = 2.4L Power Tech	DDK = 5 Speed HDManual
H = Sport	U = RHD (4WD)		EKG,EK0 = 3.7L Power Tech	DDD = 5 Speed HD Manual
M = Renegade	T = LHD (2WD)		ENJ = 2.5L 4Cyl Turbo Diesel	DG4,DGQ = Multi-Speed Auto
			ENR = 2.8L 4Cyl Turbo Diesel	DG6 = 4 Speed Auto Transm
			EN0 = 4Cyl Turbo Diesel	DG0 = All Automatic Transm
				DBB = All Manual Transm

AR = Use as required - = Non illustrated part # = New this model year

September 30, 2003

« RETURN TO GROUP INDEX

« »

Gear Train [NV 1500] [DDK]
Figure NV1500-410

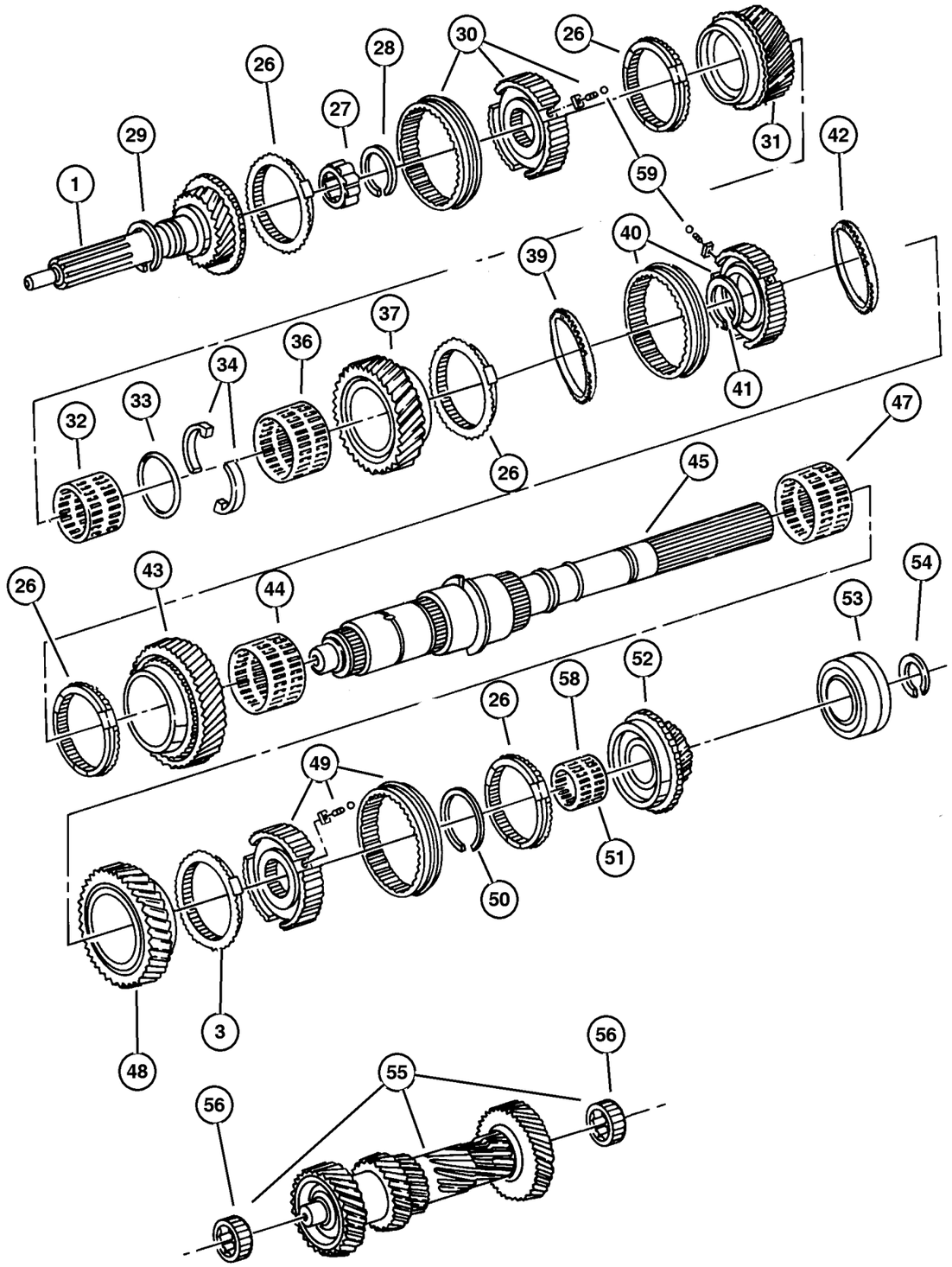

ITEM	PART NUMBER	QTY	LINE	SERIES	BODY	ENGINE	TRANS	TRIM	DESCRIPTION
	5013 414AA	1	T			ED0	DDK		
		1	J, U			ED0	DDK		
56									CONE ASSEMBLY, Countershaft
	5013 416AA	2	J, U			ED0	DDK		
		2	T			ED0	DDK		
-57									SHIM PACKAGE, Countershaft
	4419 650	1	T			ED0	DDK		
		1	J, U			ED0	DDK		
58									BEARING, Idler
	5013 417AA	1	T			ED0	DDK		
		1	J, U			ED0	DDK		
59									BALL, Shift Lever, M5
	4741 136	3	J, U			ED0	DDK		
		3	T			ED0	DDK		
-60									SPRING, Synchronizer
	5080 807AA	3	J, U			ED0	DDK		
		3	T			ED0	DDK		

JEEP LIBERTY (KJ)

SERIES	LINE	BODY	ENGINE	TRANSMISSION
P = Limited	J = LHD (4WD)	74 = 4 Dr (104.3 WB)	ED1,ED0 = 2.4L Power Tech	DDK = 5 Speed HDManual
H = Sport	U = RHD (4WD)		EKG,EK0 = 3.7L Power Tech	DDD = 5 Speed HD Manual
M = Renegade	T = LHD (2WD)		ENJ = 2.5L 4Cyl Turbo Diesel	DG4,DGQ = Multi-Speed Auto
			ENR = 2.8L 4Cyl Turbo Diesel	DG6 = 4 Speed Auto Transm
			EN0 = 4Cyl Turbo Diesel	DG0 = All Automatic Transm
				DBB = All Manual Transm

AR = Use as required - = Non illustrated part # = New this model year

September 30, 2003

« RETURN TO GROUP INDEX

Fork and Rail [NV 1500] [DDK]
Figure NV1500-910

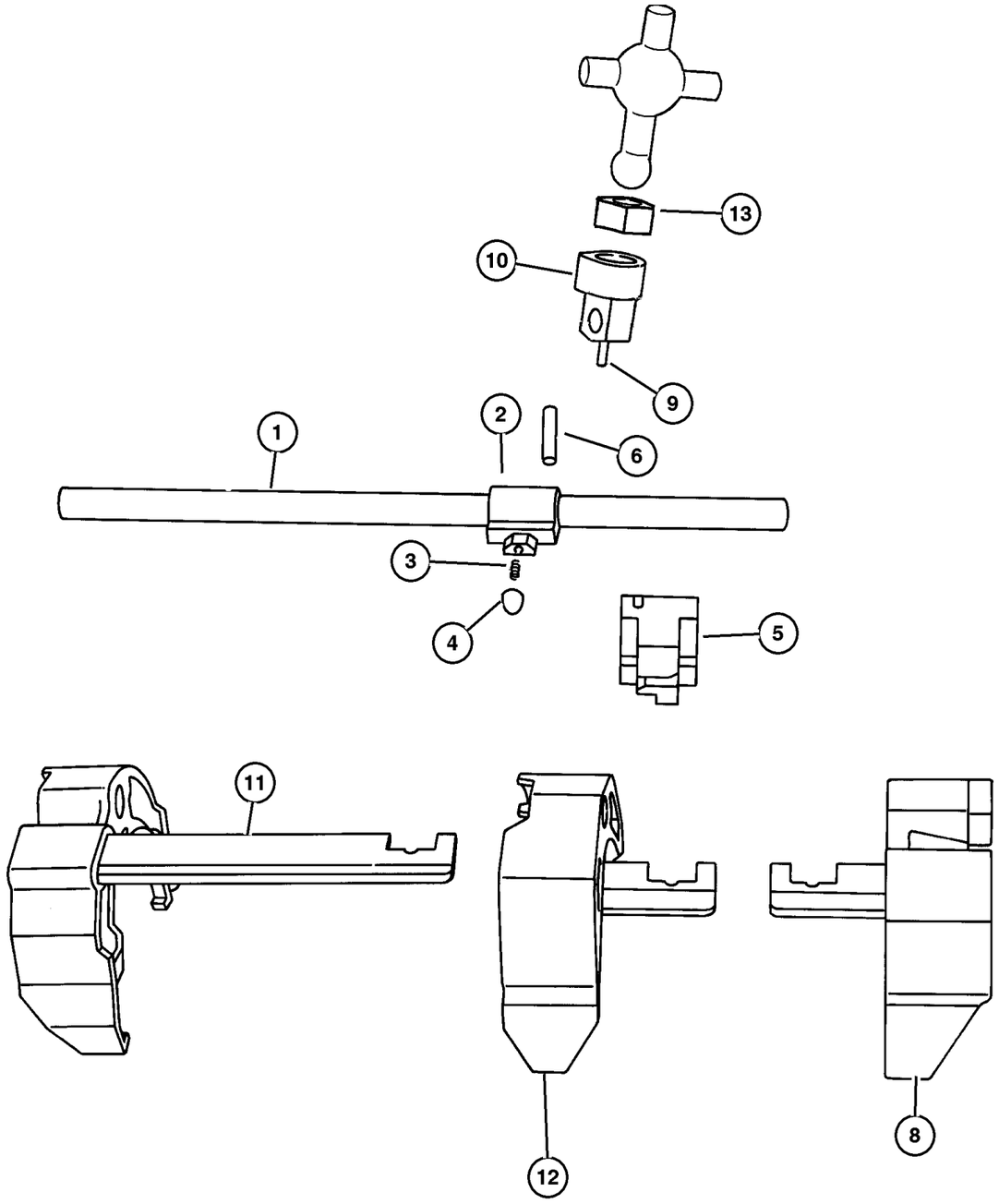

ITEM	PART NUMBER	QTY	LINE	SERIES	BODY	ENGINE	TRANS	TRIM	DESCRIPTION
NOTE; Sales Codes									
[DDK] = 5 Speed Heavy Duty Manual Transmissions									
[ED0] = All 2.2,2.5,2.4 L 4 Cylinder Gas Engines									
1									SHAFT, Shift Lever
	5072 116AA	1	T			ED0	DDK		
		1	J, U			ED0	DDK		
2									LEVER, Shift Shaft
	5016 504AA	1	T			ED0	DDK		
		1	J, U			ED0	DDK		
3									SPRING, Lever, (NOT REQUIRED)
4									PLUNGER
	5015 949AA	1	T			ED0	DDK		
		1	J, U			ED0	DDK		
5									BUSHING, Transmission
	5013 350AA	1	T			ED0	DDK		
		1	J, U			ED0	DDK		
6									PIN, Shift Shaft
	4741 139	1	T			ED0	DDK		
		1	J, U			ED0	DDK		
-7									PIN, Shift Shaft
	4741 139	1	T			ED0	DDK		
		1	J, U			ED0	DDK		
8									FORK, Third and Fourth
	5013 344AA	1	T			ED0	DDK		
		1	J, U			ED0	DDK		
9									PIN, Shift Shaft
	4741 139	1	T			ED0	DDK		
		1	J, U			ED0	DDK		
10									SOCKET, Shift Shaft
	4874 352	1	T			ED0	DDK		
		1	J, U			ED0	DDK		
11									FORK, Fifth Shift
	5013 345AA	1	T			ED0	DDK		
		1	J, U			ED0	DDK		
12									FORK, First and Second
	5013 343AA	1	T			ED0	DDK		
		1	J, U			ED0	DDK		
13									ISOLATOR, Shift Lever
	5012 020AA	1	T			ED0	DDK		
		1	J, U			ED0	DDK		
-14									BUSHING, Detent

JEEP LIBERTY (KJ)

SERIES	LINE	BODY	ENGINE	TRANSMISSION
P = Limited	J = LHD (4WD)	74 = 4 Dr (104.3 WB)	ED1,ED0 = 2.4L Power Tech	DDK = 5 Speed HDManual
H = Sport	U = RHD (4WD)		EKG,EK0 = 3.7L Power Tech	DDD = 5 Speed HD Manual
M = Renegade	T = LHD (2WD)		ENJ = 2.5L 4Cyl Turbo Diesel	DG4,DGQ = Multi-Speed Auto
			ENR = 2.8L 4Cyl Turbo Diesel	DG6 = 4 Speed Auto Transm
			EN0 = 4Cyl Turbo Diesel	DG0 = All Automatic Transm
				DBB = All Manual Transm

Fork and Rail [NV 1500] [DDK]
Figure NV1500-910

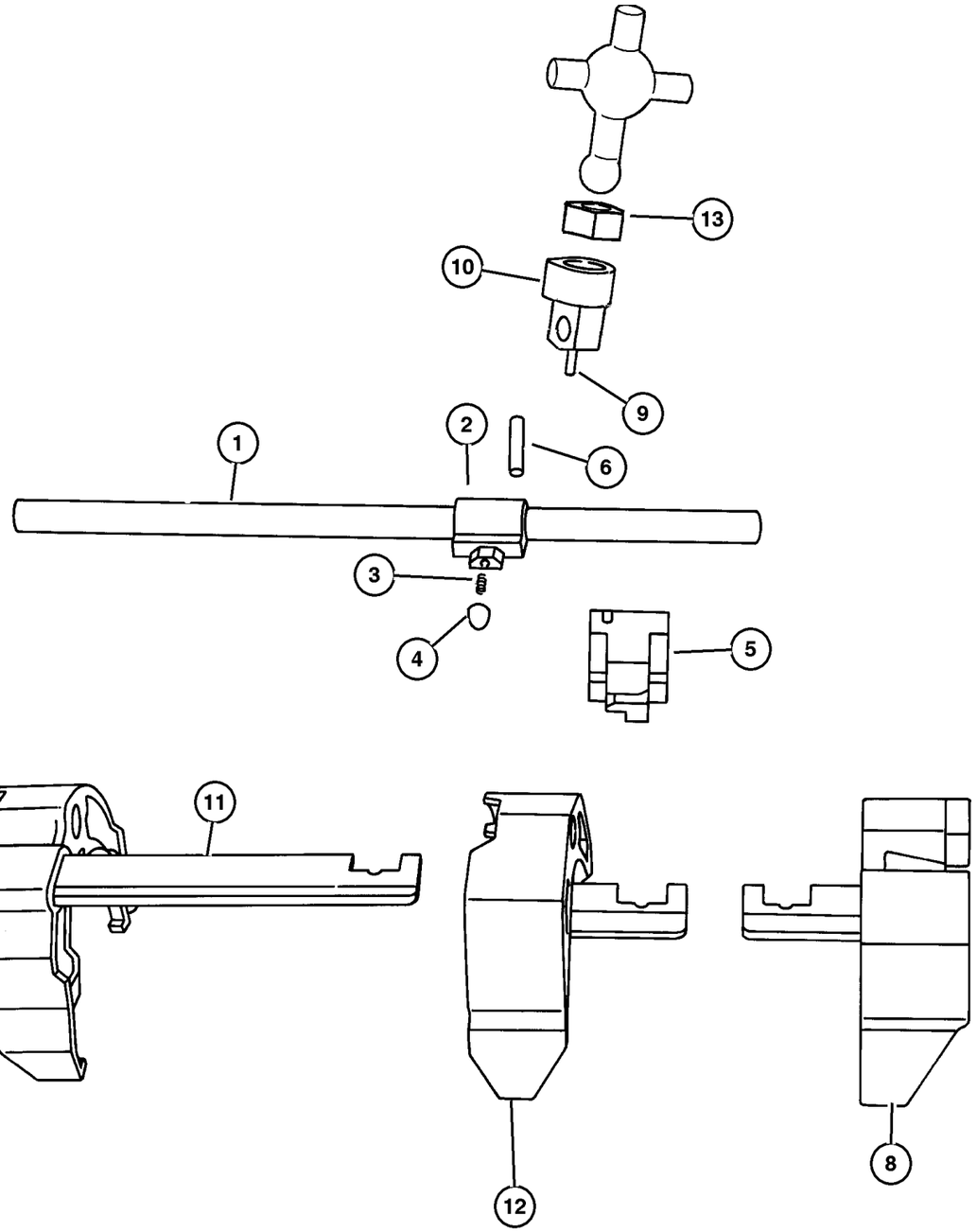

ITEM	PART NUMBER	QTY	LINE	SERIES	BODY	ENGINE	TRANS	TRIM	DESCRIPTION
	4740 892	2	J, U			ED0	DDK		
		1	T			ED0	DDK		

JEEP LIBERTY (KJ)

SERIES	LINE	BODY	ENGINE	TRANSMISSION
P = Limited	J = LHD (4WD)	74 = 4 Dr (104.3 WB)	ED1,ED0 = 2.4L Power Tech	DDK = 5 Speed HDManual
H = Sport	U = RHD (4WD)		EKG,EK0 = 3.7L Power Tech	DDD = 5 Speed HD Manual
M = Renegade	T = LHD (2WD)		ENJ = 2.5L 4Cyl Turbo Diesel	DG4,DGQ = Multi-Speed Auto
			ENR = 2.8L 4Cyl Turbo Diesel	DG6 = 4 Speed Auto Transm
			EN0 = 4Cyl Turbo Diesel	DG0 = All Automatic Transm
				DBB = All Manual Transm

Gearshift Controls [DDK]
Figure NV1500-1210

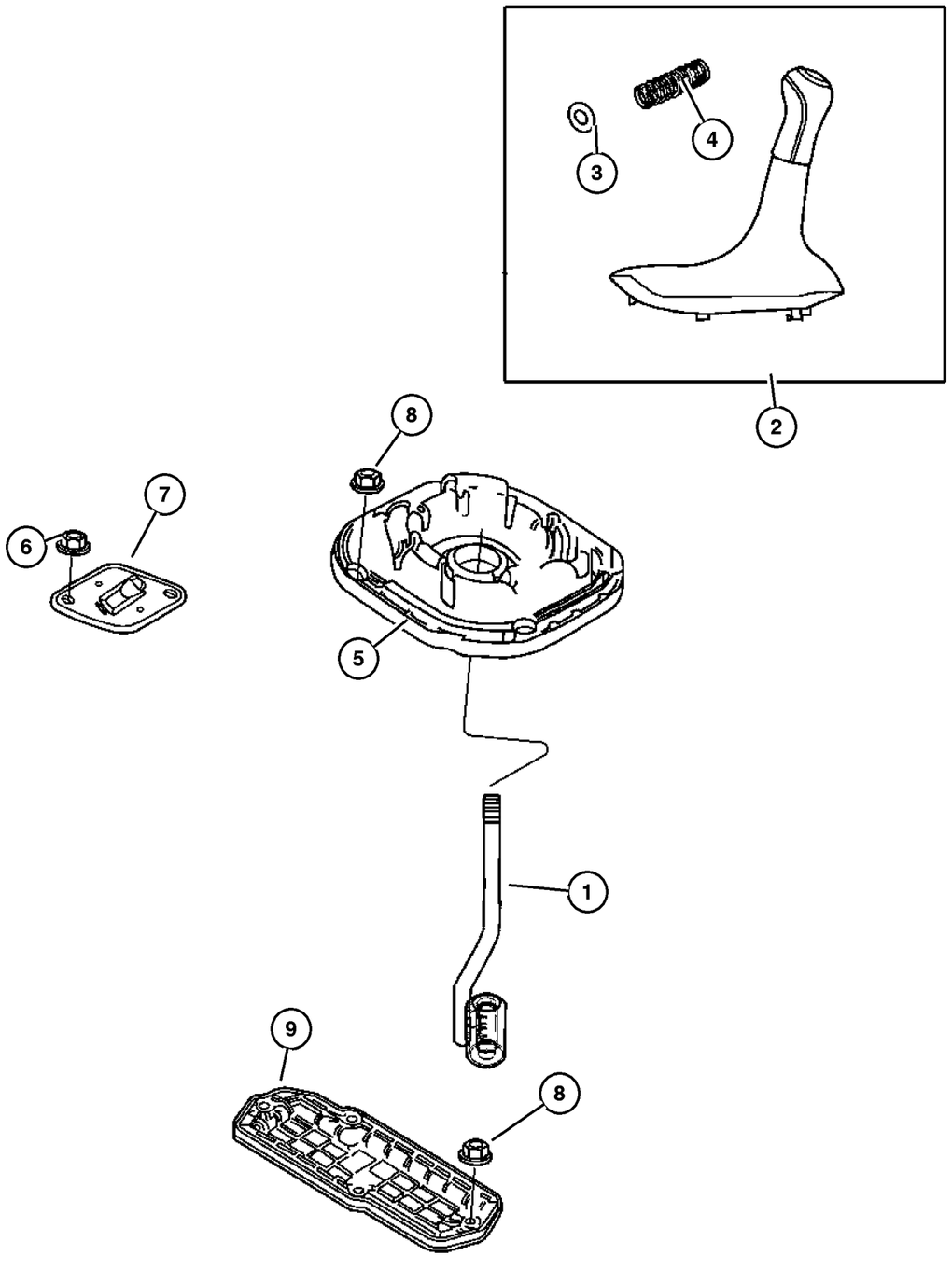

ITEM	PART NUMBER	QTY	LINE	SERIES	BODY	ENGINE	TRANS	TRIM	DESCRIPTION
NOTE; Sales Codes									
[DBB] = All Manual Transmissions									
[ED0] = All 4 Cylinder Gas Engines									
[EK0] = All 3.7L 6 Cylinder Gas Engines									
[EN0] = All 4/5 Cylinder Turbo Diesel									
1	5102 826AA	1					DBB		LEVER, Gearshift
2	5102 830AA	1					DBB		BOOT KIT, Gearshift
3	5102 828AA	1					DBB		SPRING, Gearshift Lever
4	5102 827AA	1					DBB		O RING, Gearshift Boot
5	52104 306AB	1				ED0, EK0, EN0	DBB		BOOT, Gearshift Lever
6	6100 047	2							NUT AND WASHER, Hex Nut-Coned Washer, M6 x 1.00
7	52104 382AA	1					DBB		COVER, Gearshift
8									NUT AND WASHER, Hex Nut-Sealing Washer, M6 x 1.00
	3420 1358	4							
		4					DBB		
9	52104 321AA	1	T						COVER, Transfer Case Lever Hole
-10	6506 668AA	1					DBB		SCREW, Cap, Trans Gear Shift Control Lever

JEEP LIBERTY (KJ)

SERIES	LINE	BODY	ENGINE	TRANSMISSION
P = Limited	J = LHD (4WD)	74 = 4 Dr (104.3 WB)	ED1,ED0 = 2.4L Power Tech	DDK = 5 Speed HDManual
H = Sport	U = RHD (4WD)		EKG,EK0 = 3.7L Power Tech	DDD = 5 Speed HD Manual
M = Renegade	T = LHD (2WD)		ENJ = 2.5L 4Cyl Turbo Diesel	DG4,DGQ = Multi-Speed Auto
			ENR = 2.8L 4Cyl Turbo Diesel	DG6 = 4 Speed Auto Transm
			EN0 = 4Cyl Turbo Diesel	DG0 = All Automatic Transm
				DBB = All Manual Transm

Group – 231
Transfer Case Model 231

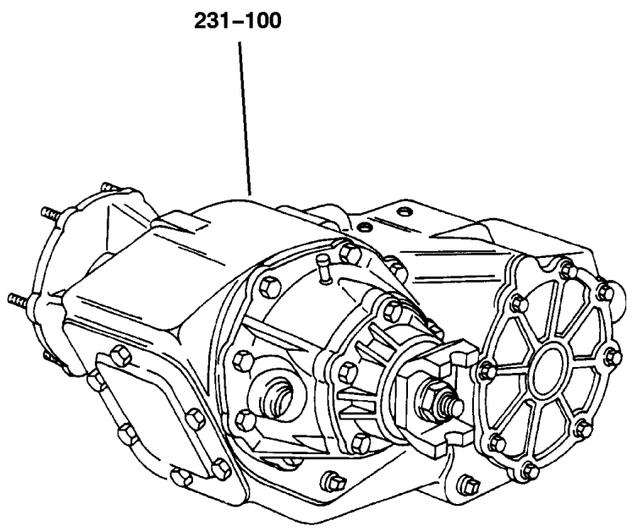

231–100 Transfer Case Assembly	231–200 Case and Related Parts	231–400 Gear Train	231–900 Fork and Rails
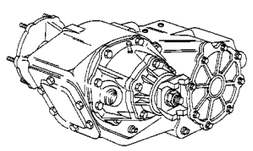	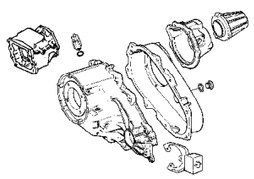	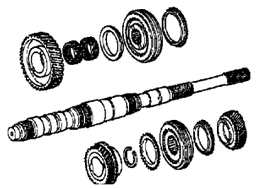	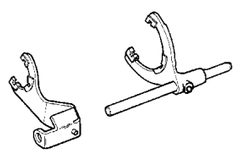
231–1200 Gearshift Controls			
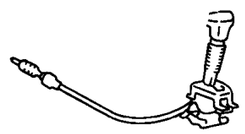			

GROUP 231 - Transfer Case Model 231

Illustration Title	Group-Fig. No.
Transfer Case Assembly	
Transfer Case Command Trac [DHN]	Fig. 231-110
Case and Related Parts	
Case and Related Parts Command Trac [DHN]	Fig. 231-210
Gear Train	
Gear Train Command Trac [DHN]	Fig. 231-410
Fork and Rails	
Forks and Rails Command Trac [DHN]	Fig. 231-910
Gearshift Controls	
Gearshift Controls	Fig. 231-1210

Transfer Case Command Trac [DHN]
Figure 231-110

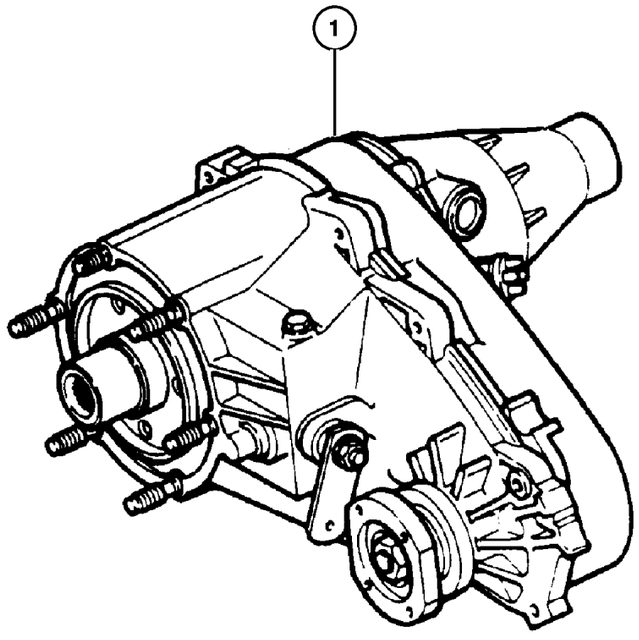

ITEM	PART NUMBER	QTY	LINE	SERIES	BODY	ENGINE	TRANS	TRIM	DESCRIPTION
NOTE; Sales Codes									
[ED0] = All 2.2,2.5,2.4,L 4 Cylinder Gas Engines									
[EK0]= All 3.7L 6 Cylinder Gas Egines									
[EN0] = All 4/5 Turbo Diesel Engines									
1	52099 421AE	1	J, U			ED0, EK0, EN0			TRANSFER CASE, NV231

JEEP LIBERTY (KJ)

SERIES	LINE	BODY	ENGINE	TRANSMISSION
P = Limited	J = LHD (4WD)	74 = 4 Dr (104.3 WB)	ED1,ED0 = 2.4L Power Tech	DDK = 5 Speed HDManual
H = Sport	U = RHD (4WD)		EKG,EK0 = 3.7L Power Tech	DDD = 5 Speed HD Manual
M = Renegade	T = LHD (2WD)		ENJ = 2.5L 4Cyl Turbo Diesel	DG4,DGQ = Multi-Speed Auto
			ENR = 2.8L 4Cyl Turbo Diesel	DG6 = 4 Speed Auto Transm
			EN0 = 4Cyl Turbo Diesel	DG0 = All Automatic Transm
				DBB = All Manual Transm

Case and Related Parts Command Trac [DHN]
Figure 231-210

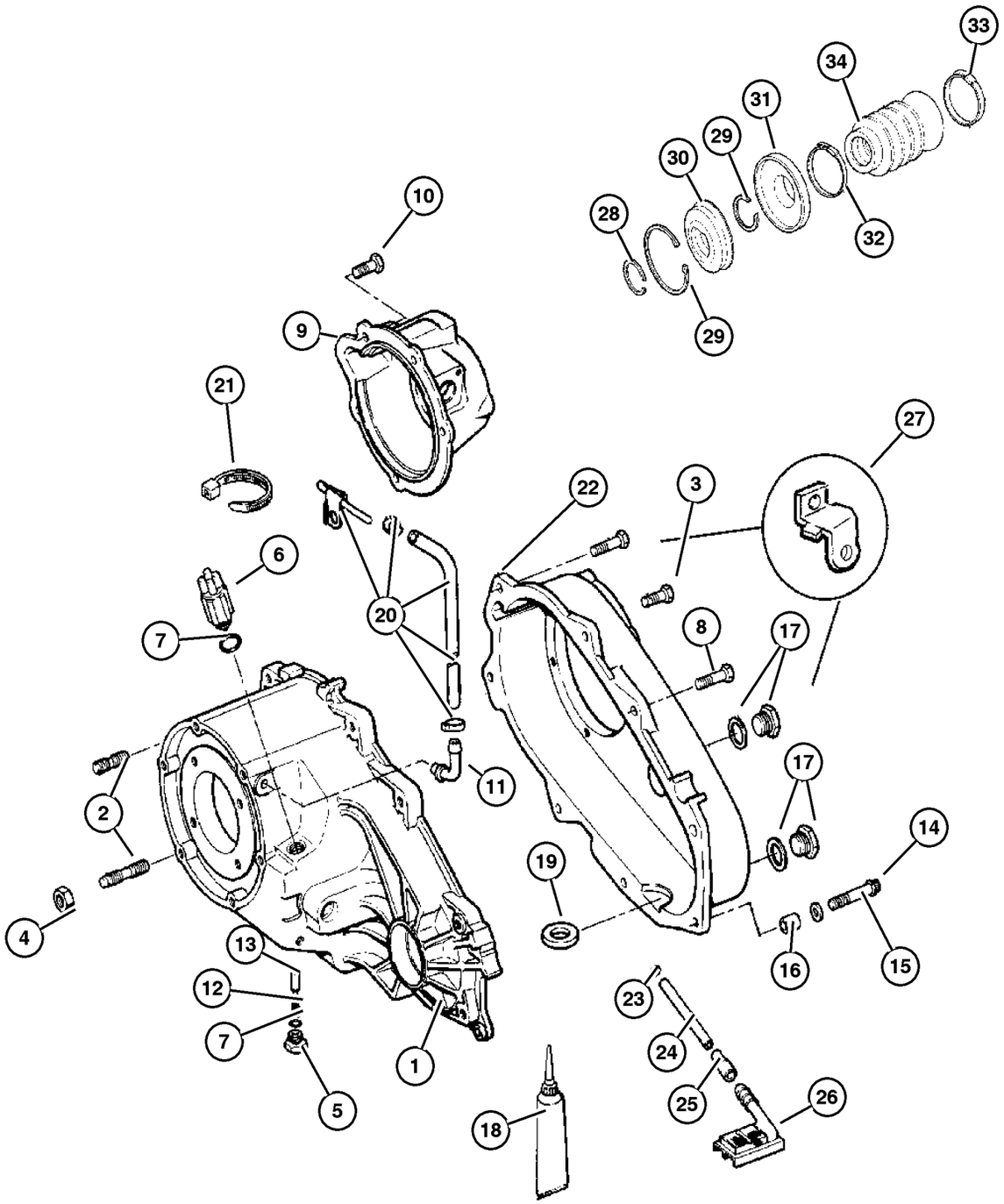

ITEM	PART NUMBER	QTY	LINE	SERIES	BODY	ENGINE	TRANS	TRIM	DESCRIPTION
NOTE; Sales Codes									
[ED0] = All 2.2,2.5,2.4,L 4 Cylinder Gas Engines									
[EK0]= All 3.7L 6 Cylinder Gas Egines									
[EN0] = All 4/5 Turbo Diesel Engines									
1	5072 322AA	1	J, U			ED0,			CASE, Transfer Front
2	4167 922	1	J, U			EK0, EN0 ED0, EK0,			STUD, Tranmission Case
3	J813 0979	1	J, U			EN0 ED0, EK0, EN0			BOLT, Twelve Point Head, M10x1. 5x48
4	J400 6681	6	J, U						NUT AND CONED WASHER, Hex, .375-24
5	4886 473AA	1	J, U			ED0, EK0,			SCREW
6	5083 138AA	1	J, U			EN0 ED0, EK0, EN0			SWITCH, Transfer Case, 5 Position
7	4338 956	1	J, U			ED0, EK0, EN0			SEAL, Vacuum Switch
8	4210 617	1	J, U			ED0, EK0, EN0			BOLT, Transfer Case
9	5072 325AA	1	J, U			ED0, EK0, EN0			RETAINER, Transfer Case Rear
10	6501 371	9	J, U			ED0, EK0, EN0			BOLT, Retainer
11	4796 910	1	J, U			ED0, EK0, EN0			VENT, Transfer Case
12	5003 445AA	1	J, U			ED0, EK0, EN0			SPRING, Poppet Plunger

JEEP LIBERTY (KJ)

SERIES	LINE	BODY	ENGINE	TRANSMISSION
P = Limited	J = LHD (4WD)	74 = 4 Dr (104.3 WB)	ED1,ED0 = 2.4L Power Tech	DDK = 5 Speed HDManual
H = Sport	U = RHD (4WD)		EKG,EK0 = 3.7L Power Tech	DDD = 5 Speed HD Manual
M = Renegade	T = LHD (2WD)		ENJ = 2.5L 4Cyl Turbo Diesel	DG4,DGQ = Multi-Speed Auto
			ENR = 2.8L 4Cyl Turbo Diesel	DG6 = 4 Speed Auto Transm
			EN0 = 4Cyl Turbo Diesel	DG0 = All Automatic Transm
				DBB = All Manual Transm

Case and Related Parts Command Trac [DHN]
Figure 231-210

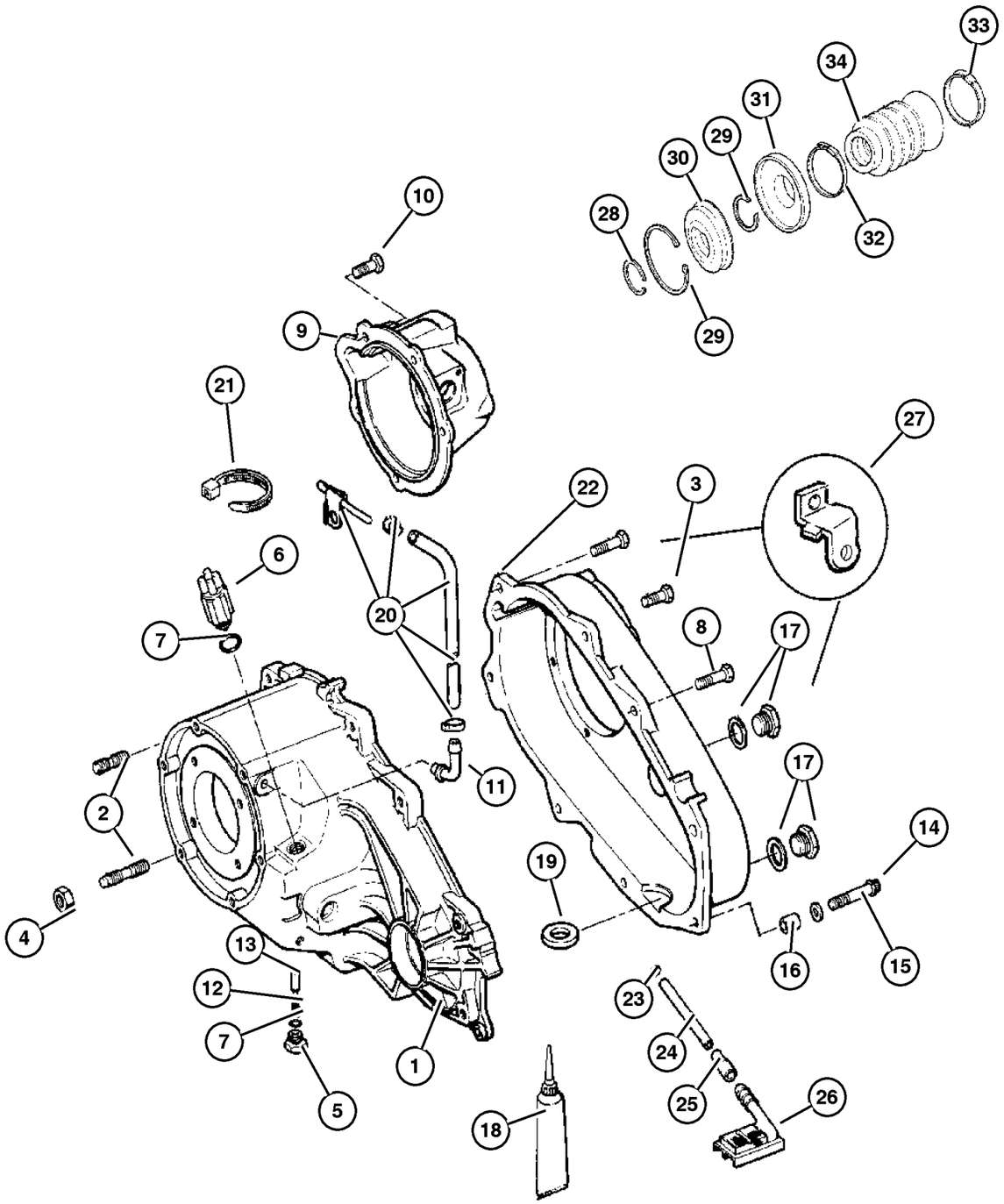

ITEM	PART NUMBER	QTY	LINE	SERIES	BODY	ENGINE	TRANS	TRIM	DESCRIPTION
13	5003 444AA	1	J, U			ED0,			PLUNGER
14	4210 614	2	J, U			EK0, EN0 ED0, EK0,			BOLT, Hex Flange Head
15	4210 983	2	J, U			EN0 ED0, EK0, EN0			WASHER, Flat
16	4116 310	2	J, U			ED0, EK0, EN0			DOWEL, Transfer Case
17	4856 641	2	J, U			ED0,			PLUG, Oil Fill
18	5010 884AA	1	J, U			EK0, EN0 ED0, EK0,			SEALANT, RTV
19	3681 601	1	J, U			EN0 ED0, EK0, EN0			MAGNET, Transmission
20	52105 882AA	1	J, U						VENT, Transfer Case
21	5073 039AA	1	J, U						STRAP, Tie
22	4886 222AA	1	J, U			ED0, EK0,			CASE, Transfer Rear
23	4338 942	1	J, U			EN0 ED0, EK0, EN0			SEAL, Oil
24	4338 941	1	J, U			ED0, EK0,			TUBE, Oil Pickup
25	4338 944	1	J, U			EN0 ED0,			CONNECTOR, Oil Tube Pickup
26	4338 943	1	J, U			EK0, EN0 ED0, EK0,			FILTER, Transfer Case Oil
27						EN0			CLIP, Housing, (NOT REQUIRED)

JEEP LIBERTY (KJ)

SERIES	LINE	BODY	ENGINE	TRANSMISSION
P = Limited	J = LHD (4WD)	74 = 4 Dr (104.3 WB)	ED1,ED0 = 2.4L Power Tech	DDK = 5 Speed HDManual
H = Sport	U = RHD (4WD)		EKG,EK0 = 3.7L Power Tech	DDD = 5 Speed HD Manual
M = Renegade	T = LHD (2WD)		ENJ = 2.5L 4Cyl Turbo Diesel	DG4,DGQ = Multi-Speed Auto
			ENR = 2.8L 4Cyl Turbo Diesel	DG6 = 4 Speed Auto Transm
			EN0 = 4Cyl Turbo Diesel	DG0 = All Automatic Transm
				DBB = All Manual Transm

Case and Related Parts Command Trac [DHN]
Figure 231-210

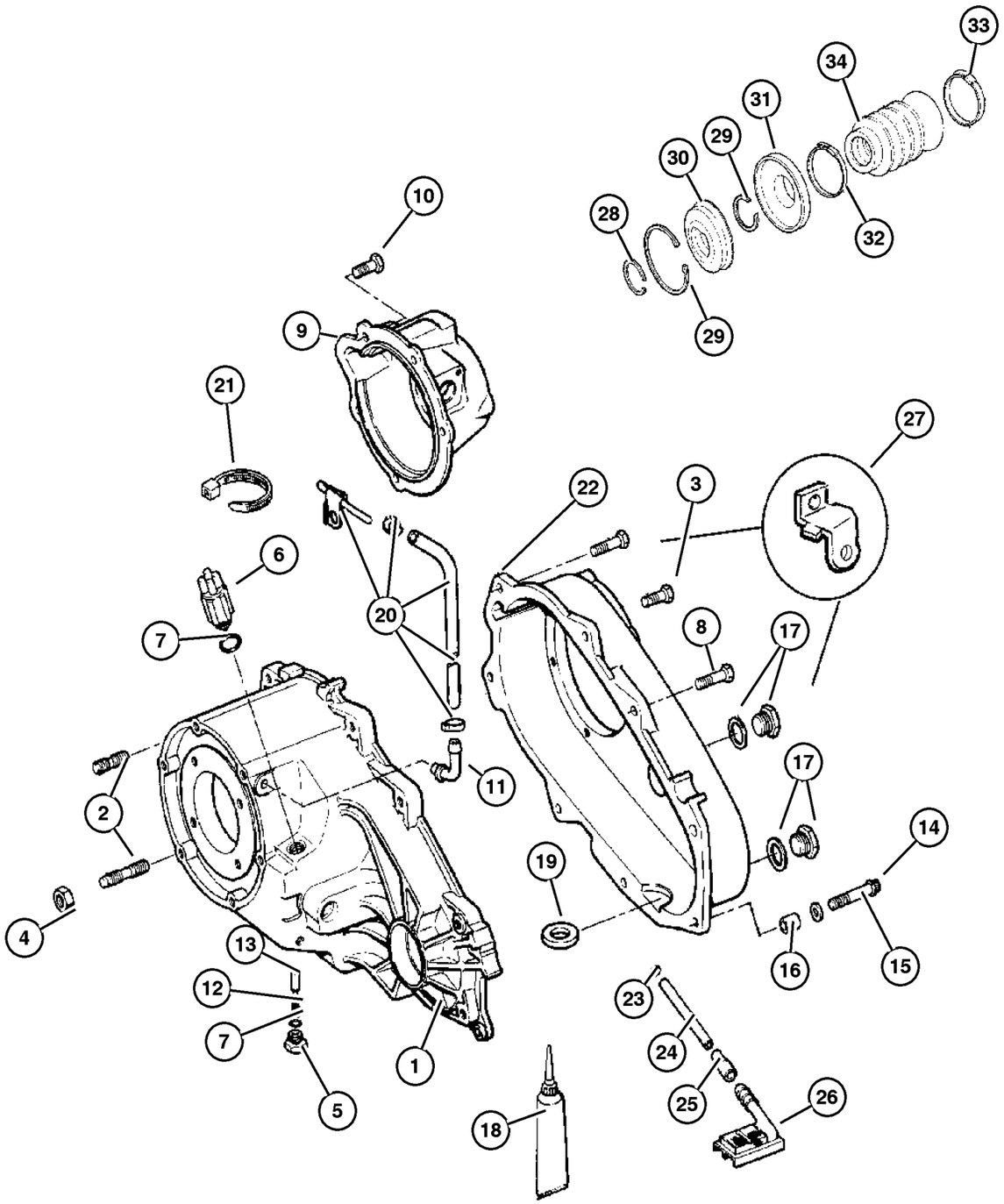

ITEM	PART NUMBER	QTY	LINE	SERIES	BODY	ENGINE	TRANS	TRIM	DESCRIPTION
28	5072 306AB	1	J, U			ED0,			SNAP RING
29	5072 306AB	1	J, U			EK0, EN0 ED0, EK0,			SNAP RING
30	5072 307AA	1	J, U			EN0 ED0, EK0, EN0			SEAL, Output Shaft
31	5072 308AA	1	J, U			ED0,			SLINGER, Transfer Case Flange
32	5072 310AA	1	J, U			EK0, EN0 ED0,			CLAMP, Boot
33	5072 311AA	1	J, U			EK0, EN0 ED0, EK0,			CLAMP, Boot
34	5072 329AA	1	J, U			EN0 ED0, EK0, EN0			BOOT, Output Shaft, None
-35	5072 310AA	1	J, U			ED0, EK0, EN0			CLAMP, Boot
-36	5019 020AA	1	J, U			ED0, EK0, EN0			SEAL, Input Gear
-37	4213 328	1	J, U						VENT, Cap, Vent to Breather Tube
-38	4167 922	6	J, U						STUD, Tranmission Case

JEEP LIBERTY (KJ)

SERIES	LINE	BODY	ENGINE	TRANSMISSION
P = Limited	J = LHD (4WD)	74 = 4 Dr (104.3 WB)	ED1,ED0 = 2.4L Power Tech	DDK = 5 Speed HDManual
H = Sport	U = RHD (4WD)		EKG,EK0 = 3.7L Power Tech	DDD = 5 Speed HD Manual
M = Renegade	T = LHD (2WD)		ENJ = 2.5L 4Cyl Turbo Diesel	DG4,DGQ = Multi-Speed Auto
			ENR = 2.8L 4Cyl Turbo Diesel	DG6 = 4 Speed Auto Transm
			EN0 = 4Cyl Turbo Diesel	DG0 = All Automatic Transm
				DBB = All Manual Transm

Gear Train Command Trac [DHN]
Figure 231-410

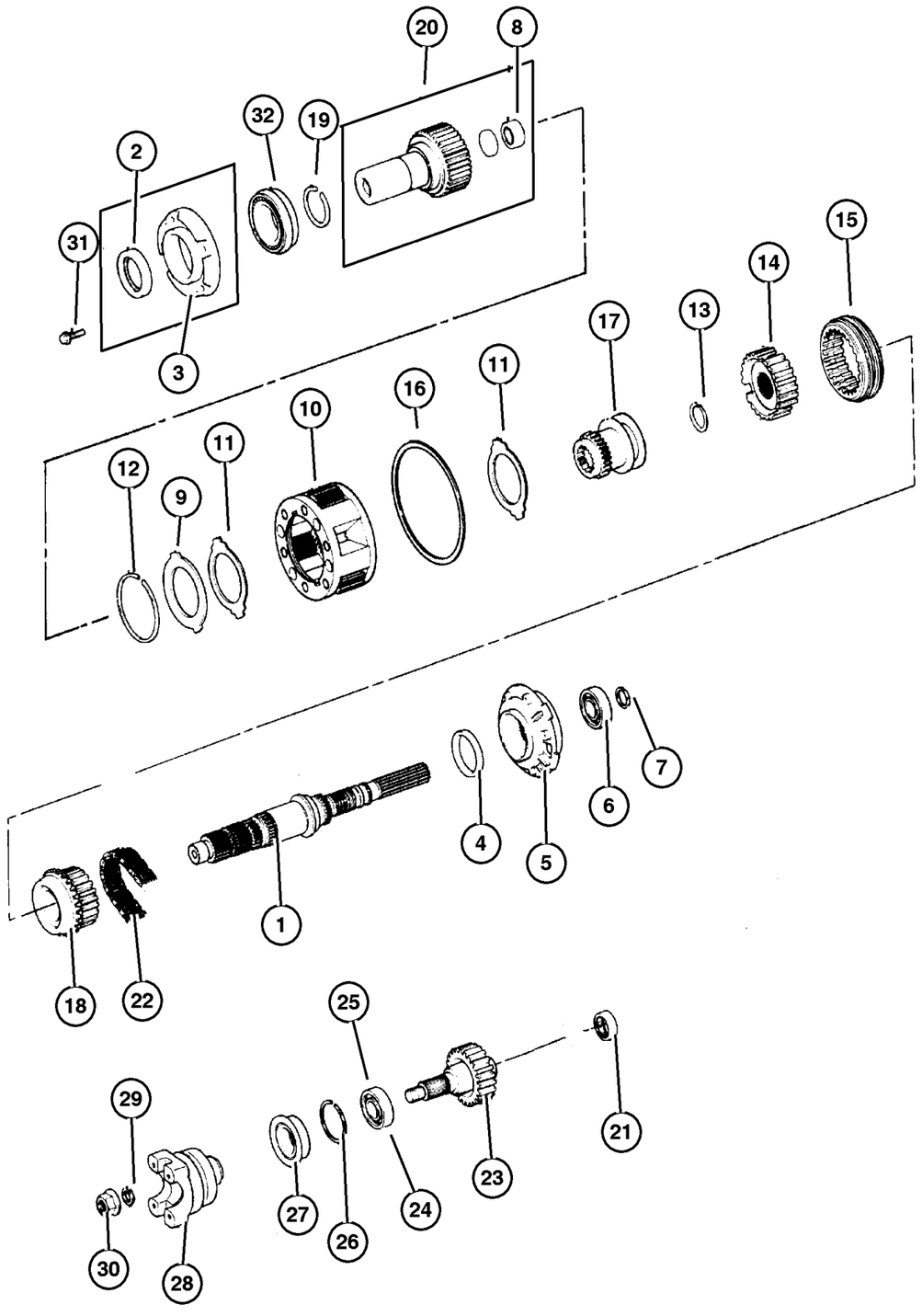

ITEM	PART NUMBER	QTY	LINE	SERIES	BODY	ENGINE	TRANS	TRIM	DESCRIPTION
NOTE; Sales Codes									
[ED0] = All 2.2,2.5,2.4L 4 Cylinder Gas Engines									
[EK0] = All 3.7L 6 Cylinder Gas Engines									
[EN0] = All 4/5 Turbo Diesel Engines									
1	5072 345AA	1	J, U			ED0,			MAINSHAFT, Transfer Case
2	5019 020AA	1	J, U			EK0, EN0 ED0, EK0,			SEAL, Input Gear
3	4338 973	1	J, U			EN0 ED0, EK0, EN0			EXTENSION, Transfer Case
4	4210 603	1	J, U			ED0, EK0,			SEAL, Main Shaft
5	4883 596AA	1	J, U			EN0 ED0,			PUMP, Transfer Case Oil
6	4883 601AA	1	J, U			EK0, EN0 ED0, EK0,			BEARING, Output Shaft
7	4883 597AA	1	J, U			EN0 ED0, EK0, EN0			SNAP RING
8	8350 3507	1	J, U			ED0, EK0, EN0			BEARING, Input Shaft
9	4338 909	1	J, U			ED0,			RING
10	4796 903AB	1	J, U			EK0, EN0 ED0, EK0,			PLANETARY, Transfer Case
11	4338 908	2	J, U			EN0 ED0, EK0, EN0			THRUST WASHER, Planetary Carrier
12	4338 910	1	J, U			ED0, EK0, EN0			SNAP RING

JEEP LIBERTY (KJ)

SERIES	LINE	BODY	ENGINE	TRANSMISSION
P = Limited	J = LHD (4WD)	74 = 4 Dr (104.3 WB)	ED1,ED0 = 2.4L Power Tech	DDK = 5 Speed HDManual
H = Sport	U = RHD (4WD)		EKG,EK0 = 3.7L Power Tech	DDD = 5 Speed HD Manual
M = Renegade	T = LHD (2WD)		ENJ = 2.5L 4Cyl Turbo Diesel	DG4,DGQ = Multi-Speed Auto
			ENR = 2.8L 4Cyl Turbo Diesel	DG6 = 4 Speed Auto Transm
			EN0 = 4Cyl Turbo Diesel	DG0 = All Automatic Transm
				DBB = All Manual Transm

AR = Use as required - = Non illustrated part # = New this model year

September 30, 2003

« RETURN TO GROUP INDEX »

Gear Train Command Trac [DHN]
Figure 231-410

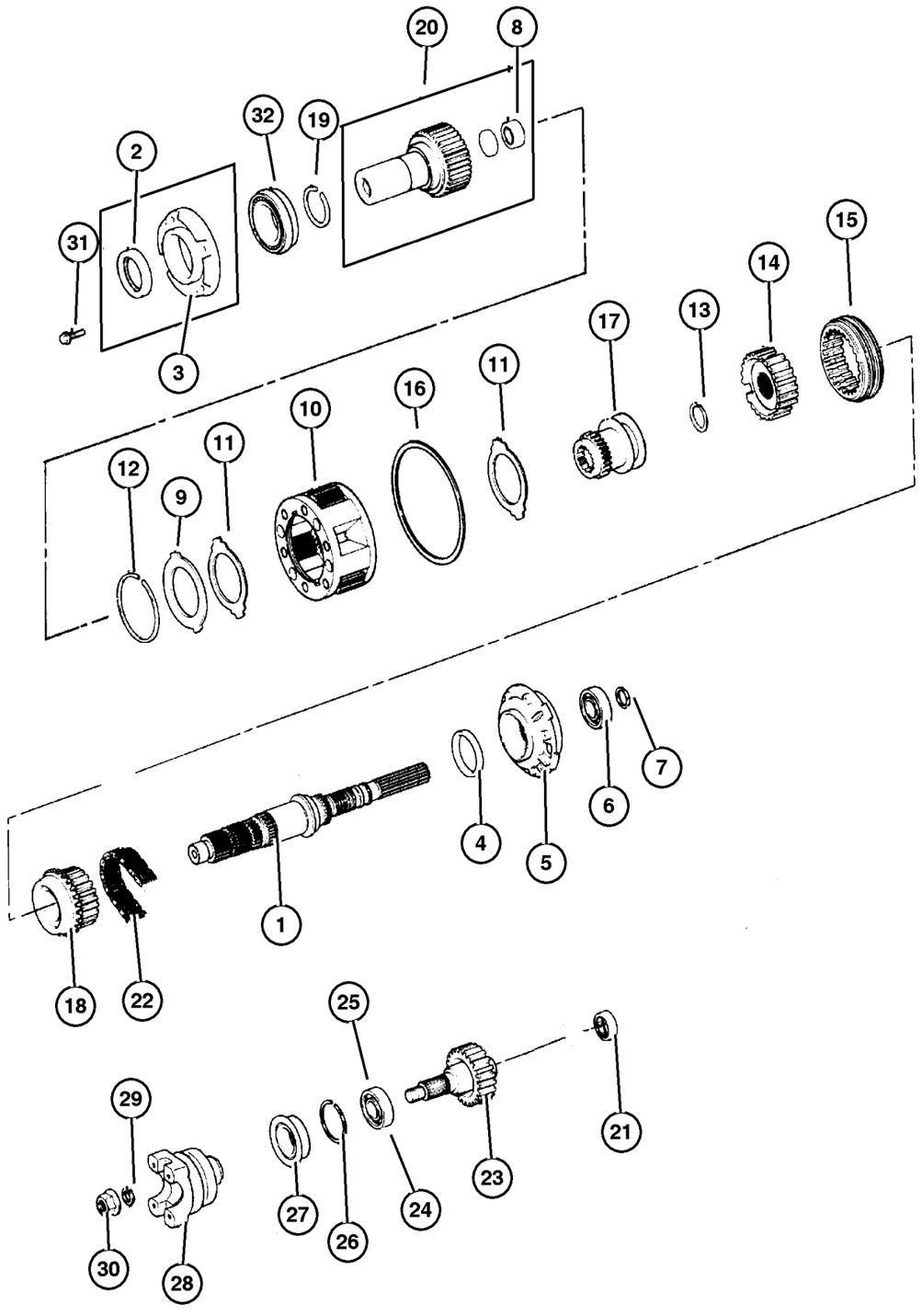

ITEM	PART NUMBER	QTY	LINE	SERIES	BODY	ENGINE	TRANS	TRIM	DESCRIPTION
13	4338 933	1	J, U			ED0,			SNAP RING
14	4741 240	1	J, U			EK0, EN0 ED0, EK0,			HUB, Sychronizer Mode
15	4796 909	1	J, U			EN0 ED0, EK0, EN0			SLEEVE, Mode Synchronizer
16	4219 065	1	J, U			ED0,			SNAP RING, Annulus Gear
17	4797 013	1	J, U			EK0, EN0 ED0,			SLEEVE, Range Fork
18	4796 908	1	J, U			EK0, EN0 ED0, EK0,			SPROCKET, Transfer Case
19	3821 558	1	J, U			EN0 ED0, EK0, EN0			SNAP RING
20	4798 113	1	J, U			ED0,			GEAR, Input
21	4269 189	1	J, U			EK0, EN0 ED0,			BEARING, Output Shaft
22	4338 935	1	J, U			EK0, EN0 ED0, EK0,			CHAIN, Transfer Case
23	5072 324AA	1	J, U			EN0 ED0, EK0, EN0			OUTPUT SHAFT, Transfer Case
24	4883 601AA	1	J, U			ED0, EK0,			BEARING, Output Shaft
25	4338 892	1	J, U			EN0 ED0, EK0, EN0			BEARING

JEEP LIBERTY (KJ)

SERIES	LINE	BODY	ENGINE	TRANSMISSION
P = Limited	J = LHD (4WD)	74 = 4 Dr (104.3 WB)	ED1,ED0 = 2.4L Power Tech	DDK = 5 Speed HDManual
H = Sport	U = RHD (4WD)		EKG,EK0 = 3.7L Power Tech	DDD = 5 Speed HD Manual
M = Renegade	T = LHD (2WD)		ENJ = 2.5L 4Cyl Turbo Diesel	DG4,DGQ = Multi-Speed Auto
			ENR = 2.8L 4Cyl Turbo Diesel	DG6 = 4 Speed Auto Transm
			EN0 = 4Cyl Turbo Diesel	DG0 = All Automatic Transm
				DBB = All Manual Transm

AR = Use as required - = Non illustrated part # = New this model year

September 30, 2003

« RETURN TO GROUP INDEX

« »

Gear Train Command Trac [DHN]
Figure 231-410

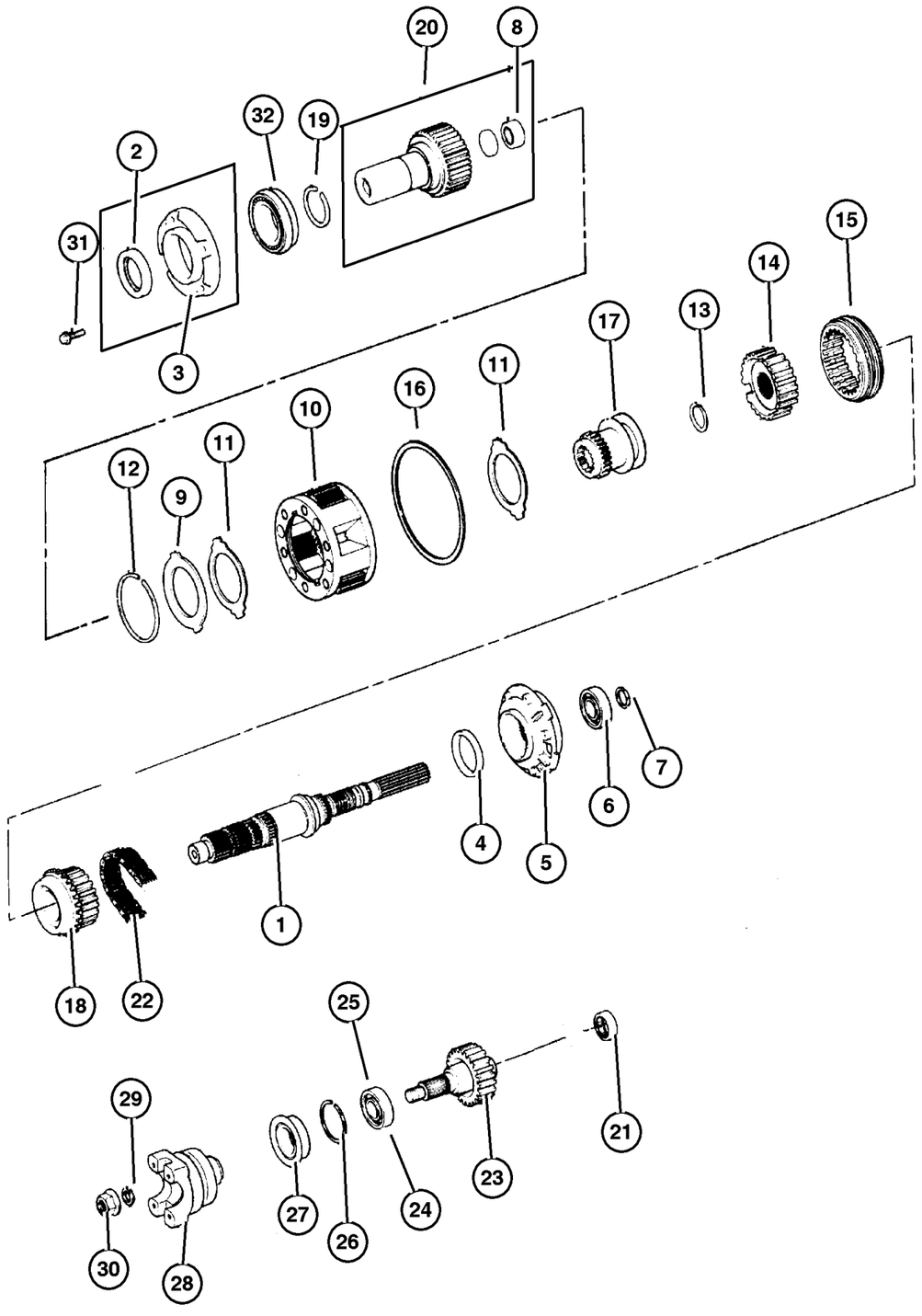

ITEM	PART NUMBER	QTY	LINE	SERIES	BODY	ENGINE	TRANS	TRIM	DESCRIPTION
26	4338 894	1	J, U			ED0,			SNAP RING, Bearing
27	5015 847AA	1	J, U			EK0, EN0 ED0, EK0,			SEAL, Output Shaft
28	5019 583AA	1	J, U			EN0 ED0, EK0, EN0			FLANGE, Driveshaft Yoke
29	4446 487	1	J, U			ED0, EK0, EN0			WASHER, Flat
30	4446 488	1	J, U			ED0,			NUT, Hex Flange
31	6501 371	9	J, U			EK0, EN0 ED0, EK0,			BOLT, Retainer
32	4746 155	1	J, U			EN0 ED0, EK0, EN0			BEARING, Input Gear

JEEP LIBERTY (KJ)

SERIES	LINE	BODY	ENGINE	TRANSMISSION
P = Limited	J = LHD (4WD)	74 = 4 Dr (104.3 WB)	ED1,ED0 = 2.4L Power Tech	DDK = 5 Speed HDManual
H = Sport	U = RHD (4WD)		EKG,EK0 = 3.7L Power Tech	DDD = 5 Speed HD Manual
M = Renegade	T = LHD (2WD)		ENJ = 2.5L 4Cyl Turbo Diesel	DG4,DGQ = Multi-Speed Auto
			ENR = 2.8L 4Cyl Turbo Diesel	DG6 = 4 Speed Auto Transm
			EN0 = 4Cyl Turbo Diesel	DG0 = All Automatic Transm
				DBB = All Manual Transm

AR = Use as required - = Non illustrated part # = New this model year

September 30, 2003

« RETURN TO GROUP INDEX

«

Forks and Rails Command Trac [DHN]
Figure 231-910

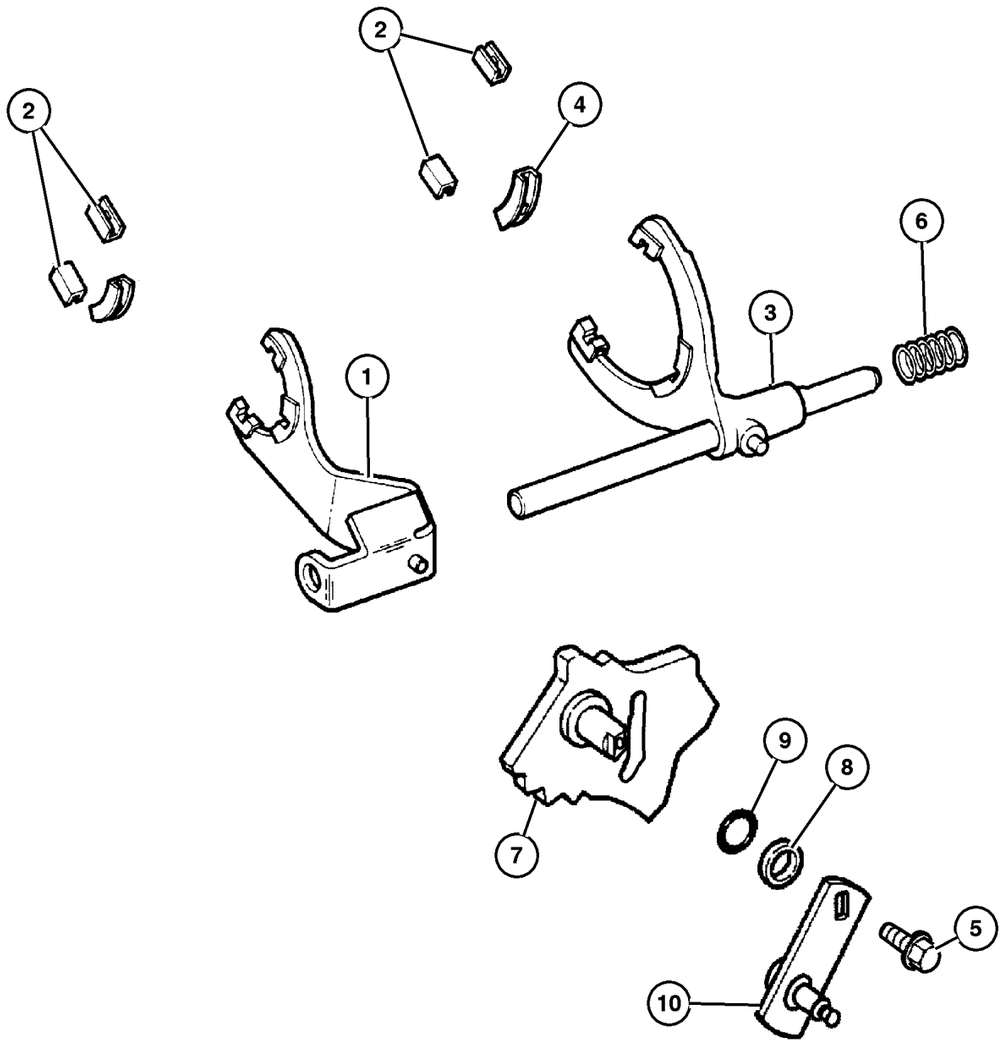

ITEM	PART NUMBER	QTY	LINE	SERIES	BODY	ENGINE	TRANS	TRIM	DESCRIPTION
Notes; Sales Codes									
[ED0] = All 2.2,2.5,2.4L 4 Cylinder Gas Engines									
[EK0] = All 3.7L 6 Cylinder Gas Engines									
[EN0] = All 4/5 Turbo Diesel Engines									
1	4798 136	1	J, U			ED0,			FORK, Range
2	4167 969	2	J, U			EK0, EN0 ED0, EK0,			PAD, Shift Fork
3	4741 237	1	J, U			EN0 ED0, EK0, EN0			FORK, Transfer Case Mode Shift
4	4219 073	1	J, U			ED0, EK0,			PAD, Shift Fork
5	5014 048AA	1	J, U			EN0 ED0,			BOLT, Hex Head
6	4338 925	1	J, U			EK0, EN0 ED0, EK0,			SPRING, Mode Shift Rail
7	5072 568AA	1	J, U			EN0 ED0, EK0, EN0			SECTOR, Transfer Case
8	5003 442AA	1	J, U			EK0, EN0 ED0, EK0, EN0			BEARING, Shift Lever Linkage
9	5014 046AA	1	J, U			ED0,			SEAL, Sector Shaft
10	5072 328AA	1	J, U			EK0, EN0 ED0, EK0, EN0			LEVER, Selector

JEEP LIBERTY (KJ)

SERIES	LINE	BODY	ENGINE	TRANSMISSION
P = Limited	J = LHD (4WD)	74 = 4 Dr (104.3 WB)	ED1,ED0 = 2.4L Power Tech	DDK = 5 Speed HDManual
H = Sport	U = RHD (4WD)		EKG,EK0 = 3.7L Power Tech	DDD = 5 Speed HD Manual
M = Renegade	T = LHD (2WD)		ENJ = 2.5L 4Cyl Turbo Diesel	DG4,DGQ = Multi-Speed Auto
			ENR = 2.8L 4Cyl Turbo Diesel	DG6 = 4 Speed Auto Transm
			EN0 = 4Cyl Turbo Diesel	DG0 = All Automatic Transm
				DBB = All Manual Transm

Gearshift Controls
Figure 231-1210

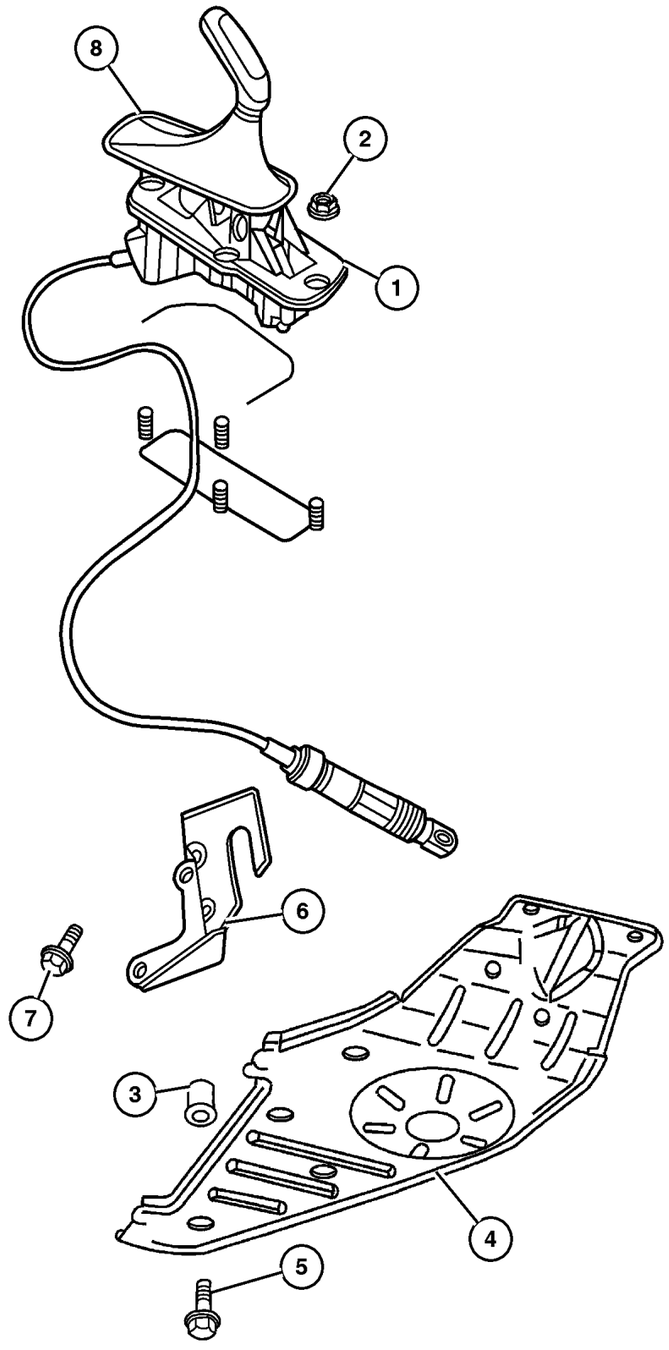

ITEM	PART NUMBER	QTY	LINE	SERIES	BODY	ENGINE	TRANS	TRIM	DESCRIPTION
NOTE; Sales Codes									
[DBB] = All Manual Transmissions									
[DG0] = All Automatic Transmissions									
1									SHIFTER, Transfer Case
	52104 308AD	1	J						
	52104 309AD	1	U						
2	3420 1358	4							NUT AND WASHER, Hex Nut-Sealing Washer, M6 x 1.00
3	6506 644AA	4	J, U						RIVET
4	52128 649AA	1	J, U						PLATE, Transfer Case Skid
5	6506 644AA	4	J, U						RIVET
6	52104 390AC	1	J, U				DBB		BRACKET, Shifter
7	6101 752	3	J, U				DG0		SCREW AND WASHER, Hex Head, M10x1.5x28
8	52109 709AB	1	J, U						BOOT, Gearshift

JEEP LIBERTY (KJ)

SERIES	LINE	BODY	ENGINE	TRANSMISSION
P = Limited	J = LHD (4WD)	74 = 4 Dr (104.3 WB)	ED1,ED0 = 2.4L Power Tech	DDK = 5 Speed HDManual
H = Sport	U = RHD (4WD)		EKG,EK0 = 3.7L Power Tech	DDD = 5 Speed HD Manual
M = Renegade	T = LHD (2WD)		ENJ = 2.5L 4Cyl Turbo Diesel	DG4,DGQ = Multi-Speed Auto
			ENR = 2.8L 4Cyl Turbo Diesel	DG6 = 4 Speed Auto Transm
			EN0 = 4Cyl Turbo Diesel	DG0 = All Automatic Transm
				DBB = All Manual Transm

Group – 242
Transfer Case Model 242

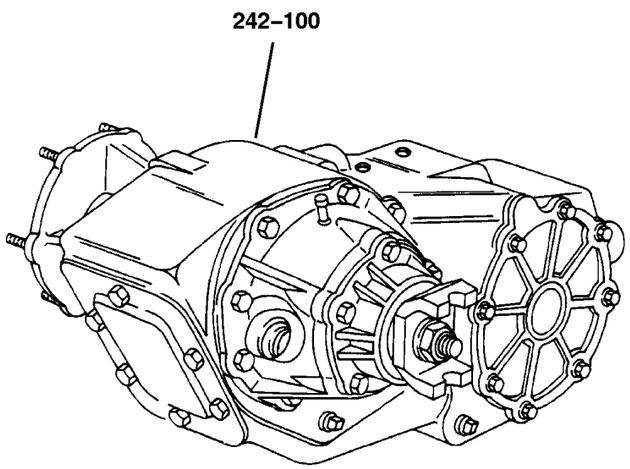

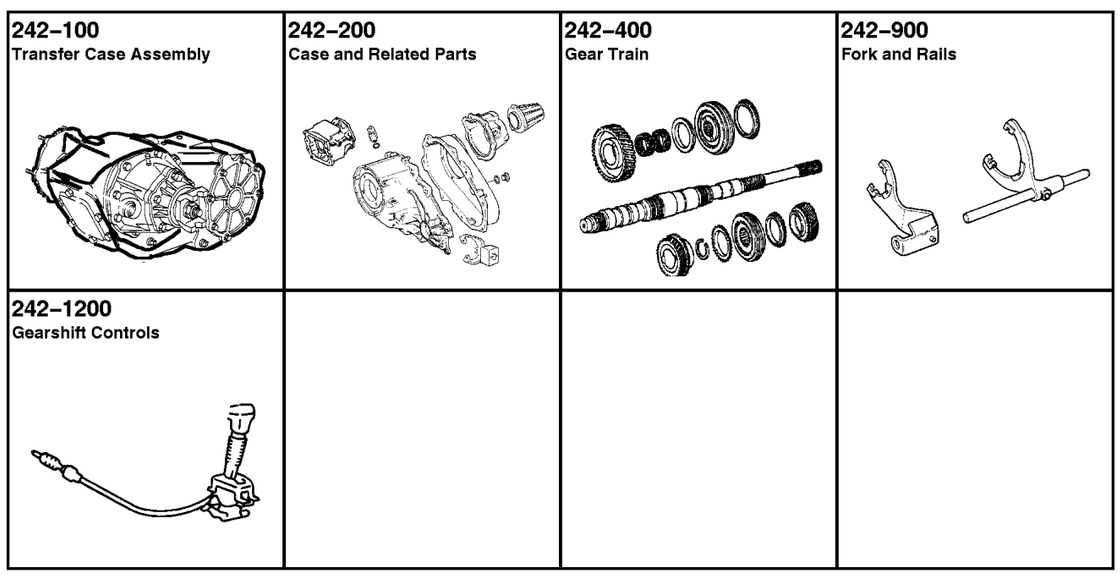

GROUP 242 - Transfer Case Model 242

Illustration Title — Group-Fig. No.

Transfer Case Assembly
Transfer Case Select Trac [DHP] . . . . . Fig. 242-110

Case and Related Parts
Case and Related Parts Select Trac [DHP] . . . . . Fig. 242-210

Gear Train
Gear Train Select Trac [DHP] . . . . . Fig. 242-410

Fork and Rails
Forks and Rails Select Trac [DHP] . . . . . Fig. 242-910

Gearshift Controls
Gearshift Controls . . . . . Fig. 242-1210

Transfer Case Select Trac [DHP]
Figure 242-110

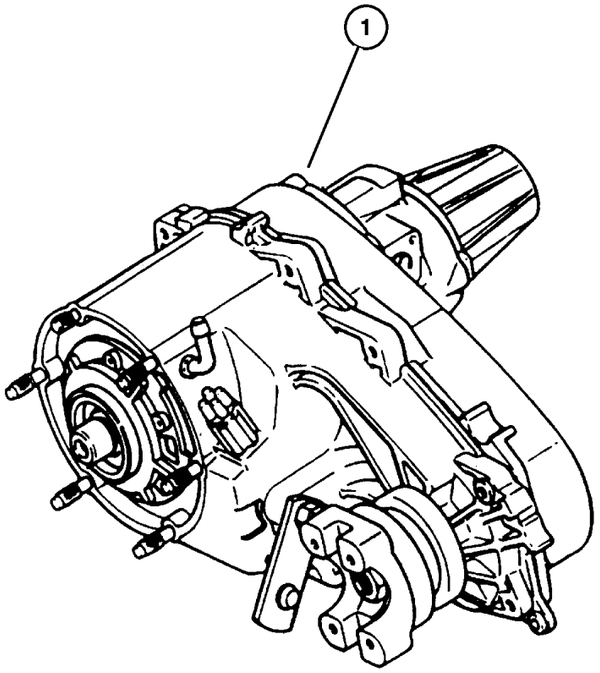

ITEM	PART NUMBER	QTY	LINE	SERIES	BODY	ENGINE	TRANS	TRIM	DESCRIPTION
Notes: Sales Code									
ED0=All 2.2,2.4,2.5,L 4Cylinder Gas Engines									
EK0=All 3.7L Gas Engines									
EN0=All 4/5 Cylinber Turbo Diesel Engines									
1									TRANSFER CASE, NP242
	52853 123AA	1	J, U			EN0			
	52111 022AG	1	J, U			ED0, EK0			

JEEP LIBERTY (KJ)

SERIES	LINE	BODY	ENGINE	TRANSMISSION
P = Limited	J = LHD (4WD)	74 = 4 Dr (104.3 WB)	ED1,ED0 = 2.4L Power Tech	DDK = 5 Speed HDManual
H = Sport	U = RHD (4WD)		EKG,EK0 = 3.7L Power Tech	DDD = 5 Speed HD Manual
M = Renegade	T = LHD (2WD)		ENJ = 2.5L 4Cyl Turbo Diesel	DG4,DGQ = Multi-Speed Auto
			ENR = 2.8L 4Cyl Turbo Diesel	DG6 = 4 Speed Auto Transm
			EN0 = 4Cyl Turbo Diesel	DG0 = All Automatic Transm
				DBB = All Manual Transm

Case and Related Parts Select Trac [DHP]
Figure 242-210

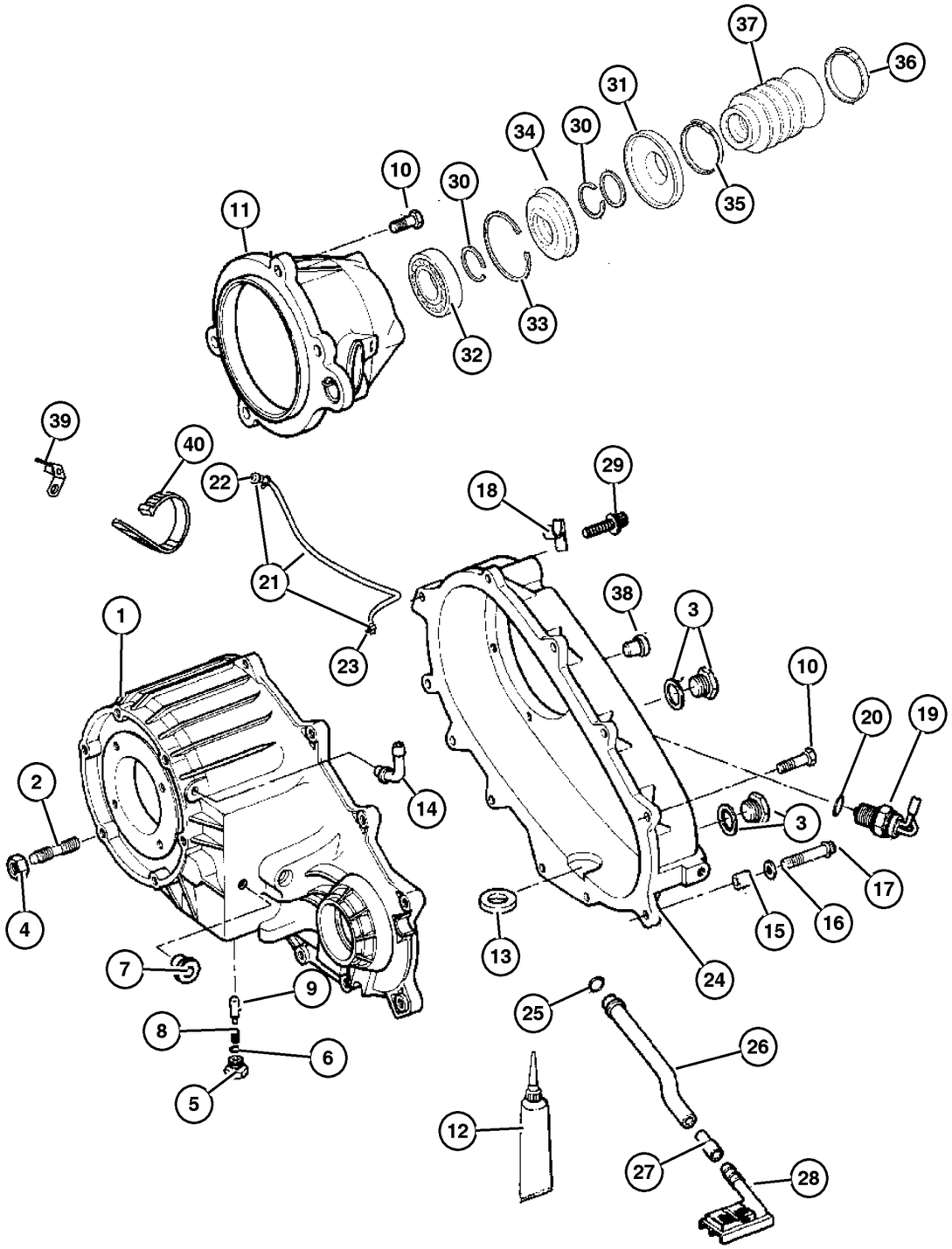

ITEM	PART NUMBER	QTY	LINE	SERIES	BODY	ENGINE	TRANS	TRIM	DESCRIPTION
Notes: Sales Code									
ED0=All 2.2,2.4,2.5,L 4Cylinder Gas Engines									
EK0=All 3.7L Gas Engines									
EN0=All 4/5 Cylinber Turbo Diesel Engines									
1									CASE, Transfer Front
	5072 315AA	1	J, U			ED0, EK0			
		1	J, U			EN0			
2									STUD, Tranmission Case
	4167 922	6	J, U			ED0, EK0			
		6	J, U			EN0			
3									PLUG, Oil Fill
	4856 641	2	J, U			ED0, EK0			
		2	J, U			EN0			
4	J400 6681	6	J, U						NUT AND CONED WASHER, Hex, .375-24
5									SCREW
	4886 473AA	1	J, U			ED0, EK0			
		1	J, U			EN0			
6									SEAL, Vacuum Switch
	4338 956	1	J, U			ED0, EK0			
		1	J, U			EN0			
7									PLUG
	0015 105	1	J, U			ED0, EK0			
		1	J, U			EN0			
8									SPRING, Poppet Plunger
	5003 445AA	1	J, U			ED0, EK0			
		1	J, U			EN0			
9									PLUNGER
	5003 444AA	1	J, U			ED0, EK0			
		1	J, U			EN0			
10									BOLT, Transfer Case
	4210 617	8	J, U			ED0, EK0			

JEEP LIBERTY (KJ)

SERIES	LINE	BODY	ENGINE	TRANSMISSION
P = Limited	J = LHD (4WD)	74 = 4 Dr (104.3 WB)	ED1,ED0 = 2.4L Power Tech	DDK = 5 Speed HDManual
H = Sport	U = RHD (4WD)		EKG,EK0 = 3.7L Power Tech	DDD = 5 Speed HD Manual
M = Renegade	T = LHD (2WD)		ENJ = 2.5L 4Cyl Turbo Diesel	DG4,DGQ = Multi-Speed Auto
			ENR = 2.8L 4Cyl Turbo Diesel	DG6 = 4 Speed Auto Transm
			EN0 = 4Cyl Turbo Diesel	DG0 = All Automatic Transm
				DBB = All Manual Transm

AR = Use as required - = Non illustrated part # = New this model year

September 30, 2003

« RETURN TO GROUP INDEX »

Case and Related Parts Select Trac [DHP]
Figure 242-210

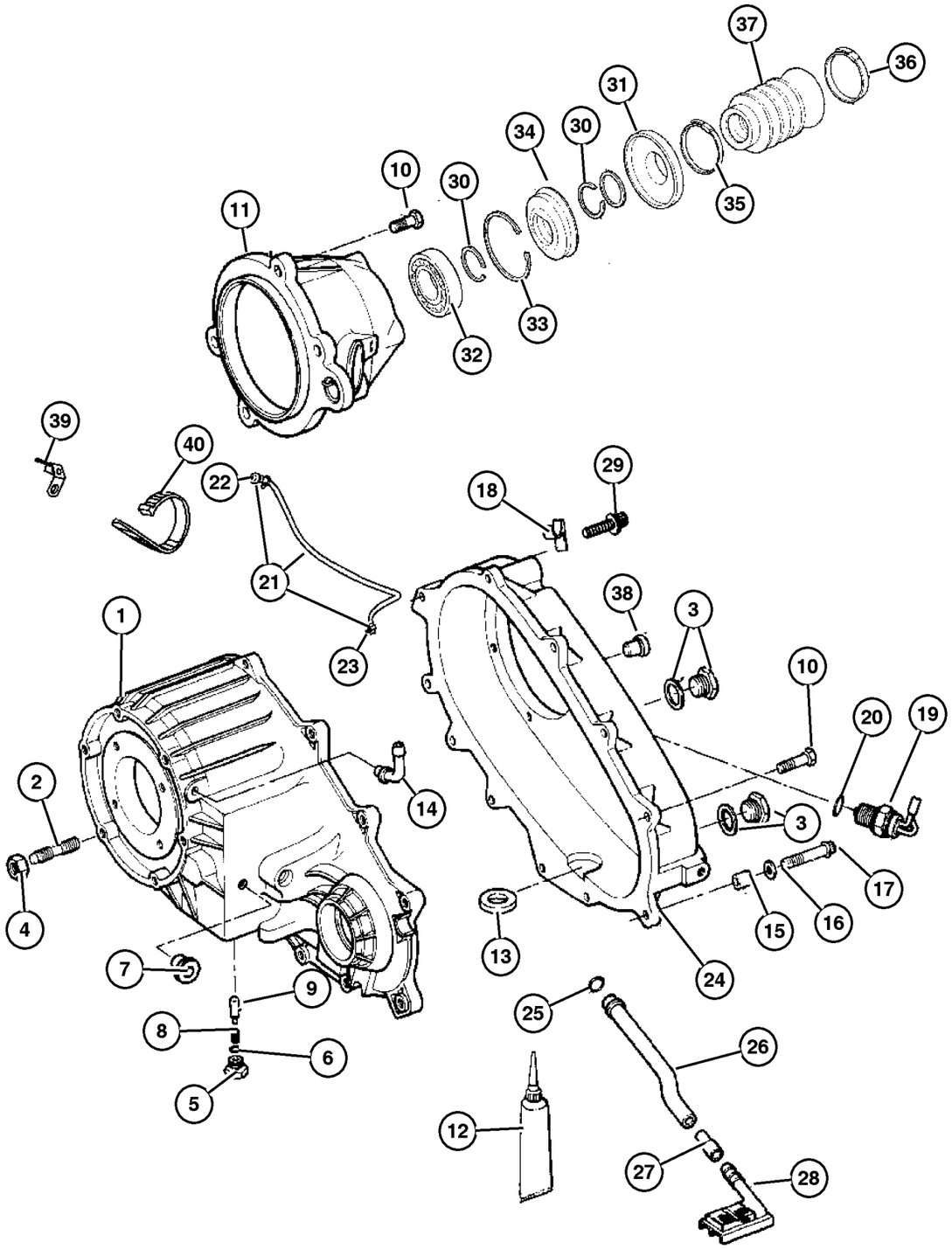

ITEM	PART NUMBER	QTY	LINE	SERIES	BODY	ENGINE	TRANS	TRIM	DESCRIPTION
		8	J, U			EN0			
11									RETAINER, Transfer Case Rear
	5072 305AA	1	J, U			ED0, EK0			
		1	J, U			EN0			
12									SEALANT, RTV
	5010 884AA	1	J, U			ED0, EK0			
		1	J, U			EN0			
13									MAGNET, Transmission
	3681 601	1	J, U			ED0, EK0			
		1	J, U			EN0			
14									VENT, Transfer Case
	4796 910	1	J, U			ED0, EK0			
		1	J, U			EN0			
15									DOWEL, Transfer Case
	4116 310	2	J, U			ED0, EK0			
		2	J, U			EN0			
16									WASHER, Flat
	4210 983	1	J, U			ED0, EK0			
		1	J, U			EN0			
17									BOLT, Hex Flange Head
	4210 614	6	J, U			ED0, EK0			
		6	J, U			EN0			
18	5211 8181	1				ED0			CLIP
19									SWITCH, Transfer Case, 5 Position
	5083 138AA	1	J, U			ED0, EK0			
		1	J, U			EN0			
20									SEAL, Vacuum Switch
	4338 956	1	J, U			ED0, EK0			
		1	J, U			EN0			
21	52105 882AA	1	J, U						VENT, Transfer Case
22	4213 328	1	J, U						VENT, Cap
23	6502 081	1	J, U						CLAMP, Oil Cooler Line
24									CASE, Transfer Case Rear

JEEP LIBERTY (KJ)

SERIES	LINE	BODY	ENGINE	TRANSMISSION
P = Limited	J = LHD (4WD)	74 = 4 Dr (104.3 WB)	ED1,ED0 = 2.4L Power Tech	DDK = 5 Speed HDManual
H = Sport	U = RHD (4WD)		EKG,EK0 = 3.7L Power Tech	DDD = 5 Speed HD Manual
M = Renegade	T = LHD (2WD)		ENJ = 2.5L 4Cyl Turbo Diesel	DG4,DGQ = Multi-Speed Auto
			ENR = 2.8L 4Cyl Turbo Diesel	DG6 = 4 Speed Auto Transm
			EN0 = 4Cyl Turbo Diesel	DG0 = All Automatic Transm
				DBB = All Manual Transm

AR = Use as required - = Non illustrated part # = New this model year

September 30, 2003

« RETURN TO GROUP INDEX

Case and Related Parts Select Trac [DHP]
Figure 242-210

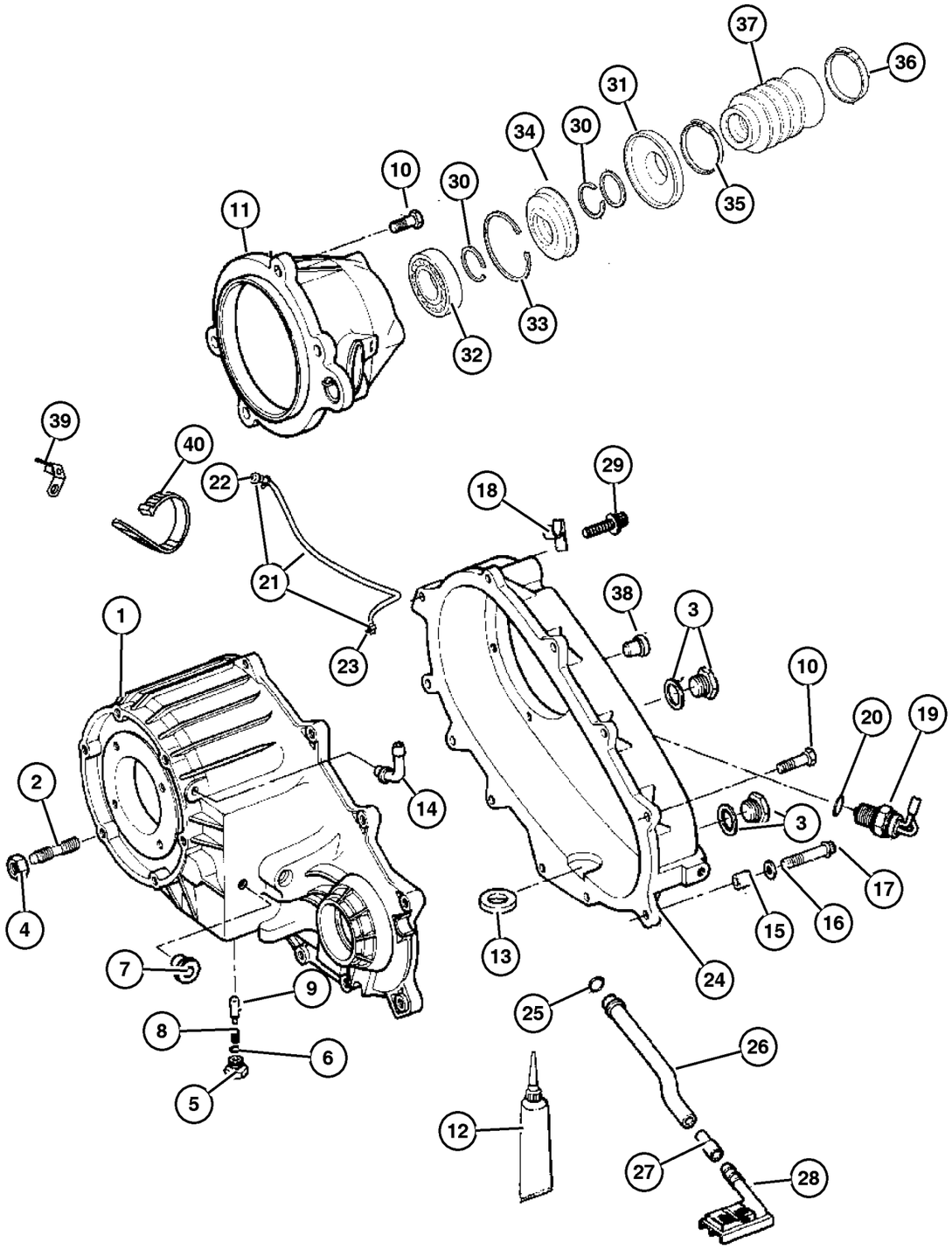

ITEM	PART NUMBER	QTY	LINE	SERIES	BODY	ENGINE	TRANS	TRIM	DESCRIPTION
	5013 858AA	1	J, U			ED0,			
						EK0			
		1	J, U			EN0			
25									SEAL, Oil
	4338 942	1	J, U			ED0,			
						EK0			
		1	J, U			EN0			
26									TUBE, Oil Pickup
	5003 455AA	1	J, U			ED0,			
						EK0			
		1	J, U			EN0			
27									CONNECTOR, Oil Tube Pickup
	4338 944	1	J, U			ED0,			
						EK0			
		1	J, U			EN0			
28									FILTER, Transfer Case Oil
	4338 943	1	J, U			ED0,			
						EK0			
		1	J, U			EN0			
29									BOLT, Twelve Point Head, M10x1.5x48
	J813 0979	1	J, U			ED0,			
						EK0			
		1	J, U			EN0			
30									SNAP RING
	4883 597AA	2	J, U			ED0,			
						EK0			
		2	J, U			EN0			
31									SLINGER, Transfer Case Flange
	5072 308AA	1	J, U			ED0,			
						EK0			
		1	J, U			EN0			
32									BEARING, Output Shaft
	2466 224	1	J, U			EN0			
	4883 601AA	1	J, U			ED0,			
						EK0			
33									SNAP RING
	5072 306AB	1	J, U			ED0,			
						EK0			
		1	J, U			EN0			
34									SEAL, Output Shaft

JEEP LIBERTY (KJ)

SERIES	LINE	BODY	ENGINE	TRANSMISSION
P = Limited	J = LHD (4WD)	74 = 4 Dr (104.3 WB)	ED1,ED0 = 2.4L Power Tech	DDK = 5 Speed HDManual
H = Sport	U = RHD (4WD)		EKG,EK0 = 3.7L Power Tech	DDD = 5 Speed HD Manual
M = Renegade	T = LHD (2WD)		ENJ = 2.5L 4Cyl Turbo Diesel	DG4,DGQ = Multi-Speed Auto
			ENR = 2.8L 4Cyl Turbo Diesel	DG6 = 4 Speed Auto Transm
			EN0 = 4Cyl Turbo Diesel	DG0 = All Automatic Transm
				DBB = All Manual Transm

AR = Use as required - = Non illustrated part # = New this model year

September 30, 2003

« RETURN TO GROUP INDEX

Case and Related Parts Select Trac [DHP]
Figure 242-210

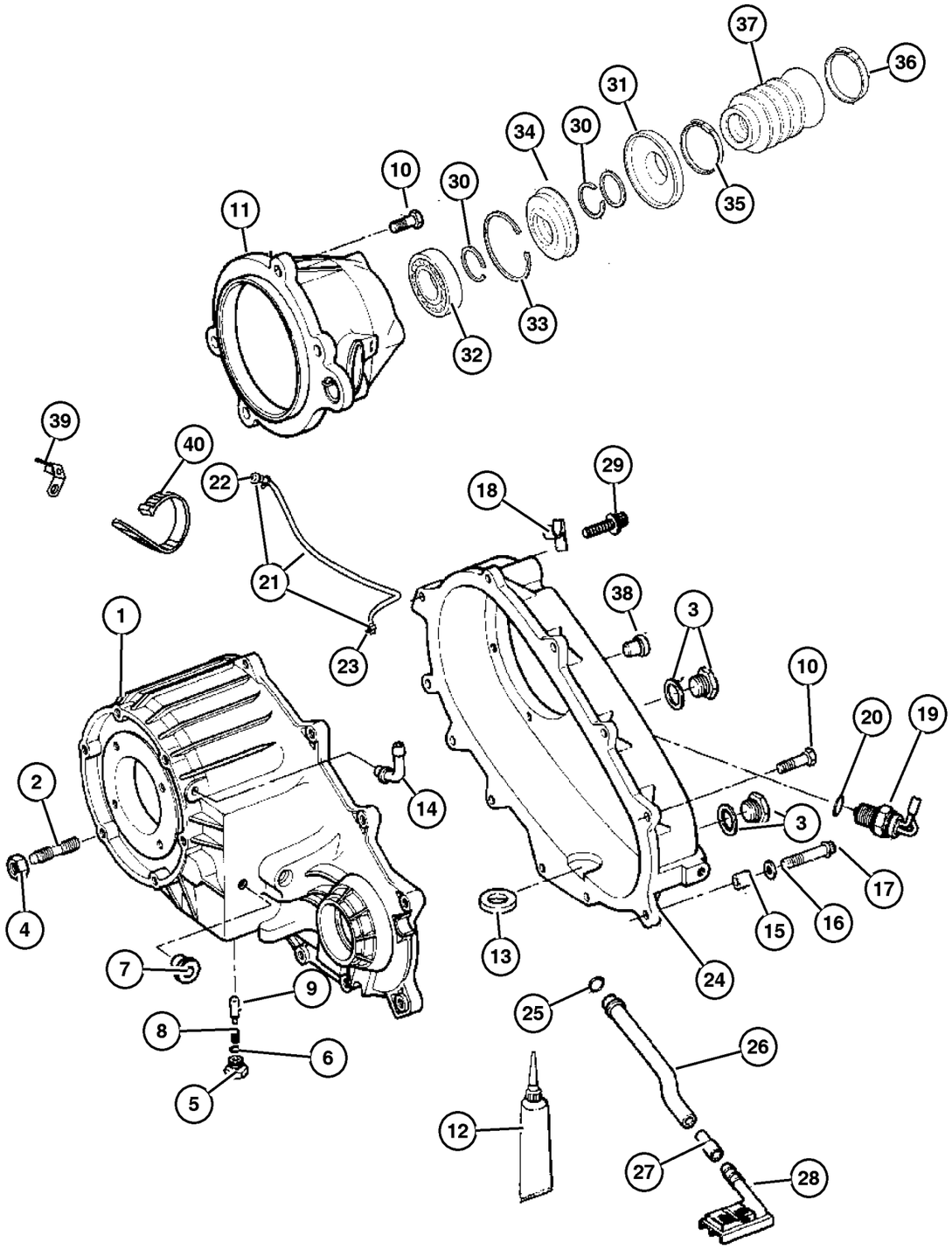

ITEM	PART NUMBER	QTY	LINE	SERIES	BODY	ENGINE	TRANS	TRIM	DESCRIPTION
	5072 307AA	1	J, U			ED0,			
						EK0			
		1	J, U			EN0			
35									CLAMP, Boot
	5072 310AA	1	J, U			ED0,			
						EK0			
		1	J, U			EN0			
36									CLAMP, Boot
	5072 311AA	1	J, U			ED0,			
						EK0			
		1	J, U			EN0			
37									BOOT, Output Shaft, None
	5072 329AB	1	J, U			EN0			
		1	J, U			ED0,			
						EK0			
38									DOWEL
	4638 953	1	J, U			ED0,			
						EK0			
		1	J, U			EN0			
39	56041 823AB	2				EK0			BRACKET, Oxygen Sensor
40	5073 039AA	1	J, U						STRAP, Tie

JEEP LIBERTY (KJ)

SERIES	LINE	BODY	ENGINE	TRANSMISSION
P = Limited	J = LHD (4WD)	74 = 4 Dr (104.3 WB)	ED1,ED0 = 2.4L Power Tech	DDK = 5 Speed HDManual
H = Sport	U = RHD (4WD)		EKG,EK0 = 3.7L Power Tech	DDD = 5 Speed HD Manual
M = Renegade	T = LHD (2WD)		ENJ = 2.5L 4Cyl Turbo Diesel	DG4,DGQ = Multi-Speed Auto
			ENR = 2.8L 4Cyl Turbo Diesel	DG6 = 4 Speed Auto Transm
			EN0 = 4Cyl Turbo Diesel	DG0 = All Automatic Transm
				DBB = All Manual Transm

AR = Use as required - = Non illustrated part # = New this model year

September 30, 2003

« RETURN TO GROUP INDEX

Gear Train Select Trac [DHP]
Figure 242-410

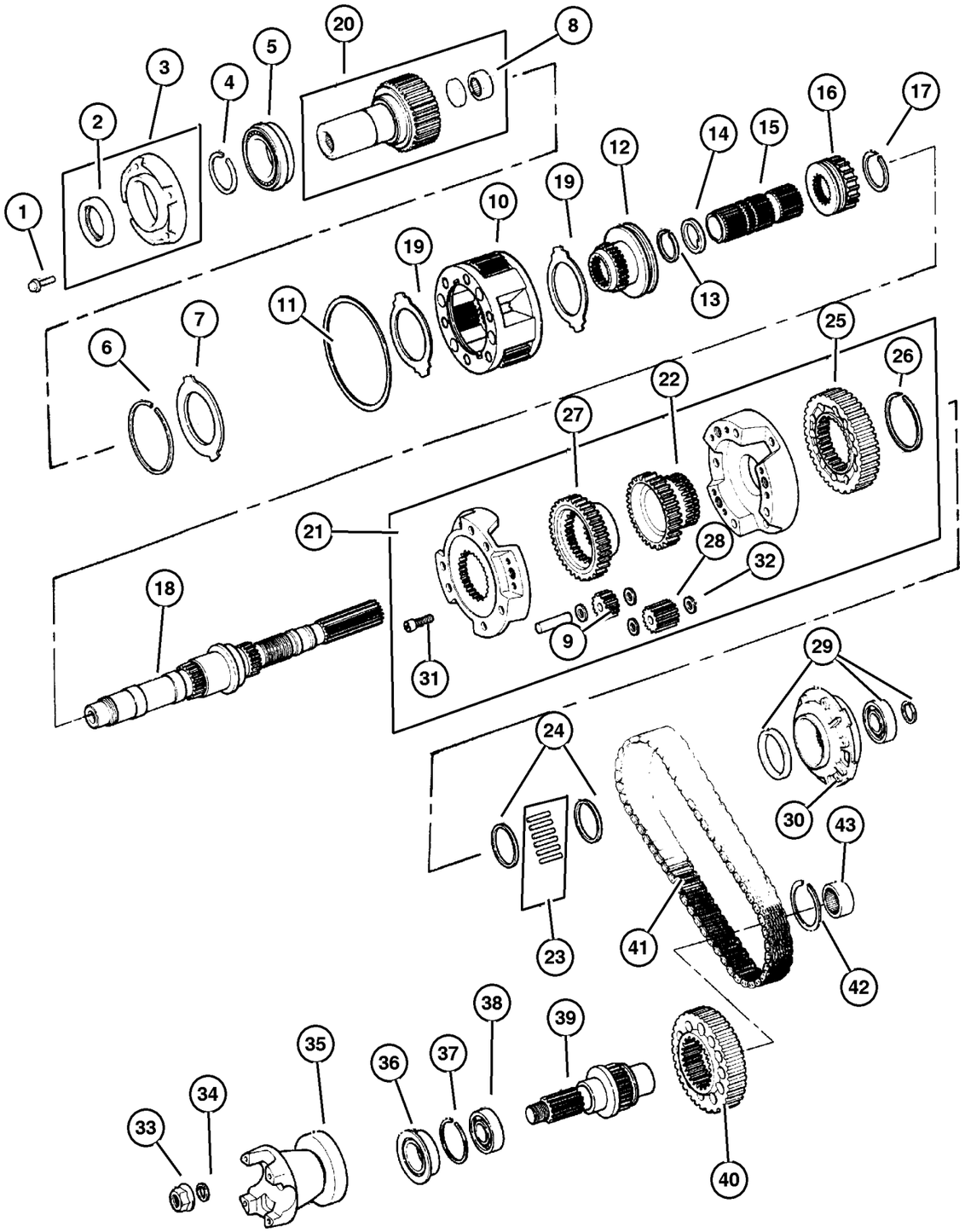

ITEM	PART NUMBER	QTY	LINE	SERIES	BODY	ENGINE	TRANS	TRIM	DESCRIPTION
Notes: Sales Code									
ED0=All 2.2,2.4,2.5,L 4Cylinder Gas Engines									
EK0=All 3.7L Gas Engines									
EN0=All 4/5 Cylinber Turbo Diesel Engines									
1									BOLT, Retainer
	6501 371	4	J, U			ED0, EK0			
		4	J, U			EN0			
2									SEAL, Input Gear
	5019 020AA	1	J, U			ED0, EK0			
		1	J, U			EN0			
3									EXTENSION, Transfer Case
	4338 973	1	J, U			ED0, EK0			
		1	J, U			EN0			
4									SNAP RING
	3821 558	1	J, U			ED0, EK0			
		1	J, U			EN0			
5									BEARING, Input Gear
	4746 155	1	J, U			ED0, EK0			
		1	J, U			EN0			
6									SNAP RING
	4338 910	1	J, U			ED0, EK0			
		1	J, U			EN0			
7									RING
	4338 909	1	J, U			ED0, EK0			
		1	J, U			EN0			
8									BEARING, Input Shaft
	8350 3507	1	J, U			ED0, EK0			
		1	J, U			EN0			
9									GEAR, Planetary
	8350 4170	1	J, U			ED0, EK0			
		1	J, U			EN0			
10									PLANETARY, Transfer Case

JEEP LIBERTY (KJ)

SERIES	LINE	BODY	ENGINE	TRANSMISSION
P = Limited	J = LHD (4WD)	74 = 4 Dr (104.3 WB)	ED1,ED0 = 2.4L Power Tech	DDK = 5 Speed HDManual
H = Sport	U = RHD (4WD)		EKG,EK0 = 3.7L Power Tech	DDD = 5 Speed HD Manual
M = Renegade	T = LHD (2WD)		ENJ = 2.5L 4Cyl Turbo Diesel	DG4,DGQ = Multi-Speed Auto
			ENR = 2.8L 4Cyl Turbo Diesel	DG6 = 4 Speed Auto Transm
			EN0 = 4Cyl Turbo Diesel	DG0 = All Automatic Transm
				DBB = All Manual Transm

AR = Use as required - = Non illustrated part # = New this model year **September 30, 2003**

« RETURN TO GROUP INDEX »

Gear Train Select Trac [DHP]
Figure 242-410

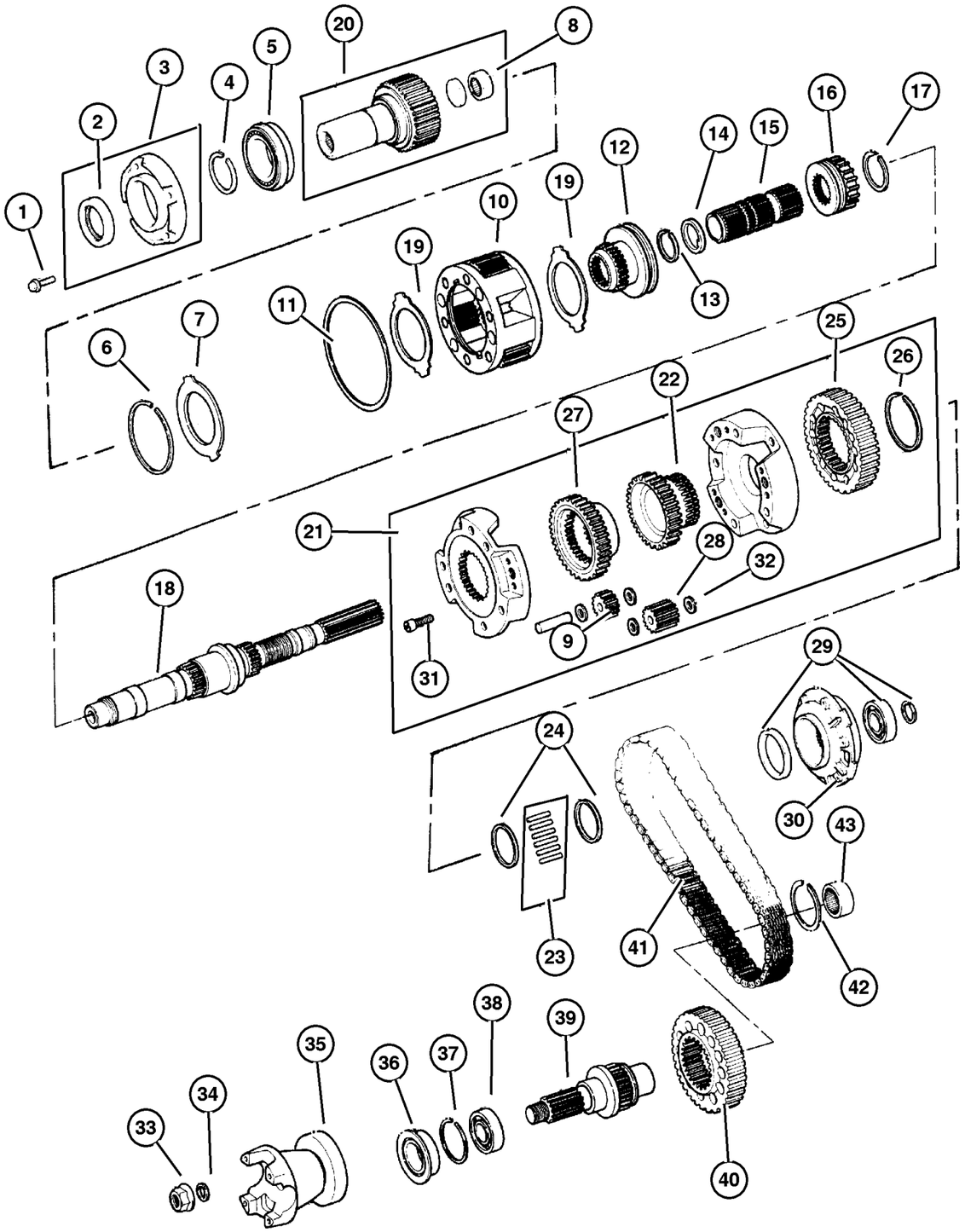

ITEM	PART NUMBER	QTY	LINE	SERIES	BODY	ENGINE	TRANS	TRIM	DESCRIPTION
	4796 903AB	1	J, U			ED0,			
						EK0			
		1	J, U			EN0			
11									SNAP RING, Annulus Gear
	4219 065	1	J, U			ED0,			
						EK0			
		1	J, U			EN0			
12									SLEEVE, Shift Range
	5003 746AA	1	J, U			ED0,			
						EK0			
		1	J, U			EN0			
13									SNAP RING
	8350 3540	1	J, U			ED0,			
						EK0			
		1	J, U			EN0			
14									WASHER, Intermediate Sleeve
	8350 3539	1	J, U			ED0,			
						EK0			
		1	J, U			EN0			
15									SHAFT, Intermediate
	4798 277	1	J, U			ED0,			
						EK0			
		1	J, U			EN0			
16									SLEEVE, Mode Synchronizer
	8350 3542	1	J, U			ED0,			
						EK0			
		1	J, U			EN0			
17									SNAP RING
	8350 3537	1	J, U			ED0,			
						EK0			
		1	J, U			EN0			
18									MAINSHAFT, Transfer Case
	5072 299AA	1	J, U			ED0,			
						EK0			
		1	J, U			EN0			
19									THRUST WASHER, Planetary Carrier
	4338 908	2	J, U			ED0,			
						EK0			
		2	J, U			EN0			
20									GEAR, Input

JEP LIBERTY (KJ)

SERIES	LINE	BODY	ENGINE	TRANSMISSION
P = Limited	J = LHD (4WD)	74 = 4 Dr (104.3 WB)	ED1,ED0 = 2.4L Power Tech	DDK = 5 Speed HDManual
H = Sport	U = RHD (4WD)		EKG,EK0 = 3.7L Power Tech	DDD = 5 Speed HD Manual
M = Renegade	T = LHD (2WD)		ENJ = 2.5L 4Cyl Turbo Diesel	DG4,DGQ = Multi-Speed Auto
			ENR = 2.8L 4Cyl Turbo Diesel	DG6 = 4 Speed Auto Transm
			EN0 = 4Cyl Turbo Diesel	DG0 = All Automatic Transm
				DBB = All Manual Transm

AR = Use as required - = Non illustrated part # = New this model year

September 30, 2003

« RETURN TO GROUP INDEX

Gear Train Select Trac [DHP]
Figure 242-410

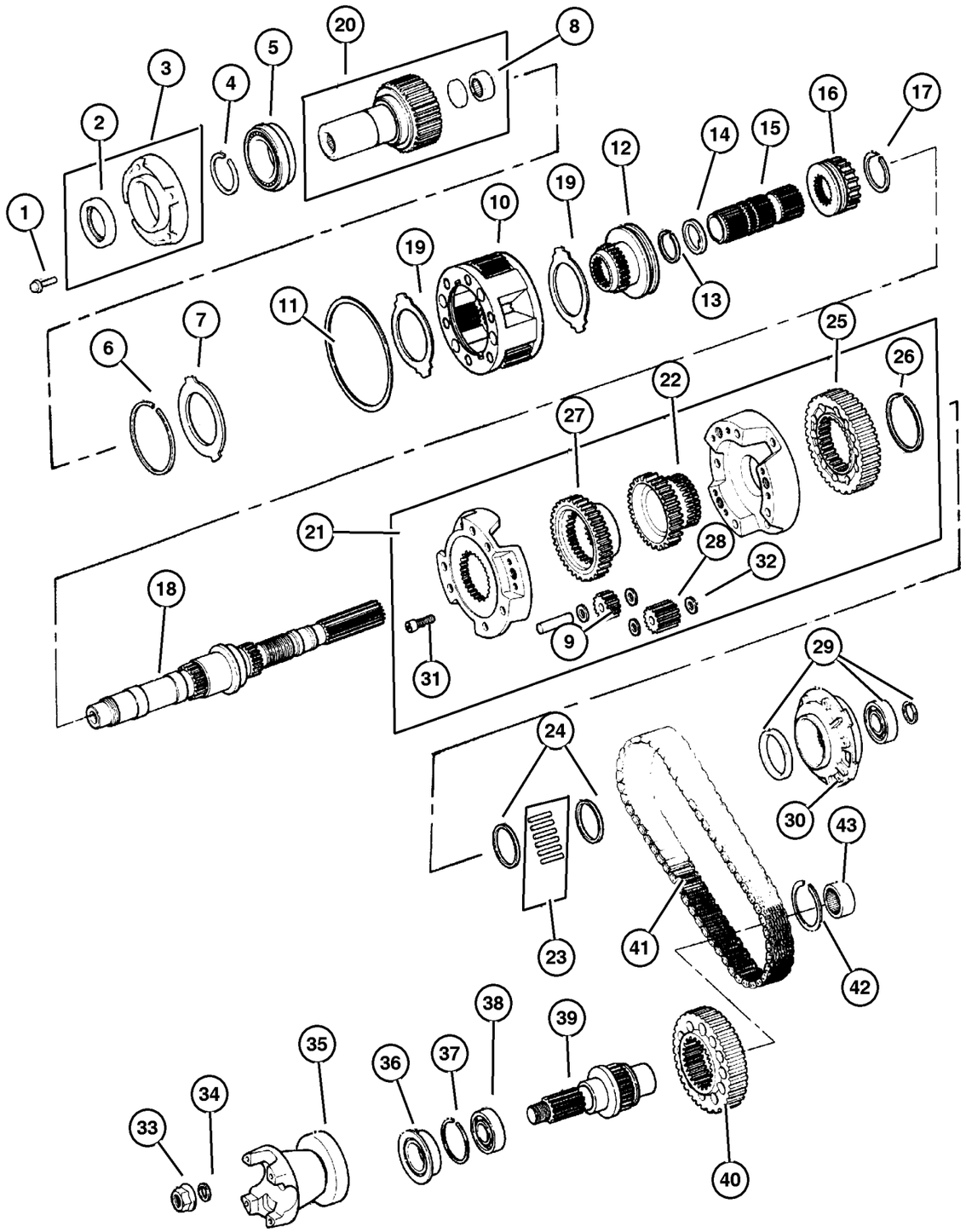

ITEM	PART NUMBER	QTY	LINE	SERIES	BODY	ENGINE	TRANS	TRIM	DESCRIPTION
	5072 298AA	1	J, U			ED0,			
						EK0			
		1	J, U			EN0			
21									DIFFERENTIAL, Transfer Case
	5072 300AA	1	J, U			ED0,			
						EK0			
		1	J, U			EN0			
22									SPROCKET, Transfer Case
	5072 301AA	1	J, U			ED0,			
						EK0			
		1	J, U			EN0			
23									NEEDLE BEARING, Roller Cage, None
	5066 996AA	1	J, U			ED0,			
						EK0			
		1	J, U			EN0			
24									THRUST WASHER, Planetary Carrier
	4338 908	2	J, U			ED0,			
						EK0			
		2	J, U			EN0			
25									SPROCKET, Differential
	8350 3536	1	J, U			ED0,			
						EK0			
		1	J, U			EN0			
26	8350 3532	1	J, U						SNAP RING
27									GEAR, Differential Drive
	5003 450AA	1	J, U			ED0,			
						EK0			
		1	J, U			EN0			
28									GEAR, Planetary
	8350 4169	3	J, U			ED0,			
						EK0			
		3	J, U			EN0			
29									SEAL, Main Shaft, (NOT REQUIRED)
30									PUMP, Transfer Case Oil
	4883 596AA	1	J, U			ED0,			
						EK0			
		1	J, U			EN0			
31									SCREW

JEP LIBERTY (KJ)

SERIES	LINE	BODY	ENGINE	TRANSMISSION
P = Limited	J = LHD (4WD)	74 = 4 Dr (104.3 WB)	ED1,ED0 = 2.4L Power Tech	DDK = 5 Speed HDManual
H = Sport	U = RHD (4WD)		EKG,EK0 = 3.7L Power Tech	DDD = 5 Speed HD Manual
M = Renegade	T = LHD (2WD)		ENJ = 2.5L 4Cyl Turbo Diesel	DG4,DGQ = Multi-Speed Auto
			ENR = 2.8L 4Cyl Turbo Diesel	DG6 = 4 Speed Auto Transm
			EN0 = 4Cyl Turbo Diesel	DG0 = All Automatic Transm
				DBB = All Manual Transm

AR = Use as required - = Non illustrated part # = New this model year

September 30, 2003

« RETURN TO GROUP INDEX

Gear Train Select Trac [DHP]
Figure 242-410

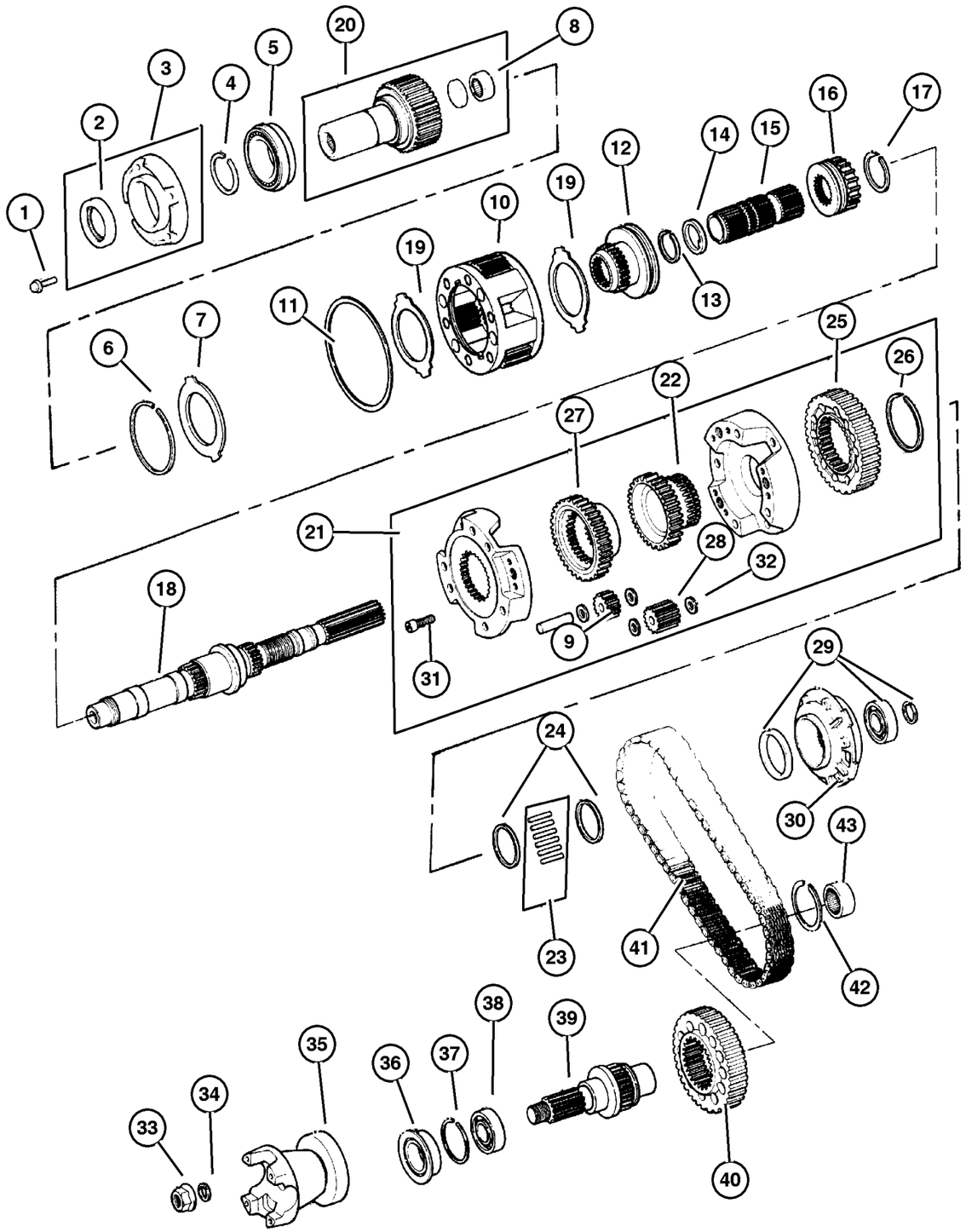

ITEM	PART NUMBER	QTY	LINE	SERIES	BODY	ENGINE	TRANS	TRIM	DESCRIPTION
	3820 898	1	J, U			ED0,			
						EK0			
		1	J, U			EN0			
32									WASHER, Differential Gear
	8350 4168	12	J, U			ED0,			
						EK0			
		12	J, U			EN0			
33									NUT, Transfer Case Yoke
	4167 924	1	J, U			ED0,			
						EK0			
		1	J, U			EN0			
34									WASHER, Transfer Case Yoke
	4210 973	1	J, U			ED0,			
						EK0			
		1	J, U			EN0			
35									FLANGE, Driveshaft Yoke
	5066 927AA	1	J, U			ED0,			
						EK0			
	5103 223AA	1	J, U			EN0			
36									SEAL, Output Shaft
	4798 125	1	J, U			ED0,			
						EK0			
		1	J, U			EN0			
37									SNAP RING
	0893 31A	1	J, U			ED0,			
						EK0			
		1	J, U			EN0			
38									BEARING, Output Shaft
	2466 224	1	J, U			ED0,			
						EK0			
		1	J, U			EN0			
39									OUTPUT SHAFT, Transfer Case
	5012 336AA	1	J, U			ED0,			
						EK0			
		1	J, U			EN0			
40									SPROCKET, Transfer Case
	5072 302AA	1	J, U			ED0,			
						EK0			
		1	J, U			EN0			
41									CHAIN, Transfer Case

JEEP LIBERTY (KJ)

SERIES	LINE	BODY	ENGINE	TRANSMISSION
P = Limited	J = LHD (4WD)	74 = 4 Dr (104.3 WB)	ED1,ED0 = 2.4L Power Tech	DDK = 5 Speed HDManual
H = Sport	U = RHD (4WD)		EKG,EK0 = 3.7L Power Tech	DDD = 5 Speed HD Manual
M = Renegade	T = LHD (2WD)		ENJ = 2.5L 4Cyl Turbo Diesel	DG4,DGQ = Multi-Speed Auto
			ENR = 2.8L 4Cyl Turbo Diesel	DG6 = 4 Speed Auto Transm
			EN0 = 4Cyl Turbo Diesel	DG0 = All Automatic Transm
				DBB = All Manual Transm

AR = Use as required - = Non illustrated part # = New this model year

September 30, 2003

« RETURN TO GROUP INDEX

Gear Train Select Trac [DHP]
Figure 242-410

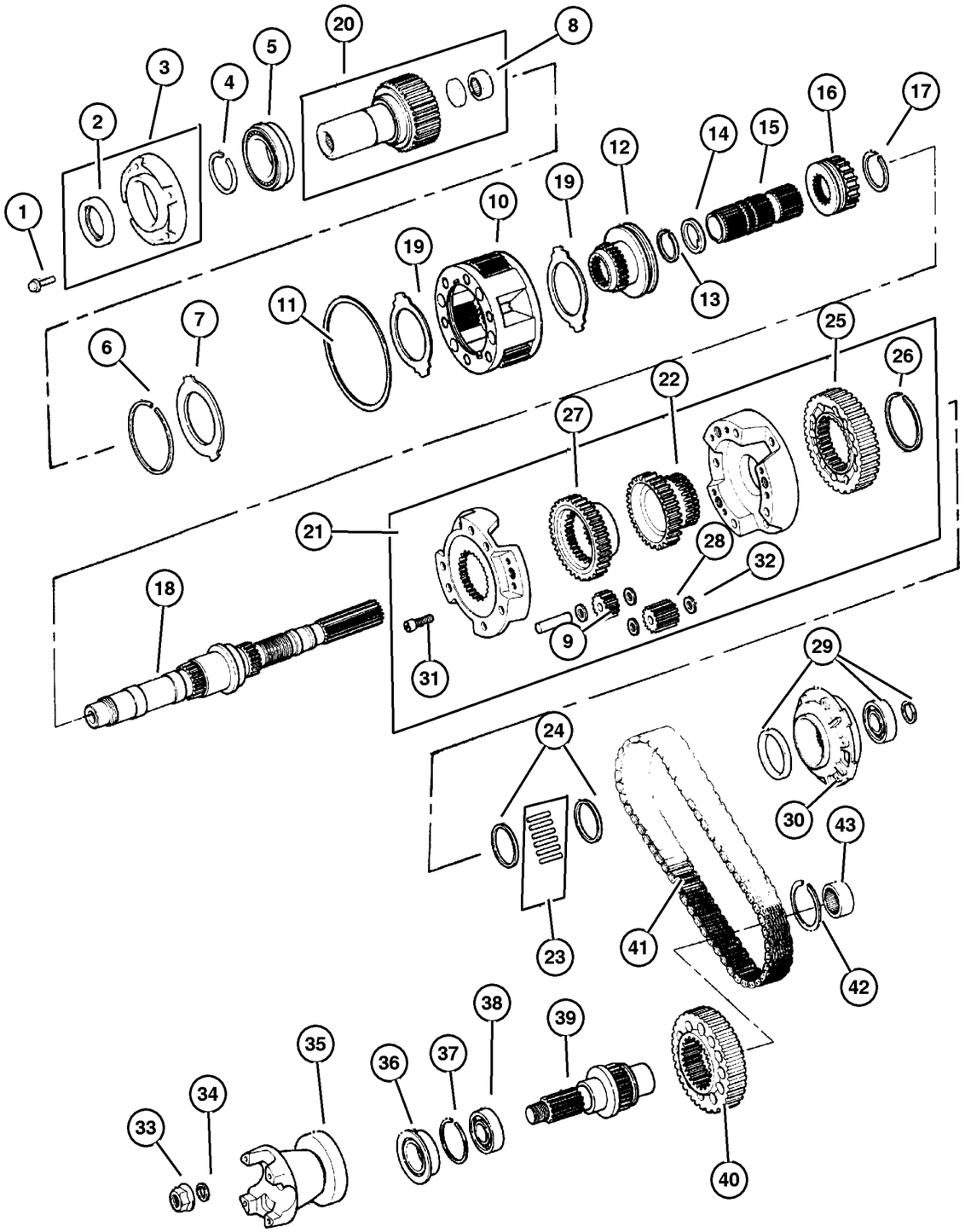

ITEM	PART NUMBER	QTY	LINE	SERIES	BODY	ENGINE	TRANS	TRIM	DESCRIPTION
	5012 322AB	1	J, U			ED0,			
						EK0			
		1	J, U			EN0			
42									SNAP RING, Bearing
	4167 991	1	J, U			ED0,			
						EK0			
		1	J, U			EN0			
43									BEARING, Output Shaft
	2466 224	1	J, U			ED0,			
						EK0			
		1	J, U			EN0			

JEEP LIBERTY (KJ)

SERIES	LINE	BODY	ENGINE	TRANSMISSION
P = Limited	J = LHD (4WD)	74 = 4 Dr (104.3 WB)	ED1,ED0 = 2.4L Power Tech	DDK = 5 Speed HDManual
H = Sport	U = RHD (4WD)		EKG,EK0 = 3.7L Power Tech	DDD = 5 Speed HD Manual
M = Renegade	T = LHD (2WD)		ENJ = 2.5L 4Cyl Turbo Diesel	DG4,DGQ = Multi-Speed Auto
			ENR = 2.8L 4Cyl Turbo Diesel	DG6 = 4 Speed Auto Transm
			EN0 = 4Cyl Turbo Diesel	DG0 = All Automatic Transm
				DBB = All Manual Transm

Forks and Rails Select Trac [DHP]
Figure 242-910

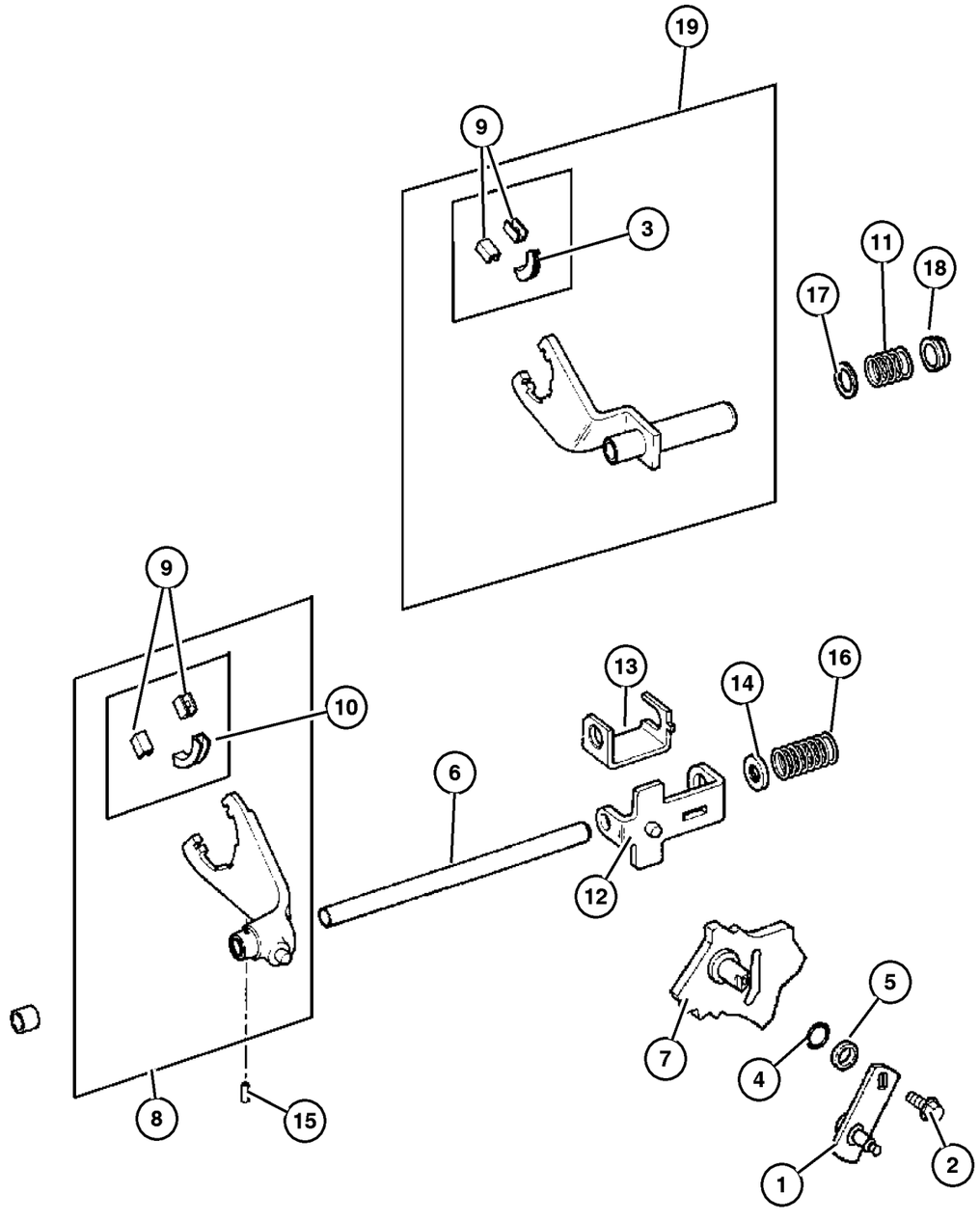

ITEM	PART NUMBER	QTY	LINE	SERIES	BODY	ENGINE	TRANS	TRIM	DESCRIPTION
Notes: Sales Code									
ED0=All 2.2,2.4,2.5,L 4Cylinder Gas Engines									
EK0=All 3.7L Gas Engines									
EN0=All 4/5 Cylinber Turbo Diesel Engines									
1									LEVER, Transfer Case
	5072 316AA	1	J, U			ED0, EK0			From 9/10/02
		1	J, U			EN0			From 9/10/02
2									BOLT, Hex Head
	5014 048AA	1	J, U			EN0			From 9/10/02
		1	J, U			ED0, EK0			From 9/10/02
3									PAD, Shift Fork
	4338 376	1	J, U			EN0			From 9/10/02
		1	J, U			ED0, EK0			From 9/10/02
4									SEAL, Sector Shaft
	5014 046AA	1	J, U			ED0, EK0			From 9/10/02
		1	J, U			EN0			From 9/10/02
5									BEARING, Shift Lever Linkage
	5003 442AA	1	J, U			ED0, EK0			From 9/10/02
		1	J, U			EN0			From 9/10/02
6									RAIL, Transfer Case
	8350 4469	1	J, U			ED0, EK0			From 9/10/02
		1	J, U			EN0			From 9/10/02
7									SECTOR, Transfer Case
	5072 569AA	1	J, U			EN0			From 9/10/02
		1	J, U			ED0, EK0			From 9/10/02
8									FORK, Range
	5003 459AA	1	J, U			EN0			From 9/10/02
		1	J, U			ED0, EK0			From 9/10/02
9									PAD, Shift Fork
	4167 969	2	J, U			ED0, EK0			From 9/10/02
		2	J, U			EN0			From 9/10/02
10									PAD, Shift Fork

JEEP LIBERTY (KJ)

SERIES	LINE	BODY	ENGINE	TRANSMISSION
P = Limited	J = LHD (4WD)	74 = 4 Dr (104.3 WB)	ED1,ED0 = 2.4L Power Tech	DDK = 5 Speed HDManual
H = Sport	U = RHD (4WD)		EKG,EK0 = 3.7L Power Tech	DDD = 5 Speed HD Manual
M = Renegade	T = LHD (2WD)		ENJ = 2.5L 4Cyl Turbo Diesel	DG4,DGQ = Multi-Speed Auto
			ENR = 2.8L 4Cyl Turbo Diesel	DG6 = 4 Speed Auto Transm
			EN0 = 4Cyl Turbo Diesel	DG0 = All Automatic Transm
				DBB = All Manual Transm

Forks and Rails Select Trac [DHP]
Figure 242-910

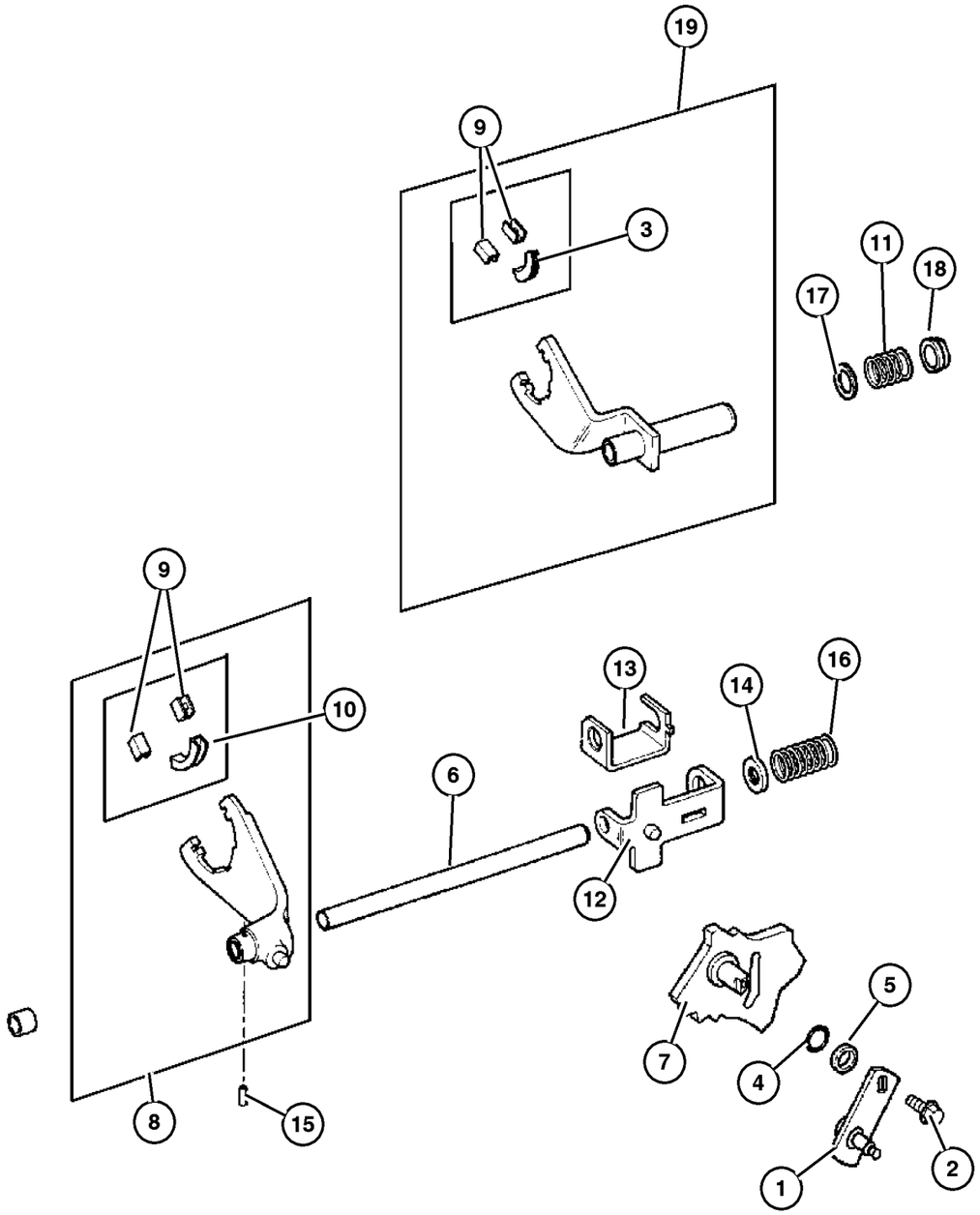

ITEM	PART NUMBER	QTY	LINE	SERIES	BODY	ENGINE	TRANS	TRIM	DESCRIPTION
	4167 970	1	J, U			ED0, EK0			From 9/10/02
		1	J, U			EN0			From 9/10/02
11									SPRING, Mode Shift Fork
	8350 3513	1	J, U			ED0, EK0			From 9/10/02
		1	J, U			EN0			From 9/10/02
12									BRACKET, Shift Mode
	8350 3510	1	J, U			ED0, EK0			From 9/10/02
		1	J, U			EN0			From 9/10/02
13									BRACKET, Shift Mode
	8350 3511	1	J, U			ED0, EK0			From 9/10/02
		1	J, U			EN0			From 9/10/02
14									CUP, Shift Fork Spring
	8350 3515	1	J, U			ED0, EK0			From 9/10/02
		1	J, U			EN0			From 9/10/02
15									PIN, Shift Fork
	1664 355	1	J, U			ED0, EK0			From 9/10/02
		1	J, U			EN0			From 9/10/02
16									SPRING, Mode Shift Fork
	8350 3516	1	J, U			ED0, EK0			From 9/10/02
		1	J, U			EN0			From 9/10/02
17									WASHER, Flat
	8350 3512	1	J, U			ED0, EK0			From 9/10/02
		1	J, U			EN0			From 9/10/02
18									BUSHING, Shift Rail
	8350 3514	1	J, U			ED0, EK0			From 9/10/02
		1	J, U			EN0			From 9/10/02
19									FORK, Transfer Case Mode Shift
	4638 950AB	1	J, U			ED0, EK0			From 9/10/02
		1	J, U			EN0			From 9/10/02
-20									SNAP RING

JEEP LIBERTY (KJ)

SERIES	LINE	BODY	ENGINE	TRANSMISSION
P = Limited	J = LHD (4WD)	74 = 4 Dr (104.3 WB)	ED1,ED0 = 2.4L Power Tech	DDK = 5 Speed HDManual
H = Sport	U = RHD (4WD)		EKG,EK0 = 3.7L Power Tech	DDD = 5 Speed HD Manual
M = Renegade	T = LHD (2WD)		ENJ = 2.5L 4Cyl Turbo Diesel	DG4,DGQ = Multi-Speed Auto
			ENR = 2.8L 4Cyl Turbo Diesel	DG6 = 4 Speed Auto Transm
			EN0 = 4Cyl Turbo Diesel	DG0 = All Automatic Transm
				DBB = All Manual Transm

Forks and Rails Select Trac [DHP]
Figure 242-910

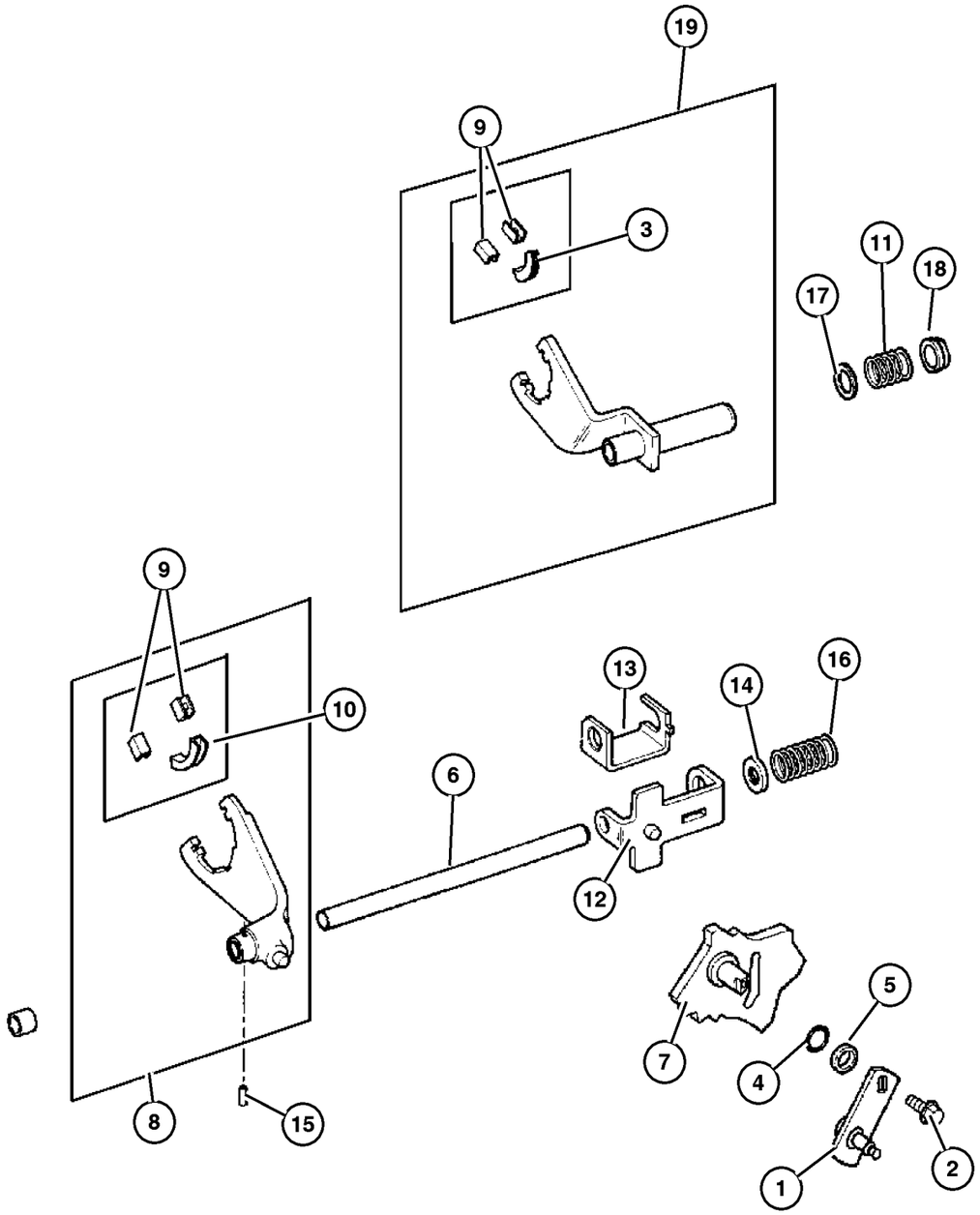

ITEM	PART NUMBER	QTY	LINE	SERIES	BODY	ENGINE	TRANS	TRIM	DESCRIPTION
	5072 304AA	1	J, U			ED0,			From 9/10/02
						EK0			
		1	J, U			EN0			From 9/10/02
-21									SNAP RING
	0893 31A	1	J, U			ED0,			From 9/10/02
						EK0			
		1	J, U			EN0			From 9/10/02

JEEP LIBERTY (KJ)

SERIES	LINE	BODY	ENGINE	TRANSMISSION
P = Limited	J = LHD (4WD)	74 = 4 Dr (104.3 WB)	ED1,ED0 = 2.4L Power Tech	DDK = 5 Speed HDManual
H = Sport	U = RHD (4WD)		EKG,EK0 = 3.7L Power Tech	DDD = 5 Speed HD Manual
M = Renegade	T = LHD (2WD)		ENJ = 2.5L 4Cyl Turbo Diesel	DG4,DGQ = Multi-Speed Auto
			ENR = 2.8L 4Cyl Turbo Diesel	DG6 = 4 Speed Auto Transm
			EN0 = 4Cyl Turbo Diesel	DG0 = All Automatic Transm
				DBB = All Manual Transm

Gearshift Controls
Figure 242-1210

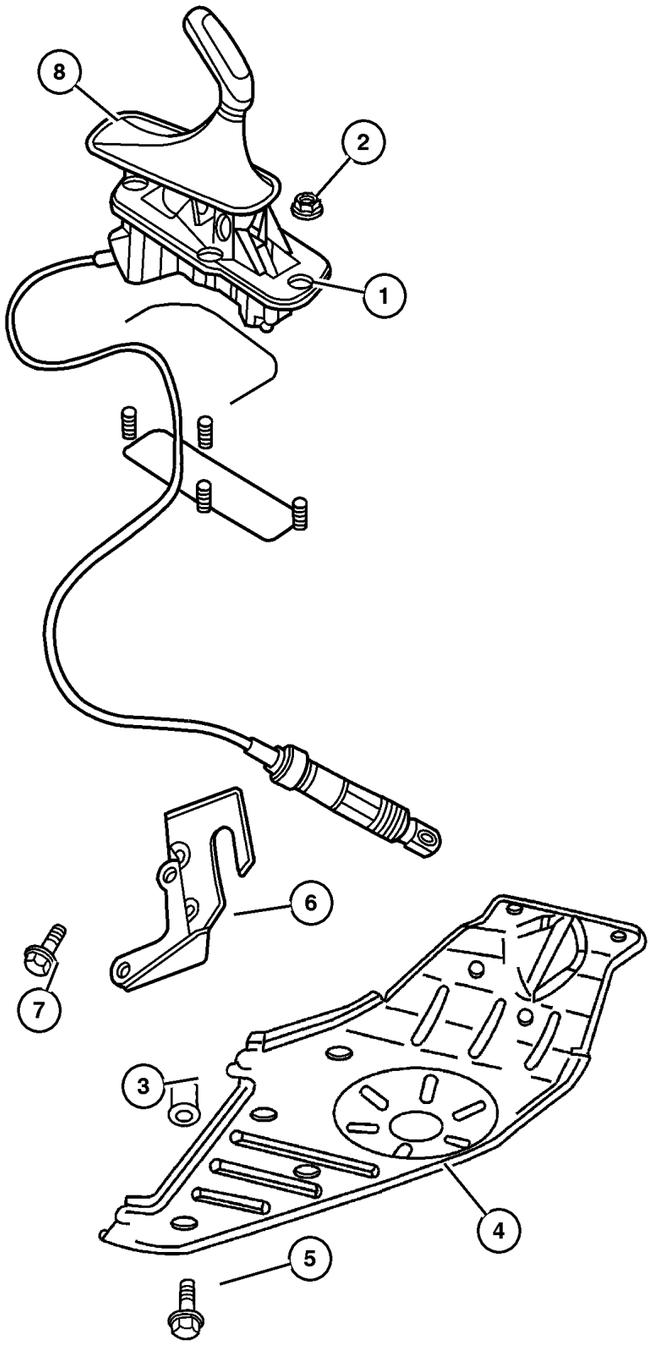

ITEM	PART NUMBER	QTY	LINE	SERIES	BODY	ENGINE	TRANS	TRIM	DESCRIPTION
NOTE; Sales Codes									
[DBB] = All Manual Transmissions									
[DG0]= All Automatic Transmissions									
1									SHIFTER, Transfer Case
	52104 310AD	1	J						
	52104 311AD	1	U						
2	3420 1358	4							NUT AND WASHER, Hex Nut-Sealing Washer, M6 x 1.00
3	6506 644AA	4	J, U						RIVET
4	52128 649AA	1	J, U						PLATE, Transfer Case Skid
5	6506 027AA	4	J, U						SCREW, Hex Head
6	52104 390AC	1	J, U				DBB		BRACKET, Shifter
7	6101 752	3	J, U				DG0		SCREW AND WASHER, Hex Head, M10x1.5x28
8	52109 709AB	1	J, U						BOOT, Gearshift

JEEP LIBERTY (KJ)

SERIES	LINE	BODY	ENGINE	TRANSMISSION
P = Limited	J = LHD (4WD)	74 = 4 Dr (104.3 WB)	ED1,ED0 = 2.4L Power Tech	DDK = 5 Speed HDManual
H = Sport	U = RHD (4WD)		EKG,EK0 = 3.7L Power Tech	DDD = 5 Speed HD Manual
M = Renegade	T = LHD (2WD)		ENJ = 2.5L 4Cyl Turbo Diesel	DG4,DGQ = Multi-Speed Auto
			ENR = 2.8L 4Cyl Turbo Diesel	DG6 = 4 Speed Auto Transm
			EN0 = 4Cyl Turbo Diesel	DG0 = All Automatic Transm
				DBB = All Manual Transm

AR = Use as required - = Non illustrated part # = New this model year

September 30, 2003

« RETURN TO GROUP INDEX

Group – 022
Wheels, Covers and Jacks

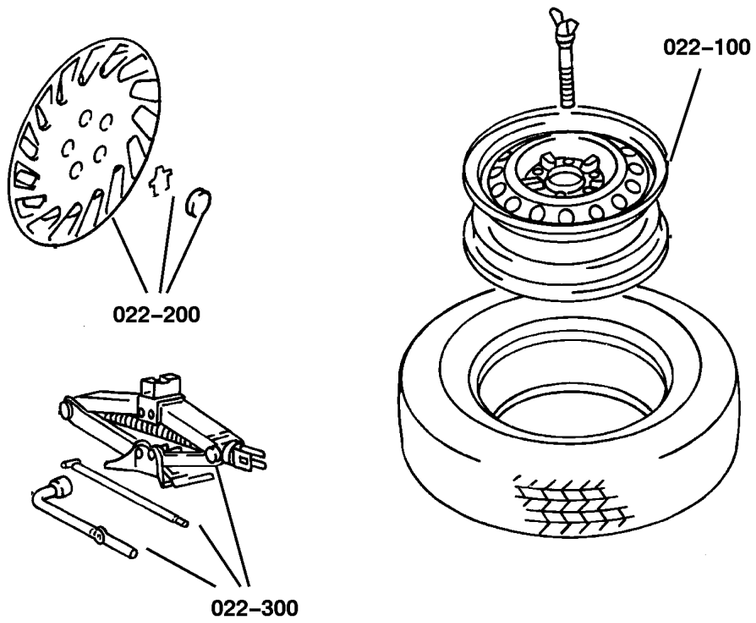

022–100 Wheels and Hardware	022–200 Wheel Covers and Center Caps	022–300 Jack Stowage	022–400 Spare Tire Stowage
		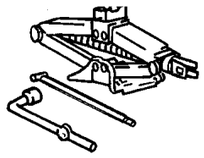	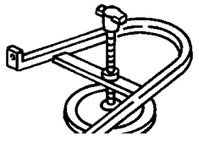

GROUP 22 - Wheels, Covers and Jacks

Illustration Title	Group-Fig. No.
Wheels and Hardware	
Wheels and Hardware	Fig. 022-110
Wheel Covers and Center Caps	
Wheel Caps	Fig. 022-210
Jack Stowage	
Jack and Hardware	Fig. 022-310
Spare Tire Stowage	
Spare Wheel	Fig. 022-410
Spare Wheel, Export	Fig. 022-420

Wheels and Hardware
Figure 022-110

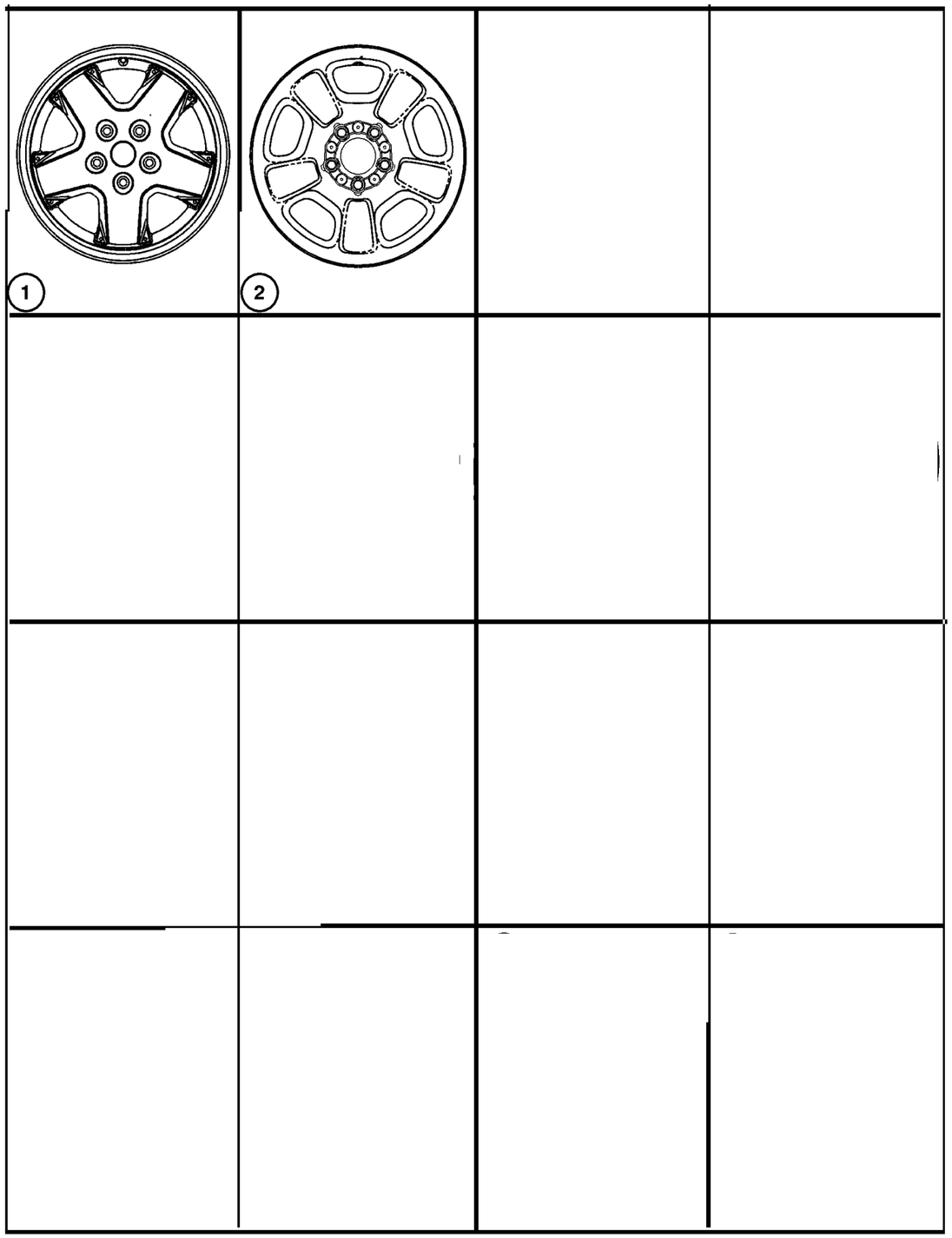

ITEM	PART NUMBER	QTY	LINE	SERIES	BODY	ENGINE	TRANS	TRIM	DESCRIPTION
Note; Sales Codes									
[WND]= 16x7 Cast Aluminum									
[WLD,WLC]= 16x7 Lux Aluminum									
[WGR]= 17x7.5 Cast Aluminum									
[WGQ]= 17x7.5 Aluminum									
1									WHEEL, Aluminum
	5GL66 PAKAC	4							[WND]
	5GL66 ZDRAC	4							[WD5]
	5GL67 PAKAB	4							[WLD]
	52128 674AA	4							[WGW]
	5GK75 ZDRAB	4							[WDN]
2	5GL65 S4AAC	4							WHEEL, Steel, [WLC]
-3	6036 310AA	20							NUT, Wheel, .50x20
-4	2073 355	4							STEM, Wheel Valve

JEEP LIBERTY (KJ)

SERIES	LINE	BODY	ENGINE	TRANSMISSION
P = Limited	J = LHD (4WD)	74 = 4 Dr (104.3 WB)	ED1,ED0 = 2.4L Power Tech	DDK = 5 Speed HDManual
H = Sport	U = RHD (4WD)		EKG,EK0 = 3.7L Power Tech	DDD = 5 Speed HD Manual
M = Renegade	T = LHD (2WD)		ENJ = 2.5L 4Cyl Turbo Diesel	DG4,DGQ = Multi-Speed Auto
			ENR = 2.8L 4Cyl Turbo Diesel	DG6 = 4 Speed Auto Transm
			EN0 = 4Cyl Turbo Diesel	DG0 = All Automatic Transm
				DBB = All Manual Transm

Wheel Caps
Figure 022-210

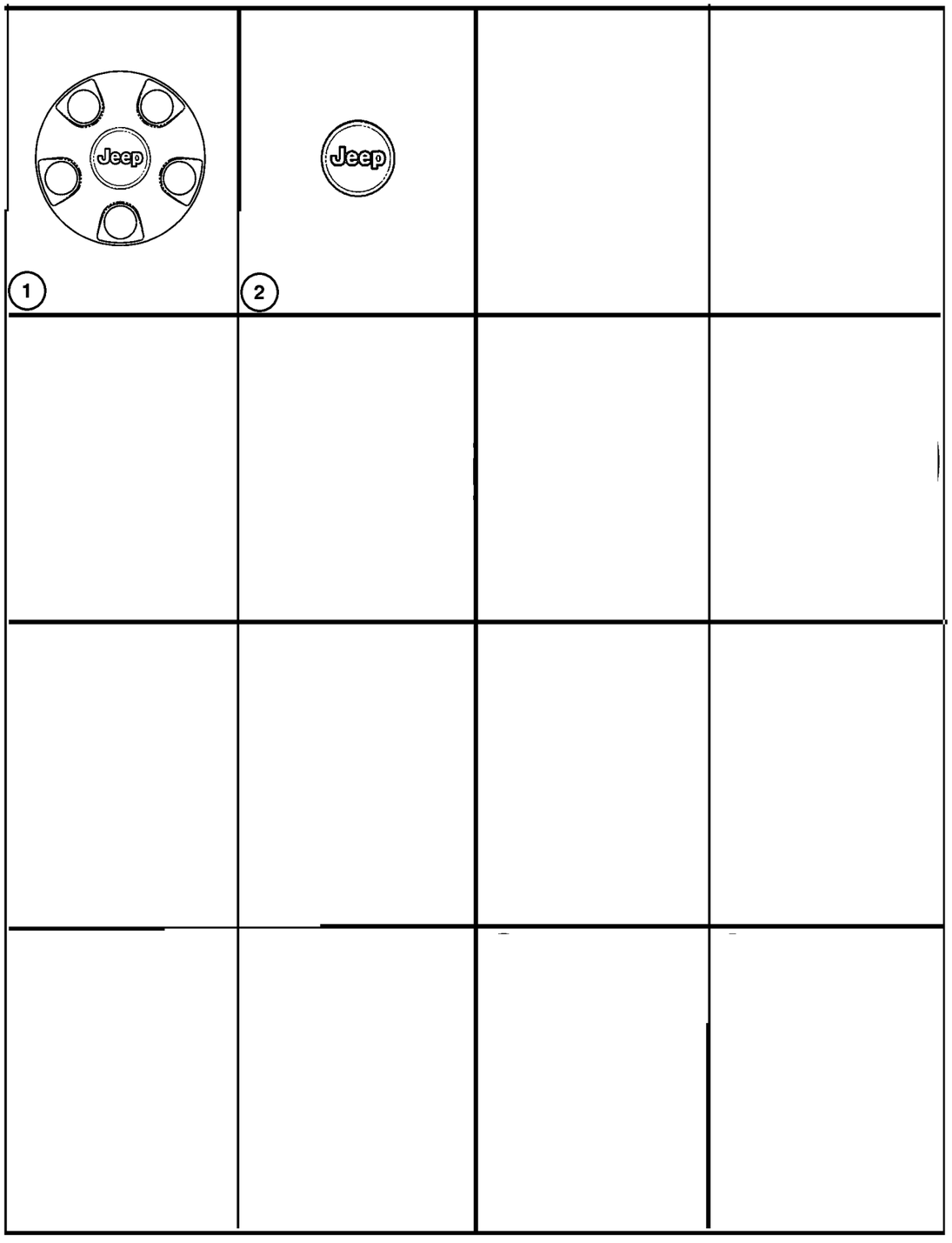

ITEM	PART NUMBER	QTY	LINE	SERIES	BODY	ENGINE	TRANS	TRIM	DESCRIPTION
Note; Sales Codes									
[WLD,WLC]= 16x7 Lux Aluminum									
[WND]= 16x7 Cast Aluminum									
[WGR]= 17x7.5 Cast Aluminum									
[WGQ]= 17x7.5 Aluminum									
1									CAP, Wheel Center
	5GL69 S4AAA	4							[WLC]
	52128 525AA	1							[WGW,WKB]
2	52059 522AA	4							CAP, Wheel Center, [WND,WDN, WFM]

JEEP LIBERTY (KJ)

SERIES	LINE	BODY	ENGINE	TRANSMISSION
P = Limited	J = LHD (4WD)	74 = 4 Dr (104.3 WB)	ED1,ED0 = 2.4L Power Tech	DDK = 5 Speed HDManual
H = Sport	U = RHD (4WD)		EKG,EK0 = 3.7L Power Tech	DDD = 5 Speed HD Manual
M = Renegade	T = LHD (2WD)		ENJ = 2.5L 4Cyl Turbo Diesel	DG4,DGQ = Multi-Speed Auto
			ENR = 2.8L 4Cyl Turbo Diesel	DG6 = 4 Speed Auto Transm
			EN0 = 4Cyl Turbo Diesel	DG0 = All Automatic Transm
				DBB = All Manual Transm

Jack and Hardware
Figure 022-310

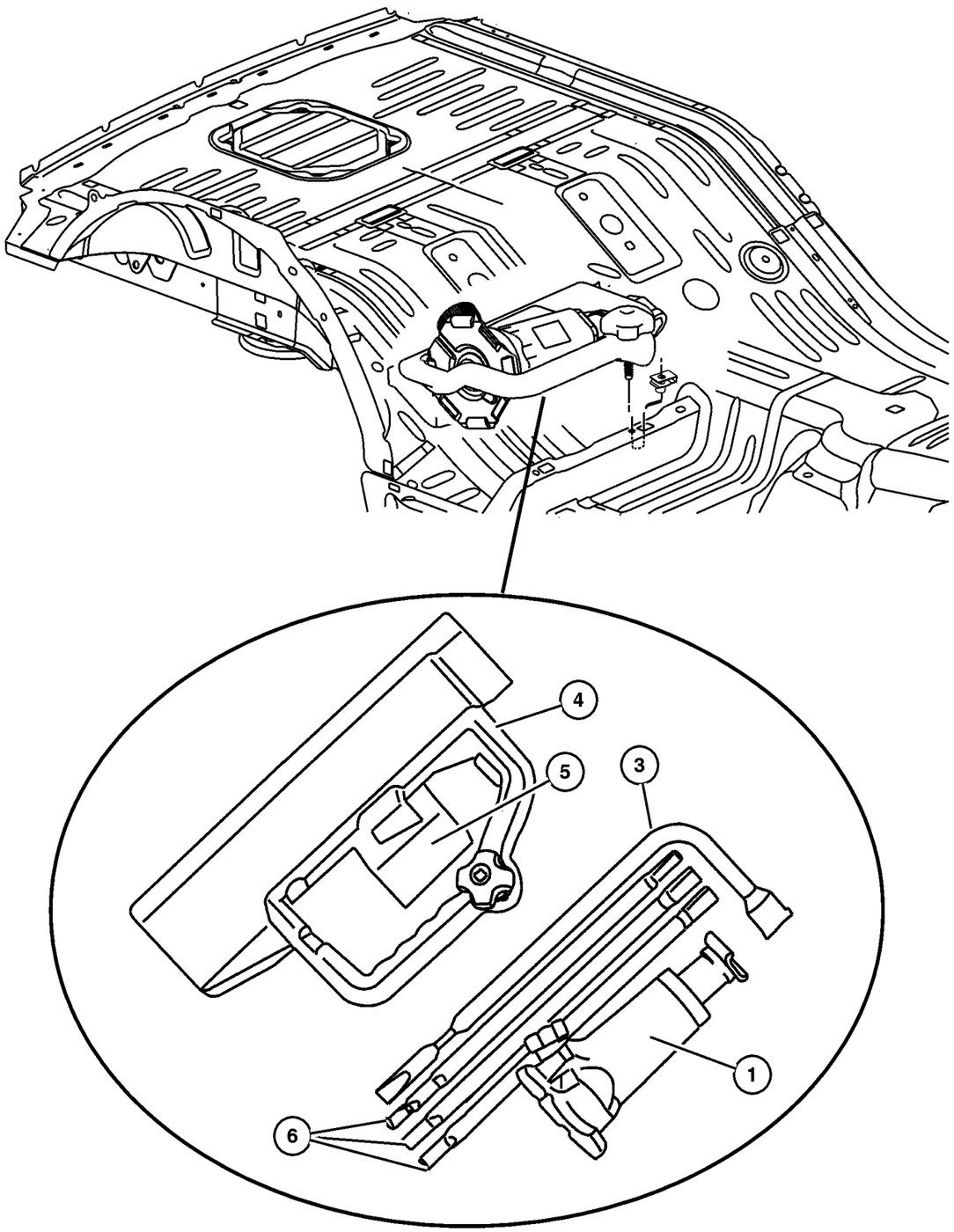

ITEM	PART NUMBER	QTY	LINE	SERIES	BODY	ENGINE	TRANS	TRIM	DESCRIPTION
1	#52080 427AA	1							JACK, Bottle Type
-2	5093 791AA	1							JACK ASSEMBLY, Screw Type
3	52059 478AA	1							WRENCH, Wheel Lug Nut
4									BRACKET AND LOCATOR, Jack Stowage
	52128 755AA	1							Screw Type Jack
	#52129 757AA	1							Bottle Type Jack
5									LABEL, Jack Instructions
	52128 756AA	1							
	#52059 371AB	1							[ABA]
6	5093 510AA	1							EXTENSION KIT, JACK HANDLE, Screw Type Jack

JEEP LIBERTY (KJ)

SERIES	LINE	BODY	ENGINE	TRANSMISSION
P = Limited	J = LHD (4WD)	74 = 4 Dr (104.3 WB)	ED1,ED0 = 2.4L Power Tech	DDK = 5 Speed HDManual
H = Sport	U = RHD (4WD)		EKG,EK0 = 3.7L Power Tech	DDD = 5 Speed HD Manual
M = Renegade	T = LHD (2WD)		ENJ = 2.5L 4Cyl Turbo Diesel	DG4,DGQ = Multi-Speed Auto
			ENR = 2.8L 4Cyl Turbo Diesel	DG6 = 4 Speed Auto Transm
			EN0 = 4Cyl Turbo Diesel	DG0 = All Automatic Transm
				DBB = All Manual Transm

AR = Use as required - = Non illustrated part # = New this model year

September 30, 2003

« RETURN TO GROUP INDEX

Spare Wheel
Figure 022-410

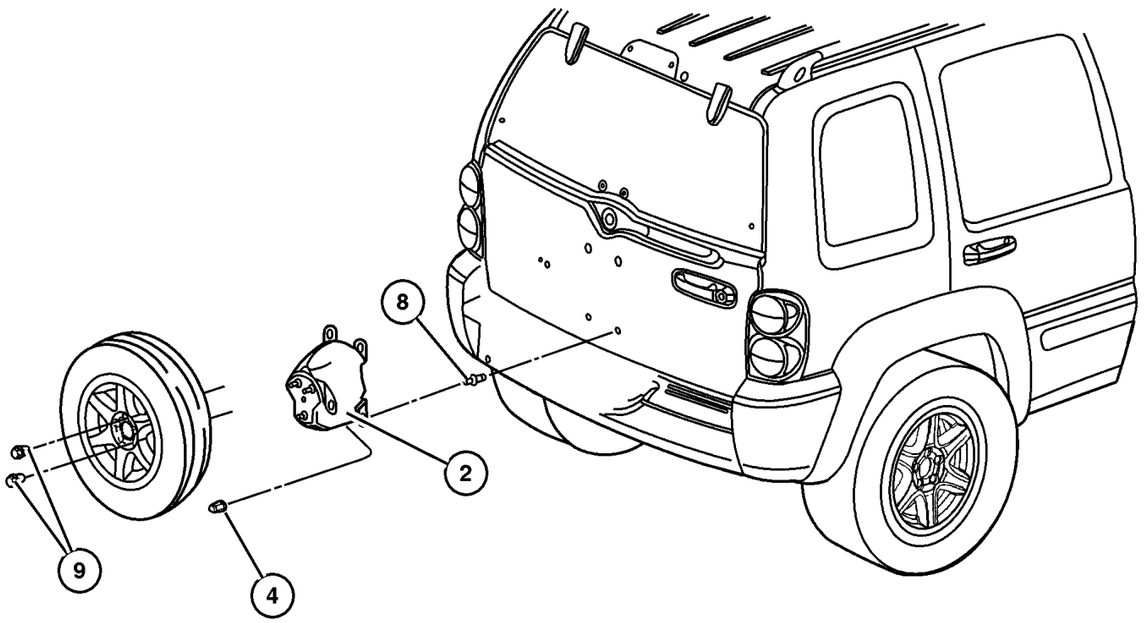

ITEM	PART NUMBER	QTY	LINE	SERIES	BODY	ENGINE	TRANS	TRIM	DESCRIPTION
Note; Sales Codes									
[WND]= 16x7 Cast Aluminum									
[WLD]= 16x7 Lux Aluminum									
[WGR]= 17x7.5 Cast Aluminum									
[WGQ]= 17x7.5 Aluminum									
-1	5HF06 RXFAI	1	J, U	M					BRACKET, License Plate
2									BRACKET, Spare Tire
	55155 933AC	1							
	55360 618AA	2							
-3	55360 585AA	2							GASKET, Spare Tire Bracket
4	6507 799AA	4							NUT, Wheel
-5	5GL66 PAKAC	4							WHEEL, Aluminum, [WND]
-6	5JG14 1X7AB	1							COVER, Spare Tire
-7	5GL65 S4AAC	4							WHEEL, Steel, [WLC]
8									STUD
	6507 623AA	AR							
	6507 016AA	AR							Repair Outsidie Spare Tire Carrier
9	6507 799AA	4							NUT, Wheel

JEEP LIBERTY (KJ)

SERIES	LINE	BODY	ENGINE	TRANSMISSION
P = Limited	J = LHD (4WD)	74 = 4 Dr (104.3 WB)	ED1,ED0 = 2.4L Power Tech	DDK = 5 Speed HDManual
H = Sport	U = RHD (4WD)		EKG,EK0 = 3.7L Power Tech	DDD = 5 Speed HD Manual
M = Renegade	T = LHD (2WD)		ENJ = 2.5L 4Cyl Turbo Diesel	DG4,DGQ = Multi-Speed Auto
			ENR = 2.8L 4Cyl Turbo Diesel	DG6 = 4 Speed Auto Transm
			EN0 = 4Cyl Turbo Diesel	DG0 = All Automatic Transm
				DBB = All Manual Transm

Spare Wheel, Export
Figure 022-420

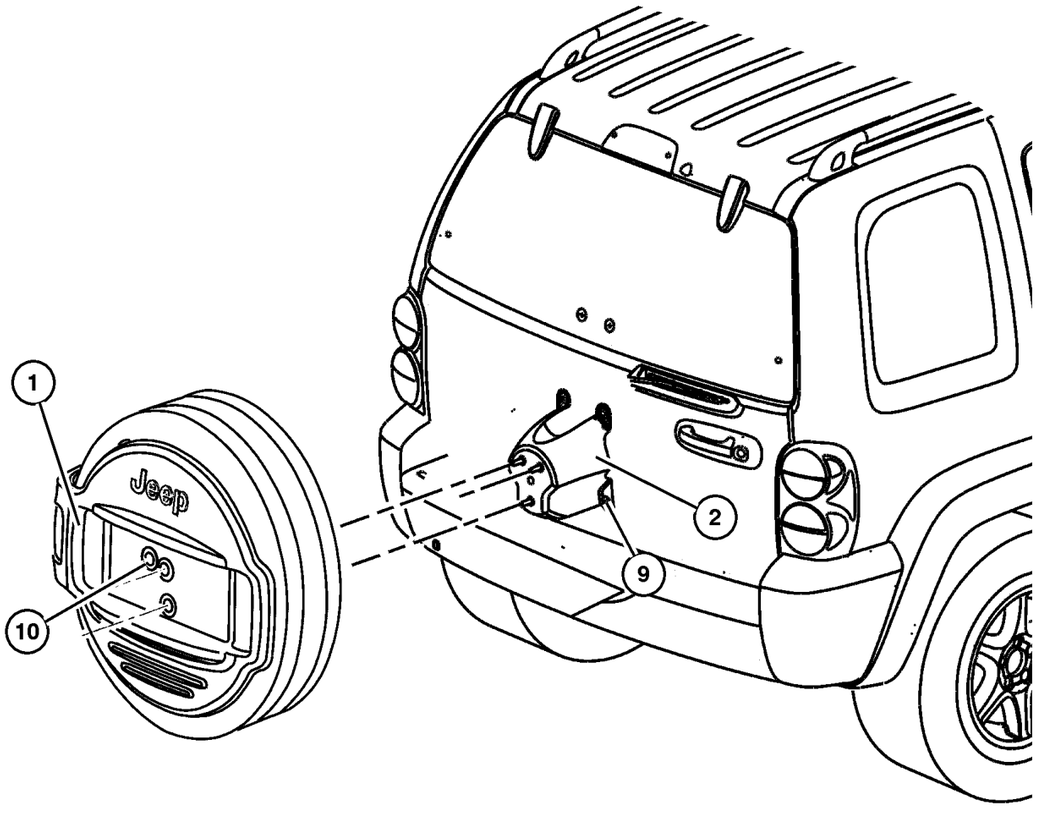

ITEM	PART NUMBER	QTY	LINE	SERIES	BODY	ENGINE	TRANS	TRIM	DESCRIPTION
1									BRACKET, License Plate
	5HF06 RXFAI	1	J, U	H, P					
		1	J, U	M					
2	55155 933AC	1							BRACKET, Spare Tire
-3	6036 303AA	2	J, U						NUT, .50-20
-4	6036 310AA	2							NUT, Wheel, .50x20
-5	5GL67 PAKAB	1							WHEEL, Aluminum
-6	5GL64 S4AAA	1							WHEEL, Steel
-7	5JG14 1X7AB	1							COVER, Spare Tire
-8	6035 201	3							RIVET
9	6507 799AA	4							NUT, Wheel
10	6506 429AA	2	J, U						SCREW, M8x1.25x21

JEEP LIBERTY (KJ)

SERIES	LINE	BODY	ENGINE	TRANSMISSION
P = Limited	J = LHD (4WD)	74 = 4 Dr (104.3 WB)	ED1,ED0 = 2.4L Power Tech	DDK = 5 Speed HDManual
H = Sport	U = RHD (4WD)		EKG,EK0 = 3.7L Power Tech	DDD = 5 Speed HD Manual
M = Renegade	T = LHD (2WD)		ENJ = 2.5L 4Cyl Turbo Diesel	DG4,DGQ = Multi-Speed Auto
			ENR = 2.8L 4Cyl Turbo Diesel	DG6 = 4 Speed Auto Transm
			EN0 = 4Cyl Turbo Diesel	DG0 = All Automatic Transm
				DBB = All Manual Transm

Group – 23D

Wiper/Lock Cylinder and Keys

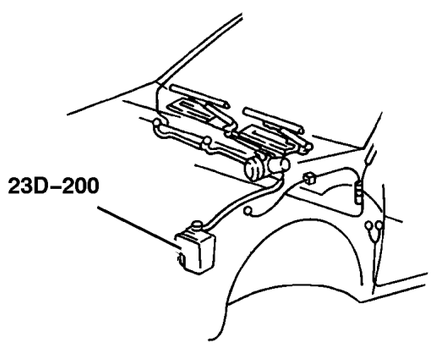

23D–200

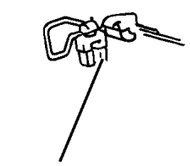

23D–300

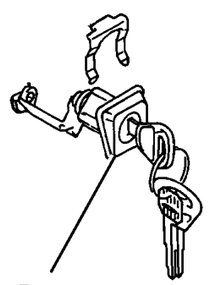

23D–100

GROUP 23D - Wiper/Lock Cylinder and Keys

Illustration Title	Group-Fig. No.
Lock Cylinders and Keys	
Lock Cylinder & Keys	Fig. 23D-110
Windshield Wiper and Washer Systems	
Windshield Wiper & Washer	Fig. 23D-210
Rear Wiper and Washer System	
Rear Wiper & Washer	Fig. 23D-310

23D–100 Lock Cylinders and Keys	23D–200 Windshield Wiper and Washer Systems	23D–300 Rear Wiper and Washer System	
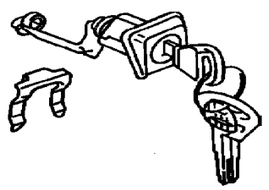	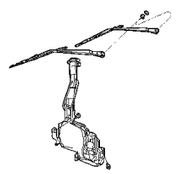		

Lock Cylinder & Keys
Figure 23D-110

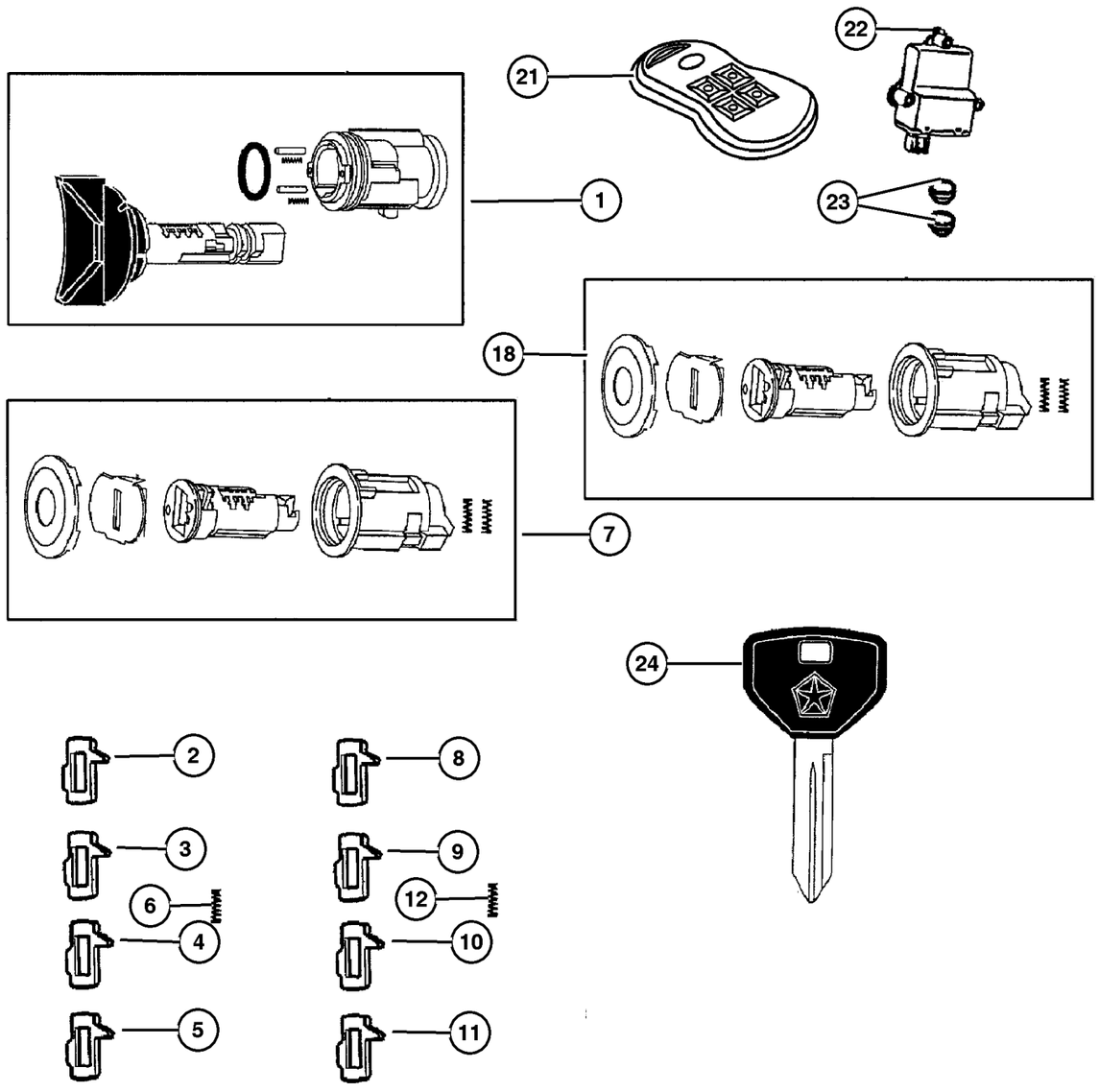

ITEM	PART NUMBER	QTY	LINE	SERIES	BODY	ENGINE	TRANS	TRIM	DESCRIPTION
1									CYLINDER, Ignition Lock
	5083 915AA	1	J, T						
		1							Europe
2	5257 132	1							TUMBLER, Ignition Number 1, Europe
3	5257 133	1							TUMBLER, Ignition Number 2, Europe
4	5257 134	1							TUMBLER, Ignition Number 3, Europe
5	5257 135	1							TUMBLER, Ignition Number 4, Europe
6	4746 873	1							SPRING, Lock Cylinder Tumbler, Europe
7									CYLINDER, Door Lock
	5013 682AA	1	J, T						
		1							Europe
8									TUMBLER, Door and Deck Number 1, Wide
	4778 117	1	J, T						
		1							Europe
9									TUMBLER, Door and Deck Number 2, Wide
	4778 118	1	J, T						
		1							Europe
10									TUMBLER, Door and Deck Number 3, Wide
	4778 119	1	J, T						
		1							Europe
11									TUMBLER, Door and Deck Number 4, Wide
	4778 120	1	J, T						
		1							Europe
12									SPRING, Door and Deck Tumbler
	4778 121	7	J, T						
		7							Europe
-13									LEVER, Door Lock
	5071 039AA	1	J, T						
		1							Europe
-14									RETAINER, Lock Rod
	5071 063AA	1	J, T						Right Door
		1							Europe, Right Door

JEEP LIBERTY (KJ)

SERIES	LINE	BODY	ENGINE	TRANSMISSION
P = Limited	J = LHD (4WD)	74 = 4 Dr (104.3 WB)	ED1,ED0 = 2.4L Power Tech	DDK = 5 Speed HDManual
H = Sport	U = RHD (4WD)		EKG,EK0 = 3.7L Power Tech	DDD = 5 Speed HD Manual
M = Renegade	T = LHD (2WD)		ENJ = 2.5L 4Cyl Turbo Diesel	DG4,DGQ = Multi-Speed Auto
			ENR = 2.8L 4Cyl Turbo Diesel	DG6 = 4 Speed Auto Transm
			EN0 = 4Cyl Turbo Diesel	DG0 = All Automatic Transm
				DBB = All Manual Transm

Lock Cylinder & Keys
Figure 23D-110

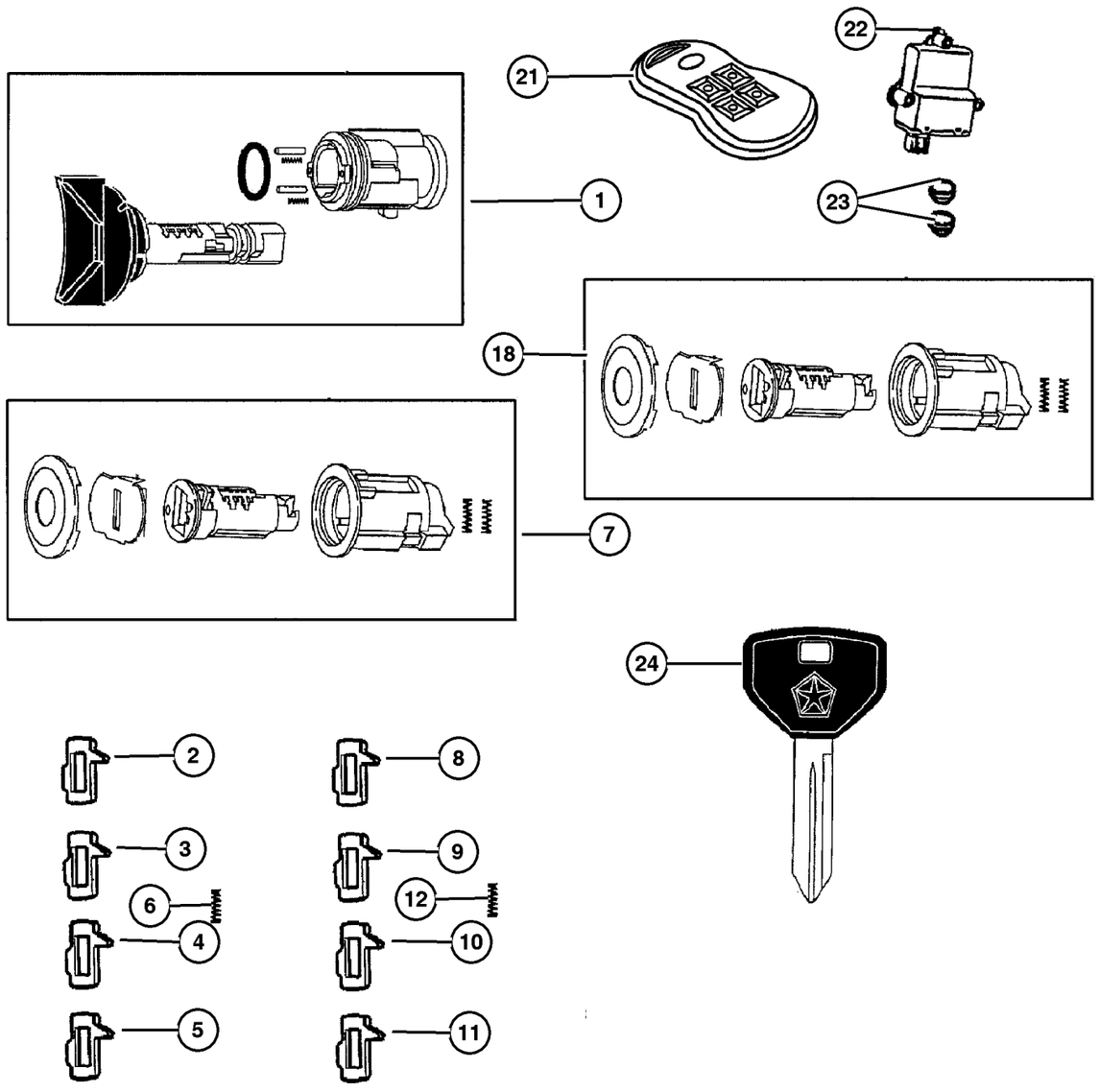

ITEM	PART NUMBER	QTY	LINE	SERIES	BODY	ENGINE	TRANS	TRIM	DESCRIPTION
	5071 155AA	1	J, T						Left Door
		1							Europe, Left Door
-15	5072 944AA	1	J, T						ROD, Lock Cylinder
-16									BRACKET, Door Inside
	55360 636AA	1	J, T						
	55360 659AA	1							Europe
-17									SPACER, Lock Cylinder
	5071 201AA	1	J, T						
		1							Europe
18									CYLINDER, Door Lock
	5013 682AA	1	J, T						
		1							Europe
-19									BRACKET, Door Inside
	55360 636AA	1	J, T						
	55360 659AA	1							Europe
-20									SPACER, Lock Cylinder
	5071 201AA	1	J, T						
		1							
21									TRANSMITTER, Keyless Entry
	4602 260AA	2							Remote with 4 Button
	4602 261AB	2							Remote with 4 Button (Export)
	56010 562AB	2							Remote with315MHZ BCM Interconnect (Export)
22	56010 209AC	1							MODULE, Immobilizer, (Located on the Steering Column)
23	8350 4802	2							BATTERY, Transmitter
24									KEY, Master
	5018 699AA	1							Sentry
	5018 700AA	1	J, T						Master
-25	56010 424AA	1							RECEIVER, Keyless Entry, Remote with315MHZ BCM Interconnect (Export)
-26	56010 335AC	1							SIREN, Alarm, Security Alarm with Bracket (Europe)
-27	5019 605AA	1	J, T						SHUTTER, Lock Cylinder, Serviced in Lock Kit Only
-28	4778 149	1	J, T						CAP, Door Lock Cylinder, Bright, Serviced in Lock Kit Only
-29									TUMBLER, Ignition Number 1, Sidebar
	5010 879AA	1	J, T						
		1							Europe

JEEP LIBERTY (KJ)

SERIES	LINE	BODY	ENGINE	TRANSMISSION
P = Limited	J = LHD (4WD)	74 = 4 Dr (104.3 WB)	ED1,ED0 = 2.4L Power Tech	DDK = 5 Speed HDManual
H = Sport	U = RHD (4WD)		EKG,EK0 = 3.7L Power Tech	DDD = 5 Speed HD Manual
M = Renegade	T = LHD (2WD)		ENJ = 2.5L 4Cyl Turbo Diesel	DG4,DGQ = Multi-Speed Auto
			ENR = 2.8L 4Cyl Turbo Diesel	DG6 = 4 Speed Auto Transm
			EN0 = 4Cyl Turbo Diesel	DG0 = All Automatic Transm
				DBB = All Manual Transm

AR = Use as required - = Non illustrated part # = New this model year

September 30, 2003

« RETURN TO GROUP INDEX

Lock Cylinder & Keys
Figure 23D-110

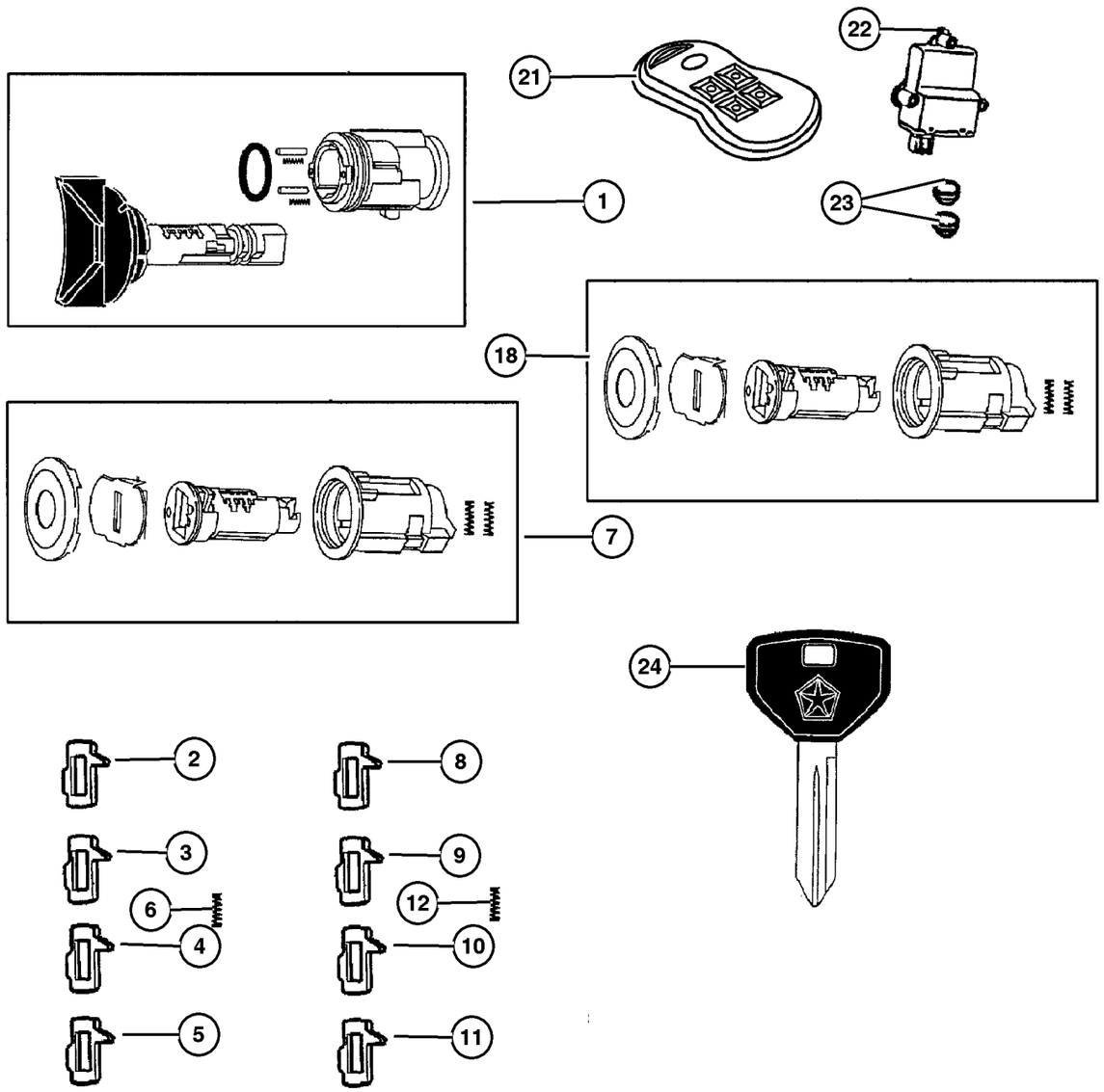

ITEM	PART NUMBER	QTY	LINE	SERIES	BODY	ENGINE	TRANS	TRIM	DESCRIPTION
-30									TUMBLER, Ignition Number 2,
									Sidebar
	5010 880AA	1	J, T						
		1							Europe
-31									TUMBLER, Ignition Number 3,
									Sidebar
	5010 881AA	1	J, T						
		1							Europe
-32									TUMBLER, Ignition Number 4,
									Sidebar
	5010 882AA	1	J, T						
		1							Europe
-33									SPRING, Ignition Tumbler, Sidebar
	5010 883AB	1	J, T						
		1							Europe
-34	5071 283AA	1	J, T						SPACER, Lock Cylinder
-35	5102 099AA	1	J, T						BRACKET, Lock Cylinder Attach

JEEP LIBERTY (KJ)

SERIES	LINE	BODY	ENGINE	TRANSMISSION
P = Limited	J = LHD (4WD)	74 = 4 Dr (104.3 WB)	ED1,ED0 = 2.4L Power Tech	DDK = 5 Speed HDManual
H = Sport	U = RHD (4WD)		EKG,EK0 = 3.7L Power Tech	DDD = 5 Speed HD Manual
M = Renegade	T = LHD (2WD)		ENJ = 2.5L 4Cyl Turbo Diesel	DG4,DGQ = Multi-Speed Auto
			ENR = 2.8L 4Cyl Turbo Diesel	DG6 = 4 Speed Auto Transm
			EN0 = 4Cyl Turbo Diesel	DG0 = All Automatic Transm
				DBB = All Manual Transm

AR = Use as required - = Non illustrated part # = New this model year

September 30, 2003

« RETURN TO GROUP INDEX

Windshield Wiper & Washer
Figure 23D-210

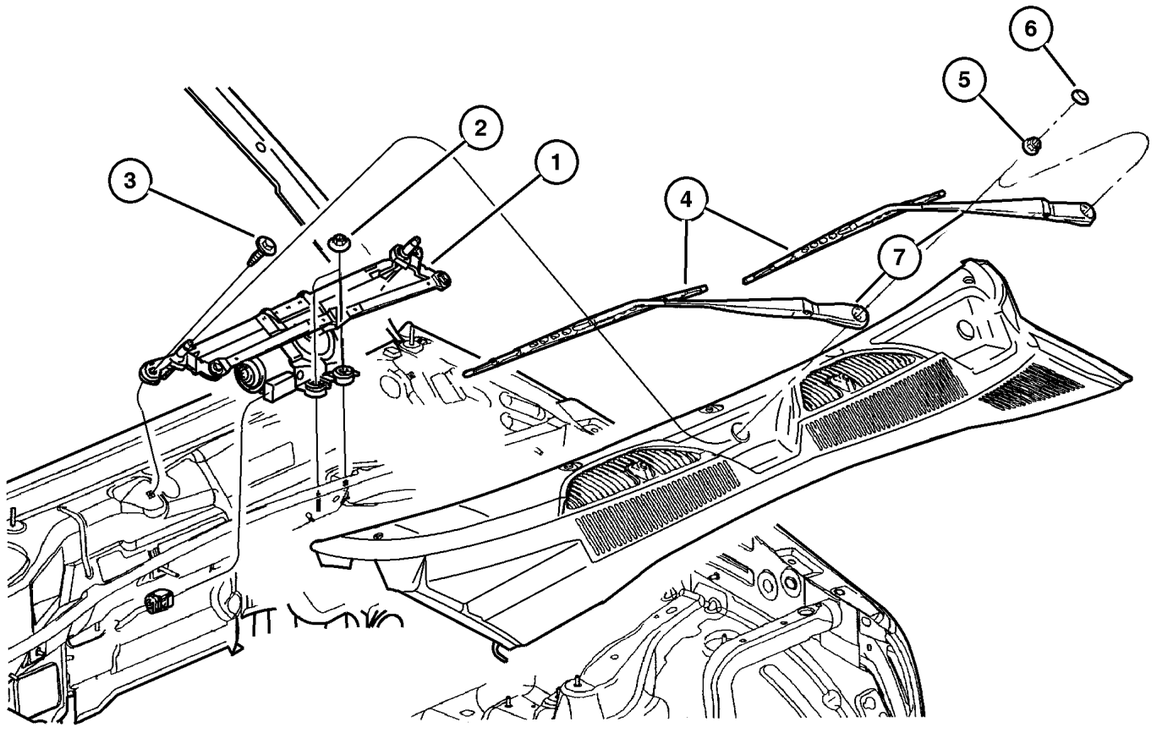

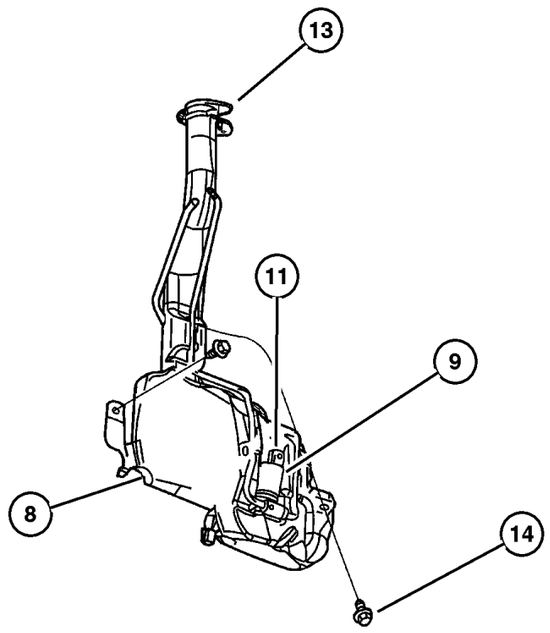

ITEM	PART NUMBER	QTY	LINE	SERIES	BODY	ENGINE	TRANS	TRIM	DESCRIPTION
1									MODULE, Wiper
	55155 894AD	1	U						
	55155 895AD	1	J, T						
2	3420 1358	2							NUT AND WASHER, Hex Nut-Sealing Washer, M6 x 1.00
3									SCREW, Hex Flange Head, M6x1.00x35.00, (NOT SERVICED) (Not Serviced)
4									BLADE, Wiper
	5066 973AA	1	U						Left
	5066 974AA	1	U						Right
		1	J, T						Left
		1	J, T						Right
5	6503 335	2							NUT, Hex, M10X1.25
6	55155 765AA	2							CAP, Wiper Arm Nut
7									ARM, Wiper
	5096 337AA	1	J, T						Left
	5066 968AA	1	J						Europe, Left
	5066 969AA	1	U						Left
	5066 970AA	1	J, T						Right
	5066 971AA	1	U						Right
8	5066 867AA	1							RESERVOIR, Washer
9	5066 880AB	1							PUMP, Washer, Windshield
-10	5011 809AA	1							GROMMET, Windshield Washer Pump
11	4882 797	1							SENSOR, Washer Fluid Level
-12	5013 755AA	1							GROMMET, Washer Reservoir
13	5066 881AA	1							CAP, Washer Reservoir
14	6034 716	2							SCREW AND WASHER, Hex Flange Head, .25-14x.875
-15									HOSE 1FT, Windshield Washer, 5/32"
	HWV00 532AB	1	J, T						
		1	J, U						
-16									NOZZLE, Washer, Windshield
	55155 854AB	2	U						
		2	J, T						
-17									HOSE, Washer Reservoir
	55155 892AC	1	U						
		1	J, T						
-18	4778 097	2							GROMMET, WIPER FRAME
-19	6036 456AA	1							RIVET, Wiper Cap to Core Support

JEEP LIBERTY (KJ)

SERIES	LINE	BODY	ENGINE	TRANSMISSION
P = Limited	J = LHD (4WD)	74 = 4 Dr (104.3 WB)	ED1,ED0 = 2.4L Power Tech	DDK = 5 Speed HDManual
H = Sport	U = RHD (4WD)		EKG,EK0 = 3.7L Power Tech	DDD = 5 Speed HD Manual
M = Renegade	T = LHD (2WD)		ENJ = 2.5L 4Cyl Turbo Diesel	DG4,DGQ = Multi-Speed Auto
			ENR = 2.8L 4Cyl Turbo Diesel	DG6 = 4 Speed Auto Transm
			EN0 = 4Cyl Turbo Diesel	DG0 = All Automatic Transm
				DBB = All Manual Transm

Rear Wiper & Washer
Figure 23D-310

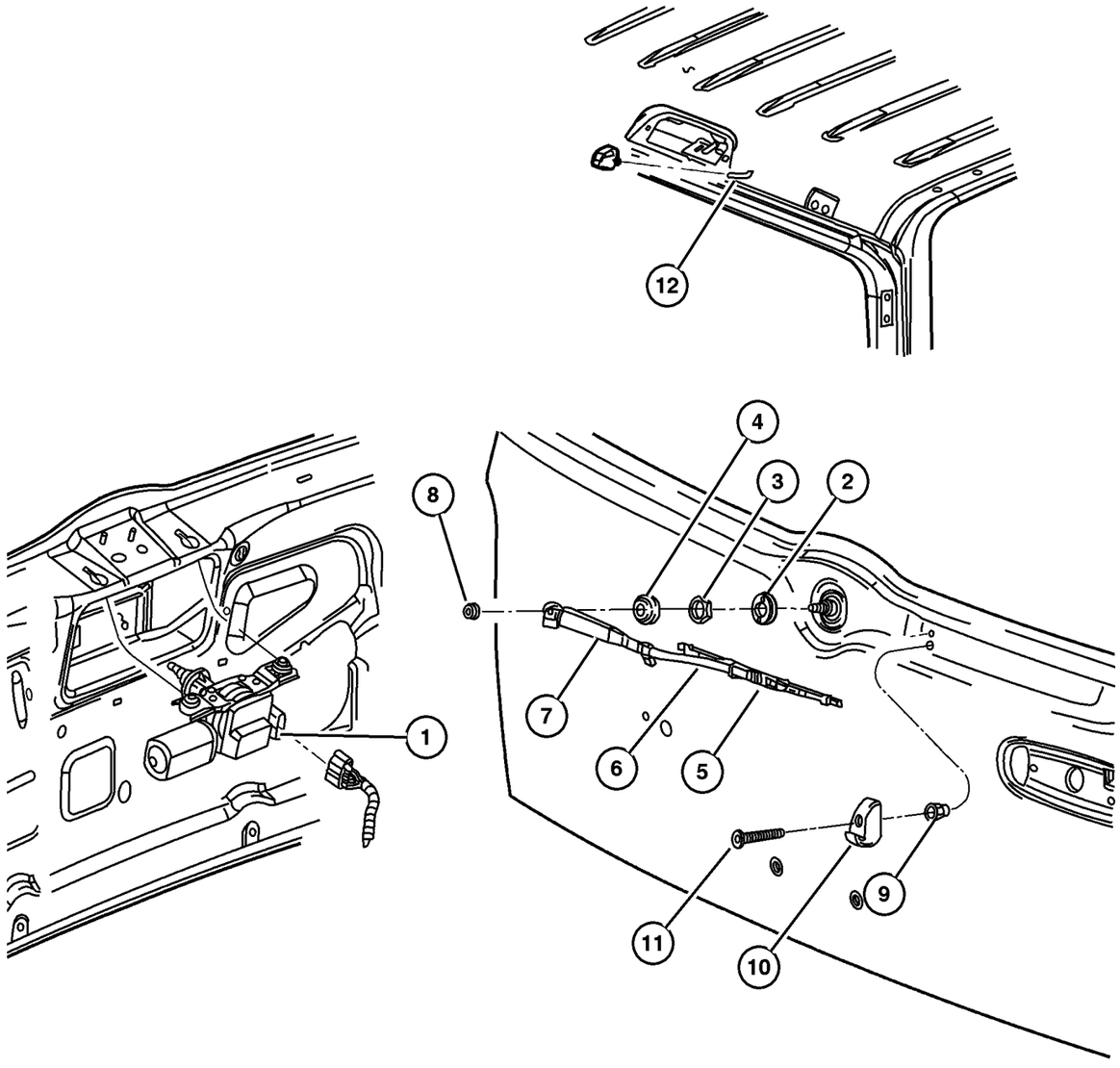

ITEM	PART NUMBER	QTY	LINE	SERIES	BODY	ENGINE	TRANS	TRIM	DESCRIPTION
1	55155 884AB	1							MOTOR, Wiper
2	55155 887AB	1							BEZEL, Wiper Motor
3	6507 801AA	1							NUT, Hex, M20x1.00
4	5507 6650	1							COVER, Rear Wiper Motor
5	5066 964AA	1							BLADE, Wiper
6	5066 965AA	1							ARM, Liftgate Wiper
7	5014 217AA	1							COVER, Rear Wiper Motor
8	6500 165	1							NUT, Wiper Arm
9	6503 245	2							RIVET
10	55155 886AA	1							RAMP, Wiper Park
11	6505 062AA	1							SCREW, Pilot Point
12	55156 158AD	1							NOZZLE, Washer, Windshield
-13	HWV00 532AB	1	J, T						HOSE 1FT, Windshield Washer, 5/32"
-14	55156 260AA	1							CLIP, Hose

JEEP LIBERTY (KJ)

SERIES	LINE	BODY	ENGINE	TRANSMISSION
P = Limited	J = LHD (4WD)	74 = 4 Dr (104.3 WB)	ED1,ED0 = 2.4L Power Tech	DDK = 5 Speed HDManual
H = Sport	U = RHD (4WD)		EKG,EK0 = 3.7L Power Tech	DDD = 5 Speed HD Manual
M = Renegade	T = LHD (2WD)		ENJ = 2.5L 4Cyl Turbo Diesel	DG4,DGQ = Multi-Speed Auto
			ENR = 2.8L 4Cyl Turbo Diesel	DG6 = 4 Speed Auto Transm
			EN0 = 4Cyl Turbo Diesel	DG0 = All Automatic Transm
				DBB = All Manual Transm

Group – 024
Air Conditioning & Heater

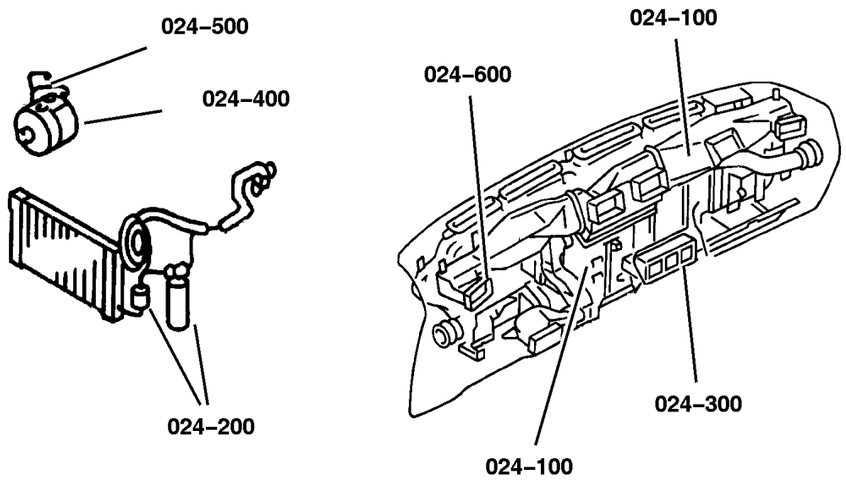

024–100 Air Conditioner and Heater Units 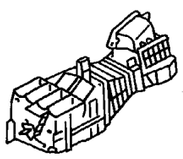	**024–200** Air Conditioner and Heater Plumbing 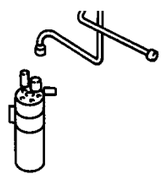	**024–300** Air Conditioner and Heater Controls 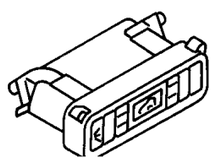	**024–400** Air Conditioning Compressor 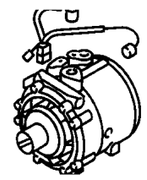
024–500 Air Conditioning Compressor Mounting 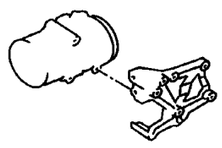	**024–600** Air Ducts and Outlets 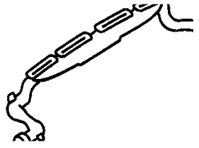		

GROUP 24 - Air Conditioning & Heater

Illustration Title — Group-Fig. No.

Air Conditioner and Heater Units
HEVAC Unit . . . . . Fig. 024-110

Air Conditioner and Heater Plumbing
Plumbing, Heater 2.4L Engine, LHD . . . . . Fig. 024-210
Plumbing, Heater 2.4L Engine, RHD . . . . . Fig. 024-220
Plumbing, Heater 3.7L Engine, LHD . . . . . Fig. 024-230
Plumbing, Heater 3.7L Engine, RHD . . . . . Fig. 024-240
Plumbing, Heater 2.5,2.8L Diesel Engine, LHD . . . . . Fig. 024-250
Plumbing, Heater 2.5,2.8L Diesel Engine, RHD . . . . . Fig. 024-260
Plumbing, Air Conditioning 2.4L Engine, LHD . . . . . Fig. 024-270
Plumbing, Air Conditioning 2.4L Engine, RHD . . . . . Fig. 024-280
Plumbing, Air Conditioning 3.7L Engine, LHD . . . . . Fig. 024-285
Plumbing, Air Conditioning 3.7L Engine, RHD . . . . . Fig. 024-288
Plumbing, Air Conditioning 2.5,2.8L Diesel Engine, LHD . . . . . Fig. 024-290
Plumbing, Air Conditioning 2.5,2.8L Diesel Engine, RHD . . . . . Fig. 024-295

Air Conditioner and Heater Controls
Control, Heater and Air Conditioning . . . . . Fig. 024-310

Air Conditioning Compressor
Compressor, 2.4L - 3.7L Engine . . . . . Fig. 024-410
Compressor, 2.5,2.8L Diesel Engine . . . . . Fig. 024-430

Air Conditioning Compressor Mounting
Compressor Mounting, 2.4L - 3.7L Engine . . . . . Fig. 024-510
Compressor Mounting, 2.5,2.8L Diesel Engine . . . . . Fig. 024-530

Air Ducts and Outlets
Air Distribution Ducts . . . . . Fig. 024-610

HEVAC Unit
Figure 024-110

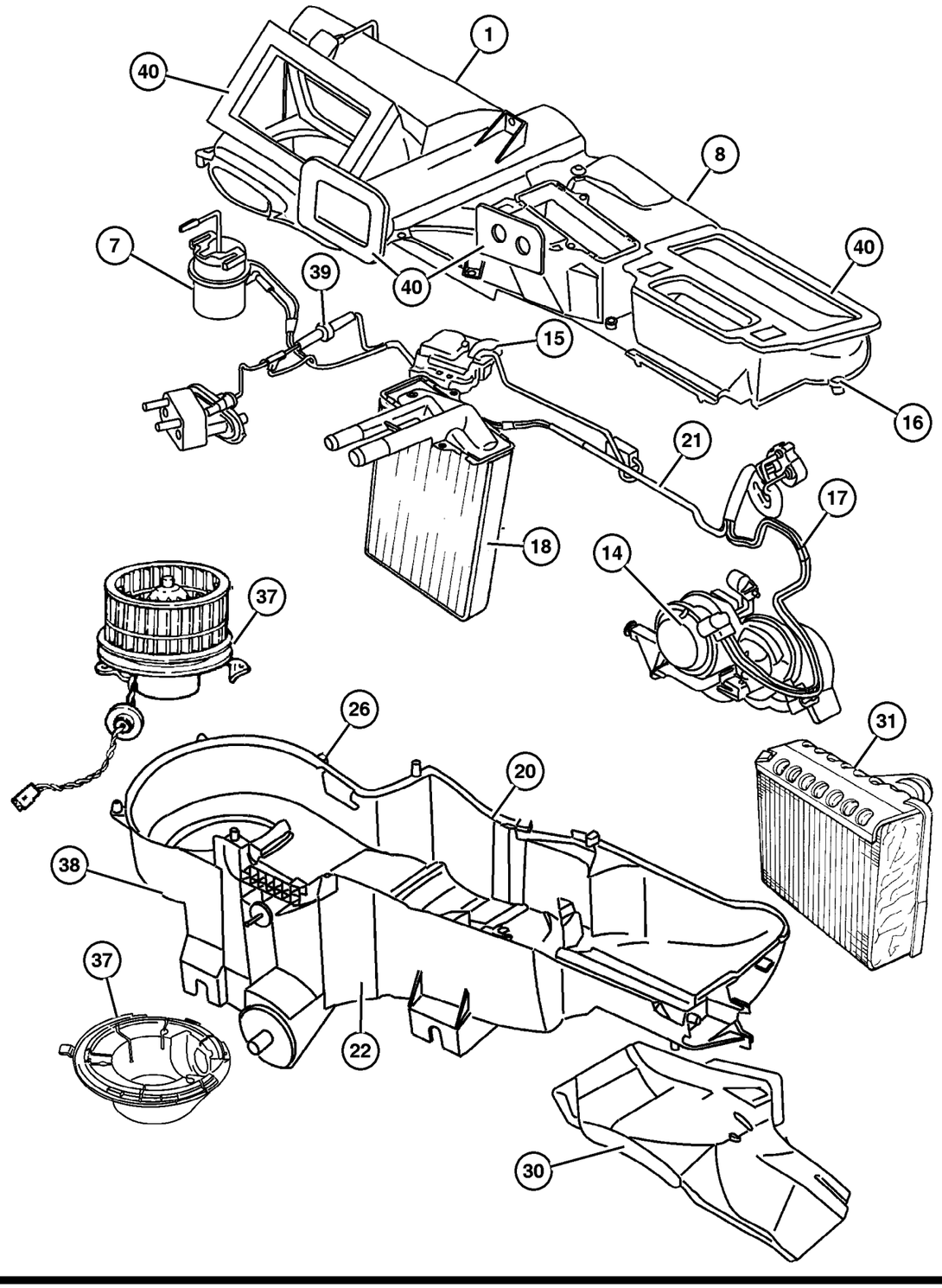

ITEM	PART NUMBER	QTY	LINE	SERIES	BODY	ENGINE	TRANS	TRIM	DESCRIPTION
1									HOUSING, Air Inlet
	5066 496AA	1	J, T						
	5066 507AA	1	U						
-2									HOUSING, Air Inlet, (NOT SERVICED) (Not Serviced)
-3									DOOR, Air Inlet, (NOT SERVICED) (Not Serviced)
-4									CAM, Recirculating Door, (NOT SERVICED) (Not Serviced)
-5									LEVER, A/C Recirculation Door, (NOT SERVICED) (Not Serviced)
-6									SEAL, Air Inlet, (NOT SERVICED) (Not Serviced)
7									ACTUATOR, A/C and Heater
	5066 510AA	1	J, T						Recirculation Door, Vacuumed Controled
	5066 511AA	1	U						
8									HOUSING, A/C Upper
	5066 501AA	1	J, T						
	5066 509AA	1	U						
-9									HOUSING, A/C Upper, (NOT SERVICED) (Not Serviced)
-10									DOOR, Panel, (NOT SERVICED) (Not Serviced)
-11									LEVER, Panel Door, (NOT SERVICED) (Not Serviced)
-12									SEAL, Evaporator, Tubes To Dash, (NOT SERVICED) (Not Serviced)
-13									SEAL, Defroster To Panel, (NOT SERVICED) (Not Serviced)
14									ACTUATOR, A/C and Heater
	5066 518AA	1	J, T						Floor and Defrost Door, Vacuumed Controled
		1	U						Floor and Defrost Door, Vacuumed Controled
15									ACTUATOR, A/C and Heater
	5066 519AA	1	J, T						Blend Door, Electric Controled
	5066 522AA	1	U						
16	4734 227	22	J, T						SCREW, Hex Head, M4.8-1.59x19
17									HARNESS, Jumper
	5066 528AA	1	J, T						

JEEP LIBERTY (KJ)

SERIES	LINE	BODY	ENGINE	TRANSMISSION
P = Limited	J = LHD (4WD)	74 = 4 Dr (104.3 WB)	ED1,ED0 = 2.4L Power Tech	DDK = 5 Speed HDManual
H = Sport	U = RHD (4WD)		EKG,EK0 = 3.7L Power Tech	DDD = 5 Speed HD Manual
M = Renegade	T = LHD (2WD)		ENJ = 2.5L 4Cyl Turbo Diesel	DG4,DGQ = Multi-Speed Auto
			ENR = 2.8L 4Cyl Turbo Diesel	DG6 = 4 Speed Auto Transm
			EN0 = 4Cyl Turbo Diesel	DG0 = All Automatic Transm
				DBB = All Manual Transm

AR = Use as required - = Non illustrated part # = New this model year

September 30, 2003

« RETURN TO GROUP INDEX »

HEVAC Unit
Figure 024-110

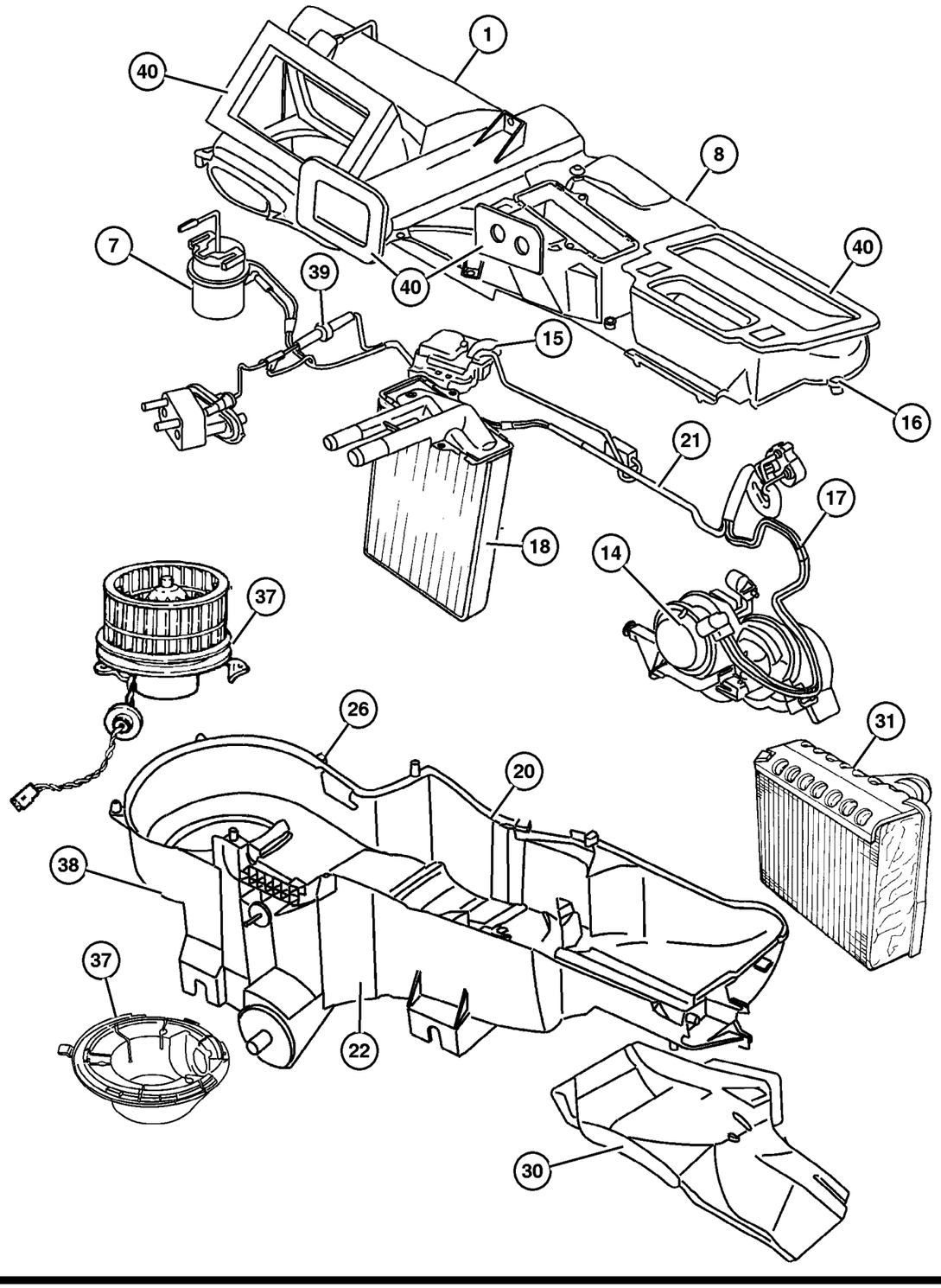

ITEM	PART NUMBER	QTY	LINE	SERIES	BODY	ENGINE	TRANS	TRIM	DESCRIPTION
		1	U						
18									HEATER, Core Kit
	5066 555AA	1	J, T						
		1	U						
-19	5066 551AA	1	J, T						ISOLATOR, Tube
20	4644 388	4	J, T						CLIP, A/C Heater Housing
21									VACUUM HARNESS, Heater and A/C
	5066 531AA	1	J, T						
		1	U						
22									HOUSING, A/C Lower
	5066 532AB	1	J, T						
	5066 534AB	1	U						
-23									HOUSING, A/C Lower, (NOT SERVICED) (Not Serviced)
-24									STUD, A/C and Heater Housing Mtg., (NOT SERVICED) (Not Serviced)
-25									WASHER, A/C Unit Mounting Stud, (NOT SERVICED) (Not Serviced)
26	6101 712	2							NUT, U, M6x1
-27									DOOR, Blend Air, (NOT SERVICED) (Not Serviced)
-28									DOOR, A/C and Heater Mode, (NOT SERVICED) (Not Serviced)
-29									LINK, Blend Door, (NOT SERVICED) (Not Serviced)
30									DUCT, Floor
	5066 535AA	1	J, T						
	5066 536AA	1	U						
31	5066 549AB	1	J, T						EVAPORATOR, Air Conditioning
-32									LINER, Evaporator, (NOT SERVICED) (Not Serviced)
-33									EVAPORATOR, Air Conditioning, (NOT SERVICED) (Not Serviced)
-34									ISOLATOR, Evaporator Tube, (NOT SERVICED) (Not Serviced)
-35	55037 651AA	1	J, T						TUBE, Evaporator Housing
-36									SEAL, Evaporator Tube, (NOT SERVICED) (Not Serviced)
37									MOTOR, Blower with Wheel
	5066 553AA	1	J, T						

JEEP LIBERTY (KJ)

SERIES	LINE	BODY	ENGINE	TRANSMISSION
P = Limited	J = LHD (4WD)	74 = 4 Dr (104.3 WB)	ED1,ED0 = 2.4L Power Tech	DDK = 5 Speed HDManual
H = Sport	U = RHD (4WD)		EKG,EK0 = 3.7L Power Tech	DDD = 5 Speed HD Manual
M = Renegade	T = LHD (2WD)		ENJ = 2.5L 4Cyl Turbo Diesel	DG4,DGQ = Multi-Speed Auto
			ENR = 2.8L 4Cyl Turbo Diesel	DG6 = 4 Speed Auto Transm
			EN0 = 4Cyl Turbo Diesel	DG0 = All Automatic Transm
				DBB = All Manual Transm

AR = Use as required - = Non illustrated part # = New this model year

September 30, 2003

« RETURN TO GROUP INDEX

HEVAC Unit
Figure 024-110

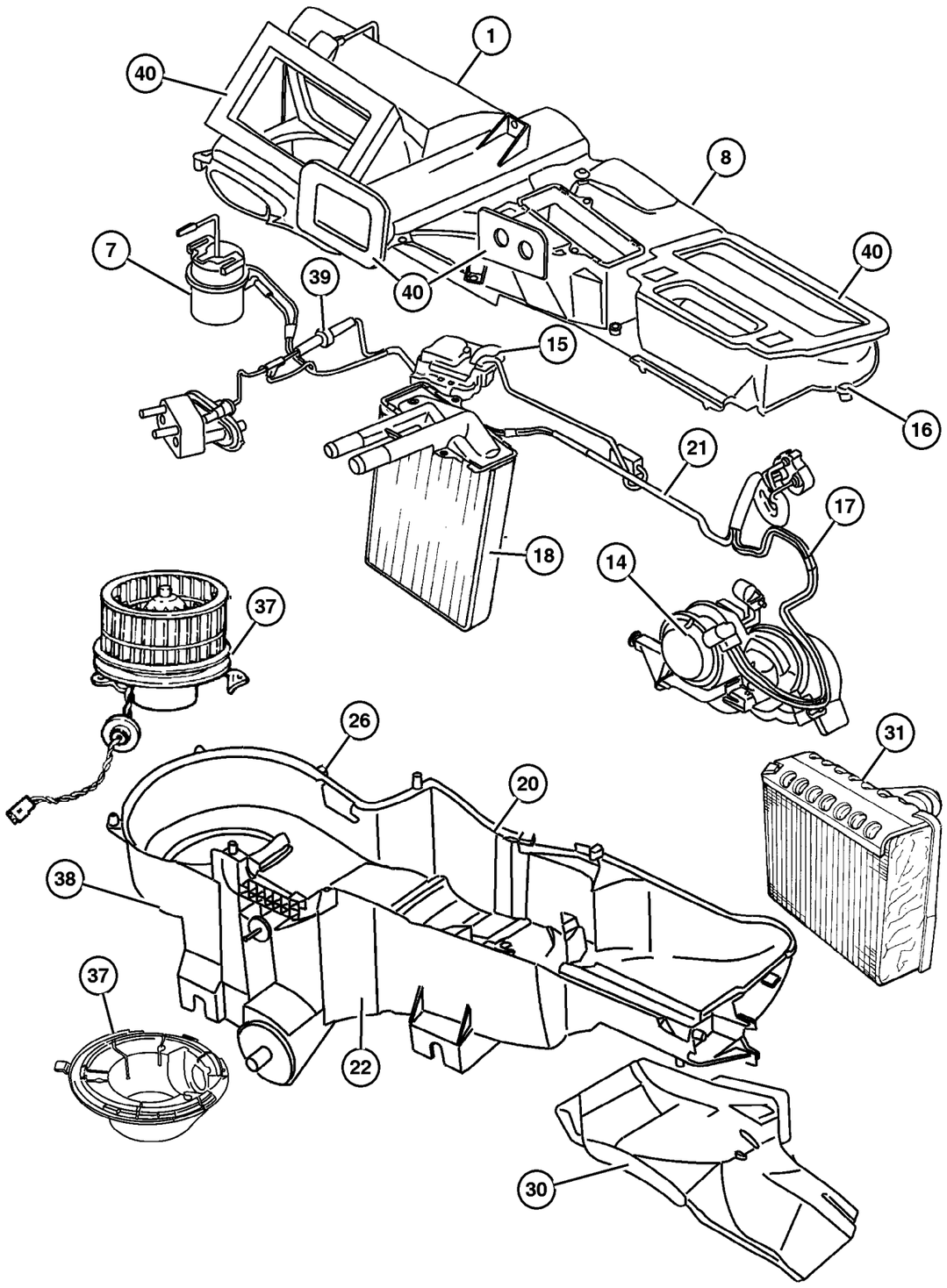

ITEM	PART NUMBER	QTY	LINE	SERIES	BODY	ENGINE	TRANS	TRIM	DESCRIPTION
	5066 554AA	1	U						
38									RESISTOR, A/C Heater
	5066 552AA	1	J, T						
		1	U						
39	4549 209	1	J, T						VALVE PACKAGE, Check
40									SEAL KIT, A/C And Heater Unit
	5071 491AA	1	J, T						
	5072 576AA	1	U						
-41									RESISTOR, A/C Heater
	5066 552AA	1	J, T						
		1	U						
-42									HOSE AND VALVE, Vacuum
	55038 432AD	1	J, T						Air Conditioning
	55038 433AD	1	U						Air Conditioning
-43	6504 441	1				EK0			SCREW AND WASHER, A/C Unit mounting

JEEP LIBERTY (KJ)

SERIES	LINE	BODY	ENGINE	TRANSMISSION
P = Limited	J = LHD (4WD)	74 = 4 Dr (104.3 WB)	ED1,ED0 = 2.4L Power Tech	DDK = 5 Speed HDManual
H = Sport	U = RHD (4WD)		EKG,EK0 = 3.7L Power Tech	DDD = 5 Speed HD Manual
M = Renegade	T = LHD (2WD)		ENJ = 2.5L 4Cyl Turbo Diesel	DG4,DGQ = Multi-Speed Auto
			ENR = 2.8L 4Cyl Turbo Diesel	DG6 = 4 Speed Auto Transm
			EN0 = 4Cyl Turbo Diesel	DG0 = All Automatic Transm
				DBB = All Manual Transm

AR = Use as required - = Non illustrated part # = New this model year

September 30, 2003

« RETURN TO GROUP INDEX

Plumbing, Heater 2.4L Engine, LHD
Figure 024-210

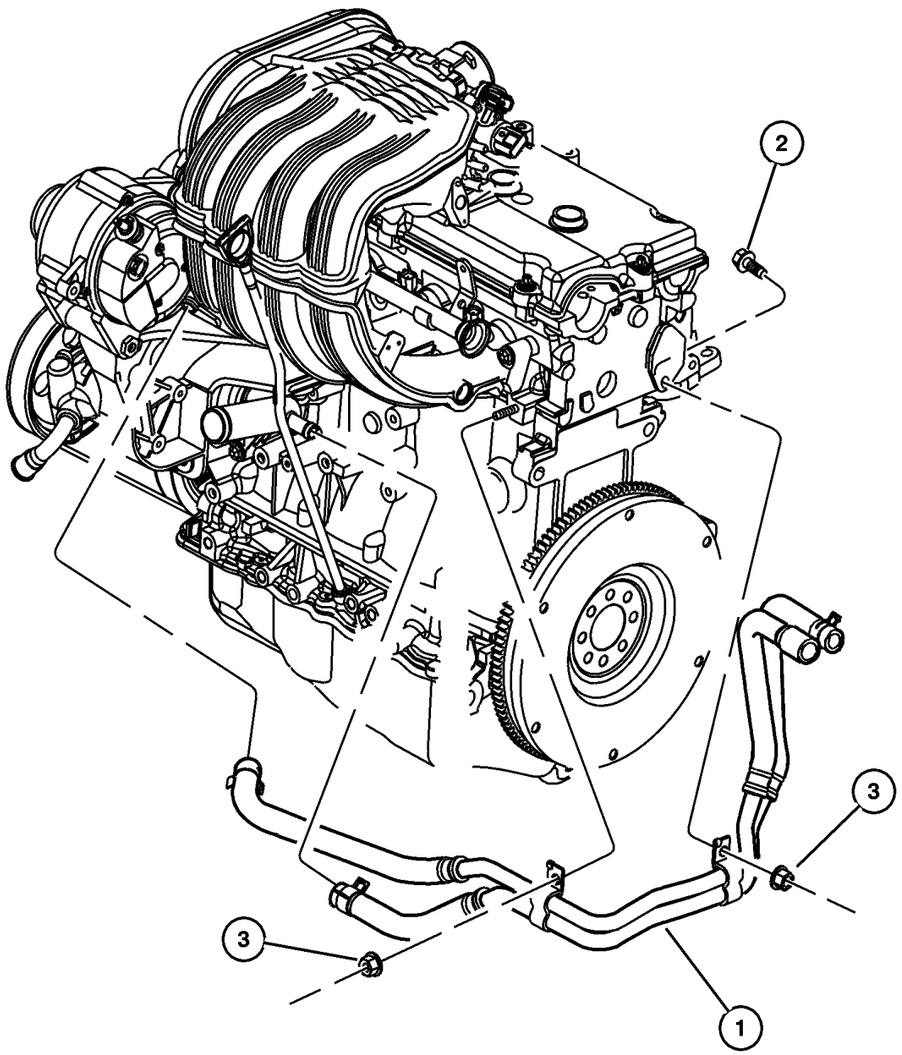

ITEM	PART NUMBER	QTY	LINE	SERIES	BODY	ENGINE	TRANS	TRIM	DESCRIPTION
NOTE:									
Sales Codes:									
[ED0]=All 2.4L 4 Cyl. 16-V Engines									
1	55038 330AB	1	J, T			ED0			HOSE, Heater Supply
2	6501 474	1	J, T			ED0			BOLT, Hex Head, M8x1.25x16
3	6101 445	1	J, T			ED0			NUT AND WASHER, Hex Nut-Coned Washer, M8 x 1.25

JEEP LIBERTY (KJ)

SERIES	LINE	BODY	ENGINE	TRANSMISSION
P = Limited	J = LHD (4WD)	74 = 4 Dr (104.3 WB)	ED1,ED0 = 2.4L Power Tech	DDK = 5 Speed HDManual
H = Sport	U = RHD (4WD)		EKG,EK0 = 3.7L Power Tech	DDD = 5 Speed HD Manual
M = Renegade	T = LHD (2WD)		ENJ = 2.5L 4Cyl Turbo Diesel	DG4,DGQ = Multi-Speed Auto
			ENR = 2.8L 4Cyl Turbo Diesel	DG6 = 4 Speed Auto Transm
			EN0 = 4Cyl Turbo Diesel	DG0 = All Automatic Transm
				DBB = All Manual Transm

Plumbing, Heater 2.4L Engine, RHD
Figure 024-220

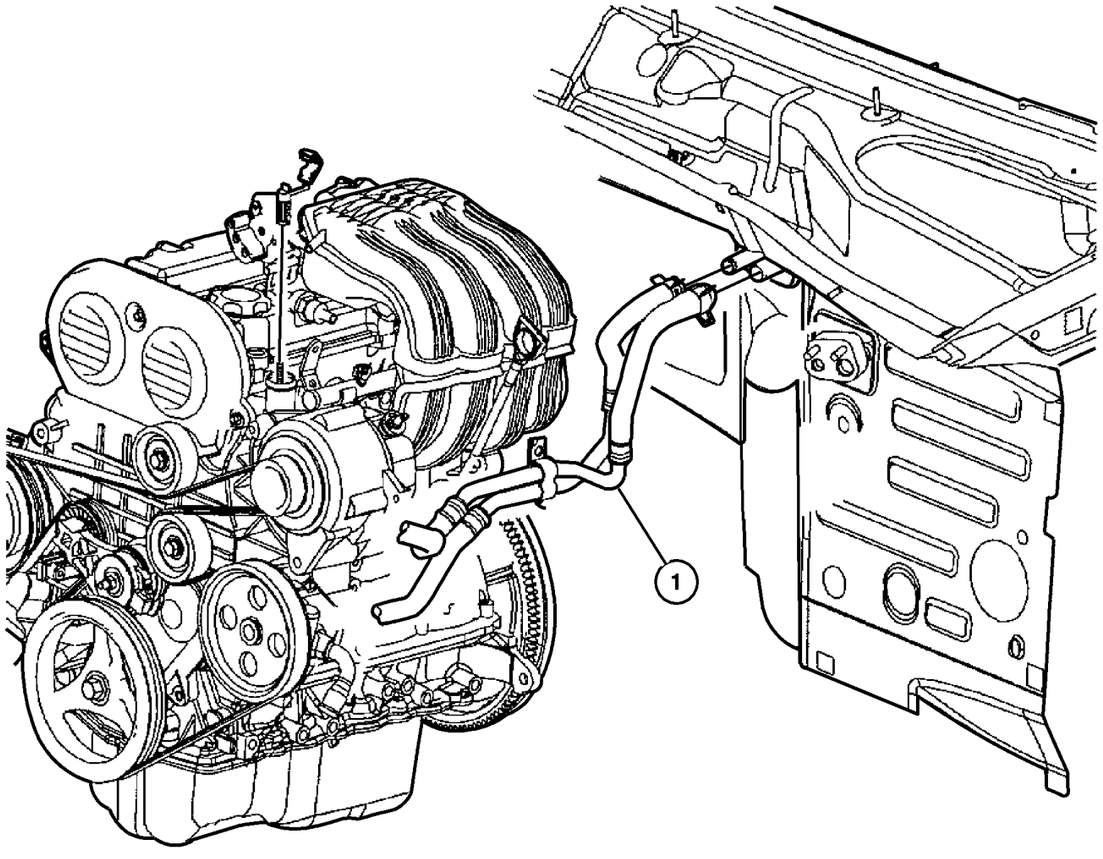

ITEM	PART NUMBER	QTY	LINE	SERIES	BODY	ENGINE	TRANS	TRIM	DESCRIPTION
Note; Sales Codes									
[ED0]= All 2.2L, 2.5L, 2.4L, 4 Cylinder Gas Engines									
1	55038 333AB	1	U			ED0			HOSE, Heater Supply
-2	6101 445	1				ED0			NUT AND WASHER, Hex Nut-Coned Washer, M8 x 1.25, Hose to Cylinder Head

JEEP LIBERTY (KJ)

SERIES	LINE	BODY	ENGINE	TRANSMISSION
P = Limited	J = LHD (4WD)	74 = 4 Dr (104.3 WB)	ED1,ED0 = 2.4L Power Tech	DDK = 5 Speed HDManual
H = Sport	U = RHD (4WD)		EKG,EK0 = 3.7L Power Tech	DDD = 5 Speed HD Manual
M = Renegade	T = LHD (2WD)		ENJ = 2.5L 4Cyl Turbo Diesel	DG4,DGQ = Multi-Speed Auto
			ENR = 2.8L 4Cyl Turbo Diesel	DG6 = 4 Speed Auto Transm
			EN0 = 4Cyl Turbo Diesel	DG0 = All Automatic Transm
				DBB = All Manual Transm

Plumbing, Heater 3.7L Engine, LHD
Figure 024-230

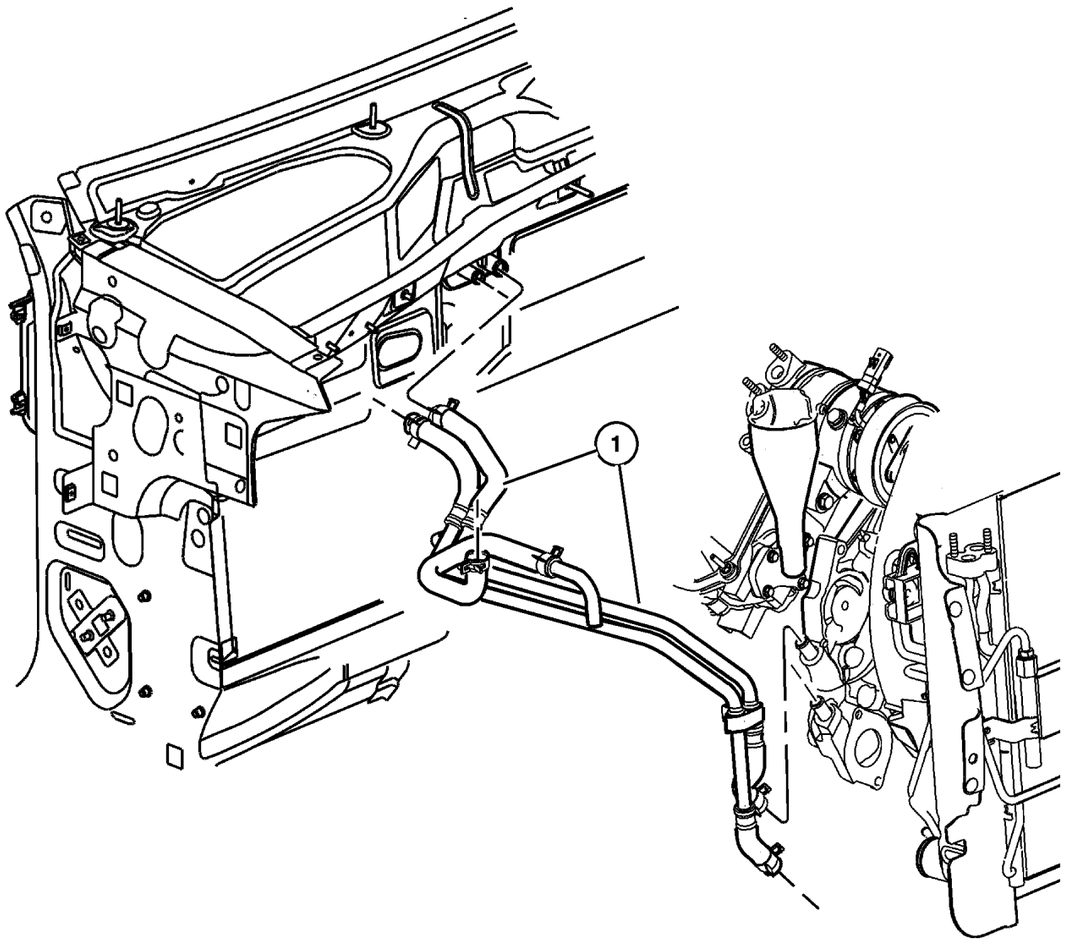

ITEM	PART NUMBER	QTY	LINE	SERIES	BODY	ENGINE	TRANS	TRIM	DESCRIPTION
NOTE:									
Sales Codes:									
[EK0]=All 3.7L V-6 Engines									
1	55038 331AD	1	J, T			EK0			HOSE, Heater Supply
-2	5072 449AA	1	J, T			EK0			BRACKET
-3	5072 450AB	1	J, T			EK0			BRACKET
-4	HHR00 034AA	1							HOSE 1FT, Heater, 3/4"

JEEP LIBERTY (KJ)

SERIES	LINE	BODY	ENGINE	TRANSMISSION
P = Limited	J = LHD (4WD)	74 = 4 Dr (104.3 WB)	ED1,ED0 = 2.4L Power Tech	DDK = 5 Speed HDManual
H = Sport	U = RHD (4WD)		EKG,EK0 = 3.7L Power Tech	DDD = 5 Speed HD Manual
M = Renegade	T = LHD (2WD)		ENJ = 2.5L 4Cyl Turbo Diesel	DG4,DGQ = Multi-Speed Auto
			ENR = 2.8L 4Cyl Turbo Diesel	DG6 = 4 Speed Auto Transm
			EN0 = 4Cyl Turbo Diesel	DG0 = All Automatic Transm
				DBB = All Manual Transm

Plumbing, Heater 3.7L Engine, RHD
Figure 024-240

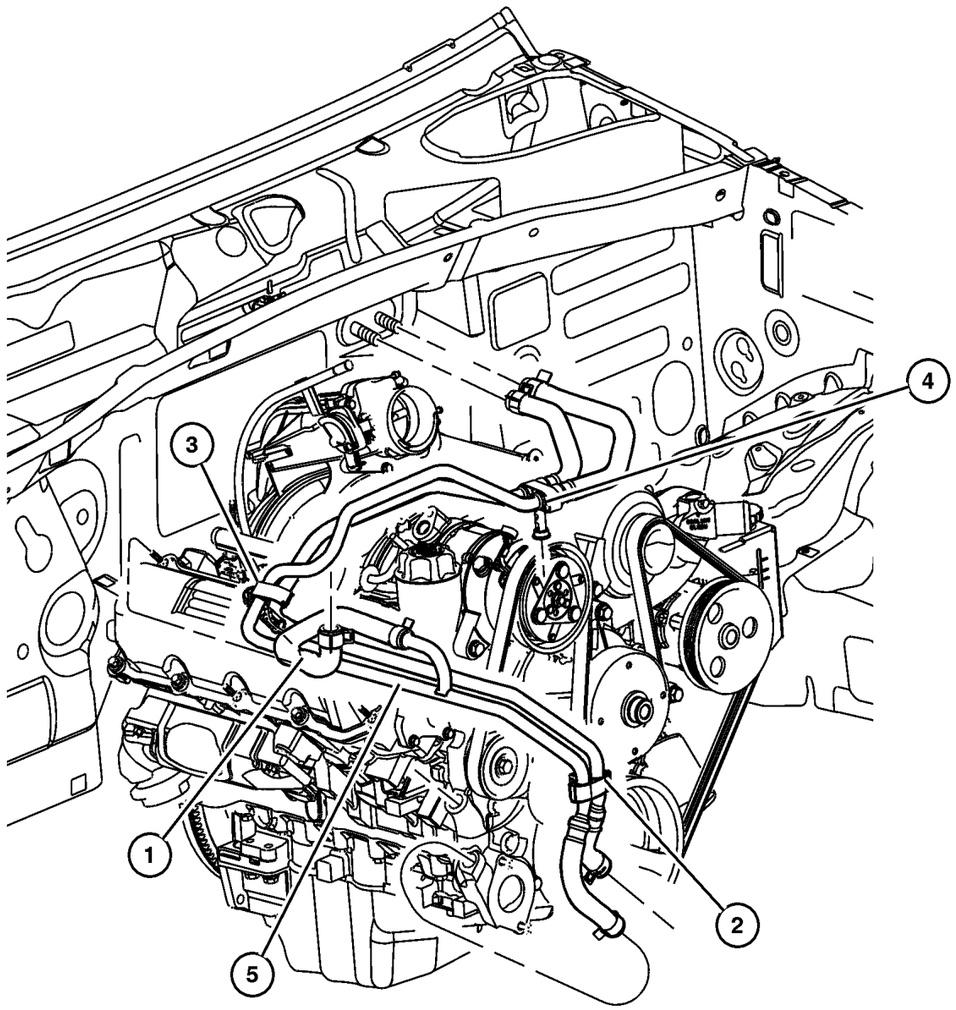

ITEM	PART NUMBER	QTY	LINE	SERIES	BODY	ENGINE	TRANS	TRIM	DESCRIPTION
Note; Sales Codes									
[EK0]= All 3.7L, 6 Cylinder Gas Engines									
1	5072 448AA	1	U			EK0			HOSE, Hot Bottle
2	5072 449AA	1	U			EK0			BRACKET, Oil Fill
3	5072 450AB	1	U			EK0			BRACKET, Valve Cover
4	5072 451AB	1	U			EK0			BRACKET, Intake Manifold
5	55038 334AD	1	U			EK0			HOSE, Heater Supply

JEEP LIBERTY (KJ)

SERIES	LINE	BODY	ENGINE	TRANSMISSION
P = Limited	J = LHD (4WD)	74 = 4 Dr (104.3 WB)	ED1,ED0 = 2.4L Power Tech	DDK = 5 Speed HDManual
H = Sport	U = RHD (4WD)		EKG,EK0 = 3.7L Power Tech	DDD = 5 Speed HD Manual
M = Renegade	T = LHD (2WD)		ENJ = 2.5L 4Cyl Turbo Diesel	DG4,DGQ = Multi-Speed Auto
			ENR = 2.8L 4Cyl Turbo Diesel	DG6 = 4 Speed Auto Transm
			EN0 = 4Cyl Turbo Diesel	DG0 = All Automatic Transm
				DBB = All Manual Transm

Plumbing, Heater 2.5,2.8L Diesel Engine, LHD
Figure 024-250

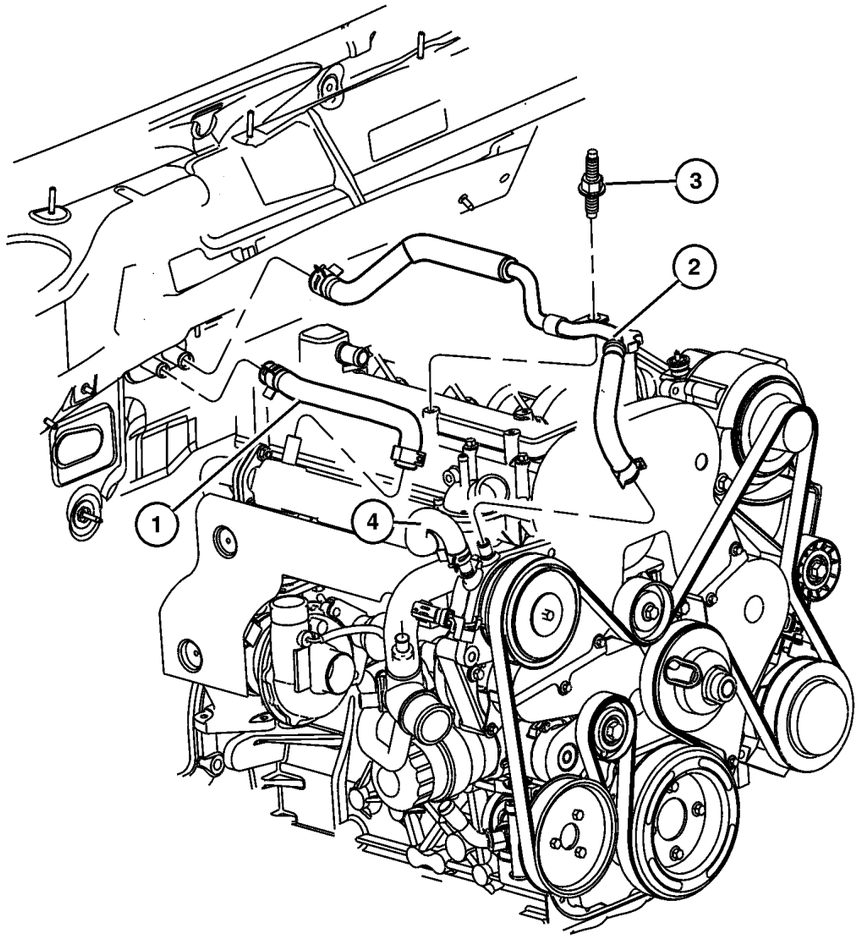

ITEM	PART NUMBER	QTY	LINE	SERIES	BODY	ENGINE	TRANS	TRIM	DESCRIPTION
1	55037 605AB	1	J, T			EN0			HOSE
2	55037 703AA	1	J, T			EN0			HOSE, Heater Supply
3	6504 035	1	J, T			EN0			STUD, M8x1.25x41.00
4	5072 740AB	1				EN0			PIPE

JEEP LIBERTY (KJ)

SERIES	LINE	BODY	ENGINE	TRANSMISSION
P = Limited	J = LHD (4WD)	74 = 4 Dr (104.3 WB)	ED1,ED0 = 2.4L Power Tech	DDK = 5 Speed HDManual
H = Sport	U = RHD (4WD)		EKG,EK0 = 3.7L Power Tech	DDD = 5 Speed HD Manual
M = Renegade	T = LHD (2WD)		ENJ = 2.5L 4Cyl Turbo Diesel	DG4,DGQ = Multi-Speed Auto
			ENR = 2.8L 4Cyl Turbo Diesel	DG6 = 4 Speed Auto Transm
			EN0 = 4Cyl Turbo Diesel	DG0 = All Automatic Transm
				DBB = All Manual Transm

Plumbing, Heater 2.5,2.8L Diesel Engine, RHD
Figure 024-260

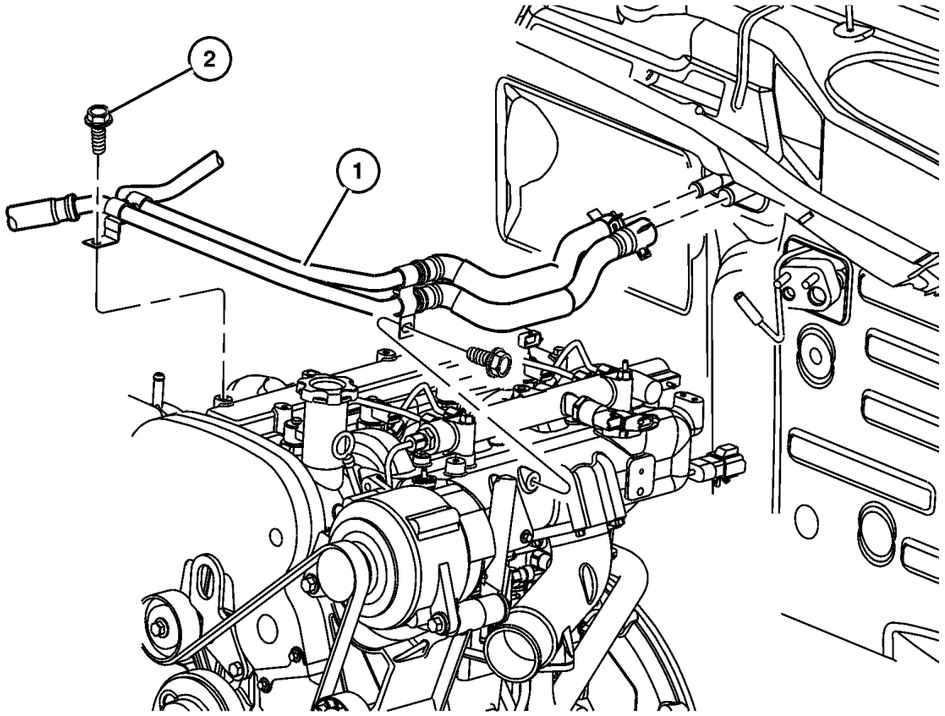

ITEM	PART NUMBER	QTY	LINE	SERIES	BODY	ENGINE	TRANS	TRIM	DESCRIPTION
1	55037 704AA	1	T, U			EN0			HOSE, Heater Supply
2	6501 474	2	U			EN0			BOLT, Hex Head, M8x1.25x16

JEEP LIBERTY (KJ)

SERIES	LINE	BODY	ENGINE	TRANSMISSION
P = Limited	J = LHD (4WD)	74 = 4 Dr (104.3 WB)	ED1,ED0 = 2.4L Power Tech	DDK = 5 Speed HDManual
H = Sport	U = RHD (4WD)		EKG,EK0 = 3.7L Power Tech	DDD = 5 Speed HD Manual
M = Renegade	T = LHD (2WD)		ENJ = 2.5L 4Cyl Turbo Diesel	DG4,DGQ = Multi-Speed Auto
			ENR = 2.8L 4Cyl Turbo Diesel	DG6 = 4 Speed Auto Transm
			EN0 = 4Cyl Turbo Diesel	DG0 = All Automatic Transm
				DBB = All Manual Transm

Plumbing, Air Conditioning 2.4L Engine, LHD
Figure 024-270

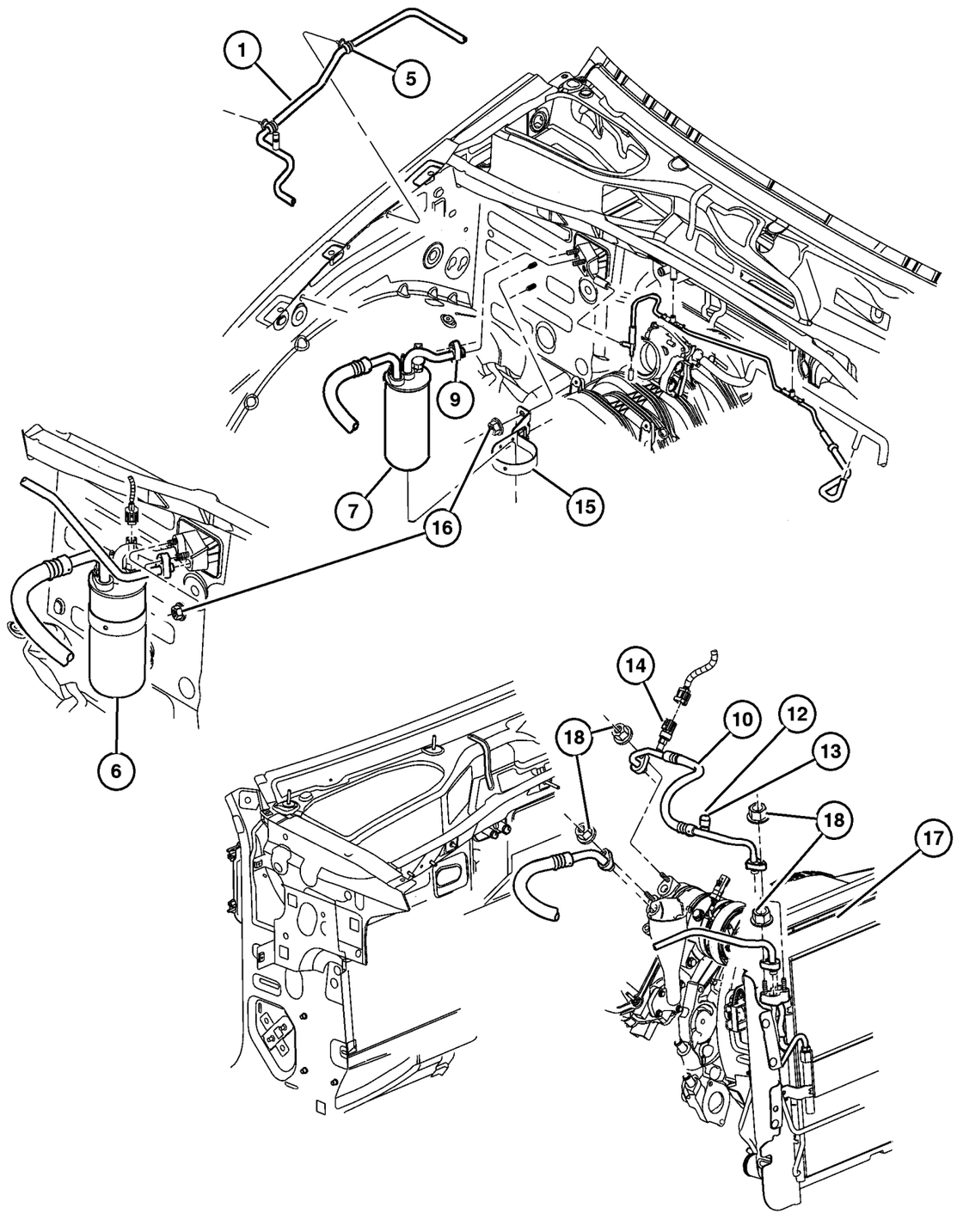

ITEM	PART NUMBER	QTY	LINE	SERIES	BODY	ENGINE	TRANS	TRIM	DESCRIPTION
Note; Sales Codes									
[ED0]= All 2.2L, 2.5L, 2.4L, 4 Cylinder Gas Engines									
1	55037 809AC	1	J, T						LINE, A/C Liquid
-2	5072 141AA	2	J, T						GASKET & O RING KIT, A/C Line
-3	4882 334	1	J, T						VALVE, A/C Discharge Line Check
-4									CAP, A/C Check Valve
	4882 335	1	J, T						
	5264 642	1				ED0			
5	5602 1384	2							CLIP, Wiring
6	55037 803AB	1	J, T			ED0			ACCUMULATOR, Suction Line, with Suction Line
7	5072 139AA	1	J, T			ED0			ACCUMULATOR, Air Conditioning, Without Suction Line
-8	5072 141AA	2	J, T						GASKET & O RING KIT, A/C Line, Suction Line
9	5072 160AA	1	J, T			ED0			LINE, A/C Liquid
10	#55037 800AD	1				ED0			LINE, A/C Discharge
-11	5066 497AA	2				ED0			GASKET & O RING KIT, A/C Line
12	4882 334	1	J, T						VALVE, A/C Discharge Line Check
13	5264 642	1				ED0			CAP, A/C Check Valve
14	5072 138AA	1				ED0			TRANSDUCER KIT, A/C Pressure
15	55037 476AB	1	J, T						BRACKET, Accumulator
16	6506 152AA	2	J, T						NUT AND CONED WASHER, Hex, M8x1.25
17	55037 465AB	1				ED0			CONDENSER, Air Conditioning
18	6506 152AA	2							NUT AND CONED WASHER, Hex, M8x1.25

JEEP LIBERTY (KJ)

SERIES	LINE	BODY	ENGINE	TRANSMISSION
P = Limited	J = LHD (4WD)	74 = 4 Dr (104.3 WB)	ED1,ED0 = 2.4L Power Tech	DDK = 5 Speed HDManual
H = Sport	U = RHD (4WD)		EKG,EK0 = 3.7L Power Tech	DDD = 5 Speed HD Manual
M = Renegade	T = LHD (2WD)		ENJ = 2.5L 4Cyl Turbo Diesel	DG4,DGQ = Multi-Speed Auto
			ENR = 2.8L 4Cyl Turbo Diesel	DG6 = 4 Speed Auto Transm
			EN0 = 4Cyl Turbo Diesel	DG0 = All Automatic Transm
				DBB = All Manual Transm

AR = Use as required - = Non illustrated part # = New this model year **September 30, 2003**

« RETURN TO GROUP INDEX

Plumbing, Air Conditioning 2.4L Engine, RHD
Figure 024-280

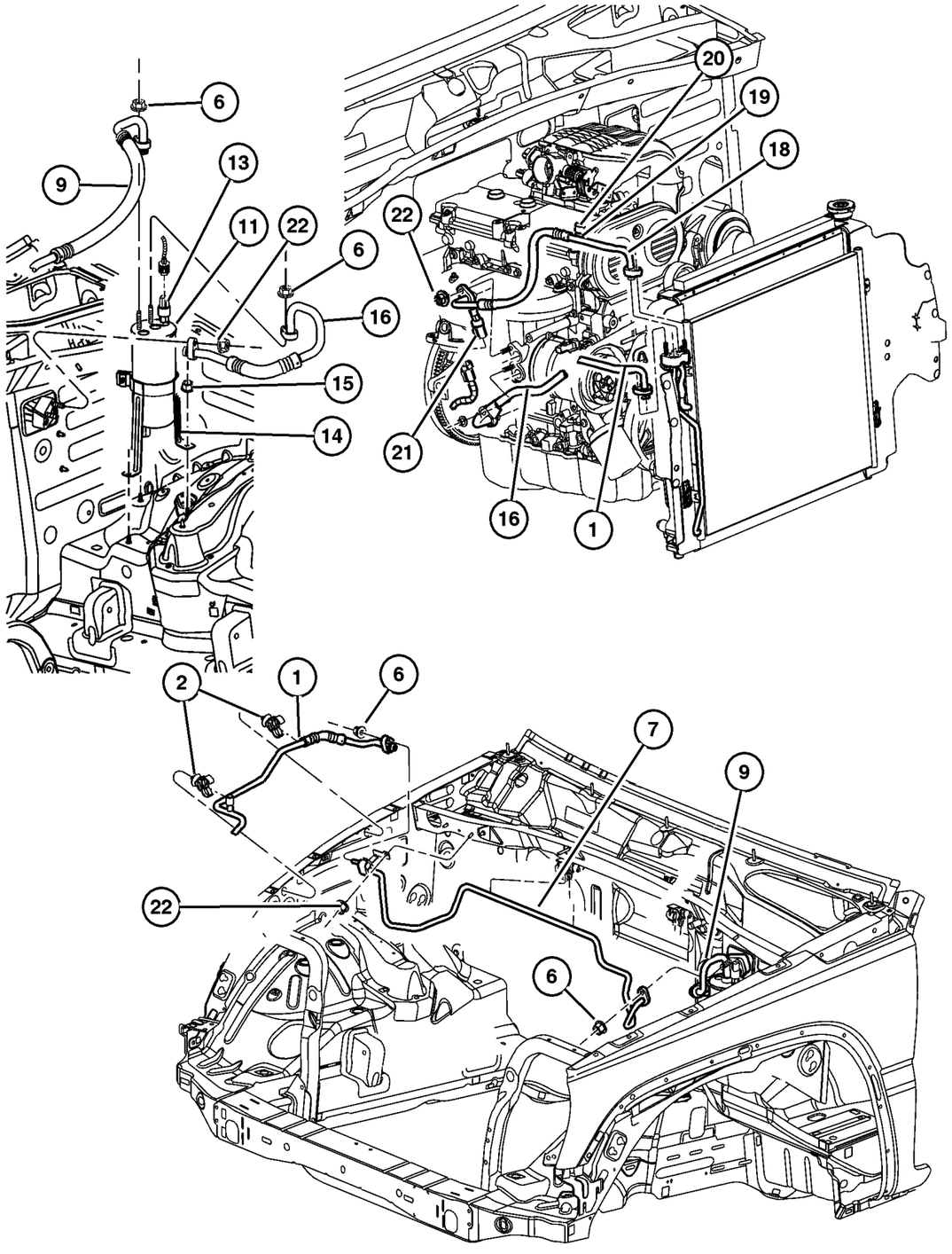

ITEM	PART NUMBER	QTY	LINE	SERIES	BODY	ENGINE	TRANS	TRIM	DESCRIPTION
Note; Sales Codes									
[ED0]= All 2.2L, 2.5L, 2.4L, 4 Cylinder Gas Engines									
1	55037 810AC	1	U						LINE, A/C Liquid
2	5602 1384	2							CLIP, Wiring
-3	4882 334	1	U						VALVE, A/C Discharge Line Check
-4	4882 335	1	U						CAP, A/C Check Valve
-5	5066 497AA	2				ED0			GASKET & O RING KIT, A/C Line
6	6506 152AA	1	U						NUT AND CONED WASHER, Hex, M8x1.25
7	55037 811AC	1	U						LINE, A/C Liquid
-8	5066 497AA	2				ED0			GASKET & O RING KIT, A/C Line
9									LINE, A/C Suction
	55037 804AB	1	U			ED0			
	55037 595AB	1	U						
-10	5066 497AA	2				ED0			GASKET & O RING KIT, A/C Line
11	55037 471AC	1	U						ACCUMULATOR, Air Conditioning
-12	55037 588AA	1	U			ED0			CLIP, A/C Suction Line
13	4799 758AC	1	J, U						TRANSDUCER, Pressure Sensor
14	55037 476AB	1	J, T						BRACKET, Accumulator
15	6101 447	1	U						NUT
16	55037 595AB	1	U						LINE, A/C Suction
-17	5072 141AA	2	J, T						GASKET & O RING KIT, A/C Line
18	#55037 800AD	1				ED0			LINE, A/C Discharge
19	4882 334	1	U						VALVE, A/C Discharge Line Check
20	4882 335	1	U						CAP, A/C Check Valve
21	5072 138AA	1				ED0			TRANSDUCER KIT, A/C Pressure
22	6506 152AA	1	U						NUT AND CONED WASHER, Hex, M8x1.25

JEEP LIBERTY (KJ)

SERIES	LINE	BODY	ENGINE	TRANSMISSION
P = Limited	J = LHD (4WD)	74 = 4 Dr (104.3 WB)	ED1,ED0 = 2.4L Power Tech	DDK = 5 Speed HDManual
H = Sport	U = RHD (4WD)		EKG,EK0 = 3.7L Power Tech	DDD = 5 Speed HD Manual
M = Renegade	T = LHD (2WD)		ENJ = 2.5L 4Cyl Turbo Diesel	DG4,DGQ = Multi-Speed Auto
			ENR = 2.8L 4Cyl Turbo Diesel	DG6 = 4 Speed Auto Transm
			EN0 = 4Cyl Turbo Diesel	DG0 = All Automatic Transm
				DBB = All Manual Transm

AR = Use as required - = Non illustrated part # = New this model year

September 30, 2003

« RETURN TO GROUP INDEX

Plumbing, Air Conditioning 3.7L Engine, LHD
Figure 024-285

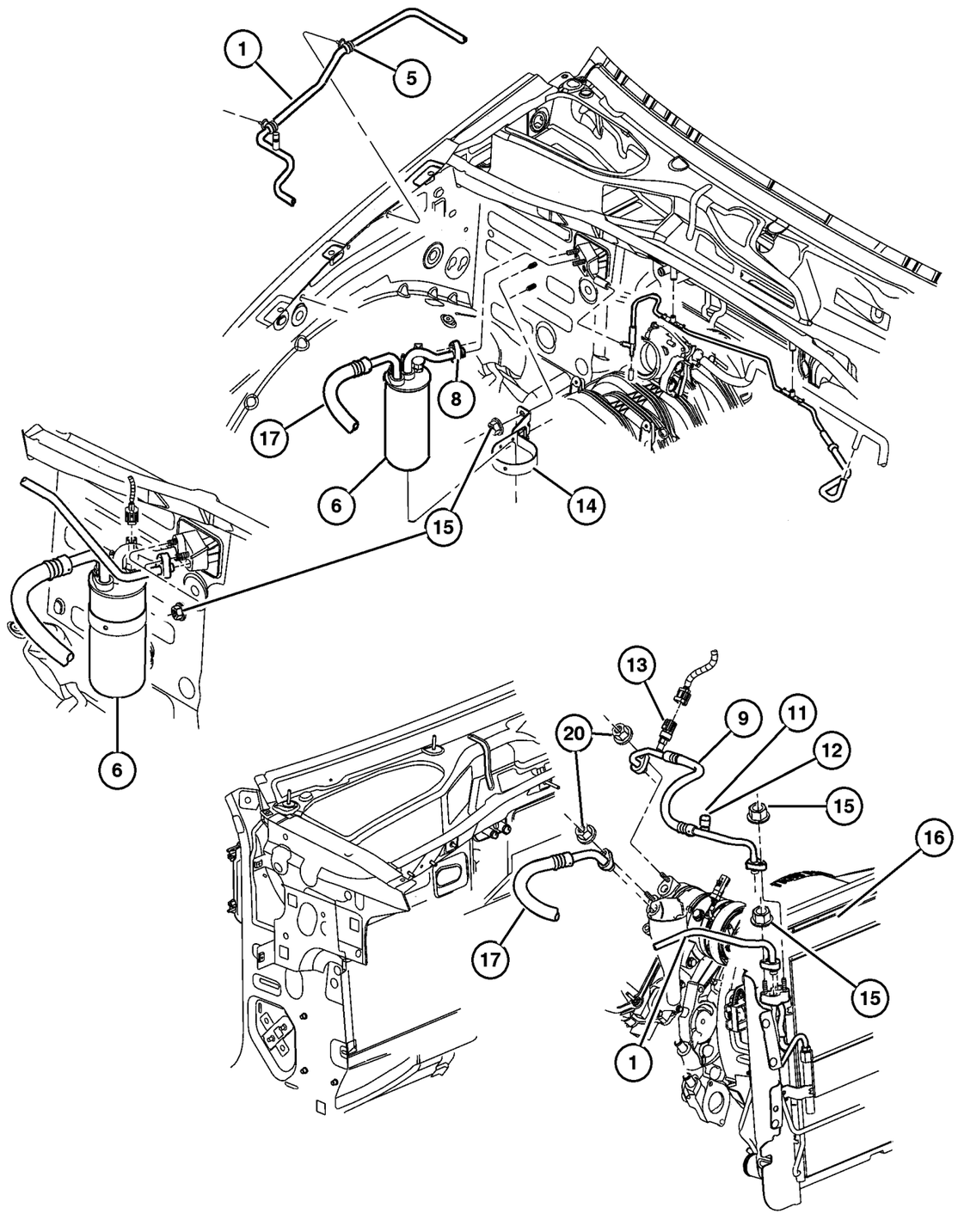

ITEM	PART NUMBER	QTY	LINE	SERIES	BODY	ENGINE	TRANS	TRIM	DESCRIPTION
Note; Sales Codes									
[EK0]= All 3.7L, 6 Cylinder Gas Engines									
1	55037 809AC	1	J, T						LINE, A/C Liquid
-2	5072 141AA	2	J, T						GASKET & O RING KIT, A/C Line
-3	4882 334	1	J, T						VALVE, A/C Discharge Line Check
-4	4882 335	1	J, T						CAP, A/C Check Valve
5	5602 1384	2							CLIP, Wiring
6	55037 807AD	1	J, T			EK0			ACCUMULATOR, Air Conditioning, With Suction Line
-7	55037 807AD	1	J, T			EK0			ACCUMULATOR, Air Conditioning, Without Suction Line
8	55037 809AC	1	J, T						LINE, A/C Liquid
9	#55037 801AC	1				EK0			LINE, A/C Discharge
-10	5066 497AA	2				EK0			GASKET & O RING KIT, A/C Line
11	4882 334	1	J, T						VALVE, A/C Discharge Line Check
12	5264 642	1				EK0			CAP, A/C Check Valve
13	5072 138AA	1				EK0			TRANSDUCER KIT, A/C Pressure, Discharge Line
14	55037 476AB	1	J, T						BRACKET, Accumulator
15	6506 152AA	2	J, T						NUT AND CONED WASHER, Hex, M8x1.25
16	55037 465AC	1				EK0			CONDENSER, Air Conditioning
17	5072 199AA	1	J, T			EK0			LINE, A/C Suction
-18	5072 141AA	2	J, T						GASKET & O RING KIT, A/C Line
-19	5072 200AA	1	J, T			EK0			TRANSDUCER, Pressure Sensor, Suction Line
20	6506 152AA	2							NUT AND CONED WASHER, Hex, M8x1.25

JEEP LIBERTY (KJ)

SERIES	LINE	BODY	ENGINE	TRANSMISSION
P = Limited	J = LHD (4WD)	74 = 4 Dr (104.3 WB)	ED1,ED0 = 2.4L Power Tech	DDK = 5 Speed HDManual
H = Sport	U = RHD (4WD)		EKG,EK0 = 3.7L Power Tech	DDD = 5 Speed HD Manual
M = Renegade	T = LHD (2WD)		ENJ = 2.5L 4Cyl Turbo Diesel	DG4,DGQ = Multi-Speed Auto
			ENR = 2.8L 4Cyl Turbo Diesel	DG6 = 4 Speed Auto Transm
			EN0 = 4Cyl Turbo Diesel	DG0 = All Automatic Transm
				DBB = All Manual Transm

AR = Use as required - = Non illustrated part # = New this model year

September 30, 2003

« RETURN TO GROUP INDEX

Plumbing, Air Conditioning 3.7L Engine, RHD
Figure 024-288

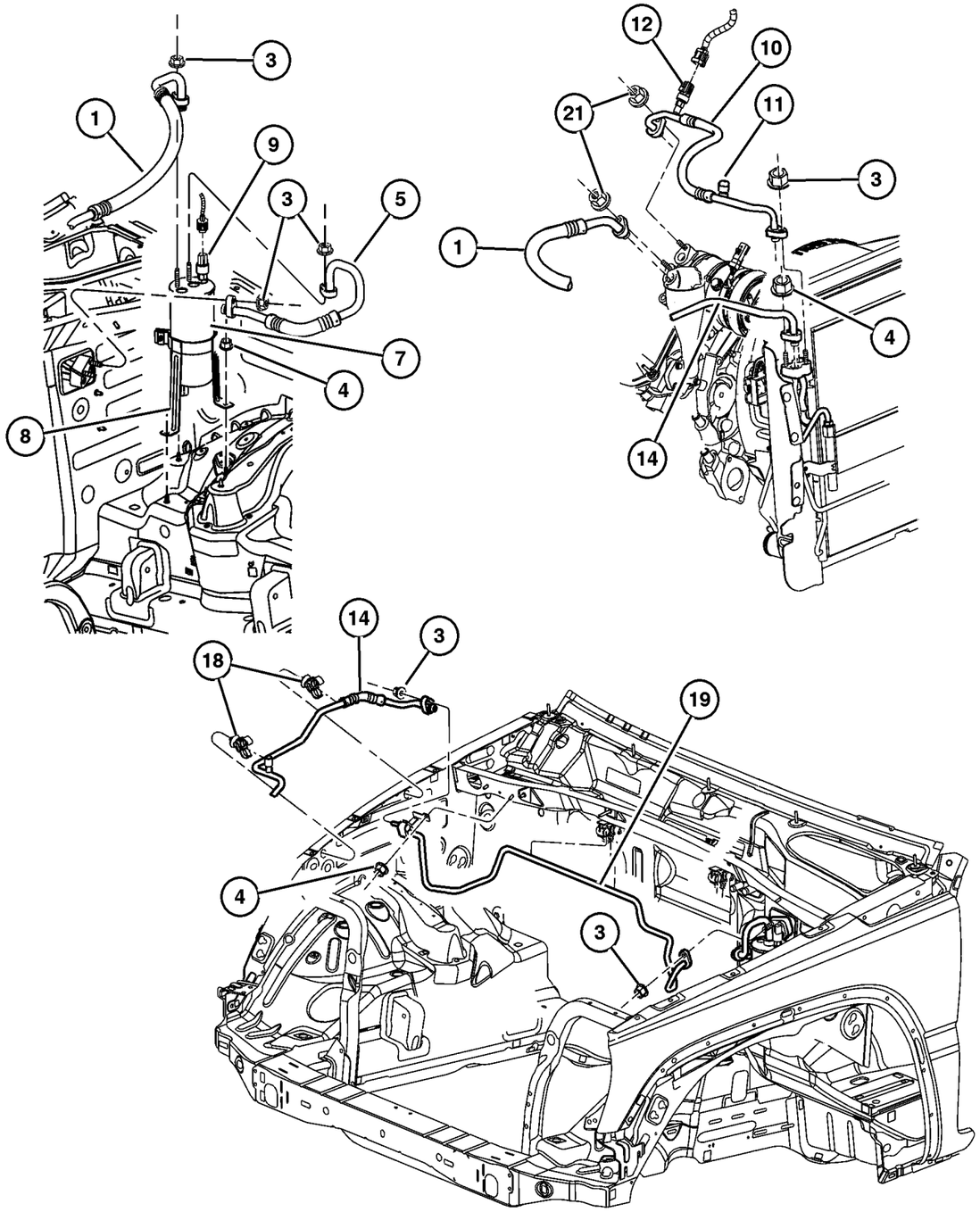

ITEM	PART NUMBER	QTY	LINE	SERIES	BODY	ENGINE	TRANS	TRIM	DESCRIPTION
Note; Sales Codes									
[EK0]= All 3.7L, 6 Cylinder Gas Engines									
1	55037 808AA	1	U			EK0			LINE, A/C Suction
-2	5072 141AA	2	J, T						GASKET & O RING KIT, A/C Line
3	6506 152AA	1	U						NUT AND CONED WASHER, Hex, M8x1.25
4	6101 447	1	U						NUT
5	55037 595AB	1	U						LINE, A/C Suction, to Evaporator
-6	5072 141AA	2	J, T						GASKET & O RING KIT, A/C Line
7	55037 471AC	1	U						ACCUMULATOR, Air Conditioning
8	55037 476AB	1	J, T						BRACKET, Accumulator
9	5072 200AA	1	J, T			EK0			TRANSDUCER, Pressure Sensor
10	#55037 801AC	1				EK0			LINE, A/C Discharge
11	5264 642	1				EK0			CAP, A/C Check Valve
12	5072 200AA	1	J, T			EK0			TRANSDUCER, Pressure Sensor
-13	5066 497AA	2				EK0			GASKET & O RING KIT, A/C Line
14	55037 810AC	1	U						LINE, A/C Liquid
-15	4882 334	1	U						VALVE, A/C Discharge Line Check
-16	4882 335	1	U						CAP, A/C Check Valve
-17	5066 497AA	2				EK0			GASKET & O RING KIT, A/C Line
18	5602 1384	2							CLIP, Wiring
19	55037 811AC	1	U						LINE, A/C Liquid
-20	5066 497AA	2				EK0			GASKET & O RING KIT, A/C Line
21	6506 152AA	2							NUT AND CONED WASHER, Hex, M8x1.25

JEEP LIBERTY (KJ)

SERIES	LINE	BODY	ENGINE	TRANSMISSION
P = Limited	J = LHD (4WD)	74 = 4 Dr (104.3 WB)	ED1,ED0 = 2.4L Power Tech	DDK = 5 Speed HDManual
H = Sport	U = RHD (4WD)		EKG,EK0 = 3.7L Power Tech	DDD = 5 Speed HD Manual
M = Renegade	T = LHD (2WD)		ENJ = 2.5L 4Cyl Turbo Diesel	DG4,DGQ = Multi-Speed Auto
			ENR = 2.8L 4Cyl Turbo Diesel	DG6 = 4 Speed Auto Transm
			EN0 = 4Cyl Turbo Diesel	DG0 = All Automatic Transm
				DBB = All Manual Transm

AR = Use as required - = Non illustrated part # = New this model year

September 30, 2003

« RETURN TO GROUP INDEX

Plumbing, Air Conditioning 2.5,2.8L Diesel Engine, LHD
Figure 024-290

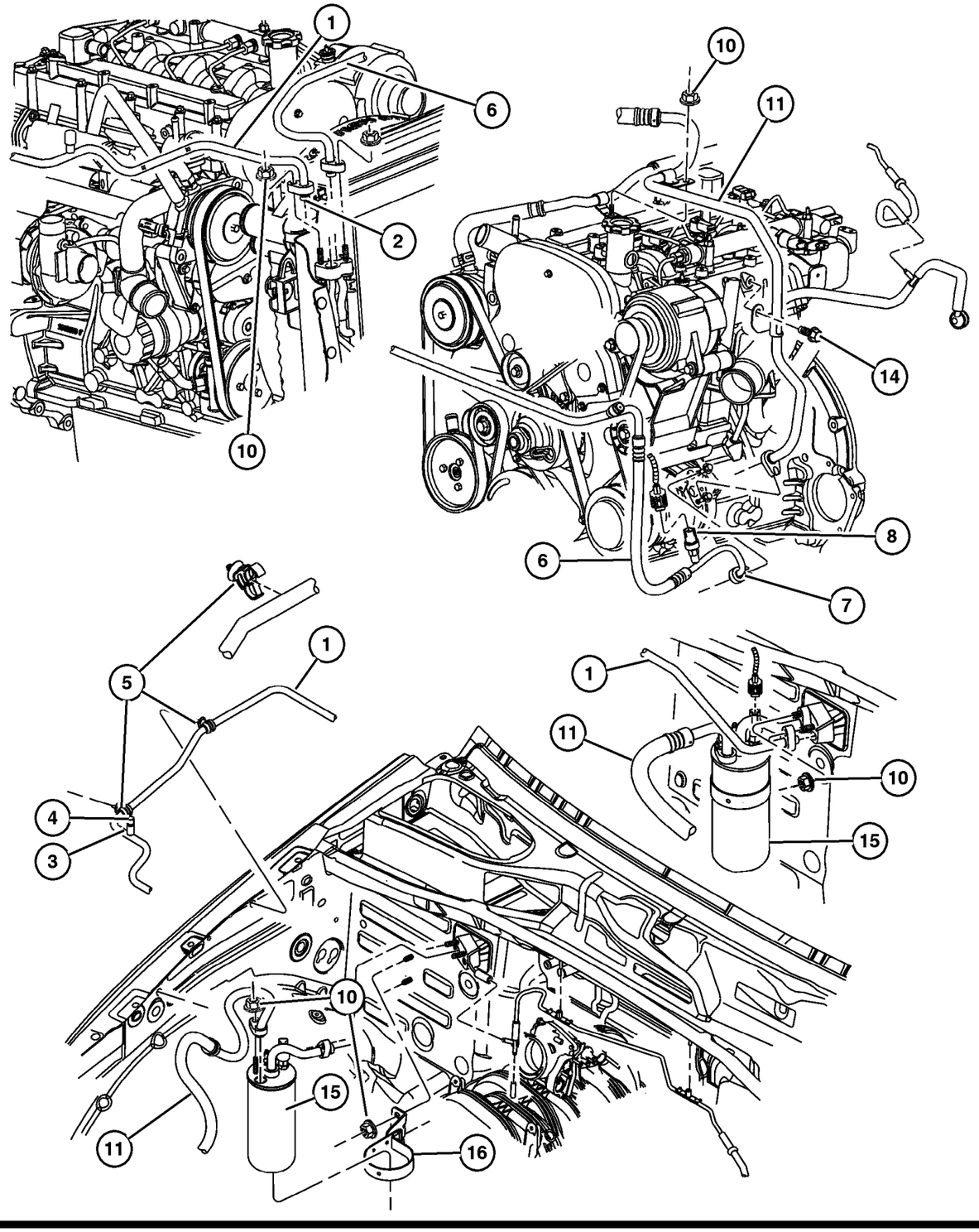

ITEM	PART NUMBER	QTY	LINE	SERIES	BODY	ENGINE	TRANS	TRIM	DESCRIPTION
1	55037 809AC	1	J, T						LINE, A/C Liquid
2	5072 141AA	1	J, T			EN0			GASKET & O RING KIT, A/C Line
3	4882 334	1	J, T						VALVE, A/C Discharge Line Check
4	4882 335	1	J, T						CAP, A/C Check Valve
5	5503 6022	2				EN0			CLIP, A/C Liquid Line
6	55037 802AB	1				EN0			LINE, A/C Discharge
7	5066 497AA	2				EN0			GASKET & O RING KIT, A/C Line
8	5072 138AA	1				EN0			TRANSDUCER KIT, A/C Pressure
-9	4796 565	1				EN0			O RING, A/C Line, 1/2 inch - Red
10	6506 152AA	2	J, T						NUT AND CONED WASHER, Hex, M8x1.25
11	55037 805AC	1	J, T			EN0			LINE, A/C Suction
-12	4796 564	1	J, T			EN0			O RING, A/C Line, 5/8 inch - Red
-13	5072 141AA	1	J, T			EN0			GASKET & O RING KIT, A/C Line
14	6501 474	1	J, T			EN0			BOLT, Hex Head, M8x1.25x16
15	55037 470AC	1	J, T			EN0			ACCUMULATOR, Suction and Discharge Line
16	55037 476AB	1	J, T						BRACKET, Accumulator

JEEP LIBERTY (KJ)

SERIES	LINE	BODY	ENGINE	TRANSMISSION
P = Limited	J = LHD (4WD)	74 = 4 Dr (104.3 WB)	ED1,ED0 = 2.4L Power Tech	DDK = 5 Speed HDManual
H = Sport	U = RHD (4WD)		EKG,EK0 = 3.7L Power Tech	DDD = 5 Speed HD Manual
M = Renegade	T = LHD (2WD)		ENJ = 2.5L 4Cyl Turbo Diesel	DG4,DGQ = Multi-Speed Auto
			ENR = 2.8L 4Cyl Turbo Diesel	DG6 = 4 Speed Auto Transm
			EN0 = 4Cyl Turbo Diesel	DG0 = All Automatic Transm
				DBB = All Manual Transm

Plumbing, Air Conditioning 2.5,2.8L Diesel Engine, RHD
Figure 024-295

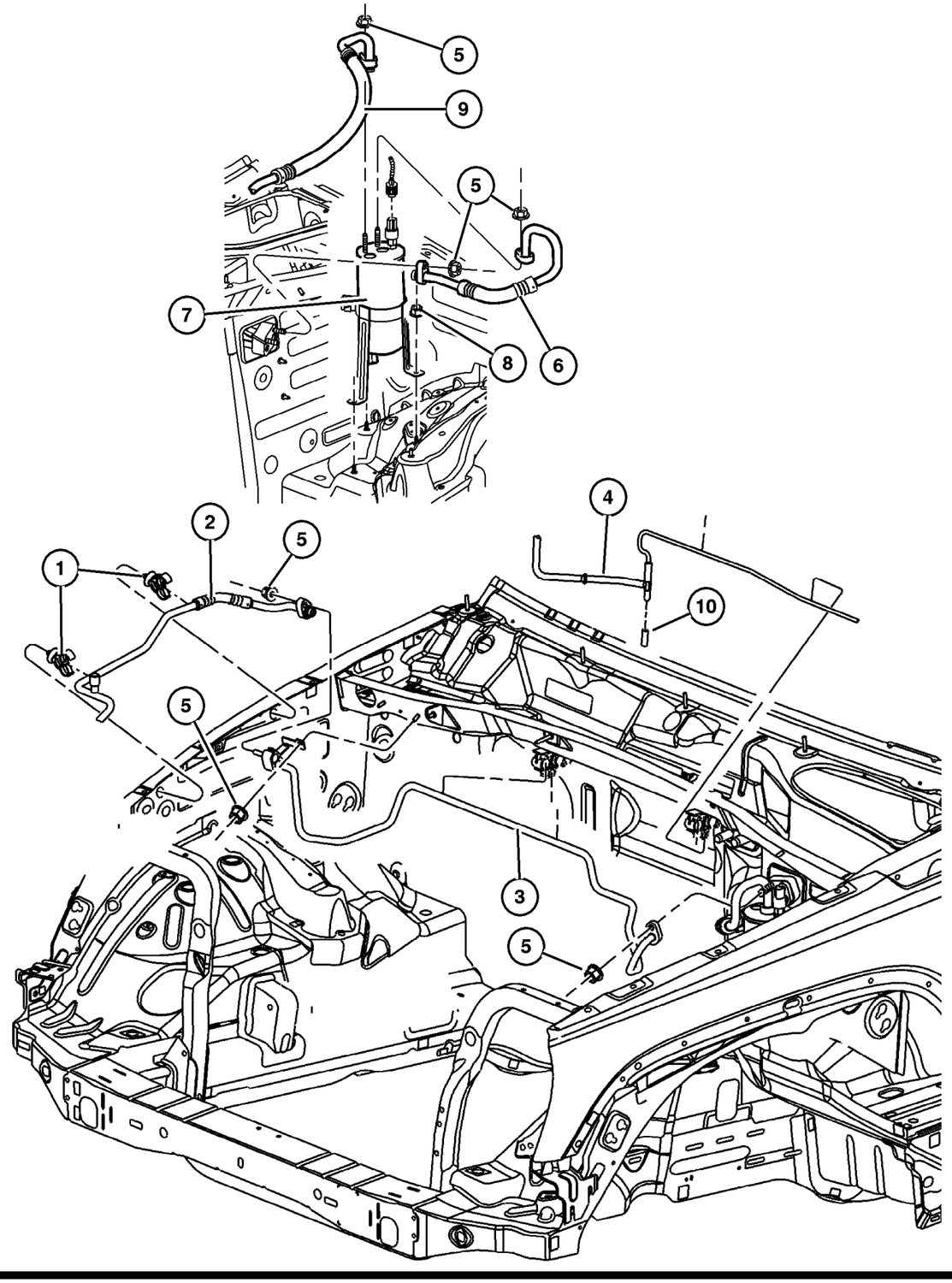

ITEM	PART NUMBER	QTY	LINE	SERIES	BODY	ENGINE	TRANS	TRIM	DESCRIPTION
1	5602 1384	2							CLIP, Wiring
2	55037 802AB	1				EN0			LINE, A/C Discharge
3	55037 811AC	1	U						LINE, A/C Liquid
4	55038 433AD	1	U						HOSE AND VALVE, Vacuum
5	6506 152AA	3				EN0			NUT AND CONED WASHER, Hex, M8x1.25
6	55037 595AB	1	U						LINE, A/C Suction
7	55037 471AC	1	U						ACCUMULATOR, Air Conditioning
8	6101 447	1	U						NUT
9	55037 806AA	1	U			EN0			LINE, A/C Suction
10	3580 172	1							CAP, Vacuum

JEEP LIBERTY (KJ)

SERIES	LINE	BODY	ENGINE	TRANSMISSION
P = Limited	J = LHD (4WD)	74 = 4 Dr (104.3 WB)	ED1,ED0 = 2.4L Power Tech	DDK = 5 Speed HDManual
H = Sport	U = RHD (4WD)		EKG,EK0 = 3.7L Power Tech	DDD = 5 Speed HD Manual
M = Renegade	T = LHD (2WD)		ENJ = 2.5L 4Cyl Turbo Diesel	DG4,DGQ = Multi-Speed Auto
			ENR = 2.8L 4Cyl Turbo Diesel	DG6 = 4 Speed Auto Transm
			EN0 = 4Cyl Turbo Diesel	DG0 = All Automatic Transm
				DBB = All Manual Transm

AR = Use as required - = Non illustrated part # = New this model year

September 30, 2003

« RETURN TO GROUP INDEX

Control, Heater and Air Conditioning
Figure 024-310

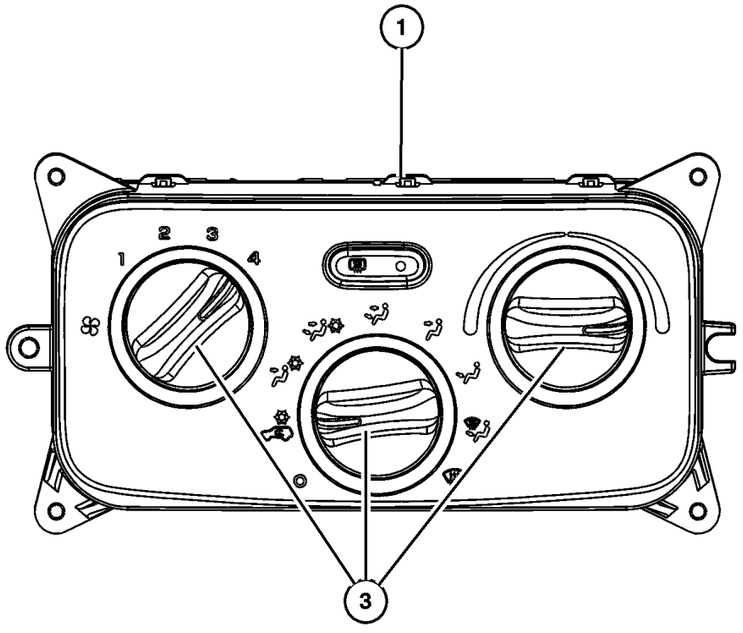

ITEM	PART NUMBER	QTY	LINE	SERIES	BODY	ENGINE	TRANS	TRIM	DESCRIPTION
1	55037 533AD	1							CONTROL, A/C And Heater, with Air Conditioning
-2	55037 531AD	1							CONTROL, Heater, without Air Conditioning
3	5069 169AA	3							KNOB, A/C And Heater Control - Rotary
-4	5069 170AA	2							BULB, Heater and A/C Control

JEEP LIBERTY (KJ)

SERIES	LINE	BODY	ENGINE	TRANSMISSION
P = Limited	J = LHD (4WD)	74 = 4 Dr (104.3 WB)	ED1,ED0 = 2.4L Power Tech	DDK = 5 Speed HDManual
H = Sport	U = RHD (4WD)		EKG,EK0 = 3.7L Power Tech	DDD = 5 Speed HD Manual
M = Renegade	T = LHD (2WD)		ENJ = 2.5L 4Cyl Turbo Diesel	DG4,DGQ = Multi-Speed Auto
			ENR = 2.8L 4Cyl Turbo Diesel	DG6 = 4 Speed Auto Transm
			EN0 = 4Cyl Turbo Diesel	DG0 = All Automatic Transm
				DBB = All Manual Transm

Compressor, 2.4L - 3.7L Engine
Figure 024-410

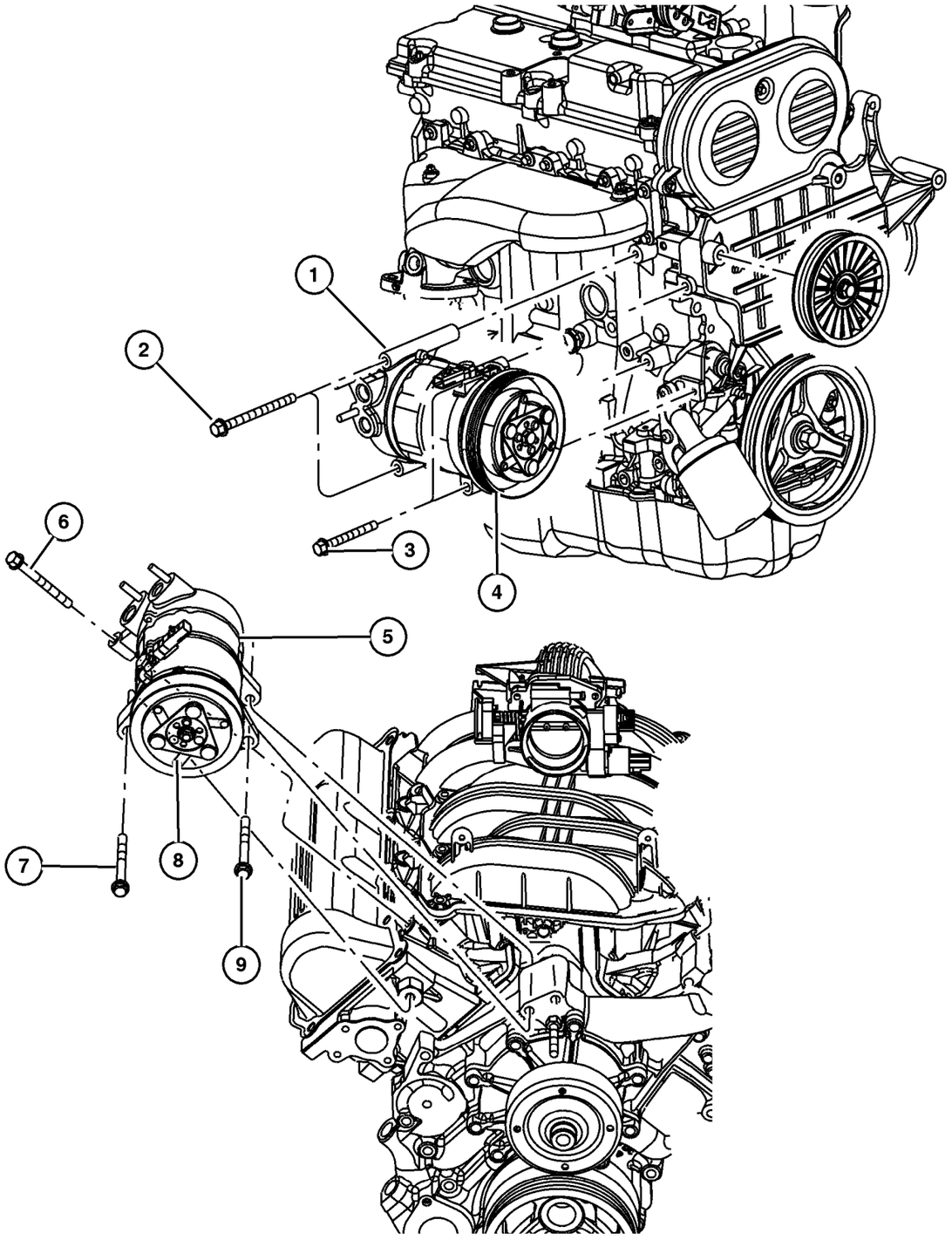

ITEM	PART NUMBER	QTY	LINE	SERIES	BODY	ENGINE	TRANS	TRIM	DESCRIPTION
Note; Sales Codes									
[ED0]= All 2.2L, 2.5L, 2.4L, 4 Cylinder Gas Engines									
[EK0]= All 3.7L, 6 Cylinder Gas Engines									
1	55037 524AE	1				ED0			COMPRESSOR, Air Conditioning
2	6102 178AA	2				ED0			SCREW, Hex Flange Head, M8x1.25x130
3									BOLT, (NOT SERVICED) (Not Serviced)
4	5083 076AA	1				EK0			CLUTCH, A/C Compressor
5	55037 466AE	1				EK0			COMPRESSOR, Air Conditioning
6	6505 482AA	1				EK0			SCREW AND WASHER, Hex Head, M8x1.25x50
7	6505 487AA	1				EK0			SCREW AND WASHER, M10x1.5x45
8	5083 076AA	1				EK0			CLUTCH, A/C Compressor
9	6504 344	1				EK0			SCREW AND WASHER, Hex Head

JEEP LIBERTY (KJ)

SERIES	LINE	BODY	ENGINE	TRANSMISSION
P = Limited	J = LHD (4WD)	74 = 4 Dr (104.3 WB)	ED1,ED0 = 2.4L Power Tech	DDK = 5 Speed HDManual
H = Sport	U = RHD (4WD)		EKG,EK0 = 3.7L Power Tech	DDD = 5 Speed HD Manual
M = Renegade	T = LHD (2WD)		ENJ = 2.5L 4Cyl Turbo Diesel	DG4,DGQ = Multi-Speed Auto
			ENR = 2.8L 4Cyl Turbo Diesel	DG6 = 4 Speed Auto Transm
			EN0 = 4Cyl Turbo Diesel	DG0 = All Automatic Transm
				DBB = All Manual Transm

Compressor, 2.5,2.8L Diesel Engine
Figure 024-430

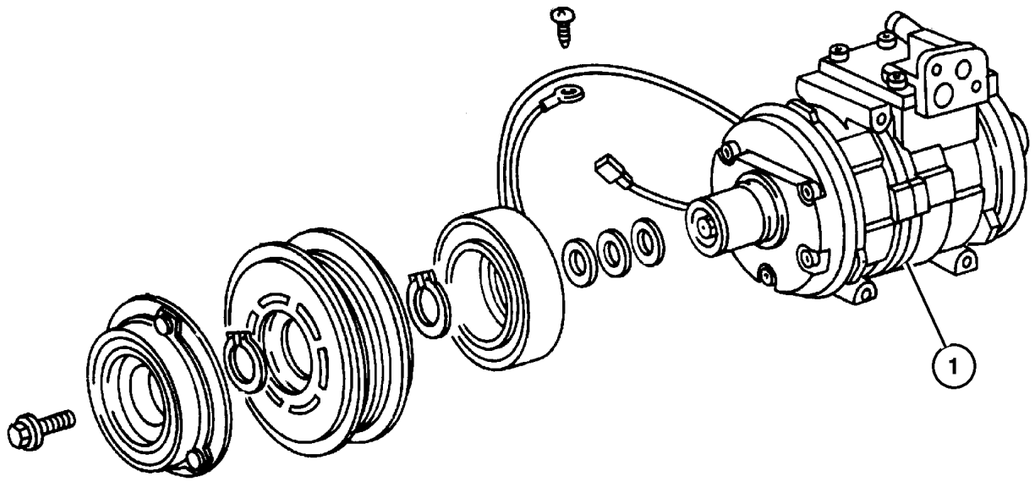

ITEM	PART NUMBER	QTY	LINE	SERIES	BODY	ENGINE	TRANS	TRIM	DESCRIPTION
1									COMPRESSOR, Air Conditioning
	5093 940AA	1				EN0			Without Clutch
	55037 467AB	1				EN0			With Clutch

JEEP LIBERTY (KJ)

SERIES	LINE	BODY	ENGINE	TRANSMISSION
P = Limited	J = LHD (4WD)	74 = 4 Dr (104.3 WB)	ED1,ED0 = 2.4L Power Tech	DDK = 5 Speed HDManual
H = Sport	U = RHD (4WD)		EKG,EK0 = 3.7L Power Tech	DDD = 5 Speed HD Manual
M = Renegade	T = LHD (2WD)		ENJ = 2.5L 4Cyl Turbo Diesel	DG4,DGQ = Multi-Speed Auto
			ENR = 2.8L 4Cyl Turbo Diesel	DG6 = 4 Speed Auto Transm
			EN0 = 4Cyl Turbo Diesel	DG0 = All Automatic Transm
				DBB = All Manual Transm

Compressor Mounting, 2.4L - 3.7L Engine
Figure 024-510

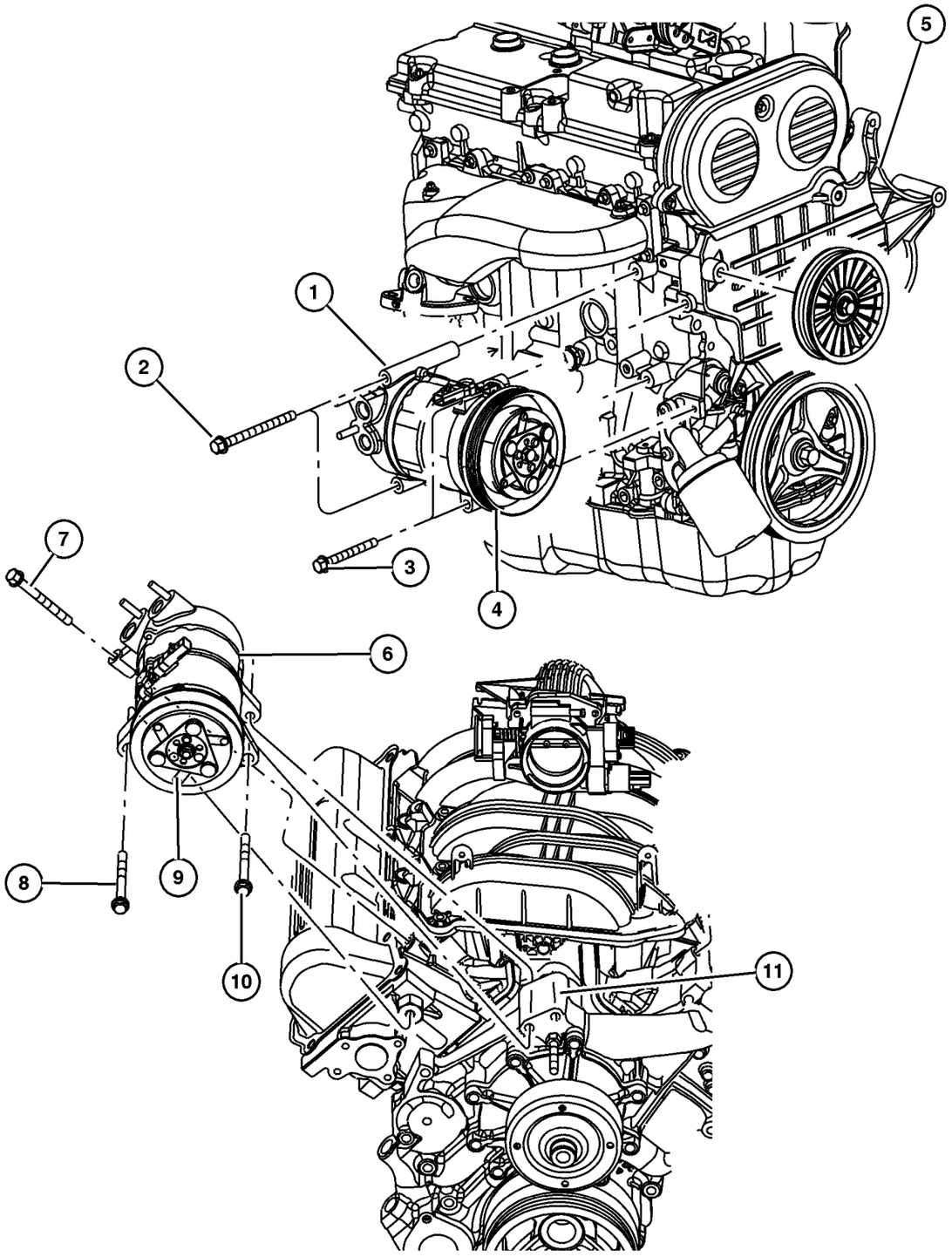

ITEM	PART NUMBER	QTY	LINE	SERIES	BODY	ENGINE	TRANS	TRIM	DESCRIPTION
Note; Sales Codes									
[ED0]= All 2.2L, 2.5L, 2.4L, 4 Cylinder Gas Engines									
[EK0]= All 3.7L, 6 Cylinder Gas Engines									
1	55037 524AE	1				ED0			COMPRESSOR, Air Conditioning
2	6102 178AA	2				ED0			SCREW, Hex Flange Head, M8x1.25x130
3									BOLT, (NOT SERVICED) (Not Serviced)
4	5083 076AA	1				EK0			CLUTCH, A/C Compressor
5	4861 371AA	1				ED0			BRACKET, Alternator
6	55037 466AE	1				EK0			COMPRESSOR, Air Conditioning
7	6505 482AA	1				EK0			SCREW AND WASHER, Hex Head, M8x1.25x50
8	6507 372AA	2				ED0			STUD, Double Ended
9	5083 076AA	1				EK0			CLUTCH, A/C Compressor
10	6504 344	1				EK0			SCREW AND WASHER, Hex Head
11	53021 238AB	1				EK0			COVER, Timing Belt

JEEP LIBERTY (KJ)

SERIES	LINE	BODY	ENGINE	TRANSMISSION
P = Limited	J = LHD (4WD)	74 = 4 Dr (104.3 WB)	ED1,ED0 = 2.4L Power Tech	DDK = 5 Speed HDManual
H = Sport	U = RHD (4WD)		EKG,EK0 = 3.7L Power Tech	DDD = 5 Speed HD Manual
M = Renegade	T = LHD (2WD)		ENJ = 2.5L 4Cyl Turbo Diesel	DG4,DGQ = Multi-Speed Auto
			ENR = 2.8L 4Cyl Turbo Diesel	DG6 = 4 Speed Auto Transm
			EN0 = 4Cyl Turbo Diesel	DG0 = All Automatic Transm
				DBB = All Manual Transm

AR = Use as required - = Non illustrated part # = New this model year

September 30, 2003

« RETURN TO GROUP INDEX

Compressor Mounting, 2.5,2.8L Diesel Engine
Figure 024-530

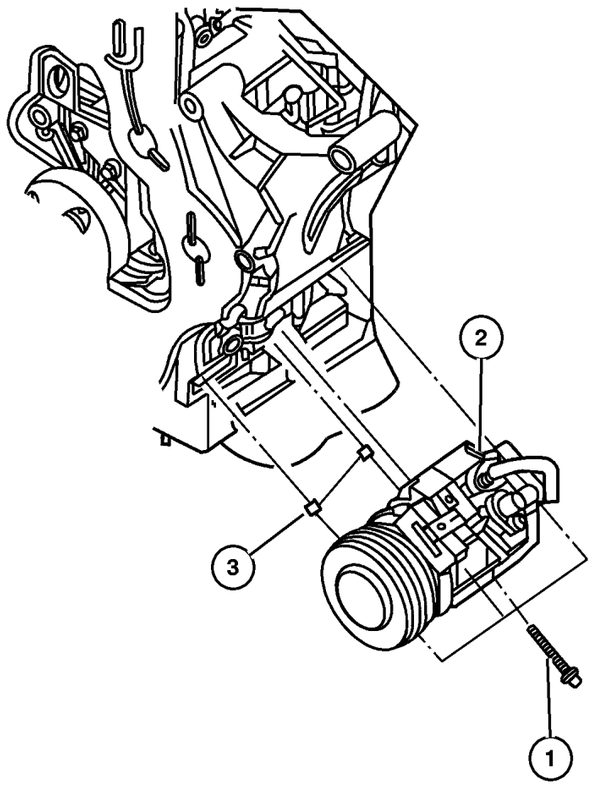

ITEM	PART NUMBER	QTY	LINE	SERIES	BODY	ENGINE	TRANS	TRIM	DESCRIPTION
1	4897 253AA	1				EN0			BOLT, Hex Flange Head, M10x35
2									COMPRESSOR, Air Conditioning
	5093 940AA	1				EN0			Without Clutch
	55037 467AB	1				EN0			With Clutch
3	5066 930AA	2				EN0			PIN

JEEP LIBERTY (KJ)

SERIES	LINE	BODY	ENGINE	TRANSMISSION
P = Limited	J = LHD (4WD)	74 = 4 Dr (104.3 WB)	ED1,ED0 = 2.4L Power Tech	DDK = 5 Speed HDManual
H = Sport	U = RHD (4WD)		EKG,EK0 = 3.7L Power Tech	DDD = 5 Speed HD Manual
M = Renegade	T = LHD (2WD)		ENJ = 2.5L 4Cyl Turbo Diesel	DG4,DGQ = Multi-Speed Auto
			ENR = 2.8L 4Cyl Turbo Diesel	DG6 = 4 Speed Auto Transm
			EN0 = 4Cyl Turbo Diesel	DG0 = All Automatic Transm
				DBB = All Manual Transm

Air Distribution Ducts
Figure 024-610

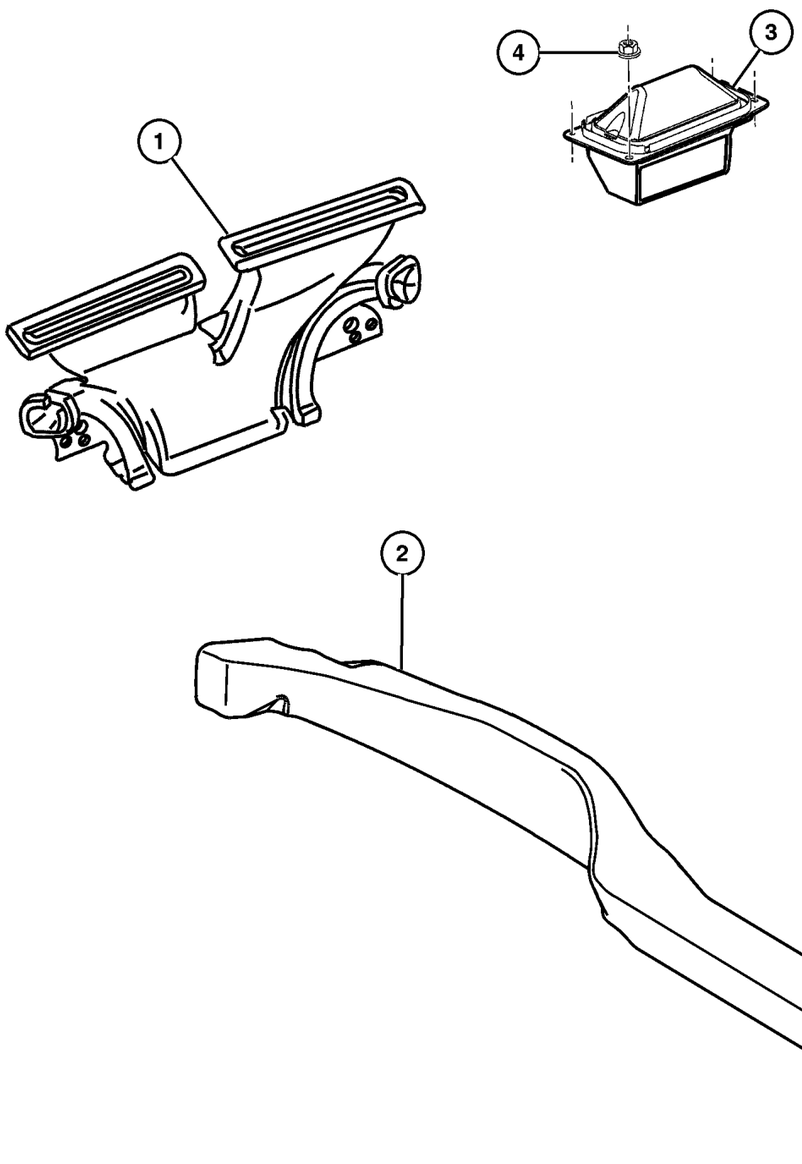

ITEM	PART NUMBER	QTY	LINE	SERIES	BODY	ENGINE	TRANS	TRIM	DESCRIPTION
NOTE : SALES CODES									
[DBB]= Transmission - All Manual									
[DG0] = Transmission - All Automatic									
1									DUCT, Defroster
	55037 448AB	1	J, T						
	55037 535AB	1	U						
2									DUCT, Rear Floor Heat
	#55037 480AB	1							[DG0]
	#55037 562AB	1							[DBB]
3									BAFFLE, Air Inlet
	55037 522AA	1	J, T						
	55037 523AA	1	U						
4									NUT, (NOT SERVICED) (Not Serviced)

JEEP LIBERTY (KJ)

SERIES	LINE	BODY	ENGINE	TRANSMISSION
P = Limited	J = LHD (4WD)	74 = 4 Dr (104.3 WB)	ED1,ED0 = 2.4L Power Tech	DDK = 5 Speed HDManual
H = Sport	U = RHD (4WD)		EKG,EK0 = 3.7L Power Tech	DDD = 5 Speed HD Manual
M = Renegade	T = LHD (2WD)		ENJ = 2.5L 4Cyl Turbo Diesel	DG4,DGQ = Multi-Speed Auto
			ENR = 2.8L 4Cyl Turbo Diesel	DG6 = 4 Speed Auto Transm
			EN0 = 4Cyl Turbo Diesel	DG0 = All Automatic Transm
				DBB = All Manual Transm

Group – 025
Emission Systems

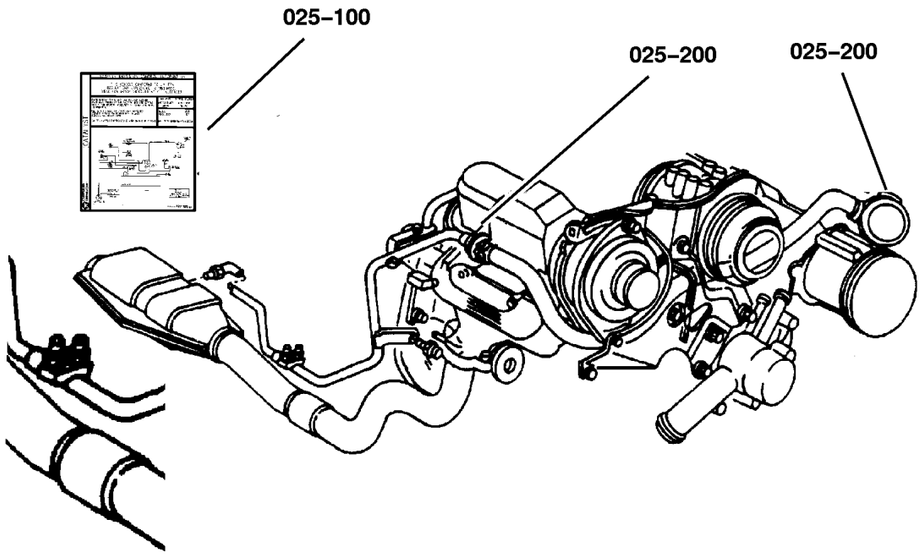

025–200 EGR System	025–300 Vacuum Canister	025–400 Emission Harness	
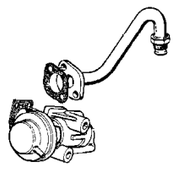			

GROUP 25 - Emission Systems

Illustration Title	Group-Fig. No.
EGR System	
EGR System 2.5/2.8 Diesel [EN0]	Fig. 025-210
Vacuum Canister	
Vapor Canister 2.4L [ED1], 3.7L [EKG]	Fig. 025-310
Emission Harness	
Emission Vacuum Harness 2.5/2.8 Diesel [EN0]	Fig. 025-410
Emission Vacuum Harness 2.4L [ED1], 3.7L [EKG]	Fig. 025-420
Leak Detection Pump, 2.4L [ED1], 3.7L [EKG]	Fig. 025-430

EGR System 2.5/2.8 Diesel [EN0]
Figure 025-210

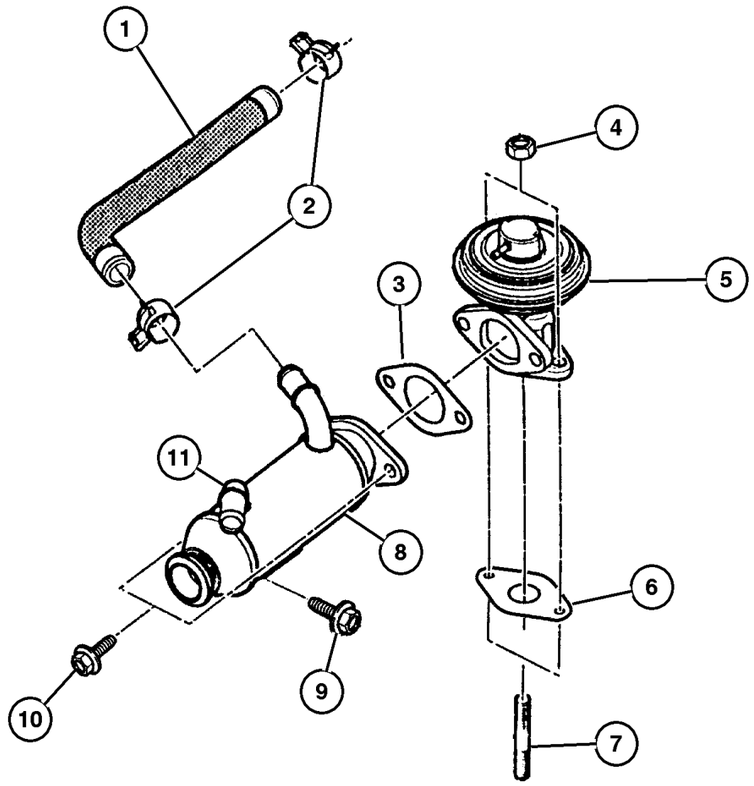

ITEM	PART NUMBER	QTY	LINE	SERIES	BODY	ENGINE	TRANS	TRIM	DESCRIPTION
Note; Sales Codes									
[DBB]= All Manual Transmissions									
[EN0]= All 4/5 Cylinder Turbo Diesels									
1	5072 689AA	1				EN0	DG0		PIPE, EGR to Manifold
2	4883 924AA	2				EN0	DG0		CLAMP, Heater Hose
3	5083 261AA	1				EN0	DG0		GASKET, EGR Tube Flange
4	4882 610	4				EN0	DG0		NUT, Lock
5	5066 800AB	1				EN0	DG0		VALVE, EGR
6	4663 247AB	1				ED0			GASKET, EGR Valve
7	4882 606	1				EN0	DG0		STUD, Turbo Elbow
8	5072 687AB	1				EN0	DG0		COOLER, EGR
9									SCREW
	5072 688AA	4				EN0	DBB		
		4				EN0	DG0		
10	5066 986AA	1				EN0	DG0		SCREW
11	5066 942AA	1				EN0	DG0		CLAMP
-12	5066 943AA	1				EN0	DG0		CLAMP, Hose

JEEP LIBERTY (KJ)

SERIES	LINE	BODY	ENGINE	TRANSMISSION
P = Limited	J = LHD (4WD)	74 = 4 Dr (104.3 WB)	ED1,ED0 = 2.4L Power Tech	DDK = 5 Speed HDManual
H = Sport	U = RHD (4WD)		EKG,EK0 = 3.7L Power Tech	DDD = 5 Speed HD Manual
M = Renegade	T = LHD (2WD)		ENJ = 2.5L 4Cyl Turbo Diesel	DG4,DGQ = Multi-Speed Auto
			ENR = 2.8L 4Cyl Turbo Diesel	DG6 = 4 Speed Auto Transm
			EN0 = 4Cyl Turbo Diesel	DG0 = All Automatic Transm
				DBB = All Manual Transm

Vapor Canister 2.4L [ED1], 3.7L [EKG]
Figure 025-310

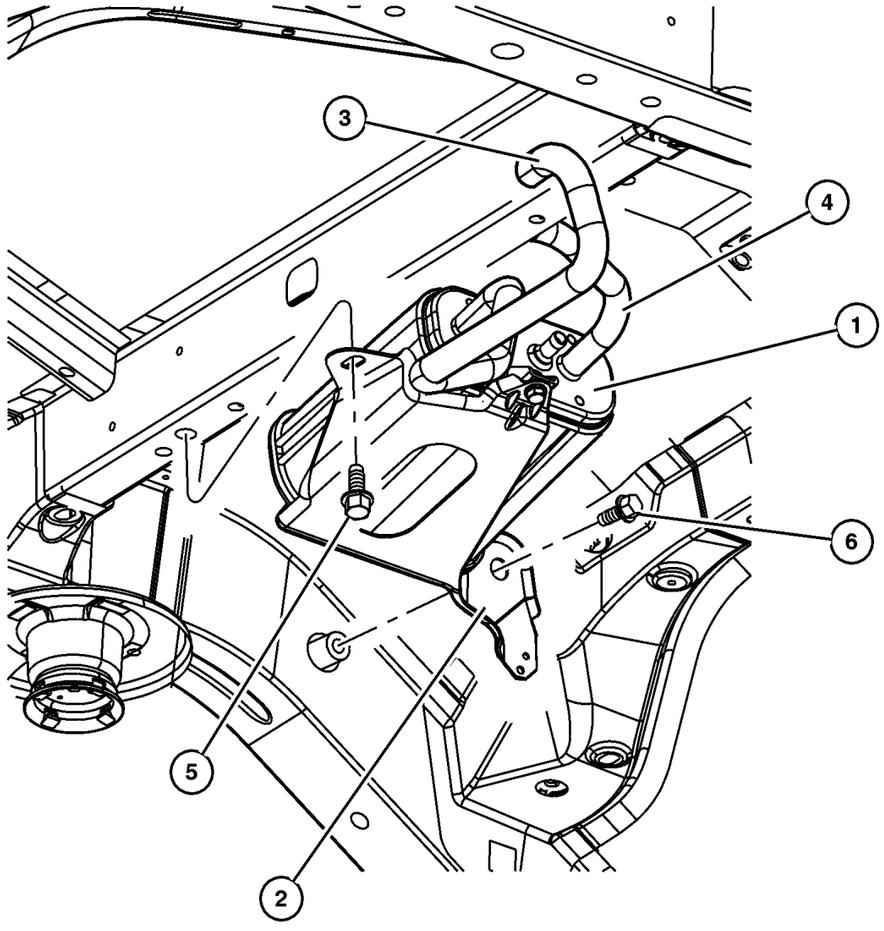

ITEM	PART NUMBER	QTY	LINE	SERIES	BODY	ENGINE	TRANS	TRIM	DESCRIPTION
1	#4891 562AA	1				ED0, EK0			CANISTER, Vapor
2	#52128 677AA	1				ED0, EK0			BRACKET, Vapor Canister
3	#52128 661AA	1				ED0, EK0			HOSE, Canister to NVLD
4	#52128 679AA	1				ED0, EK0			HOSE, Canister to Vent Valve
5	6101 452	1				ED0, EK0			SCREW AND WASHER, Hex Head, M8x1.25x20
6	6503 900	2				ED0, EK0			SCREW AND WASHER, Hex Head, M12x1.75x40
-7	6101 467	1				ED0, EK0			NUT, Hex Flange, M8x1.25

JEEP LIBERTY (KJ)

SERIES	LINE	BODY	ENGINE	TRANSMISSION
P = Limited	J = LHD (4WD)	74 = 4 Dr (104.3 WB)	ED1,ED0 = 2.4L Power Tech	DDK = 5 Speed HDManual
H = Sport	U = RHD (4WD)		EKG,EK0 = 3.7L Power Tech	DDD = 5 Speed HD Manual
M = Renegade	T = LHD (2WD)		ENJ = 2.5L 4Cyl Turbo Diesel	DG4,DGQ = Multi-Speed Auto
			ENR = 2.8L 4Cyl Turbo Diesel	DG6 = 4 Speed Auto Transm
			EN0 = 4Cyl Turbo Diesel	DG0 = All Automatic Transm
				DBB = All Manual Transm

Emission Vacuum Harness 2.5/2.8 Diesel [EN0]
Figure 025-410

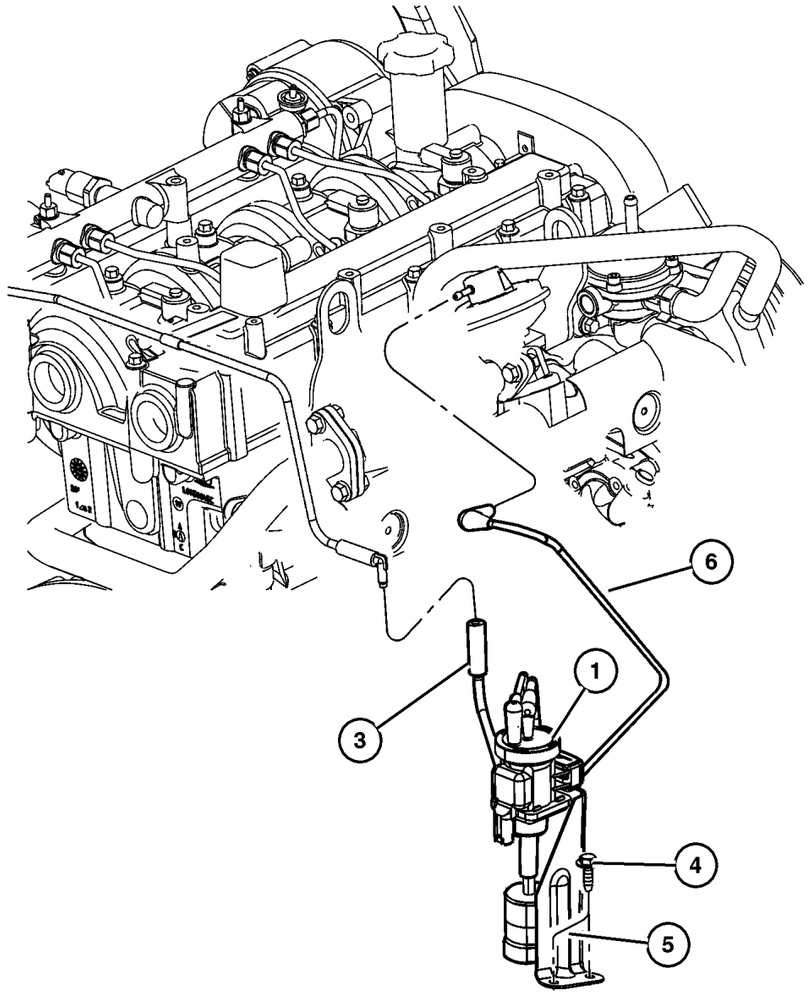

ITEM	PART NUMBER	QTY	LINE	SERIES	BODY	ENGINE	TRANS	TRIM	DESCRIPTION
Note; Sales Codes									
[EN0]= All 4/5 Cylinder Turbo Diesels									
1	5274 478AA	1	J, U			EN0			SOLENOID, Vacuum
-2	5274 510AA	1	J, U			EN0			FILTER, Vacuum Solenoid
3	52109 619AB	1	J, U			EN0			HOSE, Solenoid
4									SCREW, M4.8-1.59X15.00, (NOT SERVICED) (Not Serviced)
5	53013 411AB	1	J, U			EN0			BRACKET
6	53013 088AD	1	J, U			EN0			TUBE, EGR To Vacuum Regulator

JEEP LIBERTY (KJ)

SERIES	LINE	BODY	ENGINE	TRANSMISSION
P = Limited	J = LHD (4WD)	74 = 4 Dr (104.3 WB)	ED1,ED0 = 2.4L Power Tech	DDK = 5 Speed HDManual
H = Sport	U = RHD (4WD)		EKG,EK0 = 3.7L Power Tech	DDD = 5 Speed HD Manual
M = Renegade	T = LHD (2WD)		ENJ = 2.5L 4Cyl Turbo Diesel	DG4,DGQ = Multi-Speed Auto
			ENR = 2.8L 4Cyl Turbo Diesel	DG6 = 4 Speed Auto Transm
			EN0 = 4Cyl Turbo Diesel	DG0 = All Automatic Transm
				DBB = All Manual Transm

Emission Vacuum Harness 2.4L [ED1], 3.7L [EKG]
Figure 025-420

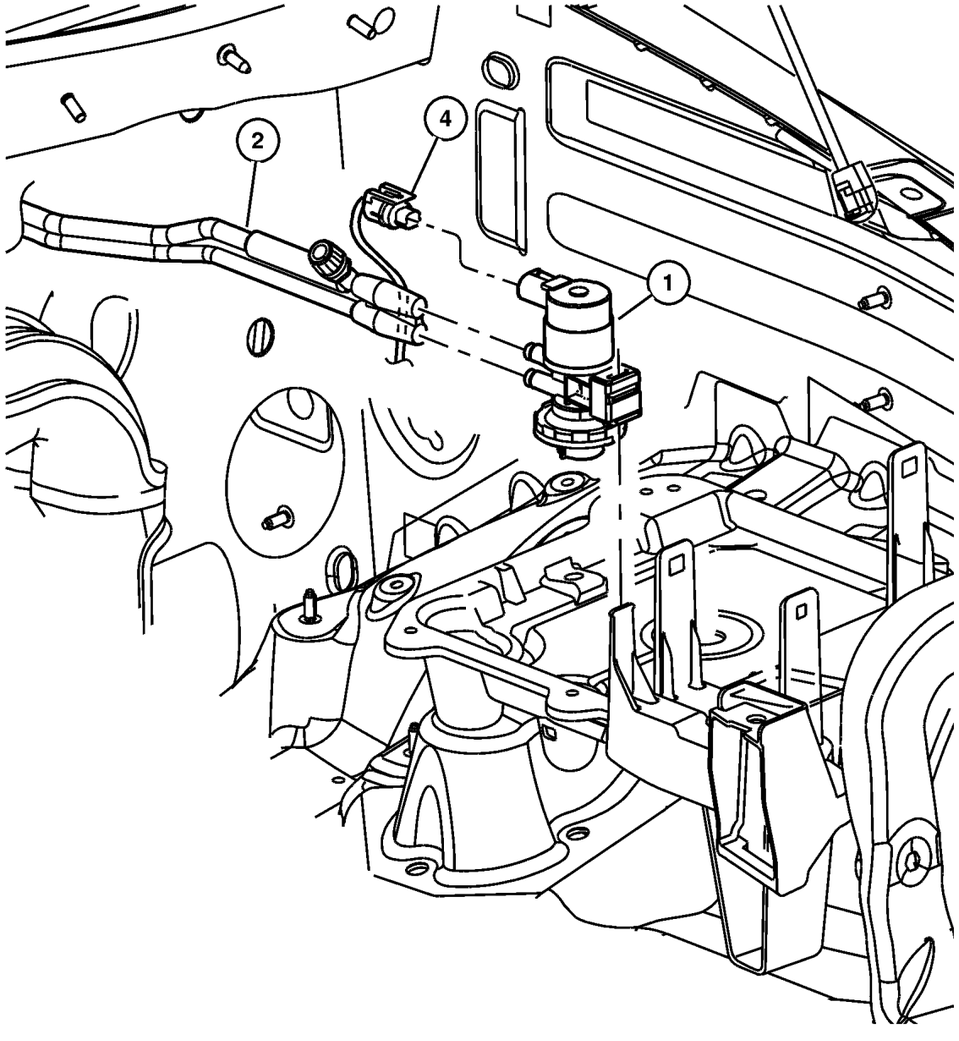

ITEM	PART NUMBER	QTY	LINE	SERIES	BODY	ENGINE	TRANS	TRIM	DESCRIPTION
Note; Sales Codes									
[ED0]= All 2.2L, 2.5L, 2.4L, 4 Cylinder Gas Engines									
[EK0]= All 3.7L 6 Cylinder Gas Engines									
1	#52090 419AA	1				ED0, EK0			SOLENOID, Proportional Purge
2	#52128 662AA	1				ED0, EK0			HARNESS, Vapor Purge
-3									TUBE, Vacuum, From Vapor Harness To Throttle Body
	#52128 663AB	1				EK0			
	#52128 666AB	1				ED0			
4									CONNECTOR, See Headlamp To Dash Wiring , Group 8, (NOT SERVICED) (Not Serviced)
-5	3580 172	1							CAP, Vacuum

JEEP LIBERTY (KJ)

SERIES	LINE	BODY	ENGINE	TRANSMISSION
P = Limited	J = LHD (4WD)	74 = 4 Dr (104.3 WB)	ED1,ED0 = 2.4L Power Tech	DDK = 5 Speed HDManual
H = Sport	U = RHD (4WD)		EKG,EK0 = 3.7L Power Tech	DDD = 5 Speed HD Manual
M = Renegade	T = LHD (2WD)		ENJ = 2.5L 4Cyl Turbo Diesel	DG4,DGQ = Multi-Speed Auto
			ENR = 2.8L 4Cyl Turbo Diesel	DG6 = 4 Speed Auto Transm
			EN0 = 4Cyl Turbo Diesel	DG0 = All Automatic Transm
				DBB = All Manual Transm

Leak Detection Pump, 2.4L [ED1], 3.7L [EKG]
Figure 025-430

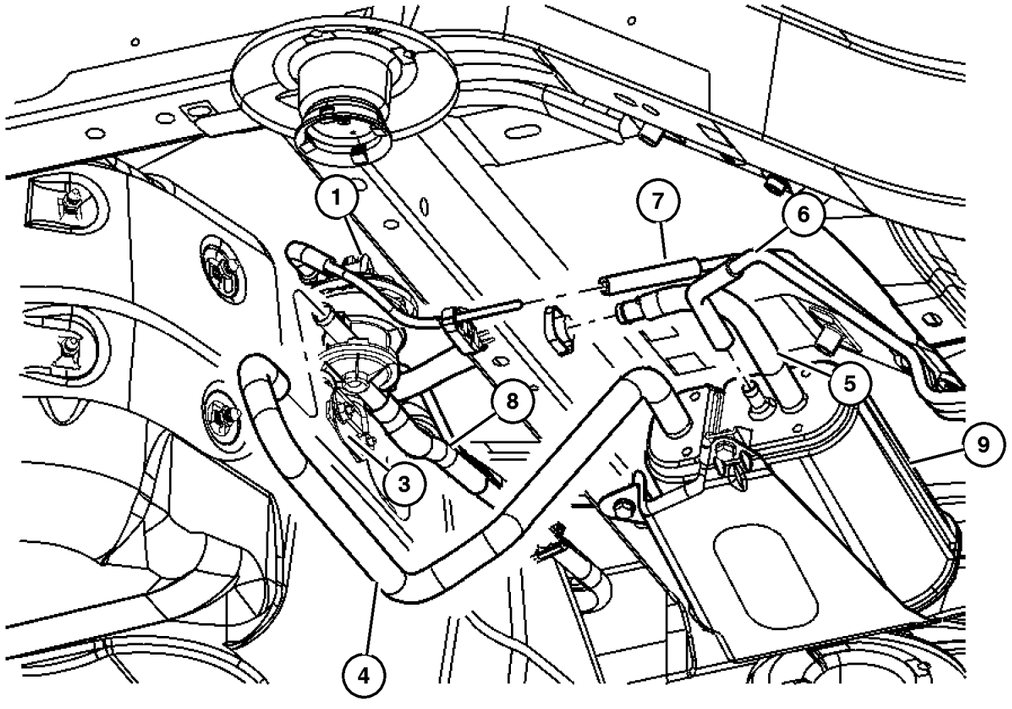

ITEM	PART NUMBER	QTY	LINE	SERIES	BODY	ENGINE	TRANS	TRIM	DESCRIPTION
Note; Sales Code									
[ED0]= All 2.2L, 2.5L, 2.4L, 4 Cylinder Gas Engines									
[EK0]= All 3.7L 6 Cylinder Gas Engines									
1	4891 525AB	1				ED0, EK0			DETECTOR, Natural Vacuum Leak Detection
-2	4612 901	1				ED0, EK0			FILTER, Fuel Vapor Vent
3	#52128 629AC	1				ED0, EK0			BRACKET, Natural Vacuum Leak Detection
4	#52128 661AA	1				ED0, EK0			HOSE, Canister to NVLD
5	#52128 679AA	1				ED0, EK0			HOSE, Canister to Vent Valve
6									TUBE, Vacuum
	#52128 663AB	1				EK0			
	#52128 666AB	1				ED0			
7	#52128 700AC	1				ED0, EK0			TUBE, Fuel Vapor
8	#52128 631AB	1				ED0, EK0			TUBE, Vapor
9	#4891 562AA	1				ED0, EK0			CANISTER, Vapor

JEEP LIBERTY (KJ)

SERIES	LINE	BODY	ENGINE	TRANSMISSION
P = Limited	J = LHD (4WD)	74 = 4 Dr (104.3 WB)	ED1,ED0 = 2.4L Power Tech	DDK = 5 Speed HDManual
H = Sport	U = RHD (4WD)		EKG,EK0 = 3.7L Power Tech	DDD = 5 Speed HD Manual
M = Renegade	T = LHD (2WD)		ENJ = 2.5L 4Cyl Turbo Diesel	DG4,DGQ = Multi-Speed Auto
			ENR = 2.8L 4Cyl Turbo Diesel	DG6 = 4 Speed Auto Transm
			EN0 = 4Cyl Turbo Diesel	DG0 = All Automatic Transm
				DBB = All Manual Transm

Group – DKJ

Doors and Related Parts

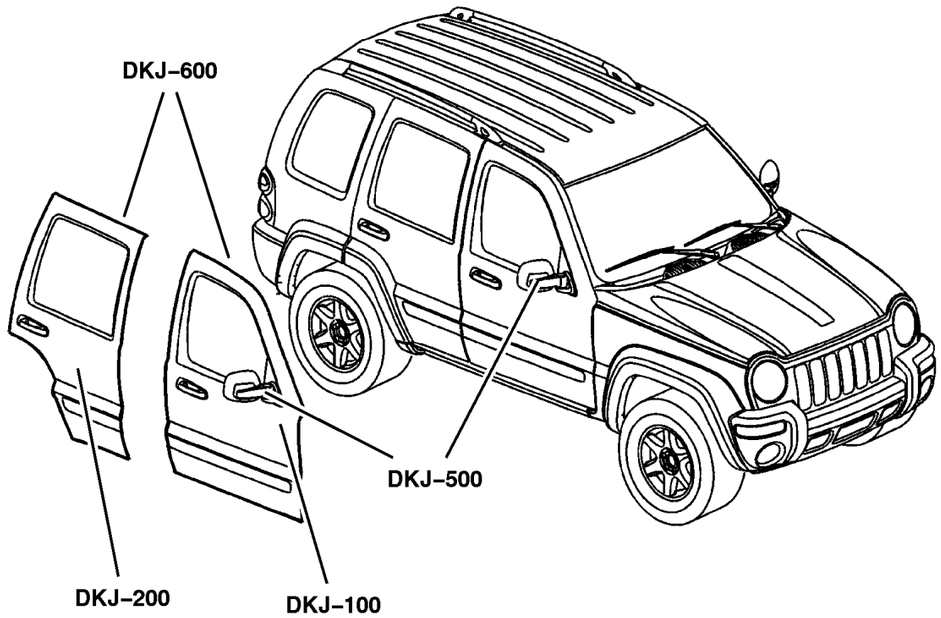

DKJ–100 Front Door	DKJ–200 Rear Door	DKJ–500 Exterior Mirror	DKJ–600 Weatherstrips and Seals
	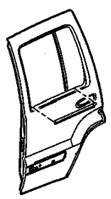		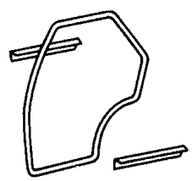

GROUP DKJ - Doors and Related Parts

Illustration Title	Group-Fig. No.
Front Door	
Door, Front, Shell and Hinges	Fig. DKJ-110
Door, Front, Glass and Regulator	Fig. DKJ-120
Door, Front, Lock and Controls	Fig. DKJ-130
Rear Door	
Door, Rear, Shell and Hinges	Fig. DKJ-210
Door, Rear, Glass and Regulator	Fig. DKJ-220
Door, Rear, Lock and Controls	Fig. DKJ-230
Exterior Mirror	
Mirrors, Exterior	Fig. DKJ-510
Weatherstrips and Seals	
Door, Front	Fig. DKJ-610
Door, Rear	Fig. DKJ-620

Door, Front, Shell and Hinges
Figure DKJ-110

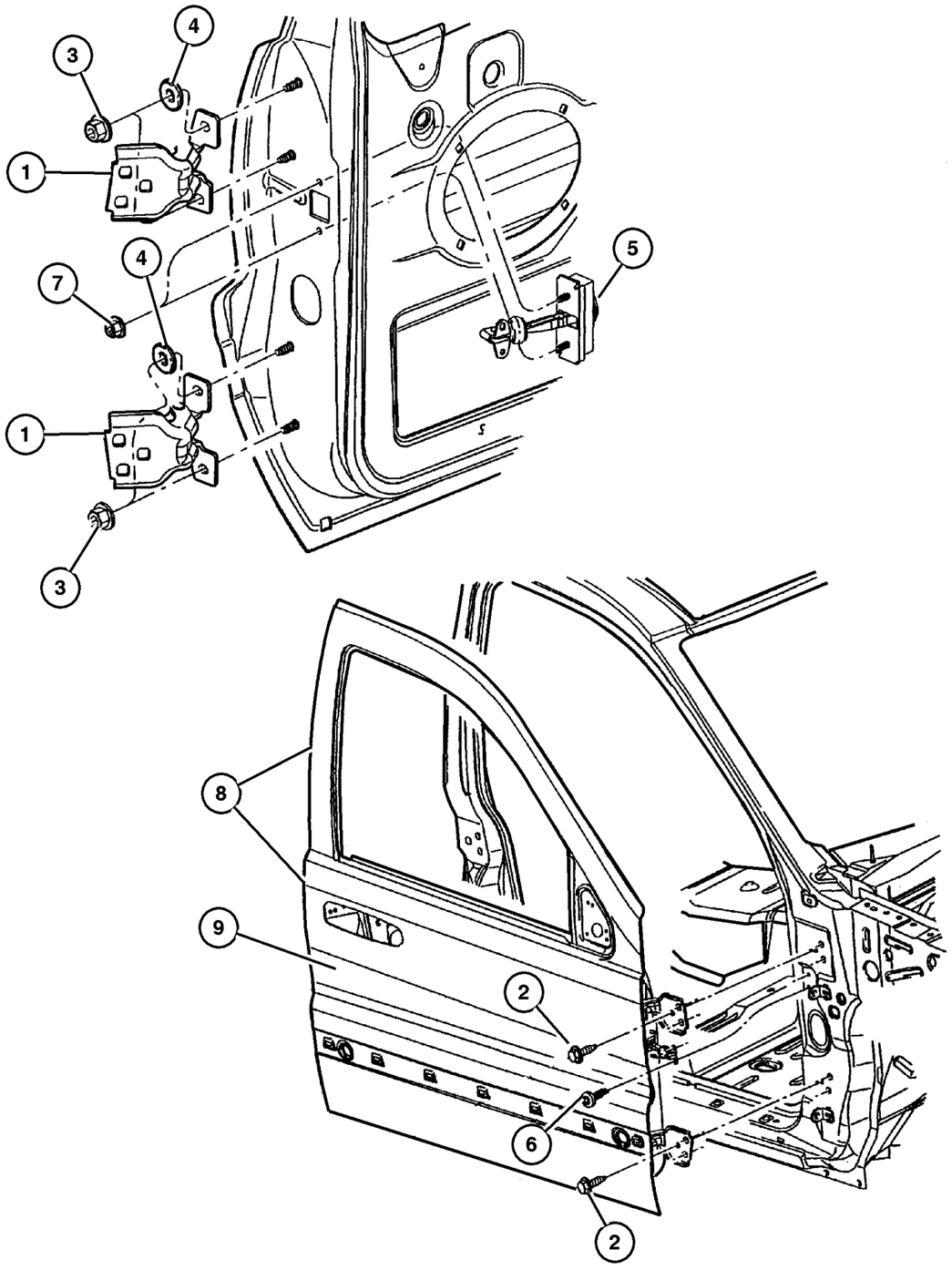

ITEM	PART NUMBER	QTY	LINE	SERIES	BODY	ENGINE	TRANS	TRIM	DESCRIPTION
1	55177 026AB	4							HINGE, Door
2	6503 328	4							SCREW, Hex Head, M8x1.25x30
3	6101 809	1							NUT AND WASHER, Hex, M8x1.25
4	55136 971AC	4							WASHER, Flat
5	55177 028AC	2							CHECK, Front Door
6									SCREW, Torx Round Head, M6-1. 0x20.0, (NOT SERVICED) (Not Serviced)
7	6503 504	2							NUT AND WASHER, Hex, M6x1
8									DOOR, Front
	55176 890AF	1							Right
	55176 891AF	1							Left
9									PANEL, Front Door Outer Repair
	55176 882AC	1							Right
	55176 883AC	1							Left
-10									NUT, Rivet, M5x.080x26.41, (NOT SERVICED) (Not Serviced)
-11	55360 636AA	1	J, T						BRACKET, Door Inside

JEEP LIBERTY (KJ)

SERIES	LINE	BODY	ENGINE	TRANSMISSION
P = Limited	J = LHD (4WD)	74 = 4 Dr (104.3 WB)	ED1,ED0 = 2.4L Power Tech	DDK = 5 Speed HDManual
H = Sport	U = RHD (4WD)		EKG,EK0 = 3.7L Power Tech	DDD = 5 Speed HD Manual
M = Renegade	T = LHD (2WD)		ENJ = 2.5L 4Cyl Turbo Diesel	DG4,DGQ = Multi-Speed Auto
			ENR = 2.8L 4Cyl Turbo Diesel	DG6 = 4 Speed Auto Transm
			EN0 = 4Cyl Turbo Diesel	DG0 = All Automatic Transm
				DBB = All Manual Transm

AR = Use as required - = Non illustrated part # = New this model year

September 30, 2003

« RETURN TO GROUP INDEX

Door, Front, Glass and Regulator
Figure DKJ-120

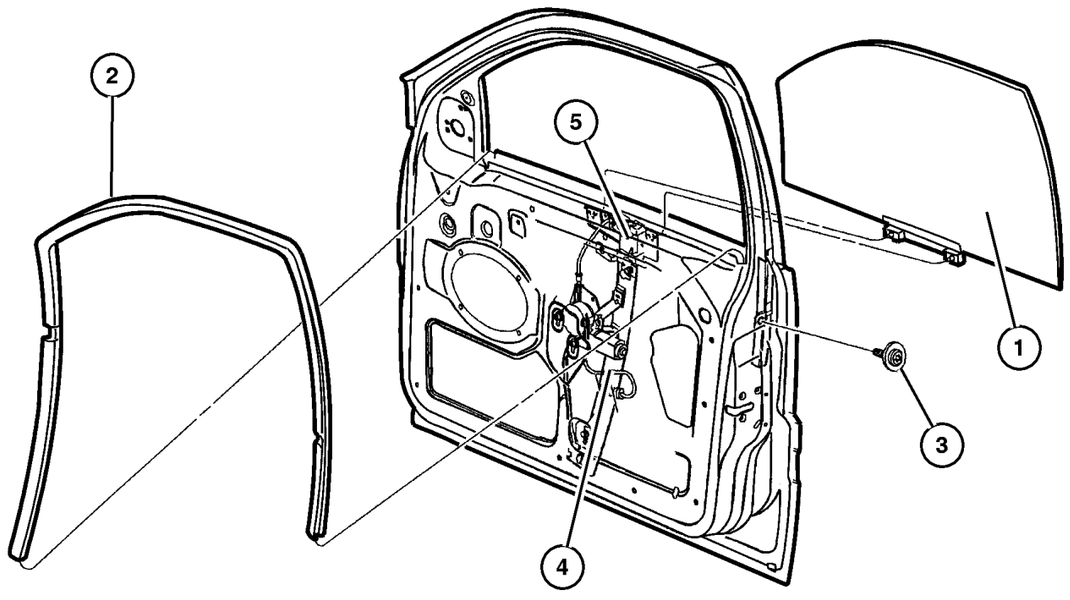

ITEM	PART NUMBER	QTY	LINE	SERIES	BODY	ENGINE	TRANS	TRIM	DESCRIPTION
1									GLASS, Front Door
	55360 374AG	1							Right
	55360 375AG	1							Left
2									WEATHERSTRIP, Glass Channel Run
	55235 874AD	1							Right
	55235 875AD	1							Left
3									SCREW AND WASHER, Tapping, M6-1.0x20.0, (NOT SERVICED) (Not Serviced)
4									REGULATOR, Front Door Window
	55360 030AH	1							With Power Windows, Right
	55360 031AH	1							With Power Windows, Left
	55360 032AF	1							Without Power Windows, Right
	55360 033AF	1							Without Power Windows, Left
5									SCREW, M6X1.00X16.00, (NOT SERVICED) (Not Serviced)
-6	FW80 XDV	2							HANDLE, Window Regulator

JEEP LIBERTY (KJ)

SERIES	LINE	BODY	ENGINE	TRANSMISSION
P = Limited	J = LHD (4WD)	74 = 4 Dr (104.3 WB)	ED1,ED0 = 2.4L Power Tech	DDK = 5 Speed HDManual
H = Sport	U = RHD (4WD)		EKG,EK0 = 3.7L Power Tech	DDD = 5 Speed HD Manual
M = Renegade	T = LHD (2WD)		ENJ = 2.5L 4Cyl Turbo Diesel	DG4,DGQ = Multi-Speed Auto
			ENR = 2.8L 4Cyl Turbo Diesel	DG6 = 4 Speed Auto Transm
			EN0 = 4Cyl Turbo Diesel	DG0 = All Automatic Transm
				DBB = All Manual Transm

Door, Front, Lock and Controls
Figure DKJ-130

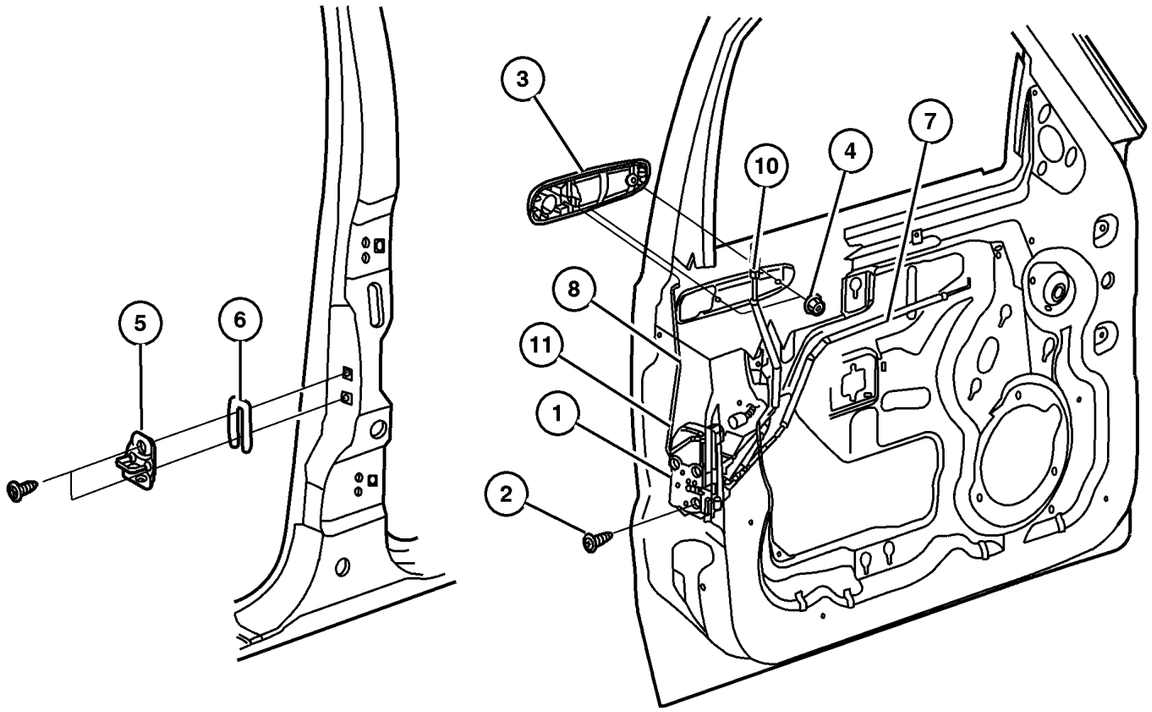

ITEM	PART NUMBER	QTY	LINE	SERIES	BODY	ENGINE	TRANS	TRIM	DESCRIPTION
Note; Sales Codes									
[JPB]= Power Locks									
1									LATCH, Front Door
	55177 040AI	1							Without [JPB,JPH], Right
	55177 041AI	1							Without [JPB,JPH], Left
	55360 611AC	1							[JPB,JPH], Without Cylinder, Right
	55177 043AI	1							[JPB,JPH], Left
2	6033 876	6							SCREW, Tapping, M6.3x1.8x38.1
3									HANDLE, Front Door Exterior
	55360 332AF	1							With Cylinder, Right
	55360 614AB	1							Without Cylinder, Right
	55360 333AF	1							Left
4	6503 226	2							NUT, Hex Flange, M5x.8
5	4780 607AA	2							STRIKER, Door
6	4520 289	AR							SPACER, Door Latch Striker
7									ROD, Inside Handle to Latch
	5072 350AA	1							Right
	5072 351AA	1							Left
8	5072 354AA	1							ROD, Inside Lock to Latch, Right
-9	4658 677	2							CLIP, Latch Link
10									ROD, Latch To Knob
	55360 534AC	1							Right
	55360 535AC	1							Left
11									LINK, Exterior Door Handle, 05072358aa-9
	5103 132AA	1							Without Cylinder, Right
	5072 358AB	1							With Cylinder, Right
	5072 359AB	1							Left
-12									CLIP, Outside Door Handle
	4615 346	1							Inner
	4615 347	1							Outer

JEEP LIBERTY (KJ)

SERIES	LINE	BODY	ENGINE	TRANSMISSION
P = Limited	J = LHD (4WD)	74 = 4 Dr (104.3 WB)	ED1,ED0 = 2.4L Power Tech	DDK = 5 Speed HDManual
H = Sport	U = RHD (4WD)		EKG,EK0 = 3.7L Power Tech	DDD = 5 Speed HD Manual
M = Renegade	T = LHD (2WD)		ENJ = 2.5L 4Cyl Turbo Diesel	DG4,DGQ = Multi-Speed Auto
			ENR = 2.8L 4Cyl Turbo Diesel	DG6 = 4 Speed Auto Transm
			EN0 = 4Cyl Turbo Diesel	DG0 = All Automatic Transm
				DBB = All Manual Transm

Door, Rear, Shell and Hinges
Figure DKJ-210

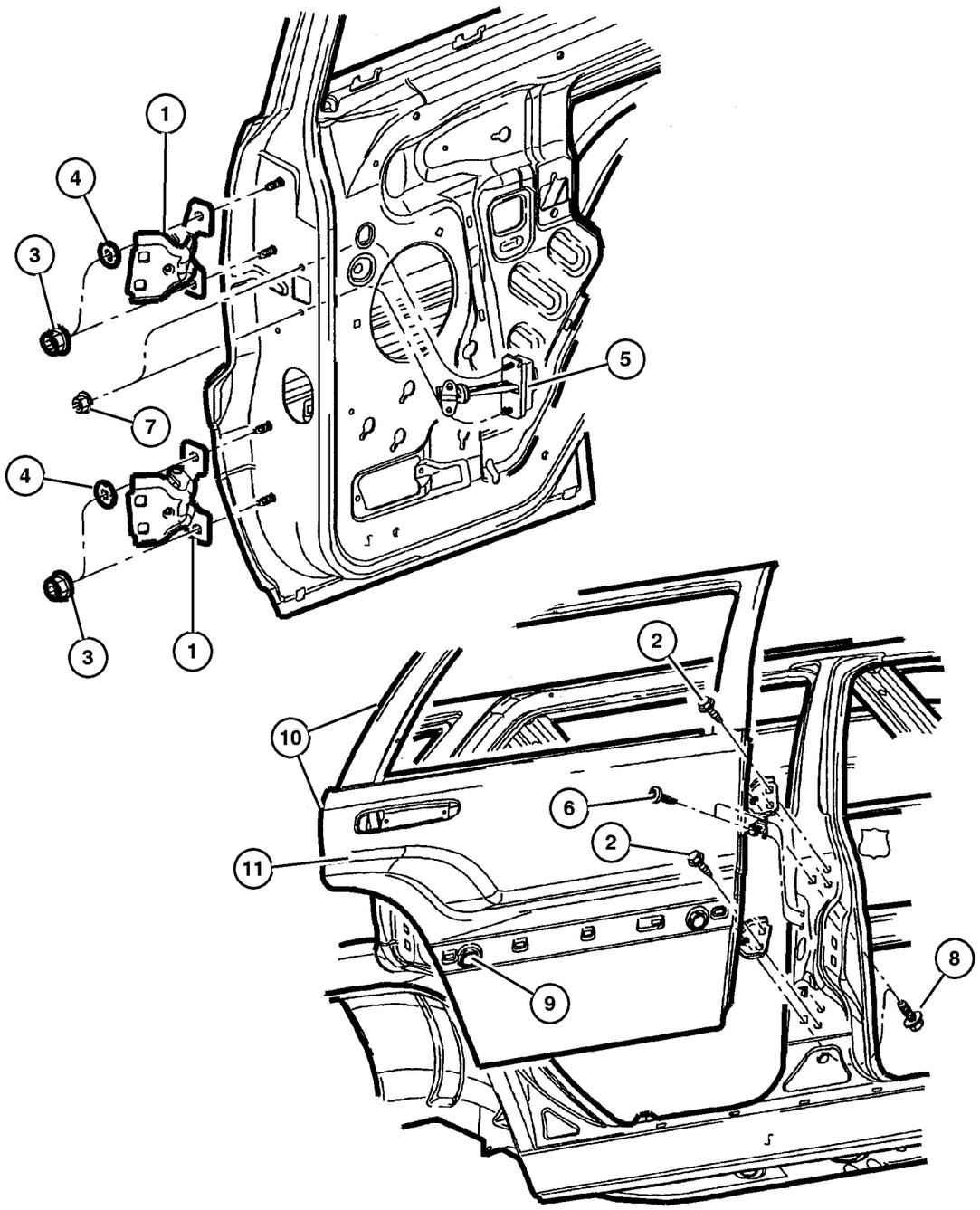

ITEM	PART NUMBER	QTY	LINE	SERIES	BODY	ENGINE	TRANS	TRIM	DESCRIPTION
1	55177 030AD	4							HINGE, Door
2	6503 328	4							SCREW, Hex Head, M8x1.25x30
3	6101 809	1							NUT AND WASHER, Hex, M8x1.25
4	55136 971AC	4							WASHER, Flat
5	55177 036AC	2							CHECK, Rear Door
6									SCREW, Torx Head, M6x1.0x16, (NOT SERVICED) (Not Serviced)
7	6503 504	2							NUT AND WASHER, Hex, M6x1
8									SCREW AND WASHER, Hex Head, M8x1.25x30, (NOT SERVICED) (Not Serviced)
9	55136 859AA	2							PLUG
10									DOOR, Rear
	55176 907AF	1							Left
	55176 906AF	1							Right
11									PANEL, Rear Door
	55176 908AC	1							Right
	55176 909AC	1							Left

JEEP LIBERTY (KJ)

SERIES	LINE	BODY	ENGINE	TRANSMISSION
P = Limited	J = LHD (4WD)	74 = 4 Dr (104.3 WB)	ED1,ED0 = 2.4L Power Tech	DDK = 5 Speed HDManual
H = Sport	U = RHD (4WD)		EKG,EK0 = 3.7L Power Tech	DDD = 5 Speed HD Manual
M = Renegade	T = LHD (2WD)		ENJ = 2.5L 4Cyl Turbo Diesel	DG4,DGQ = Multi-Speed Auto
			ENR = 2.8L 4Cyl Turbo Diesel	DG6 = 4 Speed Auto Transm
			EN0 = 4Cyl Turbo Diesel	DG0 = All Automatic Transm
				DBB = All Manual Transm

AR = Use as required - = Non illustrated part # = New this model year

September 30, 2003

« RETURN TO GROUP INDEX

Door, Rear, Glass and Regulator
Figure DKJ-220

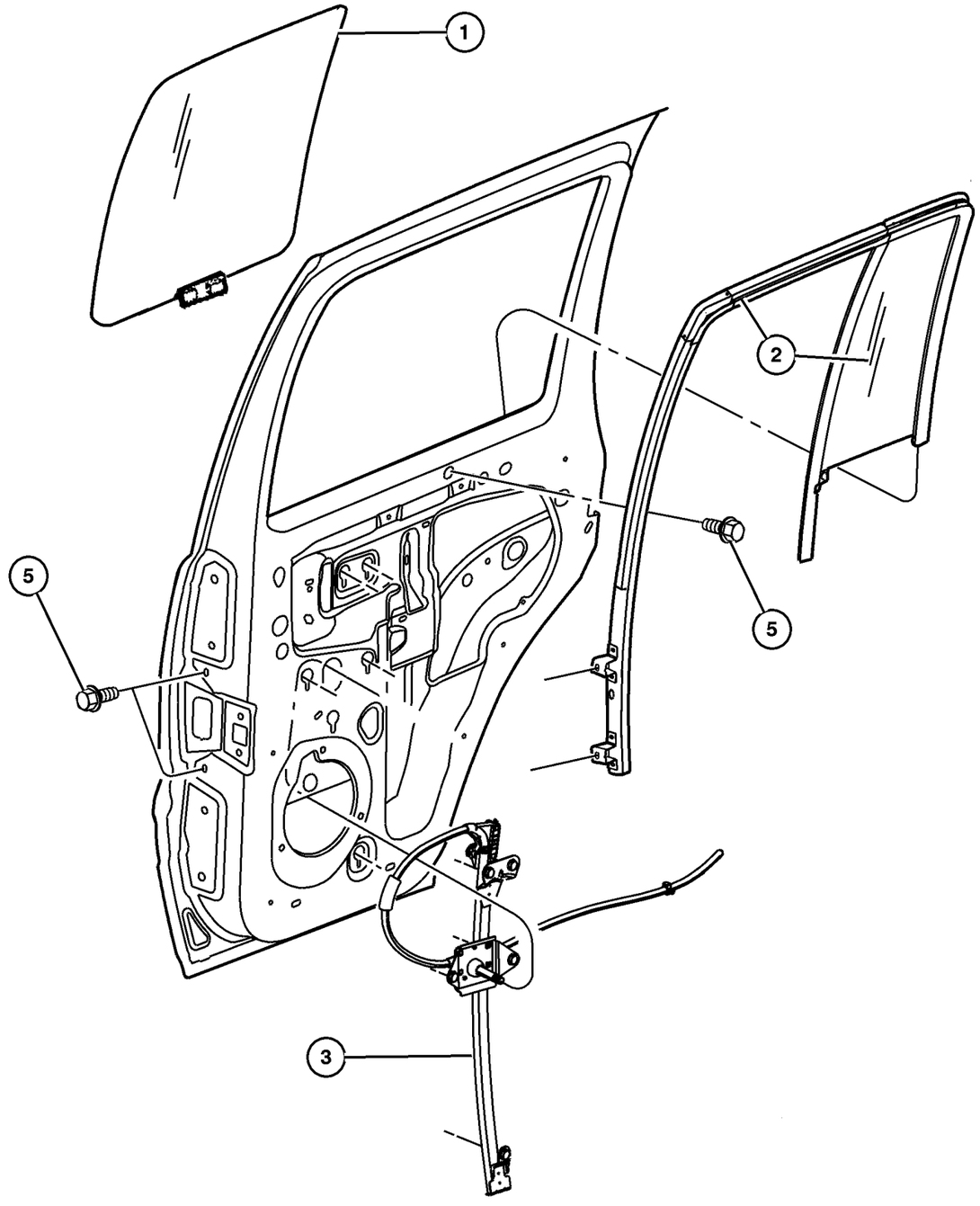

ITEM	PART NUMBER	QTY	LINE	SERIES	BODY	ENGINE	TRANS	TRIM	DESCRIPTION
Note; Sales Codes									
[GEG] = Glass - Deep Tint Sunscreen									
[GEJ] = Glass - Tinted									
[JPD] = Window - Power									
1									GLASS, Rear Door, Roll Up
	55360 376AF	1							[GEJ], Right
	55360 377AE	1							[GEJ], Left
	55360 378AF	1							[GEG], Right
	55360 379AF	1							[GEG], Left
2									GLASS, Rear Door, Fixed, With Weatherstrip
	5103 248AC	1							[GEJ], Right
	5103 247AC	1							[GEJ], Left
	5103 252AC	1							[GEG], Right
	5103 251AC	1							[GEG], Left
3									REGULATOR, Rear Door Window
	55360 034AG	1							With Power Windows, Right
	55360 035AG	1							With Power Windows, Left
	55360 036AE	1							Without Power Windows, Right
	55360 037AE	1							Without Power Windows, Left
-4									HANDLE, Window Regulator
	FW80 WL5	2							[L5]
	FW80 XDV	2							[DV]
5									SCREW, (NOT SERVICED) (Not Serviced)

JEEP LIBERTY (KJ)

SERIES	LINE	BODY	ENGINE	TRANSMISSION
P = Limited	J = LHD (4WD)	74 = 4 Dr (104.3 WB)	ED1,ED0 = 2.4L Power Tech	DDK = 5 Speed HDManual
H = Sport	U = RHD (4WD)		EKG,EK0 = 3.7L Power Tech	DDD = 5 Speed HD Manual
M = Renegade	T = LHD (2WD)		ENJ = 2.5L 4Cyl Turbo Diesel	DG4,DGQ = Multi-Speed Auto
			ENR = 2.8L 4Cyl Turbo Diesel	DG6 = 4 Speed Auto Transm
			EN0 = 4Cyl Turbo Diesel	DG0 = All Automatic Transm
				DBB = All Manual Transm

Door, Rear, Lock and Controls
Figure DKJ-230

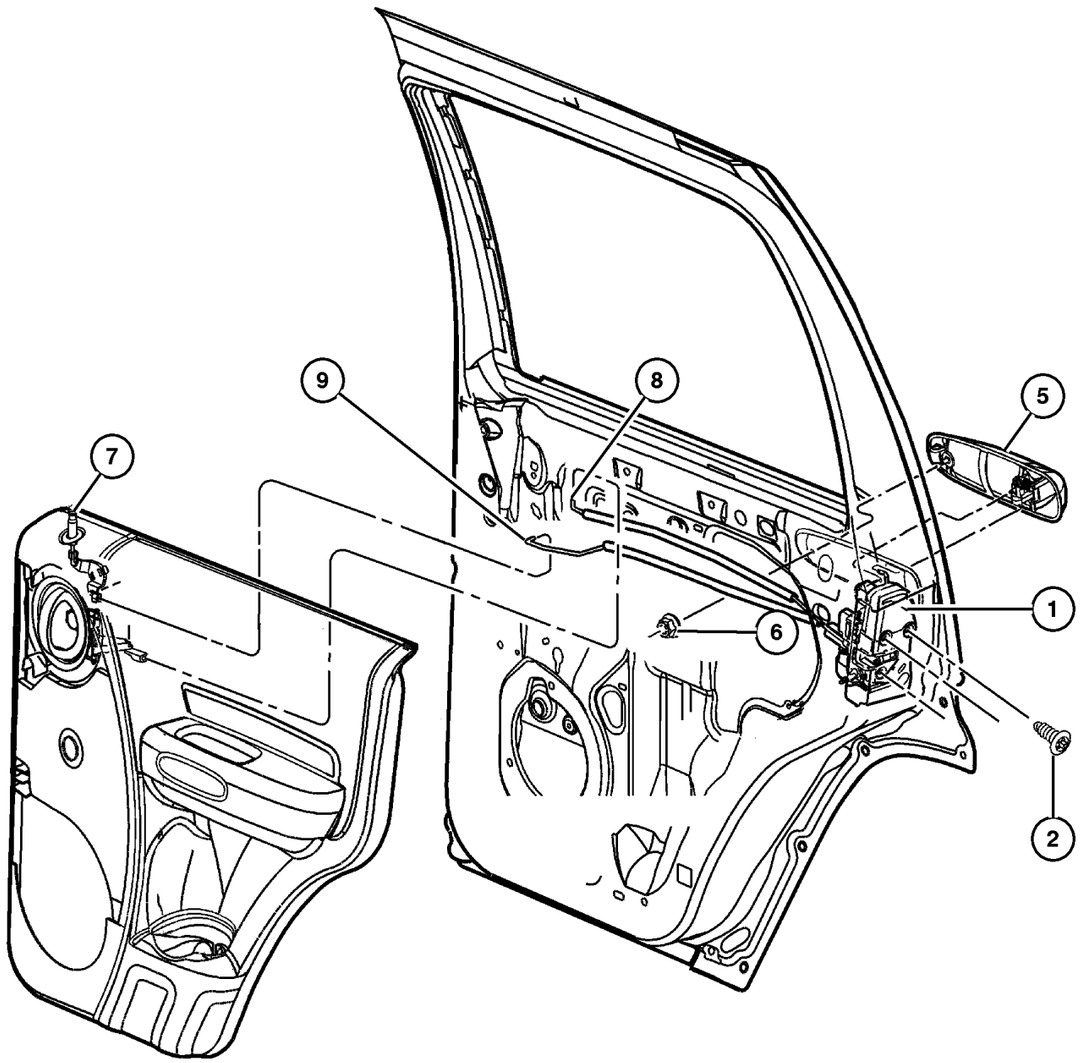

ITEM	PART NUMBER	QTY	LINE	SERIES	BODY	ENGINE	TRANS	TRIM	DESCRIPTION
Note; Sales Codes									
[JPB]- Power Locks									
1									LATCH, Rear Door
	55177 044AG	1							With [JPB,JPH], Right
	55177 045AG	1							With [JPB,JPH], Left
	55177 046AG	1							Without [JPB,JPH], Right
	55177 047AG	1							Without [JPB,JPH], Left
2	6033 876	6							SCREW, Tapping, M6.3x1.8x38.1
-3	4780 607AA	2							STRIKER, Door
-4	4520 289	AR							SPACER, Door Latch Striker
5									HANDLE, Exterior Door
	55360 334AF	1							Right
	55360 335AF	1							Left
6	6503 226	2							NUT, Hex Flange, M5x.8
7									KNOB, Door Lock
	55360 464AB	1							Right
	55360 465AB	1							Left
8									ROD, Inside Handle to Latch
	5072 356AA	1							Right
	5072 357AA	1							Left
9									ROD, Inside Lock to Latch
	5072 360AB	1							Right
	5072 361AB	1							Left
-10									LINK, Exterior Door Handle, 05072358ab-9
	5072 358AB	1							Right
	5072 359AB	1							Left
-11									COVER, Latch-Anti Theft
	5014 395AA	1							Right
	5014 396AA	1							Left

JEEP LIBERTY (KJ)

SERIES	LINE	BODY	ENGINE	TRANSMISSION
P = Limited	J = LHD (4WD)	74 = 4 Dr (104.3 WB)	ED1,ED0 = 2.4L Power Tech	DDK = 5 Speed HDManual
H = Sport	U = RHD (4WD)		EKG,EK0 = 3.7L Power Tech	DDD = 5 Speed HD Manual
M = Renegade	T = LHD (2WD)		ENJ = 2.5L 4Cyl Turbo Diesel	DG4,DGQ = Multi-Speed Auto
			ENR = 2.8L 4Cyl Turbo Diesel	DG6 = 4 Speed Auto Transm
			EN0 = 4Cyl Turbo Diesel	DG0 = All Automatic Transm
				DBB = All Manual Transm

Mirrors, Exterior
Figure DKJ-510

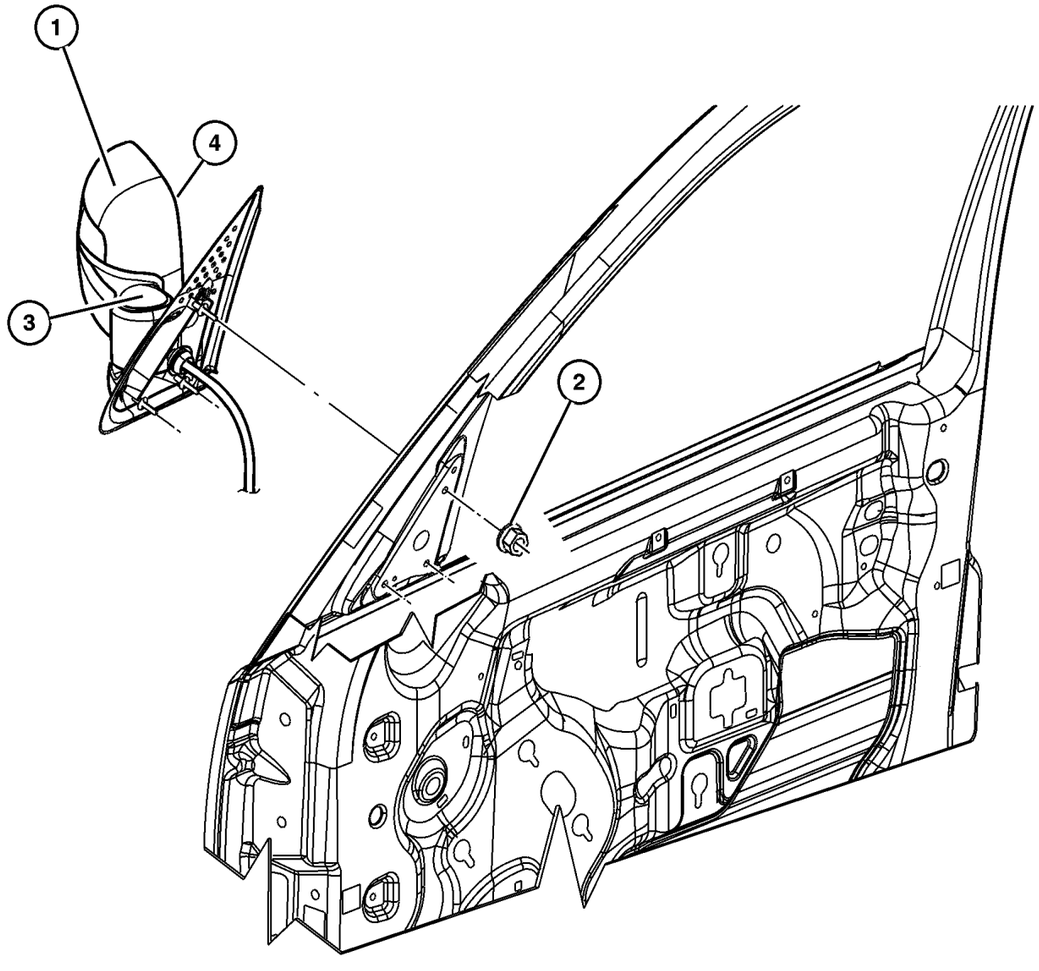

ITEM	PART NUMBER	QTY	LINE	SERIES	BODY	ENGINE	TRANS	TRIM	DESCRIPTION
Note; Sales Codes									
[GT9] = Mirrors - Power Heated Memory F/Away									
[GTB] = Mirrors - Power Heated									
[GTJ] = Mirrors - Power									
[GTP] = Mirrors - Manual - Fold Away									
[GPF] = Mirrors - Manual - Fold Away Black									
1									MIRROR, Outside Rearview
	55155 836AE	1	J, T						[GTP], Right
	55155 849AE	1	U						[GPF], Left
	55156 411AD	1							[GUW], Left
	55155 837AE	1	J, T						[GTP], Left
	55155 839AE	1	J, T						[GTB], Right
	55155 840AE	1	J, T						[GT9], Right
	55155 841AE	1	J, T						[GT9], Left
	55155 843AE	1	J, T						[GTS,GTB], Left
	55155 846AE	1	U						[GTJ], Right
	55155 847AE	1	U						[GTJ], Left
	55155 848AE	1	U						[GPF], Right
2	6504 047	6							NUT AND WASHER, Hex, M5x.80
3									COVER, Mirror Flag
	5086 298AA	1	J, T						Right
	5086 299AA	1	J, T						Left
	5086 298AA	1	U						Right
	5086 299AA	1	U						Left
4									GLASS, Mirror Replacement
	5083 982AA	1	J, T						[GTP], Right
	5083 985AA	1	U						[GPF], Left
	5083 983AA	1	J, T						[GTP], Left
	5083 986AA	1	J, T						[GTB], Right
	5083 982AA	1	J, T						[GT9], Right
	5083 983AA	1	J, T						[GT9], Left
	5083 989AA	1	J, T						[GTS,GTB], Left
	5083 990AA	1	U						[GTJ], Right
	5083 991AA	1	U						[GTJ], Left
	5083 984AA	1	U						[GPF], Right

JEEP LIBERTY (KJ)

SERIES	LINE	BODY	ENGINE	TRANSMISSION
P = Limited	J = LHD (4WD)	74 = 4 Dr (104.3 WB)	ED1,ED0 = 2.4L Power Tech	DDK = 5 Speed HDManual
H = Sport	U = RHD (4WD)		EKG,EK0 = 3.7L Power Tech	DDD = 5 Speed HD Manual
M = Renegade	T = LHD (2WD)		ENJ = 2.5L 4Cyl Turbo Diesel	DG4,DGQ = Multi-Speed Auto
			ENR = 2.8L 4Cyl Turbo Diesel	DG6 = 4 Speed Auto Transm
			EN0 = 4Cyl Turbo Diesel	DG0 = All Automatic Transm
				DBB = All Manual Transm

Door, Front
Figure DKJ-610

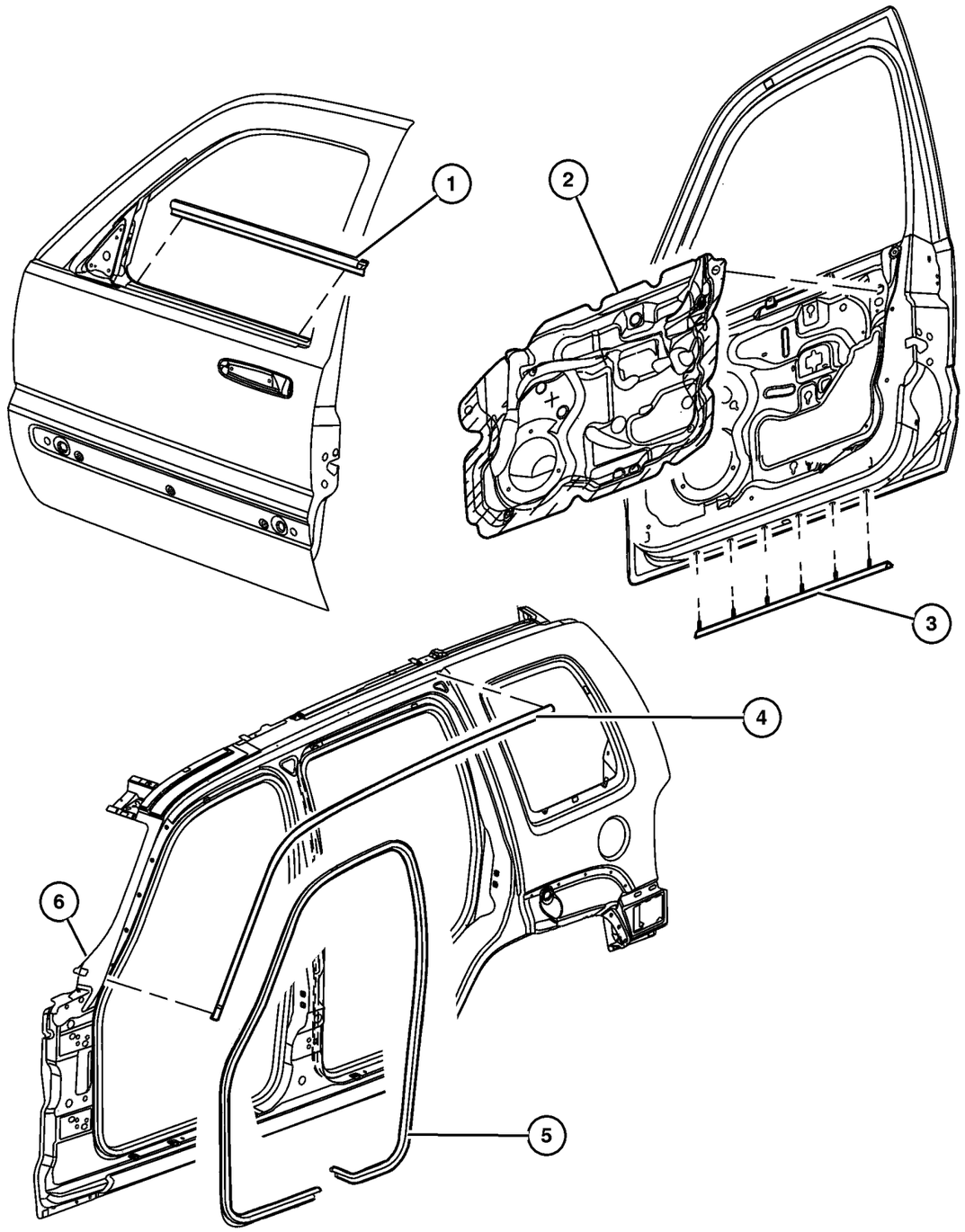

ITEM	PART NUMBER	QTY	LINE	SERIES	BODY	ENGINE	TRANS	TRIM	DESCRIPTION
1									WEATHERSTRIP, Door Belt
	55360 642AA	1							Right
	55360 643AA	1							Left
2									WATERDAM, Front Door
	55235 892AG	1							Right
	55235 893AG	1							Left
3	55360 663AA	2							SEAL, Rocker
4									SEAL, Door
	55235 918AI	1							Right
	55235 919AI	1							Left
5	5GU15 XXXAH	2							WEATHERSEAL, Full Door To Body
6									SEAL, A-Pillar Blocker, Body Mounted
	55360 542AD	1							Right
	55360 543AD	1							Left
-7	55360 256AC	2							SEAL, A-Pillar, Door Mounted

JEEP LIBERTY (KJ)

SERIES	LINE	BODY	ENGINE	TRANSMISSION
P = Limited	J = LHD (4WD)	74 = 4 Dr (104.3 WB)	ED1,ED0 = 2.4L Power Tech	DDK = 5 Speed HDManual
H = Sport	U = RHD (4WD)		EKG,EK0 = 3.7L Power Tech	DDD = 5 Speed HD Manual
M = Renegade	T = LHD (2WD)		ENJ = 2.5L 4Cyl Turbo Diesel	DG4,DGQ = Multi-Speed Auto
			ENR = 2.8L 4Cyl Turbo Diesel	DG6 = 4 Speed Auto Transm
			EN0 = 4Cyl Turbo Diesel	DG0 = All Automatic Transm
				DBB = All Manual Transm

Door, Rear
Figure DKJ-620

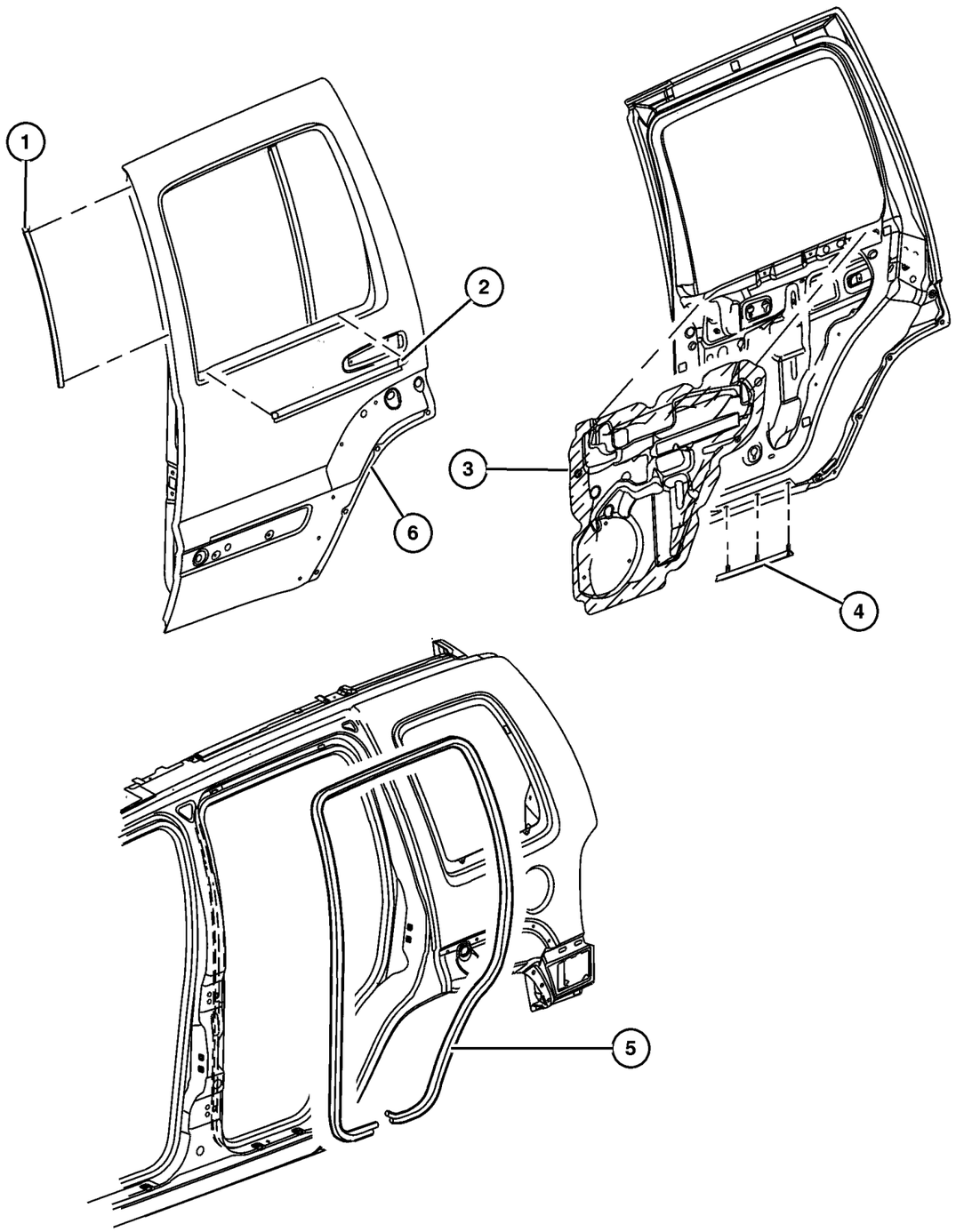

ITEM	PART NUMBER	QTY	LINE	SERIES	BODY	ENGINE	TRANS	TRIM	DESCRIPTION
1	55235 880AB	2							WEATHERSTRIP, B Pillar
									Secondary
2									WEATHERSTRIP, Belt
	55360 644AC	1							Right
	55360 645AC	1							Left
3									WATERDAM, Rear Door
	55235 894AH	1							Right
	55235 895AH	1							Left
4	55360 664AA	2							SEAL, Rocker
5									WEATHERSEAL, Full Door To Body
	5JD42 XXXAF	1							Right
	5GU13 XXXAH	1							Left
6	55360 254AA	1							SEAL, Moulding

JEEP LIBERTY (KJ)

SERIES	LINE	BODY	ENGINE	TRANSMISSION
P = Limited	J = LHD (4WD)	74 = 4 Dr (104.3 WB)	ED1,ED0 = 2.4L Power Tech	DDK = 5 Speed HDManual
H = Sport	U = RHD (4WD)		EKG,EK0 = 3.7L Power Tech	DDD = 5 Speed HD Manual
M = Renegade	T = LHD (2WD)		ENJ = 2.5L 4Cyl Turbo Diesel	DG4,DGQ = Multi-Speed Auto
			ENR = 2.8L 4Cyl Turbo Diesel	DG6 = 4 Speed Auto Transm
			EN0 = 4Cyl Turbo Diesel	DG0 = All Automatic Transm
				DBB = All Manual Transm

Group – EKJ
Exterior Ornamentation

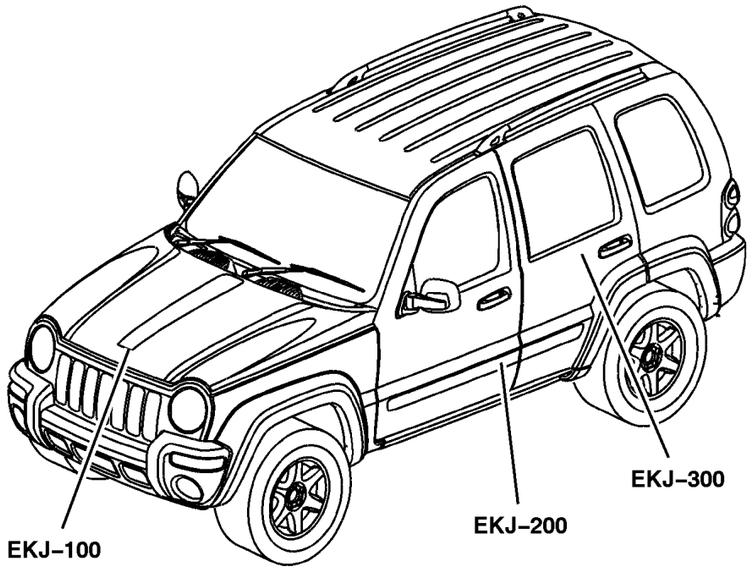

EKJ–100 Nameplates	EKJ–200 Moldings and Ornamentation	EKJ–300 Decals and Tapestripes	
	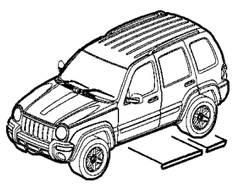		

GROUP EKJ - Exterior Ornamentation

Illustration Title — Group-Fig. No.

Nameplates
Nameplats . . . . . Fig. EKJ-110

Moldings and Ornamentation
Moldings, Body Side . . . . . Fig. EKJ-210
Side Rails, Tubular [MRK] . . . . . Fig. EKJ-220

Decals and Tapestripes
Decals . . . . . Fig. EKJ-310

Nameplats
Figure EKJ-110

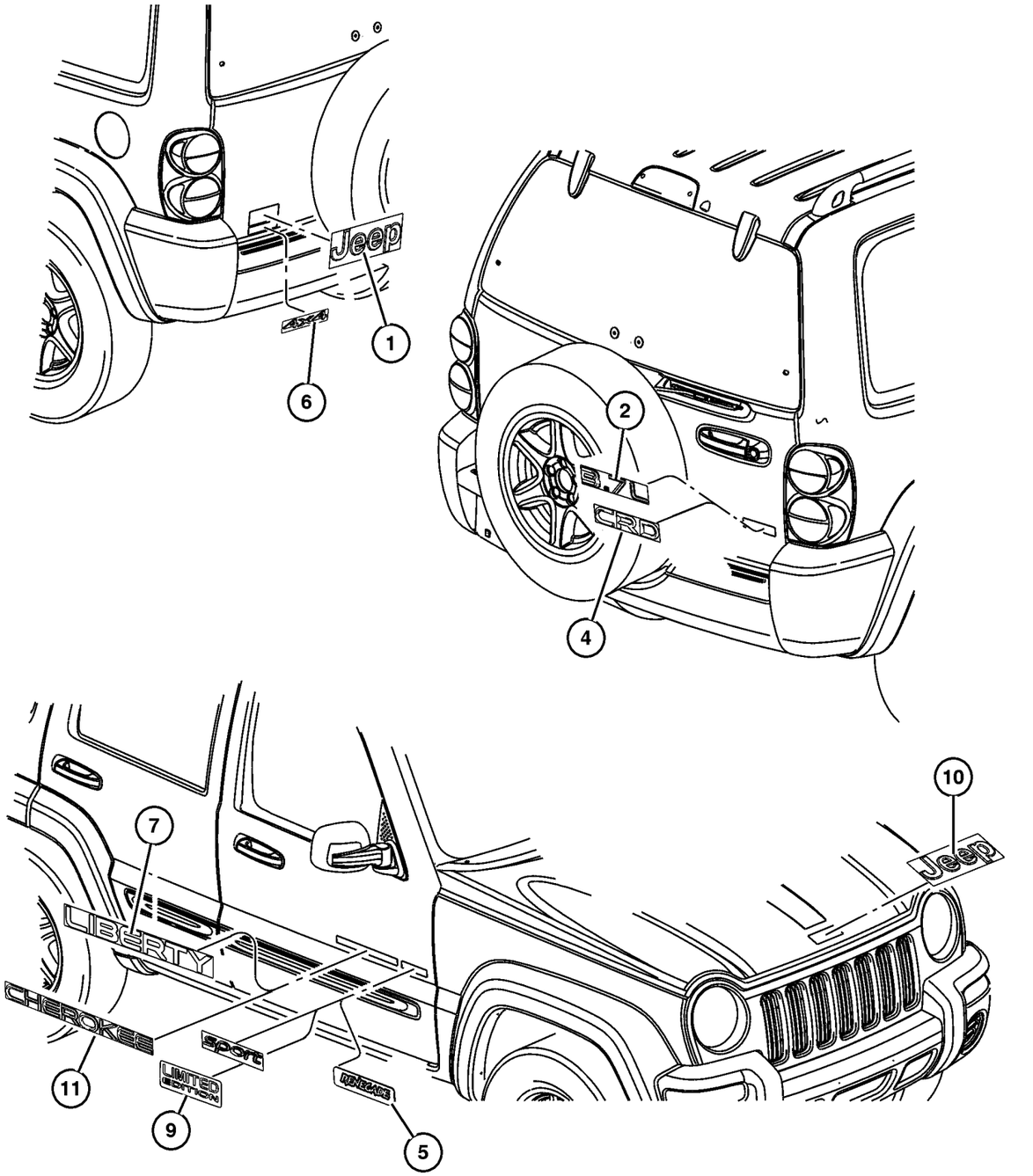

ITEM	PART NUMBER	QTY	LINE	SERIES	BODY	ENGINE	TRANS	TRIM	DESCRIPTION
Note; Sales Codes									
[MZR]= Common Rail Diesel									
1	55156 554AE	1							DECAL, JEEP, [MVC]
2	55156 275AF	1							DECAL, 3.7L, [MZL]
-3	5JN17 CA1AB	1							NAMEPLATE, 3.7L, [KFS]
4	55156 405AD	1							DECAL, CRD, [MZR]
5	52112 057AA	2							DIMENSIONAL GRAPHIC, Renegade, [MZ2]
6	5JN16 CA1AB	1	J, U						NAMEPLATE, 4X4, [KRS]
7	5JN11 CA1AB	2							NAMEPLATE, Liberty, [KLS]
-8	55156 604AD	2							DECAL, Liberty, [MZ3]
9	55156 605AA	2							DECAL, Limited Edition , [MZ2]
10	55156 554AE	1							DECAL, JEEP, [MVC]
11	55156 272AG	2							DECAL, Cherokee, [MZC]
-12	4399 791	2							REFLECTOR, Fascia
-13	52112 057AA	2							DIMENSIONAL GRAPHIC, Freedom Edition

JEEP LIBERTY (KJ)

SERIES	LINE	BODY	ENGINE	TRANSMISSION
P = Limited	J = LHD (4WD)	74 = 4 Dr (104.3 WB)	ED1,ED0 = 2.4L Power Tech	DDK = 5 Speed HDManual
H = Sport	U = RHD (4WD)		EKG,EK0 = 3.7L Power Tech	DDD = 5 Speed HD Manual
M = Renegade	T = LHD (2WD)		ENJ = 2.5L 4Cyl Turbo Diesel	DG4,DGQ = Multi-Speed Auto
			ENR = 2.8L 4Cyl Turbo Diesel	DG6 = 4 Speed Auto Transm
			EN0 = 4Cyl Turbo Diesel	DG0 = All Automatic Transm
				DBB = All Manual Transm

AR = Use as required - = Non illustrated part # = New this model year

September 30, 2003

« RETURN TO GROUP INDEX

Moldings, Body Side
Figure EKJ-210

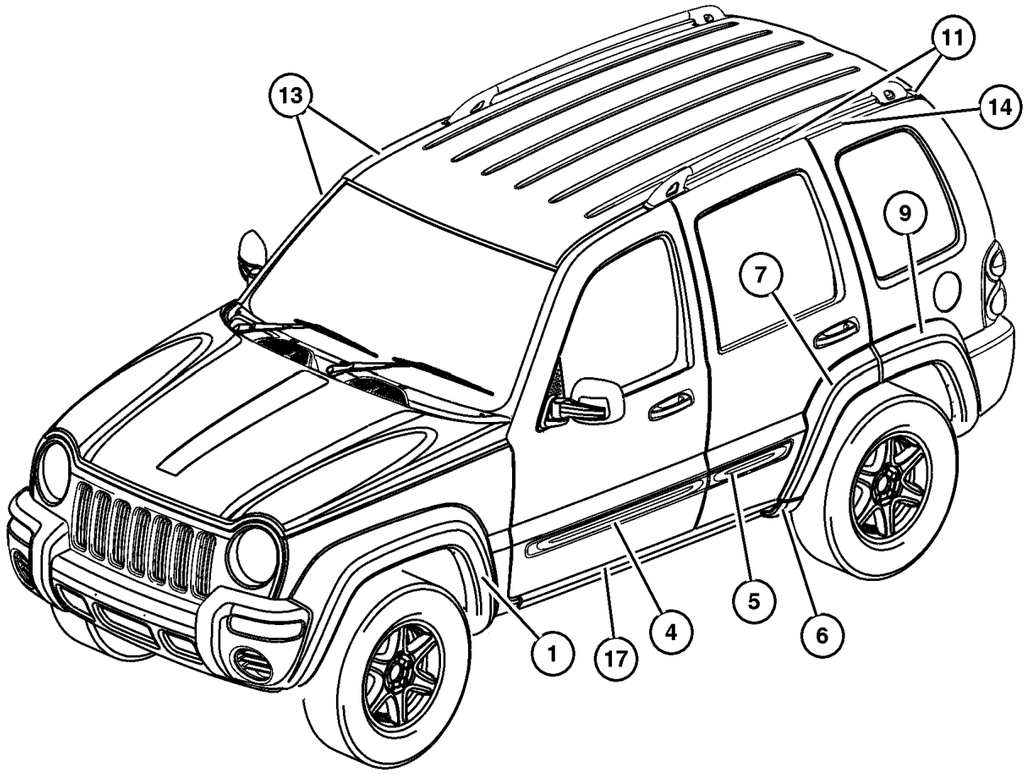

ITEM	PART NUMBER	QTY	LINE	SERIES	BODY	ENGINE	TRANS	TRIM	DESCRIPTION
NOTE									
Sales Code :[MWG] = Roof Rack									
Sales Code :[MRK] = Side Step									
Sales Code : [APA] = Australia Equipment Group									
1									APPLIQUE, Fender Wheel Opening
	5GG96 HS5AG	1		H					[K3A], Right
	5HV45 WS2AD	1							[K4S], Left
	5GH00 AGWAF	1		P					[K5G], Right
	5GH00 AJCAF	1		P					[K5K], Right
	5GH00 BR8AF	1		P					[K5H], Right
	5GH00 DX8AF	1		P					[K5X], Right
	5GH00 PR4AF	1		P					[K5R], Right
	5GH00 SW1AF	1		P					[K5W], Right
	5GH00 WB7AF	1		P					[K5B], Right
	5GH00 WS2AF	1		P					[K5S], Right
	5GH00 ZBJAF	1		P					[K5D], Right
	5GG96 HS5AG	1		H					[K3A], Left
	5GH01 AGWAF	1		P					[K5G], Left
	5GH01 AJCAF	1		P					[K5K], Left
	5GH01 BR8AF	1		P					[K5H], Left
	5GH01 DX8AF	1		P					[K5X], Left
	5GH01 PR4AF	1		P					[K5R], Left
	5GH01 SW1AF	1		P					[K5W], Left
	5GH01 WB7AF	1		P					[K5B], Left
	5GH01 WS2AF	1		P					[K5S], Left
	5GH01 ZBJAF	1		P					[K5D], Left
	5HV46 AFMAD	1							[K4C], Right
	5HV46 AJCAD	1							[K4K], Right
	5HV46 DX8AD	1							[K4X], Right
	5HV46 WS2AD	1							[K4S], Right
	5HV45 AFMAD	1							[K4C], Left
	5HV45 AJCAD	1							[K4K], Left
	5HV45 DX8AD	1							[K4X], Left
-2	55156 429AA	3							RETAINER, Applique
-3	55156 447AA	11							PIN, Push
4									MOLDING, Front Door
	5GF34 HS5AB	1		H					[K1A], Right
	5GF54 WS2AB	1		P					[K2S], Right
	5GF54 ZBJAB	1		P					[K2D], Right
	5GF55 AGWAB	1		P					[K2G], Left
	5GF55 AJCAB	1		P					[K2K], Left

JEEP LIBERTY (KJ)

SERIES	LINE	BODY	ENGINE	TRANSMISSION
P = Limited	J = LHD (4WD)	74 = 4 Dr (104.3 WB)	ED1,ED0 = 2.4L Power Tech	DDK = 5 Speed HDManual
H = Sport	U = RHD (4WD)		EKG,EK0 = 3.7L Power Tech	DDD = 5 Speed HD Manual
M = Renegade	T = LHD (2WD)		ENJ = 2.5L 4Cyl Turbo Diesel	DG4,DGQ = Multi-Speed Auto
			ENR = 2.8L 4Cyl Turbo Diesel	DG6 = 4 Speed Auto Transm
			EN0 = 4Cyl Turbo Diesel	DG0 = All Automatic Transm
				DBB = All Manual Transm

Moldings, Body Side
Figure EKJ-210

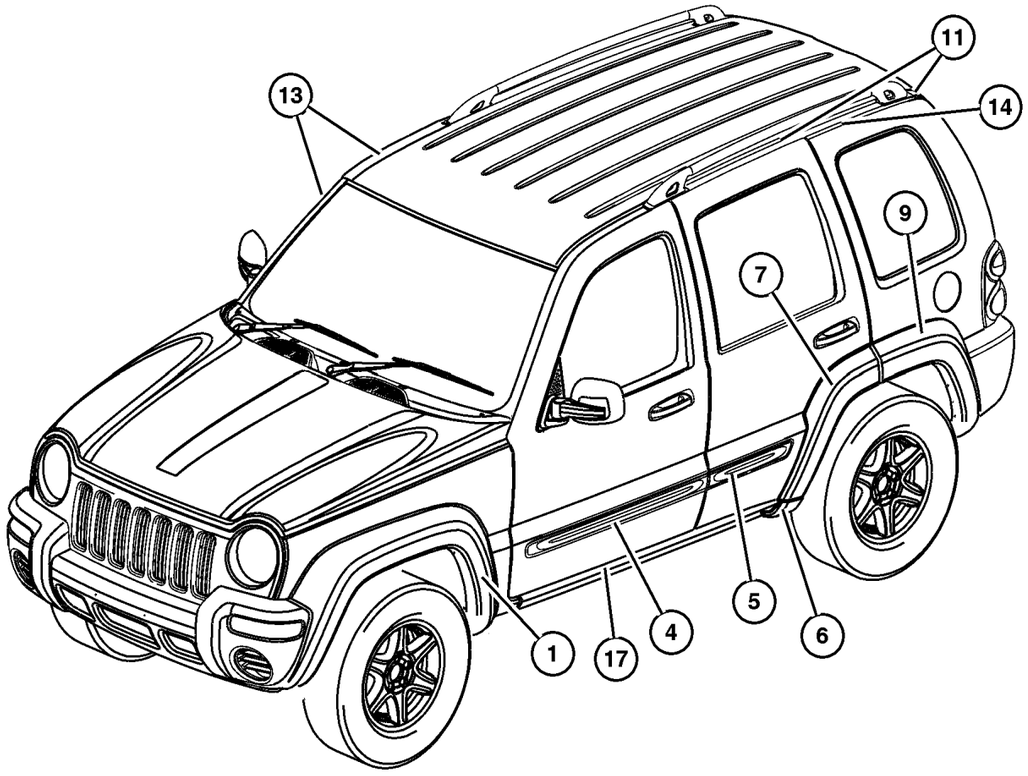

ITEM	PART NUMBER	QTY	LINE	SERIES	BODY	ENGINE	TRANS	TRIM	DESCRIPTION
	5GF55 BR8AB	1		P					[K2H], Left
	5GF55 DX8AB	1		P					[K2X], Left
	5GF55 PR4AB	1		P					[K2R], Left
	5GF55 SW1AB	1		P					[K2W], Left
	5GF55 WB7AB	1		P					[K2B], Left
	5GF55 WS2AB	1		P					[K2S], Left
	5GF35 HS5AB	1		H					[K1A], Left
	5GF55 ZBJAB	1		P					[K2D], Left
	5GF34 RXFAB	1		M					[K1F], Right
	5GF35 RXFAB	1		M					[K1F], Left
	5GF54 AGWAB	1		P					[K2G], Right
	5GF54 AJCAB	1		P					[K2K], Right
	5GF54 BR8AB	1		P					[K2H], Right
	5GF54 DX8AB	1		P					[K2X], Right
	5GF54 PR4AB	1		P					[K2R], Right
	5GF54 SW1AB	1		P					[K2W], Right
	5GF54 WB7AB	1		P					[K2B], Right
5									MOLDING, Rear Door
	5GF30 HS5AC	1		H					[K1A], Right
	5GF38 SW1AC	1		P					[K2W], Right
	5GF38 WB7AC	1		P					[K2B], Right
	5GF38 WS2AC	1		P					[K2S], Right
	5GF38 ZBJAC	1		P					[K2D], Right
	5GF39 AGWAC	1		P					[K2G], Left
	5GF39 AJCAC	1		P					[K2K], Left
	5GF39 BR8AC	1		P					[K2H], Left
	5GF39 DX8AC	1		P					[K2X], Left
	5GF39 PR4AC	1		P					[K2R], Left
	5GF39 SW1AC	1		P					[K2W], Left
	5GF30 RXFAC	1		M					[K1F], Right
	5GF39 WB7AC	1		P					[K2B], Left
	5GF39 WS2AC	1		P					[K2S], Left
	5GF39 ZBJAC	1		P					[K2D], Left
	5GF31 HS5AC	1		H					[K1A], Left
	5GF31 RXFAC	1		M					[K1F], Left
	5GF38 AGWAC	1		P					[K2G], Right
	5GF38 AJCAC	1		P					[K2K], Right
	5GF38 BR8AC	1		P					[K2H], Right
	5GF38 DX8AC	1		P					[K2X], Right
	5GF38 PR4AC	1		P					[K2R], Right
6									APPLIQUE, Sill

JEEP LIBERTY (KJ)

SERIES	LINE	BODY	ENGINE	TRANSMISSION
P = Limited	J = LHD (4WD)	74 = 4 Dr (104.3 WB)	ED1,ED0 = 2.4L Power Tech	DDK = 5 Speed HDManual
H = Sport	U = RHD (4WD)		EKG,EK0 = 3.7L Power Tech	DDD = 5 Speed HD Manual
M = Renegade	T = LHD (2WD)		ENJ = 2.5L 4Cyl Turbo Diesel	DG4,DGQ = Multi-Speed Auto
			ENR = 2.8L 4Cyl Turbo Diesel	DG6 = 4 Speed Auto Transm
			EN0 = 4Cyl Turbo Diesel	DG0 = All Automatic Transm
				DBB = All Manual Transm

Moldings, Body Side
Figure EKJ-210

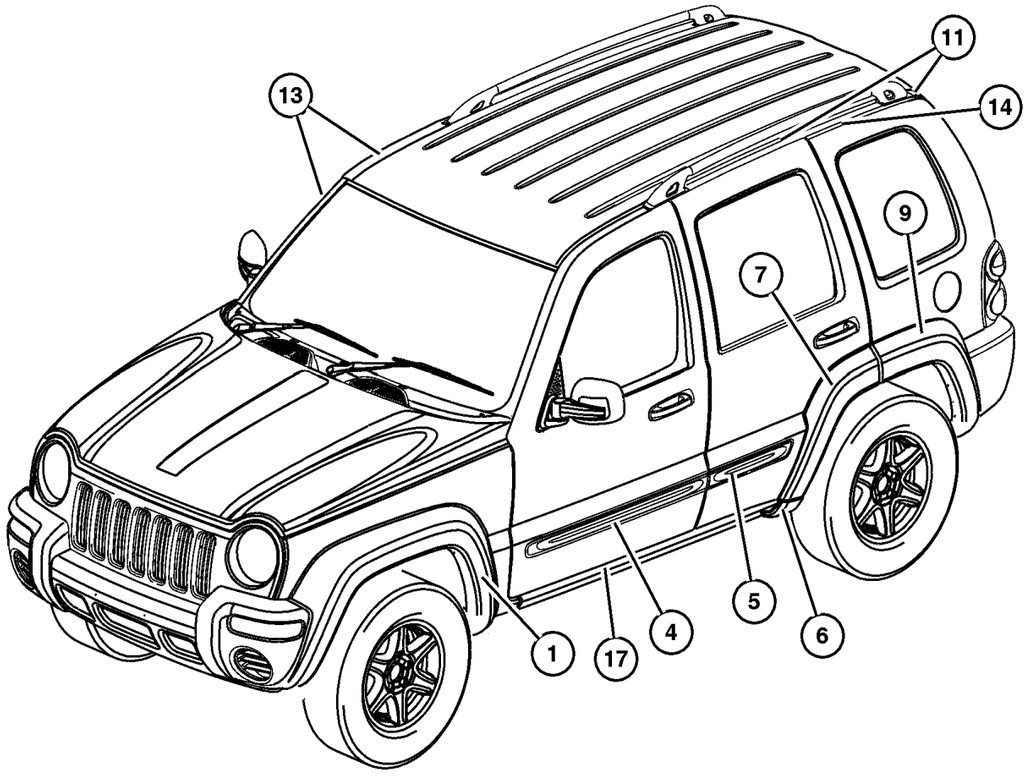

ITEM	PART NUMBER	QTY	LINE	SERIES	BODY	ENGINE	TRANS	TRIM	DESCRIPTION
	5GK86 HS5AD	1		H					[K3A], Right
	5HV51 WS2AD	1							[K4S], Left
	5GK87 HS5AD	1		H					[K3A], Left
	5HV52 AFMAD	1							[K4C], Right
	5HV52 AJCAD	1							[K4K], Right
	5HV52 DX8AD	1							[K4X], Right
	5HV52 WS2AD	1							[K4S], Right
	5HV51 AFMAD	1							[K4C], Left
	5HV51 AJCAD	1							[K4K], Left
	5HV51 DX8AD	1							[K4X], Left
7									APPLIQUE, Rear Door
	5GF36 HS5AG	1		H					[K3A], Right
	5HV49 WS2AC	1							[K4S], Left
	5GF32 AGWAF	1		P					[K5G], Right
	5GF32 AJCAF	1		P					[K5K], Right
	5GF32 BR8AF	1		P					[K5H], Right
	5GF32 DX8AF	1		P					[K5X], Right
	5GF32 PR4AF	1		P					[K5R], Right
	5GF32 SW1AF	1		P					[K5W], Right
	5GF32 WB7AF	1		P					[K5B], Right
	5GF32 WS2AF	1		P					[K5S], Right
	5GF32 ZBJAF	1		P					[K5D], Right
	5GF37 HS5AG	1		H					[K3A], Left
	5GF33 AGWAF	1		P					[K5G], Left
	5GF33 AJCAF	1		P					[K5K], Left
	5GF33 BR8AF	1		P					[K5H], Left
	5GF33 DX8AF	1		P					[K5X], Left
	5GF33 PR4AF	1		P					[K5R], Left
	5GF33 SW1AF	1		P					[K5W], Left
	5GF33 WB7AF	1		P					[K5B], Left
	5GF33 WS2AF	1		P					[K5S], Left
	5GF33 ZBJAF	1		P					[K5D], Left
	5HV50 AFMAC	1							[K4C], Right
	5HV50 AJCAC	1							[K4K], Right
	5HV50 DX8AC	1							[K4X], Right
	5HV50 WS2AC	1							[K4S], Right
	5HV49 AFMAC	1							[K4C], Left
	5HV49 AJCAC	1							[K4K], Left
	5HV49 DX8AC	1							[K4X], Left
-8	55156 447AB	11							PIN, Push
9									APPLIQUE, Rear Wheel Opening

JEEP LIBERTY (KJ)

SERIES	LINE	BODY	ENGINE	TRANSMISSION
P = Limited	J = LHD (4WD)	74 = 4 Dr (104.3 WB)	ED1,ED0 = 2.4L Power Tech	DDK = 5 Speed HDManual
H = Sport	U = RHD (4WD)		EKG,EK0 = 3.7L Power Tech	DDD = 5 Speed HD Manual
M = Renegade	T = LHD (2WD)		ENJ = 2.5L 4Cyl Turbo Diesel	DG4,DGQ = Multi-Speed Auto
			ENR = 2.8L 4Cyl Turbo Diesel	DG6 = 4 Speed Auto Transm
			EN0 = 4Cyl Turbo Diesel	DG0 = All Automatic Transm
				DBB = All Manual Transm

Moldings, Body Side
Figure EKJ-210

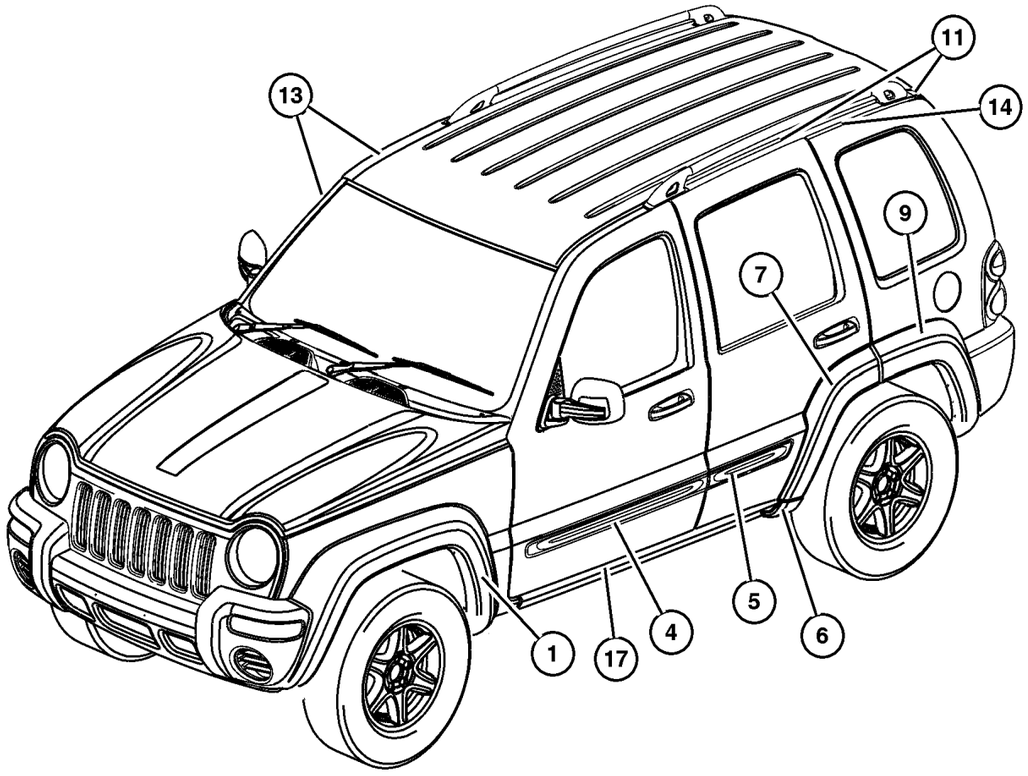

ITEM	PART NUMBER	QTY	LINE	SERIES	BODY	ENGINE	TRANS	TRIM	DESCRIPTION
	5GH02 HS5AC	1		H					[K3A], Right
	5HV47 WS2AC	1							[K4S], Left
	5GH04 AGWAB	1		P					[K5G], Right
	5GH04 AJCAB	1		P					[K5K], Right
	5GH04 BR8AB	1		P					[K5H], Right
	5GH04 DX8AB	1		P					[K5X], Right
	5GH04 PR4AB	1		P					[K5R], Right
	5GH04 SW1AB	1		P					[K5W], Right
	5GH04 WB7AB	1		P					[K5B], Right
	5GH04 WS2AB	1		P					[K5S], Right
	5GH04 ZBJAB	1		P					[K5D], Right
	5GH03 HS5AC	1		H					[K3A], Left
	5GH05 AGWAB	1		P					[K5G], Left
	5GH05 AJCAB	1		P					[K5K], Left
	5GH05 BR8AB	1		P					[K5H], Left
	5GH05 DX8AB	1		P					[K5X], Left
	5GH05 PR4AB	1		P					[K5R], Left
	5GH05 SW1AB	1		P					[K5W], Left
	5GH05 WB7AB	1		P					[K5B], Left
	5GH05 WS2AB	1		P					[K5S], Left
	5GH05 ZBJAB	1		P					[K5D], Left
	5HV48 AFMAC	1							[K4C], Right
	5HV48 AJCAC	1							[K4K], Right
	5HV48 DX8AC	1							[K4X], Right
	5HV48 WS2AC	1							[K4S], Right
	5HV47 AFMAC	1							[K4C], Left
	5HV47 AJCAC	1							[K4K], Left
	5HV47 DX8AC	1							[K4X], Left
-10	55360 254AA	1							SEAL, Moulding
11									MOLDING, Roof
	55360 174AC	1							With Roof Rack [MWG], Right
	55360 175AC	1							With Roof Rack [MWG], Left
	55360 176AE	1							Without Roof Rack [MWG], Right
	55360 177AE	1							Without Roof Rack [MWG], Left
-12	55360 509AA	8							SPACER, Windshield
13									MOLDING, A-PILLAR
	55360 052AC	1							Right
	55360 053AC	1							Left
14									MOLDING, Roof
	55360 176AE	1							Without Roof Rack [MWG], Right
	55360 177AE	1							Without Roof Rack [MWG], Left
	55360 174AC	1							With Roof Rack [MWG], Right

JEEP LIBERTY (KJ)

SERIES	LINE	BODY	ENGINE	TRANSMISSION
P = Limited	J = LHD (4WD)	74 = 4 Dr (104.3 WB)	ED1,ED0 = 2.4L Power Tech	DDK = 5 Speed HDManual
H = Sport	U = RHD (4WD)		EKG,EK0 = 3.7L Power Tech	DDD = 5 Speed HD Manual
M = Renegade	T = LHD (2WD)		ENJ = 2.5L 4Cyl Turbo Diesel	DG4,DGQ = Multi-Speed Auto
			ENR = 2.8L 4Cyl Turbo Diesel	DG6 = 4 Speed Auto Transm
			EN0 = 4Cyl Turbo Diesel	DG0 = All Automatic Transm
				DBB = All Manual Transm

Moldings, Body Side
Figure EKJ-210

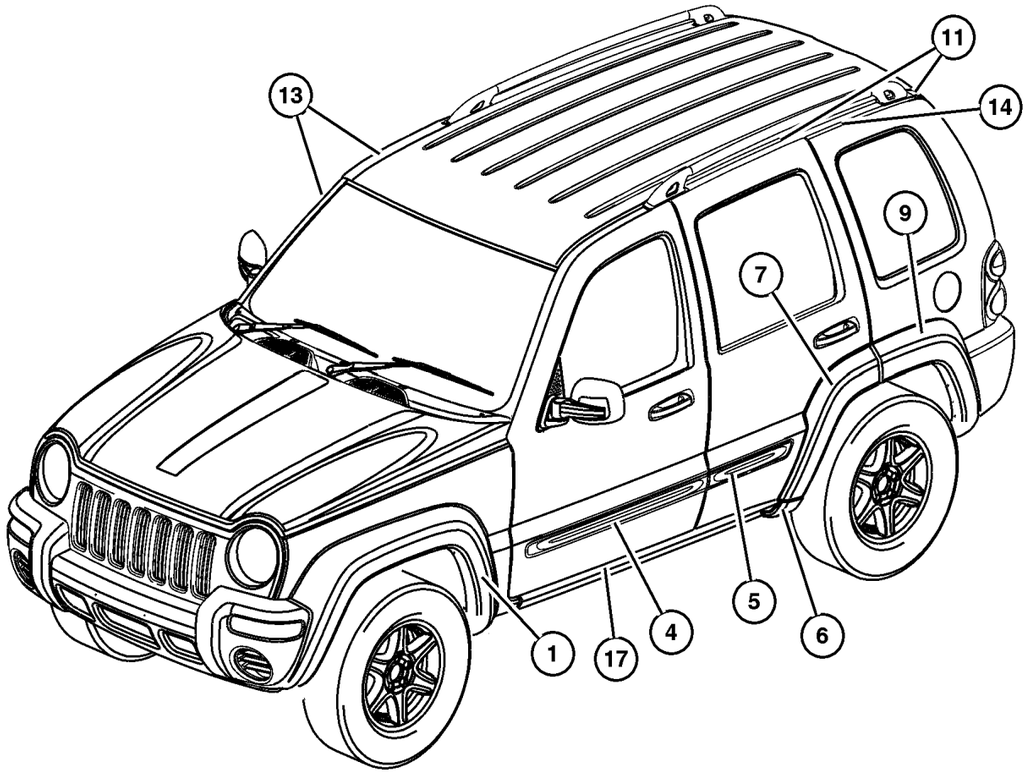

ITEM	PART NUMBER	QTY	LINE	SERIES	BODY	ENGINE	TRANS	TRIM	DESCRIPTION
	55360 175AC	1							With Roof Rack [MWG], Left
-15	5101 912AA	8		H, P					RETAINER, Molding
-16	0153 732	4							SCREW, .164-15x.500, Roof Molding
17									MOLDING, Sill Cover
	5GU02 RXFAC	1		H, P					Right
	5GU03 RXFAC	1		H, P					Left

JEEP LIBERTY (KJ)

SERIES	LINE	BODY	ENGINE	TRANSMISSION
P = Limited	J = LHD (4WD)	74 = 4 Dr (104.3 WB)	ED1,ED0 = 2.4L Power Tech	DDK = 5 Speed HDManual
H = Sport	U = RHD (4WD)		EKG,EK0 = 3.7L Power Tech	DDD = 5 Speed HD Manual
M = Renegade	T = LHD (2WD)		ENJ = 2.5L 4Cyl Turbo Diesel	DG4,DGQ = Multi-Speed Auto
			ENR = 2.8L 4Cyl Turbo Diesel	DG6 = 4 Speed Auto Transm
			EN0 = 4Cyl Turbo Diesel	DG0 = All Automatic Transm
				DBB = All Manual Transm

Side Rails, Tubular [MRK]
Figure EKJ-220

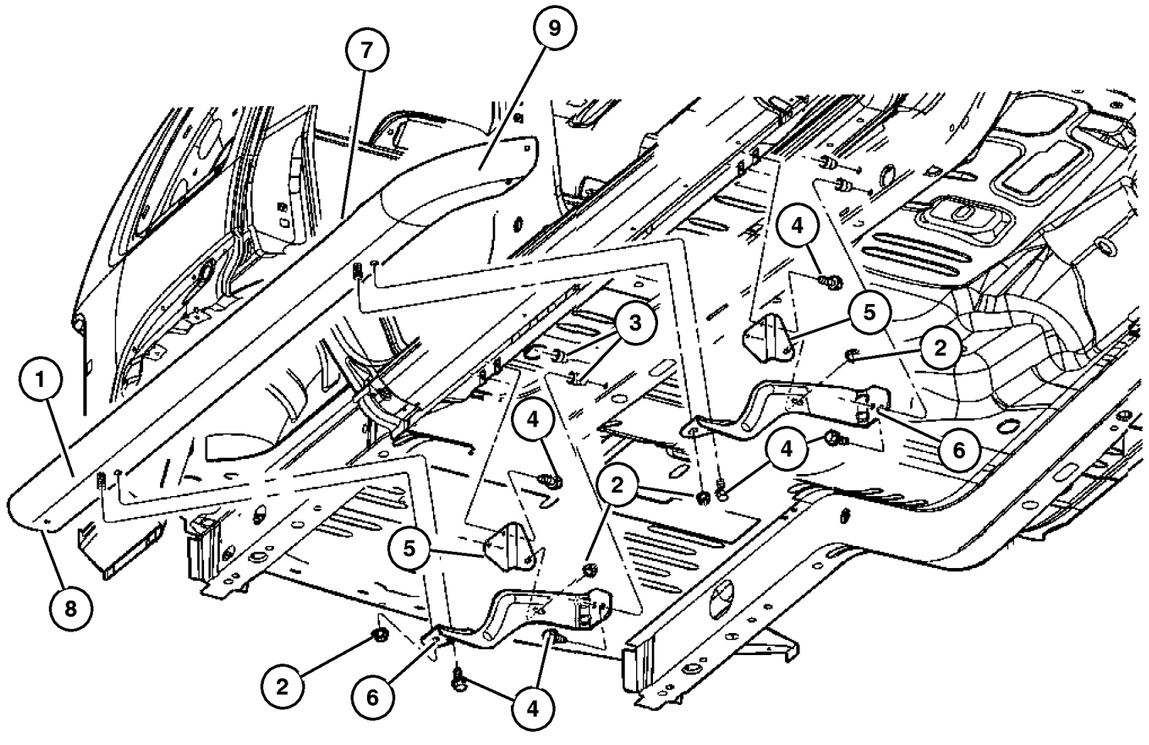

ITEM	PART NUMBER	QTY	LINE	SERIES	BODY	ENGINE	TRANS	TRIM	DESCRIPTION
1									STEP, Right Side
	5HY50 WS2AD	1							Right
	5HY51 WS2AD	1							Left
2									NUT AND WASHER, M8-1.25, (NOT SERVICED) (Not Serviced)
3									NUT/RIVET, M8x1.25x17.78, (NOT SERVICED) (Not Serviced)
4	6100 592	4							SCREW, M8x1.25x30
5									BRACKET, Side Rail
	55156 510AD	1							Front, Right
	55156 511AD	1							Front, Left
	55156 584AD	1							Rear, Right
	55156 587AD	1							Rear, Left
6									BRACKET, Side Rail
	55156 580AC	2							Right
	55156 581AC	2							Left
7									END CAP, Side Step
	55156 512AD	1							Right,Front
	55156 513AD	1							Left,Front
	55156 582AC	1							Right,Rear
	55156 583AC	1							Left,Rear
8	#55360 695AA	2							END CAP, Side Rail
9									STEP PAD, Side Step
	55156 508AD	1							Right
	55156 509AD	1							Left

JEEP LIBERTY (KJ)

SERIES	LINE	BODY	ENGINE	TRANSMISSION
P = Limited	J = LHD (4WD)	74 = 4 Dr (104.3 WB)	ED1,ED0 = 2.4L Power Tech	DDK = 5 Speed HDManual
H = Sport	U = RHD (4WD)		EKG,EK0 = 3.7L Power Tech	DDD = 5 Speed HD Manual
M = Renegade	T = LHD (2WD)		ENJ = 2.5L 4Cyl Turbo Diesel	DG4,DGQ = Multi-Speed Auto
			ENR = 2.8L 4Cyl Turbo Diesel	DG6 = 4 Speed Auto Transm
			EN0 = 4Cyl Turbo Diesel	DG0 = All Automatic Transm
				DBB = All Manual Transm

AR = Use as required - = Non illustrated part # = New this model year **September 30, 2003**

« RETURN TO GROUP INDEX

Decals
Figure EKJ-310

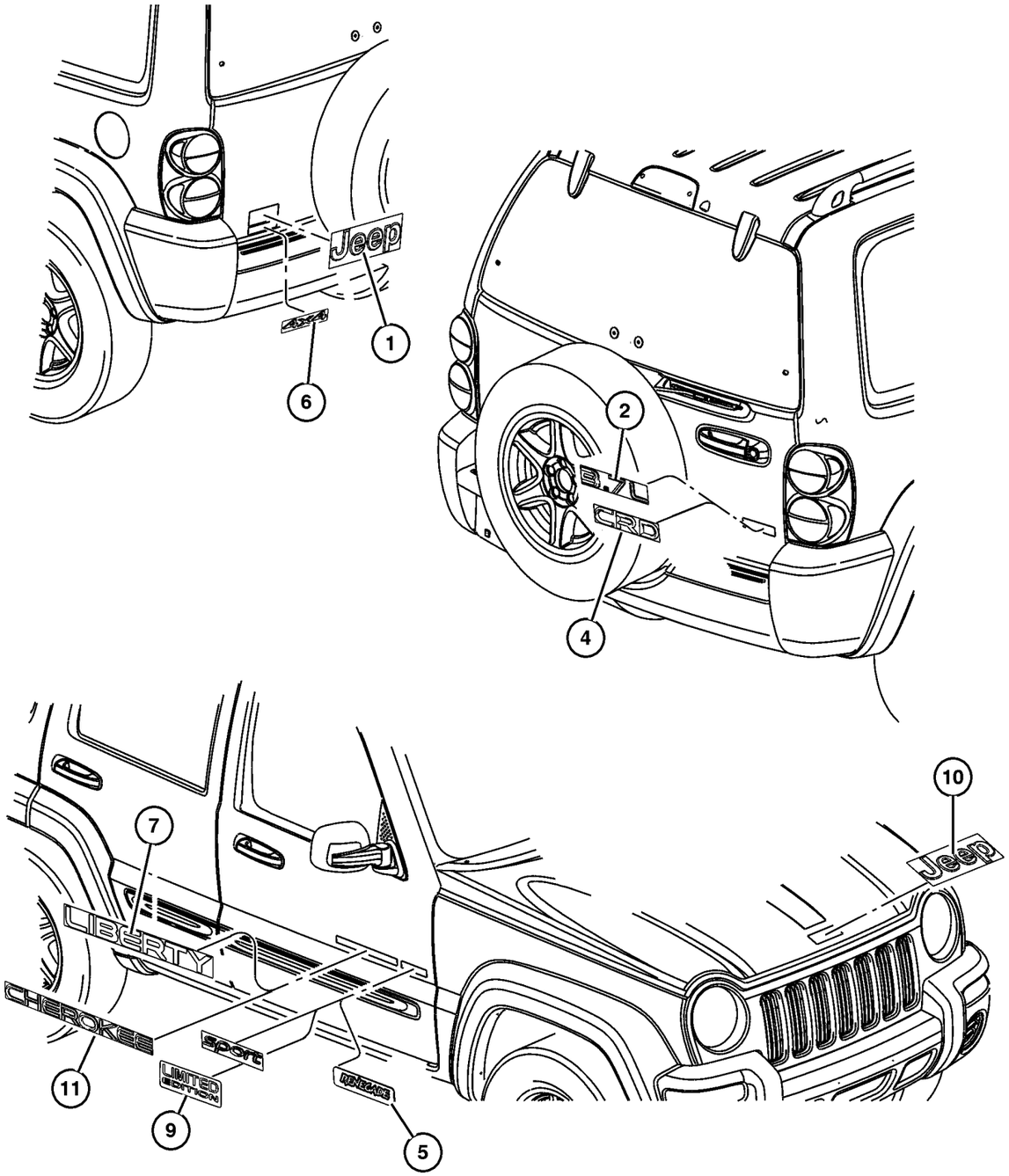

ITEM	PART NUMBER	QTY	LINE	SERIES	BODY	ENGINE	TRANS	TRIM	DESCRIPTION
Note; Sales Codes									
[MZR]= Common Rail Diesel									
1	55156 554AE	1							DECAL, JEEP, [MVC]
2	55156 275AF	1							DECAL, 3.7L, [MZL]
-3	5JN17 CA1AB	1							NAMEPLATE, 3.7L, [KFS]
4	55156 405AD	1							DECAL, CRD, [MZR]
5	52112 057AA	2							DIMENSIONAL GRAPHIC, Renegade, [MZ2]
6	5JN16 CA1AB	1	J, U						NAMEPLATE, 4X4, [KRS]
7	5JN11 CA1AB	2							NAMEPLATE, Liberty, [KLS]
-8	55156 604AD	2							DECAL, Liberty, [MZ3]
9	55156 605AA	2							DECAL, Limited Edition , [MZ2]
10	55156 554AE	1							DECAL, JEEP, [MVC]
11	55156 272AG	2							DECAL, Cherokee, [MZC]
-12	4399 791	2							REFLECTOR, Fascia
-13	#55157 106AA	1							DECAL, Trail Rated, MT2

JEEP LIBERTY (KJ)

SERIES	LINE	BODY	ENGINE	TRANSMISSION
P = Limited	J = LHD (4WD)	74 = 4 Dr (104.3 WB)	ED1,ED0 = 2.4L Power Tech	DDK = 5 Speed HDManual
H = Sport	U = RHD (4WD)		EKG,EK0 = 3.7L Power Tech	DDD = 5 Speed HD Manual
M = Renegade	T = LHD (2WD)		ENJ = 2.5L 4Cyl Turbo Diesel	DG4,DGQ = Multi-Speed Auto
			ENR = 2.8L 4Cyl Turbo Diesel	DG6 = 4 Speed Auto Transm
			EN0 = 4Cyl Turbo Diesel	DG0 = All Automatic Transm
				DBB = All Manual Transm

AR = Use as required - = Non illustrated part # = New this model year

September 30, 2003

« RETURN TO GROUP INDEX

Group – IKJ
Interior Trim

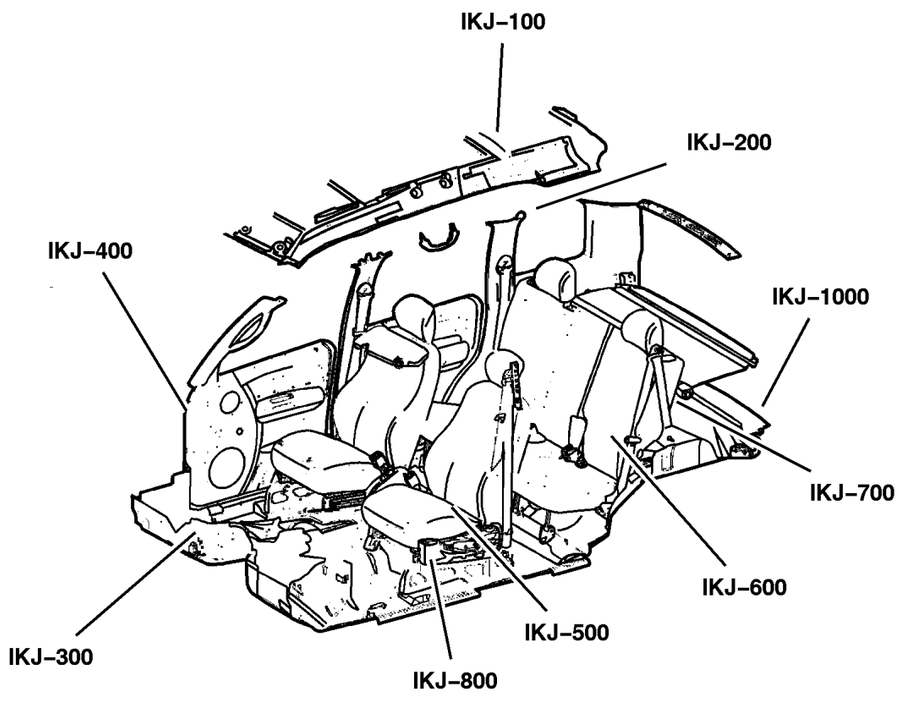

IKJ–100 Headliner and Visor 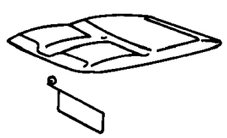	**IKJ–200** Moldings, Scuff Plates 	**IKJ–300** Carpet 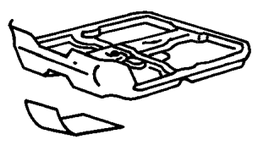	**IKJ–400** Door Trim Panels 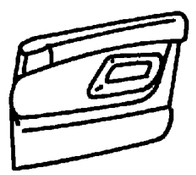
IKJ–500 Front Seats and Attaching Parts 	**IKJ–600** Rear Seats and Attaching Parts 	**IKJ–700** Seat Belts–Front and Rear 	**IKJ–800** Adjusters, Covers, Shields, and Risers 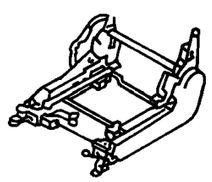

Group – IKJ
Interior Trim

IKJ–1000 Lift Gate Trim 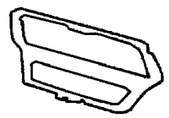			

GROUP IKJ - Interior Trim

Illustration Title	Group-Fig. No.
Headliner and Visor	
Headliner and Visors	Fig. IKJ-110
Moldings, Scuff Plates	
Panels, Interior Trim, Front	Fig. IKJ-210
Panels, Interior Trim, Rear	Fig. IKJ-220
Carpet	
Carpets and Mats	Fig. IKJ-310
Cargo Organizer	Fig. IKJ-320
Door Trim Panels	
Trim Panel, Front Door	Fig. IKJ-410
Trim Panel, Rear Door	Fig. IKJ-420
Front Seats and Attaching Parts	
Front Seat, Leather, Low Back, Trim Code [DL]	Fig. IKJ-510
Front Seat, Cloth, Low Back, Trim Code [XJ]	Fig. IKJ-520
Front Seat, Cloth, Trim Code [M5]	Fig. IKJ-530
Front Seat, Cloth, Low Back, Trim Code [E7]	Fig. IKJ-540
Front Seat, Cloth, Trim Code [J5]	Fig. IKJ-550
Front Seat, Cloth, Low Back, Trim Code [F7]	Fig. IKJ-560
Front Seat, Cloth, Low Back, Trim Code [A7]	Fig. IKJ-570
Front Seat, Cloth, Trim Code [V5]	Fig. IKJ-580
Rear Seats and Attaching Parts	
Rear Seats, Trim Code [M5]	Fig. IKJ-610
Rear Seat, Trim Code [DL]	Fig. IKJ-620
Rear Seat, Trim Code [XJ]	Fig. IKJ-630
Rear Seat, Trim Code [E7]	Fig. IKJ-640
Rear Seat, Trim Code [J5]	Fig. IKJ-650
Rear Seat, Trim Code [F7]	Fig. IKJ-660
Rear Seat, Trim Code [A7]	Fig. IKJ-670
Rear Seat, Trim Code [V5]	Fig. IKJ-680
Seat Belts-Front and Rear	
Seat Belts, Front	Fig. IKJ-710
Seat Belts, Rear	Fig. IKJ-720
Adjusters, Covers, Shields, and Risers	
Recliner and Adjuster	Fig. IKJ-810
Lift Gate Trim	
Swing Gate Trim Panel	Fig. IKJ-1010

Headliner and Visors
Figure IKJ-110

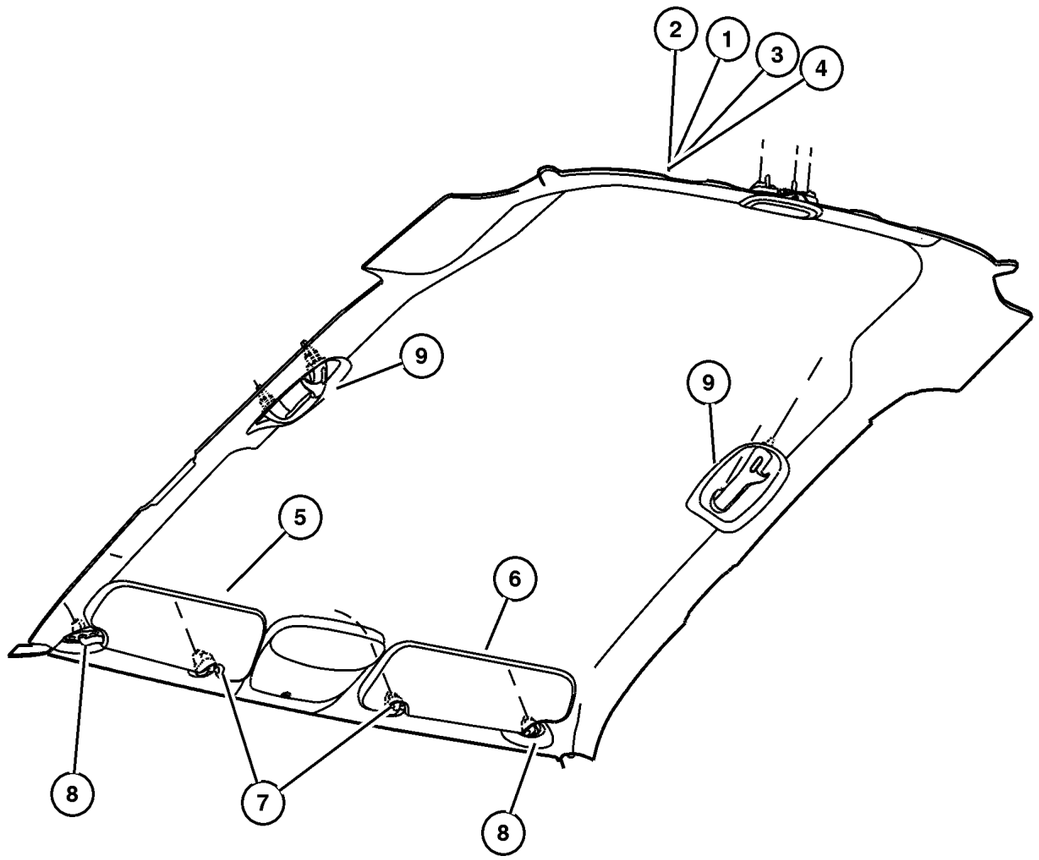

ITEM	PART NUMBER	QTY	LINE	SERIES	BODY	ENGINE	TRANS	TRIM	DESCRIPTION
Sales Codes:									
[AHM] = Convenience Group 1									
[CGS] = Side Air Bags									
[CUD] = Console, Mini Overhead									
[GNA] = Prismatic									
[GNK] = Electrochromic									
[GWA] = Power Sunroof									
[LSC] = Security Alarm									
[RSP] = Hands Free Communication									
1									HEADLINER, Without Sunroof [GWA]
	XP81 TL2AA	1	J, T						With [CGS] Side Air Bags Only
	XP87 1L2AA	1	J, T						With [AHM] Convenience Group 1, [CUD] Overhead Console, [CUD], [GNK] Auto Dim Mirror
	XP83 TL2AA	1	J, T						With [AHM] Convenience Group 1 and [CGS] Side Air Bags
	XP85 TL2AA	1	J, T						Without [AHM] Convenience Group 1, [CUD] Overhead Console, [GWA] Power Sunroof, and [CGS] Side Air Bags
	XP86 TL2AA	1	J, T						With [AHM] Convenience Group 1, Only
	XW09 1L2AA	1							With [AHM] Convenience Group 1, [CUD] Overhead Console, and [CGS] Side Air Bags
	XW08 1L2AA	1							With [AHM] Convenience Group 1, [CUD] Overhead Console
	#ZJ20 1L2AA	1	J, T						With [AHM] Convenience Group 1, [CUD] Overhead Console, [GNK] Auto Dim Mirror, [RSP] Hands Free Communication
	#ZJ22 1L2AA	1	J, T						With [AHM] Convenience Group 1, [CUD] Overhead Console, [CGS] Side Air Bags, [GNK] Auto Dim Mirror, [RSP] Hands Free Communication
	XP82 1L2AA	1	J, T						With [AHM] Convenience Group 1, [CUD] Overhead Console, [GWA] Power Sunroof, and [CGS] Side Air Bags
2									HEADLINER, With Sunroof [GWA]

JEEP LIBERTY (KJ)

SERIES	LINE	BODY	ENGINE	TRANSMISSION
P = Limited	J = LHD (4WD)	74 = 4 Dr (104.3 WB)	ED1,ED0 = 2.4L Power Tech	DDK = 5 Speed HDManual
H = Sport	U = RHD (4WD)		EKG,EK0 = 3.7L Power Tech	DDD = 5 Speed HD Manual
M = Renegade	T = LHD (2WD)		ENJ = 2.5L 4Cyl Turbo Diesel	DG4,DGQ = Multi-Speed Auto
			ENR = 2.8L 4Cyl Turbo Diesel	DG6 = 4 Speed Auto Transm
			EN0 = 4Cyl Turbo Diesel	DG0 = All Automatic Transm
				DBB = All Manual Transm

Headliner and Visors
Figure IKJ-110

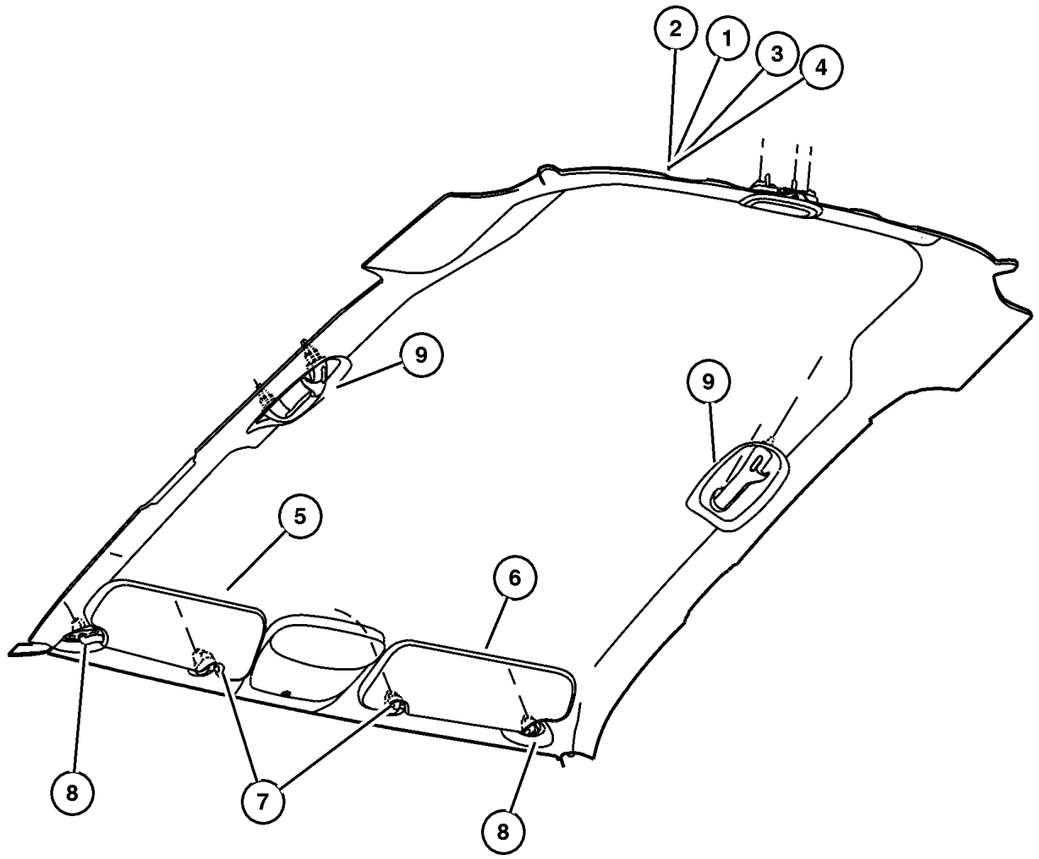

ITEM	PART NUMBER	QTY	LINE	SERIES	BODY	ENGINE	TRANS	TRIM	DESCRIPTION
	XW11 TL2AA	1							With [AHM] Convenience Group 1, [CUD] Overhead Console
	XW10 TL2AA	1							With [AHM] Convenience Group 1, [CUD] Overhead Console, and [CGS] Side Air Bags
	XP92 TL2AA	1	J, T						With [AHM] Conveniece Group 1
	XP89 TL2AA	1	J, T						With [AHM] Convenience Group 1, [CGS] Side Air Bags
	#ZJ21 TL2AA	1	J, T						With [AHM] Convenience Group 1, [CUD] Overhead Console, [GNK] Auto Dim Mirror, [RSP] Hands Free Communication
	#ZJ23 TL2AA	1	J, T						With [AHM] Convenience Group 1, [CUD] Overhead Console, [CGS] Side Air Bags, [GNK] Auto Dim Mirror, [RSP] Hands Free Communication
	XP90 TL2AA	1	J, T						With [AHM] Convenience Group 1, [CUD] Overhead Console, [CGS] Side Air Bags, [GNK] Auto Dim Mirror
	XP93 TL2AA	1	J, T						With [AHM] Convenience Group 1, [CUD] Overhead Console, [GNK] Auto Dim Mirror
3									HEADLINER, Export, With Sunroof [GWA]
	XY04 TL2AA	1	J, U						With Sunroof Only
	YL12 TL2AA	1							With [CUD] Overhead Console, [LSC] Security Alarm
	XZ20 TL2AA	1	J, U						With [CGS] Side Air Bags Only
	XW10 TL2AA	1							With [CGS] Side Air Bags, [CUD] Overhead Console
	XZ22 TL2AA	1	J, U						With [CGS] Side Air Bags, [CUD] Overhead Console, [GNK] Auto Dim Mirror
	XP91 TL2AA	1	J, U						With [CGS] Side Air Bags, [CUD] Overhead Console, [LSC] Security Alarm, [GNK] Auto Dim Mirror
	YL04 TL2AA	1							With [CGS] Side Air Bags, [CUD] Overhead Console, [LSC] Security Alarm

JEEP LIBERTY (KJ)

SERIES	LINE	BODY	ENGINE	TRANSMISSION
P = Limited	J = LHD (4WD)	74 = 4 Dr (104.3 WB)	ED1,ED0 = 2.4L Power Tech	DDK = 5 Speed HDManual
H = Sport	U = RHD (4WD)		EKG,EK0 = 3.7L Power Tech	DDD = 5 Speed HD Manual
M = Renegade	T = LHD (2WD)		ENJ = 2.5L 4Cyl Turbo Diesel	DG4,DGQ = Multi-Speed Auto
			ENR = 2.8L 4Cyl Turbo Diesel	DG6 = 4 Speed Auto Transm
			EN0 = 4Cyl Turbo Diesel	DG0 = All Automatic Transm
				DBB = All Manual Transm

AR = Use as required - = Non illustrated part # = New this model year

September 30, 2003

« RETURN TO GROUP INDEX

« »

Headliner and Visors
Figure IKJ-110

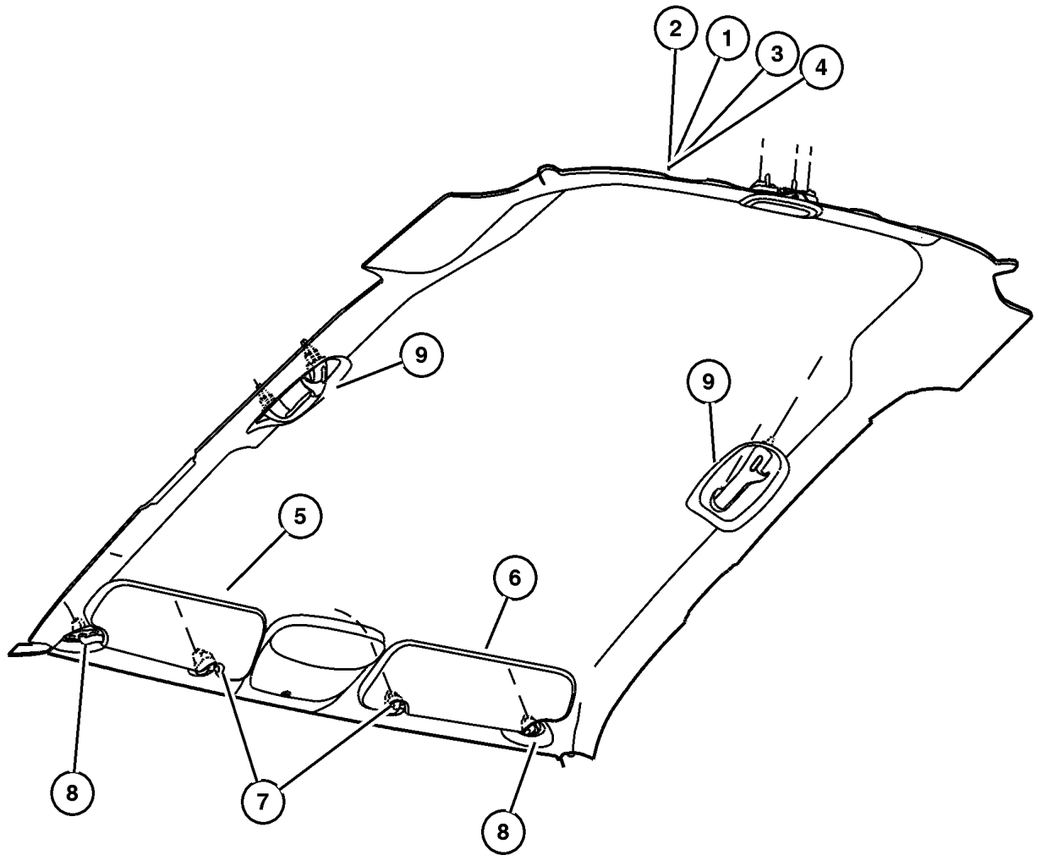

ITEM	PART NUMBER	QTY	LINE	SERIES	BODY	ENGINE	TRANS	TRIM	DESCRIPTION
	XW11 TL2AA	1							With [CUD] Overhead Console
	XY06 TL2AA	1	J, U						With [CUD] Overhead Console, [GNK] Auto Dim Mirror
	XP94 TL2AA	1	J, U						With [CUD] Overhead Console, [LSC] Security Alarm, [GNK] Auto Dim Mirror
4									HEADLINER, Export, Without Sunroof [GWA]
	XY03 TL2AA	1	J, U						
	XW08 1L2AA	1							With [CUD] Overhead Console
	XP84 1L2AA	1	J, U						With [CGS] Side Air Bags, [CUD] Overhead Console, [GNK] Auto Dim Mirror, [LSC] Security Alarm
	YL03 1L2AA	1							With [CGS] Side Air Bags, [CUD] Overhead Console, [LSC] Security Alarm
	XZ11 TL2AA	1	J, U						With [CGS] Side Air Bags Only
	XZ21 1L2AA	1	J, U						With [CGS] Side Air Bags, [CUD] Overhead Console, [GNK] Auto Dim Mirror
	XW09 1L2AA	1							With [CGS] Side Air Bags, [CUD] Overhead Console
	XP88 1L2AA	1	J, U						With [CUD] Overhead Console, [GNK] Auto Dim Mirror, [LSC] Security Alarm
	YL09 1L2AA	1							With [CUD] Overhead Console, [LSC] Security Alarm
	XY05 1L2AA	1	J, U						With [CUD] Overhead Console, [GNK] Auto Dim Mirror
5									VISOR
	XN86 TL2AB	1							Export Only, Right
	#ZX32 TL2AA	1	J, T						Without [AHM], Right
	#ZX34 1L2AA	1	J, T						With [AHM], Right
6									VISOR
	XN87 TL2AB	1							Export Only, Left
	#ZX33 TL2AA	1	J, T						Without [AHM], Left
	#ZX35 1L2AA	1	J, T						With [AHM], Left
7	XP97 TL2AA	2							SUPPORT, Visor
8	5072 343AA	2							CLIP, Visor
9									HANDLE, Roof Grab
	UY68 TL2AA	1							Right
	UY69 TL2AA	1							Left

JEEP LIBERTY (KJ)

SERIES	LINE	BODY	ENGINE	TRANSMISSION
P = Limited	J = LHD (4WD)	74 = 4 Dr (104.3 WB)	ED1,ED0 = 2.4L Power Tech	DDK = 5 Speed HDManual
H = Sport	U = RHD (4WD)		EKG,EK0 = 3.7L Power Tech	DDD = 5 Speed HD Manual
M = Renegade	T = LHD (2WD)		ENJ = 2.5L 4Cyl Turbo Diesel	DG4,DGQ = Multi-Speed Auto
			ENR = 2.8L 4Cyl Turbo Diesel	DG6 = 4 Speed Auto Transm
			EN0 = 4Cyl Turbo Diesel	DG0 = All Automatic Transm
				DBB = All Manual Transm

AR = Use as required - = Non illustrated part # = New this model year

Headliner and Visors
Figure IKJ-110

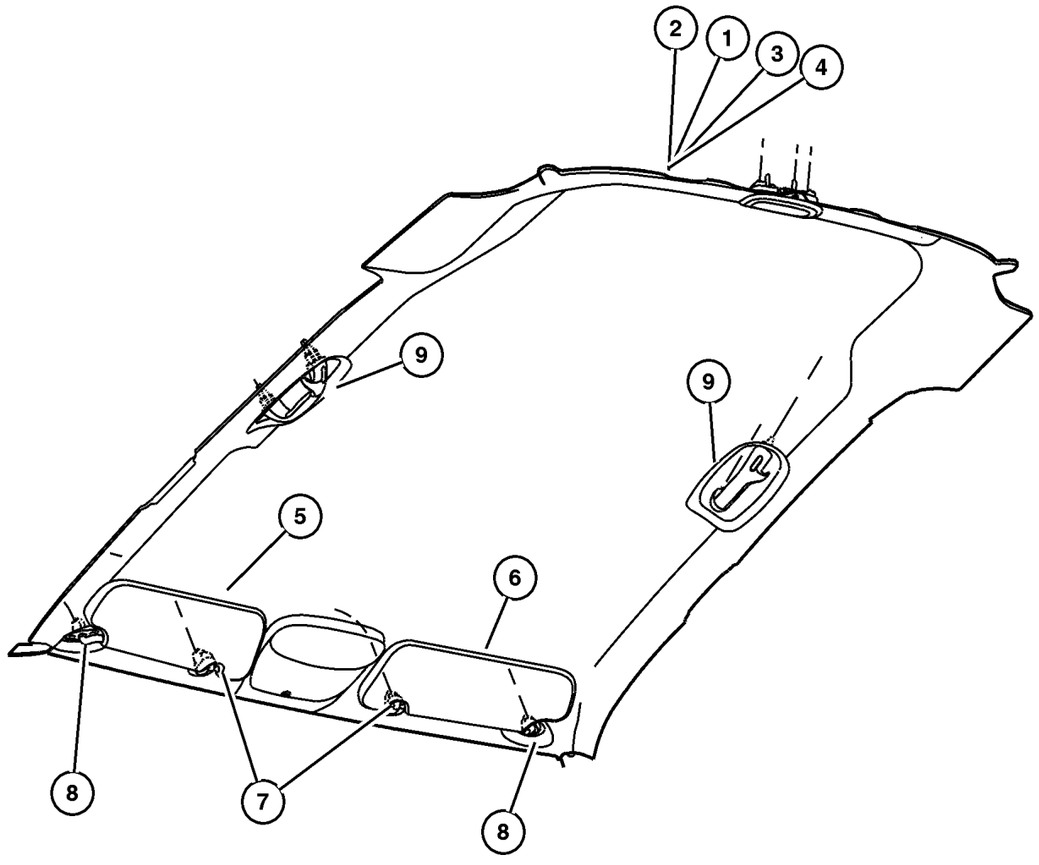

ITEM	PART NUMBER	QTY	LINE	SERIES	BODY	ENGINE	TRANS	TRIM	DESCRIPTION
-10	4897 875AA	2							LABEL, Airbag, Export Only
-11	#5108 000AA	2							LABEL, Air Bag Warning, CANADA ONLY
-12	55352 825AA	1							LABEL, Visor Warning, CANADA ONLY, High Risk Roll Over, French and English, Left Side

JEEP LIBERTY (KJ)

SERIES	LINE	BODY	ENGINE	TRANSMISSION
P = Limited	J = LHD (4WD)	74 = 4 Dr (104.3 WB)	ED1,ED0 = 2.4L Power Tech	DDK = 5 Speed HDManual
H = Sport	U = RHD (4WD)		EKG,EK0 = 3.7L Power Tech	DDD = 5 Speed HD Manual
M = Renegade	T = LHD (2WD)		ENJ = 2.5L 4Cyl Turbo Diesel	DG4,DGQ = Multi-Speed Auto
			ENR = 2.8L 4Cyl Turbo Diesel	DG6 = 4 Speed Auto Transm
			EN0 = 4Cyl Turbo Diesel	DG0 = All Automatic Transm
				DBB = All Manual Transm

Panels, Interior Trim, Front
Figure IKJ-210

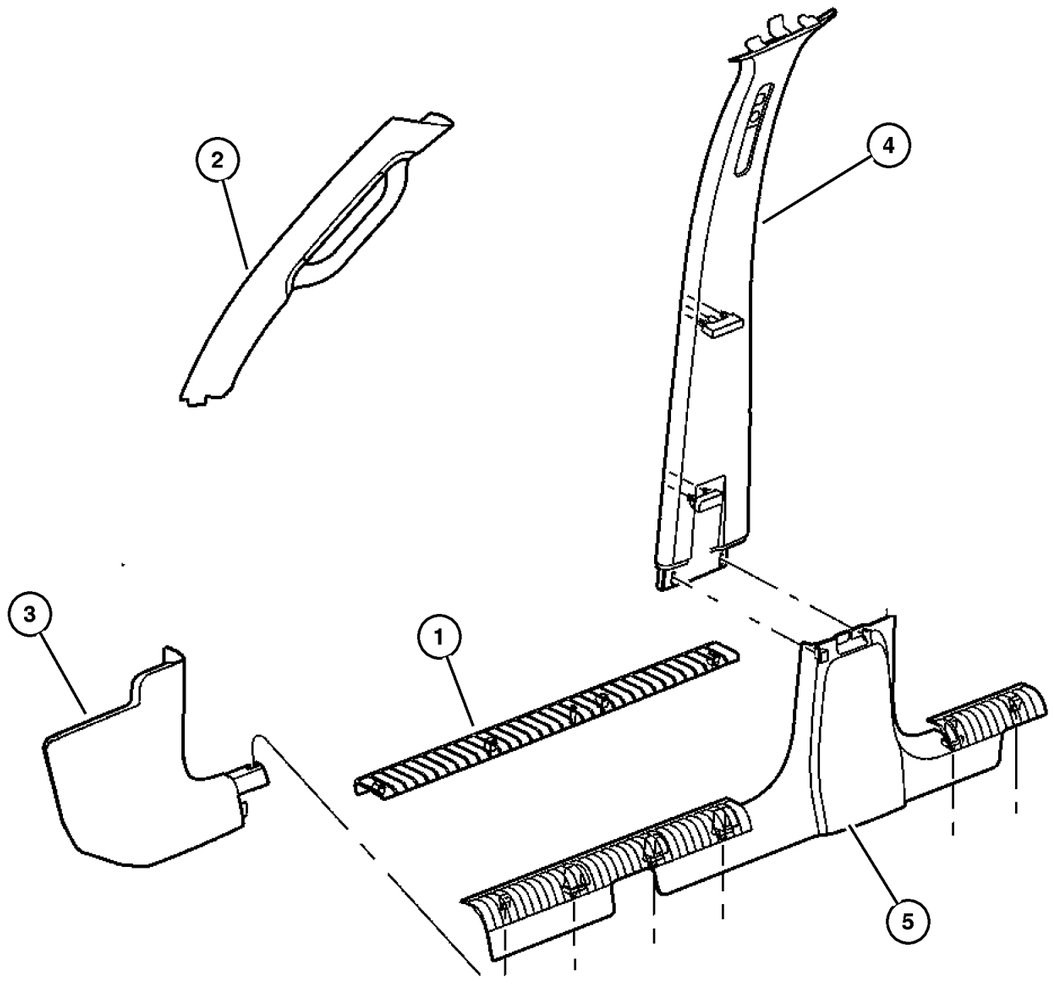

ITEM	PART NUMBER	QTY	LINE	SERIES	BODY	ENGINE	TRANS	TRIM	DESCRIPTION
1									PLATE, Scuff
	55352 778AC	1							Right Front
	55352 779AE	1							Left Front
2									PANEL, A Pillar Trim
	5GM92 TL2AH	1							Right
	5GM93 TL2AH	1							Left
3									PANEL, Cowl Side Trim
	5GE62 WL5AH	1							[L2, L5], Right
	5GE62 XDVAH	1							[D2, DV], Right
	5GE67 WL5AI	1							[L2, L5], Left
	5GE67 XDVAI	1							[D2, DV], Left
4									COVER, B Pillar Trim Panel
	5GE60 WL5AL	1							[L2, L5], Right
	5GE60 XDVAL	1							[D2, DV], Right
	5GE61 WL5AL	1							[L2, L5], Left
	5GE61 XDVAL	1							[D2, DV], Left
5									PANEL, Side Sill
	5GG22 WL5AK	1							[L2, L5], Right
	5GG22 XDVAK	1							[D2, DV], Right
	5GG23 WL5AL	1							[L2, L5], Left
	5GG23 XDVAL	1							[D2, DV], Left

JEEP LIBERTY (KJ)

SERIES	LINE	BODY	ENGINE	TRANSMISSION
P = Limited	J = LHD (4WD)	74 = 4 Dr (104.3 WB)	ED1,ED0 = 2.4L Power Tech	DDK = 5 Speed HDManual
H = Sport	U = RHD (4WD)		EKG,EK0 = 3.7L Power Tech	DDD = 5 Speed HD Manual
M = Renegade	T = LHD (2WD)		ENJ = 2.5L 4Cyl Turbo Diesel	DG4,DGQ = Multi-Speed Auto
			ENR = 2.8L 4Cyl Turbo Diesel	DG6 = 4 Speed Auto Transm
			EN0 = 4Cyl Turbo Diesel	DG0 = All Automatic Transm
				DBB = All Manual Transm

Panels, Interior Trim, Rear
Figure IKJ-220

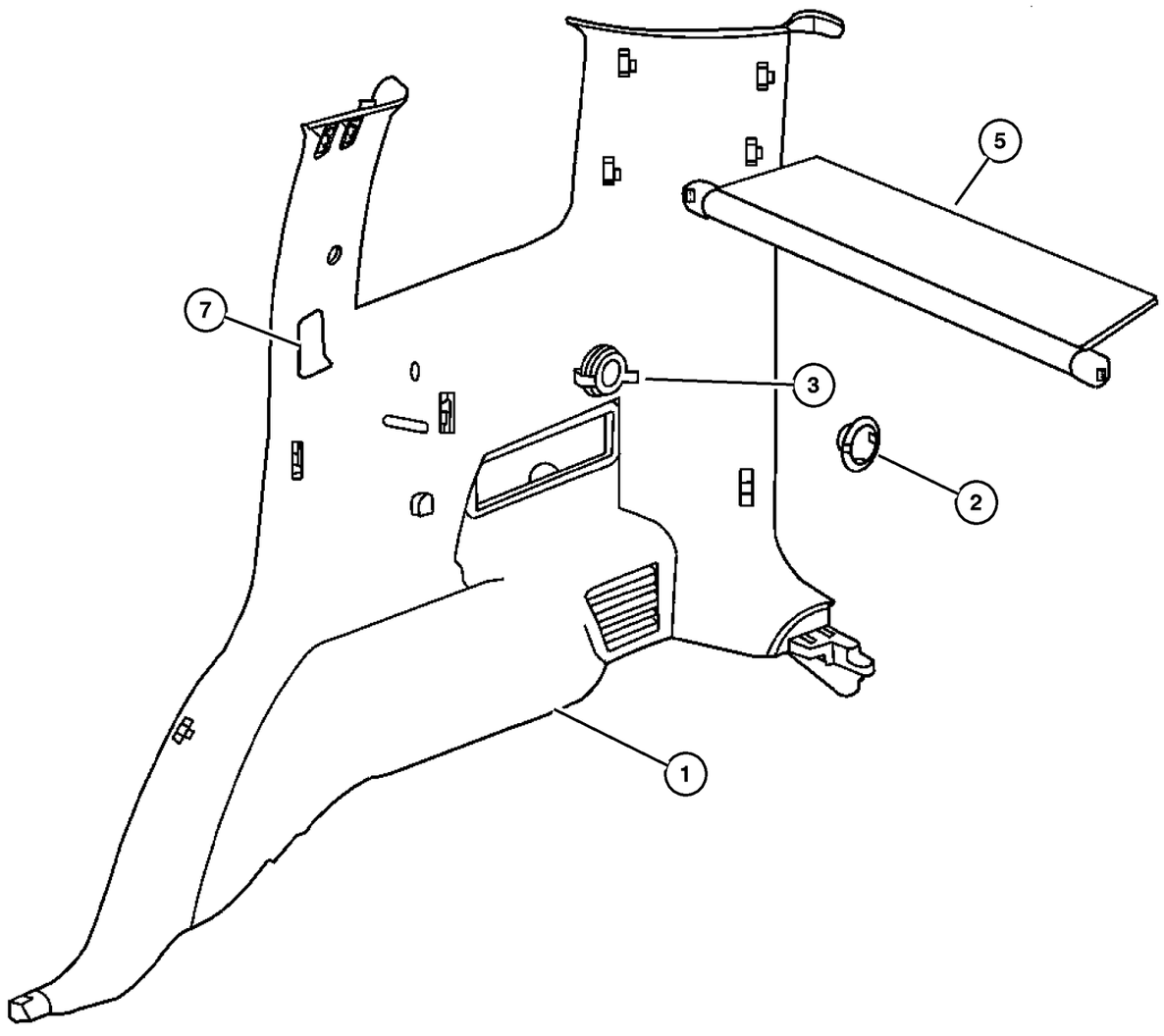

ITEM	PART NUMBER	QTY	LINE	SERIES	BODY	ENGINE	TRANS	TRIM	DESCRIPTION
1									PANEL, Quarter Trim
	5HG52 WL5AN	1							[L2, L5], Right
	5HG52 XDVAN	1							[D2, DV], Right
	5HG55 WL5AN	1							[L2, L5], With CD Changer Opening, Right
	5HG55 XDVAN	1							[D2, DV], With CD Changer Opening, Right
	5HG56 WL5AN	1							[L2, L5], With Trim Panel Net, Right
	5HG56 XDVAN	1							[D2, DV], With Trim Panel Net, Right
	5HG57 WL5AN	1							[L2, L5], Left
	5HG57 XDVAN	1							[D2, DV], Left
2									PLUG, Quarter Trim Panel
	5HH32 WL5AA	1							[L2, L5]
	5HH32 XDVAA	1							[D2, DV]
3	4793 554AB	1							POWER OUTLET
-4	4685 668AA	1							MOUNT, Power Outlet
5									COVER, Cargo Compartment
	5JM75 1DVAA	1							[D2, DV]
	5JM75 1L5AA	1							[L2, L5]
-6									BEZEL, interior trim, Surrounds [CD] Changer
	WL87 WL5AA	1							[L2, L5]
	WL87 XDVAA	1							[D2, DV]
7									COVER, C Pillar
	WR16 WL5AA	1							[L2, L5], Right
	WR16 XDVAA	1							[D2, DV], Right
	WR17 WL5AA	1							[L2, L5], Left
	WR17 XDVAA	1							[D2, DV], Left

JEEP LIBERTY (KJ)

SERIES	LINE	BODY	ENGINE	TRANSMISSION
P = Limited	J = LHD (4WD)	74 = 4 Dr (104.3 WB)	ED1,ED0 = 2.4L Power Tech	DDK = 5 Speed HDManual
H = Sport	U = RHD (4WD)		EKG,EK0 = 3.7L Power Tech	DDD = 5 Speed HD Manual
M = Renegade	T = LHD (2WD)		ENJ = 2.5L 4Cyl Turbo Diesel	DG4,DGQ = Multi-Speed Auto
			ENR = 2.8L 4Cyl Turbo Diesel	DG6 = 4 Speed Auto Transm
			EN0 = 4Cyl Turbo Diesel	DG0 = All Automatic Transm
				DBB = All Manual Transm

Carpets and Mats
Figure IKJ-310

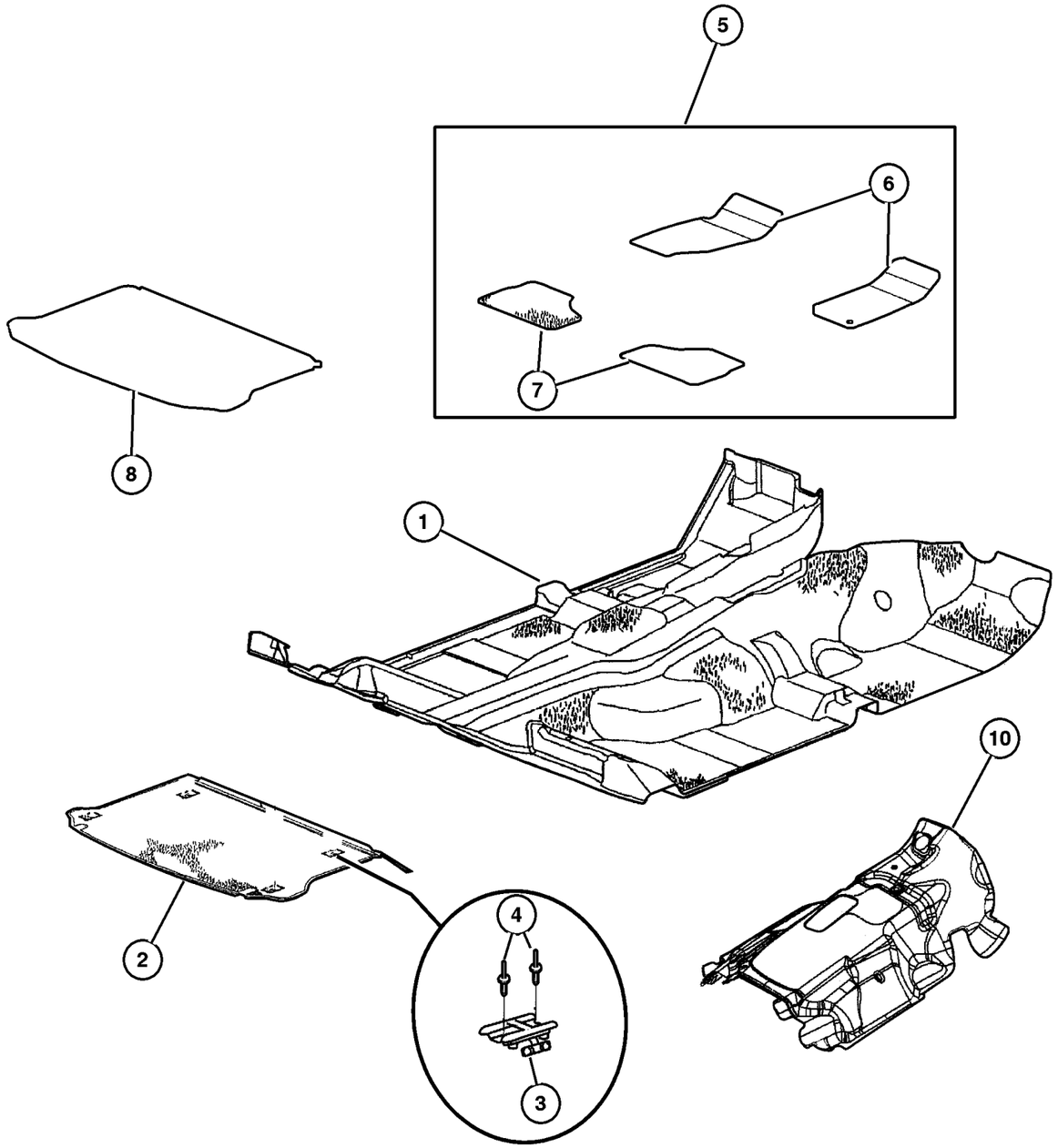

ITEM	PART NUMBER	QTY	LINE	SERIES	BODY	ENGINE	TRANS	TRIM	DESCRIPTION
1									CARPET, Front Floor
	5GF83 WL8AH	1	J, T						[L2, L5], Without Footrest, With Vinyl Heel Pad, With Manual Transmission
	5JH17 XDVAD	1	J, T						[D2, DV], With Footrest, Without Vinyl Heel Pad, With Automatic Transmission
	5JH18 WL8AD	1	J, T						[L2, L5], Without Footrest, Without Vinyl Heel Pad, With Manual Transmission
	5JH18 XDVAD	1	J, T						[D2, DV], Without Footrest, Without Vinyl Heel Pad, With Manual Transmission
	5JR01 WL8AA	1	J, T						[L2, L5], With Footrest, Without Vinyl Heel Pad, With 2.8L Diesel
	5JR01 XDVAA	1	J, T						[D2, DV], With Footrest, Without Vinyl Heel Pad, With 2.8L Diesel
	5JR08 WL8AA	1	U						[L2, L5], With Footrest, With 2.8L Diesel
	5JR08 XDVAA	1	U						[DV], With Footrest, With 2.8L Diesel
	5GF83 XDVAH	1	J, T						[D2, DV], Without Footrest, With Vinyl Heel Pad, With Manual Transmission
	5GF86 WL8AI	1	U						[L2, L5], Without Footrest, With Manual Transmission
	5GF86 XDVAI	1	U						[D2, DV], Without Footrest, With Manual Transmission
	5GU95 WL8AH	1	J, T						[L2, L5], With Footrest, With Vinyl Heel Pad, With Automatic Transmission
	5GU95 XDVAH	1	J, T						[D2, DV], With Footrest, With Vinyl Heel Pad, With Automatic Transmission
	5GV15 WL8AI	1	U						[L2, L5], With Footrest, With Automatic Transmission
	5GV15 XDVAI	1	U						[D2, DV], With Footrest, With Automatic Transmission
	5JH17 WL8AD	1	J, T						[L2, L5], With Footrest, Without Vinyl Heel Pad, With Automatic Transmission

JEEP LIBERTY (KJ)

SERIES	LINE	BODY	ENGINE	TRANSMISSION
P = Limited	J = LHD (4WD)	74 = 4 Dr (104.3 WB)	ED1,ED0 = 2.4L Power Tech	DDK = 5 Speed HDManual
H = Sport	U = RHD (4WD)		EKG,EK0 = 3.7L Power Tech	DDD = 5 Speed HD Manual
M = Renegade	T = LHD (2WD)		ENJ = 2.5L 4Cyl Turbo Diesel	DG4,DGQ = Multi-Speed Auto
			ENR = 2.8L 4Cyl Turbo Diesel	DG6 = 4 Speed Auto Transm
			EN0 = 4Cyl Turbo Diesel	DG0 = All Automatic Transm
				DBB = All Manual Transm

Carpets and Mats
Figure IKJ-310

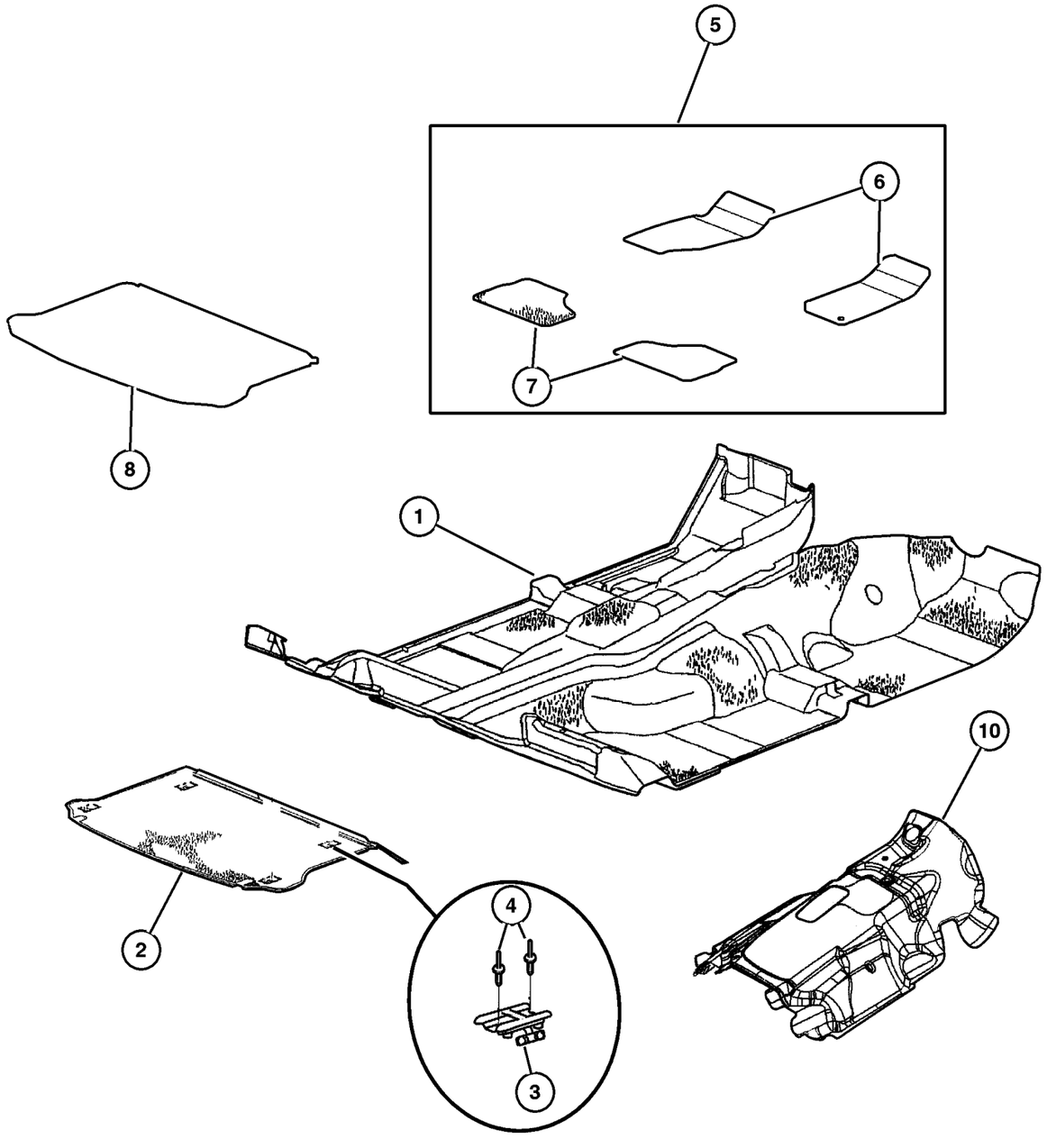

ITEM	PART NUMBER	QTY	LINE	SERIES	BODY	ENGINE	TRANS	TRIM	DESCRIPTION
2									CARPET, Cargo Floor, Includes
									Cargo Tie Down Hooks
	5GF79 WL8AG	1							[L2, L5]
	5GF79 XDVAG	1							[D2, DV]
3	5086 138AA	4							LOOP, Cargo Tie Down
4	6036 484AA	8							RIVET, Blind Bulb, Open
5									MAT KIT, Floor - Complete, Export Only
	8220 6858	1	J, T	H, M, P	74				Dark Taupe, Without Footrest
	8220 6859	1	J, T	H, M, P	74				Dark Slate, Without Footrest
	8220 6860	1	U	H, P	74				Dark Taupe, Without Footrest
	8220 6861	1	U	H, P	74				Dark Slate, Without Footrest
	8220 7377	1	J, T		74				Dark Taupe, With Footrest
	8220 7378	1	J, T		74				Dark Slate, With Footrest
	8220 7379	1	U		74				Dark Taupe, With Footrest
	8220 7380	1	U		74				Dark Slate, With Footrest
6									MAT KIT, Floor - Front
	8220 6004	1							Dark Slate, Slush, Urethane
	8220 6005	1							Taupe, Slush, Urethane
	8220 6851	1	J, T		74				[L2, L5], Dark Taupe
	8220 6852	1	J, T		74				[DV, D2], Dark Slate
	8220 6853	1	U	H, P	74				Dark Taupe
	8220 6854	1	U	H, P	74				Dark Slate
	8220 7356	1							Dark Slate, Slush, Urethane, Export
	8220 7357	1							Taupe, Slush, Urethane, Export
7									MAT KIT, Floor - Rear
	8220 6006	1							Dark Slate, Slush, Urethane
	8220 6007	1							Taupe, Slush, Urethane
	8220 6856	1							[L2, L5], Dark Taupe
	8220 6857	1							[DV, D2], Dark Slate
8	8220 6761	1							MAT KIT, Bed - Interior, One piece mat folds at rear seat and flexes
									with seats when layed flat or in up position.
-9									CLIP, Floor Mat Retention
	5086 365AA	1	J, T						
		1	U						
10	#55352 864AB	1							PAD, Tunnel
-11									SILENCER, Floor Pan, 2.8 Diesel Only
	55352 898AB	1							Right

JEEP LIBERTY (KJ)

SERIES	LINE	BODY	ENGINE	TRANSMISSION
P = Limited	J = LHD (4WD)	74 = 4 Dr (104.3 WB)	ED1,ED0 = 2.4L Power Tech	DDK = 5 Speed HDManual
H = Sport	U = RHD (4WD)		EKG,EK0 = 3.7L Power Tech	DDD = 5 Speed HD Manual
M = Renegade	T = LHD (2WD)		ENJ = 2.5L 4Cyl Turbo Diesel	DG4,DGQ = Multi-Speed Auto
			ENR = 2.8L 4Cyl Turbo Diesel	DG6 = 4 Speed Auto Transm
			EN0 = 4Cyl Turbo Diesel	DG0 = All Automatic Transm
				DBB = All Manual Transm

AR = Use as required - = Non illustrated part # = New this model year

September 30, 2003

« RETURN TO GROUP INDEX

Carpets and Mats
Figure IKJ-310

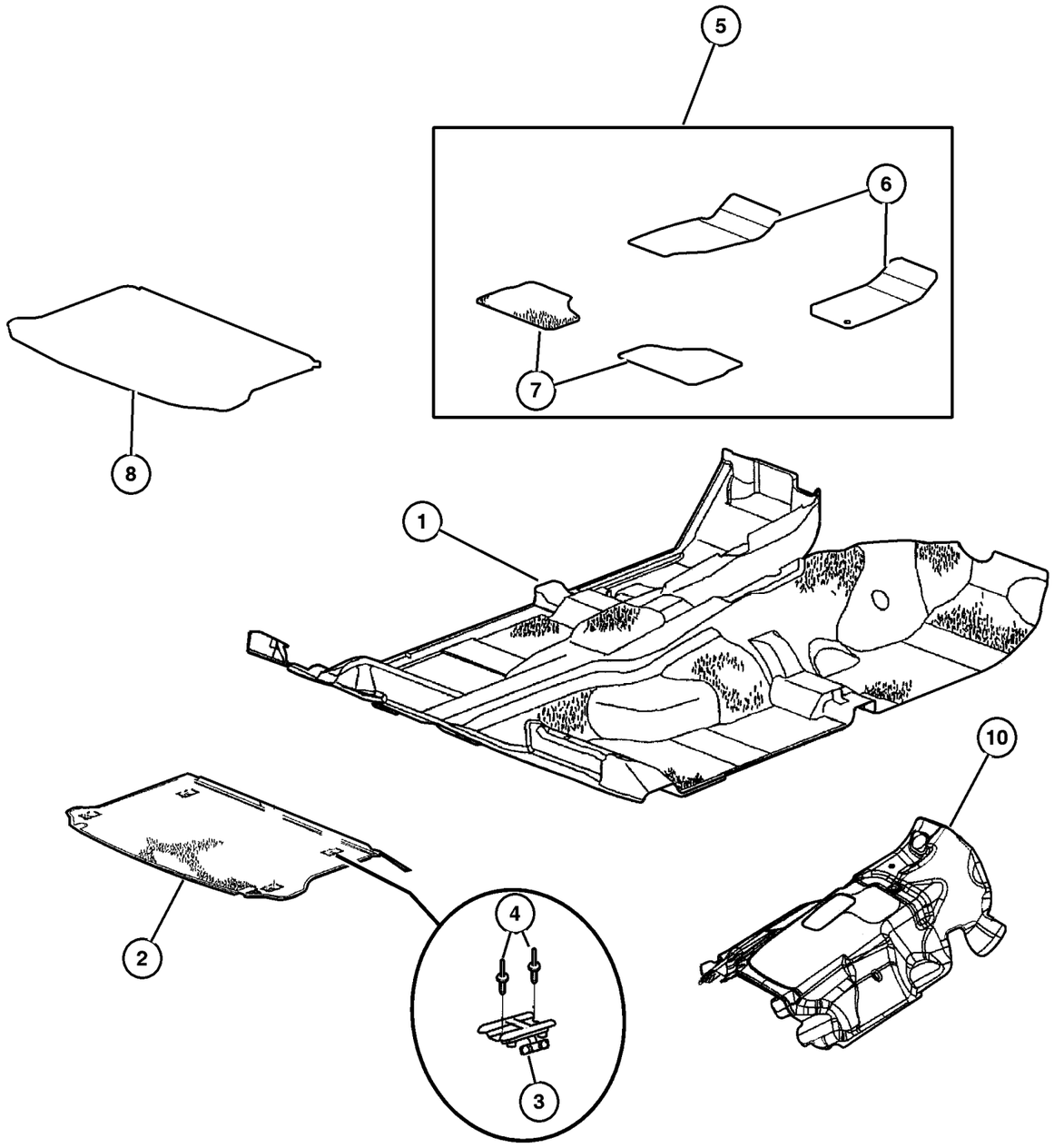

ITEM	PART NUMBER	QTY	LINE	SERIES	BODY	ENGINE	TRANS	TRIM	DESCRIPTION
	55352 899AB	1							Left

JEEP LIBERTY (KJ)

SERIES	LINE	BODY	ENGINE	TRANSMISSION
P = Limited	J = LHD (4WD)	74 = 4 Dr (104.3 WB)	ED1,ED0 = 2.4L Power Tech	DDK = 5 Speed HDManual
H = Sport	U = RHD (4WD)		EKG,EK0 = 3.7L Power Tech	DDD = 5 Speed HD Manual
M = Renegade	T = LHD (2WD)		ENJ = 2.5L 4Cyl Turbo Diesel	DG4,DGQ = Multi-Speed Auto
			ENR = 2.8L 4Cyl Turbo Diesel	DG6 = 4 Speed Auto Transm
			EN0 = 4Cyl Turbo Diesel	DG0 = All Automatic Transm
				DBB = All Manual Transm

Cargo Organizer
Figure IKJ-320

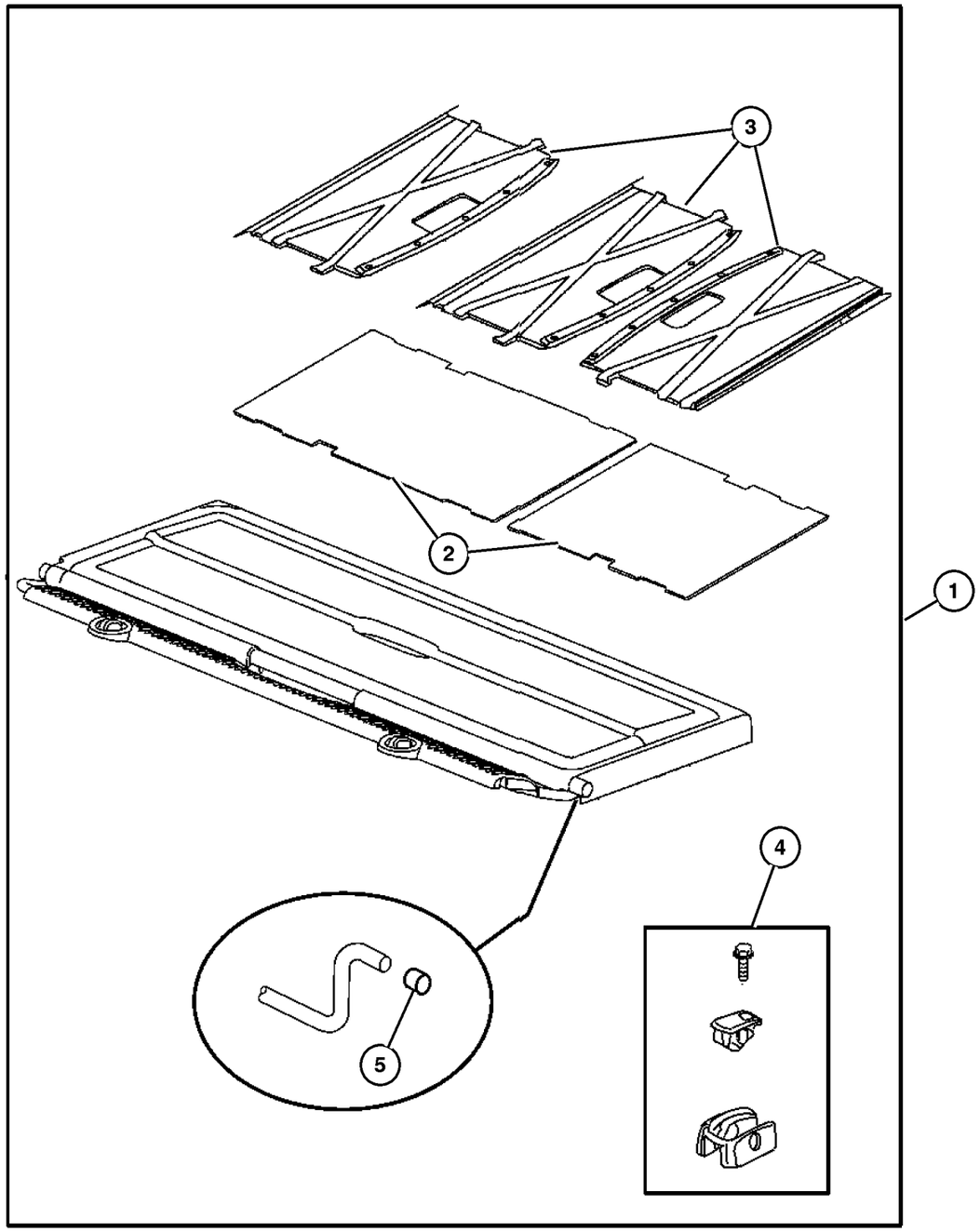

ITEM	PART NUMBER	QTY	LINE	SERIES	BODY	ENGINE	TRANS	TRIM	DESCRIPTION
1									ORGANIZER, CARGO
	#5JK49 1DVAB	1							[DV, D2]
	#5JK49 1L5AB	1							[L2, L5]
2									MAT, Storage Tray
	#5114 524AA	1							Right
	#5114 525AA	1							Left
3									PARTITION, Cargo, Includes Anti-Rattle Tape
	#ZF43 1DVAA	3							[DV, D2]
	#ZF43 1L5AA	3							[L2, L5]
4	#5114 585AA	2							MOUNT KIT
5	#5114 584AA	2							CAP, Rubber

JEEP LIBERTY (KJ)

SERIES	LINE	BODY	ENGINE	TRANSMISSION
P = Limited	J = LHD (4WD)	74 = 4 Dr (104.3 WB)	ED1,ED0 = 2.4L Power Tech	DDK = 5 Speed HDManual
H = Sport	U = RHD (4WD)		EKG,EK0 = 3.7L Power Tech	DDD = 5 Speed HD Manual
M = Renegade	T = LHD (2WD)		ENJ = 2.5L 4Cyl Turbo Diesel	DG4,DGQ = Multi-Speed Auto
			ENR = 2.8L 4Cyl Turbo Diesel	DG6 = 4 Speed Auto Transm
			EN0 = 4Cyl Turbo Diesel	DG0 = All Automatic Transm
				DBB = All Manual Transm

Trim Panel, Front Door
Figure IKJ-410

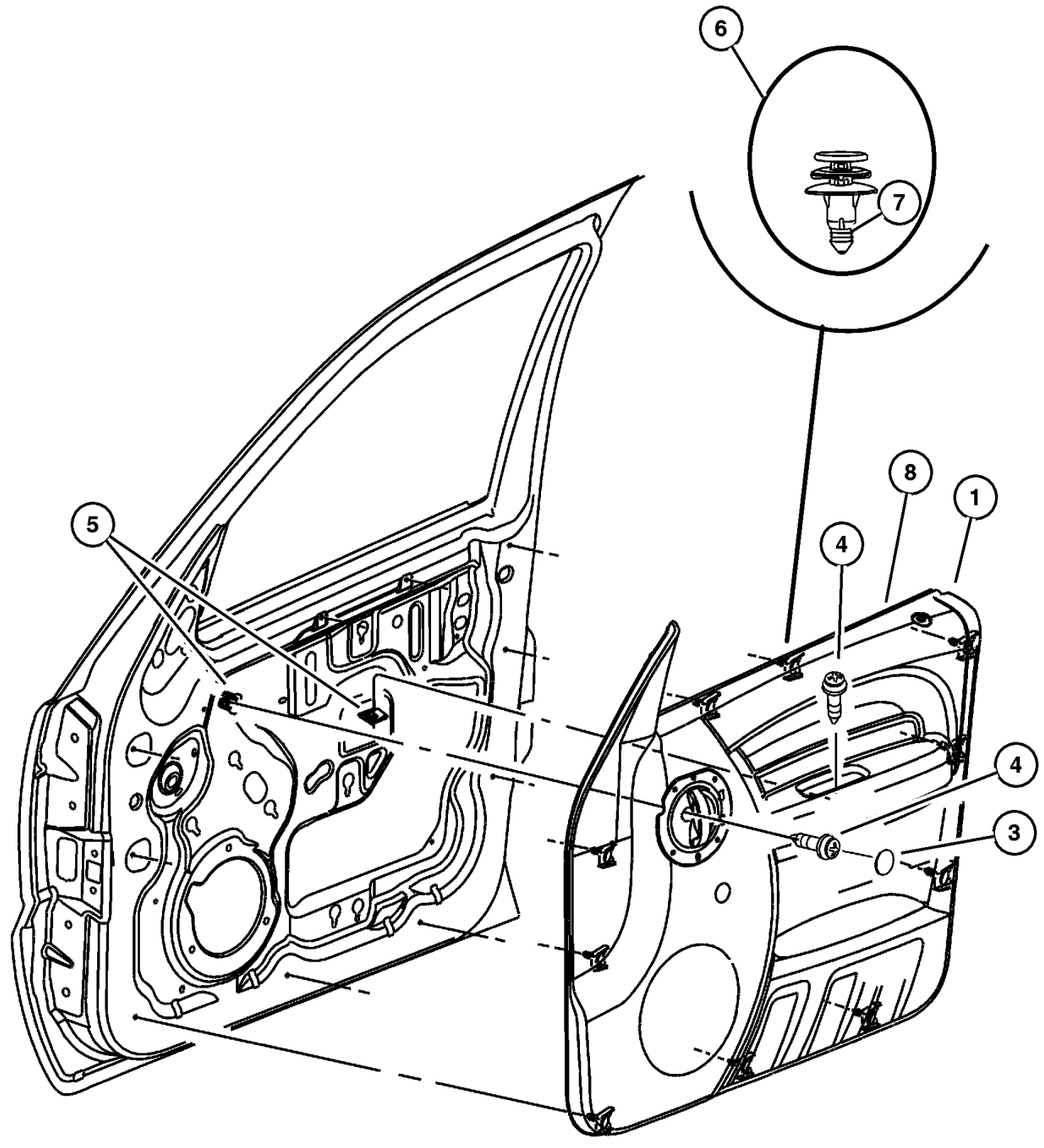

ITEM	PART NUMBER	QTY	LINE	SERIES	BODY	ENGINE	TRANS	TRIM	DESCRIPTION
Sales Codes:									
[CBF] = Premium Cloth Bolster, Bright Door Handle									
[CTC] = Leather									
[CTL] = Base, Cloth Bolster, Color Keyed Door Handle									
1									PANEL, Front Door Trim, Includes Door Handle and Clips
	YB40 WL5AA	1	J, T						[L5], With Power Locks Only, With Sales Code [CTL], Right
	YC06 XDVAA	1	U						[DV], With Power Windows and Locks, With Sales Code [CTL], Right
	YC07 WL5AA	1	U						[L5], With Power Windows and Locks, With Sales Code [CTL], Left
	YC07 XDVAA	1	U						[DV], With Power Windows and Locks, With Sales Code [CTL], Left
	YC08 1D2AA	1	J, T						[D2], With Sales Codes [CBF] and [CTC], With Chrome Door Lock Bezel, Right
	YC08 1DVAA	1	J, T						[DV], With Sales Codes [CBF] and [CTC], With Chrome Door Lock Bezel, Right
	YC08 1L2AA	1	J, T						[L2], With Sales Codes [CBF] and [CTC], With Chrome Door Lock Bezel, Right
	YC08 1L5AA	1	J, T						[L5], With Sales Codes [CBF] and [CTC], With Chrome Door Lock Bezel, Right
	#1AE10 1D2AA	1	J, T						[D2], With Sales Codes [CBF] and [CTC], With Color Keyed Door Lock Bezel, Right
	#1AE10 1DVAA	1	J, T						[DV], With Sales Codes [CBF] and [CTC], With Color Keyed Door Lock Bezel, Right
	#1AE10 1L2AA	1	J, T						[L2], With Sales Codes [CBF] and [CTC], With Color Keyed Door Lock Bezel, Right
	YB40 XDVAA	1	J, T						[DV], With Power Locks Only, With Sales Code [CTL], Right

JEEP LIBERTY (KJ)

SERIES	LINE	BODY	ENGINE	TRANSMISSION
P = Limited	J = LHD (4WD)	74 = 4 Dr (104.3 WB)	ED1,ED0 = 2.4L Power Tech	DDK = 5 Speed HDManual
H = Sport	U = RHD (4WD)		EKG,EK0 = 3.7L Power Tech	DDD = 5 Speed HD Manual
M = Renegade	T = LHD (2WD)		ENJ = 2.5L 4Cyl Turbo Diesel	DG4,DGQ = Multi-Speed Auto
			ENR = 2.8L 4Cyl Turbo Diesel	DG6 = 4 Speed Auto Transm
			EN0 = 4Cyl Turbo Diesel	DG0 = All Automatic Transm
				DBB = All Manual Transm

Trim Panel, Front Door
Figure IKJ-410

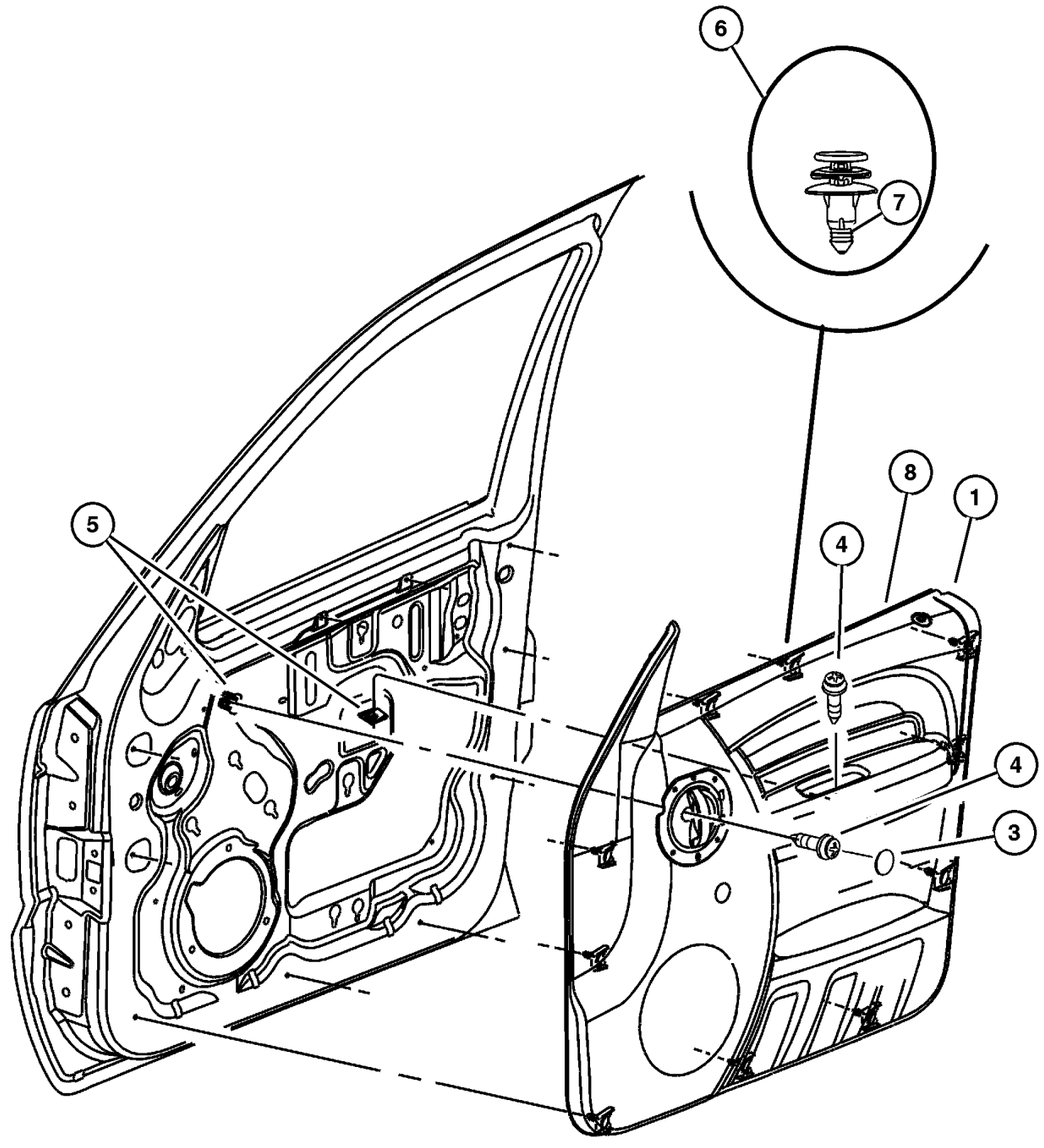

ITEM	PART NUMBER	QTY	LINE	SERIES	BODY	ENGINE	TRANS	TRIM	DESCRIPTION
	#1AE10 1L5AA	1	J, T						[L5], With Sales Codes [CBF] and [CTC], With Color Keyed Door Lock Bezel, Right
	YC09 1D2AA	1	J, T						[D2], With Sales Codes [CBF] and [CTC], With Chrome Door Lock Bezel, Left
	YC09 1DVAA	1	J, T						[DV], With Sales Codes [CBF] and [CTC], With Chrome Door Lock Bezel, Left
	YC09 1L2AA	1	J, T						[L2], With Sales Codes [CBF] and [CTC], With Chrome Door Lock Bezel, Left
	YC09 1L5AA	1	J, T						[L5], With Sales Codes [CBF] and [CTC], With Chrome Door Lock Bezel, Left
	#1AE11 1D2AA	1	J, T						[D2], With Sales Codes [CBF] and [CTC], With Color Keyed Door Lock Bezel, Left
	#1AE11 1DVAA	1	J, T						[DV], With Sales Codes [CBF] and [CTC], With Color Keyed Door Lock Bezel, Left
	#1AE11 1L2AA	1	J, T						[L2], With Sales Codes [CBF] and [CTC], With Color Keyed Door Lock Bezel, Left
	#1AE11 1L5AA	1	J, T						[L5], With Sales Codes [CBF] and [CTC], With Color Keyed Door Lock Bezel, Left
	YC10 1DVAA	1	U						[DV], With Sales Code [CBF], With Chrome Door Lock Bezel, Right
	YB41 WL5AA	1	J, T						[L5], With Power Locks Only, With Sales Code [CTL], Left
	YC10 1L2AA	1	U						[L2], With Sales Code [CBF], With Chrome Door Lock Bezel, Right
	YC10 1L5AA	1	U						[L5], With Sales Code [CBF], With Chrome Door Lock Bezel, Right
	#1AE12 1DVAA	1	U						[DV], With Sales Code [CBF], With Color Keyed Door Lock Bezel, Right
	#1AE12 1L2AA	1	U						[L2], With Sales Code [CBF], With Color Keyed Door Lock Bezel, Right

JEEP LIBERTY (KJ)

SERIES	LINE	BODY	ENGINE	TRANSMISSION
P = Limited	J = LHD (4WD)	74 = 4 Dr (104.3 WB)	ED1,ED0 = 2.4L Power Tech	DDK = 5 Speed HDManual
H = Sport	U = RHD (4WD)		EKG,EK0 = 3.7L Power Tech	DDD = 5 Speed HD Manual
M = Renegade	T = LHD (2WD)		ENJ = 2.5L 4Cyl Turbo Diesel	DG4,DGQ = Multi-Speed Auto
			ENR = 2.8L 4Cyl Turbo Diesel	DG6 = 4 Speed Auto Transm
			EN0 = 4Cyl Turbo Diesel	DG0 = All Automatic Transm
				DBB = All Manual Transm

Trim Panel, Front Door
Figure IKJ-410

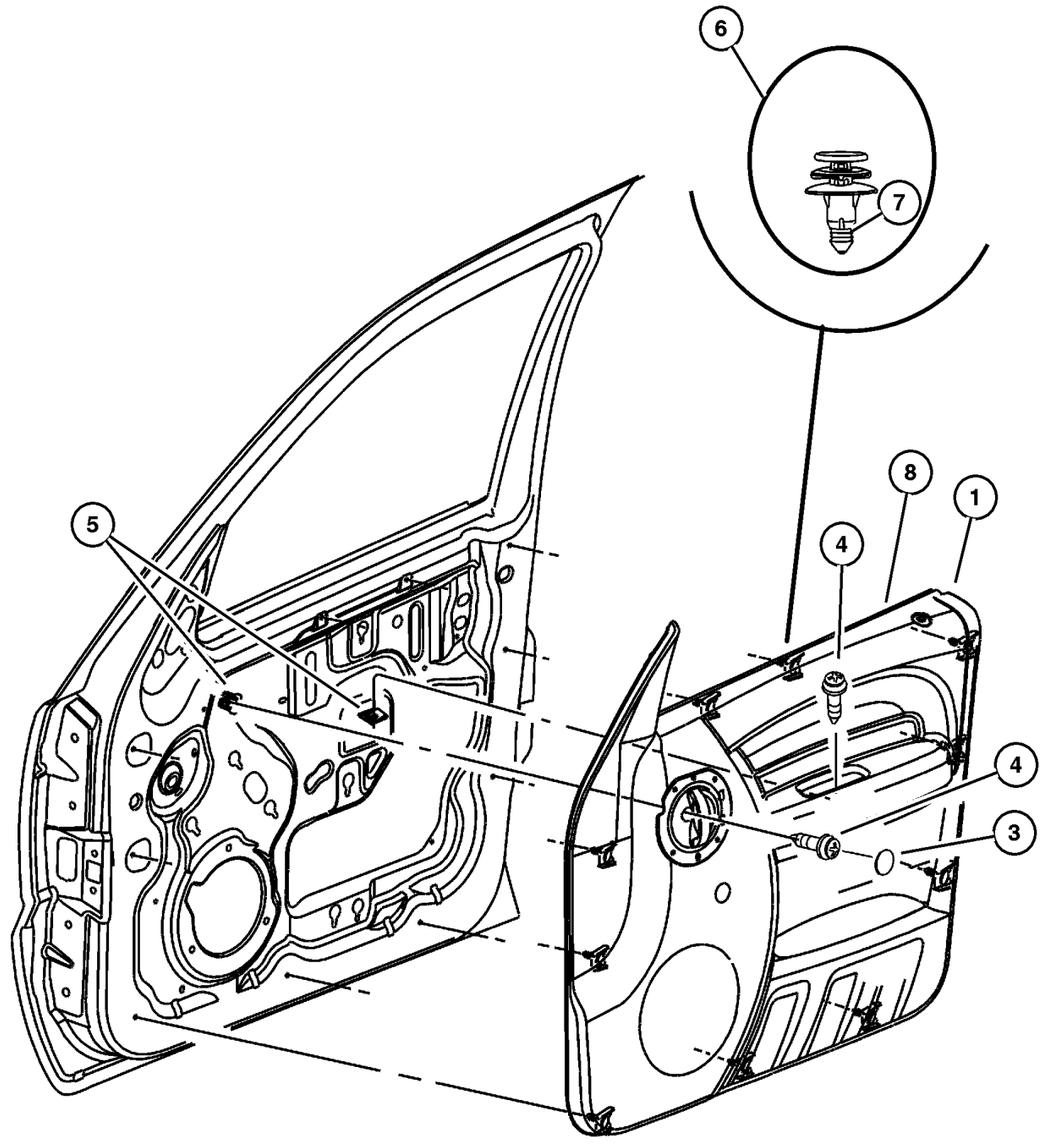

ITEM	PART NUMBER	QTY	LINE	SERIES	BODY	ENGINE	TRANS	TRIM	DESCRIPTION
	#1AE12 1L5AA	1	U						[L5], With Sales Code [CBF], With Color Keyed Door Lock Bezel, Right
	YC11 1DVAA	1	U						[DV], With Sales Code [CBF], With Chrome Door Lock Bezel, Left
	YC11 1L2AA	1	U						[L2], With Sales Code [CBF], With Chrome Door Lock Bezel, Left
	YC11 1L5AA	1	U						[L5], With Sales Code [CBF], With Chrome Door Lock Bezel, Left
	#1AE13 1DVAA	1	U						[DV], With Sales Code [CBF], With Color Keyed Door Lock Bezel, Left
	#1AE13 1L2AA	1	U						[L2], With Sales Code [CBF], With Color Keyed Door Lock Bezel, Left
	YB41 XDVAA	1	J, T						[DV], With Power Locks Only, With Sales Code [CTL], Left
	#1AE13 1L5AA	1	U						[L5], With Sales Code [CBF], With Color Keyed Door Lock Bezel, Left
	5GF00 WL5AM	1							[L5], Without Power, With Sales Code [CTL], Right
	5GF00 XDVAM	1							[DV], Without Power, With Sales Code [CTL], Right
	5GF01 WL5AM	1							[L5], Without Power, With Sales Code [CTL], Left
	5GF01 XDVAM	1							[DV], Without Power, With Sales Code [CTL], Left
	YB42 WL5AA	1	J, T						[L5], With Power Windows and Locks, With Sales Code [CTL], Right
	YB42 XDVAA	1	J, T						[DV], With Power Windows and Locks, With Sales Code [CTL], Right
	YB43 WL5AA	1	J, T						[L5], With Power Windows and Locks, With Sales Code [CTL], Left
	YB43 XDVAA	1	J, T						[DV], With Power Windows and Locks, With Sales Code [CTL], Left

JEEP LIBERTY (KJ)

SERIES	LINE	BODY	ENGINE	TRANSMISSION
P = Limited	J = LHD (4WD)	74 = 4 Dr (104.3 WB)	ED1,ED0 = 2.4L Power Tech	DDK = 5 Speed HDManual
H = Sport	U = RHD (4WD)		EKG,EK0 = 3.7L Power Tech	DDD = 5 Speed HD Manual
M = Renegade	T = LHD (2WD)		ENJ = 2.5L 4Cyl Turbo Diesel	DG4,DGQ = Multi-Speed Auto
			ENR = 2.8L 4Cyl Turbo Diesel	DG6 = 4 Speed Auto Transm
			EN0 = 4Cyl Turbo Diesel	DG0 = All Automatic Transm
				DBB = All Manual Transm

AR = Use as required - = Non illustrated part # = New this model year

September 30, 2003

« RETURN TO GROUP INDEX

Trim Panel, Front Door
Figure IKJ-410

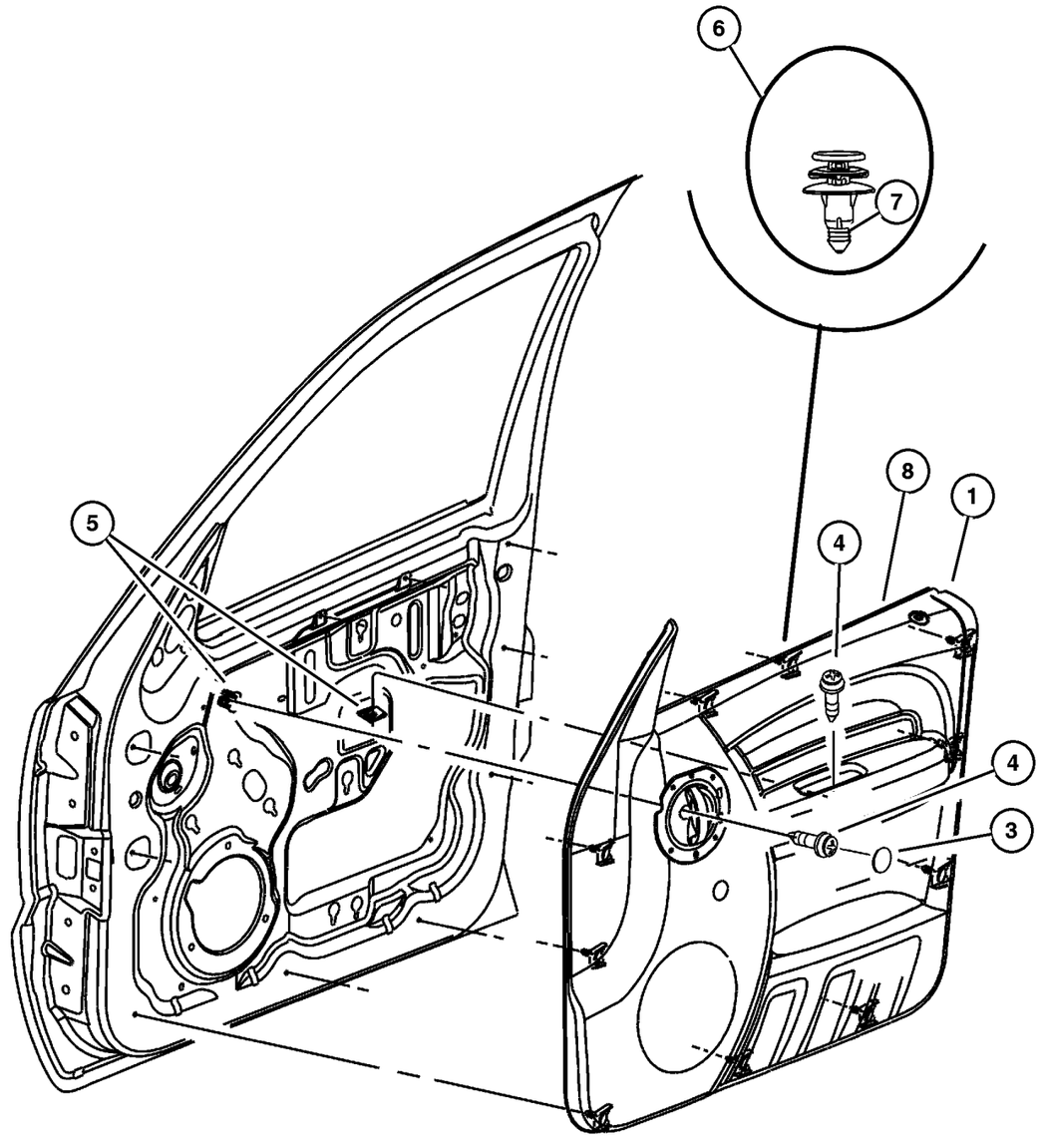

ITEM	PART NUMBER	QTY	LINE	SERIES	BODY	ENGINE	TRANS	TRIM	DESCRIPTION
	YC06 WL5AA	1	U						[L5], With Power Windows and Locks, With Sales Code [CTL], Right
-2	4658 676	2							CLIP, Latch Link
3									PLUG, Door Trim Panel
	5GY30 WL5AA	2							[L2, L5]
	5GY30 XDVAA	2							[D2, DV]
4									SCREW, .164-18x1.00, (NOT SERVICED) (Not Serviced)
5	0152 490	2							NUT, Spring, .16-18
6	5023 173AA	11							RETAINER, Trim Panel, Grommet and Pin
7	5023 174AA	11							PIN, Push, Also serviced with 5023173AA
8	55235 878AC	1							WEATHERSTRIP, Door Belt Moulding, Right & Left

JEEP LIBERTY (KJ)

SERIES	LINE	BODY	ENGINE	TRANSMISSION
P = Limited	J = LHD (4WD)	74 = 4 Dr (104.3 WB)	ED1,ED0 = 2.4L Power Tech	DDK = 5 Speed HDManual
H = Sport	U = RHD (4WD)		EKG,EK0 = 3.7L Power Tech	DDD = 5 Speed HD Manual
M = Renegade	T = LHD (2WD)		ENJ = 2.5L 4Cyl Turbo Diesel	DG4,DGQ = Multi-Speed Auto
			ENR = 2.8L 4Cyl Turbo Diesel	DG6 = 4 Speed Auto Transm
			EN0 = 4Cyl Turbo Diesel	DG0 = All Automatic Transm
				DBB = All Manual Transm

Trim Panel, Rear Door
Figure IKJ-420

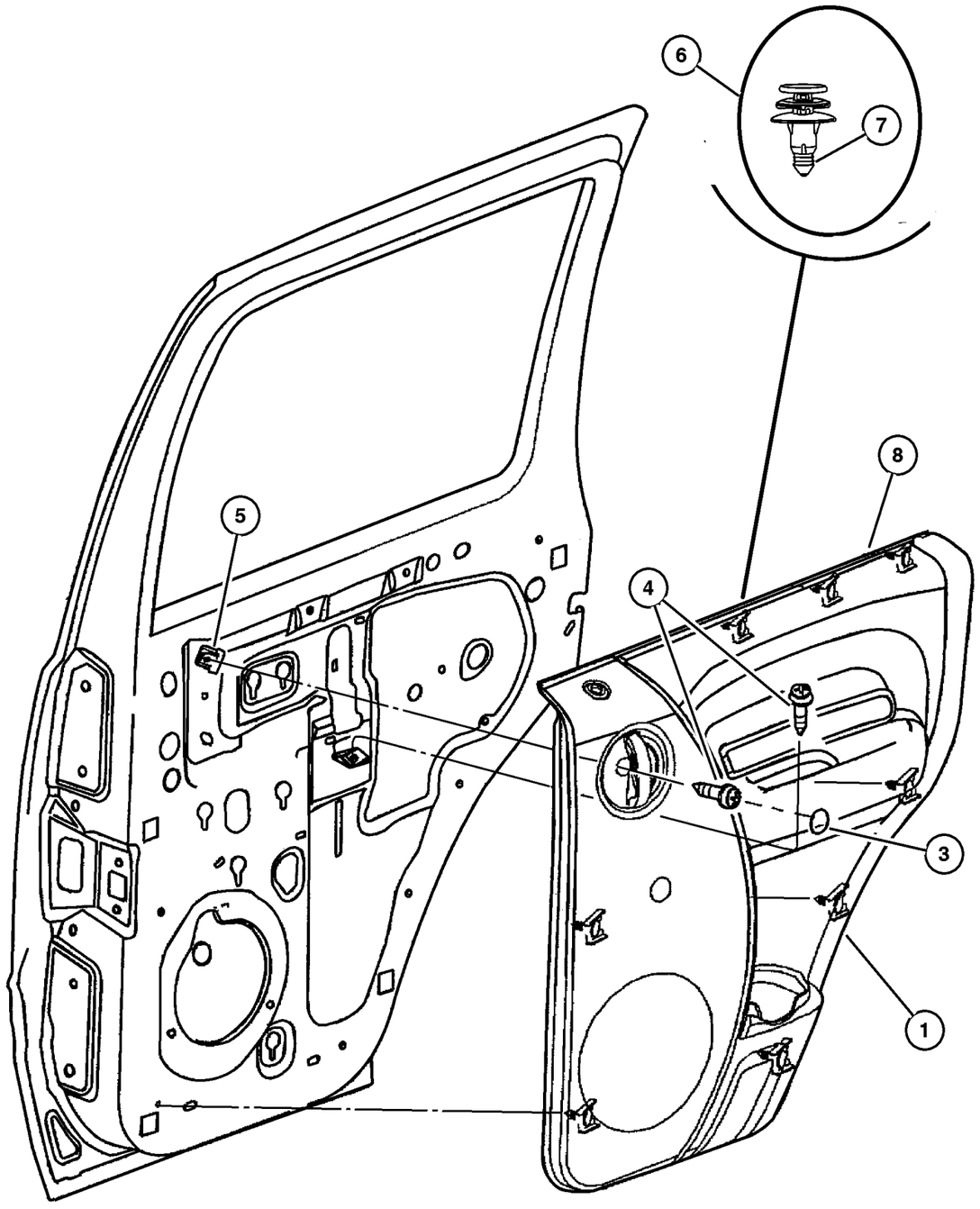

ITEM	PART NUMBER	QTY	LINE	SERIES	BODY	ENGINE	TRANS	TRIM	DESCRIPTION
Sales Codes:									
[CBF] = Premium Vinyl Bolster, Bright Door Handle									
[CTC] = Leather									
[CTL] = Base, Vinyl Bolster, Color Keyed Door Handle									
1									PANEL, Rear Door Trim, Includes Door Handle
	5GF18 WL5AM	1							[L5], With Sales Code [CTL], Right
	#5GF20 1DVAS	1							[DV], With Sales Code [CBF] and [CTC], With Color Keyed Door Lock Bezel, Right
	#5GF20 1L2AS	1							[L2], With Sales Code [CBF] and [CTC], With Color Keyed Door Lock Bezel, Right
	#5GF20 1L5AS	1							[L5], With Sales Code [CBF] and [CTC], With Color Keyed Door Lock Bezel, Right
	#5GF21 1D2AP	1							[D2], With Sales Code [CBF] and [CTC], With Chrome Door Lock Bezel, Left
	#5GF21 1DVAP	1							[DV], With Sales Code [CBF] and [CTC], With Chrome Door Lock Bezel, Left
	#5GF21 1L2AP	1							[L2], With Sales Code [CBF] and [CTC], With Chrome Door Lock Bezel, Left
	#5GF21 1L5AP	1							[L5], With Sales Code [CBF] and [CTC], With Chrome Door Lock Bezel, Left
	#5GF21 1D2AS	1							[D2], With Sales Code [CBF] and [CTC], With Color Keyed Door Lock Bezel, Left
	#5GF21 1DVAS	1							[DV], With Sales Code [CBF] and [CTC], With Color Keyed Door Lock Bezel, Left
	#5GF21 1L2AS	1							[L2], With Sales Code [CBF] and [CTC], With Color Keyed Door Lock Bezel, Left
	5GF18 XDVAM	1							[DV], With Sales Code [CTL], Right

JEEP LIBERTY (KJ)

SERIES	LINE	BODY	ENGINE	TRANSMISSION
P = Limited	J = LHD (4WD)	74 = 4 Dr (104.3 WB)	ED1,ED0 = 2.4L Power Tech	DDK = 5 Speed HDManual
H = Sport	U = RHD (4WD)		EKG,EK0 = 3.7L Power Tech	DDD = 5 Speed HD Manual
M = Renegade	T = LHD (2WD)		ENJ = 2.5L 4Cyl Turbo Diesel	DG4,DGQ = Multi-Speed Auto
			ENR = 2.8L 4Cyl Turbo Diesel	DG6 = 4 Speed Auto Transm
			EN0 = 4Cyl Turbo Diesel	DG0 = All Automatic Transm
				DBB = All Manual Transm

Trim Panel, Rear Door
Figure IKJ-420

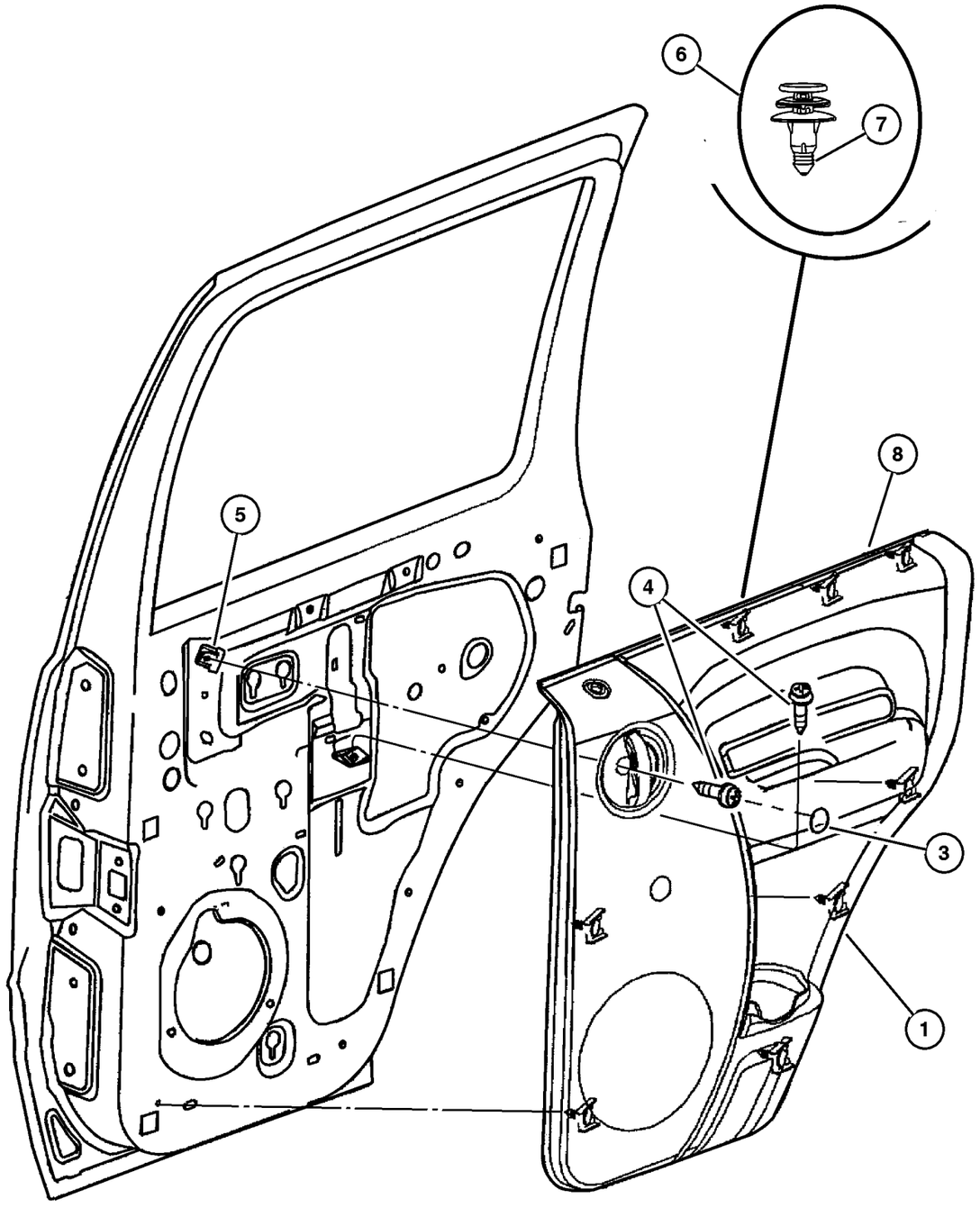

ITEM	PART NUMBER	QTY	LINE	SERIES	BODY	ENGINE	TRANS	TRIM	DESCRIPTION
	#5GF21 1L5AS	1							[L5], With Sales Code [CBF] and [CTC], With Color Keyed Door Lock Bezel, Left
	5GF19 WL5AM	1							[L5], With Sales Code [CTL], Left
	5GF19 XDVAM	1							[DV], With Sales Code [CTL], Left
	#5GF20 1D2AP	1							[D2], With Sales Code [CBF] and [CTC], With Chrome Door Lock Bezel, Right
	#5GF20 1DVAP	1							[DV], With Sales Code [CBF] and [CTC], With Chrome Door Lock Bezel, Right
	#5GF20 1L2AP	1							[L2], With Sales Code [CBF] and [CTC], With Chrome Door Lock Bezel, Right
	#5GF20 1L5AP	1							[L5], With Sales Code [CBF] and [CTC], With Chrome Door Lock Bezel, Right
	#5GF20 1D2AS	1							[D2], With Sales Code [CBF] and [CTC], With Color Keyed Door Lock Bezel, Right
-2	4658 676	2							CLIP, Latch Link, Also serviced with the Door Panel
3									PLUG, Door Trim Panel
	5GY30 WL5AA	2							[L2, L5]
	5GY30 XDVAA	2							[D2, DV]
4									SCREW, .164-18x1.00, (NOT SERVICED) (Not Serviced)
5	0152 490	2							NUT, Spring, .16-18
6	5023 173AA	9							RETAINER, Trim Panel, Grommet and Pin
7	5023 174AA	9							PIN, Push, Also serviced with 5023713AA
8									WEATHERSTRIP, Door Belt Moulding
	55235 886AC	1							Right
	55235 887AC	1							Left

JEEP LIBERTY (KJ)

SERIES	LINE	BODY	ENGINE	TRANSMISSION
P = Limited	J = LHD (4WD)	74 = 4 Dr (104.3 WB)	ED1,ED0 = 2.4L Power Tech	DDK = 5 Speed HDManual
H = Sport	U = RHD (4WD)		EKG,EK0 = 3.7L Power Tech	DDD = 5 Speed HD Manual
M = Renegade	T = LHD (2WD)		ENJ = 2.5L 4Cyl Turbo Diesel	DG4,DGQ = Multi-Speed Auto
			ENR = 2.8L 4Cyl Turbo Diesel	DG6 = 4 Speed Auto Transm
			EN0 = 4Cyl Turbo Diesel	DG0 = All Automatic Transm
				DBB = All Manual Transm

AR = Use as required - = Non illustrated part # = New this model year

September 30, 2003

« RETURN TO GROUP INDEX

«

Front Seat, Leather, Low Back, Trim Code [DL]
Figure IKJ-510

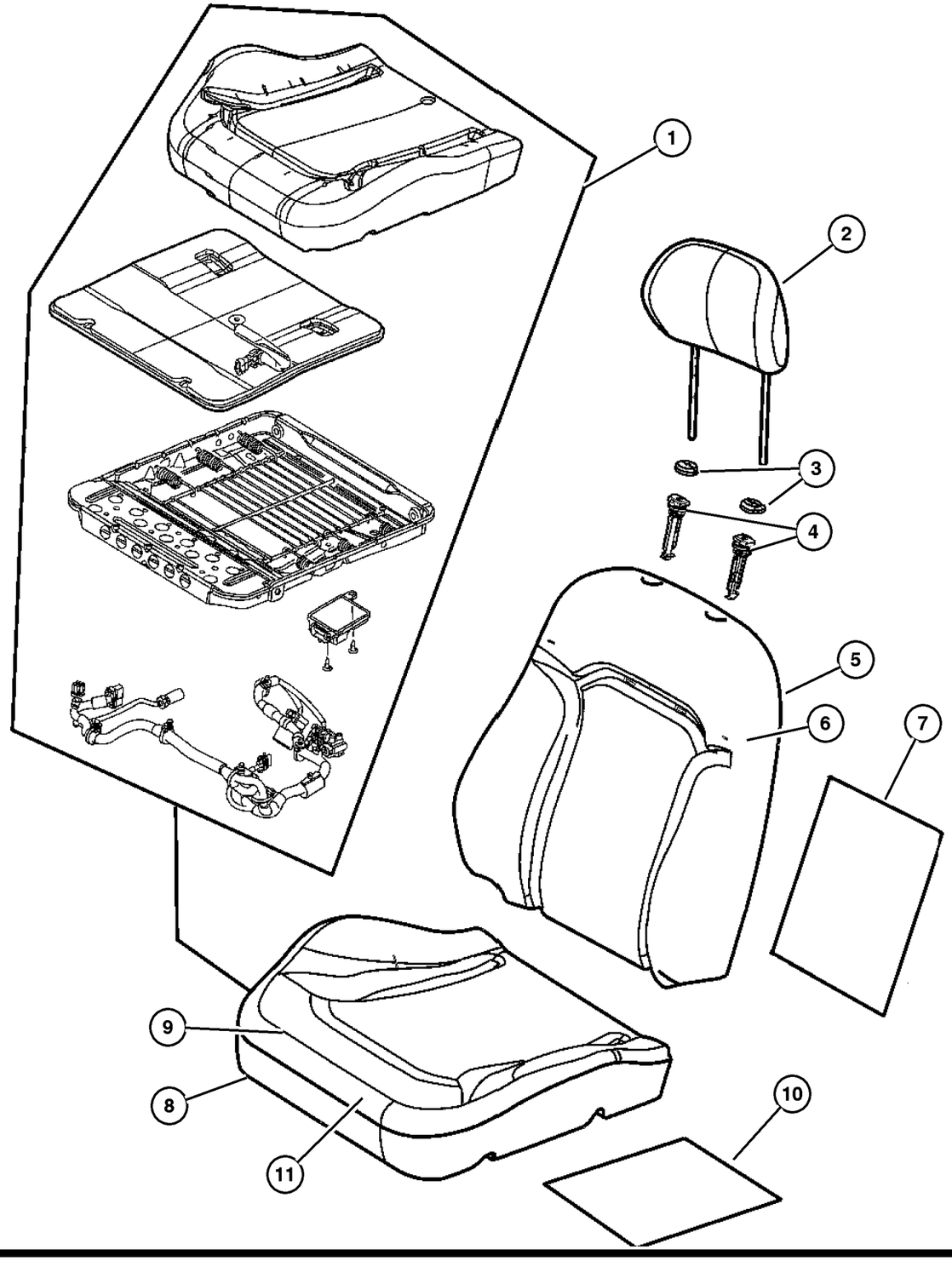

ITEM	PART NUMBER	QTY	LINE	SERIES	BODY	ENGINE	TRANS	TRIM	DESCRIPTION
Note; For United States/Canada vehicles only, if right side Cushion Foam is needed order Bladder Repair Kit. Do not attempt to replace the right side Cushion Foam separately as it may interfere with the calibration of the Occupant Classification System.									
1									BLADDER REPAIR KIT, Occupant Classification System, See Note, Right Side Only
	#5126 326AA	1	J, T					DL	Includes Heater Pad, Foam, Bladder, Frame, Control Module and Harness, Passenger
	#5114 583AA	1	J, T					DL	Includes Foam, Bladder, Frame, Control Module and Harness, Passenger
2									HEADREST, Front
	WA52 1DVAA	2	J, U					DL	[DV], Export
	WA52 1L2AA	2	J, U					DL	[L2], Export
		2	J, T					DL	[D2, L2]
3									CAP, Headrest Adjuster
	WA49 TL2AA	1	J, T					DL	[D2, L2], With Button
		2	J, U					DL	[L2], With Button, Export
	WA49 XDVAA	2	J, U					DL	[DV], With Button, Export
	WA50 TL2AA	1	J, T					DL	[D2, L2], Without Button
		2	J, U					DL	[L2], Without Button, Export
	WA50 XDVAA	2	J, U					DL	[DV], Without Button, Export
4									SLEEVE, Headrest
	5066 563AA	2	J, U					DL	
		2	J, T					DL	
5									BACK, Front Seat
	#ZN97 1L2AA	1	J, T					DL	[L2], Heated, Left
	#ZP01 1DVAA	1	J, U					DL	[DV], Non-Heated, Export, Left
	#ZP00 1L2AA	1	J, U					DL	[L2], Non-Heated, Export, Right
	#ZP00 1DVAA	1	J, U					DL	[DV], Non-Heated, Export, Right
	#ZN97 1DVAA	1	J, U					DL	[DV], Heated, Export, Left
	#ZN97 1L2AA	1	J, U					DL	[L2], Heated, Export, Left
	#ZN96 1L2AA	1	J, U					DL	[L2], Heated, Export, Right
	#ZN96 1DVAA	1	J, U					DL	[DV], Heated, Export, Right
	#ZN97 1L2AA	1	J, T					DL	[D2], Heated, Left
	#ZN96 1L2AA	1	J, T					DL	[L2], Heated, Right
		1	J, T					DL	[D2], Heated, Right
	#ZP01 1L2AA	1	J, T					DL	[L2], Non-Heated, Left
		1	J, T					DL	[D2], Non-Heated, Left
	#ZP00 1L2AA	1	J, T					DL	[L2], Non-Heated, Right
		1	J, T					DL	[D2], Non-Heated, Right

JEEP LIBERTY (KJ)

SERIES	LINE	BODY	ENGINE	TRANSMISSION
P = Limited	J = LHD (4WD)	74 = 4 Dr (104.3 WB)	ED1,ED0 = 2.4L Power Tech	DDK = 5 Speed HDManual
H = Sport	U = RHD (4WD)		EKG,EK0 = 3.7L Power Tech	DDD = 5 Speed HD Manual
M = Renegade	T = LHD (2WD)		ENJ = 2.5L 4Cyl Turbo Diesel	DG4,DGQ = Multi-Speed Auto
			ENR = 2.8L 4Cyl Turbo Diesel	DG6 = 4 Speed Auto Transm
			EN0 = 4Cyl Turbo Diesel	DG0 = All Automatic Transm
				DBB = All Manual Transm

Front Seat, Leather, Low Back, Trim Code [DL]
Figure IKJ-510

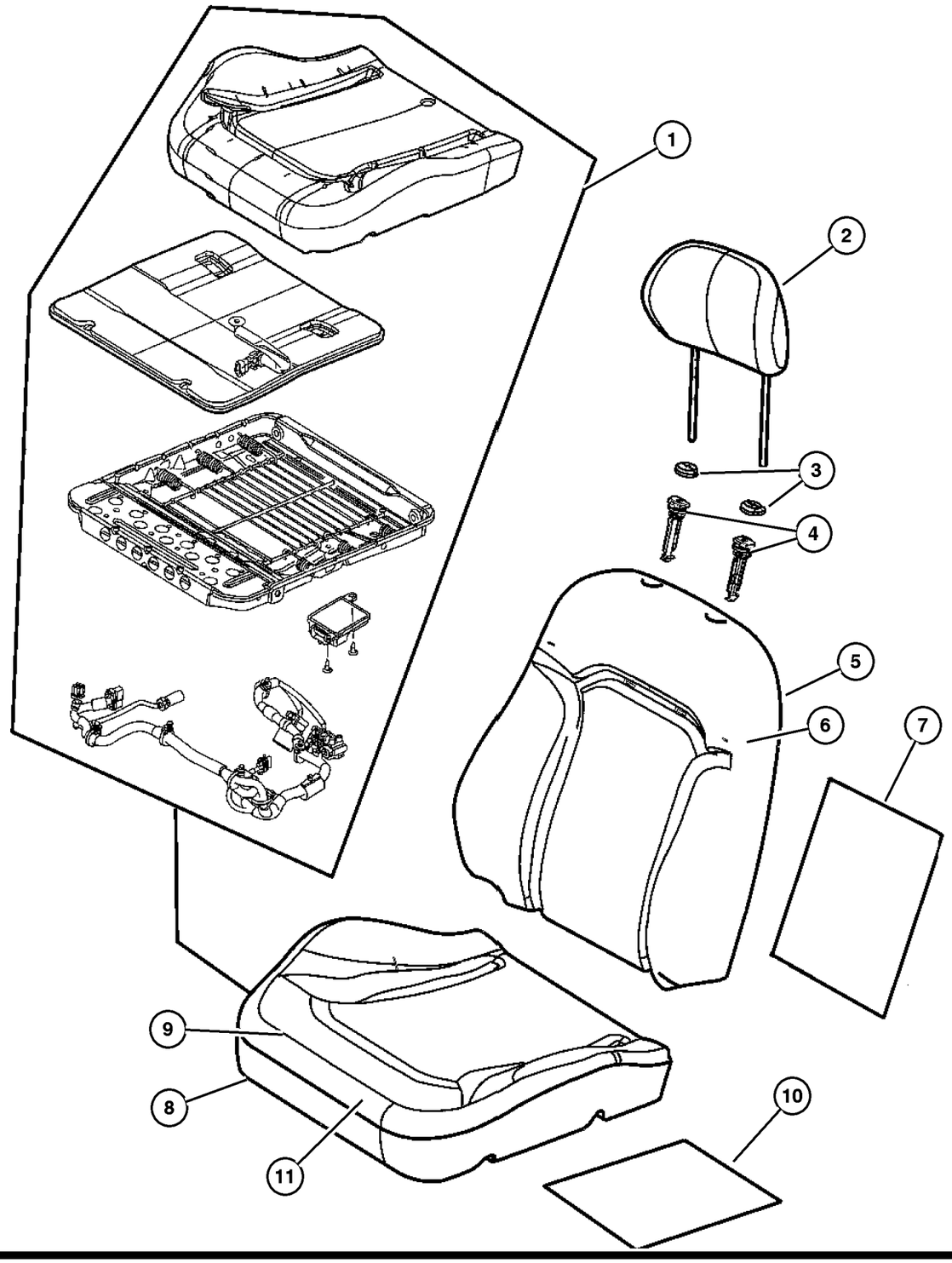

ITEM	PART NUMBER	QTY	LINE	SERIES	BODY	ENGINE	TRANS	TRIM	DESCRIPTION
	#ZP01 1L2AA	1	J, U					DL	[L2], Non-Heated, Export, Left
6									COVER, Front Seat Back
	#ZN99 1L2AA	1	J, T					DL	[D2, L2], Left
	#ZN98 1L2AA	1	J, T					DL	[D2, L2], Right
	#ZN99 1L2AA	1	J, U					DL	[L2], Export, Left
	#ZN99 1DVAA	1	J, U					DL	[DV], Export, Left
	#ZN98 1DVAA	1	J, U					DL	[DV], Export, Right
	#ZN98 1L2AA	1	J, U					DL	[L2], Export, Right
7									PAD, Heater, Back
	5103 170AA	1	J, T					DL	
		1	J, U					DL	Export
8									FRAME, Front Seat Cushion
	#5126 323AA	1	J, U					DL	Left
		1	J, T					DL	Left
	#5126 322AA	1	J, T					DL	Right
		1	J, U					DL	Right
9									COVER, Front Seat Cushion
	XV84 1DVAA	1	J, U					DL	[DV], Export, Right
	XV84 1L2AA	1	J, T					DL	[D2, L2], Right
		1	J, U					DL	[L2], Export, Right
	XV85 1DVAA	1	J, U					DL	[DV], Export, Left
	XV85 1L2AA	1	J, U					DL	[L2], Export, Left
		1	J, T					DL	[D2, L2], Left
10									PAD, Heater, Cushion
	5103 171AA	2	J, T					DL	
		2	J, U					DL	Export
11									FOAM, Seat Cushion
	5093 976AA	2	J, U					DL	Driver and Passenger,Export
		2	J, T					DL	Mexico, Driver and Passenger
		1	J, T					DL	Domestic Left Side Only
-12									WIRE KIT, Trimming
	5093 977AA	2	J, T					DL	
		2	J, U					DL	Export

JEEP LIBERTY (KJ)

SERIES	LINE	BODY	ENGINE	TRANSMISSION
P = Limited	J = LHD (4WD)	74 = 4 Dr (104.3 WB)	ED1,ED0 = 2.4L Power Tech	DDK = 5 Speed HDManual
H = Sport	U = RHD (4WD)		EKG,EK0 = 3.7L Power Tech	DDD = 5 Speed HD Manual
M = Renegade	T = LHD (2WD)		ENJ = 2.5L 4Cyl Turbo Diesel	DG4,DGQ = Multi-Speed Auto
			ENR = 2.8L 4Cyl Turbo Diesel	DG6 = 4 Speed Auto Transm
			EN0 = 4Cyl Turbo Diesel	DG0 = All Automatic Transm
				DBB = All Manual Transm

Front Seat, Cloth, Low Back, Trim Code [XJ]
Figure IKJ-520

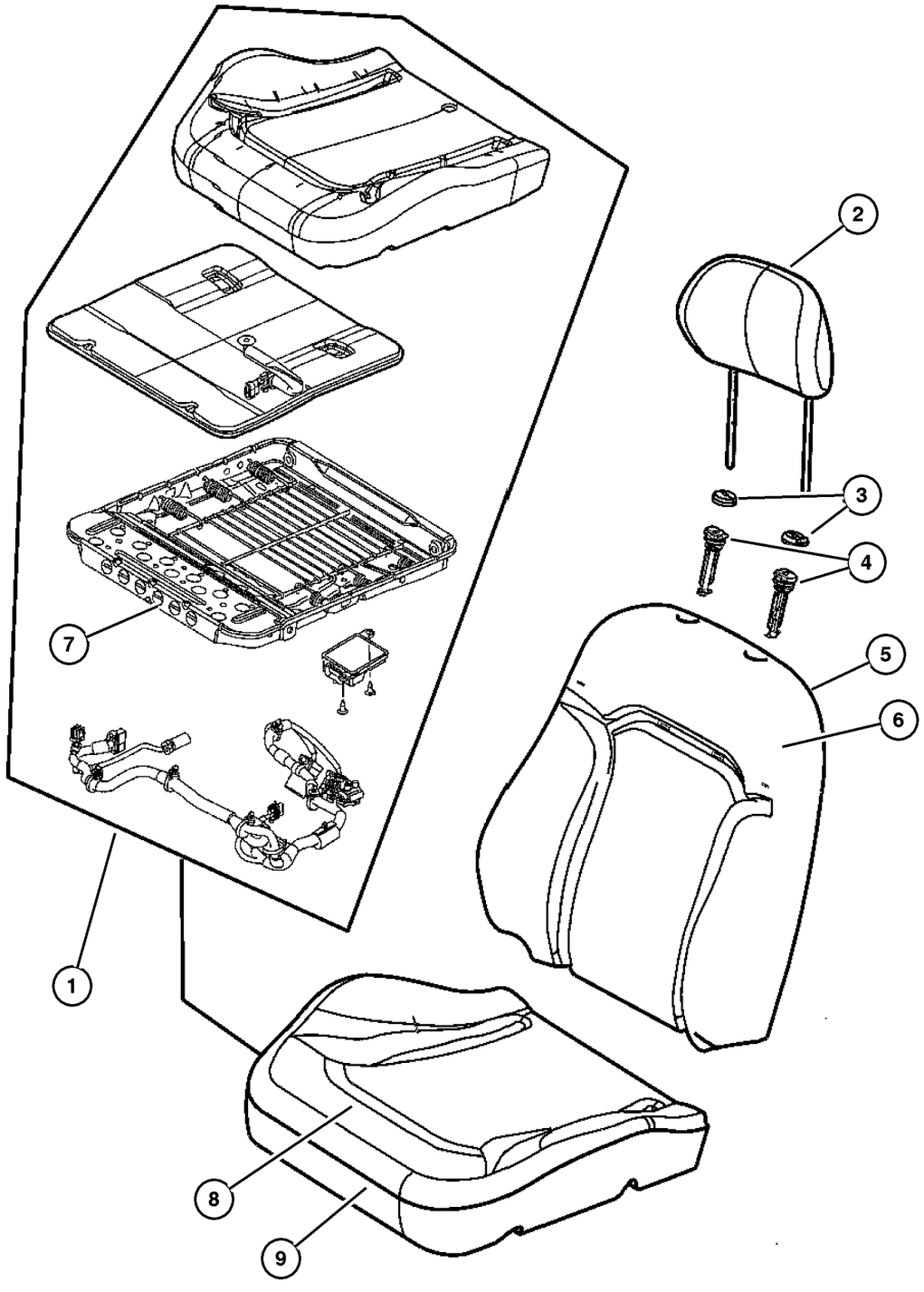

ITEM	PART NUMBER	QTY	LINE	SERIES	BODY	ENGINE	TRANS	TRIM	DESCRIPTION
Note; For United States/Canada vehicles only, if right side Cushion Foam is needed order Bladder Repair Kit. Do not attempt to replace the right side Cushion Foam separately as it may interfere with the calibration of the Occupant Classification System.									
1	#5126 304AA	1	J, T					XJ	BLADDER REPAIR KIT, Occupant Classification System, See Note, Right Side Only, Includes Foam, Bladder, Frame, Control Module and Harness, Passenger
2									HEADREST, Front
	XP74 1DVAA	2	J, T					XJ	[DV]
	XP74 1L5AA	2	J, T					XJ	[L5]
	XP74 1DVAA	2	J, U					XJ	[DV], Export
	XP74 1L5AA	2	J, U					XJ	[L5], Export
3									CAP, Headrest Adjuster
	WA49 XDVAA	2	J, T					XJ	[DV], With Button
	WA49 WL5AA	2	J, T					XJ	[L5], With Button
	WA50 XDVAA	2	J, T					XJ	[DV], Without Button
	WA50 WL5AA	2	J, T					XJ	[L5], Without Button
	WA49 XDVAA	2	J, U					XJ	[DV], With Button, Export
	WA49 WL5AA	2	J, U					XJ	[L5], With Button, Export
	WA50 XDVAA	2	J, U					XJ	[DV], Without Button, Export
	WA50 WL5AA	2	J, U					XJ	[L5], Without Button, Export
4									SLEEVE, Headrest
	5066 563AA	2	J, T					XJ	
		2	J, U					XJ	
5									BACK, Front Seat
	ZD92 1DVAA	1	J, T					XJ	[DV], Right
		1	J, U					XJ	[DV], Right,Export
	ZD92 1L5AA	1	J, T					XJ	[L5], Right
		1	J, U					XJ	[L5], Right,Export
	ZD93 1DVAA	1	J, T					XJ	[DV], Left
		1	J, U					XJ	[DV], Left,Export
	ZD93 1L5AA	1	J, T					XJ	[L5], Left
		1	J, U					XJ	[L5], Left,Export
6									COVER, Front Seat Back
	ZD90 1DVAA	1	J, T					XJ	[DV], Right
		1	J, U					XJ	[DV], Right,Export
	ZD90 1L5AA	1	J, T					XJ	[L5], Right
		1	J, U					XJ	[L5], Right,Export
	ZD91 1DVAA	1	J, T					XJ	[DV], Left
		1	J, U					XJ	[DV], Left,Export
	ZD91 1L5AA	1	J, T					XJ	[L5], Left

JEEP LIBERTY (KJ)

SERIES	LINE	BODY	ENGINE	TRANSMISSION
P = Limited	J = LHD (4WD)	74 = 4 Dr (104.3 WB)	ED1,ED0 = 2.4L Power Tech	DDK = 5 Speed HDManual
H = Sport	U = RHD (4WD)		EKG,EK0 = 3.7L Power Tech	DDD = 5 Speed HD Manual
M = Renegade	T = LHD (2WD)		ENJ = 2.5L 4Cyl Turbo Diesel	DG4,DGQ = Multi-Speed Auto
			ENR = 2.8L 4Cyl Turbo Diesel	DG6 = 4 Speed Auto Transm
			EN0 = 4Cyl Turbo Diesel	DG0 = All Automatic Transm
				DBB = All Manual Transm

Front Seat, Cloth, Low Back, Trim Code [XJ]
Figure IKJ-520

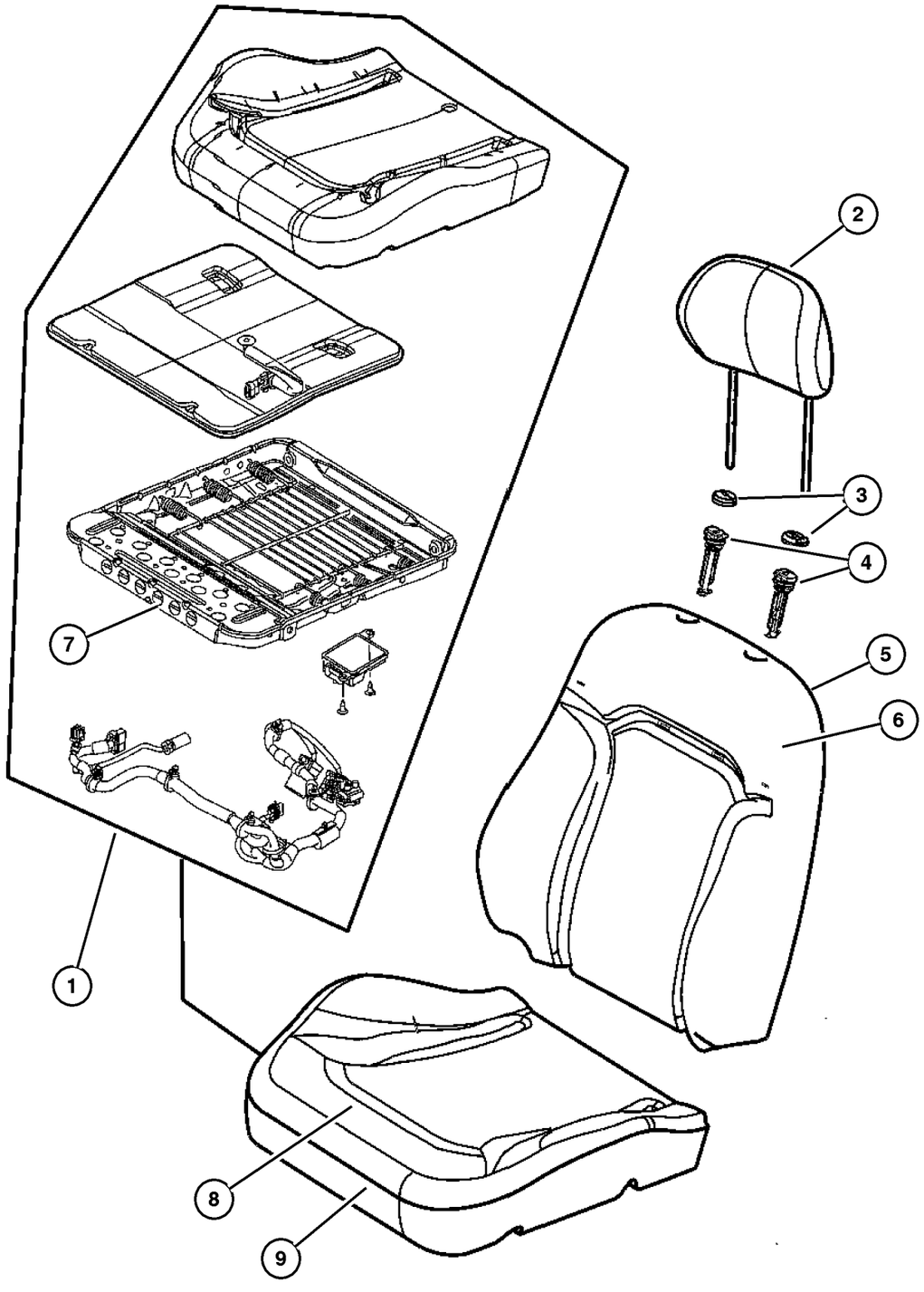

ITEM	PART NUMBER	QTY	LINE	SERIES	BODY	ENGINE	TRANS	TRIM	DESCRIPTION
		1	J, U					XJ	[L5], Left,Export
7									FRAME, Front Seat Cushion
	#5126 322AA	1	J, T					XJ	Right
		1	J, U					XJ	Right,Export
	#5126 323AA	1	J, U					XJ	Left,Export
		1	J, T					XJ	Left
8									COVER, Front Seat Cushion
	YG51 1DVAA	2	J, T					XJ	[DV], Right & Left
		2	J, U					XJ	[DV], Right & Left,Export
	YG51 1L5AA	2	J, T					XJ	[L5], Right & Left
		2	J, U					XJ	[L5], Right & Left,Export
9									FOAM, Seat Cushion
	5093 975AA	1	J, T					XJ	For Passenger Side Use Bladder
									Repair Kit, Driver
		2	J, U					XJ	Export Only, Driver and Passenger
-10									WIRE KIT, Trimming
	5093 978AA	2	J, T					XJ	
		2	J, U					XJ	

JEEP LIBERTY (KJ)

SERIES	LINE	BODY	ENGINE	TRANSMISSION
P = Limited	J = LHD (4WD)	74 = 4 Dr (104.3 WB)	ED1,ED0 = 2.4L Power Tech	DDK = 5 Speed HDManual
H = Sport	U = RHD (4WD)		EKG,EK0 = 3.7L Power Tech	DDD = 5 Speed HD Manual
M = Renegade	T = LHD (2WD)		ENJ = 2.5L 4Cyl Turbo Diesel	DG4,DGQ = Multi-Speed Auto
			ENR = 2.8L 4Cyl Turbo Diesel	DG6 = 4 Speed Auto Transm
			EN0 = 4Cyl Turbo Diesel	DG0 = All Automatic Transm
				DBB = All Manual Transm

AR = Use as required - = Non illustrated part # = New this model year

September 30, 2003

« RETURN TO GROUP INDEX

Front Seat, Cloth, Trim Code [M5]
Figure IKJ-530

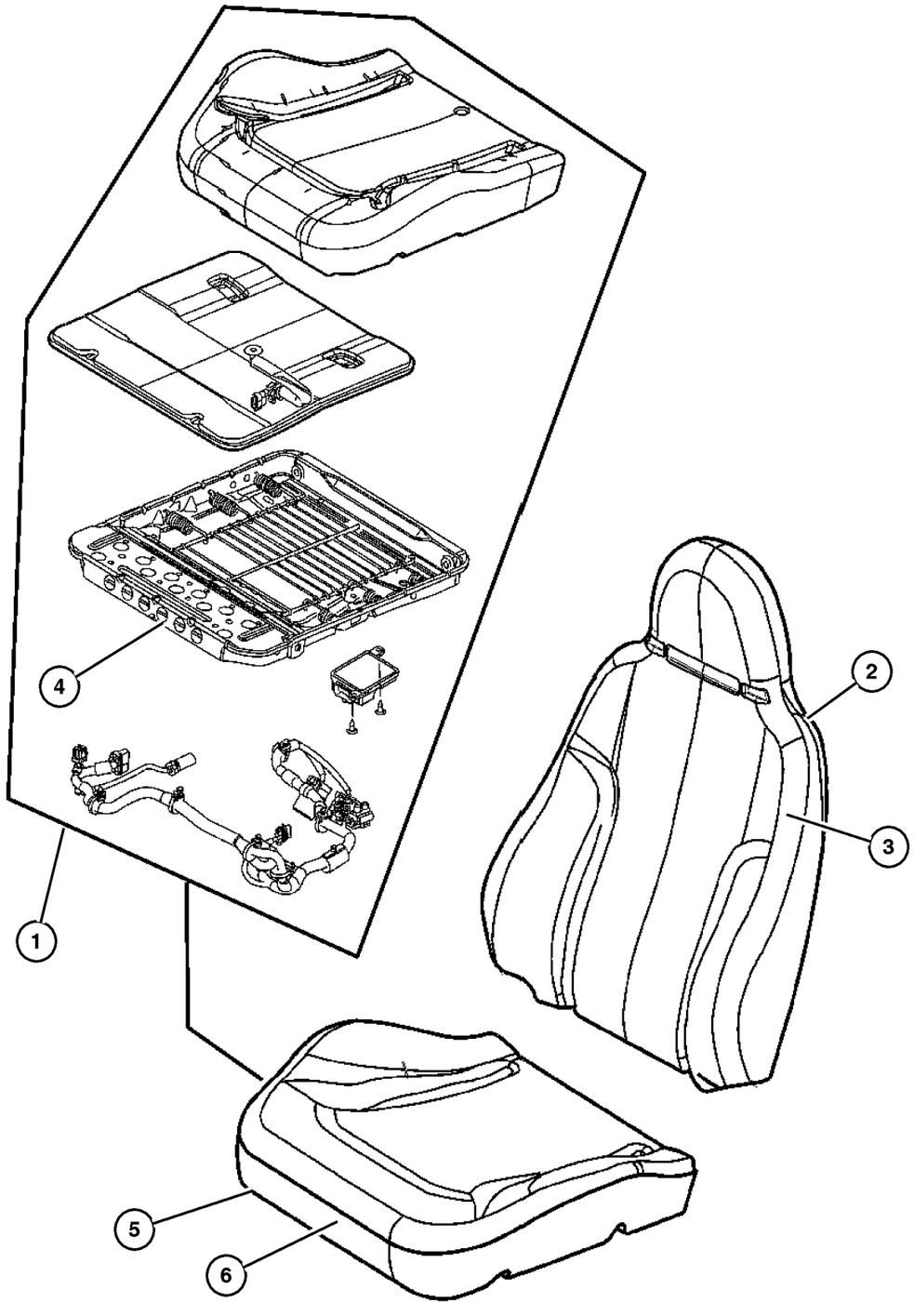

ITEM	PART NUMBER	QTY	LINE	SERIES	BODY	ENGINE	TRANS	TRIM	DESCRIPTION
Note; For United States/Canada vehicles only, if right side Cushion Foam is needed order Bladder Repair Kit. Do not attempt to replace the right side Cushion Foam separately as it may interfere with the calibration of the Occupant Classification System.									
1	#5126 305AA	1	J, T					M5	BLADDER REPAIR KIT, Occupant Classification System, See Note, Right Side Only, Includes Foam, Bladder, Frame, Control Module and Harness, Passenger
2									BACK, Front Seat
	ZD64 1DVAA	1	J, T					M5	[DV], Right
	ZD64 1L5AA	1	J, T					M5	[L5], Right
	ZD65 1DVAA	1	J, T					M5	[DV], Left
	ZD65 1L5AA	1	J, T					M5	[L5], Left
3									COVER, Front Seat Back
	ZD62 1DVAA	1	J, T					M5	[DV]
	ZD62 1L5AA	1	J, T					M5	[L5]
4									FRAME, Front Seat Cushion
	#5126 322AA	1	J, T					M5	Right
	#5126 323AA	1	J, T					M5	Left
5									COVER, Front Seat Cushion
	XV81 1DVAA	2	J, T					M5	[DV]
	XV81 1L5AA	2	J, T					M5	[L5]
6									FOAM, Seat Cushion
	5093 974AA	1	J, T					M5	For Passenger Side Use Bladder Repair Kit, Driver
		2	J, T					M5	Mexico Only, Driver and Passenger
-7	5093 977AA	2	J, T					M5	WIRE KIT, Trimming

JEEP LIBERTY (KJ)

SERIES	LINE	BODY	ENGINE	TRANSMISSION
P = Limited	J = LHD (4WD)	74 = 4 Dr (104.3 WB)	ED1,ED0 = 2.4L Power Tech	DDK = 5 Speed HDManual
H = Sport	U = RHD (4WD)		EKG,EK0 = 3.7L Power Tech	DDD = 5 Speed HD Manual
M = Renegade	T = LHD (2WD)		ENJ = 2.5L 4Cyl Turbo Diesel	DG4,DGQ = Multi-Speed Auto
			ENR = 2.8L 4Cyl Turbo Diesel	DG6 = 4 Speed Auto Transm
			EN0 = 4Cyl Turbo Diesel	DG0 = All Automatic Transm
				DBB = All Manual Transm

Front Seat, Cloth, Low Back, Trim Code [E7]
Figure IKJ-540

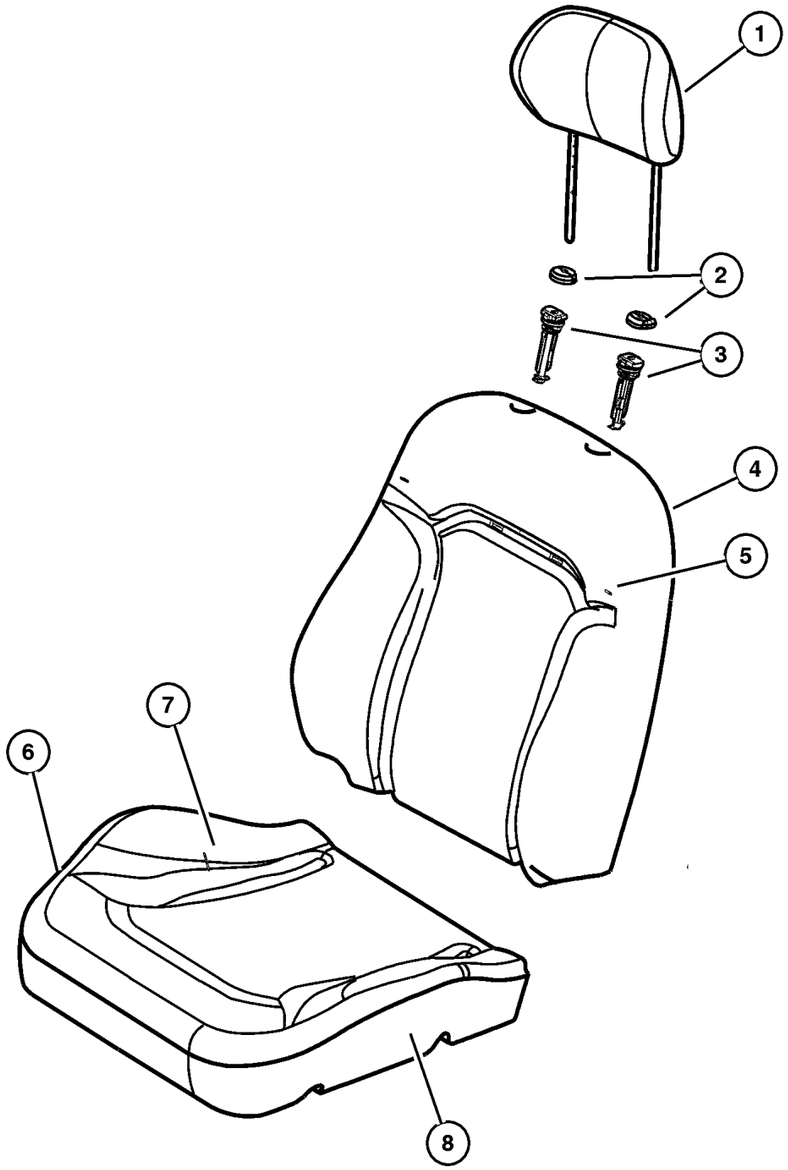

ITEM	PART NUMBER	QTY	LINE	SERIES	BODY	ENGINE	TRANS	TRIM	DESCRIPTION
1									HEADREST, Front
	WK03 1DVAA	2	J, U					E7	[DV]
	WK03 1L5AA	2	J, U					E7	[L5]
2									CAP, Headrest Adjuster
	WA49 WL5AA	2	J, U					E7	[L5], With Button
	WA49 XDVAA	2	J, U					E7	[DV], With Button
	WA50 WL5AA	2	J, U					E7	[L5], Without Button
	WA50 XDVAA	2	J, U					E7	[DV], Without Button
3	5066 017AA	4	J, U					E7	SLEEVE, Headrest
4									BACK, Front Seat
	ZD66 1DVAA	1	J, U					E7	[DV], Right
	ZD66 1L5AA	1	J, U					E7	[L5], Right
	ZD67 1DVAA	1	J, U					E7	[DV], Left
	ZD67 1L5AA	1	J, U					E7	[L5], Left
5									COVER, Front Seat Back
	ZD63 1DVAA	2	J, U					E7	[DV]
	ZD63 1L5AA	2	J, U					E7	[L5]
6									FRAME, Front Seat Cushion
	#5126 323AA	1	J, U					E7	Left
	#5126 322AA	1	J, U					E7	Right
7									COVER, Front Seat Cushion
	XV81 1DVAA	2	J, U					E7	[DV]
	XV81 1L5AA	2	J, U					E7	[L5]
8	5093 974AA	2	J, U					E7	FOAM, Seat Cushion
-9	5093 977AA	2	J, U					E7	WIRE KIT, Trimming

JEEP LIBERTY (KJ)

SERIES	LINE	BODY	ENGINE	TRANSMISSION
P = Limited	J = LHD (4WD)	74 = 4 Dr (104.3 WB)	ED1,ED0 = 2.4L Power Tech	DDK = 5 Speed HDManual
H = Sport	U = RHD (4WD)		EKG,EK0 = 3.7L Power Tech	DDD = 5 Speed HD Manual
M = Renegade	T = LHD (2WD)		ENJ = 2.5L 4Cyl Turbo Diesel	DG4,DGQ = Multi-Speed Auto
			ENR = 2.8L 4Cyl Turbo Diesel	DG6 = 4 Speed Auto Transm
			EN0 = 4Cyl Turbo Diesel	DG0 = All Automatic Transm
				DBB = All Manual Transm

Front Seat, Cloth, Trim Code [J5]
Figure IKJ-550

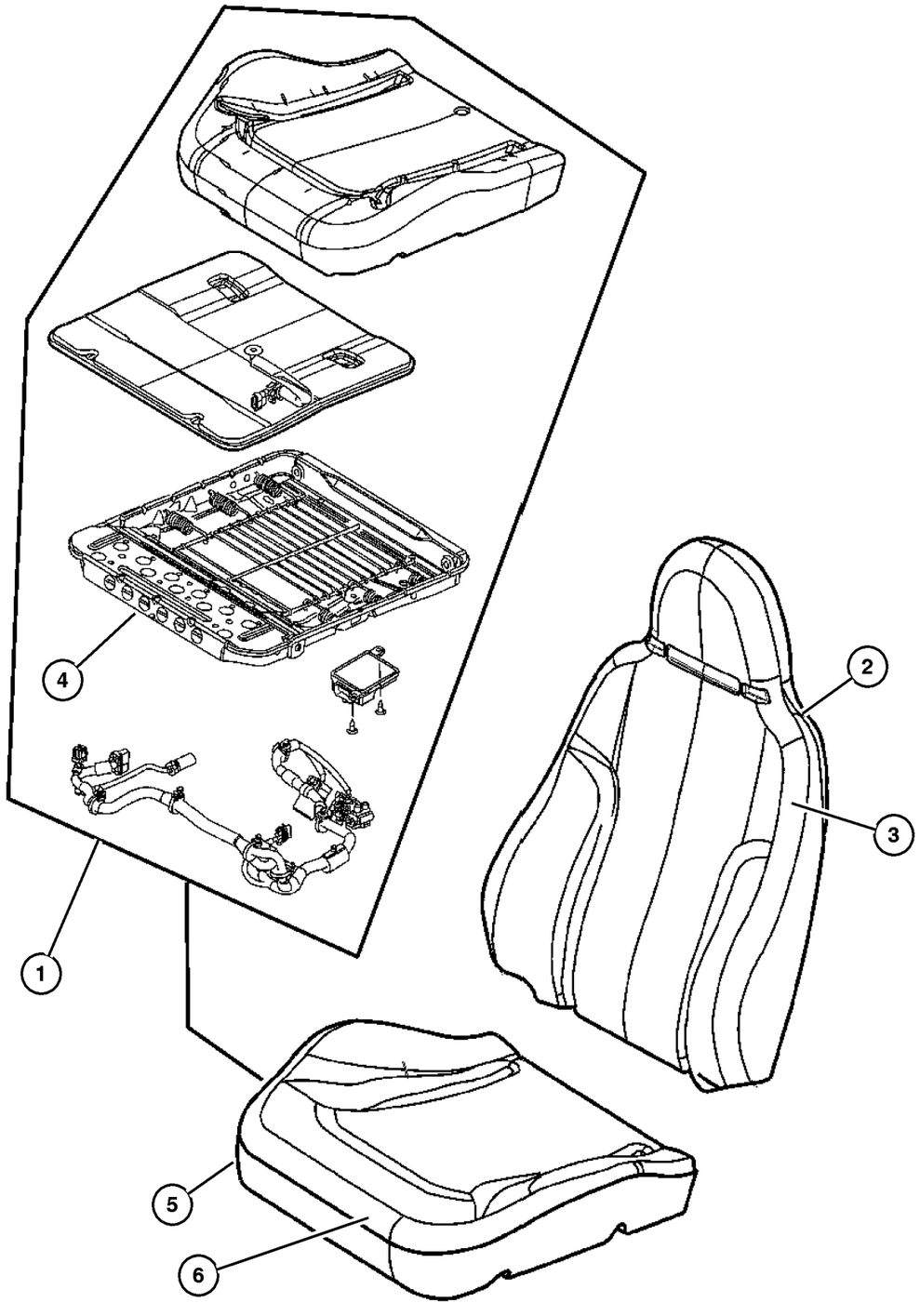

ITEM	PART NUMBER	QTY	LINE	SERIES	BODY	ENGINE	TRANS	TRIM	DESCRIPTION
Note; For United States/Canada vehicles only, if right side Cushion Foam is needed order Bladder Repair Kit. Do not attempt to replace the right side Cushion Foam separately as it may interfere with the calibration of the Occupant Classification System.									
1	#5126 305AA	1						J5	BLADDER REPAIR KIT, Occupant Classification System, See Note, Right Side Only, Includes Foam, Bladder, Frame, Control Module and Harness, Passenger
2									BACK, Front Seat
	#1AG32 1DVAA	1						J5	[DV], Right
	#1AG32 1L5AA	1						J5	[L5], Right
	#1AG33 1DVAA	1						J5	[DV], Left
	#1AG33 1L5AA	1						J5	[L5], Left
3									COVER, Front Seat Back
	#1AG30 1DVAA	1						J5	[DV], Right
	#1AG30 1L5AA	1						J5	[L5], Right
	#1AG31 1DVAA	1						J5	[DV], Left
	#1AG31 1L5AA	1						J5	[L5], Left
4									FRAME, Front Seat Cushion
	#5126 322AA	1						J5	Right
	#5126 323AA	1						J5	Left
5									COVER, Front Seat Cushion
	XV86 1DVAA	2						J5	[DV]
	XV86 1L5AA	2						J5	[L5]
6	5093 974AA	2						J5	FOAM, Seat Cushion, Drivers Side
-7	5093 977AA	2						J5	WIRE KIT, Trimming

JEEP LIBERTY (KJ)

SERIES	LINE	BODY	ENGINE	TRANSMISSION
P = Limited	J = LHD (4WD)	74 = 4 Dr (104.3 WB)	ED1,ED0 = 2.4L Power Tech	DDK = 5 Speed HDManual
H = Sport	U = RHD (4WD)		EKG,EK0 = 3.7L Power Tech	DDD = 5 Speed HD Manual
M = Renegade	T = LHD (2WD)		ENJ = 2.5L 4Cyl Turbo Diesel	DG4,DGQ = Multi-Speed Auto
			ENR = 2.8L 4Cyl Turbo Diesel	DG6 = 4 Speed Auto Transm
			EN0 = 4Cyl Turbo Diesel	DG0 = All Automatic Transm
				DBB = All Manual Transm

Front Seat, Cloth, Low Back, Trim Code [F7]
Figure IKJ-560

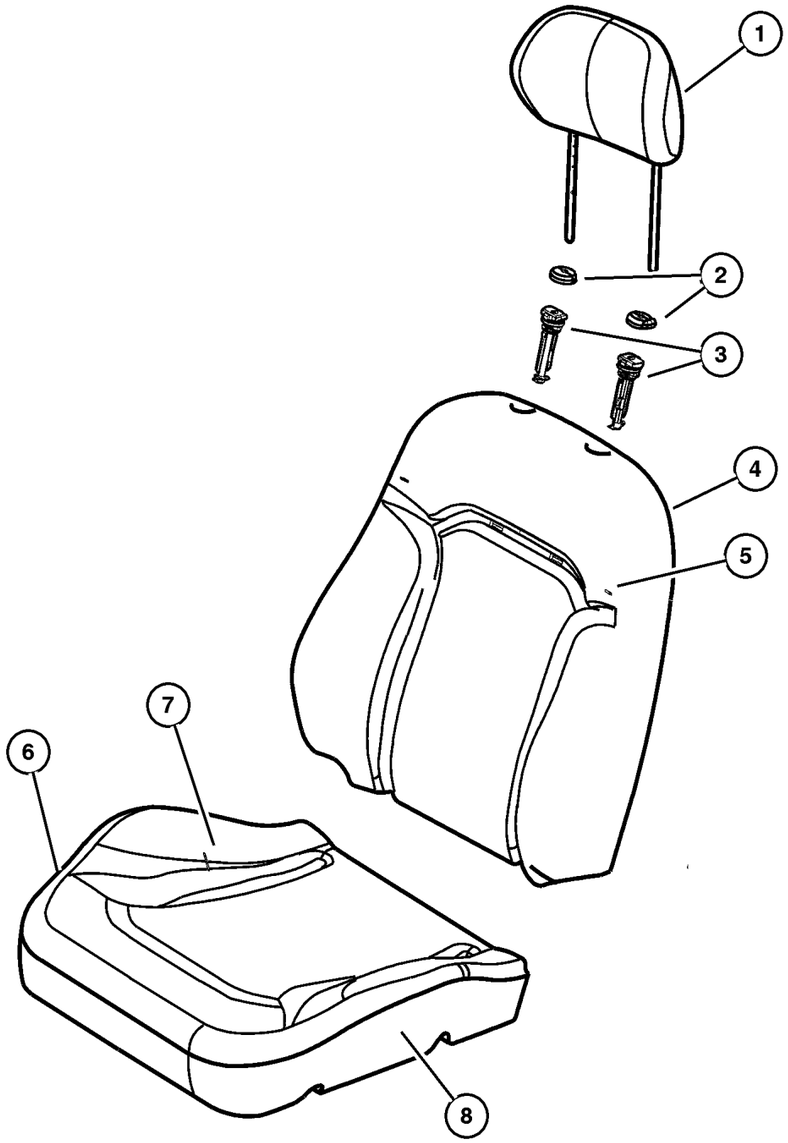

ITEM	PART NUMBER	QTY	LINE	SERIES	BODY	ENGINE	TRANS	TRIM	DESCRIPTION
1									HEADREST, Front
	XH17 1DVAA	2						F7	[DV]
	XH17 1L5AA	2						F7	[L5]
2									CAP, Headrest Adjuster
	WA49 WL5AA	1						F7	[L5], With Button
	WA49 XDVAA	1						F7	[DV], With Button
	WA50 WL5AA	1						F7	[L5], Without Button
	WA50 XDVAA	1						F7	[DV], Without Button
3	5066 563AA	2						F7	SLEEVE, Headrest
4									BACK, Front Seat
	#1AG28 1DVAA	1						F7	[DV], Right
	#1AG28 1L5AA	1						F7	[L5], Right
	#1AG29 1DVAA	1						F7	[DV], Left
	#1AG29 1L5AA	1						F7	[L5], Left
5									COVER, Front Seat Back
	#1AG26 1DVAA	1						F7	[DV], Right
	#1AG26 1L5AA	1						F7	[L5], Right
	#1AG27 1DVAA	1						F7	[DV], Left
	#1AG27 1L5AA	1						F7	[L5], Left
6									FRAME, Front Seat Cushion
	#5126 322AA	1						F7	Right
	#5126 323AA	1						F7	Left
7									COVER, Front Seat Cushion
	XV86 1DVAA	2						F7	[DV]
	XV86 1L5AA	2						F7	[L5]
8	5093 974AA	2						F7	FOAM, Seat Cushion
-9	5093 977AA	2						F7	WIRE KIT, Trimming

JEEP LIBERTY (KJ)

SERIES	LINE	BODY	ENGINE	TRANSMISSION
P = Limited	J = LHD (4WD)	74 = 4 Dr (104.3 WB)	ED1,ED0 = 2.4L Power Tech	DDK = 5 Speed HDManual
H = Sport	U = RHD (4WD)		EKG,EK0 = 3.7L Power Tech	DDD = 5 Speed HD Manual
M = Renegade	T = LHD (2WD)		ENJ = 2.5L 4Cyl Turbo Diesel	DG4,DGQ = Multi-Speed Auto
			ENR = 2.8L 4Cyl Turbo Diesel	DG6 = 4 Speed Auto Transm
			EN0 = 4Cyl Turbo Diesel	DG0 = All Automatic Transm
				DBB = All Manual Transm

Front Seat, Cloth, Low Back, Trim Code [A7]
Figure IKJ-570

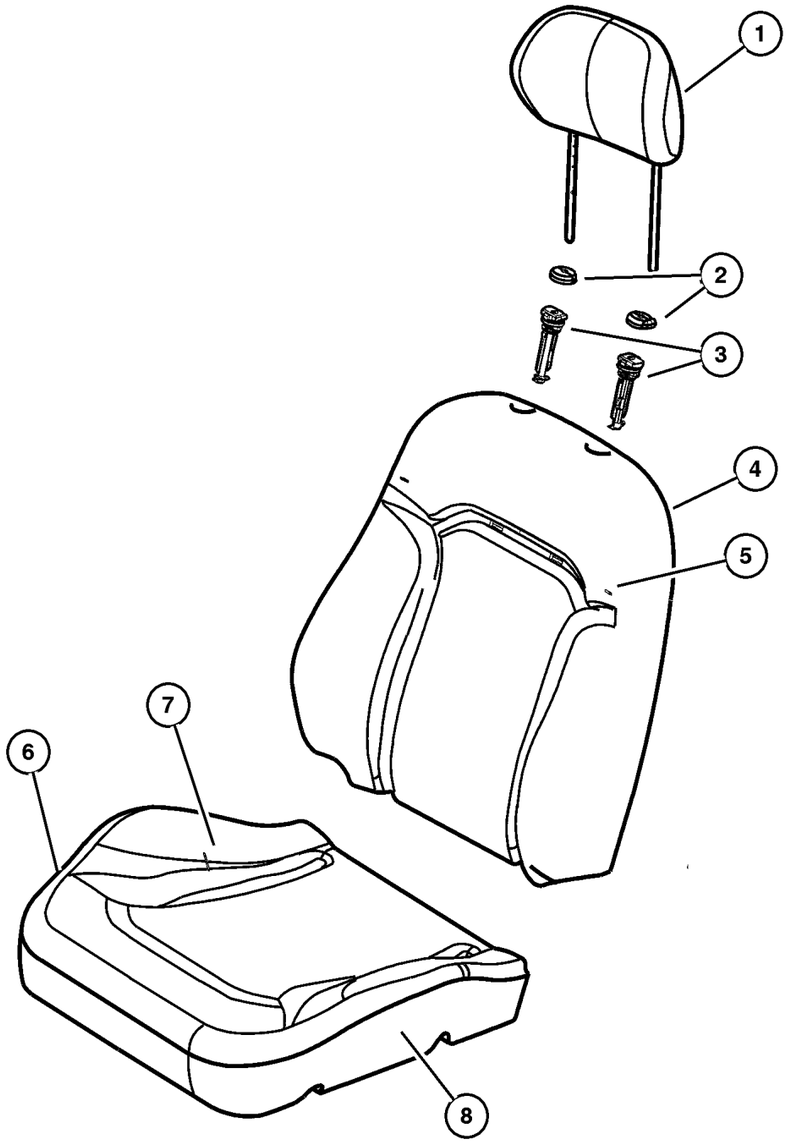

ITEM	PART NUMBER	QTY	LINE	SERIES	BODY	ENGINE	TRANS	TRIM	DESCRIPTION
1	#1AG93 1DVAA	2	J, T					A7	HEADREST, Front
2									CAP, Headrest Adjuster
	WA49 XDVAA	1	J, T					A7	With Button
	WA50 XDVAA	1	J, T					A7	Without Button
3	5066 563AA	2	J, T					A7	SLEEVE, Headrest
4									BACK, Front Seat
	#1AH00 1DVAA	1	J, T					A7	Right
	#1AH01 1DVAA	1	J, T					A7	Left
5									COVER, Front Seat Back
	#1AG98 1DVAA	1	J, T					A7	Right
	#1AG99 1DVAA	1	J, T					A7	Left
6									FRAME, Front Seat Cushion
	#5126 322AA	1	J, T					A7	Right
	#5126 323AA	1	J, T					A7	Left
7	#1AD95 1DVAA	2	J, T					A7	COVER, Front Seat Cushion
8	5093 974AA	2	J, T					A7	FOAM, Seat Cushion
-9	5093 977AA	2	J, T					A7	WIRE KIT, Trimming

JEEP LIBERTY (KJ)

SERIES	LINE	BODY	ENGINE	TRANSMISSION
P = Limited	J = LHD (4WD)	74 = 4 Dr (104.3 WB)	ED1,ED0 = 2.4L Power Tech	DDK = 5 Speed HDManual
H = Sport	U = RHD (4WD)		EKG,EK0 = 3.7L Power Tech	DDD = 5 Speed HD Manual
M = Renegade	T = LHD (2WD)		ENJ = 2.5L 4Cyl Turbo Diesel	DG4,DGQ = Multi-Speed Auto
			ENR = 2.8L 4Cyl Turbo Diesel	DG6 = 4 Speed Auto Transm
			EN0 = 4Cyl Turbo Diesel	DG0 = All Automatic Transm
				DBB = All Manual Transm

Front Seat, Cloth, Trim Code [V5]
Figure IKJ-580

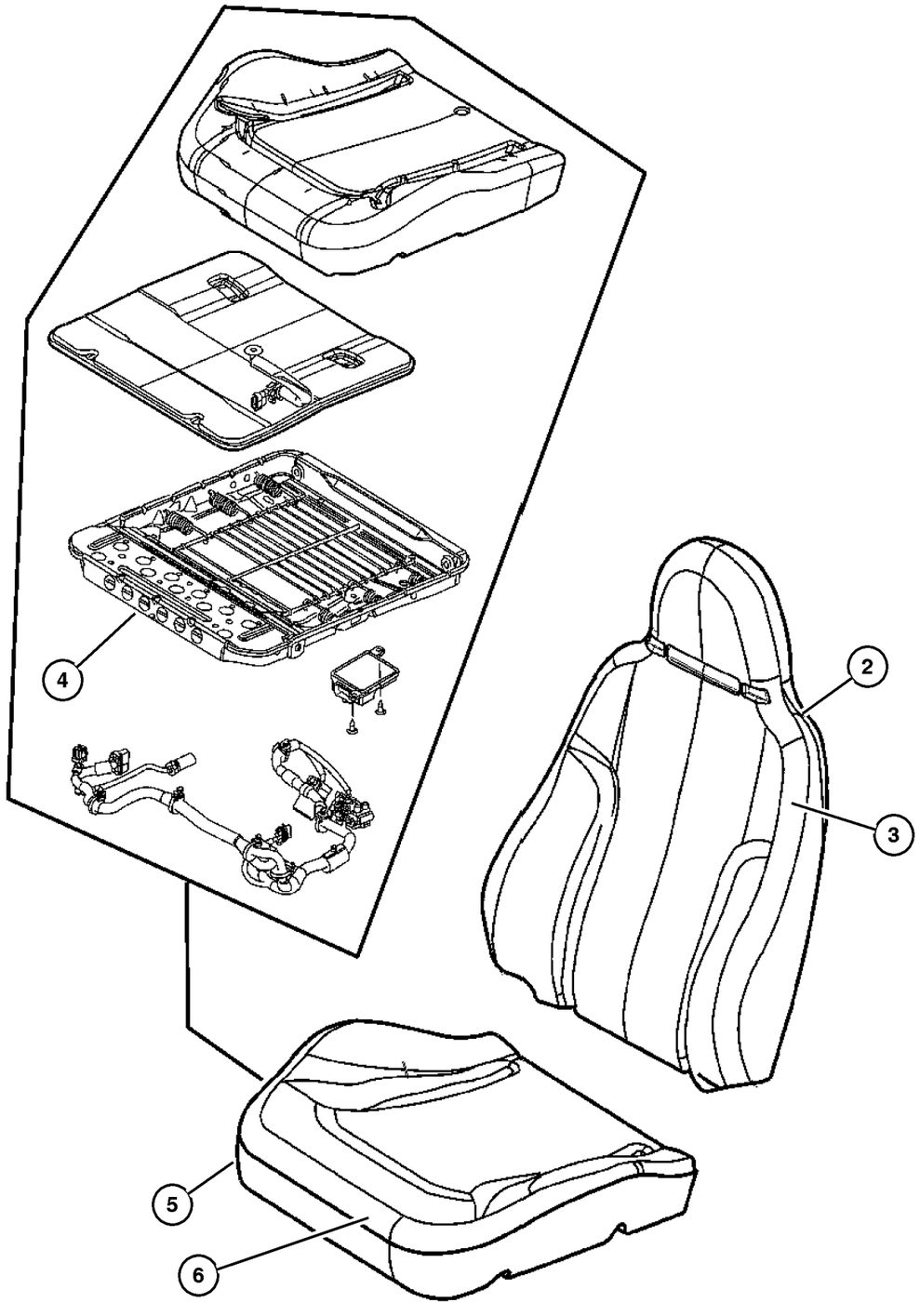

ITEM	PART NUMBER	QTY	LINE	SERIES	BODY	ENGINE	TRANS	TRIM	DESCRIPTION
Note; For United States/Canada vehicles only, if right side Cushion Foam is needed order Bladder Repair Kit. Do not attempt to replace the right side Cushion Foam separately as it may interfere with the calibration of the Occupant Classification System.									
-1	#5126 305AA	1						V5	BLADDER REPAIR KIT, Occupant Classification System, See Note, Right Side Only
2									BACK, Front Seat
	#1AE06 1DVAA	1						V5	Right
	#1AE07 1DVAA	1						V5	Left
3									COVER, Front Seat Back
	#1AE04 1DVAA	1						V5	Right
	#1AE05 1DVAA	1						V5	Left
4									FRAME, Front Seat Cushion
	#5126 322AA	1						V5	Right
	#5126 323AA	1						V5	Left
5	#1AD95 1DVAA	2						V5	COVER, Front Seat Cushion
6	5093 974AA	1						V5	FOAM, Seat Cushion
-7	5093 977AA	1						V5	WIRE KIT, Trimming

JEEP LIBERTY (KJ)

SERIES	LINE	BODY	ENGINE	TRANSMISSION
P = Limited	J = LHD (4WD)	74 = 4 Dr (104.3 WB)	ED1,ED0 = 2.4L Power Tech	DDK = 5 Speed HDManual
H = Sport	U = RHD (4WD)		EKG,EK0 = 3.7L Power Tech	DDD = 5 Speed HD Manual
M = Renegade	T = LHD (2WD)		ENJ = 2.5L 4Cyl Turbo Diesel	DG4,DGQ = Multi-Speed Auto
			ENR = 2.8L 4Cyl Turbo Diesel	DG6 = 4 Speed Auto Transm
			EN0 = 4Cyl Turbo Diesel	DG0 = All Automatic Transm
				DBB = All Manual Transm

Rear Seats, Trim Code [M5]
Figure IKJ-610

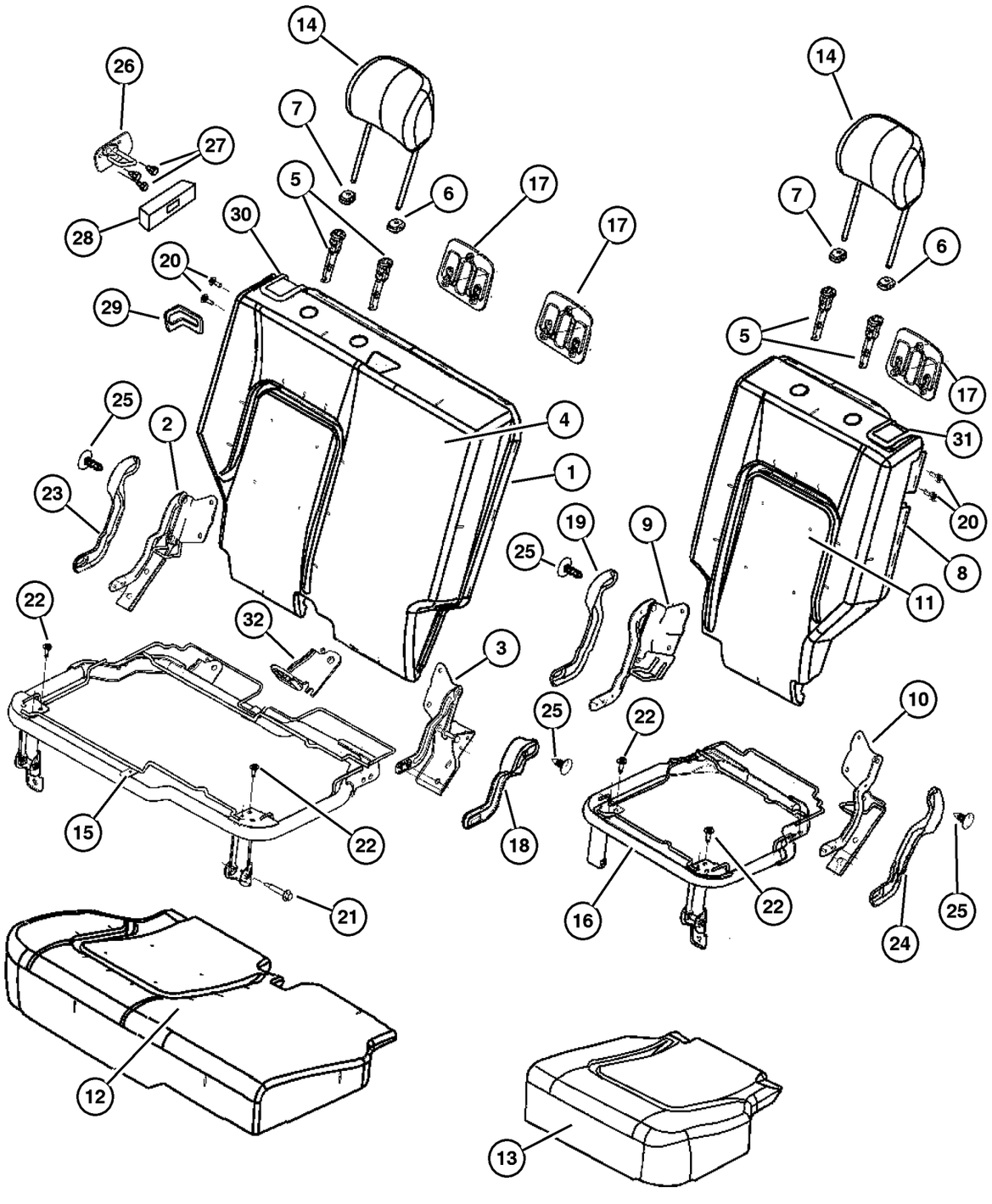

ITEM	PART NUMBER	QTY	LINE	SERIES	BODY	ENGINE	TRANS	TRIM	DESCRIPTION
1									SEAT BACK, Rear, 65%
	YF80 1DVAA	1	J, T					M5	[DV]
	YF80 1L5AA	1	J, T					M5	[L5]
2	5071 702AA	1	J, T					M5	BRACKET AND HINGE, Rear Seat Back, 65%, Right,Outboard
3	5071 703AA	1	J, T					M5	BRACKET AND HINGE, Rear Seat Back, 65%, Right,Inboard
4									COVER, Rear Seat Back, 65%
	YF76 1DVAA	1	J, T					M5	[DV]
	YF76 1L5AA	1	J, T					M5	
5	5066 017AA	2	J, T					M5	SLEEVE, Headrest
6									CAP, Headrest Adjuster, With Button
	WA46 1DVAA	2	J, T					M5	[DV]
	WA46 1L5AA	2	J, T					M5	[L5]
7									CAP, Headrest Adjuster, Without Button
	WA31 1DVAA	1	J, T					M5	[DV]
	WA31 1L5AA	1	J, T					M5	[L5]
8									SEAT BACK, Rear, 35%
	YF81 1DVAA	1	J, T					M5	[DV]
	YF81 1L5AA	1	J, T					M5	[L5]
9	5071 704AA	1	J, T					M5	BRACKET AND HINGE, Rear Seat Back, 35%, Left,Inboard
10	5071 705AA	1	J, T					M5	BRACKET AND HINGE, Rear Seat Back, 35%, Left,Outboard
11									COVER, Rear Seat Back, 35%
	YF77 1DVAA	1	J, T					M5	[DV]
	YF77 1L5AA	1	J, T					M5	[L5]
12									COVER AND PAD, Cushion, 65%
	YF86 1DVAA	1	J, T					M5	[DV]
	YF86 1L5AA	1	J, T					M5	[L5]
13									COVER AND PAD, Cushion, 35%
	YF87 1DVAA	1	J, T					M5	[DV]
	YF87 1L5AA	1	J, T					M5	[L5]
14									HEADREST, Rear
	YF83 1DVAA	2	J, T					M5	[DV]
	YF83 1L5AA	2	J, T					M5	[L5]
15	5072 112AA	1	J, T					M5	PANEL, Seat Cushion Base, 65%
16	5072 113AA	1	J, T					M5	PANEL, Seat Cushion Base, 35%
17									BEZEL, TETHER
	WB44 1DVAA	2	J, T					M5	[DV]

JEEP LIBERTY (KJ)

SERIES	LINE	BODY	ENGINE	TRANSMISSION
P = Limited	J = LHD (4WD)	74 = 4 Dr (104.3 WB)	ED1,ED0 = 2.4L Power Tech	DDK = 5 Speed HDManual
H = Sport	U = RHD (4WD)		EKG,EK0 = 3.7L Power Tech	DDD = 5 Speed HD Manual
M = Renegade	T = LHD (2WD)		ENJ = 2.5L 4Cyl Turbo Diesel	DG4,DGQ = Multi-Speed Auto
			ENR = 2.8L 4Cyl Turbo Diesel	DG6 = 4 Speed Auto Transm
			EN0 = 4Cyl Turbo Diesel	DG0 = All Automatic Transm
				DBB = All Manual Transm

Rear Seats, Trim Code [M5]
Figure IKJ-610

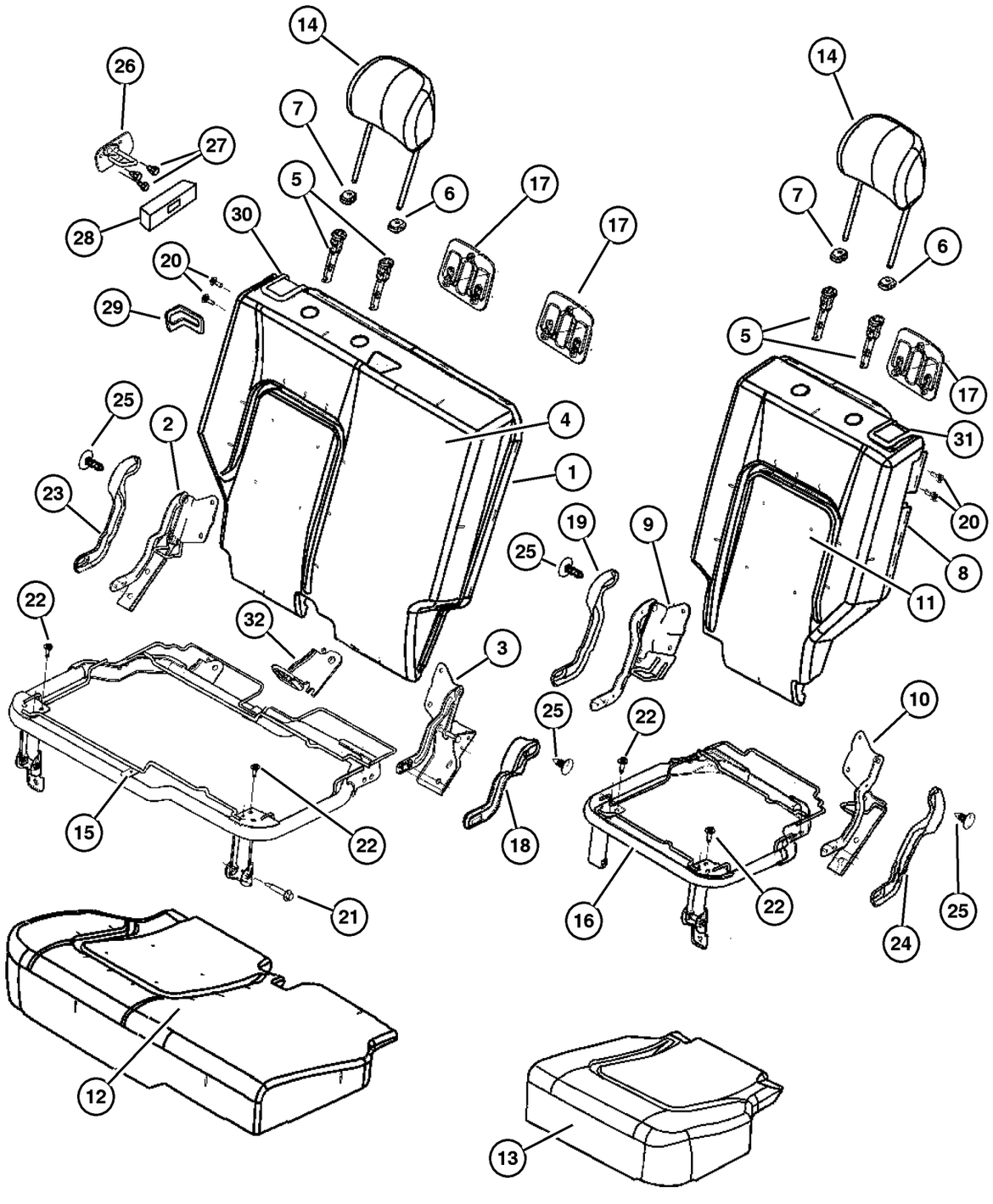

ITEM	PART NUMBER	QTY	LINE	SERIES	BODY	ENGINE	TRANS	TRIM	DESCRIPTION
	WB44 1L5AA	2	J, T					M5	[L5]
18									COVER, Hinge, Right Inboard
	UZ45 WL5AA	1	J, T					M5	[L5]
	UZ45 XDVAA	1	J, T					M5	[DV]
19									COVER, Hinge, Left Inboard
	UZ46 WL5AA	1	J, T					M5	[L5]
	UZ46 XDVAA	1	J, T					M5	[DV]
20	5072 520AA	2	J, T					M5	BOLT, Pivot
21	5072 519AA	1	J, T					M5	BOLT, Seat
22	4761 014	8	J, T					M5	BOLT, Cushion To Adjuster
23									COVER, Hinge, Right Outboard
	UZ44 WL5AA	1	J, T					M5	[L5]
	UZ44 XDVAA	1	J, T					M5	[DV]
24									COVER, Hinge, Left Outboard
	UZ47 WL5AA	1	J, T					M5	[L5]
	UZ47 XDVAA	1	J, T					M5	[DV]
25									PIN, Push
	WA51 WL5AA	2	J, T					M5	[L5]
	WA51 XDVAA	2	J, T					M5	[DV]
26									STRIKER, Seat Back Latch
	55352 816AB	1							Right
	55352 817AB	1							Left
27	6505 434AA	6							SCREW, M8-1.25
28	55352 839AC	2							BEZEL, Seat Latch
29									BEZEL, Seat Latch
	WA92 WL8AA	1	J, T					M5	[L5]
	WA92 XDVAA	1	J, T					M5	[DV]
30									CONTROL, SEAT RELEASE, With Cable and Latch
	XF78 1DVAB	1	J, T					M5	[DV], 65% Side
	XF78 1L5AB	1	J, T					M5	[L5], 65% Side
31									CONTROL, SEAT RELEASE, With Latch
	XF79 1DVAB	1	J, T					M5	[DV], 35% Side
	XF79 1L5AB	1	J, T					M5	[L5], 35% Side
32	5134 366AA	1	J, T					M5	BRACKET, Child Tether Anchor

JEEP LIBERTY (KJ)

SERIES	LINE	BODY	ENGINE	TRANSMISSION
P = Limited	J = LHD (4WD)	74 = 4 Dr (104.3 WB)	ED1,ED0 = 2.4L Power Tech	DDK = 5 Speed HDManual
H = Sport	U = RHD (4WD)		EKG,EK0 = 3.7L Power Tech	DDD = 5 Speed HD Manual
M = Renegade	T = LHD (2WD)		ENJ = 2.5L 4Cyl Turbo Diesel	DG4,DGQ = Multi-Speed Auto
			ENR = 2.8L 4Cyl Turbo Diesel	DG6 = 4 Speed Auto Transm
			EN0 = 4Cyl Turbo Diesel	DG0 = All Automatic Transm
				DBB = All Manual Transm

Rear Seat, Trim Code [DL]
Figure IKJ-620

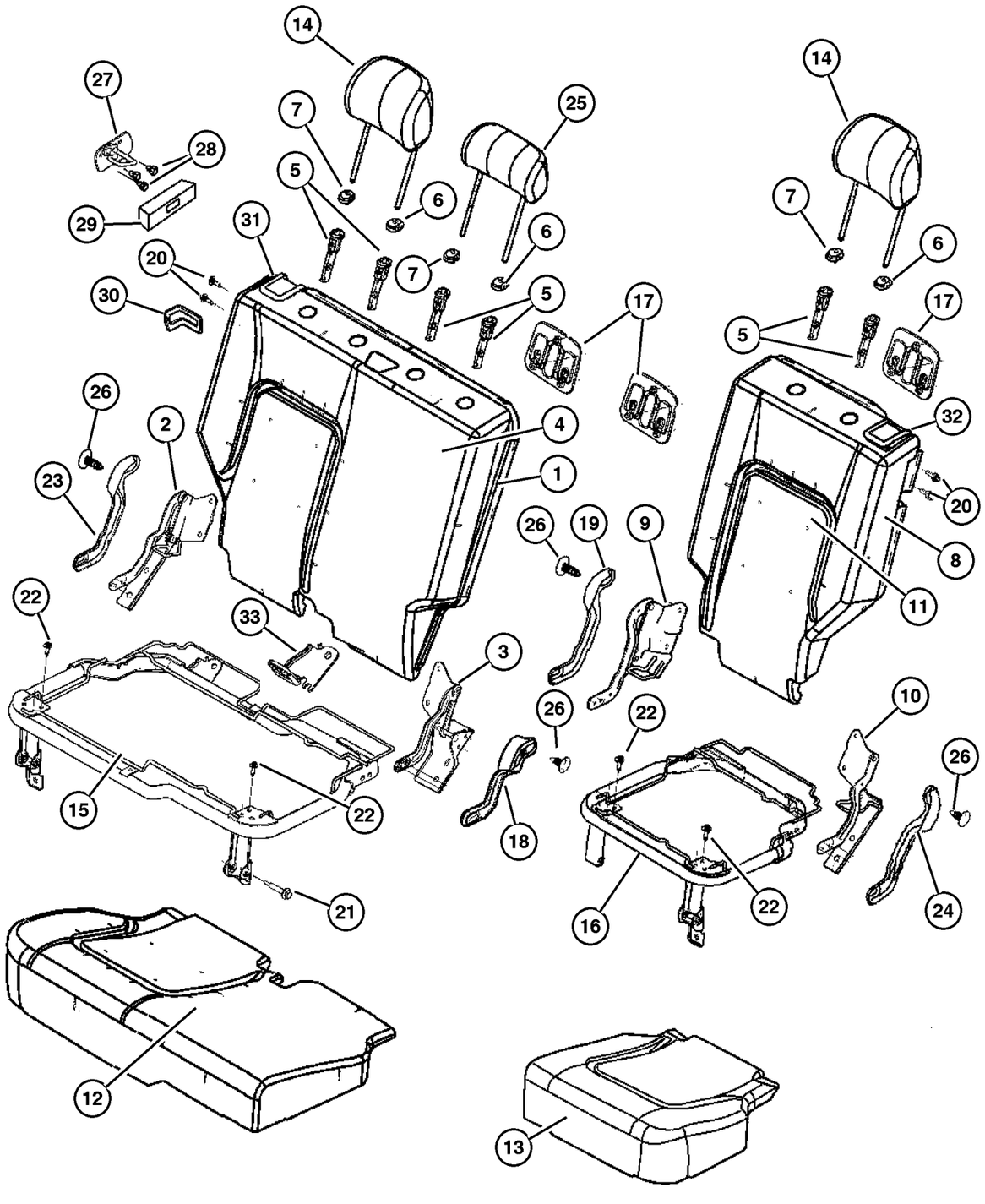

ITEM	PART NUMBER	QTY	LINE	SERIES	BODY	ENGINE	TRANS	TRIM	DESCRIPTION
1									SEAT BACK, Rear, 65%
	WD10 1D2AA	1	J, T					DL	[D2]
	WD10 1L2AA	1	J, T					DL	[L2]
	WD18 1DVAA	1	J, U					DL	[DV], Export
	WD18 1L2AA	1	J, U					DL	[L2], Export
2									BRACKET AND HINGE, Rear Seat Back, 65%
	5071 702AA	1	J, T					DL	Right,Outboard
		1	J, U					DL	Right,Outboard,Export
3									BRACKET AND HINGE, Rear Seat Back, 65%
	5071 703AA	1	J, T					DL	Right,Inboard
		1	J, U					DL	Right,Inboard,Export
4									COVER, Rear Seat Back, 65%
	WD16 1D2AA	1	J, T					DL	[D2]
	WD16 1L2AA	1	J, T					DL	[L2]
	WD19 1DVAA	1	J, U					DL	[DV], Export
	WD19 1L2AA	1	J, U					DL	[L2], Export
5									SLEEVE, Headrest
	5066 017AA	2	J, U					DL	Export
		2	J, T					DL	
6									CAP, Headrest Adjuster, With Button
	WA46 1L2AA	1	J, T					DL	[D2, L2]
	WA46 1DVAA	1	J, U					DL	[DV], Export
	WA46 1L2AA	1	J, U					DL	[L2], Export
7									CAP, Headrest Adjuster, Without Button
	WA31 1L2AA	1	J, T					DL	[D2, L2]
	WA31 1DVAA	4	J, U					DL	[DV], Export
	WA31 1L2AA	1	J, U					DL	[L2], Export
8									SEAT BACK, Rear, 35%
	WD11 1D2AA	1	J, T					DL	[D2]
	WD11 1L2AA	1	J, T					DL	[L2]
	WD11 1DVAA	1	J, U					DL	[DV], Export
	WD11 1L2AA	1	J, U					DL	[L2], Export
9									BRACKET AND HINGE, Rear Seat Back, 35%
	5071 704AA	1	J, T					DL	Left,Inboard
		1	J, U					DL	Left,Inboard,Export
10									BRACKET AND HINGE, Rear Seat Back, 35%

JEEP LIBERTY (KJ)

SERIES	LINE	BODY	ENGINE	TRANSMISSION
P = Limited	J = LHD (4WD)	74 = 4 Dr (104.3 WB)	ED1,ED0 = 2.4L Power Tech	DDK = 5 Speed HDManual
H = Sport	U = RHD (4WD)		EKG,EK0 = 3.7L Power Tech	DDD = 5 Speed HD Manual
M = Renegade	T = LHD (2WD)		ENJ = 2.5L 4Cyl Turbo Diesel	DG4,DGQ = Multi-Speed Auto
			ENR = 2.8L 4Cyl Turbo Diesel	DG6 = 4 Speed Auto Transm
			EN0 = 4Cyl Turbo Diesel	DG0 = All Automatic Transm
				DBB = All Manual Transm

Rear Seat, Trim Code [DL]
Figure IKJ-620

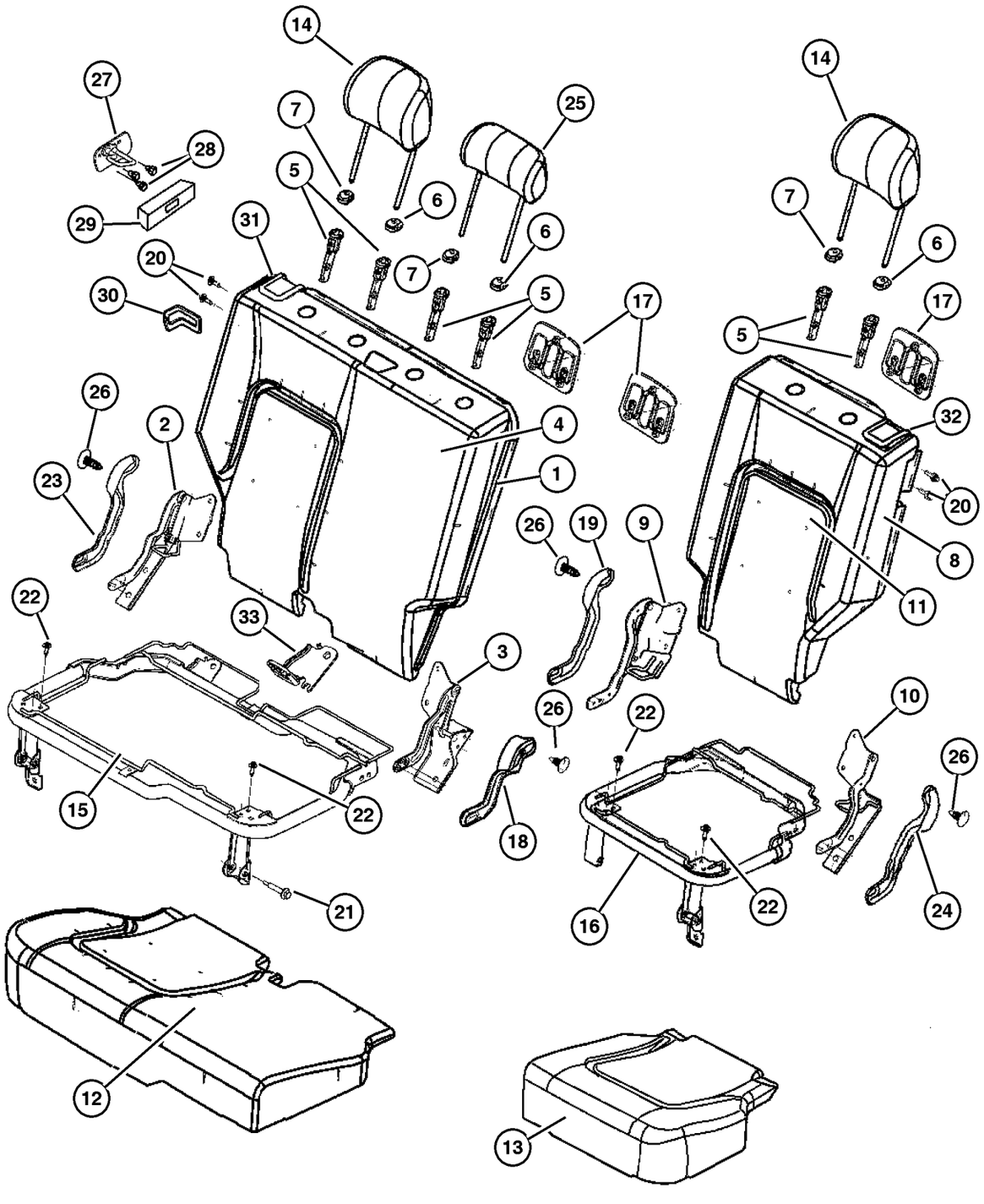

ITEM	PART NUMBER	QTY	LINE	SERIES	BODY	ENGINE	TRANS	TRIM	DESCRIPTION
	5071 705AA	1	J, T					DL	Left,Outboard
		1	J, U					DL	Left,Outboard,Export
11									COVER, Rear Seat Back, 35%
	WD17 1D2AA	1	J, T					DL	[D2]
	WD17 1L2AA	1	J, T					DL	[L2]
	WD17 1DVAA	1	J, U					DL	[DV], Export
	WD17 1L2AA	1	J, U					DL	[L2], Export
12									COVER AND PAD, Cushion, 65%
	UZ26 1L2AA	1	J, T					DL	[D2, L2]
	UZ26 1DVAA	1	J, U					DL	[DV], Export
	UZ26 1L2AA	1	J, U					DL	[L2], Export
13									COVER AND PAD, Cushion, 35%
	UZ27 1L2AA	1	J, T					DL	[D2, L2]
	UZ27 1DVAA	1	J, U					DL	[DV], Export
	UZ27 1L2AA	1	J, U					DL	[L2], Export
14									HEADREST, Rear
	XP64 1L2AA	2	J, T					DL	[D2, L2]
	XP64 1DVAA	2	J, U					DL	[DV], Export
	XP64 1L2AA	2	J, U					DL	[L2], Export
15									PANEL, Seat Cushion Base, 65%
	5072 112AA	1	J, T					DL	
		1	J, U					DL	Export
16									PANEL, Seat Cushion Base, 35%
	5072 113AA	1	J, T					DL	
		1	J, U					DL	Export
17									BEZEL, TETHER
	WB44 1DVAA	1	J, T					DL	[D2]
	WB44 1L5AA	2	J, T					DL	[L2]
	WB44 1DVAA	1	J, U					DL	[DV], Export
	WB44 1L2AA	1	J, U					DL	[L2], Export
18									COVER, Hinge
	UZ45 TL2AA	1	J, T					DL	[D2, L2]
		1	J, U					DL	[L2], Export
	UZ45 XDVAA	1	J, U					DL	[DV], Export
19									COVER, Hinge
	UZ46 TL2AA	1	J, T					DL	[D2, L2]
		1	J, U					DL	[L2], Export
	UZ46 XDVAA	1	J, U					DL	[DV], Export
20									BOLT, Pivot
	5072 520AA	2	J, T					DL	
		2	J, U					DL	Export
21									BOLT, Seat

JEEP LIBERTY (KJ)

SERIES	LINE	BODY	ENGINE	TRANSMISSION
P = Limited	J = LHD (4WD)	74 = 4 Dr (104.3 WB)	ED1,ED0 = 2.4L Power Tech	DDK = 5 Speed HDManual
H = Sport	U = RHD (4WD)		EKG,EK0 = 3.7L Power Tech	DDD = 5 Speed HD Manual
M = Renegade	T = LHD (2WD)		ENJ = 2.5L 4Cyl Turbo Diesel	DG4,DGQ = Multi-Speed Auto
			ENR = 2.8L 4Cyl Turbo Diesel	DG6 = 4 Speed Auto Transm
			EN0 = 4Cyl Turbo Diesel	DG0 = All Automatic Transm
				DBB = All Manual Transm

Rear Seat, Trim Code [DL]
Figure IKJ-620

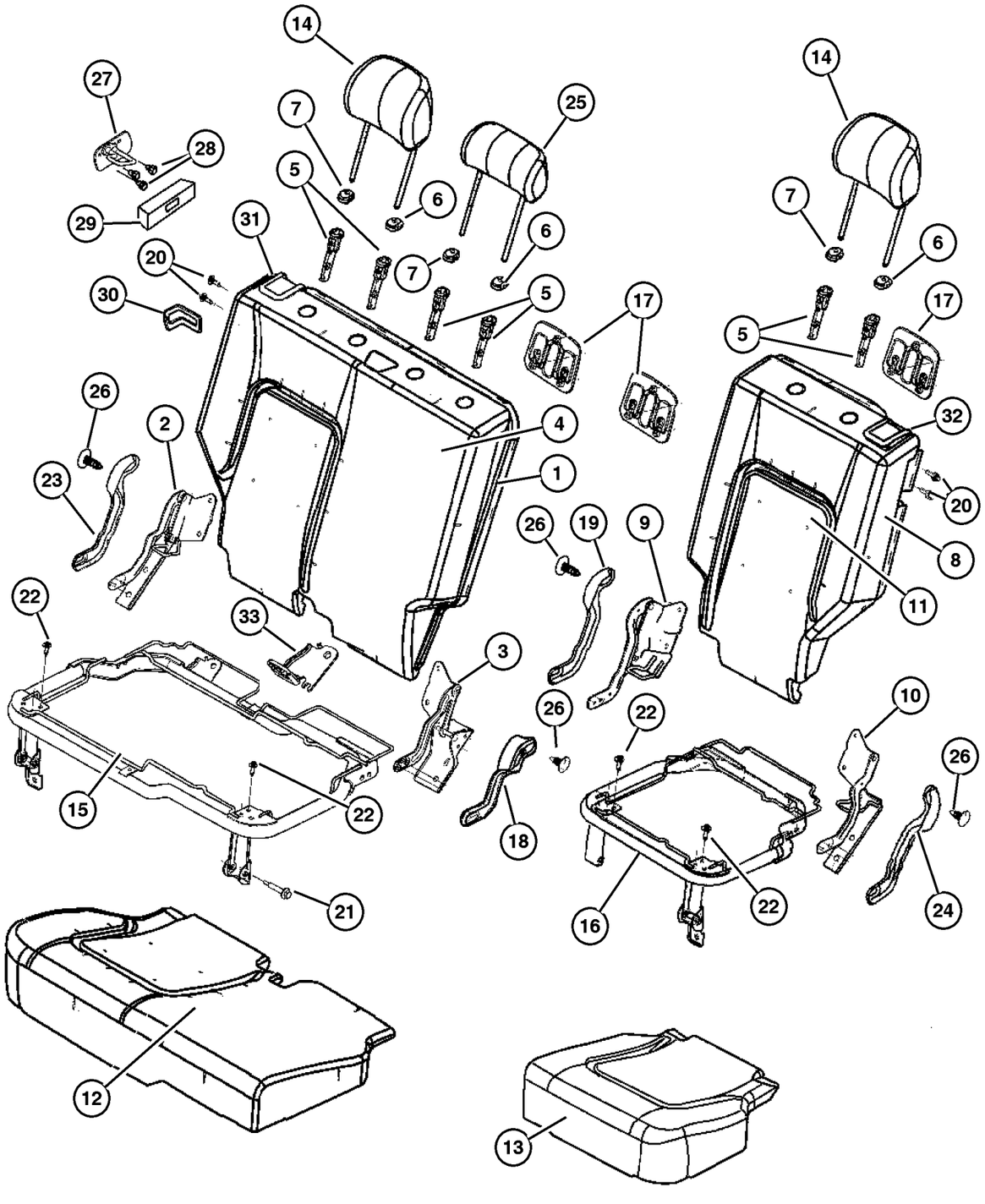

ITEM	PART NUMBER	QTY	LINE	SERIES	BODY	ENGINE	TRANS	TRIM	DESCRIPTION
	5072 519AA	1	J, T					DL	
		1	J, U					DL	Export
22									BOLT, Cushion To Adjuster
	4761 014	8	J, T					DL	
		8	J, U					DL	Export
23									COVER, Hinge
	UZ44 TL2AA	1	J, T					DL	[D2, L2]
		1	J, U					DL	[L2], Export
	UZ44 XDVAA	1	J, U					DL	[DV], Export
24									COVER, Hinge
	UZ47 TL2AA	1	J, T					DL	[D2, L2]
		1	J, U					DL	[L2], Export
	UZ47 XDVAA	1	J, U					DL	[DV], Export
25									HEADREST, Rear
	WA48 1DVAA	1	J, U					DL	[DV], Export
	WA48 1L2AA	1	J, U					DL	[L2], Export
26									PIN, Push
	WA51 1L2AA	2	J, T					DL	[D2, L2]
	WA51 XDVAA	2	J, U					DL	[DV], Export
	WA51 1L2AA	2	J, U					DL	[L2], Export
27									STRIKER, Seat Back Latch
	55352 816AB	1							Right
	55352 817AB	1							Left
28	6505 434AA	6							SCREW, M8-1.25
29	55352 839AC	2							BEZEL, Seat Latch
30									BEZEL, Seat Latch
	WA92 WL8AA	1	J, T					DL	[L2]
	WA92 XDVAA	1	J, T					DL	[D2]
	WA92 WL8AA	1	J, U					DL	[L2], Export
	WA92 XDVAA	1	J, U					DL	[DV], Export
31									CONTROL, SEAT RELEASE, With Cable and Latch
	XF78 1L2AB	1	J, T					DL	[D2, L2]
	XF78 1DVAB	1	J, U					DL	[DV], Export
	XF78 1L2AB	1	J, U					DL	[L2], Export
32									CONTROL, SEAT RELEASE, With Latch
	XF79 1L2AB	1	J, T					DL	[D2, L2]
	XF79 1DVAB	1	J, U					DL	[DV], Export
	XF79 1L2AB	1	J, U					DL	[L2], Export
33									BRACKET, Child Tether Anchor

JEEP LIBERTY (KJ)

SERIES	LINE	BODY	ENGINE	TRANSMISSION
P = Limited	J = LHD (4WD)	74 = 4 Dr (104.3 WB)	ED1,ED0 = 2.4L Power Tech	DDK = 5 Speed HDManual
H = Sport	U = RHD (4WD)		EKG,EK0 = 3.7L Power Tech	DDD = 5 Speed HD Manual
M = Renegade	T = LHD (2WD)		ENJ = 2.5L 4Cyl Turbo Diesel	DG4,DGQ = Multi-Speed Auto
			ENR = 2.8L 4Cyl Turbo Diesel	DG6 = 4 Speed Auto Transm
			EN0 = 4Cyl Turbo Diesel	DG0 = All Automatic Transm
				DBB = All Manual Transm

AR = Use as required - = Non illustrated part # = New this model year

September 30, 2003

« RETURN TO GROUP INDEX

Rear Seat, Trim Code [DL]
Figure IKJ-620

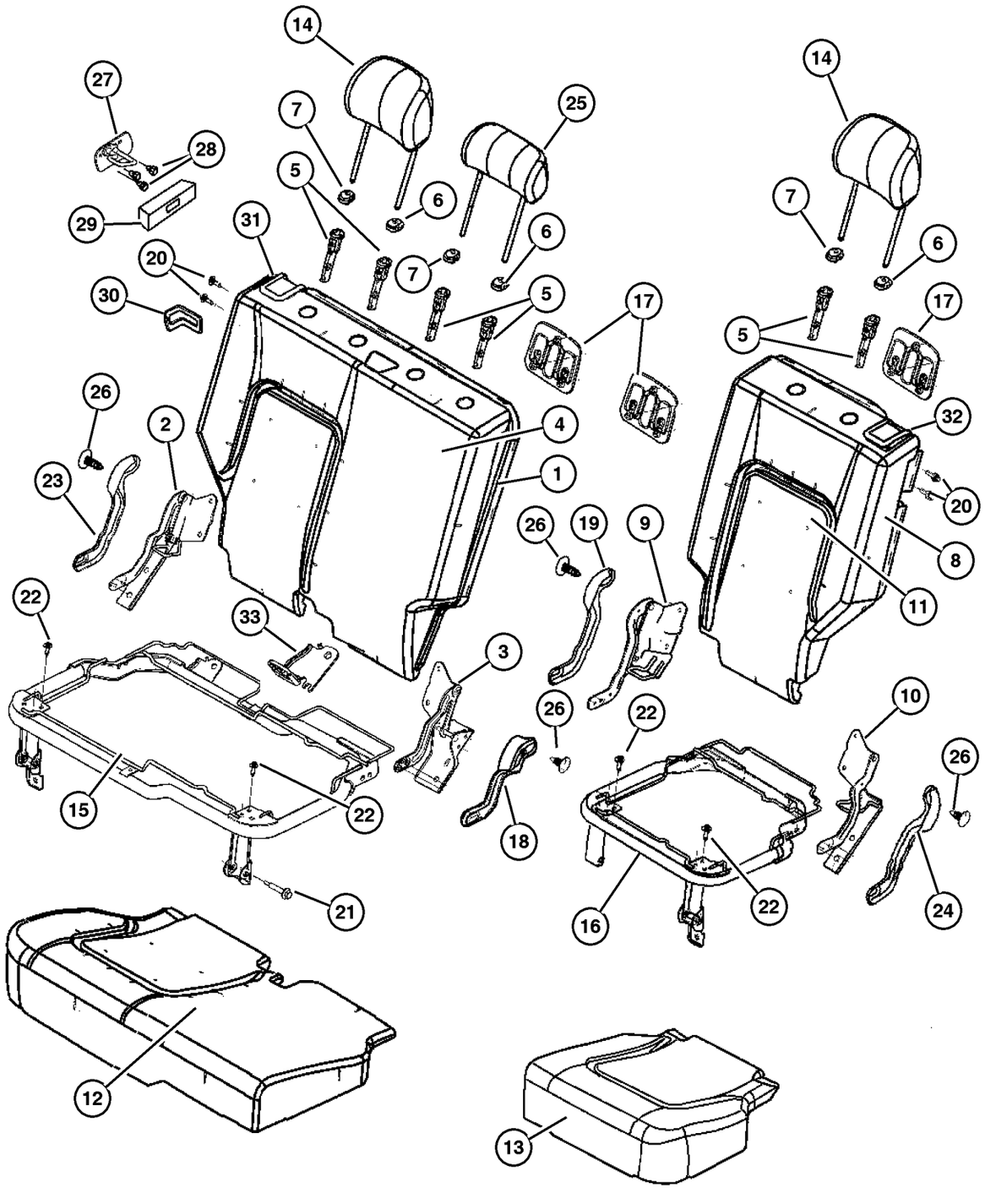

ITEM	PART NUMBER	QTY	LINE	SERIES	BODY	ENGINE	TRANS	TRIM	DESCRIPTION
	5134 366AA	1	J, U					DL	
		1	J, T					DL	

JEEP LIBERTY (KJ)

SERIES	LINE	BODY	ENGINE	TRANSMISSION
P = Limited	J = LHD (4WD)	74 = 4 Dr (104.3 WB)	ED1,ED0 = 2.4L Power Tech	DDK = 5 Speed HDManual
H = Sport	U = RHD (4WD)		EKG,EK0 = 3.7L Power Tech	DDD = 5 Speed HD Manual
M = Renegade	T = LHD (2WD)		ENJ = 2.5L 4Cyl Turbo Diesel	DG4,DGQ = Multi-Speed Auto
			ENR = 2.8L 4Cyl Turbo Diesel	DG6 = 4 Speed Auto Transm
			EN0 = 4Cyl Turbo Diesel	DG0 = All Automatic Transm
				DBB = All Manual Transm

Rear Seat, Trim Code [XJ]
Figure IKJ-630

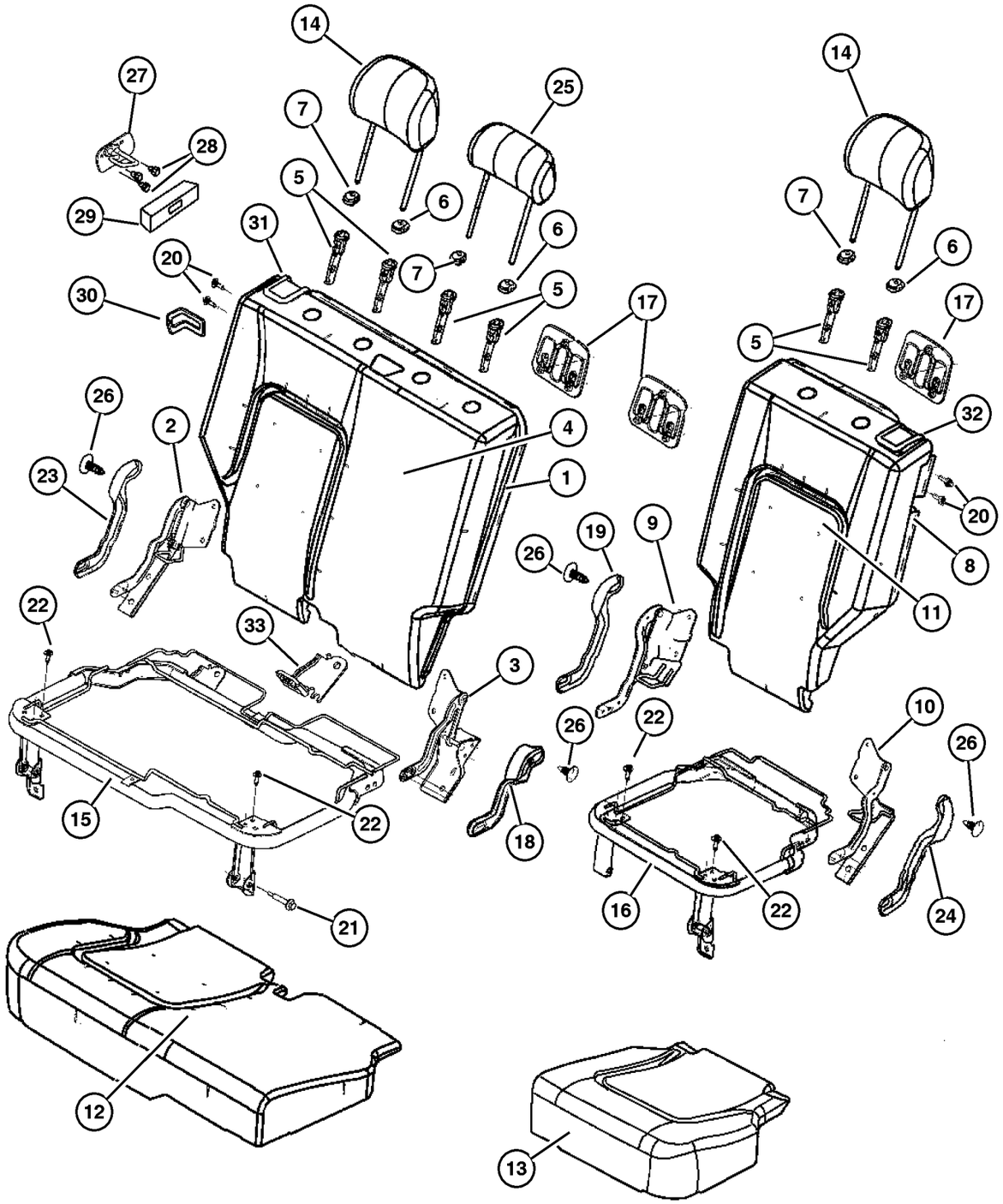

ITEM	PART NUMBER	QTY	LINE	SERIES	BODY	ENGINE	TRANS	TRIM	DESCRIPTION
1									SEAT BACK, Rear, 65%
	YG88 1DVAA	1	J, T					XJ	[DV]
	YG88 1L5AA	1	J, T					XJ	[L5]
	YG92 1DVAA	1	J, U					XJ	[DV], Export
	YG92 1L5AA	1	J, U					XJ	[L5]
2									BRACKET AND HINGE, Rear Seat Back, 65%
	5071 702AA	1	J, U					XJ	Right,Outboard
		1	J, T					XJ	Right,Outboard
3									BRACKET AND HINGE, Rear Seat Back, 65%
	5071 703AA	1	J, U					XJ	Right,Inboard
		1	J, T					XJ	Right,Inboard
4									COVER, Rear Seat Back, 65%
	YG86 1DVAA	1	J, T					XJ	[DV]
	YG86 1L5AA	1	J, T					XJ	[L5]
	YG90 1DVAA	1	J, U					XJ	[DV], Export
	YG90 1L5AA	1	J, U					XJ	[L5], Export
5									SLEEVE, Headrest
	5066 017AA	2	J, T					XJ	
		4	J, U					XJ	
6									CAP, Headrest Adjuster, With Button
	WA46 1DVAA	1	J, T					XJ	[DV]
		1	J, U					XJ	[DV], Export
	WA46 1L5AA	1	J, T					XJ	[L5]
		1	J, U					XJ	[L5], Export
7									CAP, Headrest Adjuster, Without Button
	WA31 1DVAA	1	J, T					XJ	[DV]
		3	J, U					XJ	[DV], Export
	WA31 1L5AA	1	J, T					XJ	[L5]
		3	J, U					XJ	[L5], Export
8									SEAT BACK, Rear, 35%
	YG89 1DVAA	1	J, T					XJ	[DV]
		1	J, U					XJ	[DV], Export
	YG89 1L5AA	1	J, T					XJ	[L5]
		1	J, U					XJ	[L5], Export
9									BRACKET AND HINGE, Rear Seat Back, 35%
	5071 704AA	1	J, U					XJ	Left,Inboard
		1	J, T					XJ	Left,Inboard

JEEP LIBERTY (KJ)

SERIES	LINE	BODY	ENGINE	TRANSMISSION
P = Limited	J = LHD (4WD)	74 = 4 Dr (104.3 WB)	ED1,ED0 = 2.4L Power Tech	DDK = 5 Speed HDManual
H = Sport	U = RHD (4WD)		EKG,EK0 = 3.7L Power Tech	DDD = 5 Speed HD Manual
M = Renegade	T = LHD (2WD)		ENJ = 2.5L 4Cyl Turbo Diesel	DG4,DGQ = Multi-Speed Auto
			ENR = 2.8L 4Cyl Turbo Diesel	DG6 = 4 Speed Auto Transm
			EN0 = 4Cyl Turbo Diesel	DG0 = All Automatic Transm
				DBB = All Manual Transm

AR = Use as required - = Non illustrated part # = New this model year **September 30, 2003**

« RETURN TO GROUP INDEX »

Rear Seat, Trim Code [XJ]
Figure IKJ-630

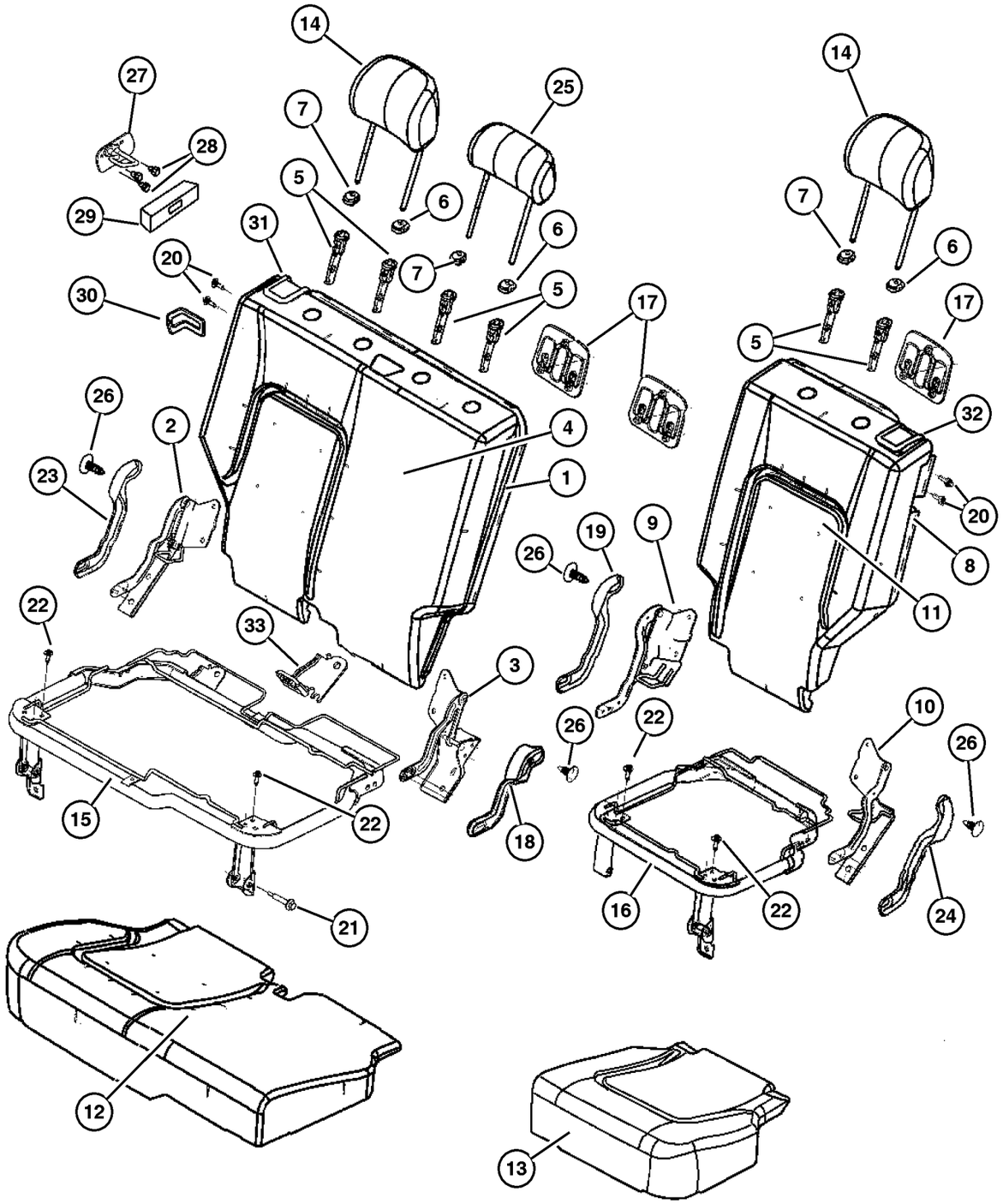

ITEM	PART NUMBER	QTY	LINE	SERIES	BODY	ENGINE	TRANS	TRIM	DESCRIPTION
10									BRACKET AND HINGE, Rear Seat Back, 35%
	5071 705AA	1	J, U					XJ	Left,Outboard
		1	J, T					XJ	Left,Outboard
11									COVER, Rear Seat Back, 35%
	YG87 1DVAA	1	J, T					XJ	[DV]
		1	J, U					XJ	[DV]
	YG87 1L5AA	1	J, T					XJ	[L5]
		1	J, U					XJ	[L5]
12									COVER AND PAD, Cushion, 65%
	YG52 1DVAA	1	J, T					XJ	[DV]
		1	J, U					XJ	[DV]
	YG52 1L5AA	1	J, T					XJ	[L5]
		1	J, U					XJ	[L5]
13									COVER AND PAD, Cushion, 35%
	YG53 1DVAA	1	J, T					XJ	[DV]
		1	J, U					XJ	[DV]
	YG53 1L5AA	1	J, T					XJ	[L5]
		1	J, U					XJ	[L5]
14									HEADREST, Rear
	XP75 1DVAA	2	J, T					XJ	[DV]
		2	J, U					XJ	[DV]
	XP75 1L5AA	2	J, T					XJ	[L5]
		2	J, U					XJ	[L5]
15									PANEL, Seat Cushion Base, 65%
	5072 112AA	1	J, U					XJ	
		1	J, T					XJ	
16									PANEL, Seat Cushion Base, 35%
	5072 113AA	1	J, T					M5	
		1	J, U					XJ	
17									BEZEL, TETHER
	WB44 1DVAA	2	J, T					XJ	[DV]
		1	J, U					XJ	[DV]
	WB44 1L5AA	2	J, T					XJ	[L5]
		1	J, U					XJ	[L5]
18									COVER, Hinge, Right Inboard
	UZ45 XDVAA	1	J, T					XJ	[DV]
		1	J, U					XJ	[DV]
	UZ45 WL5AA	1	J, U					XJ	[L5]
		1	J, T					XJ	[L5]
19									COVER, Hinge, Left Inboard

JEEP LIBERTY (KJ)

SERIES	LINE	BODY	ENGINE	TRANSMISSION
P = Limited	J = LHD (4WD)	74 = 4 Dr (104.3 WB)	ED1,ED0 = 2.4L Power Tech	DDK = 5 Speed HDManual
H = Sport	U = RHD (4WD)		EKG,EK0 = 3.7L Power Tech	DDD = 5 Speed HD Manual
M = Renegade	T = LHD (2WD)		ENJ = 2.5L 4Cyl Turbo Diesel	DG4,DGQ = Multi-Speed Auto
			ENR = 2.8L 4Cyl Turbo Diesel	DG6 = 4 Speed Auto Transm
			EN0 = 4Cyl Turbo Diesel	DG0 = All Automatic Transm
				DBB = All Manual Transm

AR = Use as required - = Non illustrated part # = New this model year

September 30, 2003

« RETURN TO GROUP INDEX

« »

Rear Seat, Trim Code [XJ]
Figure IKJ-630

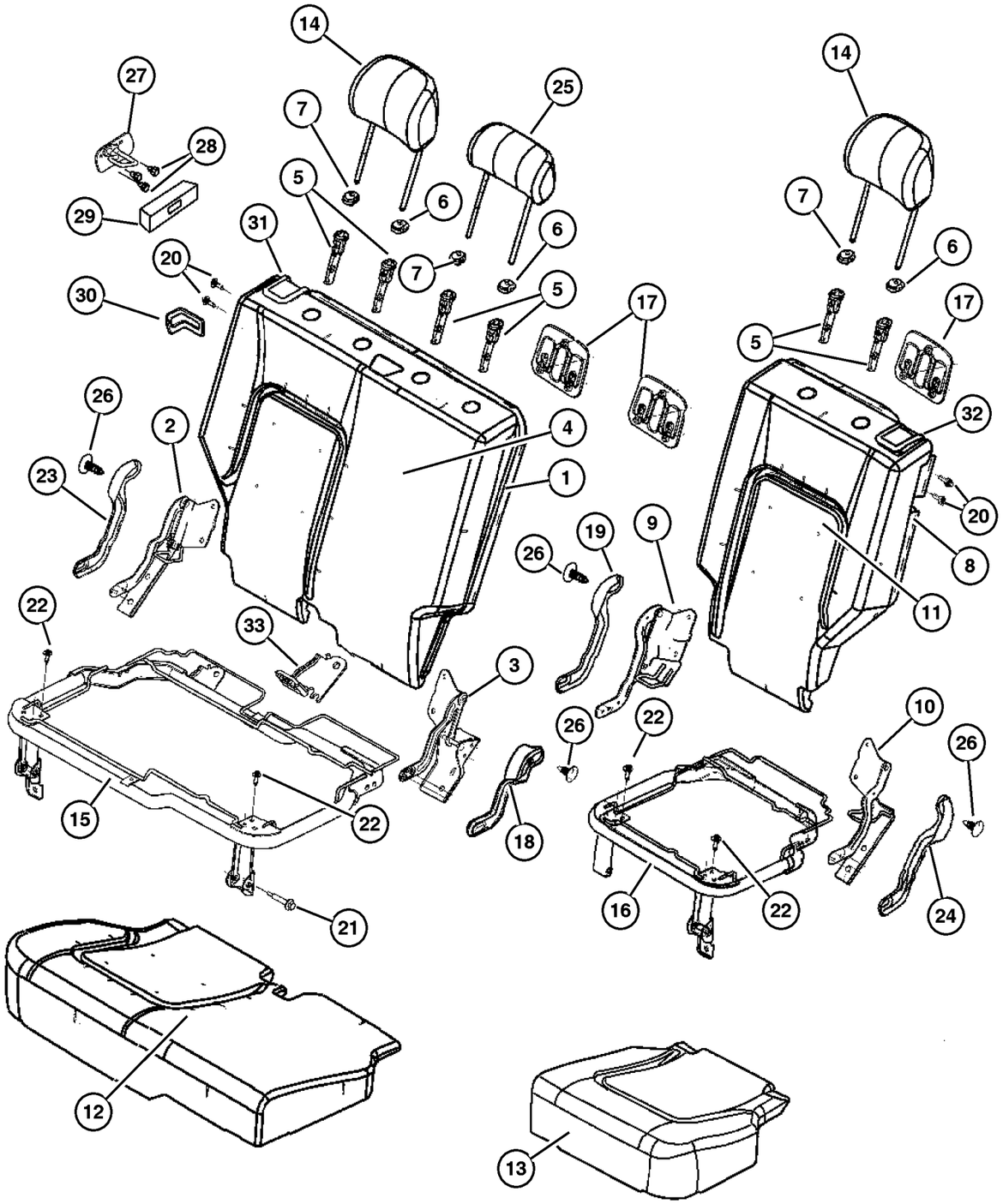

ITEM	PART NUMBER	QTY	LINE	SERIES	BODY	ENGINE	TRANS	TRIM	DESCRIPTION
	UZ46 XDVAA	1	J, T					XJ	[DV]
		1	J, U					XJ	[DV]
	UZ46 WL5AA	1	J, U					XJ	[L5]
		1	J, T					XJ	[L5]
20									BOLT, Pivot
	5072 520AA	2	J, U					XJ	
		2	J, T					XJ	
21									BOLT, Seat
	5072 519AA	1	J, U					XJ	
		1	J, T					XJ	
22									BOLT, Cushion To Adjuster
	4761 014	8	J, U					XJ	
		8	J, T					XJ	
23									COVER, Hinge, Right Outboard
	UZ44 XDVAA	1	J, T					XJ	[DV]
		1	J, U					XJ	[DV]
	UZ44 WL5AA	1	J, T					XJ	[L5]
		1	J, U					XJ	[L5]
24									COVER, Hinge, Left Outboard
	UZ47 XDVAA	1	J, T					XJ	[DV]
		1	J, U					XJ	[DV]
	UZ47 WL5AA	1	J, U					XJ	[L5]
		1	J, T					XJ	[L5]
25									HEADREST, Rear
	XP76 1DVAA	1	J, U					XJ	[DV]
	XP76 1L5AA	1	J, U					XJ	[L5]
	XP76 1L5AA	1	J, U					XJ	[L5]
26									PIN, Push
	WA51 XDVAA	2	J, U					XJ	[DV]
		2	J, T					XJ	[DV]
	WA51 WL5AA	2	J, U					XJ	[L5]
		2	J, T					XJ	[L5]
27									STRIKER, Seat Back Latch
	55352 816AB	1							Right
	55352 817AB	1							Left
28	6505 434AA	6							SCREW, M8-1.25
29	55352 839AC	2							BEZEL, Seat Latch
30									BEZEL, Seat Latch
	WA92 XDVAA	2	J, U					XJ	[DV]
	WA92 WL8AA	1	J, T					XJ	[L5]
	WA92 XDVAA	1	J, T					XJ	[DV]
	WA92 WL8AA	2	J, U					XJ	[L5]

JEEP LIBERTY (KJ)

SERIES	LINE	BODY	ENGINE	TRANSMISSION
P = Limited	J = LHD (4WD)	74 = 4 Dr (104.3 WB)	ED1,ED0 = 2.4L Power Tech	DDK = 5 Speed HDManual
H = Sport	U = RHD (4WD)		EKG,EK0 = 3.7L Power Tech	DDD = 5 Speed HD Manual
M = Renegade	T = LHD (2WD)		ENJ = 2.5L 4Cyl Turbo Diesel	DG4,DGQ = Multi-Speed Auto
			ENR = 2.8L 4Cyl Turbo Diesel	DG6 = 4 Speed Auto Transm
			EN0 = 4Cyl Turbo Diesel	DG0 = All Automatic Transm
				DBB = All Manual Transm

AR = Use as required - = Non illustrated part # = New this model year

September 30, 2003

« RETURN TO GROUP INDEX

« »

Rear Seat, Trim Code [XJ]
Figure IKJ-630

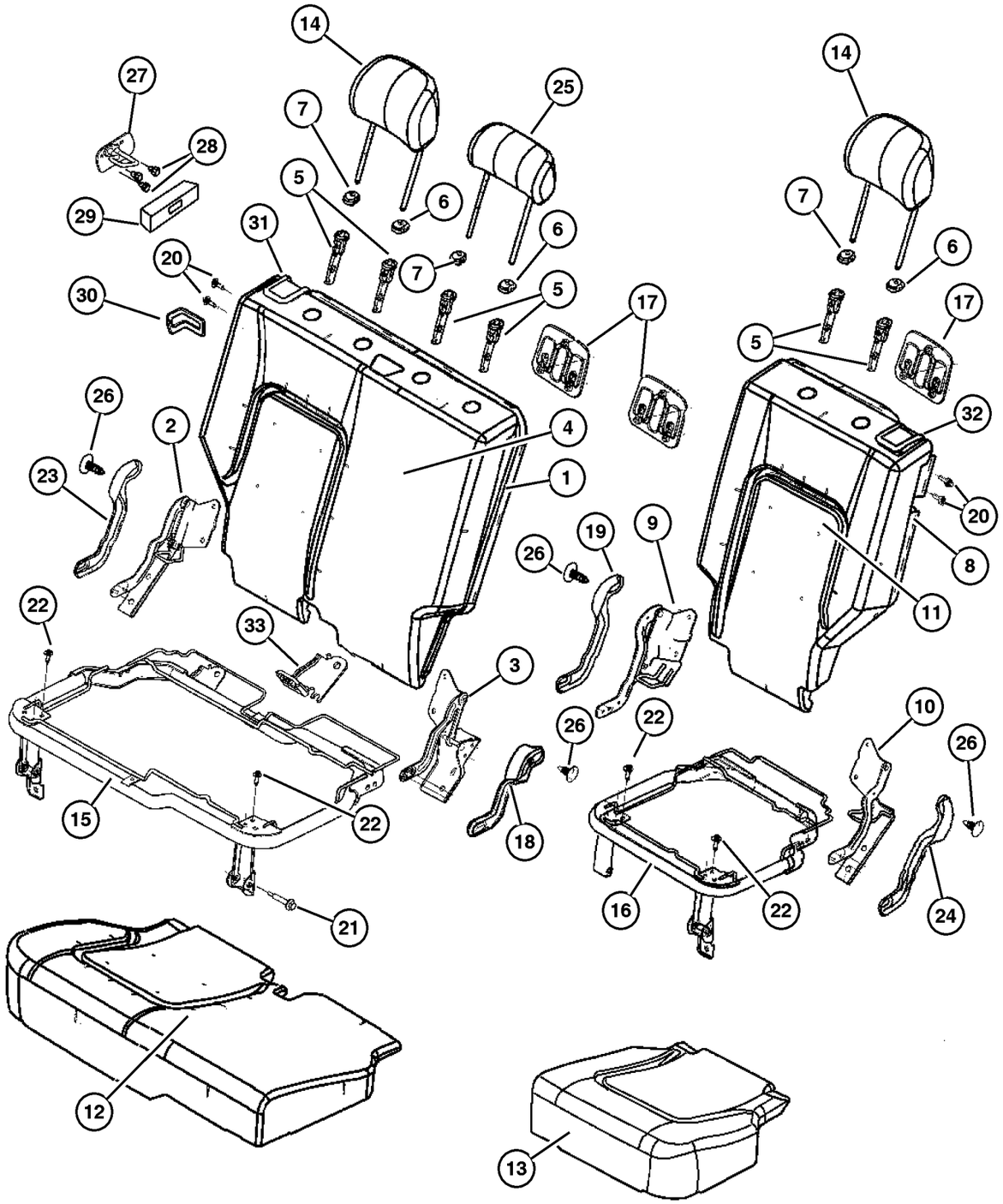

ITEM	PART NUMBER	QTY	LINE	SERIES	BODY	ENGINE	TRANS	TRIM	DESCRIPTION
31									CONTROL, SEAT RELEASE, With Cable and Latch
	XF78 1DVAB	1	J, U					XJ	[DV]
	XF78 1L5AB	1	J, U					XJ	[L5]
	XF78 1DVAB	1	J, T					XJ	[DV]
	XF78 1L5AB	1	J, T					XJ	[L5]
32									CONTROL, SEAT RELEASE, With Latch
	XF79 1DVAB	1	J, U					XJ	[DV]
		1	J, T					XJ	[DV]
	XF79 1L5AB	1	J, U					XJ	[L5]
		1	J, T					XJ	[L5]
33									BRACKET, Child Tether Anchor
	5134 366AA	1	J, U					XJ	
		1	J, T					XJ	

JEEP LIBERTY (KJ)

SERIES	LINE	BODY	ENGINE	TRANSMISSION
P = Limited	J = LHD (4WD)	74 = 4 Dr (104.3 WB)	ED1,ED0 = 2.4L Power Tech	DDK = 5 Speed HDManual
H = Sport	U = RHD (4WD)		EKG,EK0 = 3.7L Power Tech	DDD = 5 Speed HD Manual
M = Renegade	T = LHD (2WD)		ENJ = 2.5L 4Cyl Turbo Diesel	DG4,DGQ = Multi-Speed Auto
			ENR = 2.8L 4Cyl Turbo Diesel	DG6 = 4 Speed Auto Transm
			EN0 = 4Cyl Turbo Diesel	DG0 = All Automatic Transm
				DBB = All Manual Transm

Rear Seat, Trim Code [E7]
Figure IKJ-640

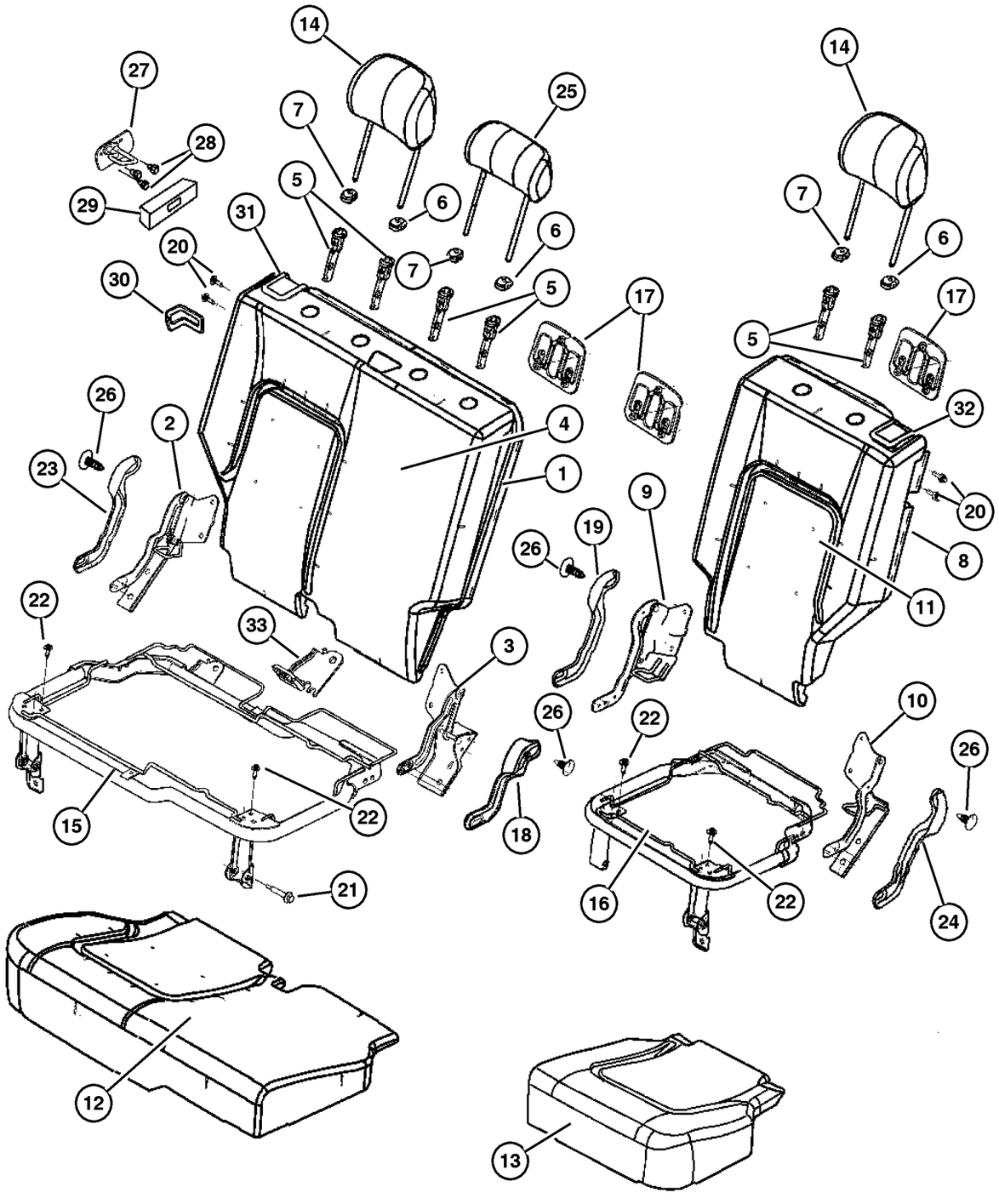

ITEM	PART NUMBER	QTY	LINE	SERIES	BODY	ENGINE	TRANS	TRIM	DESCRIPTION
1									SEAT BACK, Rear, 65%
	YF84 1DVAA	1	J, U					E7	[DV]
	YF84 1L5AA	1	J, U					E7	[L5]
2	5071 702AA	1	J, U					E7	BRACKET AND HINGE, Rear Seat Back, 65%, Right,Outboard
3	5071 703AA	1	J, U					E7	BRACKET AND HINGE, Rear Seat Back, 65%, Right,Inboard
4									COVER, Rear Seat Back, 65%
	YF82 1DVAA	1	J, U					E7	[DV]
	YF82 1L5AA	1	J, U					E7	[L5]
5	5066 017AA	4	J, U					E7	SLEEVE, Headrest
6									CAP, Headrest Adjuster, With Button
	WA46 1DVAA	2	J, U					E7	[DV]
	WA46 1L5AA	2	J, U					E7	[L5]
7									CAP, Headrest Adjuster, Without Button
	WA31 1DVAA	3	J, U					E7	[DV]
	WA31 1L5AA	3	J, U					E7	[L5]
8									SEAT BACK, Rear, 35%
	YF81 1DVAA	1	J, U					E7	[DV]
	YF81 1L5AA	1	J, U					E7	[L5]
9	5071 704AA	1	J, U					E7	BRACKET AND HINGE, Rear Seat Back, 35%, Left,Inboard
10	5071 705AA	1	J, U					E7	BRACKET AND HINGE, Rear Seat Back, 35%, Left,Outboard
11									COVER, Rear Seat Back, 35%
	YF77 1DVAA	1	J, U					E7	[DV]
	YF77 1L5AA	1	J, U					E7	[L5]
12									COVER AND PAD, Cushion, 65%
	YF86 1DVAA	1	J, U					E7	[DV]
	YF86 1L5AA	1	J, U					E7	[L5]
13									COVER AND PAD, Cushion, 35%
	YF87 1DVAA	1	J, U					E7	[DV]
	YF87 1L5AA	1	J, U					E7	[L5]
14									HEADREST, Rear
	YF83 1DVAA	2	J, U					E7	[DV]
	YF83 1L5AA	2	J, U					E7	[L5]
15	5072 112AA	1	J, U					E7	PANEL, Seat Cushion Base, 65%
16	5072 113AA	1	J, U					E7	PANEL, Seat Cushion Base, 35%
17									BEZEL, TETHER
	WB44 1DVAA	1	J, U					E7	[DV]

JEEP LIBERTY (KJ)

SERIES	LINE	BODY	ENGINE	TRANSMISSION
P = Limited	J = LHD (4WD)	74 = 4 Dr (104.3 WB)	ED1,ED0 = 2.4L Power Tech	DDK = 5 Speed HDManual
H = Sport	U = RHD (4WD)		EKG,EK0 = 3.7L Power Tech	DDD = 5 Speed HD Manual
M = Renegade	T = LHD (2WD)		ENJ = 2.5L 4Cyl Turbo Diesel	DG4,DGQ = Multi-Speed Auto
			ENR = 2.8L 4Cyl Turbo Diesel	DG6 = 4 Speed Auto Transm
			EN0 = 4Cyl Turbo Diesel	DG0 = All Automatic Transm
				DBB = All Manual Transm

Rear Seat, Trim Code [E7]
Figure IKJ-640

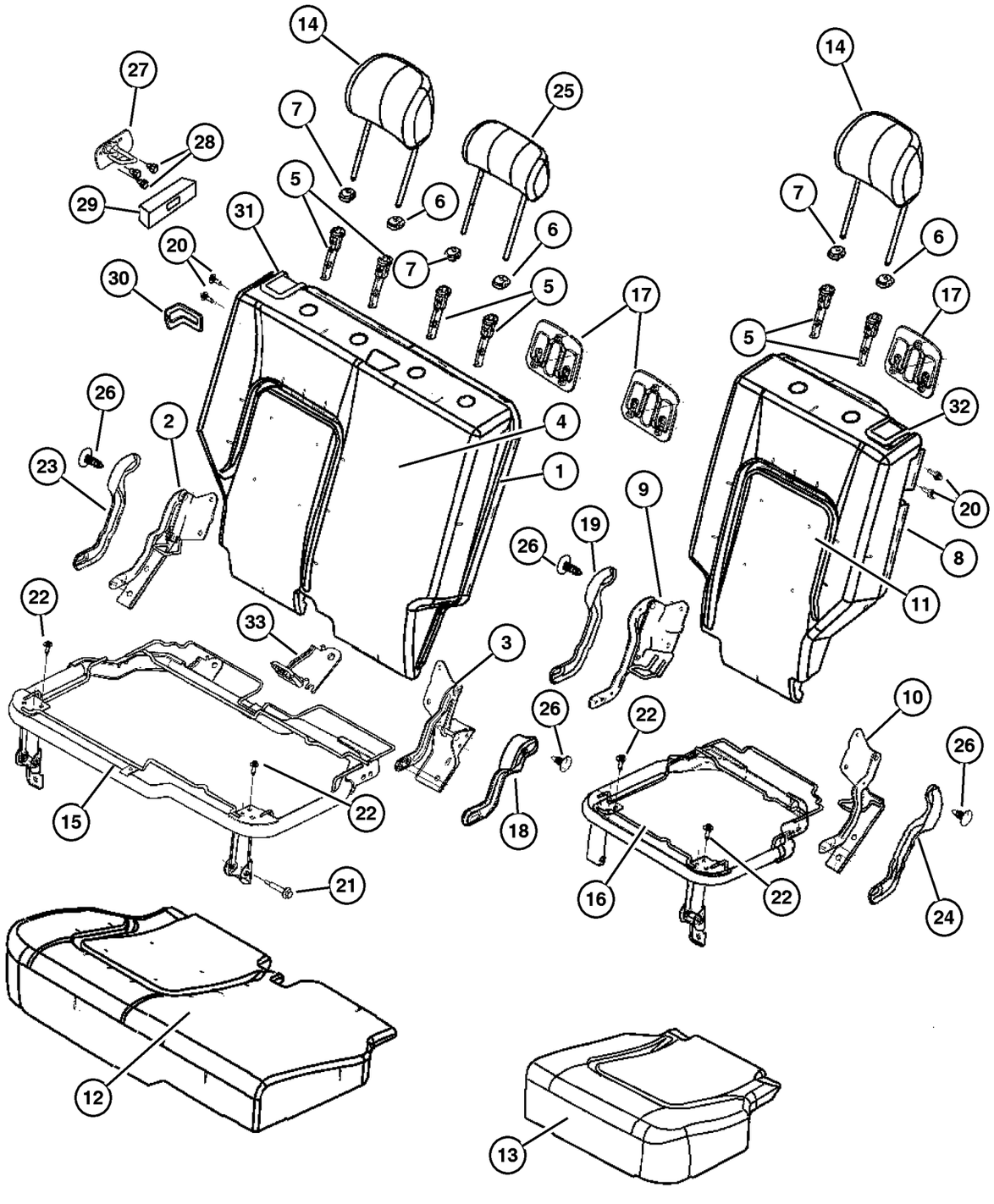

ITEM	PART NUMBER	QTY	LINE	SERIES	BODY	ENGINE	TRANS	TRIM	DESCRIPTION
	WB44 1L5AA	1	J, U					E7	[L5]
18									COVER, Hinge
	UZ45 WL5AA	1	J, U					E7	[L5], Right,Inboard
	UZ45 XDVAA	1	J, U					E7	[DV], Right,Inboard
19									COVER, Hinge
	UZ46 WL5AA	1	J, U					E7	Left,Inboard
	UZ46 XDVAA	1	J, U					E7	[DV], Left,Inboard
20	5072 520AA	2	J, U					E7	BOLT, Pivot
21	5072 519AA	1	J, U					E7	BOLT, Seat
22	4761 014	8	J, U					E7	BOLT, Cushion To Adjuster
23									COVER, Hinge
	UZ44 XDVAA	1	J, U					E7	[DV], Right,Outboard
	UZ44 WL5AA	1	J, U					E7	[L5], Right,Outboard
24									COVER, Hinge
	UZ47 WL5AA	1	J, U					E7	[L5], Left,Outboard
	UZ47 XDVAA	1	J, U					E7	[DV], Left,Outboard
25									HEADREST, Rear
	YF78 1DVAA	1	J, U					E7	[DV]
	YF78 1L5AA	1	J, U					E7	[L5]
26									PIN, Push
	WA51 XDVAA	2	J, U					E7	[DV]
	WA51 WL5AA	2	J, U					E7	[L5]
27									STRIKER, Seat Back Latch
	55352 816AB	1							Right
	55352 817AB	1							Left
28	6505 434AA	6							SCREW, M8-1.25
29	55352 839AC	2							BEZEL, Seat Latch
30									BEZEL, Seat Latch
	WA92 XDVAA	1	J, U					E7	[DV]
	WA92 WL8AA	1	J, U					E7	[L5]
31									CONTROL, SEAT RELEASE, With Cable and Latch
	XF78 1DVAB	1	J, U					E7	[DV]
	XF78 1L5AB	1	J, U					E7	[L5]
32									CONTROL, SEAT RELEASE, With Latch
	XF79 1DVAB	1	J, U					E7	[DV]
	XF79 1L5AB	1	J, U					E7	[L5]
33	5134 366AA	1	J, U					E7	BRACKET, Child Tether Anchor

JEEP LIBERTY (KJ)

SERIES	LINE	BODY	ENGINE	TRANSMISSION
P = Limited	J = LHD (4WD)	74 = 4 Dr (104.3 WB)	ED1,ED0 = 2.4L Power Tech	DDK = 5 Speed HDManual
H = Sport	U = RHD (4WD)		EKG,EK0 = 3.7L Power Tech	DDD = 5 Speed HD Manual
M = Renegade	T = LHD (2WD)		ENJ = 2.5L 4Cyl Turbo Diesel	DG4,DGQ = Multi-Speed Auto
			ENR = 2.8L 4Cyl Turbo Diesel	DG6 = 4 Speed Auto Transm
			EN0 = 4Cyl Turbo Diesel	DG0 = All Automatic Transm
				DBB = All Manual Transm

Rear Seat, Trim Code [J5]
Figure IKJ-650

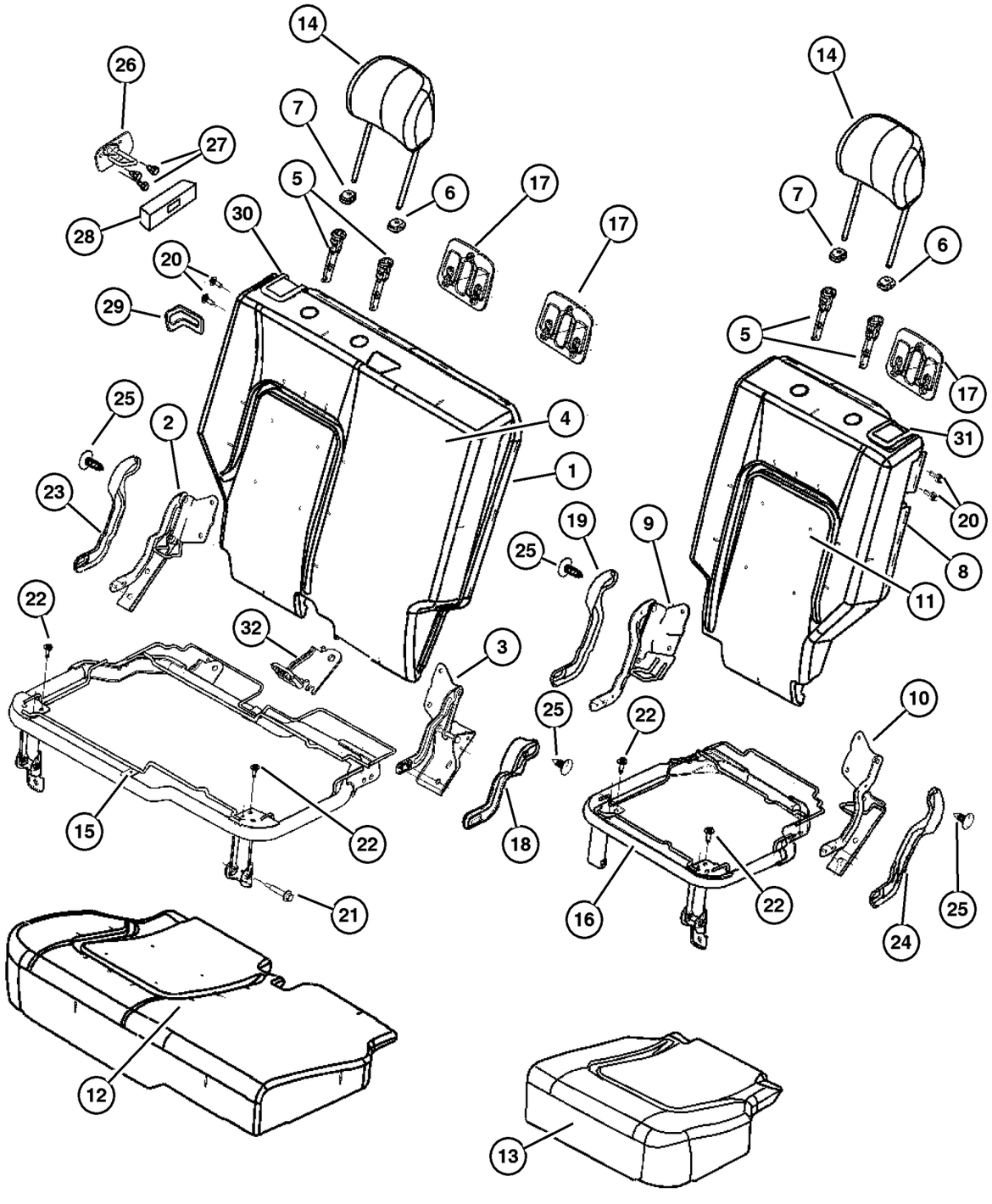

ITEM	PART NUMBER	QTY	LINE	SERIES	BODY	ENGINE	TRANS	TRIM	DESCRIPTION
1									SEAT BACK, Rear, 65%
	XG60 1DVAA	1						J5	[DV]
	XG60 1L5AA	1						J5	[L5]
2	5071 702AA	1						J5	BRACKET AND HINGE, Rear Seat Back, 65%, Right,Outboard
3	5071 703AA	1						J5	BRACKET AND HINGE, Rear Seat Back, 65%, Right,Inboard
4									COVER, Rear Seat Back, 65%
	XG58 1DVAA	1						J5	[DV]
	XG58 1L5AA	1						J5	[L5]
5	5066 017AA	2						J5	SLEEVE, Headrest
6									CAP, Headrest Adjuster, With Button
	WA46 1DVAA	1						J5	[DV]
	WA46 1L5AA	1						J5	[L5]
7									CAP, Headrest Adjuster, Without Button
	WA31 1DVAA	1						J5	[DV]
	WA31 1L5AA	1						J5	[L5]
8									SEAT BACK, Rear, 35%
	XG61 1DVAA	1						J5	[DV]
	XG61 1L5AA	1						J5	[L5]
9	5071 704AA	1						J5	BRACKET AND HINGE, Rear Seat Back, 35%, Left,Inboard
10	5071 705AA	1						J5	BRACKET AND HINGE, Rear Seat Back, 35%, Left,Outboard
11									COVER, Rear Seat Back, 35%
	XG59 1DVAA	1						J5	[DV]
	XG59 1L5AA	1						J5	[L5]
12									COVER AND PAD, Cushion, 65%
	XG54 1DVAA	1						J5	[DV]
	XG54 1L5AA	1						J5	[L5]
13									COVER AND PAD, Cushion, 35%
	XG55 1DVAA	1						J5	[DV]
	XG55 1L5AA	1						J5	[L5]
14									HEADREST, Rear
	XG56 1DVAA	2						J5	[DV]
	XG56 1L5AA	2						J5	[L5]
15	5072 112AA	1						J5	PANEL, Seat Cushion Base, 65%
16	5072 113AA	1						J5	PANEL, Seat Cushion Base, 35%
17									BEZEL, TETHER
	WB44 1DVAA	2						J5	[DV]

JEEP LIBERTY (KJ)

SERIES	LINE	BODY	ENGINE	TRANSMISSION
P = Limited	J = LHD (4WD)	74 = 4 Dr (104.3 WB)	ED1,ED0 = 2.4L Power Tech	DDK = 5 Speed HDManual
H = Sport	U = RHD (4WD)		EKG,EK0 = 3.7L Power Tech	DDD = 5 Speed HD Manual
M = Renegade	T = LHD (2WD)		ENJ = 2.5L 4Cyl Turbo Diesel	DG4,DGQ = Multi-Speed Auto
			ENR = 2.8L 4Cyl Turbo Diesel	DG6 = 4 Speed Auto Transm
			EN0 = 4Cyl Turbo Diesel	DG0 = All Automatic Transm
				DBB = All Manual Transm

Rear Seat, Trim Code [J5]
Figure IKJ-650

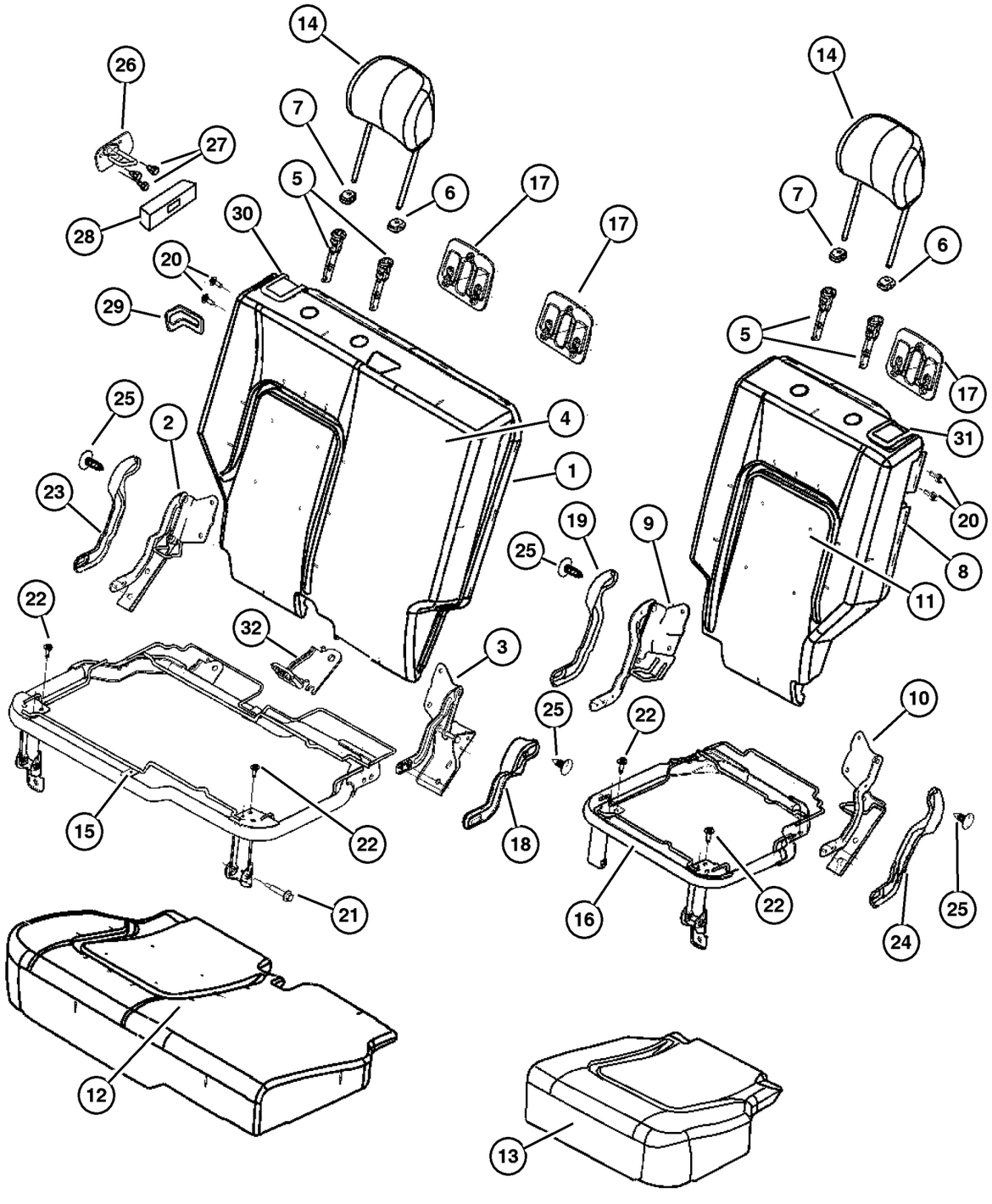

ITEM	PART NUMBER	QTY	LINE	SERIES	BODY	ENGINE	TRANS	TRIM	DESCRIPTION
	WB44 1L5AA	2						J5	[L5]
18									COVER, Hinge
	UZ45 WL5AA	1						J5	[L5], Right,Inboard
	UZ45 XDVAA	1						J5	[DV], Right,Inboard
19									COVER, Hinge
	UZ46 WL5AA	1						J5	[L5], Left,Inboard
	UZ46 XDVAA	1						J5	[DV], Left,Inboard
20	5072 520AA	2						J5	BOLT, Pivot
21	5072 519AA	1						J5	BOLT, Seat
22	4761 014	8						J5	BOLT, Cushion To Adjuster
23									COVER, Hinge
	UZ44 WL5AA	1						J5	[L5], Right,Outboard
	UZ44 XDVAA	1						J5	[DV], Right,Outboard
24									COVER, Hinge
	UZ47 WL5AA	1						J5	[L5], Left,Outboard
	UZ47 XDVAA	1						J5	[DV], Left,Outboard
25									PIN, Push
	WA51 XDVAA	30						J5	[L5]
		30						J5	[DV]
26									STRIKER, Seat Back Latch
	55352 816AB	1							Right
	55352 817AB	1							Left
27	6505 434AA	6							SCREW, M8-1.25
28	55352 839AC	2							BEZEL, Seat Latch
29									BEZEL, Seat Latch
	WA92 WL8AA	2						J5	[L5]
	WA92 XDVAA	2						J5	[DV]
30									CONTROL, SEAT RELEASE, With Cable and Latch
	XF78 1DVAB	1						J5	[DV]
	XF78 1L5AB	1						J5	[L5]
31									CONTROL, SEAT RELEASE, With Latch
	XF79 1DVAB	1						J5	[DV]
	XF79 1L5AB	1						J5	[L5]
32	5134 366AA	1						J5	BRACKET, Child Tether Anchor

JEEP LIBERTY (KJ)

SERIES	LINE	BODY	ENGINE	TRANSMISSION
P = Limited	J = LHD (4WD)	74 = 4 Dr (104.3 WB)	ED1,ED0 = 2.4L Power Tech	DDK = 5 Speed HDManual
H = Sport	U = RHD (4WD)		EKG,EK0 = 3.7L Power Tech	DDD = 5 Speed HD Manual
M = Renegade	T = LHD (2WD)		ENJ = 2.5L 4Cyl Turbo Diesel	DG4,DGQ = Multi-Speed Auto
			ENR = 2.8L 4Cyl Turbo Diesel	DG6 = 4 Speed Auto Transm
			EN0 = 4Cyl Turbo Diesel	DG0 = All Automatic Transm
				DBB = All Manual Transm

Rear Seat, Trim Code [F7]
Figure IKJ-660

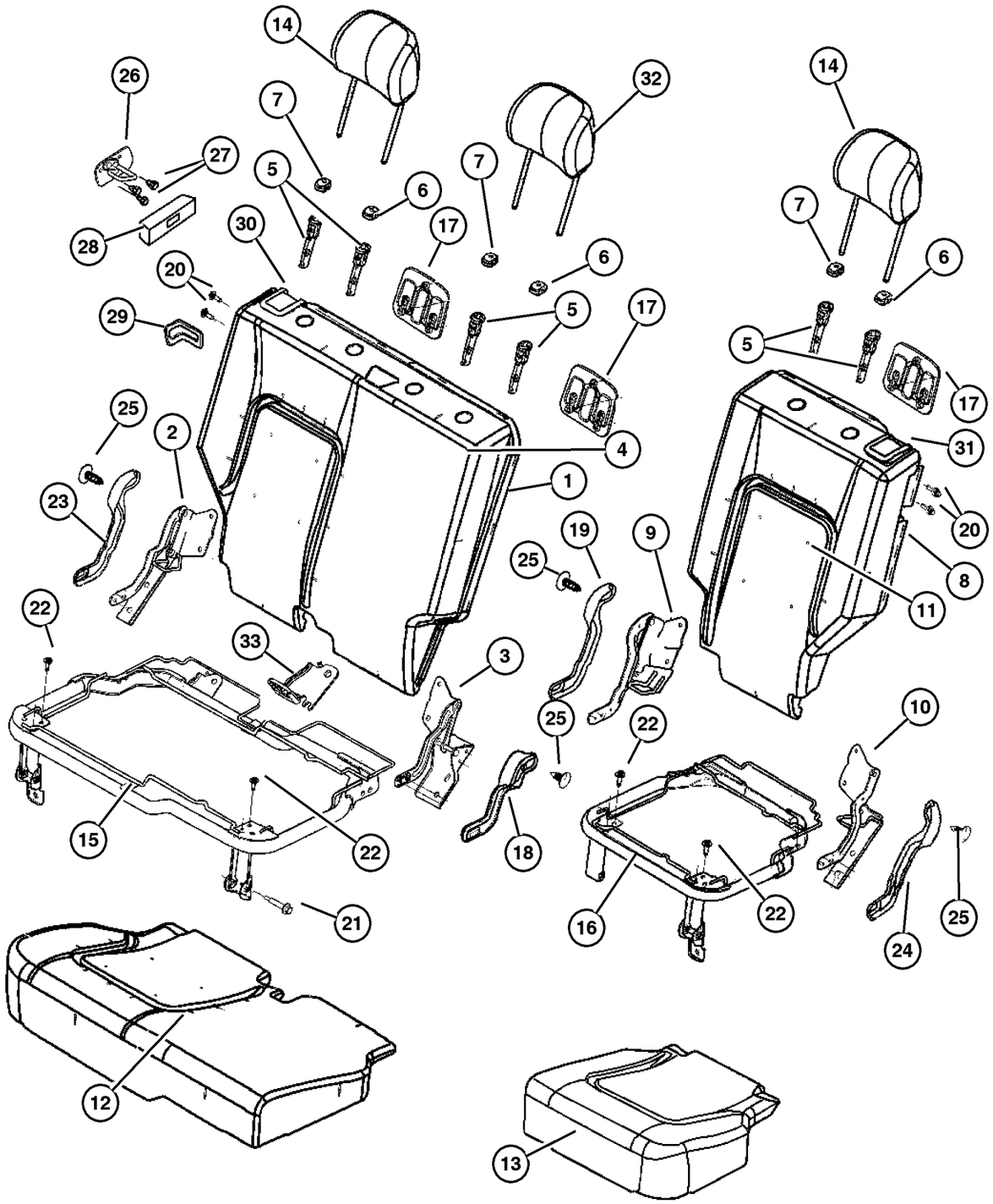

ITEM	PART NUMBER	QTY	LINE	SERIES	BODY	ENGINE	TRANS	TRIM	DESCRIPTION
1									SEAT BACK, Rear, 65%
	XH24 1DVAA	1						F7	[DV]
	XH24 1L5AA	1						F7	[L5]
2	5071 702AA	1						F7	BRACKET AND HINGE, Rear Seat Back, 65%, Right,Outboard
3	5071 703AA	1						F7	BRACKET AND HINGE, Rear Seat Back, 65%, Right,Inboard
4									COVER, Rear Seat Back, 65%
	XH26 1DVAA	1						F7	[DV]
	XH26 1L5AA	1						F7	[L5]
5	5066 017AA	2						F7	SLEEVE, Headrest
6									CAP, Headrest Adjuster, With Button
	WA46 1DVAA	1						F7	[DV]
	WA46 1L5AA	1						F7	[L5]
7									CAP, Headrest Adjuster, Without Button
	WA31 1DVAA	1						F7	[DV]
	WA31 1L5AA	1						F7	[L5]
8									SEAT BACK, Rear, 35%
	XG61 1DVAA	1						F7	[DV]
	XG61 1L5AA	1						F7	[L5]
9	5071 704AA	1						F7	BRACKET AND HINGE, Rear Seat Back, 35%, Left,Inboard
10	5071 705AA	1						F7	BRACKET AND HINGE, Rear Seat Back, 35%, Left,Outboard
11									COVER, Rear Seat Back, 35%
	XG59 1DVAA	1						F7	[DV]
	XG59 1L5AA	1						F7	[L5]
12									COVER AND PAD, Cushion, 65%
	XG54 1DVAA	1						F7	[DV]
	XG54 1L5AA	1						F7	[L5]
13									COVER AND PAD, Cushion, 35%
	XG55 1DVAA	1						F7	[DV]
	XG55 1L5AA	1						F7	[L5]
14									HEADREST, Rear
	XG56 1DVAA	2						F7	[DV]
	XG56 1L5AA	2						F7	[L5]
15	5072 112AA	1						F7	PANEL, Seat Cushion Base, 65%
16	5072 113AA	1						F7	PANEL, Seat Cushion Base, 35%
17									BEZEL, TETHER
	WB44 1DVAA	1						F7	[DV]

JEEP LIBERTY (KJ)

SERIES	LINE	BODY	ENGINE	TRANSMISSION
P = Limited	J = LHD (4WD)	74 = 4 Dr (104.3 WB)	ED1,ED0 = 2.4L Power Tech	DDK = 5 Speed HDManual
H = Sport	U = RHD (4WD)		EKG,EK0 = 3.7L Power Tech	DDD = 5 Speed HD Manual
M = Renegade	T = LHD (2WD)		ENJ = 2.5L 4Cyl Turbo Diesel	DG4,DGQ = Multi-Speed Auto
			ENR = 2.8L 4Cyl Turbo Diesel	DG6 = 4 Speed Auto Transm
			EN0 = 4Cyl Turbo Diesel	DG0 = All Automatic Transm
				DBB = All Manual Transm

AR = Use as required - = Non illustrated part # = New this model year

September 30, 2003

« RETURN TO GROUP INDEX »

Rear Seat, Trim Code [F7]
Figure IKJ-660

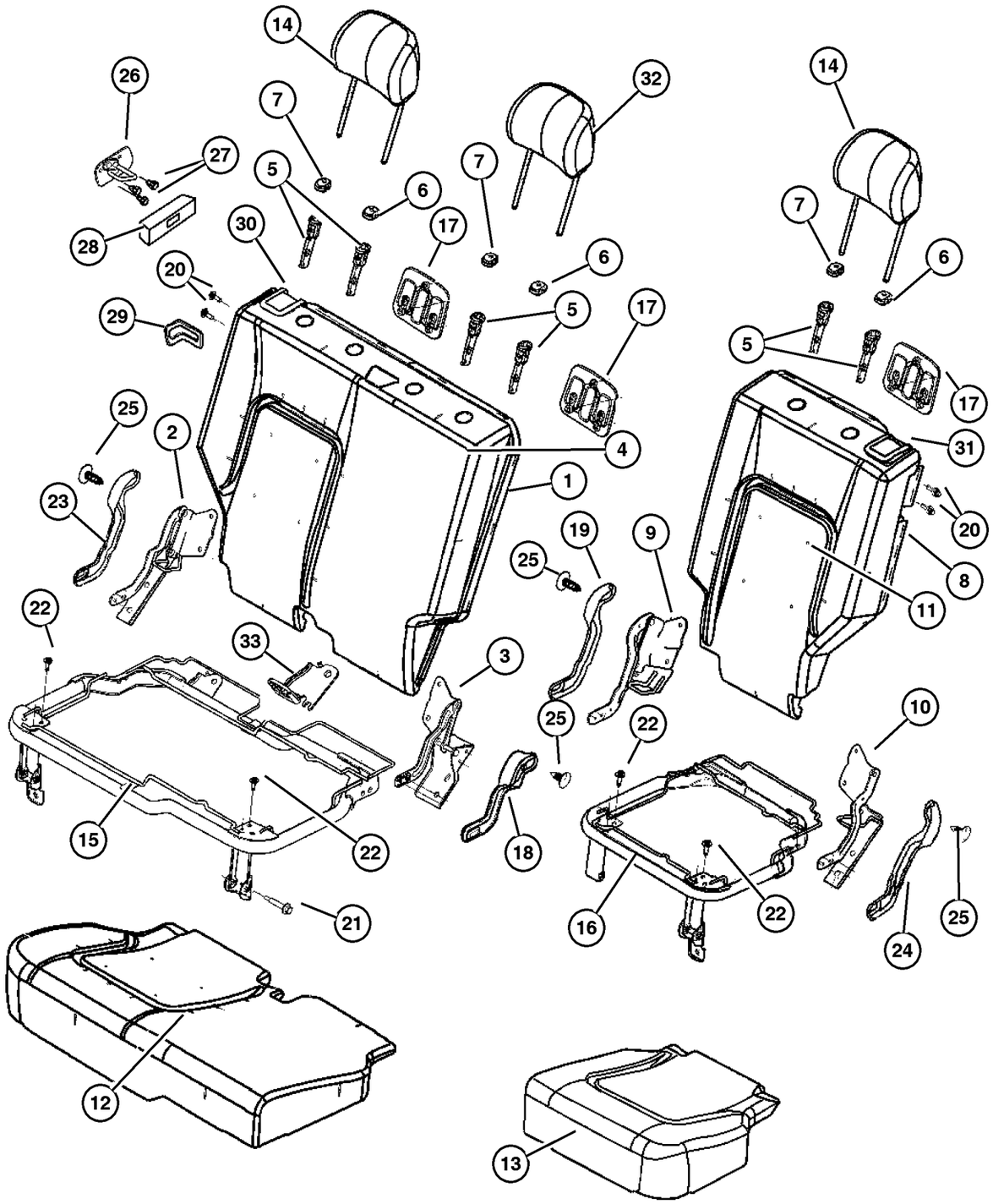

ITEM	PART NUMBER	QTY	LINE	SERIES	BODY	ENGINE	TRANS	TRIM	DESCRIPTION
	WB44 1L5AA	1						F7	[L5]
18									COVER, Hinge
	UZ45 WL5AA	1						F7	[L5], Right,Inboard
	UZ45 XDVAA	1						F7	[DV], Right,Inboard
19									COVER, Hinge
	UZ46 WL5AA	1						F7	[L5], Left,Inboard
	UZ46 XDVAA	1						F7	[DV], Left,Inboard
20	5072 520AA	2						F7	BOLT, Pivot
21	5072 519AA	1						F7	BOLT, Seat
22	4761 014	8						F7	BOLT, Cushion To Adjuster
23									COVER, Hinge
	UZ44 WL5AA	1						F7	[L5], Right,Outboard
	UZ44 XDVAA	1						F7	[DV], Right,Outboard
24									COVER, Hinge
	UZ47 WL5AA	1						F7	[L5], Left,Outboard
	UZ47 XDVAA	1						F7	[DV], Left,Outboard
25									PIN, Push
	WA51 XDVAA	30						F7	[DV]
	WA51 WL5AA	30						F7	[L5]
26									STRIKER, Seat Back Latch
	55352 816AB	1							Right
	55352 817AB	1							Left
27	6505 434AA	6							SCREW, M8-1.25
28	55352 839AC	2							BEZEL, Seat Latch
29									BEZEL, Seat Latch
	WA92 WL8AA	1						F7	[L5]
	WA92 XDVAA	1						F7	[DV]
30									CONTROL, SEAT RELEASE, With Cable and Latch
	XF78 1DVAB	1						F7	[DV]
	XF78 1L5AB	1						F7	[L5]
31									CONTROL, SEAT RELEASE, With Latch
	XF79 1L5AB	1						F7	[L5]
	XF79 1DVAB	1						F7	[DV]
32									HEADREST, Rear, Center
	XH20 1L5AA	1						F7	[L5]
	XH20 1DVAA	1						F7	[DV]
33	5134 366AA	1						F7	BRACKET, Child Tether Anchor

JEEP LIBERTY (KJ)

SERIES	LINE	BODY	ENGINE	TRANSMISSION
P = Limited	J = LHD (4WD)	74 = 4 Dr (104.3 WB)	ED1,ED0 = 2.4L Power Tech	DDK = 5 Speed HDManual
H = Sport	U = RHD (4WD)		EKG,EK0 = 3.7L Power Tech	DDD = 5 Speed HD Manual
M = Renegade	T = LHD (2WD)		ENJ = 2.5L 4Cyl Turbo Diesel	DG4,DGQ = Multi-Speed Auto
			ENR = 2.8L 4Cyl Turbo Diesel	DG6 = 4 Speed Auto Transm
			EN0 = 4Cyl Turbo Diesel	DG0 = All Automatic Transm
				DBB = All Manual Transm

AR = Use as required - = Non illustrated part # = New this model year

September 30, 2003

« RETURN TO GROUP INDEX

Rear Seat, Trim Code [A7]
Figure IKJ-670

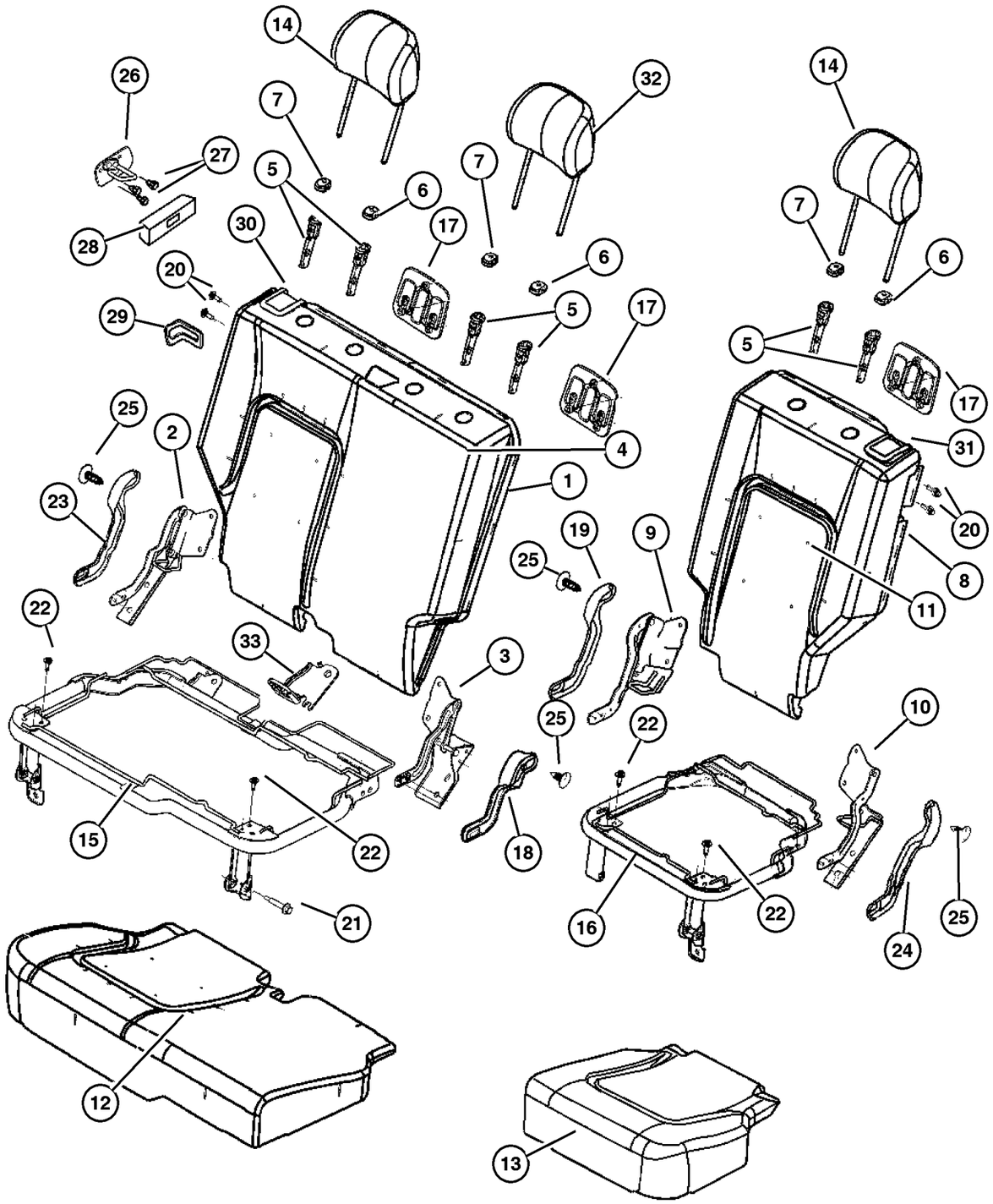

ITEM	PART NUMBER	QTY	LINE	SERIES	BODY	ENGINE	TRANS	TRIM	DESCRIPTION
1	#1AG94 1DVAA	1	J, T					A7	SEAT BACK, Rear, 65%
2	5071 702AA	1	J, T					A7	BRACKET AND HINGE, Rear Seat Back, 65%, Right,Outboard
3	5071 703AA	1	J, T					A7	BRACKET AND HINGE, Rear Seat Back, 65%
4	#1AG96 1DVAA	1	J, T					A7	COVER, Rear Seat Back, 65%
5	5066 017AA	2	J, T					A7	SLEEVE, Headrest
6	WA46 1DVAA	1	J, T					A7	CAP, Headrest Adjuster, With Button
7	WA31 1DVAA	1	J, T					A7	CAP, Headrest Adjuster, Without Button
8	#1AE03 1DVAA	1	J, T					A7	SEAT BACK, Rear, 35%
9	5071 704AA	1	J, T					A7	BRACKET AND HINGE, Rear Seat Back, 35%, Left,Inboard
10	5071 705AA	1	J, T					A7	BRACKET AND HINGE, Rear Seat Back, 35%, Left,Outboard
11	#1AE01 1DVAA	1	J, T					A7	COVER, Rear Seat Back, 35%
12	#1AD98 1DVAA	1	J, T					A7	COVER AND PAD, Cushion, 65%
13	#1AD99 1DVAA	1	J, T					A7	COVER AND PAD, Cushion, 35%
14	#1AE09 1DVAA	2	J, T					A7	HEADREST, Rear
15	5072 112AA	1	J, T					A7	PANEL, Seat Cushion Base, 65%
16	5072 113AA	1	J, T					A7	PANEL, Seat Cushion Base, 35%
17	WB44 1DVAA	1	J, T					A7	BEZEL, TETHER
18	UZ45 XDVAA	1	J, T					A7	COVER, Hinge, Right,Inboard
19	UZ46 XDVAA	1	J, T					A7	COVER, Hinge, Left,Inboard
20	5072 520AA	2	J, T					A7	BOLT, Pivot
21	5072 519AA	1	J, T					A7	BOLT, Seat
22	4761 014	8	J, T					A7	BOLT, Cushion To Adjuster
23	UZ44 XDVAA	1	J, T					A7	COVER, Hinge, Right,Outboard
24	UZ47 XDVAA	1	J, T					A7	COVER, Hinge, Left,Outboard
25	WA51 XDVAA	30	J, T					A7	PIN, Push
26									STRIKER, Seat Back Latch
	55352 816AB	1							Right
	55352 817AB	1							Left
27	6505 434AA	6							SCREW, M8-1.25
28	55352 839AC	2							BEZEL, Seat Latch
29	WA92 XDVAA	1	J, T					A7	BEZEL, Seat Latch
30	XF78 1DVAB	1	J, T					A7	CONTROL, SEAT RELEASE, With Cable and Latch
31	XF79 1DVAB	1	J, T					A7	CONTROL, SEAT RELEASE, With Latch
32	#1AG95 1DVAA	1	J, T					A7	HEADREST, Rear, Center

JEEP LIBERTY (KJ)

SERIES	LINE	BODY	ENGINE	TRANSMISSION
P = Limited	J = LHD (4WD)	74 = 4 Dr (104.3 WB)	ED1,ED0 = 2.4L Power Tech	DDK = 5 Speed HDManual
H = Sport	U = RHD (4WD)		EKG,EK0 = 3.7L Power Tech	DDD = 5 Speed HD Manual
M = Renegade	T = LHD (2WD)		ENJ = 2.5L 4Cyl Turbo Diesel	DG4,DGQ = Multi-Speed Auto
			ENR = 2.8L 4Cyl Turbo Diesel	DG6 = 4 Speed Auto Transm
			EN0 = 4Cyl Turbo Diesel	DG0 = All Automatic Transm
				DBB = All Manual Transm

AR = Use as required - = Non illustrated part # = New this model year

September 30, 2003

« RETURN TO GROUP INDEX »

Rear Seat, Trim Code [A7]
Figure IKJ-670

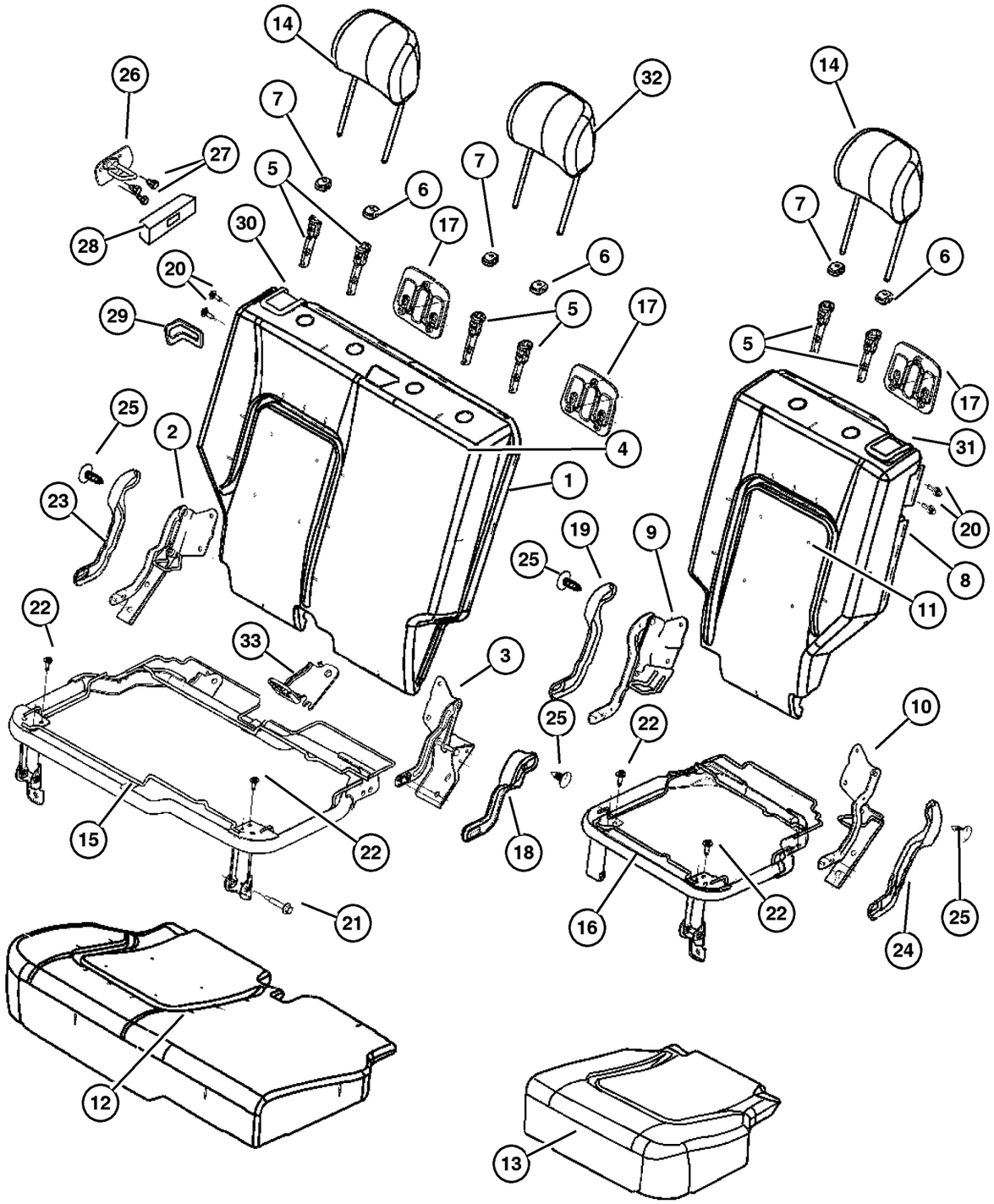

ITEM	PART NUMBER	QTY	LINE	SERIES	BODY	ENGINE	TRANS	TRIM	DESCRIPTION
33	5134 366AA	1	J, T					A7	BRACKET, Child Tether Anchor

JEEP LIBERTY (KJ)

SERIES	LINE	BODY	ENGINE	TRANSMISSION
P = Limited	J = LHD (4WD)	74 = 4 Dr (104.3 WB)	ED1,ED0 = 2.4L Power Tech	DDK = 5 Speed HDManual
H = Sport	U = RHD (4WD)		EKG,EK0 = 3.7L Power Tech	DDD = 5 Speed HD Manual
M = Renegade	T = LHD (2WD)		ENJ = 2.5L 4Cyl Turbo Diesel	DG4,DGQ = Multi-Speed Auto
			ENR = 2.8L 4Cyl Turbo Diesel	DG6 = 4 Speed Auto Transm
			EN0 = 4Cyl Turbo Diesel	DG0 = All Automatic Transm
				DBB = All Manual Transm

AR = Use as required - = Non illustrated part # = New this model year

September 30, 2003

« RETURN TO GROUP INDEX

Rear Seat, Trim Code [V5]
Figure IKJ-680

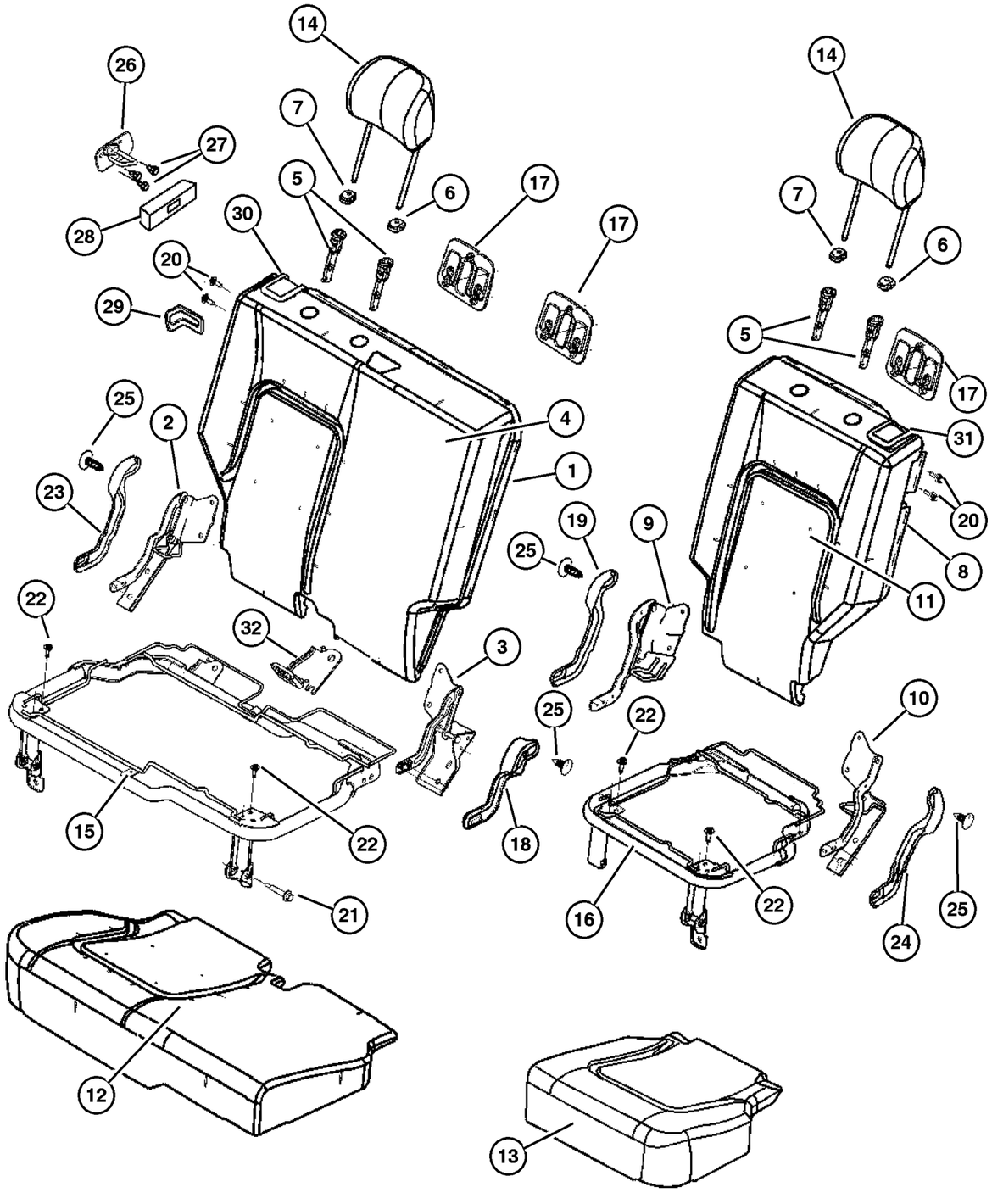

ITEM	PART NUMBER	QTY	LINE	SERIES	BODY	ENGINE	TRANS	TRIM	DESCRIPTION
1	#1AE02 1DVAA	1						V5	SEAT BACK, Rear, 65%
2	5071 702AA	1						V5	BRACKET AND HINGE, Rear Seat Back, 65%, Right,Outboard
3	5071 703AA	1						V5	BRACKET AND HINGE, Rear Seat Back, 65%, Right,Inboard
4	#1AE00 1DVAA	1						V5	COVER, Rear Seat Back, 65%
5	5066 017AA	2						V5	SLEEVE, Headrest
6	WA46 1DVAA	1						V5	CAP, Headrest Adjuster, With Button
7	WA31 1DVAA	1						V5	CAP, Headrest Adjuster, Without Button
8	#1AE03 1DVAA	1						V5	SEAT BACK, Rear, 35%
9	5071 704AA	1						V5	BRACKET AND HINGE, Rear Seat Back, 35%
10	5071 705AA	1						V5	BRACKET AND HINGE, Rear Seat Back, 35%
11	#1AE01 1DVAA	1						V5	COVER, Rear Seat Back, 35%
12	#1AD98 1DVAA	1						V5	COVER AND PAD, Cushion, 65%
13	#1AD99 1DVAA	1						V5	COVER AND PAD, Cushion, 35%
14	#1AE09 1DVAA	2						V5	HEADREST, Rear
15	5072 112AA	1						V5	PANEL, Seat Cushion Base, 65%
16	5072 113AA	1						V5	PANEL, Seat Cushion Base, 35%
17	WB44 1DVAA	2						V5	BEZEL, TETHER
18	UZ45 1DVAA	1						V5	COVER, Hinge
19	UZ46 1DVAA	1						V5	COVER, Hinge
20	5072 520AA	2						V5	BOLT, Pivot
21	5072 519AA	1						V5	BOLT, Seat
22	4761 014	1						V5	BOLT, Cushion To Adjuster
23	UZ44 XDVAA	1						V5	COVER, Hinge
24	UZ47 1DVAA	1						V5	COVER, Hinge
25	WA51 XDVAA	2						V5	PIN, Push
26									STRIKER, Seat Back Latch
	55352 816AB	1							Right
	55352 817AB	1							Left
27	6505 434AA	6							SCREW, M8-1.25
28	55352 839AC	2							BEZEL, Seat Latch
29	WA92 XDVAA	1						V5	BEZEL, Seat Latch
30	XF78 1DVAB	1						V5	CONTROL, SEAT RELEASE, With Cable and Latch
31	XF79 1DVAB	1						V5	CONTROL, SEAT RELEASE, With Latch
32	5134 366AA	1						V5	BRACKET, Child Tether Anchor

JEEP LIBERTY (KJ)

SERIES	LINE	BODY	ENGINE	TRANSMISSION
P = Limited	J = LHD (4WD)	74 = 4 Dr (104.3 WB)	ED1,ED0 = 2.4L Power Tech	DDK = 5 Speed HDManual
H = Sport	U = RHD (4WD)		EKG,EK0 = 3.7L Power Tech	DDD = 5 Speed HD Manual
M = Renegade	T = LHD (2WD)		ENJ = 2.5L 4Cyl Turbo Diesel	DG4,DGQ = Multi-Speed Auto
			ENR = 2.8L 4Cyl Turbo Diesel	DG6 = 4 Speed Auto Transm
			EN0 = 4Cyl Turbo Diesel	DG0 = All Automatic Transm
				DBB = All Manual Transm

AR = Use as required - = Non illustrated part # = New this model year

September 30, 2003

« RETURN TO GROUP INDEX

Seat Belts, Front
Figure IKJ-710

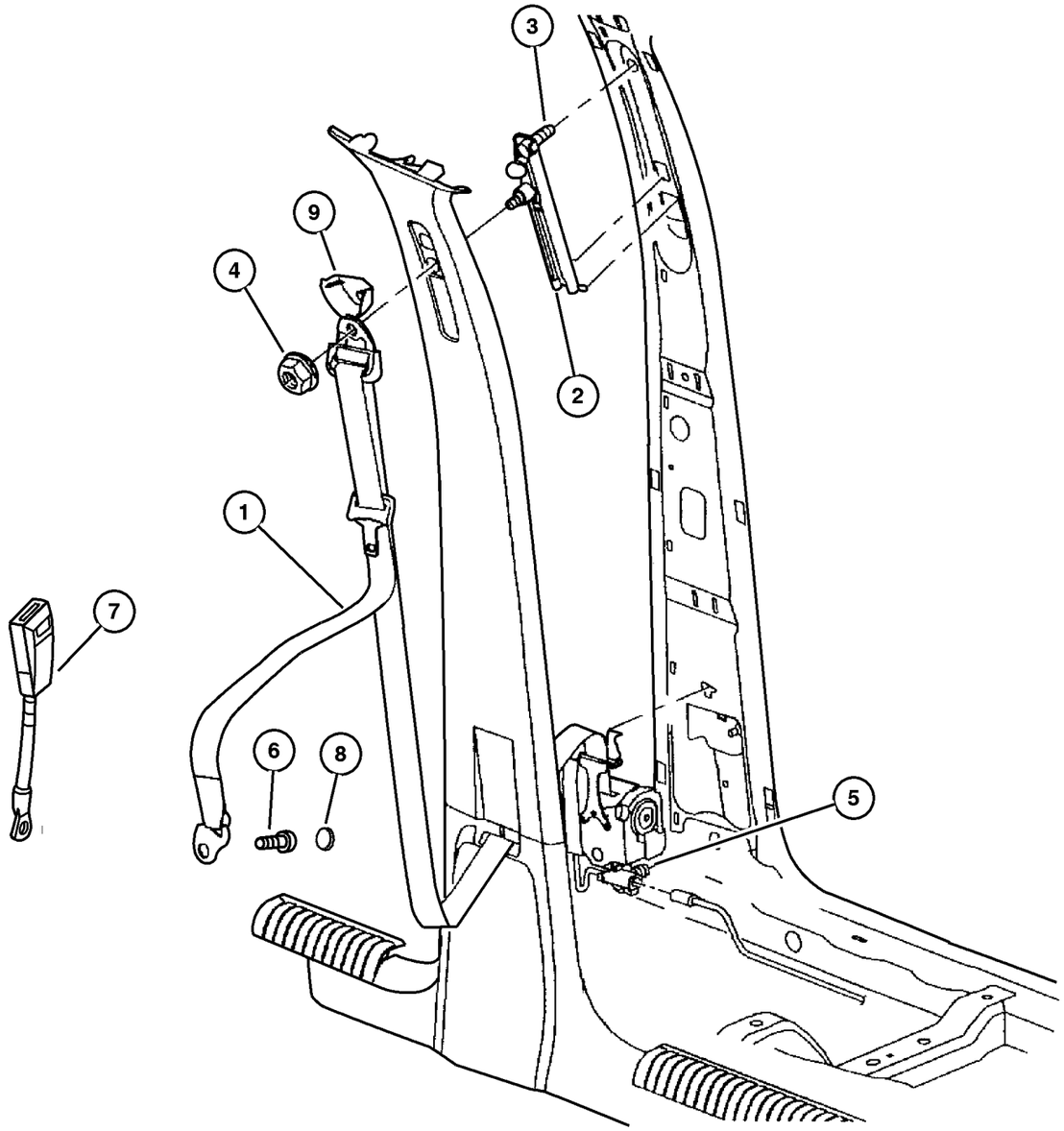

ITEM	PART NUMBER	QTY	LINE	SERIES	BODY	ENGINE	TRANS	TRIM	DESCRIPTION
1									SEAT BELT, Front Outer
	#5GZ06 1DVAL	1	J, U						[DV, L2, L5], Right,Export
	#5GZ07 1DVAH	1	J, U						[DV, L2, L5], Left,Export
	#5HG33 1DVAJ	1	J, T						[DV, D2], Left
	#5HG33 1L8AJ	1	J, T						[L2, L5], Left
	#5JL40 1DVAA	1	J, T						[DV, D2], Right
	#5JL40 1L8AA	1	J, T						[L2, L5], Right
2	55315 033AC	2							ADJUSTER, Seat Belt Turning Loop
3	6506 475AA	2							BOLT, Seat Belt
4	6506 002AA	2							NUT, M10x1.5
5	6505 867AA	2							SCREW, SEAT BELT
6	#6507 968AA	1	J, U						BOLT, Seat Belt
7									SEAT BELT, Front Inner
	#5JW77 1DVAA	2	J, T					A7	
		1						J5	[DV], Driver
	#5JW77 1L5AA	1						J5	[L5], Driver
	5JW10 1DVAA	1						J5	[DV], Passenger
		1	J, T					M5	[DV], Passenger
	5JW10 1L5AA	1	J, T					M5	[L5], Passenger
	#5JW77 1DVAA	1	J, T					M5	[DV], Driver
	#5JW77 1L5AA	1	J, T					M5	[L5], Driver
	5JW10 1DVAA	1						V5	Passenger
	#5JW77 1L5AA	1	J, T					M5	[L5], Driver
	5JW10 1DVAA	1						V5	Passenger
	#5JW77 1DVAA	1						V5	Driver
	5JW10 1DVAA	1	J, T					XJ	[DV], Domestic, Passenger
	#5JW77 1DVAA	1	J, T					DL	[D2], Domestic & Mexico, Driver
	5JW10 1L5AA	1	J, T					XJ	[L5], Domestic, Passenger
	#5JW77 1DVAA	2	J, U					XJ	[DV, L2], Export, Driver and Passenger
		1	J, T					XJ	[DV], Domestic, Driver
	#5JW77 1L5AA	1	J, T					XJ	[L5], Domestic, Driver
	#5JW77 1DVAA	2	J, U					DL	[DV, L2], Export, Driver and Passenger
	#5JW77 1L5AA	1	J, T					DL	[L2], Domestic & Mexico, Driver
	5JW10 1DVAA	1	J, T					DL	[D2], Domestic & Mexico, Passenger
	#5JW77 1L5AA	1	J, T					DL	[L2], Domestic & Mexico, Passenger
	#5JW77 1DVAA	2	J, U					E7	[DV, L5], Export, Driver and Passenger
		2						F7	[DV, L5], Export, Driver and Passenger

JEEP LIBERTY (KJ)

SERIES	LINE	BODY	ENGINE	TRANSMISSION
P = Limited	J = LHD (4WD)	74 = 4 Dr (104.3 WB)	ED1,ED0 = 2.4L Power Tech	DDK = 5 Speed HDManual
H = Sport	U = RHD (4WD)		EKG,EK0 = 3.7L Power Tech	DDD = 5 Speed HD Manual
M = Renegade	T = LHD (2WD)		ENJ = 2.5L 4Cyl Turbo Diesel	DG4,DGQ = Multi-Speed Auto
			ENR = 2.8L 4Cyl Turbo Diesel	DG6 = 4 Speed Auto Transm
			EN0 = 4Cyl Turbo Diesel	DG0 = All Automatic Transm
				DBB = All Manual Transm

AR = Use as required - = Non illustrated part # = New this model year

September 30, 2003

« RETURN TO GROUP INDEX »

Seat Belts, Front
Figure IKJ-710

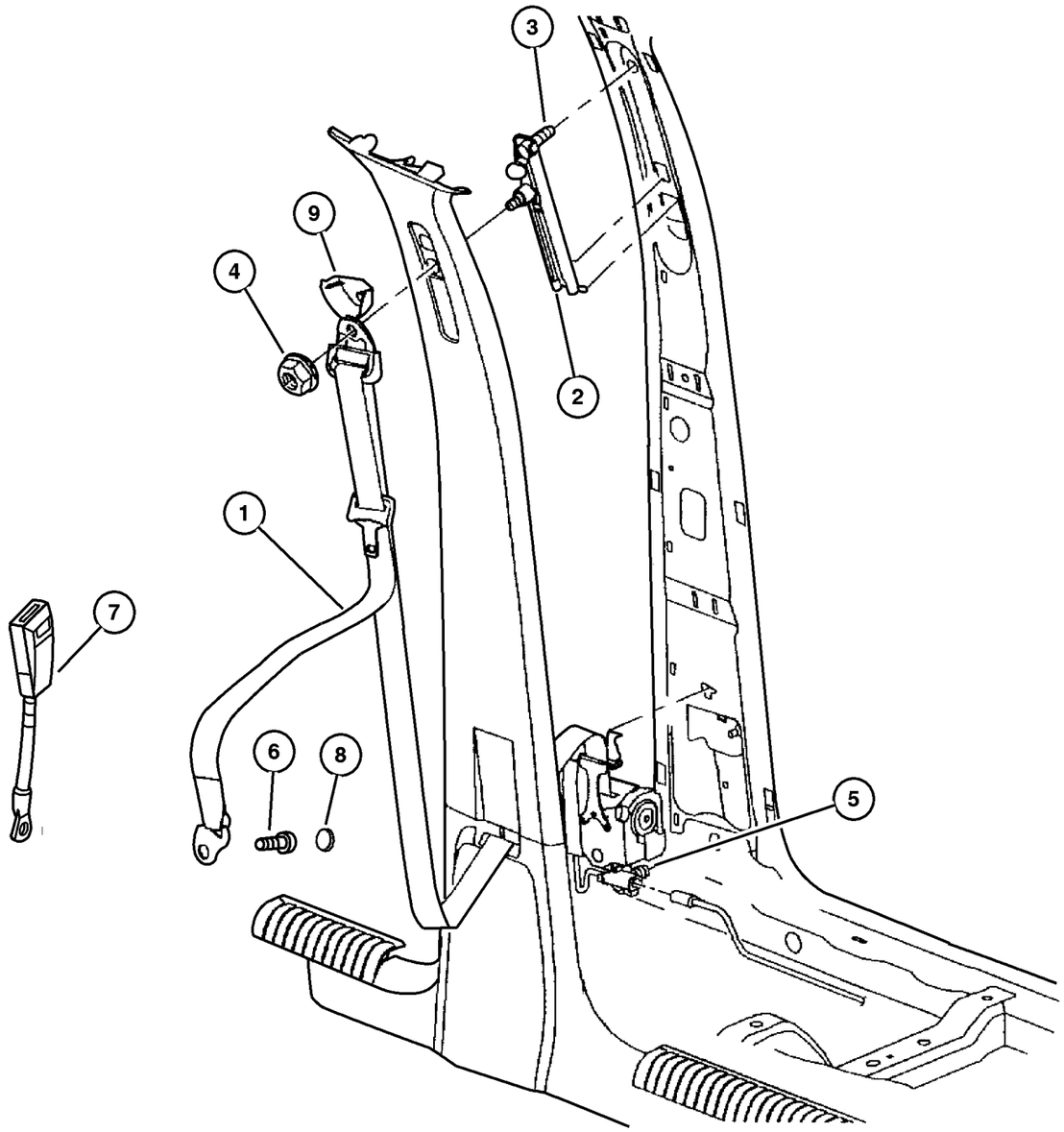

ITEM	PART NUMBER	QTY	LINE	SERIES	BODY	ENGINE	TRANS	TRIM	DESCRIPTION
	5JW10 1L5AA	1						J5	[L5], Passenger
8									COVER, Seat Belt Anchor, Side Shieild
	#5JX80 TL2AA	1							[D2, L2], Right
	#5JX80 WL5AA	1							[L5], Right
	#5JX80 XDVAA	1							[DV], Right
	#5JX81 TL2AA	1							[D2, L2], Left
	#5JX81 WL5AA	1							[L5], Left
	#5JX81 XDVAA	1							[DV], Left
9									COVER, Seat Belt Turning Loop
	#ZL81 1DVAA	1	J, U						[DV, L2, L5], Export
		1	J, T						[D2, DV]
	#ZL81 1L8AA	1	J, T						[L2, L5]
-10	5086 227AA	1	J, T						EXTENDER, Seat Belt

JEEP LIBERTY (KJ)

SERIES	LINE	BODY	ENGINE	TRANSMISSION
P = Limited	J = LHD (4WD)	74 = 4 Dr (104.3 WB)	ED1,ED0 = 2.4L Power Tech	DDK = 5 Speed HDManual
H = Sport	U = RHD (4WD)		EKG,EK0 = 3.7L Power Tech	DDD = 5 Speed HD Manual
M = Renegade	T = LHD (2WD)		ENJ = 2.5L 4Cyl Turbo Diesel	DG4,DGQ = Multi-Speed Auto
			ENR = 2.8L 4Cyl Turbo Diesel	DG6 = 4 Speed Auto Transm
			EN0 = 4Cyl Turbo Diesel	DG0 = All Automatic Transm
				DBB = All Manual Transm

Seat Belts, Rear
Figure IKJ-720

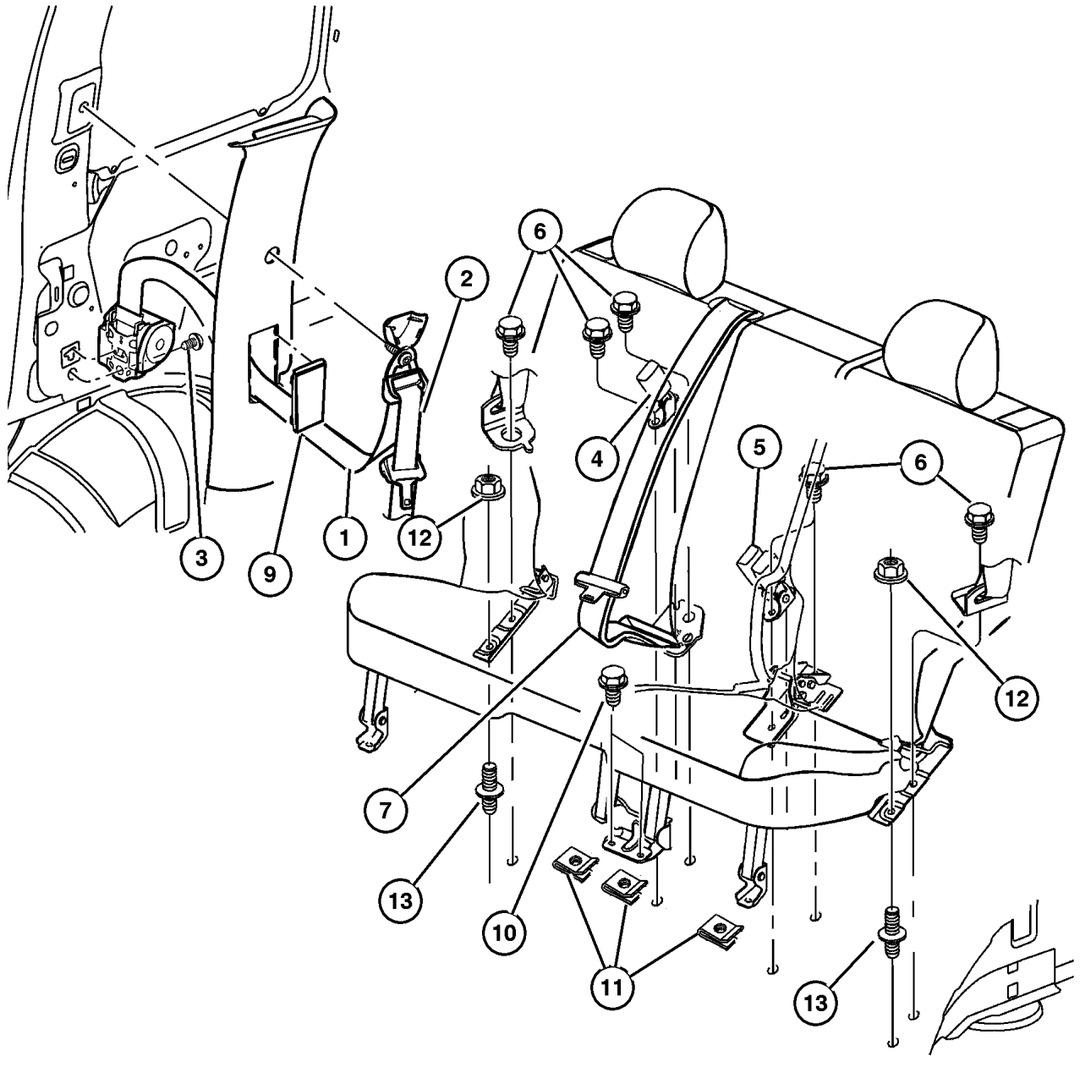

ITEM	PART NUMBER	QTY	LINE	SERIES	BODY	ENGINE	TRANS	TRIM	DESCRIPTION
1									SEAT BELT, Rear Outer
	#5GE52 1DVAJ	1	J, U						[DV, L2], Right,Export
	#5GE53 1DVAJ	1	J, U						[DV, L2], Left,Export
	#5HG36 1DVAI	1	J, T						[D2, DV], Right
	#5HG36 1L8AI	1	J, T						[L2, L5], Right
	#5HG37 1DVAI	1	J, T						[D2, DV], Left
	#5HG37 1L8AI	1	J, T						[L2, L5], Left
2									BOLT, Seat Belt
	6506 911AA	1	J, U						Export
		1	J, U						
3	6505 867AA	2							SCREW, SEAT BELT
4									SEAT BELT, Buckle Half
	5GU58 1DVAE	1	J, U						[DV, L2, L5], Export
		1	J, T						[D2, DV]
	5GU58 1L5AE	1	J, T						[L2, L5]
5									SEAT BELT, Two Buckles
	5GE49 1DVAE	1	J, U						[DV, L2, L5], Export
		1	J, T						[D2, DV]
	5GE49 1L5AE	1	J, T						[L2, L5]
6	6506 791AA	6							SCREW, Seat
7									SEAT BELT, RR CNTR SHOULDER
	5GE48 1DVAE	1	J, T					A7	
	#5HK44 1DVAC	1						J5	[DV]
	#5HK44 1L5AC	1						J5	[L5]
		1	J, T					M5	[L5]
	#5HK44 1DVAC	1	J, T					M5	[DV]
		1						V5	
	#5GE48 1DVAE	1	J, U					XJ	[DV]
	#5GE48 1L5AE	1	J, U					XJ	[L5]
	#5HK44 1DVAC	1	J, T					XJ	[DV]
	#5HK44 1L5AC	1	J, T					XJ	[L5]
	#5GE48 1L2AE	1	J, U					DL	[L2], Export
	#5HK44 1D2AC	1	J, T					DL	[D2, DV]
	#5HK44 1L2AC	1	J, T					DL	[L2]
	#5GE48 1DVAE	1	J, U					DL	[DV], Export
		1	J, U					E7	[DV], Export
	#5GE48 1L5AE	1	J, U					E7	[L2], Export
	#5GE48 1DVAE	1						F7	[DV], Export
	#5GE48 1L2AE	1						F7	[L5], Export
-8									BUTTON, BELT WEBBING
	YQ76 XDVAA	1	J, U					XJ	

JEEP LIBERTY (KJ)

SERIES	LINE	BODY	ENGINE	TRANSMISSION
P = Limited	J = LHD (4WD)	74 = 4 Dr (104.3 WB)	ED1,ED0 = 2.4L Power Tech	DDK = 5 Speed HDManual
H = Sport	U = RHD (4WD)		EKG,EK0 = 3.7L Power Tech	DDD = 5 Speed HD Manual
M = Renegade	T = LHD (2WD)		ENJ = 2.5L 4Cyl Turbo Diesel	DG4,DGQ = Multi-Speed Auto
			ENR = 2.8L 4Cyl Turbo Diesel	DG6 = 4 Speed Auto Transm
			EN0 = 4Cyl Turbo Diesel	DG0 = All Automatic Transm
				DBB = All Manual Transm

AR = Use as required - = Non illustrated part # = New this model year

September 30, 2003

« RETURN TO GROUP INDEX »

Seat Belts, Rear
Figure IKJ-720

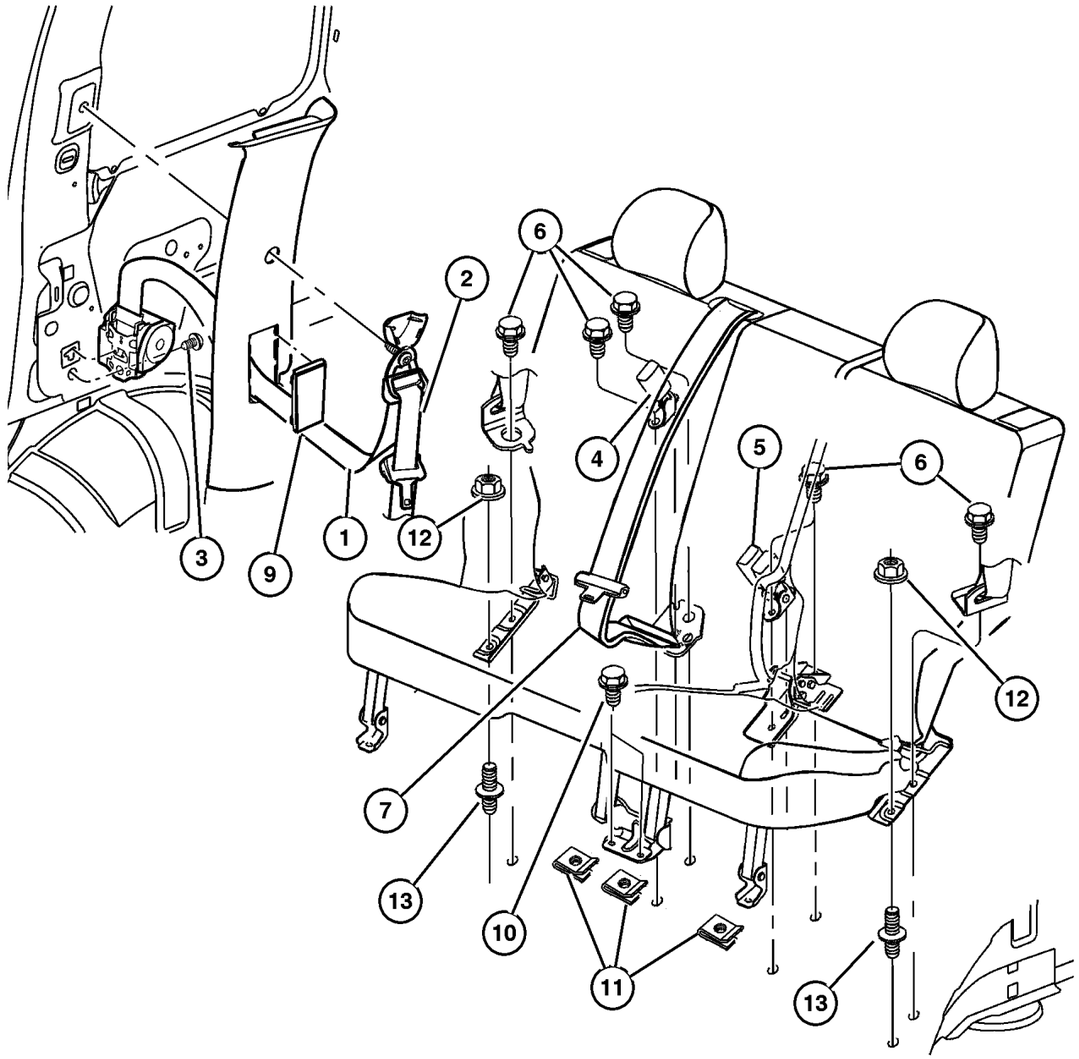

ITEM	PART NUMBER	QTY	LINE	SERIES	BODY	ENGINE	TRANS	TRIM	DESCRIPTION
		1	J, T					XJ	
		1	J, T					M5	
		1						L5	
		1						K7	
		1	J, U					E7	
		1	J, T					DL	
		1	J, U					DL	
9									COVER, C Pillar
	WR16 WL5AA	1							[L2, L5], Right
	WR16 XDVAA	1							[D2, DV], Right
	WR17 WL5AA	1							[L2, L5], Left
	WR17 XDVAA	1							[D2, DV], Left
10	6101 232	4							BOLT, Hex Flange Head, M8x1.25x25
11	6101 283	4							U-NUT, M8x1.25
12	6507 170AA	2							BOLT, Seat
13									STUD, M12x1.75x81.50, (NOT SERVICED) (Not Serviced)
-14									EXTENDER, Seat Belt
	5086 227AA	1	J, U						
		1	J, T						

JEEP LIBERTY (KJ)

SERIES	LINE	BODY	ENGINE	TRANSMISSION
P = Limited	J = LHD (4WD)	74 = 4 Dr (104.3 WB)	ED1,ED0 = 2.4L Power Tech	DDK = 5 Speed HDManual
H = Sport	U = RHD (4WD)		EKG,EK0 = 3.7L Power Tech	DDD = 5 Speed HD Manual
M = Renegade	T = LHD (2WD)		ENJ = 2.5L 4Cyl Turbo Diesel	DG4,DGQ = Multi-Speed Auto
			ENR = 2.8L 4Cyl Turbo Diesel	DG6 = 4 Speed Auto Transm
			EN0 = 4Cyl Turbo Diesel	DG0 = All Automatic Transm
				DBB = All Manual Transm

Recliner and Adjuster
Figure IKJ-810

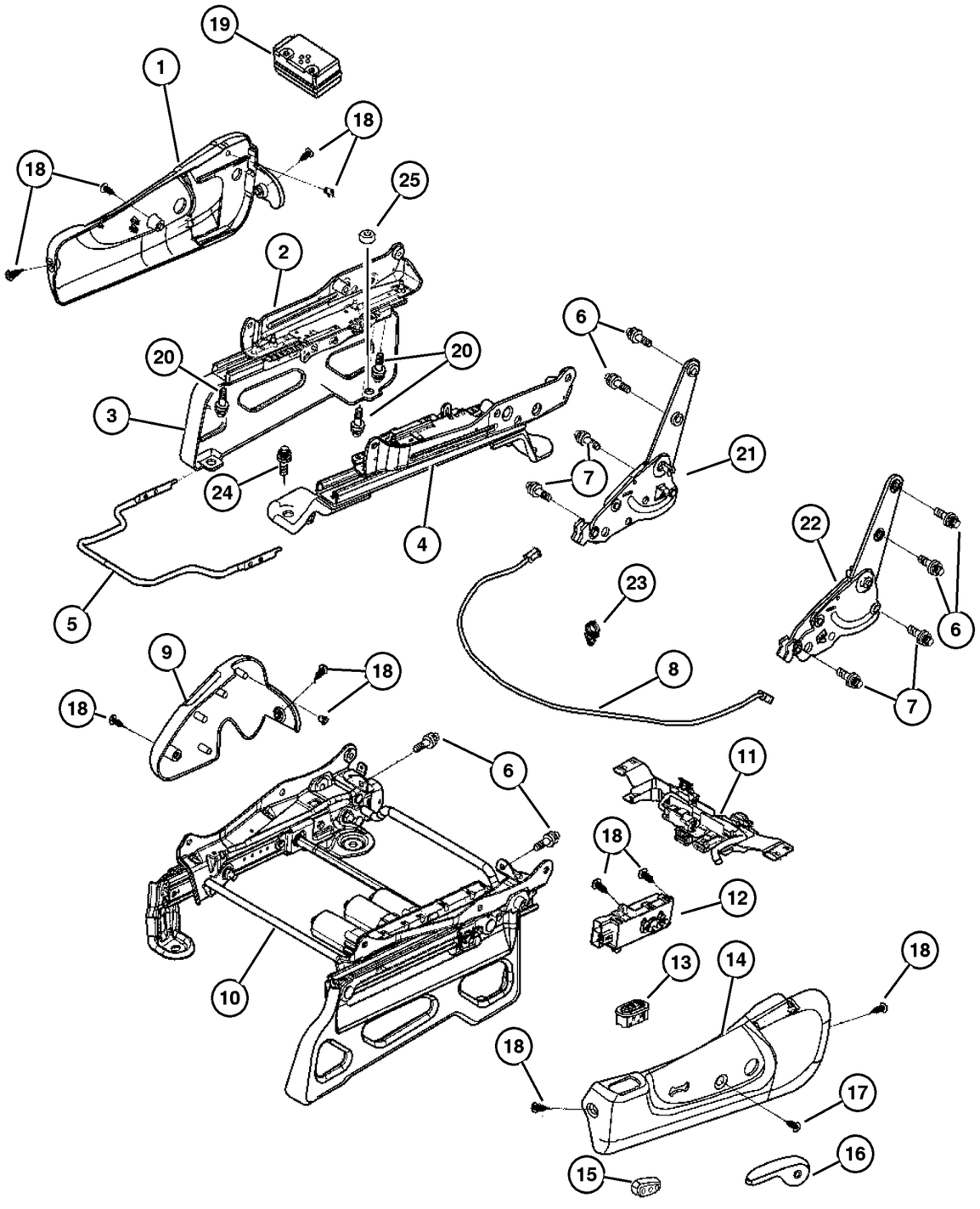

ITEM	PART NUMBER	QTY	LINE	SERIES	BODY	ENGINE	TRANS	TRIM	DESCRIPTION
1									SHIELD, Seat Adjuster, Manual Seat
	ZH79 1DVAA	1	J, T					A7	Left
		1						F7	[DV], Left
	#ZH78 1DVAA	1						J5	[DV], Right
	#ZH78 1L5AA	1						J5	[L5], Right
	#ZH79 1DVAA	1						J5	[DV], Left
	#ZH79 1L5AA	1						J5	[L5], Left
	#ZH78 1L5AA	1	J, T					M5	[L5], Right
	#ZH79 1DVAA	1	J, T					M5	[DV], Left
	#ZH78 1DVAA	1	J, T					M5	[DV], Right
	#ZH79 1L5AA	1	J, T					M5	[L5], Left
	ZH78 1DVAA	1						V5	Right
		1	J, T					A7	Right
	ZH79 1DVAA	1						V5	Left
		1	J, U					XJ	[DV], Left
	#ZH78 1L5AA	1	J, T					XJ	[L5], Right
	#ZH78 1DVAA	1	J, T					XJ	[DV], Right
	#ZH79 1L5AA	1	J, T					XJ	[L5], Left
		1	J, U					E7	[L5], Left
	#ZH79 1DVAA	1	J, U					E7	[DV], Left
	#ZH78 1L5AA	1	J, U					E7	[L5], Right
	#ZH78 1DVAA	1	J, U					E7	[DV], Right
		1						F7	[DV], Right
	#ZH78 1L5AA	1						F7	[L5], Right
	#ZH79 1L5AA	1						F7	[L5], Left
2									ADJUSTER, Manual Seat
	5072 107AA	1	J, T					A7	Driver
		1	J, T					M5	Driver
		1						V5	Driver
	5072 104AA	1						V5	Passenger
		1	J, U					XJ	Passenger
	5072 107AA	1	J, T					XJ	Driver
	5072 104AA	1	J, T					XJ	Passenger
	5072 107AA	1	J, U					XJ	Driver
	5072 104AA	1	J, T					A7	Passenger
		1	J, U					E7	Passenger
	5072 107AA	1	J, U					E7	Driver
		1						F7	Driver
	5072 104AA	1						F7	Passenger
	5072 107AA	1						J5	Driver
	5072 104AA	1						J5	Passenger

JEEP LIBERTY (KJ)

SERIES	LINE	BODY	ENGINE	TRANSMISSION
P = Limited	J = LHD (4WD)	74 = 4 Dr (104.3 WB)	ED1,ED0 = 2.4L Power Tech	DDK = 5 Speed HDManual
H = Sport	U = RHD (4WD)		EKG,EK0 = 3.7L Power Tech	DDD = 5 Speed HD Manual
M = Renegade	T = LHD (2WD)		ENJ = 2.5L 4Cyl Turbo Diesel	DG4,DGQ = Multi-Speed Auto
			ENR = 2.8L 4Cyl Turbo Diesel	DG6 = 4 Speed Auto Transm
			EN0 = 4Cyl Turbo Diesel	DG0 = All Automatic Transm
				DBB = All Manual Transm

AR = Use as required - = Non illustrated part # = New this model year

September 30, 2003

« RETURN TO GROUP INDEX »

Recliner and Adjuster
Figure IKJ-810

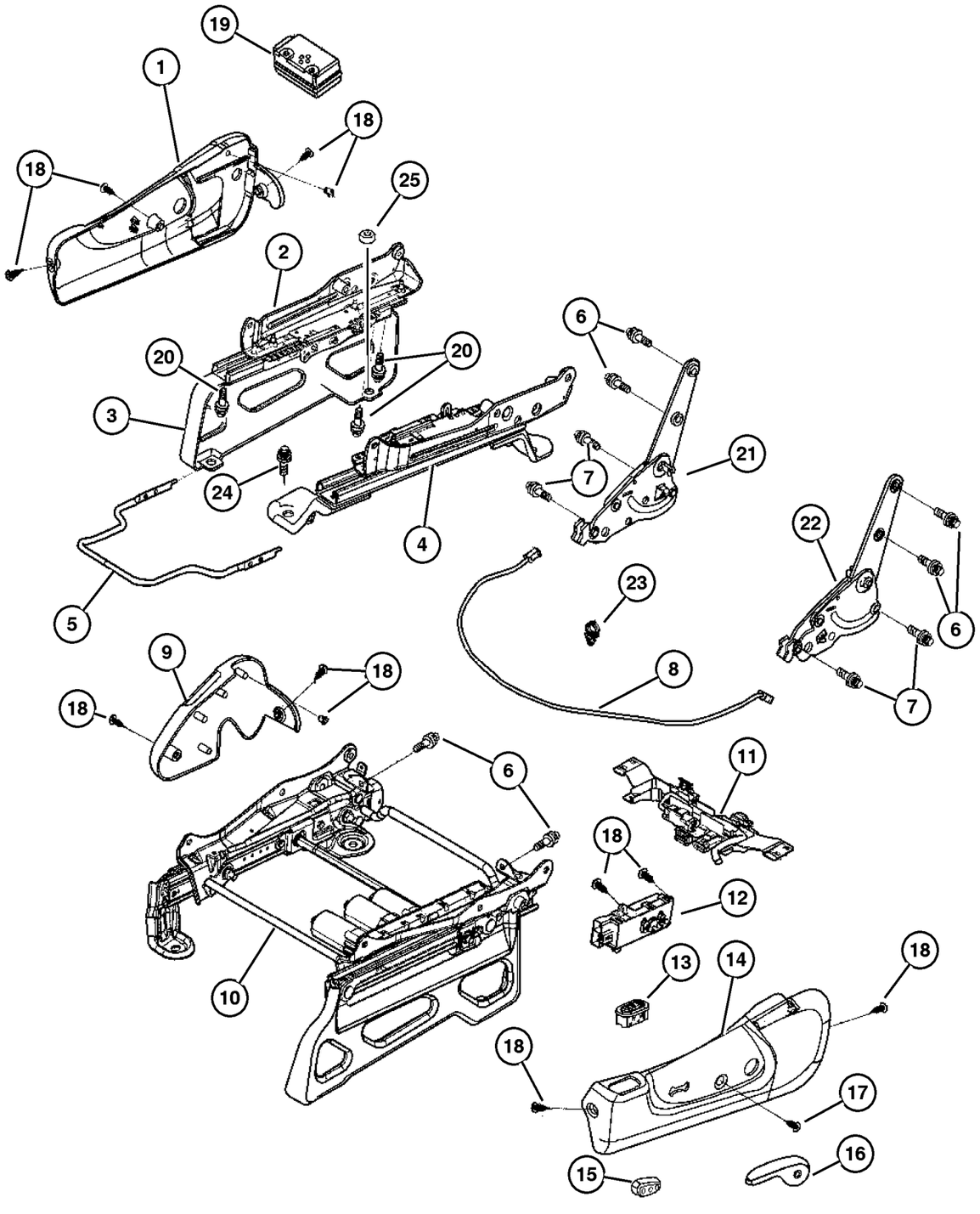

ITEM	PART NUMBER	QTY	LINE	SERIES	BODY	ENGINE	TRANS	TRIM	DESCRIPTION
		1	J, T					M5	Passenger
3									RISER, Seat
	5072 757AA	1	J, T					A7	Driver
	5072 756AA	1	J, T					M5	Passenger
	5072 757AA	1						V5	Driver
	5072 756AA	1						V5	Passenger
	UZ48 1DVAA	1	J, T					XJ	[DV], Passenger
	UZ48 XDVAA	1	J, U					XJ	[DV], Passenger,Export
	UZ49 XDVAA	1	J, U					XJ	[DV], Driver,Export
	UZ48 WL8AA	1	J, U					XJ	[L5], Passenger,Export
	UZ48 1L5AA	1	J, T					XJ	[L5], Passenger
	UZ49 WL8AA	1	J, T					XJ	[L5], Driver
		1	J, U					XJ	[L5], Driver,Export
	5072 756AA	1	J, T					A7	Passenger
	UZ49 1DVAA	1	J, T					XJ	[DV], Driver
	5072 757AA	1	J, U					E7	Driver
	5072 756AA	1	J, U					E7	Passenger
		1						F7	Passenger
	5072 757AA	1						F7	Driver
		1						J5	Driver
	5072 756AA	1						J5	Passenger
	5072 757AA	1	J, T					M5	Driver
4									ADJUSTER, Manual Seat
	5072 106AA	1	J, T					A7	Driver,Manual
		1	J, T					M5	Driver,Manual
	5072 105AA	1						V5	Passenger,Manual
	5072 106AA	1						V5	Driver,Manual
		1	J, U					XJ	Driver,Manual
		1	J, T					XJ	Driver,Manual
	5072 105AA	1	J, T					XJ	Passenger,Manual
		1	J, U					XJ	Passenger,Manual
		1	J, T					A7	Passenger,Manual
	5072 106AA	1	J, U					E7	Driver,Manual
	5072 105AA	1	J, U					E7	Passenger,Manual
	5072 106AA	1						F7	Driver,Manual
	5072 105AA	1						F7	Passenger,Manual
	5072 106AA	1						J5	Driver,Manual
	5072 105AA	1						J5	Passenger,Manual
		1	J, T					M5	Passenger,Manual
5									HANDLE, Towel Bar
	5072 003AA	2	J, T					A7	

JEEP LIBERTY (KJ)

SERIES	LINE	BODY	ENGINE	TRANSMISSION
P = Limited	J = LHD (4WD)	74 = 4 Dr (104.3 WB)	ED1,ED0 = 2.4L Power Tech	DDK = 5 Speed HDManual
H = Sport	U = RHD (4WD)		EKG,EK0 = 3.7L Power Tech	DDD = 5 Speed HD Manual
M = Renegade	T = LHD (2WD)		ENJ = 2.5L 4Cyl Turbo Diesel	DG4,DGQ = Multi-Speed Auto
			ENR = 2.8L 4Cyl Turbo Diesel	DG6 = 4 Speed Auto Transm
			EN0 = 4Cyl Turbo Diesel	DG0 = All Automatic Transm
				DBB = All Manual Transm

Recliner and Adjuster
Figure IKJ-810

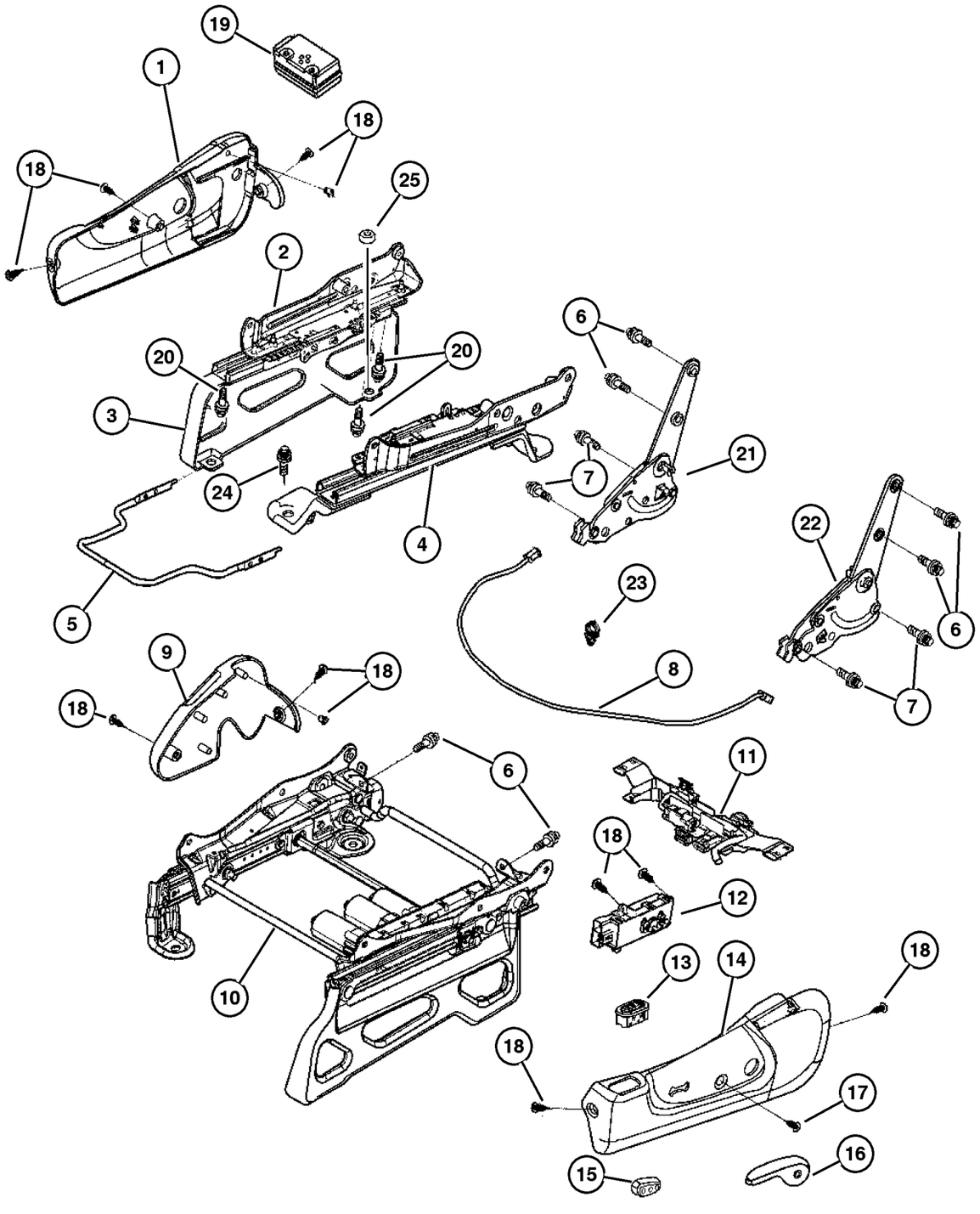

ITEM	PART NUMBER	QTY	LINE	SERIES	BODY	ENGINE	TRANS	TRIM	DESCRIPTION
		2	J, U					E7	
		2						F7	
		2						J5	
		1	J, T					M5	
		2	J, T					M5	
		1						V5	
		2	J, T					XJ	
		2	J, U					XJ	
6									BOLT, Recliner
	5072 128AA	8	J, T					A7	
		8	J, T					XJ	
		8	J, U					DL	
		8	J, T					DL	
		8	J, U					E7	
		8						F7	
		8						J5	
		8	J, T					M5	
		8						V5	
		8	J, U					XJ	
7									BOLT, Recliner
	5093 647AA	8	J, T					A7	
		8	J, T					XJ	
		8	J, U					DL	
		8	J, T					DL	
		8	J, U					E7	
		8						F7	
		8						J5	
		8	J, T					M5	
		8						V5	
		8	J, U					XJ	
8									CABLE, Recliner
	5127 463AA	2	J, T					A7	
		2	J, U					XJ	
		2	J, U					DL	
		2	J, T					DL	
		2	J, U					E7	
		2						F7	
		2						J5	
		2	J, T					M5	
		2						V5	
		2	J, T					XJ	
9									SHIELD, Seat Adjuster

JEEP LIBERTY (KJ)

SERIES	LINE	BODY	ENGINE	TRANSMISSION
P = Limited	J = LHD (4WD)	74 = 4 Dr (104.3 WB)	ED1,ED0 = 2.4L Power Tech	DDK = 5 Speed HDManual
H = Sport	U = RHD (4WD)		EKG,EK0 = 3.7L Power Tech	DDD = 5 Speed HD Manual
M = Renegade	T = LHD (2WD)		ENJ = 2.5L 4Cyl Turbo Diesel	DG4,DGQ = Multi-Speed Auto
			ENR = 2.8L 4Cyl Turbo Diesel	DG6 = 4 Speed Auto Transm
			EN0 = 4Cyl Turbo Diesel	DG0 = All Automatic Transm
				DBB = All Manual Transm

AR = Use as required - = Non illustrated part # = New this model year

September 30, 2003

« RETURN TO GROUP INDEX

Recliner and Adjuster
Figure IKJ-810

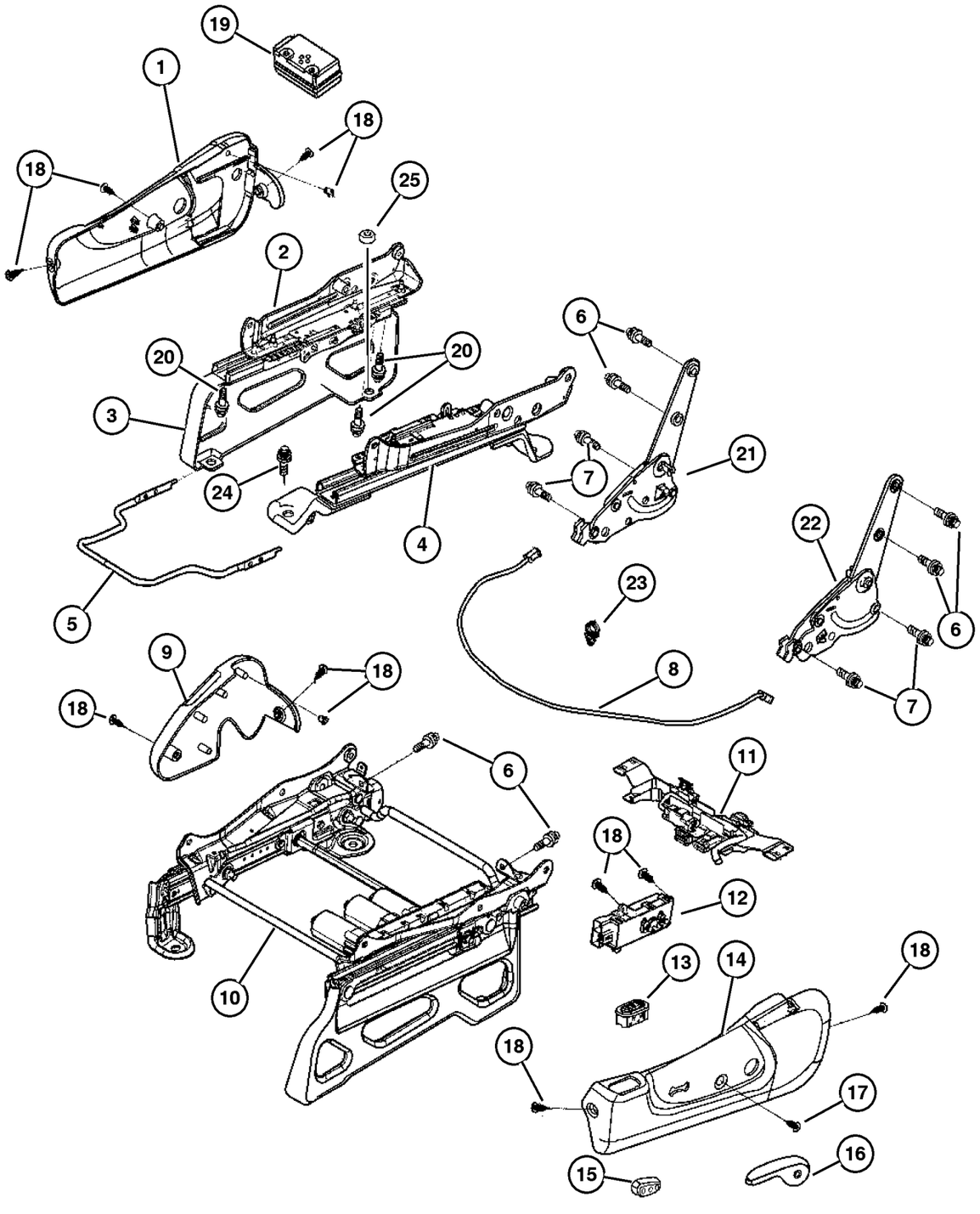

ITEM	PART NUMBER	QTY	LINE	SERIES	BODY	ENGINE	TRANS	TRIM	DESCRIPTION
	UZ43 XDVAA	1	J, T					A7	Driver,Inboard
		1	J, U					E7	[DV], Driver,Inboard
	UZ42 XDVAA	1	J, U					E7	[DV], Passenger,Inboard
	UZ42 WL5AA	1	J, U					E7	[L5], Passenger,Inboard
	UZ43 WL5AA	1						F7	[L5], Driver,Inboard
	UZ42 WL5AA	1						F7	[L5], Passenger,Inboard
	UZ43 XDVAA	1						F7	[DV], Driver,Inboard
	UZ42 XDVAA	1						F7	[DV], Passenger,Inboard
	UZ42 WL5AA	1						J5	[L5], Passenger,Inboard
	UZ43 XDVAA	1						J5	[DV], Driver,Inboard
	UZ43 WL5AA	1						J5	[L5], Driver,Inboard
	UZ42 XDVAA	1	J, T					A7	Passenger,Inboard
		1						J5	[DV], Passenger,Inboard
	UZ42 WL5AA	1	J, T					M5	[L5], Passenger,Inboard
	UZ43 XDVAA	1	J, T					M5	[DV], Driver,Inboard
	UZ43 WL5AA	1	J, T					M5	[L5], Driver,Inboard
	UZ42 XDVAA	1	J, T					M5	[DV], Passenger,Inboard
		1						V5	Passenger,Inboard
	UZ43 XDVAA	1						V5	Driver,Inboard
	UZ43 WL5AA	1	J, U					XJ	[L5], Driver,Inboard
		1	J, T					XJ	[L5], Driver,Inboard
	UZ42 XDVAA	1	J, U					XJ	[DV], Passenger,Inboard
	UZ42 TL2AA	1	J, T					DL	[D2, L2], Passenger,Inboard
	UZ42 XDVAA	1	J, T					XJ	[DV], Passenger,Inboard
	UZ42 WL5AA	1	J, U					XJ	[L5], Passenger,Inboard
	UZ42 XDVAA	1	J, T					XJ	[DV], Passenger,Inboard
	UZ42 WL5AA	1	J, U					XJ	[L5], Passenger,Inboard
		1	J, T					XJ	[L5], Passenger,Inboard
	UZ43 XDVAA	1	J, U					XJ	[DV], Driver,Inboard
		1	J, T					XJ	[DV], Driver,Inboard
	UZ42 TL2AA	1	J, U					DL	[L2], Passenger,Inboard
	UZ42 XDVAA	1	J, U					DL	[DV], Passenger,Inboard
	UZ43 TL2AA	1	J, U					DL	[L2], Driver,Inboard
		1	J, T					DL	[D2, L2], Driver,Inboard
	UZ43 XDVAA	1	J, U					DL	[DV], Driver,Inboard
	UZ43 WL5AA	1	J, U					E7	[L5], Driver,Inboard
10									ADJUSTER, Power Seat
	WZ35 DX9AA	1	J, T					A7	Driver
	WZ34 WL8AA	1	J, U					DL	[L2], Passenger
	WZ34 DX9AA	1						F7	[DV, L5], Passenger
	WZ35 WL8AA	1						F7	[DV, L5], Driver
	WZ35 DX9AA	1						J5	[DV, L5], Driver
		1	J, T					M5	[DV, L5], Driver

JEEP LIBERTY (KJ)

SERIES	LINE	BODY	ENGINE	TRANSMISSION
P = Limited	J = LHD (4WD)	74 = 4 Dr (104.3 WB)	ED1,ED0 = 2.4L Power Tech	DDK = 5 Speed HDManual
H = Sport	U = RHD (4WD)		EKG,EK0 = 3.7L Power Tech	DDD = 5 Speed HD Manual
M = Renegade	T = LHD (2WD)		ENJ = 2.5L 4Cyl Turbo Diesel	DG4,DGQ = Multi-Speed Auto
			ENR = 2.8L 4Cyl Turbo Diesel	DG6 = 4 Speed Auto Transm
			EN0 = 4Cyl Turbo Diesel	DG0 = All Automatic Transm
				DBB = All Manual Transm

AR = Use as required - = Non illustrated part # = New this model year

September 30, 2003

« RETURN TO GROUP INDEX

Recliner and Adjuster
Figure IKJ-810

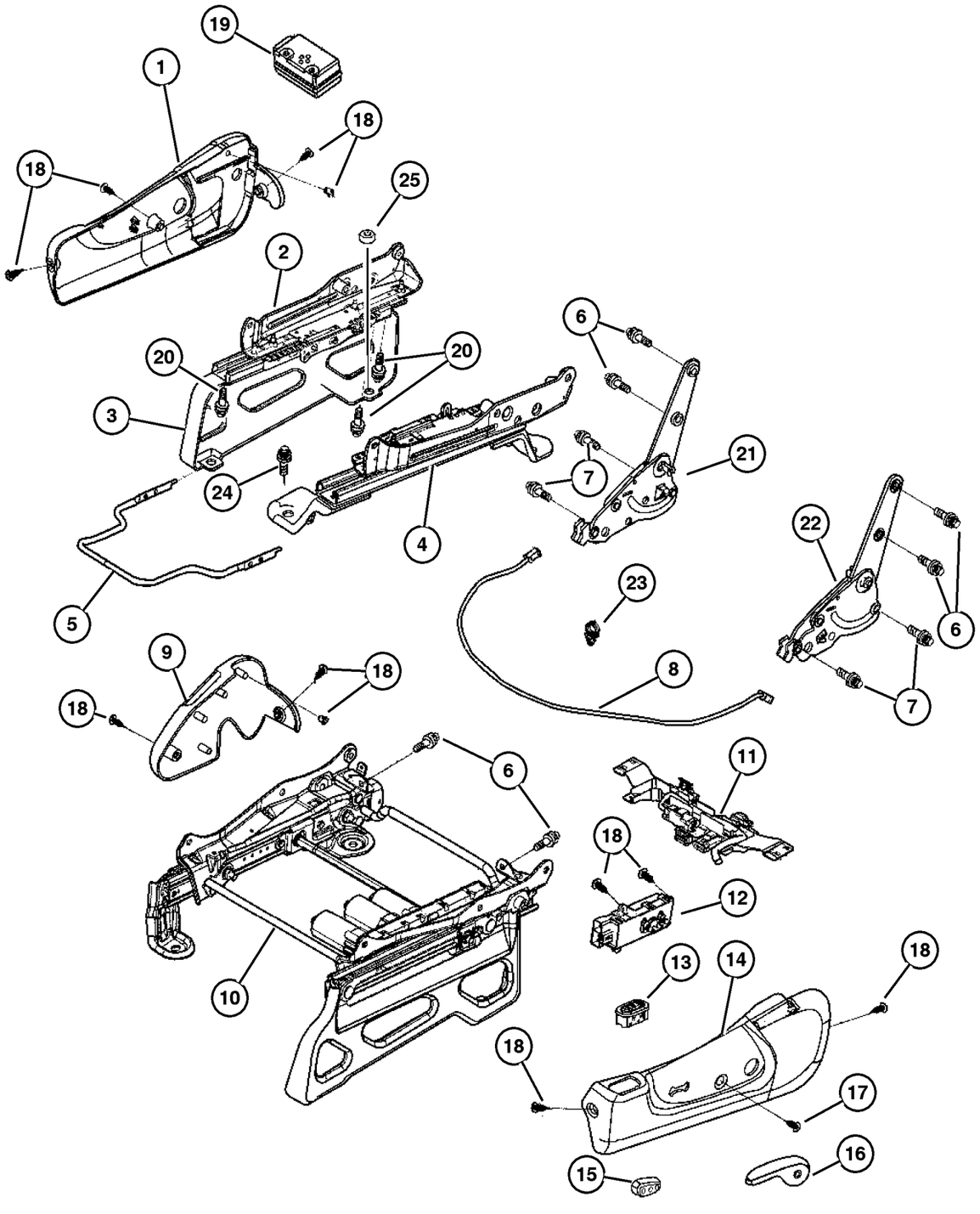

ITEM	PART NUMBER	QTY	LINE	SERIES	BODY	ENGINE	TRANS	TRIM	DESCRIPTION
	WZ35 WL8AA	1	J, T					XJ	[L5], Driver
		1	J, U					XJ	[L5], Driver
	WZ35 XDVAA	1	J, U					XJ	[DV], Driver
		1	J, T					XJ	[DV], Driver
	WZ34 WL8AA	1	J, U					XJ	[L5], Passenger
	WZ34 DX9AA	1	J, T					A7	Passenger
	WZ34 XDVAA	1	J, U					XJ	[DV], Passenger
		1	J, T					DL	[D2], Passenger
		1	J, U					DL	[DV], Passenger
	WZ35 XDVAA	1	J, T					DL	[D2], Driver
		1	J, U					DL	[DV], Driver
	WZ35 WL8AA	1	J, U					DL	[L2], Driver
		1	J, T					DL	[L2], Driver
	WZ34 WL8AA	1	J, T					DL	[L2], Passenger
11									WIRING, Power Seat
	#5127 462AA	1	J, T					A7	Non-Heated, Right,Power
	#5127 456AA	1	J, T					DL	Heated, Domestic, Right,Power
	#5127 464AA	1	J, T					DL	Heated, Mexico, Right,Power
	#5127 453AA	1	J, T					DL	Non-Heated, Left,Power
		1						F7	Left,Power
	#5127 462AA	1						F7	Right,Power
	#5127 453AA	1						J5	Left,Power
		1	J, T					M5	Left,Power
		1	J, T					XJ	Left,Power
		1	J, U					XJ	Left,Power
	#5127 462AA	1	J, U					XJ	Right,Power
	#5127 453AA	1	J, T					A7	Non-Heated, Left,Power
		1	J, U					DL	Non-Heated, Left,Power
	#5127 464AA	1	J, U					DL	Heated, Expot, Right,Power
	#5127 462AA	1	J, U					DL	Non-Heated, Export, Right,Power
		1	J, T					DL	Non-Heated, Mexico, Right,Power
	#5127 454AA	1	J, T					DL	Non-Heated, Domestic, Right, Power
	#5127 455AA	1	J, T					DL	Heated, Left,Power
		1	J, U					DL	Heated, Left,Power
12									SWITCH, Seat
	55352 782AA	2	J, T					A7	
		2	J, U					DL	
		2	J, T					DL	
		2						F7	
		1						J5	

JEEP LIBERTY (KJ)

SERIES	LINE	BODY	ENGINE	TRANSMISSION
P = Limited	J = LHD (4WD)	74 = 4 Dr (104.3 WB)	ED1,ED0 = 2.4L Power Tech	DDK = 5 Speed HDManual
H = Sport	U = RHD (4WD)		EKG,EK0 = 3.7L Power Tech	DDD = 5 Speed HD Manual
M = Renegade	T = LHD (2WD)		ENJ = 2.5L 4Cyl Turbo Diesel	DG4,DGQ = Multi-Speed Auto
			ENR = 2.8L 4Cyl Turbo Diesel	DG6 = 4 Speed Auto Transm
			EN0 = 4Cyl Turbo Diesel	DG0 = All Automatic Transm
				DBB = All Manual Transm

AR = Use as required - = Non illustrated part # = New this model year

September 30, 2003

« RETURN TO GROUP INDEX

Recliner and Adjuster
Figure IKJ-810

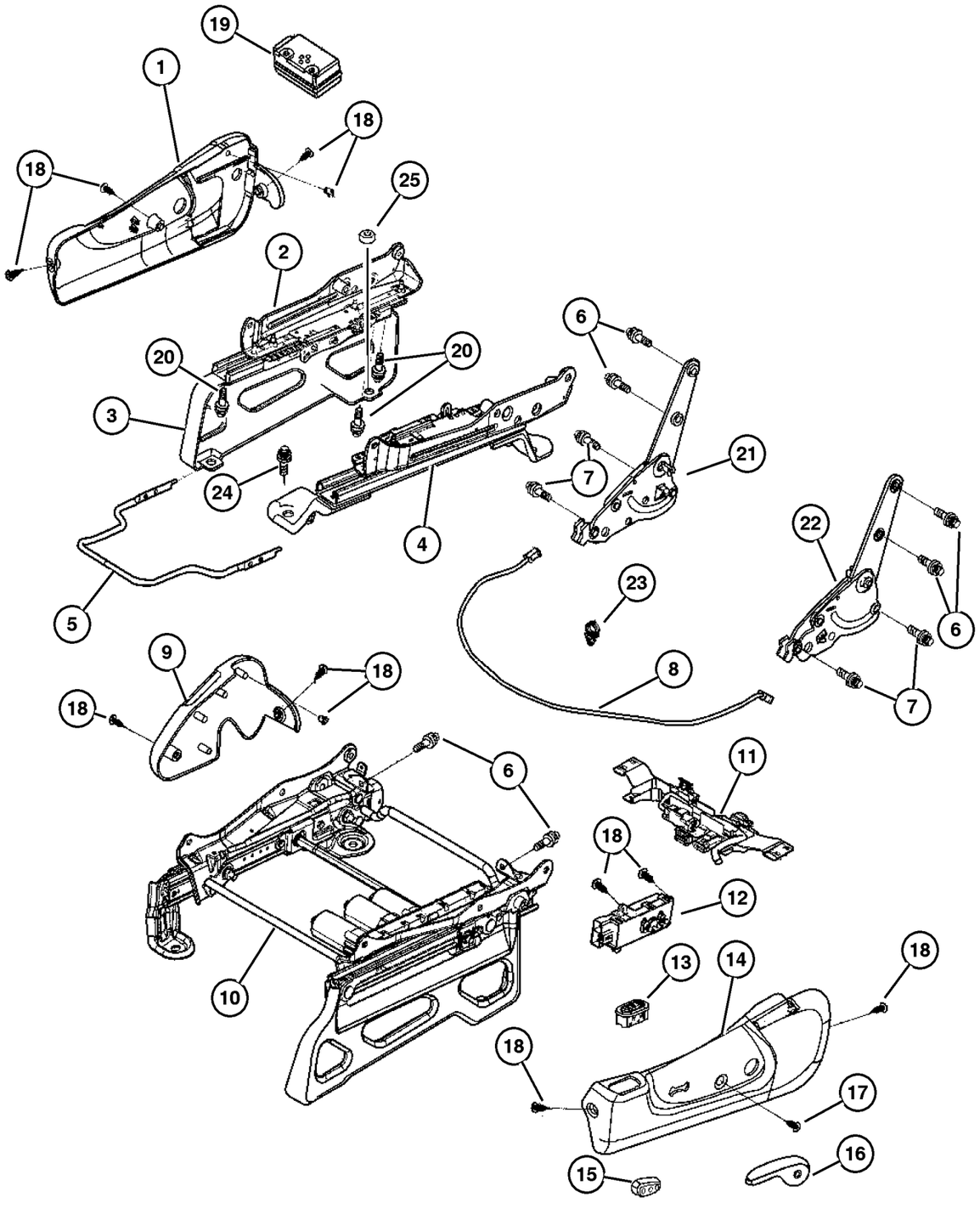

ITEM	PART NUMBER	QTY	LINE	SERIES	BODY	ENGINE	TRANS	TRIM	DESCRIPTION
		1	J, T					M5	
		1	J, T					XJ	
		2	J, U					XJ	
13									SWITCH, Heated Seat
	5GW44 DX9AB	2	J, T					DL	
		2	J, U					DL	
14									SHIELD, Seat Adjuster, Power Seat
	ZH85 1DVAA	1	J, T					A7	Left
	#ZH84 1L2AA	1	J, U					DL	[L2], Non-Heated, Right
		1	J, T					DL	[D2, L2], Non-Heated, Right
	#ZH84 1DVAA	1	J, U					DL	[DV], Non-Heated, Right
	#ZH87 1L2AA	1	J, T					DL	[D2, L2], Heated, Left
		1	J, U					DL	[L2], Heated, Left
	#ZH85 1L5AA	1						F7	[L5], Non-Heated, Left
	#ZH85 1DVAA	1						F7	[DV], Non-Heated, Left
	#ZH84 1L5AA	1						F7	[L5], Non-Heated, Right
	#ZH84 1DVAA	1						F7	[DV], Non-Heated, Right
	#ZH85 1L5AA	1						J5	[L5], Non-Heated, Left
	ZH84 1DVAA	1	J, T					A7	Right
	#ZH85 1DVAA	1						J5	[DV], Non-Heated, Left
		1	J, T					M5	[DV], Non-Heated, Left
	#ZH85 1L5AA	1	J, T					M5	[L5], Non-Heated, Left
	#ZH84 1DVAA	1	J, U					XJ	[DV], Non-Heated, Right
	#ZH84 1L5AA	1	J, U					XJ	[L5], Non-Heated, Right
	#ZH85 1DVAA	1	J, T					XJ	[DV], Non-Heated, Left
		1	J, U					XJ	[DV], Non-Heated, Left
	#ZH85 1L5AA	1	J, T					XJ	[L5], Non-Heated, Left
		1	J, U					XJ	[L5], Non-Heated, Left
	#ZH87 1DVAA	1	J, U					DL	[DV], Heated, Left
	#ZH86 1L2AA	1	J, U					DL	[L2], Heated, Right
		1	J, T					DL	[D2, L2], Heated, Right
	#ZH86 1DVAA	1	J, U					DL	[DV], Heated, Right
	#ZH85 1L2AA	1	J, T					DL	[D2, L2], Non-Heated, Left
		1	J, U					DL	[L2], Non-Heated, Left
	#ZH85 1DVAA	1	J, U					DL	[DV], Non-Heated, Left
15									KNOB, Power Seat Switch
	4607 043AB	1	J, T					A7	Left
		1	J, T					M5	Left
	4607 042AB	1	J, U					XJ	Right
	4607 043AB	1	J, T					XJ	Left
		1	J, U					XJ	Left

JEEP LIBERTY (KJ)

SERIES	LINE	BODY	ENGINE	TRANSMISSION
P = Limited	J = LHD (4WD)	74 = 4 Dr (104.3 WB)	ED1,ED0 = 2.4L Power Tech	DDK = 5 Speed HDManual
H = Sport	U = RHD (4WD)		EKG,EK0 = 3.7L Power Tech	DDD = 5 Speed HD Manual
M = Renegade	T = LHD (2WD)		ENJ = 2.5L 4Cyl Turbo Diesel	DG4,DGQ = Multi-Speed Auto
			ENR = 2.8L 4Cyl Turbo Diesel	DG6 = 4 Speed Auto Transm
			EN0 = 4Cyl Turbo Diesel	DG0 = All Automatic Transm
				DBB = All Manual Transm

AR = Use as required - = Non illustrated part # = New this model year

September 30, 2003

« RETURN TO GROUP INDEX

Recliner and Adjuster
Figure IKJ-810

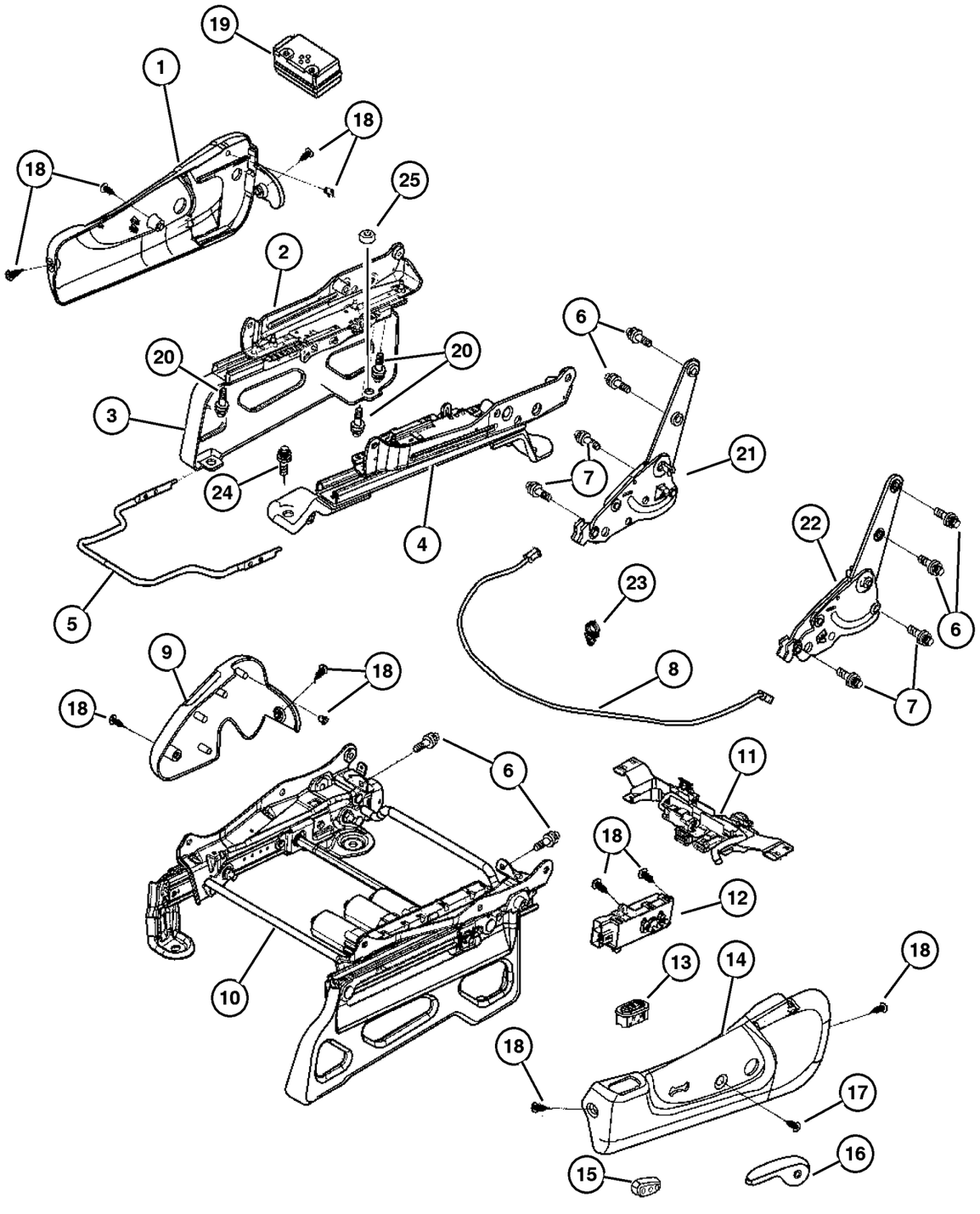

ITEM	PART NUMBER	QTY	LINE	SERIES	BODY	ENGINE	TRANS	TRIM	DESCRIPTION
	4607 042AB	1	J, T					A7	Right
	4607 043AB	1	J, T					DL	Left
		1	J, U					DL	Left
	4607 042AB	1	J, T					DL	Right
		1	J, U					DL	Right
		1						F7	Right
	4607 043AB	1						F7	Left
		1						J5	Left
16									HANDLE, Recliner
	UZ29 1DVAB	1	J, T					A7	Left
	UZ28 1L5AB	1	J, U					E7	[L5], Right
	UZ28 1DVAB	1	J, U					E7	[DV], Right
	UZ29 1DVAB	1	J, U					E7	[DV], Left
	UZ28 1DVAB	1						F7	[DV], Right
	UZ28 1L5AB	1						F7	[L5], Right
	UZ29 1L5AB	1						F7	[L5], Left
	UZ29 1DVAB	1						F7	[DV], Left
	UZ28 1L5AB	1						J5	[L5], Right
	UZ28 1DVAB	1						J5	[DV], Right
	UZ29 1L5AB	1						J5	[L5], Left
	UZ28 1DVAB	1	J, T					A7	Right
	UZ29 1DVAB	1						J5	[DV], Left
	UZ28 1DVAB	1	J, T					M5	[DV], Right
	UZ28 1L5AB	1	J, T					M5	[L5], Right
	UZ29 1DVAB	1	J, T					M5	[DV], Left
	UZ29 1L5AB	1	J, T					M5	[L5], Left
	UZ28 1DVAB	1						V5	Left
	UZ29 1DVAB	1						V5	Right
	UZ29 1L5AB	1	J, T					XJ	[L5], Left
		1	J, U					XJ	[L5], Left
	UZ28 1L5AB	1	J, U					XJ	[L5], Right
	UZ28 1DVAB	1	J, U					DL	[DV], Right
	UZ29 1DVAB	1	J, T					XJ	[DV], Left
		1	J, U					XJ	[DV], Left
	UZ28 1DVAB	1	J, T					XJ	[DV], Right
	UZ28 1L5AB	1	J, T					XJ	[L5], Right
	UZ28 1DVAB	1	J, U					XJ	[DV], Right
	UZ29 1L2AB	1	J, T					DL	[D2, L2], Left
	UZ28 1L2AB	1	J, U					DL	[L2], Right
	UZ29 1L2AB	1	J, U					DL	[L2], Left
	UZ28 1L2AB	1	J, T					DL	[D2, L2], Right

JEEP LIBERTY (KJ)

SERIES	LINE	BODY	ENGINE	TRANSMISSION
P = Limited	J = LHD (4WD)	74 = 4 Dr (104.3 WB)	ED1,ED0 = 2.4L Power Tech	DDK = 5 Speed HDManual
H = Sport	U = RHD (4WD)		EKG,EK0 = 3.7L Power Tech	DDD = 5 Speed HD Manual
M = Renegade	T = LHD (2WD)		ENJ = 2.5L 4Cyl Turbo Diesel	DG4,DGQ = Multi-Speed Auto
			ENR = 2.8L 4Cyl Turbo Diesel	DG6 = 4 Speed Auto Transm
			EN0 = 4Cyl Turbo Diesel	DG0 = All Automatic Transm
				DBB = All Manual Transm

AR = Use as required - = Non illustrated part # = New this model year

September 30, 2003

« RETURN TO GROUP INDEX

Recliner and Adjuster
Figure IKJ-810

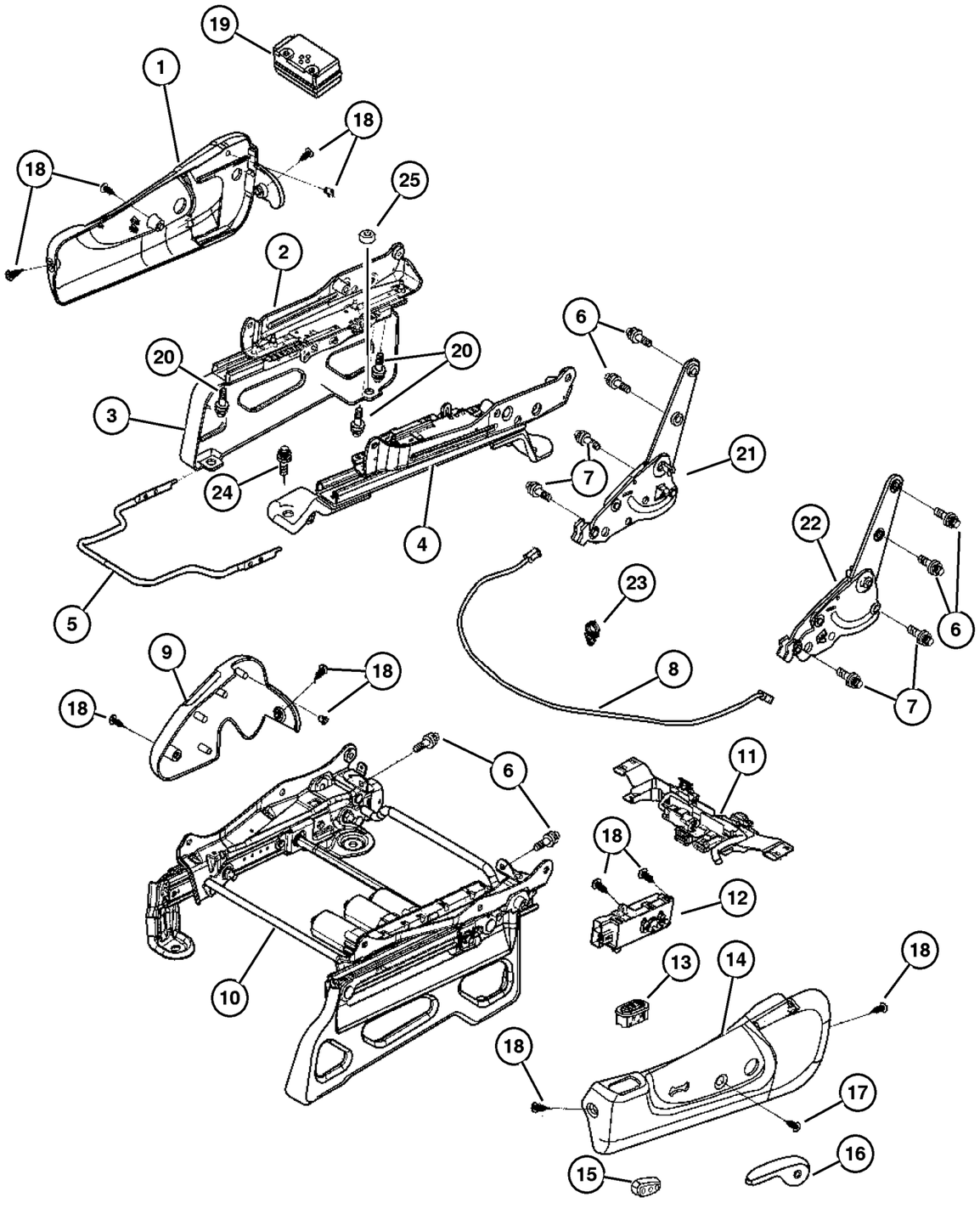

ITEM	PART NUMBER	QTY	LINE	SERIES	BODY	ENGINE	TRANS	TRIM	DESCRIPTION
	UZ29 1DVAB	1	J, U					DL	[DV], Left
	UZ29 1L5AB	1	J, U					E7	[L5], Left
17									SCREW, Recliner Handle
	5072 127AB	2	J, T					A7	
		2	J, T					XJ	
		2	J, U					DL	
		2	J, T					DL	
		2	J, U					E7	
		2						F7	
		2						J5	
		2	J, T					M5	
		2						V5	
		2	J, U					XJ	
18									SCREW, Trim
	5072 741AA	8	J, T					A7	
		8	J, U					XJ	
		8	J, T					DL	
		8	J, U					DL	
		8	J, U					E7	
		8						F7	
		8						J5	
		8	J, T					M5	
		8						V5	
		8	J, T					XJ	
19									MODULE, Heated Seat Control
	56010 113AA	1	J, T					DL	
		1	J, U					DL	
20	6101 452	4							SCREW AND WASHER, Hex Head, M8x1.25x20
21									RECLINER, Front Seat Back
	5072 022AA	1	J, T					A7	Left,Inboard
		1						F7	Left,Inboard
	5072 020AA	1						J5	Right,Outboard
	5072 022AA	1						J5	Left,Inboard
		1	J, T					M5	Left,Inboard
	5072 020AA	1	J, T					M5	Right,Outboard
		1						V5	Right,Outboard
	5072 022AA	1						V5	Left,Inboard
		1	J, T					XJ	Left,Inboard
		1	J, U					XJ	Left,Inboard
	5072 020AA	1	J, T					XJ	Right,Outboard

JEEP LIBERTY (KJ)

SERIES	LINE	BODY	ENGINE	TRANSMISSION
P = Limited	J = LHD (4WD)	74 = 4 Dr (104.3 WB)	ED1,ED0 = 2.4L Power Tech	DDK = 5 Speed HDManual
H = Sport	U = RHD (4WD)		EKG,EK0 = 3.7L Power Tech	DDD = 5 Speed HD Manual
M = Renegade	T = LHD (2WD)		ENJ = 2.5L 4Cyl Turbo Diesel	DG4,DGQ = Multi-Speed Auto
			ENR = 2.8L 4Cyl Turbo Diesel	DG6 = 4 Speed Auto Transm
			EN0 = 4Cyl Turbo Diesel	DG0 = All Automatic Transm
				DBB = All Manual Transm

AR = Use as required - = Non illustrated part # = New this model year

September 30, 2003

« RETURN TO GROUP INDEX

Recliner and Adjuster
Figure IKJ-810

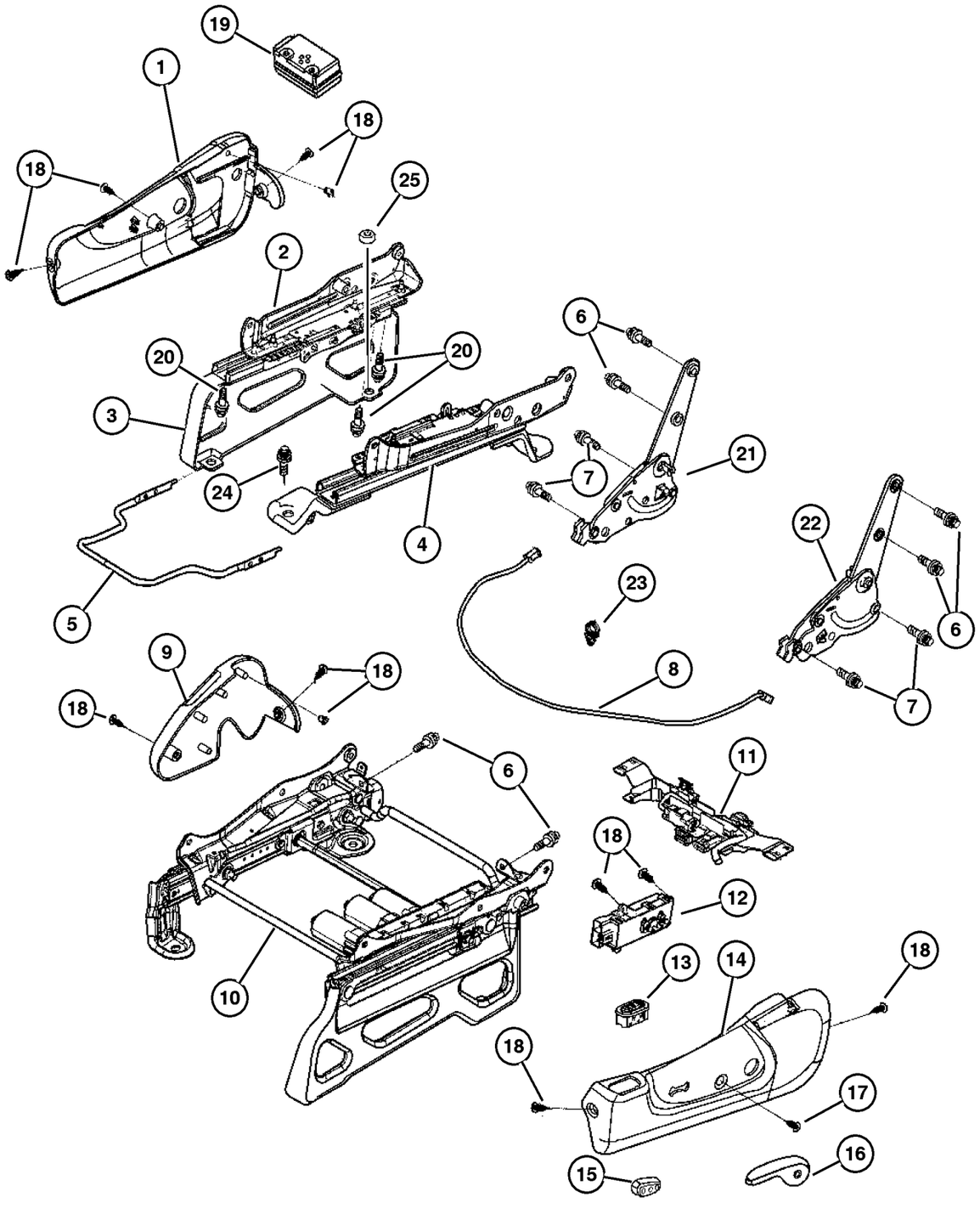

ITEM	PART NUMBER	QTY	LINE	SERIES	BODY	ENGINE	TRANS	TRIM	DESCRIPTION
		1	J, T					A7	Right,Outboard
		1	J, U					XJ	Right,Outboard
		1	J, U					DL	Right,Outboard
		1	J, T					DL	Right,Outboard
	5072 022AA	1	J, U					DL	Left,Inboard
		1	J, T					DL	Left,Inboard
		1	J, U					E7	Left,Inboard
	5072 020AA	1	J, U					E7	Right,Outboard
		1						F7	Right,Outboard
22									RECLINER, Front Seat Back
	5072 023AA	1	J, T					A7	Left,Outboard
		1						F7	Left,Outboard
		1						J5	Left,Outboard
	5072 021AA	1						J5	Right,Inboard
		1	J, T					M5	Right,Inboard
	5072 023AA	1	J, T					M5	Left,Outboard
		1						V5	Left,Outboard
	5072 021AA	1						V5	Right,Inboard
	5072 023AA	1	J, T					XJ	Left,Outboard
		1	J, U					XJ	Left,Outboard
	5072 021AA	1	J, T					XJ	Right,Inboard
		1	J, T					A7	Right,Inboard
		1	J, U					XJ	Right,Inboard
	5072 023AA	1	J, U					DL	Left,Outboard
		1	J, T					DL	Left,Outboard
	5072 021AA	1	J, U					DL	Right,Inboard
		1	J, T					DL	Right,Inboard
		1	J, U					E7	Right,Inboard
	5072 023AA	1	J, U					E7	Left,Outboard
	5072 021AA	1						F7	Right,Inboard
23									CLIP, Cable
	5072 013AA	4	J, T					A7	
		4	J, T					XJ	
		4	J, U					DL	
		4	J, T					DL	
		4	J, U					E7	
		4						F7	
		4						J5	
		4	J, T					M5	
		4						V5	
		4	J, U					XJ	
24	6506 791AA	6							SCREW, Seat

JEEP LIBERTY (KJ)

SERIES	LINE	BODY	ENGINE	TRANSMISSION
P = Limited	J = LHD (4WD)	74 = 4 Dr (104.3 WB)	ED1,ED0 = 2.4L Power Tech	DDK = 5 Speed HDManual
H = Sport	U = RHD (4WD)		EKG,EK0 = 3.7L Power Tech	DDD = 5 Speed HD Manual
M = Renegade	T = LHD (2WD)		ENJ = 2.5L 4Cyl Turbo Diesel	DG4,DGQ = Multi-Speed Auto
			ENR = 2.8L 4Cyl Turbo Diesel	DG6 = 4 Speed Auto Transm
			EN0 = 4Cyl Turbo Diesel	DG0 = All Automatic Transm
				DBB = All Manual Transm

Recliner and Adjuster
Figure IKJ-810

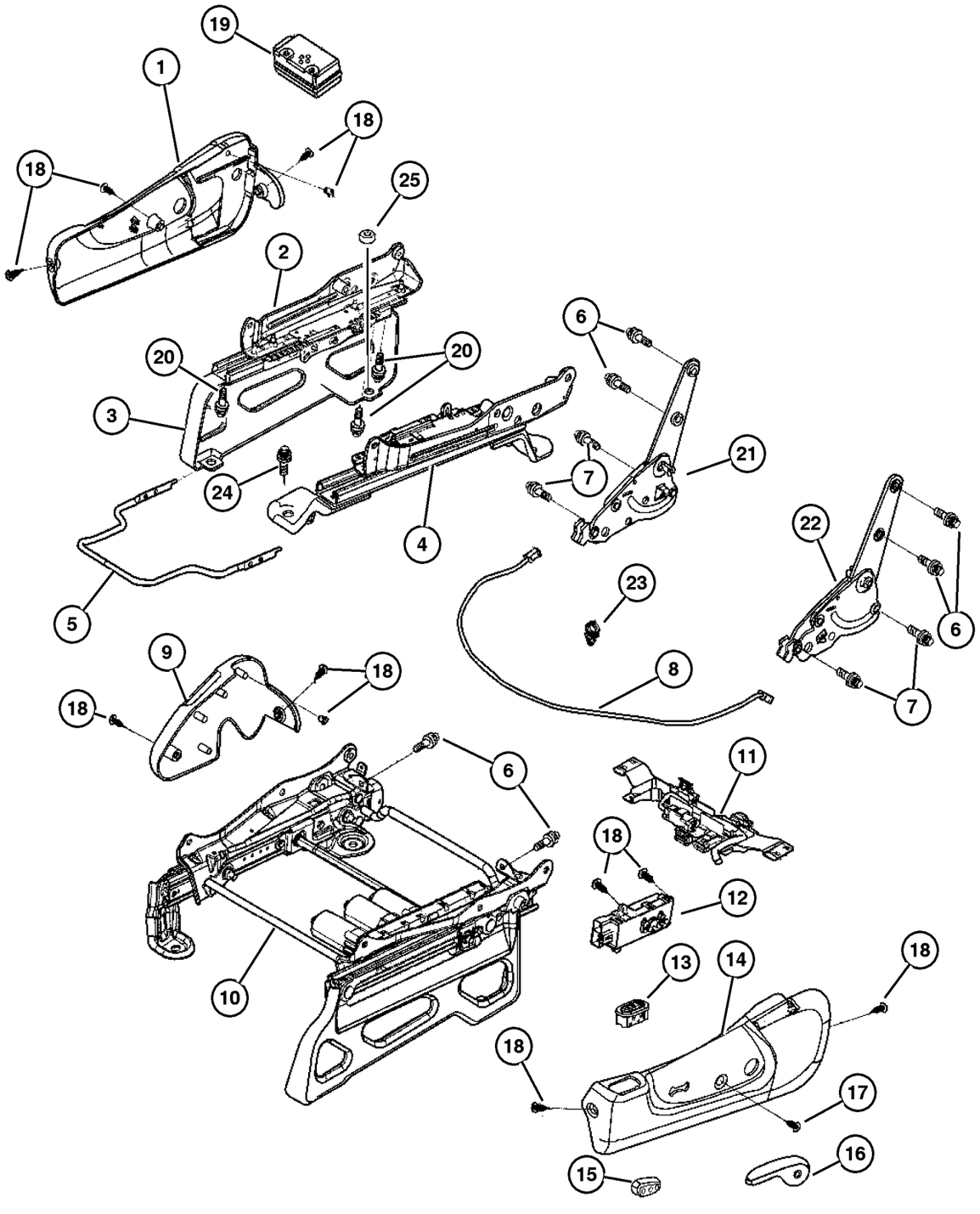

ITEM	PART NUMBER	QTY	LINE	SERIES	BODY	ENGINE	TRANS	TRIM	DESCRIPTION
25	6507 170AA	2							BOLT, Seat
-26	4754 806	1	U						BRACKET, Attaches Flare to Front Outboard Riser, Japan Only

JEEP LIBERTY (KJ)

SERIES	LINE	BODY	ENGINE	TRANSMISSION
P = Limited	J = LHD (4WD)	74 = 4 Dr (104.3 WB)	ED1,ED0 = 2.4L Power Tech	DDK = 5 Speed HDManual
H = Sport	U = RHD (4WD)		EKG,EK0 = 3.7L Power Tech	DDD = 5 Speed HD Manual
M = Renegade	T = LHD (2WD)		ENJ = 2.5L 4Cyl Turbo Diesel	DG4,DGQ = Multi-Speed Auto
			ENR = 2.8L 4Cyl Turbo Diesel	DG6 = 4 Speed Auto Transm
			EN0 = 4Cyl Turbo Diesel	DG0 = All Automatic Transm
				DBB = All Manual Transm

Swing Gate Trim Panel
Figure IKJ-1010

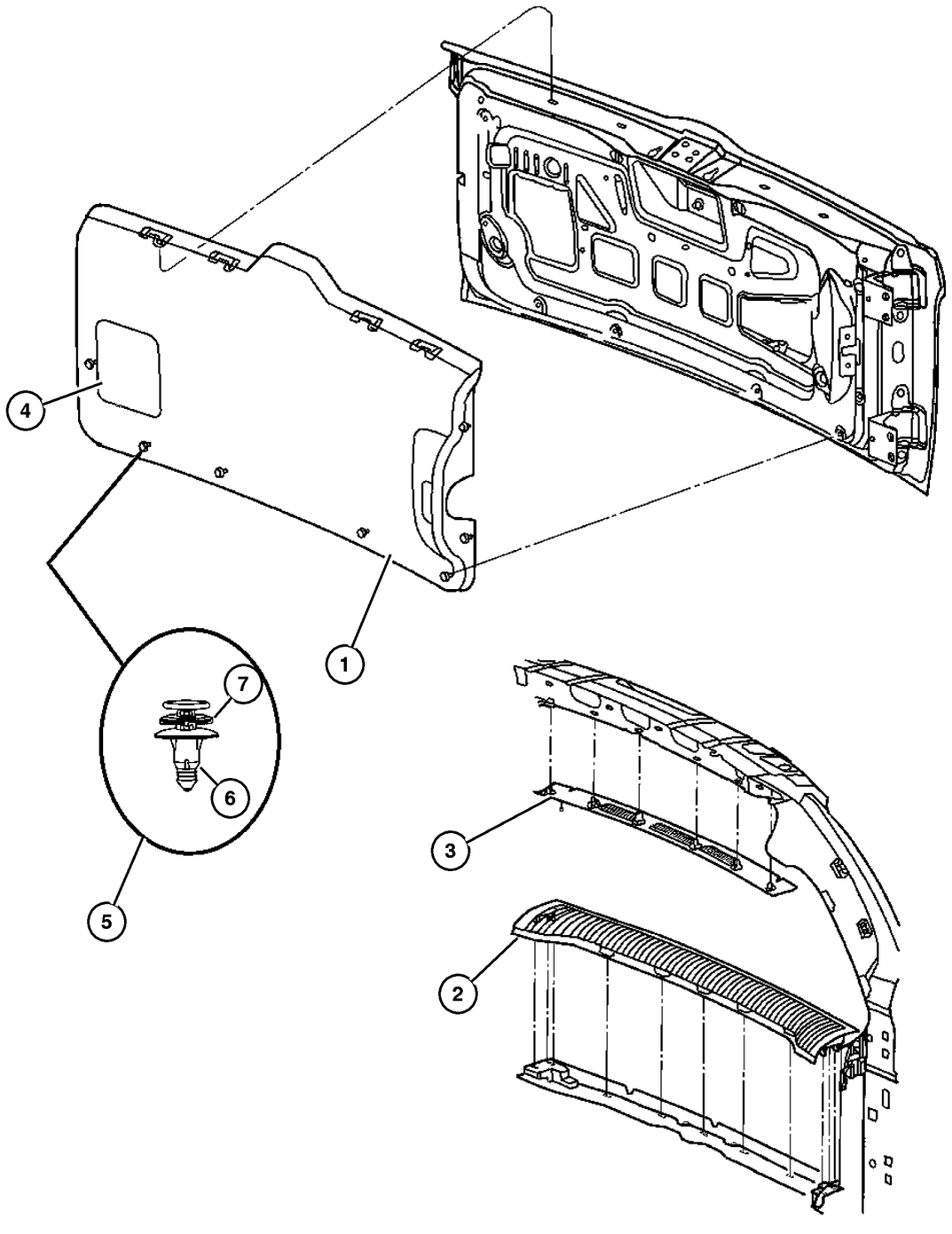

ITEM	PART NUMBER	QTY	LINE	SERIES	BODY	ENGINE	TRANS	TRIM	DESCRIPTION
1									PANEL, Liftgate Lower
	5GE89 WL5AJ	1							[L2, L5]
	5GE89 XDVAJ	1							[D2, DV]
2									PLATE, Liftgate Scuff, Lower
	5GE73 WL5AJ	1							[L2, L5]
	5GE73 XDVAJ	1							[D2, DV]
3									MOLDING, Headliner
	5GP80 WL5AI	1							[L2, L5]
	5GP80 XDVAI	1							[D2, DV]
4									PANEL, Liftgate Glass Latch
	WZ20 WL5AA	1							[L2, L5]
	WZ20 XDVAA	1							[D2, DV]
5	5023 173AA	9							RETAINER, Trim Panel
6	5023 174AA	9							PIN, Push
7	5023 175AA	9							GROMMET

JEEP LIBERTY (KJ)

SERIES	LINE	BODY	ENGINE	TRANSMISSION
P = Limited	J = LHD (4WD)	74 = 4 Dr (104.3 WB)	ED1,ED0 = 2.4L Power Tech	DDK = 5 Speed HDManual
H = Sport	U = RHD (4WD)		EKG,EK0 = 3.7L Power Tech	DDD = 5 Speed HD Manual
M = Renegade	T = LHD (2WD)		ENJ = 2.5L 4Cyl Turbo Diesel	DG4,DGQ = Multi-Speed Auto
			ENR = 2.8L 4Cyl Turbo Diesel	DG6 = 4 Speed Auto Transm
			EN0 = 4Cyl Turbo Diesel	DG0 = All Automatic Transm
				DBB = All Manual Transm

AR = Use as required - = Non illustrated part # = New this model year **September 30, 2003**

« RETURN TO GROUP INDEX

Group – SKJ

Body Sheet Metal Except Doors

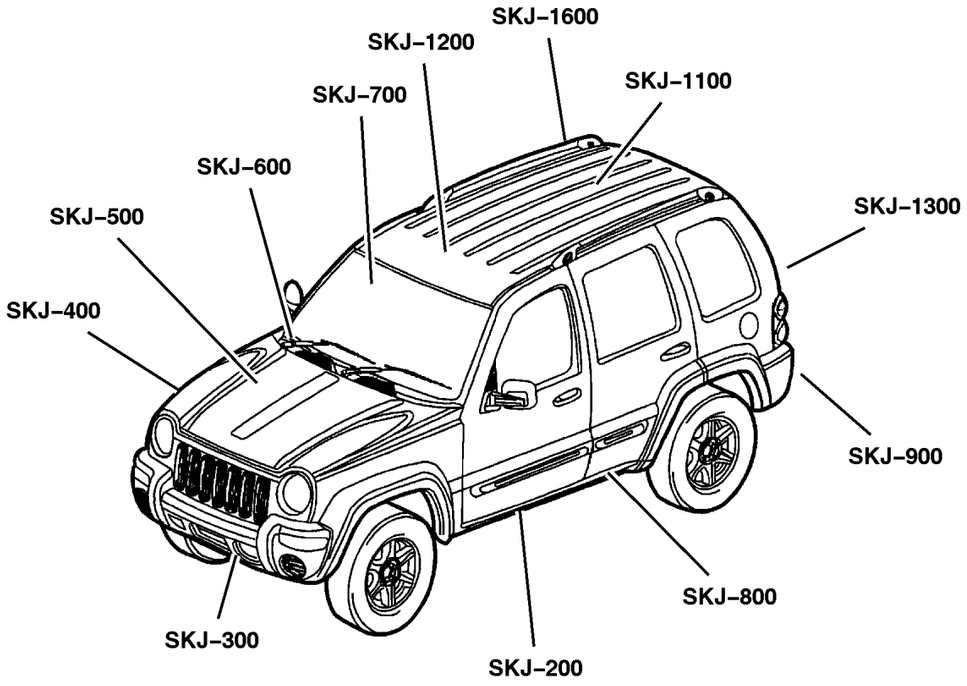

SKJ–200 Floor Pans	**SKJ–300** Plugs	**SKJ–400** Front Fenders	**SKJ–500** Hood & Hood Release
SKJ–600 Cowl and Dash Panel	**SKJ–700** Glass and Rear View Mirror	**SKJ–800** Aperture Panel	**SKJ–900** Quarter Panel and Pillar

Group – SKJ

Body Sheet Metal Except Doors

SKJ–1100 Roof Panels	**SKJ–1200** Sunroof	**SKJ–1300** Liftgate Panel	**SKJ–1600** Luggage Rack

GROUP SKJ - Body Sheet Metal Except Doors

Illustration Title	Group-Fig. No.
Floor Pans	
Front Floor Pan	Fig. SKJ-210
Rear Floor Pan	Fig. SKJ-220
Plates, Underbody Skid	Fig. SKJ-230
Plugs	
Plugs	Fig. SKJ-310
Front Fenders	
Front Fender	Fig. SKJ-410
Hood & Hood Release	
Hood, Latch and Hinges	Fig. SKJ-510
Cowl and Dash Panel	
Cowl and Dash Panel	Fig. SKJ-610
Glass and Rear View Mirror	
Windshield, Quarter Window, Backlite and Mirror	Fig. SKJ-710
Aperture Panel	
Panels, Body Side	Fig. SKJ-810
Quarter Panel and Pillar	
Panels, Rear Quarter	Fig. SKJ-910
Fuel Filler Housing and Door	Fig. SKJ-920
Roof Panels	
Roof Panel	Fig. SKJ-1110
Sunroof	
Sunroof	Fig. SKJ-1210
Liftgate Panel	
Swing Gate, Latch, and Hinges	Fig. SKJ-1310
Luggage Rack	
Luggage Rack	Fig. SKJ-1610

Front Floor Pan
Figure SKJ-210

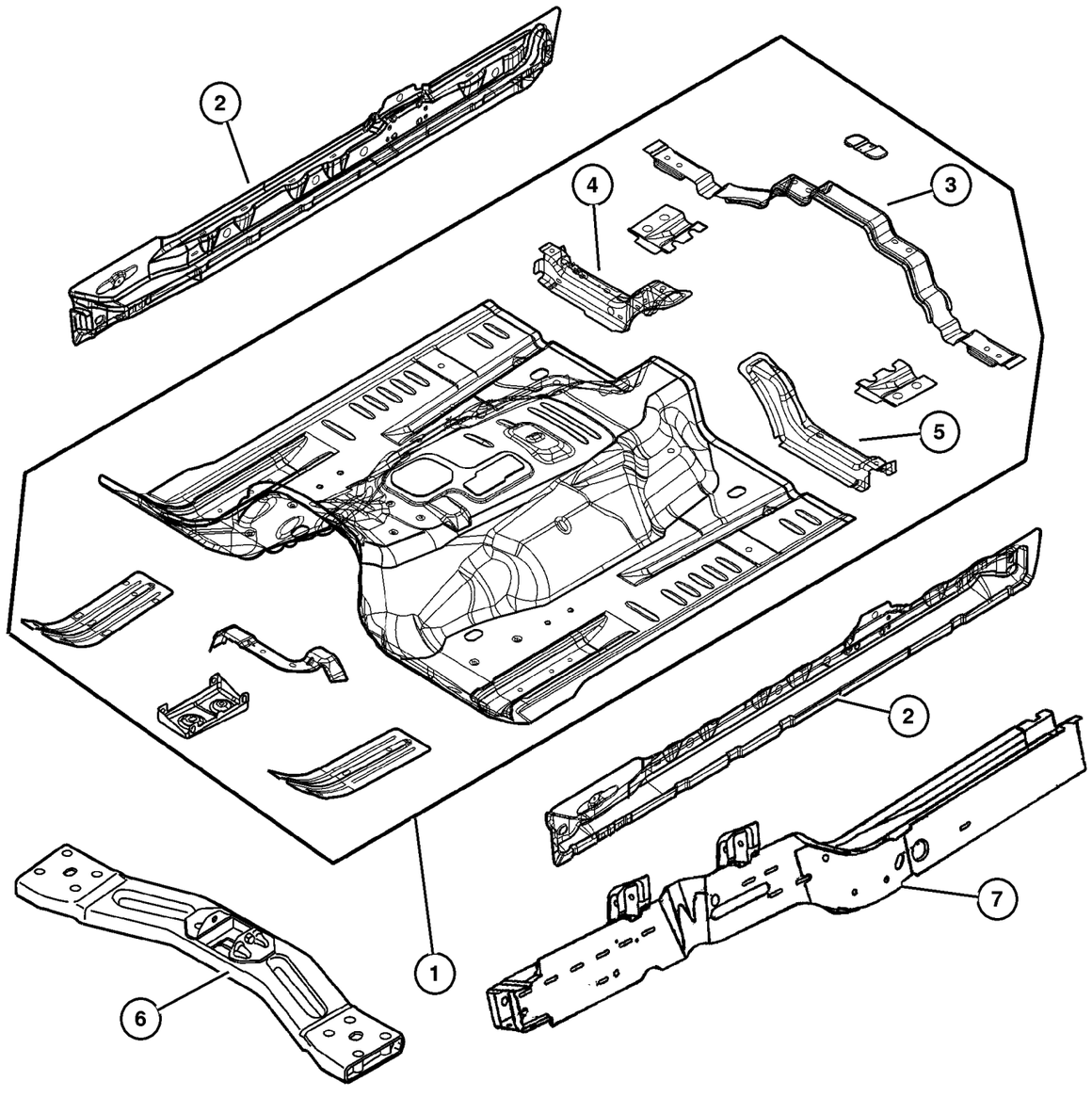

ITEM	PART NUMBER	QTY	LINE	SERIES	BODY	ENGINE	TRANS	TRIM	DESCRIPTION
1	#55360 589AB	1							PAN, Floor
2									SILL, Body Side
	55176 878AD	1							Right
	55176 879AD	1							Left
3	56052 085AA	1							CROSSMEMBER, Front Seat Retention, Rear
4	56052 086AA	2							CROSSMEMBER, Front Seat Retention, Right
5	56052 087AA	2							CROSSMEMBER, Front Seat Retention, Left
6									CROSSMEMBER, Transmission
	#52128 702AA	1							
	#52128 707AA	1							Diesel
7									PANEL, Sill
	#5103 422AA	1							Right
	#5103 423AA	1							Left

JEEP LIBERTY (KJ)

SERIES	LINE	BODY	ENGINE	TRANSMISSION
P = Limited	J = LHD (4WD)	74 = 4 Dr (104.3 WB)	ED1,ED0 = 2.4L Power Tech	DDK = 5 Speed HDManual
H = Sport	U = RHD (4WD)		EKG,EK0 = 3.7L Power Tech	DDD = 5 Speed HD Manual
M = Renegade	T = LHD (2WD)		ENJ = 2.5L 4Cyl Turbo Diesel	DG4,DGQ = Multi-Speed Auto
			ENR = 2.8L 4Cyl Turbo Diesel	DG6 = 4 Speed Auto Transm
			EN0 = 4Cyl Turbo Diesel	DG0 = All Automatic Transm
				DBB = All Manual Transm

AR = Use as required - = Non illustrated part # = New this model year **September 30, 2003**

« RETURN TO GROUP INDEX

Rear Floor Pan
Figure SKJ-220

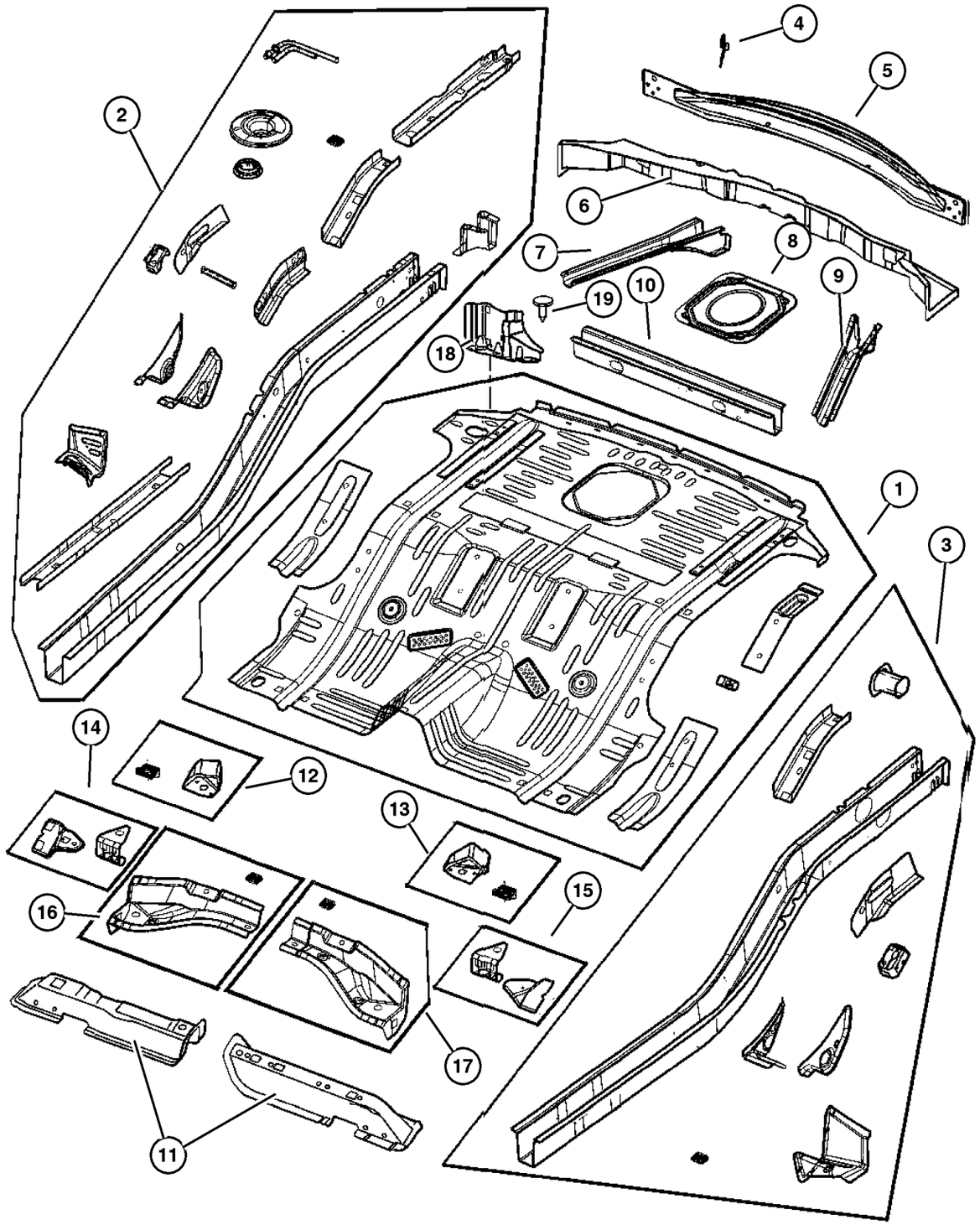

ITEM	PART NUMBER	QTY	LINE	SERIES	BODY	ENGINE	TRANS	TRIM	DESCRIPTION
1	55360 015AE	1							PAN, Floor
2	5080 850AA	1							SILL, Rear, Right
3	5080 851AB	1							SILL, Rear, Left
4									BAFFLE, Air
	55360 260AA	1							Right
	55360 261AA	1							Left
5	55360 371AA	1							REINFORCEMENT, Liftgate Opening
6	55176 846AA	1							CROSSMEMBER, Floor Pan
7	56022 913AB	1							SUPPORT, Fuel Tank
8	55360 187AA	1							DOOR, Fuel Fill
9	56022 914AB	1							SUPPORT, Fuel Tank
10	56022 915AB	1							CROSSMEMBER, Floor Pan
11									CROSSMEMBER, Floor Pan
	55360 062AA	1							Right
	55360 063AA	1							Left
12	5073 062AA	1							REINFORCEMENT, Rear Seat, Right
13	5073 063AA	1							REINFORCEMENT, Rear Seat, Left
14	5073 060AA	1							BRACKET, Control Arm, Right
15	5073 061AA	2							BRACKET, Control Arm, Left
16	5073 058AA	1							CROSSMEMBER, Rear Floor, Right
17	5073 059AA	1							CROSSMEMBER, Rear Floor, Left
18									GUSSET, Side Member
	55360 368AC	1							Right
	55360 369AD	1							Left
19	6507 345AA	4							PIN, Push

JEEP LIBERTY (KJ)

SERIES	LINE	BODY	ENGINE	TRANSMISSION
P = Limited	J = LHD (4WD)	74 = 4 Dr (104.3 WB)	ED1,ED0 = 2.4L Power Tech	DDK = 5 Speed HDManual
H = Sport	U = RHD (4WD)		EKG,EK0 = 3.7L Power Tech	DDD = 5 Speed HD Manual
M = Renegade	T = LHD (2WD)		ENJ = 2.5L 4Cyl Turbo Diesel	DG4,DGQ = Multi-Speed Auto
			ENR = 2.8L 4Cyl Turbo Diesel	DG6 = 4 Speed Auto Transm
			EN0 = 4Cyl Turbo Diesel	DG0 = All Automatic Transm
				DBB = All Manual Transm

AR = Use as required - = Non illustrated part # = New this model year

September 30, 2003

« RETURN TO GROUP INDEX

Plates, Underbody Skid
Figure SKJ-230

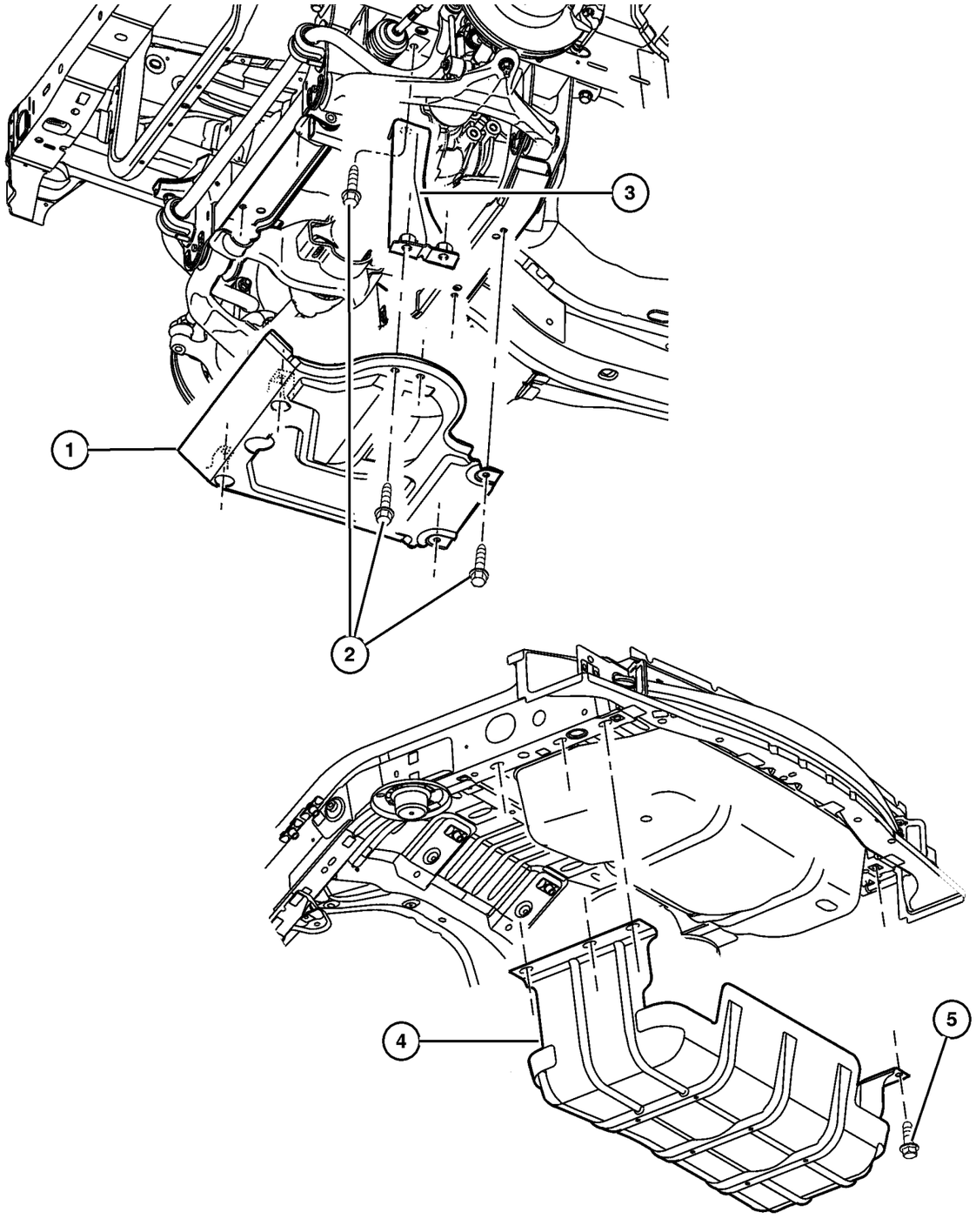

ITEM	PART NUMBER	QTY	LINE	SERIES	BODY	ENGINE	TRANS	TRIM	DESCRIPTION
1	52128 539AC	1	J, U						SKID PLATE, Front
2									SCREW, M10x1.5x30, (NOT SERVICED) (Not Serviced)
3									BRACKET, Skid Plate
	52128 544AA	1	J, U						Right
	52128 545AA	1	J, U						Left
4	52100 332AF	1							PLATE, Skid
5	6502 557	6							BOLT, Hex Flange Head, M12x1.75x40

JEEP LIBERTY (KJ)

SERIES	LINE	BODY	ENGINE	TRANSMISSION
P = Limited	J = LHD (4WD)	74 = 4 Dr (104.3 WB)	ED1,ED0 = 2.4L Power Tech	DDK = 5 Speed HDManual
H = Sport	U = RHD (4WD)		EKG,EK0 = 3.7L Power Tech	DDD = 5 Speed HD Manual
M = Renegade	T = LHD (2WD)		ENJ = 2.5L 4Cyl Turbo Diesel	DG4,DGQ = Multi-Speed Auto
			ENR = 2.8L 4Cyl Turbo Diesel	DG6 = 4 Speed Auto Transm
			EN0 = 4Cyl Turbo Diesel	DG0 = All Automatic Transm
				DBB = All Manual Transm

Plugs
Figure SKJ-310

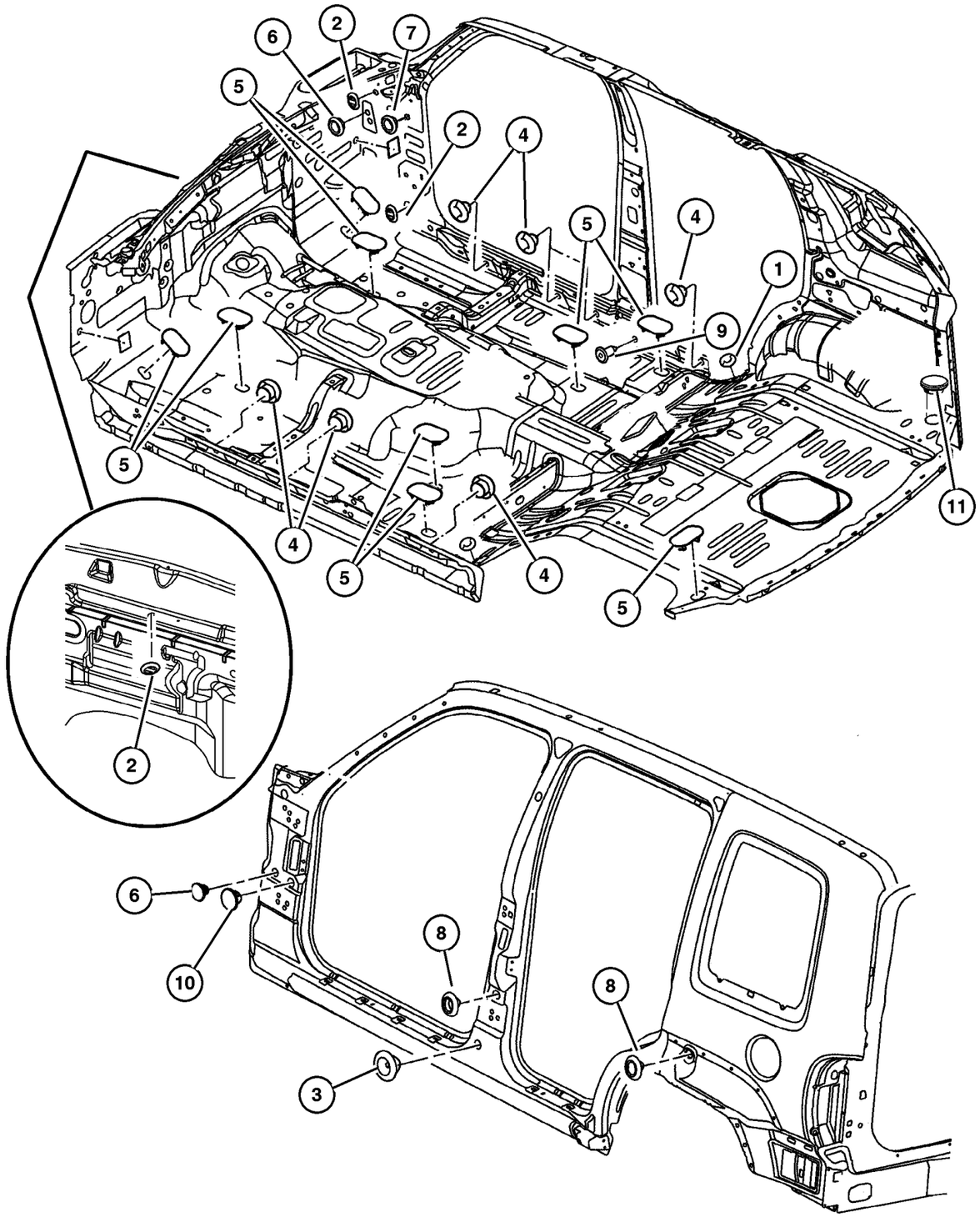

ITEM	PART NUMBER	QTY	LINE	SERIES	BODY	ENGINE	TRANS	TRIM	DESCRIPTION
1	4780 615AB	2							PLUG, Body, .75 Diameter, Rear Floor Pan
2	4716 933	2							PLUG, Body Side Aperture
3	4780 194	2							PLUG, Body Side Outer
4	4780 615AB	8							PLUG, Body, .75 Diameter
5	4646 971	4							PLUG, Floor Pan
6	55136 859AA	2							PLUG, Plastic, Expandable
7	4780 615AB	2							PLUG, Body, .75 Diameter
8	55176 729AA	4							PLUG, Cowl Side
9	3502 6594	2							PLUG, Floor Pan, .187 Rubber
10									PLUG, Plastic Expandable, 25mm, (NOT SERVICED) (Not Serviced)
11	56010 048AB	1							PLUG

JEEP LIBERTY (KJ)

SERIES	LINE	BODY	ENGINE	TRANSMISSION
P = Limited	J = LHD (4WD)	74 = 4 Dr (104.3 WB)	ED1,ED0 = 2.4L Power Tech	DDK = 5 Speed HDManual
H = Sport	U = RHD (4WD)		EKG,EK0 = 3.7L Power Tech	DDD = 5 Speed HD Manual
M = Renegade	T = LHD (2WD)		ENJ = 2.5L 4Cyl Turbo Diesel	DG4,DGQ = Multi-Speed Auto
			ENR = 2.8L 4Cyl Turbo Diesel	DG6 = 4 Speed Auto Transm
			EN0 = 4Cyl Turbo Diesel	DG0 = All Automatic Transm
				DBB = All Manual Transm

Front Fender
Figure SKJ-410

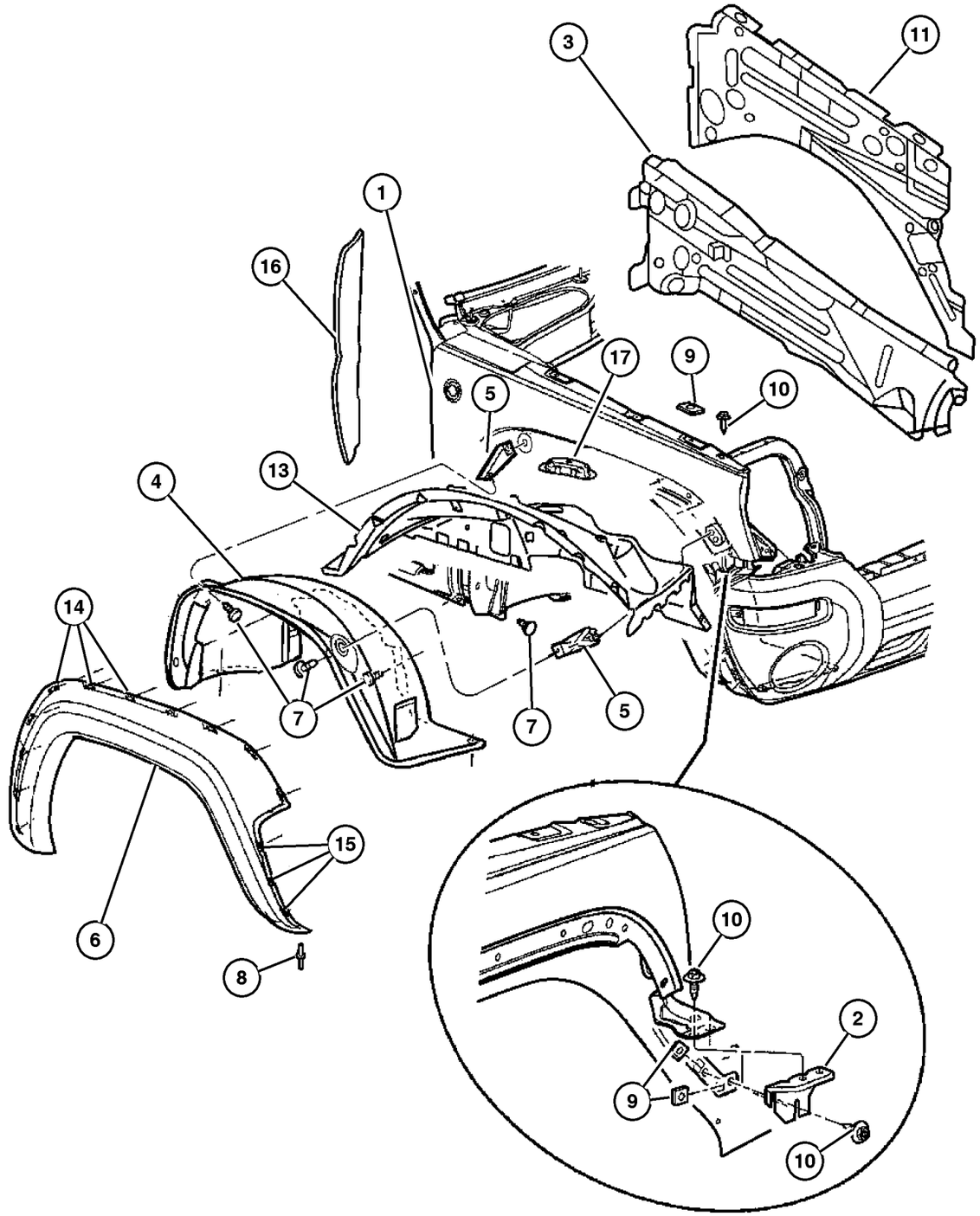

ITEM	PART NUMBER	QTY	LINE	SERIES	BODY	ENGINE	TRANS	TRIM	DESCRIPTION
1									FENDER, Front
	55177 100AD	1							Right
	55177 101AD	1							Left
2									BRACKET, Fender
	55360 236AB	1							Right
	55360 237AB	1							Left
3									REINFORCEMENT, Fender
	55177 414AE	1							Right
	55177 415AE	1							Left
4									LINER, Front Fender
	55360 144AG	1							Right
	55360 145AG	1							Left
5	55155 988AB	2							BRACKET, Fender Applique, Front
6									APPLIQUE, Fender Wheel Opening
	5GG96 HS5AG	1							[K3A], Sport, Right
	5HV46 AJCAD	1							[K4K], Right
	5HV46 DX8AD	1							[K4X], Right
	5HV46 WS2AD	1							[K4S], Right
	5GG97 HS5AG	1							[K3A], Sport, Left
	5GH00 TZZAF	1							[K5], Paint as Required, Limited, Right
	5GH01 TZZAF	1							[K5], Paint as Required, Limited, Left
	5HV45 AFMAD	1							[K4C], Left
	5HV45 AJCAD	1							[K4K], Left
	5HV45 DX8AD	1							[K4X], Left
	5HV45 WS2AD	1							[K4S], Left
	5HV46 AFMAD	1							[K4C], Right
7	6036 155AA	3							PIN, Push
8	6506 007AA	8							RIVET
9	6504 118	6							U-NUT, M6 x 1.00, M6x1.00
10	6505 903AA	2							SCREW AND WASHER, Self Tapping, M6x1x22
11									PANEL, Fender, Inner
	55177 016AD	1							Right
	55177 017AD	1							Left
-12									BRACKET, Ballstud, Gas Prop Mounting
	55360 428AB	1							Right
	55360 429AB	1							Left
13									WHEELHOUSE, Front Inner
	55176 858AJ	1							Right

JEEP LIBERTY (KJ)

SERIES	LINE	BODY	ENGINE	TRANSMISSION
P = Limited	J = LHD (4WD)	74 = 4 Dr (104.3 WB)	ED1,ED0 = 2.4L Power Tech	DDK = 5 Speed HDManual
H = Sport	U = RHD (4WD)		EKG,EK0 = 3.7L Power Tech	DDD = 5 Speed HD Manual
M = Renegade	T = LHD (2WD)		ENJ = 2.5L 4Cyl Turbo Diesel	DG4,DGQ = Multi-Speed Auto
			ENR = 2.8L 4Cyl Turbo Diesel	DG6 = 4 Speed Auto Transm
			EN0 = 4Cyl Turbo Diesel	DG0 = All Automatic Transm
				DBB = All Manual Transm

Front Fender
Figure SKJ-410

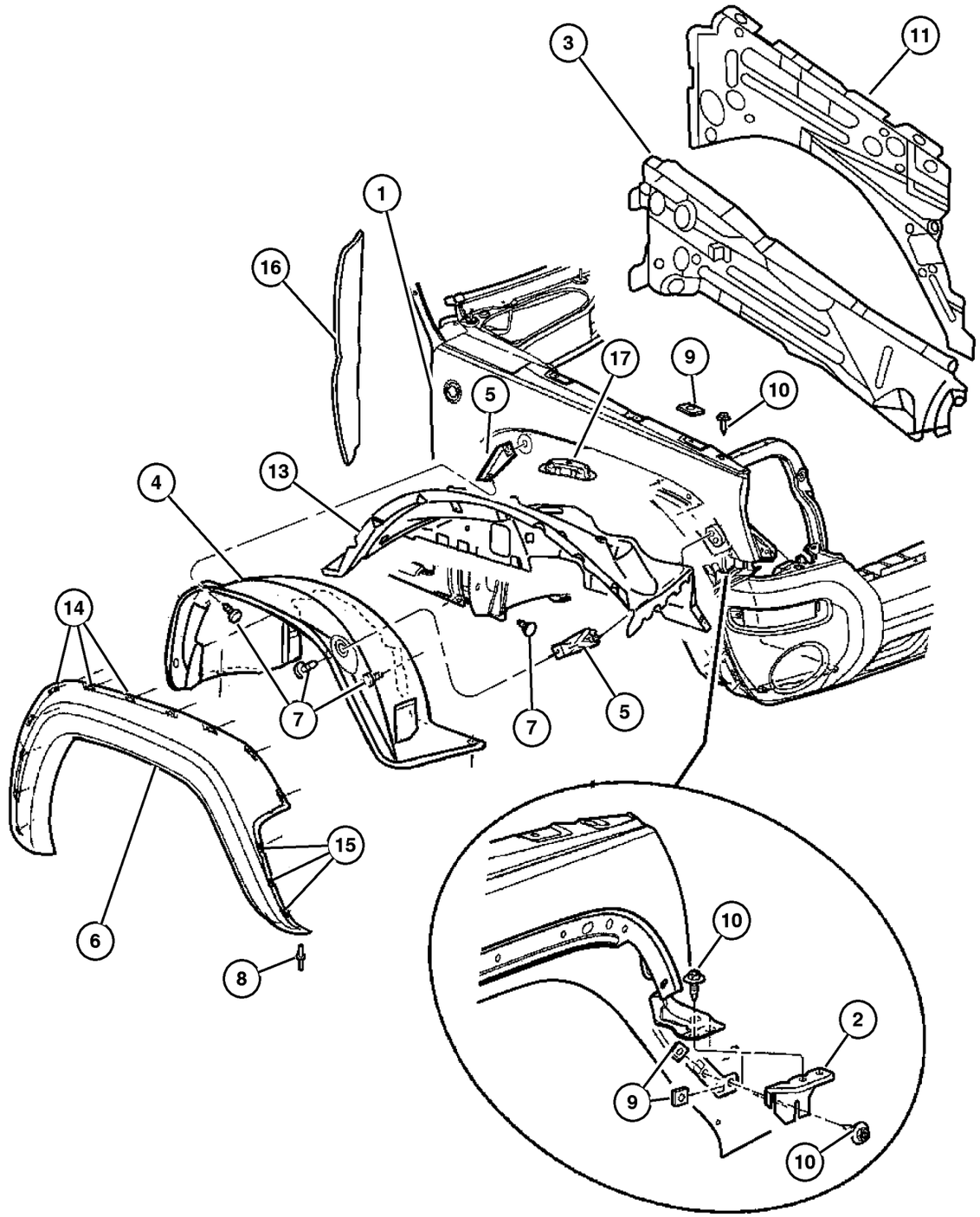

ITEM	PART NUMBER	QTY	LINE	SERIES	BODY	ENGINE	TRANS	TRIM	DESCRIPTION
	55176 859AK	1							Left
14	55156 447AB	11							PIN, Push
15	55156 429AA	3							RETAINER, Applique
16	55235 932AC	2							SEAL, Fender To Cowl
17	55360 201AC	1							CUP, Jounce Bumper

JEEP LIBERTY (KJ)

SERIES	LINE	BODY	ENGINE	TRANSMISSION
P = Limited	J = LHD (4WD)	74 = 4 Dr (104.3 WB)	ED1,ED0 = 2.4L Power Tech	DDK = 5 Speed HDManual
H = Sport	U = RHD (4WD)		EKG,EK0 = 3.7L Power Tech	DDD = 5 Speed HD Manual
M = Renegade	T = LHD (2WD)		ENJ = 2.5L 4Cyl Turbo Diesel	DG4,DGQ = Multi-Speed Auto
			ENR = 2.8L 4Cyl Turbo Diesel	DG6 = 4 Speed Auto Transm
			EN0 = 4Cyl Turbo Diesel	DG0 = All Automatic Transm
				DBB = All Manual Transm

Hood, Latch and Hinges
Figure SKJ-510

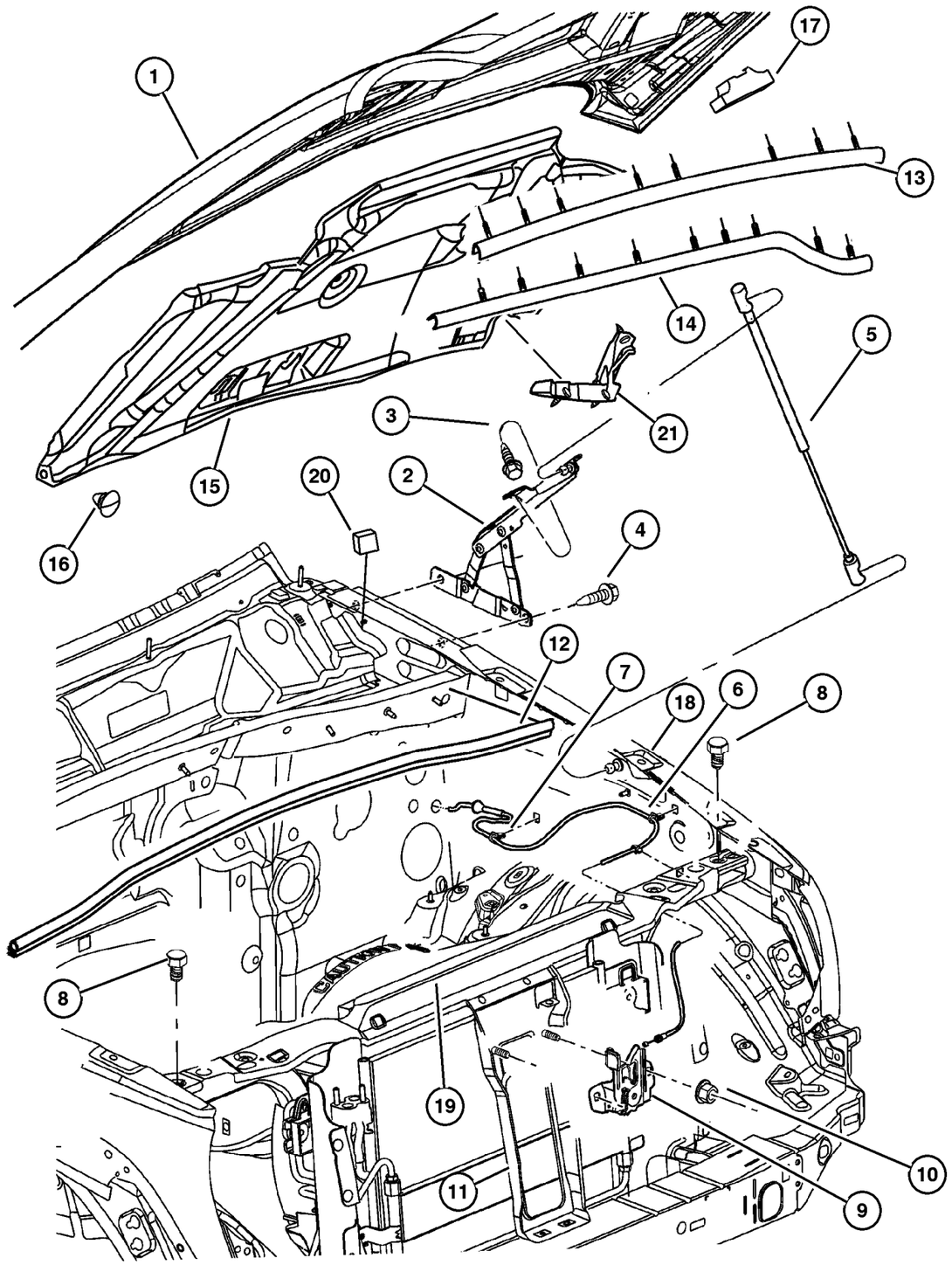

ITEM	PART NUMBER	QTY	LINE	SERIES	BODY	ENGINE	TRANS	TRIM	DESCRIPTION
1	55177 200AD	1							HOOD
2									HINGE, Hood
	55176 928AA	1							Right
	55176 929AA	1							Left
3									SCREW AND WASHER, Hex Head, M6X1.00X19.00, (NOT SERVICED) (Not Serviced)
4	6505 940AA	4							SCREW, M8-1.25
5	55360 411AA	2							PROP, Hood
6	55360 280AD	1							CABLE, Hood Release
7	6503 794	3							CLIP, M6.3x11.2
8	4696 592	2							BUMPER, Hood
9	55176 926AB	1							LATCH, Hood
10	6503 102	2							NUT AND WASHER, Hex Nut-Coned Washer, M6 x 1.00
11	55360 229AB	1							REINFORCEMENT, Hood Latch
12	55235 927AC	1							SEAL, Hood To Cowl
13	55360 066AD	1							SEAL, Hood To Radiator
14	55360 341AC	1							SEAL, Hood
15	55352 746AF	1							INSULATION, Hood
16	6504 135	8							PIN, Push In, M6.3x15 LG
17	55360 258AB	2							SEAL, Hood To Plenum
18									BRACKET, Ballstud
	55360 428AB	1							Right
	55360 429AB	1							Left
19	55176 763AE	1							CROSSMEMBER, Radiator
20									SEAL, A-Pillar Blocker
	55360 542AD	1							Right
	55360 543AD	1							Left
21	55360 551AC	1							SEAL, Air Inlet

JEEP LIBERTY (KJ)

SERIES	LINE	BODY	ENGINE	TRANSMISSION
P = Limited	J = LHD (4WD)	74 = 4 Dr (104.3 WB)	ED1,ED0 = 2.4L Power Tech	DDK = 5 Speed HDManual
H = Sport	U = RHD (4WD)		EKG,EK0 = 3.7L Power Tech	DDD = 5 Speed HD Manual
M = Renegade	T = LHD (2WD)		ENJ = 2.5L 4Cyl Turbo Diesel	DG4,DGQ = Multi-Speed Auto
			ENR = 2.8L 4Cyl Turbo Diesel	DG6 = 4 Speed Auto Transm
			EN0 = 4Cyl Turbo Diesel	DG0 = All Automatic Transm
				DBB = All Manual Transm

AR = Use as required - = Non illustrated part # = New this model year

September 30, 2003

« RETURN TO GROUP INDEX

Cowl and Dash Panel
Figure SKJ-610

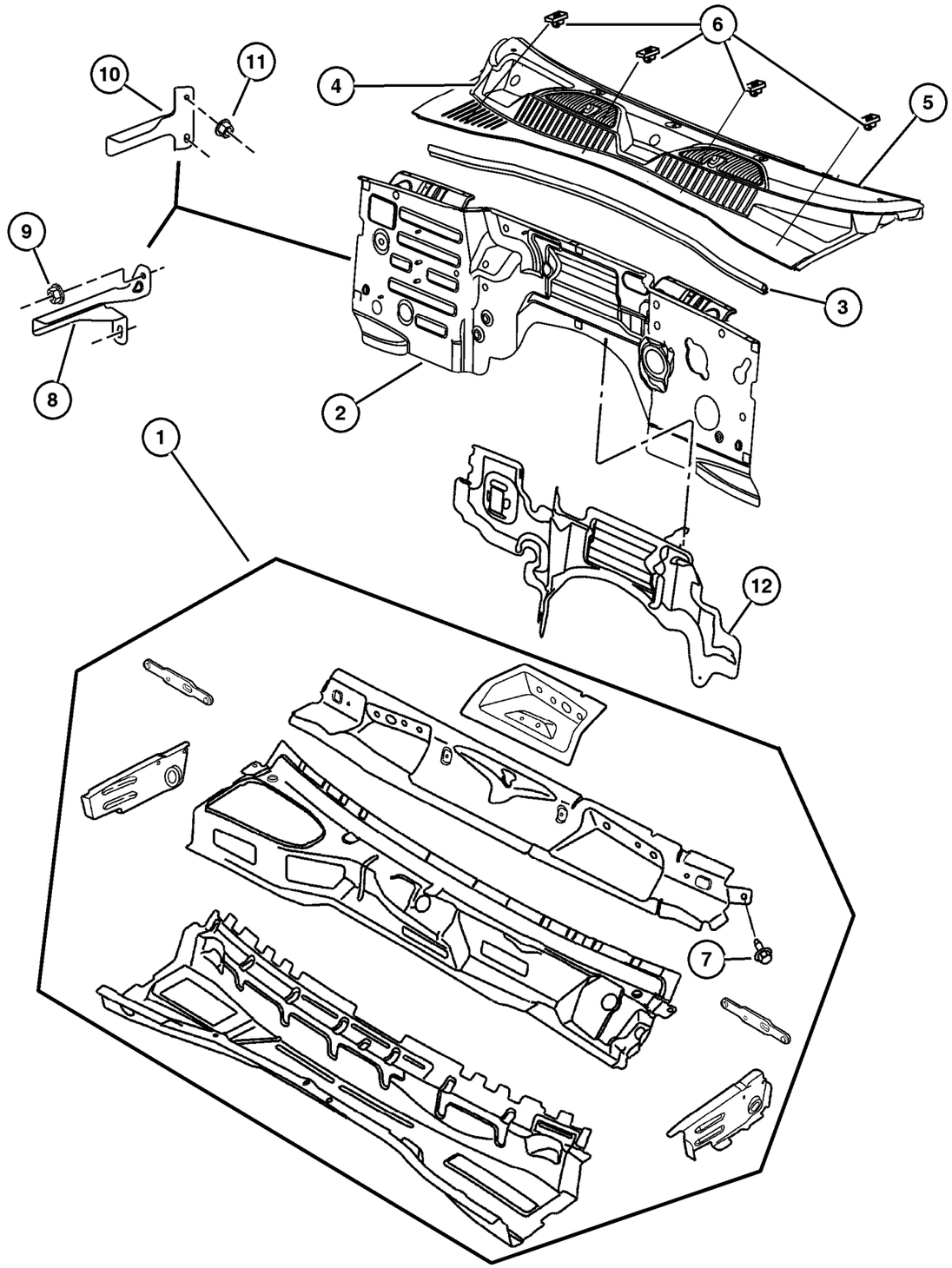

ITEM	PART NUMBER	QTY	LINE	SERIES	BODY	ENGINE	TRANS	TRIM	DESCRIPTION
1									PANEL, Plenum Complete
	55176 767AD	1	J, T						
	55176 776AD	1	U						
2									PANEL, Dash
	55177 300AB	1	J, T						
	55177 350AB	1	U						
3	55235 927AC	1							SEAL, Hood To Cowl
4									COVER, Cowl Grille
	55155 850AH	1	U						
	55155 851AH	1	J, T						
5	5071 165AA	1	J, T						SEAL, Body Side To Cowl Side
6	6501 925	4							PIN, Splash Shield
7	6503 328	4							SCREW, Hex Head, M8x1.25x30
8	55360 202AA	1	J, T						BRACKET, Coolant Recovery Bottle
9	6504 030	2	J, T						NUT AND WASHER, Hex, M6x1
10	55360 203AA	1	U						BRACKET, Coolant Recovery Bottle
11	6101 467	2	U						NUT, Hex Flange, M8x1.25
12									INSULATION, Dash Panel
	55352 847AD	1	J, T						
	55352 720AF	1	U						

JEEP LIBERTY (KJ)

SERIES	LINE	BODY	ENGINE	TRANSMISSION
P = Limited	J = LHD (4WD)	74 = 4 Dr (104.3 WB)	ED1,ED0 = 2.4L Power Tech	DDK = 5 Speed HDManual
H = Sport	U = RHD (4WD)		EKG,EK0 = 3.7L Power Tech	DDD = 5 Speed HD Manual
M = Renegade	T = LHD (2WD)		ENJ = 2.5L 4Cyl Turbo Diesel	DG4,DGQ = Multi-Speed Auto
			ENR = 2.8L 4Cyl Turbo Diesel	DG6 = 4 Speed Auto Transm
			EN0 = 4Cyl Turbo Diesel	DG0 = All Automatic Transm
				DBB = All Manual Transm

Windshield, Quarter Window, Backlite and Mirror
Figure SKJ-710

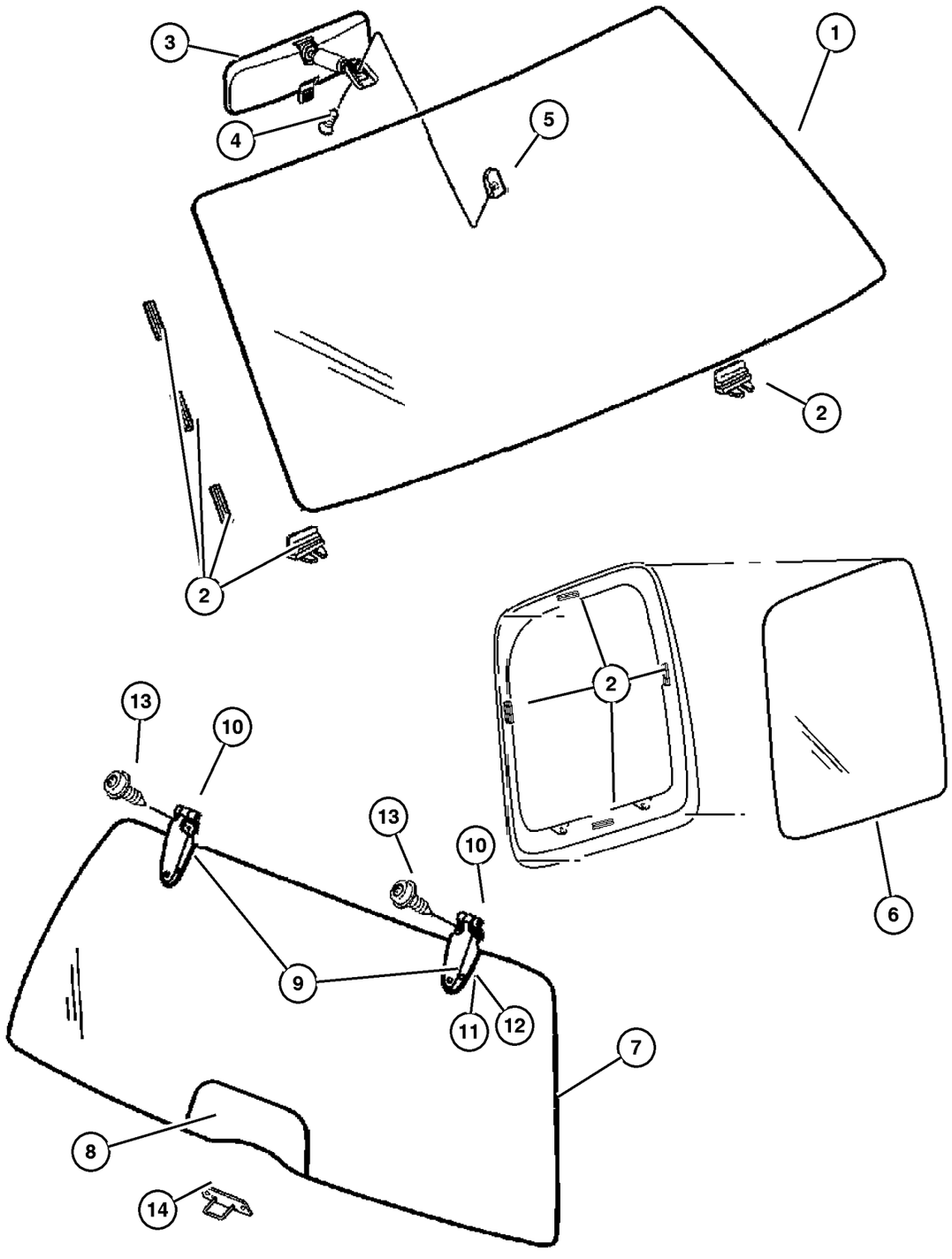

ITEM	PART NUMBER	QTY	LINE	SERIES	BODY	ENGINE	TRANS	TRIM	DESCRIPTION
1	5093 459AD	1							WINDSHIELD, 30-Lite
2	55360 509AA	4							SPACER, Windshield
3									MIRROR, Inside Rear View
	4805 332AB	1							Prismatic Mirror
	55155 380AB	1							Electrochromic Mirror
4	5073 472AA	1							SCREW
5	5507 6401	1							BUTTON, Rear View Mirror
6									GLASS, Quarter
	55235 921AC	1							Tinted, Left
	55235 923AC	1							Privacy, Left
	55360 054AC	1							Tinted, With Antenna, Export, Right
	55360 056AC	1							Privacy, With Antenna, Export, Right
	55235 920AC	1							Tinted, Right
	55235 922AC	1							Privacy, Right
7									BACKLITE
	55360 340AP	1							Tinted
	55360 342AP	1							Privacy
8	#55360 709AA	1							PAD, Flipper Glass
9									COVER, Hinge
	55360 366AE	1							Right
	55360 367AE	1							Left
10									HINGE, Liftglass
	55360 216AD	1							Right
	55360 217AD	1							Left
11	5529 6025	2							SCREW, Special Head, M6x1x12.7
12	5507 5164	4							GASKET, Liftgate Hinge
13	6507 883AA	4							SCREW, M5x.8x22.50
14	55360 220AB	1							STRIKER, Liftgate Glass
-15	6504 513	2							NUT AND WASHER, Hex Nut-Coned Washer, M6 x 1.00
-16									LABEL, Flipper Glass
	55360 573AA	1							Use With Tinted Glass, French
	55360 582AA	1							Use With Privacy Glass, French
	55360 583AA	1							Use With Privacy Glass, Arabic
-17	55360 561AA	1							TAPE, Anti-Squeak

JEEP LIBERTY (KJ)

SERIES	LINE	BODY	ENGINE	TRANSMISSION
P = Limited	J = LHD (4WD)	74 = 4 Dr (104.3 WB)	ED1,ED0 = 2.4L Power Tech	DDK = 5 Speed HDManual
H = Sport	U = RHD (4WD)		EKG,EK0 = 3.7L Power Tech	DDD = 5 Speed HD Manual
M = Renegade	T = LHD (2WD)		ENJ = 2.5L 4Cyl Turbo Diesel	DG4,DGQ = Multi-Speed Auto
			ENR = 2.8L 4Cyl Turbo Diesel	DG6 = 4 Speed Auto Transm
			EN0 = 4Cyl Turbo Diesel	DG0 = All Automatic Transm
				DBB = All Manual Transm

AR = Use as required - = Non illustrated part # = New this model year **September 30, 2003**

« RETURN TO GROUP INDEX

Panels, Body Side
Figure SKJ-810

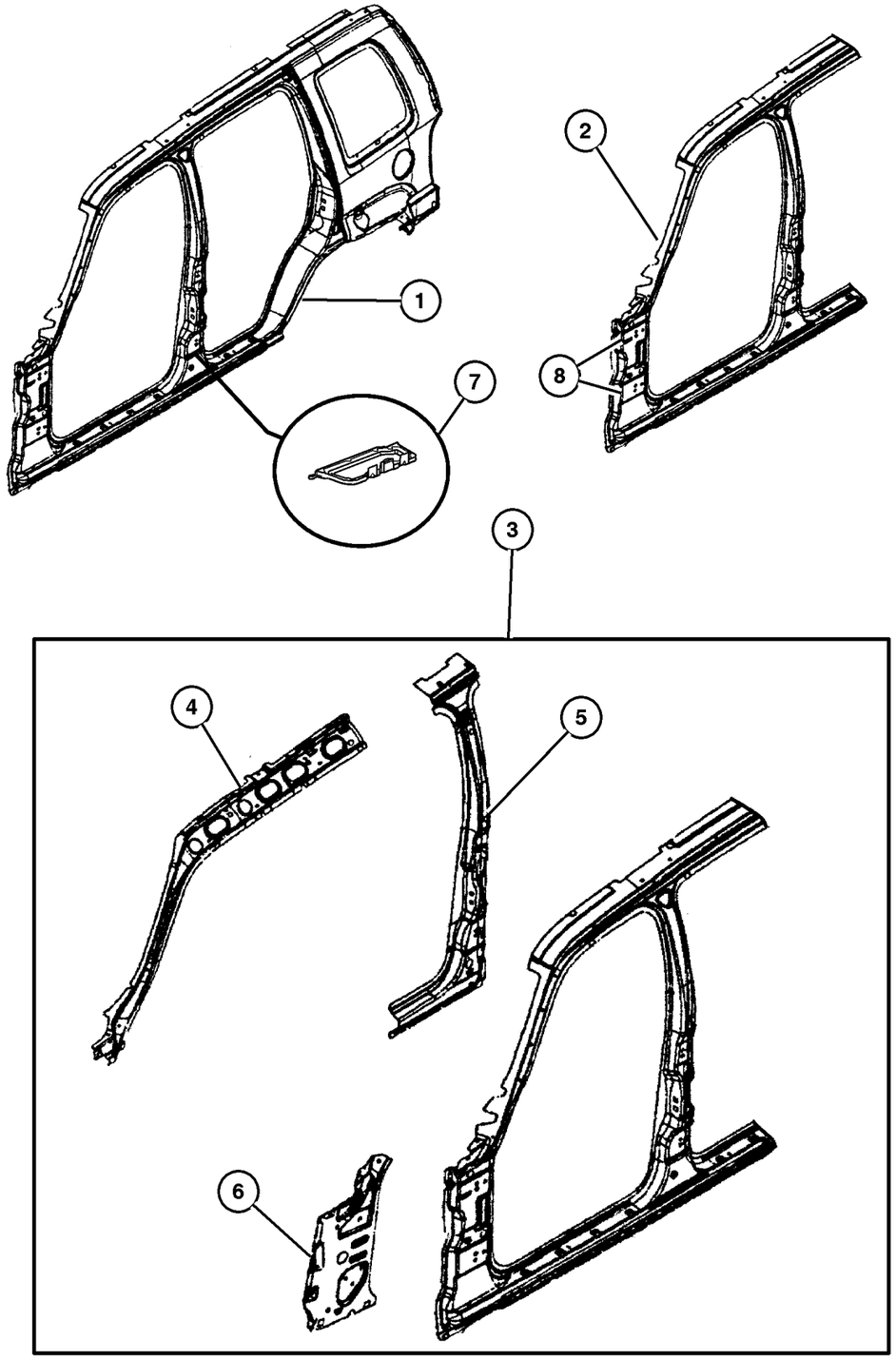

ITEM	PART NUMBER	QTY	LINE	SERIES	BODY	ENGINE	TRANS	TRIM	DESCRIPTION
1									APERTURE, Body Side, Complete
									Outer
	55176 962AD	1							Right
	55176 963AD	1							Left
2									PANEL PACKAGE, Body Side
									Aperture Front, Front Outer Only
	5072 890AB	1							Right
	5072 891AB	1							Left
3									PANEL PACKAGE, Body Side
									Aperture Front, Complete Inner and Outer Front
	5072 888AC	1							Right
	5072 889AC	1							Left
4									REINFORCEMENT, Front Pillar
	55176 960AH	1							Right
	55176 961AH	1							Left
5									REINFORCEMENT, Center Pillar
									Inner
	55176 966AF	1							Right
	55176 967AF	1							Left
6									PANEL, Cowl
	55177 400AD	1							Right
	55177 401AD	1							Left
7									BAFFLE, B Pillar
	55360 196AD	1							Right
	55360 197AD	1							Left
8	55360 233AC	4							TAPPING PLATE, Door Hinge

JEEP LIBERTY (KJ)

SERIES	LINE	BODY	ENGINE	TRANSMISSION
P = Limited	J = LHD (4WD)	74 = 4 Dr (104.3 WB)	ED1,ED0 = 2.4L Power Tech	DDK = 5 Speed HDManual
H = Sport	U = RHD (4WD)		EKG,EK0 = 3.7L Power Tech	DDD = 5 Speed HD Manual
M = Renegade	T = LHD (2WD)		ENJ = 2.5L 4Cyl Turbo Diesel	DG4,DGQ = Multi-Speed Auto
			ENR = 2.8L 4Cyl Turbo Diesel	DG6 = 4 Speed Auto Transm
			EN0 = 4Cyl Turbo Diesel	DG0 = All Automatic Transm
				DBB = All Manual Transm

Panels, Rear Quarter
Figure SKJ-910

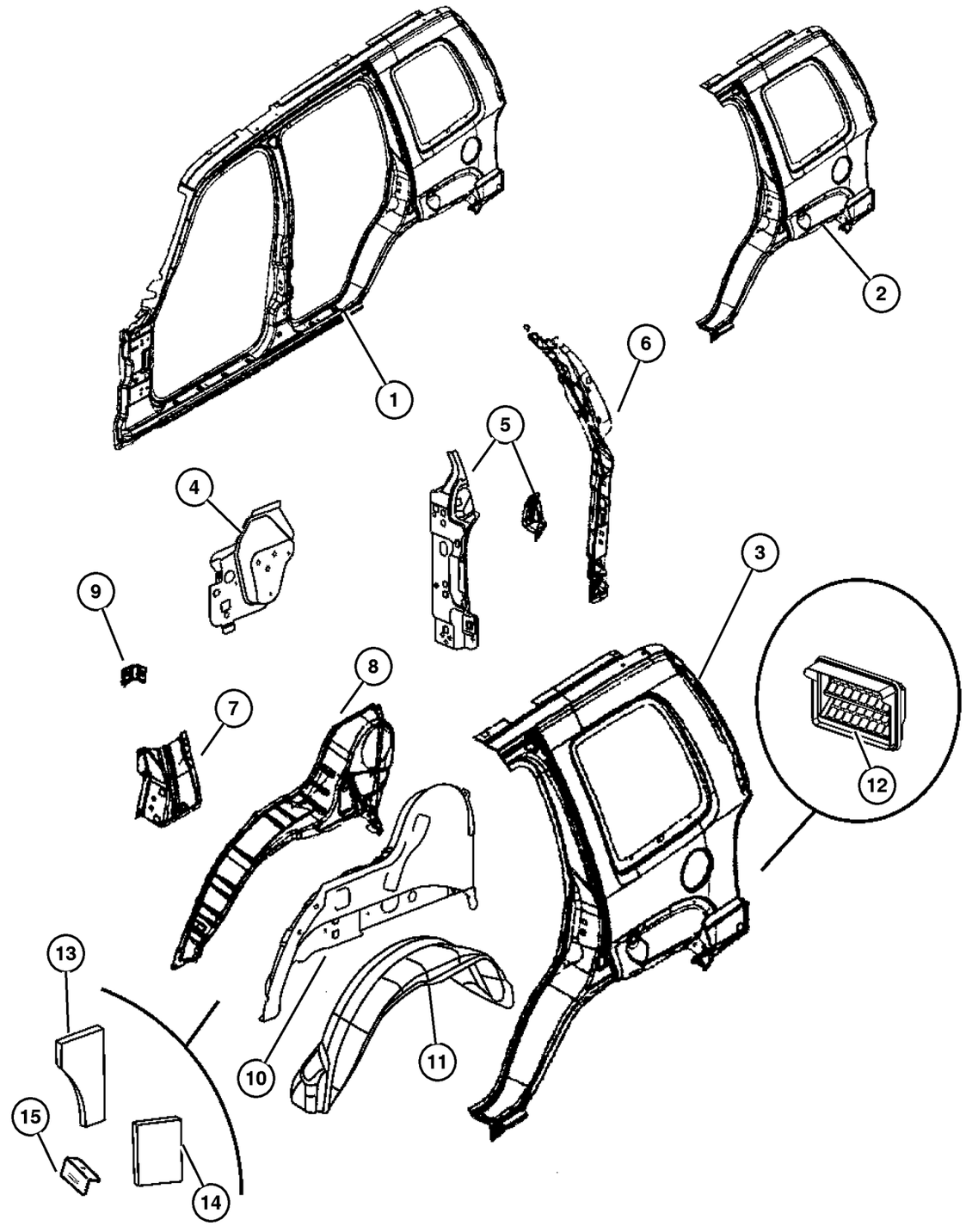

ITEM	PART NUMBER	QTY	LINE	SERIES	BODY	ENGINE	TRANS	TRIM	DESCRIPTION
1									APERTURE, Body Side, Complete Outer
	55176 962AD	1							Right
	55176 963AD	1							Left
2									PANEL, Quarter, Front Outer Only
	5072 884AB	1							Right
	5072 885AB	1							Left
3									PANEL, Quarter, Complete Inner And Outer
	5072 886AD	1							Right
	5072 887AD	1							Left
4									REINFORCEMENT, Seat Mount
	55360 298AB	1							Right
	55360 299AB	1							Left
5									PANEL, Taillamp Mounting
	55360 356AC	1							Right
	55360 452AB	1							Left
6									REINFORCEMENT, D Pillar Upper
	55360 354AB	1							Right
	55360 381AB	1							Left
7									REINFORCEMENT, Striker Assembly
	55360 624AB	1							Right
	55360 625AB	1							Left
8									PANEL, Rear Wheelhouse, Outer
	55177 012AD	1							Right
	55177 013AD	1							Left
9	55360 463AA	2							REINFORCEMENT, Shoulder Belt
10									WHEELHOUSE, Rear Inner
	55360 406AD	1							Right
	55360 407AD	1							Left
11									LINER, Fender Side
	55360 146AD	1							Right
	55360 147AD	1							Left
12	55037 458AB	2							EXHAUSTER, Quarter Panel
13	55352 854AA	1							INSULATION, Side Panel, Right Side,Upper
14	55352 846AA	1							INSULATION, Side Panel, Right Side,Lower
15	55136 998AC	1							BRACKET, Wheel House

JEEP LIBERTY (KJ)

SERIES	LINE	BODY	ENGINE	TRANSMISSION
P = Limited	J = LHD (4WD)	74 = 4 Dr (104.3 WB)	ED1,ED0 = 2.4L Power Tech	DDK = 5 Speed HDManual
H = Sport	U = RHD (4WD)		EKG,EK0 = 3.7L Power Tech	DDD = 5 Speed HD Manual
M = Renegade	T = LHD (2WD)		ENJ = 2.5L 4Cyl Turbo Diesel	DG4,DGQ = Multi-Speed Auto
			ENR = 2.8L 4Cyl Turbo Diesel	DG6 = 4 Speed Auto Transm
			EN0 = 4Cyl Turbo Diesel	DG0 = All Automatic Transm
				DBB = All Manual Transm

Fuel Filler Housing and Door
Figure SKJ-920

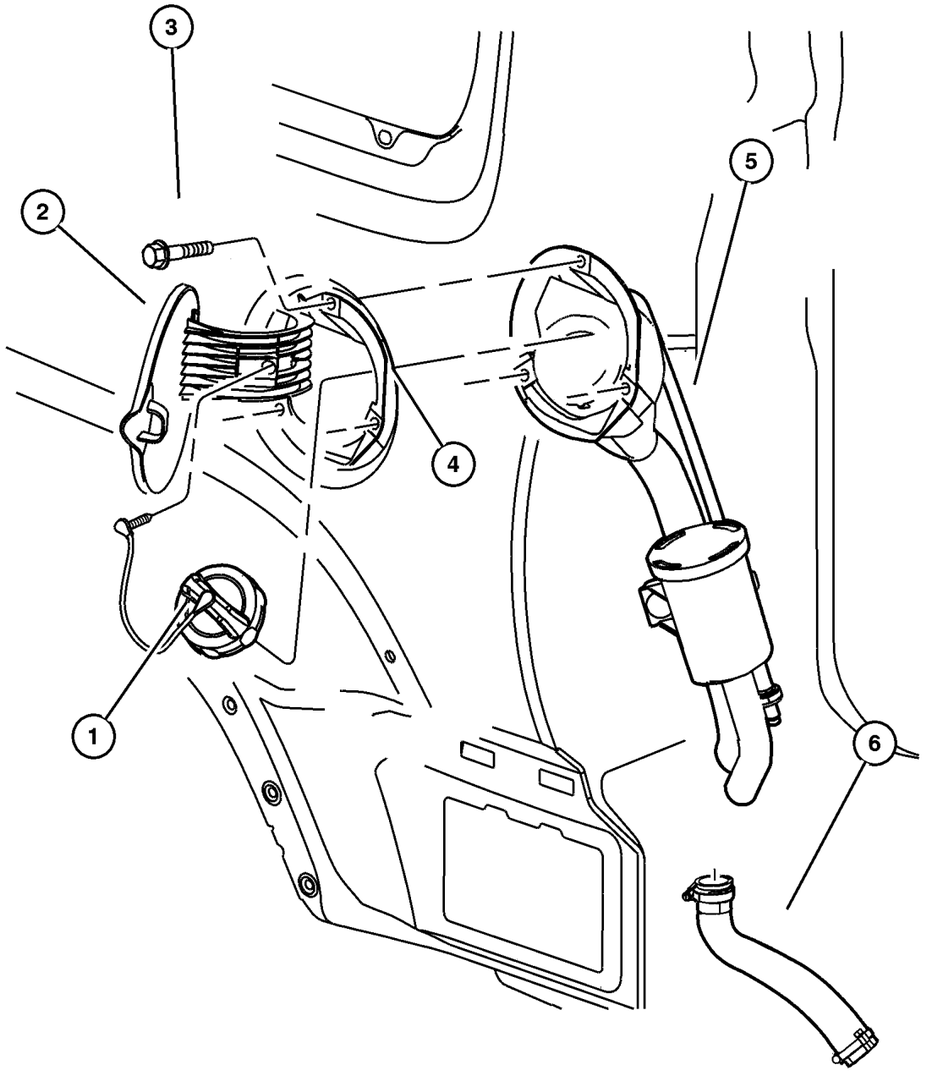

ITEM	PART NUMBER	QTY	LINE	SERIES	BODY	ENGINE	TRANS	TRIM	DESCRIPTION
1	5015 636AB	1							CAP KIT, Fuel Tank Locking
2	4674 991AG	1							DOOR, Fuel Filler Manual Access
3	6035 204	3							SCREW, Tapping, .19-16x.75
4	4716 571AD	1							HOUSING, Fuel Filler
5									TUBE, Fuel Filler
	#52128 640AB	1							
	#52128 641AB	1							Diesel
6	#52128 753AA	1							HOSE, Fuel Filler
-7	4716 532	1							SPRING, Fuel Filler Door

JEEP LIBERTY (KJ)

SERIES	LINE	BODY	ENGINE	TRANSMISSION
P = Limited	J = LHD (4WD)	74 = 4 Dr (104.3 WB)	ED1,ED0 = 2.4L Power Tech	DDK = 5 Speed HDManual
H = Sport	U = RHD (4WD)		EKG,EK0 = 3.7L Power Tech	DDD = 5 Speed HD Manual
M = Renegade	T = LHD (2WD)		ENJ = 2.5L 4Cyl Turbo Diesel	DG4,DGQ = Multi-Speed Auto
			ENR = 2.8L 4Cyl Turbo Diesel	DG6 = 4 Speed Auto Transm
			EN0 = 4Cyl Turbo Diesel	DG0 = All Automatic Transm
				DBB = All Manual Transm

AR = Use as required - = Non illustrated part # = New this model year

September 30, 2003

« RETURN TO GROUP INDEX

Roof Panel
Figure SKJ-1110

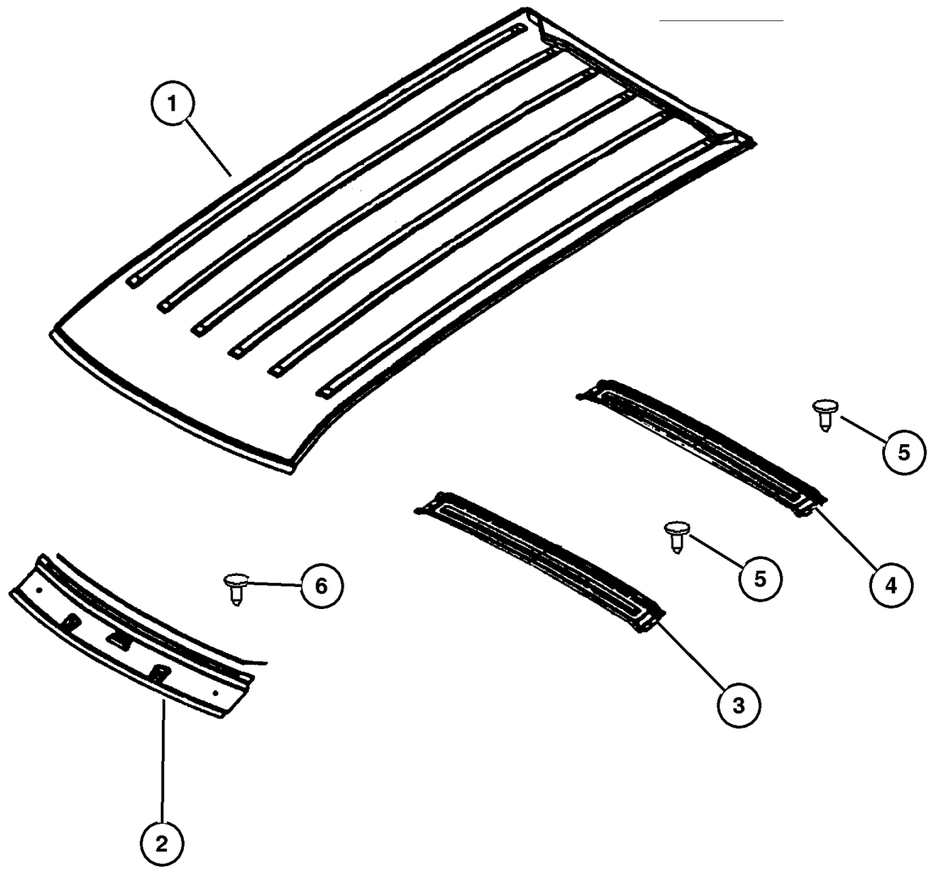

ITEM	PART NUMBER	QTY	LINE	SERIES	BODY	ENGINE	TRANS	TRIM	DESCRIPTION
1									PANEL, Roof
	55176 994AC	1							Without Sunroof
	55176 995AD	1							With Sunroof
2	55177 022AA	1							HEADER, Roof Front
3	55360 281AA	1							BOW, Roof, Without Sunroof
4	55176 998AA	1							BOW, Roof
5									PUSH PIN, M6.35x18.50, (NOT SERVICED) (Not Serviced)
6	6030 441	1							PIN, Retainer

JEEP LIBERTY (KJ)

SERIES	LINE	BODY	ENGINE	TRANSMISSION
P = Limited	J = LHD (4WD)	74 = 4 Dr (104.3 WB)	ED1,ED0 = 2.4L Power Tech	DDK = 5 Speed HDManual
H = Sport	U = RHD (4WD)		EKG,EK0 = 3.7L Power Tech	DDD = 5 Speed HD Manual
M = Renegade	T = LHD (2WD)		ENJ = 2.5L 4Cyl Turbo Diesel	DG4,DGQ = Multi-Speed Auto
			ENR = 2.8L 4Cyl Turbo Diesel	DG6 = 4 Speed Auto Transm
			EN0 = 4Cyl Turbo Diesel	DG0 = All Automatic Transm
				DBB = All Manual Transm

Sunroof
Figure SKJ-1210

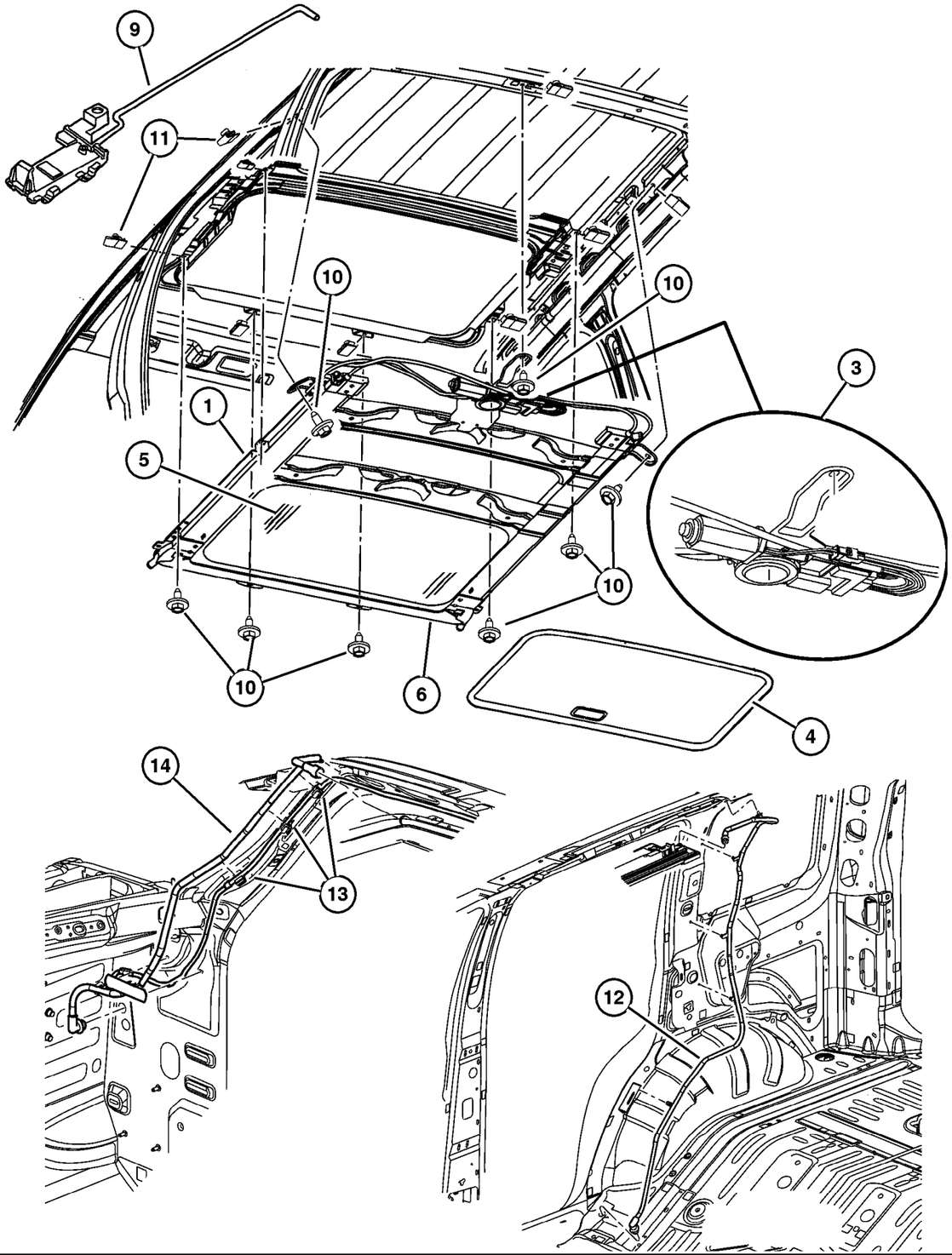

ITEM	PART NUMBER	QTY	LINE	SERIES	BODY	ENGINE	TRANS	TRIM	DESCRIPTION
1	5101 963AA	1							MODULE, Sunroof
-2	5066 895AB	1							DEFLECTOR, Sunroof Wind
3	5096 260AA	1							MOTOR, Sunroof, With Control Unit
4	UX06 TL2AA	1							SUNSHADE, Sunroof
5	5066 892AA	1							GLASS, Sunroof
6	5066 896AA	1							SEAL, Sunroof Glass
-7	UX09 TL2AA	1							TRIM LACE, Sunroof
-8	5101 961AA	1							WIRING, Sunroof
9	5066 433AB	1							GUIDE, Sunroof Track, Contains Right & Left Guides and 2 Push Nuts
10	6505 728AA	8							SCREW AND WASHER, Hex Head, M6x1x17
11	6506 035AA	10							NUT, U, M6x1
12									HOSE, Sunroof Drain, Rear
	55360 180AF	1							Right
	55360 181AF	1							Left
13	55360 393AA	3							CLIP, Hose
14									HOSE, Sunroof Drain, Front
	55360 178AB	1							Right
	55360 179AB	1							Left
-15	5101 844AA	1							BRACE, Frame, Water Trough

JEEP LIBERTY (KJ)

SERIES	LINE	BODY	ENGINE	TRANSMISSION
P = Limited	J = LHD (4WD)	74 = 4 Dr (104.3 WB)	ED1,ED0 = 2.4L Power Tech	DDK = 5 Speed HDManual
H = Sport	U = RHD (4WD)		EKG,EK0 = 3.7L Power Tech	DDD = 5 Speed HD Manual
M = Renegade	T = LHD (2WD)		ENJ = 2.5L 4Cyl Turbo Diesel	DG4,DGQ = Multi-Speed Auto
			ENR = 2.8L 4Cyl Turbo Diesel	DG6 = 4 Speed Auto Transm
			EN0 = 4Cyl Turbo Diesel	DG0 = All Automatic Transm
				DBB = All Manual Transm

AR = Use as required - = Non illustrated part # = New this model year

September 30, 2003

« RETURN TO GROUP INDEX

Swing Gate, Latch, and Hinges
Figure SKJ-1310

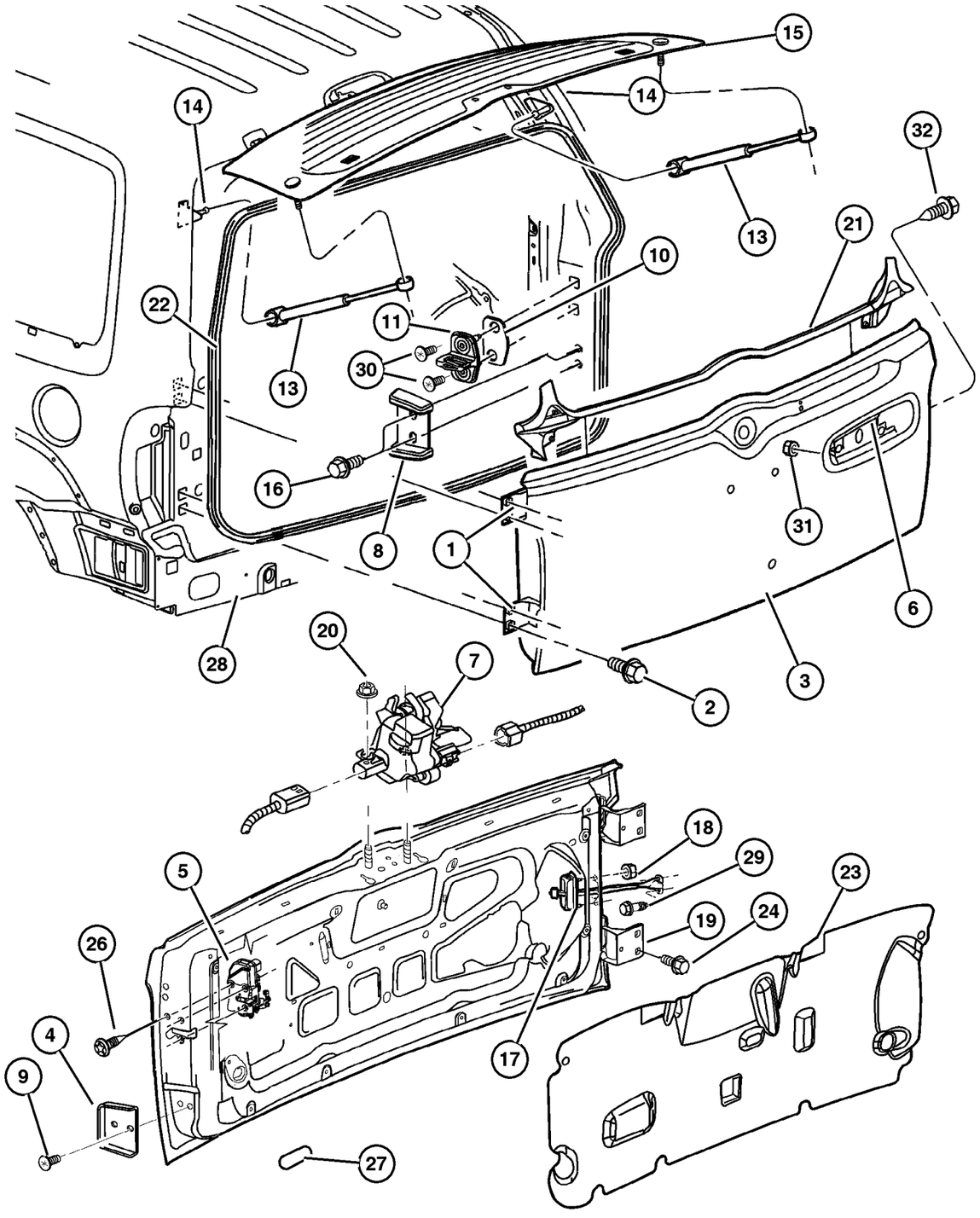

ITEM	PART NUMBER	QTY	LINE	SERIES	BODY	ENGINE	TRANS	TRIM	DESCRIPTION
Note: For Backlite Hinges and Associated Hardware, see Group SKJ Illustration 710									
1									HINGE, Liftgate
	52850 558AB	1							Upper
	52850 559AB	1							Lower
2									SCREW, M8X1.25X42.00 , (NOT SERVICED) (Not Serviced)
3	55176 934AF	1							PANEL, Tailgate
4	52850 562AG	1							BUMPER, Tailgate
5	55360 641AA	1							LATCH, Tailgate
6	5102 498AA	1							HANDLE, Exterior Tailgate
7	55360 357AC	1							LATCH, Liftgate Glass
8	55360 324AC	1							STABILIZER, Swing Gate
9	6507 128AA	2							SCREW AND WASHER, Hex Head, M6 x 1.00 x 26.5
10	5507 5483	AR							SPACER, Door Latch Striker
11	4878 826AA	1							STRIKER, Door
-12	6503 692	2							SCREW, M8-1.25
13	55360 171AB	2							GAS CYLINDER, Liftgate Glass
14	55360 394AC	2							BRACKET, Ballstud
15									BACKLITE, Note: For Backlite Hinges and Associated Hardware, see Group SKJ Illustration 710
	55360 340AP	1							Tinted
	55360 342AP	1							Privacy
16	6507 456AA	2							BOLT AND CONED WASHER, Hex Head, M6x20x14
17	55360 170AB	1							ARM, Cargo Door Check
18	6503 504	2							NUT AND WASHER, Hex, M6x1, Check Strap to Body
19									SCREW, Tapping, M6x1x20, (NOT SERVICED) (Not Serviced)
20	6503 102	2							NUT AND WASHER, Hex Nut-Coned Washer, M6 x 1.00
21	55360 065AB	1							WEATHERSEAL, Tailgate
22	55176 958AG	1							WEATHERSEAL, Tailgate
23	55360 309AB	1							WATERSHIELD, Liftgate Inner
24	6503 328	6							SCREW, Hex Head, M8x1.25x30
-25	4520 289	AR							SPACER, Door Latch Striker
26	6036 364AA	3							SCREW, Oval Head, Swing Gate Latch to Swing Gate
27	4646 527	2							PLUG, Deck Lid

JEEP LIBERTY (KJ)

SERIES	LINE	BODY	ENGINE	TRANSMISSION
P = Limited	J = LHD (4WD)	74 = 4 Dr (104.3 WB)	ED1,ED0 = 2.4L Power Tech	DDK = 5 Speed HDManual
H = Sport	U = RHD (4WD)		EKG,EK0 = 3.7L Power Tech	DDD = 5 Speed HD Manual
M = Renegade	T = LHD (2WD)		ENJ = 2.5L 4Cyl Turbo Diesel	DG4,DGQ = Multi-Speed Auto
			ENR = 2.8L 4Cyl Turbo Diesel	DG6 = 4 Speed Auto Transm
			EN0 = 4Cyl Turbo Diesel	DG0 = All Automatic Transm
				DBB = All Manual Transm

AR = Use as required - = Non illustrated part # = New this model year

September 30, 2003

« RETURN TO GROUP INDEX »

Swing Gate, Latch, and Hinges
Figure SKJ-1310

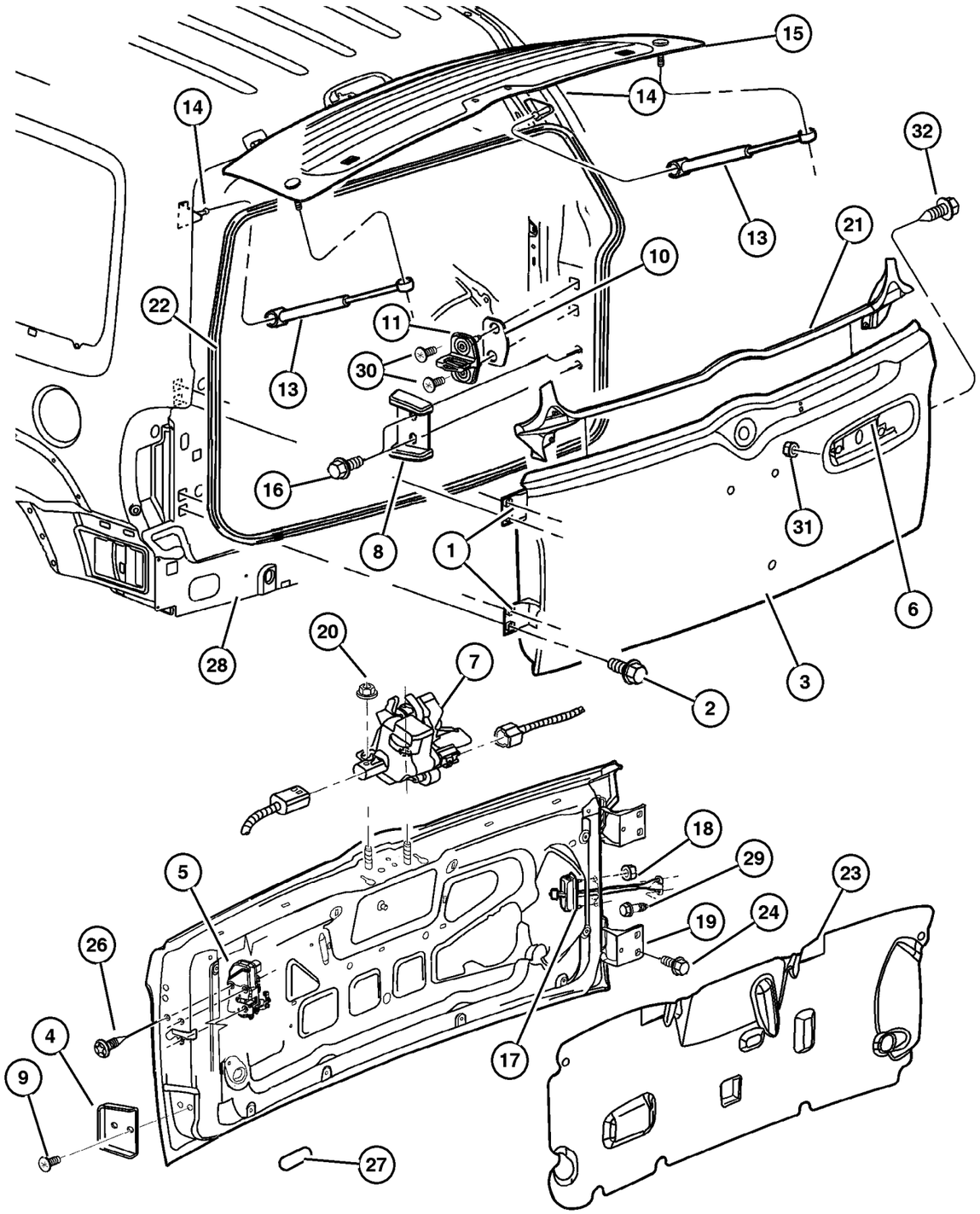

ITEM	PART NUMBER	QTY	LINE	SERIES	BODY	ENGINE	TRANS	TRIM	DESCRIPTION
28	55360 227AD	1							PANEL, Liftgate Opening, D-Ring Shaped, Contains Rear Gate Opening and Roof Header
29									SCREW, Hex Flange Head, M6x1.00x20, (NOT SERVICED) (Not Serviced)
30	6506 367AA	2							SCREW, M8-1.25
31	6503 226	2							NUT, Hex Flange, M5x.8
32	6507 011AA	2							SCREW

JEEP LIBERTY (KJ)

SERIES	LINE	BODY	ENGINE	TRANSMISSION
P = Limited	J = LHD (4WD)	74 = 4 Dr (104.3 WB)	ED1,ED0 = 2.4L Power Tech	DDK = 5 Speed HDManual
H = Sport	U = RHD (4WD)		EKG,EK0 = 3.7L Power Tech	DDD = 5 Speed HD Manual
M = Renegade	T = LHD (2WD)		ENJ = 2.5L 4Cyl Turbo Diesel	DG4,DGQ = Multi-Speed Auto
			ENR = 2.8L 4Cyl Turbo Diesel	DG6 = 4 Speed Auto Transm
			EN0 = 4Cyl Turbo Diesel	DG0 = All Automatic Transm
				DBB = All Manual Transm

Luggage Rack
Figure SKJ-1610

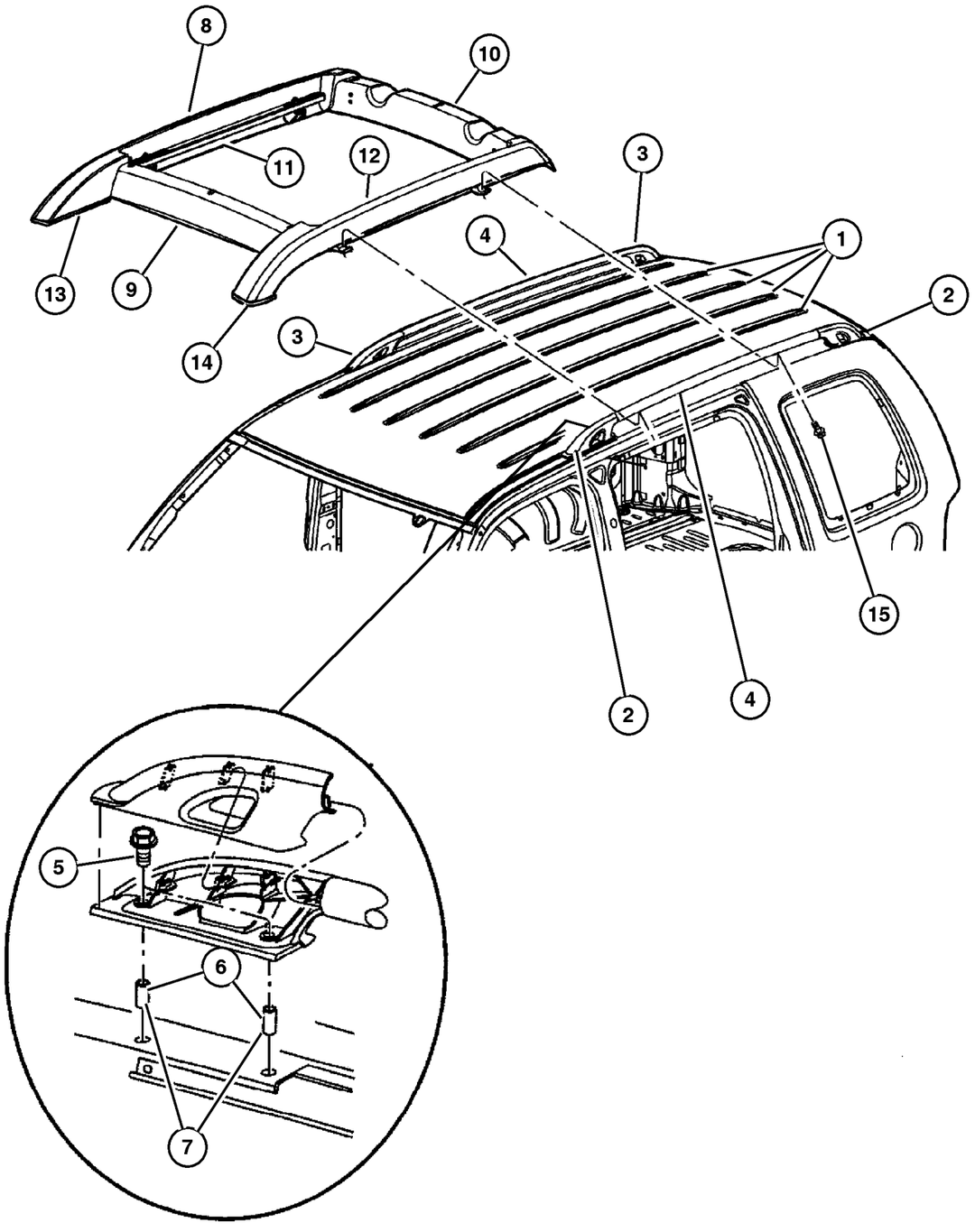

ITEM	PART NUMBER	QTY	LINE	SERIES	BODY	ENGINE	TRANS	TRIM	DESCRIPTION
Note: Production crossrails not used. See accessory catalog for crossrail package.									
1	55135 987AC	4							SKID STRIP, Roof Rack
2									COVER, Luggage Rack
	55360 425AE	1							Left,Front
	55360 427AC	1							Left,Rear
3									COVER, Luggage Rack
	55360 424AE	1							Right,Front
	55360 426AC	1							Right,Rear
4									RAIL, Luggage Rack Side
	55360 418AJ	1							Right
	55360 419AJ	1							Left
5	6507 086AA	8							SCREW
6	6503 245	6							RIVET
7	6506 489AA	2							RIVET
8									RAIL, Luggage Rack Side
	5JA16 RXFAC	1							Right
	5JA17 RXFAC	1							Left
9	5JA18 RXFAC	1							COVER, Front
10	5JA19 RXFAC	1							COVER, Rear
11	55156 586AC	1							CROSS RAIL, Roof Rack, Rear
12	55360 526AC	1							CROSS RAIL, Roof Rack, Front
13	55156 594AD	1							ISOLATOR, Right
14	55156 595AD	1							ISOLATOR, Left
15	6507 449AA	4							SCREW

JEEP LIBERTY (KJ)

SERIES	LINE	BODY	ENGINE	TRANSMISSION
P = Limited	J = LHD (4WD)	74 = 4 Dr (104.3 WB)	ED1,ED0 = 2.4L Power Tech	DDK = 5 Speed HDManual
H = Sport	U = RHD (4WD)		EKG,EK0 = 3.7L Power Tech	DDD = 5 Speed HD Manual
M = Renegade	T = LHD (2WD)		ENJ = 2.5L 4Cyl Turbo Diesel	DG4,DGQ = Multi-Speed Auto
			ENR = 2.8L 4Cyl Turbo Diesel	DG6 = 4 Speed Auto Transm
			EN0 = 4Cyl Turbo Diesel	DG0 = All Automatic Transm
				DBB = All Manual Transm

Group – LBLS

Labels All Vehicle Locations

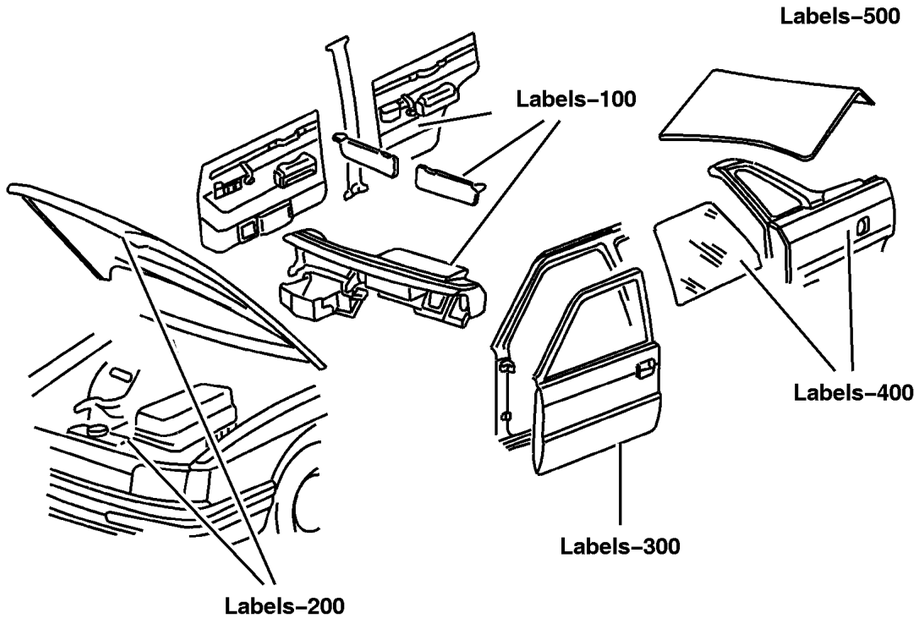

LBLS–100 Interior 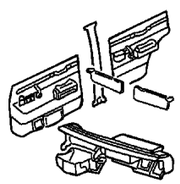	**LBLS–200** Under Hood 	**LBLS–300** Doors 	**LBLS–400** Exterior 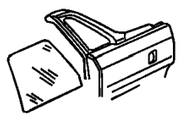
LBLS–500 Rear Cargo & Storage 			

GROUP LBLS - Labels All Vehicle Locations

Illustration Title — Group-Fig. No.

Interior
Instrument Panel, Visors & Trim . . . . . Fig. LBLS-110

Under Hood
Engine Compartment . . . . . Fig. LBLS-210

Doors
Door and Pillars . . . . . Fig. LBLS-310
Rear Glass . . . . . Fig. LBLS-320

Exterior
Fuel Door/Filler . . . . . Fig. LBLS-410

Rear Cargo & Storage
Jack Assembly . . . . . Fig. LBLS-510
Rear Cargo . . . . . Fig. LBLS-520

Instrument Panel, Visors & Trim
Figure LBLS-110

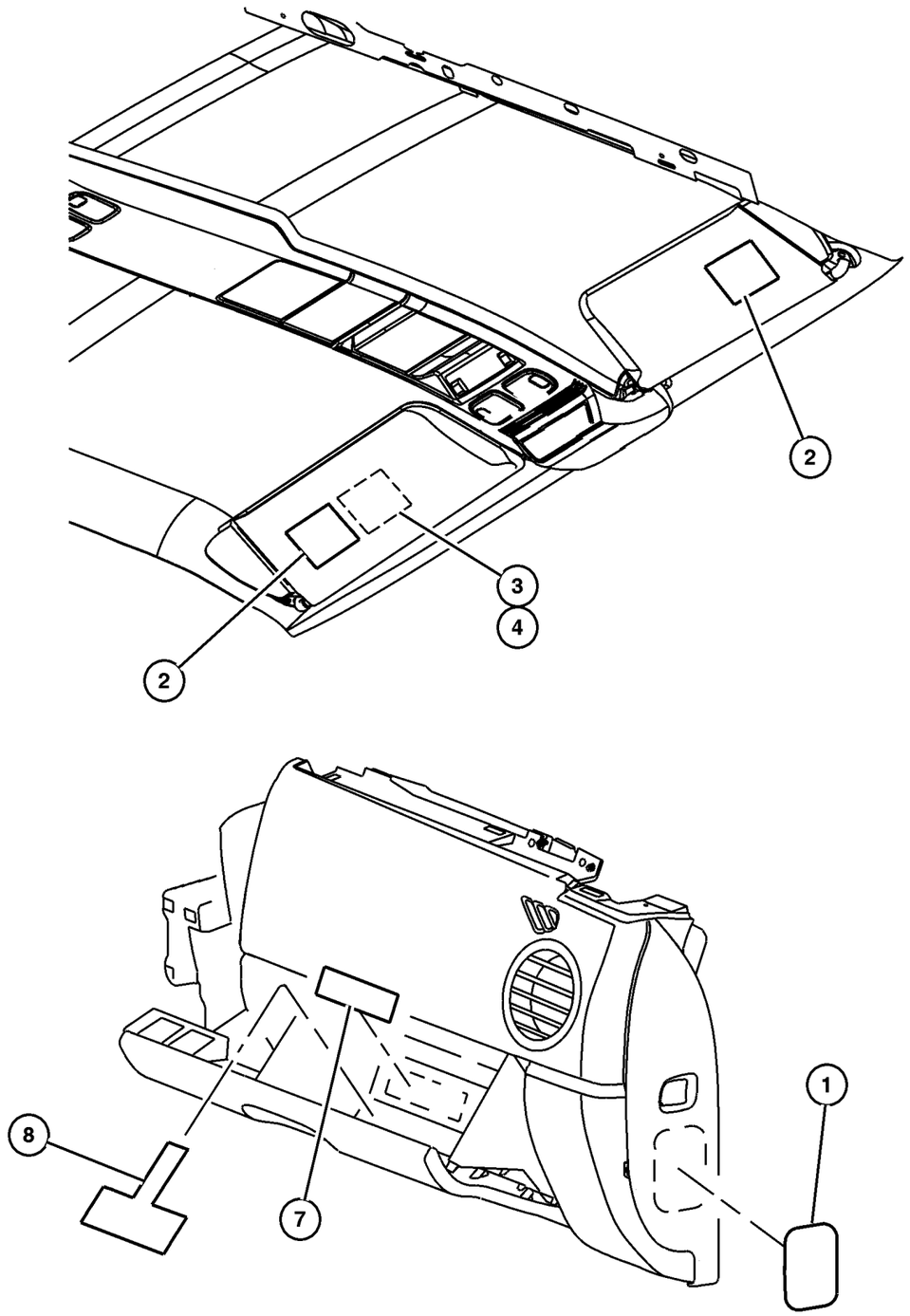

ITEM	PART NUMBER	QTY	LINE	SERIES	BODY	ENGINE	TRANS	TRIM	DESCRIPTION
1	4680 556AA	1							DECAL, Seat Belt Safety
2									LABEL, Air Bag Warning
	4787 437AA	2							English-French
	5023 548AA	2							English-Arabic
	4649 281AA	4							Seat Side (English-French)
	4664 294AA	1							Side (English-Arabic)
	5023 540AA	2							Sun Visor (English-French)
	5023 543AA	2							Sun Visor (English-Italian)
	5023 743AA	2							Sun Visor (English-German)
3	53015 958AA	1							LABEL, Rollover Risk, English-Arabic
4	55352 825AA	1							LABEL, Visor Warning, Rollover Risk, English-French
-5									LABEL, Air Bag Warning, Spanish, (NOT SERVICED) (Not Serviced)
-6	4897 875AA	2							LABEL, Airbag, Visor
7									LABEL, Tire Pressure
	52088 962AB	1							USA / Mexico / Canada
	52088 963AB	1							United Kingdom (English)
	52128 593AB	1							Canada (French-English)
8									LABEL, Limited Warranty, (NOT SERVICED) (Not Serviced)
-9	56042 844AD	1							LABEL, General Information, Sticker Sheet

JEEP LIBERTY (KJ)

SERIES	LINE	BODY	ENGINE	TRANSMISSION
P = Limited	J = LHD (4WD)	74 = 4 Dr (104.3 WB)	ED1,ED0 = 2.4L Power Tech	DDK = 5 Speed HDManual
H = Sport	U = RHD (4WD)		EKG,EK0 = 3.7L Power Tech	DDD = 5 Speed HD Manual
M = Renegade	T = LHD (2WD)		ENJ = 2.5L 4Cyl Turbo Diesel	DG4,DGQ = Multi-Speed Auto
			ENR = 2.8L 4Cyl Turbo Diesel	DG6 = 4 Speed Auto Transm
			EN0 = 4Cyl Turbo Diesel	DG0 = All Automatic Transm
				DBB = All Manual Transm

AR = Use as required - = Non illustrated part # = New this model year

September 30, 2003

« RETURN TO GROUP INDEX

Engine Compartment
Figure LBLS-210

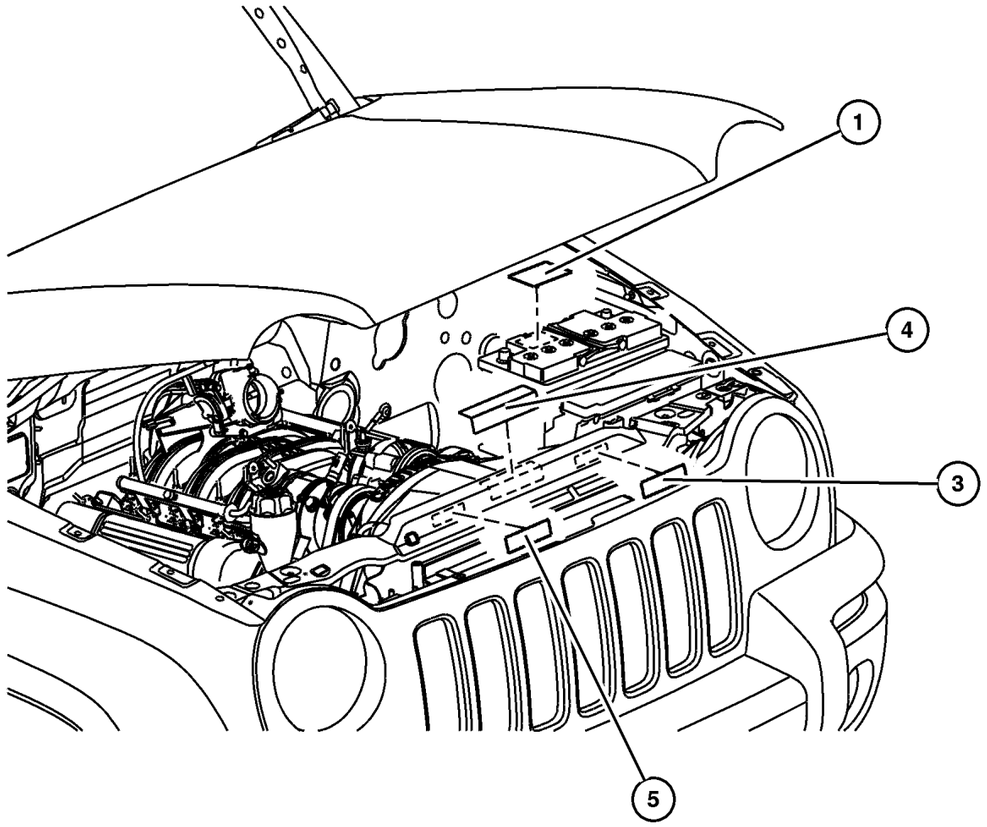

ITEM	PART NUMBER	QTY	LINE	SERIES	BODY	ENGINE	TRANS	TRIM	DESCRIPTION
Notes:									
[ED0] = 2.4L 4 Cylinder Engine									
[EK0] = 3.7L V6 Cylinder Engine									
[EN0] = 2.5L Diesel									
1									LABEL, Battery
	4793 062	1				ED0, EK0			Warning, European Equipment
	5604 1046	1							French
-2	5604 1047	1							LABEL, Battery Jump Start, French
3									LABEL, Belt Routing
	53014 005AA	1				EN0			Diesel
	5303 0960	1				EK0			Six Cylinder Gas
	53031 758AA	1				ED0			Four Cylinder Gas
4									LABEL, Emission, (NOT SERVICED) (Not Serviced)
5									LABEL, Refrigerant
	55037 464AD	1							
	55037 708AA	1							French
-6	52128 784AA	1							LABEL, Warning, Brake Fluid (Arabic)

JEEP LIBERTY (KJ)

SERIES	LINE	BODY	ENGINE	TRANSMISSION
P = Limited	J = LHD (4WD)	74 = 4 Dr (104.3 WB)	ED1,ED0 = 2.4L Power Tech	DDK = 5 Speed HDManual
H = Sport	U = RHD (4WD)		EKG,EK0 = 3.7L Power Tech	DDD = 5 Speed HD Manual
M = Renegade	T = LHD (2WD)		ENJ = 2.5L 4Cyl Turbo Diesel	DG4,DGQ = Multi-Speed Auto
			ENR = 2.8L 4Cyl Turbo Diesel	DG6 = 4 Speed Auto Transm
			EN0 = 4Cyl Turbo Diesel	DG0 = All Automatic Transm
				DBB = All Manual Transm

Door and Pillars
Figure LBLS-310

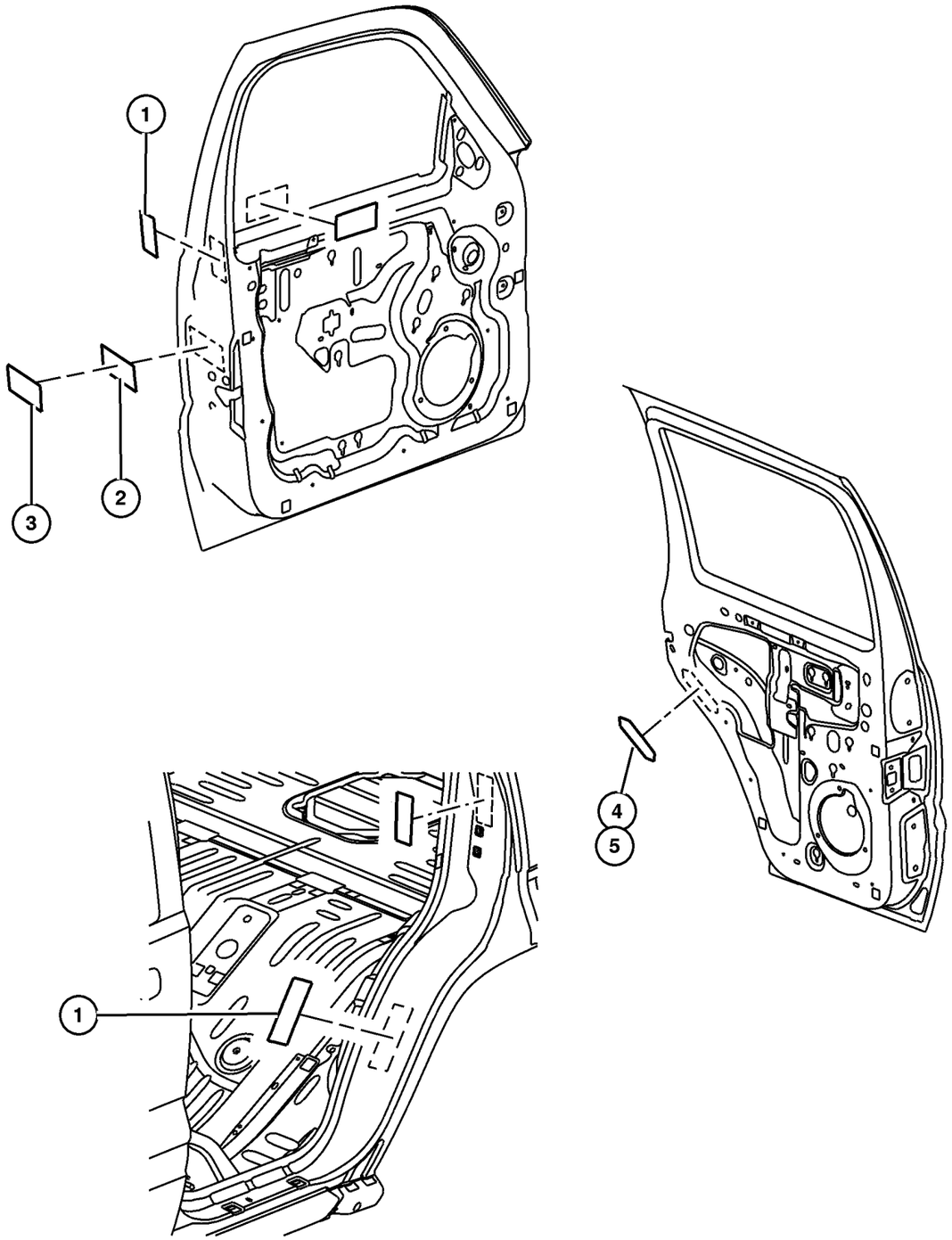

ITEM	PART NUMBER	QTY	LINE	SERIES	BODY	ENGINE	TRANS	TRIM	DESCRIPTION
1	4649 282AA	4							LABEL, Air Bag Warning
2									LABEL, Certification, (NOT SERVICED) (Not Serviced)
3									OVERLAY, Vehicle Certification
	4040 858	1							
		1							
		1							
4									LABEL, Child Protection Lock, English
	4780 544AA	1							Right
	4780 545AA	1							Left
5									LABEL, Child Protection Lock, French
	4780 546AC	1							Right
	4780 547AC	1							Left
-6	53015 960AA	1							LABEL, Exhaust Gas Warning, English & Arabic

JEEP LIBERTY (KJ)

SERIES	LINE	BODY	ENGINE	TRANSMISSION
P = Limited	J = LHD (4WD)	74 = 4 Dr (104.3 WB)	ED1,ED0 = 2.4L Power Tech	DDK = 5 Speed HDManual
H = Sport	U = RHD (4WD)		EKG,EK0 = 3.7L Power Tech	DDD = 5 Speed HD Manual
M = Renegade	T = LHD (2WD)		ENJ = 2.5L 4Cyl Turbo Diesel	DG4,DGQ = Multi-Speed Auto
			ENR = 2.8L 4Cyl Turbo Diesel	DG6 = 4 Speed Auto Transm
			EN0 = 4Cyl Turbo Diesel	DG0 = All Automatic Transm
				DBB = All Manual Transm

Rear Glass
Figure LBLS-320

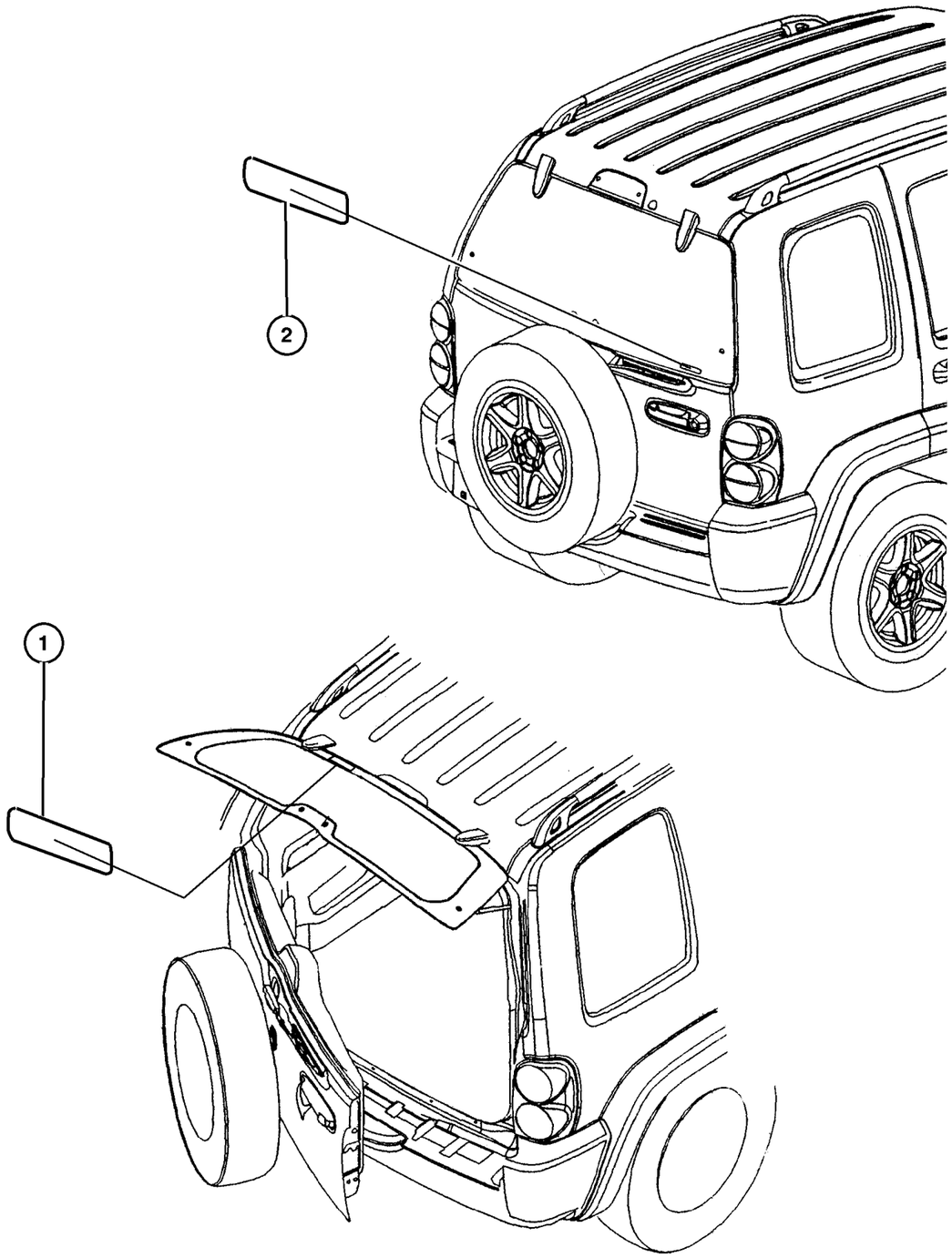

ITEM	PART NUMBER	QTY	LINE	SERIES	BODY	ENGINE	TRANS	TRIM	DESCRIPTION
1									LABEL, Flipper Glass, Warning
	55360 573AA	1							Tinted Glass, French
	55360 582AA	1							Privacy Glass, French
	55360 583AA	1							Privacy Glass, Mideast Equipment
2	#5056 223AA	1							LABEL, Warning, Exhaust Gas

JEEP LIBERTY (KJ)

SERIES	LINE	BODY	ENGINE	TRANSMISSION
P = Limited	J = LHD (4WD)	74 = 4 Dr (104.3 WB)	ED1,ED0 = 2.4L Power Tech	DDK = 5 Speed HDManual
H = Sport	U = RHD (4WD)		EKG,EK0 = 3.7L Power Tech	DDD = 5 Speed HD Manual
M = Renegade	T = LHD (2WD)		ENJ = 2.5L 4Cyl Turbo Diesel	DG4,DGQ = Multi-Speed Auto
			ENR = 2.8L 4Cyl Turbo Diesel	DG6 = 4 Speed Auto Transm
			EN0 = 4Cyl Turbo Diesel	DG0 = All Automatic Transm
				DBB = All Manual Transm

Fuel Door/Filler
Figure LBLS-410

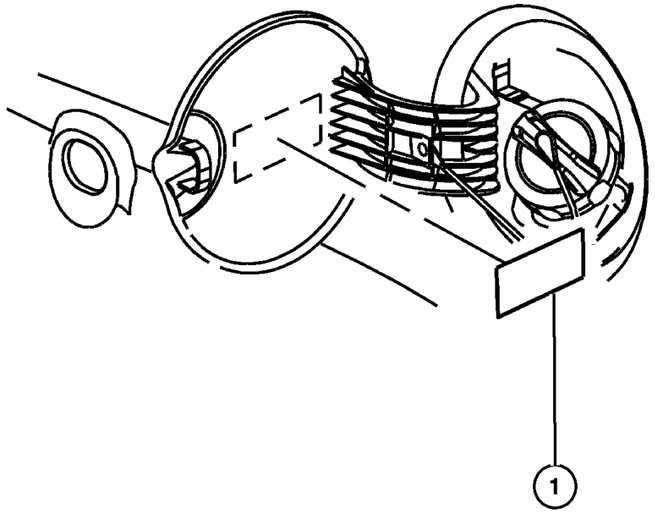

ITEM	PART NUMBER	QTY	LINE	SERIES	BODY	ENGINE	TRANS	TRIM	DESCRIPTION
1									LABEL, Fuel
	5529 5856	1				ED0, EK0			Gas Only
	J546 4900	1				EN0			Diesel

JEEP LIBERTY (KJ)

SERIES	LINE	BODY	ENGINE	TRANSMISSION
P = Limited	J = LHD (4WD)	74 = 4 Dr (104.3 WB)	ED1,ED0 = 2.4L Power Tech	DDK = 5 Speed HDManual
H = Sport	U = RHD (4WD)		EKG,EK0 = 3.7L Power Tech	DDD = 5 Speed HD Manual
M = Renegade	T = LHD (2WD)		ENJ = 2.5L 4Cyl Turbo Diesel	DG4,DGQ = Multi-Speed Auto
			ENR = 2.8L 4Cyl Turbo Diesel	DG6 = 4 Speed Auto Transm
			EN0 = 4Cyl Turbo Diesel	DG0 = All Automatic Transm
				DBB = All Manual Transm

Jack Assembly
Figure LBLS-510

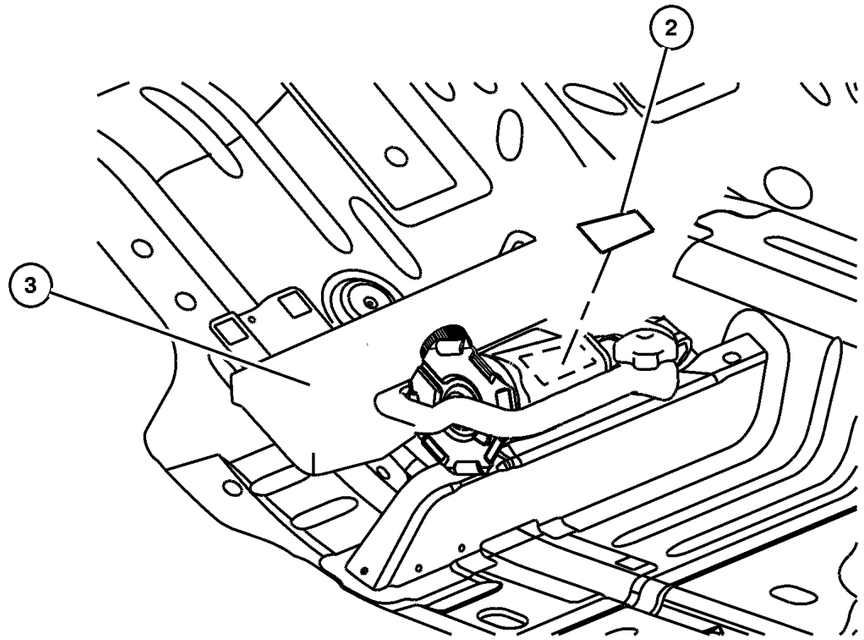

ITEM	PART NUMBER	QTY	LINE	SERIES	BODY	ENGINE	TRANS	TRIM	DESCRIPTION
-1	52059 371AA	1							LABEL, Jack Instructions, Australia Group
2	52110 391AA	1							LABEL, Australia Group, Jack Carrier
3									LABEL, Jack Caution
	#52110 392AB	1							French
		1							French
	#52110 400AB	1							Arabic
	52110 391AB	1							English

JEEP LIBERTY (KJ)

SERIES	LINE	BODY	ENGINE	TRANSMISSION
P = Limited	J = LHD (4WD)	74 = 4 Dr (104.3 WB)	ED1,ED0 = 2.4L Power Tech	DDK = 5 Speed HDManual
H = Sport	U = RHD (4WD)		EKG,EK0 = 3.7L Power Tech	DDD = 5 Speed HD Manual
M = Renegade	T = LHD (2WD)		ENJ = 2.5L 4Cyl Turbo Diesel	DG4,DGQ = Multi-Speed Auto
			ENR = 2.8L 4Cyl Turbo Diesel	DG6 = 4 Speed Auto Transm
			EN0 = 4Cyl Turbo Diesel	DG0 = All Automatic Transm
				DBB = All Manual Transm

Rear Cargo
Figure LBLS-520

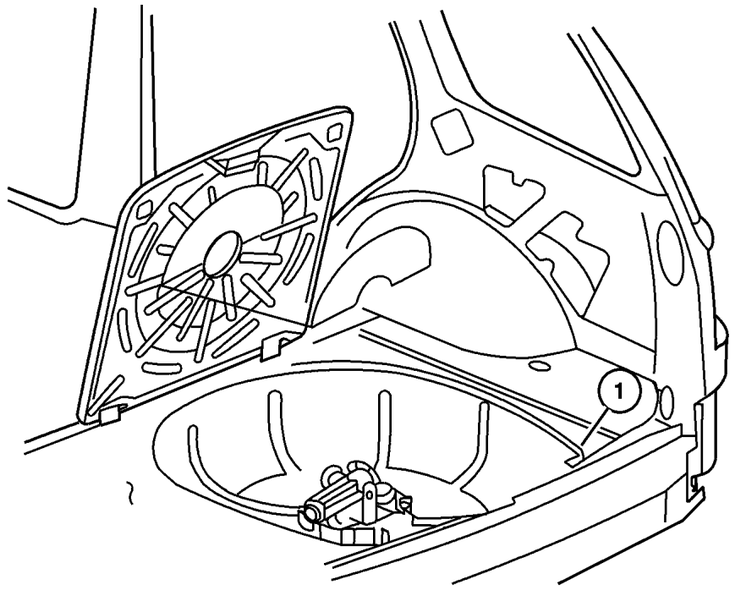

ITEM	PART NUMBER	QTY	LINE	SERIES	BODY	ENGINE	TRANS	TRIM	DESCRIPTION
1									LABEL, Warning
	#55352 890AA	1							Cargo Organizer (French)
	#55352 891AA	1							Cargo Organizer (Arabic)

JEEP LIBERTY (KJ)

SERIES	LINE	BODY	ENGINE	TRANSMISSION
P = Limited	J = LHD (4WD)	74 = 4 Dr (104.3 WB)	ED1,ED0 = 2.4L Power Tech	DDK = 5 Speed HDManual
H = Sport	U = RHD (4WD)		EKG,EK0 = 3.7L Power Tech	DDD = 5 Speed HD Manual
M = Renegade	T = LHD (2WD)		ENJ = 2.5L 4Cyl Turbo Diesel	DG4,DGQ = Multi-Speed Auto
			ENR = 2.8L 4Cyl Turbo Diesel	DG6 = 4 Speed Auto Transm
			EN0 = 4Cyl Turbo Diesel	DG0 = All Automatic Transm
				DBB = All Manual Transm