SECTION BT

CONTENTS

PRECAUTIONS

Precautions 3

WINDSHIELD GLASS • WINDSHIELD MOLDING

Removal • Installation 5

REAR WINDOW GLASS • REAR WINDOW MOLDING

Removal • Installation 9

FRONT DOOR GLASS AND REGULATOR

Removal • Installation 12

REAR DOOR GLASS AND REGULATOR

Removal • Installation 14

DOOR MIRROR

Removal • Installation 17

Disassembly • Assembly 17

INSIDE MIRROR

Removal • Installation 19

FRONT BUMPER

Removal • Installation 20

REAR BUMPER

Removal • Installation 21

FRONT GRILLE

Removal • Installation 22

COWL TOP COVER

Removal • Installation 23

FENDER PROTECTOR

Removal • Installation 24

WINDSHIELD MOLDING

Removal • Installation 25

DOOR OUTSIDE MOLDING

Removal • Installation 26

SIDE GUARD MOLDING

Removal • Installation 27

FRONT BUMPER COVER

Removal • Installation 28

HEADLAMP/TURN SIGNAL LAMP

Removal • Installation 29

REAR COMBINATION/REAR FOG LAMP

Removal • Installation 30

REAR MUD GUARD

Removal • Installation 31

DOOR TRIM

Removal • Installation 32

BODY SIDE TRIM

Removal • Installation 34

CONTENTS

REAR PARTIAL SELF FINISHER

Removal • Installation 35

FLOOR TRIM

Removal • Installation 36

HEAD LINING

Removal • Installation 37

TRUNK TRIM AND TRUNK LID TRIM

Removal • Installation 39

INSTRUMENT ASSEMBLY

Components Diagram 40

Removal • Installation 41

Disassembly • Assembly 46

FRONT SEAT

Components Diagram 47

Removal • Installation of Front Seat Assembly ... 48

Disassembly • Assembly of Seatback 49

REAR SEAT

Removal • Installation 52

HOOD

Assembly Dimension Adjustment 53

Removal • Installation of Hood Assembly 54

Removal • Installation of Hood Lock Control 55

Hood Lock Control Inspection 56

DOOR

Door Assembly Dimension Adjustment 57

Removal • Installation 58

FRONT DOOR LOCK

Components Diagram 59

Removal • Installation 59

Disassembly • Assembly 61

REAR DOOR LOCK

Components Diagram 62

Removal • Installation 62

TRUNK LID

Assembly Dimension Adjustment 64

Removal • Installation of Trunk Lid Assembly 65

Removal • Installation of Torsion Bar 66

Removal • Installation of Trunk Lid Welt Strip 67

TRUNK LID & FUEL FILLER LID OPENER

Components Location 68

BODY ALIGNMENT

Description 69

Engine Compartment 70

Underbody 72

Passenger Compartment 74

Rear Body 76

Precautions

Precautions for Supplemental Restraint System (SRS) "AIR BAG" and "SEAT BELT PRE-TENSIONER"

The Supplemental Restraint System such as "AIR BAG" and "SEAT BELT PRE-TENSIONER", used along with a front seat belt, helps to reduce the risk or severity of injury to the driver and front passenger for certain types of collision. Information necessary to service the system safely is included in the RS section of this Service Manual.

WARNING:

- **To install/remove the SRS airbag, pretensioner seatbelt system related components and harness, turn the ignition switch "OFF", disconnect the battery terminals and wait over 3 minutes. (This is to discharge all the remaining electricity in the airbag sensor unit's auxiliary power circuit.)**
- **Do not use air impact or electrical tools when installing/removing the components.**
- **Do not use any hand-held tools for harness used in SRS airbag and pretensioner seatbelt systems. Be careful with the harness not to tangle with or interfere with other components.**
- **Do not use any electrical test equipments such as circuit tester when inspecting the SRS airbag and pretensioner seatbelt circuit while installed unless the Service Manual instructs to do so. (The weak current in the tester can cause the SRS airbag to operate.)**
- **Do not insert any foreign materials such as a screwdriver in the airbag module and pretensioner seatbelt connector in order to prevent unintended operation due to static electricity.**
- **The harnesses used in SRS airbag and pretensioner are covered with yellow insulation for easy identification.**
- **Refer to "RS Restraint System" in this Service Manual for safe airbag system service information.**

Sealant and Primer Handing

- Use the sealant less than 6 months from the manufacturing date.
- Store the primer and sealant in cool and shaded area.
- Open the primer and sealant container right before using it. Do not reuse the remaining.
- Always shake the primer container before using it. Do not use it if foreign particles are floating on.
- If primer or sealant touches the skin, quickly wipe out with white gasoline and clean with soap.
- In addition to above cautions, always follow the instructions on the container.

Caution in Service

- Be careful not to damage or deform the components during removal and disassembly. Protect the components that interfere with the other components in service with cloth.
- Protect the components by covering with a cloth or vinyl tape when removing the components using a screwdriver (When removing the components that are engaged each other).
- Store the removed components safely with a cloth.
- Replace the clip if deformed or damaged.
- For the components that are not allowed reuse, always replace them with new if removed.
- Tighten the bolts and nuts to the specified torque.
- After assembling, check if every component operates properly.
- Remove the dirt as follows:
  - If watersoluble: Clean the polluted are with cloth dampened in warm water and wipe out with a soft dry cloth.
  - If oilsoluble: Clean the polluted are with cloth dampened in warm water with mild soap (2 - 3 % of concentration). Remove the soap with cloth dampened in clean water and then wipe out with a soft dry cloth.
- Do not use any organic detergent such as thinner, benzene, alcohol and gasoline.

MEMO:

Windshield Glass • Windshield Molding

Removal • Installation

REMOVAL

1. Remove the front pillar garnish and head lining front end.
2. Remove the front pillar weatherstrip.
3. Remove the windshield side molding.
4. Remove the cowl top cover.
5. Put the protector tape around the windshield glass to prevent from scratching the body surface.
6. Cut the molding surface using a cutter knife following the glass line.

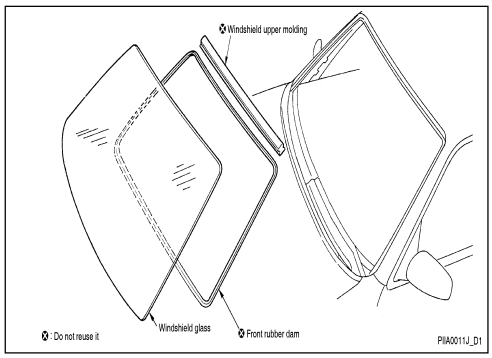

7. Pull out and completely remove the molding remaining at the body flange using pliers.

   When reusing the windshield glass, put an alignment mark on the body and the glass.
8. Cut the sealant.

   Perform as below according to using tools.

CAUTION:

When reusing the windshield glass, do not use the windshield knife. (Glass may be damaged.)

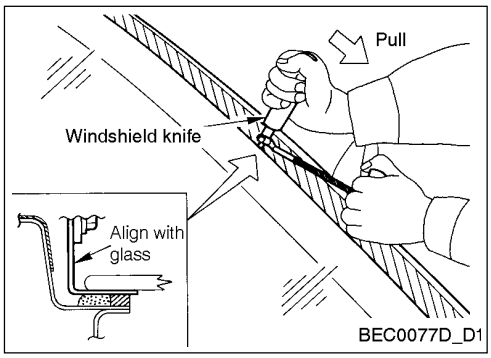

a. When using the windshield knife (When replacing the glass)
   i. Apply some soap solution on the body side sealant for easy windshield knife operation.
   ii. Insert the windshield knife into the sealant and adjust the knife parallel to the glass and cut the sealant by pulling the knife.

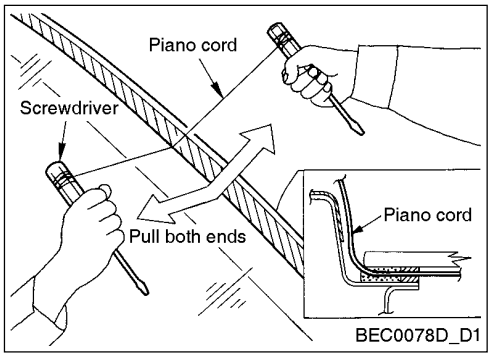

b. When using the piano cord (When reusing the glass)
   i. Perforate a hole using a gimlet or cutter to the glass sealant from the inside of the vehicle.
   ii. Insert the piano cord into the hole from the inside of the vehicle and connect the both cord ends with screwdrivers.
   iii. By pulling the both ends of the piano cord (one inside and one outside of the vehicle), cut the sealant following the glass line.

CAUTION:

- **Strongly contact the piano cord onto the glass edge.**
- **Insert copper plates to prevent the piano cord from touching the instrument panel.**

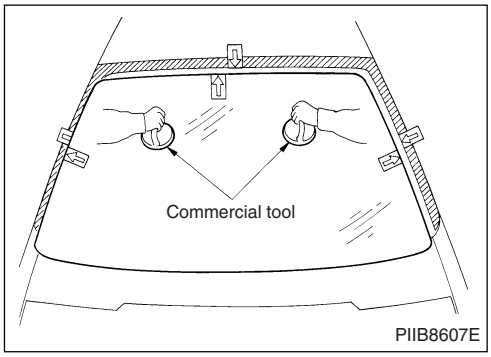

9. Using the glass holder (commercial tool), remove the glass from the vehicle.

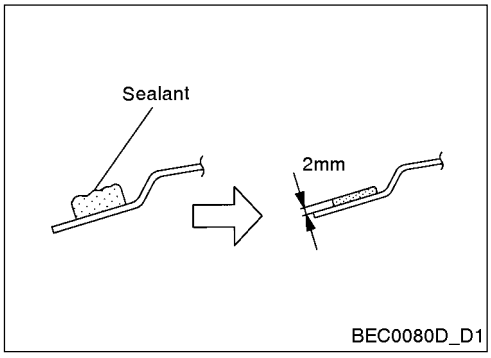

INSTALLATION

1. Cut the remaining sealant evenly leaving the 2 mm thickness using a knife.

CAUTION:

- **When the body side is damaged, always repair with 2-fluid type urethane paint. Do not use the lacquer paint.**

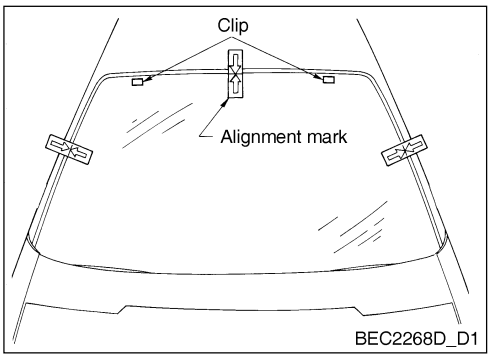

2. Put the clip to the clip holes on the vehicle.
3. For new glass installation, place the glass onto the vehicle, mark the alignment marks on the body and the glass and remove the glass again.
4. For the reused glass, cut the remainder evenly with a knife.
5. Wipe out the glass's sealant surfaces and upper molding installation surface with white gasoline.

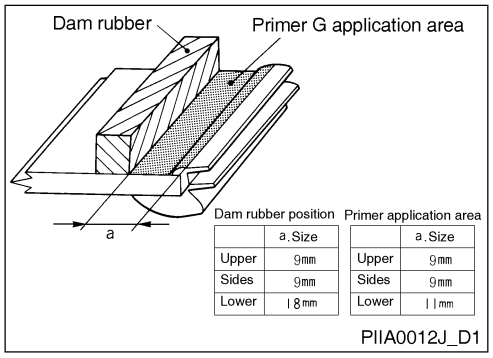

Dam rubber position

	a.Size
Upper	9mm
Sides	9mm
Lower	18mm

Primer application area

	a.Size
Upper	9mm
Sides	9mm
Lower	11mm

6. Stick the dam rubber on the glass as shown in the illustration by centering center below point.
7. Apply the primer.

REFERENCE:

- **The primer is very important since it strengthens the sealing effect between the glass and the body surface.**

CAUTION:

- **There are 2 types of primers. Be careful not to confuse between the two.**

  Primer M: For body surface.

  Primer G: For glass.
- Apply the primer G around the glass following the instructions.

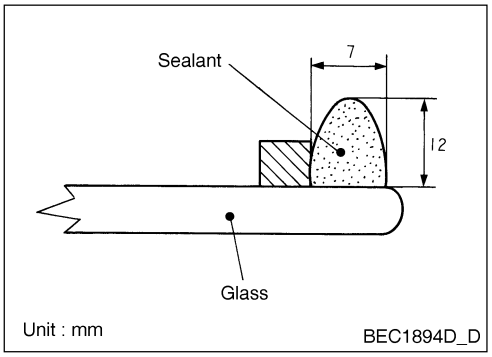

8. Apply the primer M on the vehicle surface.

CAUTION:

- **When primer M stains on the body surface besides the sealant surface, quickly wipe it out with white gasoline.**
- **Insert copper plates to prevent the primer M from touching the instrument panel.**

9. Apply the primer and apply the sealant around the glass within the instructed time on the user's guide.
   - Cut the sealant nozzle end and open it. Then apply with a sealant gun.
10. Install the glass holder (commercial tool) to the glass and install the glass to the vehicle by mating the alignment marks on the body and the glass.
11. Press the glass lightly and completely seat the glass.
12. Make the glass even by removing the slipped out sealant or adding sealant where lacks.

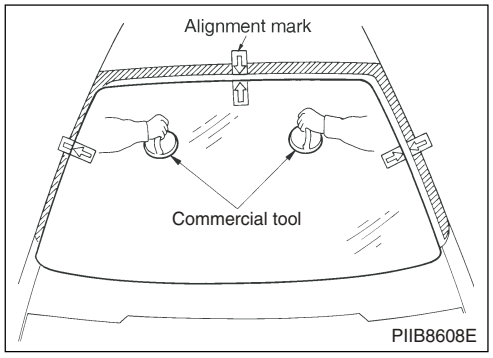

13. Determine the upper molding position and insert and fix the bottom of the molding to the glass.

CAUTION:

Perform the windshield molding installation before the sealant hardens.

Leave the door glass open until the sealant hardens after installing the glass. Do not drive.

14. Inspect for any water leakage.
15. Remove the protector tape.
16. Install the removed components.

Rear Window Glass • Rear Window Molding

Removal • Installation

REMOVAL

1. Remove the rear part of the head lining.
2. Remove the rear pillar garnish and rear partial self finisher.
3. Remove the rear defogger and glass antenna connector.
4. Put the protector tape around the rear window glass (molding) not to scratch the body surface.

5. Cut the rear window molding using a cutter knife following the glass line.
6. Pull out and completely remove the molding remaining at the body flange.

   When reusing the rear window glass, put an alignment marks on the body and the glass.

7. Cut the sealant.

   Cut the 2 upper clips with sealant.

   Perform as below according to using tools.

CAUTION:

When reusing the rear window glass, do not use the windshield knife. (Glass may be damaged.)

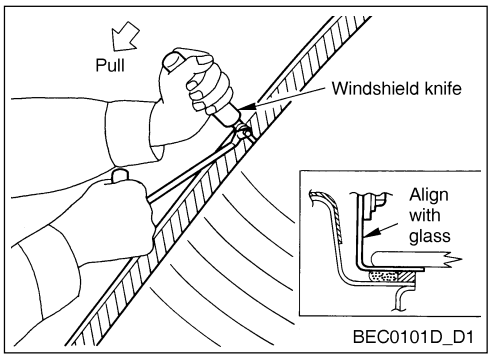

a. When using the windshield knife (When replacing the glass)
   i. Apply some soap solution on the body side sealant for easy windshield knife operation.
   ii. Insert the windshield knife into the sealant and adjust the knife parallel to the glass and cut the sealant by pulling the knife.

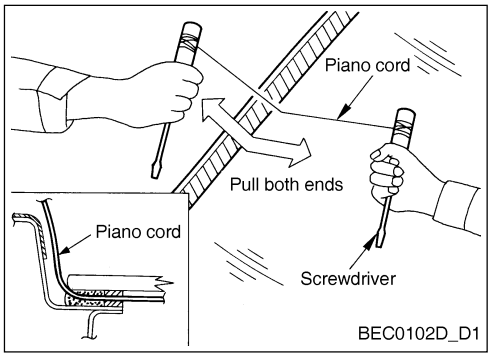

b. When using the piano cord (When reusing the glass)
   i. Perforate a hole using a gimlet or cutter to the glass sealant from the inside of the vehicle.
   ii. Insert the piano cord into the hole from the inside of the vehicle and connect the both cord ends with screwdrivers.
   iii. By pulling the both ends of the piano cord (one inside and one outside of the vehicle), cut the sealant following the glass line.

CAUTION:

- **Strongly contact the piano cord onto the glass edge.**
- **Insert copper plates to prevent the piano cord from touching the instrument panel.**

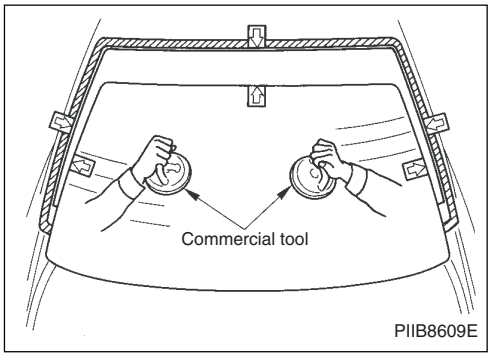

8. Using the glass holder (commercial tool), remove the glass from the vehicle.

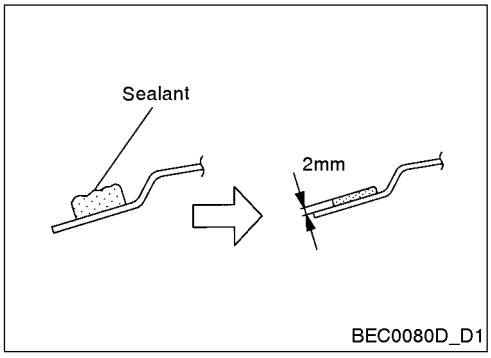

INSTALLATION

1. Cut the remaining sealant evenly leaving the 2 mm thickness using a knife.

CAUTION:

- **When the body side is damaged, always repair with 2-fluid type urethane paint. Do not use the lacquer paint.**

2. For the reused glass, cut the remainder evenly with a knife.
3. Wipe out the glass's sealant surfaces and surroundings with white gasoline.

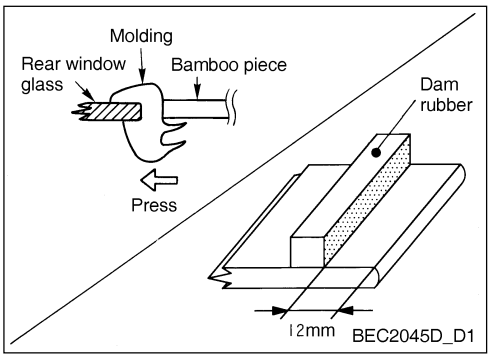

4. Stick the dam rubber on the glass sides as shown in the illustration by centering center upper point.
5. Install the rear window molding to the rear window glass and fix the glass by pressing the glass with a bamboo piece.

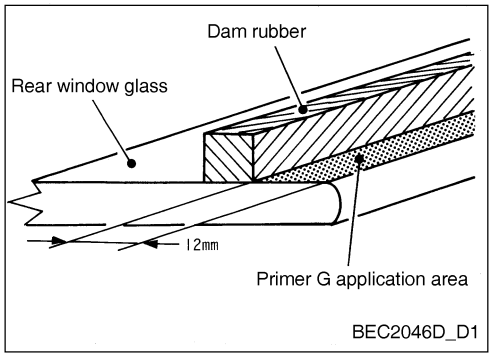

6. Apply the primer.

REFERENCE:

- **The primer is very important since it strengthens the sealing effect between the glass and the body surface.**

CAUTION:

- **There are 2 types of primers. Be careful not to confuse between the two.**

  Primer M: For body surface.
  Primer G: For glass.
- Apply the primer G around the glass following the instructions.

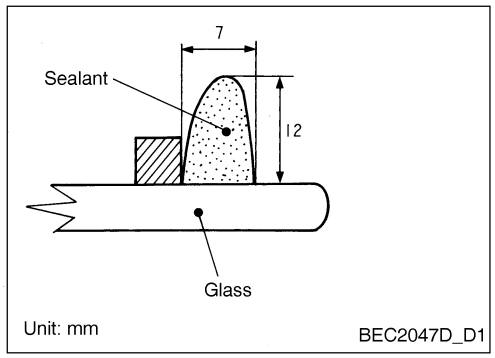

7. Apply the primer M on the vehicle surface.

CAUTION:

- **When primer M stains on the body surface besides the sealant surface, quickly wipe it out with white gasoline.**

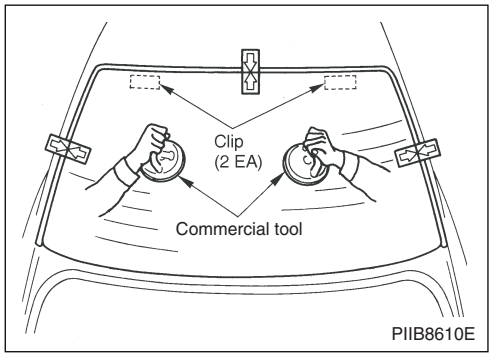

8. Apply the primer and apply the sealant around the glass within the instructed time on the user's guide.
   - Cut the sealant nozzle end and open it. Then apply with a sealant gun.
9. Install the glass holder (commercial tool) to the glass and install the glass to the vehicle by mating the upper clip (2 EA) to the body holes. When reusing the glass, install the glass to the vehicle by mating the alignment marks on the body and the glass.
10. Press the glass lightly and completely seat the glass.
11. Make the glass even by removing the slipped out sealant or adding sealant where lacks.

CAUTION:

- **Leave the door glass open until the sealant hardens after installing the glass. Do not drive.**

12. Inspect for any water leakage.
13. Remove the protector tape.
14. Install the removed components.

Front Door Glass and Regulator

Removal • Installation

1. Remove the front door finisher.
2. Remove the sealing screen.

REFERENCE:

When reusing the sealing screen, cut the butyl tape with a cutter so that the butyl tape remains on the sealing screen.

3. Operate the power window main switch and adjust the door glass until can see the carrier plate mounting bolt.
4. Remove the carrier plate mounting bolt.
5. Remove the door glass by lifting from the rear end and pulling out towards outside from the chassis.

6. Disconnect the regulator assembly connector.
7. Remove the regulator assembly and guide rail mounting bolts and pull out through the operation hole.

   Installation is in the reverse order of removal.

INSPECTION AFTER REMOVAL

Inspect the regulator assembly for the below items and replace or lubricate if defective.

Wire wear.

Regulator deformation.

Lubrication condition on major moving parts.

The arrow in the illustration shows the lubrication points.

ASSEMBLING DIMENSION INSPECTION

Check if the glass is securely installed into the glass run groove.

Check for proper operation by moving the glass up and down.

Rear Door Glass and Regulator

Removal • Installation

1. Remove the door outside molding.
2. Remove the rear door finisher.
3. Remove the sealing screen.

REFERENCE:

When reusing the sealing screen, cut the butyl tape with a cutter so that the butyl tape remains on the sealing screen.

4. Remove the mounting bolts and remove the lower chassis rear towards the bottom.
5. Operate the power window main switch and adjust the door glass until can see the main channel mounting bolts.
6. Remove the main channel mounting bolts.

7. Lower the door glass to its bottom and remove the glass from the partition chassis's glass run.
8. Insert the glass in the gap between the partition chassis and door outer panel and remove the glass towards the outside of the door.
9. Disconnect the regulator assembly connector.

10. Remove the regulator assembly mounting bolts and remove it through the operation hole.

11. Remove the glass run partition chassis.
12. Remove the partition chassis mounting bolts (lower section) and screws (upper section).

13. Remove the partition glass.
    Installation is in the reverse order of removal.

INSPECTION AFTER REMOVAL

Inspect the regulator assembly for the below items and replace or lubricate if defective.

Gear wear

Regulator deformation

Spring damage

Lubrication condition on major moving parts

The arrow in the illustration shows the lubrication points.

ASSEMBLING DIMENSION INSPECTION

Check if the glass is securely installed into the glass run groove.

Check for proper operation by moving the glass up and down.

Door Mirror

Removal • Installation

CAUTION:

Be careful not to damage the mirror assembly.

1. Remove the corner cover (Remove it from the upper clip section).
2. Disconnect the door mirror harness connector.
3. Remove the door mirror mounting nuts and remove the door mirror assembly.
   Installation is in the reverse order of removal.

Disassembly • Assembly

DISASSEMBLY

1. Fold up mirror.
2. Put a protective tape around the mirror body.
3. Insert a small minus (-) screwdriver into the gap between the mirror (mirror holder) and mirror holder bracket as in the illustration. Remove the bottom of the mirror holder by pressing and lifting up the mirror holder mounts (2 points).

CAUTION:

When pressing and lifting the mount, do not lift just one location too much. Always lift up 2 locations.

ASSEMBLY

1. Position the mirror holder bracket and mirror body assembly (actuator) horizontal.
2. Install the mirror to the mirror holder bracket by facing the upper part of the mirror mounts forwards and press in the lower part of the mirror until clicks to install.

CAUTION:

Check the lower part of the mirror after assembly and make sure that the lower mount (2 locations) is securely installed.

Inside Mirror

Removal • Installation

REMOVAL

Push “D” area to removal direction.

INSTALLATION

Install the inside mirror to the windshield bracket placing it vertically to the base surface “B” and assemble the inside mirror by rotating it 90° to the assembling direction with the force “F” (less than 147 N).

Front Bumper

Removal • Installation

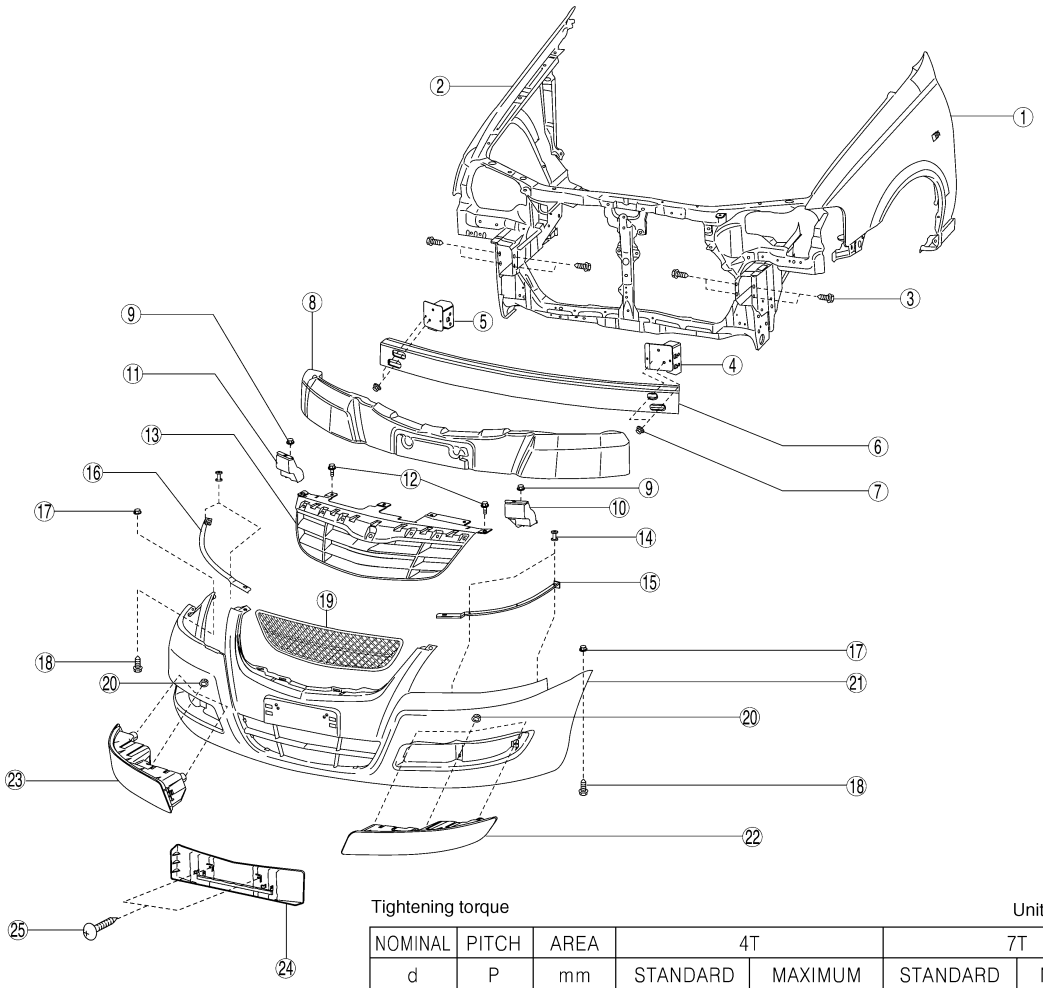

Tightening torque

Unit: N·m (kgf-m)

NOMINAL	PITCH	AREA	4T		7T	
d	P	mm	STANDARD	MAXIMUM	STANDARD	MAXIMUM
M5	0.8	14.2	2.94 (0.30)	3.82 (0.39)	5.001 (0.51)	6.37 (0.65)
M6	1.0	20.1	5.10 (0.52)	6.37 (0.66)	8.43 (0.86)	10.8 (1.1)
M8	1.25	36.6	12.7 (1.3)	15.7 (1.6)	20.6 (2.1)	26.5 (2.7)
	1.0	39.2	12.7 (1.3)	16.7 (1.7)	21.6 (2.2)	28.4 (2.9)
M10	1.5	58.0	24.5 (2.5)	31.1 (3.2)	41.2 (4.2)	52.0 (5.3)
	1.25	61.2	25.5 (2.6)	32.4 (3.3)	43.1 (4.4)	54.9 (5.6)

PIIB8642E

① Front fender (LH)
② Front fender (RH)
③ Bolts (8 EA)
④ Front bumper stay (LH)
⑤ Front bumper stay (RH)
⑥ Front bumper beam
⑦ Nuts (4 EA)
⑧ Front bumper energy absorber
⑨ Nuts (4 EA)
⑩ Front bumper bracket (LH)
⑪ Front bumper bracket (RH)
⑫ Clips (2 EA)
⑬ Radiator grille
⑭ Rivets (4 EA)
⑮ Front bumper side bracket (LH)
⑯ Front bumper side bracket (RH)
⑰ Screw grommets (2 EA)
⑱ Screws (4 EA)
⑲ Front fascia low grille
⑳ Nuts (6 EA)
㉑ Front bumper fascia
㉒ Fog lamp (LH)
㉓ Fog lamp (RH)
㉔ License plate
㉕ Screws (2 EA)

Rear Bumper

Removal • Installation

① Long bolt
② Nuts (2 EA)
③ Bolts (2 EA)
④ Rear bumper stay (LH)
⑤ Rear bumper stay (RH)
⑥ Bolts (8 EA)
⑦ Rear bumper beam
⑧ Nuts (4 EA)
⑨ Rear bumper energy absorber (LH)
⑩ Rear bumper energy absorber (RH)
⑪ Clip pushes (2 EA)
⑫ Rear bumper closing (LH)
⑬ Rear bumper closing (RH)
⑭ Screw grommets (2 EA)
⑮ Screws (2 EA)
⑯ Rear bumper side bracket (LH)
⑰ Rear bumper side bracket (RH)
⑱ Trim clips (6 EA)
⑲ License plate
⑳ Clips (4 EA)
㉑ Screws (2 EA)
㉒ Screws (2 EA)
㉓ Screws (2 EA)
㉔ Rear bumper fascia
㉕ Spring nut (1 EA)

Front Grille

Removal • Installation

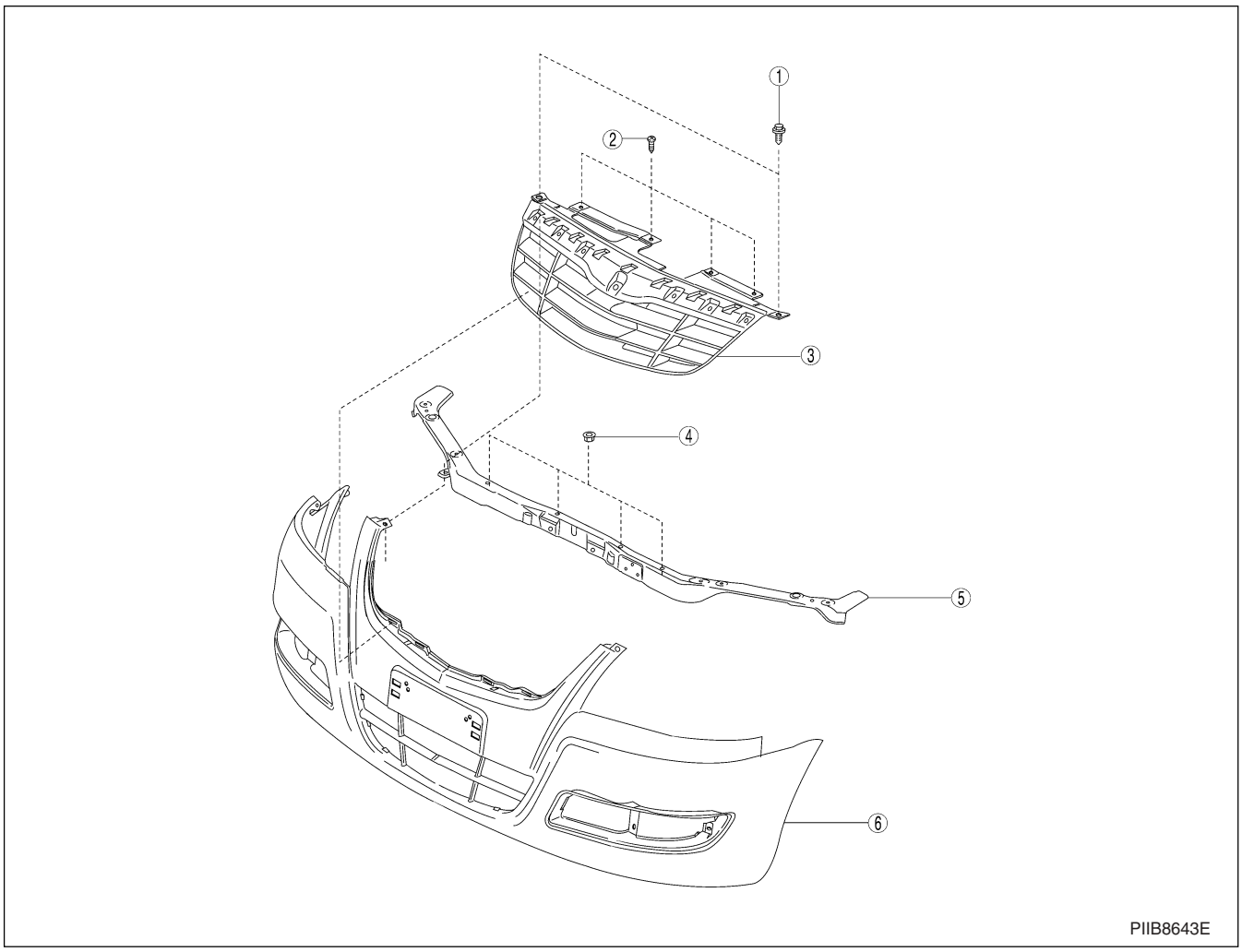

① Clips (2 EA)
② Tap screws (4 EA)
③ Radiator grille assembly
④ Screw grommets (4 EA)
⑤ Radiator core support
⑥ Front bumper fascia

Cowl Top Cover

Removal • Installation

① Cowl top seal rubber
② Cowl top cover
③ Clips (8 EA)
④ Clips (2 EA)
⑤ Screw (1 EA)

ACCOMPANYING WORKS

Wiper arm removal/installation.
Windshield side molding removal/installation.

Fender Protector

Removal • Installation

① Front fender
② Bumper fascia
③ Clips (R/L: 2 EA)
④ Underside cover
⑤ Fender protector
⑥ Screws (R/L: 2 EA)
⑦ Clips (R/L: 6 EA)
⑧ Clips (R/L: 2 EA)
⑨ Screws (R/L: 3 EA)
⑩ Front mud guard
⑪ Protector chipping
⑫ Screw grommets (R/L: 3 EA)
⑬ Dash side

Windshield Molding

Removal • Installation

(Accompanying work)

Weather strip removal/installation (at windshield molding)

CAUTION:

The windshield upper molding removal and installation is included in windshield glass assembly.

Door Outside Molding

Removal • Installation

Side Guard Molding

Removal • Installation

Front Bumper Cover

Removal • Installation

① Front bumper fascia
② Clips (5 EA)
③ Screws (4 EA)
④ Front bumper cover
⑤ Radiator core support

Headlamp/Turn Signal Lamp

Removal • Installation

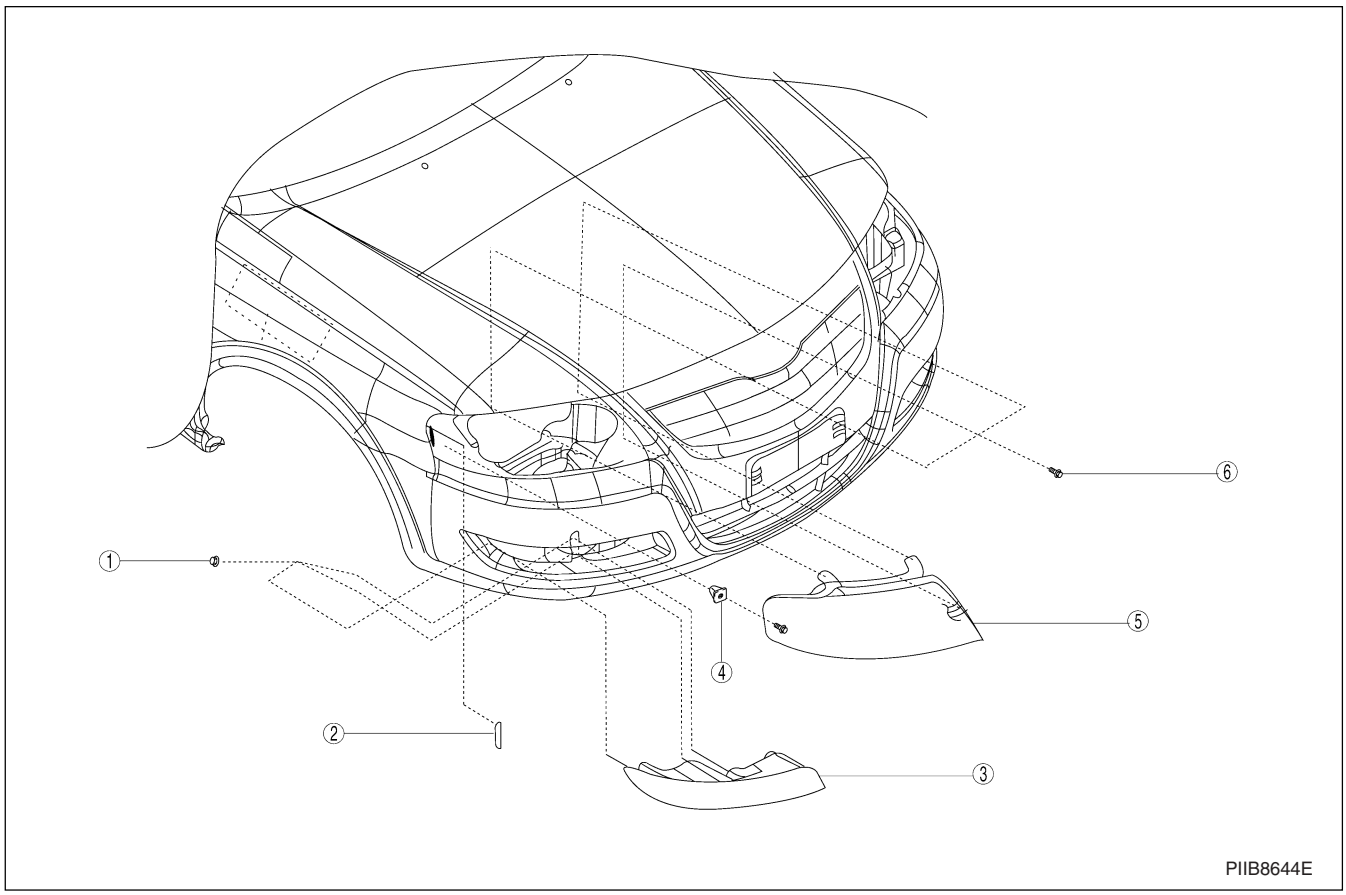

① Nuts (3 EA)
② Front fender tape
③ Turn signal lamp assembly
④ Grommet (1 EA)
⑤ Headlamp assembly
⑥ Screws (3 EA)

Rear Combination/Rear Fog Lamp

Removal • Installation

① Nuts (4 EA)
② Nuts (2 EA)
③ Rear fog lamp bracket
④ Grommet (1 EA)
⑤ Rear combination lamp assembly
⑥ Rear fog lamp assembly (for export)
⑦ Trim clip
⑧ Screws (2 EA)
⑨ License plate assembly

Rear Mud Guard

Removal • Installation

① Rear bumper closing
② Trim clips (2 EA)
③ Spring nuts (3 EA)
④ Tap screws (3 EA)
⑤ Rear mud guard
⑥ Rear bumper fascia
⑦ Air draft assembly
⑧ Rear fender

Door Trim

Removal • Installation

FRONT AND REAR

1. Remove the armrest.

2. Remove the power window switch finisher by holding and lifting up the rear end. Disconnect the power window switch connector.

3. Insert a cloth protected minus (-) screwdriver into the gap at the center bottom of the inside handle escutcheon and remove it by disconnecting the 6 connection mounts.

4. Remove the door finisher mounting screws (front door), clip and the bolt.
5. Insert the hand into the door finisher lower opening, pull out and remove the clip.
6. Remove the door finisher by pulling upwards.

   Installation is in the reverse order of removal.

REFERENCE:

Insert the clip driver or clip clamping tool into the arrow location (between the body panel and clip) and remove the finisher.

CAUTION:

During finisher installation, check if the clip is securely inserted into the body panel holes. Then push it in.

Body Side Trim

Removal • Installation

CENTER PILLAR LOWER GARNISH

Front and rear kicking plate inner removal/installation.

CENTER PILLAR UPPER GARNISH

Seatbelt shoulder anchor removal/installation.

Front and rear kicking plate inner and center pillar lower garnish removal/installation.

REAR PILLAR FINISHER

Rear seat removal/installation.

REAR SEATBACK FINISHER

Rear seat and rear pillar finisher removal/installation.

CAUTION:

Insert a cloth protected screwdriver or clip driver into the arrow location (between the body panel and clip) and remove the clip.

During installation, check if the clip is securely inserted into the chassis panel holes. Then push it in.

Rear Partial Self Finisher

Removal • Installation

(Accompanying works)

Rear seat removal/installation.

Rear pillar finisher removal/installation.

Rear seatbelt floor anchor bolt removal/installation.

Floor Trim

Removal • Installation

(Accompanying works)

Front seat and rear seat cushion removal/installation.
Center console removal/installation.
Instrument lower cover and instrument lower center panel removal/installation.
Instrument stay removal/installation.
Front seatbelt floor anchor bolt removal/installation.
Front and rear kicking plate inner and body side welt removal/installation.
Dash side finisher and center pillar lower garnish removal/installation.

Head Lining

Removal • Installation

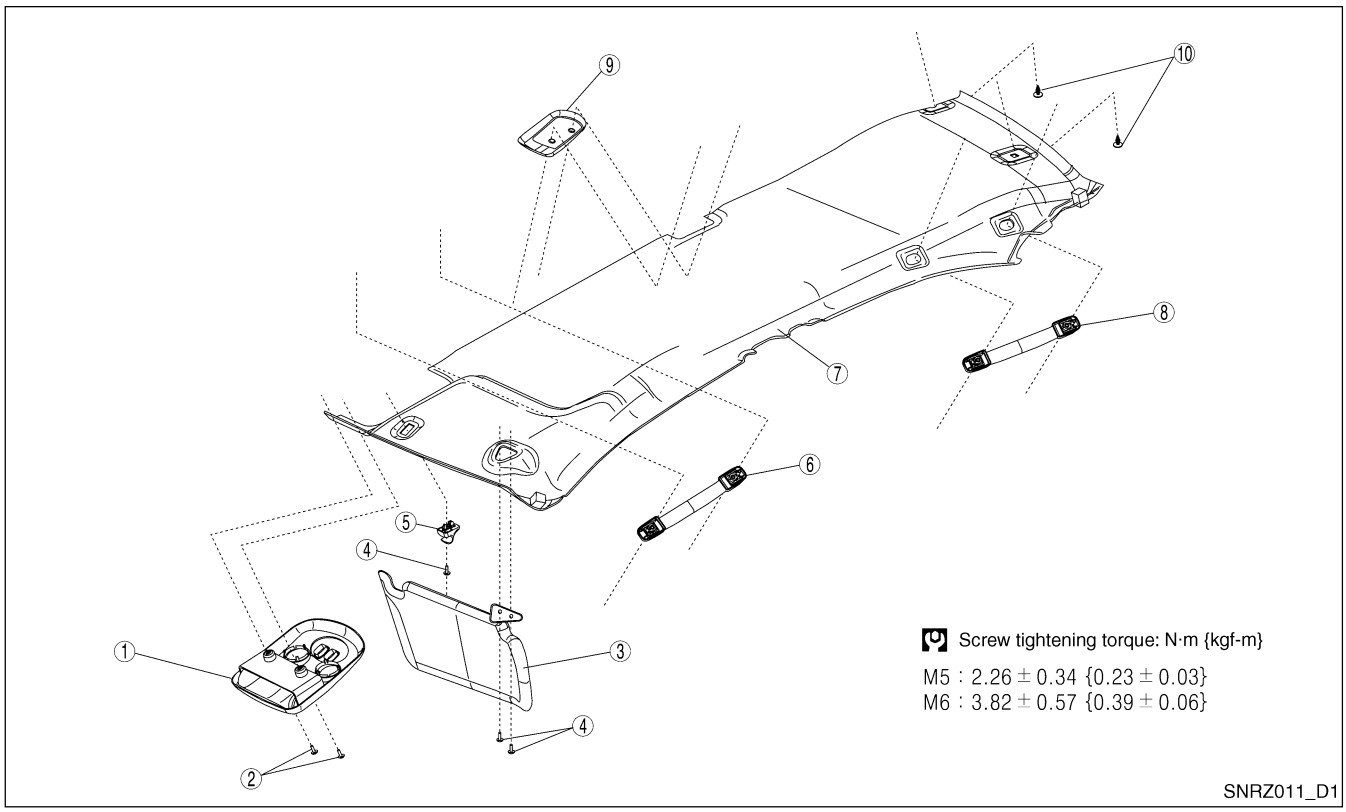

① Map lamp assembly
② Tap screws (2 EA)
③ Sun visor (R/L:1EA)
④ Tap screws (R/L:1EA)
⑤ Sun visor holder (R/L:1EA)
⑥ Assist clip (RH)
⑦ Headlining
⑧ Assist clip (R/L:1EA)
⑨ Room lamp
⑩ Trim clips (3 EA)

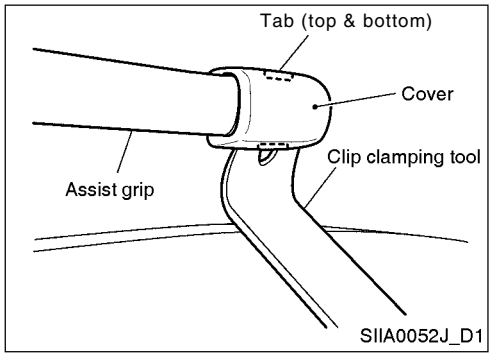

(Accompanying works)

- Center pillar garnish removal/installation.
- Body side welt removal/installation.
- Front pillar and rear pillar finisher removal/installation.
  (Point) Assist grip
- Using the clip clamping tool, remove the assist grip cover's top and bottom mounts. Place it sideways and remove the screws (each 1 EA left and right).

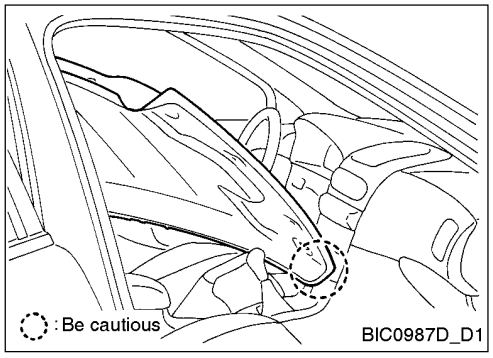

1. Tilt the head lining and pass the right side through in between the shift knob and lower cluster lid C.

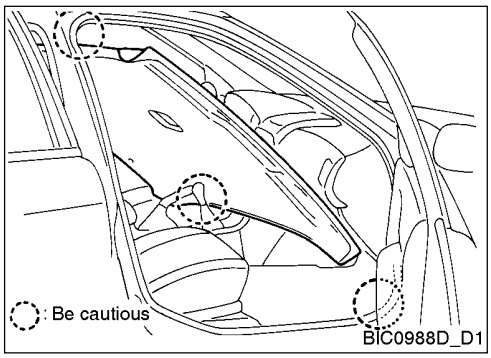

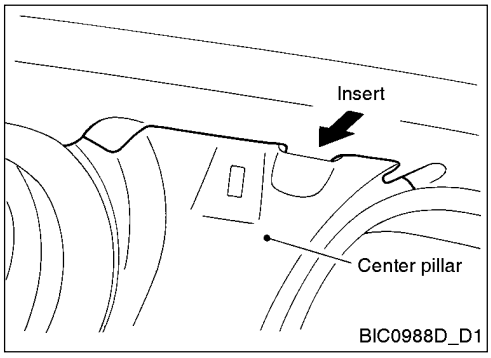

2. Remove the head lining from the passenger's door opening.

CAUTION:

- **Two people must work together during removal.**
- **Place a cloth cover around the instrument assembly to prevent from scratching.**
- **Do not excessively bend the head lining.**

Installation is in the reverse order of removal.

REFERENCE:

- **Insert into the center pillar upper hole during installation.**

Trunk Trim and Trunk Lid Trim

Removal • Installation

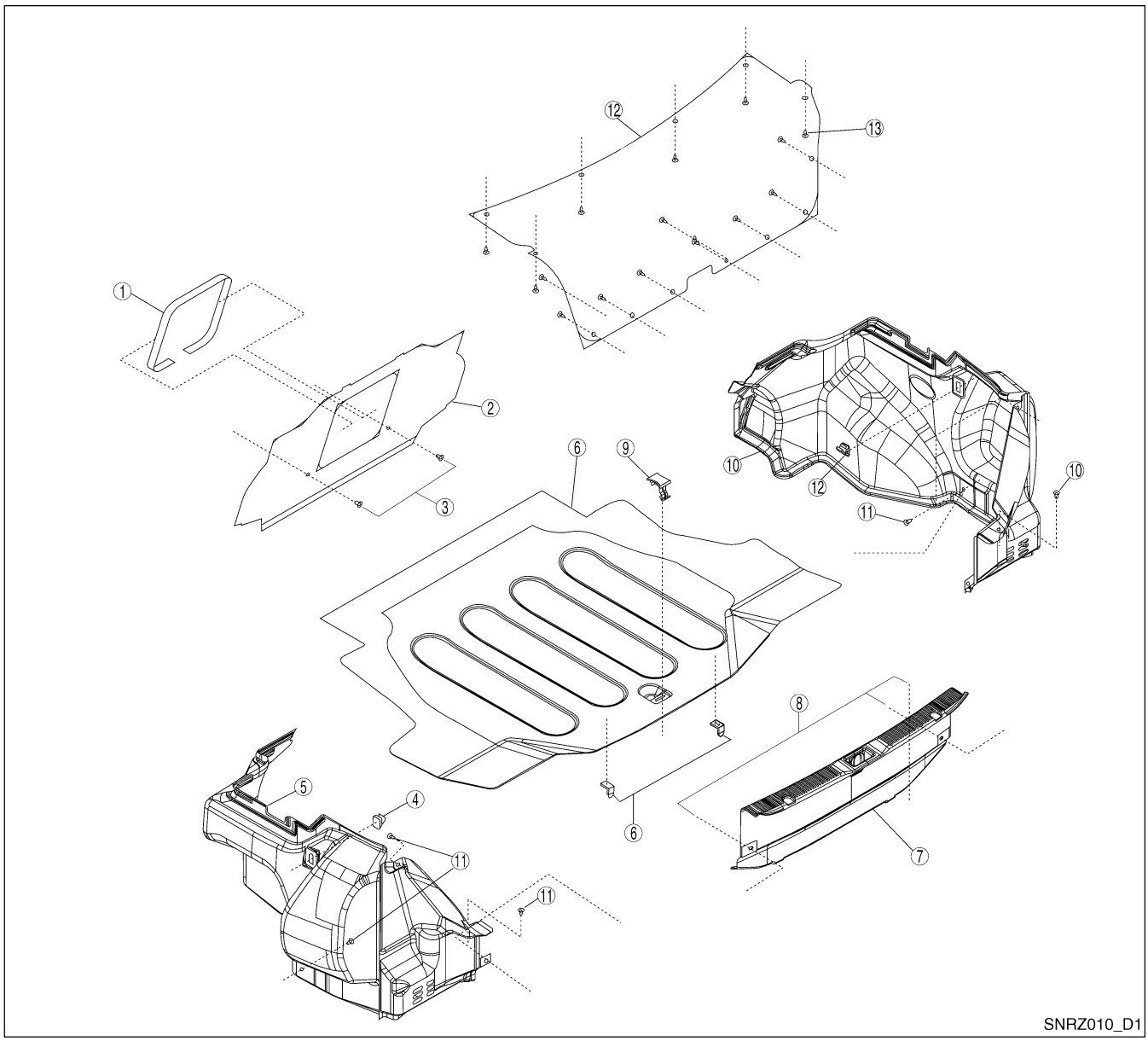

① Rear seatback welt
② Trunk front finisher assembly
③ Trim clips (2 EA)
④ Trunk net hook (2 EA)
⑤ Trunk side finisher (LH)
⑥ Trunk carpet support (2 EA)
⑦ Trunk rear plate
⑧ Trunk trim clip
⑨ Trunk carpet hook (1 EA)
⑩ Trim clips (6 EA)
⑪ Trunk side finisher (RH)
⑫ Trunk lid finisher
⑬ Trim clips (15 EA)

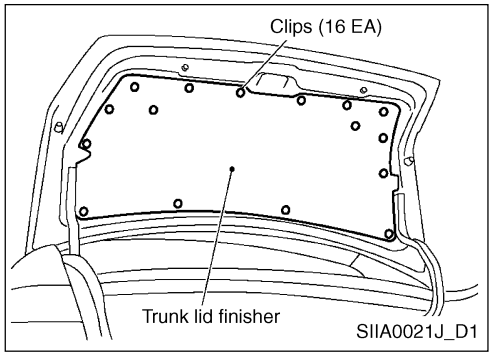

Instrument Assembly

Components Diagram

Removal • Installation

WORK LIST

Item	Instrument panel	Combination meter	Display	Audio	Console
Key cylinder escutcheon	[1]	[1]			
Steering column cover	[2]	[2]			
Light • turn signal switch	[3]	[3]			
Cluster lid A	[4]	[4]			
Combination meter	[5]	[5]			
Instrument lower driver panel	[6]				
Switch finisher	[7]				
A/T (M/T) finisher	[8]			[1]	[1]
Cluster lid C lower	[9]			[2]	
Cluster lid C	[10]		[1]	[3]	
Console	[11]			[4]	[2]
Audio, A/C controller	[12]				
Glove box	[13]				
Instrument lower assist panel	[14]				
Glove box cover	[15]				
Instrument lower cover	[16]				
Instrument center panel	[17]				
Passenger airbag module	[18]				
Instrument mask	[19]				
Front pillar garnish	[20]				
Instrument panel	[21]				

KEY CYLINDER ESCUTCHEON

Remove the key cylinder escutcheon to the outside of the vehicle.

STEERING COLUMN COVER

Remove the steering column cover (screw: 5 EA).

LIGHT • TURN SIGNAL SWITCH

Remove the light • turn signal switch (screw: 2 EA).

CLUSTER LID A

1. Remove the two crews and remove the metal clip by pulling the cluster lid A forwards.
2. Remove from the right side cautioning with other surrounding components.

COMBINATION METER

Remove the 3 screws, disconnect the connector and then remove the combination meter.

INSTRUMENT LOWER DRIVER PANEL

1. Remove the fuse box lid.
2. Remove the metal clip by pulling the instrument lower driver panel forwards after removing the screw.
3. Remove the two screws from the diagnosis connector mount bracket in the back of the panel.

SWITCH FINISHER

Pull out and remove the top mounts (2 locations) and disconnect all switch connectors.

A/T (M/T) FINISHER

Remove the ashtray and then pull out the finisher.

CLUSTER LID C LOWER

1. Remove the two screws.
2. Insert the hand into the top and bottom of the cluster lid C lower and remove it by pulling it forwards.

AUDIO • A/C CONTROLLER

Remove the 4 screws and connectors and remove the audio and A/C controller.

CLUSTER LID C

1. Insert the hand into the lid and pull it forwards.

CAUTION:

Be careful with the hazard switch, door lock switch and snow switch harness.

2. Disconnect the hazard switch, door lock switch and snow switch connectors.

CONSOLE

1. Remove the two screws from the rear of the console.
2. Remove the console center cap and remove the screw (1 EA).
3. Remove the console finisher.
4. Remove the two screws and then remove the console.

GLOVE BOX

Open the glove box and remove the glove box pin from the inside.

INSTRUMENT LOWER ASSIST PANEL

Remove the 2 screws. Pull it forwards and remove it from the blower unit lower mount.

GLOVE BOX COVER

1. Remove the 2 screws and glove box striker (screws: 2 EA). The glove box lamp is installed in all models except for PE model. When removing the lamp, disconnect the lamp connector first.
2. Pull it forwards and remove the mount from the instrument panel.

INSTRUMENT LOWER COVER

1. Remove the metal clip and resin mount from the driver's side and remove by pulling towards the driver's seat.
2. Remove the wooden mount from the passenger side and remove by pulling towards the rear of the vehicle.

INSTRUMENT LOWER CENTER PANEL

1. Remove the 2 screws.
2. Disconnect the power outlet harness connector.
3. Pull the instrument lower center panel forwards and remove it after removing the metal clip.

PASSENGER SEAT AIRBAG MODULE

Remove the special bolt and then remove the passenger side airbag module.

Refer to “Restraint System”.

INSTRUMENT MASK

Insert a cloth protected minus (-) screwdriver into the cut portion of the instrument mask end and remove it by releasing the mount.

FRONT PILLAR GARNISH

Pull the front pillar garnish forwards and remove it after removing the metal clip.

INSTRUMENT PANEL

1. Press the A/T device’s key interlock cable slider mount and push into the casing cap direction , then remove the key interlock rod and adjuster holder.
2. Remove the casing cap from the bracket.
3. Remove the nut and lower down the steering column.
4. Remove the 3 bolts, 2 nuts and 1 screw that holds the instrument panel and remove the instrument panel.

Disassembly • Assembly

INSTRUMENT PAD

Remove the 6 screws from the rear of the instrument panel.

GLOVE BOX

Remove the 2 screws from the inside of the glove box.

Front Seat

Components Diagram

CAUTION:

Protect the locations that interfere during seat removal with a cloth.

Removal • Installation of Front Seat Assembly

REMOVAL

1. Remove the front seat assembly in the order as shown in the figure.

2. Remove two front bolts fixing the front seat.

3. Remove the inner side seat slide cover and mounting bolts.

4. Remove the outer side seat slide cover and mounting bolts.

INSTALLATION

Assemble in the reverse order of disassembly.

Removal • Installation of Front Seat

Disassembly • Assembly of Seatback

SEATBACK TRIM (WITH SIDE AIRBAG)

1. Remove the seatback finisher.

2. Remove the retainer.

3. Remove the 2 nuts and remove the inner cross mount stay.

4. Press the headrest holder mounts on the headrest stay pipe's hole from the rear of the seatback. Remove the stopper and lift up the headrest to remove.

CAUTION:

Be careful of the headrest holder directions (left & right and forwards & rearwards) during installation.

5. Remove the hug ring and separate the pad and trim after removing the seatback.

SEATBACK ASSEMBLY

To remove the seatback assembly, remove the 4 bolts after step 1 and 2.

CAUTION:

During assembling the seatback frame, check the reclining device's lock in both sides and insert the bolt and then tighten.

SEATBACK TRIM (VEHICLE WITHOUT SIDE AIRBAG)

1. Remove the retainer from the lower side of the seatback rear.

2. Pry up the trim and remove the retainer from the back and hug rings from the front.

3. Remove the headrest holder mount by holding and pushing it up.

CAUTION:

Be careful of the headrest holder directions (left & right and forwards & rearwards) during installation.

4. Remove the hug ring and separate the pad and trim after removing the seatback.

SEATBACK ASSEMBLY

To remove the seatback assembly, remove the 4 bolts after step 1.

CAUTION:

During assembling the seatback frame, check the reclining device's lock in both sides and insert the bolt and then tighten.

DISASSEMBLY • ASSEMBLY OF SEAT CUSHION TRIM

1. Remove the reclining lever by standing the mount inside and pushing the knob towards the front.

2. Remove the snap ring by hanging a wire and lifting it up and then remove the lifter dial.

3. Remove the seat harness and bolts from the rear of the seat cushion.

CAUTION:

For bolt installation, check the slide's lock in both sides and insert the bolt and then tighten.

4. Remove the retainer on the rear of the cushion.

5. Pry up the trim and remove the hug ring.

Rear Seat

Removal • Installation

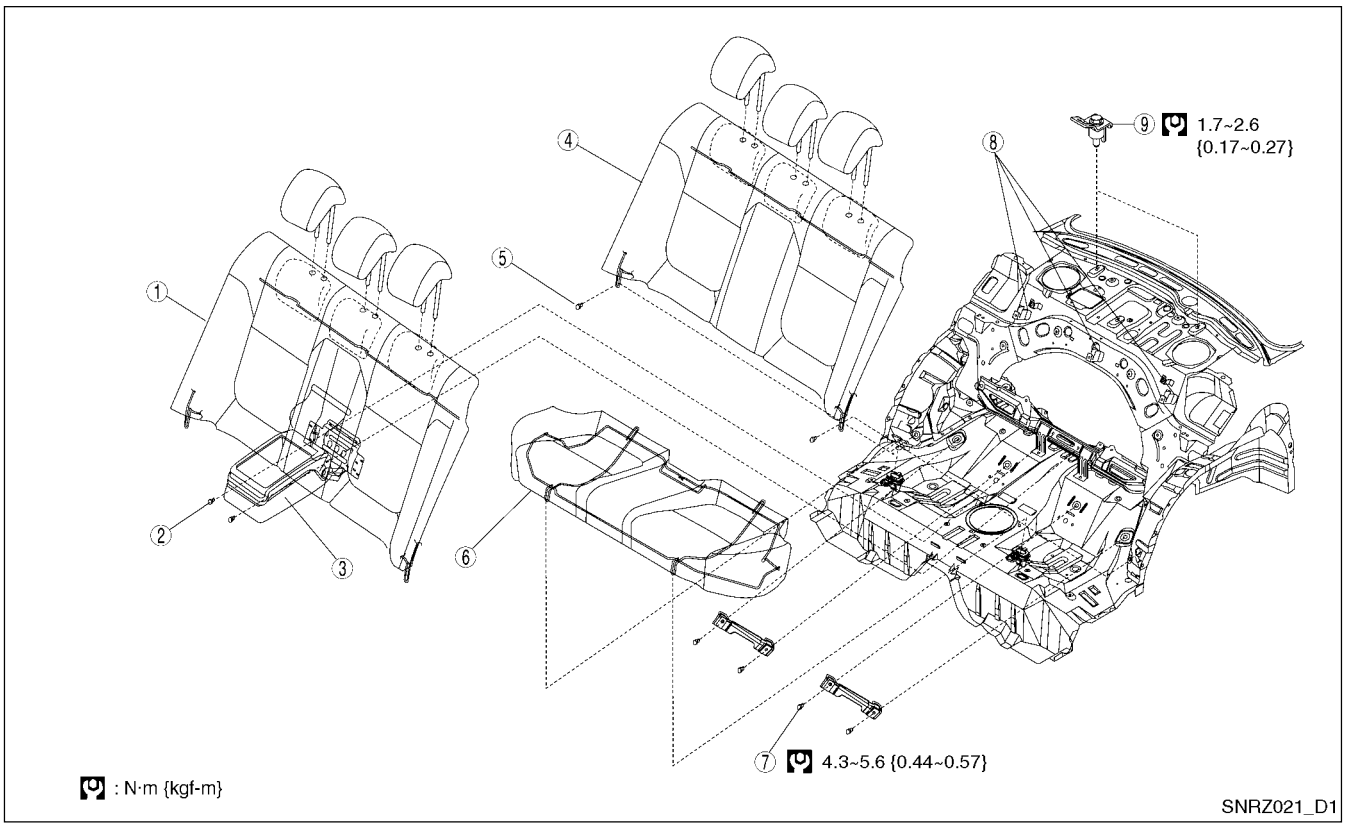

① Rear seatback assembly (with armrest)
② Tap screws (2 EA)
③ Armrest
④ Rear seatback assembly (without armrest)
⑤ Screw (R/L:1EA)
⑥ Rear seat cushion assembly
⑦ Bolts (4 EA)
⑧ Hook
⑨ Tether anchor plate assembly

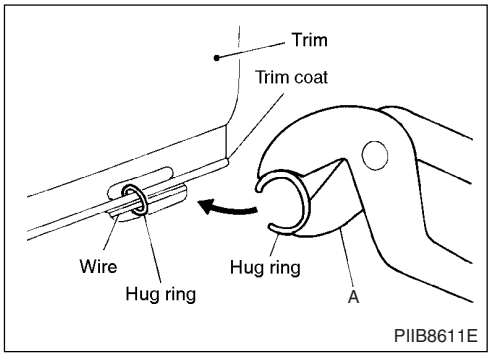

- Secure the pad side wire and trim side wire using the hug ring.

REFERENCE:

- **The hug ring installation is easier if use the hug ring pliers (A: commercial tool).**
- **When installing a new trim, it is easier if put the hug ring locations by referring the old trim.**

Hood

Assembly Dimension Adjustment

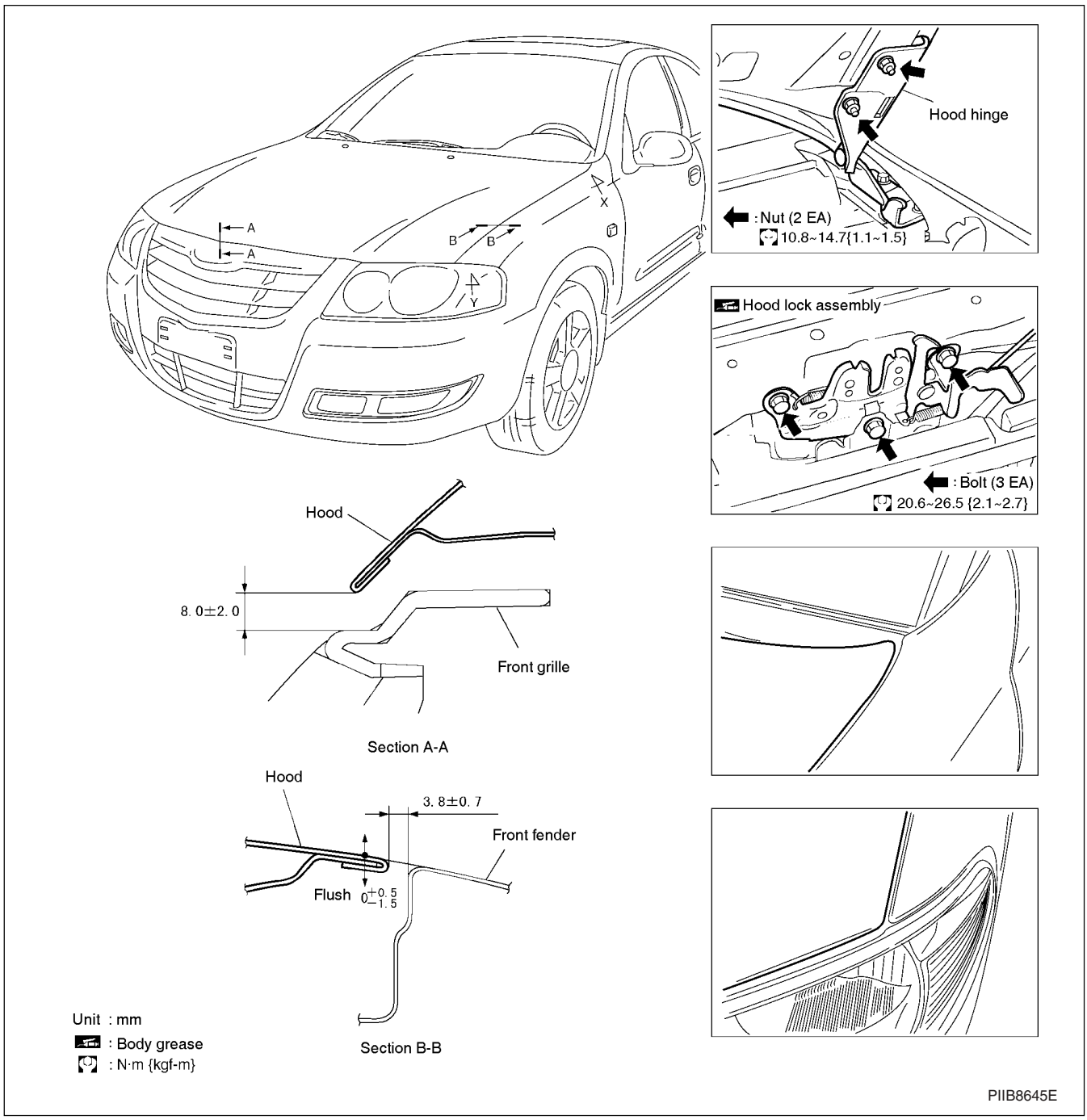

FRONT END HEIGHT ADJUSTMENT, LEFT-RIGHT AND FRONT-REAR GAP ADJUSTMENT

1. Remove the hood lock. Adjust the hood by rotating the bumper rubber so that it becomes 1-1.5 mm lower than the fender.
2. Temporarily install the hood lock and determine the position so that the hood lock engages with the striker. Check if the lock and the striker has any looseness and tighten the lock mounting bolts to the specified torque.

SURFACE DIFFERENCE (FLUSH) ADJUSTMENT

1. Remove the hood lock. Adjust the bumper rubber left and right so that the surface difference between the hood and the fender becomes the plant assembling standard.
2. Install the hood lock. Adjust the hood lock left and right so that the striker and the lock center are perpendicular when viewed from the front.

3. Check if the secondary latch engages securely with the secondary striker when drop the hood from 200 mm of height or press the hood with 3 kg of force.
4. Close the hood. Adjust the hood by moving the hood lock up and down so that the striker and the lock are securely engaged.
5. After the adjustment, tighten the lock mounting bolt to the specified torque.

Removal • Installation of Hood Assembly

1. Disconnect the washer hose from the connecting section.
2. Remove the hinge mounting nut from the hood and remove the hood assembly.
   Installation is in the reverse order of removal.

Removal • Installation of Hood Lock Control

REMOVAL

1. Disconnect the hood lock cable from the hood lock and remove the hood lock cable from the radiator core support upper and hood latch clip.
2. Remove the dash side finisher. Refer to “Removal • Installation” (BT-34) in “Body Side Trim”.
3. Remove the mounting screws and remove the hood opener.
4. Remove the grommet from the dash and pull out towards the inside of the hood lock cable.

CAUTION:

When removing by pulling, be careful not to damage the hood lock cable (surface peeling) by the body hole.

INSTALLATION

1. Push in the hood lock cable with maximum R (over R 100 mm).
2. Check if not escaped from the position determining grommet. Insert the grommet securely into the panel hole.
3. Apply the sealant on the grommet where marked section.

4. Install the cable securely to the lock.
5. Adjust hood lock after installation and check opener for proper operation.

Hood Lock Control Inspection

CAUTION:

Replace the hood lock cable if bent or deformed.

1. Check if the hood lock secondary latch engages securely with the secondary striker only when drop the hood from 200 mm of height.
2. Check if the hood end pops up about 20 mm when pull the hood opener smoothly. Also check if the hood opener returns to the original position.
3. Inspect the lubrication at the hood lock and apply “body grease” to the illustrated positions if necessary.

Door

Door Assembly Dimension Adjustment

Front Door

FORE AND AFT GAP AND FRONT END FLUSH ADJUSTMENT

1. Remove the fender protector.
2. Loosen the body side hinge mounting bolt from inside of the fender. Lift up the rear of the front door and perform adjustment.

Rear Door

FORE AND AFT GAP AND FRONT END FLUSH ADJUSTMENT

1. Remove the center pillar upper and lower garnish.
2. Loosen the mounting bolt from outside and mounting nuts from inside. Open the rear door and lift up the rear of the rear door and then perform adjustment.

STRIKER ADJUSTMENT

Adjust the striker so that it becomes parallel with the lock engaging direction.

Removal • Installation

CAUTION:

While removing/installing the door assembly, secure the door with a cloth-covered jack to prevent from scratching the door and the body panels.

Perform the door assembly dimension adjustment when removing/installing the door assembly.

Inspect the lubrication condition at the hinge pivots and main moving section of the check link. Apply body grease if necessary.

1. Remove the door finisher.
2. Remove the door harness.
3. Remove the mounting bolts and nuts and remove the door assembly. Install in the reverse order of removal and tighten the mounting bolts and nuts to the specified torque.

Door Welt Strip

Front Door Lock

Components Diagram

Inspection • Adjustment

1. Remove the front door finisher.
2. Remove the sealing screen.

REFERENCE:

When reusing the sealing screen, cut the butyl tape with a cutter so that the butyl tape remains on the sealing screen.

Outside Handle Rod Adjustment

Adjust by rotating the bush so that the gap between the bush and rod becomes as shown in the illustration.

REFERENCE:

Do not let the gap become 0 mm or rod always be pressed.

Removal • Installation

REMOVAL

1. Remove the front door finisher.
2. Remove the sealing screen.

REFERENCE:

When reusing the sealing screen, cut the butyl tape with a cutter so that the butyl tape remains on the sealing screen.

3. Remove the front door glass.

4. Remove the fixing clip and remove the inner pad.

5. Remove the mounting bolts and remove the lower chassis and rear glass as an assembly from the door panel up to the upper part of the door panel.
6. Remove the inside handle escutcheon A.

7. Remove the inside handle mounting screws.
8. Disconnect the lock knob rod connections (2 locations) on the bell crank.
9. Disconnect the inside handle rod (door lock assembly side).
10. Push the inside handle rearwards and remove it from the door panel hole.
11. Remove the rod from the inside handle.
12. Insert the hand into the work hole and disconnect the key lock rod and outside handle rod connections (handle side).

13. Remove the connector on the door lock actuator.
14. Remove the mounting screw and remove the door lock assembly from the work hole.
15. Remove the outside handle and key cylinder stay mounting bolt and remove the outside handle assembly.

INSTALLATION

Install in the reverse order of removal.

CAUTION:

During door lock assembly installation, apply the anti-corrosion wax on body side.

To install the rod, rotate the rod holder until each rod clicks.

Disassembly • Assembly

DISASSEMBLY

CAUTION:

Perform the actuator removal/installation after removing the door lock assembly from the vehicle.

1. Remove the mounting screws and remove the actuator from the door lock assembly.
2. Pull the actuator downward and remove it from the door lock assembly.

ASSEMBLY

1. Insert the actuator pivot into the door lock assembly's knob lever.
2. Locate the lock lever and actuator pivot to lock position and check if it is securely engaged.

Rear Door Lock

Components Diagram

Inspection • Adjustment

1. Remove the rear door finisher. Refer to “Removal • Installation” (BT-32) in “Door Trim”.
2. Remove the sealing screen.

REFERENCE:

When reusing the sealing screen, cut the butyl tape with a cutter so that the butyl tape remains on the sealing screen.

Outside Handle Rod Adjustment

Adjust by rotating the bush so that the gap between the bush and rod becomes as shown in the illustration.

REFERENCE:

Do not let the gap become 0 mm or rod always be pressed.

Removal • Installation

REMOVAL

1. Remove the rear door finisher.
2. Remove the sealing screen.

REFERENCE:

When reusing the sealing screen, cut the butyl tape with a cutter so that the butyl tape remains on the sealing screen.

3. Open all rear door glasses.
4. Pull out the inside handle escutcheon A.
5. Remove the inside handle mounting screw.

6. Disconnect the inside handle rod (door lock assembly side).
7. Disconnect the lock knob rod (door lock assembly side).
8. Open the rod holder using a minus (-) screwdriver and remove the rod.
9. Push the inside handle rearwards and remove it from the door panel hole.
10. Remove the rod from the inside handle.

11. Remove the mounting bolts and remove the lower chassis rear by pulling downward.
12. Remove the connector on the door lock actuator.
13. Remove the mounting screws and remove the door lock assembly from the work hole.
14. Remove the mounting bolts and remove the outside handle.

INSTALLATION

Installation is in the reverse order of removal.

CAUTION:

During door lock assembly installation, apply the “anti-corrosion wax” on body side.

To install the rod, rotate the rod holder until each rod clicks.

Disassembly • Assembly

DISASSEMBLY

CAUTION:

Perform the actuator removal/installation after removing the door lock assembly from the vehicle.

1. Remove the mounting screws and remove the actuator from the door lock assembly.
2. Pull the actuator downward and remove it from the door lock assembly.

ASSEMBLY

1. Insert the actuator pivot into the door lock assembly’s knob lever.
2. Locate the lock lever and actuator pivot to lock position and check if it is securely engaged.

Trunk Lid

Assembly Dimension Adjustment

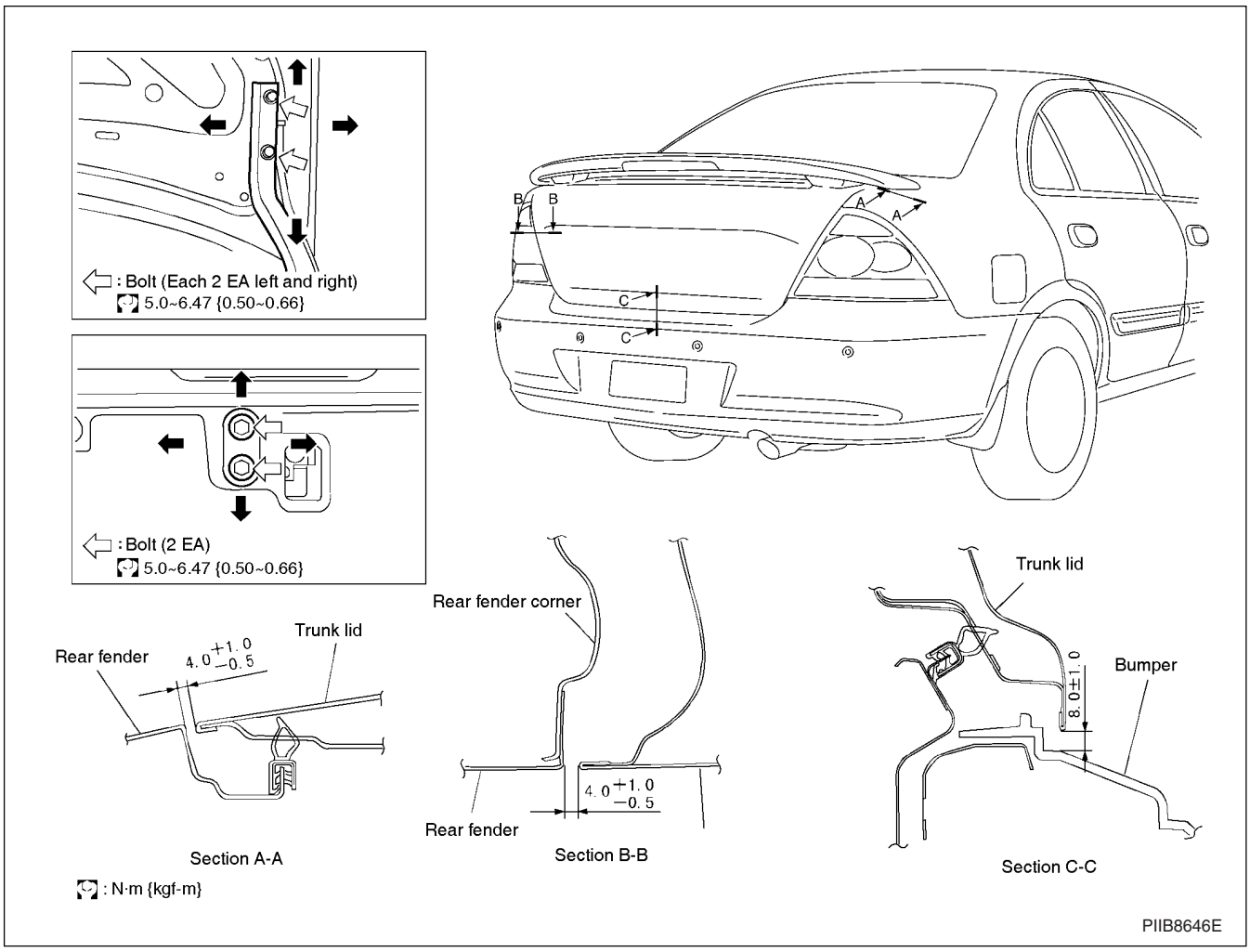

FORE & AFT AND LEFT & RIGHT GAP ADJUSTMENT

1. Remove the striker. Remove the trunk lid hinge mounting bolts and close the trunk lid.
2. After adjusting the gap between the left and right and with the rear window glass, open the trunk lid and tighten the mounting bolts to the specified torque.

SURFACE DIFFERENCE (FLUSH) ADJUSTMENT

1. Remove the striker mounting bolts. Lift the striker and temporarily insert the upper mounting bolts while striker is at the highest point.
2. Lightly close the trunk lid. Open the trunk lid and tighten the striker mounting bolts to the specified torque after adjusting the surface difference (flush).

Removal • Installation of Trunk Lid Assembly

1. Remove all connectors in the trunk lid. Remove all harness clamps and then remove the harness from the trunk lid by pulling it out.
2. Remove the mounting bolts and remove the trunk lid assembly.

CAUTION

Apply the anti-corrosion wax on the connection between the trunk lid and hinge.

After tightening the hinge mounting bolts, apply touch-up paint on the bolt heads with the same color.

Installation is in the reverse order of removal.

Removal • Installation of Trunk Lid Lock & Striker

LOCK REMOVAL

1. Remove the trunk lid finisher.
2. Remove the trunk lid lock cover.
3. Remove the mounting bolts and remove the trunk lid lock.

STRIKER REMOVAL

1. Remove the trunk rear plate and trunk rear finisher.

2. Remove the mounting bolts and remove the trunk lid opener bracket.
3. Remove the mounting bolts and trunk room lamp connector and remove the trunk lid striker.
4. Remove the trunk lid opener cable from the trunk lid striker.

LOCK AND STRIKER INSTALLATION

1. After installation, lightly close the trunk lid and adjust the lock and the surface difference.
2. Check the operation after installation.
3. Install the trunk lid lock cover, trunk lid finisher and trunk finisher.

Removal • Installation of Torsion Bar

CAUTION:

The folding force of the torsion bar is very strong. Be careful when removing/installing the torsion bar.

Cover the tool with a cloth to prevent from slipping.

1. Hang the torsion bar wrench onto the torsion bar and remove it by lifting up.

Removal • Installation of Trunk Lid Welt Strip

1. Align the welt strip marking to the vehicle center position marking from the front and then install.
2. For the rear, insert the welt strip connections into the center of the striker.
3. After installation, check if the welt strip is not loose by pulling it lightly.

CAUTION:

Securely install the each corner and trunk lid rear plate area.

Trunk Lid & Fuel Filler Lid Opener

Components Location

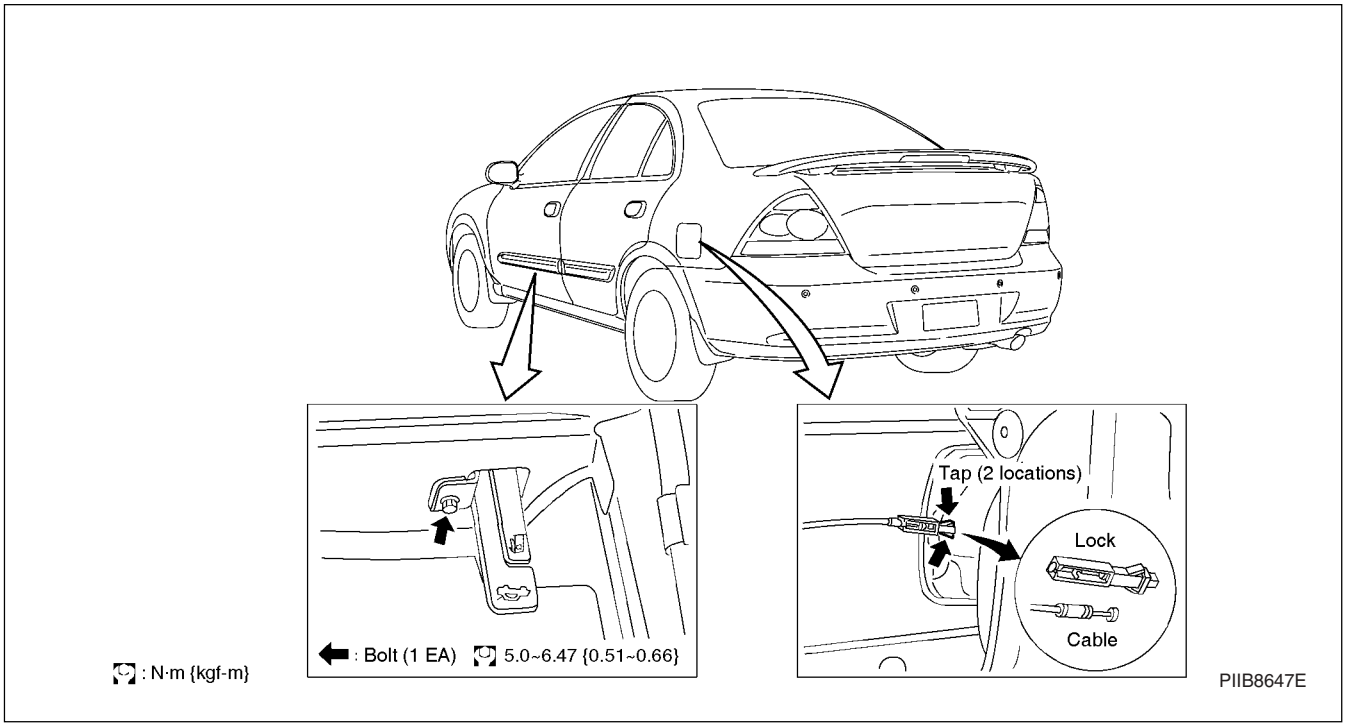

Body Alignment

Description

All dimensions indicated in the figures are actual.

When using a tracking gauge, adjust both pointers to equal length. Then check the pointers and gauge itself to make sure there is no free play.

When a measuring tape is used, check to be sure there is no elongation, twisting or bending.

Measurements should be taken at the center of the mounting holes.

An asterisk (*) following the value at the measuring point indicates that the measuring point on the other side is symmetrically the same value.

The coordinates of the measurement points are the distances measured from the standard line of “X”, “Y” and “Z”.

Engine Compartment

MEASUREMENT

MEASUREMENT POINTS

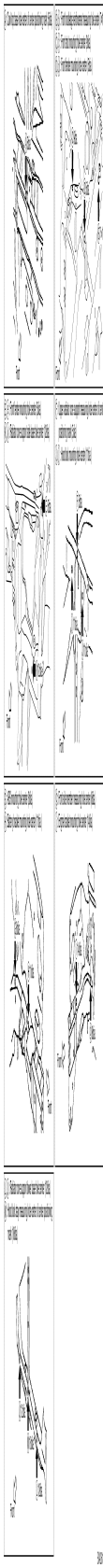

Underbody

MEASUREMENT

MEASUREMENT POINTS

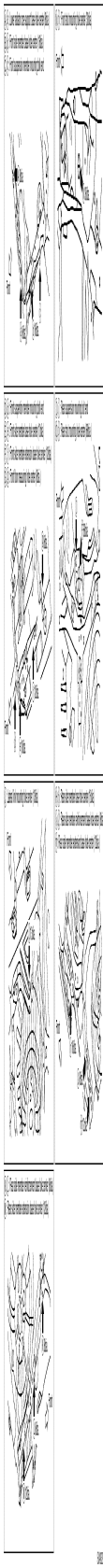

Passenger Compartment

MEASUREMENT

MEASUREMENT POINTS

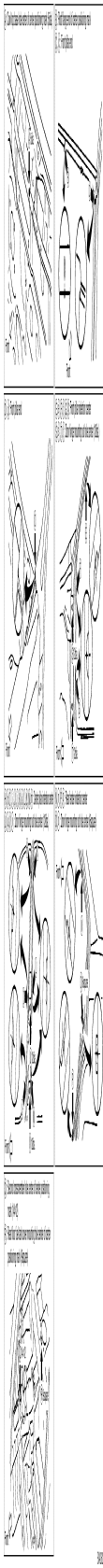

Rear Body

MEASUREMENT
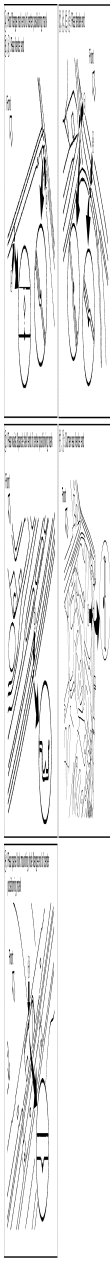
MEASUREMENT POINTS